Dist	COUNTY	ROUTE	POST MILES TOTAL PROJECT	SHEET No.	TOTAL SHEETS
11	SD	8,54,67,94, 125, *etc.*	Var	101	231

Manuel Reyes 12-11-15
REGISTERED CIVIL ENGINEER DATE

01-11-16
PLANS APPROVAL DATE

REGISTERED PROFESSIONAL ENGINEER
MANUEL REYES
No. 58621
Exp. 12-31-16
CIVIL
STATE OF CALIFORNIA

THE STATE OF CALIFORNIA OR ITS OFFICERS OR AGENTS SHALL NOT BE RESPONSIBLE FOR THE ACCURACY OR COMPLETENESS OF SCANNED COPIES OF THIS PLAN SHEET.

NOTE:

1. FOR ACCURATE RIGHT OF WAY DATA, CONTACT RIGHT OF WAY ENGINEERING AT THE DISTRICT OFFICE.

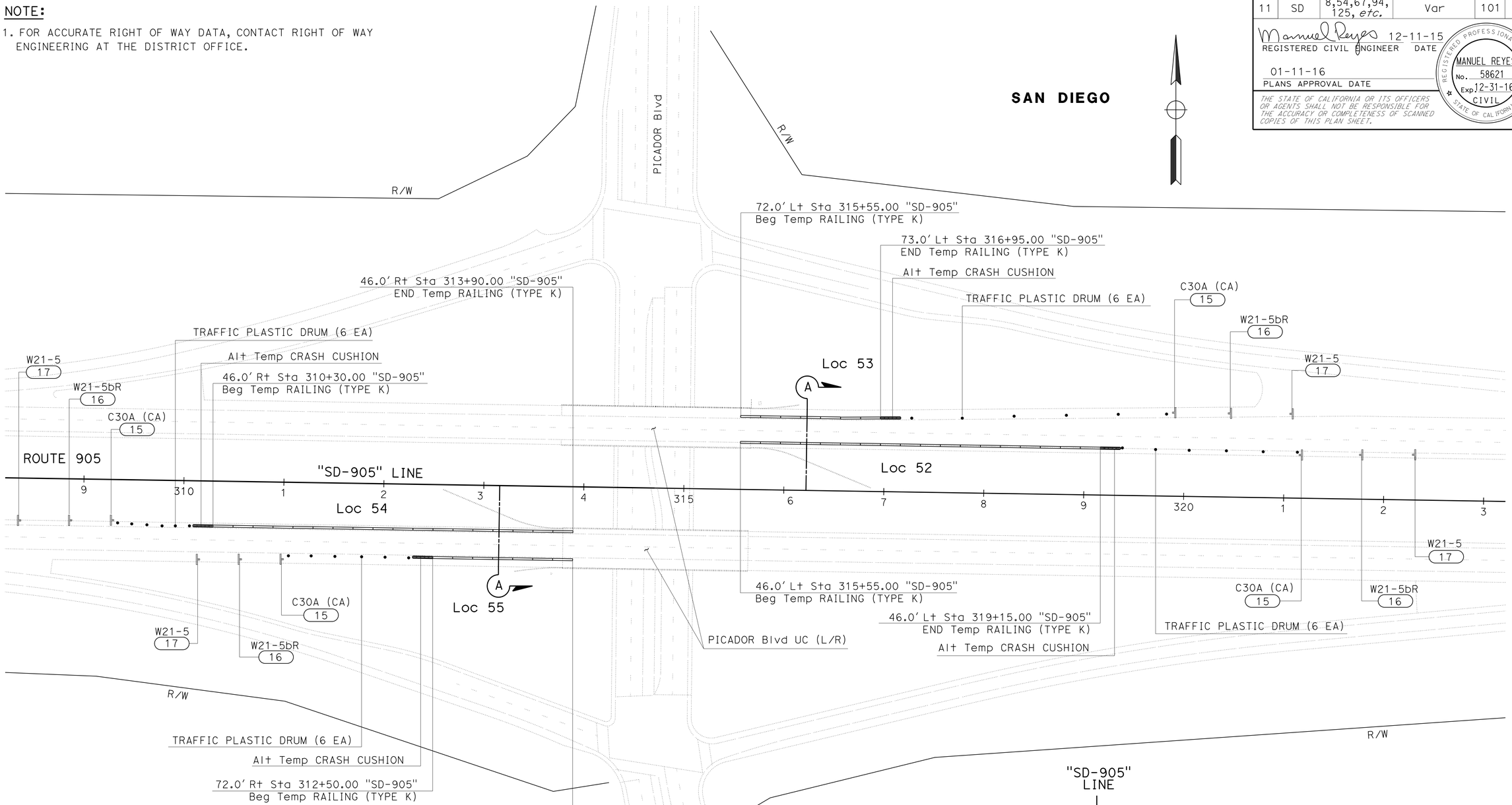

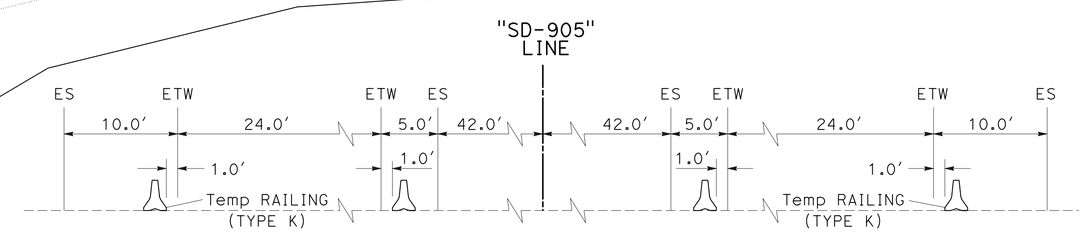

SECTION A-A
NO SCALE

APPROVED FOR TRAFFIC HANDLING WORK ONLY

LOCATIONS 52, 53, 54, 55

ROUTE 905 PM 4.41

TRAFFIC HANDLING PLAN

SCALE: 1" = 50'

TH-21

STATE OF CALIFORNIA - DEPARTMENT OF TRANSPORTATION
Caltrans PROJECT DEVELOPMENT
TRAFFIC

FUNCTIONAL SUPERVISOR: RICHARD ESTRADA
CALCULATED-DESIGNED BY: VAN D. CALLANTA
CHECKED BY: MANUEL REYES
REVISED BY
DATE REVISED

LAST REVISION 12-22-15
DATE PLOTTED => 12-JAN-2016
TIME PLOTTED => 16:09

Dist	COUNTY	ROUTE	POST MILES TOTAL PROJECT	SHEET No.	TOTAL SHEETS
11	SD	8,54,67,94, 125, *etc.*	Var	102	231

Manuel Reyes 12-11-15
REGISTERED CIVIL ENGINEER DATE

01-11-16
PLANS APPROVAL DATE

REGISTERED PROFESSIONAL ENGINEER
MANUEL REYES
No. 58621
Exp. 12-31-16
CIVIL
STATE OF CALIFORNIA

THE STATE OF CALIFORNIA OR ITS OFFICERS OR AGENTS SHALL NOT BE RESPONSIBLE FOR THE ACCURACY OR COMPLETENESS OF SCANNED COPIES OF THIS PLAN SHEET.

NOTE:

1. FOR ACCURATE RIGHT OF WAY DATA, CONTACT RIGHT OF WAY ENGINEERING AT THE DISTRICT OFFICE.

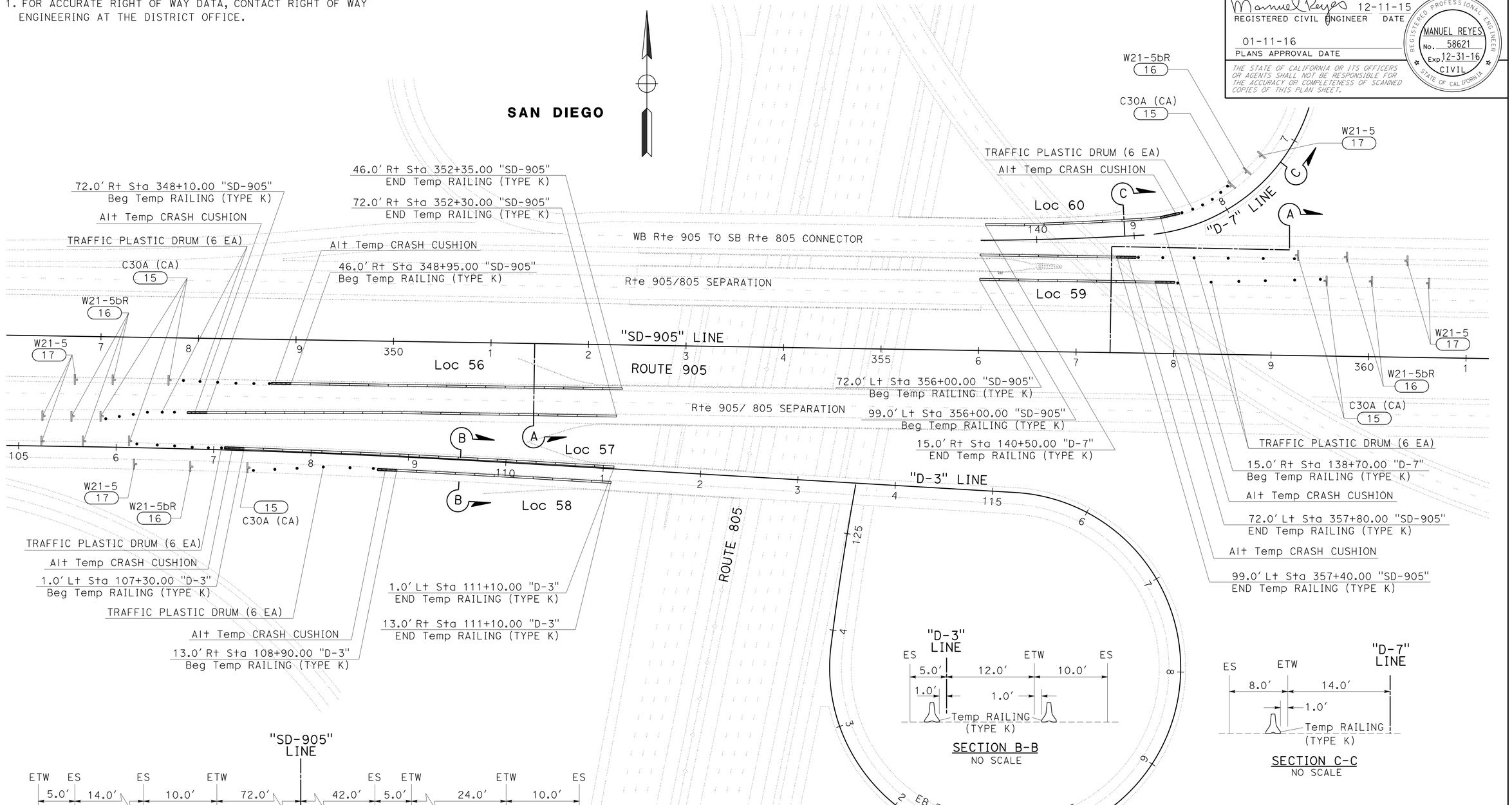

APPROVED FOR TRAFFIC HANDLING WORK ONLY

LOCATIONS 56, 57, 58, 59, 60

ROUTE 905 PM 5.14

TRAFFIC HANDLING PLAN

SCALE: 1" = 50'

TH-22

STATE OF CALIFORNIA - DEPARTMENT OF TRANSPORTATION
Caltrans PROJECT DEVELOPMENT
TRAFFIC

FUNCTIONAL SUPERVISOR: RICHARD ESTRADA
CALCULATED-DESIGNED BY: VAN D. CALLANTA
CHECKED BY: MANUEL REYES
REVISED BY
DATE REVISED

LAST REVISION 12-22-15
DATE PLOTTED => 12-JAN-2016
TIME PLOTTED => 16:09

Dist	COUNTY	ROUTE	POST MILES TOTAL PROJECT	SHEET No.	TOTAL SHEETS
11	SD	8,54,67,94, 125, etc.	Var	103	231

Manuel Reyes 12-11-15
REGISTERED CIVIL ENGINEER DATE

01-11-16
PLANS APPROVAL DATE

REGISTERED PROFESSIONAL ENGINEER
MANUEL REYES
No. 58621
Exp. 12-31-16
CIVIL
STATE OF CALIFORNIA

THE STATE OF CALIFORNIA OR ITS OFFICERS OR AGENTS SHALL NOT BE RESPONSIBLE FOR THE ACCURACY OR COMPLETENESS OF SCANNED COPIES OF THIS PLAN SHEET.

NOTE:

1. FOR ACCURATE RIGHT OF WAY DATA, CONTACT RIGHT OF WAY ENGINEERING AT THE DISTRICT OFFICE.

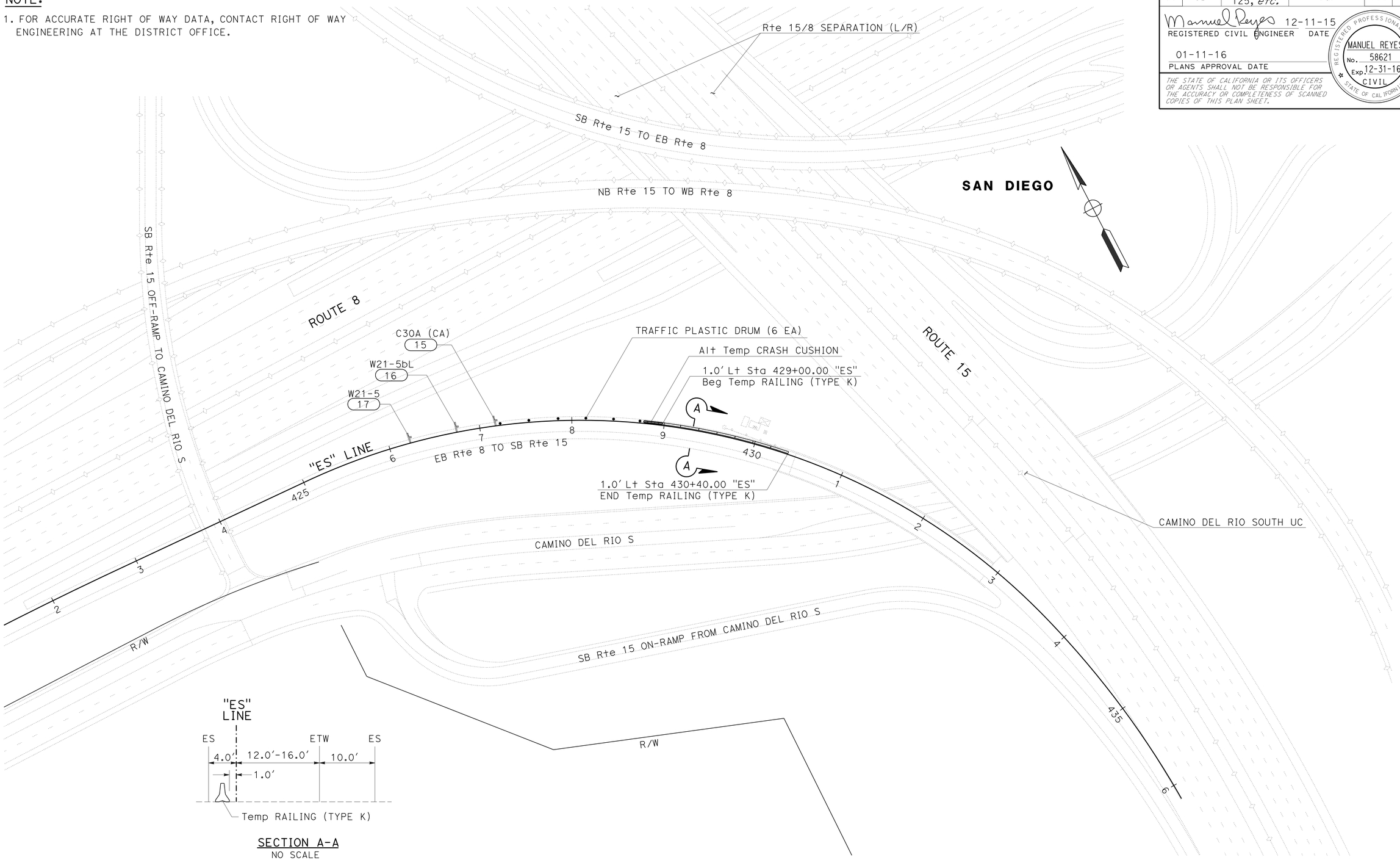

SECTION A-A
NO SCALE

APPROVED FOR TRAFFIC HANDLING WORK ONLY

LOCATION 61

ROUTE 8 PM 5.47

TRAFFIC HANDLING PLAN

SCALE: 1" = 50'

TH-23

STATE OF CALIFORNIA - DEPARTMENT OF TRANSPORTATION
Caltrans PROJECT DEVELOPMENT
TRAFFIC

FUNCTIONAL SUPERVISOR: RICHARD ESTRADA
CALCULATED-DESIGNED BY: VAN D. CALLANTA
CHECKED BY: MANUEL REYES
REVISED BY
DATE REVISED

LAST REVISION 12-22-15
DATE PLOTTED => 12-JAN-2016
TIME PLOTTED => 16:09

Dist	COUNTY	ROUTE	POST MILES TOTAL PROJECT	SHEET No.	TOTAL SHEETS
11	SD	54,67,94 125,163,etc.	Var	104	231

REGISTERED CIVIL ENGINEER 12-11-15 DATE

01-11-16
PLANS APPROVAL DATE

REGISTERED PROFESSIONAL ENGINEER
NOEL TAPIA
No. 81028
Exp. 09-30-17
CIVIL
STATE OF CALIFORNIA

THE STATE OF CALIFORNIA OR ITS OFFICERS OR AGENTS SHALL NOT BE RESPONSIBLE FOR THE ACCURACY OR COMPLETENESS OF SCANNED COPIES OF THIS PLAN SHEET.

NOTES:

1. EXACT LOCATION OF CONSTRUCTION AREA SIGNS WILL BE DETERMINED BY THE ENGINEER.
2. FEDERAL MANUAL ON UNIFORM TRAFFIC CONTROL DEVICES (MUTCD) SIGN CODES ARE SHOWN UNLESS DESIGNATED BY (CA), INDICATING CALIFORNIA MUTCD.
3. EXISTING UTILITIES ARE NOT SHOWN ON THESE PLAN SHEETS. THE CONTRACTOR SHALL VERIFY LOCATIONS OF EXISTING UTILITIES AND ADJUST THE FIELD LOCATION OF THE SIGN POSTS IN CONSULTATION WITH THE ENGINEER.
4. SEE CONSTRUCTION AREA SIGN PLAN FOR ADDITIONAL CONSTRUCTION AREA SIGNS.
5. ROTATE ARROW ON SC9 (CA) PANEL TO REFLECT DIRECTION OF DETOUR.

LEGEND:

(X) = CONSTRUCTION AREA SIGN
⇨ = DETOUR DIRECTION OF TRAFFIC
SPCL = SPECIAL CONSTRUCTION AREA SIGN
Caps = CAPITAL LETTERING

SIGN # 1

SPCL-1 8" Caps

54 EAST
USE
DETOUR

72" 72"

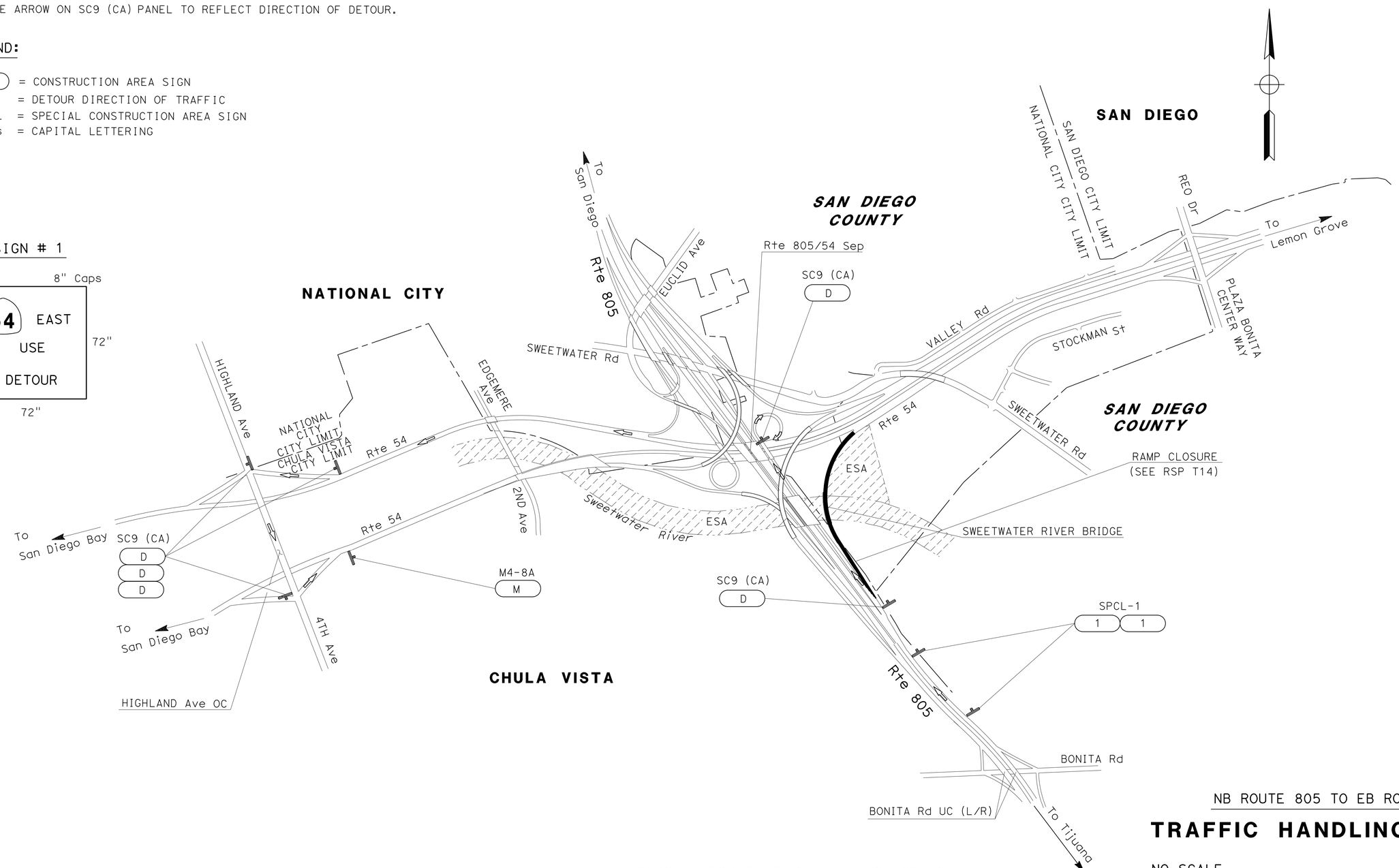

NB ROUTE 805 TO EB ROUTE 54

TRAFFIC HANDLING PLAN

NO SCALE

TH-24

APPROVED FOR TRAFFIC HANDLING WORK ONLY

STATE OF CALIFORNIA - DEPARTMENT OF TRANSPORTATION
Caltrans
TRAFFIC DESIGN
FUNCTIONAL SUPERVISOR: CAMILLE ABOUFADEL
CALCULATED-DESIGNED BY: PARVIS NAHAVANDIAN
CHECKED BY: NOEL TAPIA
REVISED BY
DATE REVISED

LAST REVISION
DATE PLOTTED => 12-JAN-2016
TIME PLOTTED => 16:09
12-22-15

Dist	COUNTY	ROUTE	POST MILES TOTAL PROJECT	SHEET No.	TOTAL SHEETS
11	SD	8,54,67,94, 125, *etc.*	Var	105	231

REGISTERED CIVIL ENGINEER 12-11-15 DATE

01-11-16
PLANS APPROVAL DATE

REGISTERED PROFESSIONAL ENGINEER
NOEL TAPIA
No. 81028
Exp. 09-30-17
CIVIL
STATE OF CALIFORNIA

THE STATE OF CALIFORNIA OR ITS OFFICERS OR AGENTS SHALL NOT BE RESPONSIBLE FOR THE ACCURACY OR COMPLETENESS OF SCANNED COPIES OF THIS PLAN SHEET.

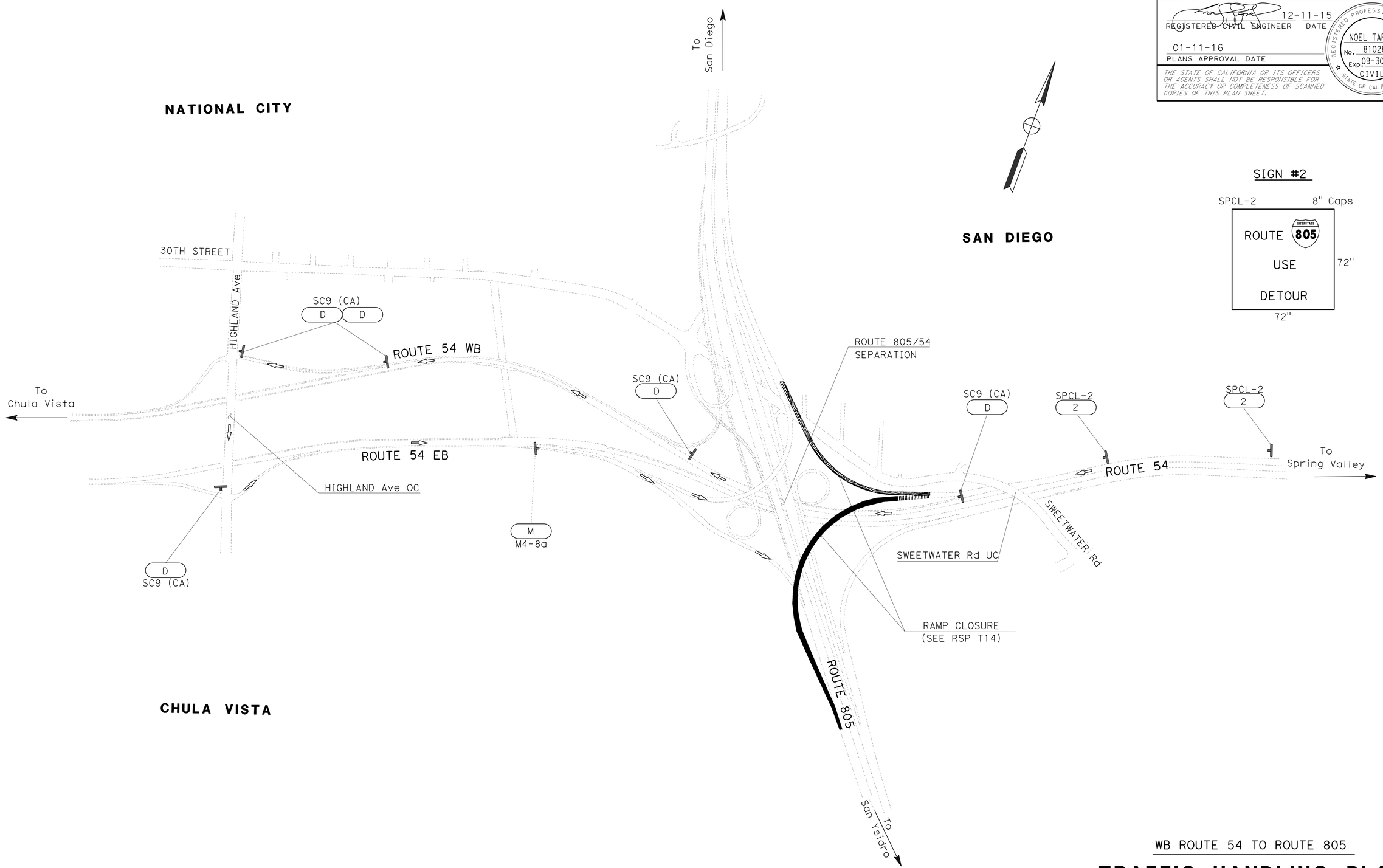

WB ROUTE 54 TO ROUTE 805

TRAFFIC HANDLING PLAN

NO SCALE

TH-25

APPROVED FOR TRAFFIC HANDLING WORK ONLY

STATE OF CALIFORNIA - DEPARTMENT OF TRANSPORTATION
Caltrans
TRAFFIC DESIGN

FUNCTIONAL SUPERVISOR: CAMILLE ABOUFADEL
CALCULATED-DESIGNED BY: PARVIS NAHAVANDIAN
CHECKED BY: NOEL TAPIA
REVISED BY
DATE REVISED

LAST REVISION 12-22-15
DATE PLOTTED => 12-JAN-2016
TIME PLOTTED => 16:09

Dist	COUNTY	ROUTE	POST MILES TOTAL PROJECT	SHEET No.	TOTAL SHEETS
11	SD	54,67,94 125,163,etc.	Var	106	231

REGISTERED CIVIL ENGINEER 12-11-15 DATE

01-11-16
PLANS APPROVAL DATE

REGISTERED PROFESSIONAL ENGINEER NOEL TAPIA No. 81028 Exp. 09-30-17 CIVIL STATE OF CALIFORNIA

THE STATE OF CALIFORNIA OR ITS OFFICERS OR AGENTS SHALL NOT BE RESPONSIBLE FOR THE ACCURACY OR COMPLETENESS OF SCANNED COPIES OF THIS PLAN SHEET.

SIGN #2

SPCL-2 8" Caps

ROUTE 805 USE DETOUR

72" 72"

SIGN #3

SPCL-3 8" Caps

805 SOUTH DETOUR

805 NORTH DETOUR

90" 84"

SAN DIEGO

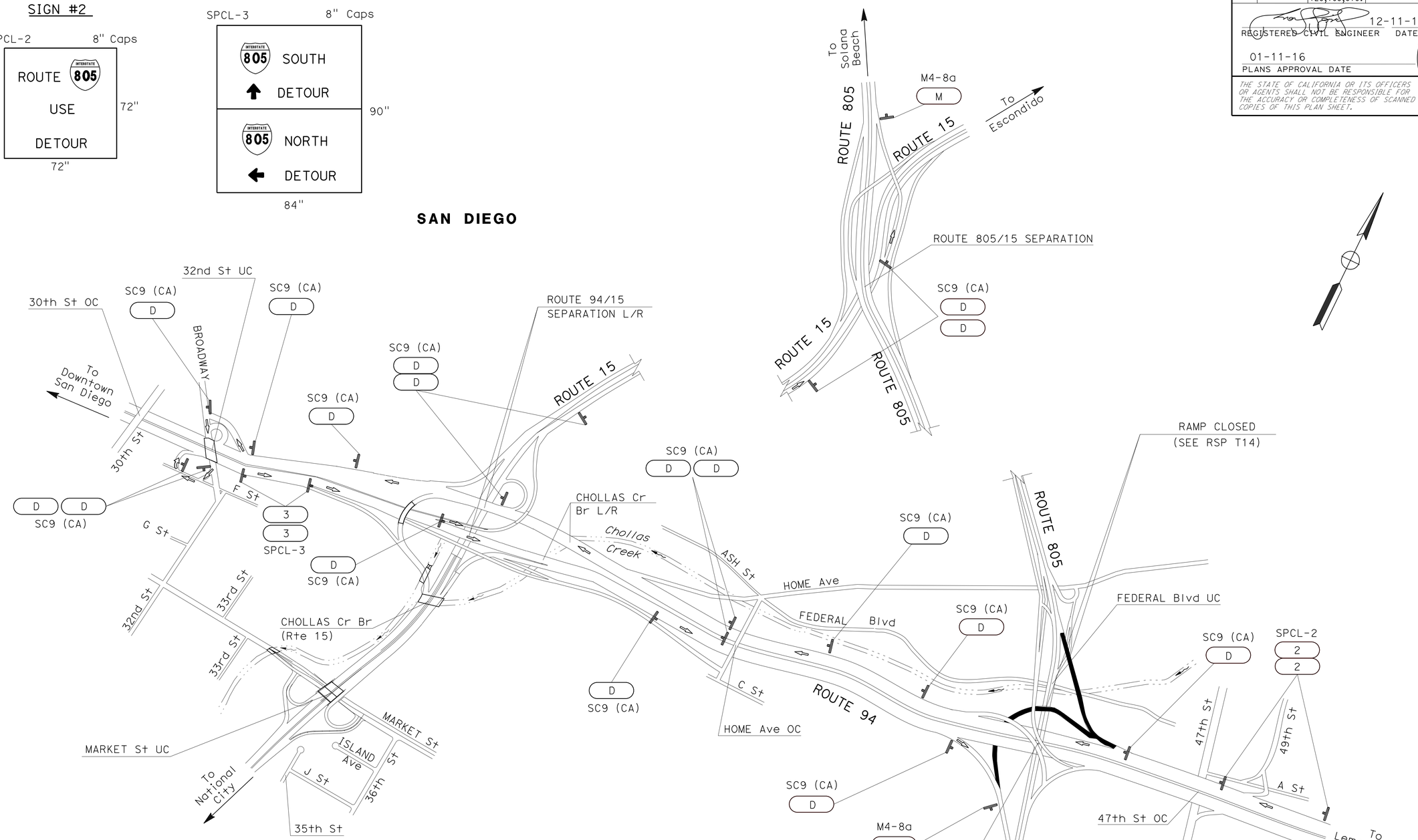

WB ROUTE 94 TO NB/SB ROUTE 805

TRAFFIC HANDLING PLAN

NO SCALE

TH-26

APPROVED FOR TRAFFIC HANDLING WORK ONLY

STATE OF CALIFORNIA - DEPARTMENT OF TRANSPORTATION

Caltrans

TRAFFIC DESIGN

FUNCTIONAL SUPERVISOR: CAMILLE ABOUFADEL

CALCULATED-DESIGNED BY: PARVIS NAHAVANDIAN

CHECKED BY: NOEL TAPIA

REVISED BY

DATE REVISED

LAST REVISION 12-22-15

DATE PLOTTED => 12-JAN-2016

TIME PLOTTED => 16:09

Dist	COUNTY	ROUTE	POST MILES TOTAL PROJECT	SHEET No.	TOTAL SHEETS
11	SD	8,54,67,94, 125, *etc.*	Var	107	231

REGISTERED CIVIL ENGINEER 12-11-15 DATE

01-11-16
PLANS APPROVAL DATE

REGISTERED PROFESSIONAL ENGINEER
NOEL TAPIA
No. 81028
Exp. 09-30-17
CIVIL
STATE OF CALIFORNIA

THE STATE OF CALIFORNIA OR ITS OFFICERS OR AGENTS SHALL NOT BE RESPONSIBLE FOR THE ACCURACY OR COMPLETENESS OF SCANNED COPIES OF THIS PLAN SHEET.

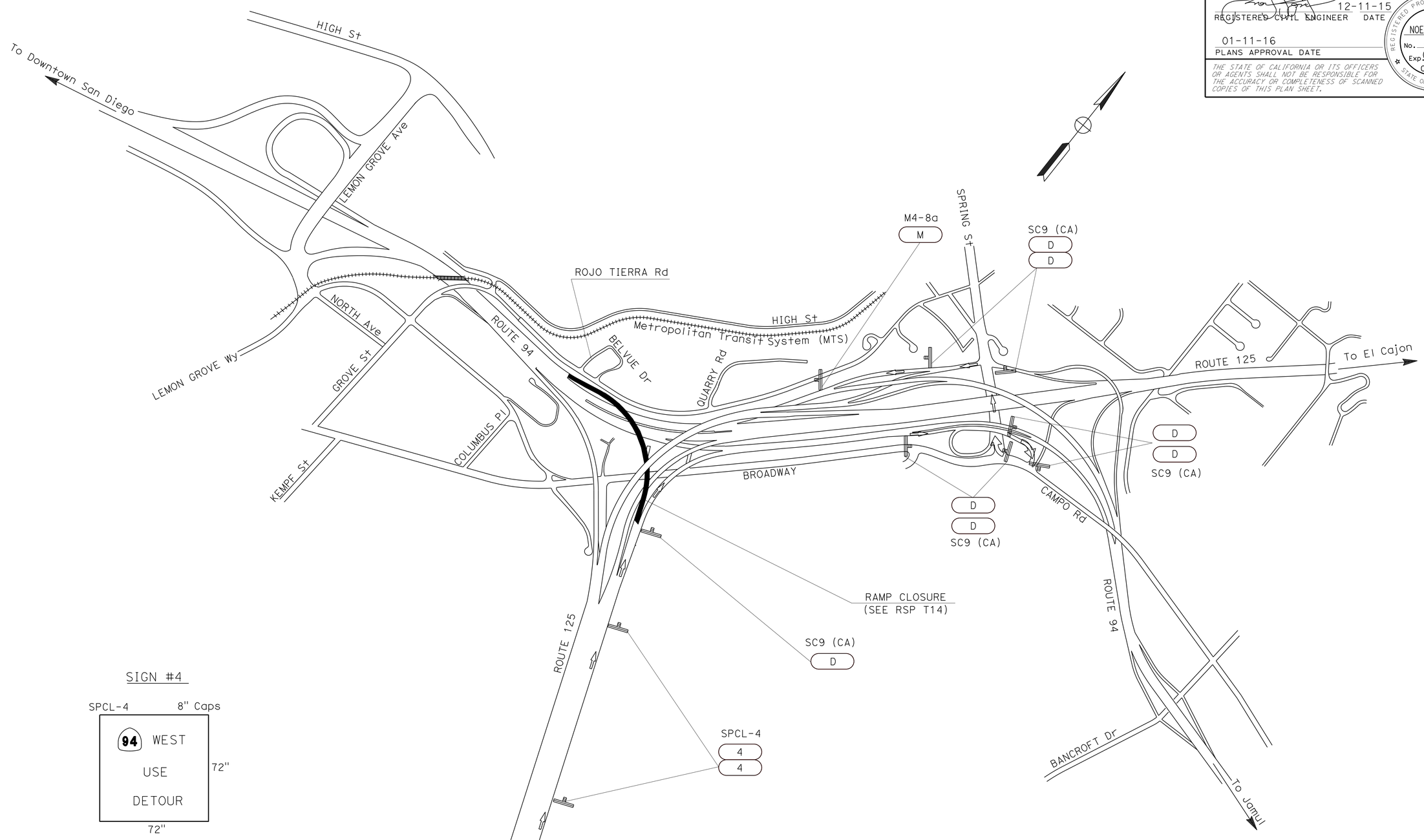

SIGN #4

SPCL-4 8" Caps

94 WEST
USE
DETOUR

72" × 72"

NB ROUTE 125 TO WB ROUTE 94

TRAFFIC HANDLING PLAN

NO SCALE

TH-27

APPROVED FOR TRAFFIC HANDLING WORK ONLY

STATE OF CALIFORNIA - DEPARTMENT OF TRANSPORTATION
Caltrans
TRAFFIC DESIGN

FUNCTIONAL SUPERVISOR: CAMILLE ABOUFADEL
CALCULATED-DESIGNED BY: PARVIS NAHAVANDIAN
CHECKED BY: NOEL TAPIA
REVISED BY
DATE REVISED

LAST REVISION 12-22-15
DATE PLOTTED => 12-JAN-2016
TIME PLOTTED => 16:09

Dist	COUNTY	ROUTE	POST MILES TOTAL PROJECT	SHEET No.	TOTAL SHEETS
11	SD	8,54,67,94, 125, *etc.*	Var	108	231

REGISTERED CIVIL ENGINEER 12-11-15 DATE

01-11-16
PLANS APPROVAL DATE

REGISTERED PROFESSIONAL ENGINEER
NOEL TAPIA
No. 81028
Exp. 09-30-17
CIVIL
STATE OF CALIFORNIA

THE STATE OF CALIFORNIA OR ITS OFFICERS OR AGENTS SHALL NOT BE RESPONSIBLE FOR THE ACCURACY OR COMPLETENESS OF SCANNED COPIES OF THIS PLAN SHEET.

SIGN #5

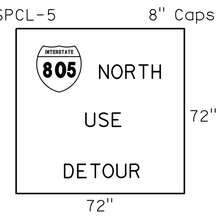

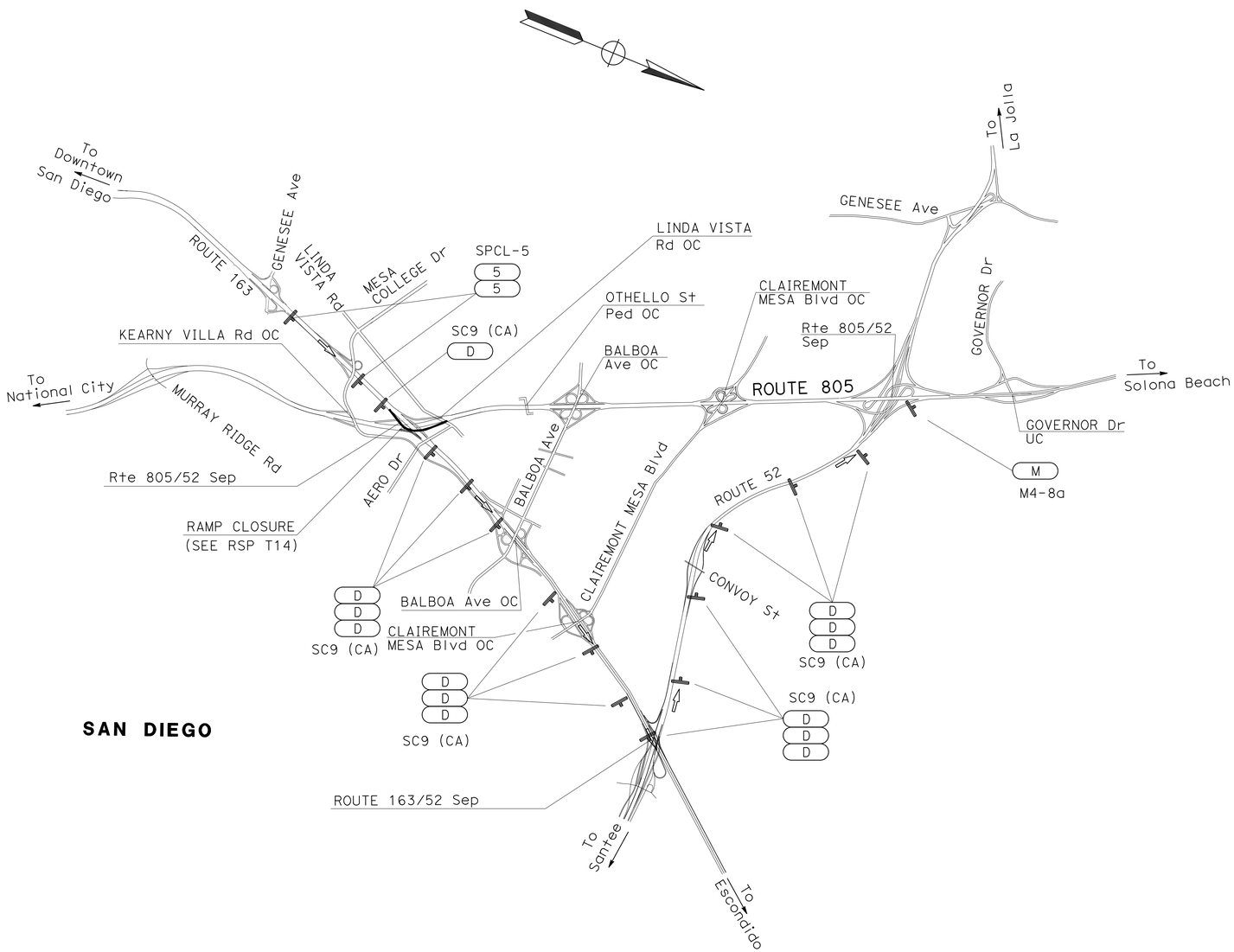

NB ROUTE 163 TO NB ROUTE 805

TRAFFIC HANDLING PLAN

NO SCALE

TH-28

APPROVED FOR TRAFFIC HANDLING WORK ONLY

STATE OF CALIFORNIA - DEPARTMENT OF TRANSPORTATION
Caltrans
TRAFFIC DESIGN

FUNCTIONAL SUPERVISOR: CAMILLE ABOUFADEL
CALCULATED-DESIGNED BY: PARVIS NAHAVANDIAN
CHECKED BY: NOEL TAPIA
REVISED BY
DATE REVISED

LAST REVISION 12-22-15
DATE PLOTTED => 12-JAN-2016
TIME PLOTTED => 16:09

Dist	COUNTY	ROUTE	POST MILES TOTAL PROJECT	SHEET No.	TOTAL SHEETS
11	SD	54,67,94 125,163,etc.	Var	109	231

REGISTERED CIVIL ENGINEER 12-11-15 DATE

01-11-16
PLANS APPROVAL DATE

REGISTERED PROFESSIONAL ENGINEER NOEL TAPIA No. 81028 Exp. 09-30-17 CIVIL STATE OF CALIFORNIA

THE STATE OF CALIFORNIA OR ITS OFFICERS OR AGENTS SHALL NOT BE RESPONSIBLE FOR THE ACCURACY OR COMPLETENESS OF SCANNED COPIES OF THIS PLAN SHEET.

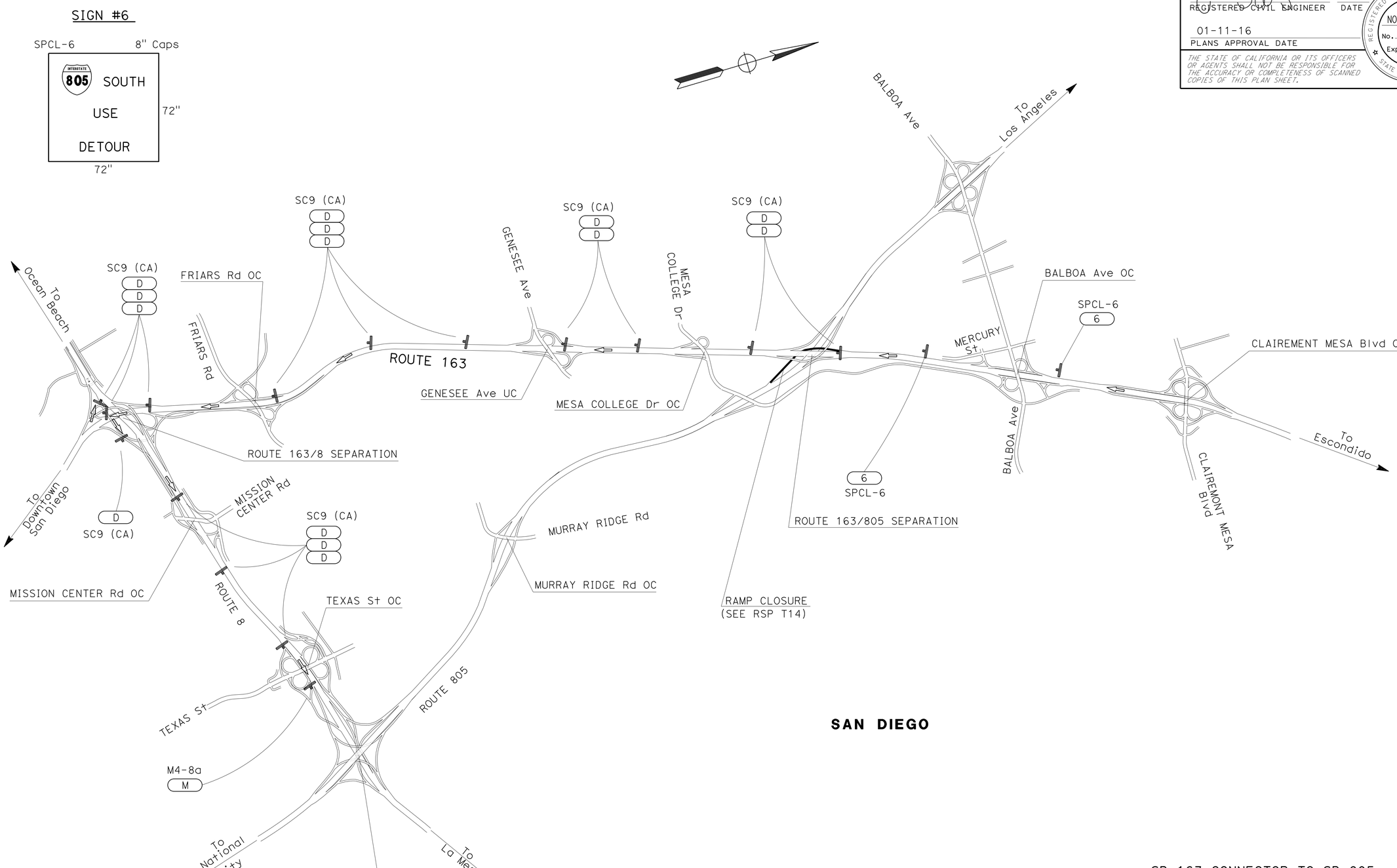

SB 163 CONNECTOR TO SB 805

TRAFFIC HANDLING PLAN

NO SCALE

TH-29

APPROVED FOR TRAFFIC HANDLING WORK ONLY

STATE OF CALIFORNIA - DEPARTMENT OF TRANSPORTATION
Caltrans
TRAFFIC DESIGN

FUNCTIONAL SUPERVISOR: CAMILLE ABOUFADEL
CALCULATED-DESIGNED BY: PARVIS NAHAVANDIAN
CHECKED BY: NOEL TAPIA
REVISED BY
DATE REVISED

LAST REVISION 12-22-15
DATE PLOTTED => 12-JAN-2016
TIME PLOTTED => 16:09

Dist	COUNTY	ROUTE	POST MILES TOTAL PROJECT	SHEET No.	TOTAL SHEETS
11	SD	54,67,94 125,163,etc.	Var	110	231

REGISTERED CIVIL ENGINEER DATE 12-11-15

01-11-16
PLANS APPROVAL DATE

REGISTERED PROFESSIONAL ENGINEER NOEL TAPIA No. 81028 Exp. 09-30-17 CIVIL STATE OF CALIFORNIA

THE STATE OF CALIFORNIA OR ITS OFFICERS OR AGENTS SHALL NOT BE RESPONSIBLE FOR THE ACCURACY OR COMPLETENESS OF SCANNED COPIES OF THIS PLAN SHEET.

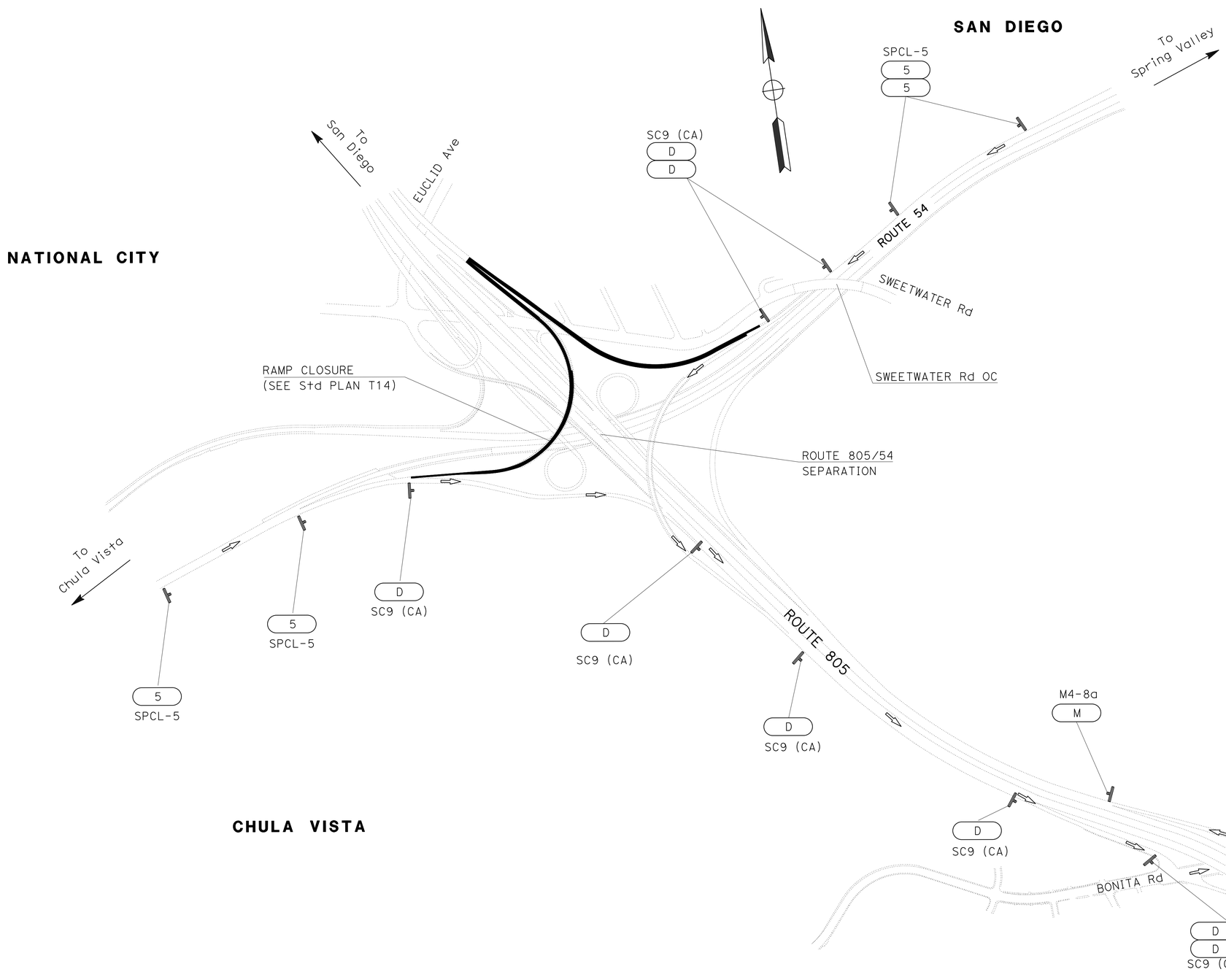

SIGN #5

SPCL-5 8" Caps

INTERSTATE 805 NORTH
USE
DETOUR

72" 72"

EB/WB ROUTE 54 TO NB ROUTE 805

TRAFFIC HANDLING PLAN

APPROVED FOR TRAFFIC HANDLING WORK ONLY

NO SCALE

TH-30

STATE OF CALIFORNIA - DEPARTMENT OF TRANSPORTATION
Caltrans® **TRAFFIC DESIGN**

FUNCTIONAL SUPERVISOR: CAMILLE ABOUFADEL
CALCULATED-DESIGNED BY: PARVIS NAHAVANDIAN
CHECKED BY: NOEL TAPIA
REVISED BY
DATE REVISED

LAST REVISION 12-22-15
DATE PLOTTED => 12-JAN-2016
TIME PLOTTED => 16:09

Dist	COUNTY	ROUTE	POST MILES TOTAL PROJECT	SHEET No.	TOTAL SHEETS
11	SD	54,67,94 125,163,etc.	Var	111	231

12-11-15
REGISTERED CIVIL ENGINEER DATE

01-11-16
PLANS APPROVAL DATE

REGISTERED PROFESSIONAL ENGINEER
NOEL TAPIA
No. 81028
Exp. 09-30-17
CIVIL
STATE OF CALIFORNIA

THE STATE OF CALIFORNIA OR ITS OFFICERS OR AGENTS SHALL NOT BE RESPONSIBLE FOR THE ACCURACY OR COMPLETENESS OF SCANNED COPIES OF THIS PLAN SHEET.

SIGN #7

SPCL-7 8" Caps

ROUTE 94
USE
DETOUR

72" 72"

SIGN #8

SPCL-8 8" Caps

94 EAST
DETOUR

94 WEST
DETOUR

90" 84"

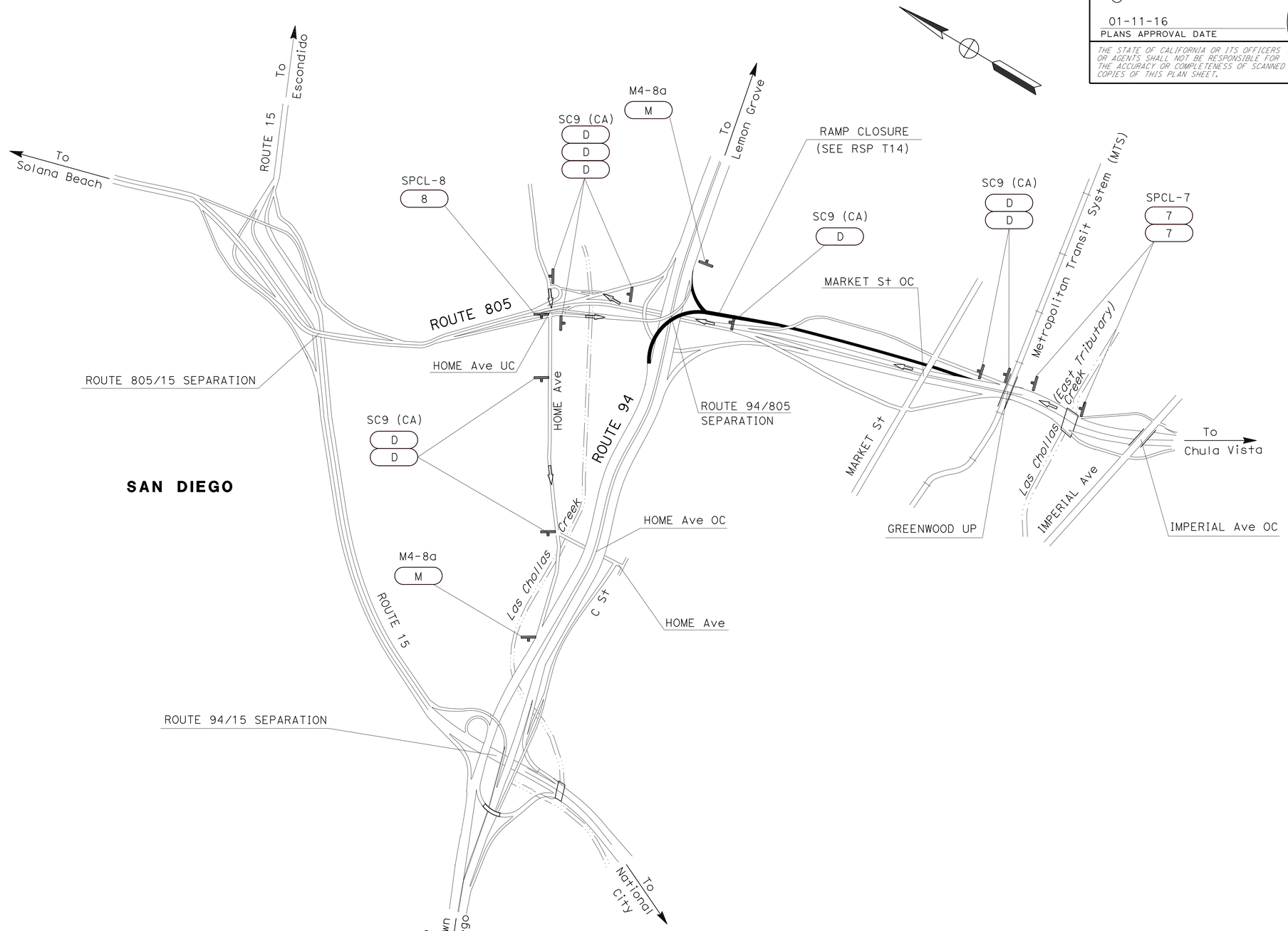

APPROVED FOR TRAFFIC HANDLING WORK ONLY

NB ROUTE 805 TO EB/WB ROUTE 94

TRAFFIC HANDLING PLAN

NO SCALE

TH-31

STATE OF CALIFORNIA - DEPARTMENT OF TRANSPORTATION
Caltrans
TRAFFIC DESIGN

FUNCTIONAL SUPERVISOR: CAMILLE ABOUFADEL
CALCULATED-DESIGNED BY: PARVIS NAHAVANDIAN
CHECKED BY: NOEL TAPIA
REVISED BY
DATE REVISED

LAST REVISION 12-22-15
DATE PLOTTED => 12-JAN-2016
TIME PLOTTED => 16:09

Dist	COUNTY	ROUTE	POST MILES TOTAL PROJECT	SHEET No.	TOTAL SHEETS
11	SD	54,67,94 125,163,etc.	Var	112	231

REGISTERED CIVIL ENGINEER 12-11-15 DATE

01-11-16
PLANS APPROVAL DATE

REGISTERED PROFESSIONAL ENGINEER
NOEL TAPIA
No. 81028
Exp. 09-30-17
CIVIL
STATE OF CALIFORNIA

THE STATE OF CALIFORNIA OR ITS OFFICERS OR AGENTS SHALL NOT BE RESPONSIBLE FOR THE ACCURACY OR COMPLETENESS OF SCANNED COPIES OF THIS PLAN SHEET.

SIGN # 9

SPCL-9 8" Caps

ROUTE 8 USE DETOUR

72" 72"

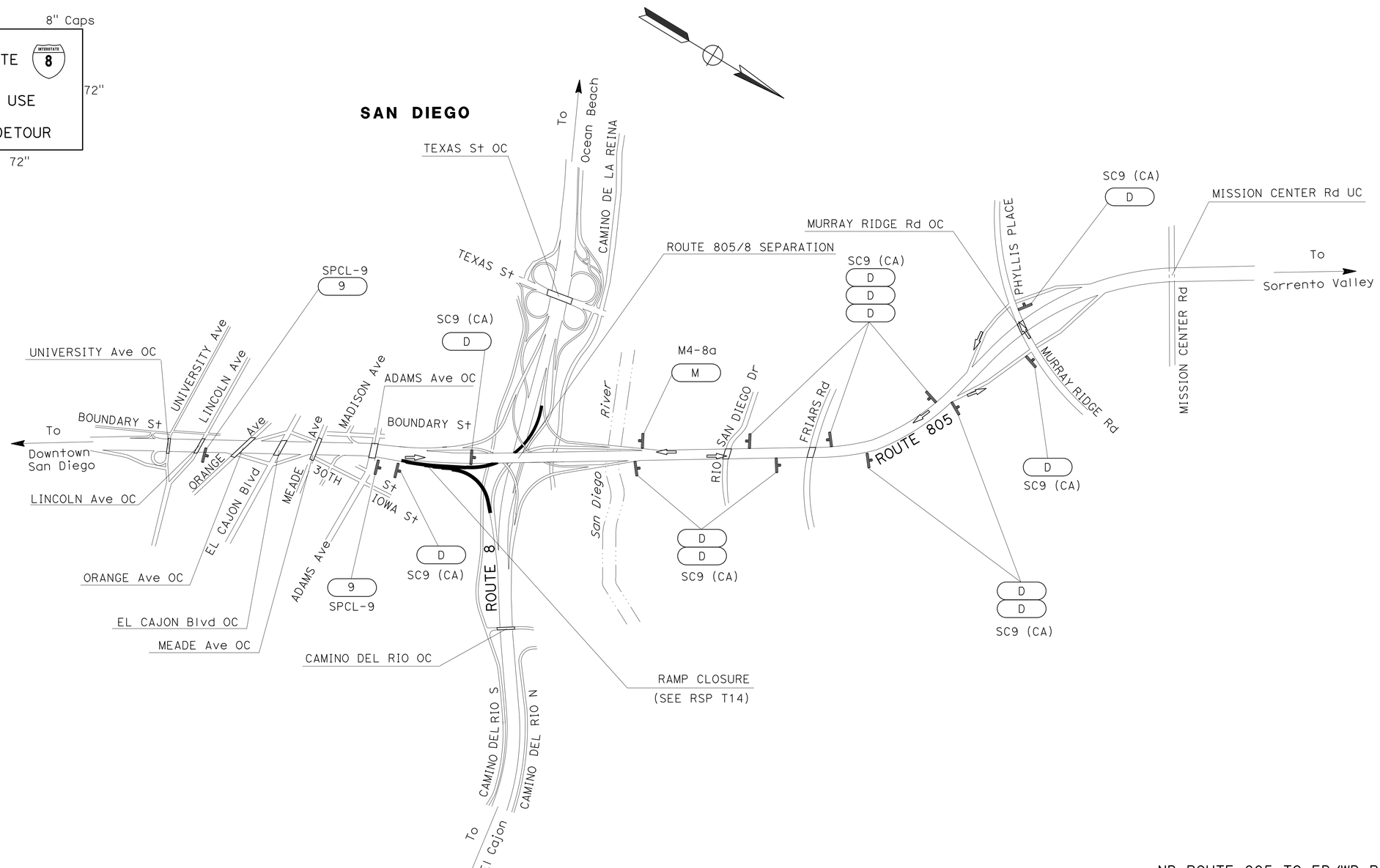

NB ROUTE 805 TO EB/WB ROUTE 8

TRAFFIC HANDLING PLAN

NO SCALE

TH-32

APPROVED FOR TRAFFIC HANDLING WORK ONLY

STATE OF CALIFORNIA - DEPARTMENT OF TRANSPORTATION
Caltrans
TRAFFIC DESIGN

FUNCTIONAL SUPERVISOR: CAMILLE ABOUFADEL
CALCULATED-DESIGNED BY: PARVIS NAHAVANDIAN
CHECKED BY: NOEL TAPIA
REVISED BY
DATE REVISED

LAST REVISION 12-22-15
DATE PLOTTED => 12-JAN-2016
TIME PLOTTED => 16:09

Dist	COUNTY	ROUTE	POST MILES TOTAL PROJECT	SHEET No.	TOTAL SHEETS
11	SD	54,67,94 125,163,etc.	Var	113	231

REGISTERED CIVIL ENGINEER 12-11-15 DATE

01-11-16
PLANS APPROVAL DATE

REGISTERED PROFESSIONAL ENGINEER
NOEL TAPIA
No. 81028
Exp. 09-30-17
CIVIL
STATE OF CALIFORNIA

THE STATE OF CALIFORNIA OR ITS OFFICERS OR AGENTS SHALL NOT BE RESPONSIBLE FOR THE ACCURACY OR COMPLETENESS OF SCANNED COPIES OF THIS PLAN SHEET.

SIGN #10

SPCL-10 8" Caps

ROUTE 52
USE
DETOUR

72" 72"

NB ROUTE 805 TO EB/WB ROUTE 52

TRAFFIC HANDLING PLAN

NO SCALE

TH-33

APPROVED FOR TRAFFIC HANDLING WORK ONLY

STATE OF CALIFORNIA - DEPARTMENT OF TRANSPORTATION
Caltrans
TRAFFIC DESIGN

FUNCTIONAL SUPERVISOR: CAMILLE ABOUFADEL
CALCULATED-DESIGNED BY: PARVIS NAHAVANDIAN
CHECKED BY: NOEL TAPIA
REVISED BY
DATE REVISED

LAST REVISION 12-22-15
DATE PLOTTED => 12-JAN-2016
TIME PLOTTED => 16:09

Dist	COUNTY	ROUTE	POST MILES TOTAL PROJECT	SHEET No.	TOTAL SHEETS
11	SD	54,67,94 125,163,etc.	Var	114	231

REGISTERED CIVIL ENGINEER 12-11-15 DATE

01-11-16
PLANS APPROVAL DATE

REGISTERED PROFESSIONAL ENGINEER NOEL TAPIA No. 81028 Exp 09-30-17 CIVIL STATE OF CALIFORNIA

THE STATE OF CALIFORNIA OR ITS OFFICERS OR AGENTS SHALL NOT BE RESPONSIBLE FOR THE ACCURACY OR COMPLETENESS OF SCANNED COPIES OF THIS PLAN SHEET.

SIGN #2

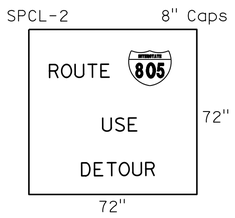

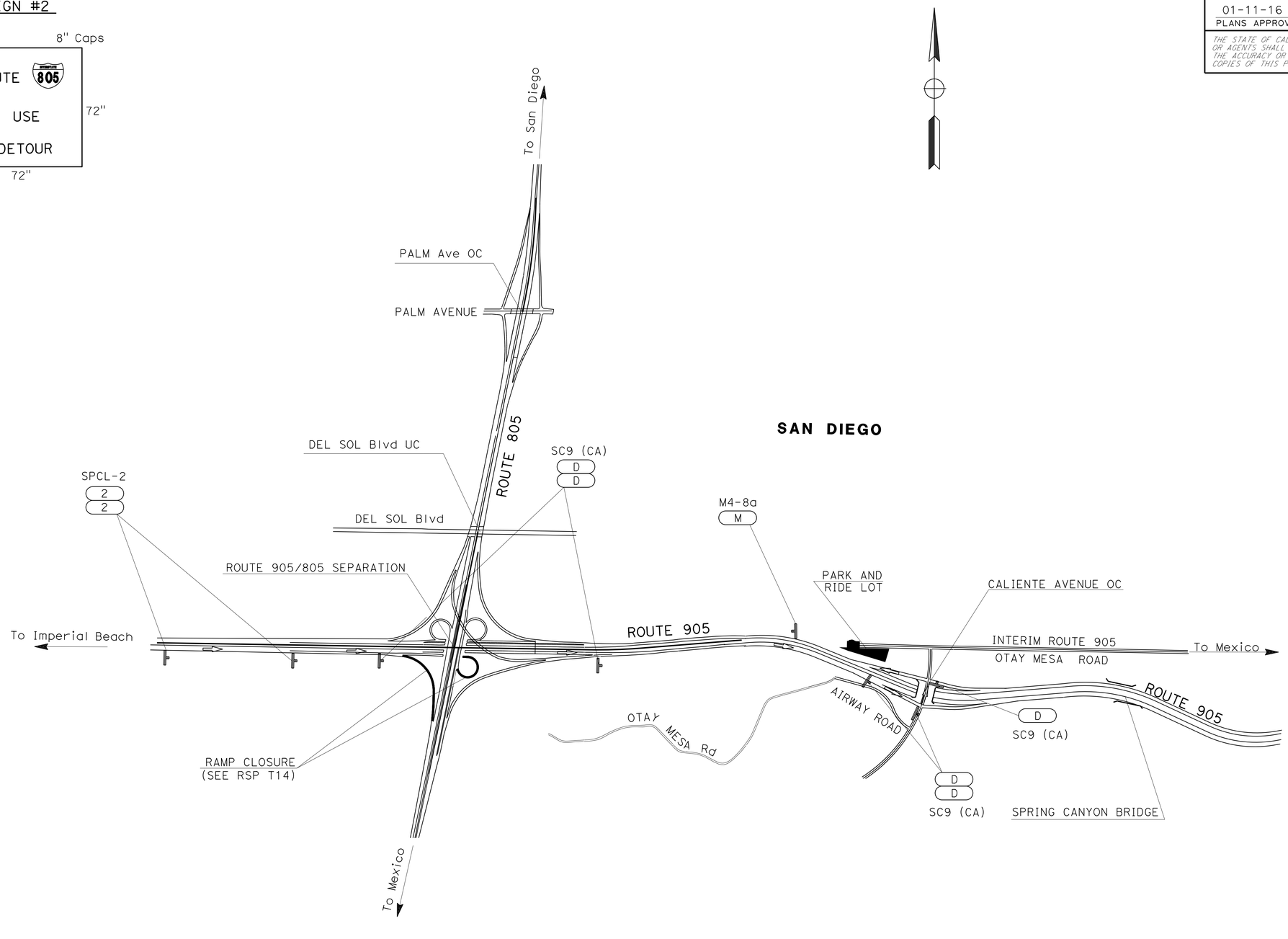

SAN DIEGO

EB ROUTE 905 TO NB/SB ROUTE 805

TRAFFIC HANDLING PLAN

NO SCALE

TH-34

APPROVED FOR TRAFFIC HANDLING WORK ONLY

STATE OF CALIFORNIA - DEPARTMENT OF TRANSPORTATION
Caltrans
TRAFFIC DESIGN

FUNCTIONAL SUPERVISOR: CAMILLE ABOUFADEL
CALCULATED-DESIGNED BY: PARVIS NAHAVANDIAN
CHECKED BY: NOEL TAPIA
REVISED BY
DATE REVISED

LAST REVISION 12-22-15
DATE PLOTTED => 12-JAN-2016
TIME PLOTTED => 16:09

Dist	COUNTY	ROUTE	POST MILES TOTAL PROJECT	SHEET No.	TOTAL SHEETS
11	SD	54,67,94 125,163,etc.	Var	115	231

REGISTERED CIVIL ENGINEER 12-11-15 DATE

01-11-16
PLANS APPROVAL DATE

REGISTERED PROFESSIONAL ENGINEER
NOEL TAPIA
No. 81028
Exp. 09-30-17
CIVIL
STATE OF CALIFORNIA

THE STATE OF CALIFORNIA OR ITS OFFICERS OR AGENTS SHALL NOT BE RESPONSIBLE FOR THE ACCURACY OR COMPLETENESS OF SCANNED COPIES OF THIS PLAN SHEET.

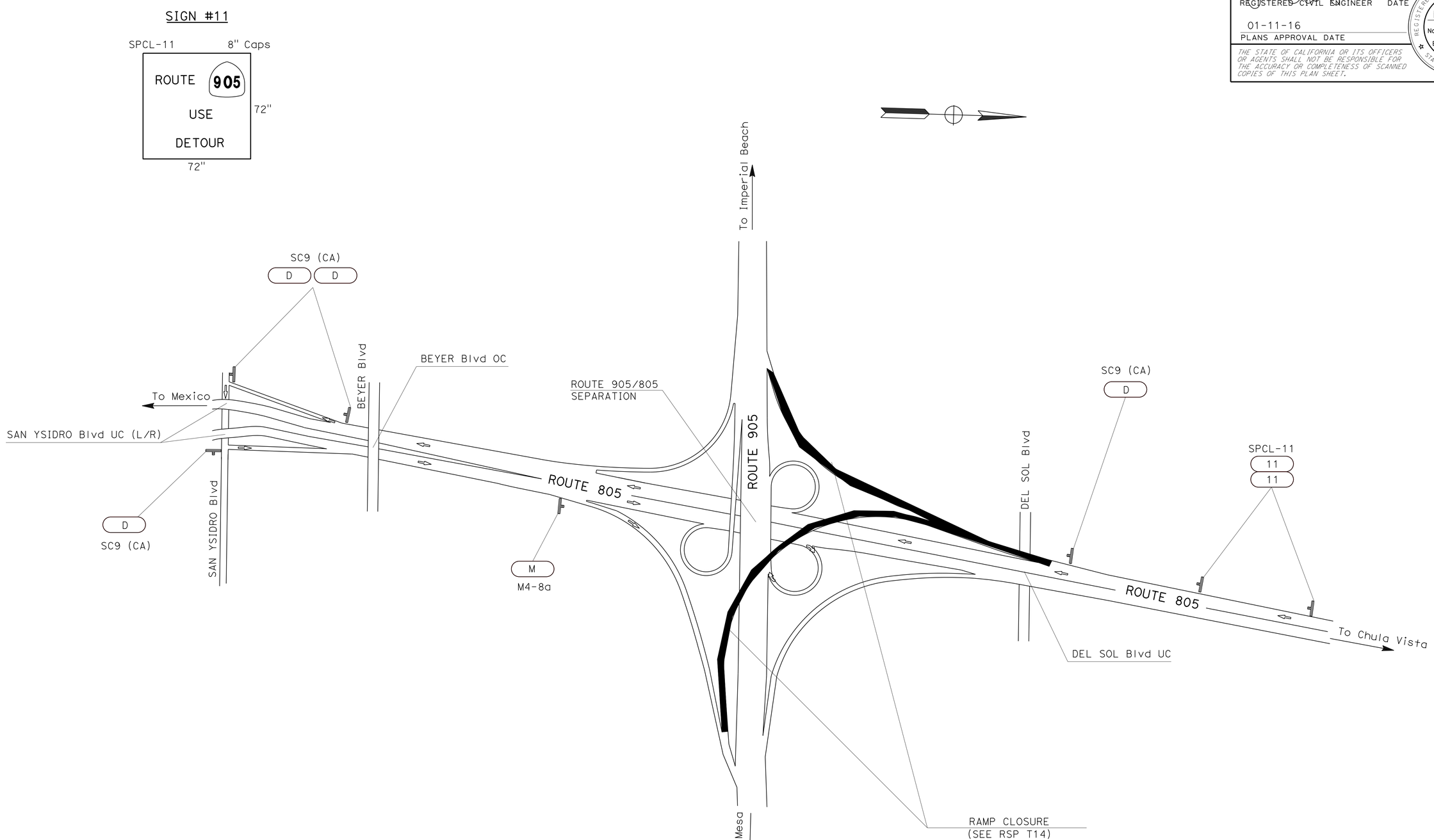

SB ROUTE 805 TO EB/WB ROUTE 905

TRAFFIC HANDLING PLAN

NO SCALE

TH-35

APPROVED FOR TRAFFIC HANDLING WORK ONLY

STATE OF CALIFORNIA - DEPARTMENT OF TRANSPORTATION
Caltrans
TRAFFIC DESIGN

FUNCTIONAL SUPERVISOR: CAMILLE ABOUFADEL
CALCULATED-DESIGNED BY: PARVIS NAHAVANDIAN
CHECKED BY: NOEL TAPIA
REVISED BY
DATE REVISED

LAST REVISION 12-22-15
DATE PLOTTED => 12-JAN-2016
TIME PLOTTED => 16:09

Dist	COUNTY	ROUTE	POST MILES TOTAL PROJECT	SHEET No.	TOTAL SHEETS
11	SD	54,67,94 125,163,etc.	Var	116	231

REGISTERED CIVIL ENGINEER 12-11-15 DATE

01-11-16
PLANS APPROVAL DATE

REGISTERED PROFESSIONAL ENGINEER NOEL TAPIA No. 81028 Exp. 09-30-17 CIVIL STATE OF CALIFORNIA

THE STATE OF CALIFORNIA OR ITS OFFICERS OR AGENTS SHALL NOT BE RESPONSIBLE FOR THE ACCURACY OR COMPLETENESS OF SCANNED COPIES OF THIS PLAN SHEET.

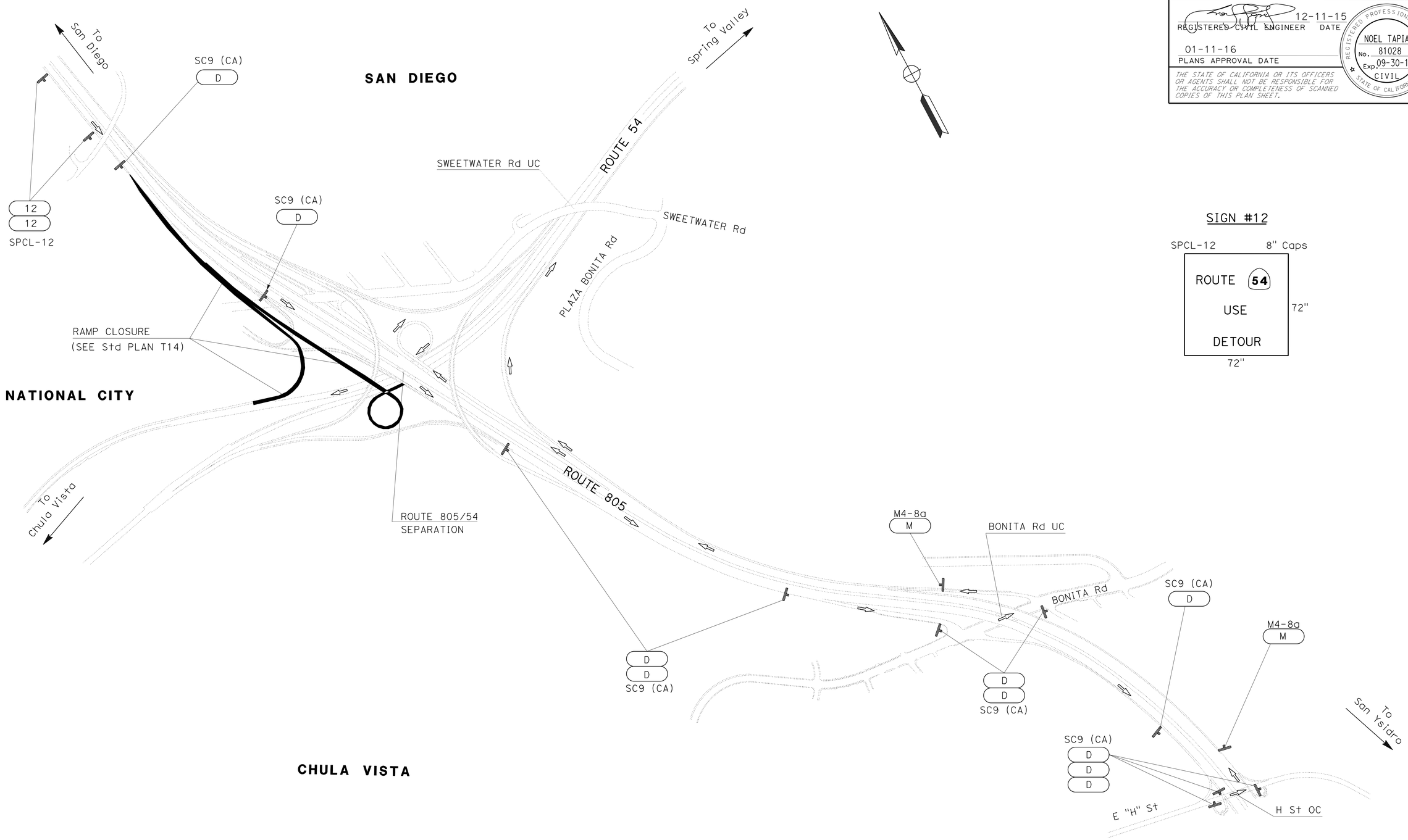

SIGN #12

SPCL-12 8" Caps

ROUTE 54
USE
DETOUR

72" 72"

SB ROUTE 805 TO EB/WB ROUTE 54

TRAFFIC HANDLING PLAN

NO SCALE

TH-36

APPROVED FOR TRAFFIC HANDLING WORK ONLY

STATE OF CALIFORNIA - DEPARTMENT OF TRANSPORTATION
Caltrans
TRAFFIC DESIGN

FUNCTIONAL SUPERVISOR: CAMILLE ABOUFADEL
CALCULATED-DESIGNED BY: PARVIS NAHAVANDIAN
CHECKED BY: NOEL TAPIA
REVISED BY
DATE REVISED

LAST REVISION 12-22-15
DATE PLOTTED => 12-JAN-2016
TIME PLOTTED => 16:09

Dist	COUNTY	ROUTE	POST MILES TOTAL PROJECT	SHEET No.	TOTAL SHEETS
11	SD	54,67,94 125,163,etc.	Var	117	231

REGISTERED CIVIL ENGINEER 12-11-15 DATE

01-11-16
PLANS APPROVAL DATE

REGISTERED PROFESSIONAL ENGINEER NOEL TAPIA No. 81028 Exp. 09-30-17 CIVIL STATE OF CALIFORNIA

THE STATE OF CALIFORNIA OR ITS OFFICERS OR AGENTS SHALL NOT BE RESPONSIBLE FOR THE ACCURACY OR COMPLETENESS OF SCANNED COPIES OF THIS PLAN SHEET.

SIGN #13

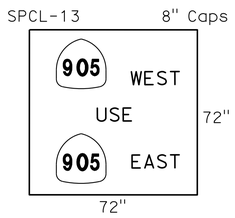

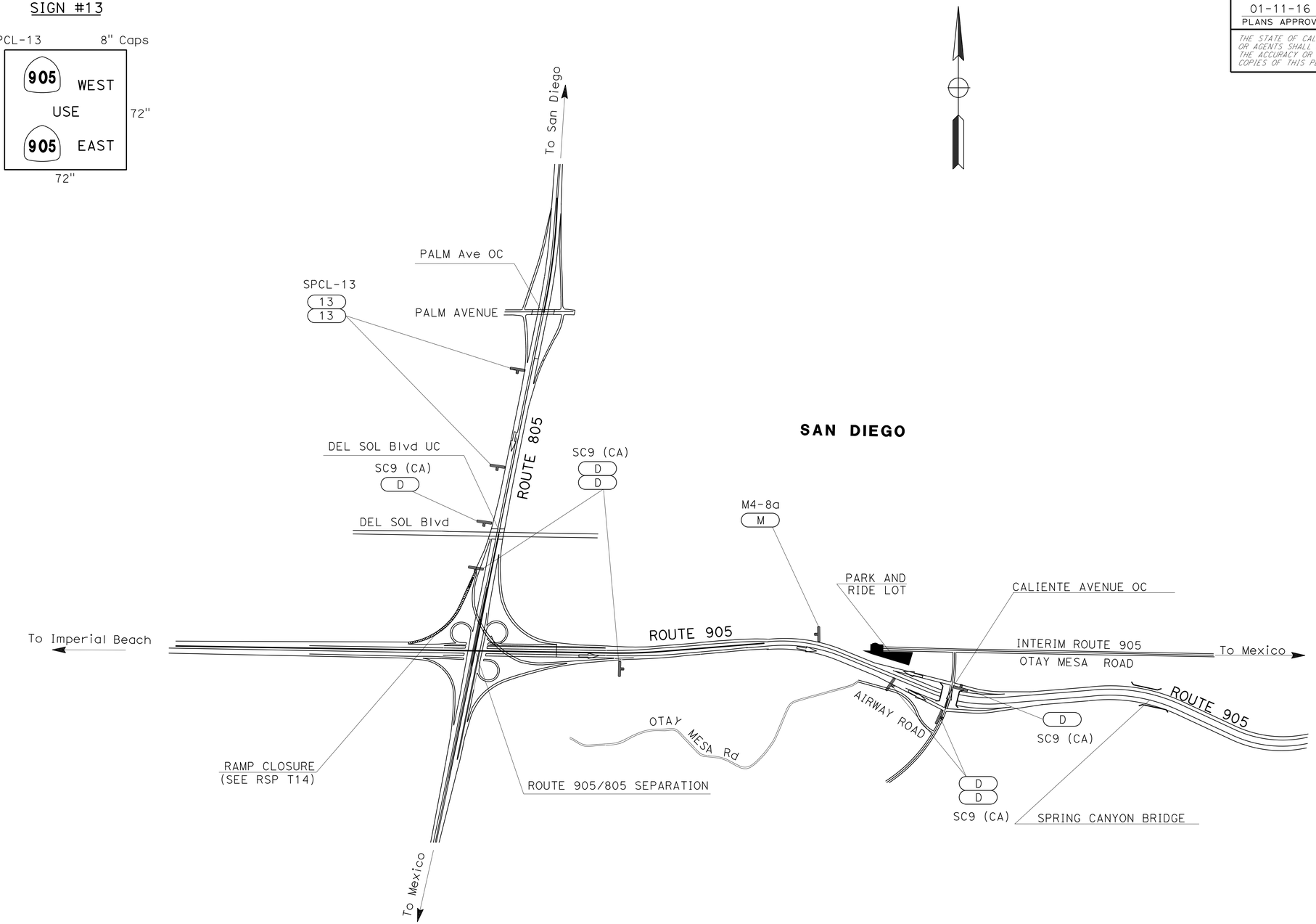

SB ROUTE 805 TO WB ROUTE 905

TRAFFIC HANDLING PLAN

NO SCALE

TH-37

APPROVED FOR TRAFFIC HANDLING WORK ONLY

STATE OF CALIFORNIA - DEPARTMENT OF TRANSPORTATION
Caltrans
TRAFFIC DESIGN

FUNCTIONAL SUPERVISOR: CAMILLE ABOUFADEL
CALCULATED-DESIGNED BY: PARVIS NAHAVANDIAN
CHECKED BY: NOEL TAPIA
REVISED BY
DATE REVISED

LAST REVISION 12-22-15
DATE PLOTTED => 12-JAN-2016
TIME PLOTTED => 16:09

Dist	COUNTY	ROUTE	POST MILES TOTAL PROJECT	SHEET No.	TOTAL SHEETS
11	SD	54,67,94 125,163,etc.	Var	118	231

REGISTERED CIVIL ENGINEER 12-11-15 DATE

01-11-16
PLANS APPROVAL DATE

REGISTERED PROFESSIONAL ENGINEER
NOEL TAPIA
No. 81028
Exp. 09-30-17
CIVIL
STATE OF CALIFORNIA

THE STATE OF CALIFORNIA OR ITS OFFICERS OR AGENTS SHALL NOT BE RESPONSIBLE FOR THE ACCURACY OR COMPLETENESS OF SCANNED COPIES OF THIS PLAN SHEET.

SIGN #13

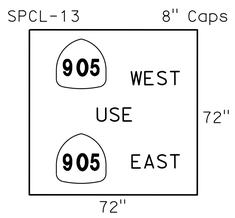

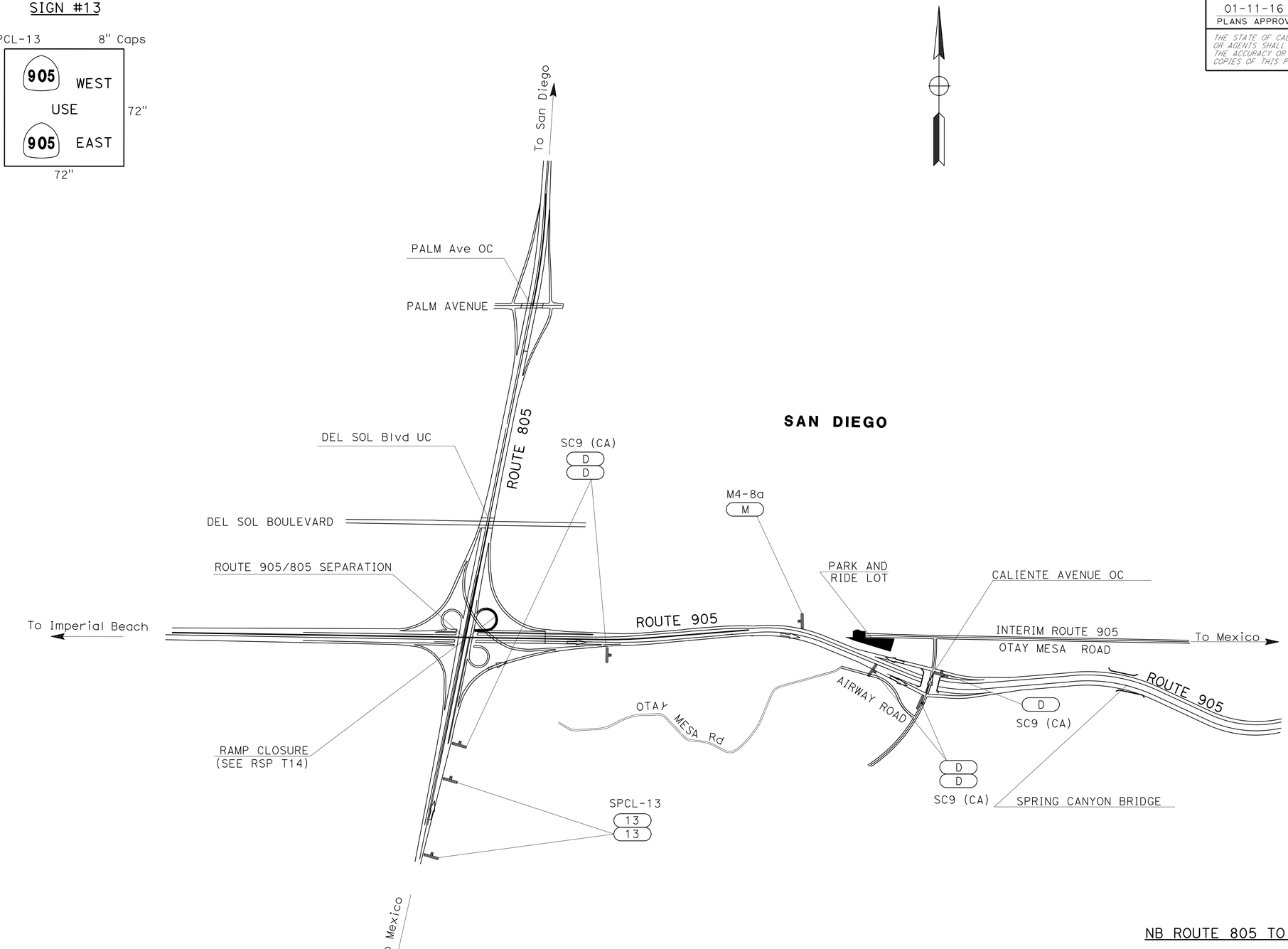

NB ROUTE 805 TO WB ROUTE 905

TRAFFIC HANDLING PLAN

NO SCALE

TH-38

APPROVED FOR TRAFFIC HANDLING WORK ONLY

STATE OF CALIFORNIA - DEPARTMENT OF TRANSPORTATION
Caltrans
TRAFFIC DESIGN

FUNCTIONAL SUPERVISOR: CAMILLE ABOUFADEL
CALCULATED-DESIGNED BY: PARVIS NAHAVANDIAN
CHECKED BY: NOEL TAPIA
REVISED BY
DATE REVISED

LAST REVISION 12-22-15
DATE PLOTTED => 12-JAN-2016
TIME PLOTTED => 16:09

Dist	COUNTY	ROUTE	POST MILES TOTAL PROJECT	SHEET No.	TOTAL SHEETS
11	SD	54,67,94 125,163,etc.	Var	119	231

REGISTERED CIVIL ENGINEER 12-11-15 DATE

01-11-16
PLANS APPROVAL DATE

REGISTERED PROFESSIONAL ENGINEER
NOEL TAPIA
No. 81028
Exp. 09-30-17
CIVIL
STATE OF CALIFORNIA

THE STATE OF CALIFORNIA OR ITS OFFICERS OR AGENTS SHALL NOT BE RESPONSIBLE FOR THE ACCURACY OR COMPLETENESS OF SCANNED COPIES OF THIS PLAN SHEET.

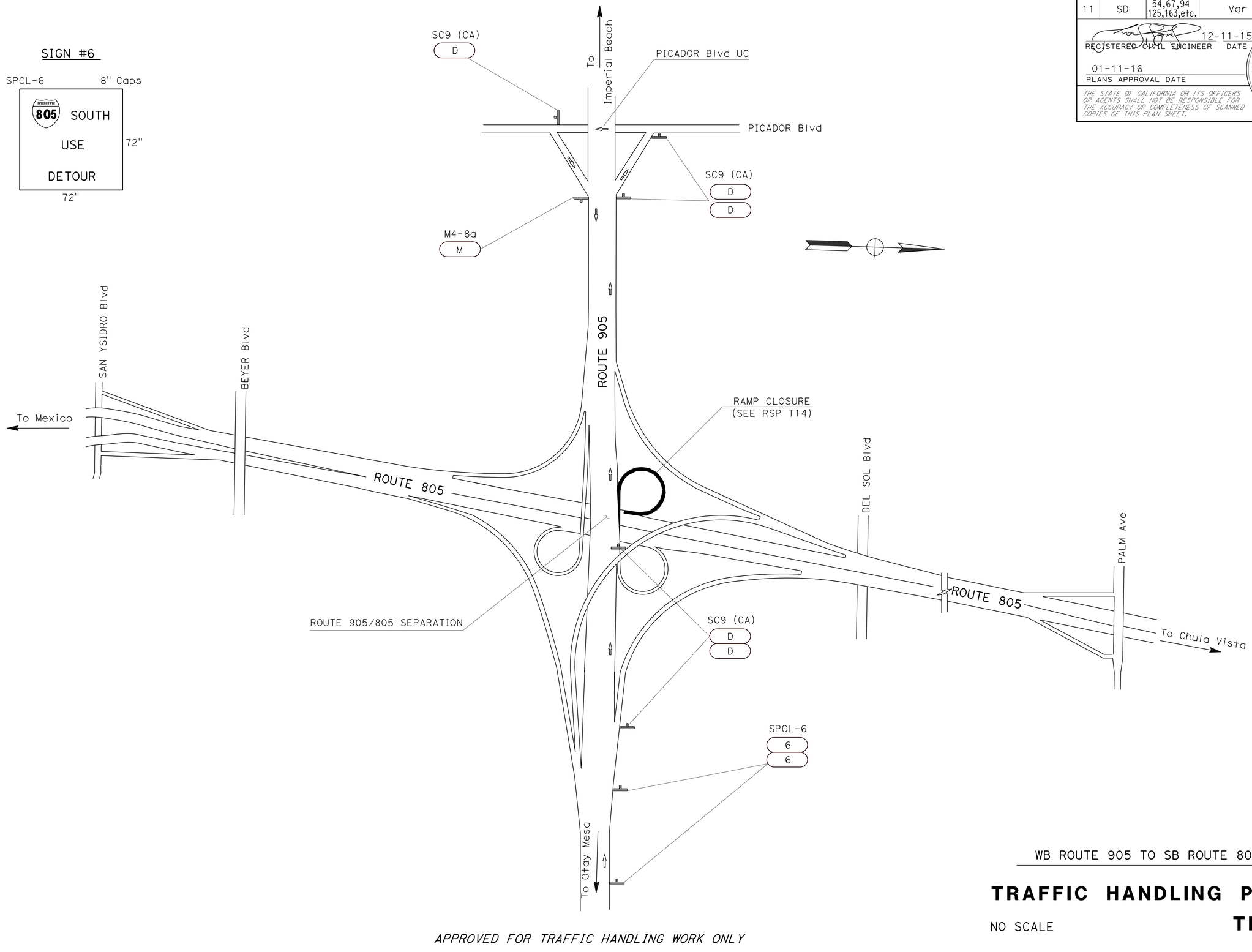

APPROVED FOR TRAFFIC HANDLING WORK ONLY

WB ROUTE 905 TO SB ROUTE 805

TRAFFIC HANDLING PLAN

NO SCALE

TH-39

STATE OF CALIFORNIA - DEPARTMENT OF TRANSPORTATION
Caltrans
TRAFFIC DESIGN

FUNCTIONAL SUPERVISOR: CAMILLE ABOUFADEL
CALCULATED-DESIGNED BY: PARVIS NAHAVANDIAN
CHECKED BY: NOEL TAPIA
REVISED BY
DATE REVISED

LAST REVISION 12-22-15
DATE PLOTTED => 12-JAN-2016
TIME PLOTTED => 16:09

Dist	COUNTY	ROUTE	POST MILES TOTAL PROJECT	SHEET No.	TOTAL SHEETS
11	SD	54,67,94 125,163,etc.	Var	120	231

REGISTERED CIVIL ENGINEER 12-11-15 DATE

01-11-16
PLANS APPROVAL DATE

REGISTERED PROFESSIONAL ENGINEER
NOEL TAPIA
No. 81028
Exp. 09-30-17
CIVIL
STATE OF CALIFORNIA

THE STATE OF CALIFORNIA OR ITS OFFICERS OR AGENTS SHALL NOT BE RESPONSIBLE FOR THE ACCURACY OR COMPLETENESS OF SCANNED COPIES OF THIS PLAN SHEET.

SIGN #14

SPCL-14 8" Caps

INTERSTATE 15 SOUTH
USE
DETOUR

72" 72"

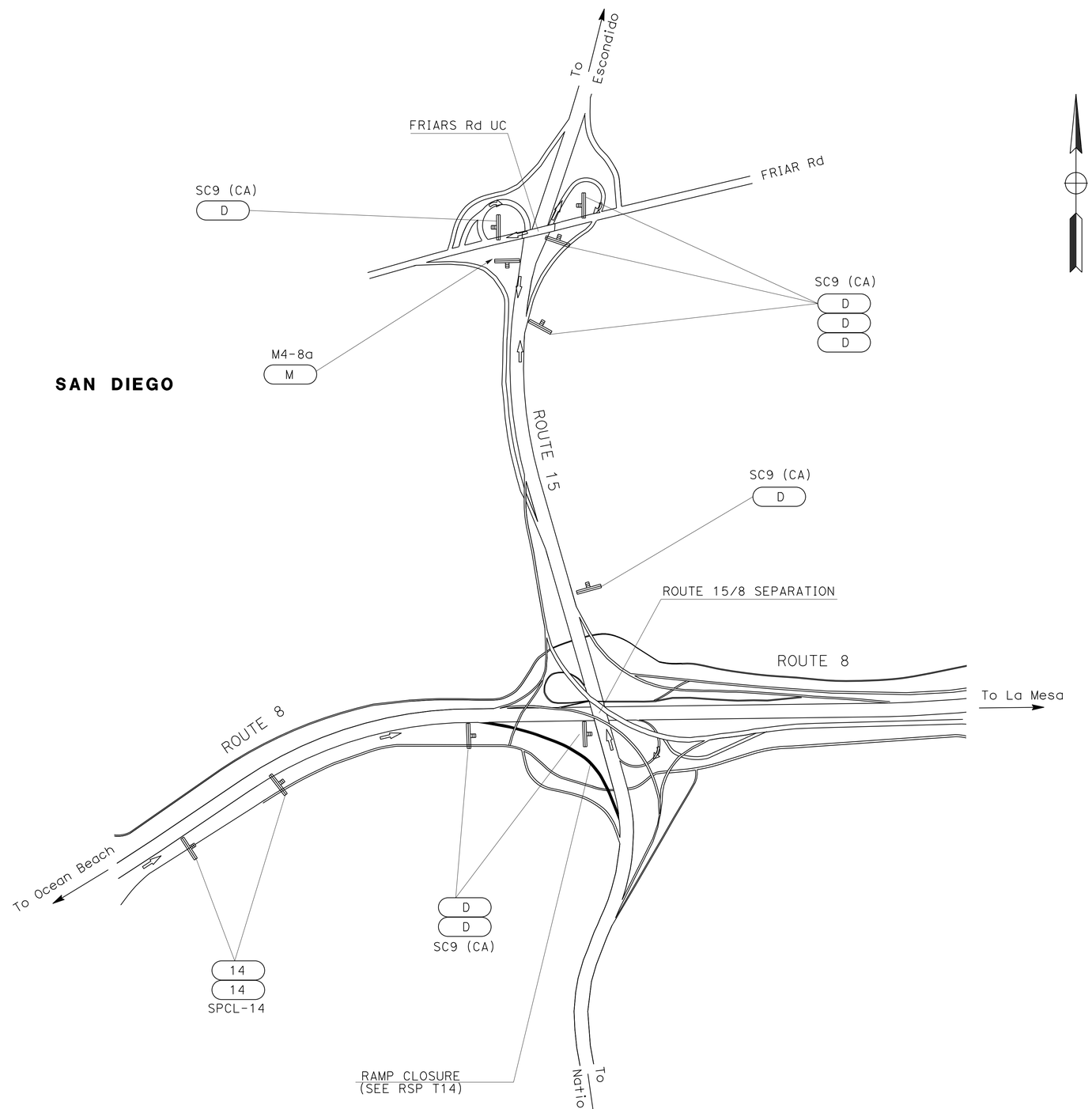

EB ROUTE 8 TO SB ROUTE 15

TRAFFIC HANDLING PLAN

NO SCALE

TH-40

APPROVED FOR TRAFFIC HANDLING WORK ONLY

STATE OF CALIFORNIA - DEPARTMENT OF TRANSPORTATION
Caltrans
TRAFFIC DESIGN

FUNCTIONAL SUPERVISOR: CAMILLE ABOUFADEL
CALCULATED-DESIGNED BY: PARVIS NAHAVANDIAN
CHECKED BY: NOEL TAPIA
REVISED BY
DATE REVISED

LAST REVISION 12-22-15
DATE PLOTTED => 12-JAN-2016
TIME PLOTTED => 16:09

Dist	COUNTY	ROUTE	POST MILES TOTAL PROJECT	SHEET No.	TOTAL SHEETS
11	SD	54,67,94 125,163,etc.	Var	121	231

REGISTERED CIVIL ENGINEER DATE 12-11-15

01-11-16
PLANS APPROVAL DATE

REGISTERED PROFESSIONAL ENGINEER NOEL TAPIA No. 81028 Exp. 09-30-17 CIVIL STATE OF CALIFORNIA

THE STATE OF CALIFORNIA OR ITS OFFICERS OR AGENTS SHALL NOT BE RESPONSIBLE FOR THE ACCURACY OR COMPLETENESS OF SCANNED COPIES OF THIS PLAN SHEET.

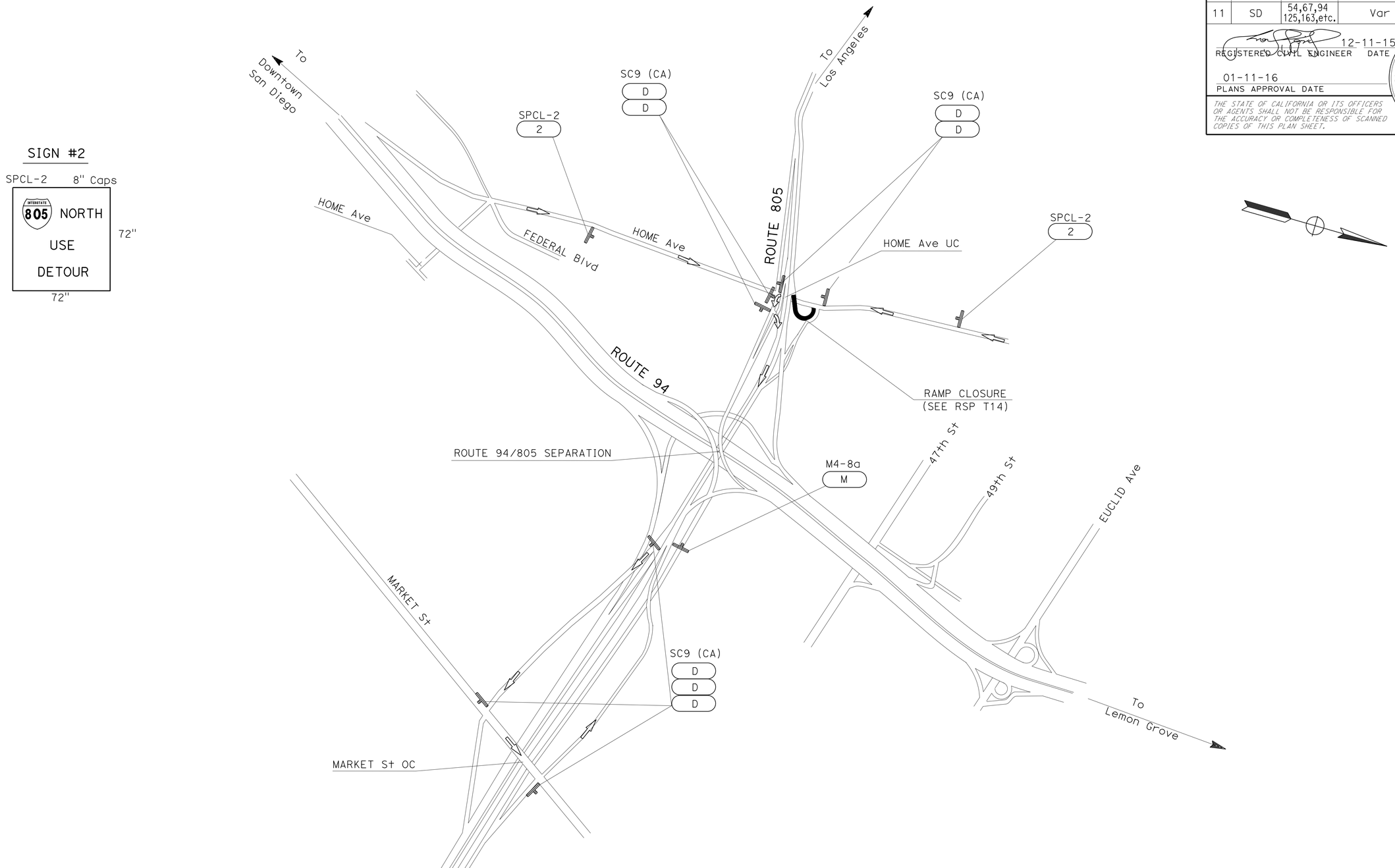

NB 805 ON-RAMP FROM HOME AVENUE

TRAFFIC HANDLING PLAN

NO SCALE

TH-41

APPROVED FOR TRAFFIC HANDLING WORK ONLY

STATE OF CALIFORNIA - DEPARTMENT OF TRANSPORTATION
Caltrans
TRAFFIC DESIGN

FUNCTIONAL SUPERVISOR: CAMILLE ABOUFADEL
CALCULATED-DESIGNED BY: PARVIS NAHAVANDIAN
CHECKED BY: NOEL TAPIA
REVISED BY
DATE REVISED

LAST REVISION 12-22-15
DATE PLOTTED => 12-JAN-2016
TIME PLOTTED => 16:09

Dist	COUNTY	ROUTE	POST MILES TOTAL PROJECT	SHEET No.	TOTAL SHEETS
11	SD	54,67,94 125,163,etc.	Var	122	231

REGISTERED CIVIL ENGINEER DATE 12-11-15

01-11-16
PLANS APPROVAL DATE

REGISTERED PROFESSIONAL ENGINEER
NOEL TAPIA
No. 81028
Exp. 09-30-17
CIVIL
STATE OF CALIFORNIA

THE STATE OF CALIFORNIA OR ITS OFFICERS OR AGENTS SHALL NOT BE RESPONSIBLE FOR THE ACCURACY OR COMPLETENESS OF SCANNED COPIES OF THIS PLAN SHEET.

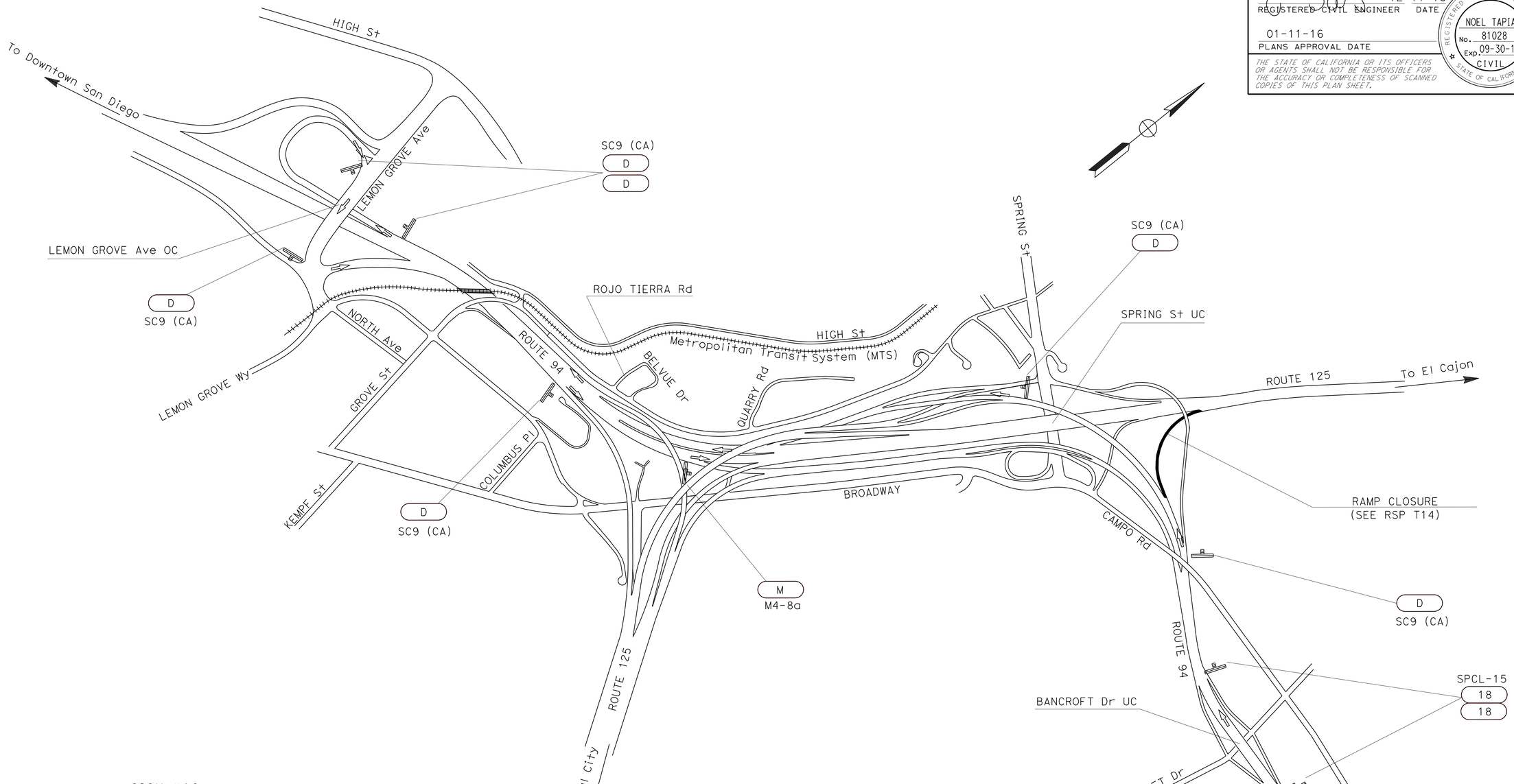

SIGN #18

SPCL-15 8" Caps

125 NORTH
USE
DETOUR

72" 72"

WB ROUTE 94 TO NB ROUTE 125

TRAFFIC HANDLING PLAN

NO SCALE

TH-42

APPROVED FOR TRAFFIC HANDLING WORK ONLY

STATE OF CALIFORNIA - DEPARTMENT OF TRANSPORTATION
Caltrans
TRAFFIC DESIGN

FUNCTIONAL SUPERVISOR: CAMILLE ABOUFADEL
CALCULATED-DESIGNED BY: PARVIS NAHAVANDIAN
CHECKED BY: NOEL TAPIA
REVISED BY
DATE REVISED

LAST REVISION 12-22-15
DATE PLOTTED => 12-JAN-2016
TIME PLOTTED => 16:09

Dist	COUNTY	ROUTE	POST MILES TOTAL PROJECT	SHEET No.	TOTAL SHEETS
11	SD	8,54,67,94, 125, etc.	Var	123	231

Manuel Reyes 12-11-15
REGISTERED CIVIL ENGINEER DATE

01-11-16
PLANS APPROVAL DATE

REGISTERED PROFESSIONAL ENGINEER MANUEL REYES No. 58621 Exp. 12-31-16 CIVIL STATE OF CALIFORNIA

THE STATE OF CALIFORNIA OR ITS OFFICERS OR AGENTS SHALL NOT BE RESPONSIBLE FOR THE ACCURACY OR COMPLETENESS OF SCANNED COPIES OF THIS PLAN SHEET.

TRAFFIC HANDLING QUANTITIES

Loc No.	ROUTE	LINE	SIDE OF ROAD IN DIRECTION OF TRAVEL	BEGIN Sta	END Sta	Temp RAILING (TYPE K) (LF)	Temp CRASH CUSHION MODULE (ARRAY 'TU21') (EA)	ALTERNATIVE Temp CRASH CUSHION (EA)	TRAFFIC PLASTIC DRUM (EA)
1	54	"R7RAMP1"	L+	502+00.00	509+00.00	700		1	6
		"SD-54"	R+	152+69.00	159+84.00	700		1	6
2	54	"R7RAMP1"	R+	501+75.00	502+95.00	120		1	6
3	54	"SD-54"	R+	173+10.00	177+10.00	400		1	6
4	54	"SD-54"	R+	191+66.00	195+46.00	380		1	6
5	54	"SD-54"	R+	219+94.00	222+74.00	280		1	6
6	54	"SD-54"	R+	261+10.00	262+70.00	160		1	6
7	54	"SD-54"	R+	304+10.00	305+70.00	160		1	6
9	67	"WG"	L+	62+40.00	63+40.00	100		2	3
10	94	"WN"	L+	746+90.00	747+90.00	100		1	6
11	94	"WS"	L+	752+30.00	753+30.00	100		1	6
12	94	"SD-94"	R+	336+20.00	338+40.00	220		1	6
13	94	"SD-94"	R+	338+55.00	339+95.00	140		1	6
14	94	"SD-94R"	R+	445+10.00	446+90.00	180		1	11
15	94	"SD-94"	R+	476+15.00	477+55.00	140		1	6
16	94	"SD-94"	R+	514+50.00	518+30.00	380		1	6
17	94	"SD-94"	R+	523+84.00	525+84.00	200		1	6
18	94	"SD-94R"	R+	612+10.00	618+10.00	600		1	6
19	94	"SD-94"	R+	619+08.00	620+68.00	160		1	6
20	94	"SD-94"	R+	653+80.00	655+80.00	200		1	6
21	94	"SD-94"	R+	657+75.00	659+75.00	200		1	6
22	94	"SD-94"	R+	681+57.00	682+77.00	120		1	6
24	125	"SD-125"	R+	768+30.00	778+10.00	980		1	6
26	163	"G-1"	R+	162+90.00	164+90.00	200		1	6
		"G-4"		318+80.00	320+20.00	140		1	6
27	163	"ES"	R+	155+90.00	156+90.00	100		1	6
28	163	"CB-3"	L+	1109+95.00	1110+95.00	100		1	6
29	163	"SD-163"	R+	378+20.00	379+80.00	160		1	6
30	163	"CB-2"	R+	1122+00.00	1124+00.00	200		1	6
31	805	"SD-805L"	L+	59+30.00	61+90.00	260		1	6
32	805	"SD-805R"	L+	60+80.00	65+60.00	480		1	6
33	805	"SD-805R"	R+	62+05.00	65+05.00	300		1	6
34	805	"SD-805L"	R+	67+80.00	69+80.00	200		1	6
35	805	"D-5A"	R+	133+90.00	135+30.00	140		1	6
36	805	"D-5A"	L+	133+70.00	136+50.00	280		1	6
		"SD-805"	R+	134+00.00	136+00.00	200		1	6
37	805	"SD-805"	R+	225+85.00	231+25.00	540		1	6
38	805	"SD-805"	R+	325+35.00	327+55.00	220		1	6
39	805	"R-11"	R+	501+44.00	503+44.00	200		1	6
40	805	"SW-6"	R+	508+68.00	509+48.00	80		1	6
41	805	"R2"	L+	515+40.00	517+60.00	220		1	6
42	805	"R2"	R+	515+70.00	517+70.00	200		1	6
43	805	"NW"	R+	734+29.00	736+09.00	180	21		6
		"NE"	R+	734+29.00	736+09.00	180			5
46	805	"R-5"	L+	947+30.00	950+30.00	300		1	6
47	805	"SD-805"	R+	991+70.00	995+10.00	340		1	6
48	805	"C-8"	R+	1213+75.00	1214+95.00	120		1	6
49	805	"S-1"	L+	1273+50.00	1274+70.00	120		1	6
50	905	"SD-905"	L+	296+10.00	299+30.00	320		1	6
51	905	"SD-905"	L+	300+80.00	304+40.00	360		1	6
52	905	"SD-905"	L+	315+55.00	319+15.00	360		1	6
53	905	"SD-905"	R+	315+55.00	316+95.00	140		1	6
54	905	"SD-905"	L+	310+30.00	313+90.00	360		1	6
55	905	"SD-905"	R+	312+50.00	313+90.00	140		1	6
56	905	"SD-905"	L+	348+95.00	352+35.00	340		1	6
57	905	"SD-905"	R+	348+10.00	352+30.00	420		1	6
	905	"D-3"	L+	107+30.00	111+10.00	380		1	6
58	905	"D-3"	R+	108+90.00	111+10.00	220		1	6
59	905	"SD-905"	R+	356+00.00	357+40.00	140		1	6
	905	"SD-905"	L+	356+00.00	357+80.00	180		1	6
60	905	"D-7"	R+	138+70.00	140+50.00	180		1	6
61	8	"ES"	L+	429+00.00	430+40.00	140		1	6
					TOTAL	15,860	21	61	373

CONSTRUCTION AREA SIGNS

SIGN No.	TYPE	PANEL SIZE (In)	No. OF POST AND SIZE (In)	No. OF SIGNS
1	SPCL-1	72 X 72	2-6 X 6 (s)	2
2	SPCL-2	72 X 72	2-6 X 6 (s)	8
3	SPCL-3	72 X 72	2-6 X 6 (s)	2
4	SPCL-4	72 X 72	2-6 X 6 (s)	2
5	SPCL-5	72 X 72	2-6 X 6 (s)	6
6	SPCL-6	72 X 72	2-6 X 6 (s)	4
7	SPCL-7	72 X 72	2-6 X 6 (s)	2
8	SPCL-8	72 X 72	2-6 X 6 (s)	1
9	SPCL-9	72 X 72	2-6 X 6 (s)	2
10	SPCL-10	72 X 72	2-6 X 6 (s)	2
11	SPCL-11	72 X 72	2-6 X 6 (s)	2
12	SPCL-12	72 X 72	2-6 X 6 (s)	2
13	SPCL-13	72 X 72	2-6 X 6 (s)	4
14	SPCL-14	72 X 72	2-6 X 6 (s)	2
15	C30A (CA)	48 X 48	1-4 X 6 (s)	61
16	W21-5bR/L	48 X 48	1-4 X 6 (s)	61
17	W21-5	48 X 48	1-4 X 6 (s)	61
18	SPCL-15	72 X 72	2-6 X 6 (s)	2
D	SC9 (CA)	36 X 36	PORTABLE	150
M	M4-8a	24 X 18	PORTABLE	21

NOTE: SEE CONSTRUCTION AREA SIGNS SHEET FOR ADDITIONAL CONSTRUCTION AREA SIGNS.
(S) = DENOTES STATIONARY MOUNTED SIGN.

TRAFFIC HANDLING QUANTITIES
THQ-1

STATE OF CALIFORNIA - DEPARTMENT OF TRANSPORTATION
Caltrans PROJECT DEVELOPMENT
TRAFFIC

FUNCTIONAL SUPERVISOR: RICHARD ESTRADA
CALCULATED-DESIGNED BY: VAN D. CALLANTA
CHECKED BY: MANUEL REYES
REVISED BY
DATE REVISED

LAST REVISION 12-22-15 | DATE PLOTTED => 12-JAN-2016 | TIME PLOTTED => 16:09

Dist	COUNTY	ROUTE	POST MILES TOTAL PROJECT	SHEET No.	TOTAL SHEETS
11	SD	8,54,67,94, 125, etc.	Var	124	231

Manuel Reyes 12-11-15
REGISTERED CIVIL ENGINEER DATE

01-11-16
PLANS APPROVAL DATE

REGISTERED PROFESSIONAL ENGINEER
MANUEL REYES
No. 58621
Exp. 12-31-16
CIVIL
STATE OF CALIFORNIA

THE STATE OF CALIFORNIA OR ITS OFFICERS OR AGENTS SHALL NOT BE RESPONSIBLE FOR THE ACCURACY OR COMPLETENESS OF SCANNED COPIES OF THIS PLAN SHEET.

TRAFFIC HANDLING PAVEMENT DELINEATION QUANTITIES

Loc No.	ROUTE	LINE	DETAIL No.	LOCATION FROM STATION	LOCATION TO STATION	REMOVE PAVEMENT MARKER (N)	REMOVE PAINTED TRAFFIC STRIPE	TEMPORARY PAVEMENT MARKER TYPE A	TEMPORARY PAVEMENT MARKER TYPE G	TEMPORARY PAVEMENT MARKER TYPE H	Temp TRAFFIC STRIPE (PAINT) (2-COAT)	REMARKS
						EA	LF	EA	EA	EA	LF	
1	54	"R7RAMP1"	25A	498+50.00	509+00.00	45	1,050			45	1,050	
			11/13	498+50.00	509+00.00	110	263	88	23		1,050	
			27B	498+50.00	503+60.00		510				510	
			36	503+60.00	507+60.00	18	800					
				503+60.00	507+20.00				16		360	
24	125	"SD-125"	25	770+70.00	781+00.00	23	1,030			23	1,030	
			11/13	770+70.00	781+00.00	218	515	172	46		2,060	
			27B	773+07.00	781+00.00		793				793	
26	163	"G-4"	25A	316+40.00	322+40.00	26	600			26	600	
			27B	316+40.00	322+40.00		600				600	
40	805	"SW-6"	27B	506+68.00	510+00.00		332				332	
			25A	506+68.00	510+15.00	15	347			15	347	
			36	510+15.00	511+40.00	6	250		6		125	
SUBTOTAL							7,090	260	91	109	8,857	
TOTAL							7,090	460			8,857	

(N) = NOT SEPARATE PAY ITEM, FOR INFORMATION ONLY.

TRAFFIC HANDLING QUANTITIES

THQ-2

STATE OF CALIFORNIA - DEPARTMENT OF TRANSPORTATION
Caltrans PROJECT DEVELOPMENT
TRAFFIC

FUNCTIONAL SUPERVISOR: RICHARD ESTRADA
CALCULATED-DESIGNED BY: VAN D. CALLANTA
CHECKED BY: MANUEL REYES
REVISED BY
DATE REVISED

LAST REVISION 12-22-15
DATE PLOTTED => 12-JAN-2016
TIME PLOTTED => 16:09

Dist	COUNTY	ROUTE	POST MILES TOTAL PROJECT	SHEET No.	TOTAL SHEETS
11	SD	8,54,67,94, 125, *etc.*	Var	125	231

REGISTERED CIVIL ENGINEER 12-11-15 DATE

01-11-16
PLANS APPROVAL DATE

REGISTERED PROFESSIONAL ENGINEER
NOEL TAPIA
No. 81028
Exp. 09-30-17
CIVIL
STATE OF CALIFORNIA

THE STATE OF CALIFORNIA OR ITS OFFICERS OR AGENTS SHALL NOT BE RESPONSIBLE FOR THE ACCURACY OR COMPLETENESS OF SCANNED COPIES OF THIS PLAN SHEET.

NOTE:

1. FOR ACCURATE RIGHT OF WAY DATA, CONTACT RIGHT OF WAY ENGINEERING AT THE DISTRICT OFFICE.

LEGEND:

BEGIN/END OF TRAFFIC STRIPE DETAIL

CHANGE OF TRAFFIC STRIPE DETAIL

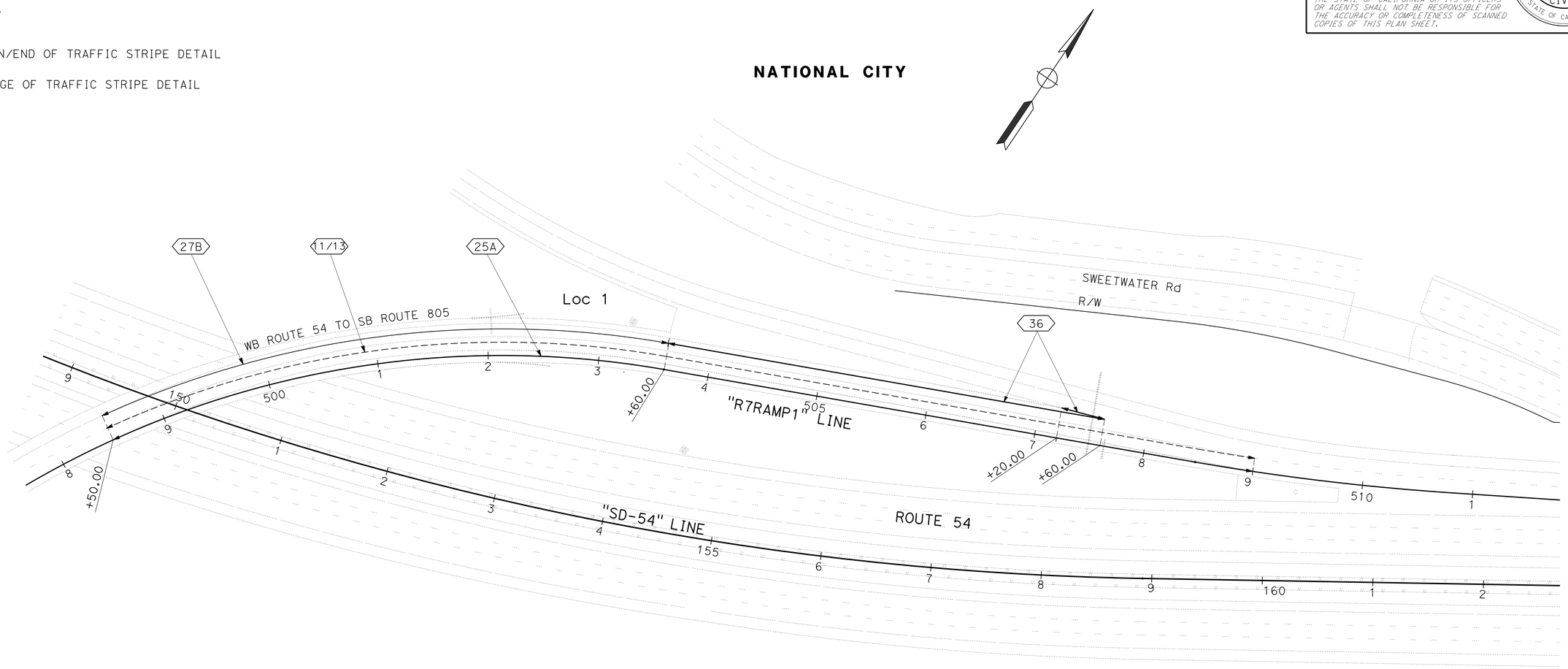

LOCATION 1

ROUTE 54 PM 1.93

PAVEMENT DELINEATION PLAN

SCALE: 1" = 50'

PD-1

APPROVED FOR PAVEMENT DELINEATION WORK ONLY

STATE OF CALIFORNIA - DEPARTMENT OF TRANSPORTATION
Caltrans
TRAFFIC DESIGN

FUNCTIONAL SUPERVISOR: CAMILLE ABOUFADEL
CALCULATED-DESIGNED BY: IRAM SYED
CHECKED BY: NOEL TAPIA
REVISED BY
DATE REVISED

LAST REVISION 12-22-15
DATE PLOTTED => 12-JAN-2016
TIME PLOTTED => 16:09

Dist	COUNTY	ROUTE	POST MILES TOTAL PROJECT	SHEET No.	TOTAL SHEETS
11	SD	8,54,67,94, 125, *etc.*	Var	126	231

REGISTERED CIVIL ENGINEER 12-11-15 DATE

01-11-16
PLANS APPROVAL DATE

REGISTERED PROFESSIONAL ENGINEER
NOEL TAPIA
No. 81028
Exp. 09-30-17
CIVIL
STATE OF CALIFORNIA

THE STATE OF CALIFORNIA OR ITS OFFICERS OR AGENTS SHALL NOT BE RESPONSIBLE FOR THE ACCURACY OR COMPLETENESS OF SCANNED COPIES OF THIS PLAN SHEET.

NOTE:

1. FOR ACCURATE RIGHT OF WAY DATA, CONTACT RIGHT OF WAY ENGINEERING AT THE DISTRICT OFFICE.

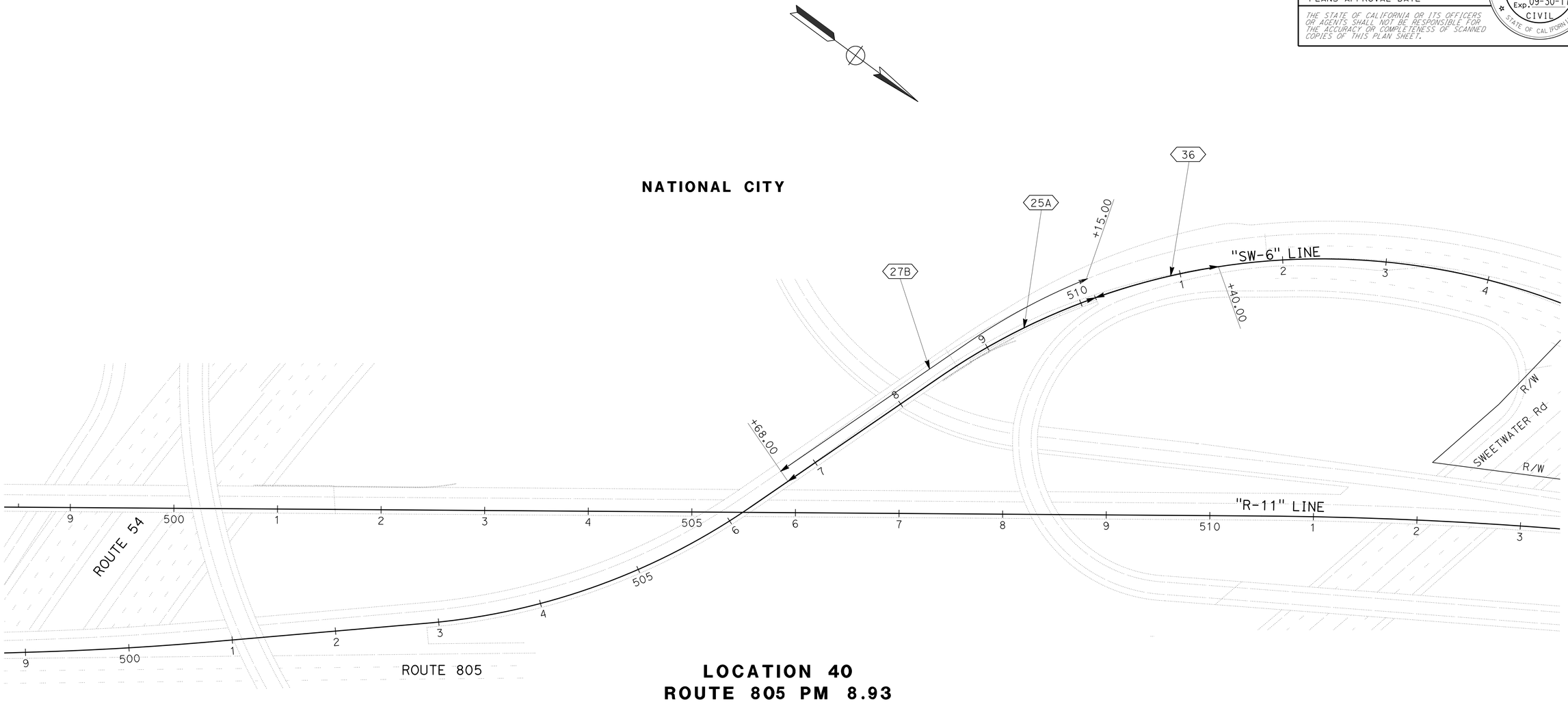

LOCATION 40
ROUTE 805 PM 8.93

APPROVED FOR PAVEMENT DELINEATION WORK ONLY

PAVEMENT DELINEATION PLAN

SCALE: 1" = 50'

PD-2

STATE OF CALIFORNIA - DEPARTMENT OF TRANSPORTATION
Caltrans® **TRAFFIC DESIGN**

FUNCTIONAL SUPERVISOR: CAMILLE ABOUFADEL

CALCULATED-DESIGNED BY: IRAM SYED
CHECKED BY: NOEL TAPIA

REVISED BY
DATE REVISED

LAST REVISION 12-22-15
DATE PLOTTED => 12-JAN-2016
TIME PLOTTED => 16:10

Dist	COUNTY	ROUTE	POST MILES TOTAL PROJECT	SHEET No.	TOTAL SHEETS
11	SD	8,54,67,94, 125, *etc.*	Var	127	231

12-11-15
REGISTERED CIVIL ENGINEER DATE

01-11-16
PLANS APPROVAL DATE

REGISTERED PROFESSIONAL ENGINEER
NOEL TAPIA
No. 81028
Exp 09-30-17
CIVIL
STATE OF CALIFORNIA

THE STATE OF CALIFORNIA OR ITS OFFICERS OR AGENTS SHALL NOT BE RESPONSIBLE FOR THE ACCURACY OR COMPLETENESS OF SCANNED COPIES OF THIS PLAN SHEET.

NOTE:

1. FOR ACCURATE RIGHT OF WAY DATA, CONTACT RIGHT OF WAY ENGINEERING AT THE DISTRICT OFFICE.

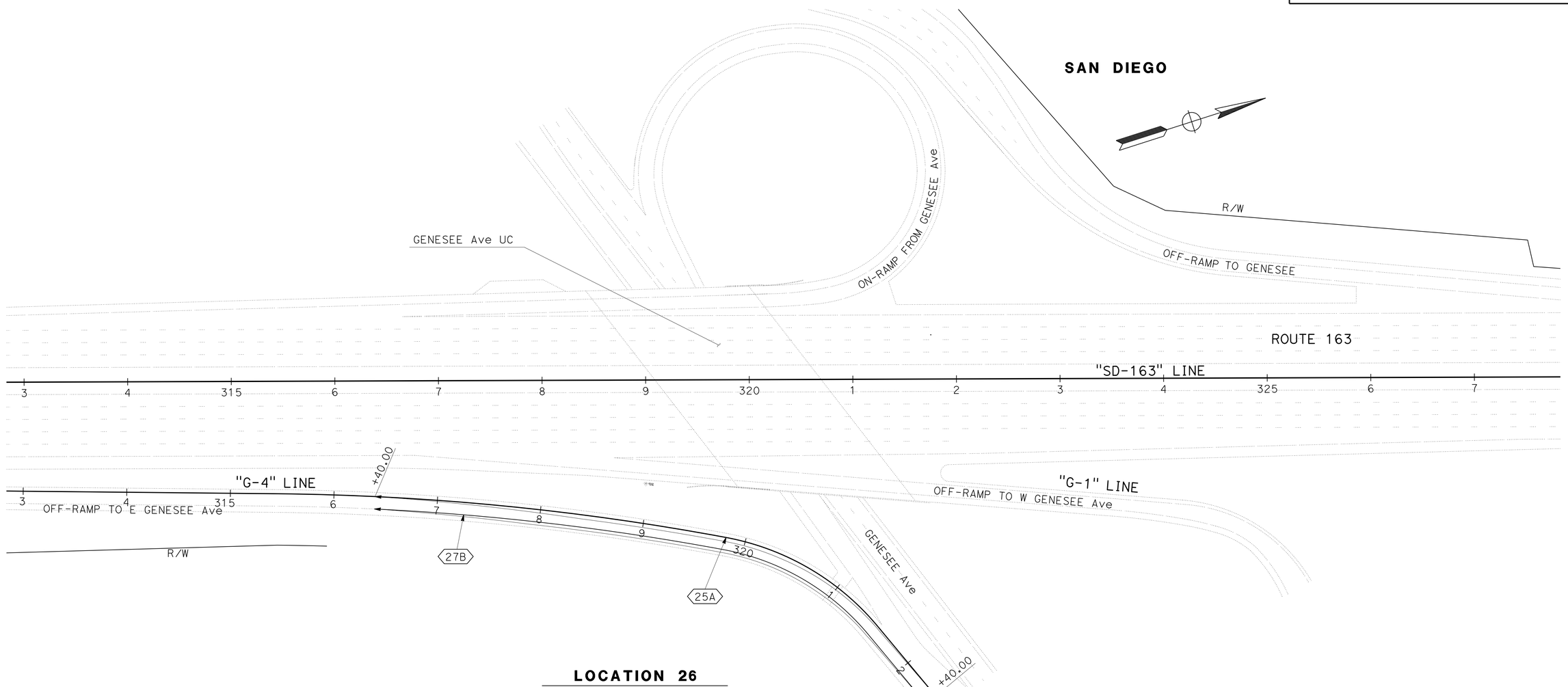

LOCATION 26
ROUTE 163 PM 5.79

APPROVED FOR PAVEMENT DELINEATION WORK ONLY

PAVEMENT DELINEATION PLAN

SCALE: 1" = 50'

PD-3

REVISED BY	DATE REVISED

CALCULATED-DESIGNED BY	CHECKED BY
IRAM SYED	NOEL TAPIA

FUNCTIONAL SUPERVISOR: CAMILLE ABOUFADEL

STATE OF CALIFORNIA - DEPARTMENT OF TRANSPORTATION
Caltrans
TRAFFIC DESIGN

LAST REVISION 12-23-15 | DATE PLOTTED => 12-JAN-2016 | TIME PLOTTED => 16:10

Dist	COUNTY	ROUTE	POST MILES TOTAL PROJECT	SHEET No.	TOTAL SHEETS
11	SD	8,54,67,94, 125, *etc.*	Var	128	231

REGISTERED CIVIL ENGINEER 12-11-15 DATE

01-11-16
PLANS APPROVAL DATE

REGISTERED PROFESSIONAL ENGINEER
NOEL TAPIA
No. 81028
Exp. 09-30-17
CIVIL
STATE OF CALIFORNIA

THE STATE OF CALIFORNIA OR ITS OFFICERS OR AGENTS SHALL NOT BE RESPONSIBLE FOR THE ACCURACY OR COMPLETENESS OF SCANNED COPIES OF THIS PLAN SHEET.

NOTE:

1. FOR ACCURATE RIGHT OF WAY DATA, CONTACT RIGHT OF WAY ENGINEERING AT THE DISTRICT OFFICE.

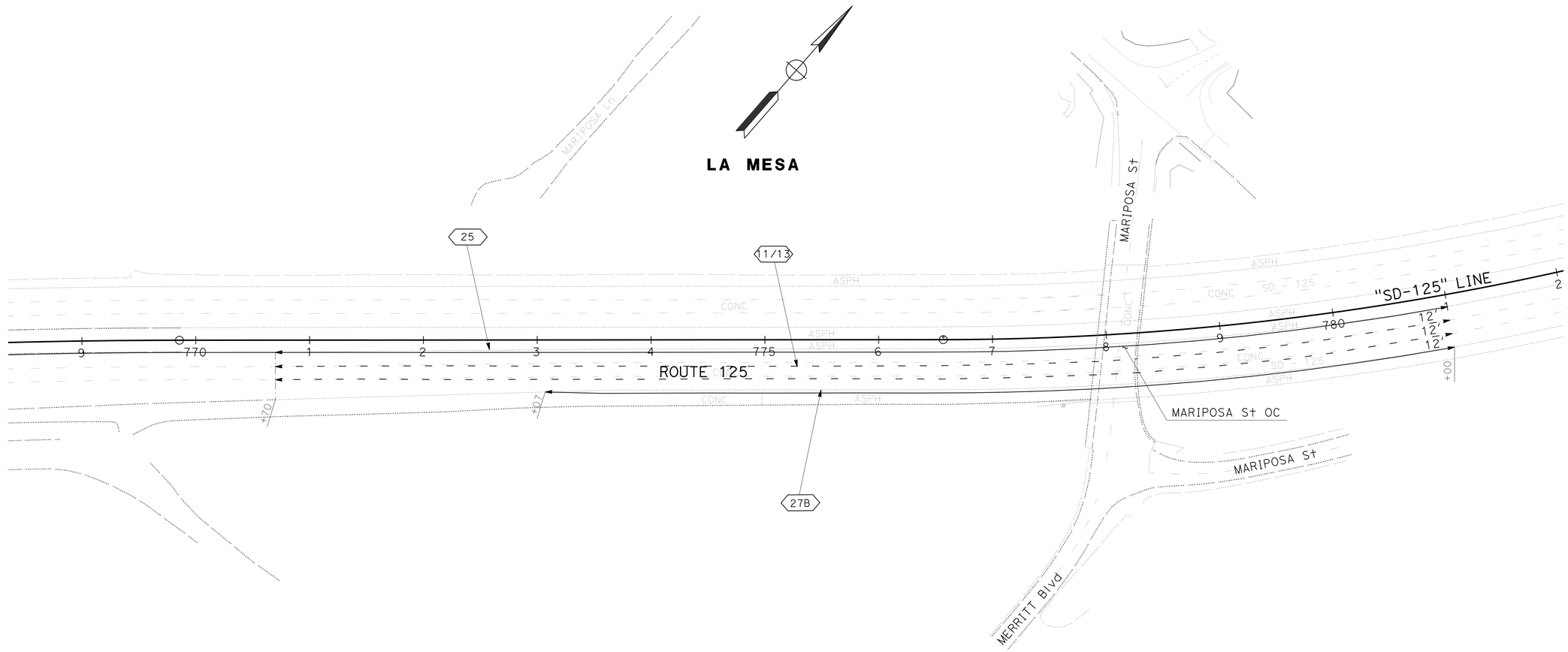

LOCATION 24
ROUTE 125 PM 14.12

APPROVED FOR PAVEMENT DELINEATION WORK ONLY

PAVEMENT DELINEATION PLAN

SCALE: 1" = 50'

PD-4

REVISED BY	DATE REVISED

CALCULATED-DESIGNED BY	CHECKED BY
IRAM SYED	NOEL TAPIA

FUNCTIONAL SUPERVISOR: CAMILLE ABOUFADEL

STATE OF CALIFORNIA - DEPARTMENT OF TRANSPORTATION
Caltrans
TRAFFIC DESIGN

LAST REVISION 12-23-15
DATE PLOTTED => 12-JAN-2016
TIME PLOTTED => 16:10

Dist	COUNTY	ROUTE	POST MILES TOTAL PROJECT	SHEET No.	TOTAL SHEETS
11	SD	8,54,67,94, 125, *etc.*	Var	129	231

12-11-15
REGISTERED CIVIL ENGINEER DATE

01-11-16
PLANS APPROVAL DATE

REGISTERED PROFESSIONAL ENGINEER
NOEL TAPIA
No. 81028
Exp. 09-30-17
CIVIL
STATE OF CALIFORNIA

THE STATE OF CALIFORNIA OR ITS OFFICERS OR AGENTS SHALL NOT BE RESPONSIBLE FOR THE ACCURACY OR COMPLETENESS OF SCANNED COPIES OF THIS PLAN SHEET.

DETAIL 25A Mod

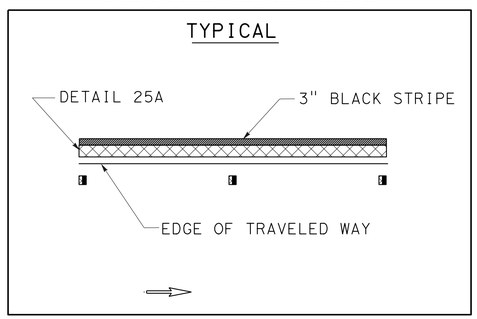

DETAIL 27B Mod

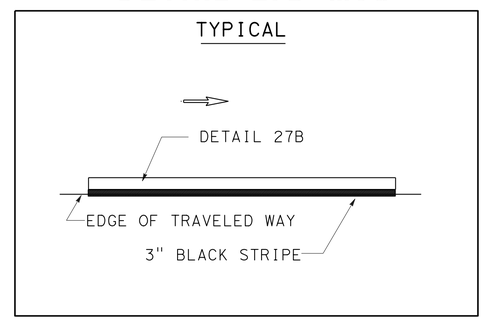

PAVEMENT DELINEATION DETAIL

NO SCALE

PDD-1

STATE OF CALIFORNIA - DEPARTMENT OF TRANSPORTATION
Caltrans
TRAFFIC DESIGN

FUNCTIONAL SUPERVISOR: CAMILLE ABOUFADEL
CALCULATED-DESIGNED BY: IRAM SYED
CHECKED BY: NOEL TAPIA
REVISED BY
DATE REVISED

LAST REVISION 12-23-15
DATE PLOTTED => 12-JAN-2016
TIME PLOTTED => 16:10

Dist	COUNTY	ROUTE	POST MILES TOTAL PROJECT	SHEET No.	TOTAL SHEETS
11	SD	8,54,67,94 125,163,etc.	Var	130	231

REGISTERED CIVIL ENGINEER 12-11-15 DATE

01-11-16
PLANS APPROVAL DATE

REGISTERED PROFESSIONAL ENGINEER
NOEL TAPIA
No. 81028
Exp. 09-30-17
CIVIL
STATE OF CALIFORNIA

THE STATE OF CALIFORNIA OR ITS OFFICERS OR AGENTS SHALL NOT BE RESPONSIBLE FOR THE ACCURACY OR COMPLETENESS OF SCANNED COPIES OF THIS PLAN SHEET.

NOTES:

1. ALL PAVEMENT DELINEATION SHALL BE REPLACED IN KIND UNLESS INDICATED OTHERWISE.
2. ALL PAVEMENT DELINEATION SHALL BE REPLACED WITH THERMOPLASTIC (ENHANCED WET NIGHT VISIBILITY) TRAFFIC STRIPE.

PAVEMENT DELINEATION QUANTITIES

LOCATION					PAVEMENT MARKER			TRAFFIC STRIPE				REMARKS
LOCATION	LINE	FROM STATION	TO STATION	DETAIL	NON-REFLECTIVE (EA)	RETROREFLECTIVE (EA)		PAINT (LF)	THERMOPLASTIC (LF) (ENHANCED WET NIGHT VISIBILITY)			
					TYPE A	TYPE G	TYPE H	(1-COAT)	4" SOLID	4" BROKEN	8" SOLID	
					WHITE	CLEAR	YELLOW			(36-12)		
Loc 1	"R7RAMP1"	498+50.00	509+00.00	25A			45		1,050			
Loc 1	"R7RAMP1"	498+50.00	509+00.00	11/13	88	23				1,050		
Loc 1	"R7RAMP1"	498+50.00	503+60.00	27B					510			
Loc 1	"R7RAMP1"	503+60.00	507+20.00	36		18					440	
Loc 4	"SD-54"	192+10.00			1							AT IRRIGATION CROSSOVER
Loc 20	"SD-94"	654+07.00	655+72.00	27B					165			
Loc 20	"SD-94"	654+90.00			1							AT IRRIGATION CROSSOVER
Loc 21	"SD-94"	657+95.00	659+37.00	27B					142			
Loc 21	"SD-94"	658+60.00			1							AT IRRIGATION CROSSOVER
Loc 24	"SD-125"	770+70.00	781+00.00	25			23		1,030			
Loc 24	"SD-125"	770+70.00	781+00.00	11/13	172	46				2,060		
Loc 24	"SD-125"	773+07.00	781+00.00	27B					793			
Loc 26	"G-4"	316+40.00	322+40.00	27B					600			
Loc 26	"G-4"	316+40.00	322+40.00	25A			26		600			
Loc 31	"SD-805L"	59+39.00	59+65.00	25A			3		26			
Loc 37	"SD-805"	226+10.00			1							AT IRRIGATION CROSSOVER
Loc 37	"SD-805"	226+14.00	231+42.00	27B					528			
Loc 43	"NW"	735+46.00	735+97.00	36		7					204	
Loc 40	"SW-6"	506+68.00	510+15.00	27B					347			
Loc 40	"SW-6"	506+68.00	510+15.00	25A			16		347			
Loc 40	"SW-6"	510+15.00	511+40.00	36		9					340	
Loc 44	"H-1"	766+95.00			1							AT IRRIGATION CROSSOVER
Loc 44	"H-1"	767+12.00	767+84.00	27B					72			
Loc 48	"C-8"	1213+85.00	1214+55.00	27B					70			
Loc 59	"SD-905"	356+10.00	357+69.00	25A Mod			8	159	159			
Loc 59	"SD-905"	356+10.00	357+69.00	27B Mod				159	159			
Loc 61	"ES"	429+43.00	430+28.00	25A Mod			5	85	85			
				SUBTOTAL	265	103	126	403	6,683	3,110	984	
				TOTAL	265	229		403	6,683	3,110	984	

STATE OF CALIFORNIA - DEPARTMENT OF TRANSPORTATION
Caltrans
TRAFFIC DESIGN

FUNCTIONAL SUPERVISOR: CAMILLE ABOUFADEL
CALCULATED-DESIGNED BY: MARY BETH HAYES
CHECKED BY: NOEL TAPIA
REVISED BY
DATE REVISED

PAVEMENT DELINEATION QUANTITIES

PDQ-1

LAST REVISION 12-23-15
DATE PLOTTED => 12-JAN-2016
TIME PLOTTED => 16:10

Dist	COUNTY	ROUTE	POST MILES TOTAL PROJECT	SHEET No.	TOTAL SHEETS
11	SD	8,54,67,94 125,163,etc.	Var	131	231

REGISTERED CIVIL ENGINEER 12-11-15 DATE

01-11-16
PLANS APPROVAL DATE

REGISTERED PROFESSIONAL ENGINEER NOEL TAPIA No. 81028 Exp. 09-30-17 CIVIL STATE OF CALIFORNIA

THE STATE OF CALIFORNIA OR ITS OFFICERS OR AGENTS SHALL NOT BE RESPONSIBLE FOR THE ACCURACY OR COMPLETENESS OF SCANNED COPIES OF THIS PLAN SHEET.

LEGEND:

U/L = UPPER/LOWER CASE LETTERING
Caps = CAPITAL LETTERING
Num = NUMERAL SIZE
Deg = DEGREE

SIGN #6
G86 (CA)

LEGEND				ARROW	
LINE No.	U/L	Caps	Num	Deg	LENGTH
1	8/6E(M)				
2		6E			

SIGN #11
G83 (CA)

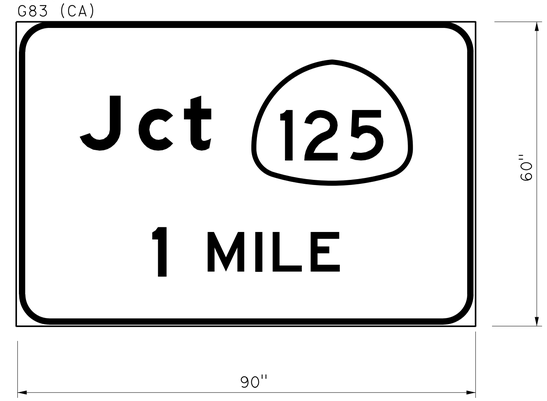

LEGEND				ARROW	
LINE No.	U/L	Caps	Num	Deg	LENGTH
1	10.67/8E(M)		10E		
2		8E	10E		

SIGN #14
G86 (CA)

LEGEND				ARROW	
LINE No.	U/L	Caps	Num	Deg	LENGTH
1	5E		8E		
2,3	10.67/8E(M)				
4		8E			

SIGN #15
G83 (CA)

LEGEND				ARROW	
LINE No.	U/L	Caps	Num	Deg	LENGTH
1		6E	10E		
2,3	13.3/10E(M)				
4		10E	10E		

NO SCALE

SIGN DETAILS
SD-1

STATE OF CALIFORNIA - DEPARTMENT OF TRANSPORTATION
Caltrans
TRAFFIC DESIGN

FUNCTIONAL SUPERVISOR: CAMILLE ABOUFADEL
CALCULATED-DESIGNED BY: MARY BETH HAYES
CHECKED BY: NOEL TAPIA
REVISED BY
DATE REVISED

LAST REVISION 12-23-15
DATE PLOTTED => 12-JAN-2016
TIME PLOTTED => 16:10

Dist	COUNTY	ROUTE	POST MILES TOTAL PROJECT	SHEET No.	TOTAL SHEETS
11	SD	8,54,67,94 125,163,etc.	Var	132	231

REGISTERED CIVIL ENGINEER 12-11-15 DATE

01-11-16
PLANS APPROVAL DATE

REGISTERED PROFESSIONAL ENGINEER NOEL TAPIA No. 81028 Exp. 09-30-17 CIVIL STATE OF CALIFORNIA

THE STATE OF CALIFORNIA OR ITS OFFICERS OR AGENTS SHALL NOT BE RESPONSIBLE FOR THE ACCURACY OR COMPLETENESS OF SCANNED COPIES OF THIS PLAN SHEET.

SIGN #18
G83 (CA)

G70-2 (CA)

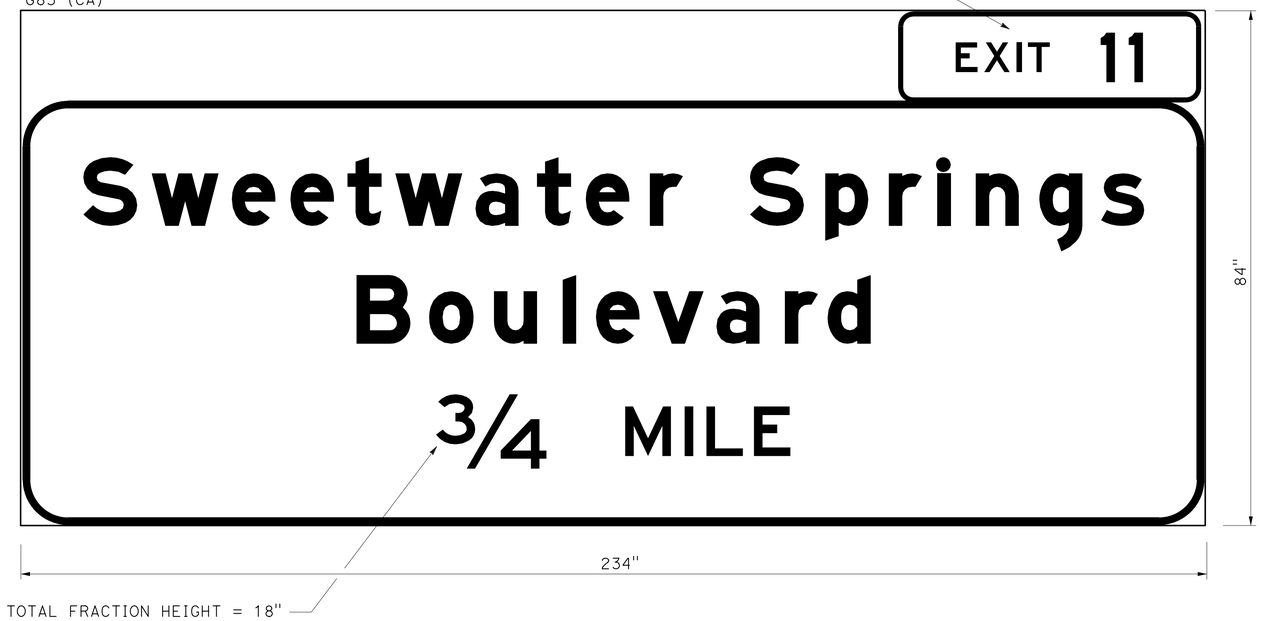

LEGEND				ARROW	
LINE No.	U/L	Caps	Num	Deg	LENGTH
1		6E	10E		
2	13.3/10E(M)				
3		10E			
4		10E	10E		

SIGN #17
G83 (CA)

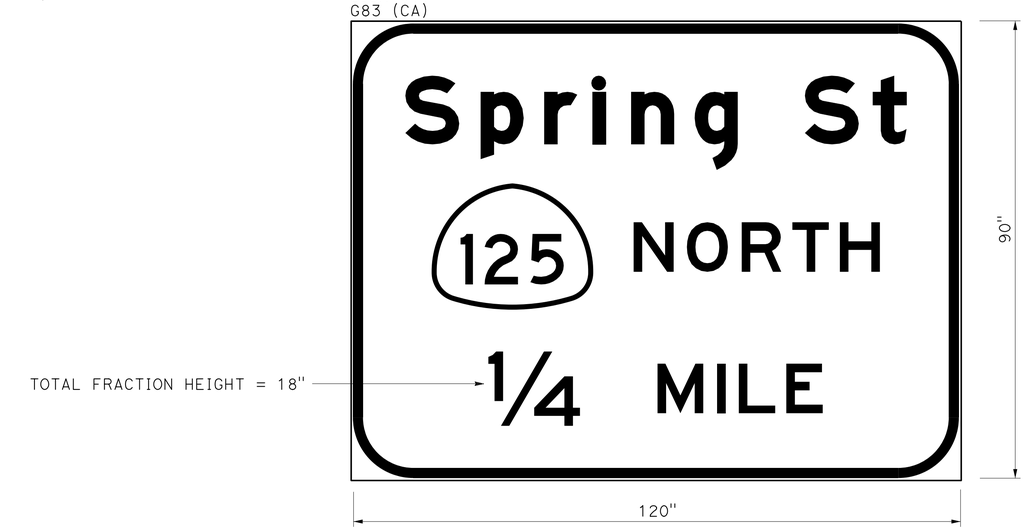

LEGEND				ARROW	
LINE No.	U/L	Caps	Num	Deg	LENGTH
1	13.3/10E(M)				
2		10E	10E		
3		10E	10E		

SIGN DETAILS

NO SCALE

SD-2

STATE OF CALIFORNIA - DEPARTMENT OF TRANSPORTATION
Caltrans
TRAFFIC DESIGN

FUNCTIONAL SUPERVISOR: CAMILLE ABOUFADEL
CALCULATED-DESIGNED BY: MARY BETH HAYES
CHECKED BY: NOEL TAPIA
REVISED BY
DATE REVISED

LAST REVISION 12-23-15
DATE PLOTTED => 12-JAN-2016
TIME PLOTTED => 16:10

Dist	COUNTY	ROUTE	POST MILES TOTAL PROJECT	SHEET No.	TOTAL SHEETS
11	SD	8,54,67,94 125,163,etc.	Var	133	231

REGISTERED CIVIL ENGINEER 12-11-15 DATE

01-11-16
PLANS APPROVAL DATE

REGISTERED PROFESSIONAL ENGINEER
NOEL TAPIA
No. 81028
Exp. 09-30-17
CIVIL
STATE OF CALIFORNIA

THE STATE OF CALIFORNIA OR ITS OFFICERS OR AGENTS SHALL NOT BE RESPONSIBLE FOR THE ACCURACY OR COMPLETENESS OF SCANNED COPIES OF THIS PLAN SHEET.

SIGN #19
G23 (CA)

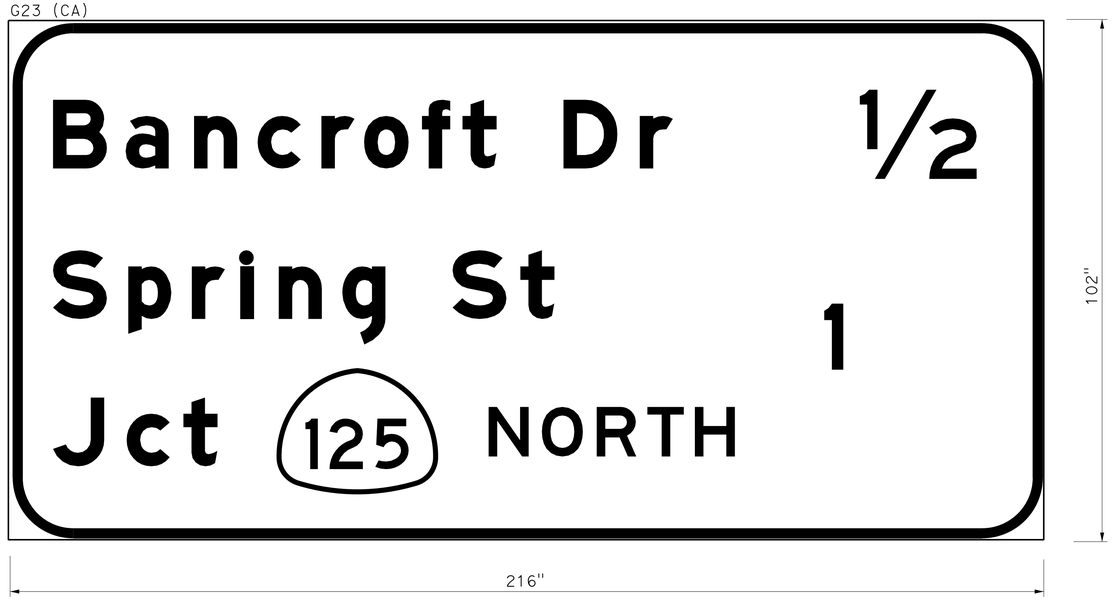

LEGEND				ARROW	
LINE No.	U/L	Caps	Num	Deg	LENGTH
1	13.3/10E(M)				
2	13.3/10E(M)				
3	13.3/10E(M)	10E	10E		

SIGN #23
G77 (CA)

LEGEND				ARROW	
LINE No.	U/L	Caps	Num	Deg	LENGTH
1		8E	10E	180	17
2	10.67/8E(M)				
3	10.67/8E(M)				
4		8E	10E	360	17

SIGN DETAILS

NO SCALE

SD-3

STATE OF CALIFORNIA - DEPARTMENT OF TRANSPORTATION
Caltrans
TRAFFIC DESIGN

FUNCTIONAL SUPERVISOR: CAMILLE ABOUFADEL
CALCULATED-DESIGNED BY: MARY BETH HAYES
CHECKED BY: NOEL TAPIA
REVISED BY
DATE REVISED

LAST REVISION 08-03-15
DATE PLOTTED => 12-JAN-2016
TIME PLOTTED => 16:10

Dist	COUNTY	ROUTE	POST MILES TOTAL PROJECT	SHEET No.	TOTAL SHEETS
11	SD	8,54,67,94 125,163,etc.	Var	134	231

REGISTERED CIVIL ENGINEER 12-11-15 DATE

01-11-16
PLANS APPROVAL DATE

REGISTERED PROFESSIONAL ENGINEER NOEL TAPIA No. 81028 Exp. 09-30-17 CIVIL STATE OF CALIFORNIA

THE STATE OF CALIFORNIA OR ITS OFFICERS OR AGENTS SHALL NOT BE RESPONSIBLE FOR THE ACCURACY OR COMPLETENESS OF SCANNED COPIES OF THIS PLAN SHEET.

NOTES:

1. FEDERAL MANUAL ON UNIFORM TRAFFIC CONTROL DEVICES (MUTCD) SIGN CODES ARE SHOWN UNLESS DESIGNATED BY (CA) INDICATING STANDARD CALIFORNIA SIGN SPECIFICATIONS.
2. EXACT LOCATION OF SIGNS AND POSTS TO BE DETERMINED BY THE ENGINEER.
3. "C" DIM - VERTICAL CLEARANCE EP TO BOTTOM OF SIGN PANEL. MINIMUM POST LENGTHS WERE CALCULATED ASSUMING LEVEL GROUND SURFACE FROM THE EP. ENSURE "C" DIMENSIONS ARE MET. POST LENGTHS MAY VARY DUE TO SITE CONDITIONS.
4. REFER TO "FURNISH ROADSIDE SIGN PANEL" CHART FOR FURTHER INFORMATION.

ROADSIDE SIGN QUANTITIES

SIGN No.	CODE	LOCATION No.	PANEL SIZE Horiz	PANEL SIZE Vert	"C" DIM	POST SIZE 4X6	POST SIZE 6X8	ROADSIDE SIGN ONE POST	ROADSIDE SIGN TWO POST	REMOVE ROADSIDE SIGN	INSTALL SIGN (STRAP & SADDLE BRACKET METHOD)	RESET ROADSIDE SIGN	TREATED WOOD WASTE	INSTALL ROADSIDE SIGN PANEL ON EXISTING POST	REMARKS
			INCHES	X INCHES	FT	INCHES	X INCHES	EA	EA	EA	EA	EA	LB	EA	
1	W4-2R	2	48	X 48	7.0									1	
2	M3-4	4	30	X 15							1				
	G28-2 (54) (CA)		30	X 31	7.0						1				STRAP AND SADDLE ON LUMINAIRE
3	W3-3	9	36	X 36	7.0									1	
4	R3-1		30	X 30	7.0									1	
5	R6-1L	9	36	X 12										1	BACK TO BACK
	R6-1R		36	X 12	1.5									1	BACK TO BACK
6	G86 (CA)	10	78	X 30	7.0									1	
7	W12-1	11	48	X 48	7.0									1	
8	W1-2L	11	36	X 36										1	
	W13-1P (50)		30	X 30	6.0									1	
9	W1-2L	11	36	X 36										1	
	W13-1P (50)		30	X 30	6.0									1	
10	G84-2 (6) (CA)	14	54	X 48	7.0									1	
11	G83 (CA)	15	90	X 60	7.0									1	
12	W12-2 (15'4")	16	48	X 48	7.0									1	
13	M3-4	17	30	X 15										1	
	G28-2 (94) (CA)		30	X 31	7.0									1	
14	G86 (CA)	17	126	X 78	7.0									1	
15	G83 (CA)	18	150	X 96	7.0									1	
16	G83 (CA)	19								1			200		
17	G83 (CA)	19	120	X 90	7.0		X		1						INSTALL EAST ~100'
18	G83 (CA)	20	234	X 84	7.0									1	
19	G23 (CA)	21	216	X 102	7.0									1	
20	W13-2 (25)	26	36	X 48	7.0						1				
21	G81-66 (CA)	29	48	X 48	7.0						1				
22	G77 (CA)	43								1			80		
23	G77 (CA)		120	X 120	7.0		X		1						
24	R91-2 (CA)	43										1			
25	R3-7 (Mod)	47										1			
26	R6-1L (CA)	48										1			
27	R2-1 (65)	53	36	X 48										1	
	R48-1 (CA)		36	X 18	7.0									1	
28	W74 (CA)	58								1			80		
29	W74 (CA)		48	X 48	7.0	X		1							
30	W1-1 (R)	60	36	X 36											
	W13-1P (25)		30	X 30	6.0									1	
							TOTAL	1	2	3	4	3	* 360	23	

NOTE: * - SEE SUMMARY OF QUANTITIES SHEET FOR ADDITIONAL TREATED WOOD WASTE QUANTITY

SIGN QUANTITIES

SQ-1

STATE OF CALIFORNIA - DEPARTMENT OF TRANSPORTATION
Caltrans
TRAFFIC DESIGN

FUNCTIONAL SUPERVISOR: CAMILLE ABOUFADEL
CALCULATED-DESIGNED BY: MARY BETH HAYES
CHECKED BY: NOEL TAPIA
REVISED BY
DATE REVISED

LAST REVISION 12-23-15
DATE PLOTTED => 12-JAN-2016
TIME PLOTTED => 16:10

Dist	COUNTY	ROUTE	POST MILES TOTAL PROJECT	SHEET No.	TOTAL SHEETS
11	SD	8,54,67,94 125,163,etc.	Var	135	231

REGISTERED CIVIL ENGINEER 12-11-15 DATE

01-11-16
PLANS APPROVAL DATE

REGISTERED PROFESSIONAL ENGINEER NOEL TAPIA No. 81028 Exp. 09-30-17 CIVIL STATE OF CALIFORNIA

THE STATE OF CALIFORNIA OR ITS OFFICERS OR AGENTS SHALL NOT BE RESPONSIBLE FOR THE ACCURACY OR COMPLETENESS OF SCANNED COPIES OF THIS PLAN SHEET.

NOTES:

1. GREEN-Grn, WHITE-Wht, BLACK-Blk, BLUE-Blu, YELLOW-Ylw, BROWN-Brn, RED-Red, ORANGE-Org, CREAM-Crm, FY-FLOURESCENT YELLOW.
2. REFER TO "ROADSIDE SIGN QUANTITIES" CHART FOR FURTHER INFORMATION.
3. FEDERAL (MUTCD) SIGN CODES ARE SHOWN UNLESS DESIGNATED BY (CA) INDICATING STANDARD CALIFORNIA SIGN SPECIFICATIONS.

FURNISH ROADSIDE SIGN PANEL

SIGN No.	CODE	PANEL SIZE Horiz	PANEL SIZE Vert	BACKGROUND SHEETING COLOR	BACKGROUND RETRO-REFLECTIVE ASTM TYPE	LEGEND SHEETING COLOR	LEGEND REFLECTIVE ASTM TYPE	LEGEND BLACK(NON-REFLECTIVE)	SIGN PANEL RETROREFLECTIVE SHEETING (TYPE XI) (SQFT)	FURNISH SINGLE SHEET ALUMINUM SIGN FOR RETROREFLECTIVE SHEETING (TYPE XI) (SQFT) UNFRAMED 0.063 INCHES	UNFRAMED 0.080 INCHES	FRAMED 0.080 INCHES	FURNISH LAMINATED PANEL SIGN FOR RETROREFLECTIVE SHEETING (TYPE XI) (SQFT) TYPE B 1 INCH	TYPE H 2.5 INCH	PROTECTIVE OVERLAY PREMIUM FILM
		INCHES X INCHES							(SQFT)						
1	W4-2R	48 X 48		FY	XI	Blk	XI	X	16.00		16.00				X
2	M3-4	30 X 15		Grn	XI	Wht	XI		3.12	3.12					X
	G28-2 (54) (CA)	30 X 31		Grn	XI	Wht	XI		6.45	6.45					X
3	W3-3	36 X 36		FY	XI	Ylw,Red,Grn,Blk	XI	X	9.00	9.00					X
4	R3-1	30 X 30		Wht	XI	Red/Blk	XI	X	6.25	6.25					X
5	R6-1L	36 X 12		Blk	XI	Blk/Wht	XI	X	3.00	3.00					X
	R6-1R	36 X 12		Blk	XI	Blk/Wht	XI	X	3.00	3.00					X
6	G86 (CA)	78 X 30		Grn	XI	Wht	XI		16.25	16.25					X
7	W12-1	48 X 48		FY	XI	Blk	XI	X	16.00		16.00				X
8	W1-2L	36 X 36		FY	XI	Blk	XI	X	9.00	9.00					X
	W13-1P (50)	30 X 30		FY	XI	Blk	XI	X	6.25	6.25					X
9	W1-2L	36 X 36		FY	XI	Blk	XI	X	9.00	9.00					X
	W13-1P (50)	30 X 30		FY	XI	Blk	XI	X	6.25	6.25					X
10	G84-2 (6) (CA)	54 X 48		Grn	XI	Wht	XI		18.00		18.00				X
11	G83 (CA)	90 X 60		Grn	XI	Wht	XI		37.50		37.50				X
12	W12-2 (15'4")	48 X 48		FY	XI	Blk	XI	X	16.00		16.00				X
13	M3-4	30 X 15		Grn	XI	Wht	XI		3.12	3.12					X
	G28-2 (94) (CA)	30 X 31		Grn	XI	Wht	XI		6.45	6.45					X
14	G86 (CA)	126 X 78		Grn	XI	Wht	XI		68.25			68.25			X
15	G83 (CA)	150 X 96		Grn	XI	Wht	XI		100.00				100.00		X
17	G83 (CA)	120 X 90		Grn	XI	Wht	XI		75.00			75.00			X
18	G83 (CA)	234 X 84		Grn	XI	Wht	XI		136.50					136.50	X
19	G23 (CA)	216 X 102		Grn	XI	Wht	XI		153.00					153.00	X
20	W13-2 (25)	36 X 48		FY	XI	Blk	XI	X	12.00	12.00					X
21	G81-66 (CA)	48 X 48		Grn	XI	Wht	XI		16.00		16.00				X
23	G77 (CA)	120 X 120		Grn	XI	Wht	XI		100.00				100.00		X
27	R2-1 (65)	36 X 48		Wht	XI	Blk	XI	X	12.00	12.00					X
	R48-1 (CA)	36 X 18		Wht	XI	Blk	XI	X	4.50	4.50					X
29	W74 (CA)	48 X 48		FY	XI	Blk	XI	X	16.00		16.00				X
30	W1-1 (R)	36 X 36		FY	XI	Blk	XI	X	9.00	9.00					X
	W13-1P (25)	30 X 30		FY	XI	Blk	XI	X	6.25	6.25					X
								TOTAL	899.14	130.89	135.50	143.25	200.00	289.50	

SIGN QUANTITIES

SQ-2

REVISED BY | DATE REVISED
MARY BETH HAYES | NOEL TAPIA
CALCULATED-DESIGNED BY | CHECKED BY
FUNCTIONAL SUPERVISOR
CAMILLE ABOUFADEL

STATE OF CALIFORNIA - DEPARTMENT OF TRANSPORTATION
Caltrans
TRAFFIC DESIGN

LAST REVISION 12-23-15 | DATE PLOTTED => 12-JAN-2016 | TIME PLOTTED => 16:10

Dist	COUNTY	ROUTE	POST MILES TOTAL PROJECT	SHEET No.	TOTAL SHEETS
11	SD	8,54,67,94, 125, etc.	Var	136	231

Manuel Reyes 12-11-15
REGISTERED CIVIL ENGINEER DATE

01-11-16
PLANS APPROVAL DATE

REGISTERED PROFESSIONAL ENGINEER MANUEL REYES No. 58621 Exp. 12-31-16 CIVIL STATE OF CALIFORNIA

THE STATE OF CALIFORNIA OR ITS OFFICERS OR AGENTS SHALL NOT BE RESPONSIBLE FOR THE ACCURACY OR COMPLETENESS OF SCANNED COPIES OF THIS PLAN SHEET.

MIDWEST GUARDRAIL SYSTEM AND CRASH CUSHION

Loc No.	MGS No.	LINE	SIDE OF ROAD IN DIRECTION OF TRAVEL	BEGIN Sta	END Sta	LAYOUT TYPE	SALVAGE METAL BRIDGE RAILING	REMOVE CONCRETE (Misc)	Conc FOOTINGS AT Br RAILING	REMOVE GUARDRAIL	TREATED WOOD WASTE	MIDWEST GUARDRAIL SYSTEM: TRANSITION RAILING (TYPE WB-31)	MGS	DOUBLE MGS	ALTERNATIVE TERMINAL SYSTEM: IN-LINE	FLARED	BURIED POST END ANCHOR (N)	RAIL TENSIONING ASSEMBLY	END ANCHOR ASSEMBLY (TYPE SFT)	REMOVE CRASH CUSHION	ALTERNATIVE CRASH CUSHION: TYPE A	TYPE B	TYPE C	TYPE D	GUARD RAILING DELINEATOR (TYPE F)	REMOVE TERMINAL SYSTEM (N): TYPE SRT	TYPE ET	BURIED POST	REMOVE CABLE ANCHOR ASSEMBLY (N)	END CAP (TYPE TC) (N)
							LF	CY		LF	LB	EA	LF	LF	EA	EA	EA	EA	EA	EA	EA	EA	EA	EA	EA	EA	EA	EA	EA	EA
1	1	"R7RAMP1"	L+	502+04.64	502+56.67		52.00	3.05																						
				502+11.64	507+99.14	12B						1	562.50			1									24					1
				505+78.81	508+42.19					262.50	2,940.00															1			1	
2	2	"R7RAMP1"	R+	501+85.47	502+31.49		48.00	3.05																						
				501+92.22	502+16.31	12B						1				1									2					1
3	3	"SD-54"	R+	174+25.64	174+90.01	12A						1	37.50		1										3					1
				175+99.57	177+16.86					117.00	1,310.40																			
4	4	"SD-54"	R+	191+75.59	192+39.59					64.00	716.80															1			1	
				191+84.73	194+28.68	12A						1	225.00		1										10					1
5	5	"SD-54"	R+	220+79.48	222+51.36	12C						1	150.00				1								7					1
				221+81.62	222+60.55					81.00	907.20																	1	1	
6	6	"SD-54"	R+	261+52.29	262+49.93	12C						1	75.00				1								4					1
				262+28.42	262+59.72					32.00	358.40																	1	1	
7	7	"SD-54"	R+	304+71.00	305+45.91	12C						1	50.00				1								3					1
				305+29.25	305+55.91					27.00	302.40																	1	1	
9	8	"WG"	L+	62+58.05	63+20.50	12AA						1	37.50						1						3					1
10	9	"WN"	L+	747+31.32	747+78.59		48.00	3.05																						
				747+49.60	747+74.45	12B						1				1									2					1
11	10	"WS"	L+	752+39.13	752+87.10		48.00	3.05																						
				752+43.32	752+68.50	12B						1				1									2					1
12	11	"SD-94"	R+	337+06.32	338+18.82	12A						1	87.50		1										5					1
				337+18.82	338+28.16					109.50	1,226.40																1		1	
13	12	"SD-94"	R+	338+65.16	339+39.49					74.50	834.40																1		1	
				338+74.49	338+99.50	12B						1				1									2					1
14	13	"SD-94R"	R+	446+20.64	446+82.28					62.00	694.40															1			1	
				446+47.95	446+72.95	12A						1			1										2					1
15	14	"SD-94"	R+	476+87.41	477+47.16					60.00	672.00															1			1	
				477+12.83	477+37.83	12A						1			1										2					1
16	15	"SD-94"	R+	515+13.95	518+21.33	12C						1	275.00				1								13					1
				515+22.15	518+31.56					302.50	3,388.00																	1	1	
17	16	"SD-94"	R+	523+93.98	525+02.54					109.00	1,220.80															1			1	
				524+26.97	524+76.96	12B						1	25.00			1									2					1
18	17	"SD-94R"	R+	613+10.70	615+83.17								293.50		1										11					1
		"SD-94"		615+83.17	617+89.66	12A						1	181.50																	
				617+43.18	617+93.16					50.00	560.00															1			1	
19	18	"SD-94"	R+	619+17.20	619+80.37					62.00	694.40															1			1	
				619+27.95	619+52.95	12A						1			1										2					1
20	19	"SD-94"	R+	655+21.95	655+69.95		48.00	3.05																						
				655+40.75	655+65.75	12A						1			1										2					1
21	20	"SD-94"	R+	657+86.76	658+35.15		48.00	3.05																						
				658+01.76	658+26.76	12A						1			1										2					1
22	21	"SD-94"	R+	682+19.08	682+67.08		48.00	3.05																						
				682+37.81	682+62.81	12B						1				1									2					1
						SUBTOTAL	340.00	21.35		1,413.00	15,825.60	21	2,000.00		9	7			1						105					

(N) - NOT A SEPARATE ITEM, FOR INFORMATION ONLY

FOR ALL LOCATIONS USE RSP A77N3 NARROW ROADWAY INSTALLATION WITH THE EXCEPTION OF LOCATION 1 AND 36, USE TYPICAL ROADWAY INSTALLATION.

SUMMARY OF QUANTITIES

Q-1

STATE OF CALIFORNIA - DEPARTMENT OF TRANSPORTATION
Caltrans PROJECT TRAFFIC DEVELOPMENT

FUNCTIONAL SUPERVISOR: RICHARD ESTRADA
CALCULATED-DESIGNED BY: VAN D. CALLANTA
CHECKED BY: MANUEL REYES
REVISED BY
DATE REVISED

LAST REVISION 12-23-15
DATE PLOTTED => 12-JAN-2016
TIME PLOTTED => 16:10

Dist	COUNTY	ROUTE	POST MILES TOTAL PROJECT	SHEET No.	TOTAL SHEETS
11	SD	8,54,67,94, 125, etc.	Var	137	231

Manuel Reyes 12-11-15
REGISTERED CIVIL ENGINEER DATE

01-11-16
PLANS APPROVAL DATE

REGISTERED PROFESSIONAL ENGINEER MANUEL REYES No. 58621 Exp. 12-31-16 CIVIL STATE OF CALIFORNIA

THE STATE OF CALIFORNIA OR ITS OFFICERS OR AGENTS SHALL NOT BE RESPONSIBLE FOR THE ACCURACY OR COMPLETENESS OF SCANNED COPIES OF THIS PLAN SHEET.

MIDWEST GUARDRAIL SYSTEM AND CRASH CUSHION

Loc No.	MGS No.	LINE	SIDE OF ROAD IN DIRECTION OF TRAVEL	BEGIN Sta	END Sta	LAYOUT TYPE	SALVAGE METAL BRIDGE RAILING	REMOVE CONCRETE (Misc)	Conc FOOTINGS AT Br RAILING	REMOVE GUARDRAIL	TREATED WOOD WASTE	MIDWEST GUARDRAIL SYSTEM: TRANSITION RAILING (TYPE WB-31)	MGS	DOUBLE MGS	ALTERNATIVE TERMINAL SYSTEM: IN-LINE	FLARED	BURIED POST END ANCHOR (N)	RAIL TENSIONING ASSEMBLY	END ANCHOR ASSEMBLY (TYPE SFT)	REMOVE CRASH CUSHION	ALTERNATIVE CRASH CUSHION: TYPE A	TYPE B	TYPE C	TYPE D	GUARD RAILING DELINEATOR (TYPE F)	REMOVE TERMINAL SYSTEM (N): TYPE SRT	TYPE ET	BURIED POST	REMOVE CABLE ANCHOR ASSEMBLY (N)	END CAP (TYPE TC) (N)
							LF	CY		LF	LB	EA	LF	LF	EA	EA	EA	EA	EA	EA	EA	EA	EA	EA	EA	EA	EA	EA	EA	EA
24		"SD-125"	R†	777+34.28	777+83.00					48.00	537.60																			
26	22	"G-1"	R†	164+16.28	164+78.78	12A						1	37.50		1										3					1
				164+44.94	164+82.95	Mod	38.00	2.58																						
27	23	"ES"	R†	156+46.88	156+85.83		38.00	2.58																						
				156+56.46	156+81.63	12B						1				1									2					1
28	24	"CB-3"	L†	1110+37.37	1110+85.35		48.00	3.05																						
				1110+56.19	1110+81.19	12B						1				1									2					1
29	25	"SD-163"	R†	379+24.78	379+72.78		48.00	3.05																						
				379+32.78	379+57.78	12A						1			1										2					1
30	26	"CB-2"	R†	1122+13.89	1122+61.89		48.00	3.05																						
				1122+18.06	1123+24.31	12C						1	81.25				1								4					1
31	27	"SD-805L"	L†	59+39.27	60+07.06		68.00	3.98																						
				59+43.44	61+06.51	12B						1	137.50			1									7					1
32	28	"SD-805R"	L†	61+75.00	65+36.55	12B						1	337.50			1									15					1
33	29	"SD-805R"	R†	63+73.16	64+93.49		120.00	6.30																						
				62+98.72	64+89.92	12B						1	166.00			1									8					1
34	30	"SD-805L"	R†	67+91.08	69+08.08		117.00	6.77																						
				67+98.08	68+73.09	12A						1	50.00		1										3					1
35	31	"D-5A"	R†	134+02.88	134+49.57		48.00	3.05																						
				134+09.67	134+34.03	12B						1				1									2					1
36	32	"D-5A"	L†	133+88.51	134+50.80		62.00	3.51																						
				134+08.67	135+81.00	12B						1	150.00			1									7					1
37	33	"SD-805"	R†	225+95.64	226+45.64		50.00	3.05																						
				226+28.64	228+04.24	12B						1	150.00			1									7					1
38	34	"SD-805"	R†	325+33.22	325+92.55		59.50	3.05																						
				325+44.89	326+57.39	12B						1	87.50		1										5					1
39	35	"R-11"	R†	501+54.04	502+72.07		118.00	6.30																						
				501+58.21	502+45.71	12B						1	62.50			1									4					1
40		"SW-6"	R†	508+78.85	509+27.08		48.00	3.05														1								
41	36	"R2"	L†	515+85.95	517+48.14	12B						1	137.50			1									7					1
				517+04.53	517+52.30		48.00	3.05																						
42	37	"R2"	R†	516+40.50	517+60.61	12C						1	93.75				1								5					1
				517+16.33	517+64.80		48.00	3.05																						
43		"NW"	R†	735+50.93	735+99.95		48.00	3.05													1									
44		"H-1"	R†	767+27.20	767+83.31		50.00	3.51														1								
45	38	"H-1"	L†	767+30.48	767+79.42		48.00	3.05																						
				767+50.82	767+75.19	12B						1				1									2					1
46	39	"R-5"	L†	947+76.36	950+00.94	12C						1	200.00				1								9					1
				948+00.61	950+21.84		225.00	11.42																						
47	40	"SD-805"	R†	991+78.97	993+65.94		76.00	9.56																						
				991+82.47	994+32.35	12B						1	225.00			1									10					1
						SUBTOTAL	1,453.50	83.76	48.00	537.60	19	1,916.00		4	12					1	2			104					

(N) - NOT A SEPARATE ITEM, FOR INFORMATION ONLY

FOR ALL LOCATIONS USE RSP A77N3 NARROW ROADWAY INSTALLATION WITH THE EXCEPTION OF LOCATION 1 AND 36, USE TYPICAL ROADWAY INSTALLATION.

SUMMARY OF QUANTITIES

Q-2

STATE OF CALIFORNIA - DEPARTMENT OF TRANSPORTATION
Caltrans TRAFFIC PROJECT DEVELOPMENT

FUNCTIONAL SUPERVISOR: RICHARD ESTRADA
CALCULATED-DESIGNED BY: VAN D. CALLANTA
CHECKED BY: MANUEL REYES
REVISED BY
DATE REVISED

LAST REVISION 12-23-15 | DATE PLOTTED => 12-JAN-2016 | TIME PLOTTED => 16:10

Dist	COUNTY	ROUTE	POST MILES TOTAL PROJECT	SHEET No.	TOTAL SHEETS
11	SD	8,54,67,94, 125, etc.	Var	138	231

Manuel Reyes 12-11-15
REGISTERED CIVIL ENGINEER DATE

01-11-16
PLANS APPROVAL DATE

REGISTERED PROFESSIONAL ENGINEER MANUEL REYES No. 58621 Exp. 12-31-16 CIVIL STATE OF CALIFORNIA

THE STATE OF CALIFORNIA OR ITS OFFICERS OR AGENTS SHALL NOT BE RESPONSIBLE FOR THE ACCURACY OR COMPLETENESS OF SCANNED COPIES OF THIS PLAN SHEET.

MIDWEST GUARDRAIL SYSTEM AND CRASH CUSHION

Loc No.	MGS No.	LINE	SIDE OF ROAD IN DIRECTION OF TRAVEL	BEGIN Sta	END Sta	LAYOUT TYPE	SALVAGE METAL BRIDGE RAILING	REMOVE CONCRETE (Misc)	Conc FOOTINGS AT Br RAILING	REMOVE GUARDRAIL	TREATED WOOD WASTE	MIDWEST GUARDRAIL SYSTEM: TRANSITION RAILING (TYPE WB-31)	MGS	DOUBLE MGS	ALTERNATIVE TERMINAL SYSTEM: IN-LINE	FLARED	BURIED POST END ANCHOR (N)	RAIL TENSIONING ASSEMBLY	END ANCHOR ASSEMBLY (TYPE SFT)	REMOVE CRASH CUSHION	ALTERNATIVE CRASH CUSHION: TYPE A	TYPE B	TYPE C	TYPE D	GUARD RAILING DELINEATOR (TYPE F)	REMOVE TERMINAL SYSTEM (N): TYPE SRT	TYPE ET	BURIED POST	REMOVE CABLE ANCHOR ASSEMBLY (N)	END CAP (TYPE TC) (N)
							LF	CY		LF	LB	EA	LF	LF	EA	EA	EA	EA	EA	EA	EA	EA	EA	EA	EA	EA	EA	EA	EA	EA
48		"C-8"	R†	1213+85.75	1214+65.96		70.00	3.98														1								
49	41	"S-1"	L†	1274+07.70	1274+56.14		48.00	3.05																						
				1274+26.85	1274+51.96	12B						1				1									2					1
50	42	"SD-905"	L†	296+64.76	298+64.32									200.00				1					1		8					
				297+97.10	299+18.46		128.00	6.77																						
				298+64.32	299+14.29	12E						1	25.00												2					1
51	43	"SD-905"	L†	300+92.86	302+13.82		128.00	6.77																						
				300+97.02	301+46.70	12E						1	25.00												2					1
				301+46.70	303+83.97									237.50				1					1		10					
52	44	"SD-905"	L†	315+65.92	316+86.69		128.00	6.77																						
				315+70.08	316+20.06	12E						1	25.00												2					1
				316+20.06	318+57.03									237.50				1					1		10					
53	45	"SD-905"	R†	315+65.69	316+13.68		48.00	3.05																						
				315+69.85	315+94.85	12B						1				1									2					1
54	46	"SD-905"	L†	310+76.19	313+25.64									250.00				1					1		10					
				312+59.56	313+79.77		128.00	6.77																						
				313+25.64	313+75.61	12E						1	25.00												2					1
55	47	"SD-905"	R†	313+32.02	313+80.00		48.00	3.05																						
				313+50.83	313+75.83	12B						1				1									2					1
56	48	"SD-905"	L†	349+46.63	351+71.13									225.00				1					1		9					
				351+28.26	352+25.27		100.00	5.37																						
				351+71.13	352+21.10	12E						1	25.00												2					1
57	49	"D-3"	L†	108+27.79	108+52.74									25.00									1		2					
				108+52.74	110+96.45	15A						1	225.00												10					1
				108+52.74	110+96.81							1	225.00												10					1
				110+20.50	111+00.61		83.00	4.31																						
				110+20.50	111+00.98		83.00	4.31																						
58	50	"D-3"	R†	109+78.45	110+98.91		120.00	6.30																						
				110+07.25	110+94.75	12B						1	62.50			1									4					1
59		"SD-905"	L†	356+10.00	356+60.00		100.00	5.37												1	1									
60	51	"D-7"	R†	139+10.82	140+42.20				131.00	1,467.20																1			1	
				139+37.27	140+38.00	12B						1	75.00			1									4					1
61		"ES"	L†	429+64.45	430+27.60																			1		1			1	
SUBTOTAL							1,212.00	65.87	195.00	2,184.00		12	712.50	1,175.00		5		5		1	1	1	6	1	93					
SUBTOTAL FOR Q-1							340.00	21.35	1,413.00	15,825.60		21	2,000.00		9	7			1						105					
SUBTOTAL FOR Q-2							1,453.50	83.76	48.00	537.60		19	1,916.00		4	12					1	2			104					
TOTAL							3,005.50	*** 170.98	1,656.00	* 18,547.20		52	4,628.50	1,175.00	13	24		5	1	1	2	3	6	1	302					

NOTE: * - SEE SIGN QUANTITIES SHEET FOR ADDITIONAL TREATED WOOD WASTE QUANTITY
*** - SEE MINOR CONCRETE/CONCRETE BARRIER TABLE FOR ADDITIONAL REMOVE CONCRETE (Misc) QUANTITIES
(N) - NOT A SEPARATE ITEM, FOR INFORMATION ONLY
FOR ALL LOCATIONS USE RSP A77N3 NARROW ROADWAY INSTALLATION WITH THE EXCEPTION OF LOCATION 1 AND 36, USE TYPICAL ROADWAY INSTALLATION.

SUMMARY OF QUANTITIES
Q-3

STATE OF CALIFORNIA - DEPARTMENT OF TRANSPORTATION
Caltrans PROJECT DEVELOPMENT TRAFFIC
FUNCTIONAL SUPERVISOR: RICHARD ESTRADA
CALCULATED-DESIGNED BY: VAN D. CALLANTA
CHECKED BY: MANUEL REYES
REVISED BY
DATE REVISED

LAST REVISION 12-23-15
DATE PLOTTED => 12-JAN-2016
TIME PLOTTED => 16:10

Dist	COUNTY	ROUTE	POST MILES TOTAL PROJECT	SHEET No.	TOTAL SHEETS
11	SD	8,54,67,94, 125, etc.	Var	139	231

Manuel Reyes 12-11-15
REGISTERED CIVIL ENGINEER DATE

01-11-16
PLANS APPROVAL DATE

REGISTERED PROFESSIONAL ENGINEER MANUEL REYES No. 58621 Exp. 12-31-16 CIVIL STATE OF CALIFORNIA

THE STATE OF CALIFORNIA OR ITS OFFICERS OR AGENTS SHALL NOT BE RESPONSIBLE FOR THE ACCURACY OR COMPLETENESS OF SCANNED COPIES OF THIS PLAN SHEET.

HOT MIX ASPHALT DIKE

Loc No.	LINE	SIDE OF ROAD IN DIRECTION OF TRAVEL	BEGIN Sta	END Sta	REMOVE AC DIKE TYPE A LF	REMOVE AC DIKE TYPE C LF	REMOVE AC DIKE TYPE D LF	REMOVE AC DIKE TYPE E LF	REMOVE AC DIKE TYPE F LF	PLACE HMA DIKE TYPE C LF	PLACE HMA DIKE TYPE A LF	PLACE HMA DIKE TYPE D LF	PLACE HMA DIKE TYPE E LF	MINOR HMA HMA DIKE TON	HMA (TYPE A) UNDER HMA DIKE TON	TACK COAT TON
1	"R7RAMP1"	L+	502+08.14	507+53.76	223.48				322.14							
			502+11.64	506+00.00							388.00			10.48	3.95	0.01
3	"SD-54"	R+	173+49.18	177+15.51				356.50								
			173+49.18	174+90.01						75.00	62.50			2.26	1.19	0.01
4	"SD-54"	R+	191+75.59	195+29.30				290.00	65.00							
			191+84.73	195+29.30						75.00	250.00		20.00	7.84	3.40	0.01
5	"SD-54"	R+	220+54.87	222+60.55		62.50		101.00	42.50							
			220+54.87	222+51.36						159.00	37.50			2.22	1.56	0.01
7	"SD-54"	R+	304+55.00	305+55.91		50.00		50.00								
			304+55.00	305+45.91						53.50	37.50			1.42	0.78	0.01
9	"WG"	L+	61+92.10	63+27.50	135.00											
			62+26.83	63+20.50						31.25	62.50			1.93	0.87	0.01
12	"SD-94"	R+	336+31.32	338+28.16	62.00	75.00			60.00							
			336+31.32	338+18.82						75.00	112.50			3.61	1.70	0.01
13	"SD-94"	R+	338+65.16	339+74.49		75.00			34.33							
			338+74.49	339+74.49						62.50	37.50			1.49	0.85	0.01
14	"SD-94R"	R+	445+69.97	446+82.28	42.50				70.00							
			445+69.97	446+72.95						78.00	25.00			1.27	0.83	0.01
15	"SD-94"	R+	476+37.83	477+47.16				50.00	60.00							
			476+37.83	477+37.83						75.00	25.00			1.25	0.81	0.01
16	"SD-94"	R+	514+88.30	518+31.56				25.00	310.00							
			514+88.30	518+21.33						235.00	90.00			4.22	2.66	0.01
17	"SD-94"	R+	523+93.98	525+39.45					145.50							
			524+26.97	525+39.45						62.50	50.00			1.83	0.97	0.01
18	"SD-94"	R+	617+17.89	617+93.16					75.00							
			617+17.89	617+89.66							72.00			1.94	0.73	0.01
19	"SD-94"	R+	619+17.20	620+27.95				25.75	85.00							
			619+27.95	620+27.95						75.00	25.00			1.25	0.81	0.01
20	"SD-94"	R+	654+00.00	655+69.95			170.00									
			654+00.00	655+65.75						75.00	25.00	65.75		5.10	2.39	0.01
21	"SD-94"	R+	657+86.76	659+37.00				150.00								
			658+01.76	659+37.00						75.00	25.00		35.25	2.16	1.33	0.01
22	"SD-94"	R+	681+75.31	682+67.08					92.00							
			681+75.31	682+62.81						62.50	25.00			1.15	0.72	0.01
24	"SD-125"	R+	769+59.90	774+48.00	488.10								488.10	12.69	7.23	0.01
			774+48.00	775+80.00				132.00			132.00			3.56	1.34	0.01
			775+80.00	777+83.00				203.00								
26	"G-1"	R+	163+41.28	164+82.95			142.00									
			163+41.28	164+78.78						75.00	62.50			2.26	1.19	0.01
29	"SD-163"	R+	378+57.78	379+72.78	115.00											
			378+57.78	379+57.78						75.00	25.00			1.25	0.81	0.01
				SUBTOTAL	1,066.08	262.50	312.00	1,383.25	1,361.47	1,419.25	1,569.50	65.75	543.35	71.18	36.12	0.21

SUMMARY OF QUANTITIES

Q-4

STATE OF CALIFORNIA - DEPARTMENT OF TRANSPORTATION
Caltrans PROJECT DEVELOPMENT
TRAFFIC

FUNCTIONAL SUPERVISOR: RICHARD ESTRADA
CALCULATED-DESIGNED BY: VAN D. CALLANTA
CHECKED BY: MANUEL REYES
REVISED BY
DATE REVISED

LAST REVISION 12-23-15
DATE PLOTTED => 12-JAN-2016
TIME PLOTTED => 16:10

Dist	COUNTY	ROUTE	POST MILES TOTAL PROJECT	SHEET No.	TOTAL SHEETS
11	SD	8,54,67,94, 125, etc.	Var	140	231

Manuel Reyes 12-11-15
REGISTERED CIVIL ENGINEER DATE

01-11-16
PLANS APPROVAL DATE

REGISTERED PROFESSIONAL ENGINEER MANUEL REYES No. 58621 Exp. 12-31-16 CIVIL STATE OF CALIFORNIA

THE STATE OF CALIFORNIA OR ITS OFFICERS OR AGENTS SHALL NOT BE RESPONSIBLE FOR THE ACCURACY OR COMPLETENESS OF SCANNED COPIES OF THIS PLAN SHEET.

HOT MIX ASPHALT DIKE

Loc No.	LINE	SIDE OF ROAD IN DIRECTION OF TRAVEL	BEGIN Sta	END Sta	REMOVE AC DIKE					PLACE HMA DIKE				MINOR HMA	HMA (TYPE A)	TACK COAT
					TYPE A	TYPE C	TYPE D	TYPE E	TYPE F	TYPE C	TYPE A	TYPE D	TYPE E	HMA DIKE	UNDER HMA DIKE	
					LF	LF	LF	LF	LF	LF	LF	LF	LF	TON	TON	TON
30	"CB-2"	R+	1122+13.89	1123+49.31	135.00											
			1122+18.06	1123+49.31						93.75	37.50			1.73	1.08	0.01
31	"SD-805L"	L+	59+43.44	61+69.26						62.50	163.00			4.88	2.12	0.01
33	"SD-805R"	R+	62+35.00	64+93.49				258.50								
			62+35.00	64+89.92						62.50	192.50			5.67	2.42	0.01
34	"SD-805L"	R+	67+91.08	69+48.08				157.00								
			67+98.08	69+48.08						75.00	75.00			2.60	1.32	0.01
36	"D-5A"	L+	134+01.67	135+81.00				172.00								
			134+01.67	135+81.00							172.00			4.64	1.75	0.01
37	"SD-805"	R+	225+95.64	231+12.00	516.00											
			226+28.64	231+12.00						62.50	420.86			11.84	4.75	0.01
38	"SD-805"	R+	325+44.89	327+12.10	167.00											
			325+44.89	327+12.10						54.50	112.50			3.45	1.55	0.01
39	"R-11"	R+	501+54.04	503+08.21	154.00											
			501+58.21	503+08.21						62.50	87.50			2.84	1.35	0.01
40	"SW-6"	R+	509+14.66	509+39.77						25.00				0.19	0.19	0.01
42	"R2"	R+	516+15.12	517+60.61						106.00	37.50			1.82	1.17	0.01
			516+15.12	517+64.80	150.00											
44	"H-1"	R+	767+11.97	767+83.31				71.00								
			767+11.97	767+41.23						30.00				0.23	0.22	0.01
46	"R-5"	L+	947+51.36	950+21.84	270.00											
			947+51.36	950+00.94						212.50	37.50			2.63	1.96	0.01
47	"SD-805"	R+	991+78.97	994+01.86				222.89								
			991+82.47	994+01.86						60.75	158.64			4.74	2.07	0.01
48	"C-8"	R+	1213+85.75	1214+55.85				70.00								
			1214+27.16	1214+55.85						29.00				0.22	0.21	0.01
49	"S-1"	L+	1273+64.06	1274+16.51				52.00								
			1273+64.06	1274+16.51						52.00				0.40	0.39	0.01
53	"SD-905"	R+	315+65.69	316+57.35				92.00								
			315+69.85	316+57.35						62.50	25.00			1.15	0.72	0.01
55	"SD-905"	R+	312+88.33	313+80.00				92.00								
			312+88.33	313+75.83						62.50	25.00			1.15	0.72	0.01
57	"D-3"	L+	107+32.00	110+96.81						340.00	25.00			3.26	2.77	0.01
			107+32.00	111+00.61				369.00								
			107+32.00	110+96.45						340.00	25.00			3.26	2.77	0.01
58	"D-3"	R+	109+44.64	110+98.91				154.16								
			109+44.64	110+94.75						62.50	87.50			2.84	1.35	0.01
59	"SD-905"	L+	356+10.00	357+68.56				158.00								
60	"D-7"	R+	138+72.38	140+42.20				52.00	115.00							
			138+72.38	140+38.00						62.50	100.00			3.18	1.48	0.01
SUBTOTAL					1,392.00			1,920.55	115.00	1,918.50	1,782.00			62.72	32.36	0.21
SUBTOTAL OF Q-4					1,066.08	262.50	312.00	1,383.25	1,361.47	1,419.25	1,569.50	65.75	543.35	71.18	36.12	0.21
TOTAL					7,812.85					3,337.75	3,351.50	65.75	543.35	# 133.90	# 68.48	# 0.42

NOTE: # - SEE STRUCTURAL PAVEMENT TABLE FOR ADDITIONAL QUANTITIES

SUMMARY OF QUANTITIES
Q-5

REVISED BY | DATE REVISED
VAN D. CALLANTA | MANUEL REYES
CALCULATED-DESIGNED BY | CHECKED BY
FUNCTIONAL SUPERVISOR
RICHARD ESTRADA

STATE OF CALIFORNIA - DEPARTMENT OF TRANSPORTATION
Caltrans PROJECT DEVELOPMENT
TRAFFIC

LAST REVISION 12-23-15 | DATE PLOTTED => 12-JAN-2016 | TIME PLOTTED => 16:10

Dist	COUNTY	ROUTE	POST MILES TOTAL PROJECT	SHEET No.	TOTAL SHEETS
11	SD	8,54,67,94, 125, etc.	Var	141	231

Manuel Reyes 12-11-15
REGISTERED CIVIL ENGINEER DATE

01-11-16
PLANS APPROVAL DATE

REGISTERED PROFESSIONAL ENGINEER MANUEL REYES No. 58621 Exp. 12-31-16 CIVIL STATE OF CALIFORNIA

THE STATE OF CALIFORNIA OR ITS OFFICERS OR AGENTS SHALL NOT BE RESPONSIBLE FOR THE ACCURACY OR COMPLETENESS OF SCANNED COPIES OF THIS PLAN SHEET.

MINOR CONCRETE/CONCRETE BARRIER

Loc No.	LINE	SIDE OF ROAD IN DIRECTION OF TRAVEL	BEGIN Sta	END Sta	ROADWAY Exc	ROADWAY EXCAVATION (TYPE Z-2) (AERIALLY DEPOSITED LEAD)	REMOVE CONCRETE CURB (TYPE A1)	REMOVE CONCRETE BARRIER	REMOVE CONCRETE BACK-UP BLOCK	REMOVE CONCRETE (Misc) REMOVE CONCRETE BLOCK	REMOVE CONCRETE (Misc) SLOPE PAVING	REMOVE CONCRETE (Misc) B-4 CURB	SLOPE PAVING (Conc)	MINOR Conc (MINOR STRUCTURE) Conc TRANSITION BLOCK	VEGETATION CONTROL (MINOR Conc)	CONCRETE BARRIER (TYPE 60)	CONCRETE BARRIER (TYPE 60 Mod 1)	CONCRETE BARRIER (TYPE 60 Mod 2)	CONCRETE BARRIER (TYPE 60F Mod)	CONCRETE BARRIER (TYPE 60 WITH SCUPPERS)
					(CY)	CY	LF	LF	CY	CY	CY	CY	CY	CY	SQYD	LF	LF	LF	LF	LF
1	"R7RAMP1"	Lt	502+04.64	502+11.64	0.26									0.91						
2	"R7RAMP1"	Rt	501+85.47	501+92.22	0.26									0.91						
3	"SD-54"	Rt	174+90.01	175+00.32	1.37						1.23			3.12						
			175+00.32	177+15.51															162.74	52.45
4	"SD-54"	Rt	191+74.59	191+84.73	1.04									2.41						
5	"SD-54"	Rt	222+51.36	222+61.55	1.04									2.41						
6	"SD-54"	Rt	262+49.93	262+59.72	1.49									4.15						
7	"SD-54"	Rt	305+45.91	305+55.91	1.49									4.15						
9	"WG"	Lt	63+20.50	63+27.50	0.26									0.91						
10	"WN"	Lt	747+74.45	747+78.59	0.54									1.25						
11	"WS"	Lt	752+39.13	752+43.32	0.54									1.25						
12	"SD-94"	Rt	338+18.82	338+28.16		0.69								2.02						
13	"SD-94"	Rt	338+65.16	338+74.49		0.69								2.02						
14	"SD-94R"	Rt	445+69.97	446+12.86							1.91		1.91							
			446+12.86	446+72.95											26.71					
			446+72.95	446+82.28		0.69								2.02						
15	"SD-94"	Rt	477+37.83	477+48.16		1.04								2.41						
16	"SD-94"	Rt	518+21.33	518+31.56		0.74								2.14						
17	"SD-94"	Rt	523+93.98	524+26.97		2.15								6.91						
18	"SD-94"	Rt	617+89.66	617+93.16		0.26								0.64						
19	"SD-94"	Rt	619+17.20	619+27.95		0.79								2.06						
20	"SD-94"	Rt	655+65.75	655+69.95		0.54								1.25						
21	"SD-94"	Rt	657+86.76	658+01.76	1.96									4.54						
22	"SD-94"	Rt	682+62.81	682+67.08	0.54									1.25						
24	"SD-125"	Rt	775+60.00	777+48.79													189.00			
			775+60.00	777+83.00		150.00														
			777+48.79	777+83.00										14.62						
26	"G-1"	Rt	164+78.78	164+82.95	0.54									1.25						
27	"ES"	Rt	156+81.63	156+85.83	0.54									1.25						
28	"CB-3"	Lt	1110+81.19	1110+85.35	0.54									1.25						
29	"SD-163"	Rt	379+57.78	379+72.78	1.43									4.02						
30	"CB-2"	Rt	1122+13.89	1122+18.06	0.54									1.25						
31	"SD-805L"	Lt	59+39.27	59+43.44	0.54									1.25						
32	"SD-805R"	Lt	64+65.63	65+47.27				85.00												
			65+36.55	65+47.27		0.81								2.38						
33	"SD-805R"	Rt	64+89.92	64+93.49	0.46									1.15						
34	"SD-805L"	Rt	67+91.08	67+98.08	0.26									0.91						
35	"D-5A"	Rt	134+02.88	134+09.67	0.26									0.91						
36	"D-5A"	Lt	133+88.51	134+08.67	0.52					0.26				2.31						
37	"SD-805"	Rt	225+95.64	226+28.64	2.15									5.41						
38	"SD-805"	Rt	325+33.22	325+44.89										0.57						
39	"R-11"	Rt	501+54.04	501+58.21	0.54									1.25						
				SUBTOTAL	19.11	158.40		85.00		0.26	3.14		1.91	88.51	26.71		189.00		162.74	52.45

SUMMARY OF QUANTITIES
Q-6

STATE OF CALIFORNIA - DEPARTMENT OF TRANSPORTATION
Caltrans PROJECT DEVELOPMENT
TRAFFIC

FUNCTIONAL SUPERVISOR: RICHARD ESTRADA
CALCULATED-DESIGNED BY: VAN D. CALLANTA
CHECKED BY: MANUEL REYES
REVISED BY
DATE REVISED

LAST REVISION 12-23-15
DATE PLOTTED => 12-JAN-2016
TIME PLOTTED => 16:10

Dist	COUNTY	ROUTE	POST MILES TOTAL PROJECT	SHEET No.	TOTAL SHEETS
11	SD	8,54,67,94, 125, etc.	Var	142	231

Manuel Reyes 12-11-15
REGISTERED CIVIL ENGINEER DATE

01-11-16
PLANS APPROVAL DATE

REGISTERED PROFESSIONAL ENGINEER MANUEL REYES No. 58621 Exp. 12-31-16 CIVIL STATE OF CALIFORNIA

THE STATE OF CALIFORNIA OR ITS OFFICERS OR AGENTS SHALL NOT BE RESPONSIBLE FOR THE ACCURACY OR COMPLETENESS OF SCANNED COPIES OF THIS PLAN SHEET.

MINOR CONCRETE/CONCRETE BARRIER

Loc No.	LINE	SIDE OF ROAD IN DIRECTION OF TRAVEL	BEGIN Sta	END Sta	ROADWAY Exc	ROADWAY Exc (TYPE Z-2) (AERIALLY DEPOSITED LEAD)	REMOVE CONCRETE CURB (TYPE A1)	REMOVE CONCRETE BARRIER	REMOVE CONCRETE BACK-UP BLOCK	REMOVE CONCRETE (Misc) REMOVE CONCRETE BLOCK	REMOVE CONCRETE (Misc) SLOPE PAVING	REMOVE CONCRETE (Misc) B-4 CURB	SLOPE PAVING (Conc)	MINOR Conc (MINOR STRUCTURE) Conc TRANSITION BLOCK	VEGETATION CONTROL (MINOR Conc)	CONCRETE BARRIER (TYPE 60)	CONCRETE BARRIER (TYPE 60 Mod 1)	CONCRETE BARRIER (TYPE 60 Mod 2)	CONCRETE BARRIER (TYPE 60F Mod)	CONCRETE BARRIER (TYPE 60 WITH SCUPPERS)
					(CY)	CY	LF	LF	CY	CY	CY	CY	CY	CY	SQYD	LF	LF	LF	LF	LF
40	"SW-6"	R†	508+78.85	508+99.03	2.22									5.07						
			508+78.85	509+39.77								3.76								
41	"R2"	L†	517+48.14	517+52.30	0.54									1.25						
42	"R2"	R†	517+60.61	517+64.80	0.54									1.25						
43	"NW"	R†	735+56.97	735+93.24														37.50		
			735+56.97	735+92.62														37.50		
			735+93.24	735+99.95	0.52									1.61						
44	"H-1"	R†	767+59.60	767+83.31	2.22									+ 4.75						
45	"H-1"	L†	767+75.19	767+79.42	0.54									+ 1.25						
46	"R-5"	L†	950+00.94	950+21.84	1.96									6.05						
47	"SD-805"	R†	991+78.97	991+82.47	0.46									1.15						
48	"C-8"	R†	1213+85.75	1214+09.15	2.22									5.12						
49	"S-1"	L†	1274+51.96	1274+56.14	0.54									1.25						
50	"SD-905"	L†	299+14.29	299+18.46	0.54									1.25						
51	"SD-905"	L†	300+92.86	300+97.02	0.54									1.25						
52	"SD-905"	L†	315+65.92	315+70.08	0.54									1.25						
53	"SD-905"	R†	315+65.69	315+69.85	0.54									1.25						
54	"SD-905"	L†	313+75.61	313+79.77	0.54									1.25						
55	"SD-905"	R†	313+75.83	313+80.00	0.54									1.25						
56	"SD-905"	L†	352+21.10	352+25.27	0.54									1.25						
57	"D-3"	L†	110+96.45	111+00.61	0.54									1.25						
			110+96.81	111+00.98	0.54									1.25						
			107+32.00	111+00.98			369.00													
58	"D-3"	R†	110+94.75	110+98.91	0.54									1.25						
59	"SD-905"	L†	356+10.00	356+84.07			148.00		4.67											
			356+10.00	356+74.97														130.00		
60	"D-7"	R†	140+38.00	140+42.20	0.54									1.25						
61	"ES"	L†	429+43.18	430+07.72												65.00				
			430+07.72	430+27.60		2.08								4.92						
SUBTOTAL					17.70	2.08	517.00		4.67			3.76		47.42		65.00		205.00		
SUBTOTAL FOR Q-6					19.11	158.40		85.00		0.26	3.14		1.91	88.51	26.71		189.00		162.74	52.45
TOTAL					**** 36.81	**** 160.48	517.00	85.00	4.67	*** 7.16			1.91	** 135.93	26.71	65.00	189.00	205.00	162.74	52.45

NOTE: + - USE RAPID STRENGTH CONCRETE FOR THE CONCRETE TRANSITION BLOCK.
** - SEE DRAINAGE QUANTITIES SHEET FOR ADDITIONAL MINOR CONCRETE (MINOR STRUCTURE) QUANTITIES.
*** - SEE MIDWEST GUARDRAIL SYSTEM AND CRASH CUSHION TABLE FOR ADDITIONAL REMOVE CONCRETE (Misc) QUANTITIES.
**** - SEE STRUCTURAL PAVEMENT TABLE AND EARTHWORK TABLE FOR ADDITIONAL ROADWAY EXCAVATION AND ROADWAY EXCAVATION (TYPE Z-2) (AERIALLY DEPOSITED LEAD) QUANTITIES.

SUMMARY OF QUANTITIES
Q-7

REVISED BY | DATE REVISED
VAN D. CALLANTA | MANUEL REYES
CALCULATED-DESIGNED BY | CHECKED BY
FUNCTIONAL SUPERVISOR: RICHARD ESTRADA
STATE OF CALIFORNIA - DEPARTMENT OF TRANSPORTATION
Caltrans PROJECT DEVELOPMENT
TRAFFIC

LAST REVISION 12-23-15 | DATE PLOTTED => 12-JAN-2016 | TIME PLOTTED => 16:10

Dist	COUNTY	ROUTE	POST MILES TOTAL PROJECT	SHEET No.	TOTAL SHEETS
11	SD	8,54,67,94, 125, etc.	Var	143	231

Manuel Reyes 12-11-15
REGISTERED CIVIL ENGINEER DATE

01-11-16
PLANS APPROVAL DATE

REGISTERED PROFESSIONAL ENGINEER MANUEL REYES No. 58621 Exp. 12-31-16 CIVIL STATE OF CALIFORNIA

THE STATE OF CALIFORNIA OR ITS OFFICERS OR AGENTS SHALL NOT BE RESPONSIBLE FOR THE ACCURACY OR COMPLETENESS OF SCANNED COPIES OF THIS PLAN SHEET.

STRUCTURAL PAVEMENT

Loc No.	LINE	SIDE OF ROAD IN DIRECTION OF TRAVEL	BEGIN Sta	END Sta	ROADWAY EXCAVATION	ROADWAY EXCAVATION (TYPE Z-2) (AERIALLY DEPOSITED LEAD)	COLD PLANE AC PAVEMENT (0.15' Max)	PLACE HMA (Misc AREA)	MINOR HMA	HMA (TYPE A)	CLASS 2 AB	ASPHALTIC EMULSION (FOG SEAL COAT)	TACK COAT
					CY	CY	SQYD	SQYD	TON	TON	CY	TON	TON
1	"R7RAMP1"	L+	502+08.14	506+00.00	138.24					54.35	89.29	0.06	0.06
			506+00.00	508+80.00			155.55			15.56		0.03	0.03
20	"SD-94"	R+	654+00.00	655+72.00	49.69		76.44			30.58	38.22	0.04	0.03
21	"SD-94"	R+	657+95.00	659+37.00	41.02		63.11			25.24	31.56	0.03	0.02
24	"SD-125"	R+	769+42.30	769+65.70	2.82					1.30	2.17	0.01	0.01
			770+61.40	770+75.40		2.04		4.70	0.94		1.57	0.01	0.01
			771+90.40	772+04.30		2.04		4.70	0.94		1.57	0.01	0.01
			774+06.00	774+18.00		2.04		4.70	0.94		1.57	0.01	0.01
			774+10.00	774+97.40	19.99					9.23	15.38	0.01	0.01
			774+97.40	775+60.00	13.56		38.26			10.09	10.43	0.01	0.01
			775+60.00	777+83.00	69.79		136.28			45.84	53.69	0.03	0.03
26	"G-4"	L+	319+00.00	320+10.00	21.19					9.78	16.30	0.01	0.01
31	"SD-805L"	L+	59+39.27	59+65.00	11.44					5.34	8.77	0.01	0.01
36	"D-5A"	L+	134+08.60	135+81.00			95.77			9.58		0.02	0.02
37	"SD-805"	R+	226+14.00	231+12.00	143.87		221.33			88.53	110.67	0.12	0.07
40	"SW-6"	L+	508+78.85	509+39.77	8.37		10.51			4.91	6.44	0.01	0.01
43	"NW"	R+	735+15.00	735+96.60	40.50		77.97			29.61	31.16	0.04	0.04
			735+15.00	735+92.62			53.31			5.33		0.01	0.01
			735+56.97	735+92.62				31.93	4.04				
44	"H-1"	R+	767+11.97	767+83.31	3.43	2.90				2.92	4.87	0.10	0.01
48	"C-8"	L+	1213+85.75	1214+55.85	9.69		15.58			4.47	7.46	0.01	0.01
49	"S-1"	L+	1274+16.71	1274+54.50				37.79	4.28				
59	"SD-905"	L+	356+10.00	357+10.97	8.75		5.37			7.63	6.73	0.01	0.02
			356+10.00	357+68.56		77.73				35.88	59.79	0.04	0.02
			356+10.00	357+10.97	8.75		13.80			13.24	6.73	0.02	0.02
61	"ES"	L+	429+43.18	430+27.60	11.73		18.76			7.29	11.43	0.01	0.01
				TOTAL	**** 602.83	**** 86.75	982.04	83.82	# 11.14	# 416.70	515.80	0.66	# 0.49

NOTE: # - SEE HOT MIX ASPHALT DIKE TABLE FOR ADDITIONAL QUANTITIES

**** - SEE MINOR CONCRETE/CONCRETE BARRIER TABLE AND EARTHWORK TABLE FOR ADDITIONAL ROADWAY EXCAVATION AND ROADWAY EXCAVATION (TYPE Z-2) (AERIALLY DEPOSITED LEAD) QUANTITIES

SUMMARY OF QUANTITIES

Q-8

STATE OF CALIFORNIA - DEPARTMENT OF TRANSPORTATION
Caltrans PROJECT DEVELOPMENT
TRAFFIC

FUNCTIONAL SUPERVISOR: RICHARD ESTRADA
CALCULATED-DESIGNED BY: VAN D. CALLANTA
CHECKED BY: MANUEL REYES
REVISED BY
DATE REVISED

LAST REVISION 12-23-15
DATE PLOTTED => 12-JAN-2016
TIME PLOTTED => 16:10

Dist	COUNTY	ROUTE	POST MILES TOTAL PROJECT	SHEET No.	TOTAL SHEETS
11	SD	8,54,67,94, 125, etc.	Var	144	231

Manuel Reyes 12-11-15
REGISTERED CIVIL ENGINEER DATE

01-11-16
PLANS APPROVAL DATE

REGISTERED PROFESSIONAL ENGINEER
MANUEL REYES
No. 58621
Exp. 12-31-16
CIVIL
STATE OF CALIFORNIA

THE STATE OF CALIFORNIA OR ITS OFFICERS OR AGENTS SHALL NOT BE RESPONSIBLE FOR THE ACCURACY OR COMPLETENESS OF SCANNED COPIES OF THIS PLAN SHEET.

EARTHWORK

Loc No.	ROUTE	LINE	STATION Beg	STATION END	ROADWAY EXCAVATION (TYPE Z-2) (AERIALLY DEPOSITED LEAD) (CY)	IMPORTED BORROW (CY)	REMARKS
1	54	"R7RAMP1"	502+08.14	508+42.19		70.00	
24	125	"SD-125"	769+65.70	774+23.00	127.00	97.00	EXCAVATION FOR 18" HDPE
36	805	"D-5A"	134+00.00	134+40.00		20.00	SLOPE REPAIR
				TOTAL	**** 127.00	187.00	

NOTE: **** - SEE MINOR CONCRETE/CONCRETE BARRIER TABLE AND STRUCTURAL PAVEMENT TABLE FOR ADDITIONAL ROADWAY EXCAVATION (TYPE Z-2) (AERIALLY DEPOSITED LEAD) QUANTITIES

WATER POLLUTION CONTROL

Loc No.	ROUTE	LINE	SIDE OF ROAD IN DIRECTION OF TRAVEL	Temp FIBER ROLL (LF)	Temp DRAINAGE INLET PROTECTION (EA)	Temp CONSTRUCTION ENTRANCE (EA)
1	54	"R7RAMP1"	L+	1,488		1
3	54	"SD-54"	R+		1	
4	54	"SD-54"	R+		1	
6	54	"SD-54"	R+		1	
7	54	"SD-54"	R+		1	
12	94	"SD-94"	R+		1	
16	94	"SD-94"	R+		2	
17	94	"SD-94"	R+		2	
18	94	"SD-94R"	R+	585		
19	94	"SD-94"	R+	145		
20	94	"SD-94"	R+		1	
21	94	"SD-94"	R+		1	
26	163	"G-1"	R+		1	
27	163	"ES"	R+			
28	163	"CB-3"	L+			
29	163	"SD-163"	R+		1	
30	163	"CB-2"	R+			
36	805	"D-5A"	L+	245	1	1
37	805	"SD-805"	R+			
38	805	"SD-805"	R+	200		
39	805	"R-11"	R+			
41	805	"R2"	L+			
42	805	"R2"	R+			
43	805	"NW"	R+		1	
46	805	"R-5"	L+		1	
47	805	"SD-805"	R+		1	
49	805	"S-1"	L+		1	
59	905	"SD-905"	L+		1	
			TOTAL	2,663	19	2

TEMPORARY FENCE (TYPE ESA)

Loc No.	ROUTE	LINE	SIDE OF ROAD IN DIRECTION OF TRAVEL	TEMPORARY FENCE (TYPE ESA) (LF)
26	163	"G-1"	R+	175
27		"ES"	R+	105
28		"CB-3"	L+	100
29		"SD-163"	R+	135
30		"CB-2"	R+	170
37	805	"SD-805"	L+	560
39		"R-11"	R+	185
41		"R2"	L+	235
42		"R2"	R+	180
49		"S-1"	L+	110
			TOTAL	1,955

ABANDON PIPELINE

Loc No.	ROUTE	LINE	STATION	SIDE OF ROAD IN DIRECTION OF TRAVEL	ABANDON PIPELINE (EA)
53	905	"SD-905"	315+69.85	L+	1
				TOTAL	1

4" PLASTIC PIPE UNDERDRAIN

Loc No.	ROUTE	LINE	STATION Beg	STATION END	4" PLASTIC PIPE UNDERDRAIN (LF)
24	125	"SD-125"	775+60.00	777+83.00	223
				TOTAL	223

SUMMARY OF QUANTITIES

Q-9

STATE OF CALIFORNIA - DEPARTMENT OF TRANSPORTATION
Caltrans PROJECT DEVELOPMENT
TRAFFIC

FUNCTIONAL SUPERVISOR: RICHARD ESTRADA
CALCULATED-DESIGNED BY: VAN D. CALLANTA
CHECKED BY: MANUEL REYES
REVISED BY
DATE REVISED

LAST REVISION 12-23-15
DATE PLOTTED => 12-JAN-2016
TIME PLOTTED => 16:10

Dist	COUNTY	ROUTE	POST MILES TOTAL PROJECT	SHEET No.	TOTAL SHEETS
11	SD	8,54,67, 94,125,etc.	Var	145	231

LICENSED LANDSCAPE ARCHITECT

01-11-16
PLANS APPROVAL DATE

LICENSED LANDSCAPE ARCHITECT
KENNETH L. MAH No. 3649
Expiration Date 02-29-16
Renewal Date 12-11-15
Date
STATE OF CALIFORNIA

THE STATE OF CALIFORNIA OR ITS OFFICERS OR AGENTS SHALL NOT BE RESPONSIBLE FOR THE ACCURACY OR COMPLETENESS OF SCANNED COPIES OF THIS PLAN SHEET.

SPRINKLER SCHEDULE

SYMBOL	ITEM DESCRIPTION	SPRINKLER TYPE	SPRAY PATTERN	OPERATING PRESSURE (psi)	PRESSURE COMPENSATING	PLUS/MINUS 5% ② DISCHARGE: GALLONS PER MINUTE (GPM)	GALLONS PER HOUR (GPH)	RADIUS (ft)	WIDTH x LENGTH (ft)	FLOW SHUTOFF DEVICE	INLET CONNECTION (NPT INCH)	POSITIVE-LOCKING Adj ARC STOP	BACKSPLASH PREVENTER	DIFFUSER PIN	DISTANCE CONTROL FLAP	Adj DISCHARGE	SPRINKLER ASSEMBLY: RISER: TYPE	RISER: MATERIAL: PLASTIC	RISER: MATERIAL: GALVANIZED	RISER: SIZE (IPS INCH)	RISER: HEIGHT (INCH)	RISER: SWING JOINT (INCH) ⑥	RISER: RISER SUPPORT	POP-UP: INLET CONNECTION (NPT INCH)	POP-UP: SPRINKLER PROTECTOR (TYPE)	POP-UP: POP-UP HEIGHT (INCH)	POP-UP: SWING JOINT (INCH) ⑥	TREE WELL: SWING JOINT (INCH) ⑥	REMARKS
⑤	RISER SPRINKLER ASSEMBLY (GEAR DRIVEN)	GEAR DRIVE	P	50	-	3.5	-	40	-	-	¾	-	-	X	-	-	I	X	-	¾	10	¾	-	-	-	-	-	-	③⑦⑧
[5]	RISER SPRINKLER ASSEMBLY (GEAR DRIVEN)	GEAR DRIVE	F	50	-	3.5	-	40	-	-	¾	-	-	X	-	-	I	X	-	¾	10	¾	-	-	-	-	-	-	③ ⑧
⑥	POP-UP SPRINKLER ASSEMBLY (GEAR DRIVEN)	GEAR DRIVE	P	50	-	3.5	-	40	-	-	¾	-	-	X	-	-	-	-	-	-	-	-	-	¾	I	12	¾	-	③⑦⑧

X IN BOX DENOTES REQUIREMENT

APPLICABLE WHEN CIRCLED BELOW:

1 - SEE SPECIAL PROVISIONS.
② - IF A PRESSURE COMPENSATING DEVICE IS SPECIFIED, THE DISCHARGE AND RADII SHOWN REFLECT ITS USE.
③ - SHALL HAVE AN INTERNAL OR EXTERNAL CHECK VALVE.
4 - NON-ADJUSTABLE DISCHARGE RATE.
5 - REQUIRED ADJACENT TO SHOULDERS, CURBS, SIDEWALKS, AND DIKES.
⑥ - SEE DETAIL.
⑦ - ADJUSTABLE ARC.
⑧ - MATCHED PRECIPITATION RATE NOZZLES
9 - REFER TO PIPE SIZING CHARTS.
10 - PROVIDE ONE FLOOD BUBBLER PER VINE AND SHRUB (AS SHOWN) AND TWO FLOOD BUBBLERS PER TREE.

ABBREVIATIONS:

Adj —— ADJUSTABLE
psi —— POUNDS PER SQUARE INCH

NOTE:

ALL LATERAL PLASTIC PIPE (SUPPLY LINE) NOT LABELED MUST BE 1 INCH.

LEGEND:

-·-·-·- TEMPORARY IRRIGATION SUPPLY LINE

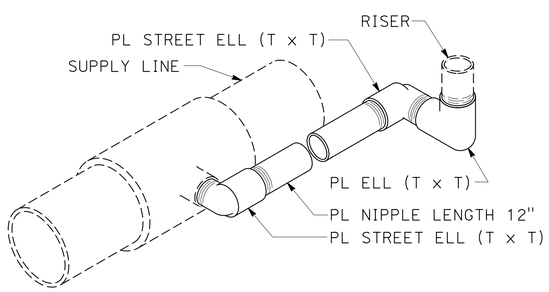

ISOMETRIC

SWING JOINT (Mod)

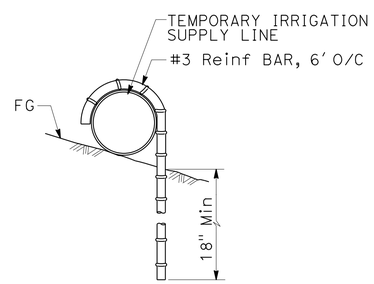

SECTION

TEMPORARY IRRIGATION SUPPLY LINE

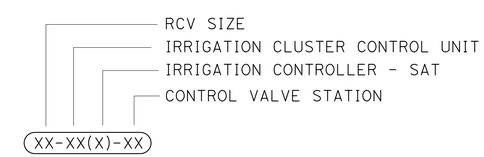

VALVE CODE

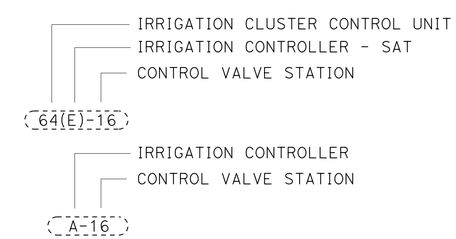

EXISTING VALVE CODE

IRRIGATION SPRINKLER SCHEDULE

ISS-1

REVISED BY | DATE REVISED
KENNY MAH | EVAN TORRES
CALCULATED-DESIGNED BY | CHECKED BY
SENIOR LANDSCAPE ARCHITECT | TIM MANN

STATE OF CALIFORNIA - DEPARTMENT OF TRANSPORTATION
Caltrans® LANDSCAPE ARCHITECTURE

LAST REVISION 09-17-15 | DATE PLOTTED => 12-JAN-2016 | TIME PLOTTED => 16:10

Dist	COUNTY	ROUTE	POST MILES TOTAL PROJECT	SHEET No.	TOTAL SHEETS
11	SD	8,54,67, 94,125,etc.	Var	146	231

LICENSED LANDSCAPE ARCHITECT

01-11-16
PLANS APPROVAL DATE

LICENSED LANDSCAPE ARCHITECT
KENNETH L. MAH No. 3649
BOARD DATE 02-29-16
EXPIRATION DATE 12-11-15
Date
STATE OF CALIFORNIA

THE STATE OF CALIFORNIA OR ITS OFFICERS OR AGENTS SHALL NOT BE RESPONSIBLE FOR THE ACCURACY OR COMPLETENESS OF SCANNED COPIES OF THIS PLAN SHEET.

NOTES:

1. FOR ACCURATE RIGHT OF WAY DATA, CONTACT RIGHT OF WAY ENGINEERING AT THE DISTRICT OFFICE.
2. ICC - SAT '1(D)' LOCATED ON SOUTHSIDE OF SWEETWATER Rd UNDER EB I-54 TO NB I-805 CONNECTOR.
3. Exist 2-2" WM AND 2-2" BPA LOCATED AT NORTHEAST CORNER OF SWEETWATER Rd AND EUCLID Ave.

NATIONAL CITY

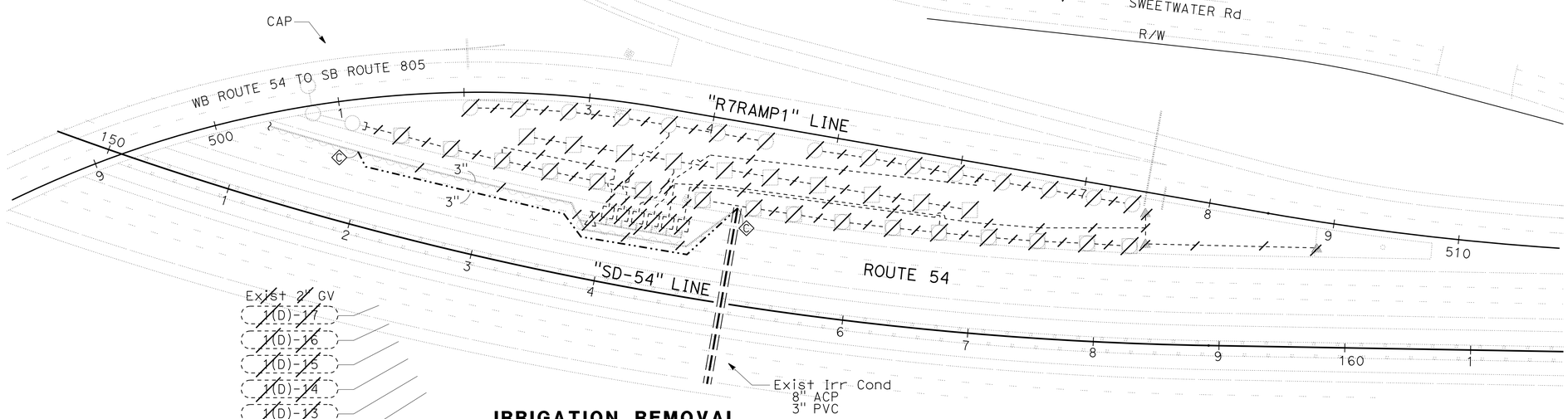

IRRIGATION REMOVAL

NATIONAL CITY

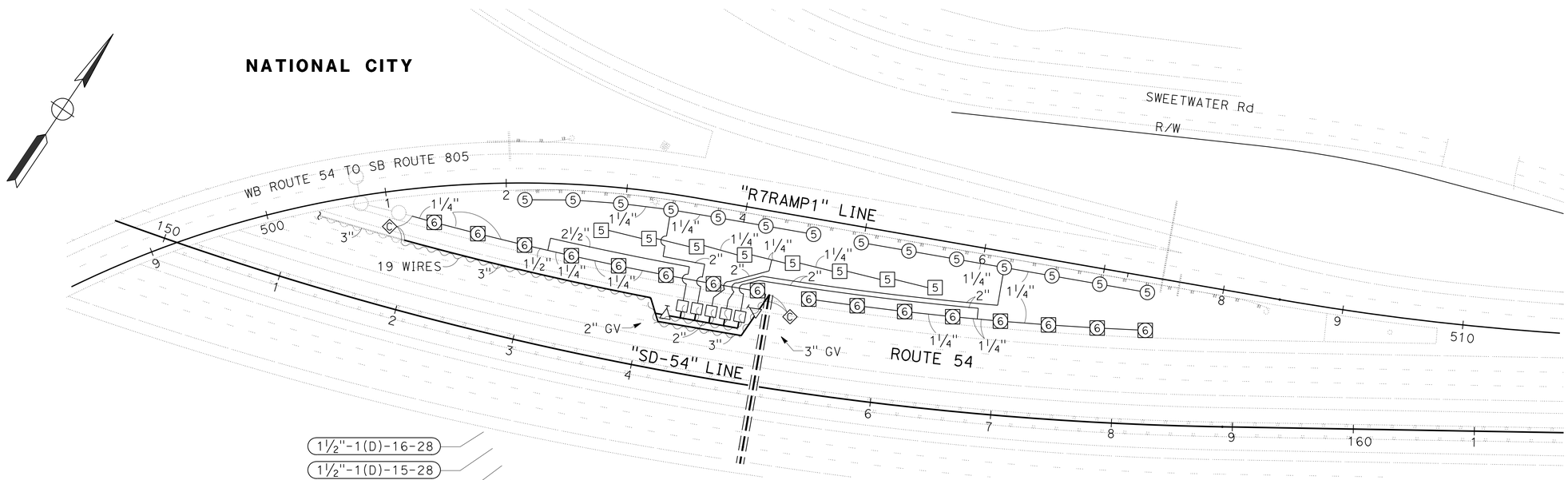

LOCATION 1

ROUTE 54 PM 1.93

APPROVED FOR IRRIGATION REMOVAL AND IRRIGATION WORK ONLY

IRRIGATION REMOVAL AND IRRIGATION PLAN

SCALE: 1" = 50'

IR-1

STATE OF CALIFORNIA - DEPARTMENT OF TRANSPORTATION
Caltrans® LANDSCAPE ARCHITECTURE

SENIOR LANDSCAPE ARCHITECT: TIM MANN
CALCULATED-DESIGNED BY: KENNY MAH
CHECKED BY: EVAN TORRES
REVISED BY
DATE REVISED

LAST REVISION 12-23-15
DATE PLOTTED => 12-JAN-2016
TIME PLOTTED => 16:10

Dist	COUNTY	ROUTE	POST MILES TOTAL PROJECT	SHEET No.	TOTAL SHEETS
11	SD	8,54,67, 94,125,etc.	Var	147	231

LICENSED LANDSCAPE ARCHITECT

01-11-16
PLANS APPROVAL DATE

LICENSED LANDSCAPE ARCHITECT
KENNETH L. MAH No. 3649
STATE OF CALIFORNIA
BOARD OF
02-29-16
EXPIRATION DATE
12-11-15
Date

THE STATE OF CALIFORNIA OR ITS OFFICERS OR AGENTS SHALL NOT BE RESPONSIBLE FOR THE ACCURACY OR COMPLETENESS OF SCANNED COPIES OF THIS PLAN SHEET.

NOTES:

1. FOR ACCURATE RIGHT OF WAY DATA, CONTACT RIGHT OF WAY ENGINEERING AT THE DISTRICT OFFICE.
2. Exist 2" WM AND 2" BPA AND ICC - SAT '17(C)' LOCATED Approx 700' RIGHT SIDE OF NB 805 TO EB 94 CONNECTOR.

SAN DIEGO

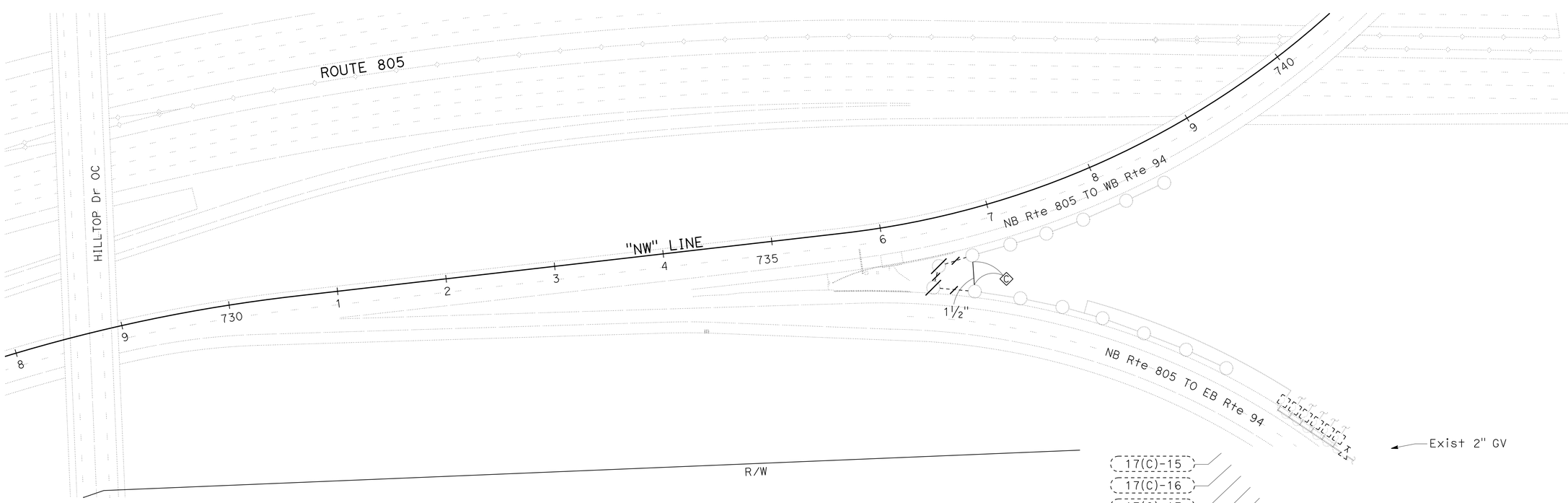

LOCATION 43

ROUTE 805 PM 13.44

APPROVED FOR IRRIGATION REMOVAL AND IRRIGATION WORK ONLY

IRRIGATION REMOVAL AND IRRIGATION PLAN

SCALE: 1" = 50'

IR-2

STATE OF CALIFORNIA - DEPARTMENT OF TRANSPORTATION
Caltrans® LANDSCAPE ARCHITECTURE

SENIOR LANDSCAPE ARCHITECT: TIM MANN

CALCULATED-DESIGNED BY: KENNY MAH
CHECKED BY: EVAN TORRES

REVISED BY
DATE REVISED

LAST REVISION 12-23-15
DATE PLOTTED => 12-JAN-2016
TIME PLOTTED => 16:10

Dist	COUNTY	ROUTE	POST MILES TOTAL PROJECT	SHEET No.	TOTAL SHEETS
11	SD	8,54,67, 94,125,etc.	Var	148	231

LICENSED LANDSCAPE ARCHITECT

01-11-16
PLANS APPROVAL DATE

LICENSED LANDSCAPE ARCHITECT
KENNETH L. MAH No. 3649
STATE OF CALIFORNIA
BOARD SEAL
02-29-16
EXPIRATION DATE
12-11-15
Date

THE STATE OF CALIFORNIA OR ITS OFFICERS OR AGENTS SHALL NOT BE RESPONSIBLE FOR THE ACCURACY OR COMPLETENESS OF SCANNED COPIES OF THIS PLAN SHEET.

NOTES:

1. FOR ACCURATE RIGHT OF WAY DATA, CONTACT RIGHT OF WAY ENGINEERING AT THE DISTRICT OFFICE.
2. Exist 3" WM LOCATED AT 2937 CAMINO DEL RIO SOUTH.
3. Exist IC "W","X","Y" AND "Z" ARE LOCATED AT THE CALTRANS LANDSCAPE MAINTENANCE YARD AT 2800 CAMINO DEL RIO SOUTH.
4. Exist IRRIGATION SHOWN TO BE OPERATED.

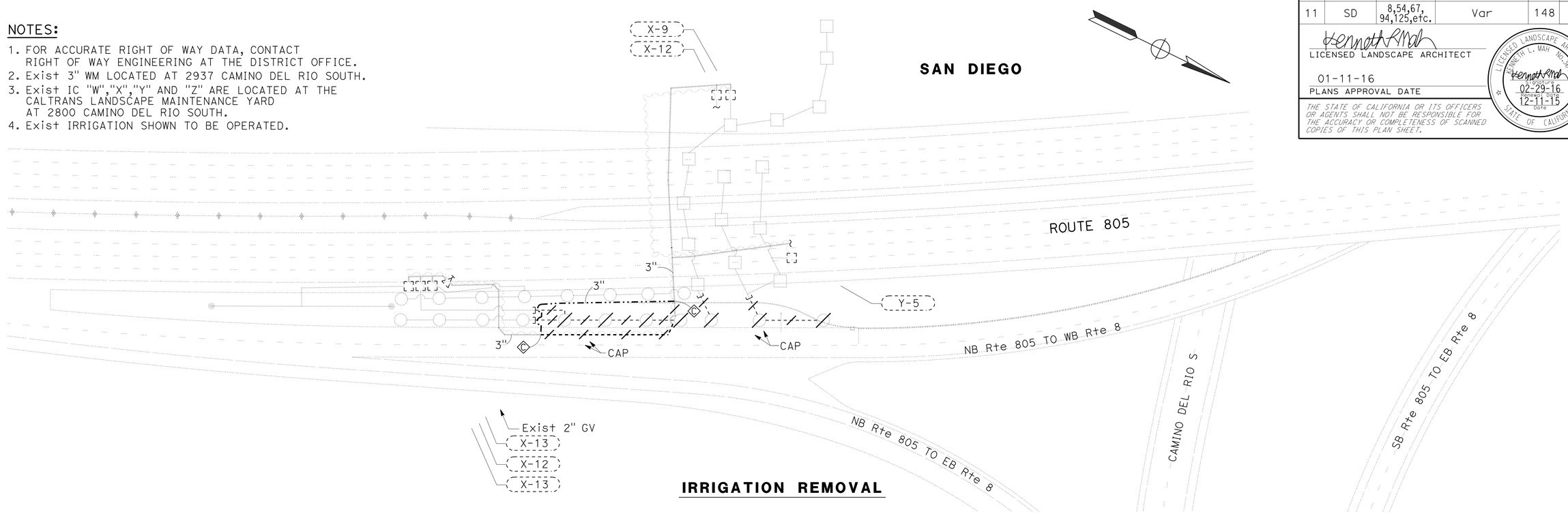

IRRIGATION REMOVAL

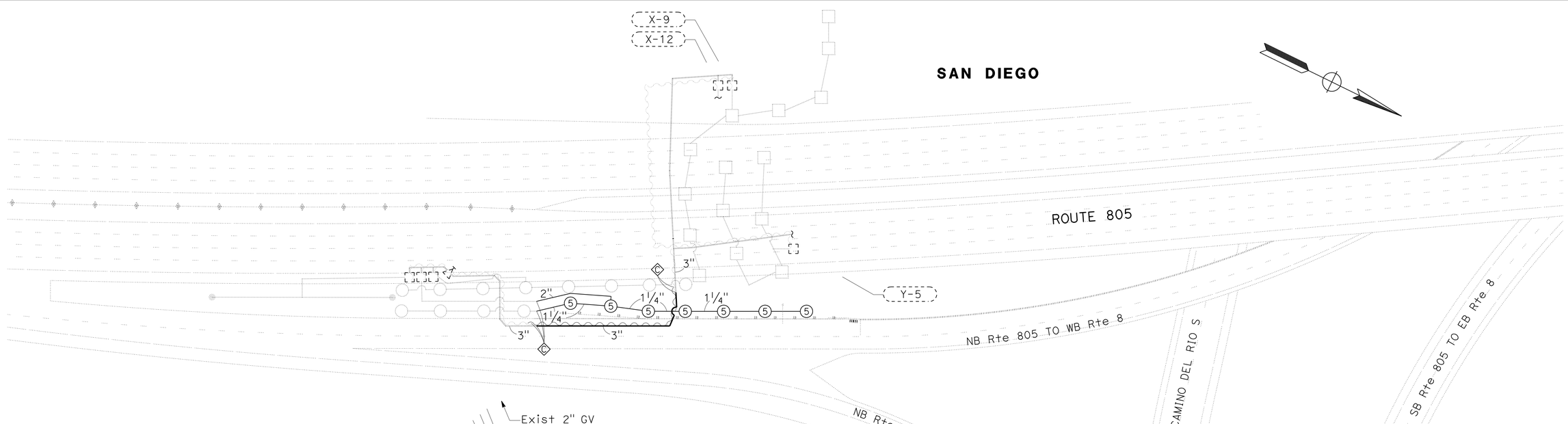

LOCATION 46

ROUTE 805 PM 17.49

APPROVED FOR IRRIGATION REMOVAL AND IRRIGATION WORK ONLY

IRRIGATION REMOVAL AND IRRIGATION PLAN

SCALE: 1" = 50'

IR-3

STATE OF CALIFORNIA - DEPARTMENT OF TRANSPORTATION
Caltrans® LANDSCAPE ARCHITECTURE

SENIOR LANDSCAPE ARCHITECT: TIM MANN

CALCULATED-DESIGNED BY: KENNY MAH
CHECKED BY: EVAN TORRES

REVISED BY / DATE REVISED

LAST REVISION 12-23-15
DATE PLOTTED => 12-JAN-2016
TIME PLOTTED => 16:10

Dist	COUNTY	ROUTE	POST MILES TOTAL PROJECT	SHEET No.	TOTAL SHEETS
11	SD	8,54,67, 94,125,etc.	Var	149	231

LICENSED LANDSCAPE ARCHITECT

01-11-16
PLANS APPROVAL DATE

LICENSED LANDSCAPE ARCHITECT — KENNETH L. MAH No. 3449 — STATE OF CALIFORNIA
REGISTERED PROFESSIONAL ENGINEER 02-29-16
CONSULTANT ENGINEER 12-11-15
Date

THE STATE OF CALIFORNIA OR ITS OFFICERS OR AGENTS SHALL NOT BE RESPONSIBLE FOR THE ACCURACY OR COMPLETENESS OF SCANNED COPIES OF THIS PLAN SHEET.

IRRIGATION QUANTITIES

DESCRIPTION	IRRIGATION CONTROLLER	VALVE NUMBER	IRRIGATION CONTROLLER (EA) 12 STATION	16 STATION	24 STATION	40 STATION	48 STATION	TWO WIRE	CEC (N) SINGLE	CEC (N) DOUBLE	COPPER PIPE (SUPPLY LINE) (LF) 2"	3"	WM (EA) 2"	BPA (EA) 2"	(N) ENCLOSURE	(N) BLANKET	PRV (EA) 2"	REMOTE CONTROL VALVE (MASTER) (EA) 1½"	2"	3"	FLOW SENSOR (EA) 1½"	2"	3"	GATE VALVE (EA) 1½"	2"	3"	BALL VALVE (EA) 1"	1½"	REMOTE CONTROL VALVE (EA) 1"	1½"	2"	PLASTIC PIPE (SCHEDULE 40) (SUPPLY LINE) (LF) 1"	1¼"	1½"	2"	PLASTIC PIPE (CLASS 315) (SUPPLY LINE) (LF) 2½"	3"	TEMPORARY IRRIGATION SUPPLY LINE (LF) 2"	3"	CHECK VALVE (EA) 1"	1¼"	1½"	2"	SPRINKLER ASSEMBLY (EA) TREE WELL	RISER GEAR DRIVEN	POP-UP GEAR DRIVEN	RISER	POP-UP
SUBTOTALS PER VALVE ON LATERAL SUPPLY SIDE OF CONTROL VALVE	1(D)	12																														160	120		220												8		
		13																														160	80		280											7			
		14																														160	120		70											8			
		15																														160	80		120											7			
		16																														80	210	20		140											8		
	17(C)	15																																40															
	X	12																														80	200		80											7			
SUBTOTALS PER SHEET ON MAIN SUPPLY SIDE OF CONTROL VALVE	SHEET NUMBER	IR-1																							1	1				5							310		310										
		IR-3																																			160		160										
TOTAL																									1	1				5		800	810	60	770	140	470		470						29	16		

IRRIGATION QUANTITIES
IQ-1

STATE OF CALIFORNIA - DEPARTMENT OF TRANSPORTATION
Caltrans® LANDSCAPE ARCHITECTURE

SENIOR LANDSCAPE ARCHITECT: TIM MANN
CALCULATED-DESIGNED BY: KENNY MAH
CHECKED BY: EVAN TORRES
REVISED BY
DATE REVISED

LAST REVISION 12-23-15
DATE PLOTTED => 12-JAN-2016
TIME PLOTTED => 16:10

Dist	COUNTY	ROUTE	POST MILES TOTAL PROJECT	SHEET No.	TOTAL SHEETS
11	SD	8,54,67, 94,125,etc.	Var	150	231

LICENSED LANDSCAPE ARCHITECT

01-11-16
PLANS APPROVAL DATE

LICENSED LANDSCAPE ARCHITECT
KENNETH L. MAH No. 3649
REGISTERED 02-29-16
EXPIRATION DATE 12-11-15
DATE
STATE OF CALIFORNIA

THE STATE OF CALIFORNIA OR ITS OFFICERS OR AGENTS SHALL NOT BE RESPONSIBLE FOR THE ACCURACY OR COMPLETENESS OF SCANNED COPIES OF THIS PLAN SHEET.

NOTE:
FOR ACCURATE RIGHT OF WAY DATA, CONTACT RIGHT OF WAY ENGINEERING AT THE DISTRICT OFFICE.

ABBREVIATIONS:
CY — CUBIC YARD
SQFT — SQUARE FOOT
MEPA — MAINTAIN EXISTING PLANTED AREAS

APPLICABLE WHEN CIRCLED:
1 - QUANTITIES SHOWN ARE "PER PLANT" UNLESS SHOWN AS SQFT OR SQYD APPLICATION RATES.
2 - SUFFICIENT TO RECEIVE ROOT BALL AND AMENDMENTS IF REQUIRED.
3 - WOOD CHIP MULCH
4 SEE STANDARD DETAIL.
5 - SEE SPECIAL PROVISIONS.
6 - SEE STANDARD SPECIFICATIONS.
7 - AS SHOWN ON PLANS.
8 - UNLESS OTHERWISE SHOWN ON PLANS.
9 - 2X ROOT BALL WIDTH.
10 - MAINTAIN EXISTING PLANTED AREAS WORK

PLANT LIST AND PLANTING SPECIFICATIONS

PLANT GROUP	PLANT No.	SYMBOL	BOTANICAL NAME	COMMON NAME	SIZE	QUANTITY EACH	HOLE SIZE (INCH) Dia	HOLE SIZE (INCH) DEPTH	BASIN TYPE	IRON SULFATE 1	SOIL AMEND 1	FERTILIZER 1 PLANTING	FERTILIZER 1 PLT ESTB	FERTILIZER 1 MEPA	WOOD MULCH BASIN 1 3 (CY)	STAKING	PLANTING LIMITS MINIMUM DISTANCE (ft) FROM ETW	Pvmt	FENCE	WALL	PAVED DITCH	EARTH DITCH	ON CENTER (ft)	REMARKS
B	1		ACACIA REDOLENS	'LOW BOY'	No. 5	430	9	2	I	-	-	3 Pkt	-	-	0.2	-	-	10	6	6	6	7	8	GROUND COVER
H	2		CARPOBROTUS EDULIS	HOTTENTOT FIG	CUTTING 6	13,810	-	-	-	-	-	8 lb/ 1000 SQFT	4 lb/ 1000 SQFT	-	-	-	-	6	4	4	4	6	1.0	GROUND COVER
-	3		EXISTING	GROUND COVER	-	-	-	-	-	-	-	-	-	4 lb/ 1000 SQFT	-	-	-	-	-	-	-	-	-	10

NOTE:
UNDERLINED PORTIONS OF BOTANICAL NAME INDICATE ABBREVIATIONS USED ON PLANTING PLANS.

LEGEND:

MAINTAIN Exist PLANTED AREAS

WOOD MULCH

XX CY MULCH (X TREES) — MULCH (3 CY PER Exist TREE, 3" DEPTH SPREAD 10' FROM TRUNK)

MAINTAIN Exist PLANTED AREAS

SHEET NUMBER	SQFT (QUANTITIES ARE FOR INFORMATION ONLY)
PP-1	9,700

WOOD MULCH

SHEET NUMBER	WOOD CHIP CY
PP-1	117
BASIN	86
TOTAL	203

APPROVED FOR PLANTING WORK ONLY

NO SCALE

PLANT LIST

PL-1

REVISED BY | DATE REVISED
KENNY MAH | EVAN TORRES
CALCULATED-DESIGNED BY | CHECKED BY
SENIOR LANDSCAPE ARCHITECT | TIM MANN
STATE OF CALIFORNIA - DEPARTMENT OF TRANSPORTATION
Caltrans LANDSCAPE ARCHITECTURE

LAST REVISION 12-23-15 | DATE PLOTTED => 12-JAN-2016 | TIME PLOTTED => 16:10

Dist	COUNTY	ROUTE	POST MILES TOTAL PROJECT	SHEET No.	TOTAL SHEETS
11	SD	8,54,67, 94,125,etc.	Var	151	231

LICENSED LANDSCAPE ARCHITECT

01-11-16
PLANS APPROVAL DATE

LICENSED LANDSCAPE ARCHITECT
KENNETH L. MAH No. 3649
Date of Exp.
02-29-16
12-11-15
Date
STATE OF CALIFORNIA

THE STATE OF CALIFORNIA OR ITS OFFICERS OR AGENTS SHALL NOT BE RESPONSIBLE FOR THE ACCURACY OR COMPLETENESS OF SCANNED COPIES OF THIS PLAN SHEET.

NOTE:

FOR ACCURATE RIGHT OF WAY DATA, CONTACT RIGHT OF WAY ENGINEERING AT THE DISTRICT OFFICE.

NATIONAL CITY

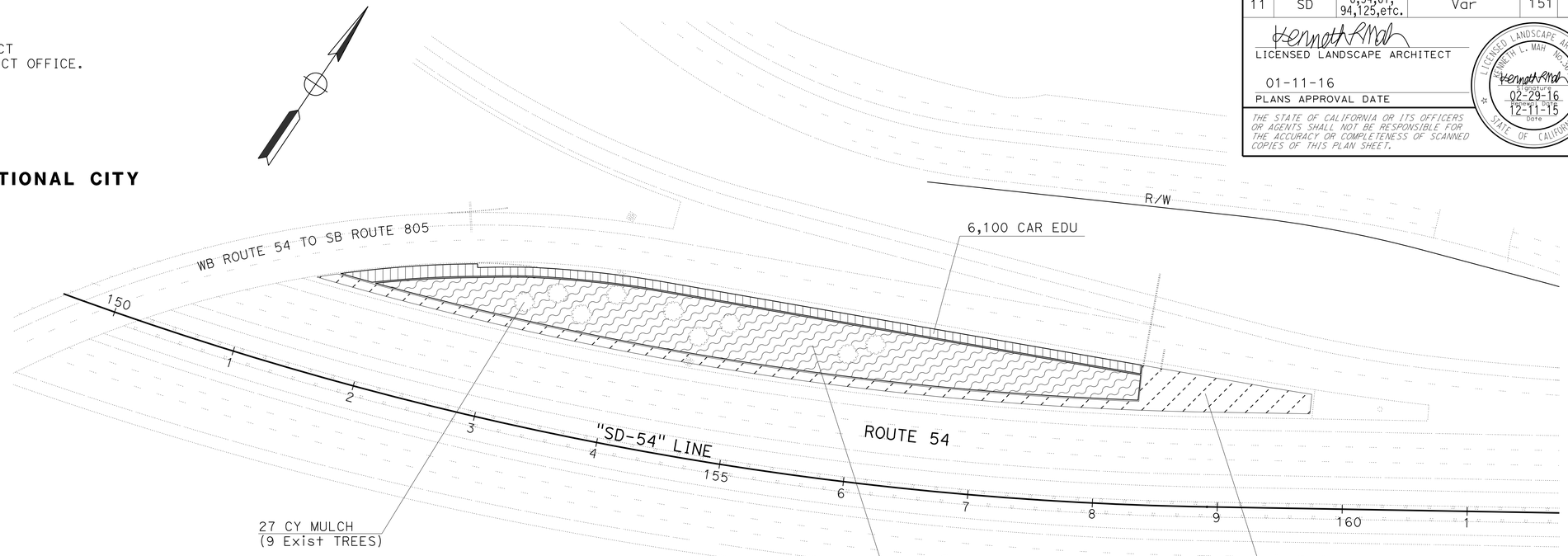

LOCATION 1

ROUTE 54 PM 1.93

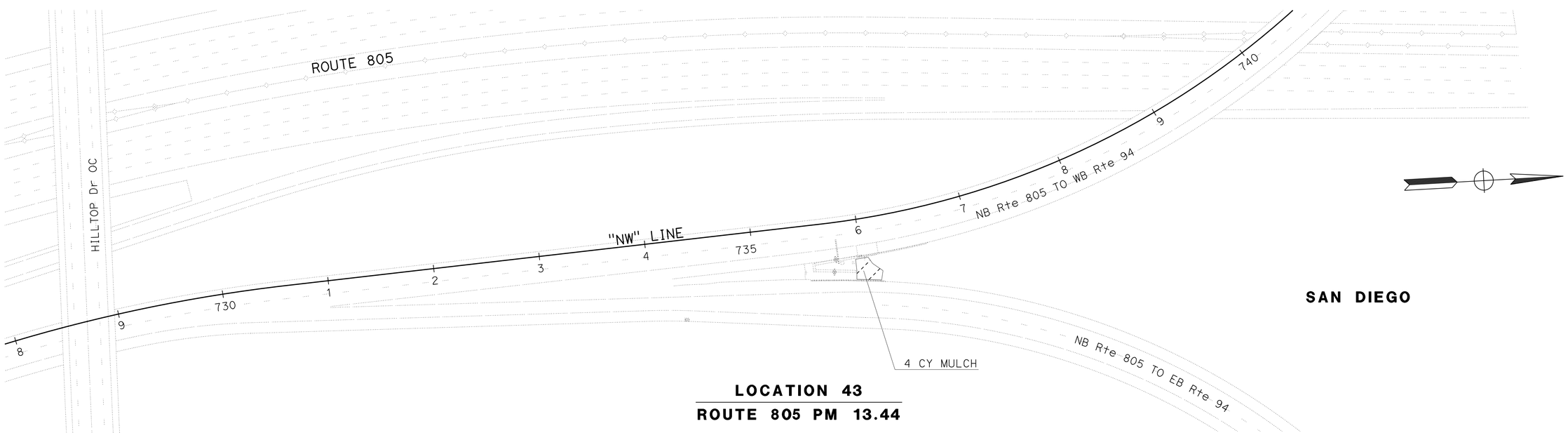

SAN DIEGO

LOCATION 43

ROUTE 805 PM 13.44

APPROVED FOR PLANTING WORK ONLY

PLANTING PLAN

SCALE: 1" = 50'

PP-1

STATE OF CALIFORNIA - DEPARTMENT OF TRANSPORTATION
Caltrans® LANDSCAPE ARCHITECTURE

SENIOR LANDSCAPE ARCHITECT: TIM MANN

CALCULATED-DESIGNED BY: KENNY MAH
CHECKED BY: EVAN TORRES

REVISED BY | DATE REVISED

LAST REVISION 12-23-15
DATE PLOTTED => 12-JAN-2016
TIME PLOTTED => 16:10

Dist	COUNTY	ROUTE	POST MILES TOTAL PROJECT	SHEET No.	TOTAL SHEETS
11	SD	8,54,67, 94,125,etc.	Var	152	231

LICENSED LANDSCAPE ARCHITECT

01-11-16
PLANS APPROVAL DATE

LICENSED LANDSCAPE ARCHITECT
KENNETH L. MAH No. 3449
02-29-16
12-11-15
STATE OF CALIFORNIA

THE STATE OF CALIFORNIA OR ITS OFFICERS OR AGENTS SHALL NOT BE RESPONSIBLE FOR THE ACCURACY OR COMPLETENESS OF SCANNED COPIES OF THIS PLAN SHEET.

NOTE:

FOR ACCURATE RIGHT OF WAY DATA, CONTACT
RIGHT OF WAY ENGINEERING AT THE DISTRICT OFFICE.

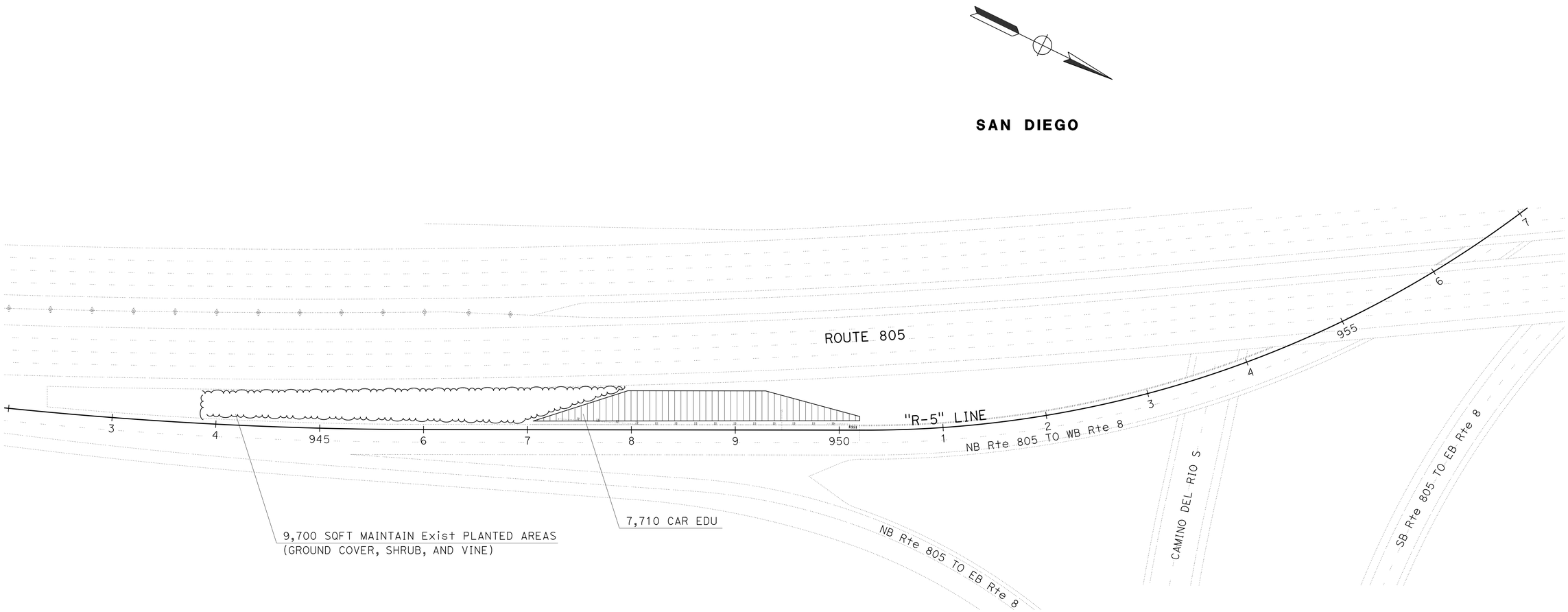

LOCATION 46

ROUTE 805 PM 17.49

APPROVED FOR PLANTING WORK ONLY

PLANTING PLAN

SCALE: 1" = 50'

PP-2

STATE OF CALIFORNIA - DEPARTMENT OF TRANSPORTATION
Caltrans® LANDSCAPE ARCHITECTURE

SENIOR LANDSCAPE ARCHITECT: TIM MANN

CALCULATED-DESIGNED BY: KENNY MAH
CHECKED BY: EVAN TORRES

REVISED BY
DATE REVISED

LAST REVISION 12-23-15
DATE PLOTTED => 12-JAN-2016
TIME PLOTTED => 16:10

Dist	COUNTY	ROUTE	POST MILES TOTAL PROJECT	SHEET No.	TOTAL SHEETS
11	SD	8,54,67,94, 125, etc.	Var	153	231

Manuel Reyes 12-11-15
REGISTERED CIVIL ENGINEER DATE

01-11-16
PLANS APPROVAL DATE

REGISTERED PROFESSIONAL ENGINEER MANUEL REYES No. 58621 Exp. 12-31-16 CIVIL STATE OF CALIFORNIA

THE STATE OF CALIFORNIA OR ITS OFFICERS OR AGENTS SHALL NOT BE RESPONSIBLE FOR THE ACCURACY OR COMPLETENESS OF SCANNED COPIES OF THIS PLAN SHEET.

LEGEND:

EROSION CONTROL (TYPE 1)

EROSION CONTROL (TYPE 2)

\\\\\CS\\\\\ COMPOST SOCK

EROSION CONTROL (TYPE 1)

SEQUENCE	ITEM	MATERIAL		APPLICATION RATE	REMARKS
		DESCRIPTION	TYPE		
STEP 1	COMPOST	COMPOST	MEDIUM	270 CY/ACRE	
STEP 2	INCORPORATE MATERIALS	COMPOST	---	---	18" DEPTH
STEP 3	IRRIGATION	---	---	---	LOCATION 1, SEE IR-1
STEP 4	COMPOST SOCK	COMPOST SOCK	---	---	8" Dia FOR INTERMIDIATE SLOPE 12" Dia AT TOE OF SLOPE
STEP 5	PLANTING	---	---	---	LOCATION 1, SEE PP-1
STEP 6	DRY SEED	SEED	TYPE 1	27 LB/ACRE	
STEP 7	ROLLED EROSION CONTROL PRODUCT (NETTING)	NETTING	TYPE B	---	

EROSION CONTROL (TYPE 2)

SEQUENCE	ITEM	MATERIAL		APPLICATION RATE	REMARKS
		DESCRIPTION	TYPE		
STEP 1	COMPOST	COMPOST	MEDIUM	135 CY/ACRE	
STEP 2	INCORPORATE MATERIALS	COMPOST	---	---	12" DEPTH
STEP 3	COMPOST SOCK	COMPOST SOCK	---	---	12" Dia
STEP 4	DRY SEED	SEED	TYPE 2	27.5 LB/ACRE	

EROSION CONTROL (TYPE 2) ONLY FOR LOCATION 47.

SEED MIX (TYPE 1)

BOTANICAL NAME (COMMON NAME)	PERCENT GERMINATION (MINIMUM)	POUNDS PURE LIVE SEED PER ACRE (SLOPE MEASUREMENT) (N)
BACCHARIS SAROTHROIDES (BROOM BACCHARIS) [1]	25	0.5
ERIOGONUM FASCICULATUM (CALIFORNIA BUCKWHEAT) [1]	20	2.5
ISOCOMA MENZIESII (COAST GOLDENBUSH) [1]	25	2.0
LASTHENIA CALIFORNICA (GOLDFIELDS) [1]	35	4.0
LOTUS SCOPARIUS (DEERWEED) [1]	60	6.0
LUPINUS BICOLOR (PIGMY LUPINE) [1]	65	4.0
NASELLA PULCHRA (PURPLE NEEDLEGRASS) [1]	60	8.0
	TOTAL	27.0

[1] SEED PRODUCED IN CALIFORNIA ONLY
(N) - NOT A SEPARATE PAY ITEM, FOR INFORMATION ONLY.

SEED MIX (TYPE 2)

BOTANICAL NAME (COMMON NAME)	PERCENT GERMINATION (MINIMUM)	POUNDS PURE LIVE SEED PER ACRE (SLOPE MEASUREMENT) (N)
ATEMISIA CALIFORNICA (CALIFORNIA SAGEBRUSH) [1]	35	3.0
ERIOGONUM FASCICULATUM (CALIFORNIA BUCKWHEAT) [1]	20	2.5
ESCHSCHOLZIA CALIFORNIA (CALIFORNIA POPPY) [1]	80	2.0
LASTHENIA CALIFORNICA (GOLDFIELDS) [1]	35	4.0
LOTUS SCOPARIUS (DEERWEED) [1]	60	6.0
NASELLA PULCHRA (PURPLE NEEDLEGRASS) [1]	60	8.0
SALVIA MELLIFERA (BLACK SAGE) [1]	60	2.0
	TOTAL	27.5

[1] SEED PRODUCED IN CALIFORNIA ONLY.
(N) - NOT A SEPARATE PAY ITEM, FOR INFORMATION ONLY.
SEED MIX (TYPE 2) ONLY FOR LOCATION 47.

EROSION CONTROL LEGEND

ECL-1

REVISED BY | DATE REVISED
DONI DE CASTRO | MANUEL REYES
CALCULATED-DESIGNED BY | CHECKED BY
FUNCTIONAL SUPERVISOR: RICHARD ESTRADA
STATE OF CALIFORNIA - DEPARTMENT OF TRANSPORTATION
Caltrans PROJECT DEVELOPMENT TRAFFIC

LAST REVISION 01-04-16 | DATE PLOTTED => 12-JAN-2016 TIME PLOTTED => 16:10

Dist	COUNTY	ROUTE	POST MILES TOTAL PROJECT	SHEET No.	TOTAL SHEETS
11	SD	8,54,67,94, 125, etc.	Var	154	231

Manuel Reyes 12-11-15
REGISTERED CIVIL ENGINEER DATE

01-11-16
PLANS APPROVAL DATE

REGISTERED PROFESSIONAL ENGINEER
MANUEL REYES
No. 58621
Exp. 12-31-16
CIVIL
STATE OF CALIFORNIA

THE STATE OF CALIFORNIA OR ITS OFFICERS OR AGENTS SHALL NOT BE RESPONSIBLE FOR THE ACCURACY OR COMPLETENESS OF SCANNED COPIES OF THIS PLAN SHEET.

NOTES:

1. EXISTING UTILITY FACILITIES HAVE NOT BEEN PLOTTED ON THESE PLAN SHEETS.

LEGEND

EROSION CONTROL (TYPE 1)

EROSION CONTROL (TYPE 2)

CS COMPOST SOCK

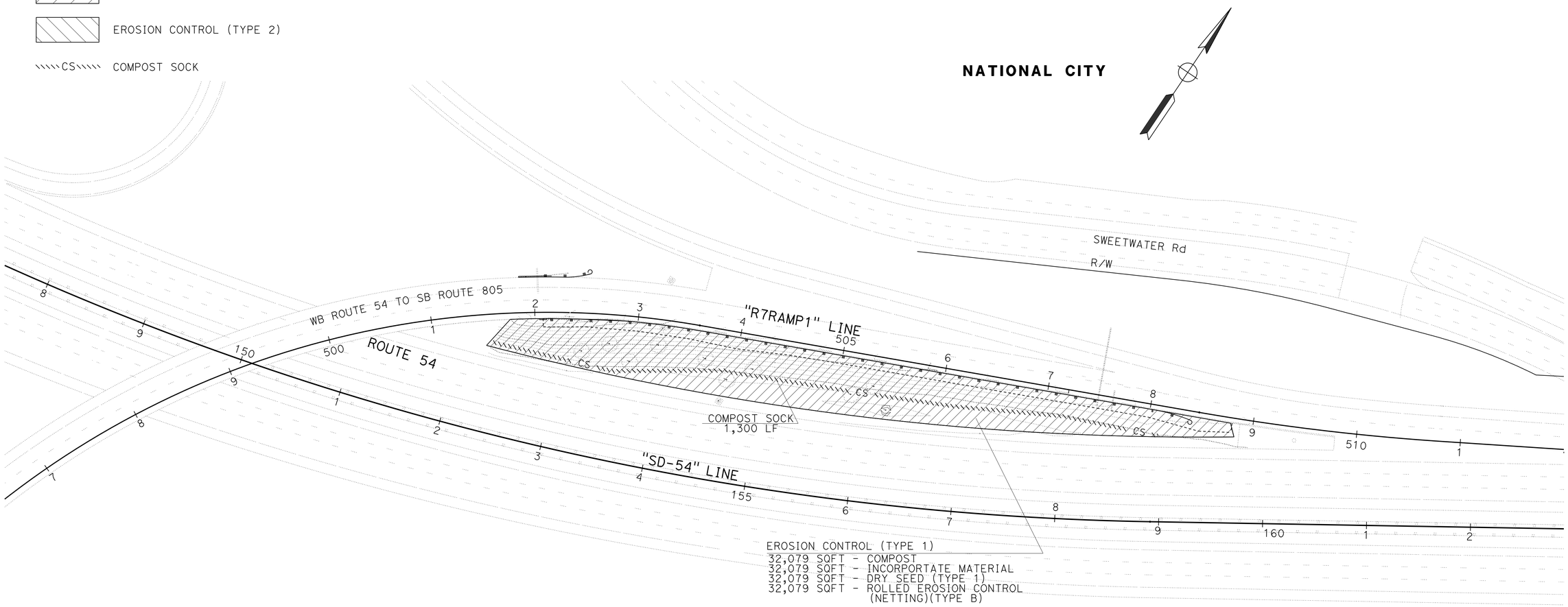

LOCATION 1

EROSION CONTROL PLANS

SCALE: 1" = 50'

EC-1

APPROVED FOR EROSION CONTROL WORK ONLY

STATE OF CALIFORNIA - DEPARTMENT OF TRANSPORTATION
Caltrans PROJECT DEVELOPMENT
TRAFFIC

FUNCTIONAL SUPERVISOR: RICHARD ESTRADA
CALCULATED-DESIGNED BY: DONI DE CASTRO
CHECKED BY: MANUEL REYES
REVISED BY
DATE REVISED

LAST REVISION 12-23-15
DATE PLOTTED => 12-JAN-2016
TIME PLOTTED => 16:10

Dist	COUNTY	ROUTE	POST MILES TOTAL PROJECT	SHEET No.	TOTAL SHEETS
11	SD	8,54,67,94, 125, *etc.*	Var	155	231

Manuel Reyes 12-11-15
REGISTERED CIVIL ENGINEER DATE

01-11-16
PLANS APPROVAL DATE

REGISTERED PROFESSIONAL ENGINEER
MANUEL REYES
No. 58621
Exp. 12-31-16
CIVIL
STATE OF CALIFORNIA

THE STATE OF CALIFORNIA OR ITS OFFICERS OR AGENTS SHALL NOT BE RESPONSIBLE FOR THE ACCURACY OR COMPLETENESS OF SCANNED COPIES OF THIS PLAN SHEET.

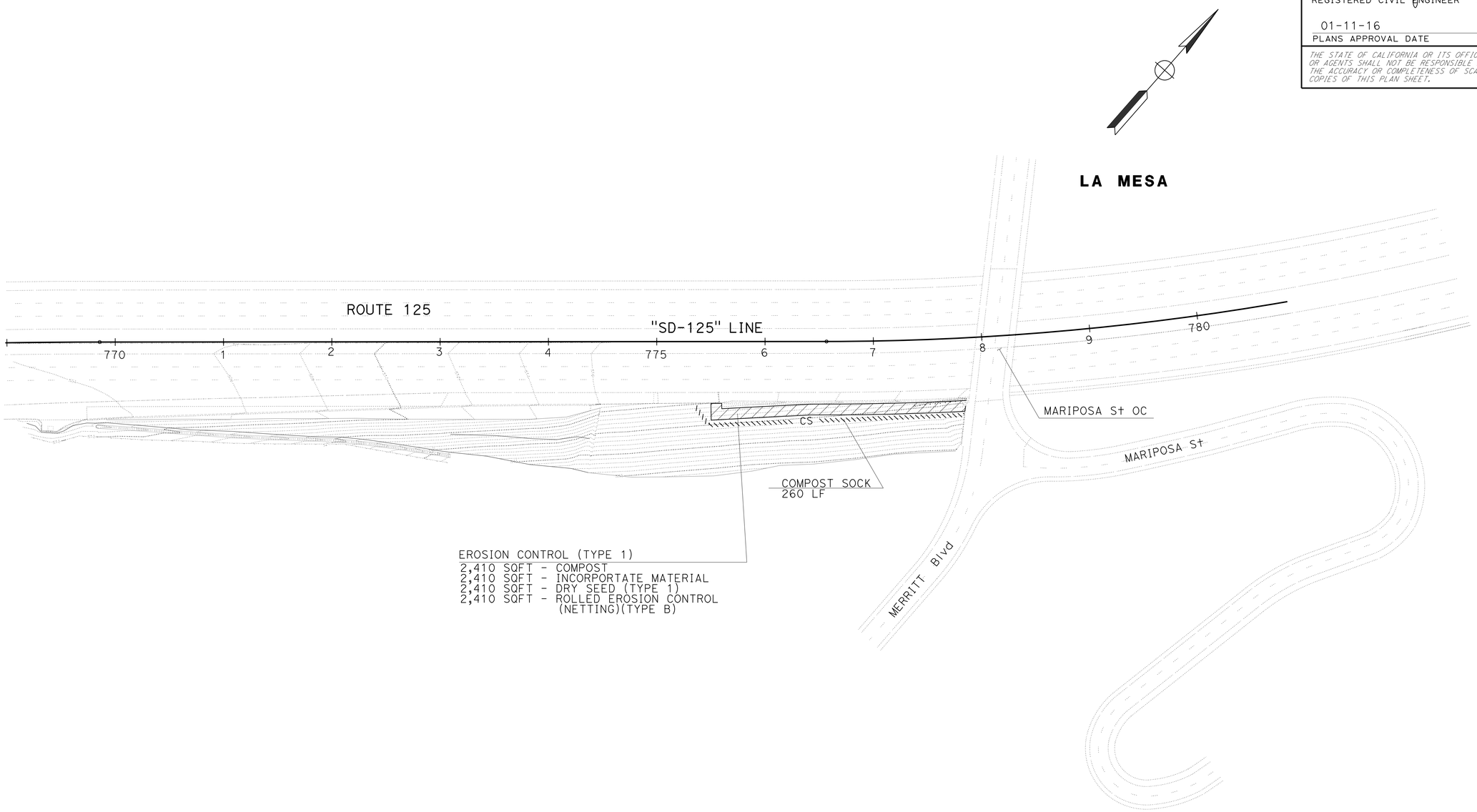

EROSION CONTROL (TYPE 1)
2,410 SQFT - COMPOST
2,410 SQFT - INCORPORTATE MATERIAL
2,410 SQFT - DRY SEED (TYPE 1)
2,410 SQFT - ROLLED EROSION CONTROL (NETTING)(TYPE B)

LOCATION 24

ROUTE 125 PM 14.12

EROSION CONTROL PLANS

SCALE: 1" = 50'

EC-2

STATE OF CALIFORNIA - DEPARTMENT OF TRANSPORTATION
Caltrans PROJECT DEVELOPMENT
TRAFFIC

FUNCTIONAL SUPERVISOR: RICHARD ESTRADA
CALCULATED-DESIGNED BY: DONI DE CASTRO
CHECKED BY: MANUEL REYES
REVISED BY
DATE REVISED

LAST REVISION 12-23-15
DATE PLOTTED => 12-JAN-2016
TIME PLOTTED => 16:10

Dist	COUNTY	ROUTE	POST MILES TOTAL PROJECT	SHEET No.	TOTAL SHEETS
11	SD	8,54,67,94, 125, etc.	Var	156	231

Manuel Reyes 12-11-15
REGISTERED CIVIL ENGINEER DATE

01-11-16
PLANS APPROVAL DATE

REGISTERED PROFESSIONAL ENGINEER
MANUEL REYES
No. 58621
Exp. 12-31-16
CIVIL
STATE OF CALIFORNIA

THE STATE OF CALIFORNIA OR ITS OFFICERS OR AGENTS SHALL NOT BE RESPONSIBLE FOR THE ACCURACY OR COMPLETENESS OF SCANNED COPIES OF THIS PLAN SHEET.

SAN DIEGO

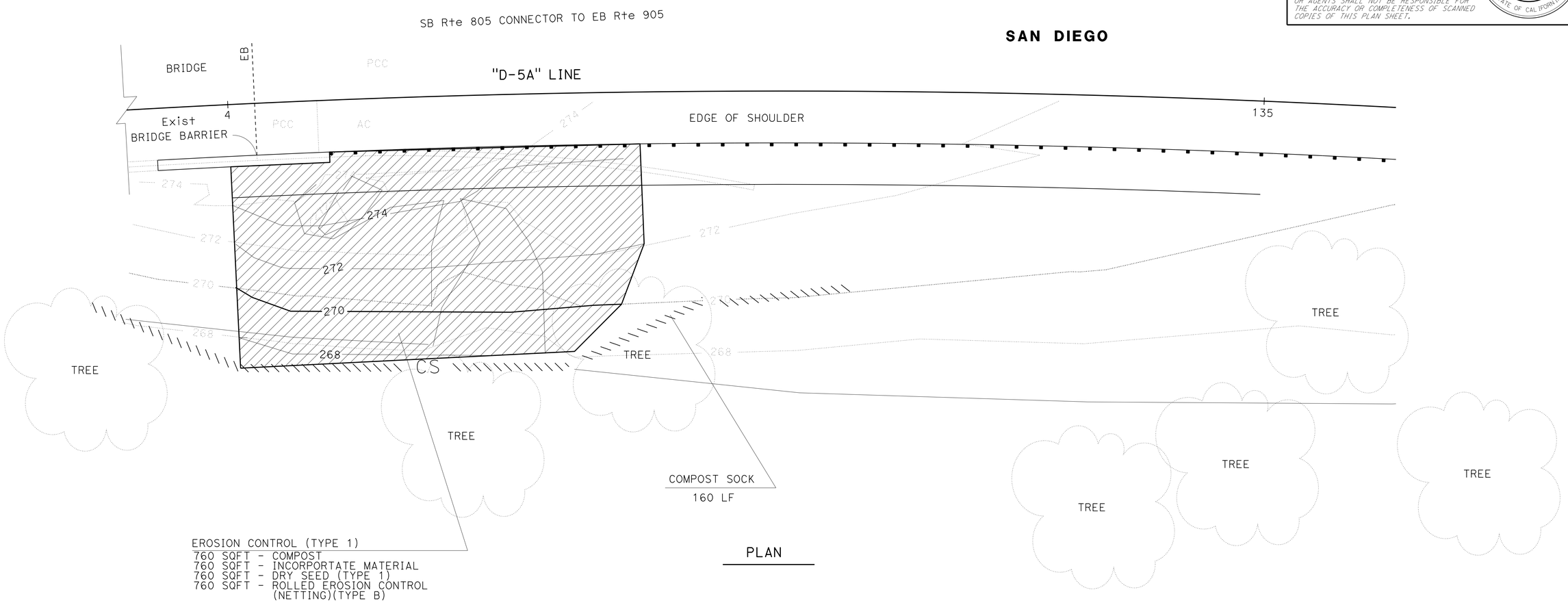

PLAN

LOCATION 36

EROSION CONTROL PLANS

SCALE: 1" = 5'

EC-3

APPROVED FOR EROSION CONTROL WORK ONLY

STATE OF CALIFORNIA - DEPARTMENT OF TRANSPORTATION
Caltrans PROJECT DEVELOPMENT
TRAFFIC

FUNCTIONAL SUPERVISOR: RICHARD ESTRADA
CALCULATED-DESIGNED BY: DONI DE CASTRO
CHECKED BY: MANUEL REYES
REVISED BY
DATE REVISED

LAST REVISION 09-03-15
DATE PLOTTED => 12-JAN-2016
TIME PLOTTED => 16:10

Dist	COUNTY	ROUTE	POST MILES TOTAL PROJECT	SHEET No.	TOTAL SHEETS
11	SD	8,54,67,94, 125, etc.	Var	157	231

Manuel Reyes 12-11-15
REGISTERED CIVIL ENGINEER DATE

01-11-16
PLANS APPROVAL DATE

REGISTERED PROFESSIONAL ENGINEER
MANUEL REYES
No. 58621
Exp. 12-31-16
CIVIL
STATE OF CALIFORNIA

THE STATE OF CALIFORNIA OR ITS OFFICERS OR AGENTS SHALL NOT BE RESPONSIBLE FOR THE ACCURACY OR COMPLETENESS OF SCANNED COPIES OF THIS PLAN SHEET.

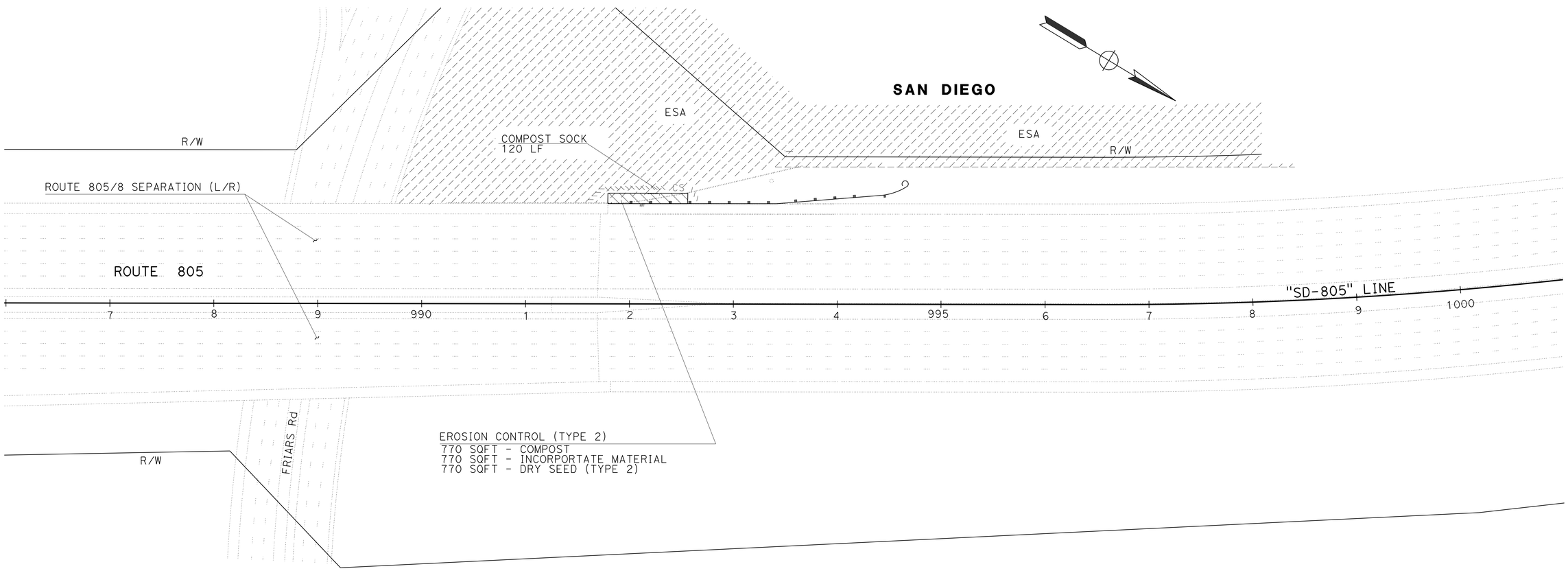

LOCATION 47

APPROVED FOR EROSION CONTROL WORK ONLY

EROSION CONTROL PLANS

SCALE: 1" = 50'

EC-4

REVISED BY	DATE REVISED

DONI DE CASTRO — MANUEL REYES

CALCULATED-DESIGNED BY — CHECKED BY

FUNCTIONAL SUPERVISOR — RICHARD ESTRADA

STATE OF CALIFORNIA - DEPARTMENT OF TRANSPORTATION
Caltrans PROJECT DEVELOPMENT
TRAFFIC

LAST REVISION 12-23-15 | DATE PLOTTED => 12-JAN-2016 | TIME PLOTTED => 16:10

Dist	COUNTY	ROUTE	POST MILES TOTAL PROJECT	SHEET No.	TOTAL SHEETS
11	SD	8,54,67,94, 125, etc.	Var	158	231

Manuel Reyes 12-11-15
REGISTERED CIVIL ENGINEER DATE

01-11-16
PLANS APPROVAL DATE

REGISTERED PROFESSIONAL ENGINEER
MANUEL REYES
No. 58621
Exp. 12-31-16
CIVIL
STATE OF CALIFORNIA

THE STATE OF CALIFORNIA OR ITS OFFICERS OR AGENTS SHALL NOT BE RESPONSIBLE FOR THE ACCURACY OR COMPLETENESS OF SCANNED COPIES OF THIS PLAN SHEET.

EROSION CONTROL

SHEET	DESCRIPTION	COMPOST	INCORPORATE MATERIALS	ROLLED EROSION CONTROL PRODUCT (NETTING) (TYPE B)	DRY SEED		COMPOST SOCK	
					(TYPE 1)	(TYPE 2)	12"	8"
		SQFT	SQFT	SQFT	SQFT		LF	
EC-1	EROSION CONTROL TYPE 1	32,079	32,079	32,079	32,079		650	650
EC-2	EROSION CONTROL TYPE 1	2,410	2,410	2,410	2,410		260	
EC-3	EROSION CONTROL TYPE 1	760	760	760	760		80	80
EC-4	EROSION CONTROL TYPE 2	770	770			770	120	
	SUBTOTAL	36,019	36,019	35,249	35,249	770	1,110	730
	TOTAL	36,019	36,019	35,249	36,019		1,840	

EROSION CONTROL QUANTITES

ECQ-1

STATE OF CALIFORNIA - DEPARTMENT OF TRANSPORTATION
Caltrans PROJECT DEVELOPMENT
TRAFFIC

FUNCTIONAL SUPERVISOR: RICHARD ESTRADA
CALCULATED-DESIGNED BY: DONI DE CASTRO
CHECKED BY: MANUEL REYES
REVISED BY
DATE REVISED

LAST REVISION 09-29-15
DATE PLOTTED => 12-JAN-2016
TIME PLOTTED => 16:10

Dist	COUNTY	ROUTE	POST MILES TOTAL PROJECT	SHEET No.	TOTAL SHEETS
11	SD	8,54,67,94 125,etc.	Var	159	231

REGISTERED ELECTRICAL ENGINEER 12-14-15 DATE

01-11-16
PLANS APPROVAL DATE

REGISTERED PROFESSIONAL ENGINEER DANNY D. McCLURE No. 16074 Exp. 12-31-17 ELECTRICAL STATE OF CALIFORNIA

THE STATE OF CALIFORNIA OR ITS OFFICERS OR AGENTS SHALL NOT BE RESPONSIBLE FOR THE ACCURACY OR COMPLETENESS OF SCANNED COPIES OF THIS PLAN SHEET.

LEGEND AND NOTES:

1 - FOR ACCURATE RIGHT OF WAY DATA, CONTACT RIGHT OF WAY ENGINEERING AT THE DISTRICT OFFICE.

LEGEND:

N△C = NO CHANGE

SDG&E = SAN DIEGO GAS AND ELECTRIC

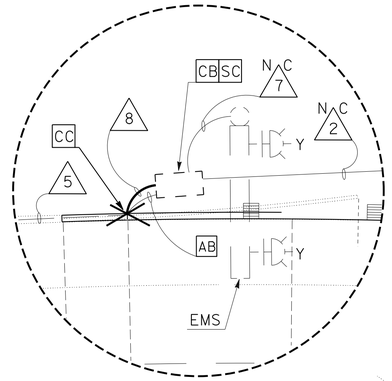

DETAIL 'A'
NO SCALE

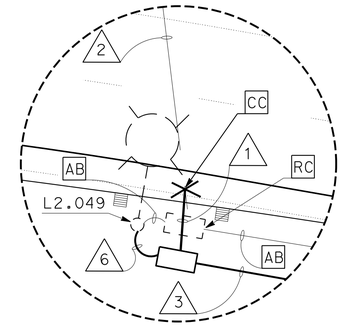

DETAIL 'B'
NO SCALE

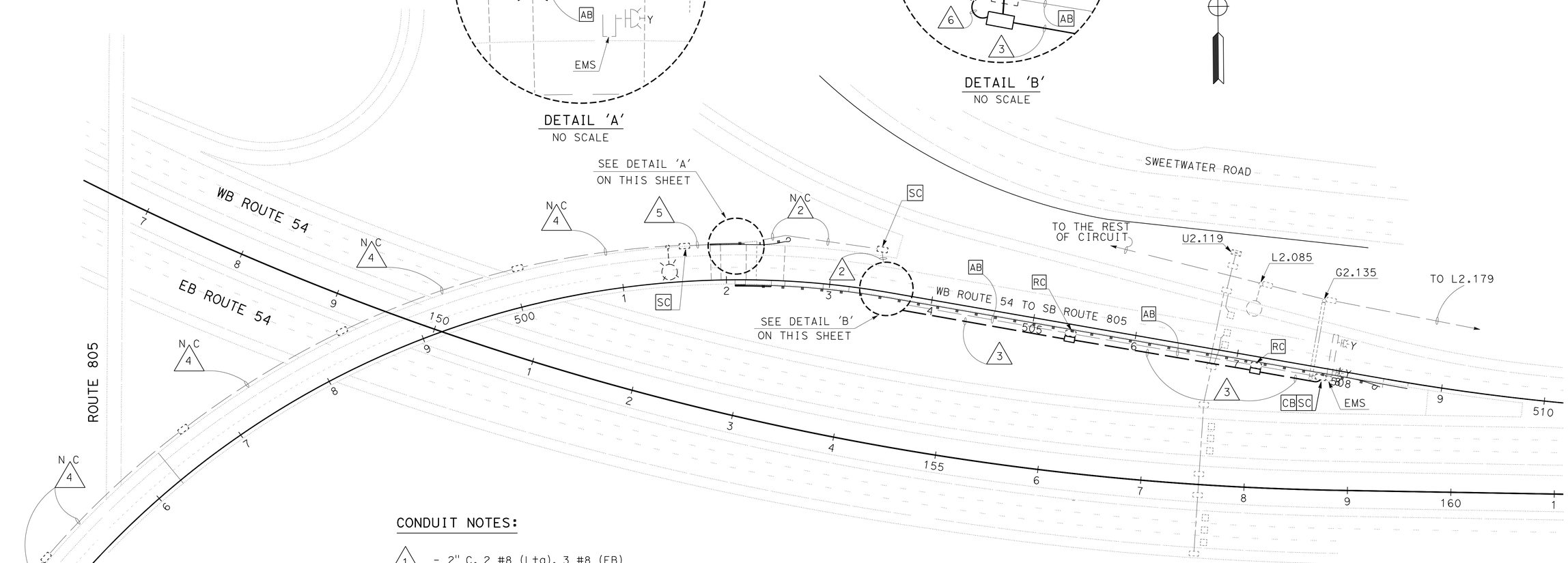

CONDUIT NOTES:

1 - 2" C, 2 #8 (Ltg), 3 #8 (FB)

N△C 2 - Exist 2" C, 2 #8(Ltg), 3 #8 (FB)

3 - 2" C, 3 #8 (FB)

N△C 4 - Exist 1½" C, 2 #8 (Ltg), 3 #8 (FB)

5 - Exist 1½" C, 2 #8 (Ltg), 3 #8 (FB)
RC 2 #8 (Ltg), 3 #8 (FB)
ADD 2 #8 (Ltg), 3 #8 (FB)

6 - 2" C, 2 #8 (Ltg)

N△C 7 - Exist 2" C, 3 #8 (FB)

8 - 1½" C, 2 #8 (Ltg), 3 #8 (FB)

LOCATIONS 1, 2
ROUTE 54

MODIFY RAMP METERING SYSTEM

SCALE: 1" = 50'

E-1

APPROVED FOR ELECTRICAL WORK ONLY

STATE OF CALIFORNIA - DEPARTMENT OF TRANSPORTATION
Caltrans® TRAFFIC ELECTRICAL

FUNCTIONAL SUPERVISOR: RAJPREET SINGH
CALCULATED-DESIGNED BY: ANTONIO A. RODRIGUEZ
CHECKED BY: DANNY McCLURE
REVISED BY
DATE REVISED

LAST REVISION 01-08-16
DATE PLOTTED => 12-JAN-2016
TIME PLOTTED => 16:10

Dist	COUNTY	ROUTE	POST MILES TOTAL PROJECT	SHEET No.	TOTAL SHEETS
11	SD	8,54,67,94 125,etc.	Var	160	231

REGISTERED ELECTRICAL ENGINEER 12-14-15 DATE

01-11-16
PLANS APPROVAL DATE

REGISTERED PROFESSIONAL ENGINEER DANNY D. McCLURE No. 16074 Exp. 12-31-17 ELECTRICAL STATE OF CALIFORNIA

THE STATE OF CALIFORNIA OR ITS OFFICERS OR AGENTS SHALL NOT BE RESPONSIBLE FOR THE ACCURACY OR COMPLETENESS OF SCANNED COPIES OF THIS PLAN SHEET.

LEGEND AND NOTES:

1 - FOR ACCURATE RIGHT OF WAY DATA, CONTACT RIGHT OF WAY ENGINEERING AT THE DISTRICT OFFICE.

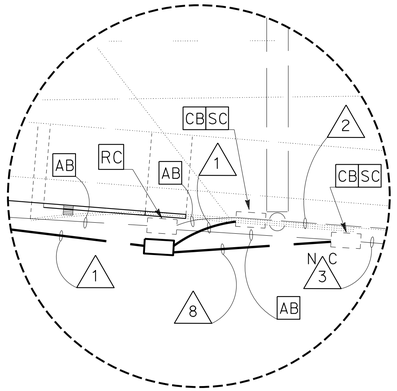

DETAIL 'A'
NO SCALE

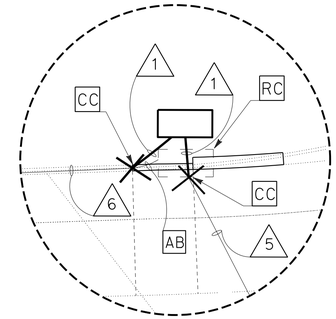

DETAIL 'B'
NO SCALE

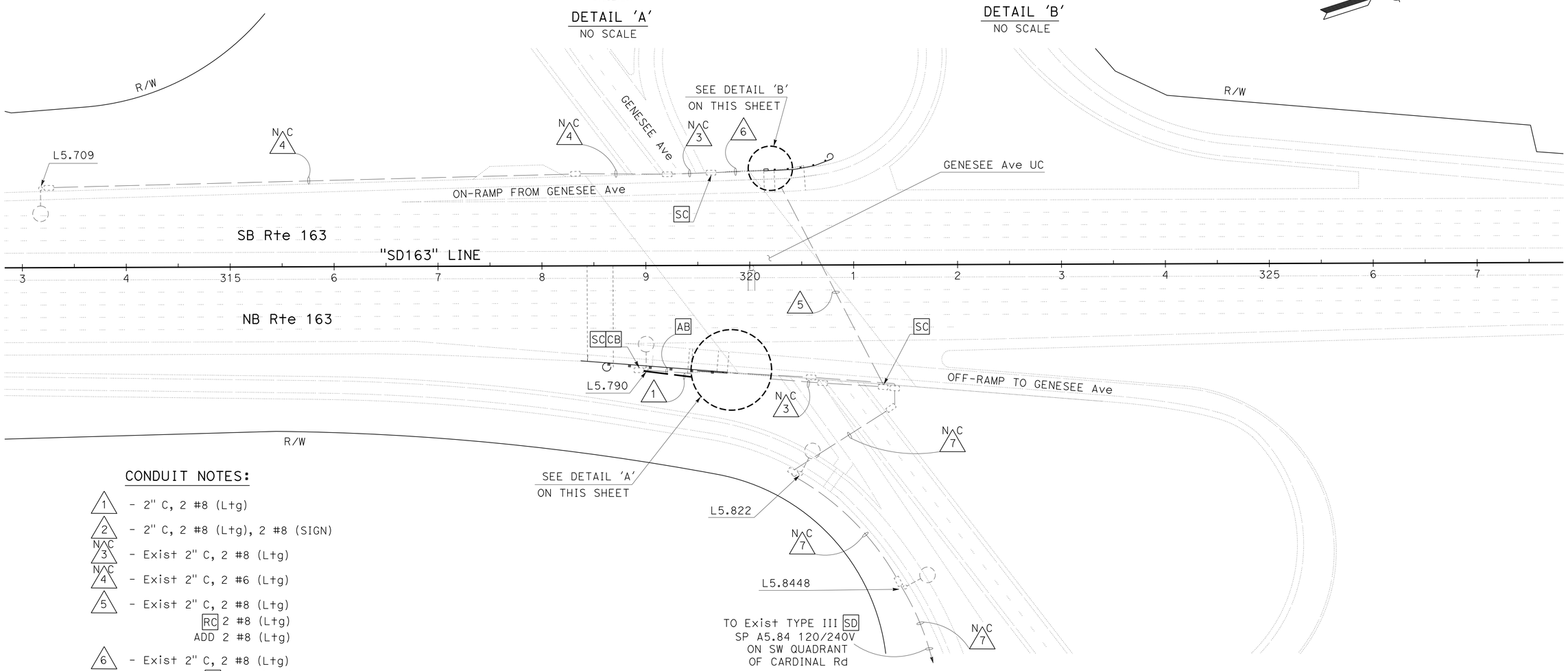

CONDUIT NOTES:

1 - 2" C, 2 #8 (Ltg)

2 - 2" C, 2 #8 (Ltg), 2 #8 (SIGN)

N C 3 - Exist 2" C, 2 #8 (Ltg)

N C 4 - Exist 2" C, 2 #6 (Ltg)

5 - Exist 2" C, 2 #8 (Ltg)
RC 2 #8 (Ltg)
ADD 2 #8 (Ltg)

6 - Exist 2" C, 2 #8 (Ltg)
RC 2 #8 (Ltg)
ADD 2 #8 (Ltg)

N C 7 - Exist 2" C, 2 #8 (Ltg)

8 - 2" C, 2 #8, PT

LOCATIONS 26, 27
ROUTE 163

APPROVED FOR ELECTRICAL WORK ONLY

MODIFY LIGHTING AND SIGN ILLUMINATION

SCALE: 1" = 50'

E-2

STATE OF CALIFORNIA - DEPARTMENT OF TRANSPORTATION
Caltrans® TRAFFIC ELECTRICAL

FUNCTIONAL SUPERVISOR: RAJPREET SINGH
CALCULATED-DESIGNED BY: ANTONIO A. RODRIGUEZ
CHECKED BY: DANNY McCLURE
REVISED BY
DATE REVISED

LAST REVISION 01-08-16
DATE PLOTTED => 12-JAN-2016
TIME PLOTTED => 16:10

Dist	COUNTY	ROUTE	POST MILES TOTAL PROJECT	SHEET No.	TOTAL SHEETS
11	SD	8,54,67,94 125,etc.	Var	161	231

REGISTERED ELECTRICAL ENGINEER 12-14-15 DATE

01-11-16
PLANS APPROVAL DATE

REGISTERED PROFESSIONAL ENGINEER DANNY D. McCLURE No. 16074 Exp. 12-31-17 ELECTRICAL STATE OF CALIFORNIA

THE STATE OF CALIFORNIA OR ITS OFFICERS OR AGENTS SHALL NOT BE RESPONSIBLE FOR THE ACCURACY OR COMPLETENESS OF SCANNED COPIES OF THIS PLAN SHEET.

LEGEND AND NOTES:

1 - FOR ACCURATE RIGHT OF WAY DATA, CONTACT RIGHT OF WAY ENGINEERING AT THE DISTRICT OFFICE.

2 - REMOVE AND REUSE LIGHTING CONDUCTORS.

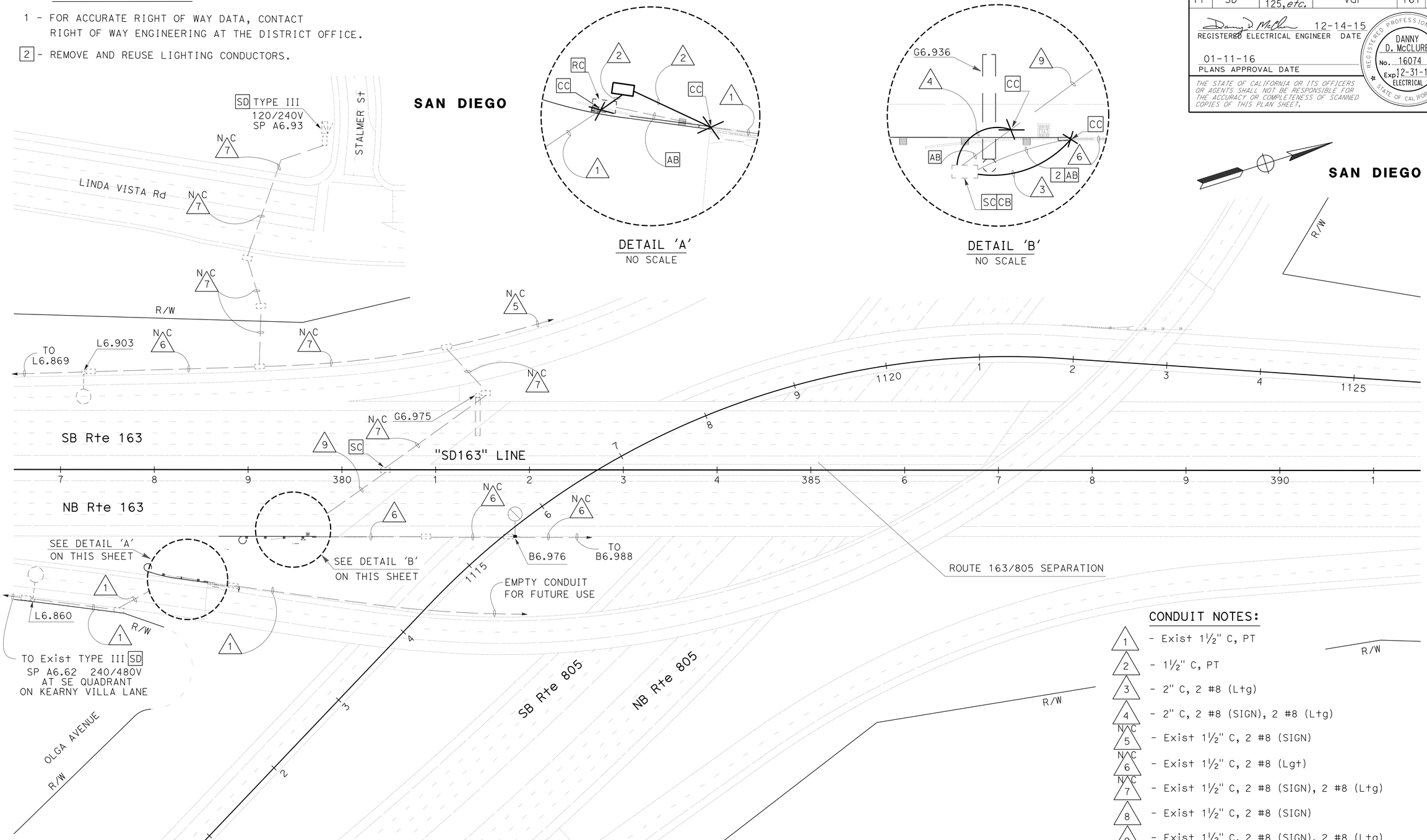

CONDUIT NOTES:

1 - Exist 1½" C, PT

2 - 1½" C, PT

3 - 2" C, 2 #8 (Ltg)

4 - 2" C, 2 #8 (SIGN), 2 #8 (Ltg)

N C 5 - Exist 1½" C, 2 #8 (SIGN)

N C 6 - Exist 1½" C, 2 #8 (Lgt)

N C 7 - Exist 1½" C, 2 #8 (SIGN), 2 #8 (Ltg)

8 - Exist 1½" C, 2 #8 (SIGN)

9 - Exist 1½" C, 2 #8 (SIGN), 2 #8 (Ltg)
RC 2 #8 (SIGN), 2 #8 (Ltg)
ADD 2 #8 (SIGN), 2 #8 (Ltg)

APPROVED FOR ELECTRICAL WORK ONLY

LOCATIONS 28, 29
ROUTE 163

MODIFY LIGHTING AND SIGN ILLUMINATION

SCALE: 1" = 50'

E-3

STATE OF CALIFORNIA - DEPARTMENT OF TRANSPORTATION
Caltrans® **TRAFFIC ELECTRICAL**

FUNCTIONAL SUPERVISOR: RAJPREET SINGH
CALCULATED-DESIGNED BY: ANTONIO A. RODRIGUEZ
CHECKED BY: DANNY McCLURE
REVISED BY / DATE REVISED

LAST REVISION 01-08-16 | DATE PLOTTED => 12-JAN-2016 | TIME PLOTTED => 16:10

Dist	COUNTY	ROUTE	POST MILES TOTAL PROJECT	SHEET No.	TOTAL SHEETS
11	SD	8,54,67,94 125,etc.	Var	162	231

REGISTERED ELECTRICAL ENGINEER 12-14-15 DATE

01-11-16
PLANS APPROVAL DATE

REGISTERED PROFESSIONAL ENGINEER DANNY D. McCLURE No. 16074 Exp. 12-31-17 ELECTRICAL STATE OF CALIFORNIA

THE STATE OF CALIFORNIA OR ITS OFFICERS OR AGENTS SHALL NOT BE RESPONSIBLE FOR THE ACCURACY OR COMPLETENESS OF SCANNED COPIES OF THIS PLAN SHEET.

LEGEND AND NOTES:

1 - FOR ACCURATE RIGHT OF WAY DATA, CONTACT RIGHT OF WAY ENGINEERING AT THE DISTRICT OFFICE.

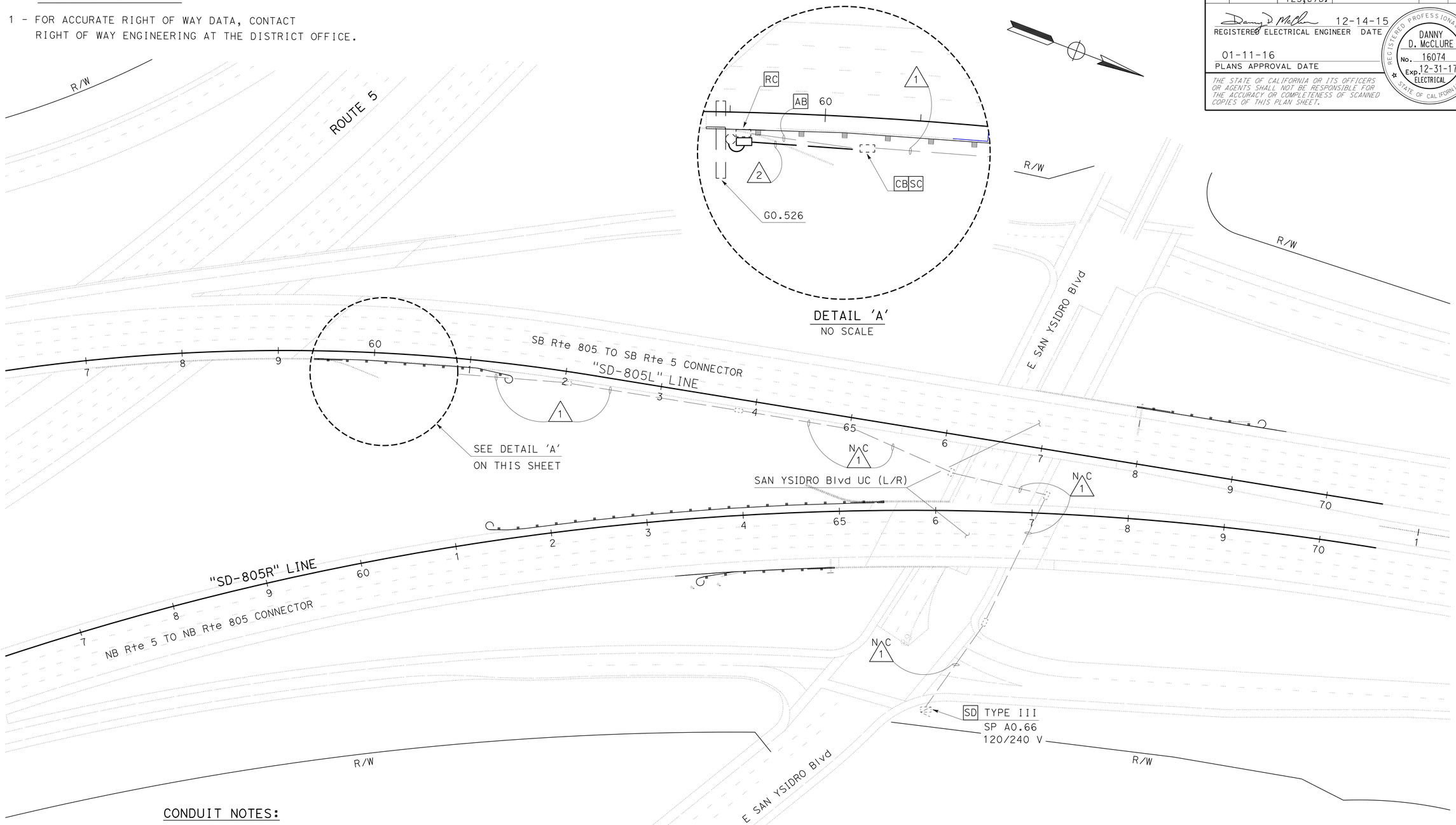

CONDUIT NOTES:

N C 1 - Exist 2" C, 2 #8 (SIGN).

2 - 2" C, 2 #8 (SIGN).

LOCATION 31
ROUTE 805

MODIFY LIGHTING AND SIGN ILLUMINATION

SCALE: 1" = 50'

E-4

APPROVED FOR ELECTRICAL WORK ONLY

STATE OF CALIFORNIA - DEPARTMENT OF TRANSPORTATION
Caltrans® TRAFFIC ELECTRICAL

FUNCTIONAL SUPERVISOR: RAJPREET SINGH
CALCULATED-DESIGNED BY: ANTONIO A. RODRIGUEZ
CHECKED BY: DANNY McCLURE
REVISED BY / DATE REVISED

LAST REVISION 01-08-16
DATE PLOTTED => 12-JAN-2016
TIME PLOTTED => 16:10

Dist	COUNTY	ROUTE	POST MILES TOTAL PROJECT	SHEET No.	TOTAL SHEETS
11	SD	8,54,67,94 125,etc.	Var	163	231

REGISTERED ELECTRICAL ENGINEER 12-14-15 DATE

01-11-16
PLANS APPROVAL DATE

REGISTERED PROFESSIONAL ENGINEER DANNY D. McCLURE No. 16074 Exp. 12-31-17 ELECTRICAL STATE OF CALIFORNIA

THE STATE OF CALIFORNIA OR ITS OFFICERS OR AGENTS SHALL NOT BE RESPONSIBLE FOR THE ACCURACY OR COMPLETENESS OF SCANNED COPIES OF THIS PLAN SHEET.

LEGEND AND NOTES:

1 - FOR ACCURATE RIGHT OF WAY DATA, CONTACT RIGHT OF WAY ENGINEERING AT THE DISTRICT OFFICE.

[2] - END OF TRANSITION BLOCK.

DETAIL 'A'
NO SCALE

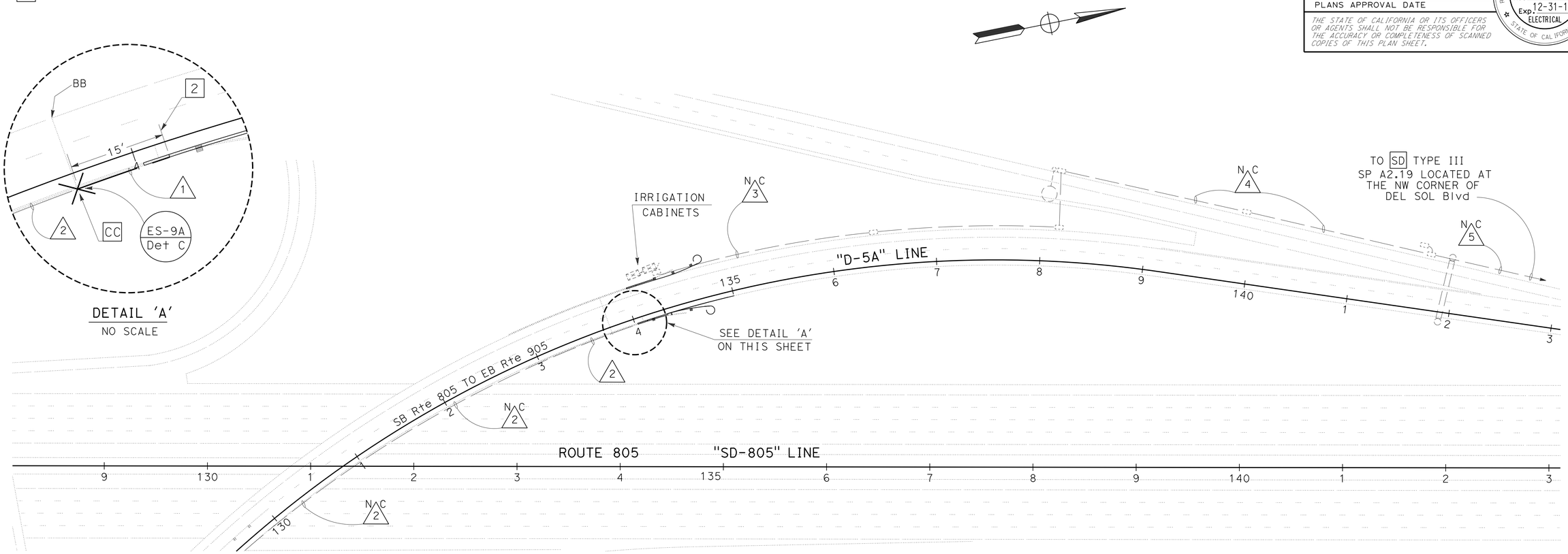

LOCATION 36

ROUTE 805 PM 2.06

CONDUIT NOTES:

1 - 1½" C, PT

N C 2 - Exist 1½" C, PT

3 - Exist 1½" C, 2 #10 (Irr)

4 - Exist 1½" C, 2 #10 (Irr), 2 #8 (Lgt)

5 - Exist 2" C, 2 #6 (Ltg), 2 #8 (SIGN)
2 #10 (Irr), 2 #4 (PUMP SERVICE)

APPROVED FOR ELECTRICAL WORK ONLY

MODIFY LIGHTING AND SIGN ILLUMINATION

SCALE: 1" = 50'

E-5

STATE OF CALIFORNIA - DEPARTMENT OF TRANSPORTATION
Caltrans® TRAFFIC ELECTRICAL

FUNCTIONAL SUPERVISOR: RAJPREET SINGH
CALCULATED-DESIGNED BY: ANTONIO A. RODRIGUEZ
CHECKED BY: DANNY McCLURE
REVISED BY
DATE REVISED

LAST REVISION 01-08-16
DATE PLOTTED => 12-JAN-2016
TIME PLOTTED => 16:10

Dist	COUNTY	ROUTE	POST MILES TOTAL PROJECT	SHEET No.	TOTAL SHEETS
11	SD	8,54,67,94 125,etc.	Var	164	231

REGISTERED ELECTRICAL ENGINEER 12-14-15 DATE

01-11-16
PLANS APPROVAL DATE

REGISTERED PROFESSIONAL ENGINEER DANNY D. McCLURE No. 16074 Exp. 12-31-17 ELECTRICAL STATE OF CALIFORNIA

THE STATE OF CALIFORNIA OR ITS OFFICERS OR AGENTS SHALL NOT BE RESPONSIBLE FOR THE ACCURACY OR COMPLETENESS OF SCANNED COPIES OF THIS PLAN SHEET.

LEGEND AND NOTES:

1 - FOR ACCURATE RIGHT OF WAY DATA, CONTACT RIGHT OF WAY ENGINEERING AT THE DISTRICT OFFICE.

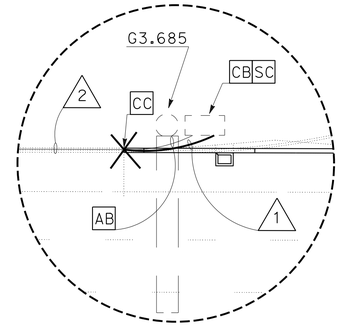

DETAIL 'A'
NO SCALE

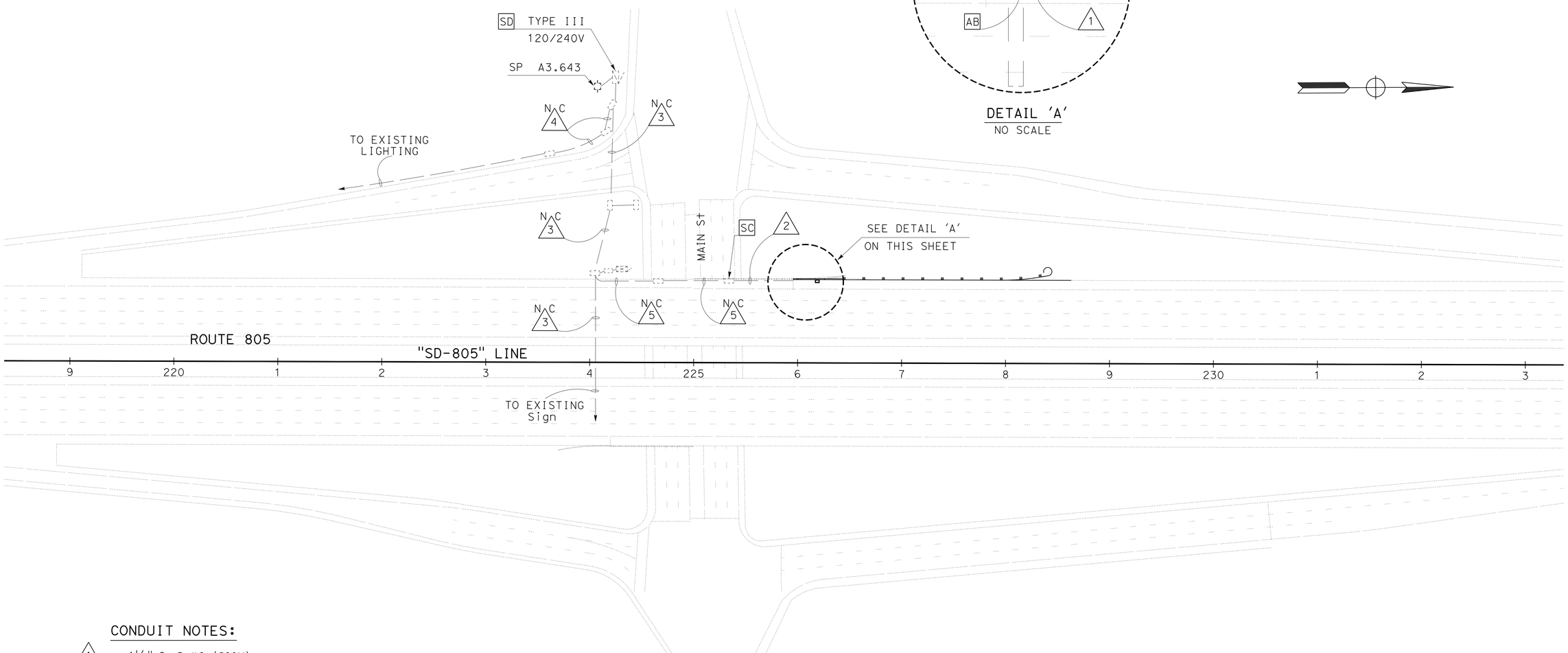

CONDUIT NOTES:

1 - 1½" C, 2 #8 (SIGN)

2 - Exist 1½" C, 2 #8 (SIGN)
RC 2 #8 (SIGN)
ADD 2 #8 (SIGN)

N C 3 - Exist 1½" C, 2 #8 (Ltg), 2 #8 (SIGN), 2 #10 (Irr)

N C 4 - Exist 1½" C, 2 #8 (Ltg)

N C 5 - Exist 1½" C, 2 #8 (SIGN)

LOCATION 37
ROUTE 805

MODIFY LIGHTING AND SIGN ILLUMINATION

SCALE: 1" = 50'

E-6

APPROVED FOR ELECTRICAL WORK ONLY

STATE OF CALIFORNIA - DEPARTMENT OF TRANSPORTATION
Caltrans® TRAFFIC ELECTRICAL

FUNCTIONAL SUPERVISOR: RAJPREET SINGH
CALCULATED-DESIGNED BY: ANTONIO A. RODRIGUEZ
CHECKED BY: DANNY McCLURE
REVISED BY / DATE REVISED

LAST REVISION 01-08-16
DATE PLOTTED => 12-JAN-2016
TIME PLOTTED => 16:10

Dist	COUNTY	ROUTE	POST MILES TOTAL PROJECT	SHEET No.	TOTAL SHEETS
11	SD	8,54,67,94 125,*etc.*	Var	165	231

Danny D. McClure 12-14-15
REGISTERED ELECTRICAL ENGINEER DATE

01-11-16
PLANS APPROVAL DATE

REGISTERED PROFESSIONAL ENGINEER
DANNY D. McCLURE
No. 16074
Exp. 12-31-17
ELECTRICAL
STATE OF CALIFORNIA

THE STATE OF CALIFORNIA OR ITS OFFICERS OR AGENTS SHALL NOT BE RESPONSIBLE FOR THE ACCURACY OR COMPLETENESS OF SCANNED COPIES OF THIS PLAN SHEET.

LEGEND AND NOTES:

1 - FOR ACCURATE RIGHT OF WAY DATA, CONTACT RIGHT OF WAY ENGINEERING AT THE DISTRICT OFFICE.

2 - RC PULL BOX. REPLACE WITH No.5 PULL BOX.

CONDUIT NOTES (TSO):

1 - Exist 2" C, 12 DLC, 1 OCC (CCTV)

N C 2 - Exist 2" C, 13 DLC 1 OCC (CCTV)

N C 3 - Exist 2" C, 13 DLC, 2 #8 (Ltg), 3 #14 PEU, 1-12CSC, 1 OCC (CCTV)

N C 4 - Exist 2" C, 1 (SIC), OCC (CCTV)

N C 5 - Exist 2" C, 2 #6 RM, 2 #8 (Ltg), 3 #14 PEU

N C 6 - Exist 2" C, 2 #8 (Ltg)

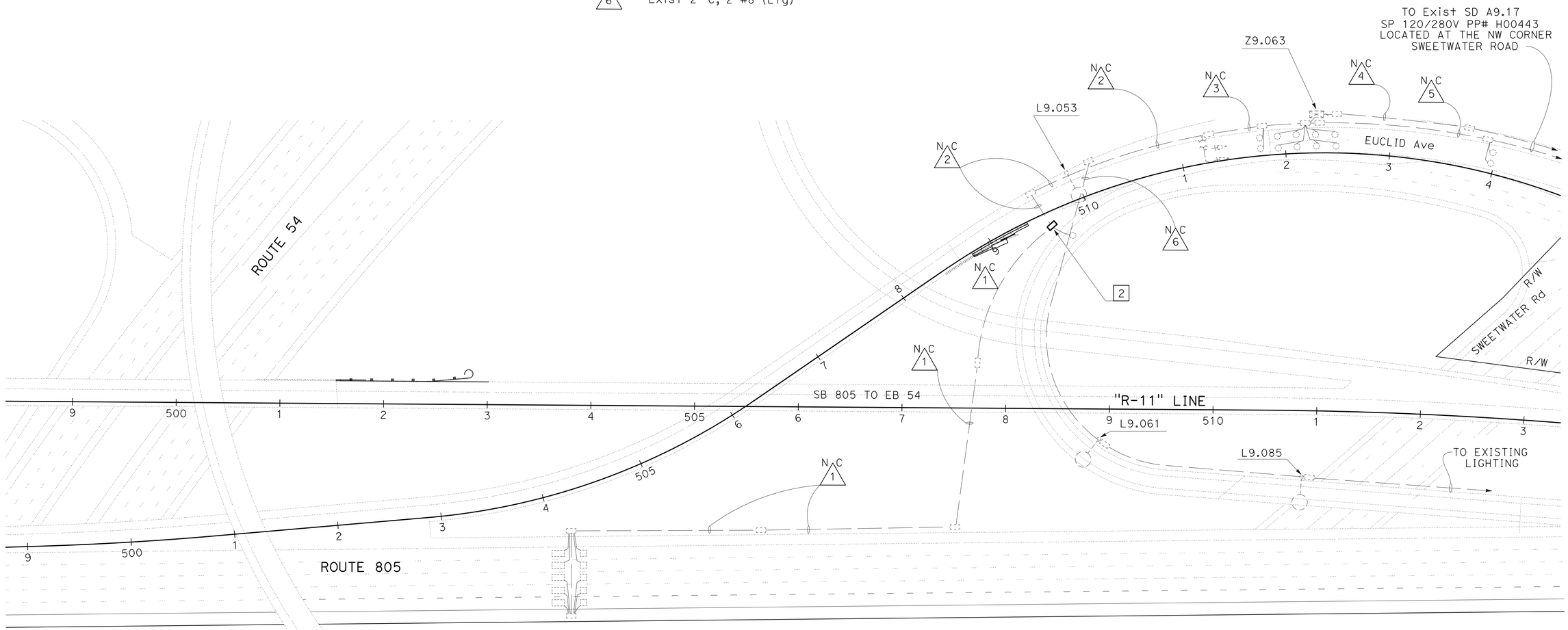

LOCATION 40
ROUTE 805

MODIFY RAMP METER SYSTEM

SCALE: 1" = 50'

E-7

APPROVED FOR ELECTRICAL WORK ONLY

STATE OF CALIFORNIA - DEPARTMENT OF TRANSPORTATION
Caltrans® TRAFFIC ELECTRICAL

FUNCTIONAL SUPERVISOR: RAJPREET SINGH
CALCULATED-DESIGNED BY: ANTONIO A. RODRIGUEZ
CHECKED BY: DANNY McCLURE
REVISED BY
DATE REVISED

LAST REVISION 01-07-16
DATE PLOTTED => 12-JAN-2016
TIME PLOTTED => 16:10

Dist	COUNTY	ROUTE	POST MILES TOTAL PROJECT	SHEET No.	TOTAL SHEETS
11	SD	8,54,67,94 125,etc.	Var	166	231

REGISTERED ELECTRICAL ENGINEER 12-14-15 DATE

01-11-16
PLANS APPROVAL DATE

REGISTERED PROFESSIONAL ENGINEER DANNY D. McCLURE No. 16074 Exp. 12-31-17 ELECTRICAL STATE OF CALIFORNIA

THE STATE OF CALIFORNIA OR ITS OFFICERS OR AGENTS SHALL NOT BE RESPONSIBLE FOR THE ACCURACY OR COMPLETENESS OF SCANNED COPIES OF THIS PLAN SHEET.

LEGEND AND NOTES:

1 - FOR ACCURATE RIGHT OF WAY DATA, CONTACT RIGHT OF WAY ENGINEERING AT THE DISTRICT OFFICE.

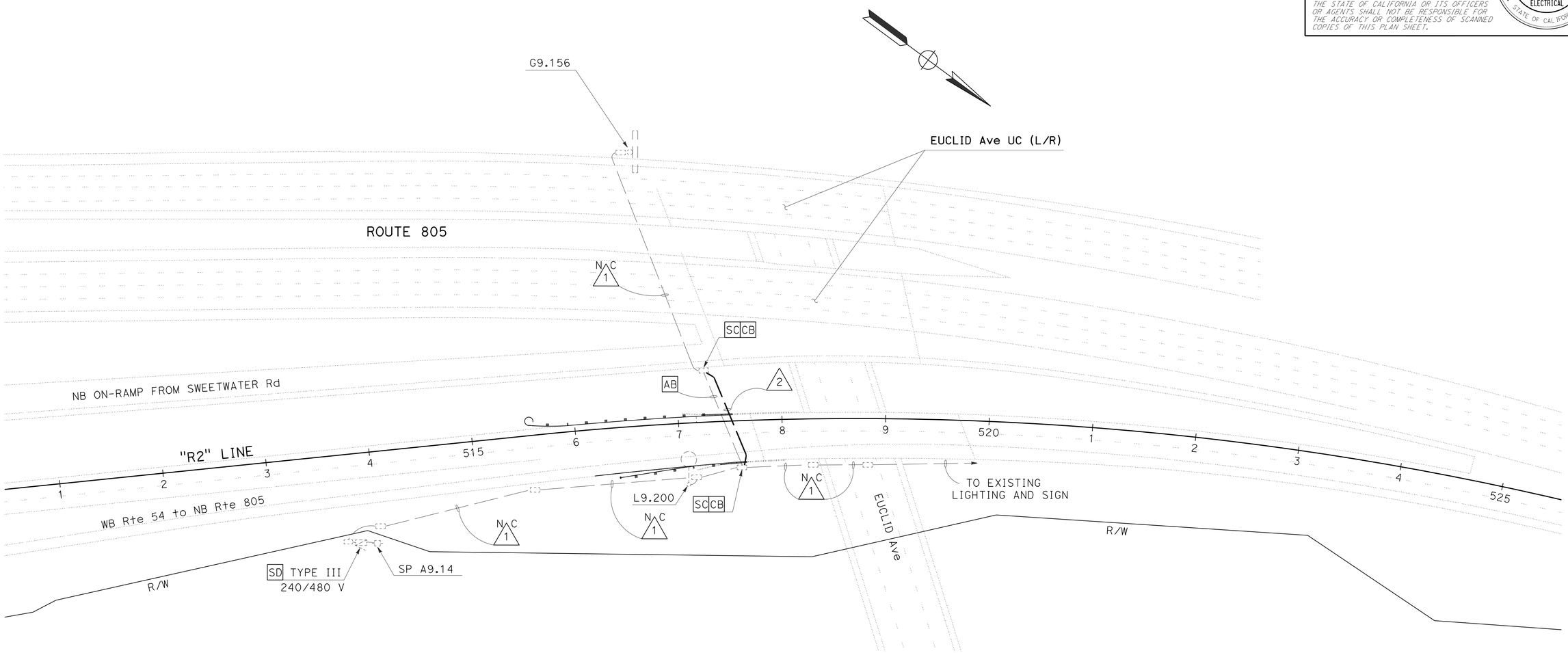

LOCATION 41, 42
ROUTE 805

CONDUIT NOTES:

N C 1 - Exist 1½" C, 2 #8 (Ltg), 2 #8 (SIGN)

2 - 2" C, 2 #8 (Ltg), 2 #8 (SIGN)

APPROVED FOR ELECTRICAL WORK ONLY

MODIFY LIGHTING AND SIGN ILLUMINATION

SCALE: 1" = 50'

E-8

STATE OF CALIFORNIA - DEPARTMENT OF TRANSPORTATION
Caltrans® TRAFFIC ELECTRICAL

FUNCTIONAL SUPERVISOR: RAJPREET SINGH
CALCULATED-DESIGNED BY: ANTONIO A. RODRIGUEZ
CHECKED BY: DANNY McCLURE
REVISED BY
DATE REVISED

LAST REVISION 01-08-16 | DATE PLOTTED => 12-JAN-2016 | TIME PLOTTED => 16:10

Dist	COUNTY	ROUTE	POST MILES TOTAL PROJECT	SHEET No.	TOTAL SHEETS
11	SD	8,54,67,94 125,etc.	Var	167	231

REGISTERED ELECTRICAL ENGINEER 12-14-15 DATE

01-11-16
PLANS APPROVAL DATE

REGISTERED PROFESSIONAL ENGINEER DANNY D. McCLURE No. 16074 Exp. 12-31-17 ELECTRICAL STATE OF CALIFORNIA

THE STATE OF CALIFORNIA OR ITS OFFICERS OR AGENTS SHALL NOT BE RESPONSIBLE FOR THE ACCURACY OR COMPLETENESS OF SCANNED COPIES OF THIS PLAN SHEET.

LEGEND and NOTES:

1 - FOR ACCURATE RIGHT OF WAY DATA, CONTACT RIGHT OF WAY ENGINEERING AT THE DISTRICT OFFICE.

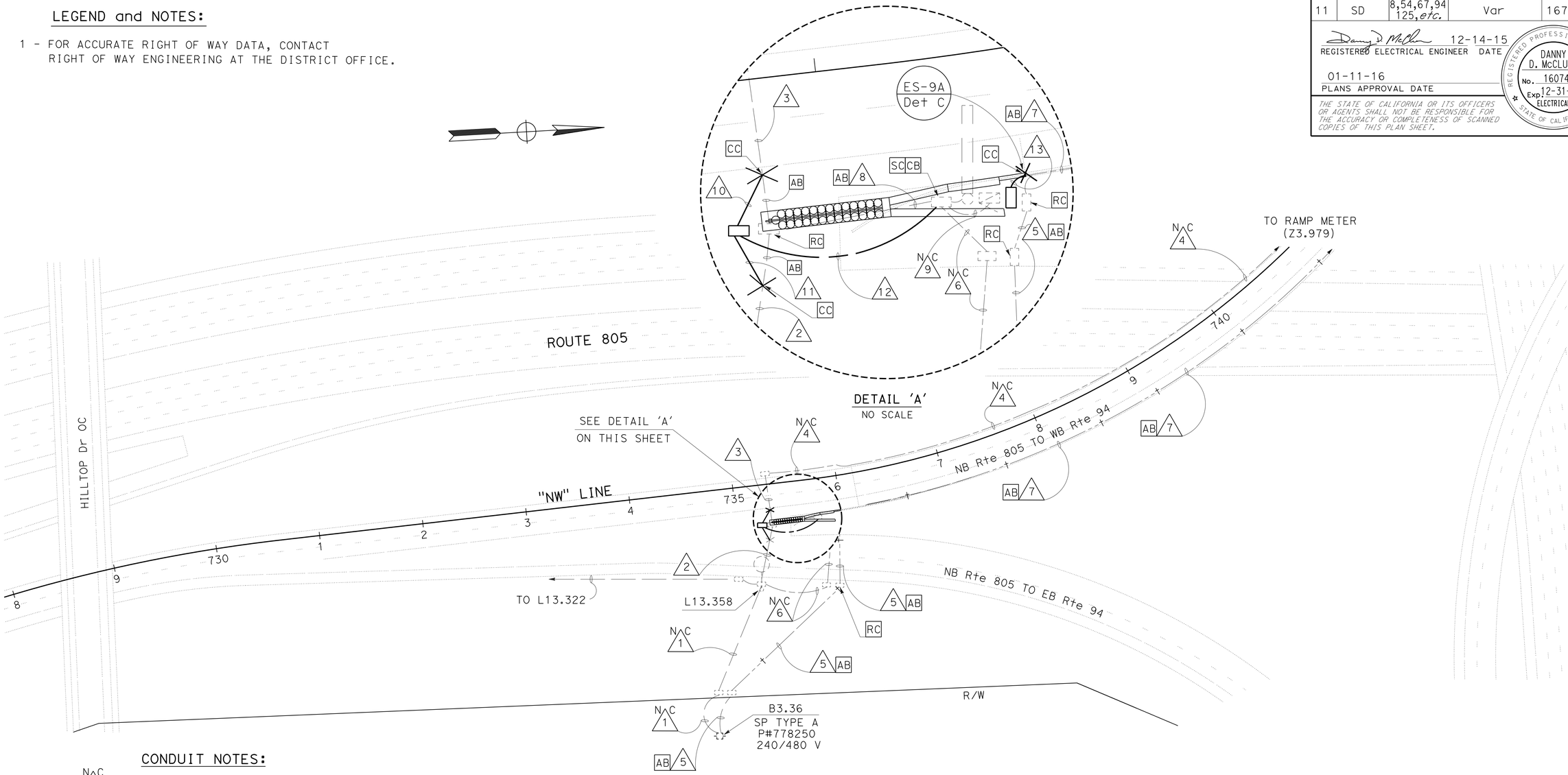

LOCATION 43
ROUTE 805

CONDUIT NOTES:

- NC 1 - Exist 1½" C, 2 #2 (SERVICE DISCONNECT)
- NC 2 - Exist 3" C, 2 #2 (SERVICE DISCONNECT)
- 3 - Exist 1½" C, 4 #14 (RM CONTROLLER), 1 DLC, 2 #2 (SERVICE DISCONNECT).
- NC 4 - Exist 1½" C, 4 #14 (RM CONTROLLER), 2 DLC, 2 #4 (SERVICE DISCONNECT).
- 5 - Exist 1½" C, 1 (SIC).
- NC 6 - Exist 1½" C, 2 #8 (SERVICE DISCONNECT), 2 #8 (Ltg), 2 #8 (SIGN), 2 #14 PEU.
- 7 - Exist 2" C, 1 (SIC).
- NC 8 - Exist 1½" C, 4 #14 (RM CONTROLLER).
- NC 9 - Exist 1½" C, 4 #14 (RM CONTROLLER), 4 #10 EMS, 5 #10 FLASH.
- 10 - 1½" C, 4 #14 (RM CONTROLLER), 1 DLC, 2 #2 (SERVICE DISCONNECT).
- 11 - 3" C, 2 #2 (SERVICE DISCONNECT)
- 12 - 1½" C, 4 #14 (RM CONTROLLER).
- 13 - 2" C, PT.

APPROVED FOR ELECTRICAL WORK ONLY

MODIFY RAMP METER SYSTEM

SCALE: 1" = 50'

E-9

STATE OF CALIFORNIA - DEPARTMENT OF TRANSPORTATION
Caltrans® TRAFFIC ELECTRICAL

FUNCTIONAL SUPERVISOR: RAJPREET SINGH
CALCULATED-DESIGNED BY: ANTONIO A. RODRIGUEZ
CHECKED BY: DANNY McCLURE
REVISED BY / DATE REVISED

LAST REVISION 01-08-16 | DATE PLOTTED => 12-JAN-2016 | TIME PLOTTED => 16:10

Dist	COUNTY	ROUTE	POST MILES TOTAL PROJECT	SHEET No.	TOTAL SHEETS
11	SD	8,54,67,94 125,etc.	Var	168	231

REGISTERED ELECTRICAL ENGINEER 12-14-15 DATE

01-11-16
PLANS APPROVAL DATE

REGISTERED PROFESSIONAL ENGINEER DANNY D. McCLURE No. 16074 Exp. 12-31-17 ELECTRICAL STATE OF CALIFORNIA

THE STATE OF CALIFORNIA OR ITS OFFICERS OR AGENTS SHALL NOT BE RESPONSIBLE FOR THE ACCURACY OR COMPLETENESS OF SCANNED COPIES OF THIS PLAN SHEET.

LEGEND AND NOTES:

1 - FOR ACCURATE RIGHT OF WAY DATA, CONTACT RIGHT OF WAY ENGINEERING AT THE DISTRICT OFFICE.

2 - RR DLC CABLES, FROM POINT A TO POINTS B AND C.

3 - RR SIGNAL CABLES AND DLC CABLES, FROM POINT A TO POINT D.

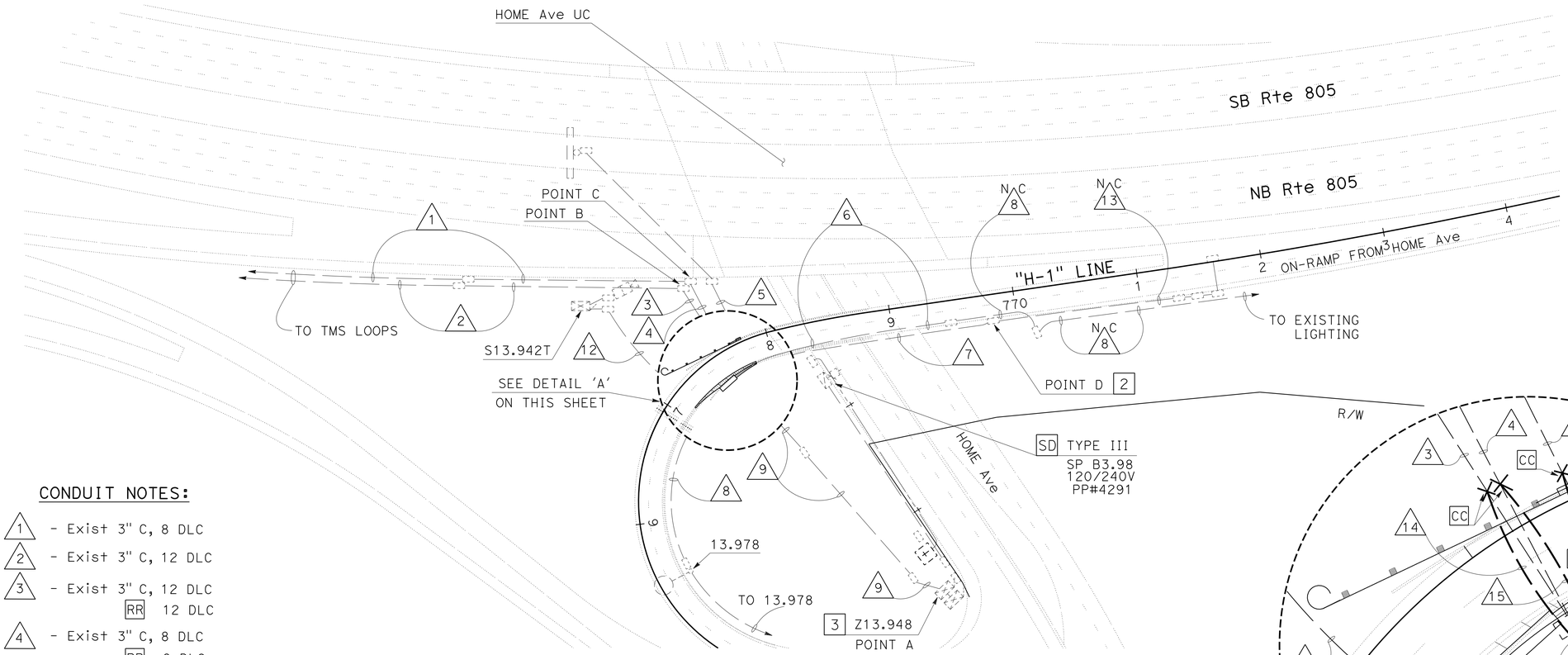

LOCATIONS 44, 45
ROUTE 805

CONDUIT NOTES:

1 - Exist 3" C, 8 DLC

2 - Exist 3" C, 12 DLC

3 - Exist 3" C, 12 DLC
RR 12 DLC

4 - Exist 3" C, 8 DLC
RR 8 DLC

5 - Exist 2" C, 2 #8 (Ltg), 2 #8 (SIGN)

6 - Exist 2" C, 2 #8 (Ltg)
RC 2 #8 (Ltg)
ADD 2 #8 (Ltg)

7 - Exist 2½" C, 2-9CSC (Sig CABLES), 4 DLC
RR 2-9CSC (Sig CABLES), 4 DLC

N C 8 - Exist 2" C, 2 #8 (Ltg)

9 - Exist 3½" C, 2-9CSC (Sig CABLES), 24 DLC
RR 2-9CSC (Sig CABLES), 24 DLC

10 - 2" C, 2# 8 (Ltg)

11 - 2½" C, 2-9CSC (Sig CABLES), 4 DLC

12 - 2" C, 2 #8 (CCTV)

N C 13 - Exist 2½" C, 2-9CSC (Sig CABLES), 4 DLC

14 - 3" C, 12 DLC

15 - 3" C, 8 DLC

16 - 2" C, 2 #8 (Ltg), 2 #8 (SIGN)

17 - 2" C, 2 #8 (Ltg)

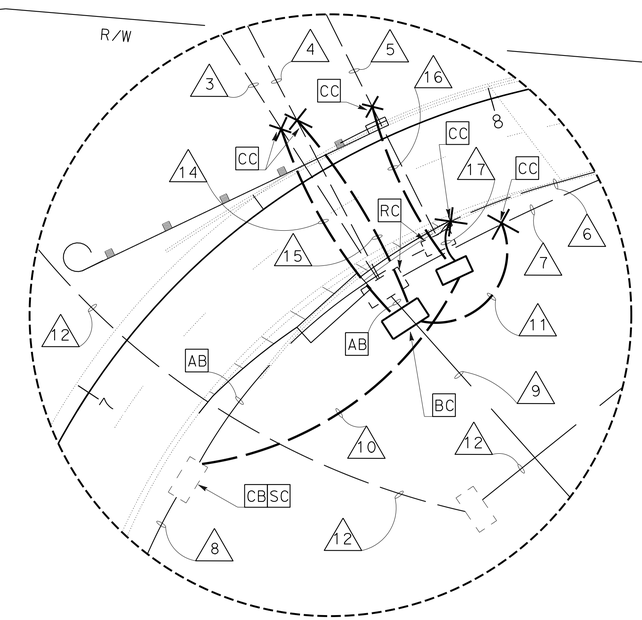

DETAIL 'A'
NO SCALE

APPROVED FOR ELECTRICAL WORK ONLY

MODIFY RAMP METER SYSTEM

SCALE: 1" = 50'

E-10

STATE OF CALIFORNIA - DEPARTMENT OF TRANSPORTATION
Caltrans® TRAFFIC ELECTRICAL

FUNCTIONAL SUPERVISOR: RAJPREET SINGH
CALCULATED-DESIGNED BY: ANTONIO A. RODRIGUEZ
CHECKED BY: DANNY McCLURE
REVISED BY / DATE REVISED

LAST REVISION 01-08-16 | DATE PLOTTED => 12-JAN-2016 | TIME PLOTTED => 16:10

Dist	COUNTY	ROUTE	POST MILES TOTAL PROJECT	SHEET No.	TOTAL SHEETS
11	SD	8,54,67,94 125,etc.	Var	169	231

REGISTERED ELECTRICAL ENGINEER 12-14-15 DATE

01-11-16
PLANS APPROVAL DATE

REGISTERED PROFESSIONAL ENGINEER DANNY D. McCLURE No. 16074 Exp. 12-31-17 ELECTRICAL STATE OF CALIFORNIA

THE STATE OF CALIFORNIA OR ITS OFFICERS OR AGENTS SHALL NOT BE RESPONSIBLE FOR THE ACCURACY OR COMPLETENESS OF SCANNED COPIES OF THIS PLAN SHEET.

LEGEND AND NOTES:

1 - FOR ACCURATE RIGHT OF WAY DATA, CONTACT RIGHT OF WAY ENGINEERING AT THE DISTRICT OFFICE.

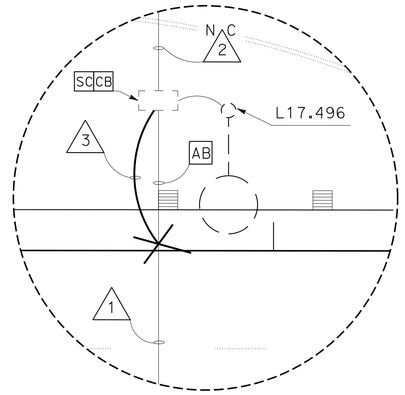

DETAIL 'A'
NO SCALE

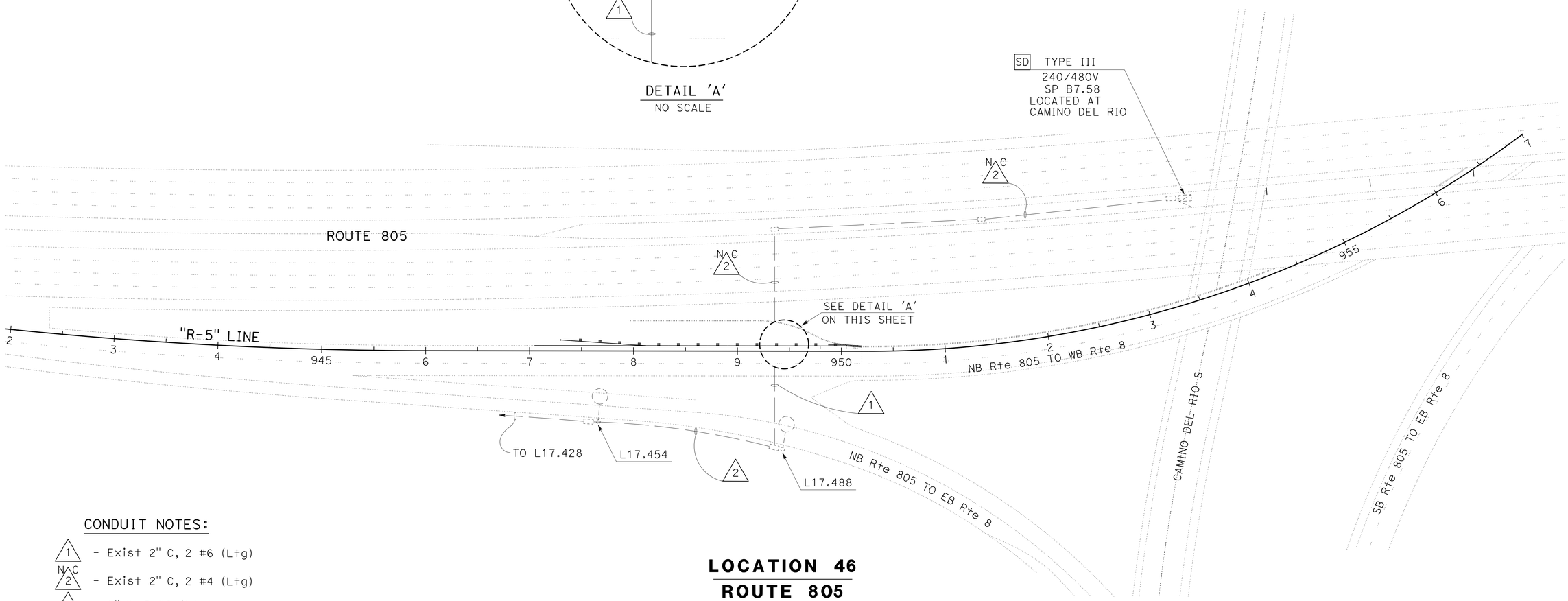

CONDUIT NOTES:

1 - Exist 2" C, 2 #6 (Ltg)

N C 2 - Exist 2" C, 2 #4 (Ltg)

3 - 2" C, 2 #6 (Ltg)

LOCATION 46
ROUTE 805

APPROVED FOR ELECTRICAL WORK ONLY

MODIFY LIGHTING AND SIGN ILLUMINATION

SCALE: 1" = 50'

E-11

STATE OF CALIFORNIA - DEPARTMENT OF TRANSPORTATION
Caltrans® TRAFFIC ELECTRICAL

FUNCTIONAL SUPERVISOR: RAJPREET SINGH
CALCULATED-DESIGNED BY: ANTONIO A. RODRIGUEZ
CHECKED BY: DANNY McCLURE
REVISED BY
DATE REVISED

LAST REVISION 01-08-16
DATE PLOTTED => 12-JAN-2016
TIME PLOTTED => 16:10

Dist	COUNTY	ROUTE	POST MILES TOTAL PROJECT	SHEET No.	TOTAL SHEETS
11	SD	8,54,67,94 125,etc.	Var	170	231

REGISTERED ELECTRICAL ENGINEER 12-14-15 DATE

01-11-16
PLANS APPROVAL DATE

REGISTERED PROFESSIONAL ENGINEER DANNY D. McCLURE No. 16074 Exp. 12-31-17 ELECTRICAL STATE OF CALIFORNIA

THE STATE OF CALIFORNIA OR ITS OFFICERS OR AGENTS SHALL NOT BE RESPONSIBLE FOR THE ACCURACY OR COMPLETENESS OF SCANNED COPIES OF THIS PLAN SHEET.

LEGEND AND NOTES:

1 - FOR ACCURATE RIGHT OF WAY DATA, CONTACT RIGHT OF WAY ENGINEERING AT THE DISTRICT OFFICE.

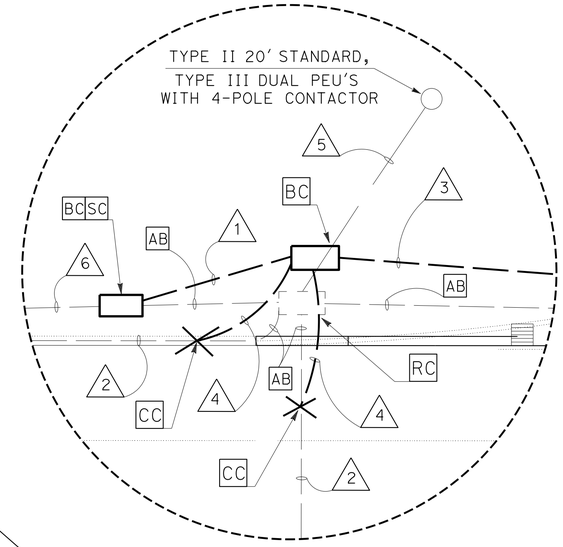

DETAIL 'A'
NO SCALE

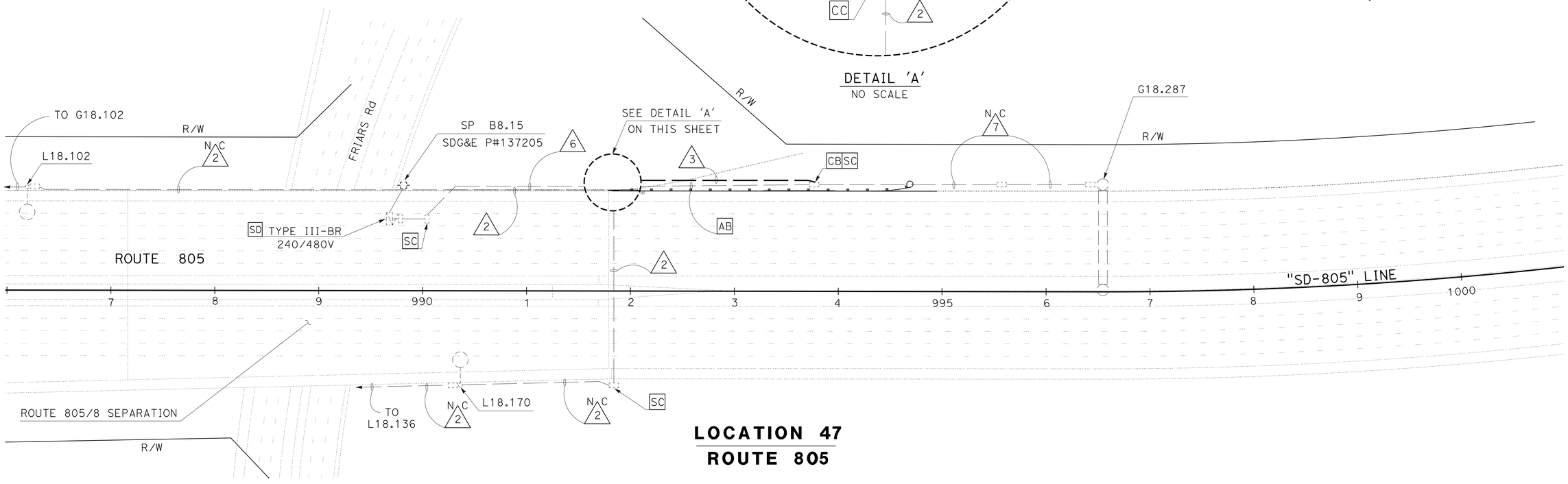

LOCATION 47
ROUTE 805

CONDUIT NOTES:

- 1 - 2" C, 2 #4 (Ltg), 2 #4 (SIGN)
- N C 2 - Exist 1½" C, 2 #4 (Ltg)
- 3 - 2" C, 2 #4 (SIGN)
- 4 - 1½" C, 2 #4 (Ltg)
- 5 - Exist 1½" C, 4 #4 (Ltg), 4 #4 (SIGN)
- N C 6 - Exist 1½" C, 2 #4 (Ltg), 2 #4 (SIGN)
- N C 7 - Exist 1½" C, 2 #4 (SIGN)

APPROVED FOR ELECTRICAL WORK ONLY

MODIFY LIGHTING AND SIGN ILLUMINATION

SCALE: 1" = 50'

E-12

STATE OF CALIFORNIA - DEPARTMENT OF TRANSPORTATION
Caltrans® TRAFFIC ELECTRICAL

FUNCTIONAL SUPERVISOR: RAJPREET SINGH
CALCULATED-DESIGNED BY: ANTONIO A. RODRIGUEZ
CHECKED BY: DANNY McCLURE
REVISED BY
DATE REVISED

LAST REVISION 01-08-16
DATE PLOTTED => 12-JAN-2016
TIME PLOTTED => 16:10

Dist	COUNTY	ROUTE	POST MILES TOTAL PROJECT	SHEET No.	TOTAL SHEETS
11	SD	8,54,67,94 125,etc.	Var	171	231

REGISTERED ELECTRICAL ENGINEER — DATE: 12-14-15

01-11-16
PLANS APPROVAL DATE

REGISTERED PROFESSIONAL ENGINEER — DANNY D. McCLURE — No. 16074 — Exp. 12-31-17 — ELECTRICAL — STATE OF CALIFORNIA

THE STATE OF CALIFORNIA OR ITS OFFICERS OR AGENTS SHALL NOT BE RESPONSIBLE FOR THE ACCURACY OR COMPLETENESS OF SCANNED COPIES OF THIS PLAN SHEET.

LEGEND AND NOTES:

1 - FOR ACCURATE RIGHT OF WAY DATA, CONTACT RIGHT OF WAY ENGINEERING AT THE DISTRICT OFFICE.

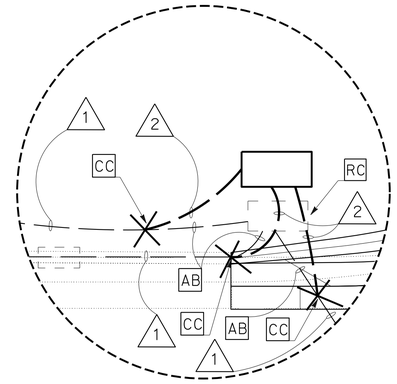

DETAIL 'A'
NO SCALE

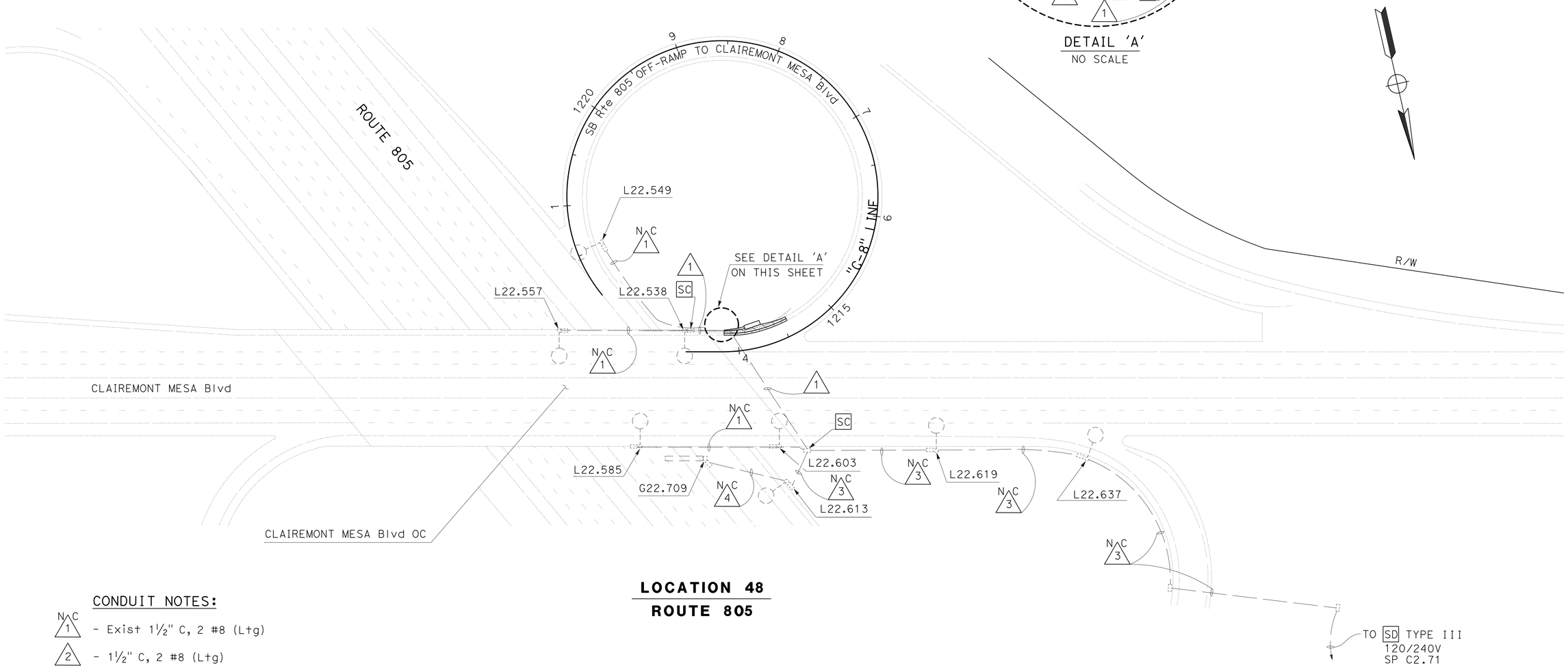

LOCATION 48
ROUTE 805

CONDUIT NOTES:

N C 1 - Exist 1½" C, 2 #8 (Ltg)

2 - 1½" C, 2 #8 (Ltg)

N C 3 - Exist 1½" C, 2 #8 (Ltg), 2 #8 (SIGN)

N C 4 - Exist 1½" C, 2 #8 (SIGN)

APPROVED FOR ELECTRICAL WORK ONLY

MODIFY LIGHTING AND SIGN ILLUMINATION

SCALE: 1" = 50'

E-13

STATE OF CALIFORNIA - DEPARTMENT OF TRANSPORTATION
Caltrans® TRAFFIC ELECTRICAL

FUNCTIONAL SUPERVISOR: RAJPREET SINGH
CALCULATED-DESIGNED BY: ANTONIO A. RODRIGUEZ
CHECKED BY: DANNY McCLURE
REVISED BY / DATE REVISED

LAST REVISION 01-08-16 | DATE PLOTTED => 12-JAN-2016 | TIME PLOTTED => 16:10

Dist	COUNTY	ROUTE	POST MILES TOTAL PROJECT	SHEET No.	TOTAL SHEETS
11	SD	8,54,67,94 125,etc.	Var	172	231

REGISTERED ELECTRICAL ENGINEER 12-14-15 DATE

01-11-16
PLANS APPROVAL DATE

REGISTERED PROFESSIONAL ENGINEER DANNY D. McCLURE No. 16074 Exp. 12-31-17 ELECTRICAL STATE OF CALIFORNIA

THE STATE OF CALIFORNIA OR ITS OFFICERS OR AGENTS SHALL NOT BE RESPONSIBLE FOR THE ACCURACY OR COMPLETENESS OF SCANNED COPIES OF THIS PLAN SHEET.

LEGEND AND NOTES:

1 - FOR ACCURATE RIGHT OF WAY DATA, CONTACT RIGHT OF WAY ENGINEERING AT THE DISTRICT OFFICE.

2 - RC PULL BOX. REPLACE WITH No.5 PULL BOX.

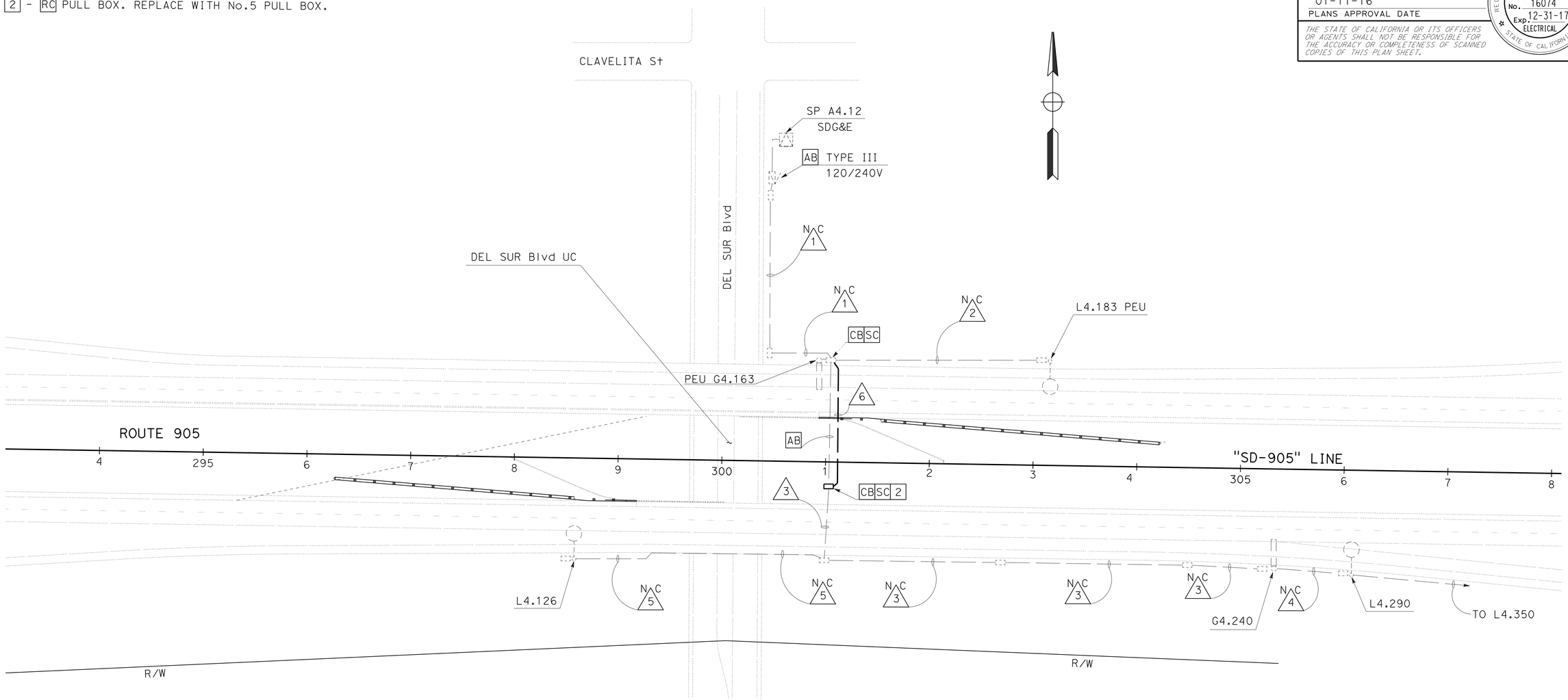

CONDUIT NOTES:

N C 1 - Exist 2" C, 2 #4 (Ltg), 4 #14 PEU, 2 #8 (SIGN)

N C 2 - Exist 1½" C, 3 #14 PEU, 2 #8 (Ltg)

N C 3 - Exist 1½" C, 2 #4 (Ltg), 2 #8 (SIGN)

N C 4 - Exist 1½" C, 2 #4 (SIGN), 2 #8 (Ltg)

N C 5 - Exist 2" C, 2 #8 (Ltg)

6 - 2" C, 2 #4 (Ltg), 2 #8 (SIGN)

LOCATION 51

ROUTE 905

APPROVED FOR ELECTRICAL WORK ONLY

MODIFY LIGHTING AND SIGN ILLUMINATION

SCALE: 1" = 50'

E-14

STATE OF CALIFORNIA - DEPARTMENT OF TRANSPORTATION
Caltrans® TRAFFIC ELECTRICAL

FUNCTIONAL SUPERVISOR: RAJPREET SINGH
CALCULATED-DESIGNED BY: ANTONIO A. RODRIGUEZ
CHECKED BY: DANNY McCLURE
REVISED BY
DATE REVISED

LAST REVISION 01-08-16
DATE PLOTTED => 12-JAN-2016
TIME PLOTTED => 16:10

Dist	COUNTY	ROUTE	POST MILES TOTAL PROJECT	SHEET No.	TOTAL SHEETS
11	SD	8,54,67,94 125,etc.	Var	173	231

REGISTERED ELECTRICAL ENGINEER — DATE: 12-14-15

01-11-16
PLANS APPROVAL DATE

REGISTERED PROFESSIONAL ENGINEER — DANNY D. McCLURE — No. 16074 — Exp. 12-31-17 — ELECTRICAL — STATE OF CALIFORNIA

THE STATE OF CALIFORNIA OR ITS OFFICERS OR AGENTS SHALL NOT BE RESPONSIBLE FOR THE ACCURACY OR COMPLETENESS OF SCANNED COPIES OF THIS PLAN SHEET.

LEGEND AND NOTES:

1 - FOR ACCURATE RIGHT OF WAY DATA, CONTACT RIGHT OF WAY ENGINEERING AT THE DISTRICT OFFICE.

2 - RC PULL BOX. REPLACE WITH No. 5 PULL BOX.

3 - EXTEND EMPTY CONDUITS.

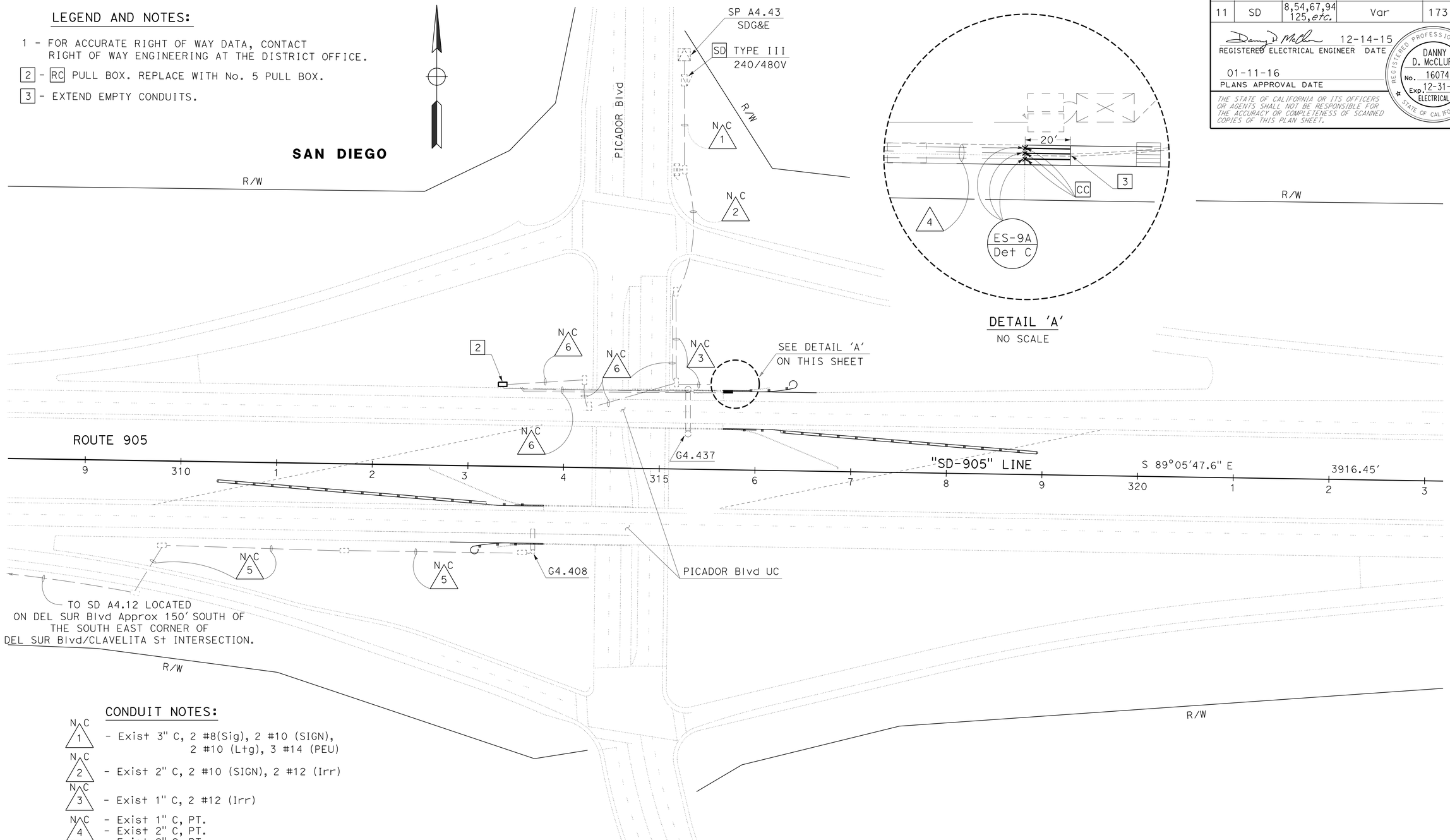

DETAIL 'A'
NO SCALE

CONDUIT NOTES:

N C 1 - Exist 3" C, 2 #8(Sig), 2 #10 (SIGN), 2 #10 (Ltg), 3 #14 (PEU)

N C 2 - Exist 2" C, 2 #10 (SIGN), 2 #12 (Irr)

N C 3 - Exist 1" C, 2 #12 (Irr)

N C 4 - Exist 1" C, PT.
- Exist 2" C, PT.
- Exist 2" C, PT.

N C 5 - Exist 1½" C, 2 #8 (Ltg), 3 #8 (FB)

N C 6 - Exist 1½" C, 2 #8 (SIGN)

LOCATION 53
ROUTE 905

MODIFY LIGHTING AND SIGN ILLUMINATION

SCALE: 1" = 50'

E-15

APPROVED FOR ELECTRICAL WORK ONLY

STATE OF CALIFORNIA - DEPARTMENT OF TRANSPORTATION
Caltrans® TRAFFIC ELECTRICAL

FUNCTIONAL SUPERVISOR: RAJPREET SINGH
CALCULATED-DESIGNED BY: ANTONIO A. RODRIGUEZ
CHECKED BY: DANNY McCLURE
REVISED BY / DATE REVISED

LAST REVISION 01-07-16 — DATE PLOTTED => 12-JAN-2016 — TIME PLOTTED => 16:10

Dist	COUNTY	ROUTE	POST MILES TOTAL PROJECT	SHEET No.	TOTAL SHEETS
11	SD	8,54,67,94 125,etc.	Var	174	231

REGISTERED ELECTRICAL ENGINEER 12-14-15 DATE

01-11-16
PLANS APPROVAL DATE

THE STATE OF CALIFORNIA OR ITS OFFICERS OR AGENTS SHALL NOT BE RESPONSIBLE FOR THE ACCURACY OR COMPLETENESS OF SCANNED COPIES OF THIS PLAN SHEET.

REGISTERED PROFESSIONAL ENGINEER
DANNY D. McCLURE
No. 16074
Exp. 12-31-17
ELECTRICAL
STATE OF CALIFORNIA

LEGEND AND NOTES:

1 - FOR ACCURATE RIGHT OF WAY DATA, CONTACT RIGHT OF WAY ENGINEERING AT THE DISTRICT OFFICE.

2 - RC PULL BOX. REPLACE WITH No. 5 PULL BOX.

3 - REMOVE AND REUSE CONDUCTORS. AB CONDUIT.

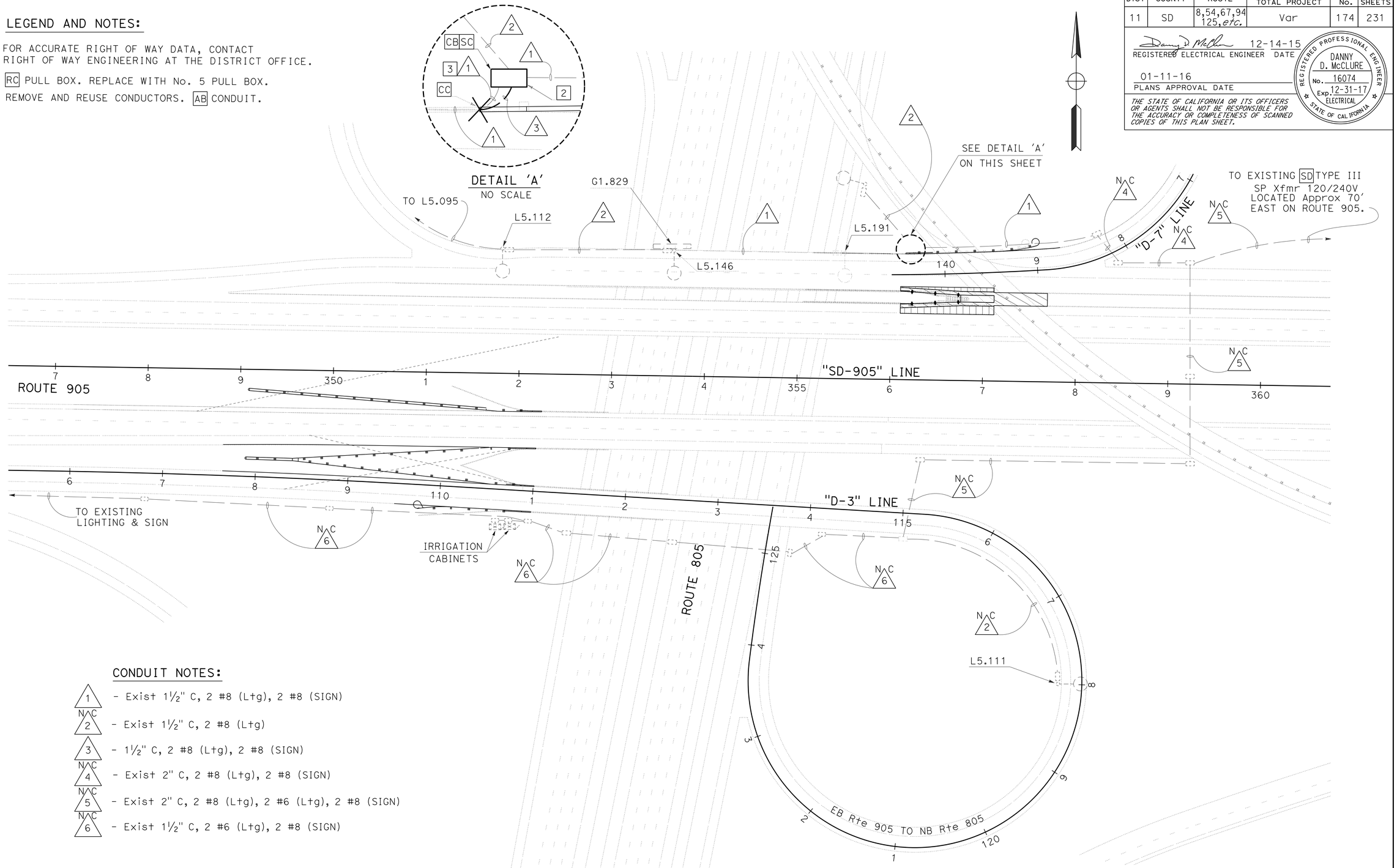

CONDUIT NOTES:

1 - Exist 1½" C, 2 #8 (Ltg), 2 #8 (SIGN)

NC 2 - Exist 1½" C, 2 #8 (Ltg)

3 - 1½" C, 2 #8 (Ltg), 2 #8 (SIGN)

NC 4 - Exist 2" C, 2 #8 (Ltg), 2 #8 (SIGN)

NC 5 - Exist 2" C, 2 #8 (Ltg), 2 #6 (Ltg), 2 #8 (SIGN)

NC 6 - Exist 1½" C, 2 #6 (Ltg), 2 #8 (SIGN)

APPROVED FOR ELECTRICAL WORK ONLY

LOCATION 60
ROUTE 905

MODIFY LIGHTING AND SIGN ILLUMINATION

SCALE: 1" = 50'

E-16

REVISED BY	DATE REVISED
ANTONIO A. RODRIGUEZ	DANNY McCLURE
CALCULATED-DESIGNED BY	CHECKED BY
FUNCTIONAL SUPERVISOR	RAJPREET SINGH

STATE OF CALIFORNIA - DEPARTMENT OF TRANSPORTATION
Caltrans® **TRAFFIC ELECTRICAL**

LAST REVISION 01-08-16 | DATE PLOTTED => 12-JAN-2016 | TIME PLOTTED => 16:10

Dist	COUNTY	ROUTE	POST MILES TOTAL PROJECT	SHEET No.	TOTAL SHEETS
11	SD	8,54,67,94 125,etc.	Var	175	231

REGISTERED ELECTRICAL ENGINEER 12-14-15 DATE

01-11-16
PLANS APPROVAL DATE

THE STATE OF CALIFORNIA OR ITS OFFICERS OR AGENTS SHALL NOT BE RESPONSIBLE FOR THE ACCURACY OR COMPLETENESS OF SCANNED COPIES OF THIS PLAN SHEET.

REGISTERED PROFESSIONAL ENGINEER DANNY D. McCLURE No. 16074 Exp. 12-31-17 ELECTRICAL STATE OF CALIFORNIA

LEGEND AND NOTES:

1 - FOR ACCURATE RIGHT OF WAY DATA, CONTACT RIGHT OF WAY ENGINEERING AT THE DISTRICT OFFICE.

2 - EXTEND THREE 2" EMPTY CONDUIT EIGHTY FIVE FEET.

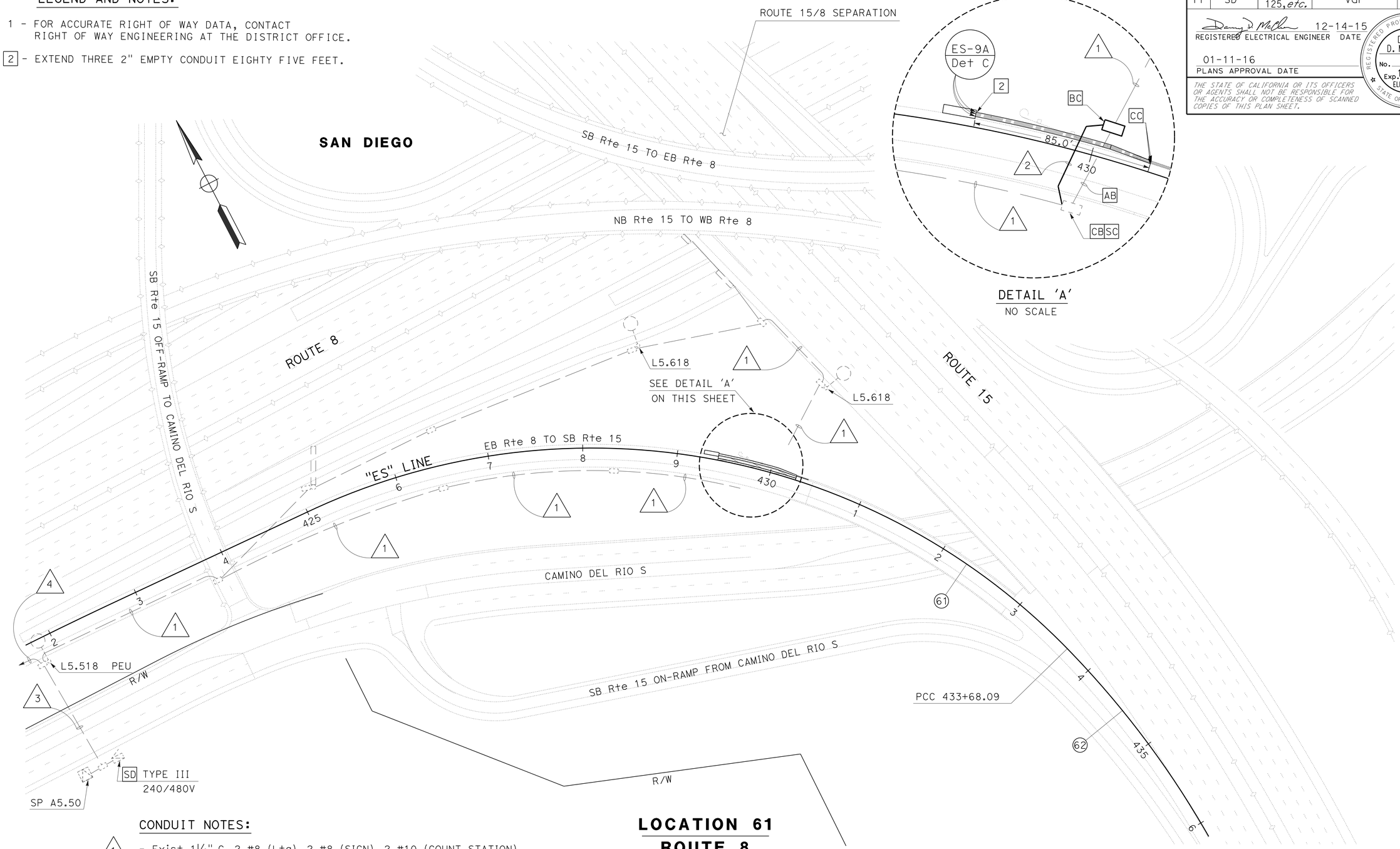

CONDUIT NOTES:

1 - Exist 1½" C, 2 #8 (Ltg), 2 #8 (SIGN), 2 #10 (COUNT STATION)

2 - 1½" C, 2 #8 (Ltg), 2 #8 (SIGN), 2 #10 (COUNT STATION)

3 - Exist 1½" C, 2 #8 (Ltg), 2 #8 (SIGN), 4 #14 (PEU), 2 #10 (COUNT STATION)

4 - Exist 2" C, 2 #8 (Ltg), 2 #8 (SIGN)

LOCATION 61
ROUTE 8

APPROVED FOR ELECTRICAL WORK ONLY

MODIFY LIGHTING AND SIGN ILLUMINATION

SCALE: 1" = 50'

E-17

STATE OF CALIFORNIA - DEPARTMENT OF TRANSPORTATION
Caltrans® TRAFFIC ELECTRICAL

FUNCTIONAL SUPERVISOR: RAJPREET SINGH
CALCULATED-DESIGNED BY: ANTONIO A. RODRIGUEZ
CHECKED BY: DANNY McCLURE
REVISED BY
DATE REVISED

LAST REVISION 01-08-16 | DATE PLOTTED => 12-JAN-2016 | TIME PLOTTED => 16:10

Dist	COUNTY	ROUTE	POST MILES TOTAL PROJECT	SHEET No.	TOTAL SHEETS
11	SD	8,54,67,94 125,etc.	Var	176	231

REGISTERED ELECTRICAL ENGINEER 12-14-15 DATE

01-11-16
PLANS APPROVAL DATE

REGISTERED PROFESSIONAL ENGINEER DANNY D. McCLURE No. 16074 Exp. 12-31-17 ELECTRICAL STATE OF CALIFORNIA

THE STATE OF CALIFORNIA OR ITS OFFICERS OR AGENTS SHALL NOT BE RESPONSIBLE FOR THE ACCURACY OR COMPLETENESS OF SCANNED COPIES OF THIS PLAN SHEET.

LEGEND AND NOTES:

1 - FOR ACCURATE RIGHT OF WAY DATA, CONTACT RIGHT OF WAY ENGINEERING AT THE DISTRICT OFFICE.

2 - RR 4 DLC, RC PULL BOX.

3 - RR 4 DLC.

4 - AB LOOPS.

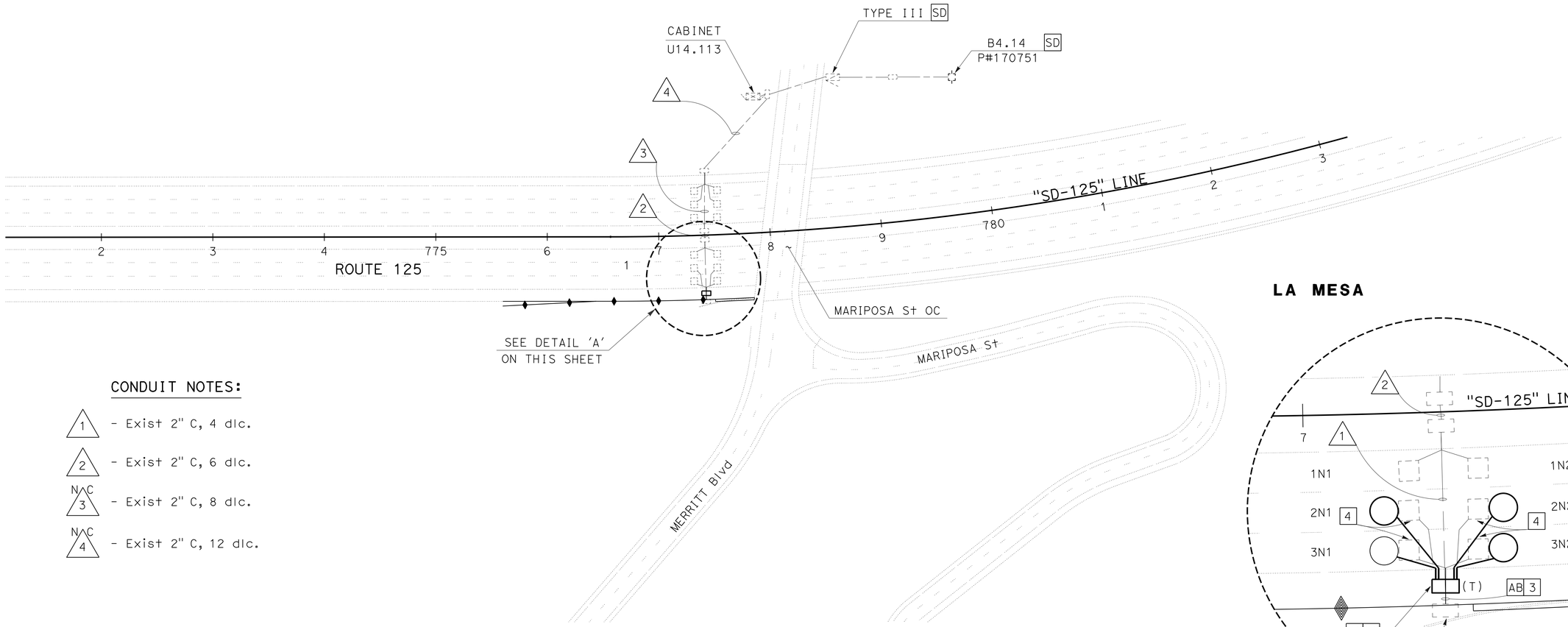

CONDUIT NOTES:

1 - Exist 2" C, 4 dlc.

2 - Exist 2" C, 6 dlc.

N C 3 - Exist 2" C, 8 dlc.

N C 4 - Exist 2" C, 12 dlc.

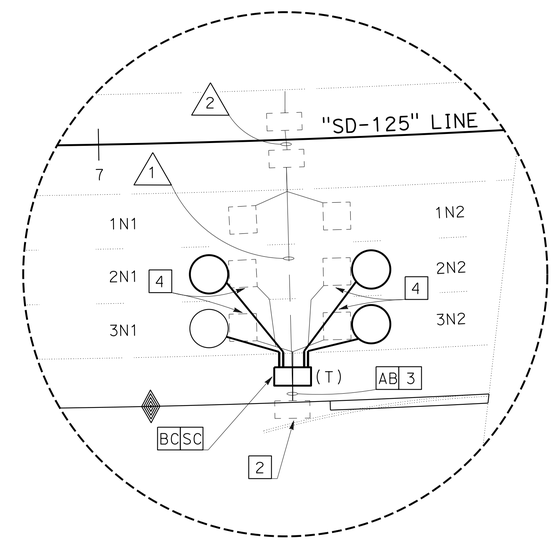

DETAIL 'A'
NO SCALE

LOCATION 24
ROUTE 125 PM 14.12

MODIFY TRAFFIC MONITORING STATION

SCALE: 1" = 50'

E-18

APPROVED FOR ELECTRICAL WORK ONLY

STATE OF CALIFORNIA - DEPARTMENT OF TRANSPORTATION
Caltrans® TRAFFIC ELECTRICAL

FUNCTIONAL SUPERVISOR: RAJPREET SINGH
CALCULATED-DESIGNED BY: ANTONIO A. RODRIGUEZ
CHECKED BY: DANNY McCLURE
REVISED BY / DATE REVISED

LAST REVISION 01-08-16 | DATE PLOTTED => 12-JAN-2016 | TIME PLOTTED => 16:10

M

Maint	MAINTENANCE
Max	MAXIMUM
MB	METAL BEAM
MBB	METAL BEAM BARRIER
MBGR	METAL BEAM GUARD RAILING
Med	MEDIAN
MGS	MIDWEST GUARDRAIL SYSTEM
MH	MANHOLE
Min	MINIMUM
Misc	MISCELLANEOUS
Misc I & S	MISCELLANEOUS IRON AND STEEL
Mkr	MARKER
Mod	MODIFIED,
	MODIFY
Mon	MONUMENT
MP	METAL PLATE
MPGR	METAL PLATE GUARD RAILING
MR	MOVEMENT RATING
MSE	MECHANICALLY STABILIZED EMBANKMENT
Mt	MOUNTAIN, MOUNT
Mtl	MATERIAL
MVP	MAINTENANCE VEHICLE PULLOUT

N

N	NORTH
NB	NORTHBOUND
No.	NUMBER (MUST HAVE PERIOD)
Nos.	NUMBERS (MUST HAVE PERIOD)
NPS	NOMINAL PIPE SIZE
NS	NEAR SIDE
NSP	NEW STANDARD PLAN
NTS	NOT TO SCALE

O

Oblr	OBLITERATE
OC	OVERCROSSING
OD	OUTSIDE DIAMETER
OF	OUTSIDE FACE
OG	ORIGINAL GROUND
OGAC	OPEN GRADED ASPHALT CONCRETE
OGFC	OPEN GRADED FRICTION COURSE
OH	OVERHEAD
OHWM	ORDINARY HIGH WATER MARK
O-O	OUT TO OUT
Opp	OPPOSITE
OSD	OVERSIDE DRAIN

P

P	PAGE
PAP	PERFORATED ALUMINUM PIPE
PB	PULL BOX
PC	POINT OF CURVATURE,
	PRECAST
PCC	POINT OF COMPOUND CURVE,
	PORTLAND CEMENT CONCRETE
PCMS	PORTABLE CHANGEABLE MESSAGE SIGN
PCP	PERFORATED CONCRETE PIPE,
	PRESTRESSED CONCRETE PIPE
PCVC	POINT OF COMPOUND VERTICAL CURVE
PEC	PERMIT TO ENTER AND CONSTRUCT
Ped	PEDESTRIAN
Ped OC	PEDESTRIAN OVERCROSSING
Ped UC	PEDESTRIAN UNDERCROSSING
Perm Mtl	PERMEABLE MATERIAL

P continued

PG	PROFILE GRADE
PI	POINT OF INTERSECTION
PJP	PARTIAL JOINT PENETRATION
Pkwy	PARKWAY
ℙ,PL	PLATE
P/L	PROPERTY LINE
PM	POST MILE,
	TIME FROM NOON TO MIDNIGHT
PN	PAVING NOTCH
POC	POINT OF HORIZONTAL CURVE
POT	POINT OF TANGENT
POVC	POINT OF VERTICAL CURVE
PP	PIPE PILE,
	PLASTIC PIPE,
	POWER POLE
PPL	PREFORMED PERMEABLE LINER
PPP	PERFORATED PLASTIC PIPE
PRC	POINT OF REVERSE CURVE
PRF	PAVEMENT REINFORCING FABRIC
PRVC	POINT OF REVERSE VERTICAL CURVE
PS&E	PLANS, SPECIFICATIONS AND ESTIMATES
PS, P/S	PRESTRESSED
PSP	PERFORATED STEEL PIPE
PT	POINT OF TANGENCY
PVC	POLYVINYL CHLORIDE
Pvmt	PAVEMENT

Q

Qty	QUANTITY

R

R	RADIUS
R & D	REMOVE AND DISPOSE
R & S	REMOVE AND SALVAGE
R/C	RATE OF CHANGE
RCA	REINFORCED CONCRETE ARCH
RCB	REINFORCED CONCRETE BOX
RCP	REINFORCED CONCRETE PIPE
RCPA	REINFORCED CONCRETE PIPE ARCH
Rd	ROAD
Reinf	REINFORCED,
	REINFORCEMENT,
	REINFORCING
Rel	RELOCATE
Repl	REPLACEMENT
Ret	RETAINING
Rev	REVISED, REVISION
Rdwy	ROADWAY
RHMA	RUBBERIZED HOT MIX ASPHALT
Riv	RIVER
RM	ROAD-MIXED
RP	RADIUS POINT,
	REFERENCE POINT
RR	RAILROAD
RSP	ROCK SLOPE PROTECTION,
	REVISED STANDARD PLAN
Rt	RIGHT
Rte	ROUTE
RW	REDWOOD,
	RETAINING WALL
R/W	RIGHT OF WAY
Rwy	RAILWAY

S

S	SOUTH,
	SUPPLEMENT
SAE	STRUCTURE APPROACH EMBANKMENT
Salv	SALVAGE
SAPP	STRUCTURAL ALUMINUM PLATE PIPE
SB	SOUTHBOUND
SC	SAND CUSHION
SCSP	SLOTTED CORRUGATED STEEL PIPE
SD	STORM DRAIN
Sec	SECOND,
	SECTION
Sep	SEPARATION
SG	SUBGRADE
Shld	SHOULDER
Sht	SHEET
Sim	SIMILAR
℄	STATION LINE
SM	SELECTED MATERIAL
Spec	SPECIAL,
	SPECIFICATIONS
SPP	SLOTTED PLASTIC PIPE
SS	SLOPE STAKE
SSBM	STRAP AND SADDLE BRACKET METHOD
SSD	STRUCTURAL SECTION DRAIN
SSPA	STRUCTURAL STEEL PLATE ARCH
SSPP	STRUCTURAL STEEL PLATE PIPE
SSPPA	STRUCTURAL STEEL PLATE PIPE ARCH
SSRP	STEEL SPIRAL RIB PIPE
St	STREET
Sta	STATION
STBB	SINGLE THRIE BEAM BARRIER
Std	STANDARD
Str	STRUCTURE
Surf	SURFACING
SW	SIDEWALK,
	SOUND WALL
Swr	SEWER
Sym	SYMMETRICAL
S4S	SURFACE 4 SIDES

T

T	SEMI-TANGENT
Tan	TANGENT
TBB	THRIE BEAM BARRIER
Tbr	TIMBER
TC	TOP OF CURB
TCB	TRAFFIC CONTROL BOX
TCE	TEMPORARY CONSTRUCTION EASEMENT
Tel	TELEPHONE
Temp	TEMPORARY
TG	TOP OF GRADE
Tot	TOTAL
TP	TELEPHONE POLE
TPB	TREATED PERMEABLE BASE
TPM	TREATED PERMEABLE MATERIAL
Trans	TRANSITION

T continued

TS	TRANSVERSE,
	TRAFFIC SIGNAL,
	TUBULAR STEEL
Typ	TYPICAL

U

UC	UNDERCROSSING
UD	UNDERDRAIN
UG	UNDERGROUND
UON	UNLESS OTHERWISE NOTED
UP	UNDERPASS

V

V	VALVE,
	DESIGN SPEED
Var	VARIABLE,
	VARIES
VC	VERTICAL CURVE
VCP	VITRIFIED CLAY PIPE
Vert	VERTICAL
Via	VIADUCT
Vol	VOLUME

W

W	WEST,
	WIDTH
WB	WESTBOUND
WH	WEEP HOLE
WM	WIRE MESH
WS	WATER SURFACE
WSP	WELDED STEEL PIPE
Wt	WEIGHT
WV	WATER VALVE
WW	WINGWALL
WWLOL	WINGWALL LAYOUT LINE

X

X Sec	CROSS SECTION
Xing	CROSSING

Y

Yr	YEAR
Yrs	YEARS

Dist	COUNTY	ROUTE	POST MILES TOTAL PROJECT	SHEET No.	TOTAL SHEETS
11	SD	8,54,67,94, 125, etc.	Var	177	231

Grace M. Tsushima
REGISTERED CIVIL ENGINEER

July 19, 2013
PLANS APPROVAL DATE

REGISTERED PROFESSIONAL ENGINEER
Grace M. Tsushima
No. C49814
Exp. 9-30-14
CIVIL
STATE OF CALIFORNIA

THE STATE OF CALIFORNIA OR ITS OFFICERS OR AGENTS SHALL NOT BE RESPONSIBLE FOR THE ACCURACY OR COMPLETENESS OF SCANNED COPIES OF THIS PLAN SHEET.

TO ACCOMPANY PLANS DATED 01-11-16

UNIT OF MEASUREMENT SYMBOLS:

Some of the symbols used in the project plan quantity tables and in the Bid Item List are:

TABLE A

SYMBOL USED	DEFINITIONS
ACRE	ACRE
CF	CUBIC FOOT
CY	CUBIC YARD
EA	EACH
GAL	GALLON
LB	POUND
LF	LINEAR FOOT
SQFT	SQUARE FOOT
SQYD	SQUARE YARD
STA	100 FEET
TAB	TABLET
TON	2,000 POUNDS

Some of the symbols used in the plans other than in the project plan quantity tables are:

TABLE B

SYMBOL USED	DEFINITIONS
ksi	KIPS PER SQUARE INCH
ksf	KIPS PER SQUARE FOOT
psi	POUNDS PER SQUARE INCH
psf	POUNDS PER SQUARE FOOT
lb/ft^3, pcf	POUNDS PER CUBIC FOOT
tsf	TONS PER SQUARE FOOT
mph, MPH *	MILES PER HOUR
ø	NOMINAL DIAMETER
oz	OUNCE
lb	POUND
kip	1,000 POUNDS
cal	CALORIE
ft	FOOT OR FEET
gal	GALLON

* For use on a sign panel only

STATE OF CALIFORNIA
DEPARTMENT OF TRANSPORTATION

ABBREVIATIONS (SHEET 2 OF 2)

NO SCALE

RSP A10B DATED JULY 19, 2013 SUPERSEDES STANDARD PLAN A10B DATED MAY 20, 2011 - PAGE 2 OF THE STANDARD PLANS BOOK DATED 2010.

REVISED STANDARD PLAN RSP A10B

2010 REVISED STANDARD PLAN RSP A10B

6-7-13

Dist	COUNTY	ROUTE	POST MILES TOTAL PROJECT	SHEET No.	TOTAL SHEETS
11	SD	8,54,67,94, 125, etc.	Var	178	231

REGISTERED CIVIL ENGINEER

July 19, 2013
PLANS APPROVAL DATE

REGISTERED PROFESSIONAL ENGINEER Roberta L. McLaughlin No. C40375 Exp. 3-31-15 CIVIL STATE OF CALIFORNIA

THE STATE OF CALIFORNIA OR ITS OFFICERS OR AGENTS SHALL NOT BE RESPONSIBLE FOR THE ACCURACY OR COMPLETENESS OF SCANNED COPIES OF THIS PLAN SHEET.

TO ACCOMPANY PLANS DATED 01-11-16

EXIT RAMP NEUTRAL AREA (GORE) TREATMENT

DETAIL 36

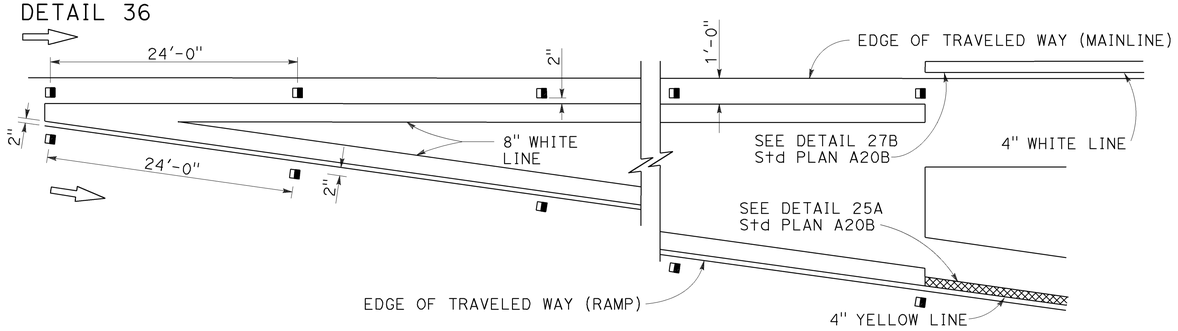

ENTRANCE RAMP NEUTRAL AREA (MERGE) TREATMENT

DETAIL 36A

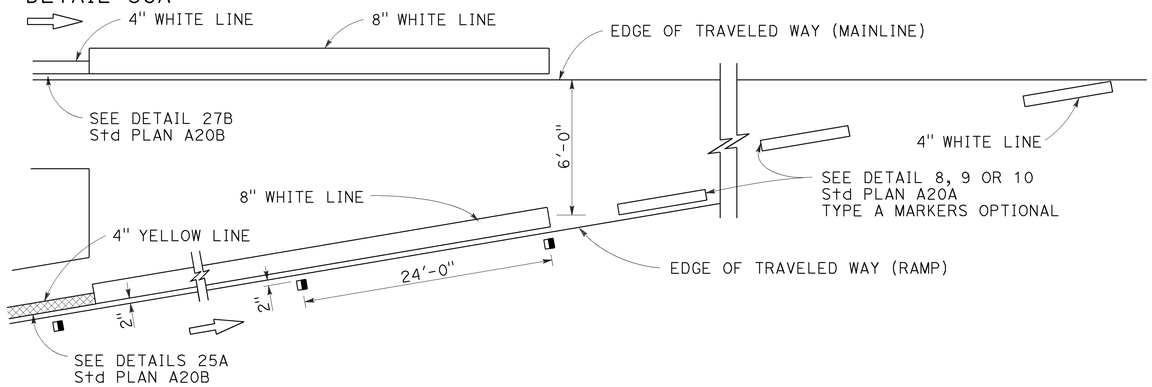

ENTRANCE RAMP NEUTRAL AREA (ACCELERATION LANE) TREATMENT

DETAIL 36B

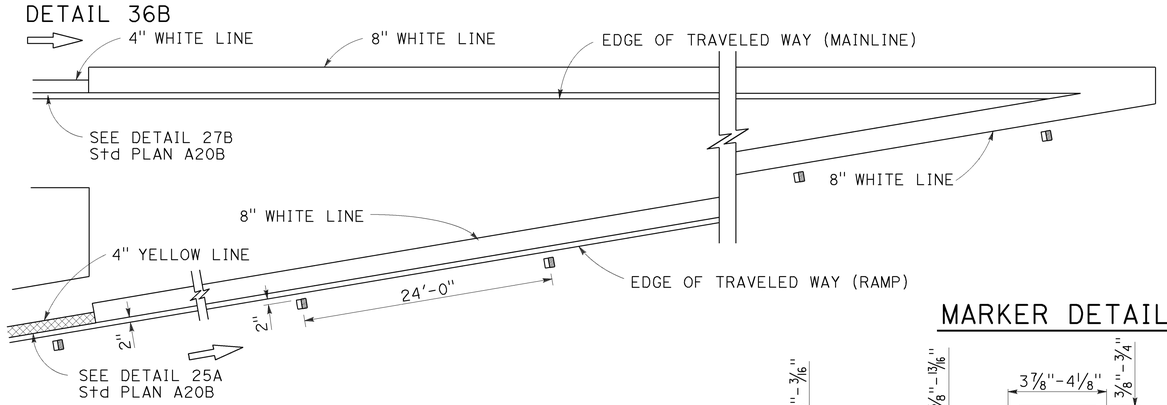

MARKER DETAILS

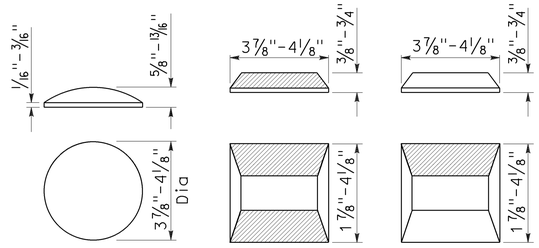

TYPE A TYPE C TYPE G

RETROREFLECTIVE FACE

LEGEND:

MARKERS

- TYPE A WHITE NON-REFLECTIVE
- TYPE C RED-CLEAR RETROREFLECTIVE
- TYPE G ONE-WAY CLEAR RETROREFLECTIVE

LANE DROP AT EXIT RAMPS

DETAIL 37

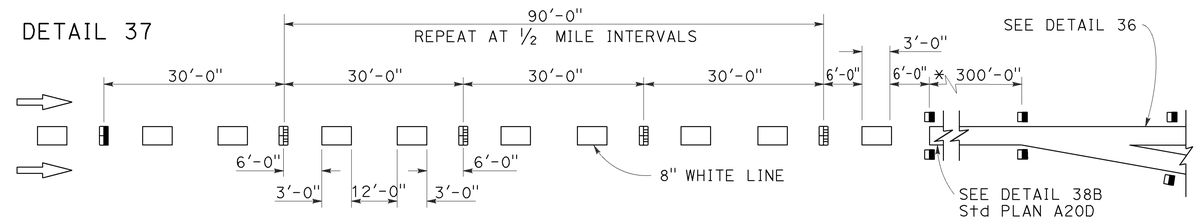

DETAIL 37A

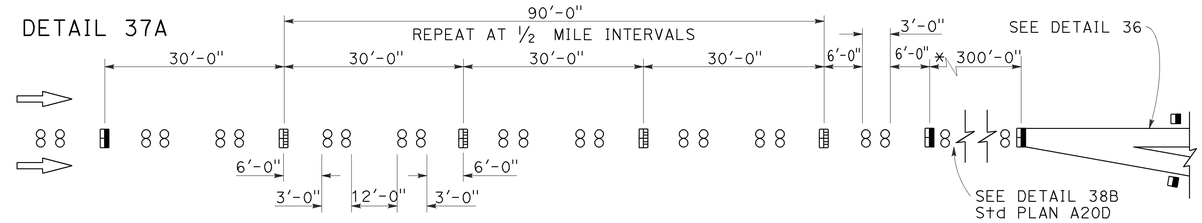

* The solid channelizing line shown may be omitted on short auxiliary lanes where weaving length is critical.

LANE DROP AT INTERSECTIONS

DETAIL 37B

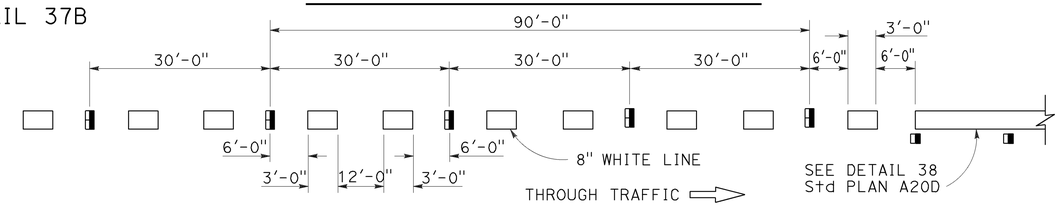

DETAIL 37C

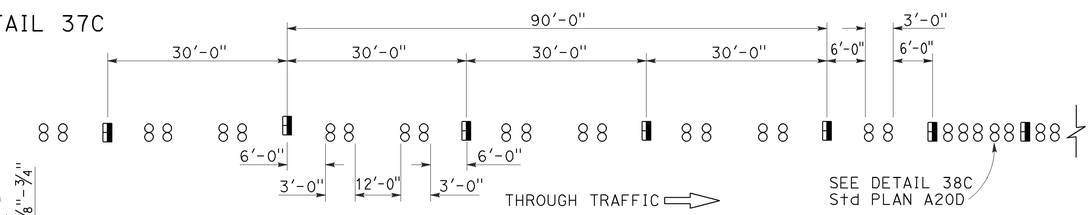

STATE OF CALIFORNIA
DEPARTMENT OF TRANSPORTATION

PAVEMENT MARKERS AND TRAFFIC LINE TYPICAL DETAILS

NO SCALE

RSP A20C DATED JULY 19, 2013 SUPERSEDES STANDARD PLAN A20C DATED MAY 20, 2011 - PAGE 11 OF THE STANDARD PLANS BOOK DATED 2010.

REVISED STANDARD PLAN RSP A20C

2010 REVISED STANDARD PLAN RSP A20C

4-29-13

Dist	COUNTY	ROUTE	POST MILES TOTAL PROJECT	SHEET No.	TOTAL SHEETS
11	SD	8,54,67,94, 125, etc.	Var	179	231

REGISTERED CIVIL ENGINEER

July 18, 2014
PLANS APPROVAL DATE

REGISTERED PROFESSIONAL ENGINEER
Carl M. Duan
No. C59976
Exp. 6-30-16
CIVIL
STATE OF CALIFORNIA

THE STATE OF CALIFORNIA OR ITS OFFICERS OR AGENTS SHALL NOT BE RESPONSIBLE FOR THE ACCURACY OR COMPLETENESS OF SCANNED COPIES OF THIS PLAN SHEET.

TO ACCOMPANY PLANS DATED 01-11-16

DESIGN NOTES:

Design: AASHTO LRFD Bridge Design Specifications, 4th edition with California Amendments. ACPA DESIGN DATA 1, October 2007. INDIRECT DESIGN METHOD

Soil: w Fe = 162 pcf Installation Type 1
w Fe = 168 pcf Installation Types 2 & 3
w = Unit weight of soil (pcf)
Fe = Soil-structure interaction factor

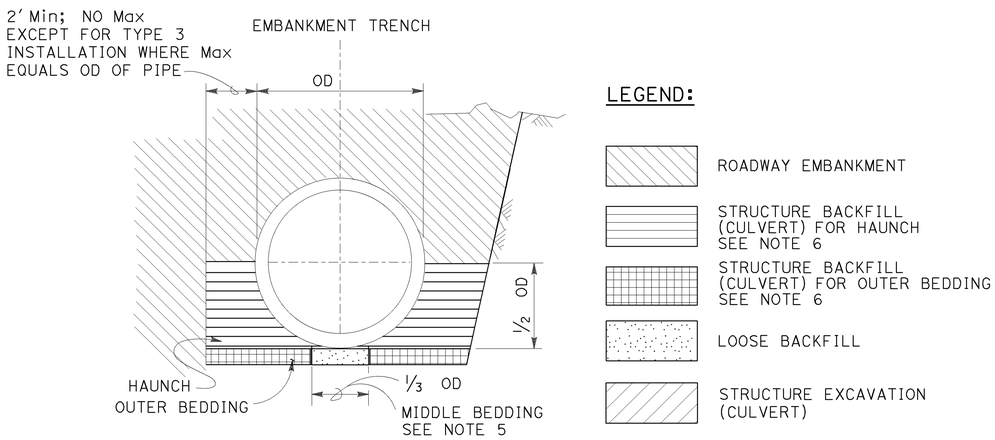

BACKFILL

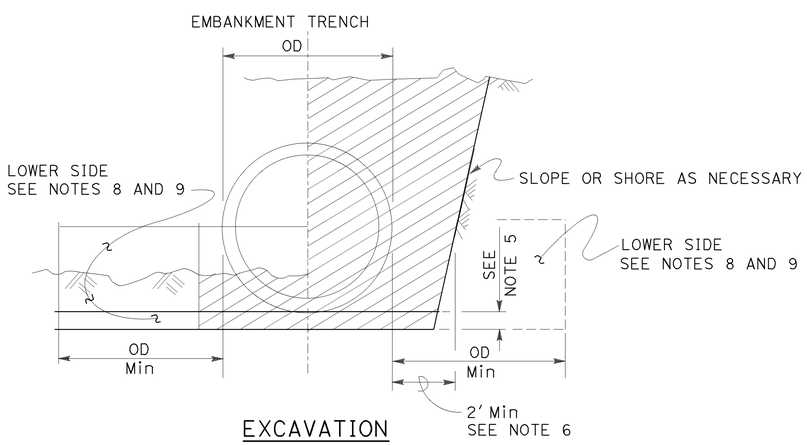

EXCAVATION

INSTALLATION TYPE 1:

The haunch and outer bedding shall be compacted to a minimum 90 percent relative compaction. In addition, the minimum sand equivalent in these areas shall be 30 and the maximum percentage passing the No. 200 sieve size shall be 12.

INSTALLATION TYPE 2:

The haunch and outer bedding shall be compacted to a minimum 90 percent relative compaction. In addition, the minimum sand equivalent in these areas shall be 25.

INSTALLATION TYPE 3:

The haunch and outer bedding shall be compacted to a minimum 85 percent relative compaction. 90 percent relative compaction will be required where the fill over the pipe is less than 4′-0″ or 1/2 OD. In addition, the minimum sand equivalent in these areas shall be 25 and the material shall not contain rocks, broken concrete, or other solid material exceeding 3″ in greatest dimension.

INSTALLATION TYPE 1

MINIMUM CLASS AND D-LOAD	COVER	
	60″ Dia AND SMALLER	OVER 60″ Dia TO 120″ Dia Max
CLASS II 1000D	14.9′	12.9′
CLASS III 1350D	15.0′ - 21.9′	13.0′ - 18.9′
CLASS III SPECIAL 1700D	22.0′ - 27.9′	19.0′ - 24.9′
CLASS IV 2000D	28.0′ - 32.9′	25.0′ - 29.9′
CLASS IV SPECIAL 2500D	33.0′ - 41.9′	30.0′ - 38.9′
CLASS V 3000D	42.0′ - 49.9′	39.0′ - 46.9′
CLASS V SPECIAL 3600D	50.0′ - 60.0′	47.0′ - 58.0′

INSTALLATION TYPE 2

MINIMUM CLASS AND D-LOAD	COVER	
	60″ Dia AND SMALLER	OVER 60″ Dia TO 120″ Dia Max
CLASS II 1000D	11.9′	9.9′
CLASS III 1350D	12.0′ - 15.9′	10.0′ - 14.9′
CLASS III SPECIAL 1700D	16.0′ - 20.9′	15.0′ - 19.9′
CLASS IV 2000D	21.0′ - 24.9′	20.0′ - 23.9′
CLASS IV SPECIAL 2500D	25.0′ - 31.9′	24.0′ - 30.9′
CLASS V 3000D	32.0′ - 37.9′	31.0′ - 37.9′
CLASS V SPECIAL 3600D	38.0′ - 46.0′	38.0′ - 46.0′

INSTALLATION TYPE 3

MINIMUM CLASS AND D-LOAD	COVER	
	60″ Dia AND SMALLER	OVER 60″ Dia TO 120″ Dia Max
CLASS II 1000D	8.9′	5.9′
CLASS III 1350D	9.0′ - 11.9′	6.0′ - 10.9′
CLASS III SPECIAL 1700D	12.0′ - 15.9′	11.0′ - 13.9′
CLASS IV 2000D	16.0′ - 18.9′	14.0′ - 17.9′
CLASS IV SPECIAL 2500D	19.0′ - 24.9′	18.0′ - 22.9′
CLASS V 3000D	25.0′ - 29.9′	23.0′ - 28.9′
CLASS V SPECIAL 3600D	30.0′ - 36.0′	29.0′ - 35.0′

NOTES:

1. Unless otherwise shown on the plans or specified in the special provision, the Contractor shall have the option of selecting the class of RCP and the type of installation to be used, provided the height of cover does not exceed the value shown for the RCP selected.
   Example: 24″ RCP culvert with maximum cover of 24′-0″ the options are:
   a) Class III Special or stronger with Installation Type 1.
   b) Class IV or stronger with Installation Type 2.
   c) Class IV Special or stronger with Installation Type 3.
   Cover is defined as the maximum vertical distance from top of the pipe to finished grade within the length of any given culvert.
2. The class of RCP and Installation Type selected shall be the same throughout the length of any given culvert.
3. The "length of any culvert" is defined as the culvert between:
   a) Successive drainage structure (inlets, junction boxes, headwalls, etc.).
   b) A drainage structure and the inlet or outlet end of the culvert.
   c) The inlet and outlet end of the culvert when there are no intervening drainage structures.
4. Oval and arch shaped RCP shall not be used.
5. Bedding depth: 1/25 OD Min, not less than 3″.
6. Slurry cement backfill may be substituted for backfill in the outer bedding and haunch areas. If slurry is used, the outer and middle beddings shall be omitted. Prior to installation, the soil under the middle 1/3 of the outside diameter of the pipe shall be softened by scarifying or other means to a minimum depth of 1/25 OD, but not less than 3″. Where slurry cement backfill is used, clear distance to trench wall may be reduced as set forth in the Standard Specifications.
7. Backfill shall be placed full width of excavation except where dimensions are shown for backfill width or thickness. Dimensions shown are minimum.
8. Lower side shall be suitable material as determined by the Engineer. Otherwise it shall be considered unsuitable as set forth in of the Standard Specifications. See Note 9.
9. Where the pipe is placed in a trench, if the trench walls are sloped at 5 vertical to 1 horizontal or steeper for at least 90 percent of the trench height or up to not less than 12″ from the grading plane, the firmness of the soil in the lower side need not be considered.
10. Non-reinforced precast concrete pipe sizes 3′-0″ or smaller may be placed under installation Types 1, 2 or 3.

STATE OF CALIFORNIA
DEPARTMENT OF TRANSPORTATION

EXCAVATION AND BACKFILL CONCRETE PIPE CULVERTS INDIRECT DESIGN METHOD

NO SCALE

RSP A62DA DATED JULY 18, 2014 SUPERSEDES STANDARD PLAN A62DA DATED MAY 20, 2011 - PAGE 24 OF THE STANDARD PLANS BOOK DATED 2010.

REVISED STANDARD PLAN RSP A62DA

2010 REVISED STANDARD PLAN RSP A62DA

5-13-14

Dist	COUNTY	ROUTE	POST MILES TOTAL PROJECT	SHEET No.	TOTAL SHEETS
11	SD	8,54,67,94, 125, etc.	Var	180	231

REGISTERED CIVIL ENGINEER

October 30, 2015
PLANS APPROVAL DATE

REGISTERED PROFESSIONAL ENGINEER
Carl M. Duan
No. C59976
Exp. 6-30-16
CIVIL
STATE OF CALIFORNIA

THE STATE OF CALIFORNIA OR ITS OFFICERS OR AGENTS SHALL NOT BE RESPONSIBLE FOR THE ACCURACY OR COMPLETENESS OF SCANNED COPIES OF THIS PLAN SHEET.

TO ACCOMPANY PLANS DATED 01-11-16

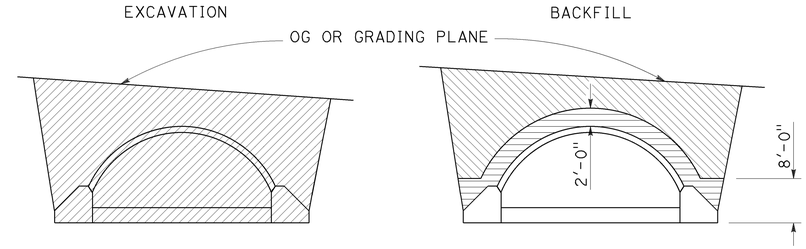

IN TRENCH

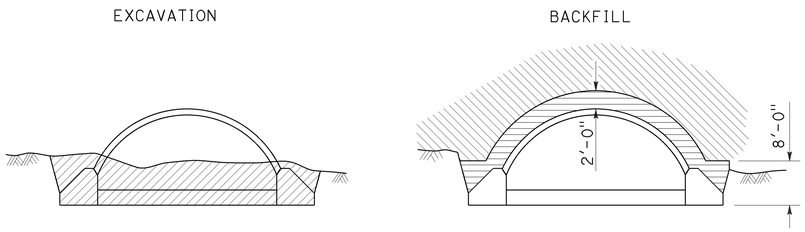

IN EMBANKMENT

STRUCTURAL STEEL PLATE ARCHES

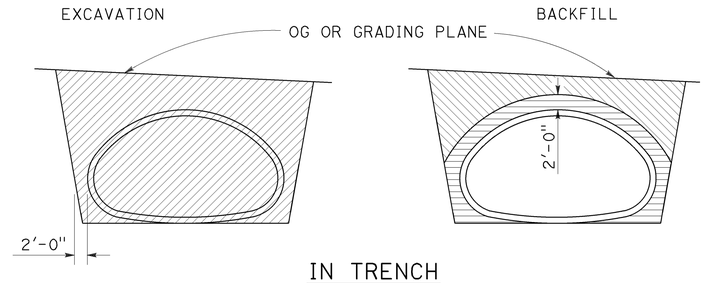

IN TRENCH

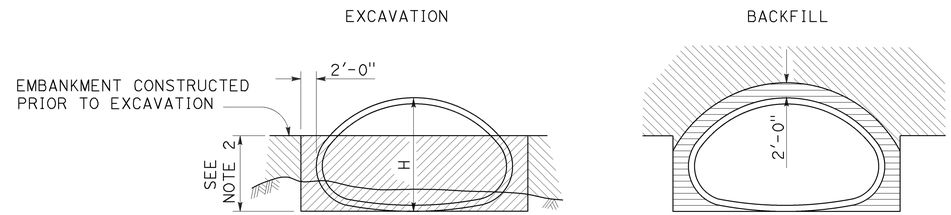

IN EMBANKMENT

STRUCTURAL STEEL PLATE PIPE ARCHES AND VEHICULAR UNDERCROSSING

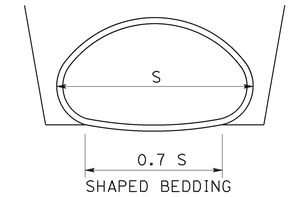

SHAPED BEDDING

S = Larger than 84"

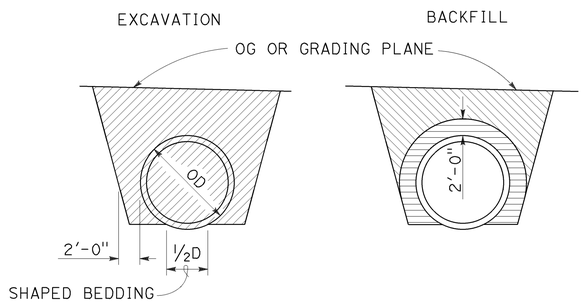

IN TRENCH

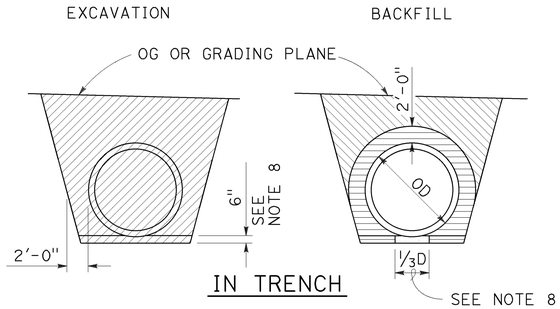

IN TRENCH

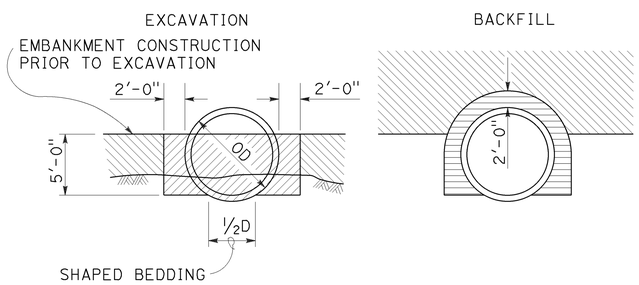

IN EMBANKMENT

PIPES

Larger than 84"

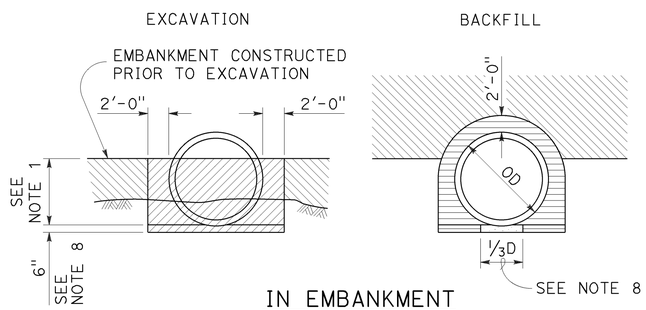

IN EMBANKMENT

METAL AND PLASTIC PIPES AND CORRUGATED METAL PIPE ARCHES

84" or Smaller

NOTES:

1. PIPES: 30" minimum for diameters up to and including 42" then ⅔ diameter but no more than 60" required. CORRUGATED METAL PIPE ARCHES: 30" maximum.
2. ⅔ H up to 60" maximum.
3. Slope or shore excavation sides as necessary.
4. Backfill shall be placed full width of excavation except as noted.
5. Diagrams do not apply to overside drains.
6. Dimensions shown are minimum.
7. Construction strutting of structural steel plate pipe, arches and vehicular undercrossing to be used when shown on the project plans. When shown, see Standard Plan D88A for strutting requirements.
8. Excavation below pipe and 80% relative compaction requirements for plastic pipes only.
9. D is the inside diameter (ID) of the pipe.

LEGEND

- STRUCTURE EXCAVATION (CULVERT)
- ROADWAY EMBANKMENT
- STRUCTURE BACKFILL (CULVERT) 95% RELATIVE COMPACTION
- STRUCTURE BACKFILL (CULVERT) 80% RELATIVE COMPACTION

STATE OF CALIFORNIA
DEPARTMENT OF TRANSPORTATION

EXCAVATION AND BACKFILL METAL AND PLASTIC CULVERTS

NO SCALE

RSP A62F DATED OCTOBER 30, 2015 SUPERSEDES STANDARD PLAN A62F DATED MAY 20, 2011 - PAGE 26 OF THE STANDARD PLANS BOOK DATED 2010.

REVISED STANDARD PLAN RSP A62F

2010 REVISED STANDARD PLAN RSP A62F

10-13-15

Dist	COUNTY	ROUTE	POST MILES TOTAL PROJECT	SHEET No.	TOTAL SHEETS
11	SD	8,54,67,94, 125, etc.	Var	181	231

Randell D. Hiatt
REGISTERED CIVIL ENGINEER

October 30, 2015
PLANS APPROVAL DATE

REGISTERED PROFESSIONAL ENGINEER
Randell D. Hiatt
No. C50200
Exp. 6-30-17
CIVIL
STATE OF CALIFORNIA

THE STATE OF CALIFORNIA OR ITS OFFICERS OR AGENTS SHALL NOT BE RESPONSIBLE FOR THE ACCURACY OR COMPLETENESS OF SCANNED COPIES OF THIS PLAN SHEET.

TO ACCOMPANY PLANS DATED 01-11-16

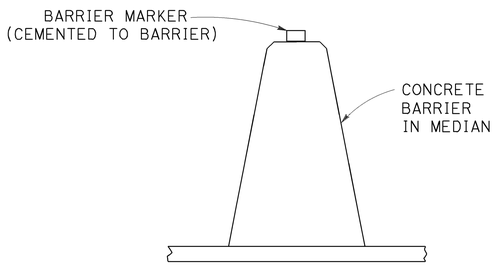

CONCRETE BARRIER TYPE 60 DELINEATION

See Note 5

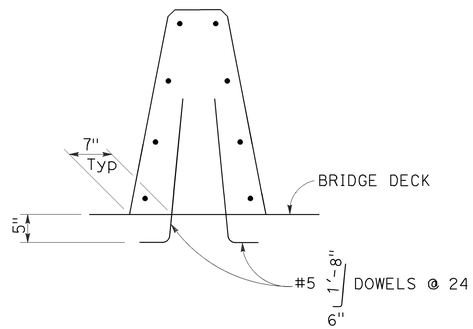

CONCRETE BARRIER TYPE 60A

Details similar to Type 60 except as noted.

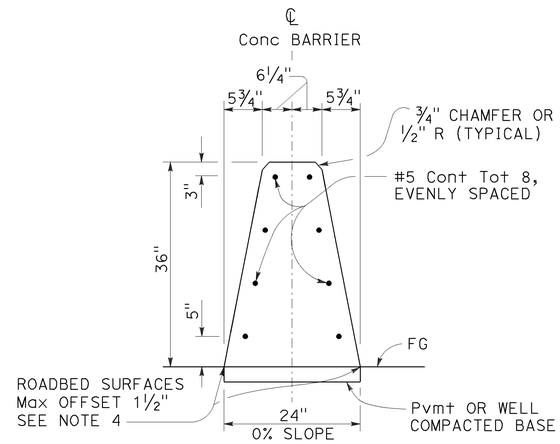

CONCRETE BARRIER TYPE 60

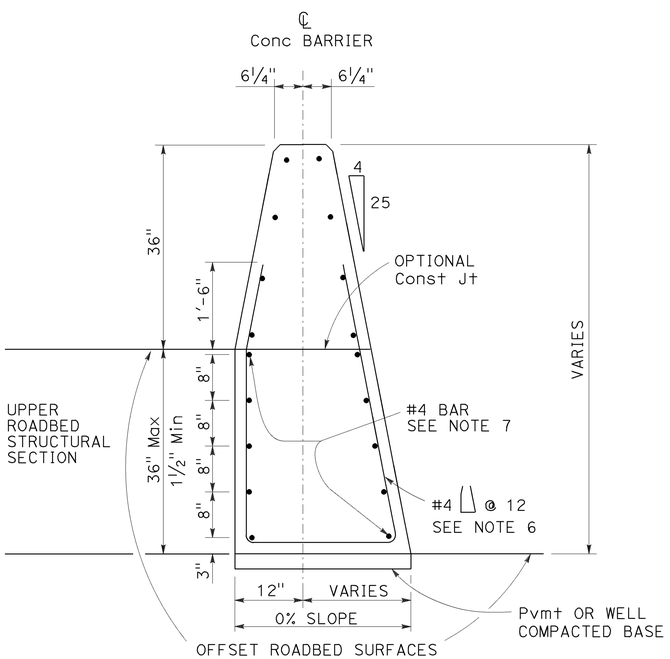

CONCRETE BARRIER TYPE 60C

Details similar to Type 60 except as noted.
Use concrete barrier end anchor when necessary.
36" roadbed surfaces offset shown.

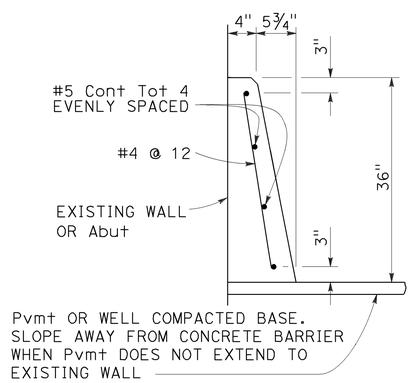

CONCRETE BARRIER TYPE 60D

NOTES:

1. See Standard Plan A76B for details of Concrete Barrier Type 60 end anchors, connection to structures and transitions to Concrete Barrier Type 50 and Concrete Barrier Type 60S.
2. See Revised Standard Plan RSP A76C for Concrete Barrier Type 60 transitions at bridge column and sign pedestals.
3. Where glare screen is required on Concrete Barrier Type 60, use Concrete Barrier Type 60G.
4. Where roadbed offset is greater than 1½", see Concrete Barrier Type 60C.
5. See Project Plans for barrier delineation locations.
6. Reinforcing stirrup not required for roadbed offsets less than 1'-0".
7. For roadbed surfaces offset greater than 1½" and less than or equal to 3", no reinforcement required. For roadbed surfaces offset greater than 3" and less than or equal to 8", use two #4 Reinf at 3" above the lower roadbed surface. For roadbed surfaces offset greater than 8" and less than or equal to 12", use two #4 Reinf at 3" above the lower roadbed surface and two #4 Reinf at 8" above the lower roadbed surface. For roadbed surfaces offset greater than 12" and less than or equal to 36", use two #4 Reinf at 3" above the lower roadbed surface and two #4 Reinf at every 8" increment vertical spacing above the first two #4 Reinf.

STATE OF CALIFORNIA
DEPARTMENT OF TRANSPORTATION

CONCRETE BARRIER TYPE 60

NO SCALE

RSP A76A DATED OCTOBER 30, 2015 SUPERSEDES STANDARD PLAN A76A DATED MAY 20, 2011 - PAGE 34 OF THE STANDARD PLANS BOOK DATED 2010.

REVISED STANDARD PLAN RSP A76A

2010 REVISED STANDARD PLAN RSP A76A

10-7-15

Dist	COUNTY	ROUTE	POST MILES TOTAL PROJECT	SHEET No.	TOTAL SHEETS
11	SD	8,54,67,94, 125, etc.	Var	182	231

Randell D. Hiatt
REGISTERED CIVIL ENGINEER

July 19, 2013
PLANS APPROVAL DATE

REGISTERED PROFESSIONAL ENGINEER Randell D. Hiatt No. C50200 Exp. 6-30-15 CIVIL STATE OF CALIFORNIA

THE STATE OF CALIFORNIA OR ITS OFFICERS OR AGENTS SHALL NOT BE RESPONSIBLE FOR THE ACCURACY OR COMPLETENESS OF SCANNED COPIES OF THIS PLAN SHEET.

TO ACCOMPANY PLANS DATED 01-11-16

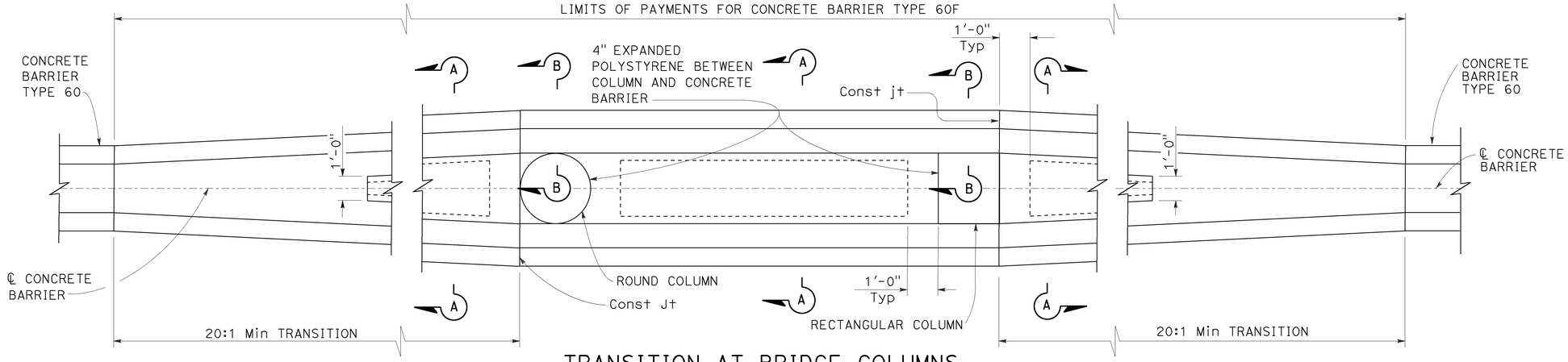

TRANSITION AT BRIDGE COLUMNS

Concrete Barrier Type 60F
See Note 7

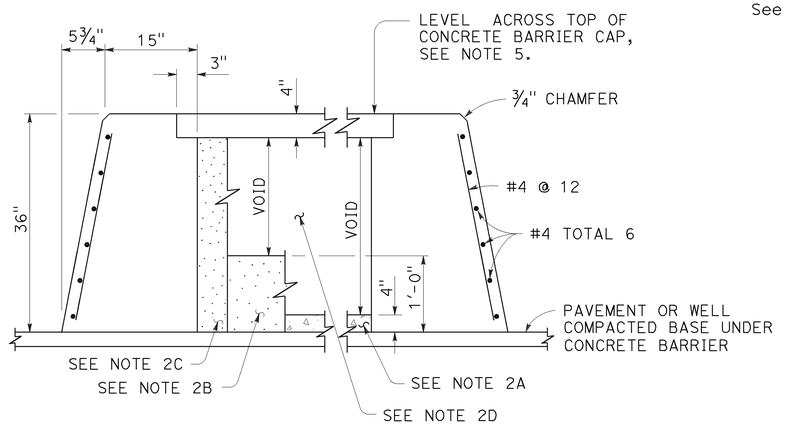

SECTION A-A

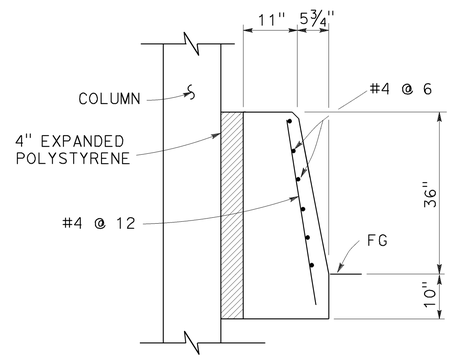

SECTION B-B

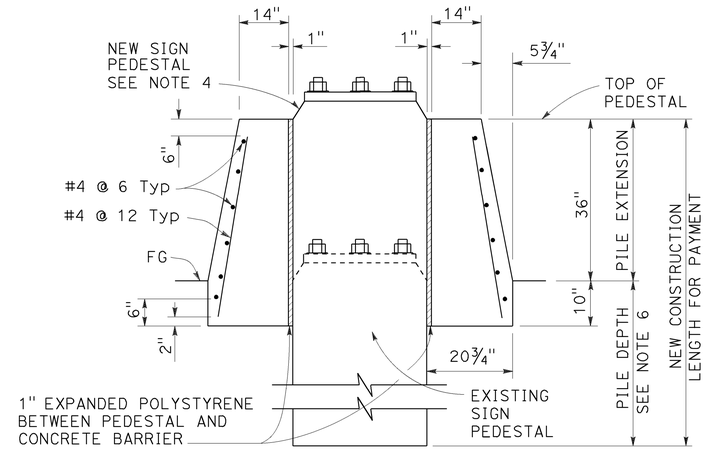

SECTION C-C

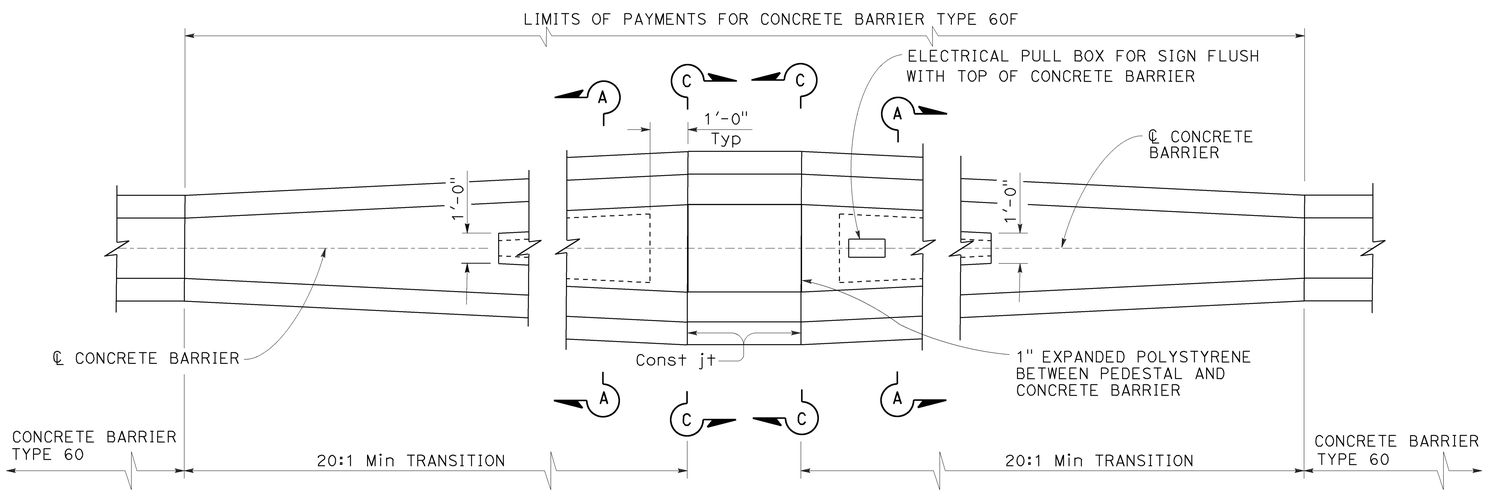

TRANSITION AT SIGN PEDESTAL

Concrete Barrier Type 60F
See Note 7

NOTES:

1. See Standard Plan A76A for Concrete Barrier Type 60.
2. Contractor options for fill between concrete barrier walls:
   A. Place 4" PCC at base between concrete barrier walls.
   B. Place 1'-0" of granular material at base between walls.
   C. Place granular material from base to bottom of 4" cap.
   D. Monolithic concrete with foam blockouts is not permitted.
3. Reinforcing steel shall extend continuous through construction joints.
4. See "Overhead Sign" plans for sign pedestal elevations on new construction.
5. Adjust height of concrete barrier wall on low side of offset or superelevated roadways to provide level grade across top of concrete barrier cap.
6. See Overhead Signs Standard Plan Pile Foundation Tables.
7. All locations with limited shoulder width available for barrier, see Standard Plan A76F for use of Concrette Barrier Type 60GE.

STATE OF CALIFORNIA
DEPARTMENT OF TRANSPORTATION

CONCRETE BARRIER TYPE 60F

NO SCALE

RSP A76C DATED JULY 19, 2013 SUPERSEDES STANDARD PLAN A76C DATED MAY 20, 2011 - PAGE 36 OF THE STANDARD PLANS BOOK DATED 2010.

REVISED STANDARD PLAN RSP A76C

2010 REVISED STANDARD PLAN RSP A76C

7-3-13

Dist	COUNTY	ROUTE	POST MILES TOTAL PROJECT	SHEET No.	TOTAL SHEETS
11	SD	8,54,67,94, 125, etc.	Var	183	231

Randell D. Hiatt
REGISTERED CIVIL ENGINEER

July 19, 2013
PLANS APPROVAL DATE

REGISTERED PROFESSIONAL ENGINEER Randell D. Hiatt No. C50200 Exp. 6-30-15 CIVIL STATE OF CALIFORNIA

THE STATE OF CALIFORNIA OR ITS OFFICERS OR AGENTS SHALL NOT BE RESPONSIBLE FOR THE ACCURACY OR COMPLETENESS OF SCANNED COPIES OF THIS PLAN SHEET.

TO ACCOMPANY PLANS DATED 01-11-16

2010 REVISED STANDARD PLAN RSP A77L1

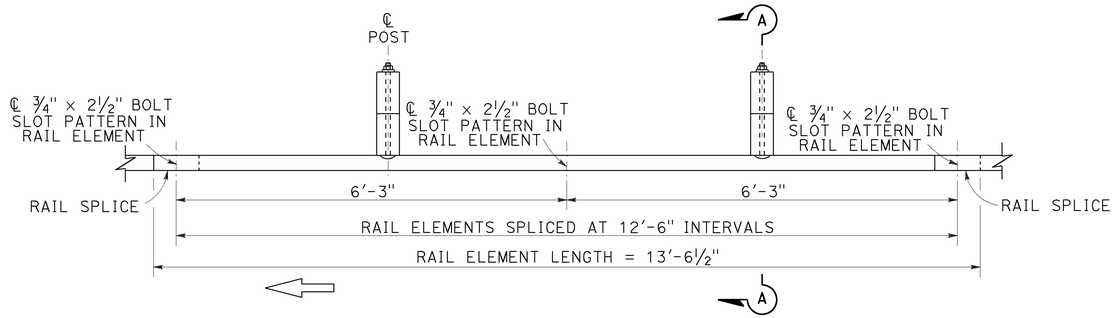

PLAN

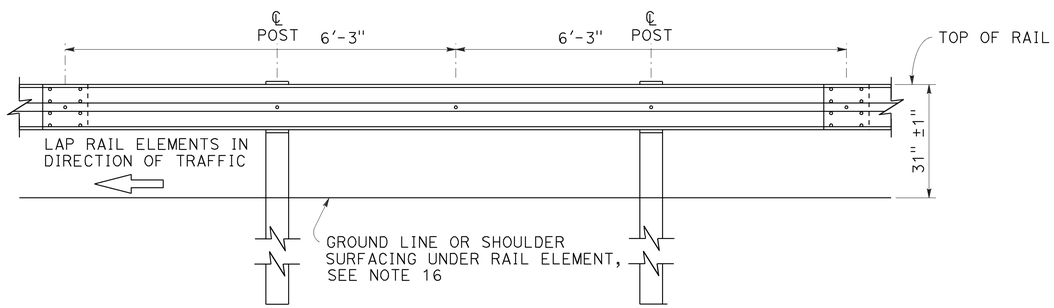

ELEVATION

MIDWEST GUARDRAIL SYSTEM WITH WOOD POST AND BLOCKS

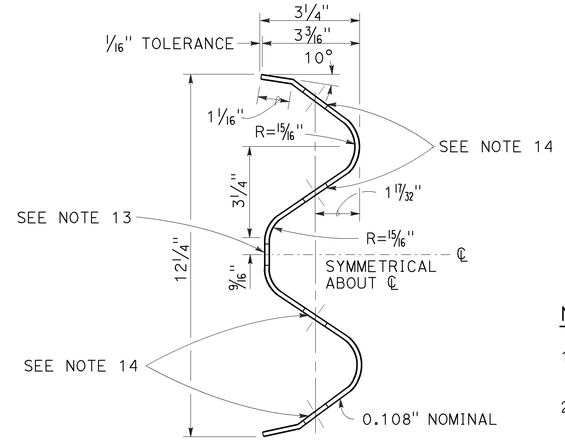

SECTION THRU RAIL ELEMENT

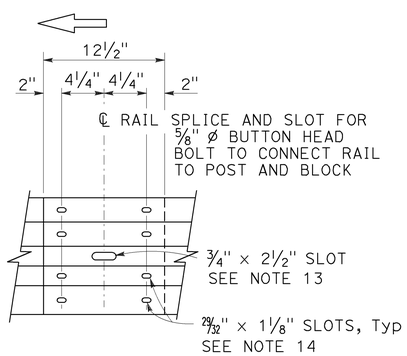

ELEVATION

RAIL ELEMENT SPLICE DETAIL

a) Connect the over lapped end of the rail elements with ⅝" ø × 1⅜" button head oval shoulder splice bolts inserted into the 29⁄32" × 1⅛" slots and bolted together with ⅝" ø recessed hex nuts. Recess of hex nut points toward rail element. A total of 8 bolts and nuts are to be used at each rail splice connection.

b) The ends of the rail elements are to be overlapped in the direction of traffic (see details).

c) Where end cap is to be attached to the end of a rail element, a total of 4 of the above described splice bolts and nuts are to be used.

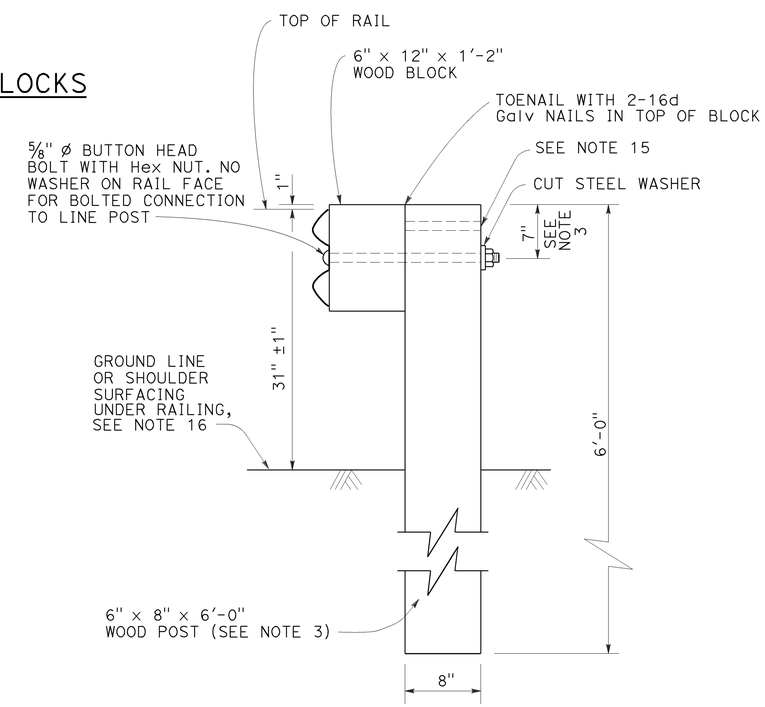

SECTION A-A

TYPICAL WOOD LINE POST INSTALLATION

See Note 4

NOTES:

1. For details of steel post installations, see Revised Standard Plan RSP A77L2.
2. For details of standard hardware used to construct MGS, see Revised Standard Plan RSP A77M1.
3. For details of wood posts and wood blocks used to construct MGS, see Revised Standard Plan RSP A77N1.
4. For additional installation details, see Revised Standard Plan RSP A77N3.
5. MGS post spacing to be 6'-3" center to center, except as otherwise noted.
6. For MGS typical layouts, see the A77P, A77Q and A77R Series of Standard Plans.
7. If railing is connected to terminal system end treatment, use 31" height terminal system end treatment.
8. For MGS end anchor details, see Revised Standard Plans RSP A77S1 and RSP A77T2.
9. For details of MGS transition to bridge railing, see Revised Standard Plan RSP A77U4.
10. For additional details of MSG connection to bridge railing, see Revised Standard Plans RSP A77U1, RSP A77U2 and RSP A77V1.
11. For MGS connection details to abutments and walls, see Revised Standard Plan RSP A77U3.
12. For typical MGS delineation and dike positioning details, see Revised Standard Plan RSP A77N4.
13. Slotted hole for bolted connection of rail element to block and post. See "Section Thru Rail Element".
14. Slotted holes for splice bolts to overlap ends of rail element. See "Section Thru Rail Element".
15. Additional hole in uppermost portion of line post is for potential future adjustments of railing height. See Revised Standard Plan RSP A77N1.
16. Install posts in soil.

STATE OF CALIFORNIA
DEPARTMENT OF TRANSPORTATION

MIDWEST GUARDRAIL SYSTEM STANDARD RAILING SECTION (WOOD POST WITH WOOD BLOCK)

NO SCALE

RSP A77L1 DATED JULY 19, 2013 SUPPLEMENTS STANDARD PLANS BOOK DATED 2010.

REVISED STANDARD PLAN RSP A77L1

Dist	COUNTY	ROUTE	POST MILES TOTAL PROJECT	SHEET No.	TOTAL SHEETS
11	SD	8,54,67,94, 125, etc.	Var	184	231

Randell D. Hiatt
REGISTERED CIVIL ENGINEER

July 19, 2013
PLANS APPROVAL DATE

REGISTERED PROFESSIONAL ENGINEER Randell D. Hiatt No. C50200 Exp. 6-30-15 CIVIL STATE OF CALIFORNIA

THE STATE OF CALIFORNIA OR ITS OFFICERS OR AGENTS SHALL NOT BE RESPONSIBLE FOR THE ACCURACY OR COMPLETENESS OF SCANNED COPIES OF THIS PLAN SHEET.

TO ACCOMPANY PLANS DATED 01-11-16

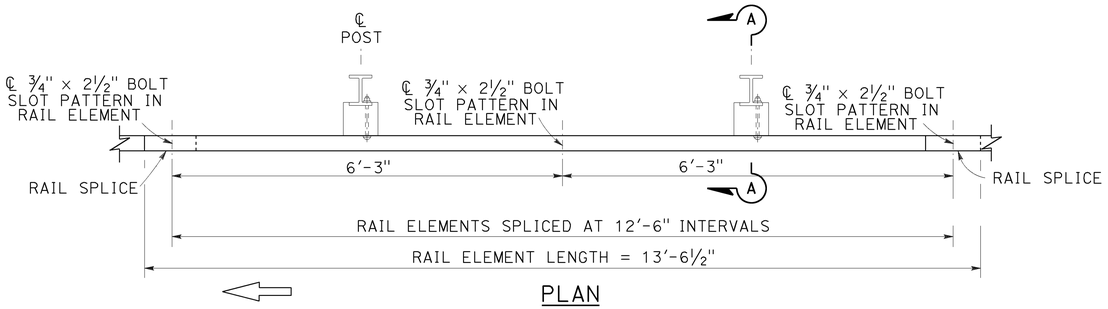

PLAN

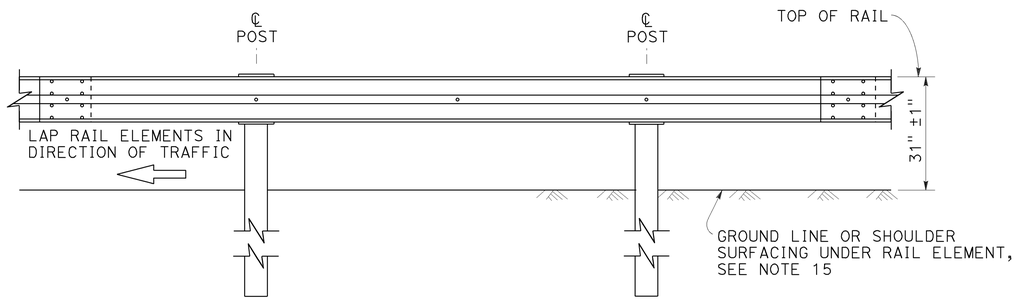

ELEVATION

MIDWEST GUARDRAIL SYSTEM WITH STEEL POSTS AND NOTCHED WOOD OR NOTCHED RECYCLED PLASTIC BLOCKS

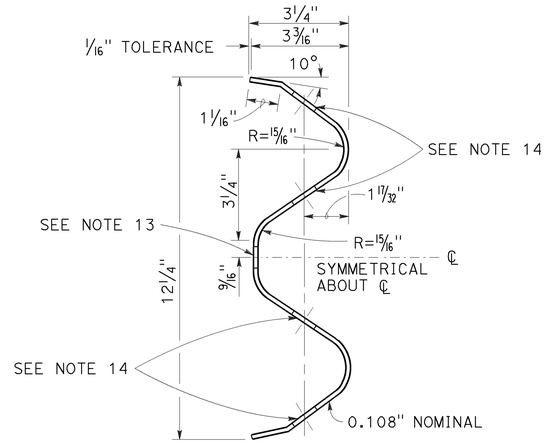

SECTION THRU RAIL ELEMENT

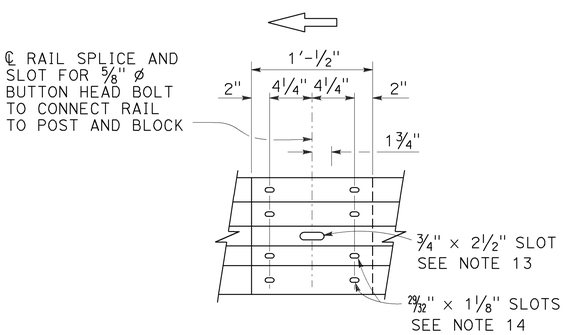

ELEVATION

RAIL ELEMENT SPLICE DETAIL

a) Connect the over lapped end of the rail elements with ⅝" ø × 1⅜" button head oval shoulder splice bolts inserted into the 29⁄32" × 1⅛" slots and bolted together with ⅝" ø recessed hex nuts. Recess of hex nut points toward rail element. A total of 8 bolts and nuts are to be used at each rail splice connection.

b) The ends of the rail elements are to be overlapped in the direction of traffic (see details).

c) Where end cap is to be attached to the end of a rail element, a total of 4 of the above described splice bolts and nuts are to be used.

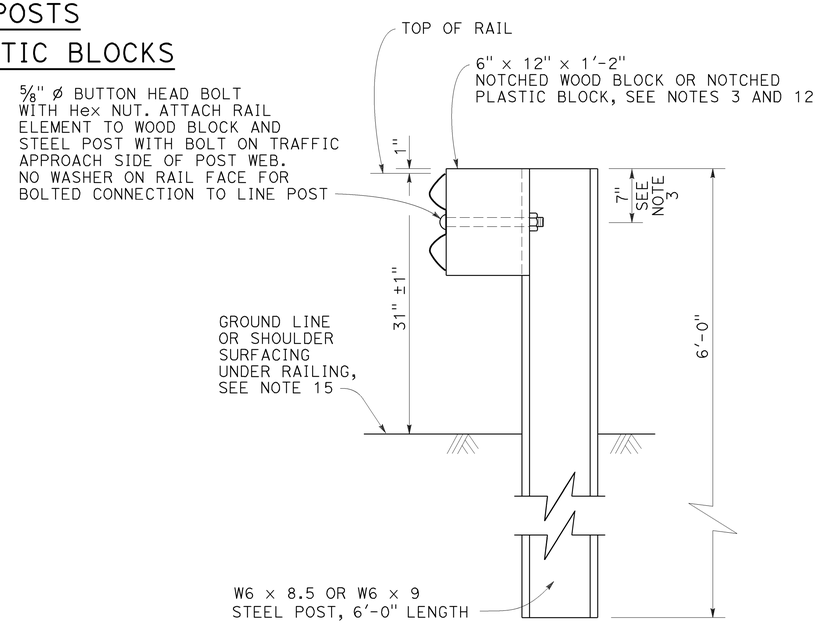

SECTION A-A

TYPICAL STEEL LINE POST INSTALLATION

See Note 4

NOTES:

1. For details of wood post installations, see Revised Standard Plan RSP A77L1.
2. For details of standard hardware used to construct MGS, see Revised Standard Plan RSP A77M1.
3. For details of steel posts and notched wood blocks used to construct MGS, see Revised Standard Plan RSP A77N2.
4. For additional installation details, see Revised Standard Plan RSP A77N3.
5. MGS post spacing to be 6'-3" center to center, except as otherwise noted.
6. For MGS typical layouts, see the A77P, A77Q and A77R Series of Standard Plans.
7. If railing is connected to terminal system end treatment, use 31" height terminal system end treatment.
8. For MGS end anchor details, see Revised Standard Plans RSP A77S1 and RSP A77T2.
9. For details of MGS transition to bridge railing, see Revised Standard Plan RSP A77U4.
10. For additional details of MGS connection to bridge railings, see Revised Standard Plans RSP A77U1, RSP A77U2 and RSP A77V1.
11. For dike positioning and MGS delineation details, see Revised Standard Plan RSP A77N4.
12. Notched face of block faces steel post.
13. Slotted hole for bolted connection of rail element to block and post. See "Section Thru Rail Element".
14. Slotted holes for splice bolts to overlap ends of rail element. See "Section Thru Rail Element".
15. Install posts in soil.

STATE OF CALIFORNIA
DEPARTMENT OF TRANSPORTATION

MIDWEST GUARDRAIL SYSTEM STANDARD RAILING SECTION (STEEL POST WITH NOTCHED WOOD OR NOTCHED RECYCLED PLASTIC BLOCK)

NO SCALE

RSP A77L2 DATED JULY 19, 2013 SUPPLEMENTS THE STANDARD PLANS BOOK DATED 2010.

REVISED STANDARD PLAN RSP A77L2

2010 REVISED STANDARD PLAN RSP A77L2

7-3-13

Dist	COUNTY	ROUTE	POST MILES TOTAL PROJECT	SHEET No.	TOTAL SHEETS
11	SD	8,54,67,94, 125, etc.	Var	185	231

Randell D. Hiatt
REGISTERED CIVIL ENGINEER

July 19, 2013
PLANS APPROVAL DATE

REGISTERED PROFESSIONAL ENGINEER
Randell D. Hiatt
No. C50200
Exp. 6-30-15
CIVIL
STATE OF CALIFORNIA

THE STATE OF CALIFORNIA OR ITS OFFICERS OR AGENTS SHALL NOT BE RESPONSIBLE FOR THE ACCURACY OR COMPLETENESS OF SCANNED COPIES OF THIS PLAN SHEET.

TO ACCOMPANY PLANS DATED 01-11-16

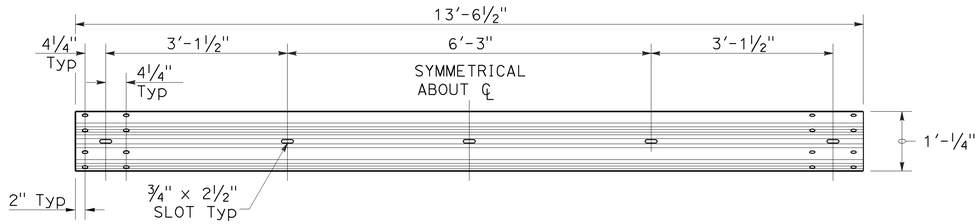

TYPICAL RAIL ELEMENT

NOTE:

1. Slotted holes for splice bolts to overlap ends of rail element.

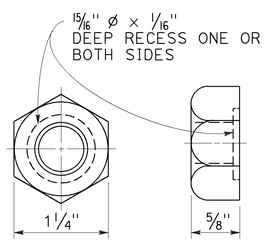

⅝" ø RECESS NUT

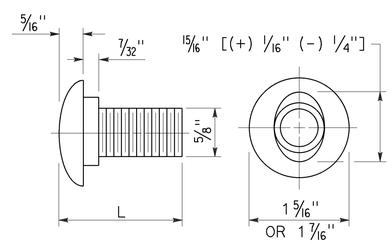

⅝" ø BUTTON HEAD BOLT

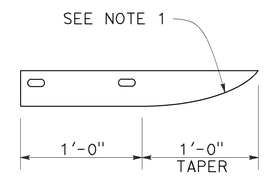

PLAN

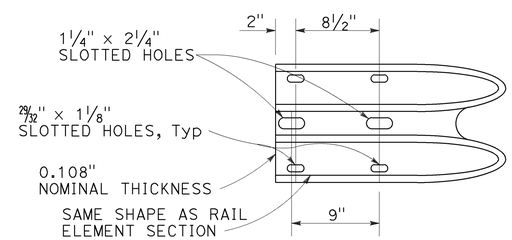

ELEVATION

END CAP
(TYPE A)

BUTTON HEAD BOLT

L	THREAD LENGTH
1⅜"	FULL THREAD LENGTH
2"	FULL THREAD LENGTH
10"	4" Min THREAD LENGTH
18"	4" Min THREAD LENGTH
20"	4" Min THREAD LENGTH
22"	4" Min THREAD LENGTH
26"	4" Min THREAD LENGTH
36"	4" Min THREAD LENGTH
** 2¾"	2" Min THREAD LENGTH
** 19"	4" Min THREAD LENGTH

** For nested rail applications.

STATE OF CALIFORNIA
DEPARTMENT OF TRANSPORTATION

MIDWEST GUARDRAIL SYSTEM STANDARD HARDWARE

NO SCALE

RSP A77M1 DATED JULY 19, 2013 SUPPLEMENTS THE STANDARD PLANS BOOK DATED 2010.

REVISED STANDARD PLAN RSP A77M1

2010 REVISED STANDARD PLAN RSP A77M1

7-3-13

Dist	COUNTY	ROUTE	POST MILES TOTAL PROJECT	SHEET No.	TOTAL SHEETS
11	SD	8,54,67,94, 125, etc.	Var	186	231

Randell D. Hiatt
REGISTERED CIVIL ENGINEER

July 19, 2013
PLANS APPROVAL DATE

REGISTERED PROFESSIONAL ENGINEER
Randell D. Hiatt
No. C50200
Exp. 6-30-15
CIVIL
STATE OF CALIFORNIA

THE STATE OF CALIFORNIA OR ITS OFFICERS OR AGENTS SHALL NOT BE RESPONSIBLE FOR THE ACCURACY OR COMPLETENESS OF SCANNED COPIES OF THIS PLAN SHEET.

TO ACCOMPANY PLANS DATED 01-11-16

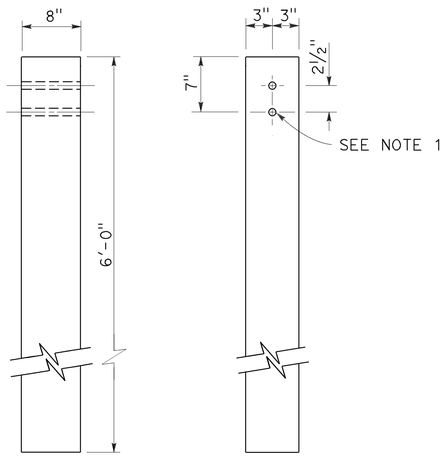

SIDE FRONT

6" x 8" WOOD POST
See Note 3

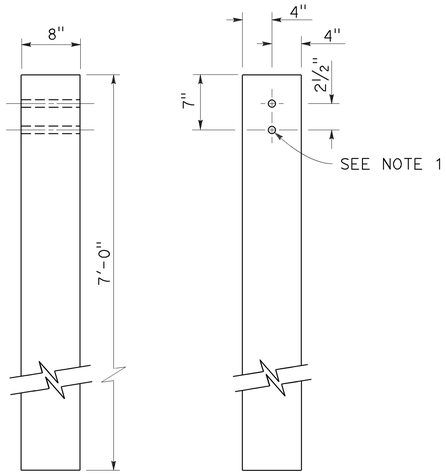

SIDE FRONT

8" x 8" WOOD POST
See Note 4

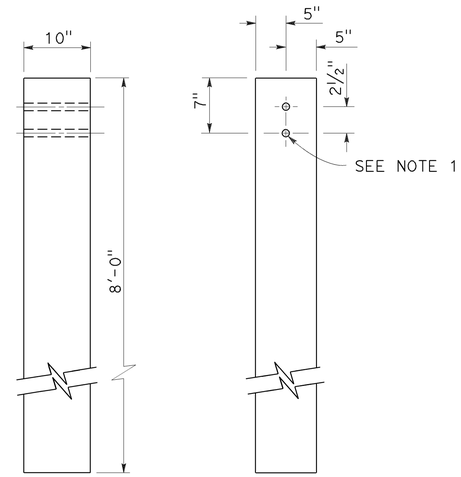

SIDE FRONT

10" x 10" WOOD POST
See Note 5

NOTES:

1. All holes in wood posts and blocks shall be 3/4" Dia ± 1/16".
2. Dimensions shown for wood post are nominal.
3. This post and block combination used for standard line post sections of MGS.
4. This post and 8" x 12" block combination used for line post sections of MGS on narrow roadways.
5. This post and 8" x 12" block combination is typically used where strengthened line post sections of MGS are warranted to shield fixed objects.
6. See Revised Standard Plan RSP A77L3 for use of 6" x 8" and 8" x 8" wood blocks.

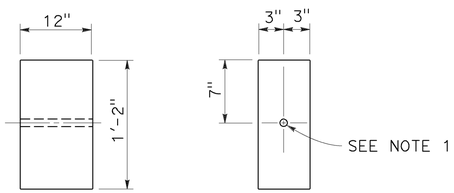

SIDE FRONT

6" x 12" WOOD BLOCK
See Note 3

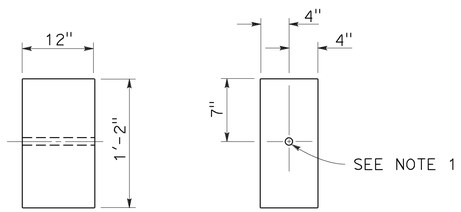

SIDE FRONT

8" x 12" WOOD BLOCK

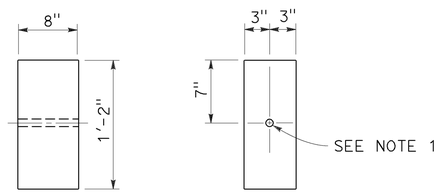

SIDE FRONT

6" x 8" WOOD BLOCK
Only for use with metal beam guard rail see Note 6

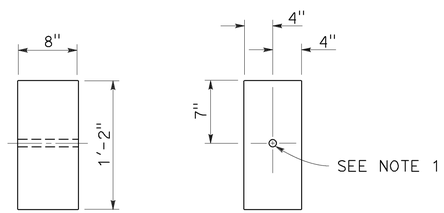

SIDE FRONT

8" x 8" WOOD BLOCK
Only for use with metal beam guard rail see Note 6

STATE OF CALIFORNIA
DEPARTMENT OF TRANSPORTATION

MIDWEST GUARDRAIL SYSTEM WOOD POST AND WOOD BLOCK DETAILS

NO SCALE

RSP A77N1 DATED JULY 19, 2013 SUPPLEMENTS THE STANDARD PLANS BOOK DATED 2010.

REVISED STANDARD PLAN RSP A77N1

2010 REVISED STANDARD PLAN RSP A77N1

7-3-13

Dist	COUNTY	ROUTE	POST MILES TOTAL PROJECT	SHEET No.	TOTAL SHEETS
11	SD	8,54,67,94, 125, etc.	Var	187	231

Randell D. Hiatt
REGISTERED CIVIL ENGINEER

November 15, 2013
PLANS APPROVAL DATE

REGISTERED PROFESSIONAL ENGINEER
Randell D. Hiatt
No. C50200
Exp. 6-30-15
CIVIL
STATE OF CALIFORNIA

THE STATE OF CALIFORNIA OR ITS OFFICERS OR AGENTS SHALL NOT BE RESPONSIBLE FOR THE ACCURACY OR COMPLETENESS OF SCANNED COPIES OF THIS PLAN SHEET.

TO ACCOMPANY PLANS DATED 01-11-16

2010 REVISED STANDARD PLAN RSP A77N2

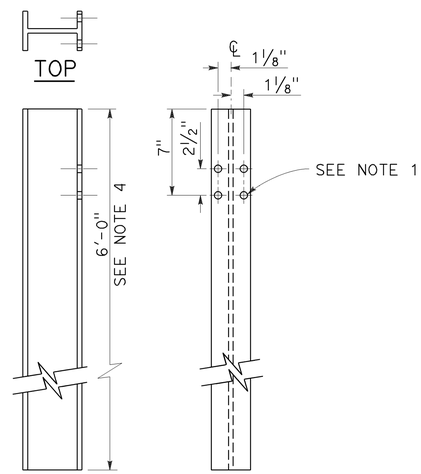

SIDE FRONT

W6 x 9 OR W6 x 8.5
STEEL POST
See Note 4

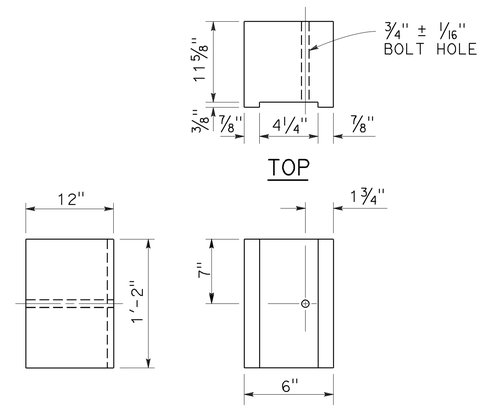

SIDE FRONT

6" x 12"
NOTCHED WOOD BLOCK
See Notes 2 and 3

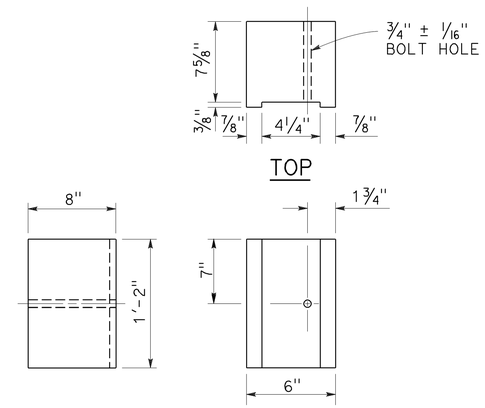

SIDE FRONT

6" x 8"
NOTCHED WOOD BLOCK
Only for use with metal beam guard railing. See Note 5

NOTES:

1. All holes in steel post shall be 13/16" Dia maximum.
2. Dimensions shown for wood block are nominal.
3. Notched face of block faces steel post.
4. 6'-0" length posts to be used for typical roadway installation. See Revised Standard Plan RSP A77N3.
5. See Revised Standard Plan RSP A77L3 for use of 6" x 8" and 8" x 8" notched wood blocks.
6. This post and 8" x 12" block combination to be used for line post sections of MGS on narrow roadways and where strengthened line post sections of MGS are warranted to shield fixed objects.

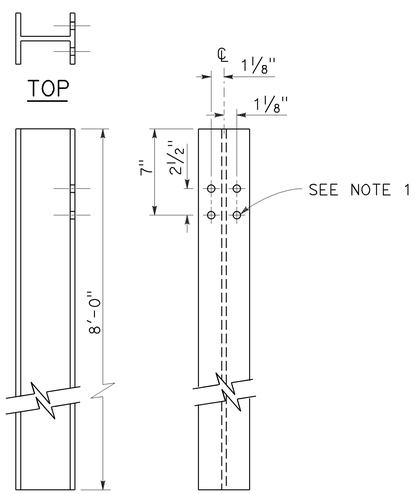

SIDE FRONT

W6 x 15
STEEL POST
See Note 6

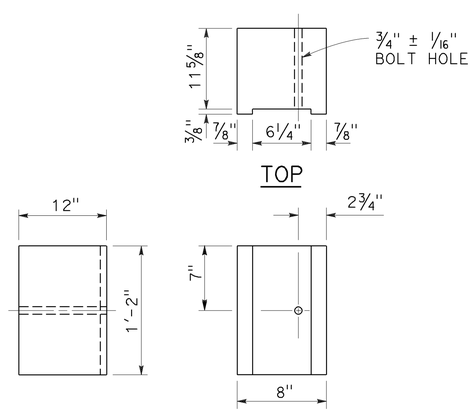

SIDE FRONT

8" x 12"
NOTCHED WOOD BLOCK
See Notes 2 and 3

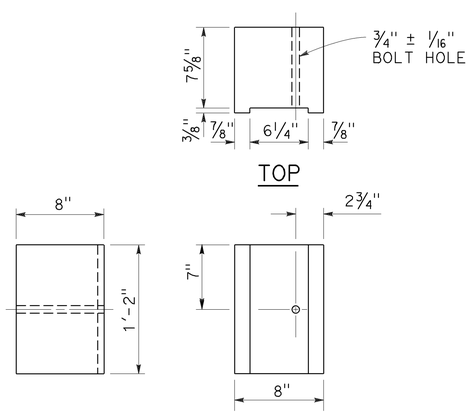

SIDE FRONT

8" x 8"
NOTCHED WOOD BLOCK
Only for use with metal beam guard railing. See Note 5

STATE OF CALIFORNIA
DEPARTMENT OF TRANSPORTATION

MIDWEST GUARDRAIL SYSTEM STEEL POST AND NOTCHED WOOD BLOCK DETAILS

NO SCALE

RSP A77N2 DATED NOVEMBER 15, 2013 SUPERSEDES RSP A77N2
DATED JULY 19, 2013 THAT SUPPLEMENTS THE STANDARD PLANS BOOK DATED 2010.

REVISED STANDARD PLAN RSP A77N2

10-29-13

Dist	COUNTY	ROUTE	POST MILES TOTAL PROJECT	SHEET No.	TOTAL SHEETS
11	SD	8,54,67,94, 125, etc.	Var	188	231

Randell D. Hiatt
REGISTERED CIVIL ENGINEER

November 15, 2013
PLANS APPROVAL DATE

REGISTERED PROFESSIONAL ENGINEER
Randell D. Hiatt
No. C50200
Exp. 6-30-15
CIVIL
STATE OF CALIFORNIA

THE STATE OF CALIFORNIA OR ITS OFFICERS OR AGENTS SHALL NOT BE RESPONSIBLE FOR THE ACCURACY OR COMPLETENESS OF SCANNED COPIES OF THIS PLAN SHEET.

TO ACCOMPANY PLANS DATED 01-11-16

2010 REVISED STANDARD PLAN RSP A77N3

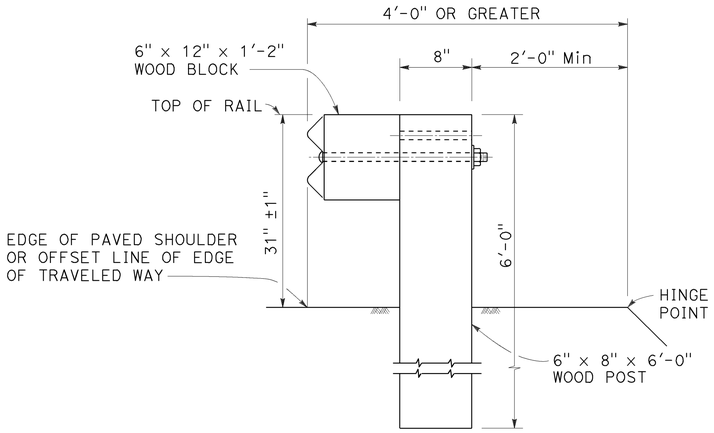

DETAIL A

TYPICAL ROADWAY INSTALLATION

See Note 1

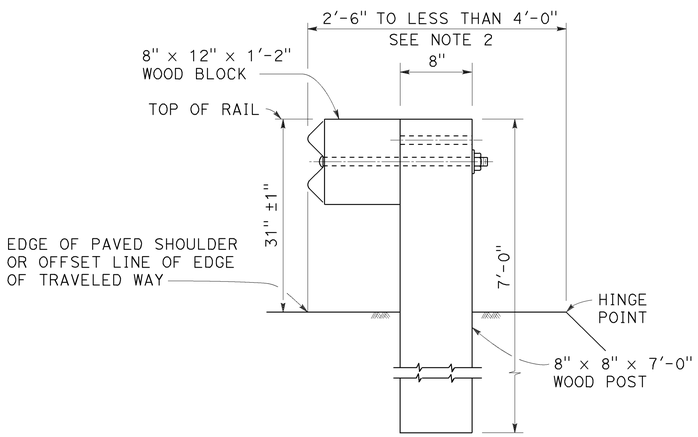

DETAIL B

NARROW ROADWAY INSTALLATION

See Note 1

POST EMBEDMENT

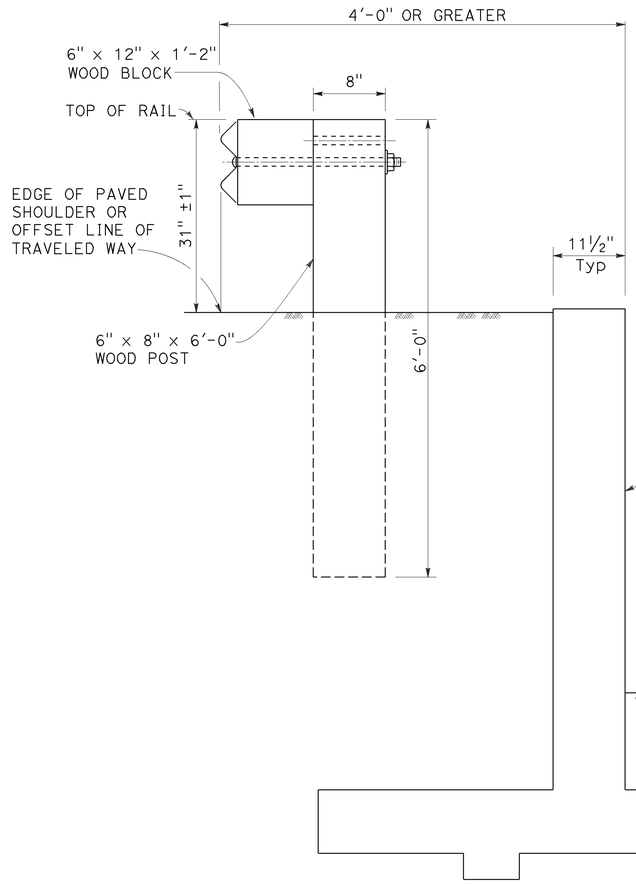

DETAIL C

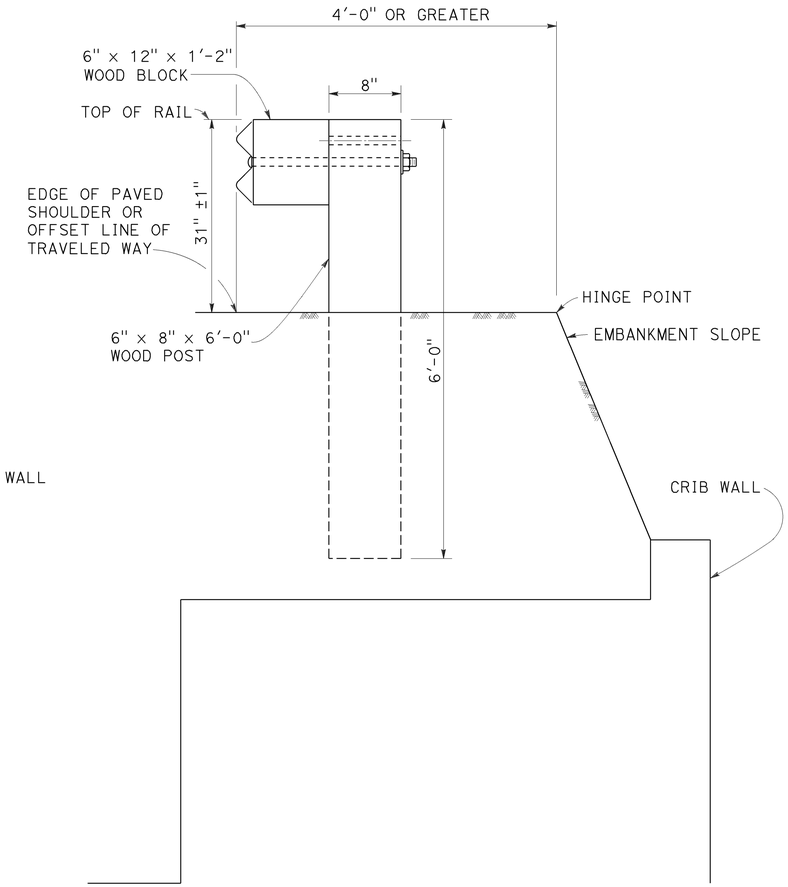

DETAIL D

INSTALLATION AT EARTH RETAINING WALLS

NOTES:

1. These installation details also applicable to steel line post installations. For Detail A, C, and D, where steel line post installations are constructed, W6 x 8.5 or W6 x 9 steel post, 6'-0" in length, with 6" x 12" x 1'-2" notched wood blocks or notched recycled plastic blocks are to be used in place of the size of wood post and wood block shown. For Detail B, where steel line post installations are constructed, W6 x 15 steel post, 8'-0" in length, with 8" x 12" x 1'-2" notched wood blocks or notched recycled plastic blocks are to be used in place of the size of wood post and wood block shown. For additional installation details, see Revised Standard Plan RSP A77L1 and RSP A77L2.
2. Where the distance between the face of the rail and the hinge point is less than 2'-6", see the Project Plans for special details.
3. For dike positioning with MGS installations, see Revised Standard Plan RSP A77N4.

STATE OF CALIFORNIA
DEPARTMENT OF TRANSPORTATION

MIDWEST GUARDRAIL SYSTEM TYPICAL LINE POST EMBEDMENT AND HINGE POINT OFFSET DETAILS

NO SCALE

RSP A77N3 DATED NOVEMBER 15, 2013 SUPERSEDES RSP A77N3
DATED JULY 19, 2013 THAT SUPPLEMENTS THE STANDARD PLANS BOOK DATED 2010.

REVISED STANDARD PLAN RSP A77N3

10-29-13

Dist	COUNTY	ROUTE	POST MILES TOTAL PROJECT	SHEET No.	TOTAL SHEETS
11	SD	8,54,67,94, 125, etc.	Var	189	231

Randell D. Hiatt
REGISTERED CIVIL ENGINEER

July 19, 2013
PLANS APPROVAL DATE

REGISTERED PROFESSIONAL ENGINEER
Randell D. Hiatt
No. C50200
Exp. 6-30-15
CIVIL
STATE OF CALIFORNIA

THE STATE OF CALIFORNIA OR ITS OFFICERS OR AGENTS SHALL NOT BE RESPONSIBLE FOR THE ACCURACY OR COMPLETENESS OF SCANNED COPIES OF THIS PLAN SHEET.

TO ACCOMPANY PLANS DATED 01-11-16

NOTES:

1. When necessary to place dike more than 7" in front of face of MGS, only Type C dike may be used. For dike details, see Revised Standard Plan RSP A87B.
2. For standard railing post embedment, see Revised Standard Plan RSP A77N3.
3. MGS delineation to be used where shown on the Project Plans.
4. When dike or curb is placed under MGS, the maximum height of the dike or curb shall be 6". Mountable dike should not be used. For dike and curb details, see Revised Standard Plans RSP A87A and RSP A87B.
5. For details of typical distance between the face of rail and hinge point, see Revised Standard Plan RSP A77N3.
6. For steel line posts, use 1/4 - 20 self-tapping screws in 0.22" diameter holes or 1/4" bolts in 9/32" diameter holes.

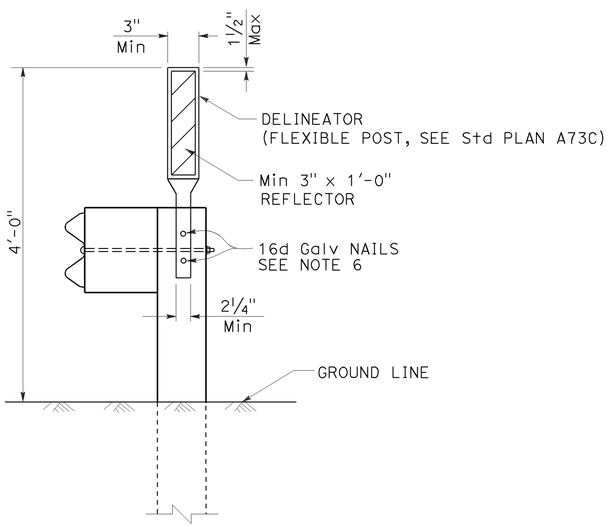

MGS DELINEATION

See Note 3

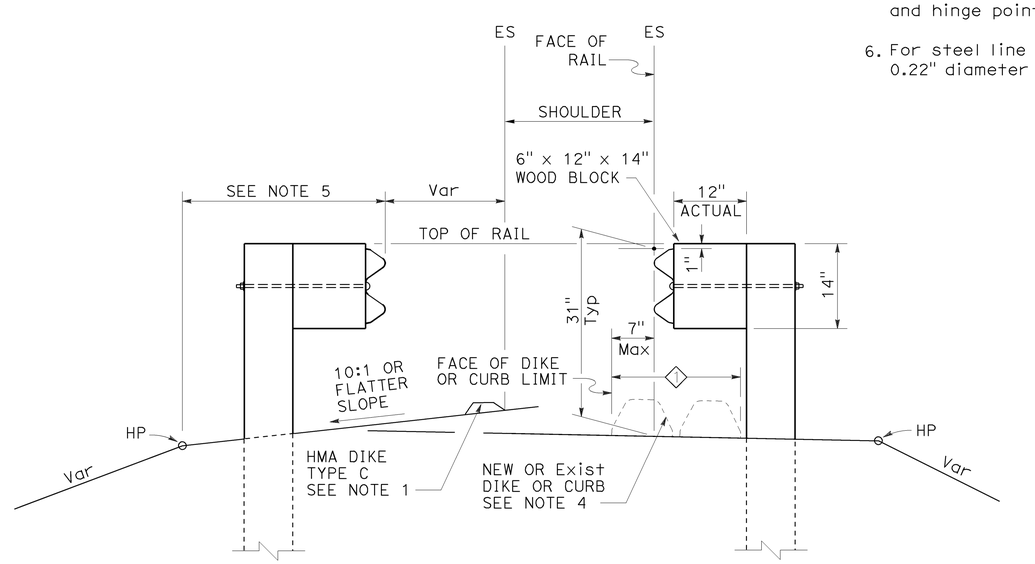

DIKE POSITIONING

See Note 1

1 PERMISSIBLE DIKE OR CURB PLACEMENT AREA

STATE OF CALIFORNIA
DEPARTMENT OF TRANSPORTATION

MIDWEST GUARDRAIL SYSTEM TYPICAL RAILING DELINEATION AND DIKE POSITIONING DETAILS

NO SCALE

RSP A77N4 DATED JULY 19, 2013 SUPPLEMENTS THE STANDARD PLANS BOOK DATED 2010.

REVISED STANDARD PLAN RSP A77N4

2010 REVISED STANDARD PLAN RSP A77N4

7-10-13

Dist	COUNTY	ROUTE	POST MILES TOTAL PROJECT	SHEET No.	TOTAL SHEETS
11	SD	8,54,67,94, 125, etc.	Var	190	231

Randell D. Hiatt
REGISTERED CIVIL ENGINEER

July 19, 2013
PLANS APPROVAL DATE

REGISTERED PROFESSIONAL ENGINEER
Randell D. Hiatt
No. C50200
Exp. 6-30-15
CIVIL
STATE OF CALIFORNIA

THE STATE OF CALIFORNIA OR ITS OFFICERS OR AGENTS SHALL NOT BE RESPONSIBLE FOR THE ACCURACY OR COMPLETENESS OF SCANNED COPIES OF THIS PLAN SHEET.

TO ACCOMPANY PLANS DATED 01-11-16

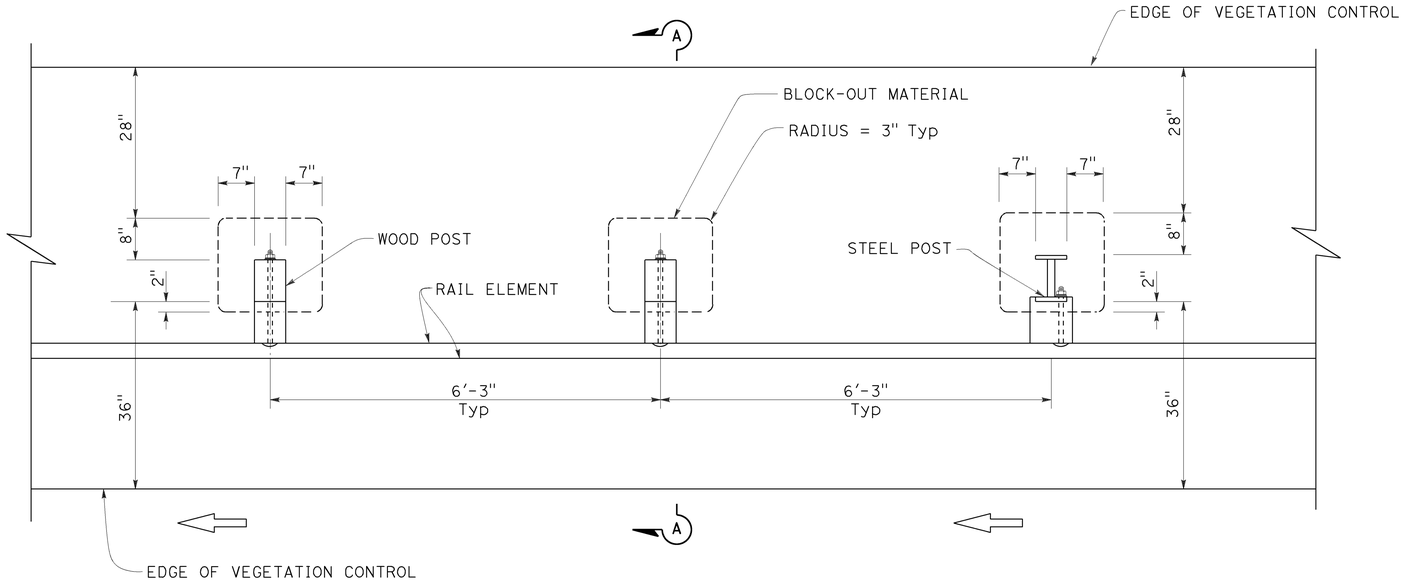

PLAN

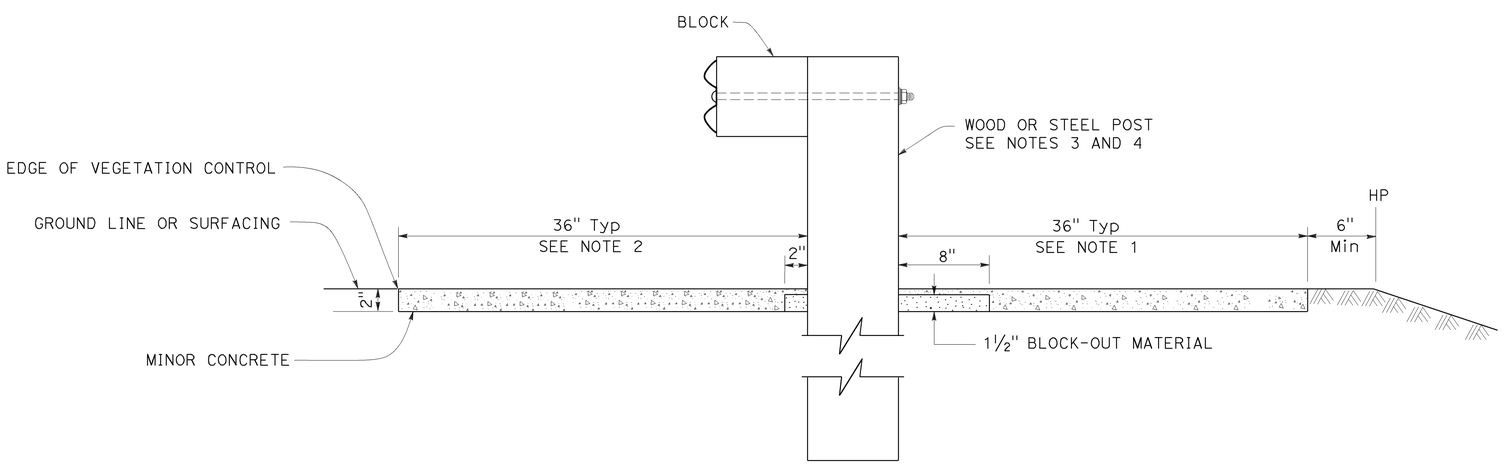

SECTION A-A

NOTES:

1. Where the distance between back of post and hinge point is less than 42", construct vegetation control to 6" from hinge point while maintaining the 8" block-out at back of post. If the 8" block-out at back of post can not be maintained, construct vegetation control flush with the back edge of post.
2. Where dike is constructed under railing, construct vegetation control to back edge of dike. Where paved shoulder is constructed within 36" in front of the post, construct vegetation control to the edge of paved shoulder.
3. For wood post sizes, see Revised Standard Plan RSP A77N1.
4. For steel post sizes, see Revised Standard Plan RSP A77N2.
5. For details not shown, see Revised Standard Plans RSP A77L1 and RSP A77L2.

STATE OF CALIFORNIA
DEPARTMENT OF TRANSPORTATION

MIDWEST GUARDRAIL SYSTEM TYPICAL VEGETATION CONTROL STANDARD RAILING SECTION

NO SCALE

RSP A77N5 DATED JULY 19, 2013 SUPPLEMENTS THE STANDARD PLANS BOOK DATED 2010.

REVISED STANDARD PLAN RSP A77N5

2010 REVISED STANDARD PLAN RSP A77N5

7-3-13

Dist	COUNTY	ROUTE	POST MILES TOTAL PROJECT	SHEET No.	TOTAL SHEETS
11	SD	8,54,67,94, 125, etc.	Var	191	231

Randell D. Hiatt
REGISTERED CIVIL ENGINEER

July 19, 2013
PLANS APPROVAL DATE

REGISTERED PROFESSIONAL ENGINEER
Randell D. Hiatt
No. C50200
Exp. 6-30-15
CIVIL
STATE OF CALIFORNIA

THE STATE OF CALIFORNIA OR ITS OFFICERS OR AGENTS SHALL NOT BE RESPONSIBLE FOR THE ACCURACY OR COMPLETENESS OF SCANNED COPIES OF THIS PLAN SHEET.

TO ACCOMPANY PLANS DATED 01-11-16

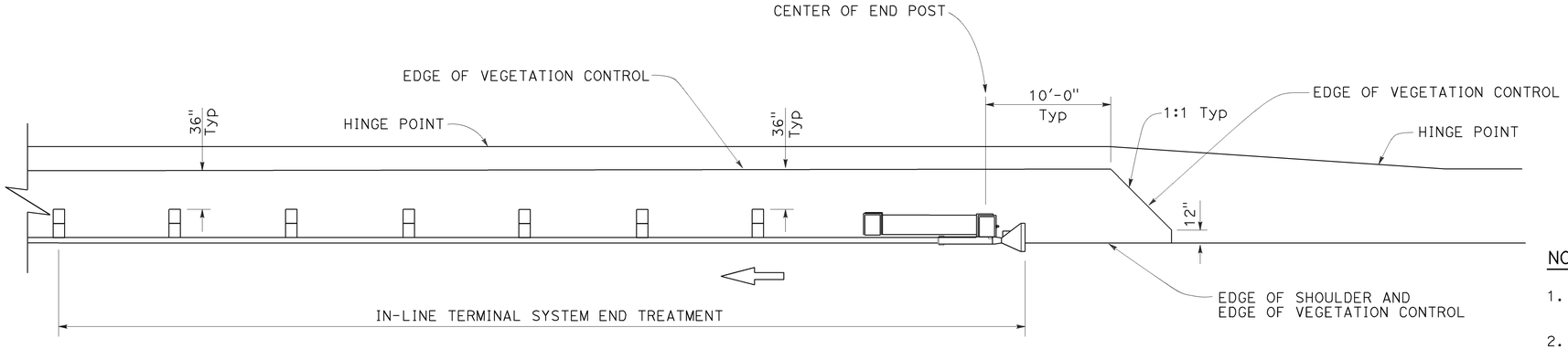

PLAN

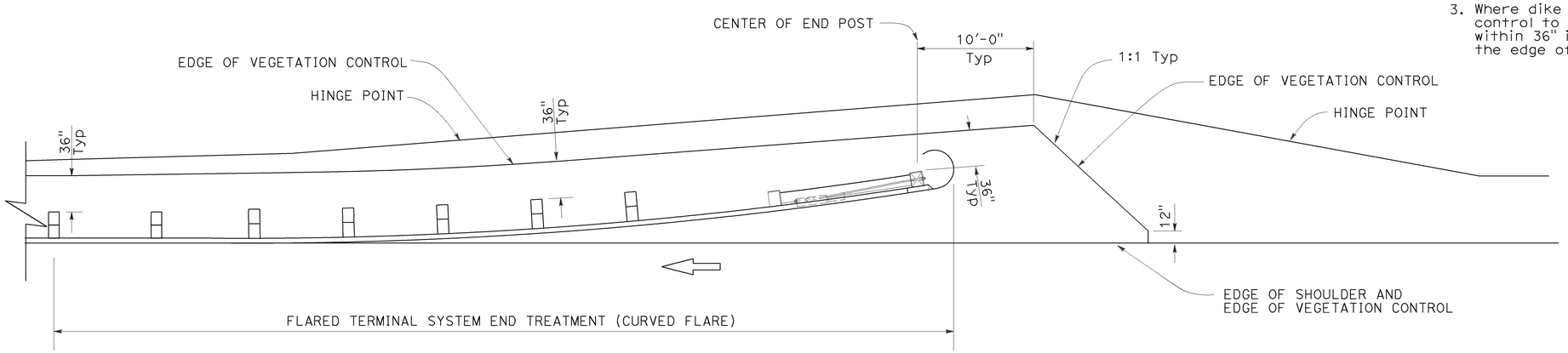

PLAN

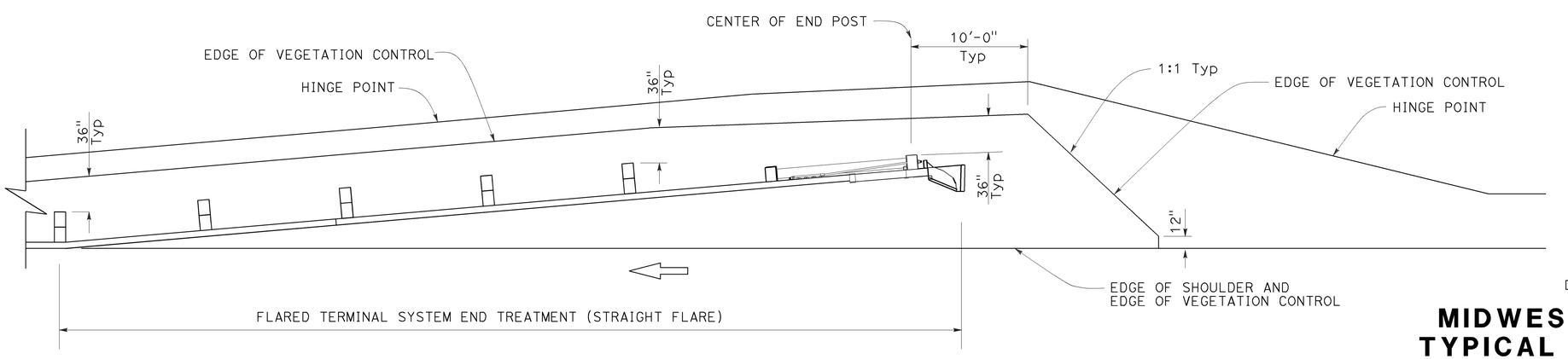

PLAN

NOTES:

1. See Revised Standard Plan RSP A77N5 for additional vegetation control details.
2. Where the distance between back of post and hinge point is less than 42", construct vegetation control to 6" from hinge point while maintaining the 8" block-out at back of post. If the 8" block-out at back of post can not be maintained, construct vegetation control flush with the back edge of post.
3. Where dike is constructed under railing, construct vegetation control to back edge of dike. Where paved shoulder is constructed within 36" in front of the post, construct vegetation control to the edge of paved shoulder.

STATE OF CALIFORNIA
DEPARTMENT OF TRANSPORTATION

MIDWEST GUARDRAIL SYSTEM TYPICAL VEGETATION CONTROL FOR TERMINAL SYSTEM END TREATMENTS

NO SCALE

RSP A77N6 DATED JULY 19, 2013 SUPPLEMENTS THE STANDARD PLANS BOOK DATED 2010.

REVISED STANDARD PLAN RSP A77N6

2010 REVISED STANDARD PLAN RSP A77N6

6-12-13

Dist	COUNTY	ROUTE	POST MILES TOTAL PROJECT	SHEET No.	TOTAL SHEETS
11	SD	8,54,67,94, 125, etc.	Var	192	231

Randell D. Hiatt
REGISTERED CIVIL ENGINEER

August 14, 2015
PLANS APPROVAL DATE

REGISTERED PROFESSIONAL ENGINEER
Randell D. Hiatt
No. C50200
Exp. 6-30-17
CIVIL
STATE OF CALIFORNIA

THE STATE OF CALIFORNIA OR ITS OFFICERS OR AGENTS SHALL NOT BE RESPONSIBLE FOR THE ACCURACY OR COMPLETENESS OF SCANNED COPIES OF THIS PLAN SHEET.

TO ACCOMPANY PLANS DATED 01-11-16

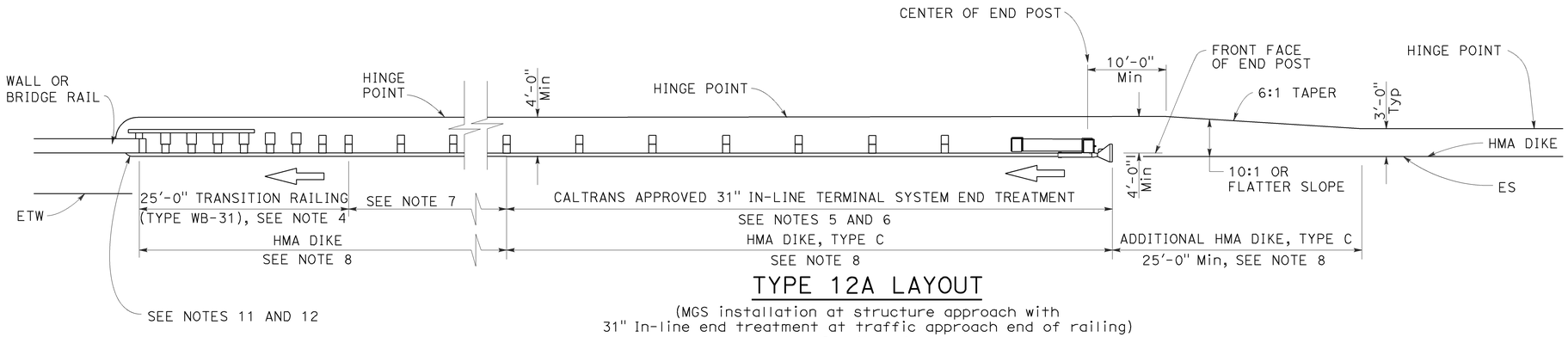

TYPE 12A LAYOUT

(MGS installation at structure approach with
31" In-line end treatment at traffic approach end of railing)
See Note 9

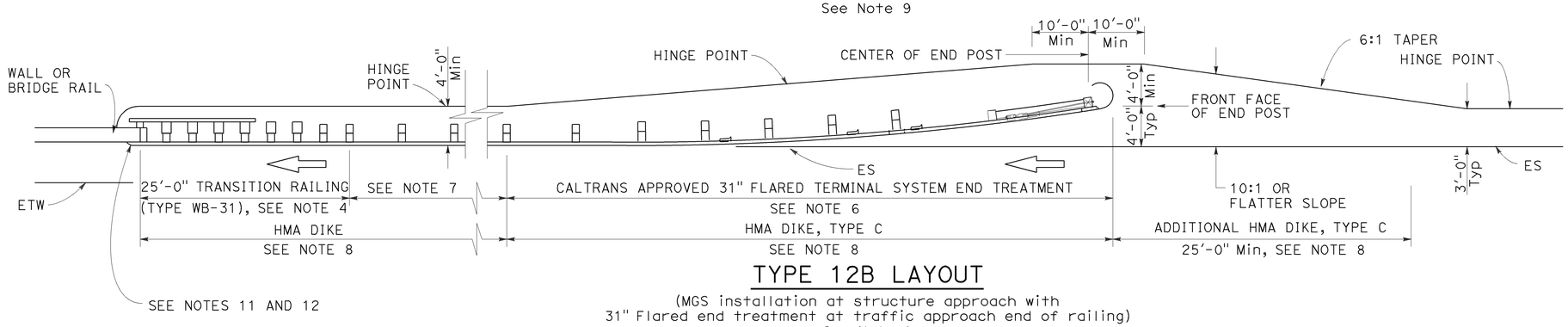

TYPE 12B LAYOUT

(MGS installation at structure approach with
31" Flared end treatment at traffic approach end of railing)
See Note 9

NOTES:

1. Line post, blocks and hardware to be used are shown on Revised Standard Plans RSP A77L1, RSP A77L2, RSP A77M1, RSP A77N1 and RSP A77N2.
2. MGS post spacing to be 6'-3" center to center, except as otherwise noted.
3. Except as noted, line posts are 6" x 8" x 6'-0" wood with 6" x 12" x 1'-2" wood blocks. W6 x 8.5 or W6 x 9 steel posts, 6'-0" in length, with 6" x 12" x 1'-2" notched wood blocks or plastic blocks may be used for 6" x 8" x 6'-0" wood posts with 6" x 12" x 1'-2" wood blocks where applicable and when specified.
4. For Transition Railing (Type WB-31) details for Types 12A and 12B Layouts, see Revised Standard Plan RSP A77U4.
5. 31" in-line terminal system end treatments are used where site conditions will not accommodate a 31" flared end treatment.
6. The type of 31" terminal system end treatment to be used will be shown on the Project Plans.
7. Dependent on site conditions (embankment height, side slopes, or other fixed objects), it may be advisable to construct additional guard railing (a length equal to multiples of 12'-6" with 6'-3" post spacing) between the transition railing and end treatment. A 12.5 degree angle of departure can be drawn on the Project Plans from the edge of traveled way through the outer most point of the fixed object to determine the additional length of railing needed.
8. Where placement of dike is required with guard railing installations, see Revised Standard Plan RSP A77N4 for dike positioning details.
9. Type 12A or Type 12B Layouts are typically used:
   a. To the right of approaching traffic, at the end of a structure, on two-lane conventional highway where the roadbed width across the structure is less than 40 feet.
   b. To the left of approaching traffic, at the end of a structure, on two-lane conventional highway where the roadbed width across the structure is less than 40 feet.
   c. To the right of approaching traffic at the end of each structure on multilane freeways or expressways with separate adjacent or parallel bridges.
   d. To the right of approaching traffic at the end of the structure on multilane freeways or expressways with decked median on the bridge.
10. See Revised Standard Plan RSP A77Q3 for typical layout used left of approaching traffic at the ends of each structure on multilane freeways or expressways with separate adjacent or parallel bridges.
11. For additional details of typical connections to bridge rail, see Connection Detail AA on Revised Standard Plans RSP A77U1 and RSP A77U2 and Connection Detail FF on Revised Standard Plans RSP A77V1 and RSP A77V2.
12. For additional details of a typical connection to walls or abutments, see Revised Standard Plan RSP A77U3.

STATE OF CALIFORNIA
DEPARTMENT OF TRANSPORTATION

MIDWEST GUARDRAIL SYSTEM TYPICAL LAYOUTS FOR STRUCTURE APPROACH

NO SCALE

RSP A77Q1 DATED AUGUST 14, 2015 SUPERSEDES RSP A77Q1 DATED JULY 19, 2013 THAT SUPPLEMENTS THE STANDARD PLANS BOOK DATED 2010.

REVISED STANDARD PLAN RSP A77Q1

2010 REVISED STANDARD PLAN RSP A77Q1

Dist	COUNTY	ROUTE	POST MILES TOTAL PROJECT	SHEET No.	TOTAL SHEETS
11	SD	8,54,67,94, 125, etc.	Var	193	231

Randell D. Hiatt
REGISTERED CIVIL ENGINEER

August 14, 2015
PLANS APPROVAL DATE

REGISTERED PROFESSIONAL ENGINEER
Randell D. Hiatt
No. C50200
Exp. 6-30-17
CIVIL
STATE OF CALIFORNIA

THE STATE OF CALIFORNIA OR ITS OFFICERS OR AGENTS SHALL NOT BE RESPONSIBLE FOR THE ACCURACY OR COMPLETENESS OF SCANNED COPIES OF THIS PLAN SHEET.

TO ACCOMPANY PLANS DATED 01-11-16

2010 REVISED STANDARD PLAN RSP A77Q2

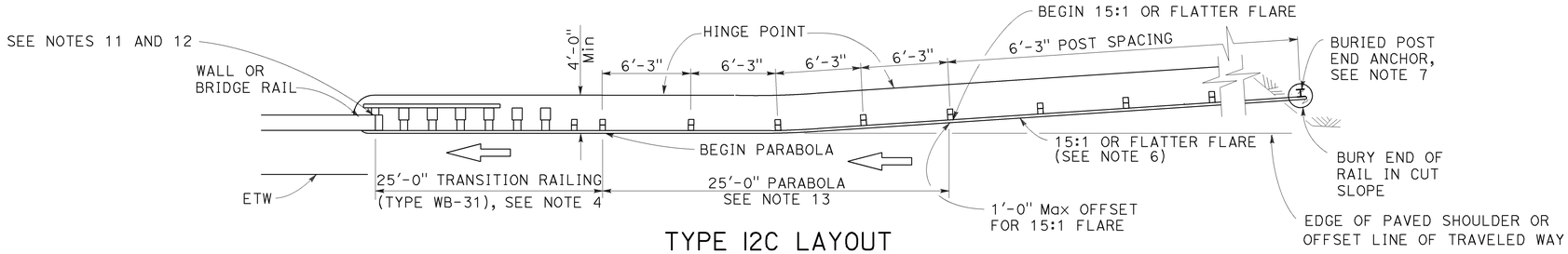

TYPE 12C LAYOUT

(MGS installation at structure approach with a
Buried end anchor treatment at traffic approach end of railing)
See Notes 8 and 9

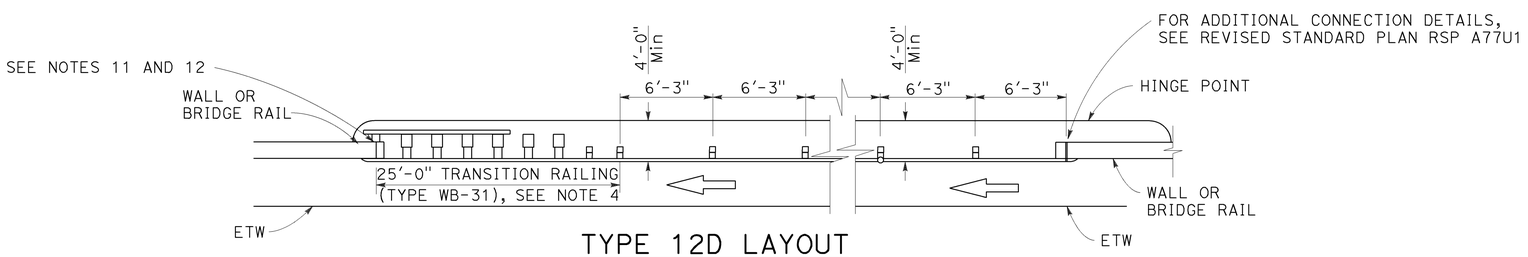

TYPE 12D LAYOUT

(Continuous MGS installation between structures)
See Notes 5 and 9

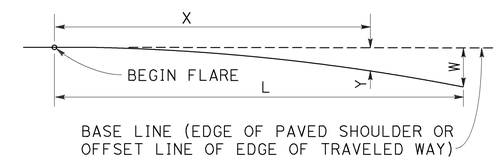

$$Y = \frac{WX^2}{L^2}$$

Y = OFFSET FROM BASE LINE
W = MAXIMUM OFFSET
X = DISTANCE ALONG BASE LINE
L = LENGTH OF FLARE

PARABOLIC FLARE OFFSETS

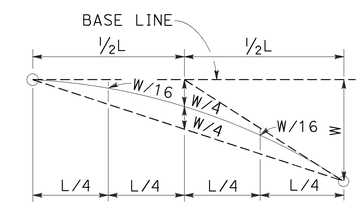

TYPICAL PARABOLIC LAYOUT

NOTES:

1. Line post, blocks and hardware to be used are shown on Revised Standard Plans RSP A77L1, RSP A77L2, RSP A77M1, RSP A77N1 and RSP A77N2.
2. MGS post spacing to be 6'-3" center to center, except as otherwise noted.
3. Except as noted, line posts are 6" x 8" x 6'-0" m wood with 6" x 12" x 1'-2" wood blocks. W6 x 8.5 or W6 x 9 steel posts, 6'-0" in length, with 6" x 12" x 1'-2" notched wood blocks or plastic blocks may be used for 6" x 8" x 6'-0" wood posts with 6" x 12" x 1'-2" wood blocks where applicable and when specified.
4. For Transition Railing (Type WB-31) details for Types 12C and 12D Layouts, see Revised Standard Plan RSP A77U4.
5. Type 12D layout is typically used where continous MGS is recommended between structures.
6. The 15:1 or flatter flare for Type 12C Layout is based on the edge of the paved shoulder or offset line of edge of the traveled way. The length of MGS with the 15:1 or flatter flare is based on site conditions and should be a length equal to multiples of 12'-6".
7. For details of the buried post end anchor used with Type 12C Layout, see Revised Standard Plan RSP A77T2.
8. Where placement of dike is required with MGS installations, see Revised Standard Plan RSP A77N4 for dike positioning details.
9. Type 12C Layout is typically used:
   a. To the right of approaching traffic, at the end of the structure, on two-lane conventional highway where the roadbed width across the structure is less than 40 feet.
   b. To the left of approaching traffic, at each of a structure, on two-lane conventional highway where the roadbed width across the structure is less than 40 feet.
   c. To the right of approaching traffic at the end of each structure on multilane freeways or expressways with separate adjacent or parallel bridges.
   d. To the right of approaching traffic at the end of the structure on multilane freeways or expressways with decked median on the bridge.
10. See Revised Standard Plan RSP A77Q3 for typical layout used left of approaching traffic at the ends of each structure on multilane freeways or expressways with separate adjacent or parallel bridges.
11. For additional details of typical connections to bridge rail, see Connection Detail AA on Revised Standard Plans RSP A77U1 and RSP A77U2 and Connection Detail FF on Revised Standard Plans RSP A77V1 and RSP A77V2.
12. For additional details of a typical connection to walls or abutments, see Revised Standard Plan RSP A77U3.
13. For typical flare offsets for 25'-0" length parabola with maximum offset of 1'-0", see Revised Standard Plan RSP A77P1.

STATE OF CALIFORNIA
DEPARTMENT OF TRANSPORTATION

MIDWEST GUARDRAIL SYSTEM TYPICAL LAYOUTS FOR STRUCTURE APPROACH AND BETWEEN STRUCTURES

NO SCALE

RSP A77Q2 DATED AUGUST 14, 2015 SUPERSEDES RSP A77Q2 DATED JULY 19, 2013 THAT SUPPLEMENTS THE STANDARD PLANS BOOK DATED 2010.

REVISED STANDARD PLAN RSP A77Q2

8-12-15

Dist	COUNTY	ROUTE	POST MILES TOTAL PROJECT	SHEET No.	TOTAL SHEETS
11	SD	8,54,67,94, 125, etc.	Var	194	231

Randell D. Hiatt
REGISTERED CIVIL ENGINEER

August 14, 2015
PLANS APPROVAL DATE

REGISTERED PROFESSIONAL ENGINEER
Randell D. Hiatt
No. C50200
Exp. 6-30-17
CIVIL
STATE OF CALIFORNIA

THE STATE OF CALIFORNIA OR ITS OFFICERS OR AGENTS SHALL NOT BE RESPONSIBLE FOR THE ACCURACY OR COMPLETENESS OF SCANNED COPIES OF THIS PLAN SHEET.

TO ACCOMPANY PLANS DATED 01-11-16

2010 REVISED STANDARD PLAN RSP A77Q3

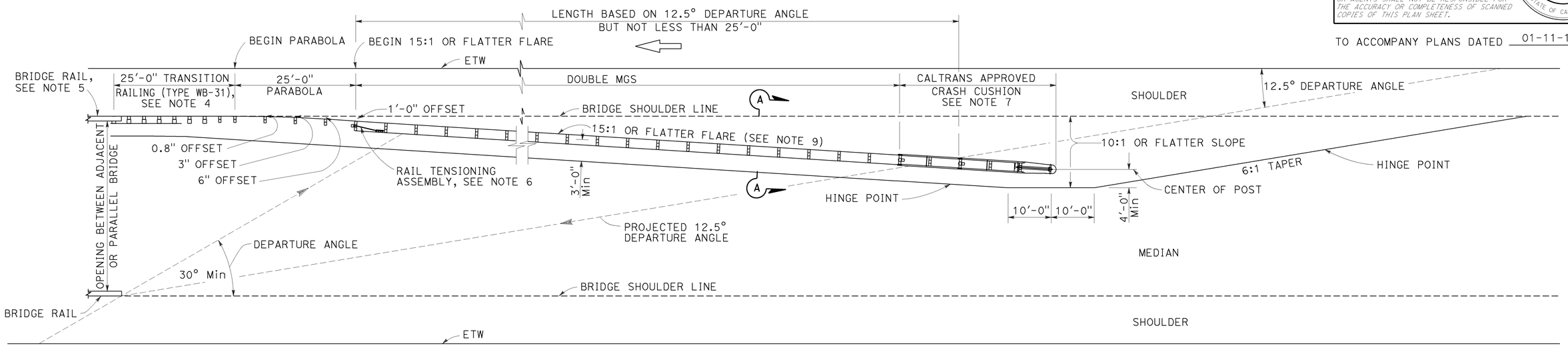

TYPE 12E LAYOUT

See Note 9

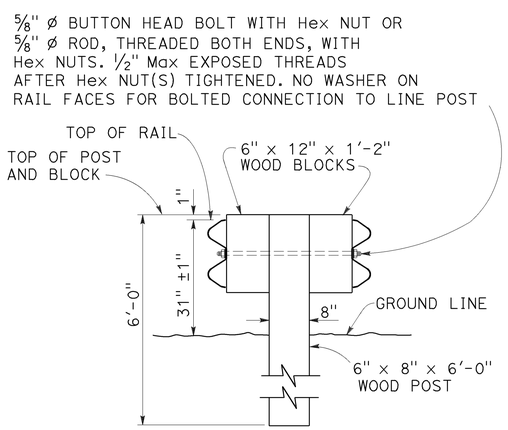

SECTION A-A
TYPICAL DOUBLE MIDWEST GUARDRAIL SYSTEM

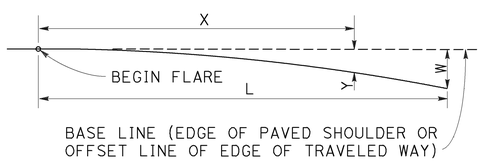

$$Y = \frac{WX^2}{L^2}$$

Y = OFFSET FROM BASE LINE
W = MAXIMUM OFFSET
X = DISTANCE ALONG BASE LINE
L = LENGTH OF FLARE

PARABOLIC FLARE OFFSETS

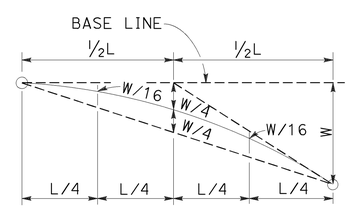

TYPICAL PARABOLIC LAYOUT

NOTES:

1. Line post, blocks and hardware to be used are shown on Revised Standard Plans RSP A77L1, RSP A77L2, RSP A77M1, RSP A77N1 and RSP A77N2.
2. MGS post spacing to be 6'-3" center to center, except as otherwise noted.
3. Except as noted, line posts are 6" x 8" x 6'-0" wood with 6" x 12" x 1'-2" wood blocks. W6 x 8.5 or W6 x 9 steel posts, 6'-0" in length, with 6" x 12" x 1'-2" notched wood blocks or notched recycled plastic blocks may be used for 6" x 8" x 6'-0" wood line posts with 6" x 12" x 1'-2" wood blocks where applicable and when specified.
4. For Transition Railing (Type WB-31) details, see Revised Standard Plan RSP A77U4.
5. For additional details of a typical connection to bridge rail, see Connection Detail AA on Revised Standard Plan RSP A77U1.
6. For Rail Tensioning Assembly details, see Revised Standard Plan RSP A77S2.
7. The type of Crash Cushion to be used will be shown on the Project Plans.
8. Type 12E Layout is typically used left of approaching traffic at the end of each structure on multilane freeways or expressways where a median type barrier is not constructed between separated roadbeds.
9. The 15:1 or flatter flare is measured off of the edge of traveled way.

STATE OF CALIFORNIA
DEPARTMENT OF TRANSPORTATION

MIDWEST GUARDRAIL SYSTEM TYPICAL LAYOUTS FOR STRUCTURE APPROACH

NO SCALE

RSP A77Q3 DATED AUGUST 14, 2015 SUPERSEDES RSP A77Q3 DATED JULY 19, 2013 THAT SUPPLEMENTS THE STANDARD PLANS BOOK DATED 2010.

REVISED STANDARD PLAN RSP A77Q3

7-8-15

Dist	COUNTY	ROUTE	POST MILES TOTAL PROJECT	SHEET No.	TOTAL SHEETS
11	SD	8,54,67,94, 125, etc.	Var	195	231

Randell D. Hiatt
REGISTERED CIVIL ENGINEER

July 19, 2013
PLANS APPROVAL DATE

REGISTERED PROFESSIONAL ENGINEER
Randell D. Hiatt
No. C50200
Exp. 6-30-15
CIVIL
STATE OF CALIFORNIA

THE STATE OF CALIFORNIA OR ITS OFFICERS OR AGENTS SHALL NOT BE RESPONSIBLE FOR THE ACCURACY OR COMPLETENESS OF SCANNED COPIES OF THIS PLAN SHEET.

TO ACCOMPANY PLANS DATED 01-11-16

NOTES:

1. Line post, blocks and hardware to be used are shown on Revised Standard Plans RSP A77L1, RSP A77L2, RSP A77M1, RSP A77N1 and RSP A77N2.
2. MGS post spacing to be 6'-3" center to center, except as otherwise noted.
3. Except as noted, line posts are 6" x 8" x 6'-0" wood with 6" x 12" x 1'-2" wood blocks. W6 x 8.5 or W6 x 9 steel posts, 6'-0" in length, with 6" x 12" x 1'-2" notched wood blocks or notched recycled plastic blocks may be used for 6" x 8" x 6'-0" wood line posts with 6" x 12" x 1'-2" wood blocks where applicable and when specified.
4. A 4'-0" minimum clearance is required between the face of the railing and the face of a fixed object located directly behind MGS section with post spacing of 6'-3". Construct MGS as shown in the detail "Strengthened Midwest Guardrail System Sections for Fixed Object" on this plan, where the clearance between the face of the railing and the face of a fixed object is less than 4'-0", but not less than 3'-0". Where the clearance is less than 3'-0", a concrete wall or barrier should be constructed to shield the fixed object(s).
5. For End Anchor Assembly (Type SFT) details, see Standard Plan RSP A77S1.
6. Type of crash cushion to be used will be shown on the Project Plans.
7. Type 15A layout is typically used on multilane freeways or expressways to shield fixed objects in the area between separated one-way roadbeds.
8. For typical flare offsets for 25'-0" length parabola with maximum offset of 1'-0", see Revised Standard Plan RSP A77P1.
9. The 15:1 or flatter flare is measured off of the edge of the traveled way.
10. W6 x 15 steel post, 8'-0" in length, with 8" x 12" x 1'-2" notched wood block or notched recycled plastic blocks may be used in place of the 10" x 10" x 8'-0" wood post with 8" x 12" x 1'-2" wood block shown in the detail "Strengthened Midwest Guardrail System Sections for Fixed Object".

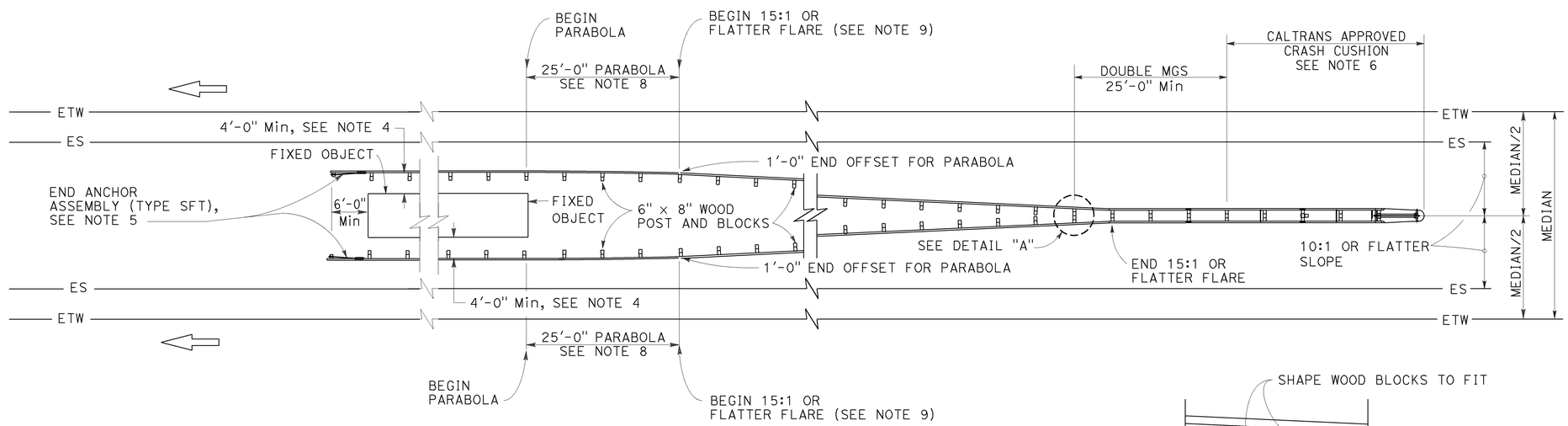

TYPE 15A LAYOUT

See Note 7

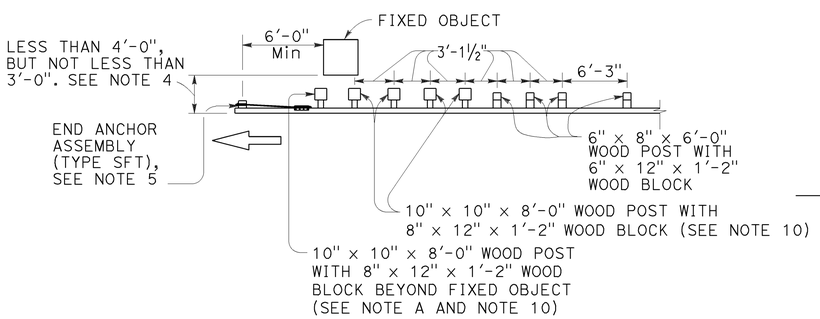

NOTE A: For a series of fixed objects (bridge columns, overhead sign supports, etc.) additional 10" x 10" x 8'-0" wood post with 8" x 12" x 1'-2" wood blocks at 3'-1½" center to center spacing are to be used between fixed objects.

STRENGTHENED MIDWEST GUARDRAIL SYSTEM SECTIONS FOR FIXED OBJECT

Use strengthened MGS sections with Type 15A layout where minimum clearance between the face of the MGS and the fixed object(s) is less than 4'-0", but not less than 3'-0". See Note 4.

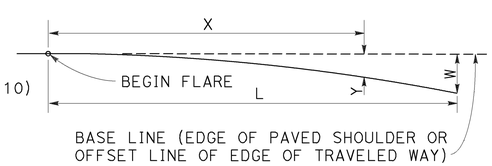

$$Y = \frac{WX^2}{L^2}$$

Y = OFFSET FROM BASE LINE
W = MAXIMUM OFFSET
X = DISTANCE ALONG BASE LINE
L = LENGTH OF FLARE

PARABOLIC FLARE OFFSETS

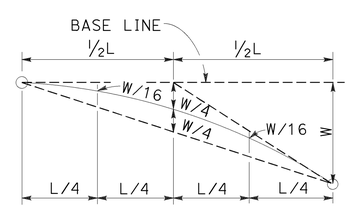

TYPICAL PARABOLIC LAYOUT

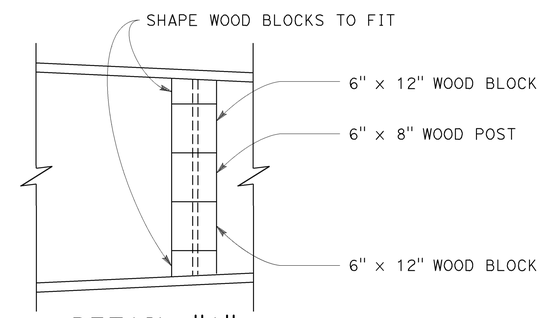

DETAIL "A"

STATE OF CALIFORNIA
DEPARTMENT OF TRANSPORTATION

MIDWEST GUARDRAIL SYSTEM TYPICAL LAYOUTS FOR FIXED OBJECTS BETWEEN SEPARATE ROADBEDS (ONE-WAY TRAFFIC)

NO SCALE

RSP A77R2 DATED JULY 19, 2013 SUPPLEMENTS THE STANDARD PLANS BOOK DATED 2010.

REVISED STANDARD PLAN RSP A77R2

2010 REVISED STANDARD PLAN RSP A77R2

6-20-13

Dist	COUNTY	ROUTE	POST MILES TOTAL PROJECT	SHEET No.	TOTAL SHEETS
11	SD	8,54,67,94, 125, etc.	Var	196	231

Randell D. Hiatt
REGISTERED CIVIL ENGINEER

November 15, 2013
PLANS APPROVAL DATE

REGISTERED PROFESSIONAL ENGINEER
Randell D. Hiatt
No. C50200
Exp. 6-30-15
CIVIL
STATE OF CALIFORNIA

THE STATE OF CALIFORNIA OR ITS OFFICERS OR AGENTS SHALL NOT BE RESPONSIBLE FOR THE ACCURACY OR COMPLETENESS OF SCANNED COPIES OF THIS PLAN SHEET.

TO ACCOMPANY PLANS DATED 01-11-16

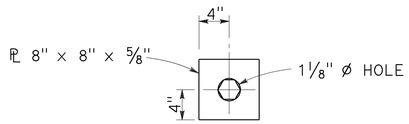

DETAIL "A"
CABLE CONNECTION
END PLATE

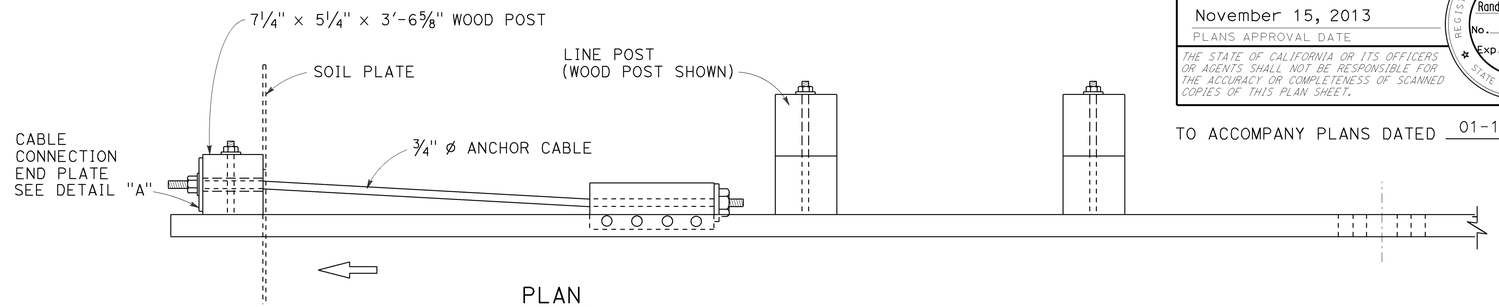

PLAN

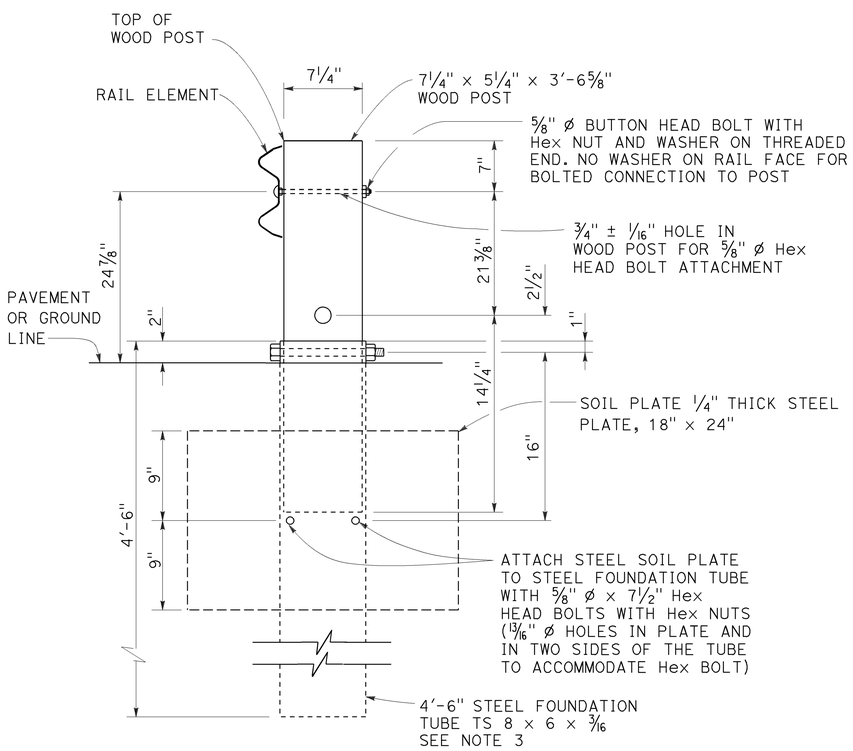

SECTION A-A

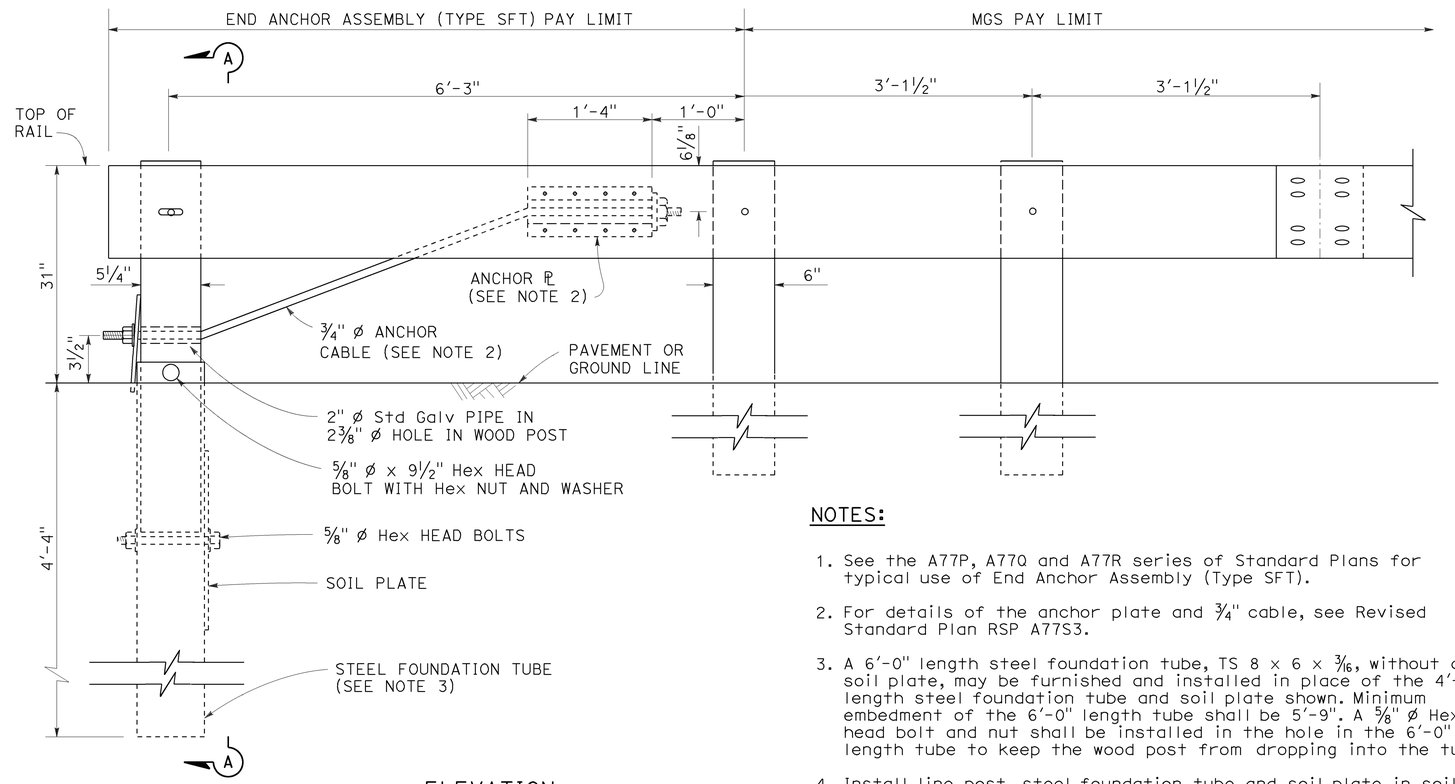

ELEVATION

END ANCHOR
ASSEMBLY (TYPE SFT)
See Note 1

NOTES:

1. See the A77P, A77Q and A77R series of Standard Plans for typical use of End Anchor Assembly (Type SFT).
2. For details of the anchor plate and 3/4" cable, see Revised Standard Plan RSP A77S3.
3. A 6'-0" length steel foundation tube, TS 8 × 6 × 3/16, without a soil plate, may be furnished and installed in place of the 4'-6" length steel foundation tube and soil plate shown. Minimum embedment of the 6'-0" length tube shall be 5'-9". A 5/8" ø Hex head bolt and nut shall be installed in the hole in the 6'-0" length tube to keep the wood post from dropping into the tube.
4. Install line post, steel foundation tube and soil plate in soil.

STATE OF CALIFORNIA
DEPARTMENT OF TRANSPORTATION

MIDWEST GUARDRAIL SYSTEM END ANCHOR ASSEMBLY (TYPE SFT)

NO SCALE

RSP A77S1 DATED NOVEMBER 15, 2013 SUPERSEDES RSP A77S1 DATED JULY 19, 2013 THAT SUPPLEMENTS THE STANDARD PLANS BOOK DATED 2010.

REVISED STANDARD PLAN RSP A77S1

2010 REVISED STANDARD PLAN RSP A77S1

10-4-13

Dist	COUNTY	ROUTE	POST MILES TOTAL PROJECT	SHEET No.	TOTAL SHEETS
11	SD	8,54,67,94, 125, etc.	Var	197	231

Randell D. Hiatt
REGISTERED CIVIL ENGINEER

July 19, 2013
PLANS APPROVAL DATE

REGISTERED PROFESSIONAL ENGINEER
Randell D. Hiatt
No. C50200
Exp. 6-30-15
CIVIL
STATE OF CALIFORNIA

THE STATE OF CALIFORNIA OR ITS OFFICERS OR AGENTS SHALL NOT BE RESPONSIBLE FOR THE ACCURACY OR COMPLETENESS OF SCANNED COPIES OF THIS PLAN SHEET.

TO ACCOMPANY PLANS DATED 01-11-16

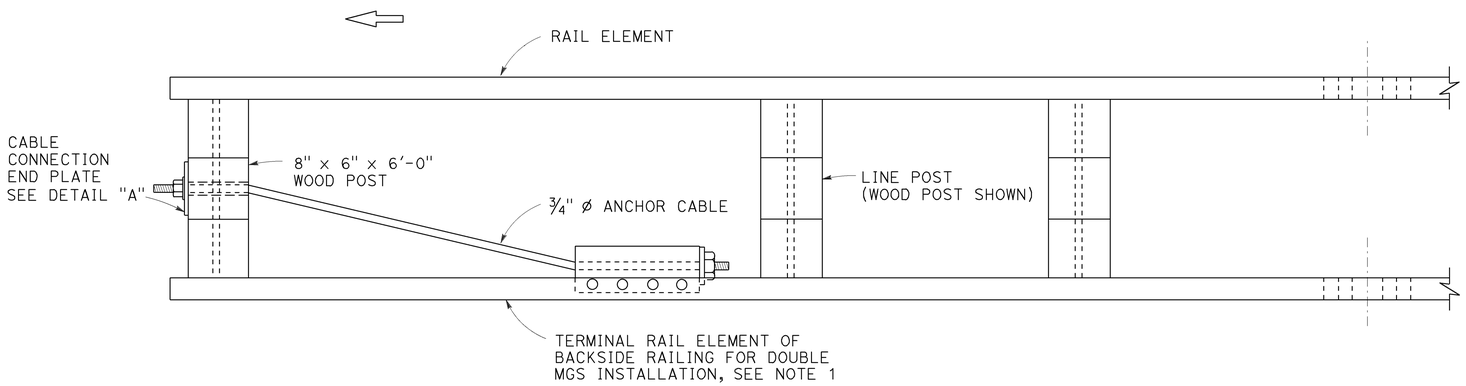

PLAN

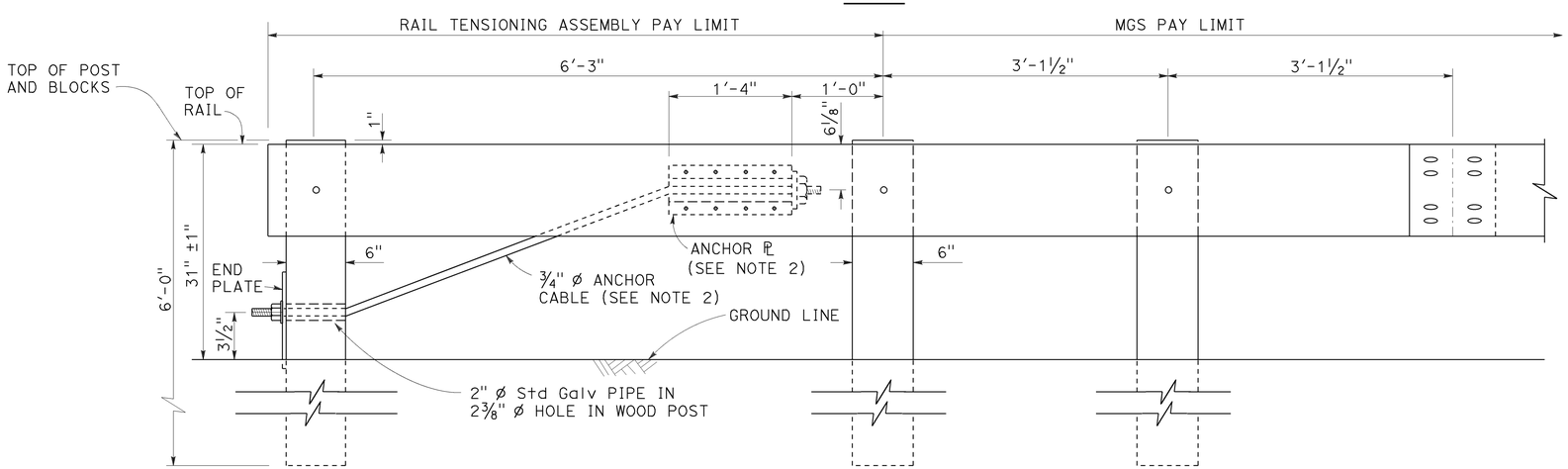

ELEVATION
RAIL TENSIONING ASSEMBLY
See Note 1

NOTES:

1. See Revised Standard Plans RSP A77Q3 and RSP A77R1 for typical use of rail tensioning assembly.
2. For details of the anchor plate and 3/4" cable, see Revised Standard Plan RSP A77S3.

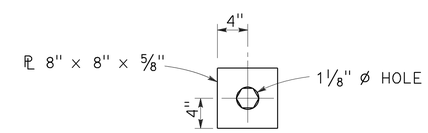

DETAIL "A"
CABLE CONNECTION END PLATE

STATE OF CALIFORNIA
DEPARTMENT OF TRANSPORTATION

MIDWEST GUARDRAIL SYSTEM RAIL TENSIONING ASSEMBLY

NO SCALE

RSP A77S2 DATED JULY 19, 2013 SUPPLEMENTS THE STANDARD PLANS BOOK DATED 2010.

REVISED STANDARD PLAN RSP A77S2

2010 REVISED STANDARD PLAN RSP A77S2

7-3-13

Dist	COUNTY	ROUTE	POST MILES TOTAL PROJECT	SHEET No.	TOTAL SHEETS
11	SD	8,54,67,94, 125, etc.	Var	198	231

Randell D. Hiatt
REGISTERED CIVIL ENGINEER

November 15, 2013
PLANS APPROVAL DATE

REGISTERED PROFESSIONAL ENGINEER
Randell D. Hiatt
No. C50200
Exp. 6-30-15
CIVIL
STATE OF CALIFORNIA

THE STATE OF CALIFORNIA OR ITS OFFICERS OR AGENTS SHALL NOT BE RESPONSIBLE FOR THE ACCURACY OR COMPLETENESS OF SCANNED COPIES OF THIS PLAN SHEET.

TO ACCOMPANY PLANS DATED 01-11-16

2010 REVISED STANDARD PLAN RSP A77S3

NOTE:

See Revised Standard Plans RSP A77S1, RSP A77S2 and RSP A77T1 for typical use of anchor cable and anchor plate.

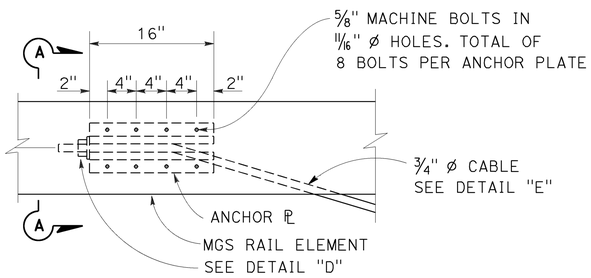

ANCHOR PLATE DETAIL
(MGS shown, TBB similar)

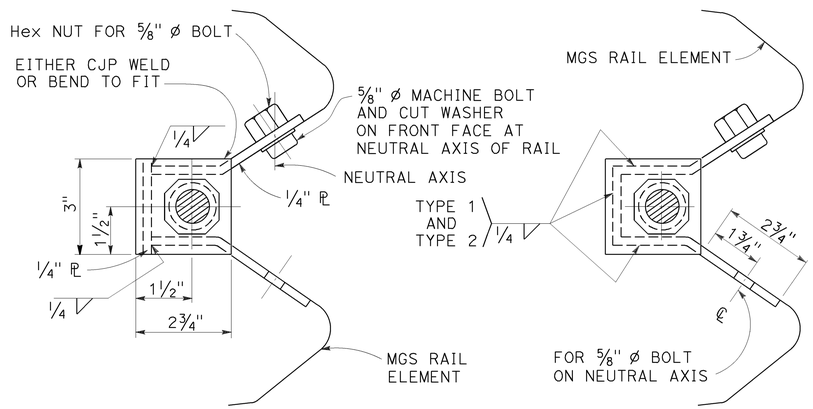

NOTE:
Dimensioning applies to both types.

SECTION A-A
(ALTERNATIVE TYPE 1)

SECTION A-A
(ALTERNATIVE TYPE 2)

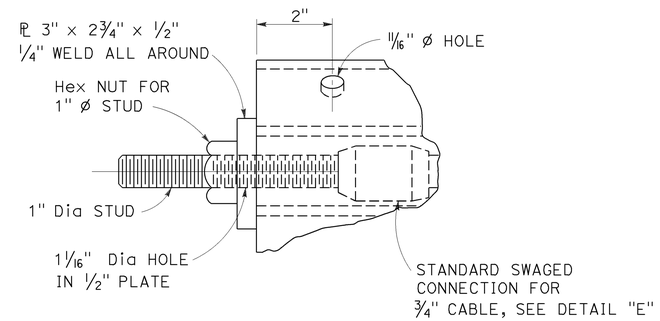

DETAIL "D"

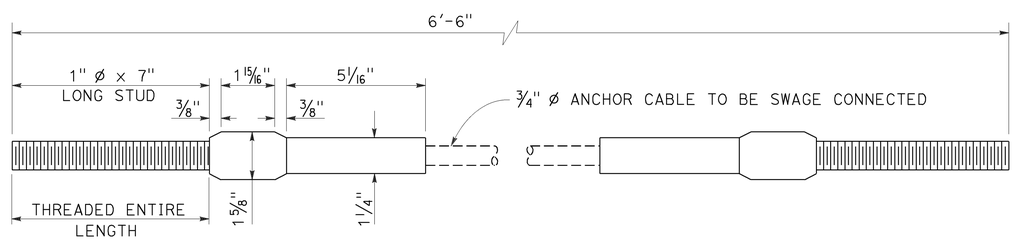

ANCHOR CABLE WITH
SWAGED FITTING AND STUD
DETAIL "E"

STATE OF CALIFORNIA
DEPARTMENT OF TRANSPORTATION

METAL RAILING ANCHOR CABLE AND ANCHOR PLATE DETAILS

NO SCALE

RSP A77S3 DATED NOVEMBER 15, 2013 SUPERSEDES RSP A77S3 DATED JULY 19, 2013 THAT SUPPLEMENTS THE STANDARD PLANS BOOK DATED 2010.

REVISED STANDARD PLAN RSP A77S3

10-4-13

Dist	COUNTY	ROUTE	POST MILES TOTAL PROJECT	SHEET No.	TOTAL SHEETS
11	SD	8,54,67,94, 125, etc.	Var	199	231

Randell D. Hiatt
REGISTERED CIVIL ENGINEER

November 15, 2013
PLANS APPROVAL DATE

REGISTERED PROFESSIONAL ENGINEER
Randell D. Hiatt
No. C50200
Exp. 6-30-15
CIVIL
STATE OF CALIFORNIA

THE STATE OF CALIFORNIA OR ITS OFFICERS OR AGENTS SHALL NOT BE RESPONSIBLE FOR THE ACCURACY OR COMPLETENESS OF SCANNED COPIES OF THIS PLAN SHEET.

TO ACCOMPANY PLANS DATED 01-11-16

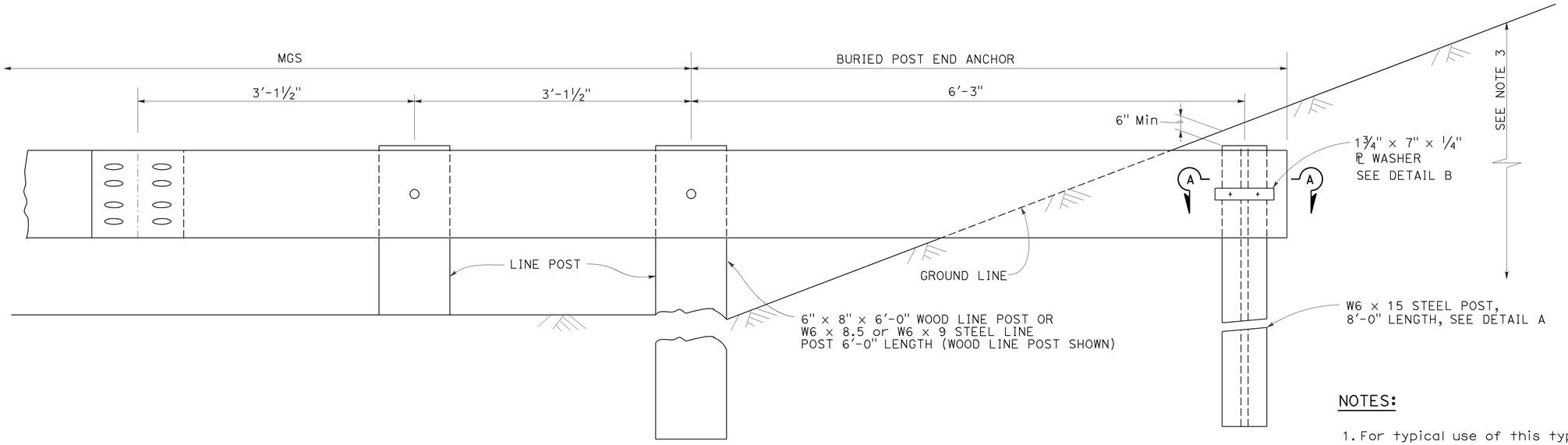

BURIED POST END ANCHOR

See Note 3

NOTES:

1. For typical use of this type of end anchor with MGS see the A77P, A77Q and A77R Series of the Standard Plans.
2. Holes excavation in the slope to construct the buried post end anchor shall be backfilled with selected earth, placed in layers approximately 1'-0" thick. Each layer shall be moistened and thoroughly compacted.
3. The buried post end anchor shall only be constructed at those locations where the slope perpendicular to the roadway is non-traversable.

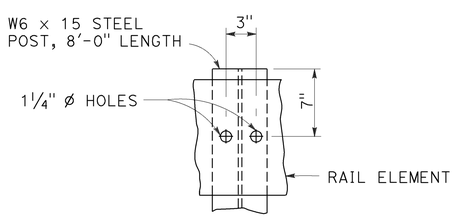

DETAIL A

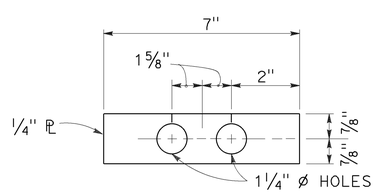

DETAIL B

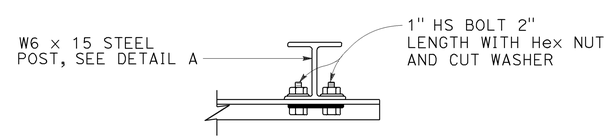

SECTION A-A

STATE OF CALIFORNIA
DEPARTMENT OF TRANSPORTATION

MIDWEST GUARDRAIL SYSTEM BURIED POST END ANCHOR

NO SCALE

RSP A77T2 DATED NOVEMBER 15, 2013 SUPERSEDES RSP A77T2
DATED JULY 19, 2013 THAT SUPPLEMENTS THE STANDARD PLANS BOOK DATED 2010.

REVISED STANDARD PLAN RSP A77T2

2010 REVISED STANDARD PLAN RSP A77T2

10-4-13

Dist	COUNTY	ROUTE	POST MILES TOTAL PROJECT	SHEET No.	TOTAL SHEETS
11	SD	8,54,67,94, 125, etc.	Var	200	231

Randell D. Hiatt
REGISTERED CIVIL ENGINEER

July 19, 2013
PLANS APPROVAL DATE

REGISTERED PROFESSIONAL ENGINEER
Randell D. Hiatt
No. C50200
Exp. 6-30-15
CIVIL
STATE OF CALIFORNIA

THE STATE OF CALIFORNIA OR ITS OFFICERS OR AGENTS SHALL NOT BE RESPONSIBLE FOR THE ACCURACY OR COMPLETENESS OF SCANNED COPIES OF THIS PLAN SHEET.

TO ACCOMPANY PLANS DATED 01-11-16

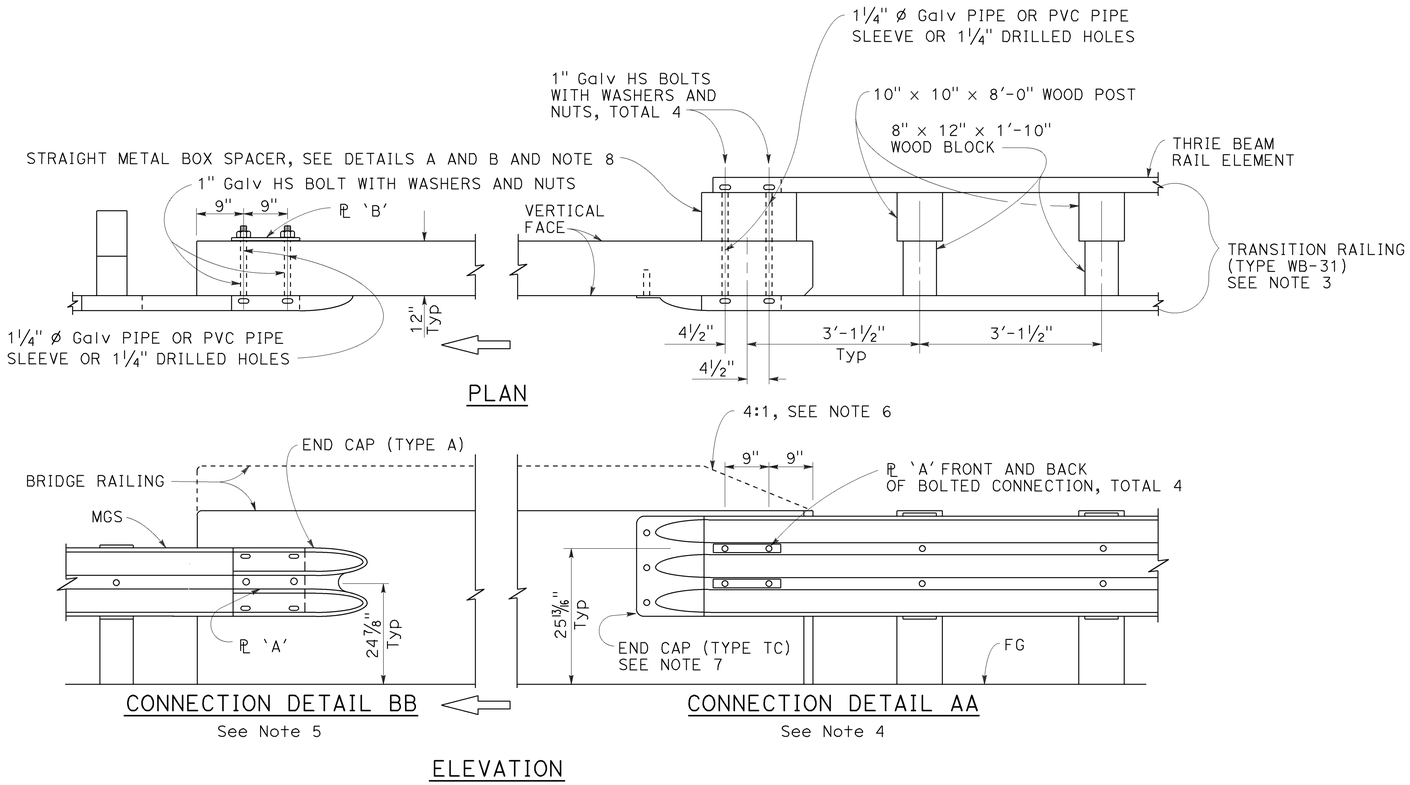

MIDWEST GUARDRAIL SYSTEM CONNECTION TO BRIDGE RAILING WITHOUT SIDEWALK

NOTES:

1. See Revised Standard Plan RSP A77U2 for additional connection details to bridges without sidewalks.
2. Additional details of posts, blocks and hardware are shown on Revised Standard Plans RSP A77M1, RSP A77N1 and RSP A77N2.
3. For additional details of Transition Railing (Type WB-31), see Revised Standard Plan RSP A77U4. Transition Railing (Type WB-31) transitions the 12 gauge MGS railing section to a heavier gage nested thrie beam railing section which is connected to the concrete bridge railing.
4. For typical use of Connection Detail AA, see Layout Types 12A and 12B on Revised Standard Plan RSP A77Q1, Layout Types 12C and 12D on Revised Standard Plan RSP A77Q2, and Layout Type 12E on Revised Standard Plan RSP A77Q3.
5. For typical use of Connection Detail BB, see Layout Type 12D (structure departure railing connection) on Revised Standard Plan RSP A77Q2 and Layout Type 12DD on Revised Standard Plan RSP A77Q5.
6. Where the height of the bridge railing exceeds the height of the thrie beam railing by more than 1" at Connection Detail AA, taper the top of the end of the bridge railing at 4:1 to match the top elevation of the thrie beam rail.
7. For details of End Cap (Type TC), see Revised Standard Plan RSP A77U4.
8. See Revised Standard Plan RSP A77U4 for additional details regarding depth dimension for straight metal box spacer.

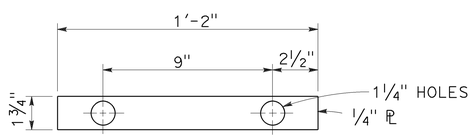

PLATE 'A'

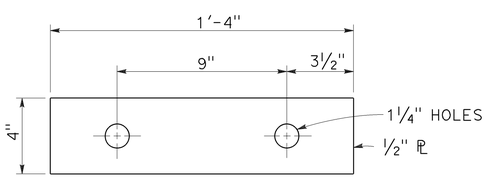

PLATE 'B'
(For backside of connection BB)

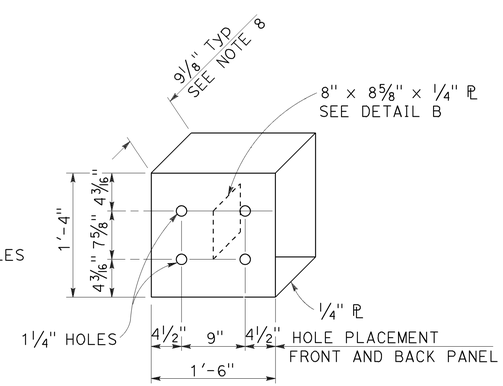

DETAIL A

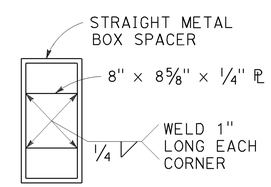

DETAIL B

STRAIGHT METAL BOX SPACER

STATE OF CALIFORNIA
DEPARTMENT OF TRANSPORTATION

MIDWEST GUARDRAIL SYSTEM CONNECTIONS TO BRIDGE RAILINGS WITHOUT SIDEWALKS DETAILS No. 1

NO SCALE

RSP A77U1 DATED JULY 19, 2013 SUPPLEMENTS THE STANDARD PLANS BOOK DATED 2010.

REVISED STANDARD PLAN RSP A77U1

2010 REVISED STANDARD PLAN RSP A77U1

7-8-13