Dist	COUNTY	ROUTE	POST MILES TOTAL PROJECT	SHEET No.	TOTAL SHEETS
11	SD	8,54,67,94, 125, *etc.*	Var	21	231

Manuel Reyes 12-11-15
REGISTERED CIVIL ENGINEER DATE

01-11-16
PLANS APPROVAL DATE

REGISTERED PROFESSIONAL ENGINEER MANUEL REYES No. 58621 Exp. 12-31-16 CIVIL STATE OF CALIFORNIA

THE STATE OF CALIFORNIA OR ITS OFFICERS OR AGENTS SHALL NOT BE RESPONSIBLE FOR THE ACCURACY OR COMPLETENESS OF SCANNED COPIES OF THIS PLAN SHEET.

NOTES:

1. FOR ACCURATE RIGHT OF WAY DATA, CONTACT RIGHT OF WAY ENGINEERING AT THE DISTRICT OFFICE.
2. EXISTING UTILITY FACILITIES ARE NOT INCLUDED ON THESE PLANS.
3. FOR Conc TRANSITION BLOCK DETAILS, SEE CONSTRUCTION DETAILS.
4. FOR TYPICAL PLACEMENT OF TEMPORARY FENCE (TYPE ESA) SEE CONSTRUCTION DETAILS.

2 REPLACED PER ADDENDUM No. 2 DATED MARCH 24, 2016

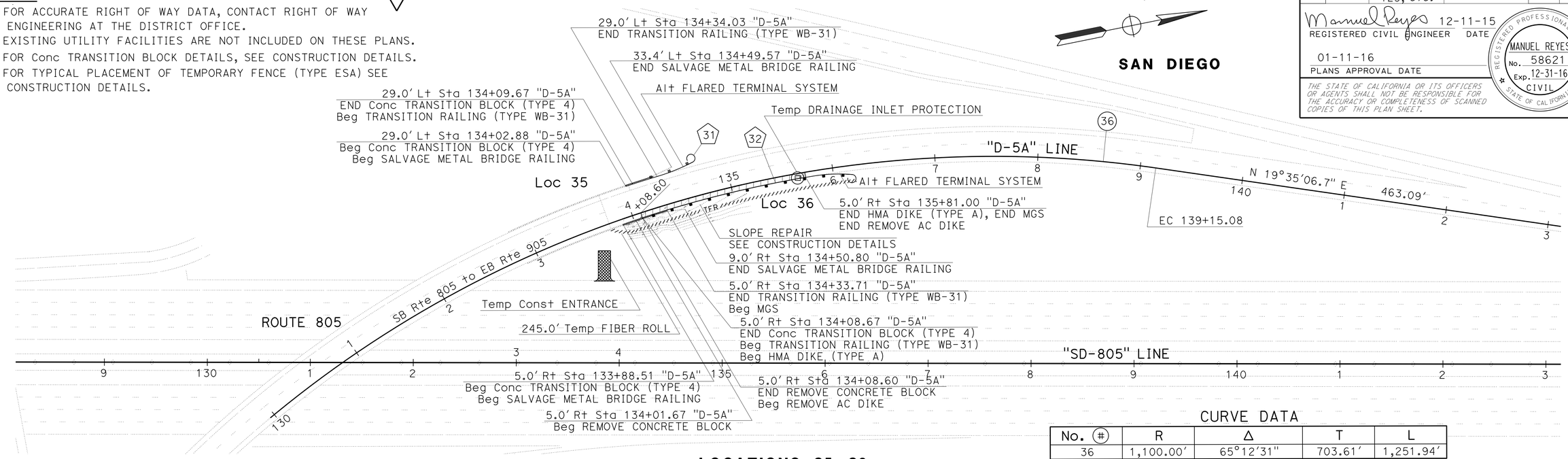

CURVE DATA

No. (#)	R	Δ	T	L
36	1,100.00'	65°12'31"	703.61'	1,251.94'

LOCATIONS 35, 36

ROUTE 805 PM 2.06

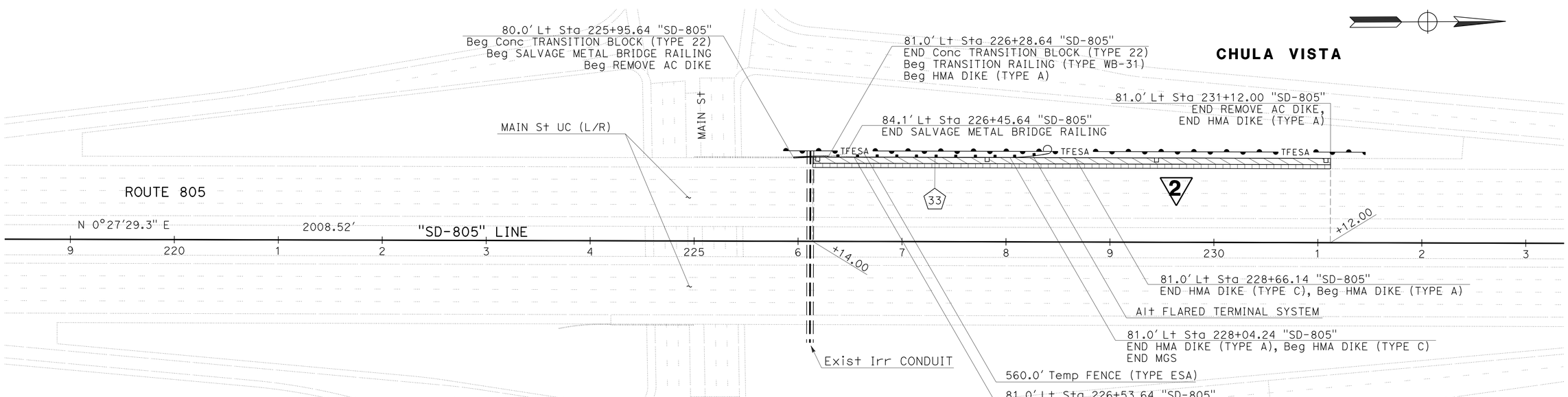

LOCATION 37

ROUTE 805 PM 3.67

SCALE: 1" = 50'

LAYOUT

L-14

STATE OF CALIFORNIA - DEPARTMENT OF TRANSPORTATION
Caltrans PROJECT DEVELOPMENT
TRAFFIC

FUNCTIONAL SUPERVISOR: RICHARD ESTRADA
CALCULATED-DESIGNED BY: VAN D. CALLANTA
CHECKED BY: MANUEL REYES
REVISED BY
DATE REVISED

LAST REVISION 03-23-16
DATE PLOTTED => 24-MAR-2016
TIME PLOTTED => 08:18

Dist	COUNTY	ROUTE	POST MILES TOTAL PROJECT	SHEET No.	TOTAL SHEETS
11	SD	8,54,67,94, 125, etc.	Var	53	231

Manuel Reyes 12-11-15
REGISTERED CIVIL ENGINEER DATE

01-11-16
PLANS APPROVAL DATE

REGISTERED PROFESSIONAL ENGINEER MANUEL REYES No. 58621 Exp. 12-31-16 CIVIL STATE OF CALIFORNIA

THE STATE OF CALIFORNIA OR ITS OFFICERS OR AGENTS SHALL NOT BE RESPONSIBLE FOR THE ACCURACY OR COMPLETENESS OF SCANNED COPIES OF THIS PLAN SHEET.

NOTES:

1. THE CONTRACTOR SHALL VERIFY ALL CONTROLLING FIELD DIMENSIONS BEFORE ORDERING OR FABRICATING ANY MATERIAL.
2. SEE REVISED Std PLANS RSP A77U1 AND A77U2 FOR ADDITIONAL DETAILS NOT SHOWN FOR MGS TRANSITION RAILING (TYPE WB-31).
3. SEE LAYOUTS, SALVAGE METAL BRIDGE RAILING DETAIL, AND SUMMARY OF QUANTITIES SHEETS FOR LIMITS OF SALVAGE METAL BRIDGE RAILING.

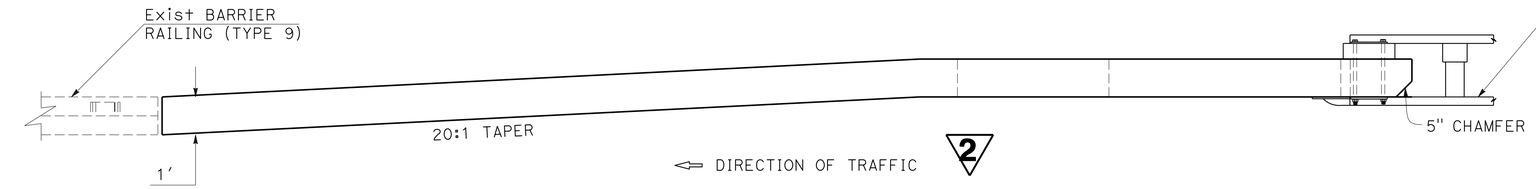

PLAN

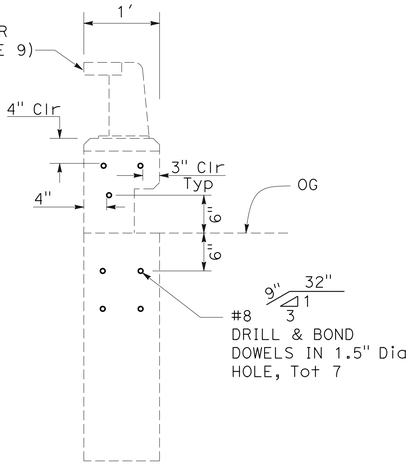

SECTION A-A
Exist BARRIER
RAILING TYPE 9

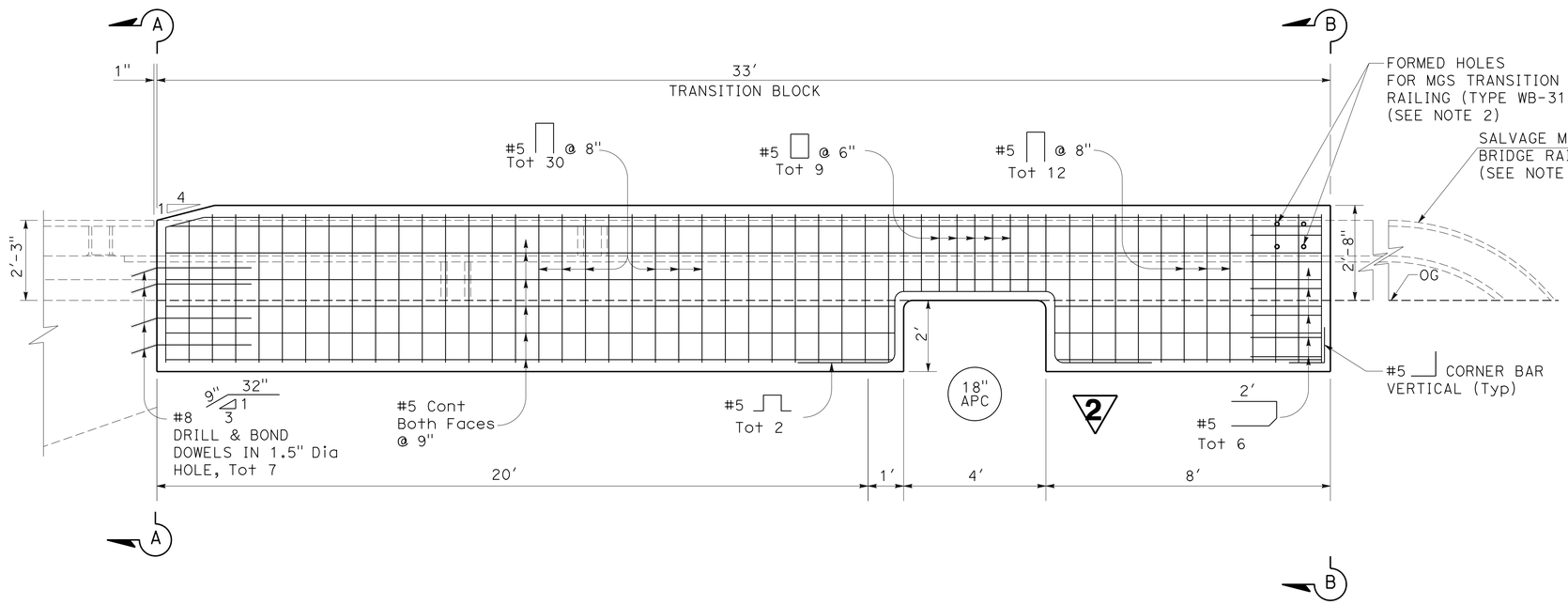

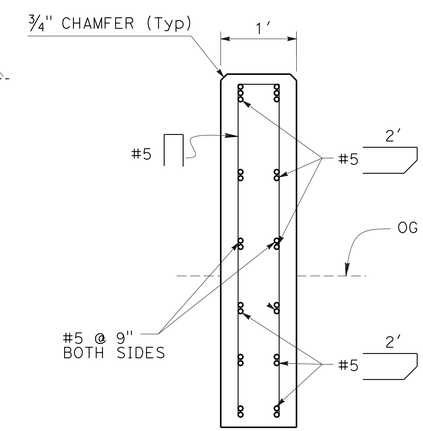

SECTION B-B
TRANSITION BLOCK

CONCRETE TRANSITION BLOCK (TYPE 22)

LOCATION 37

2 **REPLACED PER ADDENDUM No. 2 DATED MARCH 24, 2016**

CONSTRUCTION DETAILS

NO SCALE

C-23

STATE OF CALIFORNIA - DEPARTMENT OF TRANSPORTATION
TRAFFIC
PROJECT DEVELOPMENT

FUNCTIONAL SUPERVISOR: RICHARD ESTRADA
CALCULATED-DESIGNED BY: DONI DE CASTRO
CHECKED BY: MANUEL REYES
REVISED BY
DATE REVISED

LAST REVISION 03-23-16 | DATE PLOTTED => 24-MAR-2016 | TIME PLOTTED => 08:18

Dist	COUNTY	ROUTE	POST MILES TOTAL PROJECT	SHEET No.	TOTAL SHEETS
11	SD	8,54,67,94, 125, etc.	Var	71	231

Manuel Reyes 12-11-15
REGISTERED CIVIL ENGINEER DATE

01-11-16
PLANS APPROVAL DATE

REGISTERED PROFESSIONAL ENGINEER MANUEL REYES No. 58621 Exp 12-31-16 CIVIL STATE OF CALIFORNIA

THE STATE OF CALIFORNIA OR ITS OFFICERS OR AGENTS SHALL NOT BE RESPONSIBLE FOR THE ACCURACY OR COMPLETENESS OF SCANNED COPIES OF THIS PLAN SHEET.

DRAINAGE SYSTEM 4

LOCATION 24

- (g) 18" X 211.7' HDPE CULVERT
- (h) G2 INLET WITH TYPE 24-12 GRATE; H = 3.00'
- (i) 18" X 20' HDPE
- (j) G2 INLET WITH TYPE 24-12 GRATE; H = 3.00'
- (k) 18" X 120' RCP CULVERT
- (l) G2 INLET WITH TYPE 24-12 GRATE; H = 3.00'
- (m) 18" X 22' HDPE CULVERT
- (n) GD2 INLET WITH TYPE 24-12 GRATE; H = 3.00'
- (o) 18" X 120' HDPE CULVERT
- (p) G1 INLET WITH TYPE 24-12 GRATE; H = 3.00'
- (q) EDGE DRAIN VENT (TYPE F Mod) (SEE DRAINAGE DETAILS)

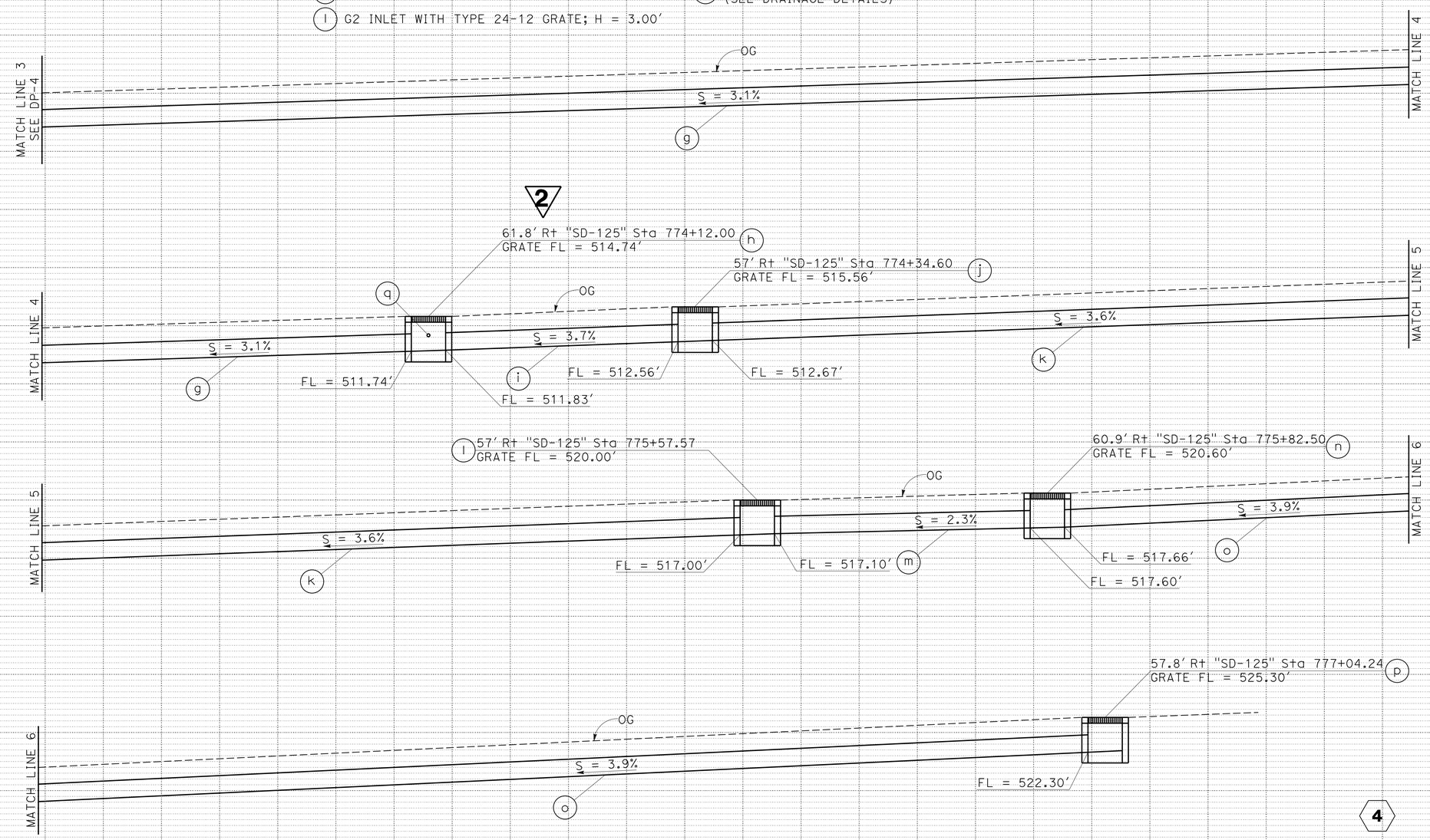

2 REPLACED PER ADDENDUM No. 2 DATED MARCH 24, 2016

DRAINAGE PROFILES 4

SCALE: Horiz 1" = 5'
Vert 1" = 5'

DP-5

STATE OF CALIFORNIA - DEPARTMENT OF TRANSPORTATION
Caltrans PROJECT DEVELOPMENT
TRAFFIC

FUNCTIONAL SUPERVISOR: RICHARD ESTRADA
CALCULATED-DESIGNED BY: DONI DE CASTRO
CHECKED BY: MANUEL REYES
REVISED BY
DATE REVISED

LAST REVISION DATE PLOTTED => 24-MAR-2016
03-23-16 TIME PLOTTED => 08:18

Dist	COUNTY	ROUTE	POST MILES TOTAL PROJECT	SHEET No.	TOTAL SHEETS
11	SD	8,54,67,94, 125, etc.	Var	72	231

Manuel Reyes 12-11-15
REGISTERED CIVIL ENGINEER DATE

01-11-16
PLANS APPROVAL DATE

REGISTERED PROFESSIONAL ENGINEER MANUEL REYES No. 58621 Exp. 12-31-16 CIVIL STATE OF CALIFORNIA

THE STATE OF CALIFORNIA OR ITS OFFICERS OR AGENTS SHALL NOT BE RESPONSIBLE FOR THE ACCURACY OR COMPLETENESS OF SCANNED COPIES OF THIS PLAN SHEET.

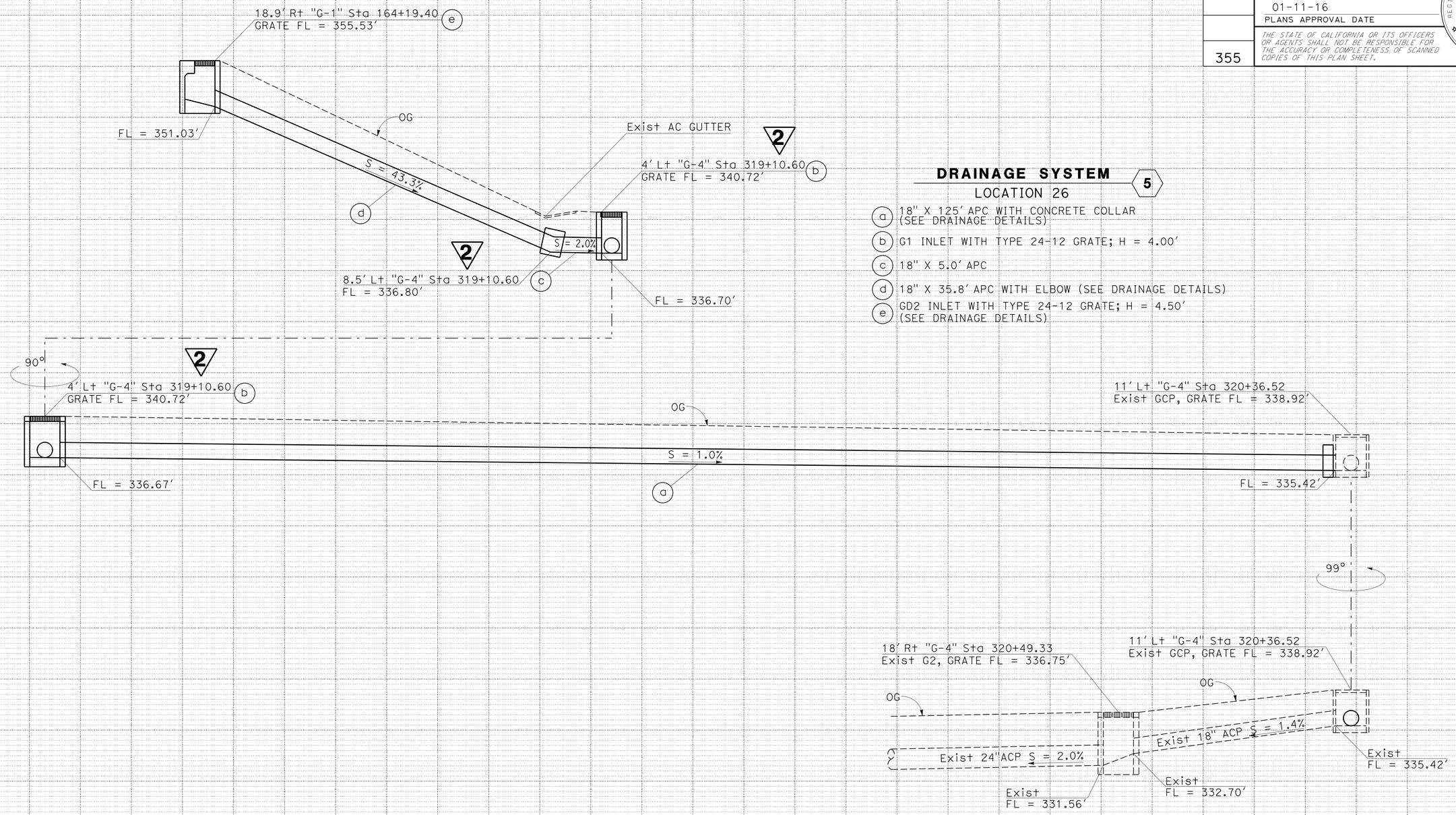

DRAINAGE SYSTEM 5

LOCATION 26

a) 18" X 125' APC WITH CONCRETE COLLAR (SEE DRAINAGE DETAILS)

b) G1 INLET WITH TYPE 24-12 GRATE; H = 4.00'

c) 18" X 5.0' APC

d) 18" X 35.8' APC WITH ELBOW (SEE DRAINAGE DETAILS)

e) GD2 INLET WITH TYPE 24-12 GRATE; H = 4.50' (SEE DRAINAGE DETAILS)

2 REPLACED PER ADDENDUM No. 2 DATED MARCH 24, 2016

5

DRAINAGE PROFILES

SCALE: Horiz 1" = 5'
Vert 1" = 5'

DP-6

STATE OF CALIFORNIA - DEPARTMENT OF TRANSPORTATION
Caltrans PROJECT DEVELOPMENT
TRAFFIC

FUNCTIONAL SUPERVISOR: RICHARD ESTRADA
CALCULATED-DESIGNED BY: DONI DE CASTRO
CHECKED BY: MANUEL REYES
REVISED BY
DATE REVISED

LAST REVISION 03-23-16
DATE PLOTTED => 24-MAR-2016
TIME PLOTTED => 08:18

Dist	COUNTY	ROUTE	POST MILES TOTAL PROJECT	SHEET No.	TOTAL SHEETS
11	SD	8,54,67,94, 125, etc.	Var	73	231

Manuel Reyes 12-11-15
REGISTERED CIVIL ENGINEER DATE

01-11-16
PLANS APPROVAL DATE

REGISTERED PROFESSIONAL ENGINEER MANUEL REYES No. 58621 Exp. 12-31-16 CIVIL STATE OF CALIFORNIA

THE STATE OF CALIFORNIA OR ITS OFFICERS OR AGENTS SHALL NOT BE RESPONSIBLE FOR THE ACCURACY OR COMPLETENESS OF SCANNED COPIES OF THIS PLAN SHEET.

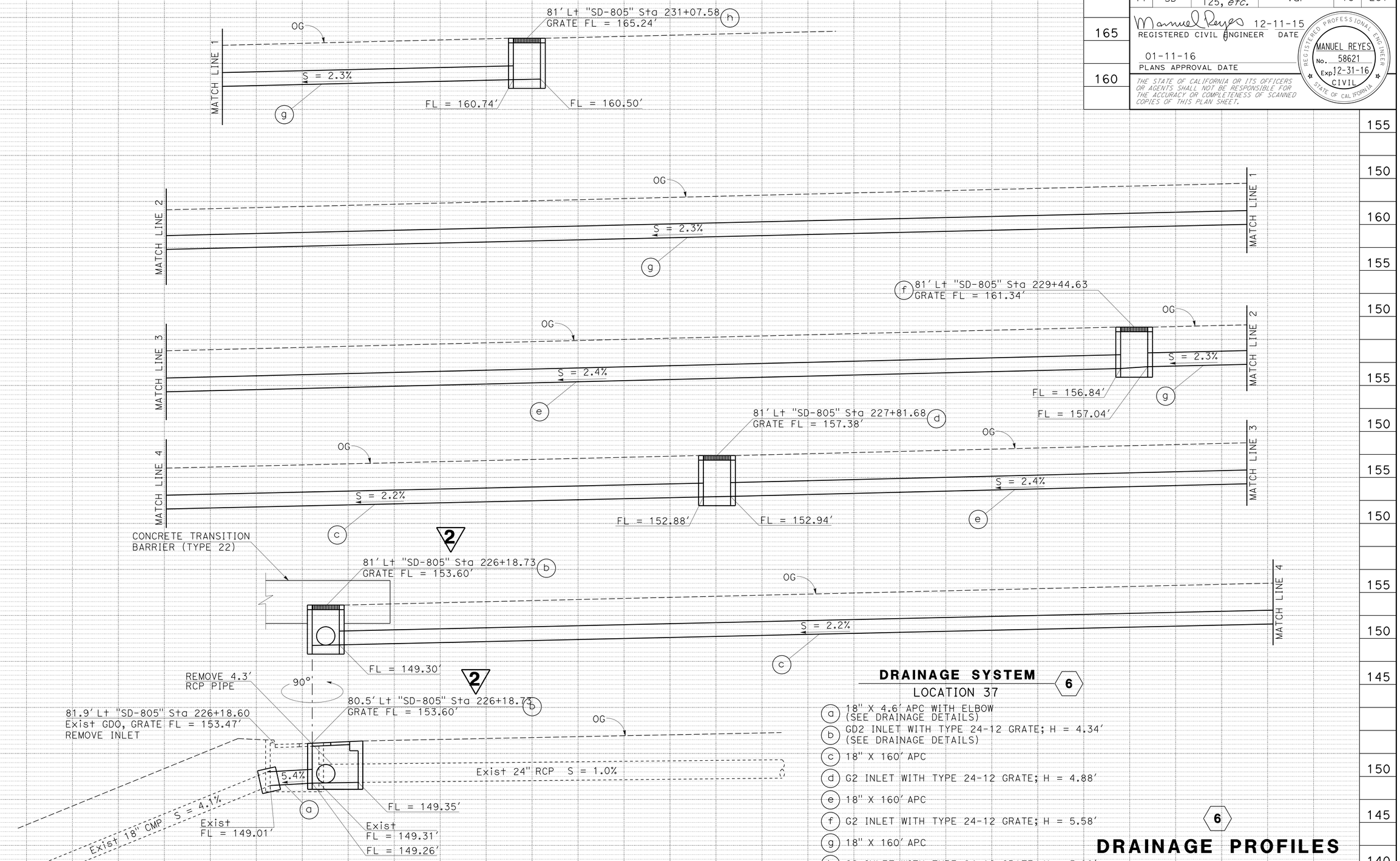

2 REPLACED PER ADDENDUM No. 2 DATED MARCH 24, 2016

REVISED BY | DATE REVISED
DONI DE CASTRO | MANUEL REYES
CALCULATED-DESIGNED BY | CHECKED BY
FUNCTIONAL SUPERVISOR | RICHARD ESTRADA

STATE OF CALIFORNIA - DEPARTMENT OF TRANSPORTATION
Caltrans TRAFFIC PROJECT DEVELOPMENT

LAST REVISION 03-23-16 | DATE PLOTTED => 24-MAR-2016 | TIME PLOTTED => 08:18

Dist	COUNTY	ROUTE	POST MILES TOTAL PROJECT	SHEET No.	TOTAL SHEETS
11	SD	8,54,67,94, 125, *etc.*	Var	75	231

Manuel Reyes 12-11-15
REGISTERED CIVIL ENGINEER DATE

01-11-16
PLANS APPROVAL DATE

REGISTERED PROFESSIONAL ENGINEER MANUEL REYES No. 58621 Exp. 12-31-16 CIVIL STATE OF CALIFORNIA

THE STATE OF CALIFORNIA OR ITS OFFICERS OR AGENTS SHALL NOT BE RESPONSIBLE FOR THE ACCURACY OR COMPLETENESS OF SCANNED COPIES OF THIS PLAN SHEET.

2 REPLACED PER ADDENDUM No. 2 DATED MARCH 24, 2016

MISCELLANEOUS IRON & STEEL		
GRATE TYPE	No. OF GRATES	WEIGHT
24 - 12	2	616 lbs
24 - 10C	2	373 lbs
24 - 10S	2	438 lbs
24 - 12X	2	455 lbs
24 - 13	2	356 lbs

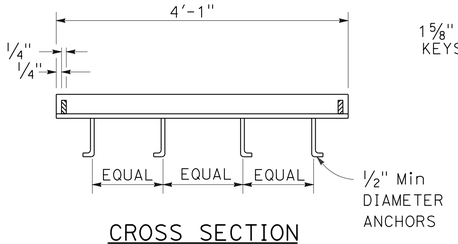

CROSS SECTION
(THRU FRAME)

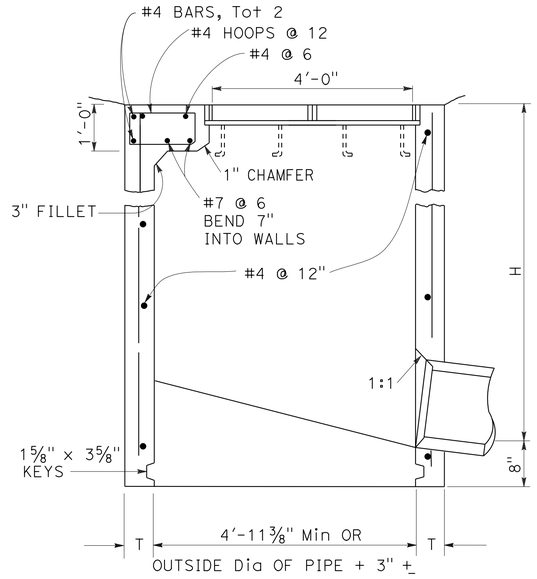

SECTION B-B

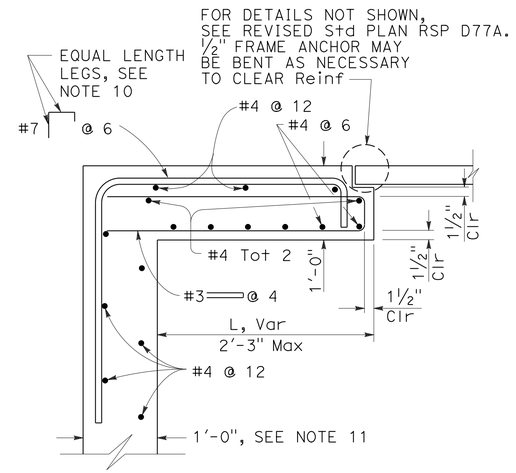

SECTION C-C

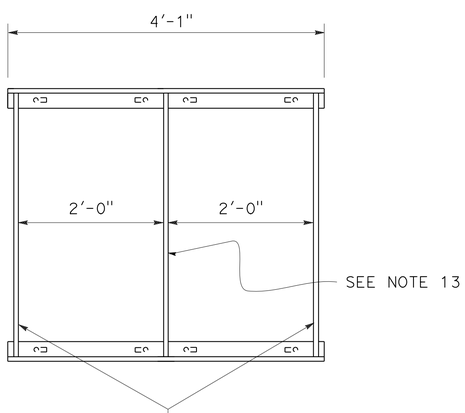

GRATE FRAME

RECTANGULAR FRAME DETAILS
(FOR DOUBLE RECTANGULAR GRATES)

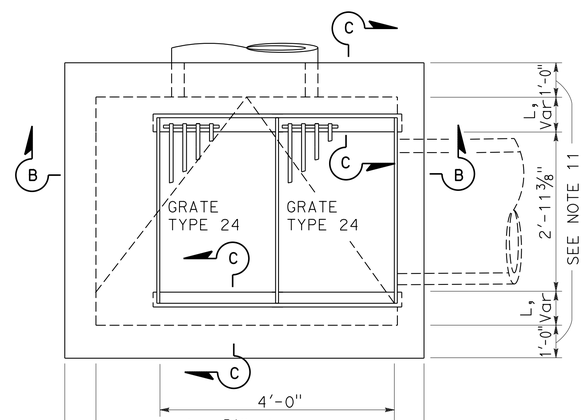

PLAN

TYPE GD2 DETAIL

3 b, 4 n, 5 e, 6 b

NOTES:

1. "H" IS THE DIFFERENCE IN ELEVATION BETWEEN THE OUTLET PIPE FLOW LINE AND THE NORMAL GUTTER GRADE LINE UNDEPRESSED.
2. FOR "T" WALL THICKNESS, SEE TABLE A BELOW.
3. WALL REINFORCING NOT REQUIRED WHEN "H" IS 8'-0" OR LESS AND THE UNSUPPORTED WIDTH OR LENGTH IS 7'-0" OR LESS. WALLS EXCEEDING THESE LIMITS SHALL BE REINFORCED WITH #4 BARS @ 12" ± CENTERS PLACED 1½" CLEAR TO INSIDE OF BOX UNLESS OTHERWISE SHOWN. (2)
4. STEPS-NONE REQUIRED WHERE "H" IS LESS THAN 2'-6". WHERE "H" IS 2'-6" OR MORE, INSTALL STEPS WITH LOWEST RUNG 1'-0" ABOVE THE FLOOR AND HIGHEST RUNG NOT MORE THAN 6" BELOW TOP OF INLET. THE DISTANCE BETWEEN STEPS SHALL NOT EXCEED 1'-0" AND SHALL BE UNIFORM THROUGHOUT THE LENGTH OF THE WALL. PLACE STEPS IN THE WALL WITHOUT AN OPENING. STEPS INSERTS MAY BE SUBSTITUTED FOR THE BAR STEPS. STEP INSERTS SHALL COMPLY WITH STATE INDUSTRIAL SAFETY REQUIREMENTS. SEE STANDARD PLAN D74C FOR STEP DETAILS.
5. DETAILS SHOWN APPLY TO BOTH METAL AND CONCRETE PIPE.
6. PIPE(S) CAN BE PLACED IN ANY WALL.
7. BASIN FLOORS SHALL HAVE WOOD TROWEL FINISH AND A MINIMUM SLOPE OF 12:3 FROM ALL DIRECTIONS TOWARD OUTLET PIPE.
8. SET INLET SO THAT GRATE BARS ARE PARALLEL TO DIRECTION OF PRINCIPAL SURFACE FLOW.
9. SEE REVISED STANDARD PLANS RSP D77A AND RSP D77B FOR GRATE AND FRAME DETAILS NOT SHOWN HERE.
10. BAR MAY BE ROTATED AS NECESSARY TO CLEAR OPENING. WHERE "L" IS 6" OR LESS, BAR MAY BE OMITTED.
11. WHERE "L" IS 6" OR LESS, WALL THICKNESS SHALL BE AS SHOWN IN TABLE A.
12. CAST-IN-PLACE INLETS TO BE FORMED AROUND ALL PIPES/STUBS INTERSECTING THE INLET, AND CONCRETE POURED IN ONE CONTINUOUS OPERATION.
13. WHEN TYPE 24-10S, 24-12X OR 24-13 GRATES ARE USED WITH GD2 INLETS, A 1/4" X 3½" X 3'-4⅞" STEEL BAR SHALL BE WELDED ACROSS THE CENTER OF INLET FRAME TO SEPARATE THE INDIVIDUAL GRATES. (2)
14. CONNECT CHAIN TO GRATE AND FRAME ONLY AT LOCATIONS SHOWN ON THE PLANS. WHEN CHAIN IS REQUIRED, DO NOT USE CAST DUCTILE IRON GRATES. SEE REVISED STANDARD PLAN RSP D77A FOR DETAILS.

TABLE A

CONCRETE QUANTITIES				
TYPE	H=3'-0" TO 8'-0" (T= 6")		H=8'-1"TO 20'-0" (T= 8")	
	H=3'-0" (CY)	ADDITIONAL PCC PER FOOT (CY)	H=8'-1" (CY)	ADDITIONAL PCC PER FOOT (CY)
GD2	2.84	0.552	6.15	0.615

TABLE BASED ON 8" FLOOR SLAB. NO DEDUCTIONS OR ADJUSTMENTS ARE TO BE MADE TO THESE QUANTITIES BECAUSE OF PIPE OPENINGS, DIFFERENT FLOOR ALTERNATIVES OR DIFFERENT CURB TYPES.

QUANTITIES FOR TYPE GD2 INLETS BASED ON Min INTERIOR DIMENSIONS SHOWN.

DRAINAGE DETAILS

NO SCALE

DD-2

STATE OF CALIFORNIA - DEPARTMENT OF TRANSPORTATION
Caltrans PROJECT DEVELOPMENT TRAFFIC
FUNCTIONAL SUPERVISOR: RICHARD ESTRADA
CALCULATED-DESIGNED BY: DONI DE CASTRO
CHECKED BY: MANUEL REYES
REVISED BY
DATE REVISED

LAST REVISION 03-21-16 | DATE PLOTTED => 24-MAR-2016 | TIME PLOTTED => 08:18