Dist	COUNTY	ROUTE	POST MILES TOTAL PROJECT	SHEET No.	TOTAL SHEETS
11	SD	76	32.6/33.3	1	269

STATE OF CALIFORNIA

DEPARTMENT OF TRANSPORTATION

ACHSSTG-S076(030)E

PROJECT PLANS FOR CONSTRUCTION ON

STATE HIGHWAY

IN SAN DIEGO COUNTY AT RINCON FROM 0.3 MILE WEST OF TO 0.4 MILE EAST OF VALLEY CENTER ROAD

TO BE SUPPLEMENTED BY STANDARD PLANS DATED 2010

INDEX OF PLANS

SHEET No.	DESCRIPTION
1	TITLE AND LOCATION MAP
2-6	TYPICAL CROSS SECTIONS
7	KEY MAP AND LINE INDEX
8	PROJECT CONTROL
9-14	LAYOUTS
15-20	PROFILE AND SUPERELEVATION DIAGRAMS
21-53	CONSTRUCTION DETAILS
54-60	TEMPORARY WATER POLLUTION CONTROL PLANS AND QUANTITIES
61-62	CONTOUR GRADING PLANS
63-91	DRAINAGE PLANS, PROFILES, DETAILS AND QUANTITIES
92-97	UTILITY PLANS, DETAILS AND QUANTITIES
98	CONSTRUCTION AREA SIGNS
99-111	STAGE CONSTRUCTION PLANS AND QUANTITIES
112-113	TRAFFIC HANDLING PLANS AND QUANTITIES
114-121	PAVEMENT DELINEATION PLANS, DETAILS AND QUANTITIES
122-136	SIGN DETAILS AND QUANTITIES
137-140	SUMMARY OF QUANTITIES
141-176	LANDSCAPE PLANS
177-180	ELECTRICAL PLANS
181-266	REVISED STANDARD PLANS

STRUCTURE PLANS

267-269	YUIMA CREEK, Br No. 57-0197

THE STANDARD PLANS LIST APPLICABLE TO THIS CONTRACT IS INCLUDED IN THE NOTICE TO BIDDERS AND SPECIAL PROVISIONS BOOK.

LOCATION MAP

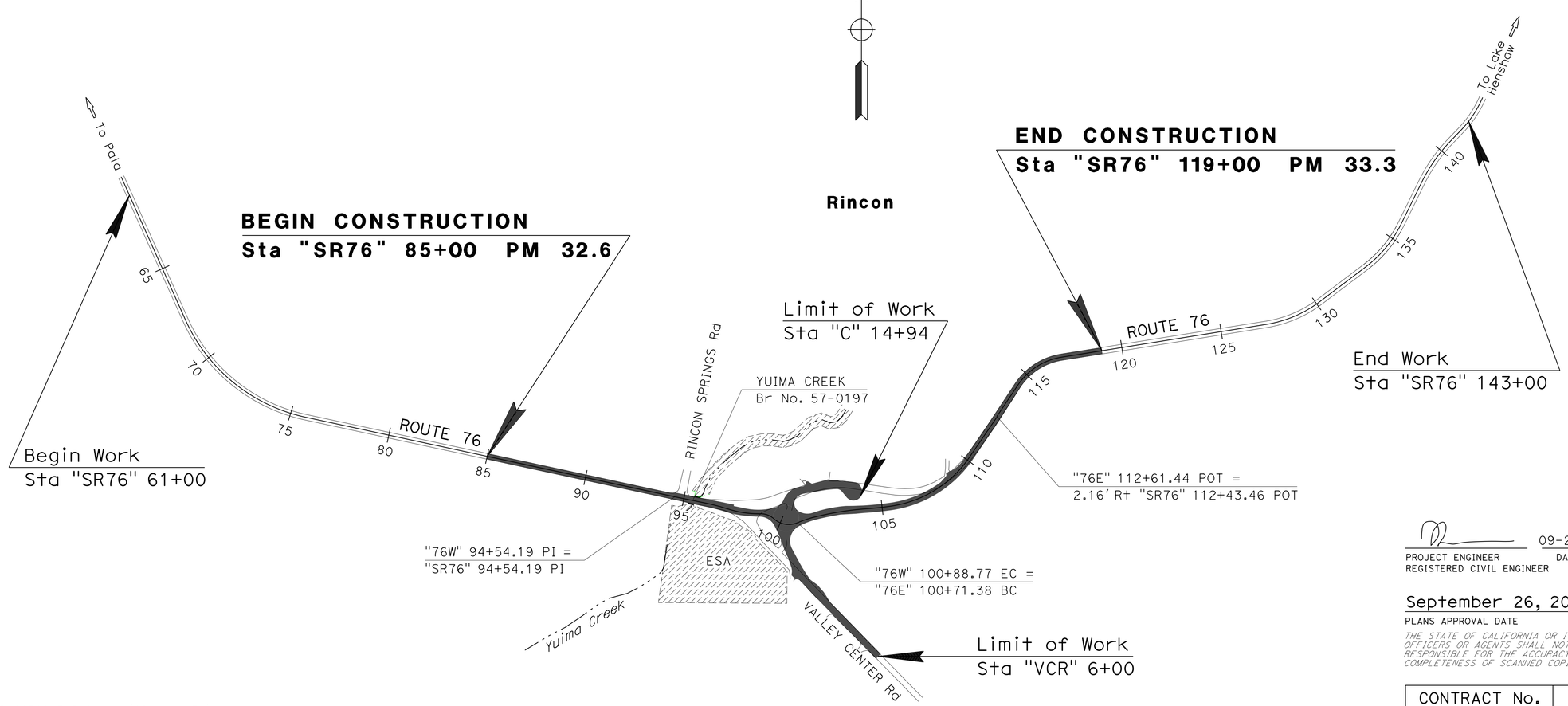

NO SCALE

THE CONTRACTOR SHALL POSSESS THE CLASS (OR CLASSES) OF LICENSE AS SPECIFIED IN THE "NOTICE TO BIDDERS."

PROJECT ENGINEER REGISTERED CIVIL ENGINEER — DATE 09-20-16

September 26, 2016
PLANS APPROVAL DATE

REGISTERED PROFESSIONAL ENGINEER — WENDY M. DANDENEAU — No. C76330 — Exp. 12/31/16 — CIVIL — STATE OF CALIFORNIA

THE STATE OF CALIFORNIA OR ITS OFFICERS OR AGENTS SHALL NOT BE RESPONSIBLE FOR THE ACCURACY OR COMPLETENESS OF SCANNED COPIES OF THIS PLAN SHEET.

PROJECT MANAGER: JOSE LUIS ROBLES
DESIGN MANAGER: JOSE LUIS ROBLES

DATE PLOTTED => 30-SEP-2016
TIME PLOTTED => 1352

CONTRACT No.	11-405704
PROJECT ID	1100020265

LAST REVISION 09-23-16

Dist	COUNTY	ROUTE	POST MILES TOTAL PROJECT	SHEET No.	TOTAL SHEETS
11	SD	76	32.6/33.3	2	269

REGISTERED CIVIL ENGINEER 09-20-16 DATE

09-26-16
PLANS APPROVAL DATE

REGISTERED PROFESSIONAL ENGINEER WENDY M. DANDENEAU No. C76330 Exp. 12/31/16 CIVIL STATE OF CALIFORNIA

THE STATE OF CALIFORNIA OR ITS OFFICERS OR AGENTS SHALL NOT BE RESPONSIBLE FOR THE ACCURACY OR COMPLETENESS OF SCANNED COPIES OF THIS PLAN SHEET.

NOTES:

1. DIMENSIONS OF THE PAVEMENT STRUCTURES (STRUCTURAL SECTIONS) ARE SUBJECT TO TOLERANCES SPECIFIED IN THE STANDARD SPECIFICATIONS.
2. EXACT LOCATIONS AND TYPES OF CURBS, HMA DIKES, RUMBLE STRIP, MGS AND ARE SHOWN ON THE LAYOUTS AND THE SUMMARY OF QUANTITIES SHEETS.
3. EXACT LOCATIONS OF MISCELLANEOUS AREAS AND MINOR CONCRETE, AND SAW CUT LINE ARE SHOWN ON THE LAYOUTS AND CONSTRUCTION DETAIL SHEETS.
4. EXACT LOCATIONS OF DRAINAGE DITCHES AND TYPE ARE SHOWN ON THE DRAINAGE PLANS.
5. SUPERELEVATIONS ARE SHOWN ON THE SUPERELEVATION DIAGRAMS.
6. EXTEND TOP LAYER OF STRUCTURAL SECTION THROUGH BACK OF DIKE.
7. FOG SEAL COAT MUST BE APPLIED TO ALL RHMA SURFACES EXCEPT TRAVELED WAYS.

TYPICAL PAVEMENT STRUCTURE SECTIONS

1 — 0.15′ RHMA (GAP GRADED)
0.30′ HMA (TYPE A)
1.10′ AB-CLASS 2

2 — 0.15′ RHMA (GAP GRADED)
0.65′ HMA (TYPE A)

3 — 0.15′ COLD PLANE AC
0.15′ TO 0.67′ RHMA (GAP GRADED)

4 — 0.85′ JPCP
0.25′ HMA (TYPE A)
0.45′ AB-CLASS 2

5 — ROCK BLANKET
(SEE CONSTRUCTION DETAILS)

6 — 0.30′ MINOR CONCRETE (SIDEWALK)
(VARIABLE SAND BLAST)

7 — 0.25′ PCC SLOPE PAVING
(SEE CONSTRUCTION DETAILS)

8 — 0.15′ RHMA (GAP GRADED)
0.35′ HMA (TYPE A)
1.00′ TO 2.00′ AB-CLASS 2

A — Exist
0.50′ AC (TYPE A)
0.67′ AB-CLASS 2

DESIGN DESIGNATION

ADT (2016)	8,970	D	61.0%
ADT (2040)	18,500	T	20.7%
DHV	2,350	V	55 mph
$ESAL_{10}$	1,477,536	TI_{10}	9.5
$ESAL_{20}$	4,523,948	TI_{20}	11.0

PAVEMENT CLIMATE REGION

SOUTH MOUNTAIN

ABBREVIATIONS:

** - MATCH EXISTING CROSS SLOPE
S/C - SAW CUT LINE
FSW - FACE OF SIDEWALK
BSW - BACK OF SIDEWALK
HFST - HIGH FRICTION SURFACE TREATMENT

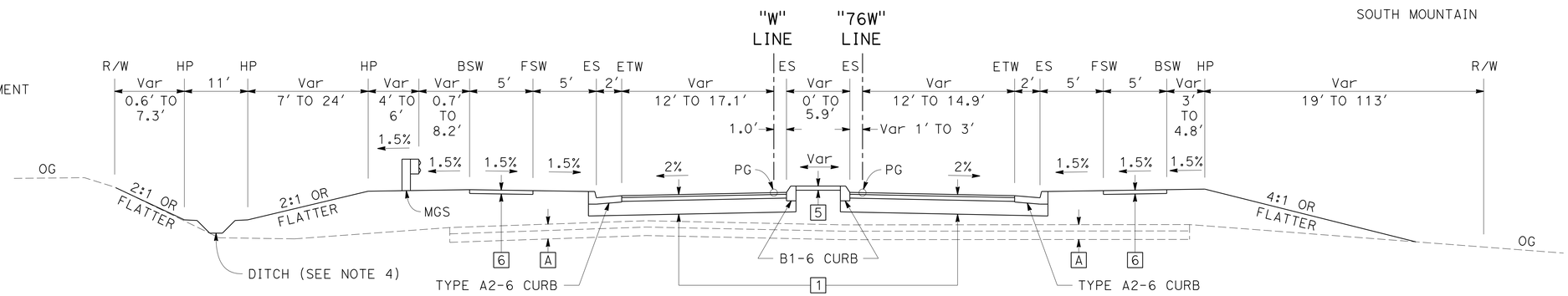

WESTBOUND

"W" 97+50.15 TO "W" 99+58.48

EASTBOUND

"76W" 97+38.43 TO 76W" 98+84.27

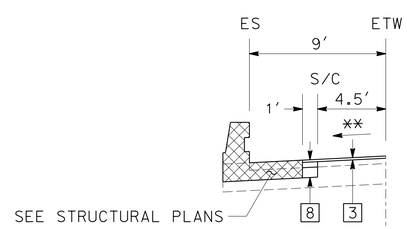

"76W" 95+47.85 TO "76W" 95+78.66

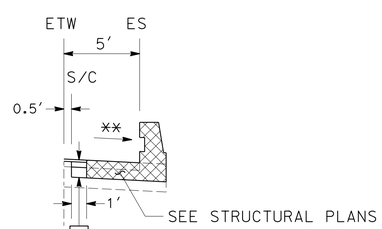

"76W" 95+23.70 TO "76W" 95+56.56

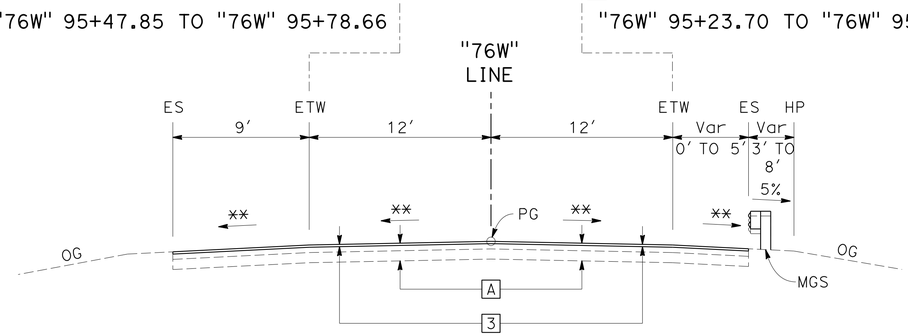

"76W" 94+54.19 TO "76W" 95+78.66

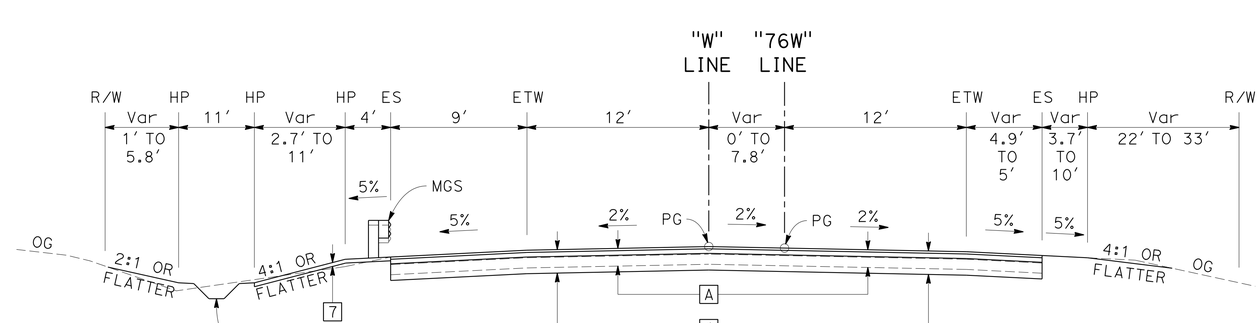

WESTBOUND

"76W" 95+78.66 TO "76W" 96+14.57
"W" 96+14.57 TO "W" 97+50.15

EASTBOUND

"76W" 95+78.66 TO "76W" 97+38.43

ROUTE 76

TYPICAL CROSS SECTIONS

NO SCALE

X-1

STATE OF CALIFORNIA - DEPARTMENT OF TRANSPORTATION
Caltrans
TRAFFIC PROJECT DEVELOPMENT

FUNCTIONAL SUPERVISOR: JOSE LUIS ROBLES
CALCULATED-DESIGNED BY: WAYNE NGUYEN
CHECKED BY: WENDY M. DANDENEAU
REVISED BY
DATE REVISED

LAST REVISION 09-23-16
DATE PLOTTED => 30-SEP-2016
TIME PLOTTED => 13:43

Dist	COUNTY	ROUTE	POST MILES TOTAL PROJECT	SHEET No.	TOTAL SHEETS
11	SD	76	32.6/33.3	3	269

REGISTERED CIVIL ENGINEER 09-20-16 DATE

09-26-16
PLANS APPROVAL DATE

REGISTERED PROFESSIONAL ENGINEER
WENDY M. DANDENEAU
No. C76330
Exp. 12/31/16
CIVIL
STATE OF CALIFORNIA

THE STATE OF CALIFORNIA OR ITS OFFICERS OR AGENTS SHALL NOT BE RESPONSIBLE FOR THE ACCURACY OR COMPLETENESS OF SCANNED COPIES OF THIS PLAN SHEET.

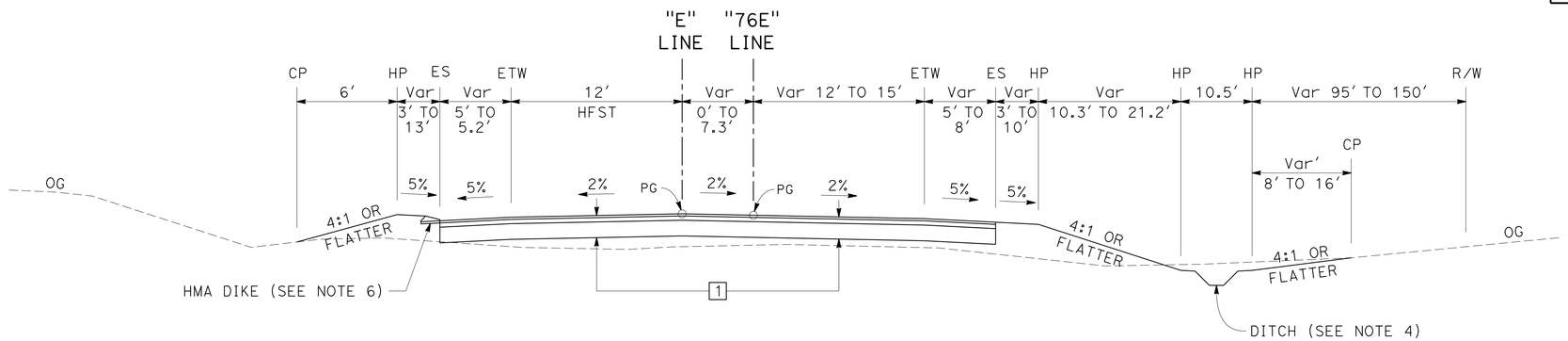

WESTBOUND

"E" 103+20.00 TO "E" 104+26.64

EASTBOUND

"76E" 103+22.27 TO "76E" 104+26.64

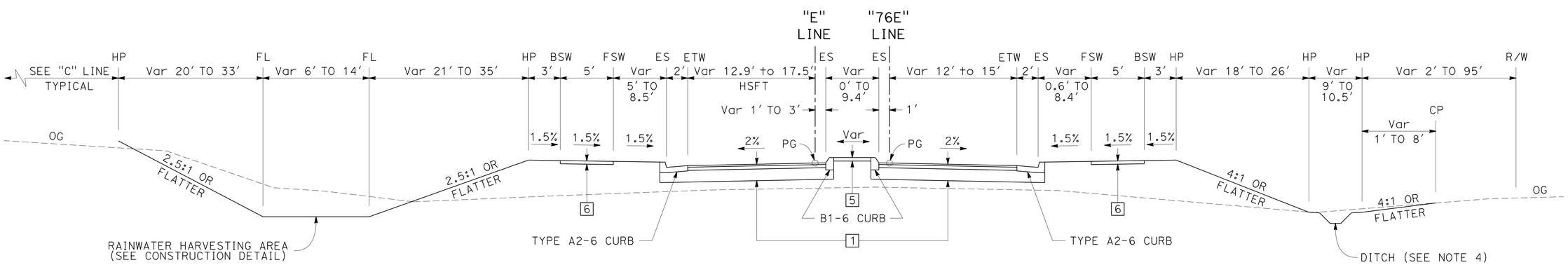

WESTBOUND

"E" 100+78.74 TO "E" 103+20.00

EASTBOUND

"76E" 101+26.89 TO "76E" 103+22.27

ROUTE 76

TYPICAL CROSS SECTIONS

NO SCALE

X-2

STATE OF CALIFORNIA - DEPARTMENT OF TRANSPORTATION
Caltrans
TRAFFIC PROJECT DEVELOPMENT

FUNCTIONAL SUPERVISOR: JOSE LUIS ROBLES
CALCULATED-DESIGNED BY: WAYNE NGUYEN
CHECKED BY: WENDY M. DANDENEAU
REVISED BY
DATE REVISED

LAST REVISION 09-23-16
DATE PLOTTED => 30-SEP-2016
TIME PLOTTED => 13:43

Dist	COUNTY	ROUTE	POST MILES TOTAL PROJECT	SHEET No.	TOTAL SHEETS
11	SD	76	32.6/33.3	4	269

REGISTERED CIVIL ENGINEER 09-20-16 DATE

09-26-16
PLANS APPROVAL DATE

REGISTERED PROFESSIONAL ENGINEER WENDY M. DANDENEAU No. C76330 Exp. 12/31/16 CIVIL STATE OF CALIFORNIA

THE STATE OF CALIFORNIA OR ITS OFFICERS OR AGENTS SHALL NOT BE RESPONSIBLE FOR THE ACCURACY OR COMPLETENESS OF SCANNED COPIES OF THIS PLAN SHEET.

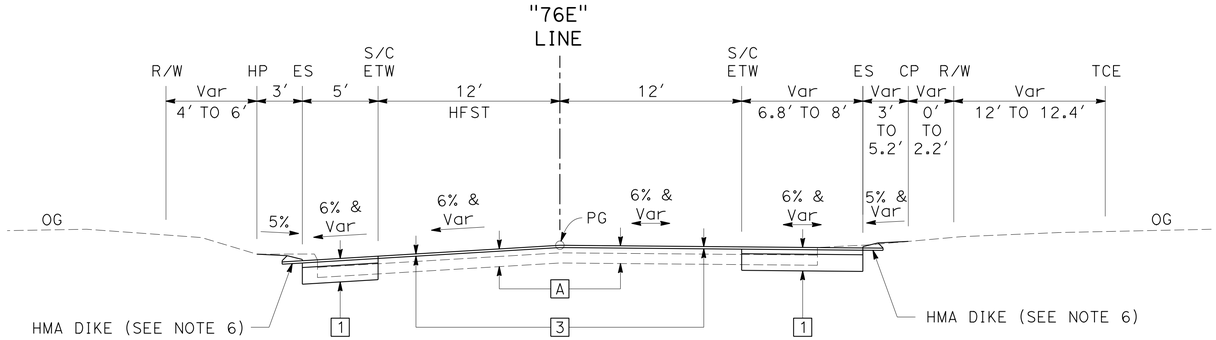

"76E" 110+16.70 TO "76E" 112+61.44

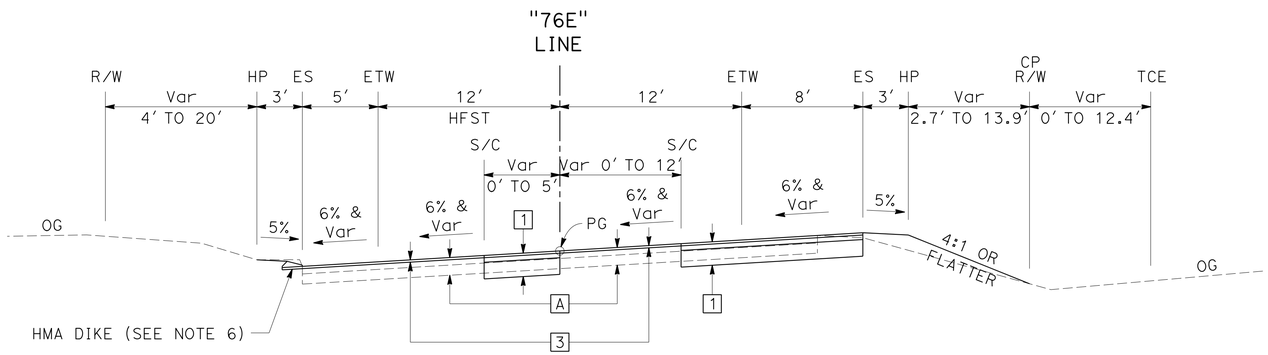

"76E" 108+25.00 TO "76E" 110+16.70

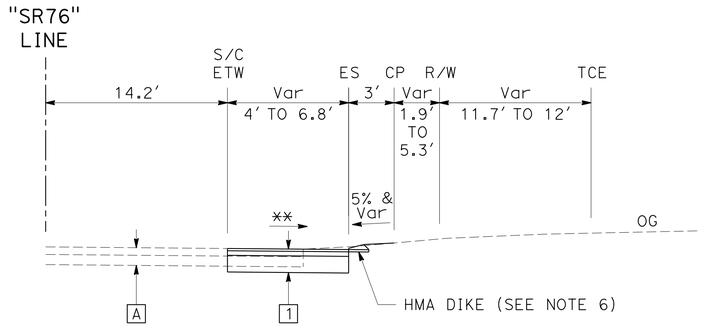

EASTBOUND

"SR76" 112+43.46 TO "SR76" 113+92.00

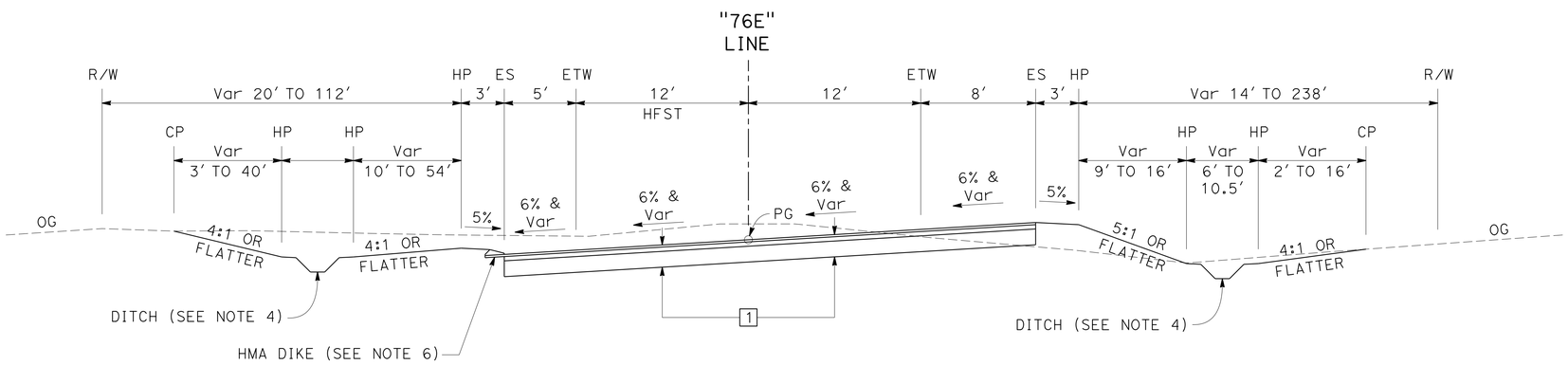

"76E" 104+26.64 TO "76E" 108+25.00

ROUTE 76

TYPICAL CROSS SECTIONS

NO SCALE **X-3**

STATE OF CALIFORNIA - DEPARTMENT OF TRANSPORTATION
Caltrans
TRAFFIC PROJECT DEVELOPMENT

FUNCTIONAL SUPERVISOR: JOSE LUIS ROBLES
CALCULATED-DESIGNED BY: WAYNE NGUYEN
CHECKED BY: WENDY M. DANDENEAU
REVISED BY
DATE REVISED

LAST REVISION DATE PLOTTED => 30-SEP-2016
09-23-16 TIME PLOTTED => 13:43

Dist	COUNTY	ROUTE	POST MILES TOTAL PROJECT	SHEET No.	TOTAL SHEETS
11	SD	76	32.6/33.3	5	269

REGISTERED CIVIL ENGINEER 09-20-16 DATE

09-26-16
PLANS APPROVAL DATE

REGISTERED PROFESSIONAL ENGINEER WENDY M. DANDENEAU No. C76330 Exp. 12/31/16 CIVIL STATE OF CALIFORNIA

THE STATE OF CALIFORNIA OR ITS OFFICERS OR AGENTS SHALL NOT BE RESPONSIBLE FOR THE ACCURACY OR COMPLETENESS OF SCANNED COPIES OF THIS PLAN SHEET.

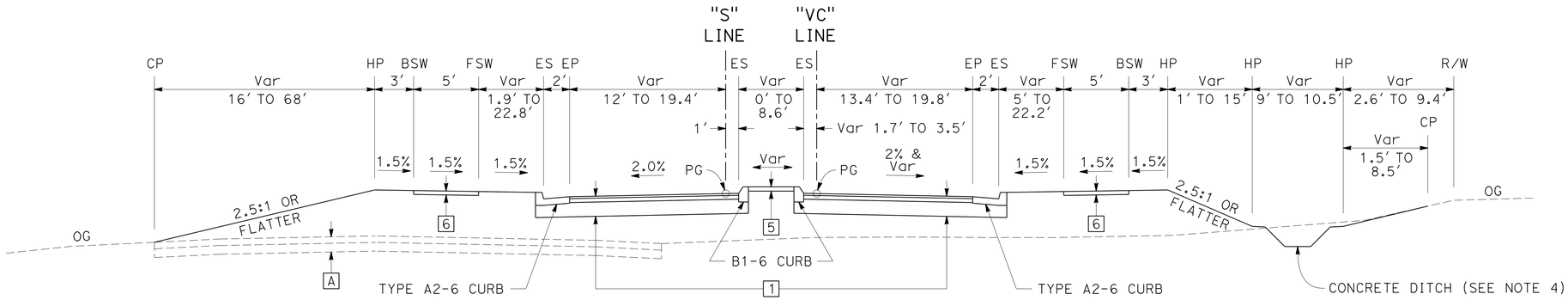

SOUTHBOUND

"S" 22+15.94 TO "S" 24+02.28

NORTHBOUND

"VC" 12+14.29 TO "VC" 13+91.39

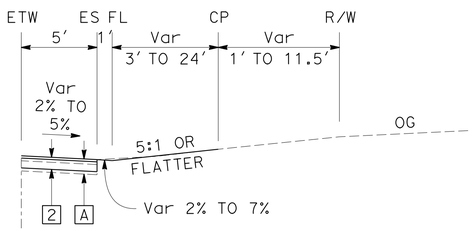

NORTHBOUND

"VC" 9+07.55 TO "VC" 9+52.57

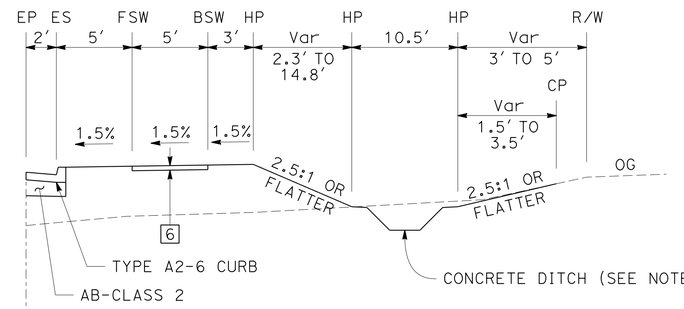

NORTHBOUND

"VC" 11+12.88 TO "VC" 12+14.29

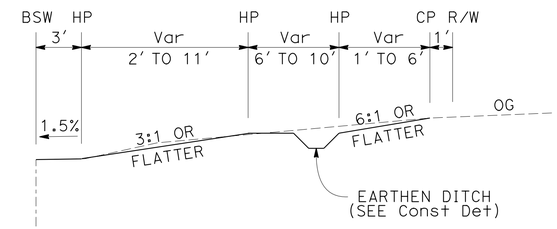

NORTHBOUND

"VC" 9+52.57 TO "VC" 10+28.23

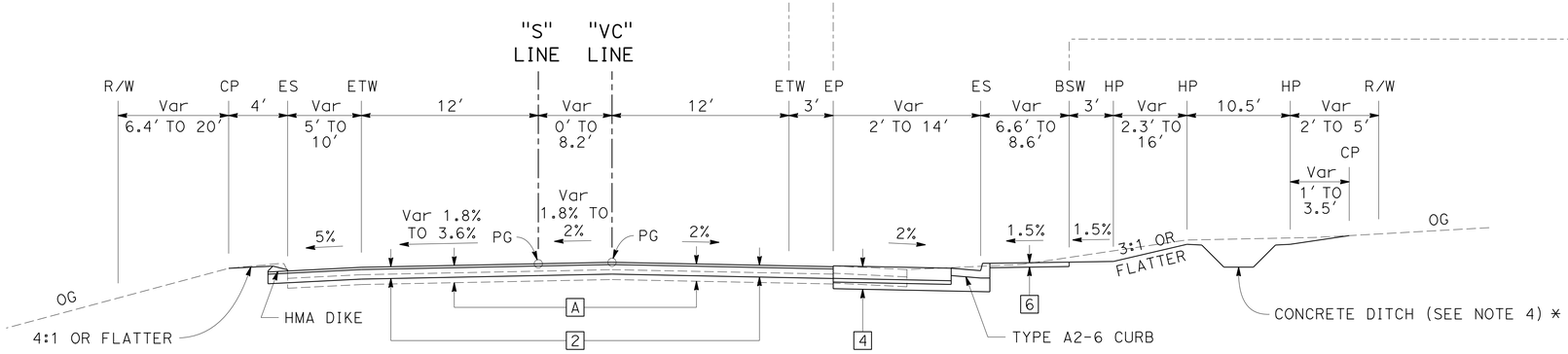

SOUTHBOUND

"VC" 9+07.55 TO "VC" 9+97.65
"S" 19+97.65 TO "S" 22+15.94

NORTHBOUND

"VC" 9+07.55 TO "VC" 12+14.29

* EARTHEN DITCH - "VC" 9+07.55 TO "VC"10+29.70 (SEE Const Det)

VALLEY CENTER ROAD

TYPICAL CROSS SECTIONS

NO SCALE

X-4

REVISED BY | DATE REVISED
WAYNE NGUYEN | WENDY M. DANDENEAU
CALCULATED-DESIGNED BY | CHECKED BY
FUNCTIONAL SUPERVISOR
JOSE LUIS ROBLES

STATE OF CALIFORNIA - DEPARTMENT OF TRANSPORTATION
TRAFFIC PROJECT DEVELOPMENT
Caltrans

LAST REVISION 09-23-16 | DATE PLOTTED => 30-SEP-2016 | TIME PLOTTED => 13:43

Dist	COUNTY	ROUTE	POST MILES TOTAL PROJECT	SHEET No.	TOTAL SHEETS
11	SD	76	32.6/33.3	6	269

REGISTERED CIVIL ENGINEER 09-20-16 DATE

09-26-16
PLANS APPROVAL DATE

REGISTERED PROFESSIONAL ENGINEER WENDY M. DANDENEAU No. C76330 Exp. 12/31/16 CIVIL STATE OF CALIFORNIA

THE STATE OF CALIFORNIA OR ITS OFFICERS OR AGENTS SHALL NOT BE RESPONSIBLE FOR THE ACCURACY OR COMPLETENESS OF SCANNED COPIES OF THIS PLAN SHEET.

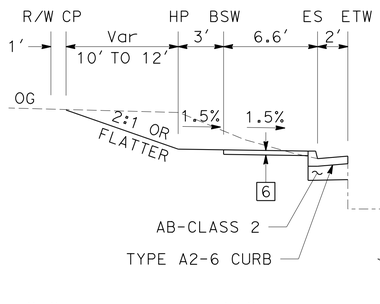

"C" 11+79.61 TO "C" 11+91.49

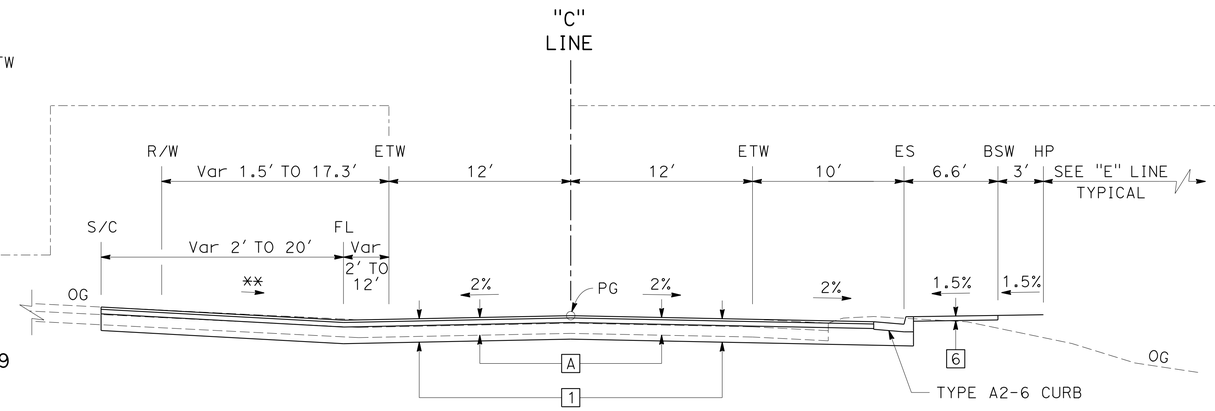

"C" 11+79.61 TO "C" 13+37.72

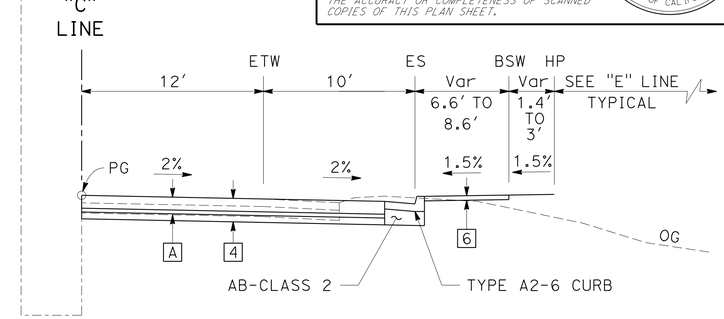

"C" 12+75.00 TO "C" 13+37.72

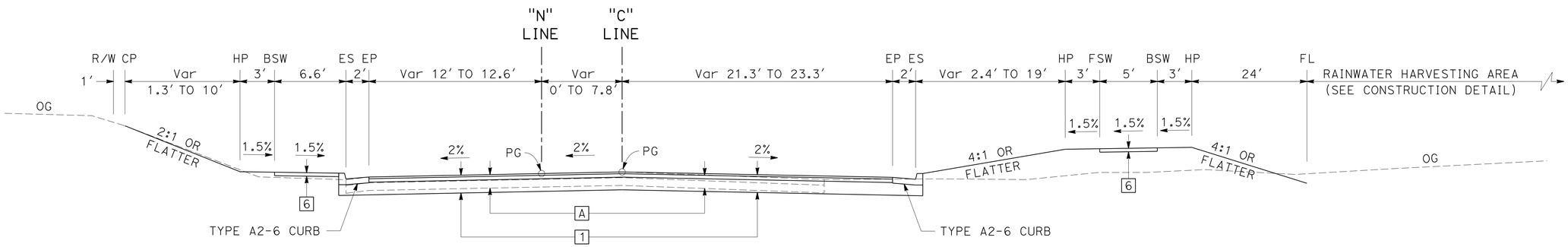

SOUTHBOUND

"N" 21+20.96 TO "N" 21+79.60

NORTHBOUND

"C" 11+24.08 TO "C" 11+79.61

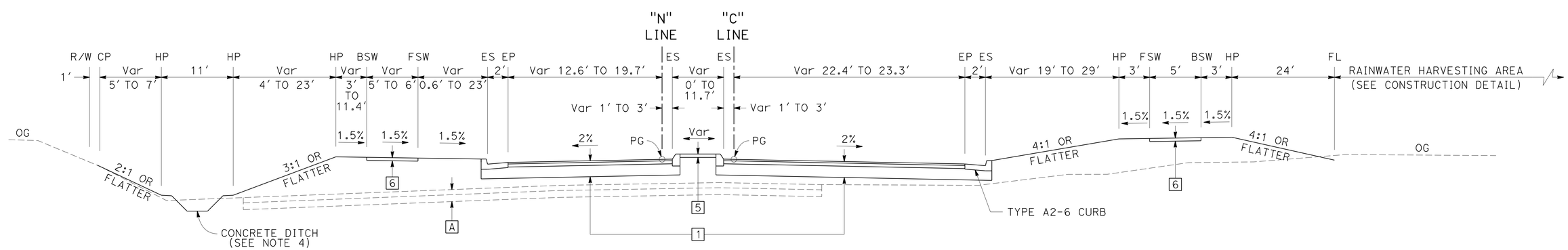

SOUTHBOUND

"N" 20+63.47 TO "N" 21+20.96

NORTHBOUND

"C" 10+72.13 TO "C" 11+24.08

VALLEY CENTER ROAD

TYPICAL CROSS SECTIONS

NO SCALE

X-5

STATE OF CALIFORNIA - DEPARTMENT OF TRANSPORTATION
Caltrans®
TRAFFIC PROJECT DEVELOPMENT

FUNCTIONAL SUPERVISOR: JOSE LUIS ROBLES
CALCULATED-DESIGNED BY: WAYNE NGUYEN
CHECKED BY: WENDY M. DANDENEAU
REVISED BY
DATE REVISED

LAST REVISION 09-23-16
DATE PLOTTED => 30-SEP-2016
TIME PLOTTED => 13:44

Dist	COUNTY	ROUTE	POST MILES TOTAL PROJECT	SHEET No.	TOTAL SHEETS
11	SD	76	32.6/33.3	7	269

REGISTERED CIVIL ENGINEER 09-20-16 DATE

09-26-16
PLANS APPROVAL DATE

REGISTERED PROFESSIONAL ENGINEER
WENDY M. DANDENEAU
No. C76330
Exp. 12/31/16
CIVIL
STATE OF CALIFORNIA

THE STATE OF CALIFORNIA OR ITS OFFICERS OR AGENTS SHALL NOT BE RESPONSIBLE FOR THE ACCURACY OR COMPLETENESS OF SCANNED COPIES OF THIS PLAN SHEET.

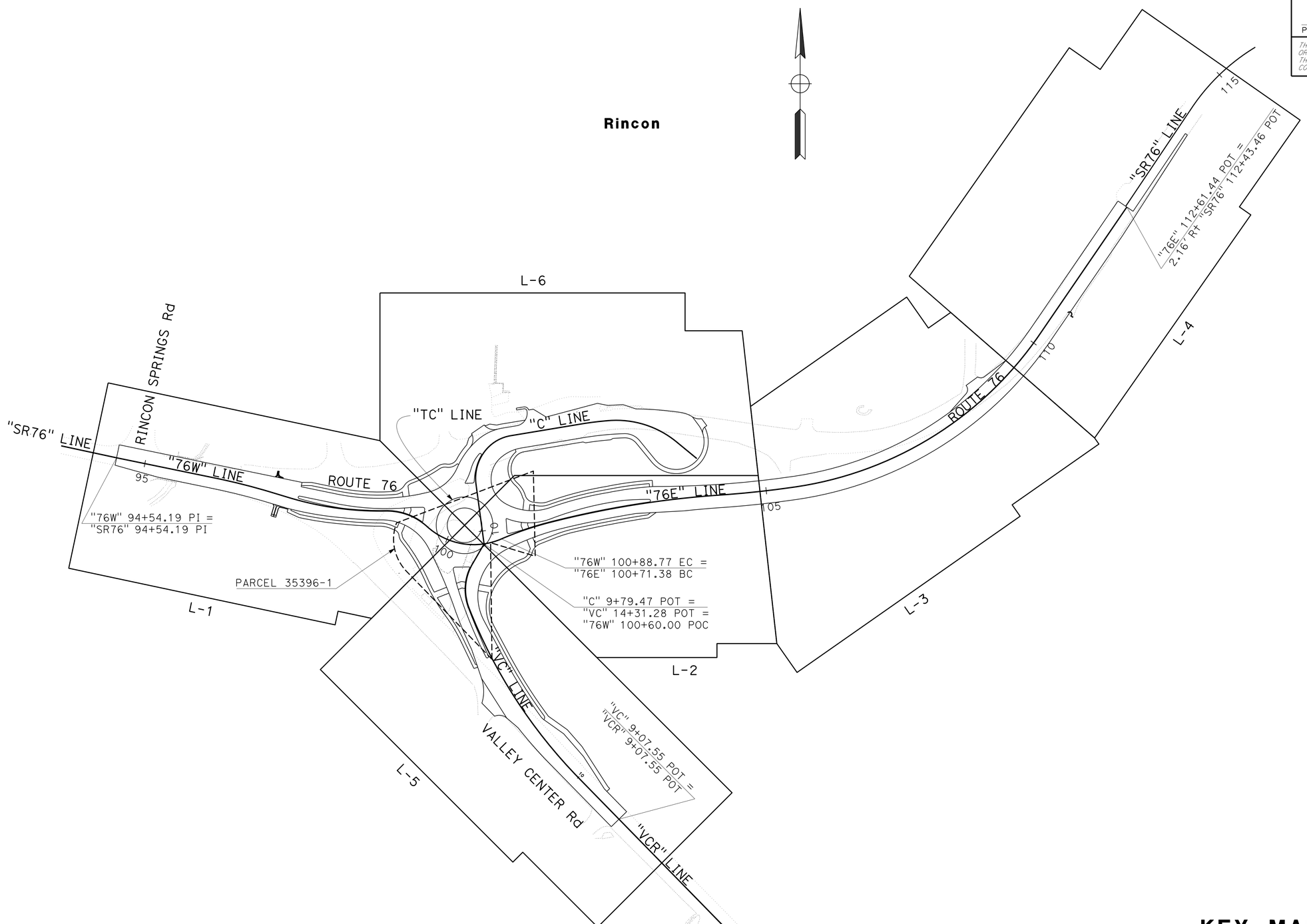

KEY MAP AND LINE INDEX

NO SCALE

K-1

STATE OF CALIFORNIA - DEPARTMENT OF TRANSPORTATION
Caltrans
TRAFFIC PROJECT DEVELOPMENT

FUNCTIONAL SUPERVISOR: JOSE LUIS ROBLES
CALCULATED-DESIGNED BY: WAYNE NGUYEN
CHECKED BY: WENDY M. DANDENEAU
REVISED BY
DATE REVISED

LAST REVISION 09-23-16
DATE PLOTTED => 30-SEP-2016
TIME PLOTTED => 13:44

Dist	COUNTY	ROUTE	POST MILES TOTAL PROJECT	SHEET No.	TOTAL SHEETS
11	SD	76	32.6/33.3	8	269

LICENSED LAND SURVEYOR 09-21-16 DATE

09-26-16
PLANS APPROVAL DATE

PROFESSIONAL LAND SURVEYOR NIDAL H. SALMAN L.S. 7589 Exp. 3/31/2018 STATE OF CALIFORNIA

THE STATE OF CALIFORNIA OR ITS OFFICERS OR AGENTS SHALL NOT BE RESPONSIBLE FOR THE ACCURACY OR COMPLETENESS OF SCANNED COPIES OF THIS PLAN SHEET.

NOTES:

1. FOR COMPLETE PROJECT CONTROL DATA, SEE THE SURVEY RECORDS ON FILE IN THE SURVEY DEPARTMENT AT THE DISTRICT OFFICE.

2. BASIS OF BEARINGS AND COORDINATES

   FOR THIS PROJECT IS THE CALIFORNIA COORDINATE SYSTEM OF 1983, 1991.35 EPOCH ADJUSTMENT [CCS 83 (1991.35)], ZONE 6. 3RD ORDER PROJECT CONTROL STATIONS WERE ESTABLISHED BASED ON THE CRITERIA SET FORTH IN THE FEDERAL GEODETIC CONTROL COMMITTEE'S "GEOMETRIC GEODETIC ACCURACY STANDARDS AND SPECIFICATIONS FOR USING GPS RELATIVE POSITIONING TECHNIQUES" REPRINTED AUGUST 1, 1989.
   THIS GPS RTK SURVEY WAS CONSTRAINED TO THE DISTRICT 11 RTK NETWORK WITH GEODETIC VALUES PUBLISHED BY CALTRANS PER THE ABOVE REFERENCED STANDARDS.

3. BASIS OF ELEVATIONS

   FOR THIS PROJECT IS THE NORTH AMERICAN VERTICAL DATUM OF 1988 (NAVD88). ELEVATIONS WERE ESTABLISHED BY GPS RTK AND TRIGONOMETRIC SURVEY METHODS AND MEET CALTRANS 3RD ORDER ACCURACY REQUIREMENTS.

4. IN THE EVENT GPS MACHINE CONTROL/GUIDANCE IS USED FOR THIS PROJECT, THE CONTRACTOR SHALL CONTACT OR MEET WITH DISTRICT 11 LAND SURVEY DIVISION TO OBTAIN THE CONTROL NECESSARY TO ESTABLISH A PROJECT CALIBRATION COMPATIBLE FOR ALL USERS.

ABBREVIATIONS:

RTK REAL TIME KINEMATIC
GPS GEODITIC POSITIONING SYSTEM

LEGEND:

(3) 3RD ORDER STATION

CONTROL FOR DESIGN AND CONSTRUCTION

STATION DESIGNATION	ORDER	NORTHING	EASTING	ELEVATION	DESCRIPTION
76 32.8	3RD	2,049,387.34	6,344,479.18	998.00	2X2 HUB WITH TACK
76 32.95	3RD	2,049,351.71	6,345,030.83	1023.85	2X2 HUB WITH TACK
76 33.1	3RD	2,049,392.77	6,345,525.85	1055.05	2X2 HUB WITH TACK
76 33.2	3RD	2,049,415.29	6,345,770.26	1070.70	2X2 HUB WITH TACK
76 32.96	3RD	2,048,988.01	6,345,290.42	1029.25	2X2 HUB WITH TACK

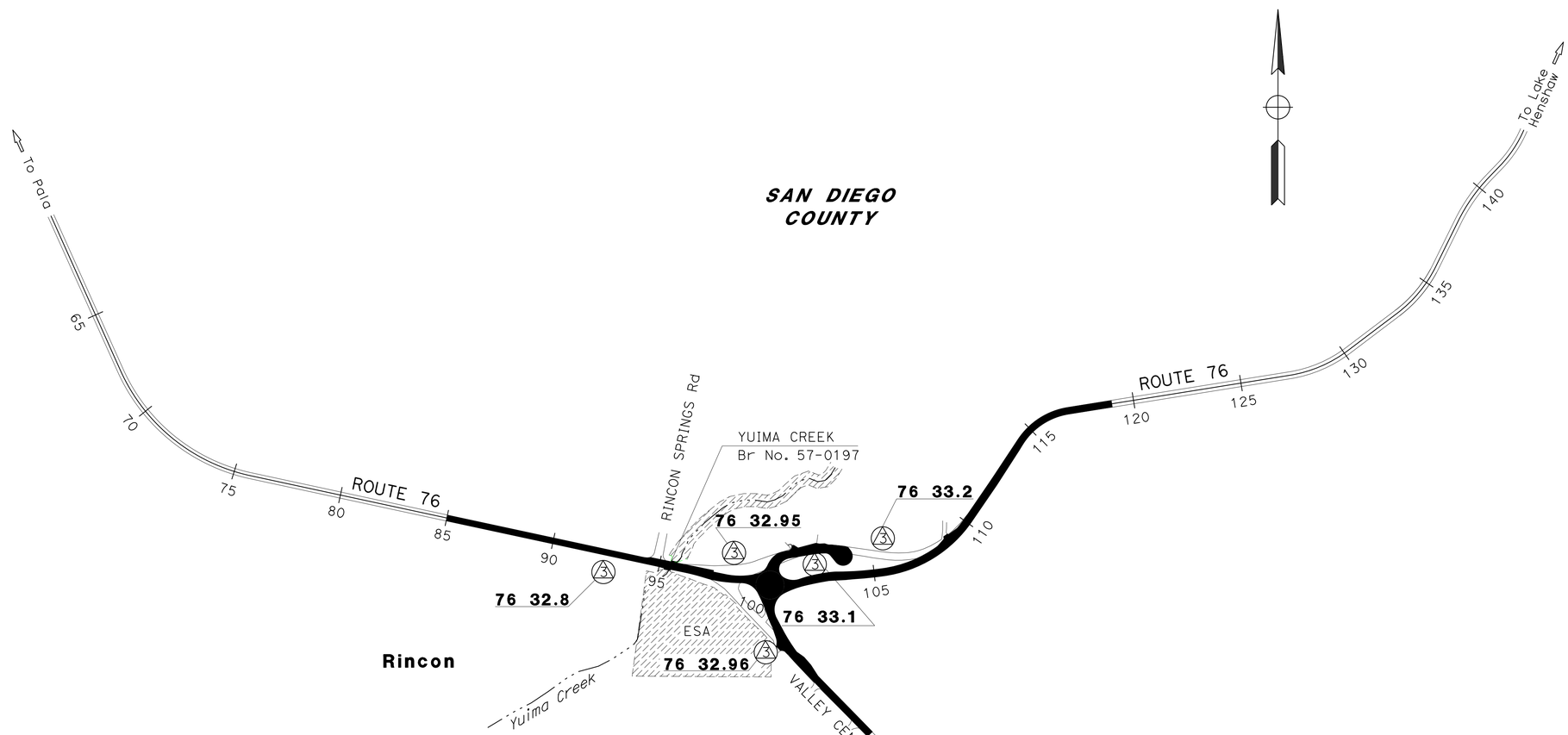

APPROVED FOR PROJECT CONTROL INFORMATION ONLY

NO SCALE

PROJECT CONTROL

PC-1

STATE OF CALIFORNIA - DEPARTMENT OF TRANSPORTATION
Caltrans LAND SURVEYS DIVISION

FUNCTIONAL SUPERVISOR: MARK PHELAN
CALCULATED-DESIGNED BY: MARK PHELAN
CHECKED BY: NED SALMAN
REVISED BY
DATE REVISED

LAST REVISION 09-23-16
DATE PLOTTED => 30-SEP-2016
TIME PLOTTED => 13:44

Dist	COUNTY	ROUTE	POST MILES TOTAL PROJECT	SHEET No.	TOTAL SHEETS
11	SD	76	32.6/33.3	9	269

REGISTERED CIVIL ENGINEER 09-20-16 DATE

09-26-16
PLANS APPROVAL DATE

REGISTERED PROFESSIONAL ENGINEER WENDY M. DANDENEAU No. C76330 Exp. 12/31/16 CIVIL STATE OF CALIFORNIA

THE STATE OF CALIFORNIA OR ITS OFFICERS OR AGENTS SHALL NOT BE RESPONSIBLE FOR THE ACCURACY OR COMPLETENESS OF SCANNED COPIES OF THIS PLAN SHEET.

NOTES:

1. FOR ACCURATE RIGHT OF WAY DATA, CONTACT RIGHT OF WAY ENGINEERING AT THE DISTRICT OFFICE.
2. SEE CONSTRUCTION DETAILS FOR MORE INFORMATION ON ROUNDABOUT, TRUCK APRON, SPLITTER ISLANDS, ROCK BLANKET, CUL-DE-SAC, BUS PADS, DRIVEWAYS, SIDEWALKS, AND CURBS.
3. SEE LANDSCAPE DETAILS FOR BOULDER COLLECTION AREAS.
4. SEE STRUCTURE PLANS FOR BARRIER DETAILS.

LEGEND:

- AREA FOR CONTRACTOR USE
- ROCK BLANKET (SEE Const Det)
- SLOPE PAVING (CONCRETE) (SEE Const Det)
- IRRAGATION CONDUIT
- RAINWATER HARVESTING AREA (SEE Const Det)
- # STRUCTURAL SECTION (SEE TYPICAL CROSS SECTIONS)
- # MGS (SEE SUMMARY OF QUANTITIES)
- # CURVE DATA
- # ISLAND PASSAGEWAY (SEE Const Det)
- # CURB RAMP (SEE Const Det)

ABBREVIATIONS:

RS - RUMBLE STRIP (AC PAVEMENT)
S/C - SAW CUT LINE
SFT - END ANCHOR ASSEMBLY (TYPE SFT)
TRWB - TRANSITION RAILING (TYPE WB-31)
AFTS - ALTERNATIVE FLARED TERMINAL SYSTEM

Rincon

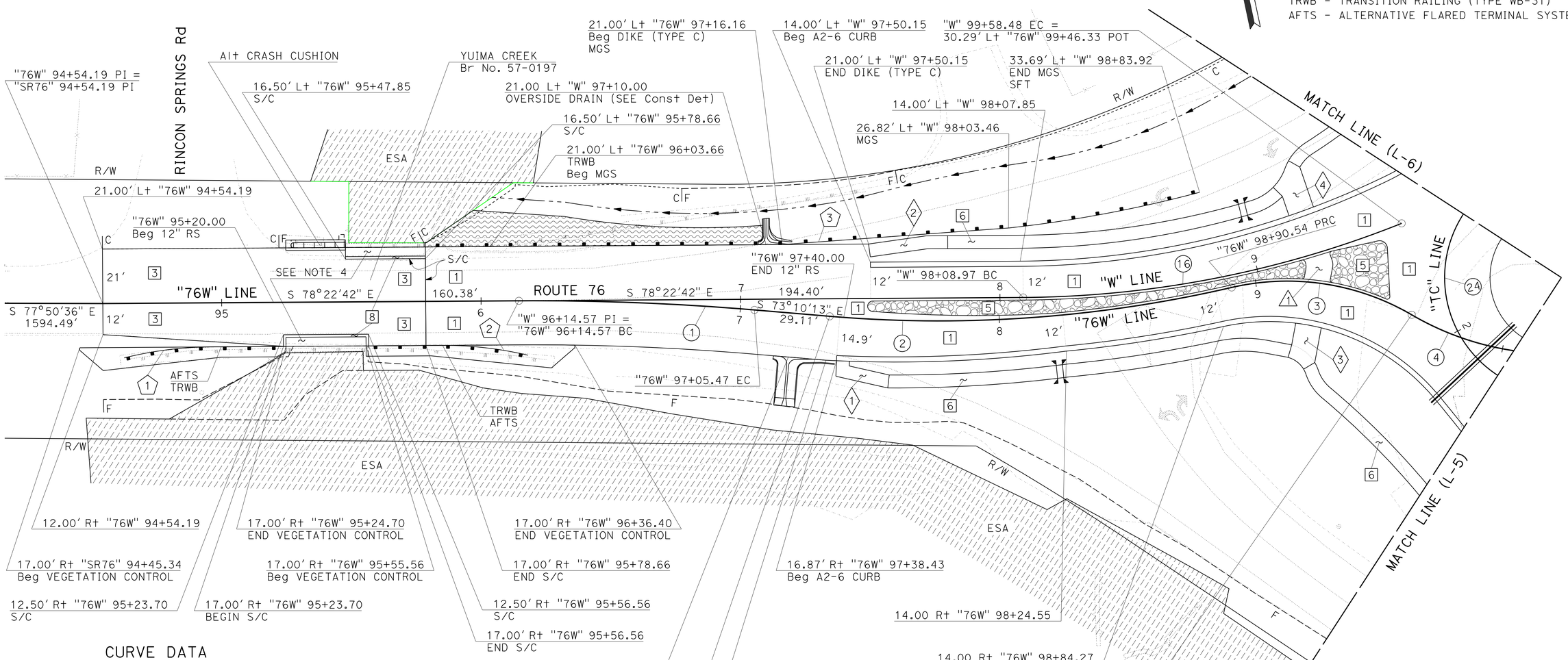

CURVE DATA

No.	R	Δ	T	L
1	1000.00'	5°12'29"	45.48'	90.90'
2	500.00'	17°52'18"	78.62'	155.96'
3	95.00'	43°21'40"	37.77'	71.90'
4	110.00'	65°48'08"	71.17'	126.33'
16	400.00'	21°24'57"	75.64'	149.51'
24	45.00'	360°00'00"	-	282.74'

LAYOUT

SCALE: 1" = 20'

L-1

STATE OF CALIFORNIA - DEPARTMENT OF TRANSPORTATION
Caltrans®
TRAFFIC PROJECT DEVELOPMENT

FUNCTIONAL SUPERVISOR: JOSE LUIS ROBLES
CALCULATED-DESIGNED BY: WAYNE NGUYEN
CHECKED BY: WENDY M. DANDENEAU
REVISED BY
DATE REVISED

LAST REVISION 09-23-16
DATE PLOTTED => 30-SEP-2016
TIME PLOTTED => 13:44

Dist	COUNTY	ROUTE	POST MILES TOTAL PROJECT	SHEET No.	TOTAL SHEETS
11	SD	76	32.6/33.3	10	269

REGISTERED CIVIL ENGINEER 09-20-16 DATE

09-26-16
PLANS APPROVAL DATE

REGISTERED PROFESSIONAL ENGINEER WENDY M. DANDENEAU No. C76330 Exp. 12/31/16 CIVIL STATE OF CALIFORNIA

THE STATE OF CALIFORNIA OR ITS OFFICERS OR AGENTS SHALL NOT BE RESPONSIBLE FOR THE ACCURACY OR COMPLETENESS OF SCANNED COPIES OF THIS PLAN SHEET.

NOTE:

FOR ACCURATE RIGHT OF WAY DATA, CONTACT RIGHT OF WAY ENGINEERING AT THE DISTRICT OFFICE.

Rincon

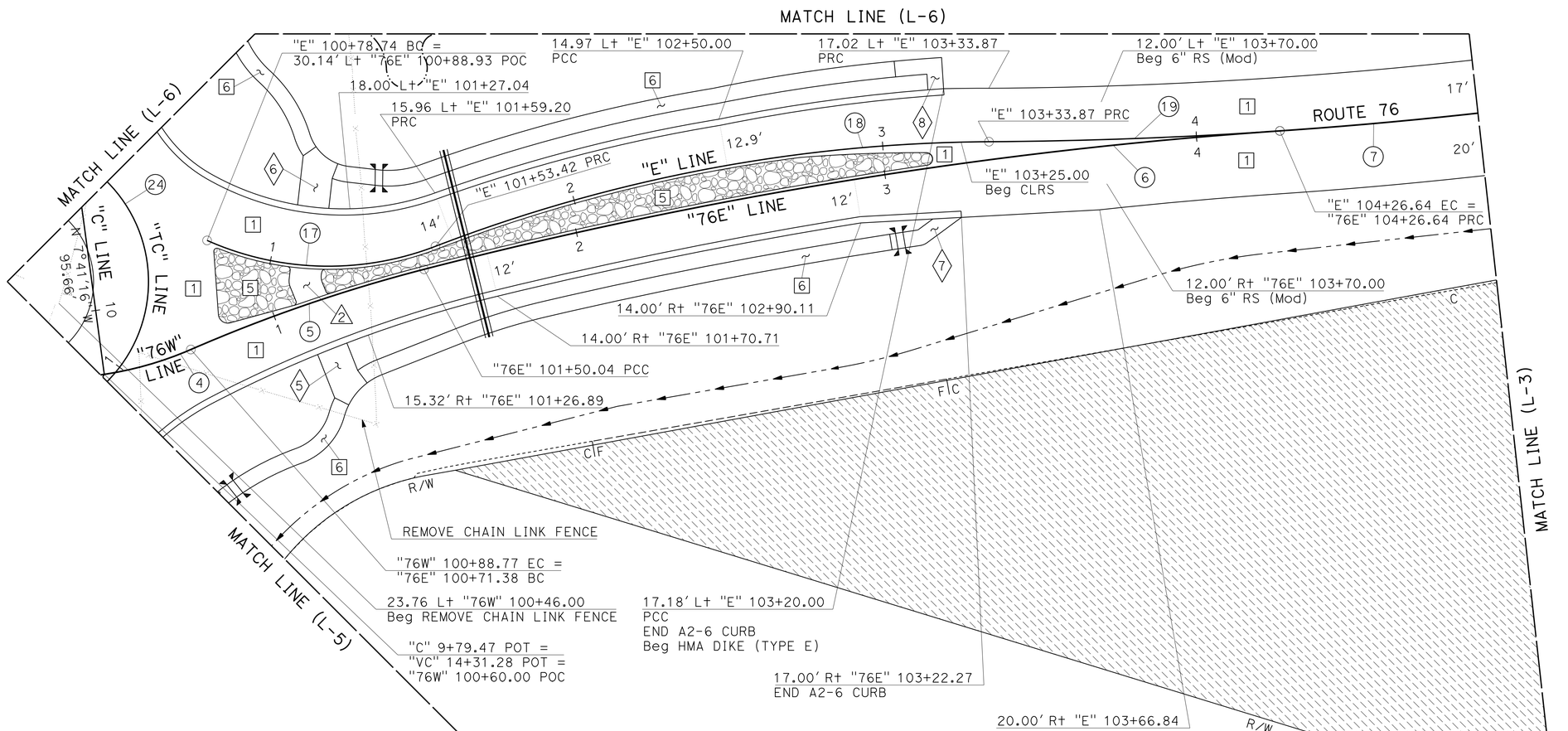

CURVE DATA

No.	R	Δ	T	L
4	110.00'	65°48'08"	71.17'	126.33'
5	500.00'	9°00'48"	39.41'	78.66'
6	1500.00'	10°33'55"	138.69'	276.60'
7	1500.00'	3°51'29"	50.52'	101.00'
17	95.00'	45°02'28"	39.39'	74.68'
18	500.00'	20°40'43"	91.22'	180.45'
19	1500.00'	3°32'36"	46.40'	92.77'
24	45.00'	360°00'00"	-	282.74'

SCALE: 1" = 20'

LAYOUT

L-2

STATE OF CALIFORNIA - DEPARTMENT OF TRANSPORTATION
Caltrans
TRAFFIC PROJECT DEVELOPMENT

FUNCTIONAL SUPERVISOR: JOSE LUIS ROBLES
CALCULATED-DESIGNED BY: WAYNE NGUYEN
CHECKED BY: WENDY M. DANDENEAU
REVISED BY
DATE REVISED

LAST REVISION 09-23-16
DATE PLOTTED => 30-SEP-2016
TIME PLOTTED => 13:44

Dist	COUNTY	ROUTE	POST MILES TOTAL PROJECT	SHEET No.	TOTAL SHEETS
11	SD	76	32.6/33.3	11	269

REGISTERED CIVIL ENGINEER 09-20-16 DATE

09-26-16
PLANS APPROVAL DATE

REGISTERED PROFESSIONAL ENGINEER WENDY M. DANDENEAU No. C76330 Exp. 12/31/16 CIVIL STATE OF CALIFORNIA

THE STATE OF CALIFORNIA OR ITS OFFICERS OR AGENTS SHALL NOT BE RESPONSIBLE FOR THE ACCURACY OR COMPLETENESS OF SCANNED COPIES OF THIS PLAN SHEET.

NOTE:

FOR ACCURATE RIGHT OF WAY DATA, CONTACT RIGHT OF WAY ENGINEERING AT THE DISTRICT OFFICE.

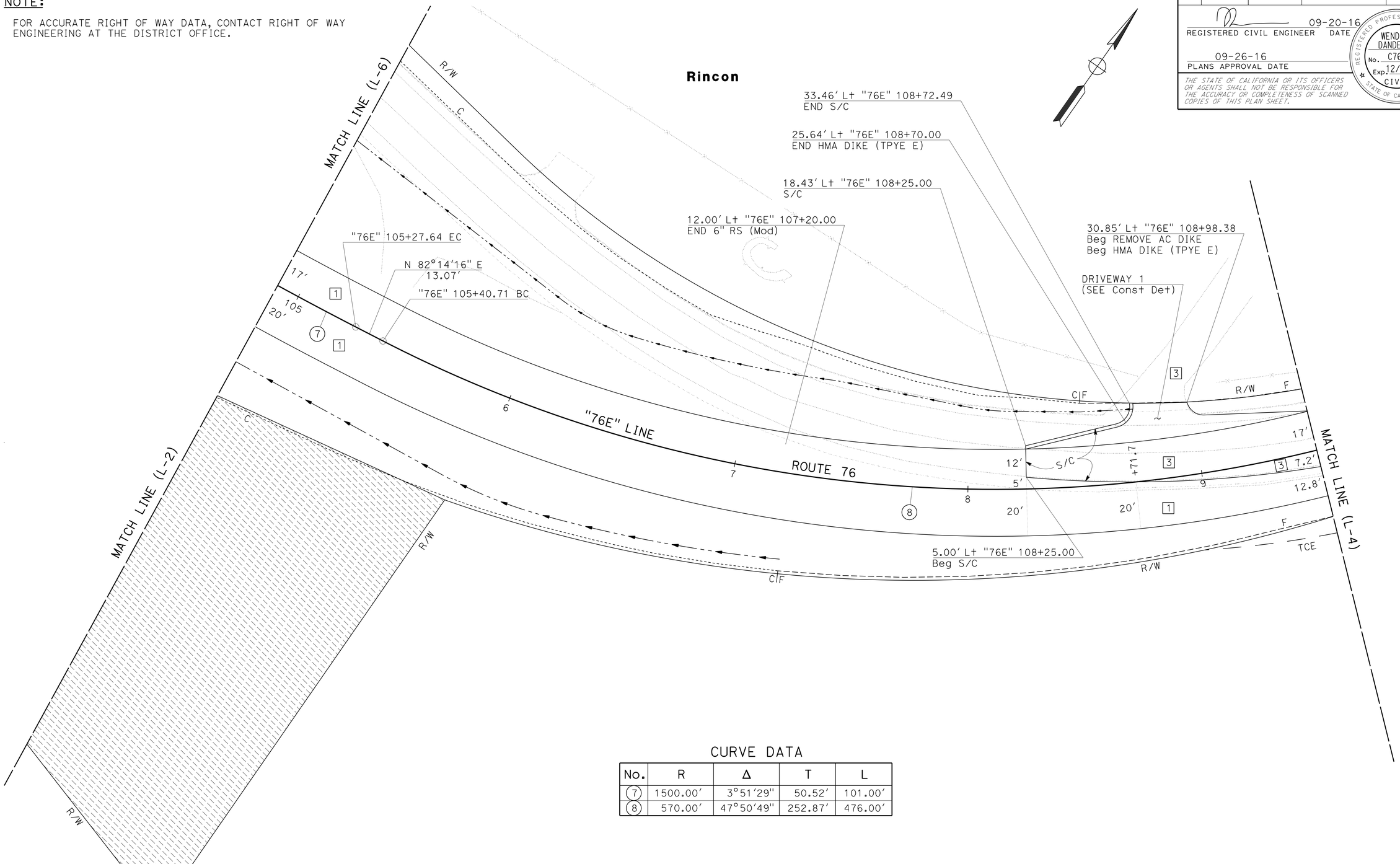

CURVE DATA

No.	R	Δ	T	L
7	1500.00'	3°51'29"	50.52'	101.00'
8	570.00'	47°50'49"	252.87'	476.00'

SCALE: 1" = 20'

LAYOUT

L-3

STATE OF CALIFORNIA - DEPARTMENT OF TRANSPORTATION
Caltrans
TRAFFIC PROJECT DEVELOPMENT

FUNCTIONAL SUPERVISOR: JOSE LUIS ROBLES
CALCULATED-DESIGNED BY: WAYNE NGUYEN
CHECKED BY: WENDY M. DANDENEAU
REVISED BY
DATE REVISED

LAST REVISION 09-26-16 | DATE PLOTTED => 30-SEP-2016 | TIME PLOTTED => 13:44

Dist	COUNTY	ROUTE	POST MILES TOTAL PROJECT	SHEET No.	TOTAL SHEETS
11	SD	76	32.6/33.3	12	269

REGISTERED CIVIL ENGINEER 09-20-16 DATE

09-26-16
PLANS APPROVAL DATE

REGISTERED PROFESSIONAL ENGINEER WENDY M. DANDENEAU No. C76330 Exp. 12/31/16 CIVIL STATE OF CALIFORNIA

THE STATE OF CALIFORNIA OR ITS OFFICERS OR AGENTS SHALL NOT BE RESPONSIBLE FOR THE ACCURACY OR COMPLETENESS OF SCANNED COPIES OF THIS PLAN SHEET.

NOTE:

FOR ACCURATE RIGHT OF WAY DATA, CONTACT RIGHT OF WAY ENGINEERING AT THE DISTRICT OFFICE.

CURVE DATA

No.	R	Δ	T	L
8	570.00′	47°50′49″	252.87′	476.00′
9	320.70′	47°01′00″	139.50′	263.17′

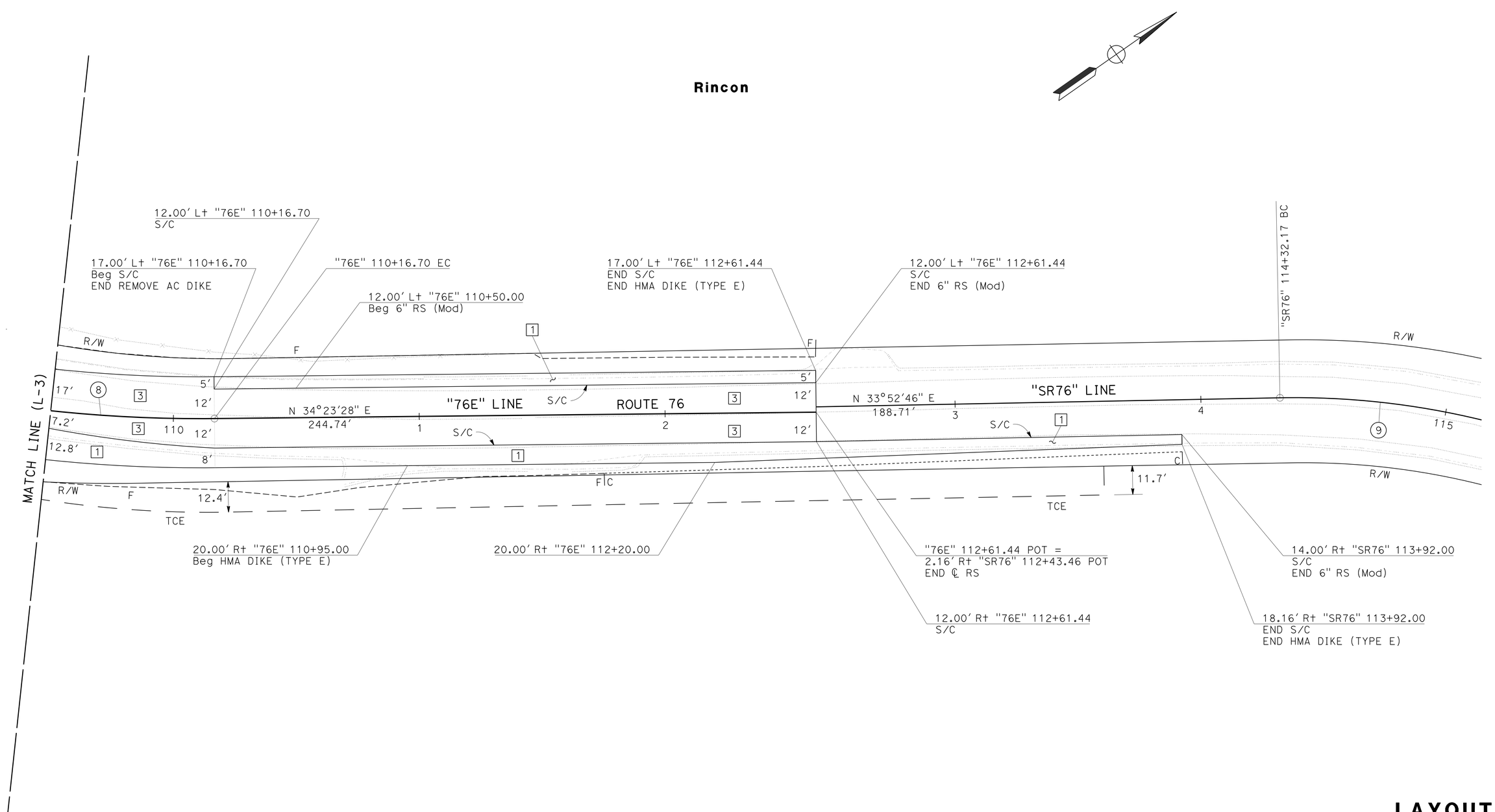

SCALE: 1" = 20′

LAYOUT

L-4

STATE OF CALIFORNIA - DEPARTMENT OF TRANSPORTATION

Caltrans

TRAFFIC PROJECT DEVELOPMENT

FUNCTIONAL SUPERVISOR: JOSE LUIS ROBLES

CALCULATED-DESIGNED BY: WAYNE NGUYEN

CHECKED BY: WENDY M. DANDENEAU

REVISED BY

DATE REVISED

LAST REVISION 09-26-16

DATE PLOTTED => 30-SEP-2016
TIME PLOTTED => 13:44

Dist	COUNTY	ROUTE	POST MILES TOTAL PROJECT	SHEET No.	TOTAL SHEETS
11	SD	76	32.6/33.3	13	269

REGISTERED CIVIL ENGINEER 09-20-16 DATE

09-26-16
PLANS APPROVAL DATE

REGISTERED PROFESSIONAL ENGINEER WENDY M. DANDENEAU No. C76330 Exp. 12/31/16 CIVIL STATE OF CALIFORNIA

THE STATE OF CALIFORNIA OR ITS OFFICERS OR AGENTS SHALL NOT BE RESPONSIBLE FOR THE ACCURACY OR COMPLETENESS OF SCANNED COPIES OF THIS PLAN SHEET.

NOTE:

FOR ACCURATE RIGHT OF WAY DATA, CONTACT RIGHT OF WAY ENGINEERING AT THE DISTRICT OFFICE.

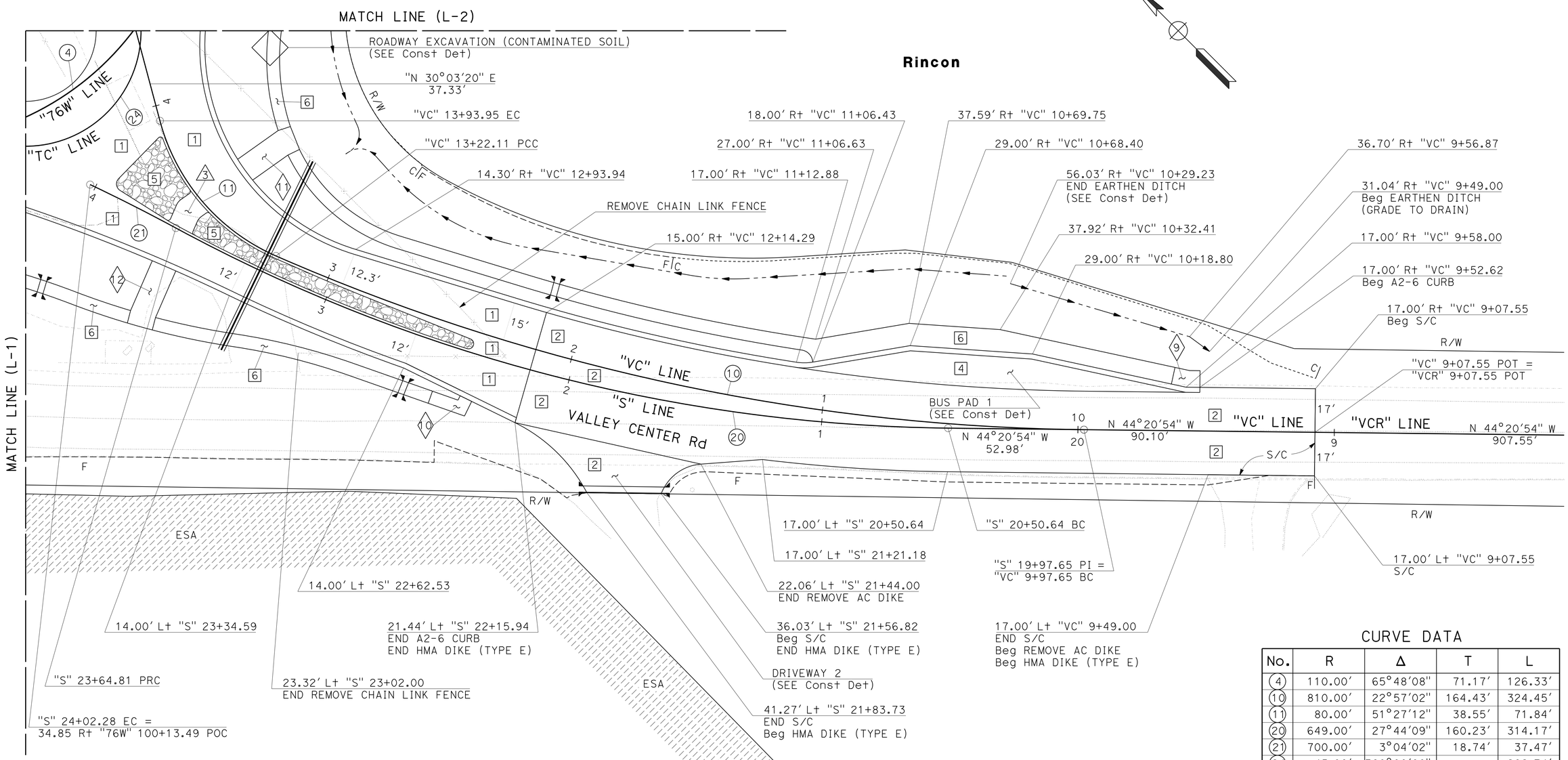

CURVE DATA

No.	R	Δ	T	L
4	110.00'	65°48'08"	71.17'	126.33'
10	810.00'	22°57'02"	164.43'	324.45'
11	80.00'	51°27'12"	38.55'	71.84'
20	649.00'	27°44'09"	160.23'	314.17'
21	700.00'	3°04'02"	18.74'	37.47'
24	45.00'	360°00'00"	-	282.74'

LAYOUT

SCALE: 1" = 20'

L-5

STATE OF CALIFORNIA - DEPARTMENT OF TRANSPORTATION
TRAFFIC PROJECT DEVELOPMENT
Caltrans

FUNCTIONAL SUPERVISOR: JOSE LUIS ROBLES
CALCULATED-DESIGNED BY: WAYNE NGUYEN
CHECKED BY: WENDY M. DANDENEAU
REVISED BY
DATE REVISED

LAST REVISION 09-26-16
DATE PLOTTED => 30-SEP-2016
TIME PLOTTED => 13:44

Dist	COUNTY	ROUTE	POST MILES TOTAL PROJECT	SHEET No.	TOTAL SHEETS
11	SD	76	32.6/33.3	14	269

REGISTERED CIVIL ENGINEER 09-20-16 DATE

09-26-16
PLANS APPROVAL DATE

REGISTERED PROFESSIONAL ENGINEER WENDY M. DANDENEAU No. C76330 Exp. 12/31/16 CIVIL STATE OF CALIFORNIA

THE STATE OF CALIFORNIA OR ITS OFFICERS OR AGENTS SHALL NOT BE RESPONSIBLE FOR THE ACCURACY OR COMPLETENESS OF SCANNED COPIES OF THIS PLAN SHEET.

NOTE:

FOR ACCURATE RIGHT OF WAY DATA, CONTACT RIGHT OF WAY ENGINEERING AT THE DISTRICT OFFICE.

CURVE DATA

No.	R	Δ	T	L
12	70.00′	50°02′21"	32.67′	61.13′
13	65.00′	38°12′25"	22.51′	43.34′
14	500.00′	5°04′13"	22.14′	44.25′
15	150.00′	43°42′33"	60.16′	114.43′
22	90.00′	19°00′31"	15.07′	29.86′
23	65.00′	66°19′34"	42.47′	75.24′
24	45.00′	360°00′00"	-	282.74′

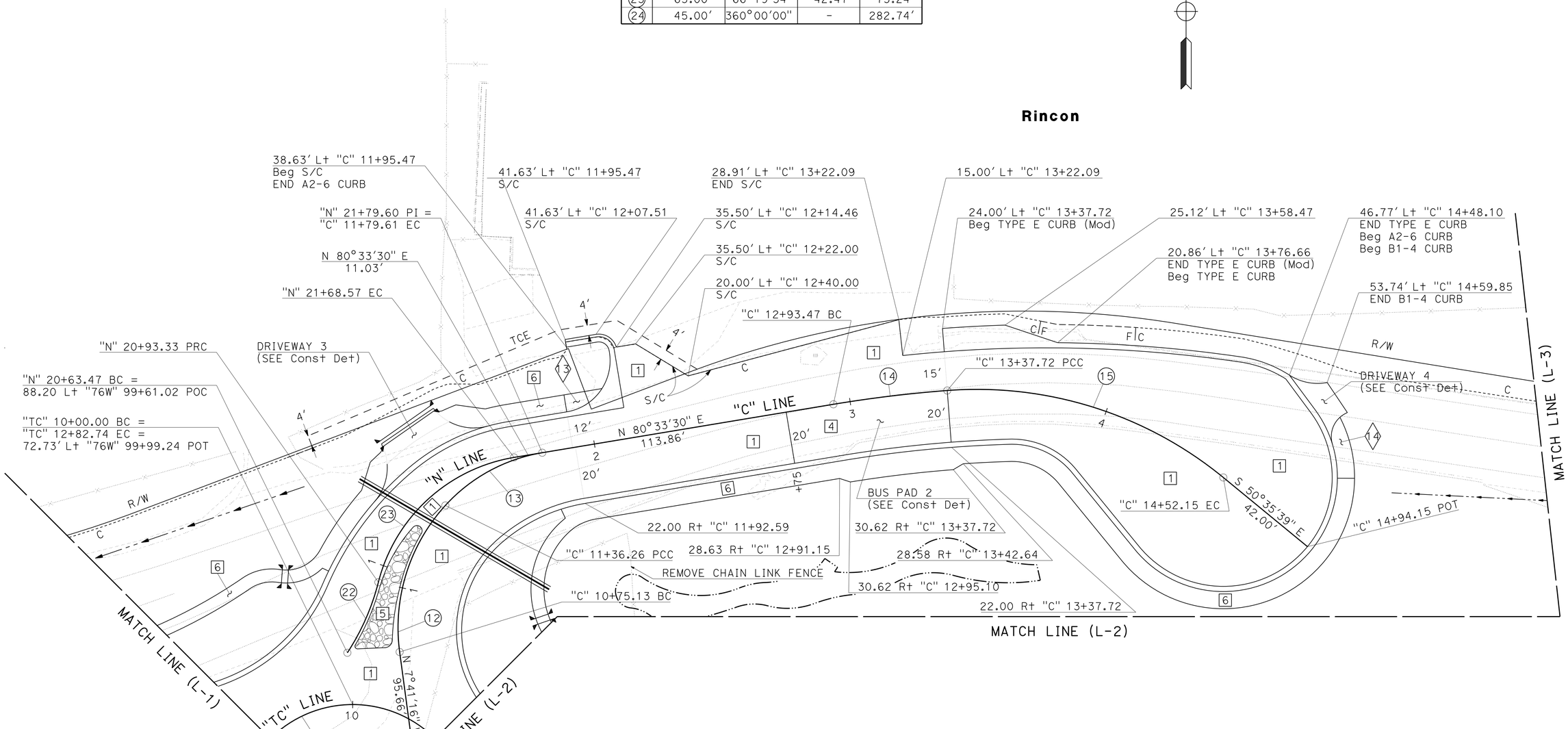

SCALE: 1" = 20′

LAYOUT

L-6

STATE OF CALIFORNIA - DEPARTMENT OF TRANSPORTATION
Caltrans
TRAFFIC PROJECT DEVELOPMENT

FUNCTIONAL SUPERVISOR: JOSE LUIS ROBLES
CALCULATED-DESIGNED BY: WAYNE NGUYEN
CHECKED BY: WENDY M. DANDENEAU
REVISED BY
DATE REVISED

LAST REVISION 09-26-16
DATE PLOTTED => 30-SEP-2016
TIME PLOTTED => 13:44

Dist	COUNTY	ROUTE	POST MILES TOTAL PROJECT	SHEET No.	TOTAL SHEETS
11	SD	76	32.6/33.3	15	269

REGISTERED CIVIL ENGINEER 09-20-16 DATE

09-26-16
PLANS APPROVAL DATE

REGISTERED PROFESSIONAL ENGINEER WENDY M. DANDENEAU No. C76330 Exp. 12/31/16 CIVIL STATE OF CALIFORNIA

THE STATE OF CALIFORNIA OR ITS OFFICERS OR AGENTS SHALL NOT BE RESPONSIBLE FOR THE ACCURACY OR COMPLETENESS OF SCANNED COPIES OF THIS PLAN SHEET.

NOTE:

ALL EXCAVATION AND EMBANKMENT QUANTITIES FOR CONSTRUCTION DETAILS ARE INCLUDED IN THE EARTHWORK TABLE UNDER THE SUMMARY OF QUANTITIES SHEETS.

ABBREVIATION:

TW = TRAVELED WAY

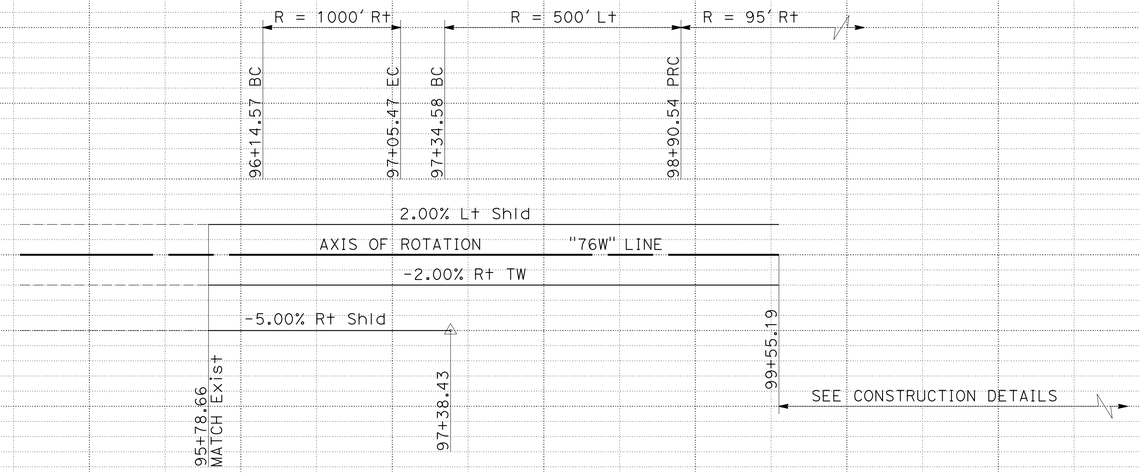

SUPERELEVATION DIAGRAM

PROFILE

ROUTE 76

"76W" LINE

PROFILE AND SUPERELEVATION DIAGRAM

SCALE: 1" = 50' Horiz
1" = 10' Vert

PS-1

STATION		94	95	96	97	98	99	100	101	TOTAL
CY	Exc		221					SEE NOTE		
	Emb		631					SEE NOTE		

STATE OF CALIFORNIA - DEPARTMENT OF TRANSPORTATION
Caltrans
TRAFFIC PROJECT DEVELOPMENT

FUNCTIONAL SUPERVISOR: JOSE LUIS ROBLES
CALCULATED-DESIGNED BY: WAYNE NGUYEN
CHECKED BY: WENDY M. DANDENEAU
REVISED BY
DATE REVISED

LAST REVISION 09-26-16
DATE PLOTTED => 30-SEP-2016
TIME PLOTTED => 13:44

Dist	COUNTY	ROUTE	POST MILES TOTAL PROJECT	SHEET No.	TOTAL SHEETS
11	SD	76	32.6/33.3	16	269

REGISTERED CIVIL ENGINEER 09-20-16 DATE

09-26-16
PLANS APPROVAL DATE

REGISTERED PROFESSIONAL ENGINEER WENDY M. DANDENEAU No. C76330 Exp. 12/31/16 CIVIL STATE OF CALIFORNIA

THE STATE OF CALIFORNIA OR ITS OFFICERS OR AGENTS SHALL NOT BE RESPONSIBLE FOR THE ACCURACY OR COMPLETENESS OF SCANNED COPIES OF THIS PLAN SHEET.

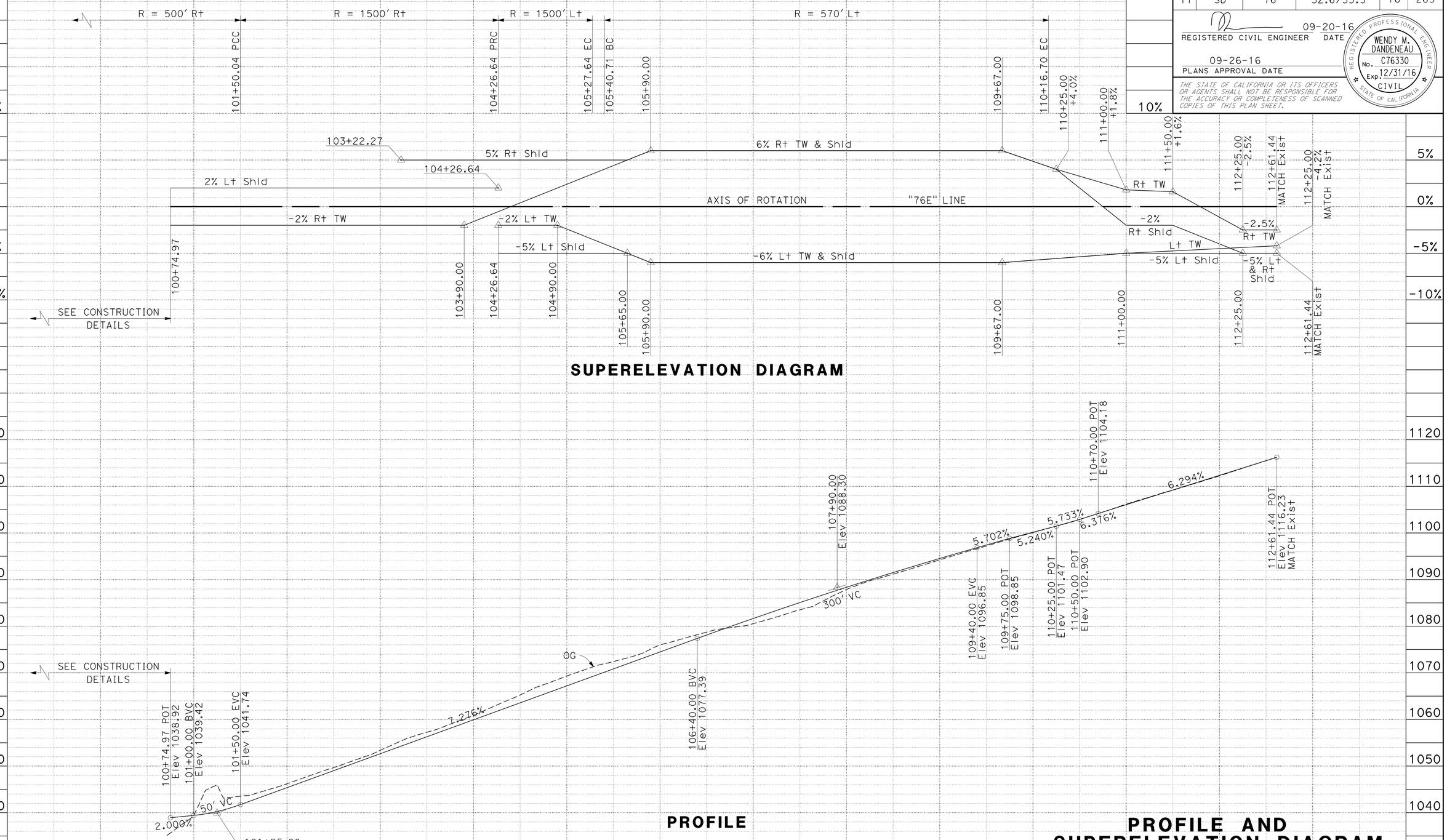

STATION		100	101	102	103	104	105	106	107	108	109	110	111	112	113	TOTAL
CY	Exc	SEE NOTE	3,510													
	Emb	SEE NOTE	590													

STATE OF CALIFORNIA - DEPARTMENT OF TRANSPORTATION
Caltrans
TRAFFIC PROJECT DEVELOPMENT

FUNCTIONAL SUPERVISOR: JOSE LUIS ROBLES
CALCULATED-DESIGNED BY: WAYNE NGUYEN
CHECKED BY: WENDY M. DANDENEAU
REVISED BY
DATE REVISED

LAST REVISION 09-26-16
DATE PLOTTED => 30-SEP-2016
TIME PLOTTED => 13:44

Dist	COUNTY	ROUTE	POST MILES TOTAL PROJECT	SHEET No.	TOTAL SHEETS
11	SD	76	32.6/33.3	17	269

REGISTERED CIVIL ENGINEER 09-20-16 DATE

09-26-16
PLANS APPROVAL DATE

REGISTERED PROFESSIONAL ENGINEER WENDY M. DANDENEAU No. C76330 Exp. 12/31/16 CIVIL STATE OF CALIFORNIA

THE STATE OF CALIFORNIA OR ITS OFFICERS OR AGENTS SHALL NOT BE RESPONSIBLE FOR THE ACCURACY OR COMPLETENESS OF SCANNED COPIES OF THIS PLAN SHEET.

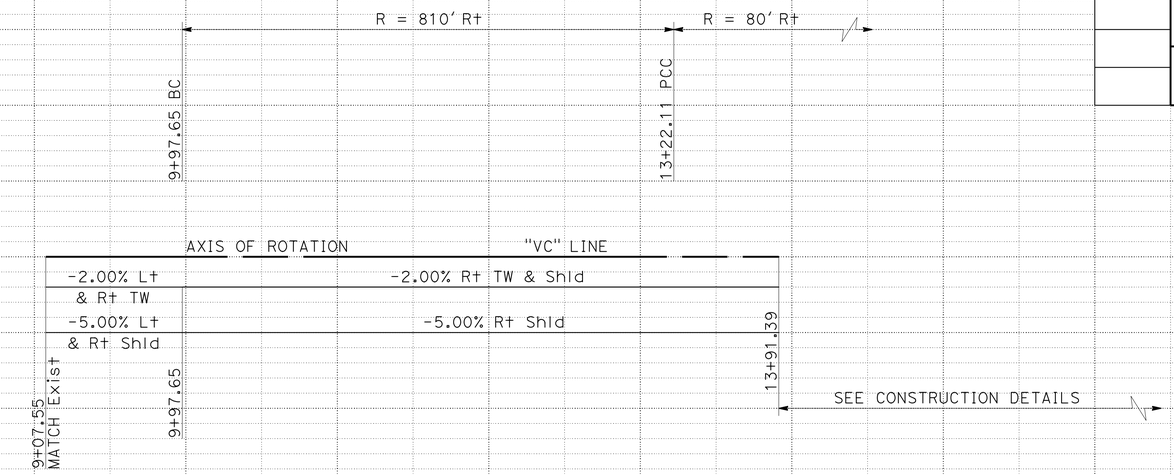

SUPERELEVATION DIAGRAM

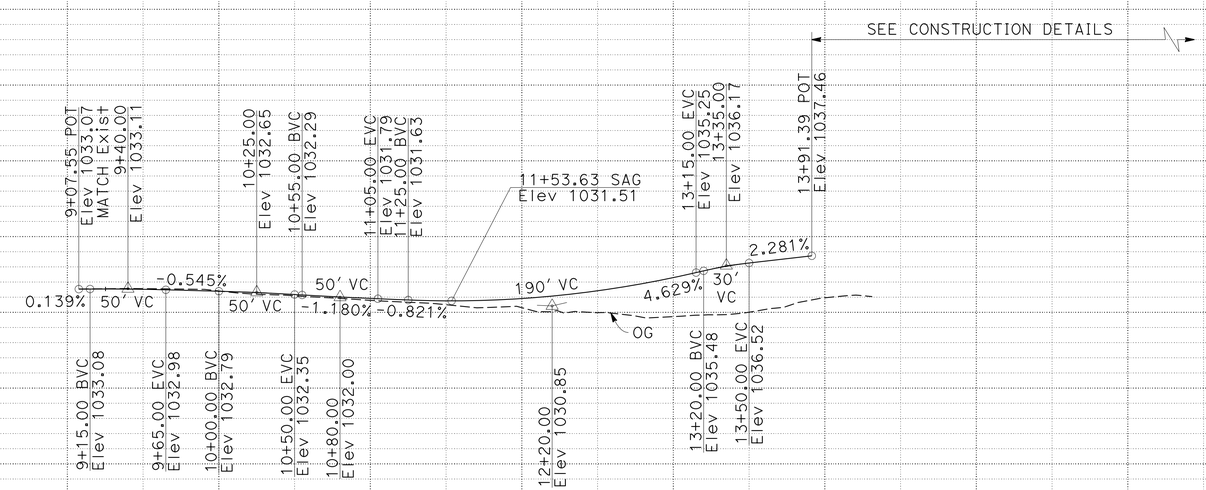

PROFILE

VALLEY CENTER ROAD

"VC" LINE

PROFILE AND SUPERELEVATION DIAGRAM

SCALE: 1" = 50' Horiz
1" = 10' Vert

PS-3

STATION		9	10	11	12	13	14	TOTAL
CY	Exc	710						SEE NOTE
	Emb	490						SEE NOTE

REVISED BY | DATE REVISED | WAYNE NGUYEN | WENDY M. DANDENEAU | CALCULATED-DESIGNED BY | CHECKED BY | FUNCTIONAL SUPERVISOR | JOSE LUIS ROBLES

STATE OF CALIFORNIA - DEPARTMENT OF TRANSPORTATION
Caltrans
TRAFFIC PROJECT DEVELOPMENT

LAST REVISION 09-26-16 | DATE PLOTTED => 30-SEP-2016 | TIME PLOTTED => 13:44

Dist	COUNTY	ROUTE	POST MILES TOTAL PROJECT	SHEET No.	TOTAL SHEETS
11	SD	76	32.6/33.3	18	269

REGISTERED CIVIL ENGINEER DATE 09-20-16

PLANS APPROVAL DATE 09-26-16

REGISTERED PROFESSIONAL ENGINEER WENDY M. DANDENEAU No. C76330 Exp. 12/31/16 CIVIL STATE OF CALIFORNIA

THE STATE OF CALIFORNIA OR ITS OFFICERS OR AGENTS SHALL NOT BE RESPONSIBLE FOR THE ACCURACY OR COMPLETENESS OF SCANNED COPIES OF THIS PLAN SHEET.

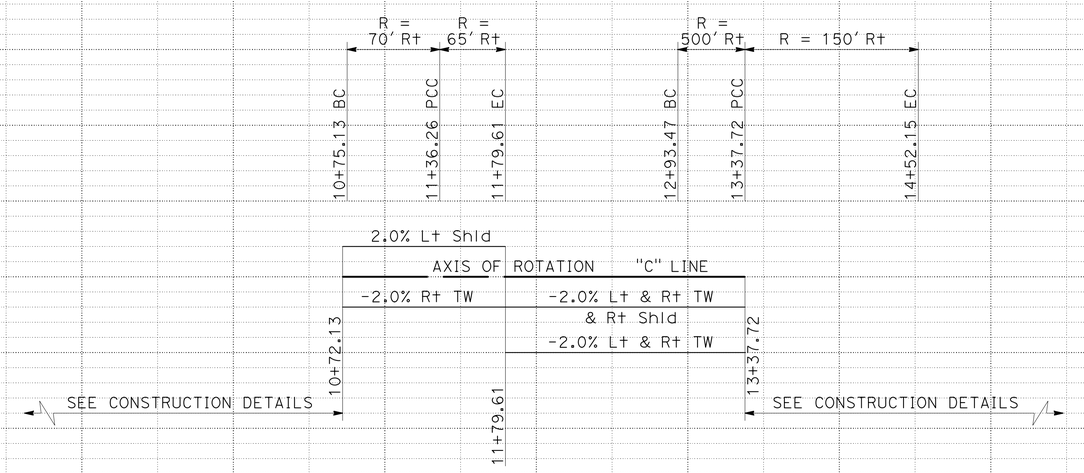

SUPERELEVATION DIAGRAM

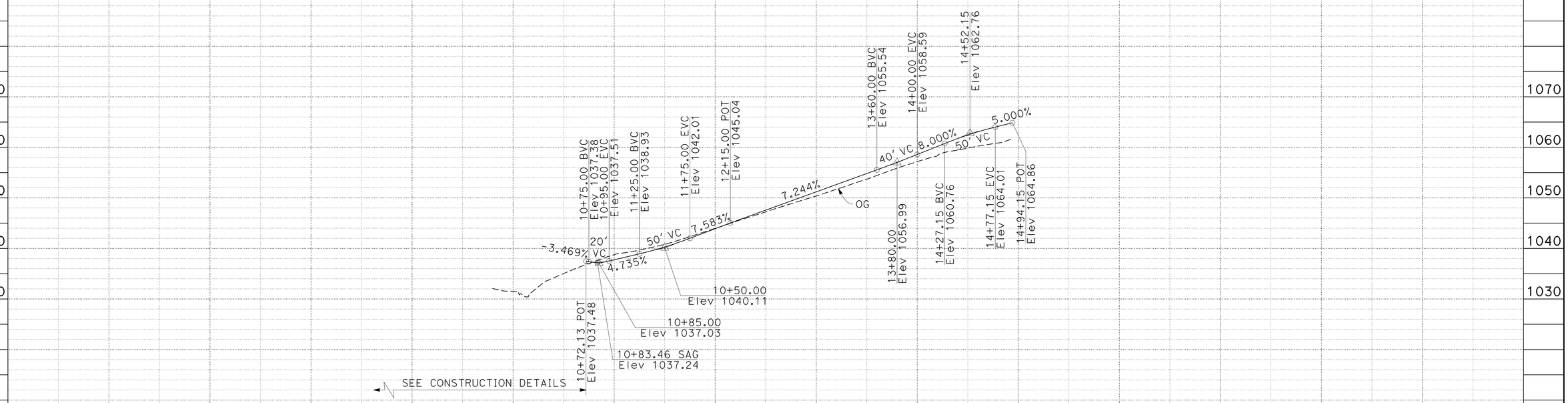

PROFILE

VALLEY CENTER ROAD

"C" LINE

PROFILE AND SUPERELEVATION DIAGRAM

SCALE: 1" = 50' Horiz
1" = 10' Vert

PS-4

STATION		10	11	12	13	14	15	TOTAL
CY	Exc	SEE NOTE	532					
	Emb	SEE NOTE	70					

STATE OF CALIFORNIA - DEPARTMENT OF TRANSPORTATION

Caltrans

TRAFFIC PROJECT DEVELOPMENT

FUNCTIONAL SUPERVISOR: JOSE LUIS ROBLES

CALCULATED-DESIGNED BY: WAYNE NGUYEN

CHECKED BY: WENDY M. DANDENEAU

REVISED BY / DATE REVISED

LAST REVISION 09-26-16 | DATE PLOTTED => 30-SEP-2016 | TIME PLOTTED => 13:44

Dist	COUNTY	ROUTE	POST MILES TOTAL PROJECT	SHEET No.	TOTAL SHEETS
11	SD	76	32.6/33.3	19	269

REGISTERED CIVIL ENGINEER 09-20-16 DATE

09-26-16
PLANS APPROVAL DATE

REGISTERED PROFESSIONAL ENGINEER WENDY M. DANDENEAU No. C76330 Exp. 12/31/16 CIVIL STATE OF CALIFORNIA

THE STATE OF CALIFORNIA OR ITS OFFICERS OR AGENTS SHALL NOT BE RESPONSIBLE FOR THE ACCURACY OR COMPLETENESS OF SCANNED COPIES OF THIS PLAN SHEET.

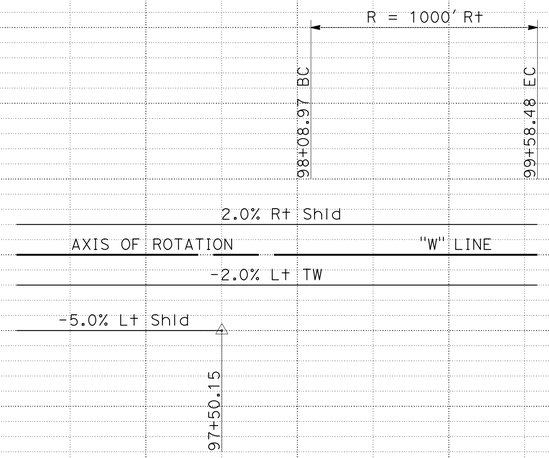

SUPERELEVATION DIAGRAM

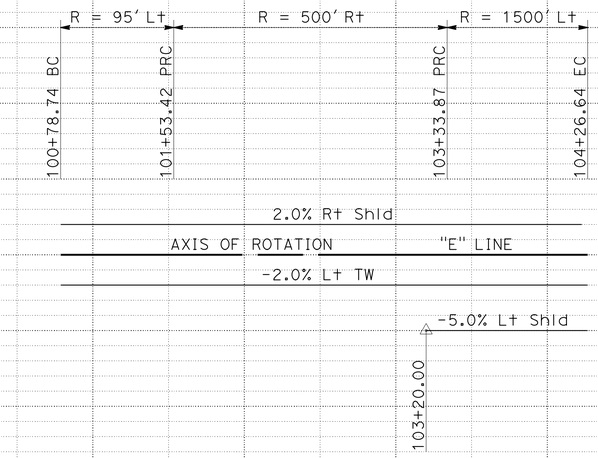

SUPERELEVATION DIAGRAM

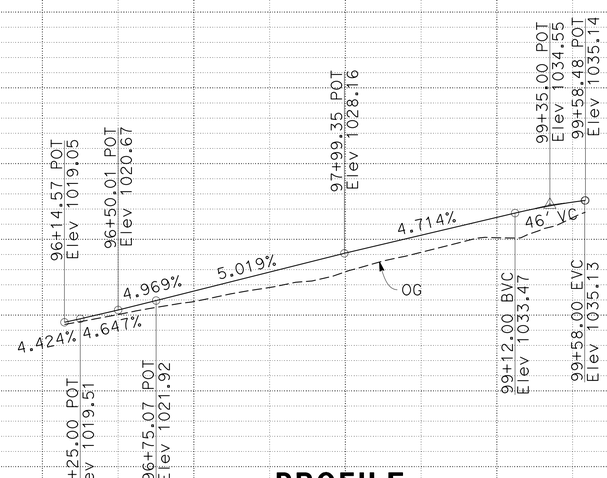

PROFILE

ROUTE 76

"W" LINE

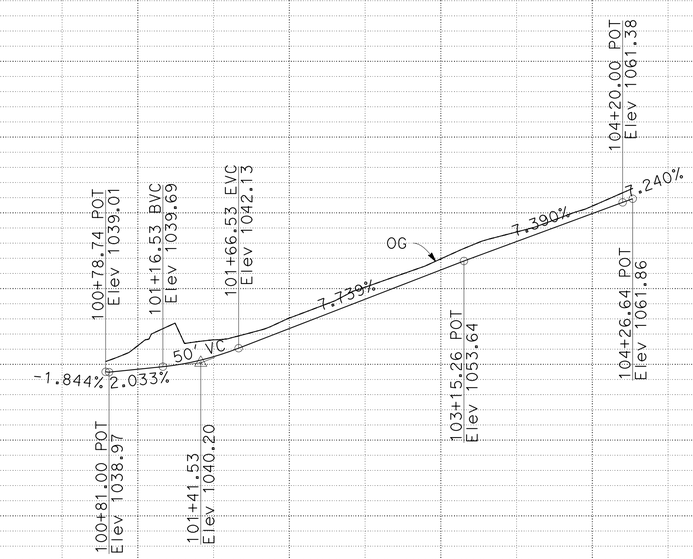

PROFILE

ROUTE 76

"E" LINE

PROFILE AND SUPERELEVATION DIAGRAM

SCALE: 1" = 50' Horiz
1" = 10' Vert

PS-5

STATION		96	97	98	99	100	101	102	103	104	TOTAL
CY	Exc	0					130				
	Emb	1,583					0				

STATE OF CALIFORNIA - DEPARTMENT OF TRANSPORTATION
Caltrans®
TRAFFIC PROJECT DEVELOPMENT

FUNCTIONAL SUPERVISOR: JOSE LUIS ROBLES
CALCULATED-DESIGNED BY: WAYNE NGUYEN
CHECKED BY: WENDY M. DANDENEAU
REVISED BY
DATE REVISED

LAST REVISION 09-26-16
DATE PLOTTED => 30-SEP-2016
TIME PLOTTED => 13:44

Dist	COUNTY	ROUTE	POST MILES TOTAL PROJECT	SHEET No.	TOTAL SHEETS
11	SD	76	32.6/33.3	20	269

REGISTERED CIVIL ENGINEER 09-20-16 DATE

09-26-16
PLANS APPROVAL DATE

REGISTERED PROFESSIONAL ENGINEER WENDY M. DANDENEAU No. C76330 Exp. 12/31/16 CIVIL STATE OF CALIFORNIA

THE STATE OF CALIFORNIA OR ITS OFFICERS OR AGENTS SHALL NOT BE RESPONSIBLE FOR THE ACCURACY OR COMPLETENESS OF SCANNED COPIES OF THIS PLAN SHEET.

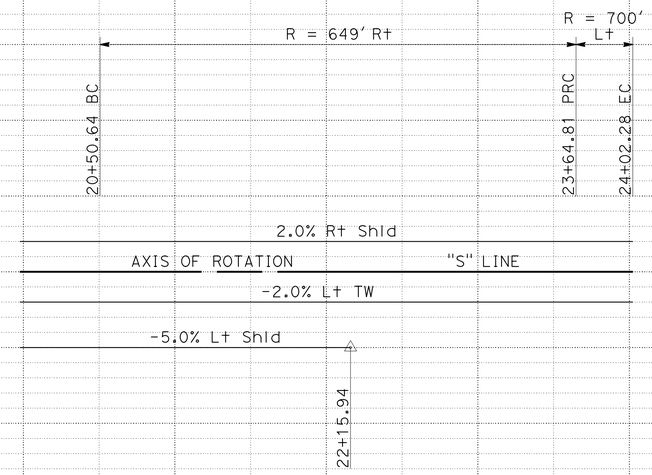

SUPERELEVATION DIAGRAM

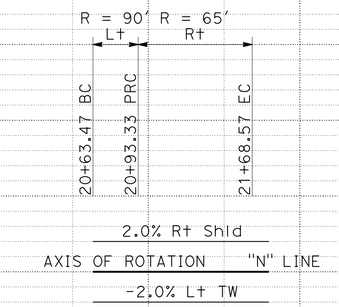

SUPERELEVATION DIAGRAM

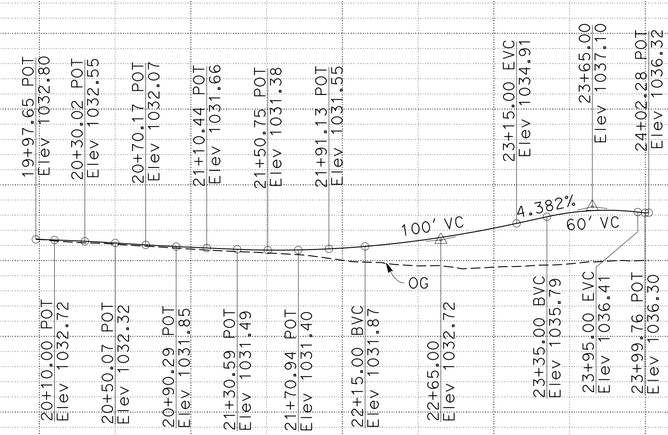

PROFILE

VALLEY CENTER ROAD

"S" LINE

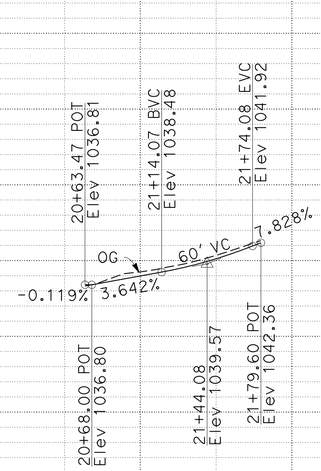

PROFILE

VALLEY CENTER ROAD

"N" LINE

PROFILE AND SUPERELEVATION DIAGRAM

SCALE: 1" = 50' Horiz
1" = 10' Vert

PS-6

STATION		20	21	22	23	24	25	20	21	22	TOTAL
CY	Exc	0,000						0,000			
	Emb	0,000						0,000			

STATE OF CALIFORNIA - DEPARTMENT OF TRANSPORTATION
Caltrans
TRAFFIC PROJECT DEVELOPMENT

FUNCTIONAL SUPERVISOR: JOSE LUIS ROBLES
CALCULATED-DESIGNED BY: WENDY M. DANDENEAU
CHECKED BY: WAYNE NGUYEN
REVISED BY
DATE REVISED

LAST REVISION 09-26-16 DATE PLOTTED => 30-SEP-2016 TIME PLOTTED => 13:44

Dist	COUNTY	ROUTE	POST MILES TOTAL PROJECT	SHEET No.	TOTAL SHEETS
11	SD	76	32.6/33.3	21	269

REGISTERED CIVIL ENGINEER 09-20-16 DATE

09-26-16
PLANS APPROVAL DATE

REGISTERED PROFESSIONAL ENGINEER WENDY M. DANDENEAU No. C76330 Exp. 12/31/16 CIVIL STATE OF CALIFORNIA

THE STATE OF CALIFORNIA OR ITS OFFICERS OR AGENTS SHALL NOT BE RESPONSIBLE FOR THE ACCURACY OR COMPLETENESS OF SCANNED COPIES OF THIS PLAN SHEET.

ABBREVIATIONS:

FSW - FACE OF SIDEWALK
BSW - BACK OF SIDEWALK
BOC - BACK OF CURB
TR - TOP OF RAMP
S/C - SAWCUT

LEGEND:

DETECTABLE WARNING SURFACE

[#] STRUCTURAL SECTION (SEE TYPICAL CROSS SECTIONS)

(#) CURVE DATA

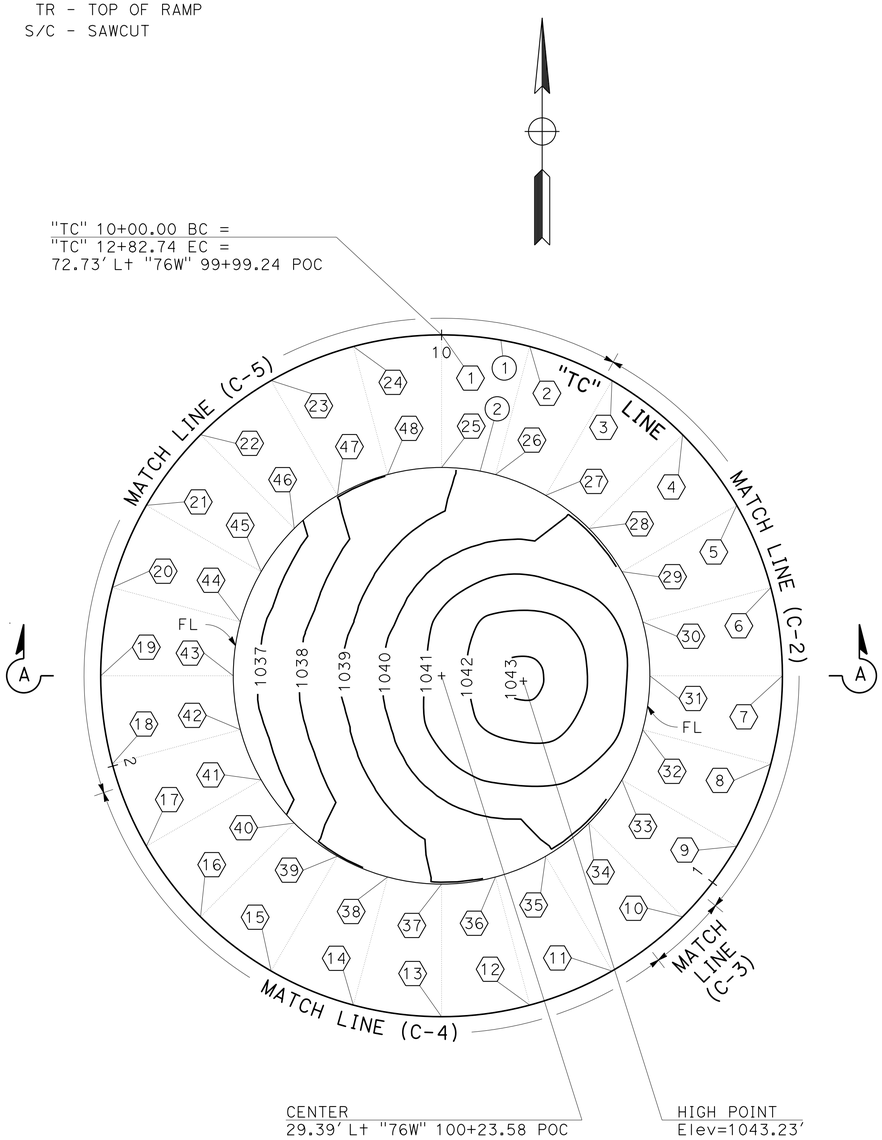

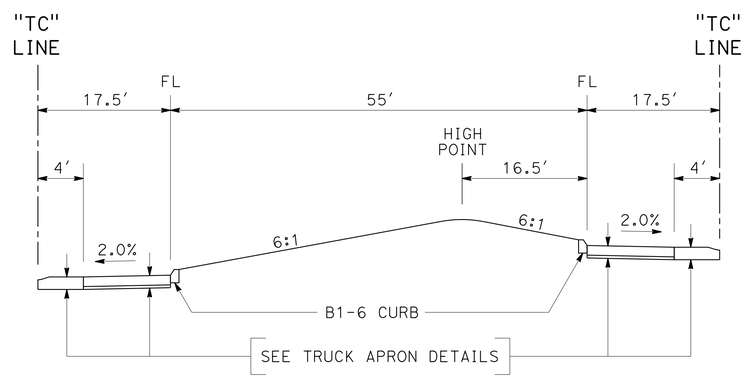

SECTION A-A

NO SCALE

CURVE DATA

No.	R	Δ	T	L
1	45.00'	360°00'00"	-	282.74'
2	27.50'	360°00'00"	-	172.79'

SPOT ELEVATIONS

No.	LINE	STATION	OFFSET	Elev	REMARK
1	"TC"	10+00.00	-	1037.27'	BC/EC
2	"TC"	10+11.78	-	1037.82'	Δ/24
3	"TC"	10+23.56	-	1038.37'	2Δ/24
4	"TC"	10+35.34	-	1038.83'	3Δ/24
5	"TC"	10+47.12	-	1039.16'	4Δ/24
6	"TC"	10+58.90	-	1039.38'	5Δ/24
7	"TC"	10+70.69	-	1039.44'	6Δ/24
8	"TC"	10+82.47	-	1039.42'	7Δ/24
9	"TC"	10+94.25	-	1039.25'	8Δ/24
10	"TC"	11+06.03	-	1038.96'	9Δ/24
11	"TC"	11+17.81	-	1038.55'	10Δ/24
12	"TC"	11+29.59	-	1038.04'	11Δ/24
13	"TC"	11+41.37	-	1037.52'	12Δ/24
14	"TC"	11+53.15	-	1036.99'	13Δ/24
15	"TC"	11+64.93	-	1036.44'	14Δ/24
16	"TC"	11+76.71	-	1035.97'	15Δ/24
17	"TC"	11+88.50	-	1035.63'	16Δ/24
18	"TC"	12+00.28	-	1035.42'	17Δ/24
19	"TC"	12+12.06	-	1035.33'	18Δ/24
20	"TC"	12+23.84	-	1035.36'	19Δ/24
21	"TC"	12+35.62	-	1035.53'	20Δ/24
22	"TC"	12+47.40	-	1035.82'	21Δ/24
23	"TC"	12+59.18	-	1036.23'	22Δ/24
24	"TC"	12+70.96	-	1036.75'	23Δ/24
25	"TC"	10+00.00	17.50' Rt	1037.85'	BC/EC
26	"TC"	10+11.78	17.50' Rt	1038.40'	Δ/24
27	"TC"	10+23.56	17.50' Rt	1038.95'	2Δ/24
28	"TC"	10+35.34	17.50' Rt	1039.41'	3Δ/24
29	"TC"	10+47.12	17.50' Rt	1039.74'	4Δ/24
30	"TC"	10+58.90	17.50' Rt	1039.95'	5Δ/24
31	"TC"	10+70.69	17.50' Rt	1040.02'	6Δ/24
32	"TC"	10+82.47	17.50' Rt	1040.00'	7Δ/24
33	"TC"	10+94.25	17.50' Rt	1039.83'	8Δ/24
34	"TC"	11+06.03	17.50' Rt	1039.54'	9Δ/24
35	"TC"	11+17.81	17.50' Rt	1039.12'	10Δ/24
36	"TC"	11+29.59	17.50' Rt	1038.61'	11Δ/24
37	"TC"	11+41.37	17.50' Rt	1038.10'	12Δ/24
38	"TC"	11+53.15	17.50' Rt	1037.56'	13Δ/24
39	"TC"	11+64.93	17.50' Rt	1037.02'	14Δ/24
40	"TC"	11+76.71	17.50' Rt	1036.55'	15Δ/24
41	"TC"	11+88.50	17.50' Rt	1036.21'	16Δ/24
42	"TC"	12+00.28	17.50' Rt	1035.99'	17Δ/24
43	"TC"	12+12.06	17.50' Rt	1035.91'	18Δ/24
44	"TC"	12+23.84	17.50' Rt	1035.94'	19Δ/24
45	"TC"	12+35.62	17.50' Rt	1036.11'	20Δ/24
46	"TC"	12+47.40	17.50' Rt	1036.39'	21Δ/24
47	"TC"	12+59.18	17.50' Rt	1036.81'	22Δ/24
48	"TC"	12+70.96	17.50' Rt	1037.33'	23Δ/24

ROUNDABOUT CIRCLE

"TC" LINE

CONSTRUCTION DETAILS

SCALE: 1" = 10'

C-1

STATE OF CALIFORNIA - DEPARTMENT OF TRANSPORTATION
Caltrans
TRAFFIC PROJECT DEVELOPMENT

FUNCTIONAL SUPERVISOR: JOSE LUIS ROBLES
CALCULATED-DESIGNED BY: WAYNE NGUYEN
CHECKED BY: WENDY M. DANDENEAU
REVISED BY
DATE REVISED

LAST REVISION 09-26-16
DATE PLOTTED => 30-SEP-2016
TIME PLOTTED => 13:44

Dist	COUNTY	ROUTE	POST MILES TOTAL PROJECT	SHEET No.	TOTAL SHEETS
11	SD	76	32.6/33.3	22	269

REGISTERED CIVIL ENGINEER 09-20-16 DATE

09-26-16
PLANS APPROVAL DATE

REGISTERED PROFESSIONAL ENGINEER WENDY M. DANDENEAU No. C76330 Exp. 12/31/16 CIVIL STATE OF CALIFORNIA

THE STATE OF CALIFORNIA OR ITS OFFICERS OR AGENTS SHALL NOT BE RESPONSIBLE FOR THE ACCURACY OR COMPLETENESS OF SCANNED COPIES OF THIS PLAN SHEET.

CURVE DATA

No.	R	Δ	T	L
1	86.00′	49°11′10"	39.36′	73.83′
2	45.00′	109°21′35"	63.51′	85.89′
3	65.00′	31°46′32"	18.50′	36.05′
4	35.00′	26°19′25"	8.18′	16.08′
5	20.00′	66°25′52"	13.10′	23.19′
6	40.00′	30°38′35"	10.96′	21.39′
7	35.00′	99°19′30"	41.22′	60.67′
8	29.99′	28°57′23"	7.74′	15.16′

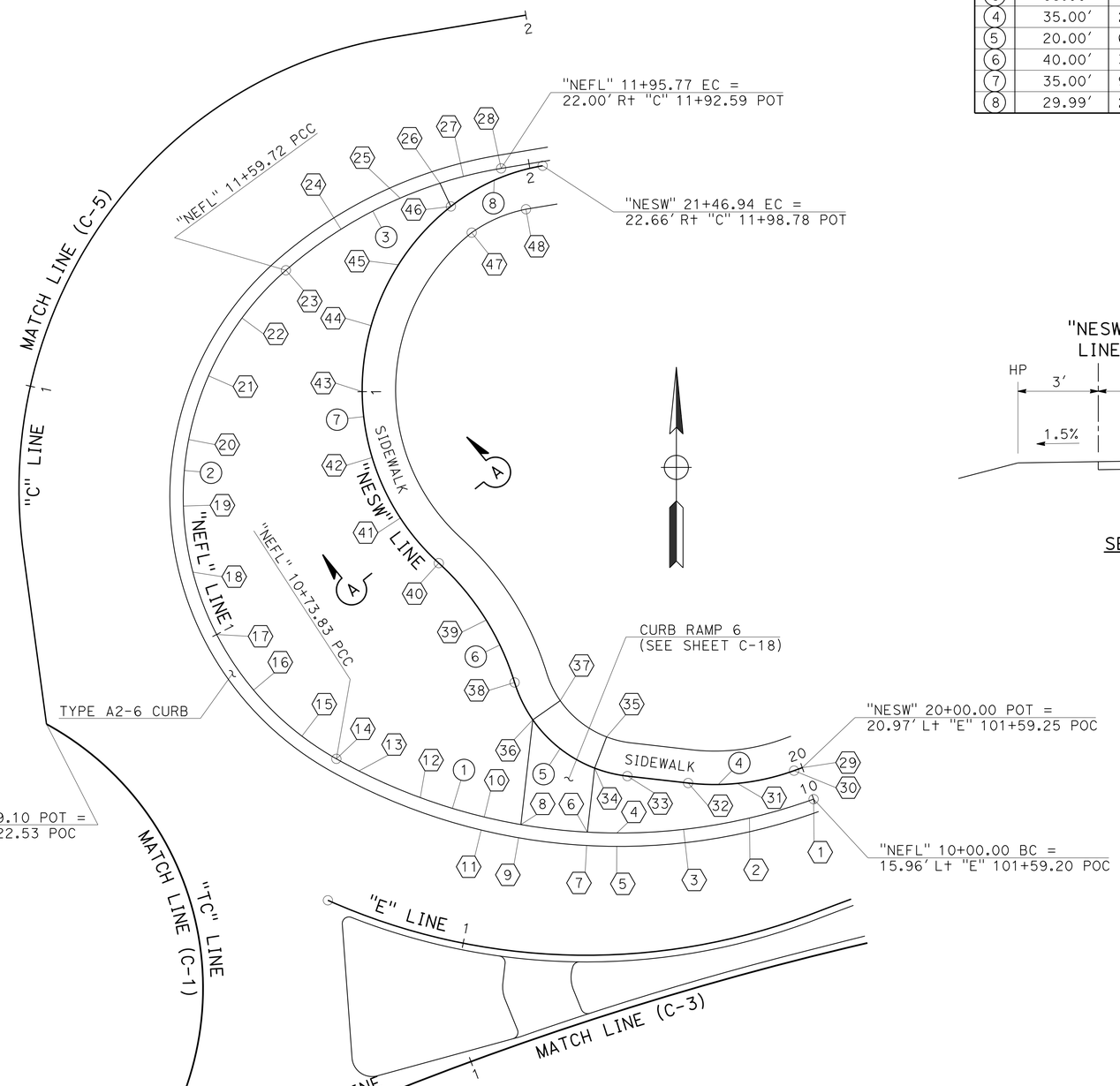

CURB RETURNS AND SIDEWALK

"C", "TC", & "E" LINE

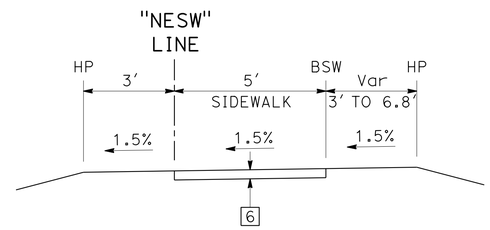

SECTION A-A
NO SCALE

SPOT ELEVATIONS

No.	LINE	STATION	OFFSET	Elev	REMARK
1	"NEFL"	10+00.00	-	1041.15′	FL/PRC
2	"NEFL"	10+10.00	-	1040.46′	FL
3	"NEFL"	10+20.00	-	1039.85′	FL
4	"NEFL"	10+30.00	-	1039.39′	FL
5	"NEFL"	10+30.00	2.00′ L+	1039.56′	LIP
6	"NEFL"	10+34.40	-	1039.32′	FL
7	"NEFL"	10+34.40	2.00′ L+	1039.41′	LIP
8	"NEFL"	10+44.41	-	1039.09′	FL
9	"NEFL"	10+44.41	2.00′ L+	1039.14′	LIP
10	"NEFL"	10+50.00	-	1038.84′	FL
11	"NEFL"	10+50.00	2.00′ L+	1039.00′	LIP
12	"NEFL"	10+60.00	-	1038.67′	FL
13	"NEFL"	10+70.00	-	1038.55′	FL
14	"NEFL"	10+73.83	-	1038.50′	FL/PCC
15	"NEFL"	10+80.00	-	1038.41′	FL
16	"NEFL"	10+90.00	-	1038.24′	FL
17	"NEFL"	11+00.00	-	1037.99′	FL
18	"NEFL"	11+10.00	-	1037.77′	FL
19	"NEFL"	11+20.00	-	1037.58′	FL
20	"NEFL"	11+30.00	-	1037.52′	FL
21	"NEFL"	11+40.00	-	1037.80′	FL
22	"NEFL"	11+50.00	-	1038.42′	FL
23	"NEFL"	11+59.72	-	1039.34′	FSW/PCC
24	"NEFL"	11+70.00	-	1040.44′	FSW
25	"NEFL"	11+80.00	-	1041.43′	FSW
26	"NEFL"	11+86.35	-	1042.00′	FL
27	"NEFL"	11+90.00	-	1042.31′	FL
28	"NEFL"	11+95.77	-	1042.79′	FL/EC
29	"NESW"	20+00.00	-	1041.70′	FL/PRC
30	"NESW"	20+01.31	-	1041.60′	FSW/BC
31	"NESW"	20+10.00	-	1040.97′	FSW
32	"NESW"	20+17.39	-	1040.52′	FSW/EC
33	"NESW"	20+26.53	-	1040.10′	FSW/BC
34	"NESW"	20+31.58	-	1039.96′	FSW
35	"NESW"	20+31.58	5.00′ R+	1040.04′	BSW
36	"NESW"	20+43.48	-	1039.79′	FSW
37	"NESW"	20+43.48	5.00′ R+	1039.86′	BSW
38	"NESW"	20+49.72	-	1039.99′	FSW/PRC
39	"NESW"	20+60.00	-	1040.41′	FSW
40	"NESW"	20+71.11	-	1040.90′	FSW/PRC
41	"NESW"	20+80.00	-	1041.29′	FSW
42	"NESW"	20+90.00	-	1041.73′	FSW
43	"NESW"	21+00.00	-	1042.13′	FSW
44	"NESW"	21+10.00	-	1042.40′	FSW
45	"NESW"	21+20.00	-	1042.55′	FSW
46	"NESW"	21+31.79	-	1042.82′	FSW
47	"NESW"	21+31.79	5.00′ R+	1042.90′	BSW/BC
48	"NESW"	21+42.57	5.74′ R+	1043.60′	BSW/EC

CONSTRUCTION DETAILS

SCALE: 1" = 10′

C-2

STATE OF CALIFORNIA - DEPARTMENT OF TRANSPORTATION
Caltrans
TRAFFIC PROJECT DEVELOPMENT

FUNCTIONAL SUPERVISOR: JOSE LUIS ROBLES
CALCULATED-DESIGNED BY: WAYNE NGUYEN
CHECKED BY: WENDY M. DANDENEAU
REVISED BY
DATE REVISED

LAST REVISION 09-26-16
DATE PLOTTED => 30-SEP-2016
TIME PLOTTED => 13:44

Dist	COUNTY	ROUTE	POST MILES TOTAL PROJECT	SHEET No.	TOTAL SHEETS
11	SD	76	32.6/33.3	23	269

REGISTERED CIVIL ENGINEER DATE 09-20-16

PLANS APPROVAL DATE 09-26-16

REGISTERED PROFESSIONAL ENGINEER WENDY M. DANDENEAU No. C76330 Exp. 12/31/16 CIVIL STATE OF CALIFORNIA

THE STATE OF CALIFORNIA OR ITS OFFICERS OR AGENTS SHALL NOT BE RESPONSIBLE FOR THE ACCURACY OR COMPLETENESS OF SCANNED COPIES OF THIS PLAN SHEET.

CURVE DATA

No.	R	Δ	T	L
1	83.00′	90°38′57″	83.95′	131.32′
2	403.00′	13°45′33″	48.62′	96.78′
3	70.00′	47°15′53″	30.63′	57.74′
4	90.00′	43°17′56″	35.72′	68.01′
5	17.00′	54°52′31″	8.83′	16.28′
6	25.00′	53°08′45″	12.50′	23.19′

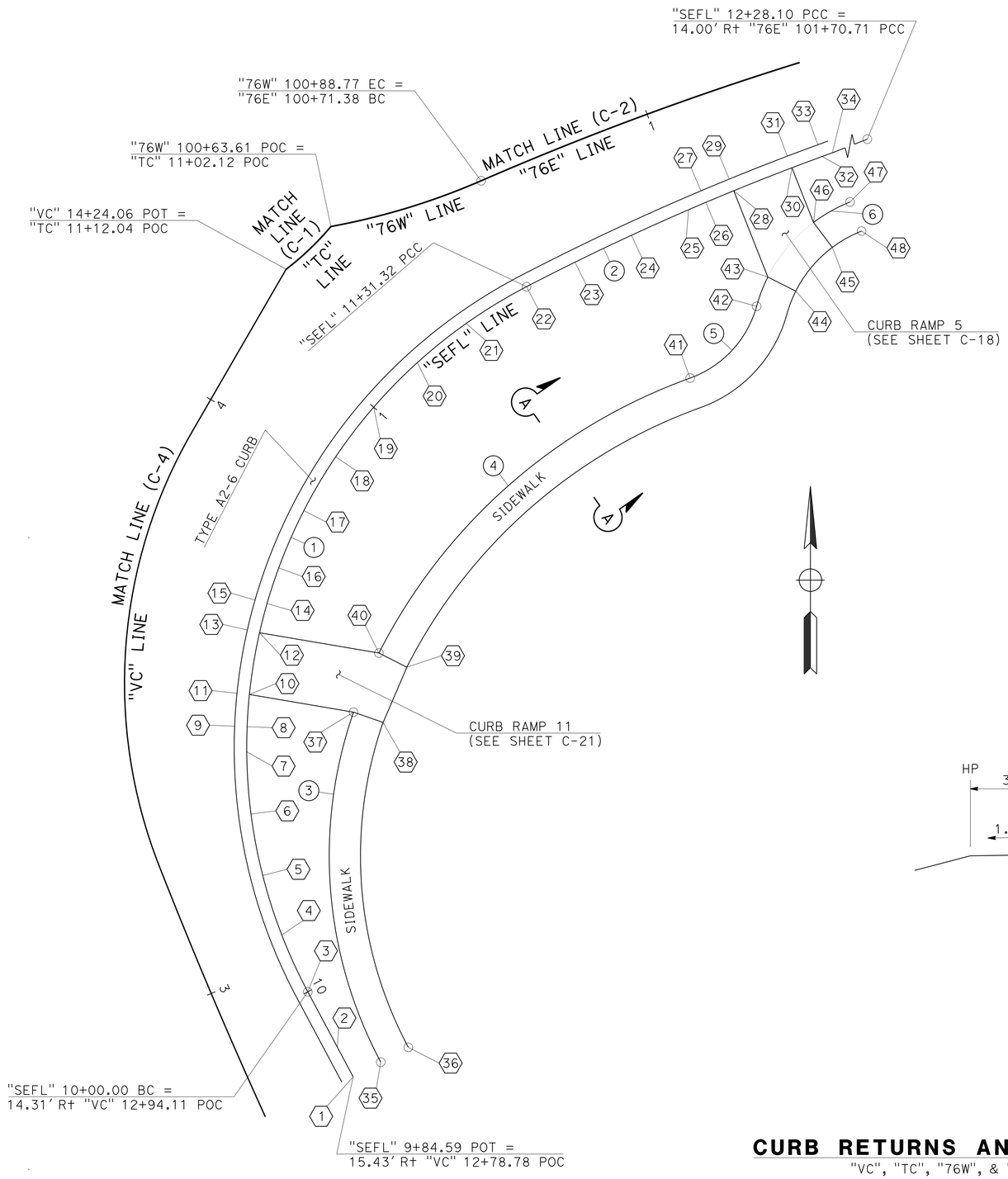

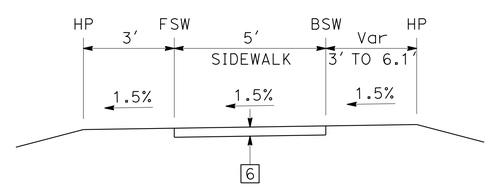

SECTION A-A
NO SCALE

SPOT ELEVATIONS

No.	LINE	STATION	OFFSET	Elev	REMARK
1	"SEFL"	9+84.59	-	1033.31′	FL
2	"SEFL"	9+90.00	-	1033.52′	FL
3	"SEFL"	10+00.00	-	1033.93′	FL/BC
4	"SEFL"	10+10.00	-	1034.36′	FL
5	"SEFL"	10+20.00	-	1034.81′	FL
6	"SEFL"	10+30.00	-	1035.26′	FL
7	"SEFL"	10+40.00	-	1035.74′	FL
8	"SEFL"	10+44.00	-	1035.94′	FL
9	"SEFL"	10+44.00	2.00′ Lt	1036.10′	LIP
10	"SEFL"	10+49.17	-	1036.27′	FL
11	"SEFL"	10+49.17	2.00′ Lt	1036.36′	LIP
12	"SEFL"	10+59.18	-	1036.75′	FL
13	"SEFL"	10+59.18	2.00′ Lt	1036.84′	LIP
14	"SEFL"	10+64.00	-	1036.89′	FL
15	"SEFL"	10+64.00	2.00′ Lt	1037.06′	LIP
16	"SEFL"	10+70.00	-	1037.14′	FL
17	"SEFL"	10+80.00	-	1037.50′	FL
18	"SEFL"	10+90.00	-	1037.79′	FL
19	"SEFL"	11+00.00	-	1038.02′	FL
20	"SEFL"	11+10.00	-	1038.21′	FL
21	"SEFL"	11+20.00	-	1038.36′	FL
22	"SEFL"	11+31.32	-	1038.52′	FL/PCC
23	"SEFL"	11+40.00	-	1038.67′	FL
24	"SEFL"	11+50.00	-	1038.85′	FL
25	"SEFL"	11+60.00	-	1039.04′	FL
26	"SEFL"	11+63.00	-	1039.11′	FL
27	"SEFL"	11+63.00	2.00′ Lt	1039.27′	LIP
28	"SEFL"	11+67.84	-	1039.31′	FL
29	"SEFL"	11+67.84	2.00′ Lt	1039.39′	LIP
30	"SEFL"	11+77.84	-	1039.66′	FL
31	"SEFL"	11+77.84	2.00′ Lt	1039.74′	LIP
32	"SEFL"	11+83.00	-	1039.81′	FL
33	"SEFL"	11+83.00	2.00′ Lt	1039.98′	LIP
34	"SEFL"	11+84.73	-	1039.89′	FL
35	"SEFL"	9+84.59	5.00′ Rt	1033.87′	FSW/BC
36	"SEFL"	9+84.59	10.00′ Rt	1033.95′	BSW/BC
37	"SEFL"	10+47.77	16.84′ Rt	1036.87′	FSW/EC
38	"SEFL"	10+46.10	21.67′ Rt	1036.94′	BSW/EC
39	"SEFL"	10+58.93	24.19′ Rt	1037.43′	BSW/BC
40	"SEFL"	10+60.55	19.33′ Rt	1037.35′	FSW/BC
41	"SEFL"	11+48.88	24.66′ Rt	1039.69′	FSW/PRC
42	"SEFL"	11+64.07	18.45′ Rt	1039.90′	FSW/PRC
43	"SEFL"	11+67.65	14.84′ Rt	1040.04′	FSW
44	"SEFL"	11+71.09	18.60′ Rt	1040.11′	BSW
45	"SEFL"	11+79.40	14.20′ Rt	1040.29′	BSW
46	"SEFL"	11+77.96	9.40′ Rt	1040.21′	FSW
47	"SEFL"	11+84.73	8.36′ Rt	1040.52′	FSW/EC
48	"SEFL"	11+84.88	13.36′ Rt	1040.62′	BSW/EC

CURB RETURNS AND SIDEWALK

"VC", "TC", "76W", & "76E" LINE

CONSTRUCTION DETAILS

SCALE: 1" = 10′

C-3

STATE OF CALIFORNIA - DEPARTMENT OF TRANSPORTATION

Caltrans

TRAFFIC PROJECT DEVELOPMENT

FUNCTIONAL SUPERVISOR: JOSE LUIS ROBLES

CALCULATED-DESIGNED BY: WAYNE NGUYEN

CHECKED BY: WENDY M. DANDENEAU

REVISED BY

DATE REVISED

LAST REVISION 09-26-16

DATE PLOTTED => 30-SEP-2016

TIME PLOTTED => 13:44

Dist	COUNTY	ROUTE	POST MILES TOTAL PROJECT	SHEET No.	TOTAL SHEETS
11	SD	76	32.6/33.3	24	269

REGISTERED CIVIL ENGINEER 09-20-16 DATE

09-26-16
PLANS APPROVAL DATE

REGISTERED PROFESSIONAL ENGINEER WENDY M. DANDENEAU No. C76330 Exp. 12/31/16 CIVIL STATE OF CALIFORNIA

THE STATE OF CALIFORNIA OR ITS OFFICERS OR AGENTS SHALL NOT BE RESPONSIBLE FOR THE ACCURACY OR COMPLETENESS OF SCANNED COPIES OF THIS PLAN SHEET.

CURVE DATA

No.	R	Δ	T	L
1	83.00′	62°41′39"	50.56′	90.82′
2	698.00′	8°20′56"	50.94′	101.71′
3	50.00′	22°23′21"	9.90′	19.54′
4	15.00′	61°10′39"	8.87′	16.02′
5	15.00′	31°43′00"	4.26′	8.30′
6	300.00′	14°00′16"	36.85′	73.33′
7	300.00′	12°21′14"	32.47′	64.68′

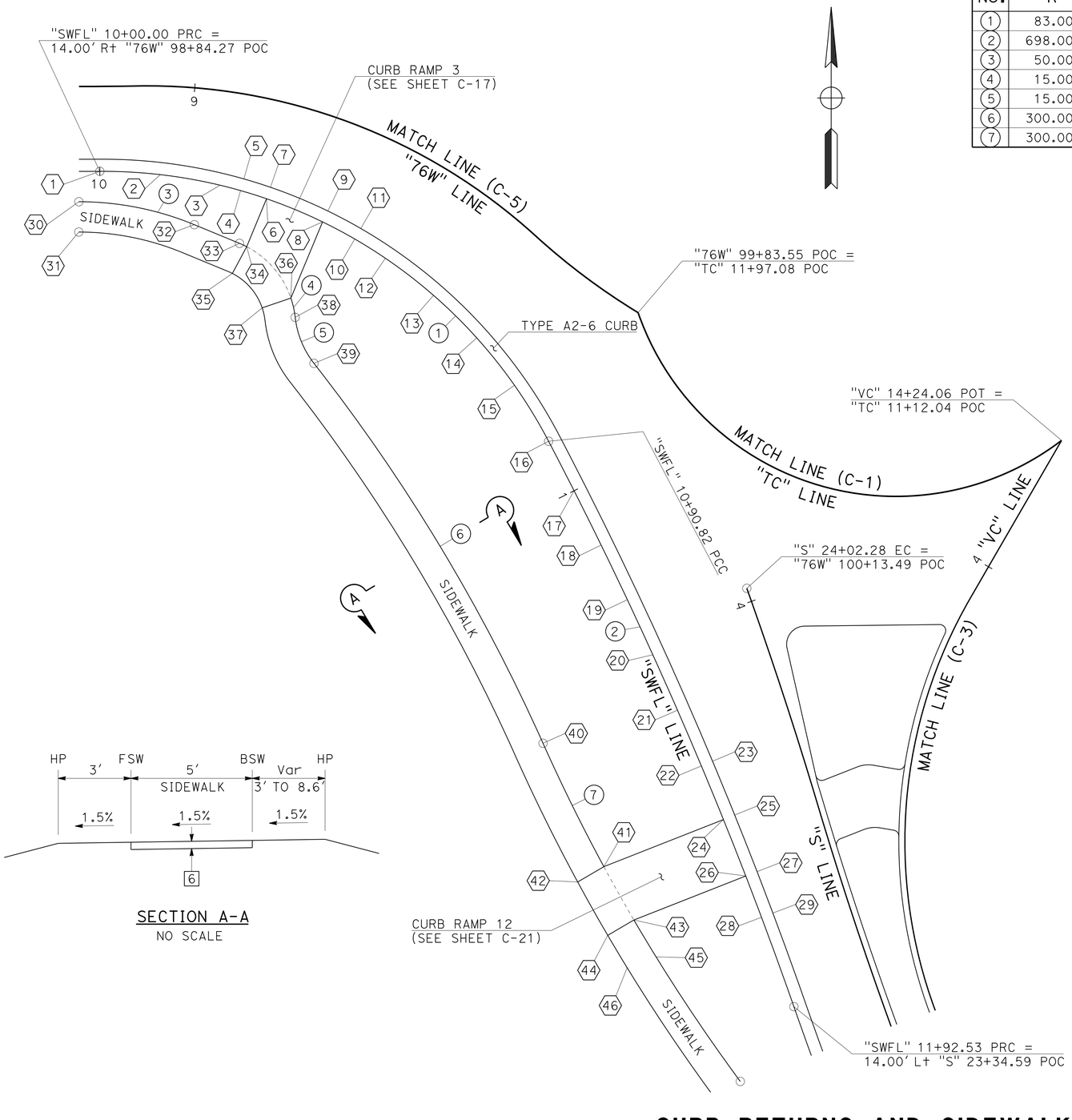

SECTION A-A
NO SCALE

SPOT ELEVATIONS

No.	LINE	STATION	OFFSET	Elev	REMARK
1	"SWFL"	10+00.00	-	1031.70′	FL/PRC
2	"SWFL"	10+10.00	-	1032.21′	FL
3	"SWFL"	10+20.00	-	1032.74′	FL
4	"SWFL"	10+23.50	-	1032.92′	FL
5	"SWFL"	10+23.50	2.00′ L+	1033.09′	LIP
6	"SWFL"	10+28.00	-	1033.27′	FL
7	"SWFL"	10+28.00	2.00′ L+	1033.32′	LIP
8	"SWFL"	10+38.00	-	1033.77′	FL
9	"SWFL"	10+38.00	2.00′ L+	1033.84′	LIP
10	"SWFL"	10+44.00	-	1033.94′	FL
11	"SWFL"	10+44.00	2.00′ L+	1034.11′	LIP
12	"SWFL"	10+49.97	-	1034.17′	FL
13	"SWFL"	10+60.00	-	1034.45′	FL
14	"SWFL"	10+70.00	-	1034.71′	FL
15	"SWFL"	10+80.00	-	1034.90′	FL
16	"SWFL"	10+90.82	-	1035.09′	FL/PCC
17	"SWFL"	11+00.00	-	1035.24′	FL
18	"SWFL"	11+10.00	-	1035.44′	FL
19	"SWFL"	11+20.00	-	1035.66′	FL
20	"SWFL"	11+30.00	-	1035.87′	FL
21	"SWFL"	11+40.00	-	1036.08′	FL
22	"SWFL"	11+50.00	-	1036.18′	FL
23	"SWFL"	11+50.00	2.00′ L+	1036.34′	LIP
24	"SWFL"	11+59.57	-	1036.29′	FL
25	"SWFL"	11+59.57	2.00′ L+	1036.33′	LIP
26	"SWFL"	11+69.57	-	1036.18′	FL
27	"SWFL"	11+69.57	2.00′ L+	1036.22′	LIP
28	"SWFL"	11+76.86	-	1035.90′	FL
29	"SWFL"	11+76.86	2.00′ L+	1036.07′	LIP
30	"SWFL"	9+96.55	5.00′ R+	1032.10′	FSW/BC
31	"SWFL"	9+96.55	10.00′ R+	1032.18′	BSW/BC
32	"SWFL"	10+17.15	7.28′ R+	1033.28′	FSW/EC
33	"SWFL"	10+25.97	8.38′ R+	1033.76′	FSW/BC
34	"SWFL"	10+27.41	8.54′ R+	1033.84′	FSW
35	"SWFL"	10+26.42	13.47′ R+	1033.91′	BSW
36	"SWFL"	10+38.93	13.58′ R+	1034.41′	FSW
37	"SWFL"	10+34.51	17.04′ R+	1034.48′	BSW
38	"SWFL"	10+41.48	16.07′ R+	1034.54′	FSW/PRC
39	"SWFL"	10+49.97	20.96′ R+	1034.97′	FSW/PRC
40	"SWFL"	11+36.00	22.50′ R+	1036.83′	FSW/PRC
41	"SWFL"	11+59.38	21.19′ R+	1037.06′	FSW
42	"SWFL"	11+60.13	26.14′ R+	1037.13′	BSW
43	"SWFL"	11+69.68	19.82′ R+	1036.90′	FSW
44	"SWFL"	11+70.51	24.76′ R+	1036.98′	BSW
45	"SWFL"	11+76.86	18.57′ R+	1036.67′	FSW
46	"SWFL"	11+76.86	23.67′ R+	1036.75′	BSW

CURB RETURNS AND SIDEWALK

"76W", "TC", & "S" LINE

CONSTRUCTION DETAILS

SCALE: 1" = 10′

C-4

STATE OF CALIFORNIA - DEPARTMENT OF TRANSPORTATION
Caltrans
TRAFFIC PROJECT DEVELOPMENT

FUNCTIONAL SUPERVISOR: JOSE LUIS ROBLES
CALCULATED-DESIGNED BY: WAYNE NGUYEN
CHECKED BY: WENDY M. DANDENEAU
REVISED BY
DATE REVISED

LAST REVISION 09-26-16
DATE PLOTTED => 30-SEP-2016
TIME PLOTTED => 13:44

Dist	COUNTY	ROUTE	POST MILES TOTAL PROJECT	SHEET No.	TOTAL SHEETS
11	SD	76	32.6/33.3	25	269

REGISTERED CIVIL ENGINEER 09-20-16 DATE

09-26-16
PLANS APPROVAL DATE

REGISTERED PROFESSIONAL ENGINEER WENDY M. DANDENEAU No. C76330 Exp. 12/31/16 CIVIL STATE OF CALIFORNIA

THE STATE OF CALIFORNIA OR ITS OFFICERS OR AGENTS SHALL NOT BE RESPONSIBLE FOR THE ACCURACY OR COMPLETENESS OF SCANNED COPIES OF THIS PLAN SHEET.

NOTE:

EXTEND MONOLITHIC POUR OF GUTTER PAN TO LIP LINE.

CURVE DATA

No.	R	Δ	T	L
1	328.00′	25°33′59"	74.42′	146.36′
2	68.00′	52°42′19"	33.69′	62.55′
3	122.00′	26°50′21"	29.11′	57.15′
4	79.00′	30°22′08"	21.44′	41.87′
5	20.00′	92°16′23"	20.81′	32.21′
6	4.00′	87°43′37"	3.84′	6.12′
7	25.00′	53°25′18"	12.58′	23.31′
8	15.00′	37°32′27"	5.10′	9.83′
9	205.00′	13°56′35"	25.07′	49.89′
10	15.00′	45°29′26"	5.98′	11.39′
11	20.00′	53°31′59"	10.09′	18.69′
12	3.00′	74°55′09"	2.30′	3.92′
13	3.00′	76°26′24"	2.36′	4.00′

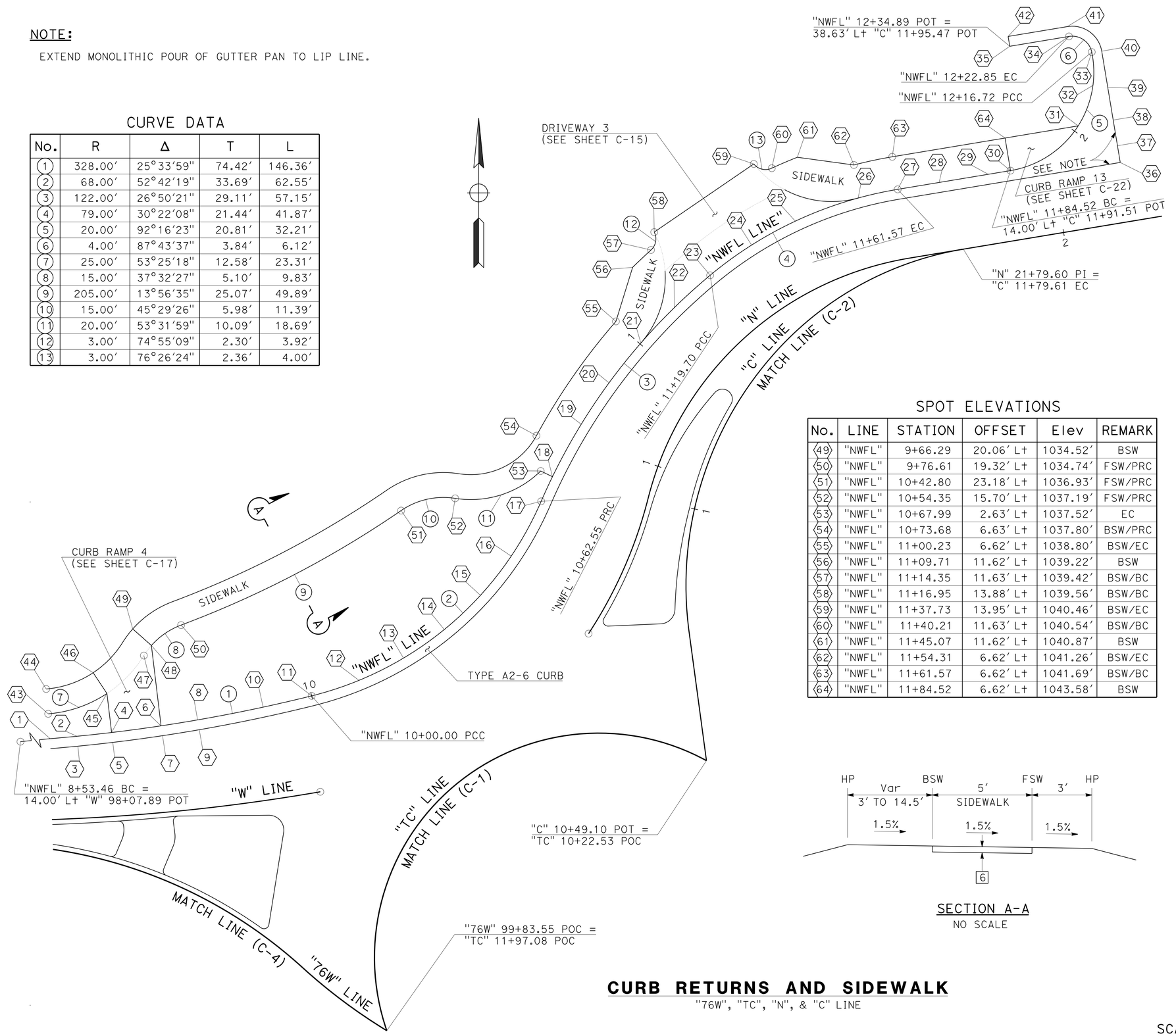

SPOT ELEVATIONS

No.	LINE	STATION	OFFSET	Elev	REMARK
49	"NWFL"	9+66.29	20.06′ Lt	1034.52′	BSW
50	"NWFL"	9+76.61	19.32′ Lt	1034.74′	FSW/PRC
51	"NWFL"	10+42.80	23.18′ Lt	1036.93′	FSW/PRC
52	"NWFL"	10+54.35	15.70′ Lt	1037.19′	FSW/PRC
53	"NWFL"	10+67.99	2.63′ Lt	1037.52′	EC
54	"NWFL"	10+73.68	6.63′ Lt	1037.80′	BSW/PRC
55	"NWFL"	11+00.23	6.62′ Lt	1038.80′	BSW/EC
56	"NWFL"	11+09.71	11.62′ Lt	1039.22′	BSW
57	"NWFL"	11+14.35	11.63′ Lt	1039.42′	BSW/BC
58	"NWFL"	11+16.95	13.88′ Lt	1039.56′	BSW/BC
59	"NWFL"	11+37.73	13.95′ Lt	1040.46′	BSW/EC
60	"NWFL"	11+40.21	11.63′ Lt	1040.54′	BSW/BC
61	"NWFL"	11+45.07	11.62′ Lt	1040.87′	BSW
62	"NWFL"	11+54.31	6.62′ Lt	1041.26′	BSW/EC
63	"NWFL"	11+61.57	6.62′ Lt	1041.69′	BSW/BC
64	"NWFL"	11+84.52	6.62′ Lt	1043.58′	BSW

SECTION A-A
NO SCALE

SPOT ELEVATIONS

No.	LINE	STATION	OFFSET	Elev	REMARK
1	"NWFL"	9+46.80	-	1032.67′	FL
2	"NWFL"	9+52.18	-	1032.93′	FL
3	"NWFL"	9+52.18	2.00′ Rt	1033.10′	LIP
4	"NWFL"	9+59.18	-	1033.35′	FL
5	"NWFL"	9+59.18	2.00′ Rt	1033.43′	LIP
6	"NWFL"	9+69.18	-	1033.76′	FL
7	"NWFL"	9+69.18	2.00′ Rt	1033.85′	LIP
8	"NWFL"	9+76.61	-	1033.96′	FL
9	"NWFL"	9+76.61	2.00′ Rt	1034.13′	LIP
10	"NWFL"	9+90.00	-	1034.43′	FL
11	"NWFL"	10+00.00	-	1034.77′	FL/PCC
12	"NWFL"	10+10.00	-	1035.12′	FL
13	"NWFL"	10+20.00	-	1035.45′	FL
14	"NWFL"	10+30.00	-	1035.74′	FL
15	"NWFL"	10+40.00	-	1036.01′	FL
16	"NWFL"	10+50.00	-	1036.31′	FL
17	"NWFL"	10+62.55	-	1036.77′	FL/PRC
18	"NWFL"	10+67.99	-	1036.99′	FL
19	"NWFL"	10+80.00	-	1037.47′	FL
20	"NWFL"	10+90.00	-	1037.86′	FL
21	"NWFL"	11+00.23	-	1038.21′	FL
22	"NWFL"	11+10.00	-	1038.57′	FL
23	"NWFL"	11+19.70	-	1038.95′	FL/PCC
24	"NWFL"	11+30.00	-	1039.40′	FL
25	"NWFL"	11+40.00	-	1039.89′	FL
26	"NWFL"	11+53.46	-	1040.26′	FL
27	"NWFL"	11+61.57	-	1041.10′	FL/EC
28	"NWFL"	11+70.00	-	1041.75′	FL
29	"NWFL"	11+80.00	-	1042.51′	FL
30	"NWFL"	11+84.51	-	1042.98′	FL/BC
31	"NWFL"	12+01.27	-	1044.18′	FL
32	"NWFL"	12+10.00	-	1045.23′	FL
33	"NWFL"	12+16.72	-	1045.96′	FL/PCC
34	"NWFL"	12+22.85	-	1046.20′	FL/EC
35	"NWFL"	12+34.89	-	1046.30′	FL
36	"NWFL"	12+00.22	11.11′ Rt	1044.69′	LIP
37	"NWFL"	12+01.89	8.80′ Rt	1044.63′	LIP
38	"NWFL"	12+05.00	5.74′ Rt	1044.74′	LIP
39	"NWFL"	12+10.00	2.99′ Rt	1045.29′	LIP
40	"NWFL"	12+16.51	2.00′ Rt	1046.00′	LIP/BC
41	"NWFL"	12+22.85	2.00′ Rt	1046.19′	LIP/EC
42	"NWFL"	12+34.89	2.00′ Rt	1046.23′	LIP
43	"NWFL"	9+46.80	5.00′ Lt	1033.24′	FSW/BC
44	"NWFL"	9+46.80	10.00′ Lt	1033.31′	BSW/EC
45	"NWFL"	9+59.18	7.88′ Lt	1033.92′	FSW
46	"NWFL"	9+56.84	12.34′ Lt	1033.99′	BSW
47	"NWFL"	9+67.81	14.46′ Lt	-	FSW/PRC
48	"NWFL"	9+69.70	16.24′ Lt	1034.45′	FSW

CURB RETURNS AND SIDEWALK
"76W", "TC", "N", & "C" LINE

CONSTRUCTION DETAILS

SCALE: 1" = 10′

C-5

STATE OF CALIFORNIA - DEPARTMENT OF TRANSPORTATION
TRAFFIC PROJECT DEVELOPMENT
Caltrans

FUNCTIONAL SUPERVISOR: JOSE LUIS ROBLES
CALCULATED-DESIGNED BY: WAYNE NGUYEN
CHECKED BY: WENDY M. DANDENEAU
REVISED BY
DATE REVISED

LAST REVISION 09-26-16
DATE PLOTTED => 30-SEP-2016
TIME PLOTTED => 13:44

Dist	COUNTY	ROUTE	POST MILES TOTAL PROJECT	SHEET No.	TOTAL SHEETS
11	SD	76	32.6/33.3	26	269

REGISTERED CIVIL ENGINEER 09-20-16 DATE

09-26-16
PLANS APPROVAL DATE

REGISTERED PROFESSIONAL ENGINEER WENDY M. DANDENEAU No. C76330 Exp. 12/31/16 CIVIL STATE OF CALIFORNIA

THE STATE OF CALIFORNIA OR ITS OFFICERS OR AGENTS SHALL NOT BE RESPONSIBLE FOR THE ACCURACY OR COMPLETENESS OF SCANNED COPIES OF THIS PLAN SHEET.

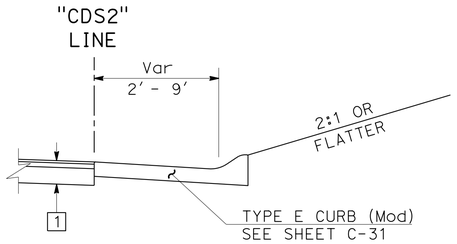

SECTION B-B
NO SCALE

CURVE DATA

No.	R	Δ	T	L
1	478.00'	02°41'33"	11.23'	22.46'
2	30.00'	52°24'37"	14.77'	27.44'
3	44.00'	177°17'32"	-	136.15'
4	45.00'	24°29'18"	9.77'	19.23'
5	515.00'	12°44'25"	57.49'	114.51'

SPOT ELEVATIONS

No.	LINE	STATION	OFFSET	Elev	REMARK
49	"CDS2"	20+80.00	3.00' R+	1057.28'	BOC
50	"CDS2"	20+90.00	-	1056.42'	LIP
51	"CDS2"	20+90.00	3.00' R+	1056.65'	BOC
52	"CDS2"	21+00.00	-	1055.79'	LIP
53	"CDS2"	21+10.00	-	1055.16'	LIP
54	"CDS2"	21+10.00	10.25' R+	1055.05'	BOC
55	"CDS2"	21+20.00	-	1054.52'	LIP
56	"CDS2"	21+20.00	10.25' R+	1054.40'	BOC
57	"CDS2"	21+30.00	-	1053.87'	LIP
58	"CDS2"	21+30.00	10.25' R+	1053.75'	BOC
59	"CDS2"	21+33.75	-	1053.63'	LIP
60	"CDS2"	21+33.75	10.25' R+	1053.51'	BOC
61	"C"	14+52.15	-	1062.58'	CENTER

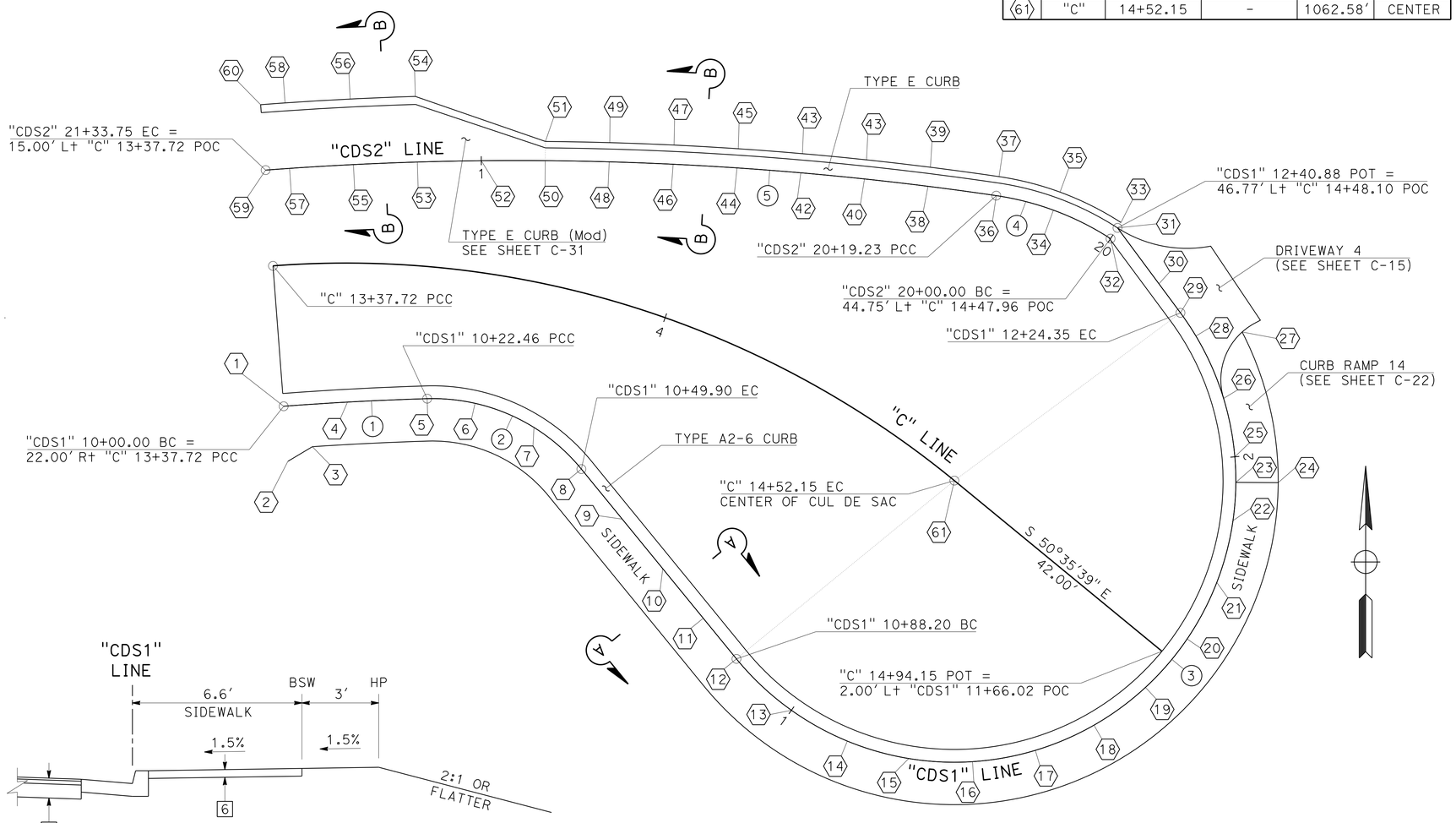

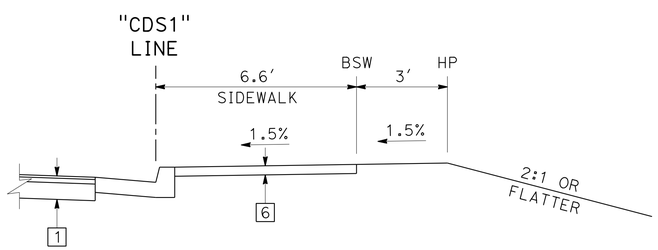

SECTION A-A
NO SCALE

CURB RETURNS AND SIDEWALK

"C" LINE

SPOT ELEVATIONS

No.	LINE	STATION	OFFSET	Elev	REMARK
1	"CDS1"	10+00.00	-	1053.36'	FL/BC
2	"CDS1"	10+00.00	8.62' R+	1053.98'	BSW
3	"CDS1"	10+04.04	6.62' R+	1054.31'	BSW
4	"CDS1"	10+10.00	-	1054.23'	FL
5	"CDS1"	10+22.46	-	1055.29'	FL/PCC
6	"CDS1"	10+30.00	-	1055.96'	FL
7	"CDS1"	10+40.00	-	1056.79'	FL
8	"CDS1"	10+49.90	-	1057.60'	FL/EC
9	"CDS1"	10+60.00	-	1058.38'	FL
10	"CDS1"	10+70.00	-	1059.22'	FL
11	"CDS1"	10+80.00	-	1060.06'	FL
12	"CDS1"	10+88.20	-	1060.80'	FL/BC
13	"CDS1"	11+00.00	-	1061.73'	FL
14	"CDS1"	11+10.00	-	1062.36'	FL
15	"CDS1"	11+20.00	-	1062.89'	FL
16	"CDS1"	11+30.00	-	1063.40'	FL
17	"CDS1"	11+40.00	-	1063.85'	FL
18	"CDS1"	11+50.00	-	1064.15'	FL
19	"CDS1"	11+60.00	-	1064.26'	FL
20	"CDS1"	11+70.00	-	1064.28'	FL
21	"CDS1"	11+80.00	-	1064.18'	FL
22	"CDS1"	11+90.00	-	1063.95'	FL
23	"CDS1"	11+96.00	-	1063.73'	FL
24	"CDS1"	11+96.00	6.62' R+	1064.32'	BSW
25	"CDS1"	12+00.00	-	1063.58'	FL
26	"CDS1"	12+09.31	-	1063.22'	FL/BC
27	"CDS1"	12+17.24	6.62' R+	1062.98'	FL/EP
28	"CDS1"	12+20.00	-	1062.72'	FL
29	"CDS1"	12+24.35	-	1062.47'	FL/EC
30	"CDS1"	12+30.00	-	1061.98'	FL
31	"CDS1"	12+40.88	-	1061.37'	FL/BC
32	"CDS2"	20+00.00	-	1061.44'	LIP/BC
33	"CDS2"	20+00.00	3.00' R+	1061.67'	BOC/BC
34	"CDS2"	20+10.00	-	1060.95'	LIP
35	"CDS2"	20+10.00	3.00' R+	1060.18'	BOC
36	"CDS2"	20+19.23	-	1060.50'	LIP/PCC
37	"CDS2"	20+19.23	3.00' R+	1060.73'	BOC/PCC
38	"CDS2"	20+30.00	-	1059.98'	LIP
39	"CDS2"	20+30.00	3.00' R+	1060.21'	BOC
40	"CDS2"	20+40.00	-	1059.41'	LIP
41	"CDS2"	20+40.00	3.00' R+	1059.64'	BOC
42	"CDS2"	20+50.00	-	1058.84'	LIP
43	"CDS2"	20+50.00	3.00' R+	1059.07'	BOC
44	"CDS2"	20+60.00	-	1058.27'	LIP
45	"CDS2"	20+60.00	3.00' R+	1058.51'	BOC
46	"CDS2"	20+70.00	-	1057.66'	LIP
47	"CDS2"	20+70.00	3.00' R+	1057.89'	BOC
48	"CDS2"	20+80.00	-	1057.05'	LIP

CONSTRUCTION DETAILS

SCALE: 1" = 10'

C-6

STATE OF CALIFORNIA - DEPARTMENT OF TRANSPORTATION
Caltrans
TRAFFIC PROJECT DEVELOPMENT

FUNCTIONAL SUPERVISOR: JOSE LUIS ROBLES
CALCULATED-DESIGNED BY: WAYNE NGUYEN
CHECKED BY: WENDY M. DANDENEAU
REVISED BY / DATE REVISED

LAST REVISION 09-26-16
DATE PLOTTED => 30-SEP-2016
TIME PLOTTED => 13:44

Dist	COUNTY	ROUTE	POST MILES TOTAL PROJECT	SHEET No.	TOTAL SHEETS
11	SD	76	32.6/33.3	27	269

REGISTERED CIVIL ENGINEER 09-20-16 DATE

09-26-16
PLANS APPROVAL DATE

REGISTERED PROFESSIONAL ENGINEER WENDY M. DANDENEAU No. C76330 Exp. 12/31/16 CIVIL STATE OF CALIFORNIA

THE STATE OF CALIFORNIA OR ITS OFFICERS OR AGENTS SHALL NOT BE RESPONSIBLE FOR THE ACCURACY OR COMPLETENESS OF SCANNED COPIES OF THIS PLAN SHEET.

NOTES:

1. DOWEL BAR REINFORMCEMENT MUST BE EPOXY-COATED OR STAINLESS-STEEL PLAIN BARS. EPOXY-COATED DOWEL BAR REINFORCEMENT MUST COMPLY WITH ASTM A 615/A 615M, GRADE 40 OR 60. STAINLESS-STEEL DOWEL BAR REINFORCEMENT MUST BE DESCALED SOLID STAINLESS-STEEL BARS UNDER ASTM A 955/A 955M, UNS DESIGNATION S31603 OR S31803.

2. TIE BAR REINFORCEMENT MUST BE EPOXY-COATED OR STAINLESS-STEEL DEFORMED BARS. EPOXY COATED TIE BAR REINFORCEMENT MUST COMPLY WITH ASTM A 706/A 706M, ASTM A 996/A 996M, OR ASTM A 615/A 615M, GRADE 40 OR 60. STAINLESS-STEEL TIE BAR REINFORCEMENT MUST BE DESCALED SOLID STAINLESS-STEEL BARS UNDER ASTM A 955/A 955M, UNS DESIGNATION S31603 OR S31803.

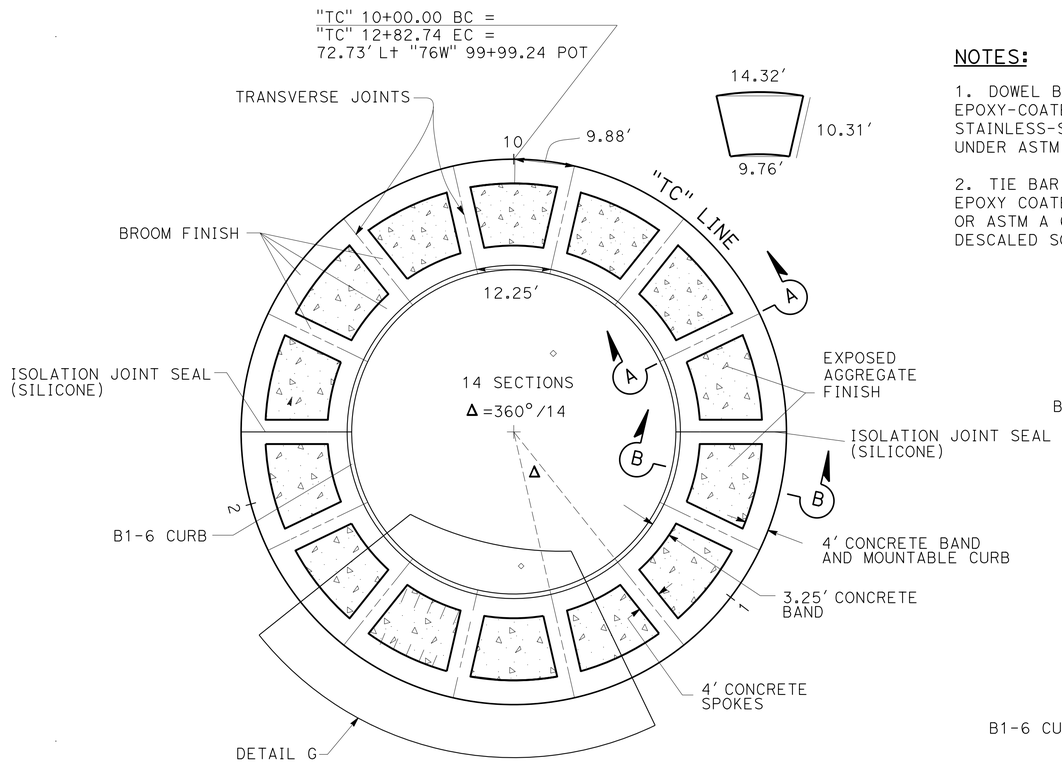

PLAN

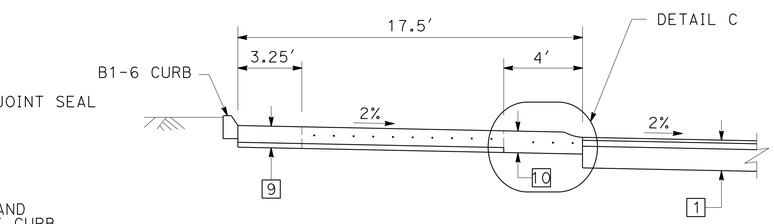

SECTION A-A

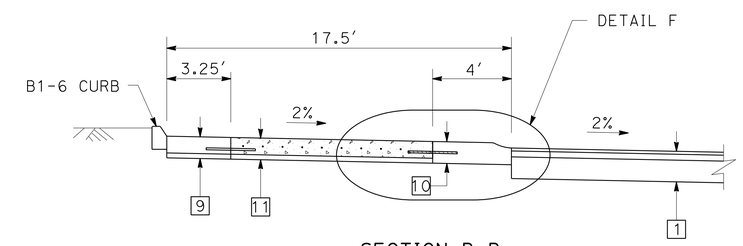

SECTION B-B

STRUCTURAL SECTIONS (THIS PAGE ONLY)

1 — 0.15' RHMA-G (GAP GRADED)
0.30' HMA-A
1.10' AB CLASS 2

9 — 0.85' MINOR CONCRETE (TRUCK APRON)
0.25' HMA-A

10 — 1.10' MINOR CONCRETE (TRUCK APRON)

11 — 0.85' MINOR CONCRETE (TRUCK APRON)(EXPOSED AGGREGATE)
0.25' HMA-A

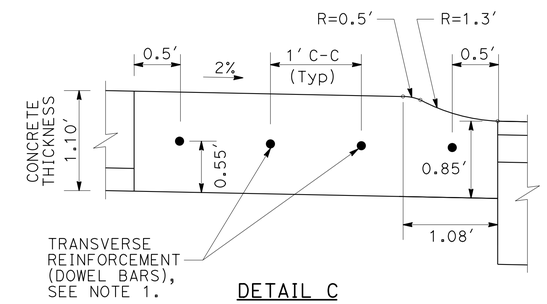

DETAIL C

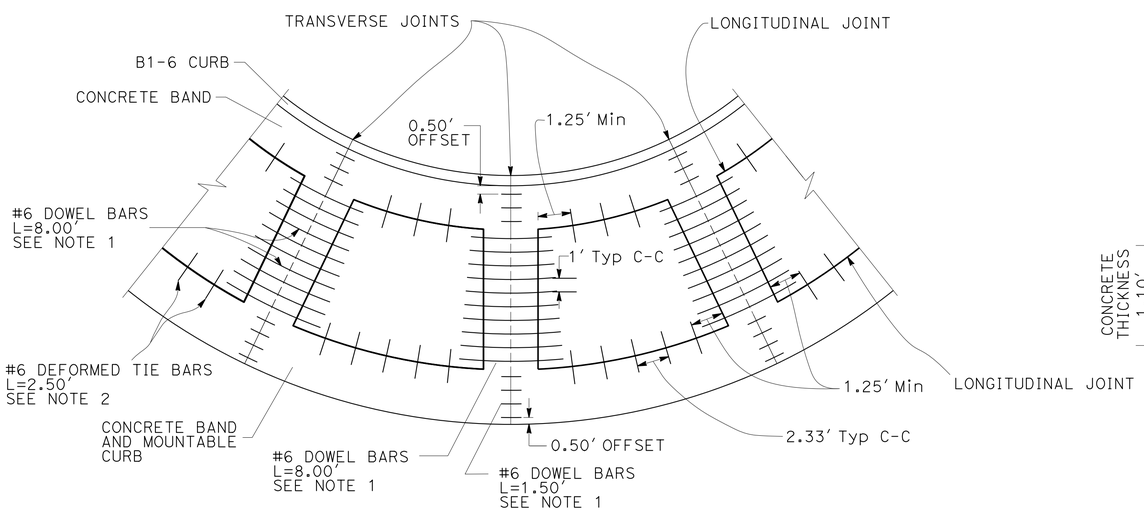

DOWEL AND TIE BAR LAYOUT

DETAIL G

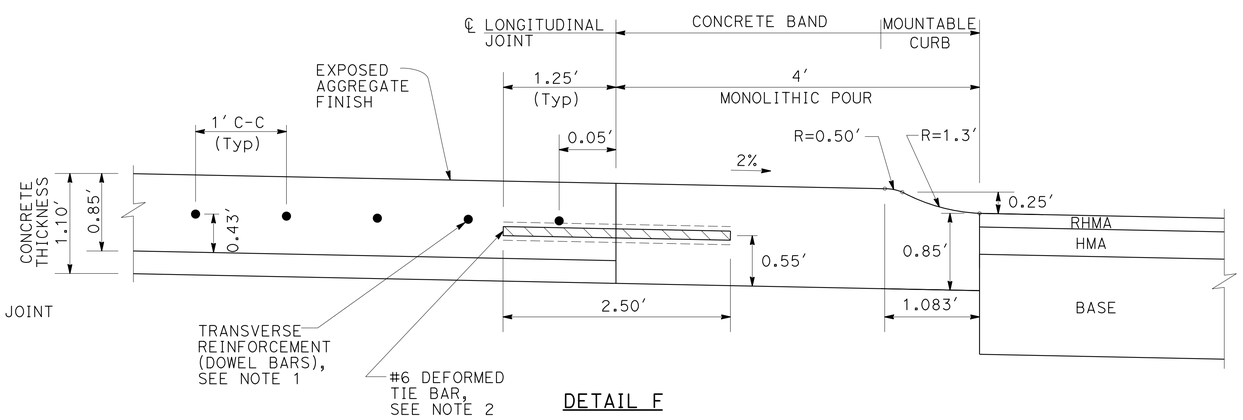

DETAIL F

TRUCK APRON

CONSTRUCTION DETAILS

NO SCALE

C-7

STATE OF CALIFORNIA - DEPARTMENT OF TRANSPORTATION
Caltrans
TRAFFIC PROJECT DEVELOPMENT

FUNCTIONAL SUPERVISOR: JOSE LUIS ROBLES
CALCULATED-DESIGNED BY: EVANGELINA PALMA
CHECKED BY: WENDY M. DANDENEAU
REVISED BY
DATE REVISED

LAST REVISION 09-26-16
DATE PLOTTED => 30-SEP-2016
TIME PLOTTED => 13:44

Dist	COUNTY	ROUTE	POST MILES TOTAL PROJECT	SHEET No.	TOTAL SHEETS
11	SD	76	32.6/33.3	28	269

REGISTERED CIVIL ENGINEER 09-20-16 DATE

09-26-16
PLANS APPROVAL DATE

REGISTERED PROFESSIONAL ENGINEER WENDY M. DANDENEAU No. C76330 Exp. 12/31/16 CIVIL STATE OF CALIFORNIA

THE STATE OF CALIFORNIA OR ITS OFFICERS OR AGENTS SHALL NOT BE RESPONSIBLE FOR THE ACCURACY OR COMPLETENESS OF SCANNED COPIES OF THIS PLAN SHEET.

NOTES:

1. S = RESERVOIR DEPTH
   S = 7/8" ± 1/16" FOR ASPHALT RUBBER SEALS
   S = 9/16" ± 1/16" FOR SILICONE SEALS
   PREFORMED COMPRESSION SEALS MUST BE 13/16" WIDE AND S = 1 11/16" ± 1/16"

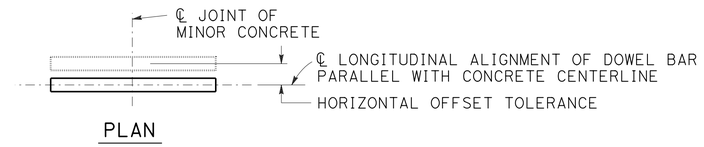

HORIZONTAL OFFSET TOLERANCE

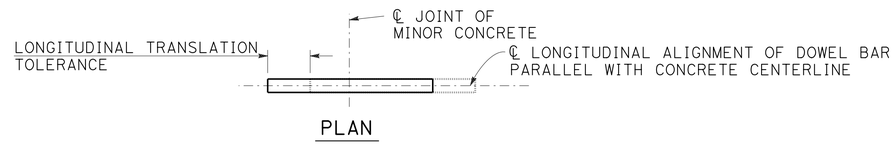

LONGITUDINAL TRANSLATION TOLERANCE

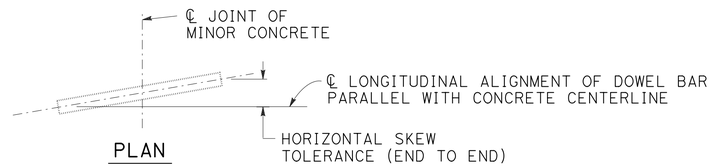

HORIZONTAL SKEW TOLERANCE

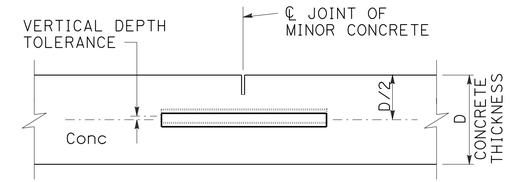

VERTICAL DEPTH TOLERANCE

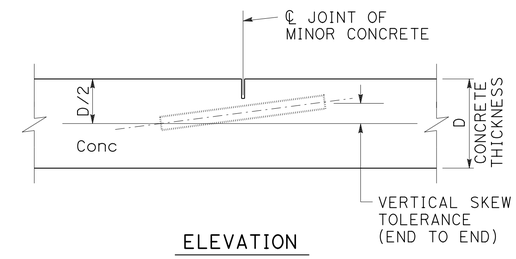

VERTICAL SKEW TOLERANCE

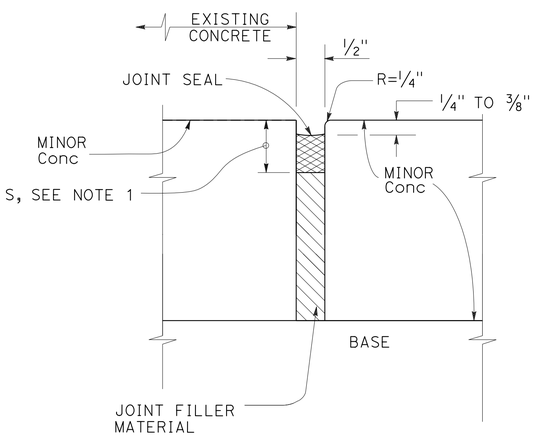

ISOLATION JOINT

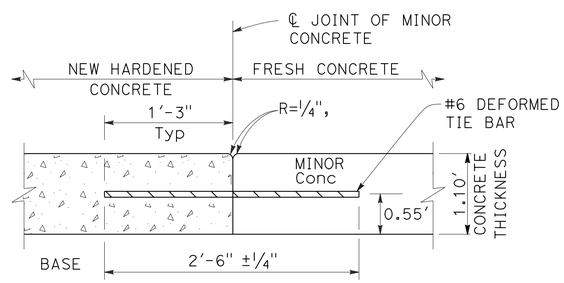

LONGITUDINAL CONSTRUCTION JOINT

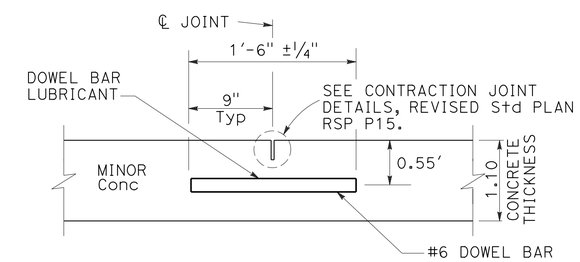

TRANSVERSE CONTRACTION JOINT TYPE 1

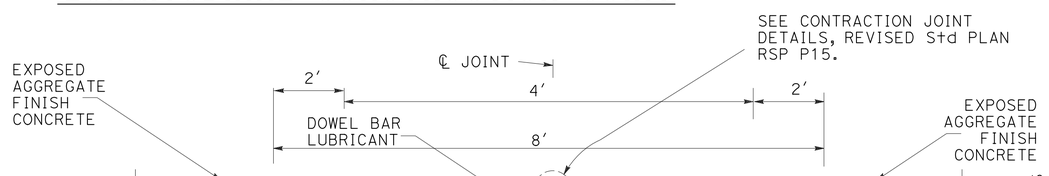

TRANSVERSE CONTRACTION JOINT TYPE 2

CONSTRUCTION DETAILS

NO SCALE

C-8

STATE OF CALIFORNIA - DEPARTMENT OF TRANSPORTATION
TRAFFIC PROJECT DEVELOPMENT
Caltrans

FUNCTIONAL SUPERVISOR: JOSE LUIS ROBLES
CALCULATED-DESIGNED BY: EVANGELINA PALMA
CHECKED BY: WENDY M. DANDENEAU
REVISED BY
DATE REVISED

LAST REVISION 09-26-16 | DATE PLOTTED => 30-SEP-2016 | TIME PLOTTED => 13:44

Dist	COUNTY	ROUTE	POST MILES TOTAL PROJECT	SHEET No.	TOTAL SHEETS
11	SD	76	32.6/33.3	29	269

REGISTERED CIVIL ENGINEER 09-20-16 DATE

09-26-16
PLANS APPROVAL DATE

REGISTERED PROFESSIONAL ENGINEER WENDY M. DANDENEAU No. C76330 Exp. 12/31/16 CIVIL STATE OF CALIFORNIA

THE STATE OF CALIFORNIA OR ITS OFFICERS OR AGENTS SHALL NOT BE RESPONSIBLE FOR THE ACCURACY OR COMPLETENESS OF SCANNED COPIES OF THIS PLAN SHEET.

CURVE DATA

No.	R	Δ	T	L
1	2.00′	176°40′16"	68.83′	6.17′
2	498.00′	8°03′39"	35.09′	70.06′
3	499.00′	7°56′05"	34.61′	69.11′
4	96.00′	36°27′13"	31.61′	61.08′
5	1.00′	116°19′47"	1.61′	2.03′
6	401.00′	17°16′05"	60.89′	120.86′
7	3.00′	99°37′53"	3.55′	5.22′

SPOT ELEVATIONS

No.	LINE	STATION	OFFSET	Elev	REMARK
1	"76W"	97+50.98	3.00′ L+	1025.65′	FL/PCC
2	"76W"	97+60.00	2.74′ L+	1026.09′	FL
3	"76W"	97+70.00	2.46′ L+	1026.57′	FL
4	"76W"	97+80.00	2.18′ L+	1027.06′	FL
5	"76W"	97+90.00	1.89′ L+	1027.54′	FL
6	"76W"	98+00.00	1.61′ L+	1028.02′	FL
7	"76W"	98+10.00	1.32′ L+	1028.50′	FL
8	"76W"	98+21.30	1.00′ L+	1029.05′	FL/PCC
9	"76W"	98+30.00	1.00′ L+	1029.47′	FL
10	"76W"	98+40.00	1.00′ L+	1029.96′	FL
11	"76W"	98+50.00	1.00′ L+	1030.45′	FL
12	"76W"	98+60.00	1.00′ L+	1030.94′	FL
13	"76W"	98+70.00	1.00′ L+	1031.43′	FL
14	"76W"	98+80.00	1.00′ L+	1031.92′	FL
15	"76W"	98+90.54	1.00′ L+	1032.43′	FL/PRC
16	"76W"	99+00.00	1.00′ L+	1032.89′	FL
17	"76W"	99+10.00	1.00′ L+	1033.34′	FL
18	"76W"	99+17.67	1.00′ L+	1033.69′	FL/EC
19	"76W"	99+29.45	1.00′ L+	1034.21′	FL/PRC
20	"76W"	99+40.00	1.00′ L+	1034.59′	FL
21	"76W"	99+50.97	1.00′ L+	1034.87′	FL/PRC
22	"76W"	99+51.86	2.45′ L+	1034.90′	FL/EC
23	"76W"	99+48.07	10.87′ L+	1035.02′	FL/EC

SPOT ELEVATIONS

No.	LINE	STATION	OFFSET	Elev	REMARK
24	"W"	97+50.98	1.00′ R+	1025.75′	FL/EC
25	"W"	97+60.00	1.00′ R+	1026.20′	FL
26	"W"	97+70.00	1.00′ R+	1026.70′	FL
27	"W"	97+80.00	1.00′ R+	1027.21′	FL
28	"W"	97+90.00	1.00′ R+	1027.71′	FL
29	"W"	98+00.00	1.00′ R+	1028.21′	FL
30	"W"	98+08.97	1.00′ R+	1028.63′	FL/BC
31	"W"	98+20.00	1.00′ R+	1029.15′	FL
32	"W"	98+30.00	1.00′ R+	1029.62′	FL
33	"W"	98+40.00	1.00′ R+	1030.09′	FL
34	"W"	98+50.00	1.00′ R+	1030.57′	FL
35	"W"	98+60.00	1.00′ R+	1031.04′	FL
36	"W"	98+70.00	1.00′ R+	1031.51′	FL
37	"W"	98+80.00	1.00′ R+	1031.98′	FL
38	"W"	98+90.00	1.00′ R+	1032.45′	FL
39	"W"	99+00.00	1.00′ R+	1032.92′	FL
40	"W"	99+10.00	1.00′ R+	1033.39′	FL
41	"W"	99+17.57	1.00′ R+	1033.74′	FL/EC
42	"W"	99+29.61	1.00′ R+	1034.24′	FL
43	"W"	99+40.00	2.07′ R+	1034.64′	FL
44	"W"	99+47.56	3.03′ R+	1034.90′	FL/BC
45	"W"	99+49.98	6.90′ R+	1034.96′	FL/EC

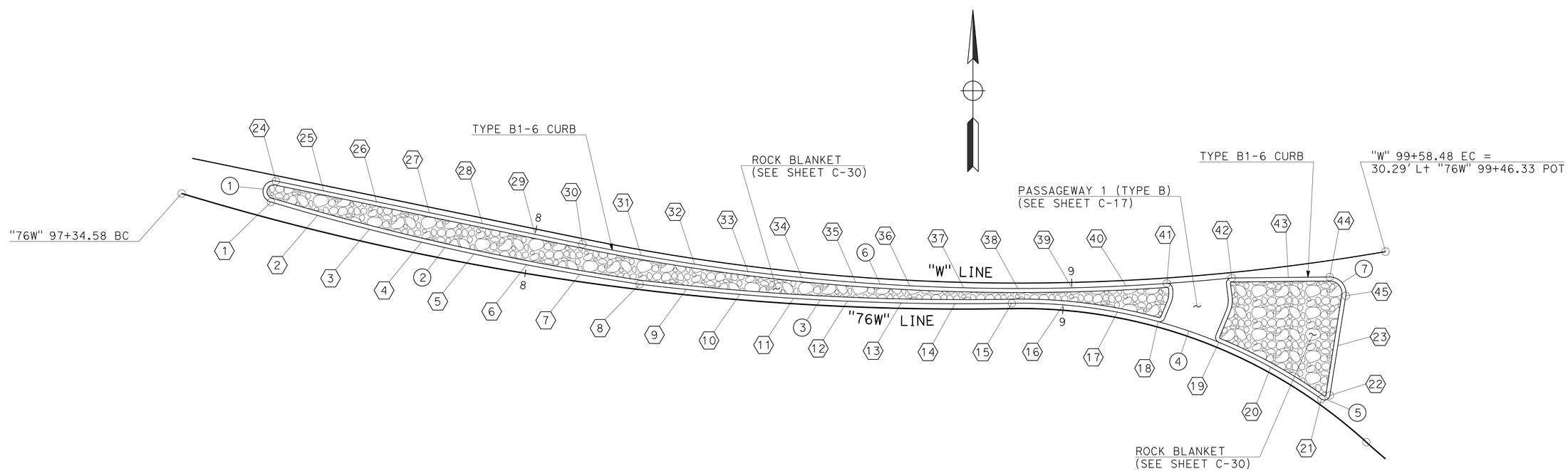

SPLITTER ISLAND

"76W" & "W" LINE

CONSTRUCTION DETAILS

SCALE: 1" = 10′

C-9

STATE OF CALIFORNIA - DEPARTMENT OF TRANSPORTATION
Caltrans
TRAFFIC PROJECT DEVELOPMENT

FUNCTIONAL SUPERVISOR: JOSE LUIS ROBLES
CALCULATED-DESIGNED BY: WAYNE NGUYEN
CHECKED BY: WENDY M. DANDENEAU
REVISED BY
DATE REVISED

LAST REVISION 09-26-16
DATE PLOTTED => 30-SEP-2016
TIME PLOTTED => 13:44

Dist	COUNTY	ROUTE	POST MILES TOTAL PROJECT	SHEET No.	TOTAL SHEETS
11	SD	76	32.6/33.3	30	269

REGISTERED CIVIL ENGINEER 09-20-16 DATE

09-26-16
PLANS APPROVAL DATE

REGISTERED PROFESSIONAL ENGINEER WENDY M. DANDENEAU No. C76330 Exp. 12/31/16 CIVIL STATE OF CALIFORNIA

THE STATE OF CALIFORNIA OR ITS OFFICERS OR AGENTS SHALL NOT BE RESPONSIBLE FOR THE ACCURACY OR COMPLETENESS OF SCANNED COPIES OF THIS PLAN SHEET.

CURVE DATA

No.	R	Δ	T	L
1	3.00′	101°07′35"	3.65′	5.29′
2	501.00′	4°47′46"	20.98′	41.94′
3	1501.00′	6°15′19"	82.02′	163.87′
4	2.00′	171°33′04"	27.08′	5.99′
5	1.00′	115°38′01"	1.59′	2.02′
6	96.00′	42°30′14"	37.34′	71.22′
7	499.00′	13°45′49"	60.22′	119.87′
8	478.61′	4°48′34"	20.10′	40.17′

SPOT ELEVATIONS

No.	LINE	STATION	OFFSET	Elev	REMARK
1	"76E"	100+83.73	6.91′ Lt	1038.99′	FL/BC
2	"76E"	100+86.22	3.02′ Lt	1039.18′	FL/EC
3	"76E"	100+90.00	2.60′ Lt	1039.25′	FL
4	"76E"	101+00.00	1.64′ Lt	1039.44′	FL
5	"76E"	101+07.07	1.08′ Lt	1039.60′	FL/BC
6	"76E"	101+08.19	1.00′ Lt	1039.65′	BC
7	"76E"	101+19.11	1.00′ Lt	1040.01′	FL/PRC
8	"76E"	101+30.00	1.00′ Lt	1040.51′	FL
9	"76E"	101+40.00	1.00′ Lt	1041.08′	FL
10	"76E"	101+50.04	1.00′ Lt	1041.76′	FL/PCC
11	"76E"	101+60.00	1.00′ Lt	1042.48′	FL
12	"76E"	101+70.00	1.00′ Lt	1043.21′	FL
13	"76E"	101+80.00	1.00′ Lt	1043.94′	FL
14	"76E"	101+90.00	1.00′ Lt	1044.67′	FL
15	"76E"	102+00.00	1.00′ Lt	1045.39′	FL
16	"76E"	102+10.00	1.00′ Lt	1046.12′	FL
17	"76E"	102+20.00	1.00′ Lt	1046.85′	FL
18	"76E"	102+30.00	1.00′ Lt	1047.58′	FL
19	"76E"	102+40.00	1.00′ Lt	1048.30′	FL
20	"76E"	102+50.00	1.00′ Lt	1049.03′	FL
21	"76E"	102+60.00	1.00′ Lt	1049.76′	FL
22	"76E"	102+70.00	1.00′ Lt	1050.49′	FL
23	"76E"	102+80.00	1.00′ Lt	1051.21′	FL
24	"76E"	102+90.00	1.00′ Lt	1051.94′	FL
25	"76E"	103+00.00	1.00′ Lt	1052.67′	FL
26	"76E"	103+10.00	1.00′ Lt	1053.40′	FL
27	"76E"	103+13.80	1.00′ Lt	1053.67′	FL/PRC

SPOT ELEVATIONS

No.	LINE	STATION	OFFSET	Elev	REMARK
28	"E"	100+86.01	11.53′ Rt	1039.01′	FL
29	"E"	100+82.07	2.44′ Rt	1039.02′	FL/BC
30	"E"	100+82.96	1.00′ Rt	1039.02′	FL/PRC
31	"E"	100+90.00	1.00′ Rt	1039.17′	FL
32	"E"	101+00.00	1.00′ Rt	1039.37′	FL
33	"E"	101+05.62	1.00′ Rt	1039.49′	FL/PRC
34	"E"	101+17.39	1.00′ Rt	1039.73′	FL/PRC
35	"E"	101+30.00	1.00′ Rt	1040.09′	FL
36	"E"	101+40.00	1.00′ Rt	1040.50′	FL
37	"E"	101+50.00	1.00′ Rt	1041.03′	FL
38	"E"	101+53.42	1.00′ Rt	1041.24′	FL/PRC
39	"E"	101+60.00	1.00′ Rt	1041.67′	FL
40	"E"	101+70.00	1.00′ Rt	1042.42′	FL
41	"E"	101+80.00	1.00′ Rt	1043.20′	FL
42	"E"	101+90.00	1.00′ Rt	1043.97′	FL
43	"E"	102+00.00	1.00′ Rt	1044.74′	FL
44	"E"	102+10.00	1.00′ Rt	1045.52′	FL
45	"E"	102+20.00	1.00′ Rt	1046.29′	FL
46	"E"	102+30.00	1.00′ Rt	1047.07′	FL
47	"E"	102+40.00	1.00′ Rt	1047.84′	FL
48	"E"	102+50.00	1.00′ Rt	1048.61′	FL
49	"E"	102+60.00	1.00′ Rt	1049.39′	FL
50	"E"	102+70.00	1.00′ Rt	1050.16′	FL
51	"E"	102+73.53	1.00′ Rt	1050.43′	FL/PCC
52	"E"	102+80.00	1.31′ Rt	1050.94′	FL
53	"E"	102+90.00	1.79′ Rt	1051.72′	FL
54	"E"	103+00.00	2.27′ Rt	1052.51′	FL
55	"E"	103+10.00	2.77′ Rt	1053.29′	FL
56	"E"	103+13.82	2.96′ Rt	1053.59′	FL/PCC

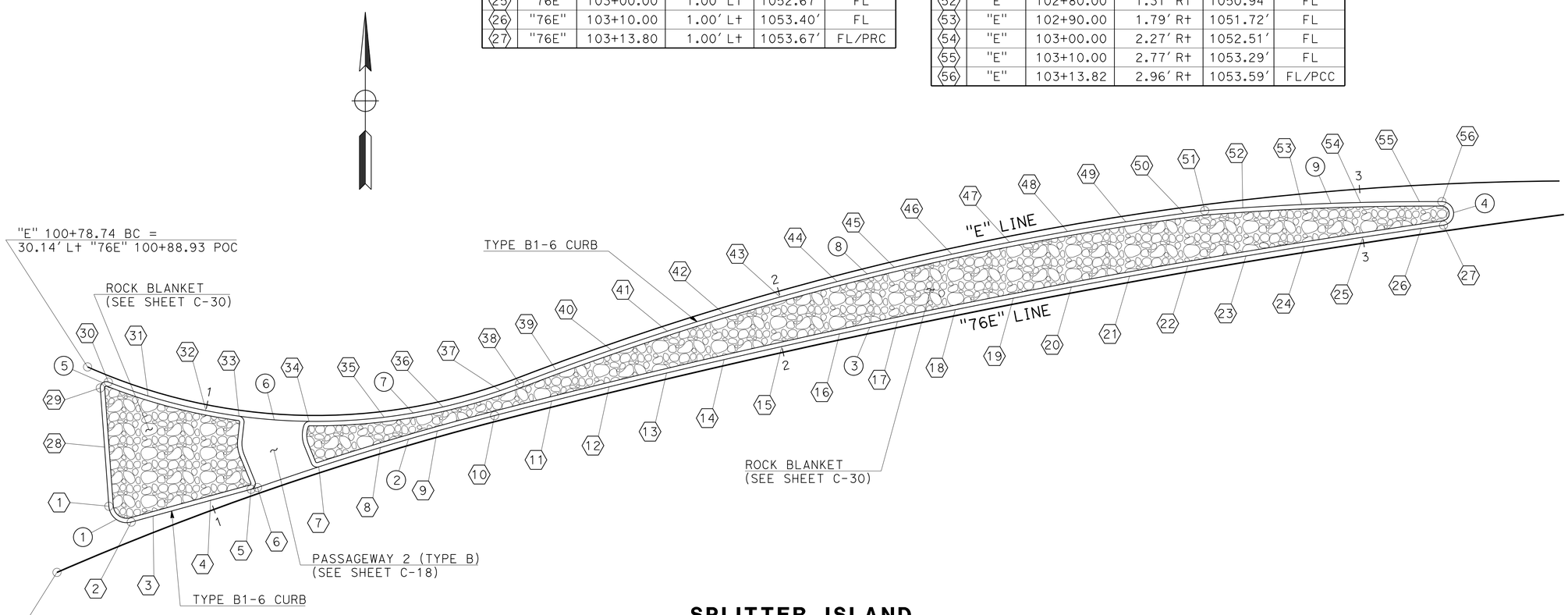

SPLITTER ISLAND

"76E" & "E" LINE

CONSTRUCTION DETAILS

SCALE: 1" = 10′

C-10

STATE OF CALIFORNIA - DEPARTMENT OF TRANSPORTATION
TRAFFIC PROJECT DEVELOPMENT
Caltrans

FUNCTIONAL SUPERVISOR: JOSE LUIS ROBLES
CALCULATED-DESIGNED BY: WAYNE NGUYEN
CHECKED BY: WENDY M. DANDENEAU
REVISED BY
DATE REVISED

LAST REVISION 09-26-16 | DATE PLOTTED => 30-SEP-2016 | TIME PLOTTED => 13:44

Dist	COUNTY	ROUTE	POST MILES TOTAL PROJECT	SHEET No.	TOTAL SHEETS
11	SD	76	32.6/33.3	31	269

REGISTERED CIVIL ENGINEER 09-20-16 DATE

09-26-16
PLANS APPROVAL DATE

REGISTERED PROFESSIONAL ENGINEER WENDY M. DANDENEAU No. C76330 Exp. 12/31/16 CIVIL STATE OF CALIFORNIA

THE STATE OF CALIFORNIA OR ITS OFFICERS OR AGENTS SHALL NOT BE RESPONSIBLE FOR THE ACCURACY OR COMPLETENESS OF SCANNED COPIES OF THIS PLAN SHEET.

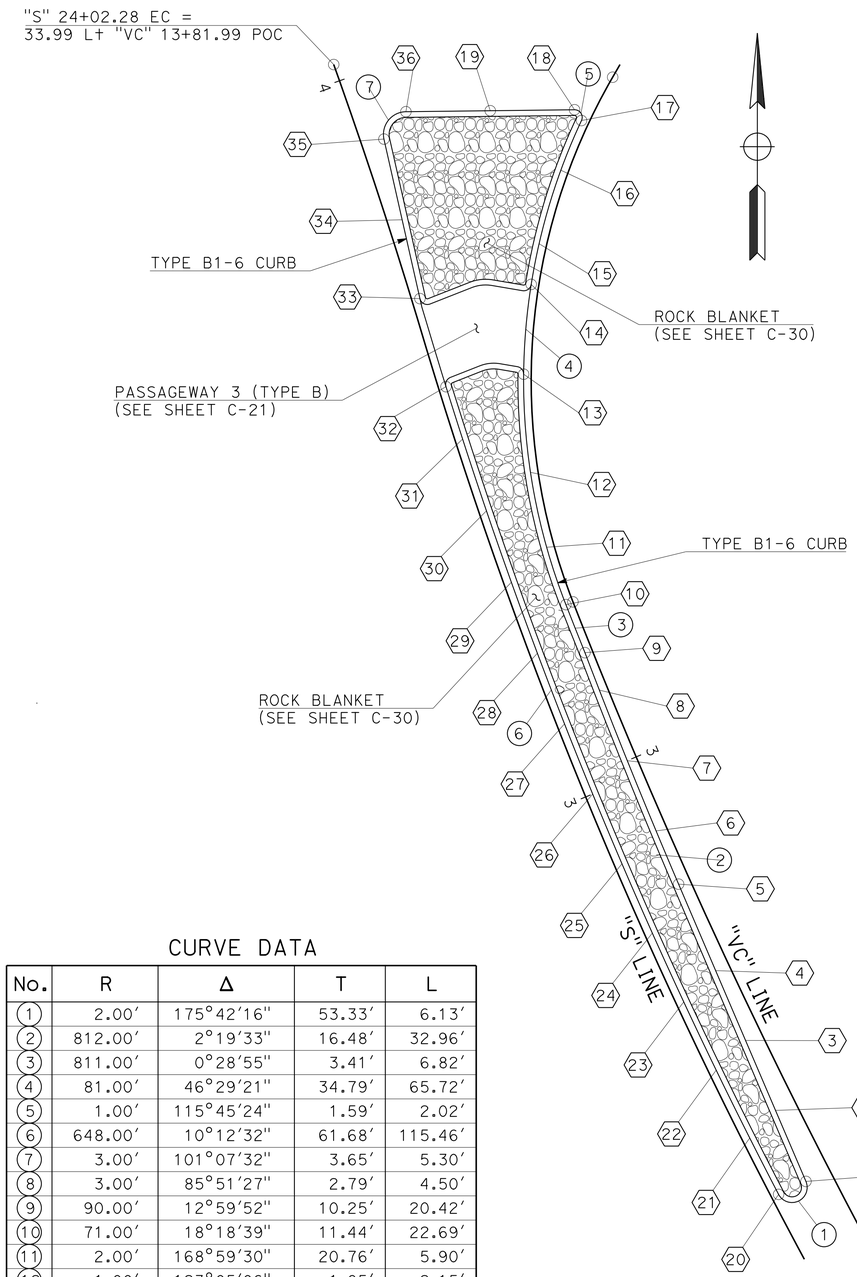

SPLITTER ISLAND

"VC" & "S" LINE

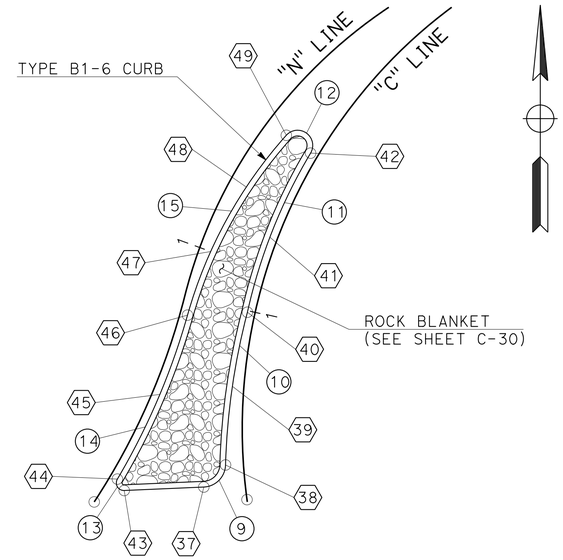

SPLITTER ISLAND

"C" & "N" LINE

CURVE DATA

No.	R	Δ	T	L
1	2.00′	175°42′16"	53.33′	6.13′
2	812.00′	2°19′33"	16.48′	32.96′
3	811.00′	0°28′55"	3.41′	6.82′
4	81.00′	46°29′21"	34.79′	65.72′
5	1.00′	115°45′24"	1.59′	2.02′
6	648.00′	10°12′32"	61.68′	115.46′
7	3.00′	101°07′32"	3.65′	5.30′
8	3.00′	85°51′27"	2.79′	4.50′
9	90.00′	12°59′52"	10.25′	20.42′
10	71.00′	18°18′39"	11.44′	22.69′
11	2.00′	168°59′30"	20.76′	5.90′
12	1.00′	123°05′06"	1.85′	2.15′
13	91.00′	14°51′47"	11.87′	23.61′
14	60.00′	26°05′26"	13.90′	27.32′

SPOT ELEVATIONS

No.	LINE	STATION	OFFSET	Elev	REMARK
37	"C"	10+77.36	5.47′ Lt	1037.19′	FL/BC
38	"C"	10+79.88	2.36′ Lt	1037.21′	FL/EC
39	"C"	10+89.78	1.52′ Lt	1037.30′	FL
40	"C"	10+99.80	1.00′ Lt	1037.73′	FL/PCC
41	"C"	11+10.00	1.00′ Lt	1038.23′	FL
42	"C"	11+22.17	1.00′ Lt	1038.81′	FL/PRC
43	"N"	20+66.81	2.55′ Rt	1036.90′	FL/BC
44	"N"	20+67.62	1.00′ Rt	1036.85′	FL/PRC
45	"N"	20+80.00	1.00′ Rt	1037.25′	FL
46	"N"	20+90.97	1.00′ Rt	1037.67′	FL/PRC
47	"N"	21+00.00	1.53′ Rt	1038.01′	FL
48	"N"	21+10.00	2.28′ Rt	1038.38′	FL
49	"N"	21+18.98	3.01′ Lt	1038.73′	FL/PCC

SPOT ELEVATIONS

No.	LINE	STATION	OFFSET	Elev	REMARK
1	"VC"	12+39.87	3.46′ Lt	1032.52	FL/EC
2	"VC"	12+50.00	2.81′ Lt	1032.90′	FL
3	"VC"	12+60.00	2.29′ Lt	1033.18′	FL
4	"VC"	12+70.00	1.90′ Lt	1033.49′	FL
5	"VC"	12+82.39	1.58′ Lt	1033.92′	FL/BC
6	"VC"	12+90.00	1.45′ Lt	1034.21′	FL
7	"VC"	13+00.00	1.27′ Lt	1034.61′	FL
8	"VC"	13+10.00	1.09′ Lt	1035.04′	FL
9	"VC"	13+15.29	1.00′ Lt	1035.28′	FL
10	"VC"	13+22.11	1.00′ Lt	1035.60′	FL/BC
11	"VC"	13+30.00	1.00′ Lt	1035.92′	FL
12	"VC"	13+40.00	1.00′ Lt	1036.26′	FL
13	"VC"	13+52.84	1.00′ Lt	1036.59′	FL
14	"VC"	13+64.60	1.00′ Lt	1036.85′	FL
15	"VC"	13+70.00	1.00′ Lt	1036.97′	FL
16	"VC"	13+80.00	1.00′ Lt	1037.19′	FL
17	"VC"	13+87.02	1.00′ Lt	1037.35′	FL/PRC
18	"VC"	13+87.89	2.44′ Lt	1037.51′	FL
19	"VC"	13+83.61	12.55′ Lt	1037.03′	FL
20	"S"	22+41.63	1.00′ Rt	1032.44′	FL/BC
21	"S"	22+50.00	1.00′ Rt	1032.65′	FL/BC
22	"S"	22+60.00	1.00′ Rt	1032.92′	FL/PRC
23	"S"	22+70.00	1.00′ Rt	1033.23′	FL
24	"S"	22+80.00	1.00′ Rt	1033.56′	FL
25	"S"	22+90.00	1.00′ Rt	1033.92′	FL/PRC
26	"S"	23+00.00	1.00′ Rt	1034.30′	FL/PRC
27	"S"	23+10.00	1.00′ Rt	1034.71′	FL
28	"S"	23+20.00	1.00′ Rt	1035.15′	FL
29	"S"	23+30.00	1.00′ Rt	1035.59′	FL
30	"S"	23+40.00	1.00′ Rt	1036.01′	FL/PRC
31	"S"	23+50.00	1.00′ Rt	1036.34′	FL
32	"S"	23+57.26	1.00′ Rt	1036.50′	FL
33	"S"	23+69.39	1.09′ Rt	1036.66′	FL
34	"S"	23+80.00	1.96′ Rt	1036.67′	FL
35	"S"	23+90.83	3.02′ Rt	1036.56′	FL
36	"S"	23+93.36	6.96′ Rt	1036.62′	FL

CONSTRUCTION DETAILS

SCALE: 1" = 10′

C-11

STATE OF CALIFORNIA - DEPARTMENT OF TRANSPORTATION
Caltrans
TRAFFIC PROJECT DEVELOPMENT

FUNCTIONAL SUPERVISOR: JOSE LUIS ROBLES
CALCULATED-DESIGNED BY: WAYNE NGUYEN
CHECKED BY: WENDY M. DANDENEAU
REVISED BY / DATE REVISED

LAST REVISION 09-26-16 | DATE PLOTTED => 30-SEP-2016 | TIME PLOTTED => 13:44

Dist	COUNTY	ROUTE	POST MILES TOTAL PROJECT	SHEET No.	TOTAL SHEETS
11	SD	76	32.6/33.3	32	269

REGISTERED CIVIL ENGINEER 09-20-16 DATE

09-26-16
PLANS APPROVAL DATE

REGISTERED PROFESSIONAL ENGINEER
WENDY M. DANDENEAU
No. C76330
Exp. 12/31/16
CIVIL
STATE OF CALIFORNIA

THE STATE OF CALIFORNIA OR ITS OFFICERS OR AGENTS SHALL NOT BE RESPONSIBLE FOR THE ACCURACY OR COMPLETENESS OF SCANNED COPIES OF THIS PLAN SHEET.

NOTE:

SEE REVISED STANDARD PLANS P2, P10 AND P15 FOR MORE INFORMATION.

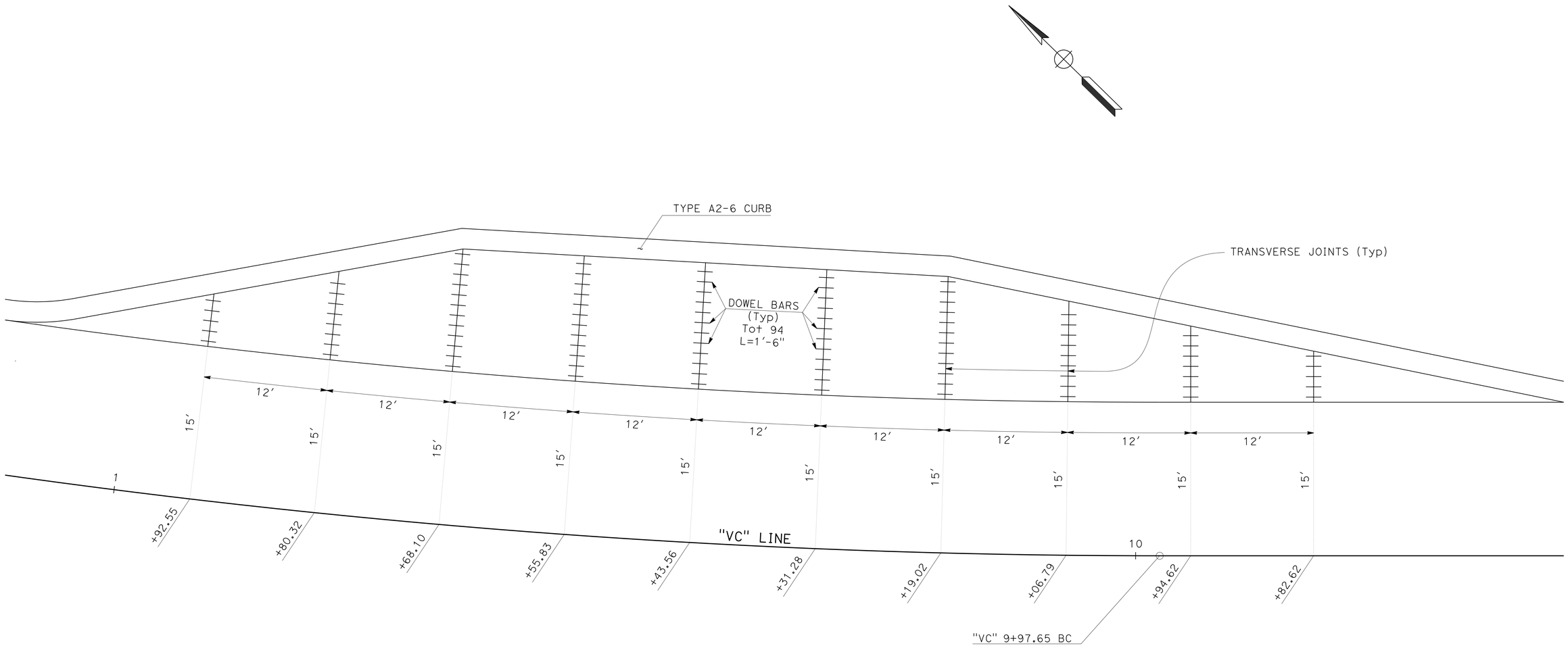

BUS PAD 1

CONSTRUCTION DETAILS

SCALE: 1" = 5'

C-12

STATE OF CALIFORNIA - DEPARTMENT OF TRANSPORTATION
Caltrans
TRAFFIC PROJECT DEVELOPMENT

FUNCTIONAL SUPERVISOR: JOSE LUIS ROBLES
CALCULATED-DESIGNED BY: VAN CALLANTA
CHECKED BY: WENDY M. DANDENEAU
REVISED BY
DATE REVISED

LAST REVISION 09-26-16
DATE PLOTTED => 30-SEP-2016
TIME PLOTTED => 13:44

Dist	COUNTY	ROUTE	POST MILES TOTAL PROJECT	SHEET No.	TOTAL SHEETS
11	SD	76	32.6/33.3	33	269

REGISTERED CIVIL ENGINEER 09-20-16 DATE

09-26-16
PLANS APPROVAL DATE

REGISTERED PROFESSIONAL ENGINEER
WENDY M. DANDENEAU
No. C76330
Exp. 12/31/16
CIVIL
STATE OF CALIFORNIA

THE STATE OF CALIFORNIA OR ITS OFFICERS OR AGENTS SHALL NOT BE RESPONSIBLE FOR THE ACCURACY OR COMPLETENESS OF SCANNED COPIES OF THIS PLAN SHEET.

NOTE:

SEE LAYOUT PLANS AND STANDARD PLANS P2, P10 AND P15 FOR MORE INFORMATION.

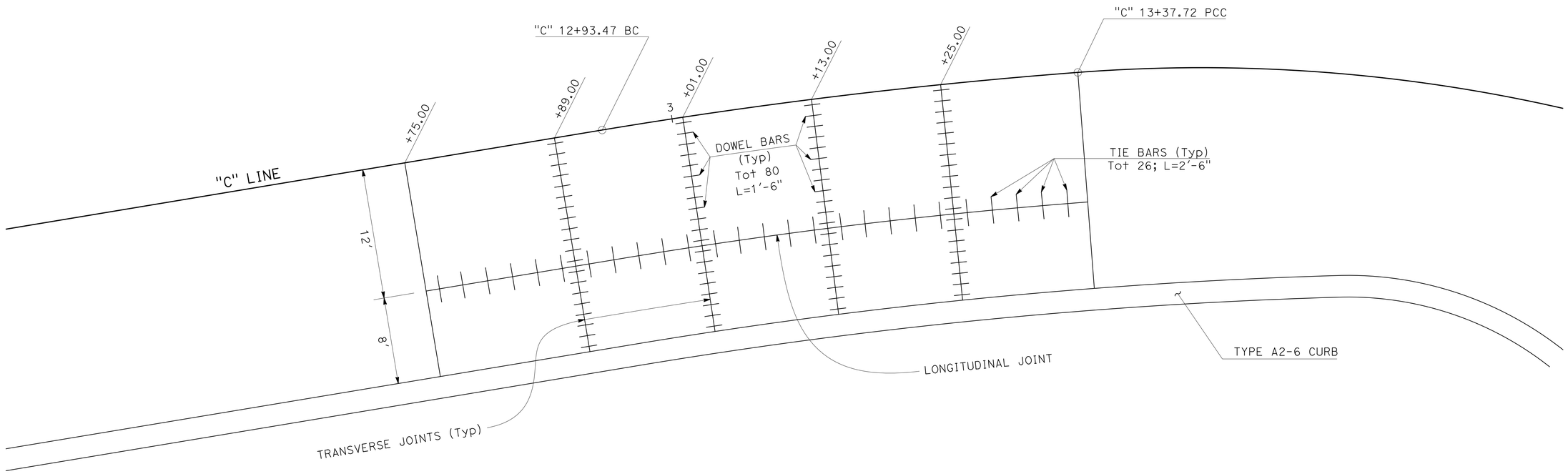

BUS PAD 2

CONSTRUCTION DETAILS

SCALE: 1" = 5'

C-13

STATE OF CALIFORNIA - DEPARTMENT OF TRANSPORTATION
Caltrans
TRAFFIC PROJECT DEVELOPMENT

FUNCTIONAL SUPERVISOR: JOSE LUIS ROBLES

CALCULATED-DESIGNED BY: VAN CALLANTA
CHECKED BY: WENDY M. DANDENEAU

REVISED BY
DATE REVISED

LAST REVISION 09-26-16
DATE PLOTTED => 30-SEP-2016
TIME PLOTTED => 13:44

Dist	COUNTY	ROUTE	POST MILES TOTAL PROJECT	SHEET No.	TOTAL SHEETS
11	SD	76	32.6/33.3	34	269

REGISTERED CIVIL ENGINEER 09-20-16 DATE

09-26-16
PLANS APPROVAL DATE

REGISTERED PROFESSIONAL ENGINEER WENDY M. DANDENEAU No. C76330 Exp. 12/31/16 CIVIL STATE OF CALIFORNIA

THE STATE OF CALIFORNIA OR ITS OFFICERS OR AGENTS SHALL NOT BE RESPONSIBLE FOR THE ACCURACY OR COMPLETENESS OF SCANNED COPIES OF THIS PLAN SHEET.

SPOT ELEVATIONS

No.	LINE	STATION	OFFSET	Elev	REMARK
1	"76E"	108+25.00	12.00′ Lt	1089.23′	ETW
2	"76E"	108+25.00	17.00′ Lt	1088.93′	FL
3	"76E"	108+50.00	12.00′ Lt	1090.79′	ETW
4	"76E"	108+50.00	21.67′ Lt	1089.77′	FL
5	"76E"	108+65.85	12.00′ Lt	1091.76′	ETW
6	"76E"	108+65.85	24.06′ Lt	1090.45′	FL/BC
7	"76E"	108+74.00	12.00′ Lt	1092.26′	ETW
8	"76E"	108+73.76	30.98′ Lt	1090.18′	FL
9	"76E"	108+73.99	33.34′ Lt	1090.27′	EC
10	"76E"	108+98.26	12.00′ Lt	1093.71′	ETW
11	"76E"	108+98.80	29.15′ Lt	1091.88′	FL
12	"76E"	108+98.26	30.86′ Lt	1091.86′	BC
13	"76E"	109+05.08	12.00′ Lt	1094.11′	ETW
14	"76E"	109+05.08	24.36′ Lt	1092.81′	FL/EC
15	"76E"	109+25.00	12.00′ Lt	1095.27′	ETW
16	"76E"	109+25.00	21.63′ Lt	1094.46′	FL
17	"76E"	109+50.95	12.00′ Lt	1096.76′	ETW
18	"76E"	109+50.95	17.00′ Lt	1096.46′	FL

CURVE DATA

No.	R	Δ	T	L
1	8.93′	85°06′45"	8.20′	13.26′
2	7.27′	77°24′06"	5.83′	9.82′
3	18.00′	64°59′59"	11.47′	20.42′
4	63.00′	36°12′33"	20.60′	39.81′

SPOT ELEVATIONS

No.	LINE	STATION	OFFSET	Elev	REMARK
19	"VC"	11+19.95	17.54′ Lt	1031.36′	ETW
20	"VC"	11+19.95	22.54′ Lt	1031.11′	FL
21	"VC"	11+42.55	18.44′ Lt	1031.19′	ETW
22	"VC"	11+42.55	28.51′ Lt	1030.69′	FL/BC
23	"VC"	11+54.92	18.87′ Lt	1031.14′	ETW
24	"VC"	11+54.92	28.24′ Lt	1030.67′	ES
25	"VC"	11+54.92	42.90′ Lt	1029.50′	FL/EC
26	"VC"	11+70.00	19.32′ Lt	1031.16′	ETW
27	"VC"	11+70.00	28.17′ Lt	1030.72′	ES
28	"VC"	11+70.00	46.15′ Lt	1029.54′	S/C
29	"VC"	11+81.76	19.62′ Lt	1031.23′	ETW
30	"VC"	11+81.76	28.32′ Lt	1030.80′	ES
31	"VC"	11+81.76	48.90′ Lt	1029.59′	FL/BC
32	"VC"	12+00.00	20.00′ Lt	1031.42′	ETW
33	"VC"	12+00.00	28.90′ Lt	1030.98′	ES
34	"VC"	12+00.00	34.43′ Lt	1030.71′	FL
35	"VC"	12+14.28	20.22′ Lt	1031.64′	ETW
36	"VC"	12+14.28	29.66′ Lt	1031.26′	FL/EC

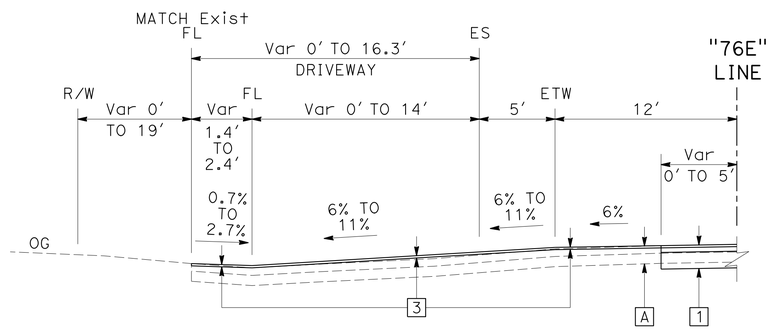

SECTION A-A
NO SCALE

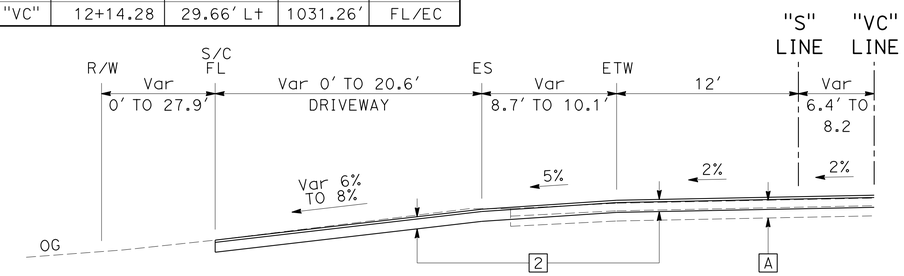

SECTION B-B
NO SCALE

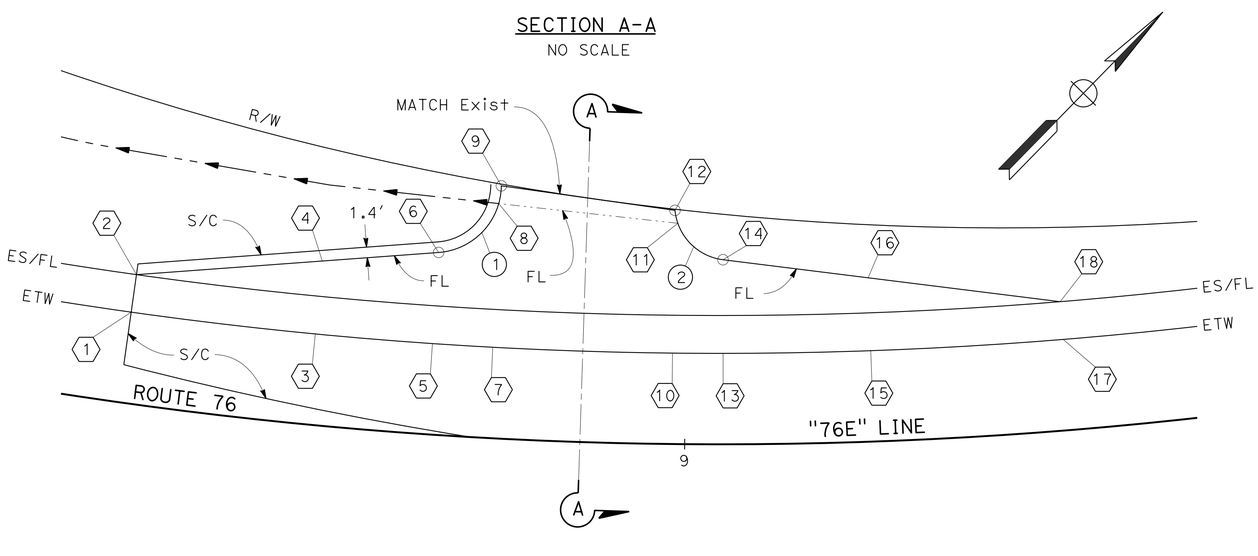

DRIVEWAY 1
"76E" LINE

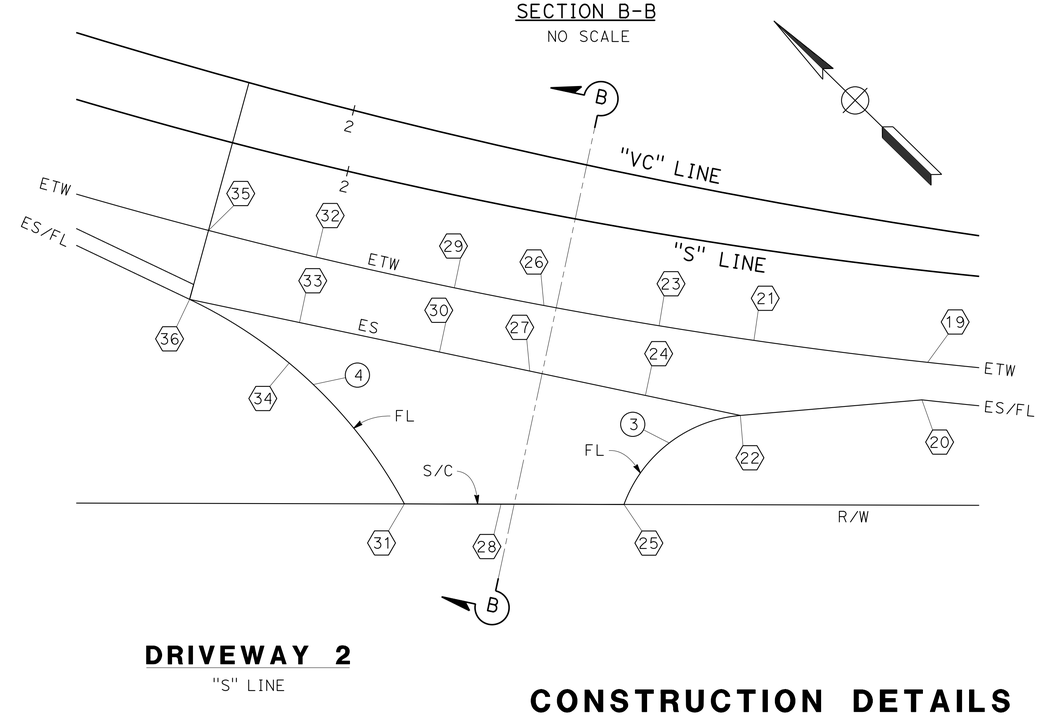

DRIVEWAY 2
"S" LINE

CONSTRUCTION DETAILS

SCALE: 1" = 10′

C-14

STATE OF CALIFORNIA - DEPARTMENT OF TRANSPORTATION
Caltrans
TRAFFIC PROJECT DEVELOPMENT

FUNCTIONAL SUPERVISOR: JOSE LUIS ROBLES
CALCULATED-DESIGNED BY: WAYNE NGUYEN
CHECKED BY: WENDY M. DANDENEAU
REVISED BY
DATE REVISED

LAST REVISION 09-26-16
DATE PLOTTED => 30-SEP-2016
TIME PLOTTED => 13:44

Dist	COUNTY	ROUTE	POST MILES TOTAL PROJECT	SHEET No.	TOTAL SHEETS
11	SD	76	32.6/33.3	35	269

REGISTERED CIVIL ENGINEER 09-20-16 DATE

09-26-16
PLANS APPROVAL DATE

REGISTERED PROFESSIONAL ENGINEER WENDY M. DANDENEAU No. C76330 Exp. 12/31/16 CIVIL STATE OF CALIFORNIA

THE STATE OF CALIFORNIA OR ITS OFFICERS OR AGENTS SHALL NOT BE RESPONSIBLE FOR THE ACCURACY OR COMPLETENESS OF SCANNED COPIES OF THIS PLAN SHEET.

SPOT ELEVATIONS

No.	LINE	STATION	OFFSET	Elev	REMARK
1	"NWFL"	11+00.22	-	1038.21′	FL/BC
2	"NWFL"	11+10.00	-	1038.57′	FL
3	"NWFL"	11+10.00	3.10′ Lt	1038.83′	FL
4	"NWFL"	11+10.00	3.20′ Lt	1039.11′	TC
5	"NWFL"	11+13.64	-	1038.70′	FL
6	"NWFL"	11+13.64	6.63′ Lt	1039.31′	FL/FSW
7	"NWFL"	11+16.95	13.88′ Lt	1039.56′	FL/EC/EP
8	"NWFL"	11+19.70	-	1038.96′	EP/PCC
9	"NWFL"	11+27.45	-	1039.29′	FL
10	"NWFL"	11+27.45	6.62′ Lt	1039.91′	FSW
11	"NWFL"	11+27.45	13.14′ Lt	1040.01′	EP
12	"NWFL"	11+37.73	13.97′ Lt	1040.46′	FL/BC/EP
13	"NWFL"	11+40.68	-	1039.93′	FL
14	"NWFL"	11+40.68	6.62′ Lt	1040.48′	FL/FSW
15	"NWFL"	11+45.07	-	1040.14′	FL
16	"NWFL"	11+45.07	2.41′ Lt	1040.42′	FL
17	"NWFL"	11+45.78	2.51′ Lt	1040.74′	TC
18	"NWFL"	11+53.46	-	1040.62′	FL/EC

CURVE DATA

No.	R	Δ	T	L
1	20.00′	68°16′37"	13.56′	23.83′
2	20.00′	66°49′50"	13.20′	23.33′
3	10.00′	79°19′41"	8.29′	13.85′
4	20.00′	43°33′28"	7.99′	15.20′

SPOT ELEVATIONS

No.	LINE	STATION	OFFSET	Elev	REMARK
15	"CDS1"	12+09.31	-	1063.22′	FL/BC
16	"CDS1"	12+17.24	6.62′ Rt	1062.98′	FL
17	"CDS1"	12+17.50	9.07′ Rt	1063.01′	FL/EC
18	"CDS1"	12+17.50	10.00′ Rt	1063.04′	FL/EP
19	"CDS1"	12+24.35	-	1062.49′	FL/EC
20	"CDS1"	12+24.35	9.73′ Rt	1062.69′	EP
21	"CDS1"	12+29.91	10.00′ Rt	1062.19′	FL/BC/EP
22	"CDS1"	12+40.88	-	1061.37′	FL/EC

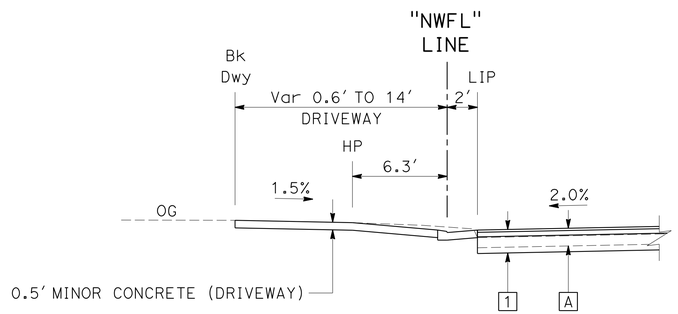

SECTION A-A
NO SCALE

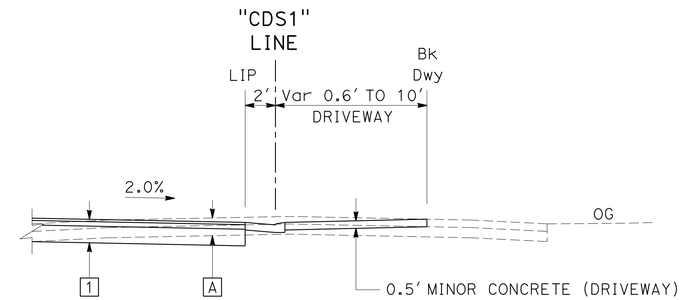

SECTION B-B
NO SCALE

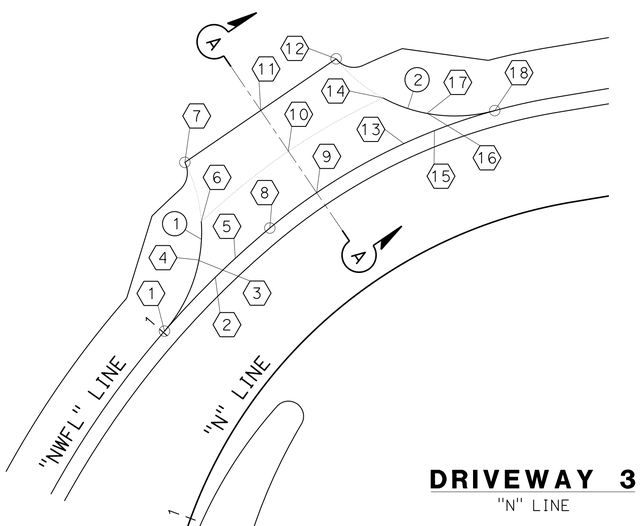

DRIVEWAY 3
"N" LINE

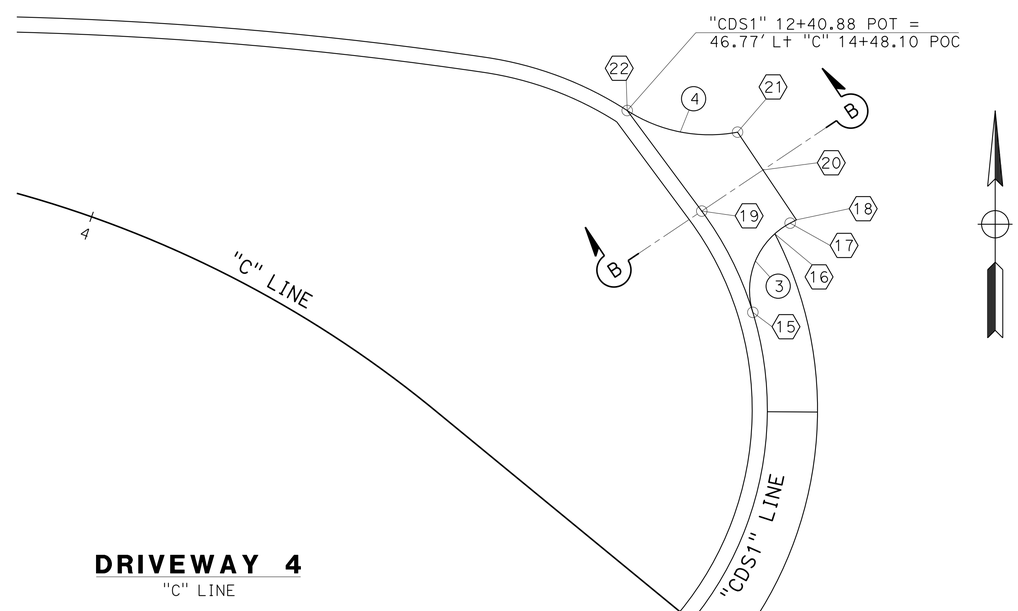

DRIVEWAY 4
"C" LINE

CONSTRUCTION DETAILS

SCALE: 1" = 10′

C-15

STATE OF CALIFORNIA - DEPARTMENT OF TRANSPORTATION
Caltrans
TRAFFIC PROJECT DEVELOPMENT

FUNCTIONAL SUPERVISOR: JOSE LUIS ROBLES
CALCULATED-DESIGNED BY: WAYNE NGUYEN
CHECKED BY: WENDY M. DANDENEAU
REVISED BY
DATE REVISED

LAST REVISION 09-26-16
DATE PLOTTED => 30-SEP-2016
TIME PLOTTED => 13:44

Dist	COUNTY	ROUTE	POST MILES TOTAL PROJECT	SHEET No.	TOTAL SHEETS
11	SD	76	32.6/33.3	36	269

REGISTERED CIVIL ENGINEER 09-20-16 DATE

09-26-16
PLANS APPROVAL DATE

REGISTERED PROFESSIONAL ENGINEER WENDY M. DANDENEAU No. C76330 Exp. 12/31/16 CIVIL STATE OF CALIFORNIA

THE STATE OF CALIFORNIA OR ITS OFFICERS OR AGENTS SHALL NOT BE RESPONSIBLE FOR THE ACCURACY OR COMPLETENESS OF SCANNED COPIES OF THIS PLAN SHEET.

CURVE DATA

No.	R	Δ	T	L
1	513.41′	10°21′03″	46.50′	92.75′
2	520.24′	7°36′00″	14.50′	28.96′

SPOT ELEVATIONS

No.	LINE	STATION	OFFSET	Elev	REMARK
1	"76W"	97+43.27	14.69′ R+	1024.92′	LIP
2	"76W"	97+43.33	16.69′ R+	1024.87′	FL
3	"76W"	97+43.38	18.54′ R+	1024.88′	FSW
4	"76W"	97+58.36	21.21′ R+	1026.11′	FSW, PI
5	"76W"	97+59.32	21.18′ R+	1026.19′	FSW
6	"76W"	97+59.47	26.18′ R+	1026.26′	BSW
7	"76W"	97+57.98	26.22′ R+	1026.17′	BSW, PI
8	"76W"	97+42.64	23.48′ R+	1024.95′	BSW
9	"76W"	97+38.68	22.86′ R+	1024.75′	BSW
10	"76W"	97+38.50	16.86′ R+	1024.64′	FL
11	"76W"	97+38.43	14.86′ R+	1024.68′	LIP
12	"W"	97+50.15	16.04′ L+	1025.25′	FSW
13	"W"	97+49.49	21.00′ L+	1025.18′	BSW
14	"W"	97+71.66	24.00′ L+	1026.87′	BSW,PI
15	"W"	97+80.00	24.00′ L+	1027.42′	BSW
16	"W"	97+80.00	19.00′ L+	1027.35′	FSW
17	"W"	97+72.00	19.00′ L+	1026.94′	FSW

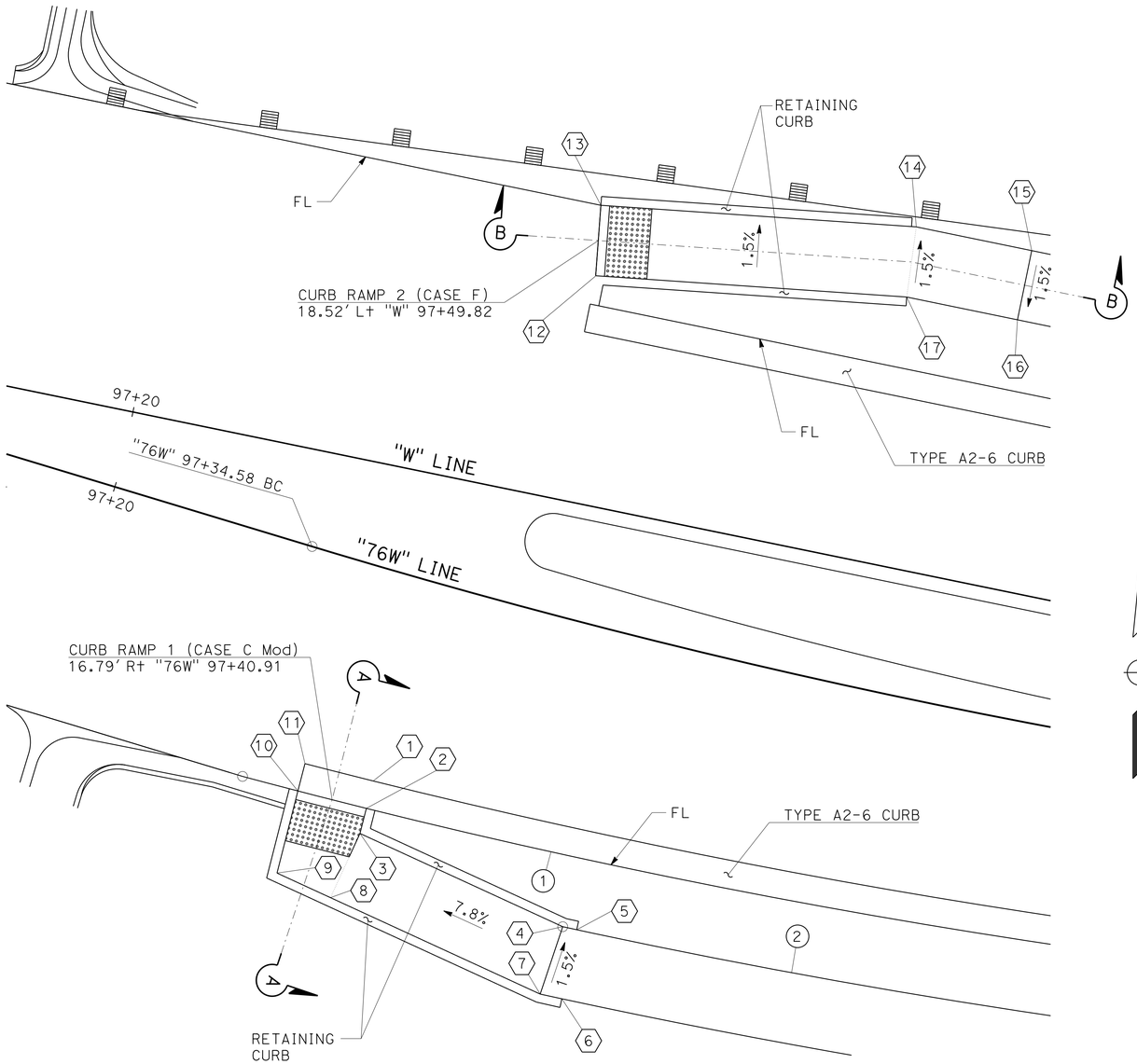

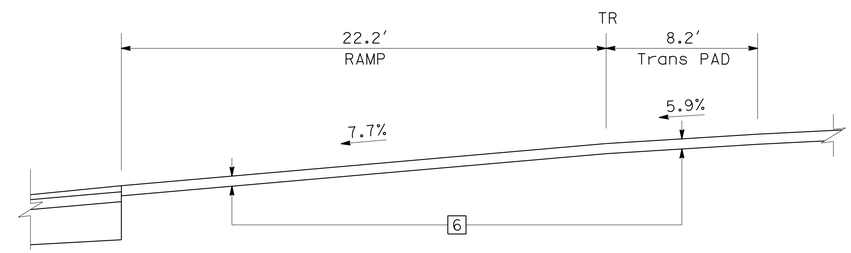

SECTION B-B
NO SCALE

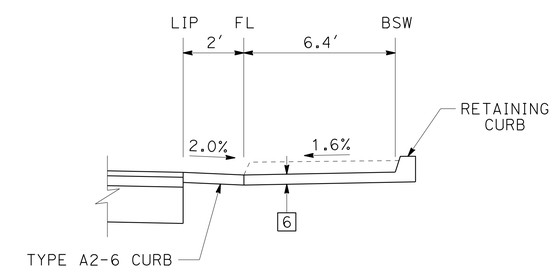

SECTION A-A
NO SCALE

CURB RAMPS
"76W" & "W" LINE

CONSTRUCTION DETAILS

SCALE: 1" = 5′

C-16

STATE OF CALIFORNIA - DEPARTMENT OF TRANSPORTATION
Caltrans
TRAFFIC PROJECT DEVELOPMENT

FUNCTIONAL SUPERVISOR: JOSE LUIS ROBLES
CALCULATED-DESIGNED BY: KENNY T. NGUYEN
CHECKED BY: WENDY M. DANDENEAU
REVISED BY
DATE REVISED

LAST REVISION 09-26-16 | DATE PLOTTED => 30-SEP-2016 | TIME PLOTTED => 13:44

Dist	COUNTY	ROUTE	POST MILES TOTAL PROJECT	SHEET No.	TOTAL SHEETS
11	SD	76	32.6/33.3	37	269

REGISTERED CIVIL ENGINEER 09-20-16 DATE

09-26-16
PLANS APPROVAL DATE

REGISTERED PROFESSIONAL ENGINEER WENDY M. DANDENEAU No. C76330 Exp. 12/31/16 CIVIL STATE OF CALIFORNIA

THE STATE OF CALIFORNIA OR ITS OFFICERS OR AGENTS SHALL NOT BE RESPONSIBLE FOR THE ACCURACY OR COMPLETENESS OF SCANNED COPIES OF THIS PLAN SHEET.

CURVE DATA

No.	R	Δ	T	L
1	83.00′	62°41′39"	50.56′	90.82′
2	15.00′	61°10′39"	8.87′	16.02′
3	96.00′	36°27′13"	31.61′	61.08′
4	1.00′	82°43′28"	0.88′	1.44′
5	5.00′	29°55′23"	1.34′	2.61′
6	1.00′	86°36′15"	0.94′	1.51′
7	401.00′	17°16′05"	60.89′	120.86′

CURVE DATA

No.	R	Δ	T	L
8	1.00′	91°40′39"	1.03′	1.60′
9	5.00′	29°55′23"	1.34′	2.61′
10	1.00′	90°10′05"	1.00′	1.57′
11	328.00′	25°33′59"	74.42′	146.36′
12	25.00′	53°25′18"	12.58′	23.31′
13	328.00′	25°33′59"	74.42′	146.36′

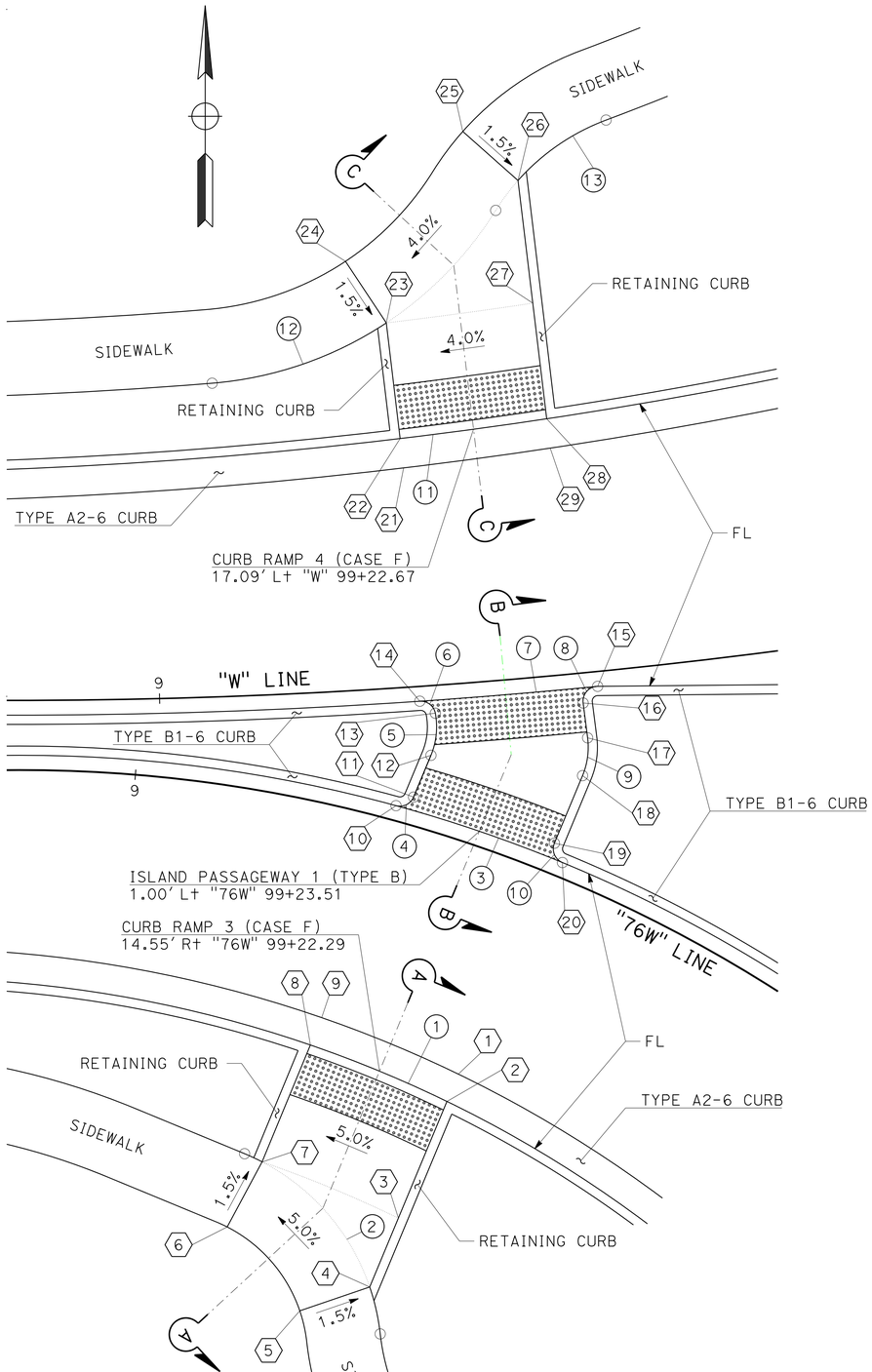

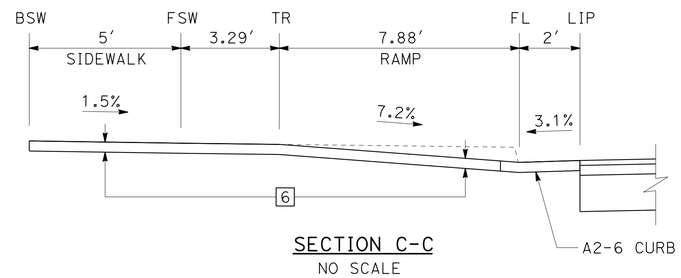

SECTION C-C
NO SCALE

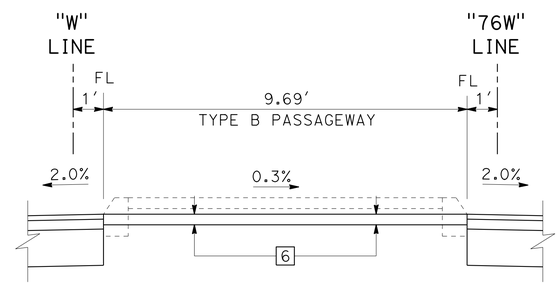

SECTION B-B
NO SCALE

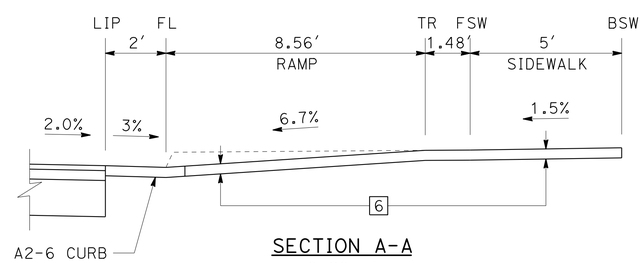

SECTION A-A
NO SCALE

SPOT ELEVATIONS

No.	LINE	STATION	OFFSET	Elev	REMARK
1	"76W"	99+28.20	14.92′ R+	1033.84′	LIP
2	"76W"	99+28.17	16.92′ R+	1033.77′	FL
3	"76W"	99+27.97	25.47′ R+	1034.34′	RAMP
4	"76W"	99+27.83	30.52′ R+	1034.41′	FSW
5	"76W"	99+21.93	33.64′ R+	1034.48′	BSW
6	"76W"	99+12.61	29.43′ R+	1033.91′	BSW
7	"76W"	99+14.46	24.61′ R+	1033.84′	FSW
8	"76W"	99+16.09	16.14′ R+	1033.27′	FL
9	"76W"	99+16.29	14.15′ R+	1033.32′	LIP
10	"76W"	99+17.66	1.00′ L+	1033.69′	FL/EC
11	"76W"	99+18.64	1.88′ L+	1033.71′	FL
12	"76W"	99+18.98	4.92′ L+	1033.72′	FL
13	"W"	99+18.56	1.94′ R+	1033.73′	FL
14	"W"	99+17.56	1.00′ R+	1033.74′	FL/EC
15	"W"	99+29.61	1.00′ R+	1034.24′	FL
16	"W"	99+28.53	2.03′ R+	1034.24′	FL
17	"W"	99+28.60	4.40′ R+	1034.23′	FL
18	"76W"	99+28.53	6.96′ L+	1034.23′	FL
19	"76W"	99+28.47	2.01′ L+	1034.22′	FL
20	"76W"	99+29.45	1.00′ L+	1034.21′	FL/PRC
21	"W"	99+17.55	14.83′ L+	1033.43′	LIP
22	"W"	99+17.45	16.83′ L+	1033.35′	FL
23	"W"	99+17.02	24.70′ L+	1033.92′	FSW
24	"W"	99+14.35	29.04′ L+	1033.99′	BSW
25	"W"	99+23.68	37.23′ L+	1034.52′	BSW
26	"W"	99+27.44	33.59′ L+	1034.45′	FSW
27	"W"	99+27.68	25.24′ L+	1034.32′	RAMP
28	"W"	99+27.89	17.36′ L+	1033.76′	FL
29	"W"	99+27.94	15.36′ L+	1033.85′	LIP

CURB RAMPS AND ISLAND PASSAGEWAY

"76W" & "W" LINE

CONSTRUCTION DETAILS

SCALE: 1" = 5′

C-17

STATE OF CALIFORNIA - DEPARTMENT OF TRANSPORTATION
TRAFFIC PROJECT DEVELOPMENT
Caltrans

FUNCTIONAL SUPERVISOR: JOSE LUIS ROBLES
CALCULATED-DESIGNED BY: KENNY T. NGUYEN
CHECKED BY: WENDY M. DANDENEAU
REVISED BY
DATE REVISED

LAST REVISION 09-26-16
DATE PLOTTED => 30-SEP-2016
TIME PLOTTED => 13:44

Dist	COUNTY	ROUTE	POST MILES TOTAL PROJECT	SHEET No.	TOTAL SHEETS
11	SD	76	32.6/33.3	38	269

REGISTERED CIVIL ENGINEER 09-20-16 DATE

09-26-16
PLANS APPROVAL DATE

REGISTERED PROFESSIONAL ENGINEER WENDY M. DANDENEAU No. C76330 Exp. 12/31/16 CIVIL STATE OF CALIFORNIA

THE STATE OF CALIFORNIA OR ITS OFFICERS OR AGENTS SHALL NOT BE RESPONSIBLE FOR THE ACCURACY OR COMPLETENESS OF SCANNED COPIES OF THIS PLAN SHEET.

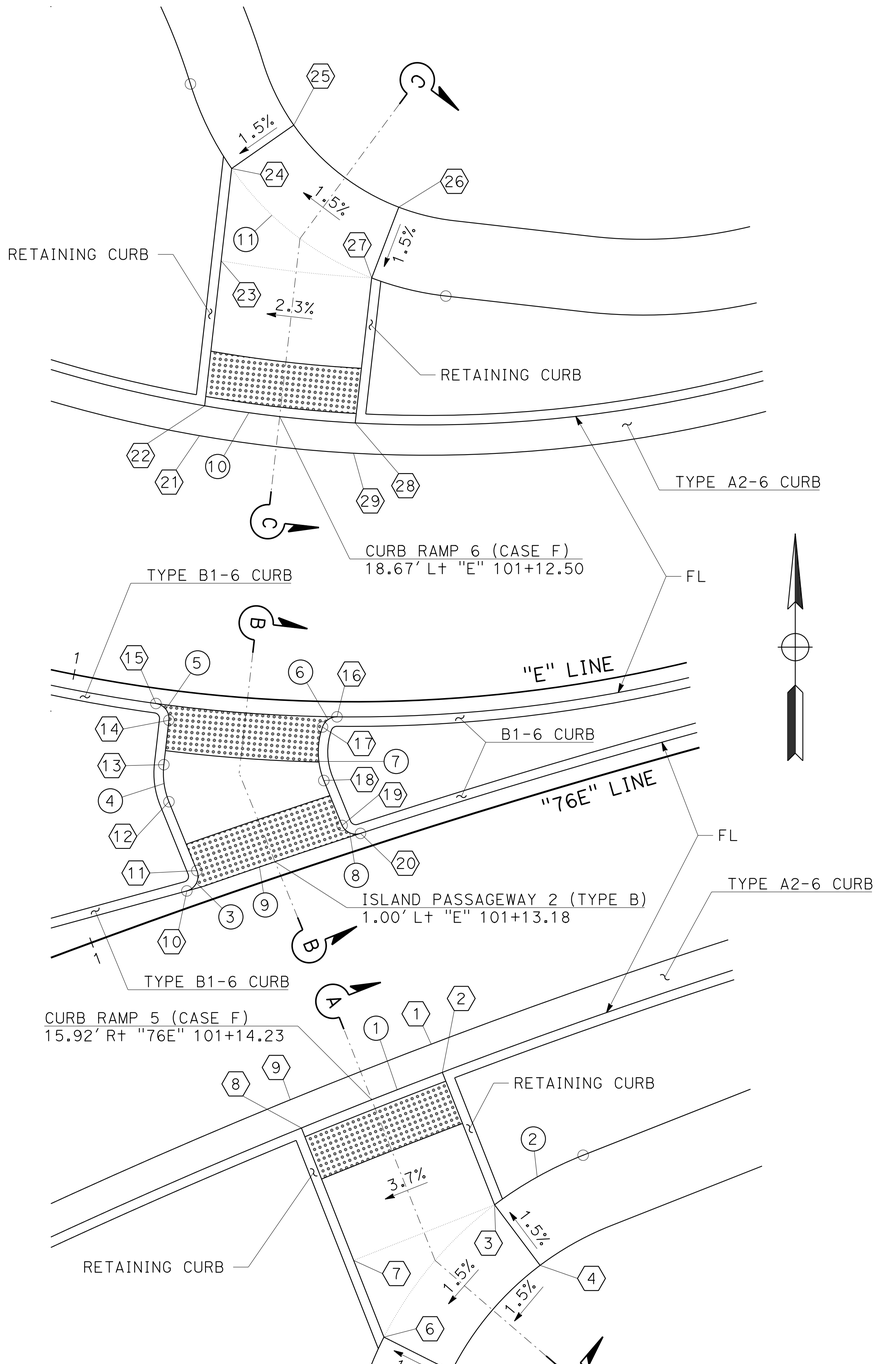

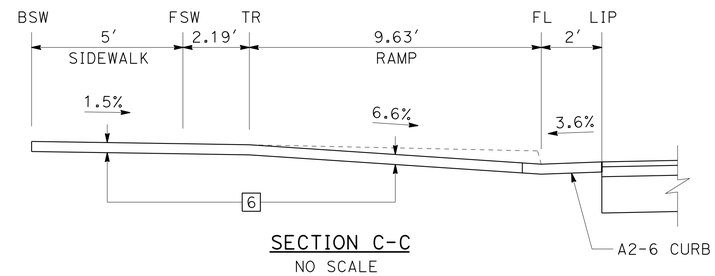

SECTION C-C
NO SCALE

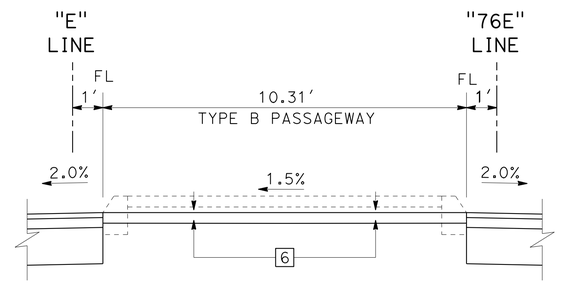

SECTION B-B
NO SCALE

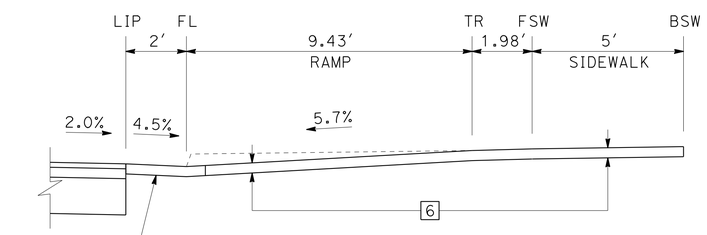

SECTION A-A
NO SCALE

SPOT ELEVATIONS

No.	LINE	STATION	OFFSET	Elev	REMARK
1	"76E"	101+19.26	13.67′ R+	1039.74′	LIP
2	"76E"	101+19.38	15.67′ R+	1039.66′	FL
3	"76E"	101+20.00	25.05′ R+	1040.21′	FSW
4	"76E"	101+21.73	29.77′ R+	1040.29′	BSW
5	"76E"	101+13.46	34.59′ R+	1040.11′	BSW
6	"76E"	101+09.72	31.01′ R+	1040.04′	FSW
7	"76E"	101+09.48	25.57′ R+	1039.84′	RAMP
8	"76E"	101+09.06	16.19′ R+	1039.31′	FL
9	"76E"	101+08.96	14.19′ R+	1039.39′	LIP
10	"76E"	101+07.07	1.08′ L+	1039.60′	FL/BC
11	"76E"	101+08.13	2.13′ L+	1039.59′	FL
12	"76E"	101+07.89	7.02′ L+	1039.57′	FL
13	"E"	101+06.63	4.93′ R+	1039.56′	FL
14	"E"	101+06.60	1.98′ R+	1039.54′	FL
15	"E"	101+05.62	1.00′ R+	1039.49′	FL/PRC
16	"E"	101+17.39	1.00′ R+	1039.73′	FL/PRC
17	"E"	101+16.41	1.90′ R+	1039.77′	FL
18	"E"	101+16.71	5.21′ R+	1039.87′	FL
19	"76E"	101+18.12	1.88′ L+	1039.97′	FL
20	"76E"	101+19.11	1.00′ L+	1040.01′	FL/PRC
21	"E"	101+06.17	16.90′ L+	1039.14′	LIP
22	"E"	101+06.27	18.90′ L+	1039.09′	FL
23	"E"	101+06.06	28.53′ L+	1039.73′	RAMP
24	"E"	101+05.88	34.66′ L+	1039.79′	FSW
25	"E"	101+12.01	37.93′ L+	1039.86′	BSW
26	"E"	101+23.13	32.57′ L+	1040.04′	BSW
27	"E"	101+20.28	27.96′ L+	1039.96′	FSW
28	"E"	101+18.71	18.40′ L+	1039.32′	FL
29	"E"	101+18.57	16.41′ L+	1039.41′	LIP

CURVE DATA

No.	R	Δ	T	L
1	403.00′	13°45′33"	48.62′	96.78′
2	25.00′	53°12′50"	12.52′	23.22′
3	1.00′	96°48′24"	1.13′	1.69′
4	5.00′	28°35′30"	1.27′	2.50′
5	1.00′	88°41′53"	0.98′	1.55′
6	1.00′	84°12′04"	0.90′	1.47′
7	5.00′	28°35′30"	1.27′	2.50′
8	1.00′	82°52′53"	0.88′	1.45′
9	501.00′	4°47′46"	20.98′	41.94′
10	86.00′	49°11′10"	39.36′	73.83′
11	20.00′	66°25′52"	13.10′	23.19′

CURB RAMPS AND ISLAND PASSAGEWAY

"76E" & "E" LINE

CONSTRUCTION DETAILS

SCALE: 1" = 5′

C-18

STATE OF CALIFORNIA - DEPARTMENT OF TRANSPORTATION
Caltrans
TRAFFIC PROJECT DEVELOPMENT

FUNCTIONAL SUPERVISOR: JOSE LUIS ROBLES
CALCULATED-DESIGNED BY: KENNY T. NGUYEN
CHECKED BY: WENDY M. DANDENEAU
REVISED BY / DATE REVISED

LAST REVISION 09-26-16 | DATE PLOTTED => 30-SEP-2016 | TIME PLOTTED => 13:44

Dist	COUNTY	ROUTE	POST MILES TOTAL PROJECT	SHEET No.	TOTAL SHEETS
11	SD	76	32.6/33.3	39	269

REGISTERED CIVIL ENGINEER 09-20-16 DATE

09-26-16
PLANS APPROVAL DATE

REGISTERED PROFESSIONAL ENGINEER WENDY M. DANDENEAU No. C76330 Exp. 12/31/16 CIVIL STATE OF CALIFORNIA

THE STATE OF CALIFORNIA OR ITS OFFICERS OR AGENTS SHALL NOT BE RESPONSIBLE FOR THE ACCURACY OR COMPLETENESS OF SCANNED COPIES OF THIS PLAN SHEET.

CURVE DATA

No.	R	Δ	T	L
1	1.00′	27°56′19"	0.25′	0.49′
2	5.00′	27°56′54"	1.24′	2.44′
3	547.00′	7°34′15"	36.19′	72.28′
4	552.00′	7°33′48"	36.49′	72.87′

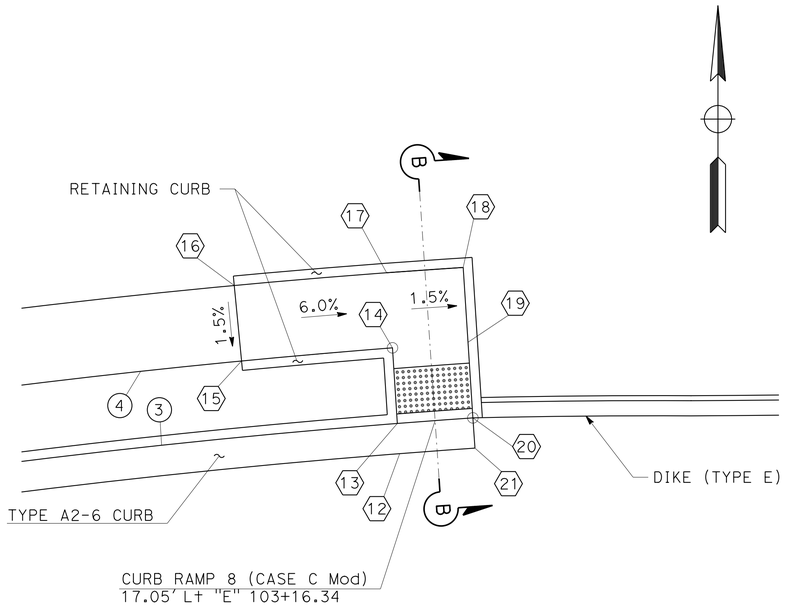

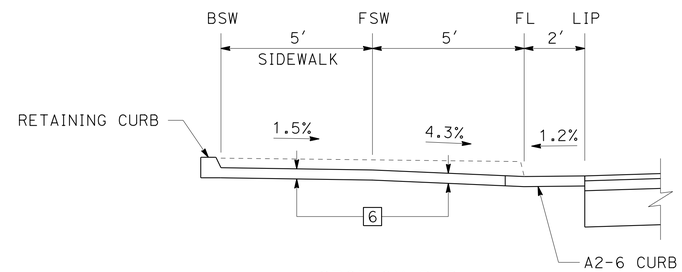

SECTION B-B
NO SCALE

SPOT ELEVATIONS

No.	LINE	STATION	OFFSET	Elev	REMARK
1	"76E"	103+13.26	14.22′ R+	1053.33′	LIP
2	"76E"	103+13.08	16.22′ R+	1053.28′	FL
3	"76E"	103+08.00	18.89′ R+	1053.06′	FSW,EC
4	"76E"	103+07.55	19.00′ R+	1053.04′	FSW,BC
5	"76E"	102+98.59	19.00′ R+	1052.69′	FSW
6	"76E"	102+98.59	24.00′ R+	1052.76′	BSW
7	"76E"	103+07.80	24.00′ R+	1053.10′	BSW,BC
8	"76E"	103+10.18	23.41′ R+	1053.13′	BSW,EC
9	"76E"	103+15.47	20.62′ R+	1053.36′	BSW
10	"76E"	103+22.27	17.00′ R+	1053.93′	FL
11	"76E"	103+22.44	15.01′ R+	1053.98′	LIP
12	"E"	103+15.23	15.01′ L+	1053.34′	LIP
13	"E"	103+15.17	17.01′ L+	1053.30′	FL
14	"E"	103+15.07	22.01′ L+	1053.69′	FSW
15	"E"	103+05.49	21.67′ L+	1053.09′	FSW
16	"E"	103+05.33	26.68′ L+	1053.16′	BSW
17	"E"	103+14.91	26.98′ L+	1053.77′	BSW
18	"E"	103+19.72	27.13′ L+	1053.84′	BSW
19	"E"	103+19.86	22.18′ L+	1053.77′	FSW
20	"E"	103+20.00	17.18′ L+	1053.65′	FL
21	"E"	103+20.07	15.18′ L+	1053.69′	LIP

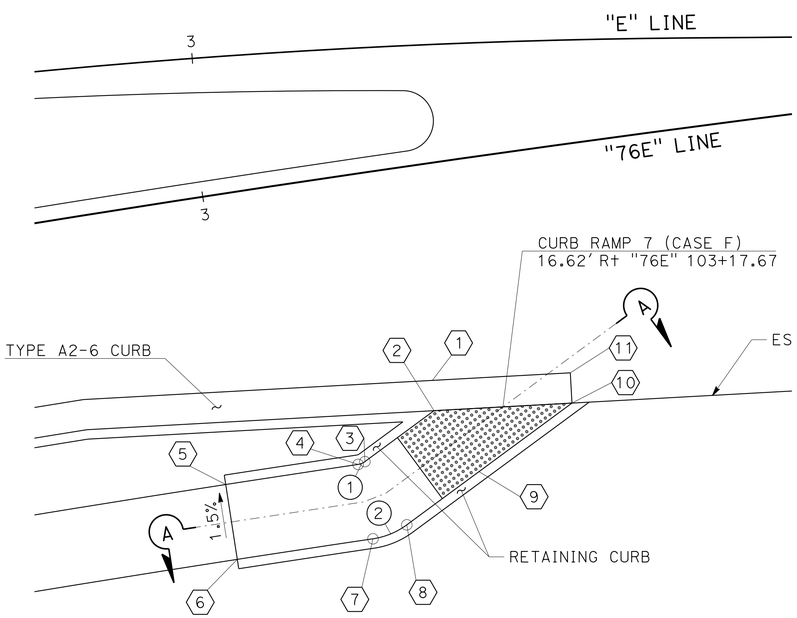

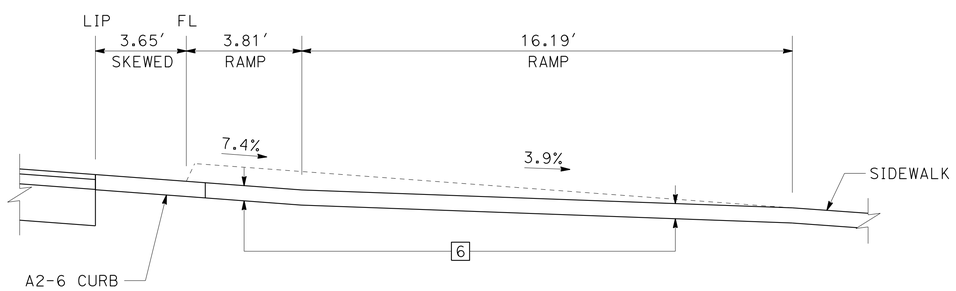

SECTION A-A
NO SCALE

CURB RAMPS
"76E" & "E" LINE

CONSTRUCTION DETAILS

SCALE: 1" = 5′

C-19

STATE OF CALIFORNIA - DEPARTMENT OF TRANSPORTATION
Caltrans
TRAFFIC PROJECT DEVELOPMENT

FUNCTIONAL SUPERVISOR: JOSE LUIS ROBLES
CALCULATED-DESIGNED BY: KENNY T. NGUYEN
CHECKED BY: WENDY M. DANDENEAU
REVISED BY / DATE REVISED

LAST REVISION 09-26-16 | DATE PLOTTED => 30-SEP-2016 | TIME PLOTTED => 13:44

Dist	COUNTY	ROUTE	POST MILES TOTAL PROJECT	SHEET No.	TOTAL SHEETS
11	SD	76	32.6/33.3	40	269

REGISTERED CIVIL ENGINEER 09-20-16 DATE

09-26-16
PLANS APPROVAL DATE

REGISTERED PROFESSIONAL ENGINEER
WENDY M. DANDENEAU
No. C76330
Exp. 12/31/16
CIVIL
STATE OF CALIFORNIA

THE STATE OF CALIFORNIA OR ITS OFFICERS OR AGENTS SHALL NOT BE RESPONSIBLE FOR THE ACCURACY OR COMPLETENESS OF SCANNED COPIES OF THIS PLAN SHEET.

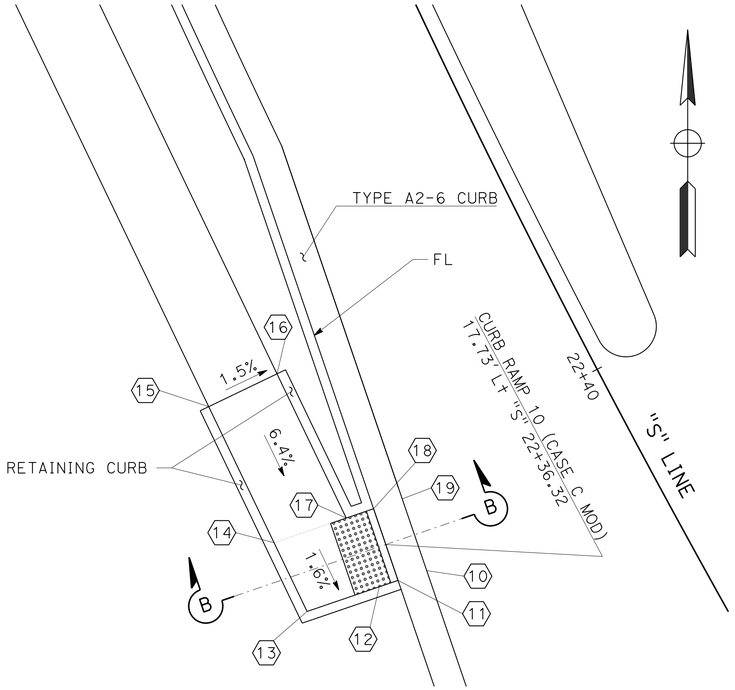

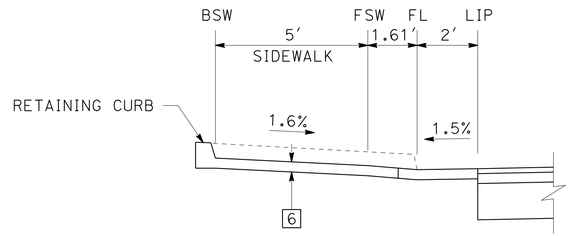

SECTION B-B
NO SCALE

SPOT ELEVATIONS

No.	LINE	STATION	OFFSET	Elev	REMARK
1	"VC"	9+58.00	15.00' R+	1032.71'	LIP
2	"VC"	9+58.00	17.00' R+	1032.67'	FL
3	"VC"	9+63.75	18.17' R+	1032.61'	FL
4	"VC"	9+63.62	18.79' R+	1033.13'	BOC,FSW
5	"VC"	9+62.42	24.66' R+	1033.22'	BSW
6	"VC"	9+56.74	23.50' R+	1032.78'	BSW
7	"VC"	9+52.62	23.50' R+	1032.79'	BSW
8	"VC"	9+52.62	17.00' R+	1032.69'	FL
9	"VC"	9+52.62	15.00' R+	1032.73'	LIP
10	"S"	22+33.61	16.16' L+	1031.91'	LIP
11	"S"	22+33.92	18.13' L+	1031.88'	FL
12	"S"	22+34.13	19.42' L+	1031.94'	FSW
13	"S"	22+34.91	24.39' L+	1032.03'	BSW
14	"S"	22+39.73	24.20' L+	1032.10'	BSW
15	"S"	22+49.36	23.93' L+	1032.78'	BSW
16	"S"	22+49.27	18.93' L+	1032.71'	FSW
17	"S"	22+39.01	19.22' L+	1032.02'	FSW
18	"S"	22+38.73	17.34' L+	1032.00'	FL
19	"S"	22+38.43	15.37' L+	1032.03'	LIP

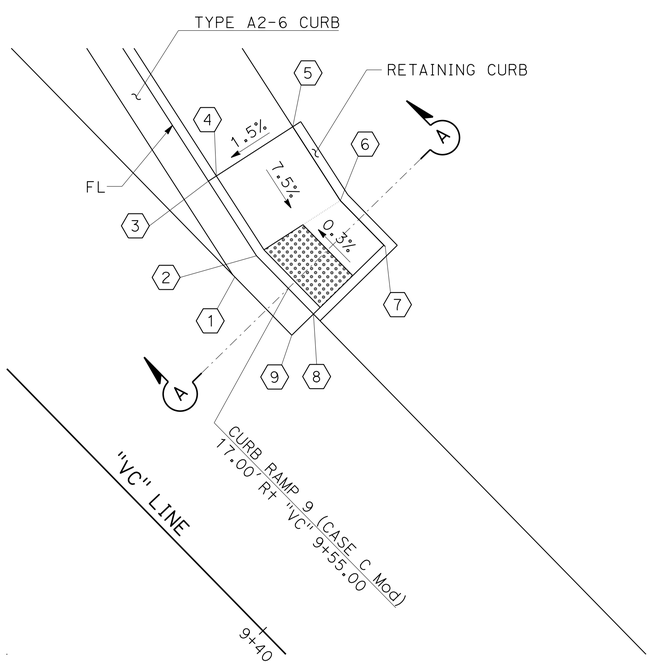

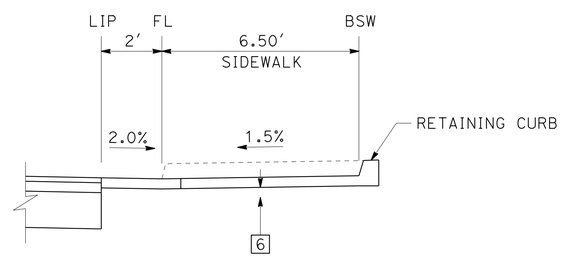

SECTION A-A
NO SCALE

CURB RAMPS
"VC" & "S" LINE

CONSTRUCTION DETAILS

SCALE: 1" = 5'

C-20

STATE OF CALIFORNIA - DEPARTMENT OF TRANSPORTATION
Caltrans
TRAFFIC PROJECT DEVELOPMENT

FUNCTIONAL SUPERVISOR: JOSE LUIS ROBLES
CALCULATED-DESIGNED BY: KENNY T. NGUYEN
CHECKED BY: WENDY M. DANDENEAU
REVISED BY
DATE REVISED

LAST REVISION 09-26-16
DATE PLOTTED => 30-SEP-2016
TIME PLOTTED => 13:44

Dist	COUNTY	ROUTE	POST MILES TOTAL PROJECT	SHEET No.	TOTAL SHEETS
11	SD	76	32.6/33.3	41	269

REGISTERED CIVIL ENGINEER DATE 09-20-16

PLANS APPROVAL DATE 09-26-16

REGISTERED PROFESSIONAL ENGINEER WENDY M. DANDENEAU No. C76330 Exp. 12/31/16 CIVIL STATE OF CALIFORNIA

THE STATE OF CALIFORNIA OR ITS OFFICERS OR AGENTS SHALL NOT BE RESPONSIBLE FOR THE ACCURACY OR COMPLETENESS OF SCANNED COPIES OF THIS PLAN SHEET.

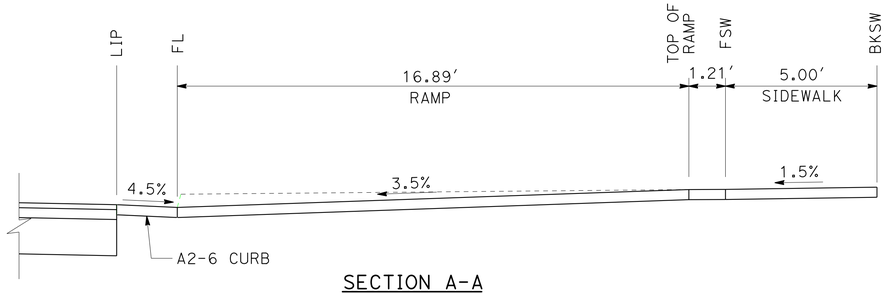

SECTION A-A
NO SCALE

CURVE DATA

No.	R	Δ	T	L
1	85.00′	90°38′57"	85.97′	134.48′
2	90.01′	15°34′19"	12.31′	24.46′
3	70.00′	25°29′45"	15.84′	31.15′
4	1.00′	80°57′33"	0.85′	1.41′
5	5.00′	31°07′47"	1.39′	2.72′
6	1.00′	85°48′02"	0.93′	1.50′
7	1.00′	98°45′26"	1.17′	1.72′
8	5.00′	31°07′47"	1.39′	2.72′
9	1.00′	90°37′07"	1.01′	1.58′
10	81.00′	46°29′21"	34.79′	65.72′
11	698.00′	8°20′56"	50.94′	101.71′
12	300.00′	12°21′14"	32.47′	64.68′

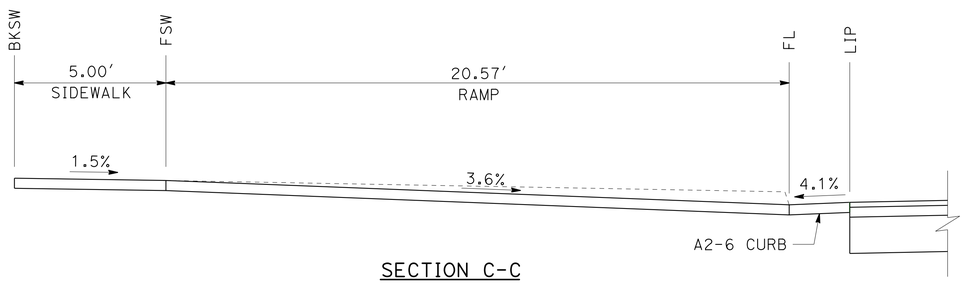

SECTION C-C
NO SCALE

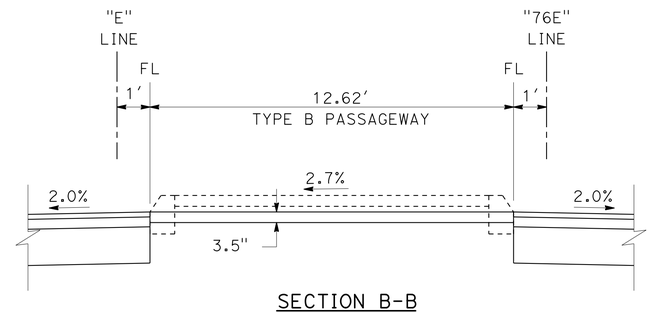

SECTION B-B
NO SCALE

SPOT ELEVATIONS

No.	LINE	STATION	OFFSET	Elev	REMARK
1	"VC"	13+49.52	19.94′ R+	1036.27′	FL
2	"VC"	13+50.03	17.98′ R+	1036.36′	LIP
3	"VC"	13+62.98	19.04′ R+	1036.84′	LIP
4	"VC"	13+62.90	21.04′ R+	1036.75′	FL
5	"VC"	13+61.87	37.91′ R+	1037.34′	RAMP
6	"VC"	13+61.65	40.39′ R+	1037.35′	FSW/BC
7	"VC"	13+57.73	45.05′ R+	1037.43′	BSW
8	"VC"	13+39.02	40.83′ R+	1036.94′	BSW
9	"VC"	13+43.39	36.37′ R+	1036.87′	FSW/EC
10	"VC"	13+52.84	1.00′ L+	1036.59′	FL
11	"VC"	13+53.80	1.85′ L+	1036.75′	FL
12	"VC"	13+54.12	4.13′ L+	1036.69′	FL
13	"S"	23+58.58	6.09′ R+	1036.63′	FL
14	"S"	23+58.26	1.93′ R+	1036.53′	FL
15	"S"	23+57.26	1.00′ R+	1036.50′	FL
16	"S"	23+64.81	1.00′ R+	1036.62′	FL
17	"S"	23+68.23	1.00′ R+	1036.65′	FL
18	"S"	23+69.39	1.09′ R+	1036.66′	FL
19	"S"	23+68.32	2.16′ R+	1036.70′	FL
20	"S"	23+68.79	8.05′ R+	1036.86′	FL
21	"VC"	13+63.71	6.10′ L+	1036.93′	FL
22	"VC"	13+63.62	2.02′ L+	1037.04′	FL
23	"VC"	13+64.60	1.00′ L+	1036.85′	FL
24	"S"	23+57.18	12.78′ L+	1036.22′	LIP
25	"S"	23+57.04	14.77′ L+	1036.18′	FL
26	"S"	23+55.67	34.55′ L+	1036.90′	FSW
27	"S"	23+54.61	39.42′ L+	1036.98′	BSW
28	"S"	23+63.90	41.57 L+	1037.13′	BSW
29	"S"	23+65.04	36.71′ L+	1037.06′	FSW
30	"S"	23+66.87	15.59′ L+	1036.29′	FL
31	"S"	23+67.06	13.60′ L+	1036.33′	LIP

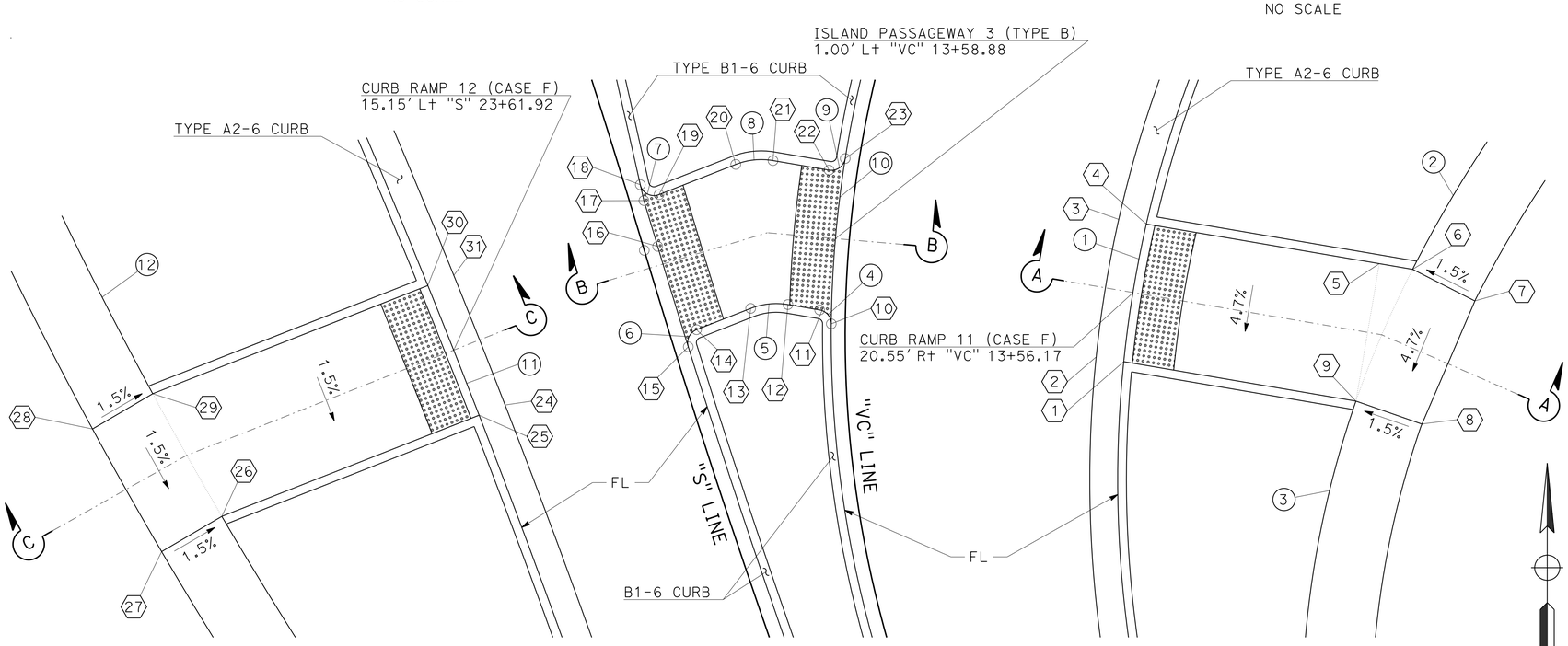

CURB RAMPS AND ISLAND PASSAGEWAY

"VC" & "S" LINE

CONSTRUCTION DETAILS

SCALE: 1" = 5′

C-21

STATE OF CALIFORNIA - DEPARTMENT OF TRANSPORTATION
Caltrans
TRAFFIC PROJECT DEVELOPMENT

FUNCTIONAL SUPERVISOR: JOSE LUIS ROBLES
CALCULATED-DESIGNED BY: KENNY T. NGUYEN
CHECKED BY: WENDY M. DANDENEAU
REVISED BY
DATE REVISED

LAST REVISION 09-26-16
DATE PLOTTED => 30-SEP-2016
TIME PLOTTED => 13:44

Dist	COUNTY	ROUTE	POST MILES TOTAL PROJECT	SHEET No.	TOTAL SHEETS
11	SD	76	32.6/33.3	42	269

REGISTERED CIVIL ENGINEER DATE 09-20-16

PLANS APPROVAL DATE 09-26-16

REGISTERED PROFESSIONAL ENGINEER WENDY M. DANDENEAU No. C76330 Exp. 12/31/16 CIVIL STATE OF CALIFORNIA

THE STATE OF CALIFORNIA OR ITS OFFICERS OR AGENTS SHALL NOT BE RESPONSIBLE FOR THE ACCURACY OR COMPLETENESS OF SCANNED COPIES OF THIS PLAN SHEET.

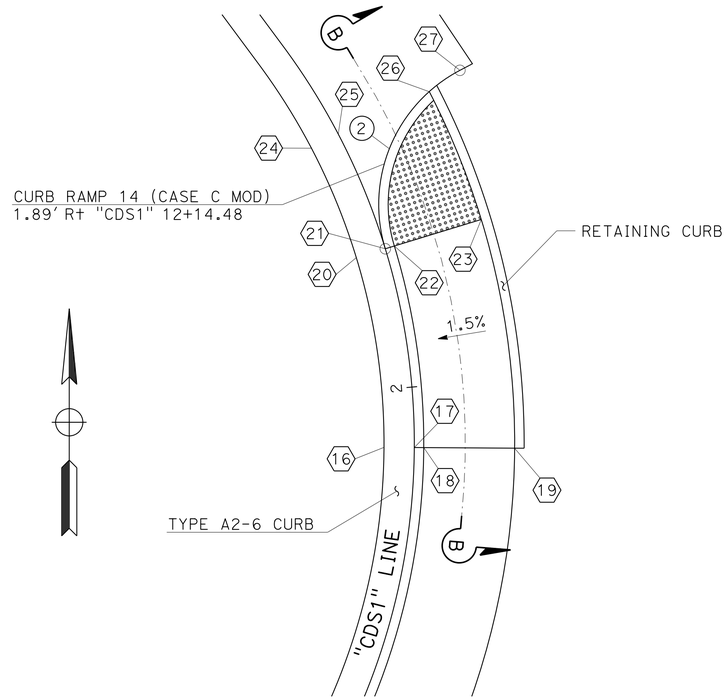

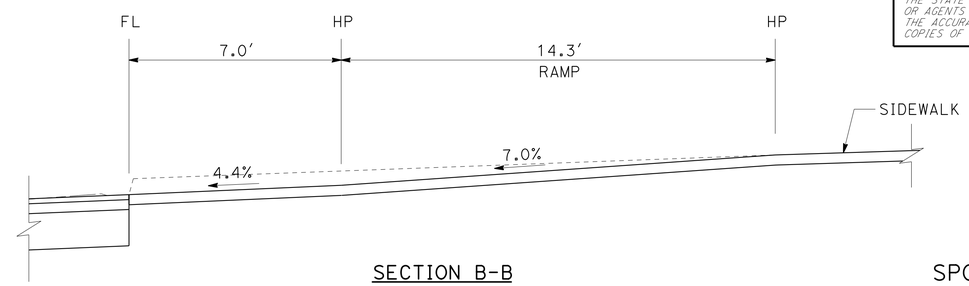

SECTION B-B
NO SCALE

CURVE DATA

No.	R	Δ	T	L
1	20.00'	91°44'00"	20.63'	32.05'
2	10.00'	79°19'41"	8.29'	13.85'

SPOT ELEVATIONS

No.	LINE	STATION	OFFSET	Elev	REMARK
1	"C"	11+91.52	12.00' Lt	1043.02'	LIP
2	"C"	11+91.52	14.00' Lt	1042.98'	FL/BC
3	"C"	11+91.52	14.63' Lt	1043.49'	BOC/FSW
4	"C"	11+91.52	20.63' Lt	1043.58'	BSW
5	"C"	12+00.00	12.00' Lt	1043.66'	LIP
6	"C"	12+00.00	14.00' Lt	1043.62'	FL
7	"C"	12+00.00	15.89' Lt	1043.69'	FL
8	"C"	12+00.00	16.59' Lt	1043.71'	BOC,FSW
9	"C"	12+00.00	20.63' Lt	1043.76'	BSW
10	"C"	12+06.38	12.00' Lt	1044.15'	LIP
11	"C"	12+06.38	14.66' Lt	1044.09'	FL
12	"C"	12+06.38	20.63' Lt	1044.18'	FL
13	"C"	12+13.51	12.00' Lt	1044.69'	LIP
14	"C"	12+13.51	15.40' Lt	1044.63'	LIP
15	"C"	12+13.51	20.63' Lt	1044.74'	LIP
16	"CDS1"	11+96.00	2.00' Lt	1063.90'	LIP
17	"CDS1"	11+96.00	-	1063.73'	FL
18	"CDS1"	11+96.00	0.63' Rt	1064.23'	BOC,FSW
19	"CDS1"	11+96.00	6.62' Lt	1064.32'	BSW
20	"CDS1"	12+09.31	2.00' Lt	1063.39'	LIP
21	"CDS1"	12+09.31	-	1063.22'	FL/BC
22	"CDS1"	12+09.31	0.63' Rt	1063.24'	BOC,FSW
23	"CDS1"	12+09.31	6.62' Rt	1063.33'	BSW
24	"CDS1"	12+17.50	2.00' Lt	1062.88'	LIP
25	"CDS1"	12+17.50	-	1062.84'	FL
26	"CDS1"	12+17.24	6.62' Rt	1062.98'	FL
27	"CDS1"	12+17.50	9.07' Rt	1063.01'	FL/EC

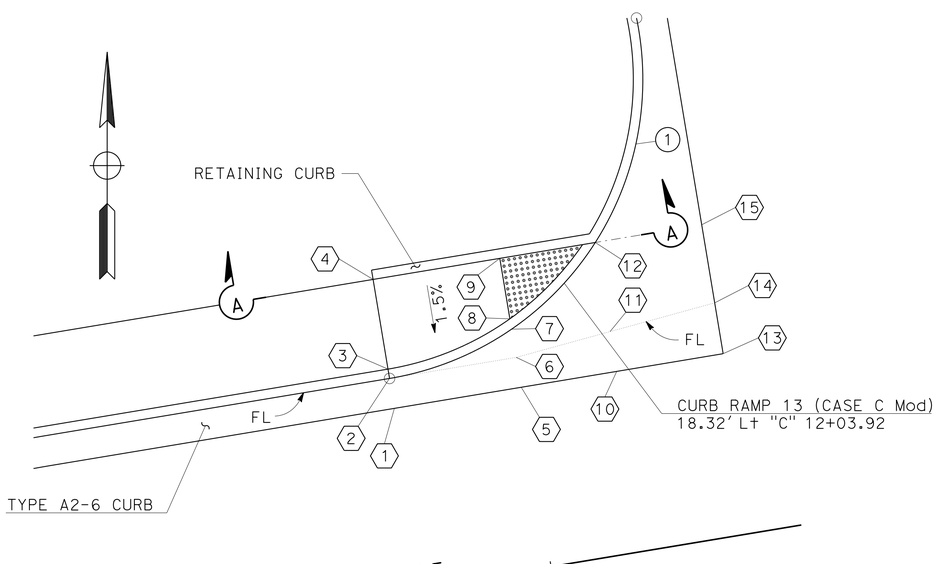

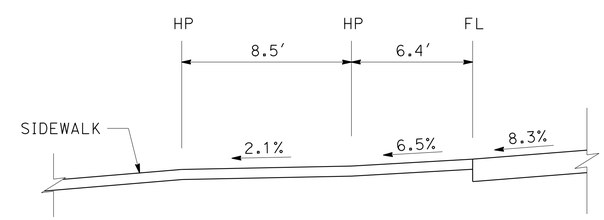

SECTION A-A
NO SCALE

CURB RAMPS
"C" LINE

CONSTRUCTION DETAILS

SCALE: 1" = 5'

C-22

STATE OF CALIFORNIA - DEPARTMENT OF TRANSPORTATION
Caltrans
TRAFFIC PROJECT DEVELOPMENT

FUNCTIONAL SUPERVISOR: JOSE LUIS ROBLES
CALCULATED-DESIGNED BY: KENNY T. NGUYEN
CHECKED BY: WENDY M. DANDENEAU
REVISED BY
DATE REVISED

LAST REVISION 09-26-16
DATE PLOTTED => 30-SEP-2016
TIME PLOTTED => 13:44

Dist	COUNTY	ROUTE	POST MILES TOTAL PROJECT	SHEET No.	TOTAL SHEETS
11	SD	76	32.6/33.3	43	269

REGISTERED CIVIL ENGINEER 09-20-16 DATE

09-26-16
PLANS APPROVAL DATE

REGISTERED PROFESSIONAL ENGINEER WENDY M. DANDENEAU No. C76330 Exp. 12/31/16 CIVIL STATE OF CALIFORNIA

THE STATE OF CALIFORNIA OR ITS OFFICERS OR AGENTS SHALL NOT BE RESPONSIBLE FOR THE ACCURACY OR COMPLETENESS OF SCANNED COPIES OF THIS PLAN SHEET.

CURVE DATA

No.	R	Δ	T	L
1	90.00′	20°03′27″	15.92′	31.51′
2	108.00′	20°06′03″	19.14′	37.89′
3	15.00′	44°16′05″	6.10′	11.59′
4	40.00′	31°40′32″	11.35′	22.11′

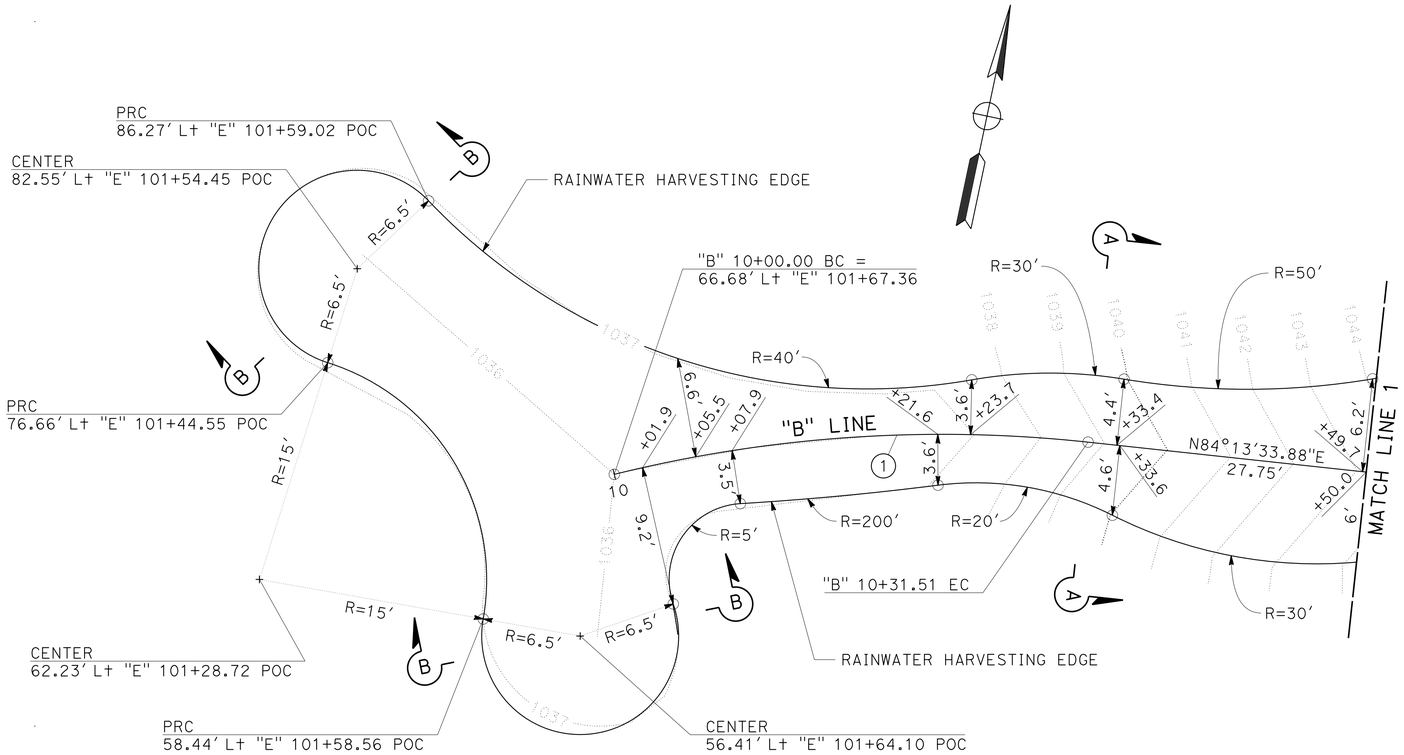

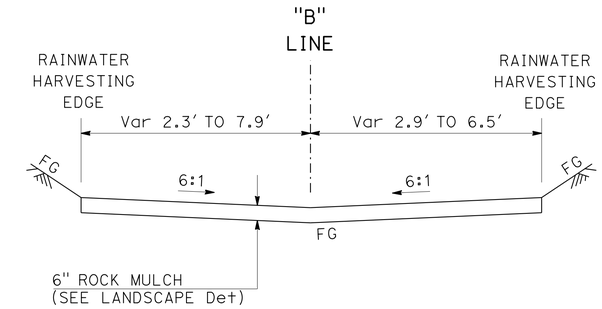

SECTION A-A
NO SCALE

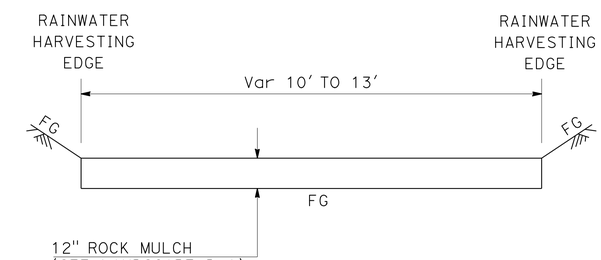

SECTION B-B
NO SCALE

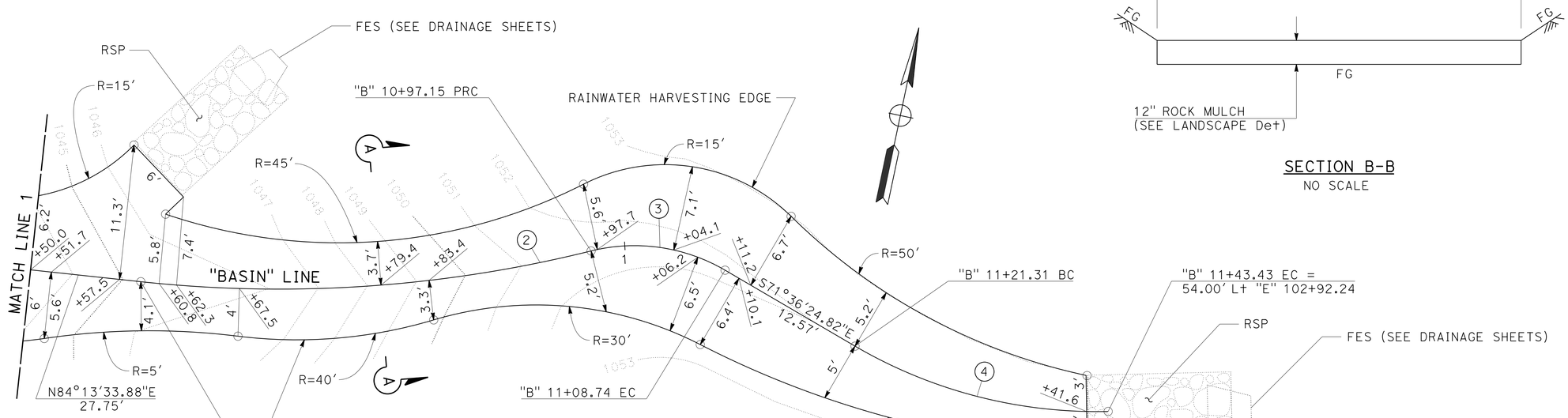

RAINWATER HARVESTING AREA

CONSTRUCTION DETAILS

SCALE: 1" = 5′

C-23

STATE OF CALIFORNIA - DEPARTMENT OF TRANSPORTATION
Caltrans
TRAFFIC PROJECT DEVELOPMENT

FUNCTIONAL SUPERVISOR: JOSE LUIS ROBLES
CALCULATED-DESIGNED BY: WAYNE NGUYEN
CHECKED BY: WENDY DANDENEAU
REVISED BY / DATE REVISED

LAST REVISION 09-26-16 | DATE PLOTTED => 30-SEP-2016 | TIME PLOTTED => 13:44

Dist	COUNTY	ROUTE	POST MILES TOTAL PROJECT	SHEET No.	TOTAL SHEETS
11	SD	76	32.6/33.3	44	269

REGISTERED CIVIL ENGINEER 09-20-16 DATE

09-26-16
PLANS APPROVAL DATE

REGISTERED PROFESSIONAL ENGINEER WENDY M. DANDENEAU No. C76330 Exp. 12/31/16 CIVIL STATE OF CALIFORNIA

THE STATE OF CALIFORNIA OR ITS OFFICERS OR AGENTS SHALL NOT BE RESPONSIBLE FOR THE ACCURACY OR COMPLETENESS OF SCANNED COPIES OF THIS PLAN SHEET.

NOTES:

1. FOR ACCURATE RIGHT OF WAY DATA, CONTACT RIGHT OF WAY ENGINEERING AT THE DISTRICT OFFICE.
2. FOR DETAIL PAVING AROUND MGS WOOD POSTS, SEE REVISED STANDARD PLAN A77N5.

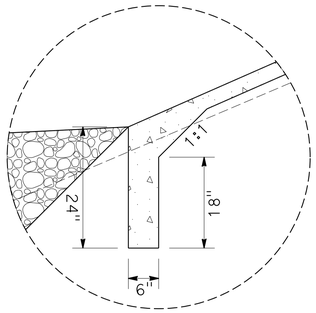

DETAIL A

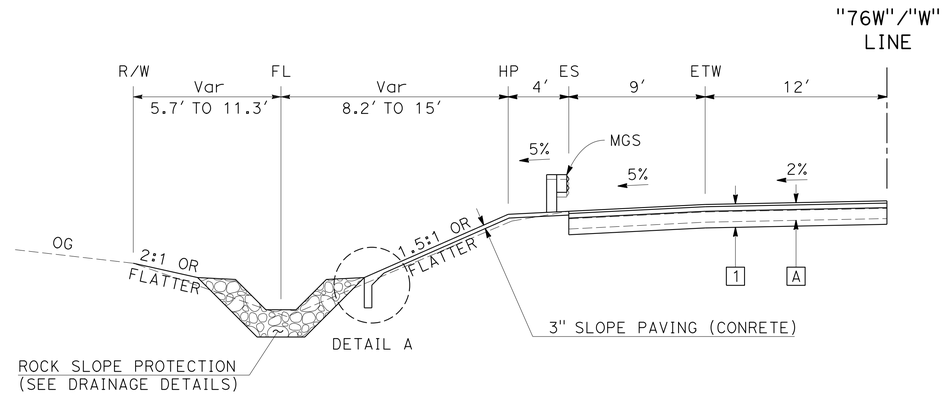

SECTION A-A

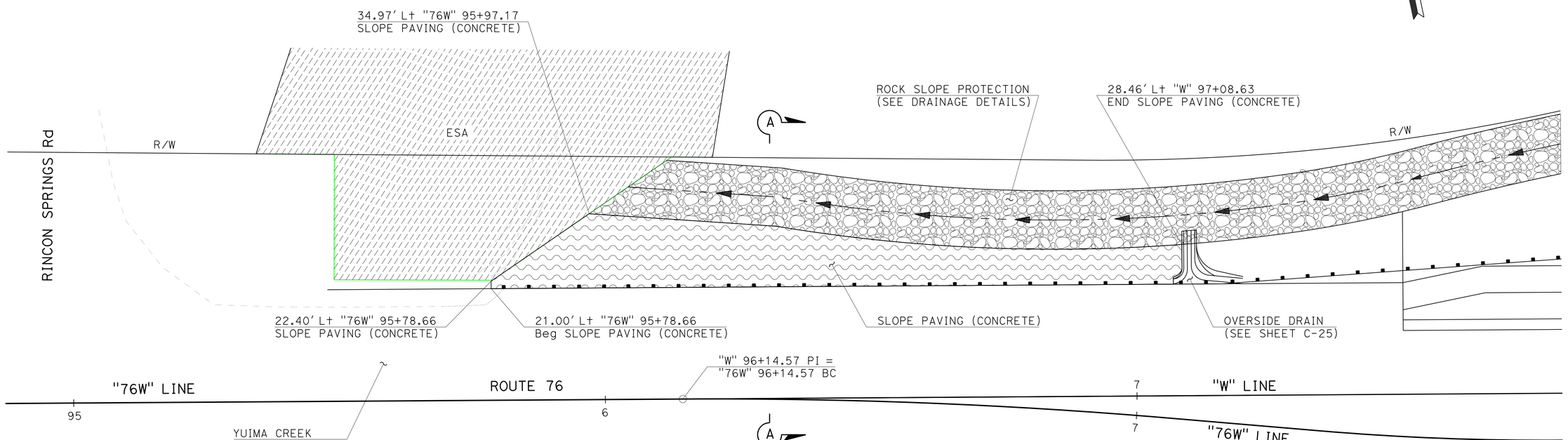

PLAN

SLOPE PAVING (CONCRETE)

"76W" 95+78.66 TO "W" 97+08.63

CONSTRUCTION DETAILS

SCALE: 1" = 10'

C-24

STATE OF CALIFORNIA - DEPARTMENT OF TRANSPORTATION
Caltrans
TRAFFIC PROJECT DEVELOPMENT

FUNCTIONAL SUPERVISOR: JOSE LUIS ROBLES
CALCULATED-DESIGNED BY: WAYNE NGUYEN
CHECKED BY: WENDY M. DANDENEAU
REVISED BY
DATE REVISED

LAST REVISION 09-26-16
DATE PLOTTED => 30-SEP-2016
TIME PLOTTED => 13:44

Dist	COUNTY	ROUTE	POST MILES TOTAL PROJECT	SHEET No.	TOTAL SHEETS
11	SD	76	32.6/33.3	45	269

REGISTERED CIVIL ENGINEER 09-20-16 DATE

09-26-16
PLANS APPROVAL DATE

REGISTERED PROFESSIONAL ENGINEER
WENDY M. DANDENEAU
No. C76330
Exp. 12/31/16
CIVIL
STATE OF CALIFORNIA

THE STATE OF CALIFORNIA OR ITS OFFICERS OR AGENTS SHALL NOT BE RESPONSIBLE FOR THE ACCURACY OR COMPLETENESS OF SCANNED COPIES OF THIS PLAN SHEET.

NOTE:

FOR ADDITIONAL INFORMATION, SEE REVISED STANDARD PLAN D87D.

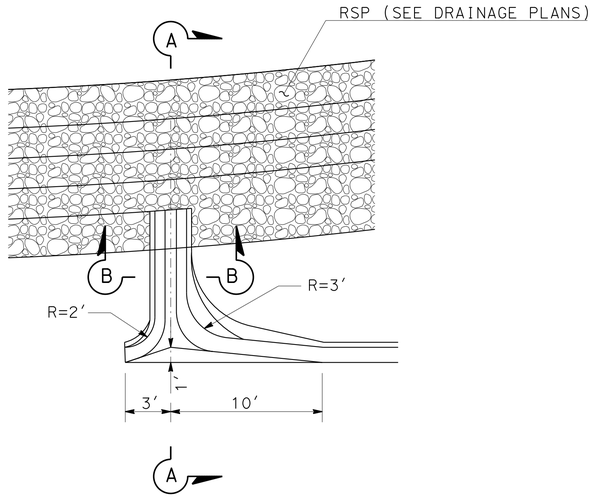

PLAN

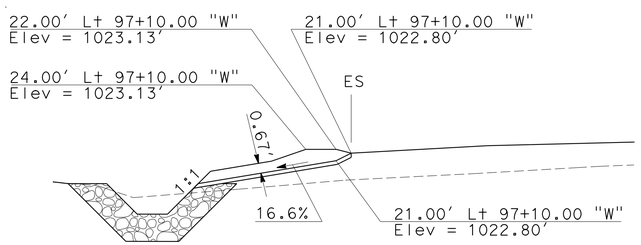

SECTION A-A

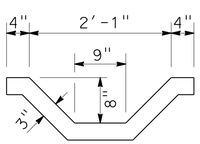

SECTION B-B

OVERSIDE DRAIN
Sta 97+10.00 "W" LINE

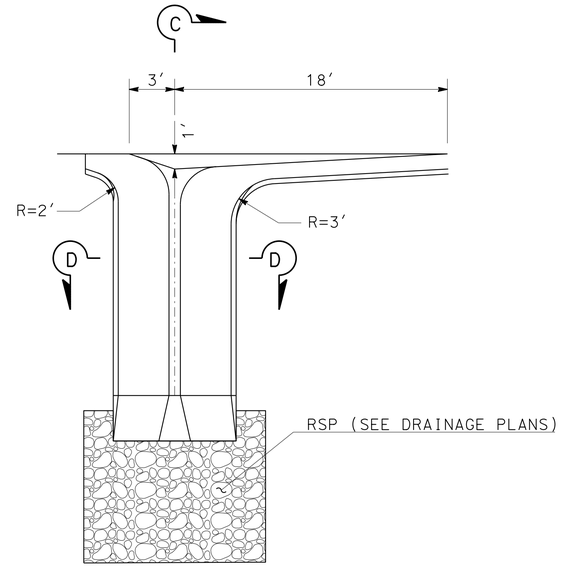

PLAN

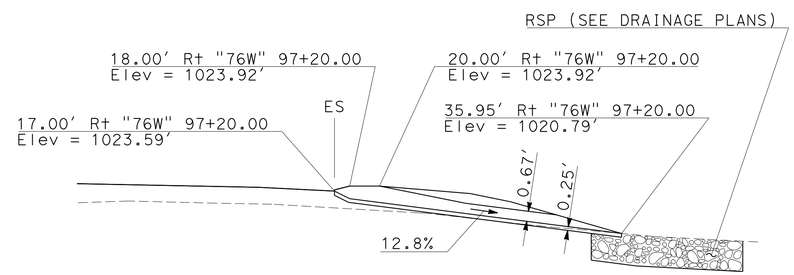

SECTION C-C

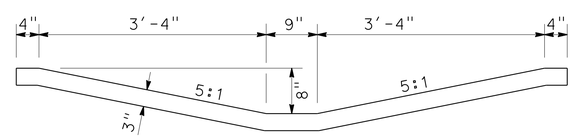

SECTION D-D

OVERSIDE DRAIN
Sta 97+20.00 "76W" LINE

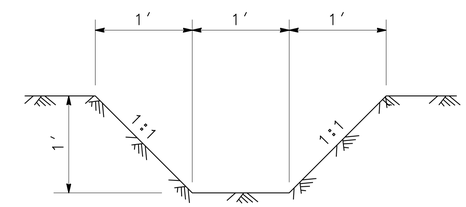

EARTHEN DITCH
Sta 9+16.81 TO 10+29.70 "VC" LINE

CONSTRUCTION DETAILS

NO SCALE

C-25

STATE OF CALIFORNIA - DEPARTMENT OF TRANSPORTATION
Caltrans
TRAFFIC PROJECT DEVELOPMENT

FUNCTIONAL SUPERVISOR: JOSE LUIS ROBLES
CALCULATED-DESIGNED BY: BARZAN ARAN
CHECKED BY: WENDY M. DANDENEAU
REVISED BY
DATE REVISED

LAST REVISION 09-26-16
DATE PLOTTED => 30-SEP-2016
TIME PLOTTED => 13:44

Dist	COUNTY	ROUTE	POST MILES TOTAL PROJECT	SHEET No.	TOTAL SHEETS
11	SD	76	32.6/33.3	46	269

REGISTERED CIVIL ENGINEER 09-20-16 DATE

09-26-16
PLANS APPROVAL DATE

REGISTERED PROFESSIONAL ENGINEER
WENDY M. DANDENEAU
No. C76330
Exp. 12/31/16
CIVIL
STATE OF CALIFORNIA

THE STATE OF CALIFORNIA OR ITS OFFICERS OR AGENTS SHALL NOT BE RESPONSIBLE FOR THE ACCURACY OR COMPLETENESS OF SCANNED COPIES OF THIS PLAN SHEET.

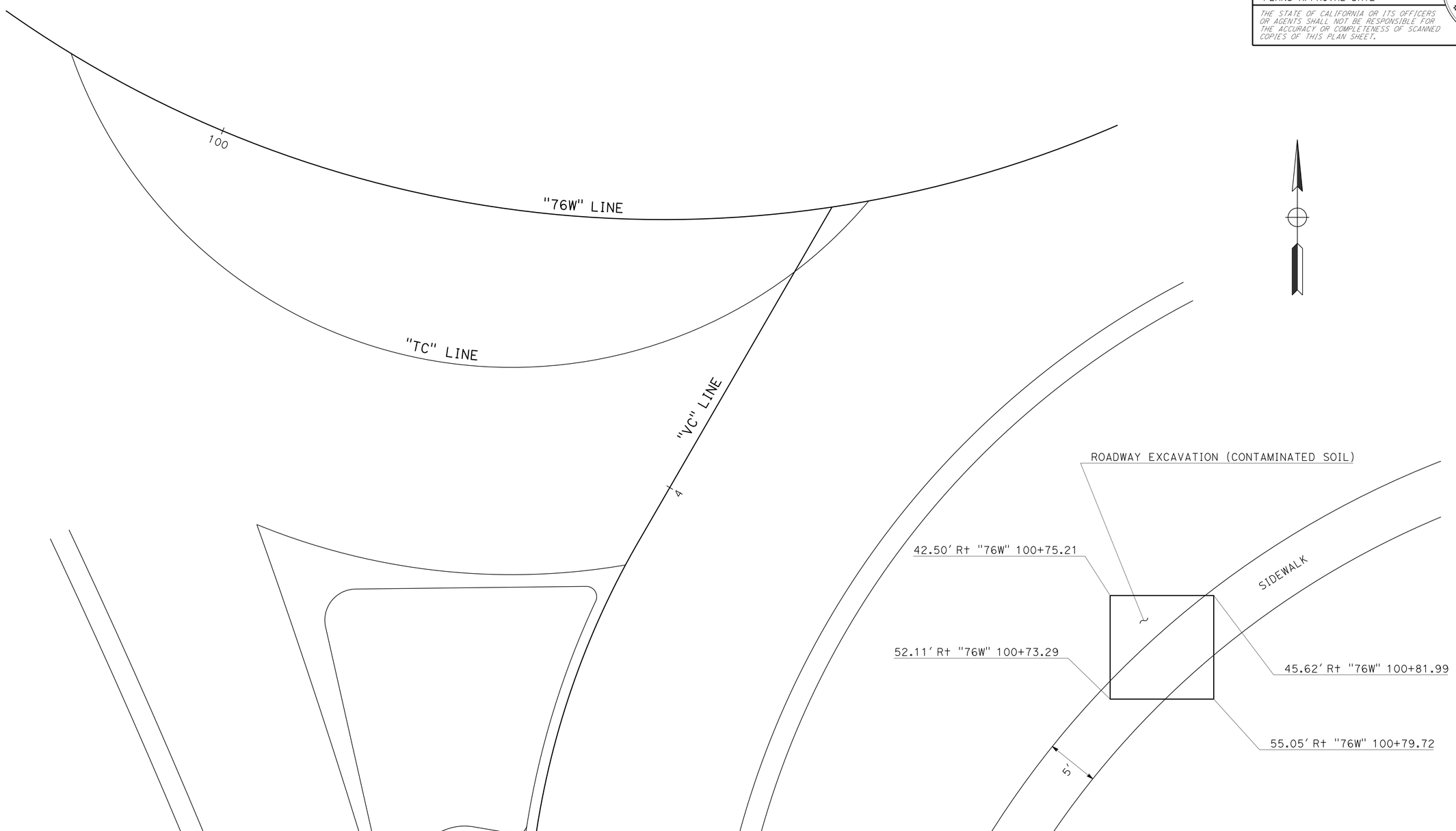

ROADWAY EXCAVATION (CONTAMINATED SOIL)

CONSTRUCTION DETAILS

SCALE: 1" = 5'

C-26

STATE OF CALIFORNIA - DEPARTMENT OF TRANSPORTATION
Caltrans
TRAFFIC PROJECT DEVELOPMENT

FUNCTIONAL SUPERVISOR: JOSE LUIS ROBLES
CALCULATED-DESIGNED BY: VAN CALLANTA
CHECKED BY: WENDY M. DANDENEAU
REVISED BY
DATE REVISED

LAST REVISION 09-26-16 | DATE PLOTTED => 30-SEP-2016 | TIME PLOTTED => 13:45

Dist	COUNTY	ROUTE	POST MILES TOTAL PROJECT	SHEET No.	TOTAL SHEETS
11	SD	76	32.6/33.3	47	269

REGISTERED CIVIL ENGINEER 09-20-16 DATE

09-26-16
PLANS APPROVAL DATE

REGISTERED PROFESSIONAL ENGINEER
WENDY M. DANDENEAU
No. C76330
Exp. 12/31/16
CIVIL
STATE OF CALIFORNIA

THE STATE OF CALIFORNIA OR ITS OFFICERS OR AGENTS SHALL NOT BE RESPONSIBLE FOR THE ACCURACY OR COMPLETENESS OF SCANNED COPIES OF THIS PLAN SHEET.

NOTE:

FOR ACCURATE RIGHT OF WAY DATA, CONTACT RIGHT OF WAY ENGINEERING AT THE DISTRICT OFFICE.

LEGEND:

DUFF COLLECTION (3" DEPTH)

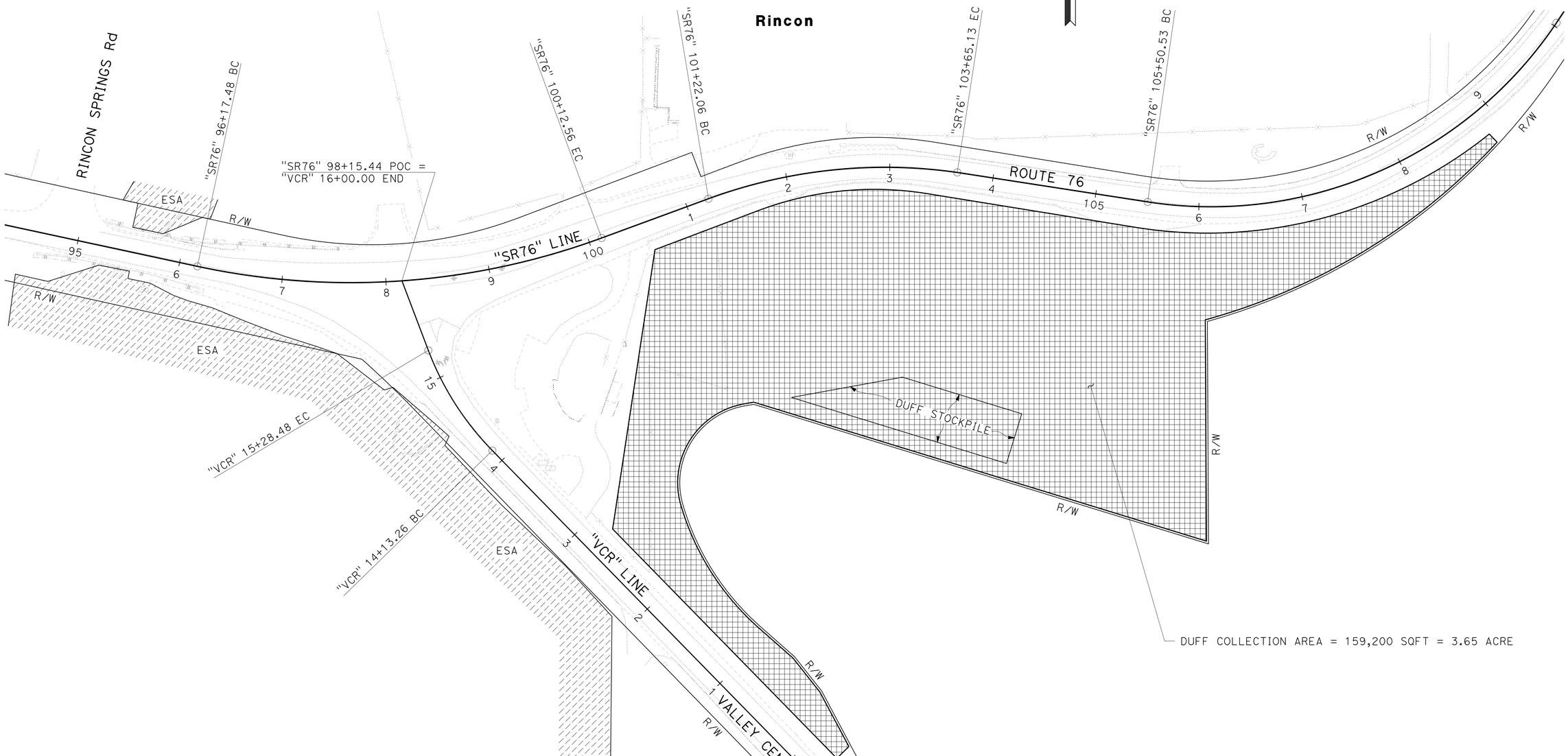

DUFF COLLECTION

CONSTRUCTION DETAILS

SCALE: 1" = 50'

C-27

STATE OF CALIFORNIA - DEPARTMENT OF TRANSPORTATION
Caltrans
TRAFFIC PROJECT DEVELOPMENT

FUNCTIONAL SUPERVISOR: JOSE LUIS ROBLES
CALCULATED-DESIGNED BY: WAYNE NGUYEN
CHECKED BY: WENDY M. DANDENEAU
REVISED BY
DATE REVISED

LAST REVISION | DATE PLOTTED => 30-SEP-2016 | 09-26-16 | TIME PLOTTED => 13:45

Dist	COUNTY	ROUTE	POST MILES TOTAL PROJECT	SHEET No.	TOTAL SHEETS
11	SD	76	32.6/33.3	48	269

REGISTERED CIVIL ENGINEER DATE 09-20-16

PLANS APPROVAL DATE 09-26-16

REGISTERED PROFESSIONAL ENGINEER WENDY M. DANDENEAU No. C76330 Exp. 12/31/16 CIVIL STATE OF CALIFORNIA

THE STATE OF CALIFORNIA OR ITS OFFICERS OR AGENTS SHALL NOT BE RESPONSIBLE FOR THE ACCURACY OR COMPLETENESS OF SCANNED COPIES OF THIS PLAN SHEET.

NOTE:

FOR ACCURATE RIGHT OF WAY DATA, CONTACT RIGHT OF WAY ENGINEERING AT THE DISTRICT OFFICE.

LEGEND:

LOCAL TOPSOIL COLLECTION

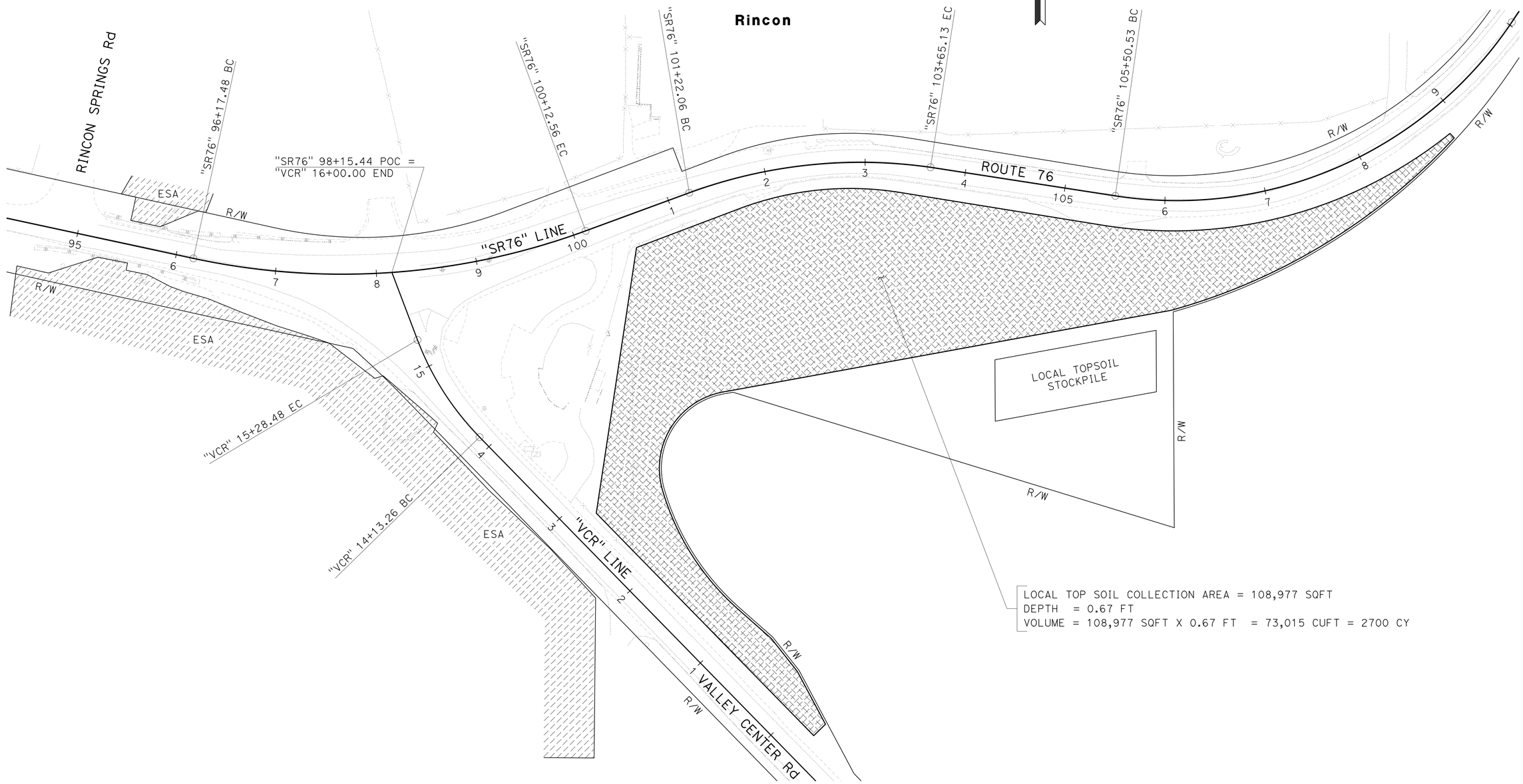

LOCAL TOPSOIL COLLECTION

CONSTRUCTION DETAILS

SCALE: 1" = 50'

C-28

STATE OF CALIFORNIA - DEPARTMENT OF TRANSPORTATION

Caltrans

TRAFFIC PROJECT DEVELOPMENT

FUNCTIONAL SUPERVISOR: JOSE LUIS ROBLES

CALCULATED-DESIGNED BY: WAYNE NGUYEN

CHECKED BY: WENDY M. DANDENEAU

REVISED BY

DATE REVISED

LAST REVISION DATE PLOTTED => 30-SEP-2016 09-26-16 TIME PLOTTED => 13:45

Dist	COUNTY	ROUTE	POST MILES TOTAL PROJECT	SHEET No.	TOTAL SHEETS
11	SD	76	32.6/33.3	49	269

REGISTERED CIVIL ENGINEER 09-20-16 DATE

09-26-16
PLANS APPROVAL DATE

REGISTERED PROFESSIONAL ENGINEER
WENDY M. DANDENEAU
No. C76330
Exp. 12/31/16
CIVIL
STATE OF CALIFORNIA

THE STATE OF CALIFORNIA OR ITS OFFICERS OR AGENTS SHALL NOT BE RESPONSIBLE FOR THE ACCURACY OR COMPLETENESS OF SCANNED COPIES OF THIS PLAN SHEET.

NOTE:

FOR ACCURATE RIGHT OF WAY DATA, CONTACT RIGHT OF WAY ENGINEERING AT THE DISTRICT OFFICE.

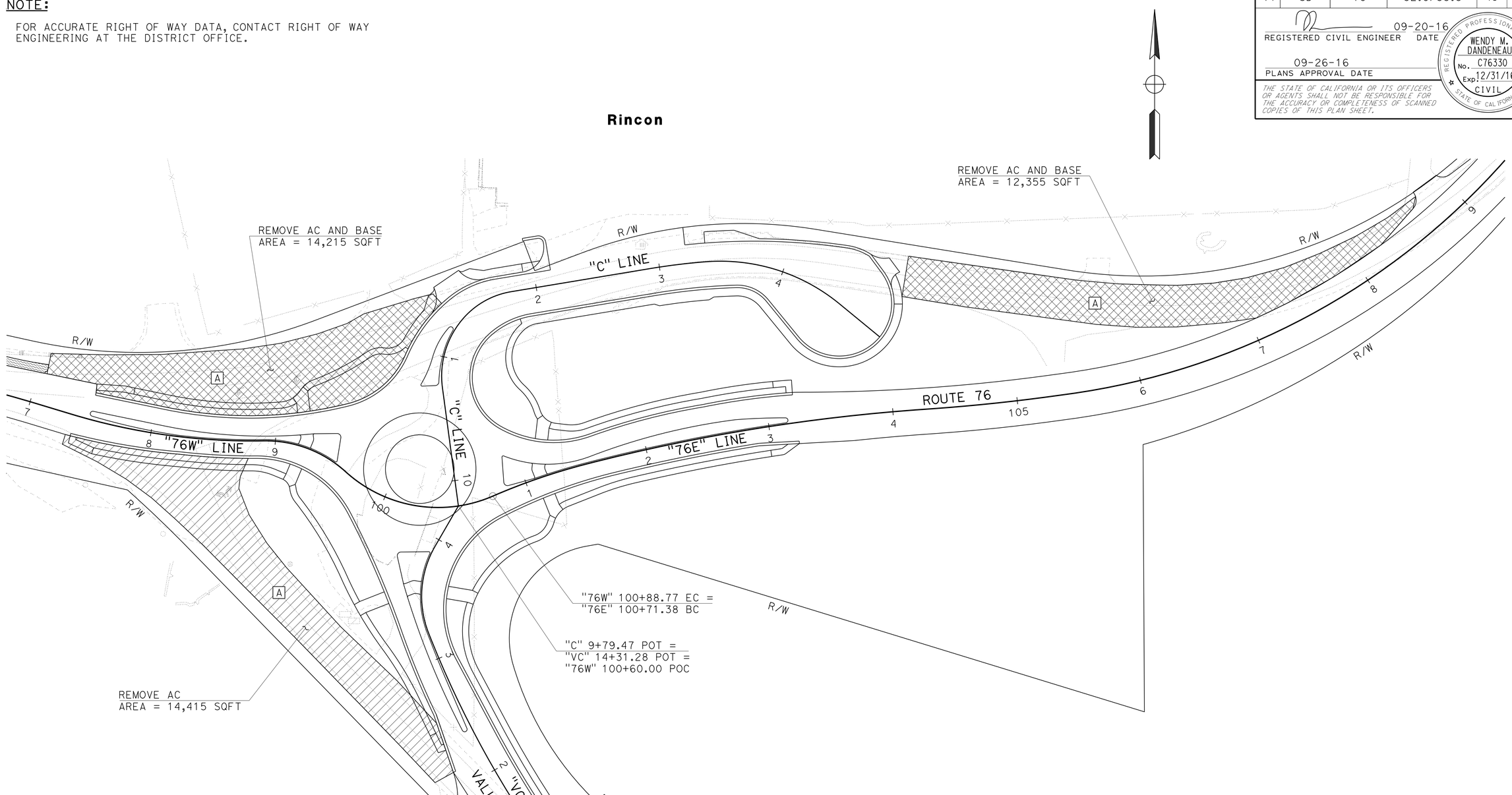

PAVEMENT REMOVAL

CONSTRUCTION DETAILS

SCALE: 1" = 40'

C-29

STATE OF CALIFORNIA - DEPARTMENT OF TRANSPORTATION
Caltrans
TRAFFIC PROJECT DEVELOPMENT

FUNCTIONAL SUPERVISOR: JOSE LUIS ROBLES
CALCULATED-DESIGNED BY: WAYNE NGUYEN
CHECKED BY: WENDY M. DANDENEAU
REVISED BY
DATE REVISED

LAST REVISION 09-27-16
DATE PLOTTED => 30-SEP-2016
TIME PLOTTED => 13:45

Dist	COUNTY	ROUTE	POST MILES TOTAL PROJECT	SHEET No.	TOTAL SHEETS
11	SD	76	32.6/33.3	50	269

REGISTERED CIVIL ENGINEER 09-20-16 DATE

09-26-16
PLANS APPROVAL DATE

REGISTERED PROFESSIONAL ENGINEER
WENDY M. DANDENEAU
No. C76330
Exp. 12/31/16
CIVIL
STATE OF CALIFORNIA

THE STATE OF CALIFORNIA OR ITS OFFICERS OR AGENTS SHALL NOT BE RESPONSIBLE FOR THE ACCURACY OR COMPLETENESS OF SCANNED COPIES OF THIS PLAN SHEET.

NOTES:

1. LAYOUT OF ROCK BLANKET AREAS SHALL AS BE SHOWN ON PLANS AND SHALL BE APPROVED BY THE ENGINEER PRIOR TO PLACING THE MATERIAL.
2. FOR SIGN POST INSTALLATION DETAILS SEE SD SHEETS.
3. CONCRETE BAND SHALL MATCH THE SURFACE ELEVATION OF THE TOP OF CURB.

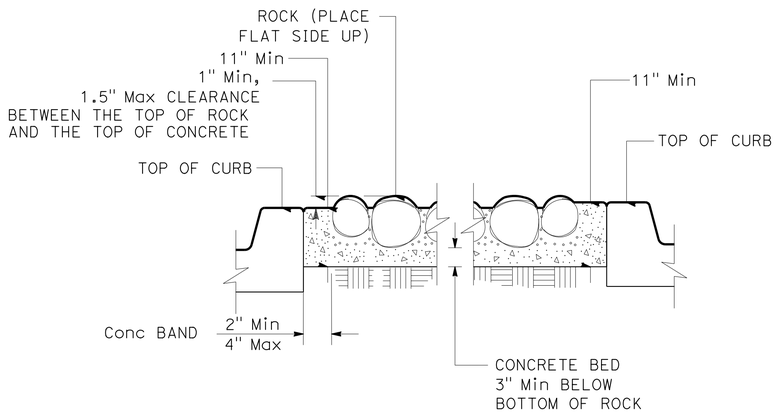

SECTION A-A

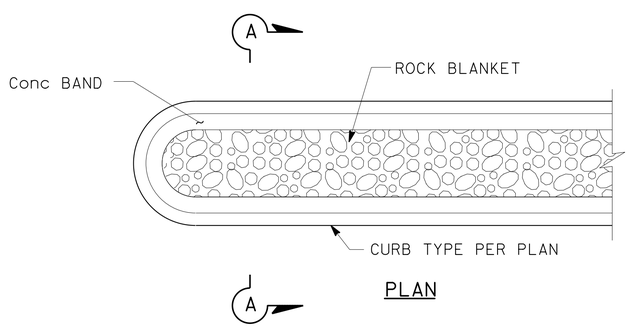

PLAN

ROCK BLANKET

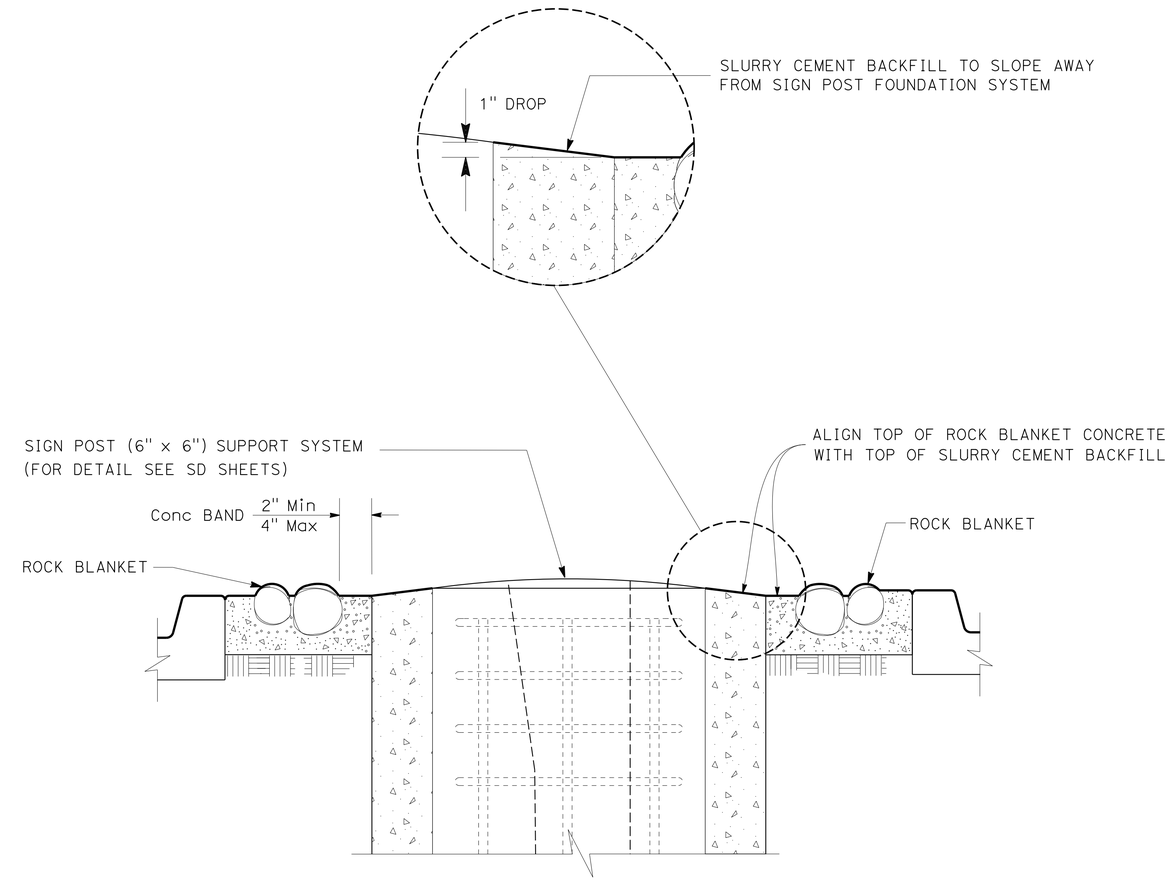

FRONT VIEW

ROCK BLANKET AT SIGN POST DETAIL

CONSTRUCTION DETAILS

NO SCALE

C-30

STATE OF CALIFORNIA - DEPARTMENT OF TRANSPORTATION
Caltrans
TRAFFIC PROJECT DEVELOPMENT

FUNCTIONAL SUPERVISOR: JOSE LUIS ROBLES
CALCULATED-DESIGNED BY: MIKE DISPENZIERI
CHECKED BY: WENDY M. DANDENEAU
REVISED BY
DATE REVISED

LAST REVISION 09-27-16
DATE PLOTTED => 30-SEP-2016
TIME PLOTTED => 13:45

Dist	COUNTY	ROUTE	POST MILES TOTAL PROJECT	SHEET No.	TOTAL SHEETS
11	SD	76	32.6/33.3	51	269

REGISTERED CIVIL ENGINEER 09-20-16 DATE

09-26-16
PLANS APPROVAL DATE

REGISTERED PROFESSIONAL ENGINEER WENDY M. DANDENEAU No. C76330 Exp. 12/31/16 CIVIL STATE OF CALIFORNIA

THE STATE OF CALIFORNIA OR ITS OFFICERS OR AGENTS SHALL NOT BE RESPONSIBLE FOR THE ACCURACY OR COMPLETENESS OF SCANNED COPIES OF THIS PLAN SHEET.

NOTE:

FOR ADDITIONAL INFORMATION, SEE REVISED STANDARD PLAN A40C.

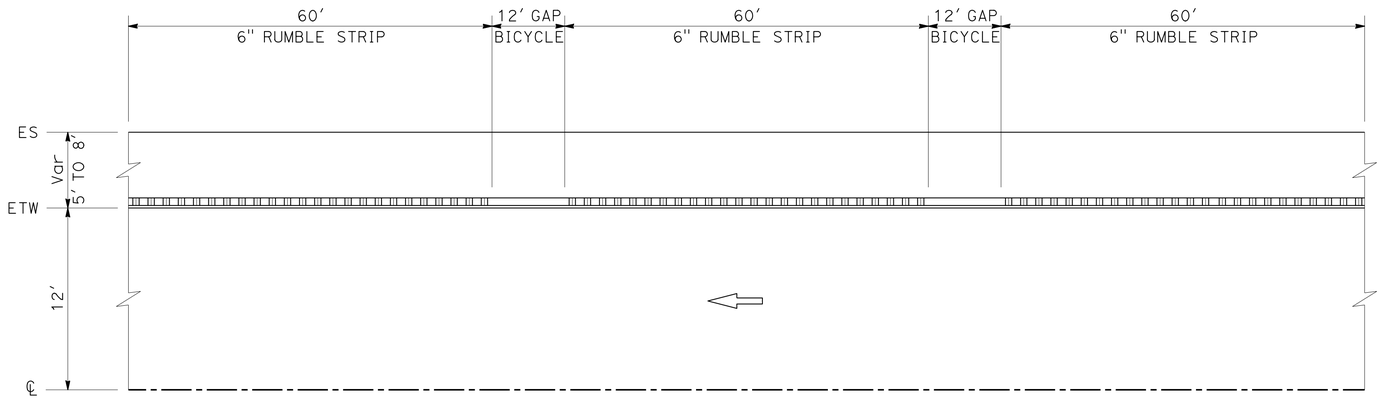

6" RUMBLE STRIP (AC PAVEMENT) (Mod)

(SEE NOTE)

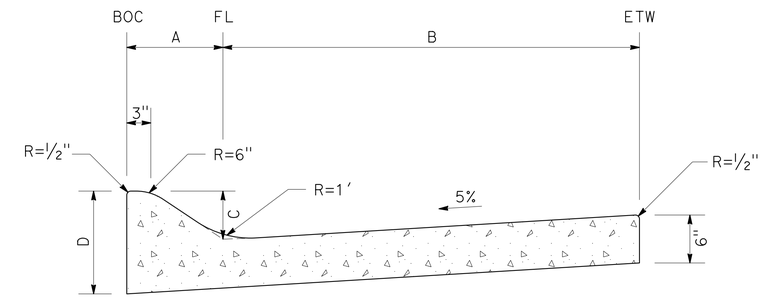

TYPE E CURB (Mod)

SHEET	STATION LIMITS	SIDE	A	B	C	D
L-6	13+37.72 "C" TO 13+58.47 "C"	Lt	1.25'	9'	6"	1'-2"
L-6	13+58.47 "C" TO 13+76.66 "C"	Lt	1' TO 1'-3"	2' TO 9'	4" TO 6"	1' TO 1'-2"

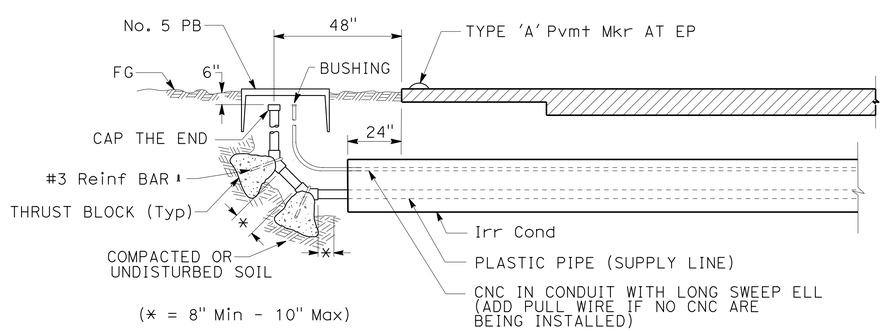

SECTION

IRRIGATION CONDUIT

UNDER TRAVELED WAY (Mod)

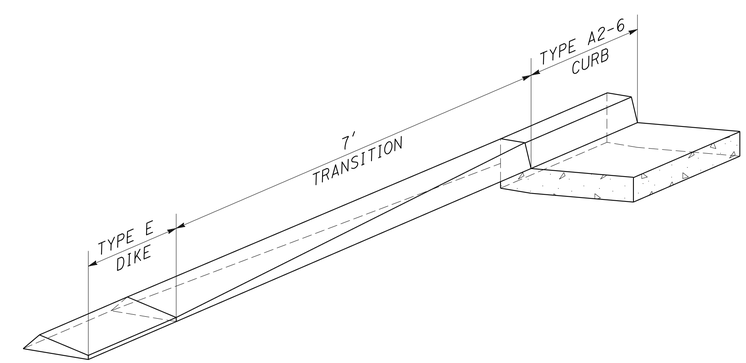

TYPE E DIKE TO TYPE A2-6 CURB TRANSITION

CONSTRUCTION DETAILS

NO SCALE

C-31

STATE OF CALIFORNIA - DEPARTMENT OF TRANSPORTATION
Caltrans
TRAFFIC PROJECT DEVELOPMENT

FUNCTIONAL SUPERVISOR: JOSE LUIS ROBLES
CALCULATED-DESIGNED BY: VAN CALLANTA
CHECKED BY: WENDY DANDENEAU
REVISED BY
DATE REVISED

LAST REVISION 09-27-16
DATE PLOTTED => 30-SEP-2016
TIME PLOTTED => 13:45

Dist	COUNTY	ROUTE	POST MILES TOTAL PROJECT	SHEET No.	TOTAL SHEETS
11	SD	76	32.6/33.3	52	269

09-20-16
REGISTERED CIVIL ENGINEER DATE

09-26-16
PLANS APPROVAL DATE

REGISTERED PROFESSIONAL ENGINEER
WENDY M. DANDENEAU
No. C76330
Exp. 12/31/16
CIVIL
STATE OF CALIFORNIA

THE STATE OF CALIFORNIA OR ITS OFFICERS OR AGENTS SHALL NOT BE RESPONSIBLE FOR THE ACCURACY OR COMPLETENESS OF SCANNED COPIES OF THIS PLAN SHEET.

NOTE:

1. USE 15'-7½" LENGTH RAIL.

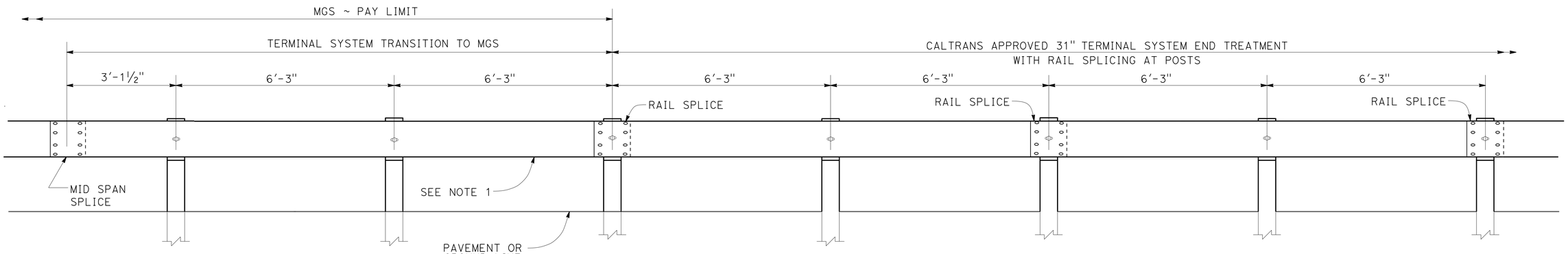

TRANSITION DETAIL FOR 31" TERMINAL SYSTEM END TREATMENT WITH RAIL SPLICING AT POSTS TO MIDWEST GUARDRAIL SYSTEM

CONSTRUCTION DETAILS

NO SCALE

C-32

STATE OF CALIFORNIA - DEPARTMENT OF TRANSPORTATION
Caltrans
TRAFFIC PROJECT DEVELOPMENT

FUNCTIONAL SUPERVISOR: JOSE LUIS ROBLES
CALCULATED-DESIGNED BY: VAN CALLANTA
CHECKED BY: WENDY M. DANDENEAU
REVISED BY
DATE REVISED

LAST REVISION DATE PLOTTED => 30-SEP-2016
09-27-16 TIME PLOTTED => 13:45

Dist	COUNTY	ROUTE	POST MILES TOTAL PROJECT	SHEET No.	TOTAL SHEETS
11	SD	76	32.6/33.3	53	269

REGISTERED CIVIL ENGINEER DATE 09-20-16

PLANS APPROVAL DATE 09-26-16

REGISTERED PROFESSIONAL ENGINEER WENDY M. DANDENEAU No. C76330 Exp. 12/31/16 CIVIL STATE OF CALIFORNIA

THE STATE OF CALIFORNIA OR ITS OFFICERS OR AGENTS SHALL NOT BE RESPONSIBLE FOR THE ACCURACY OR COMPLETENESS OF SCANNED COPIES OF THIS PLAN SHEET.

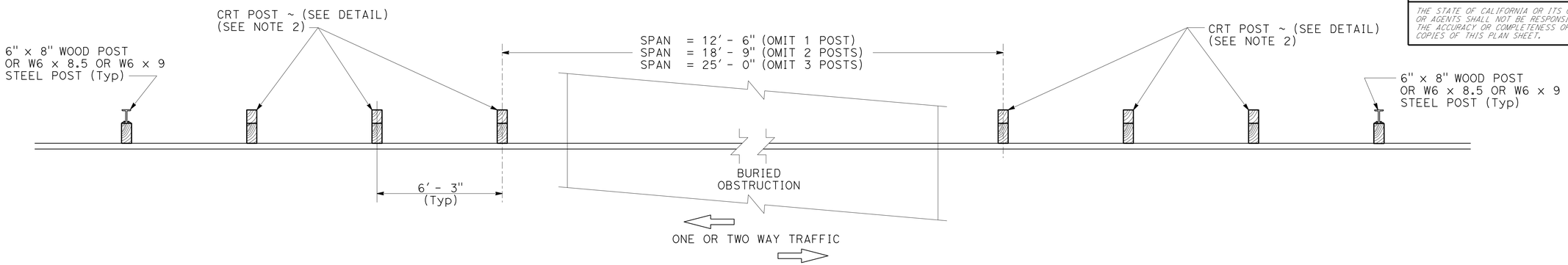

PLAN

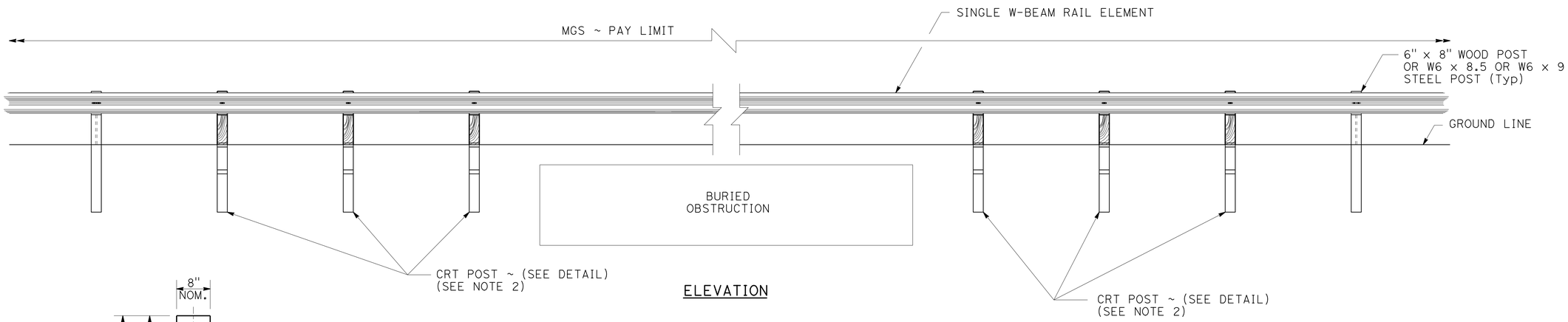

ELEVATION

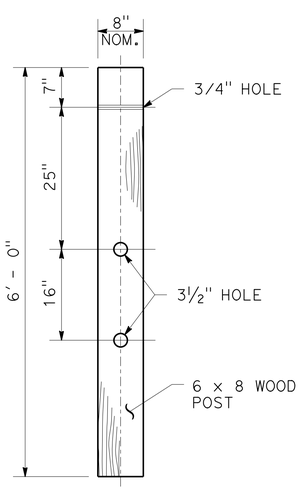

CONTROLLED RELEASING
TERMINAL (CRT) POST DETAIL

NOTES:

1. FOR ADDITIONAL DETAILS NOT SHOWN ON THIS PLAN, REFER TO RSP A77L1 AND RSP A77L2.
2. CRT POST TO BE WOOD ONLY.

MIDWEST GUARDRAIL SYSTEM DETAILS

CONSTRUCTION DETAILS

NO SCALE

C-33

STATE OF CALIFORNIA - DEPARTMENT OF TRANSPORTATION
Caltrans
TRAFFIC PROJECT DEVELOPMENT

FUNCTIONAL SUPERVISOR: JOSE LUIS ROBLES

CALCULATED-DESIGNED BY: VAN VALLANTA
CHECKED BY: WENDY M. DANDENEAU

REVISED BY | DATE REVISED

LAST REVISION DATE PLOTTED => 30-SEP-2016
09-27-16 TIME PLOTTED => 13:45

Dist	COUNTY	ROUTE	POST MILES TOTAL PROJECT	SHEET No.	TOTAL SHEETS
11	SD	76	32.6/33.3	54	269

REGISTERED CIVIL ENGINEER 09-20-16 DATE

09-26-16
PLANS APPROVAL DATE

REGISTERED PROFESSIONAL ENGINEER WENDY M. DANDENEAU No. C76330 Exp. 12/31/16 CIVIL STATE OF CALIFORNIA

THE STATE OF CALIFORNIA OR ITS OFFICERS OR AGENTS SHALL NOT BE RESPONSIBLE FOR THE ACCURACY OR COMPLETENESS OF SCANNED COPIES OF THIS PLAN SHEET.

NOTE:

FOR ACCURATE RIGHT OF WAY DATA, CONTACT RIGHT OF WAY ENGINEERING AT THE DISTRICT OFFICE.

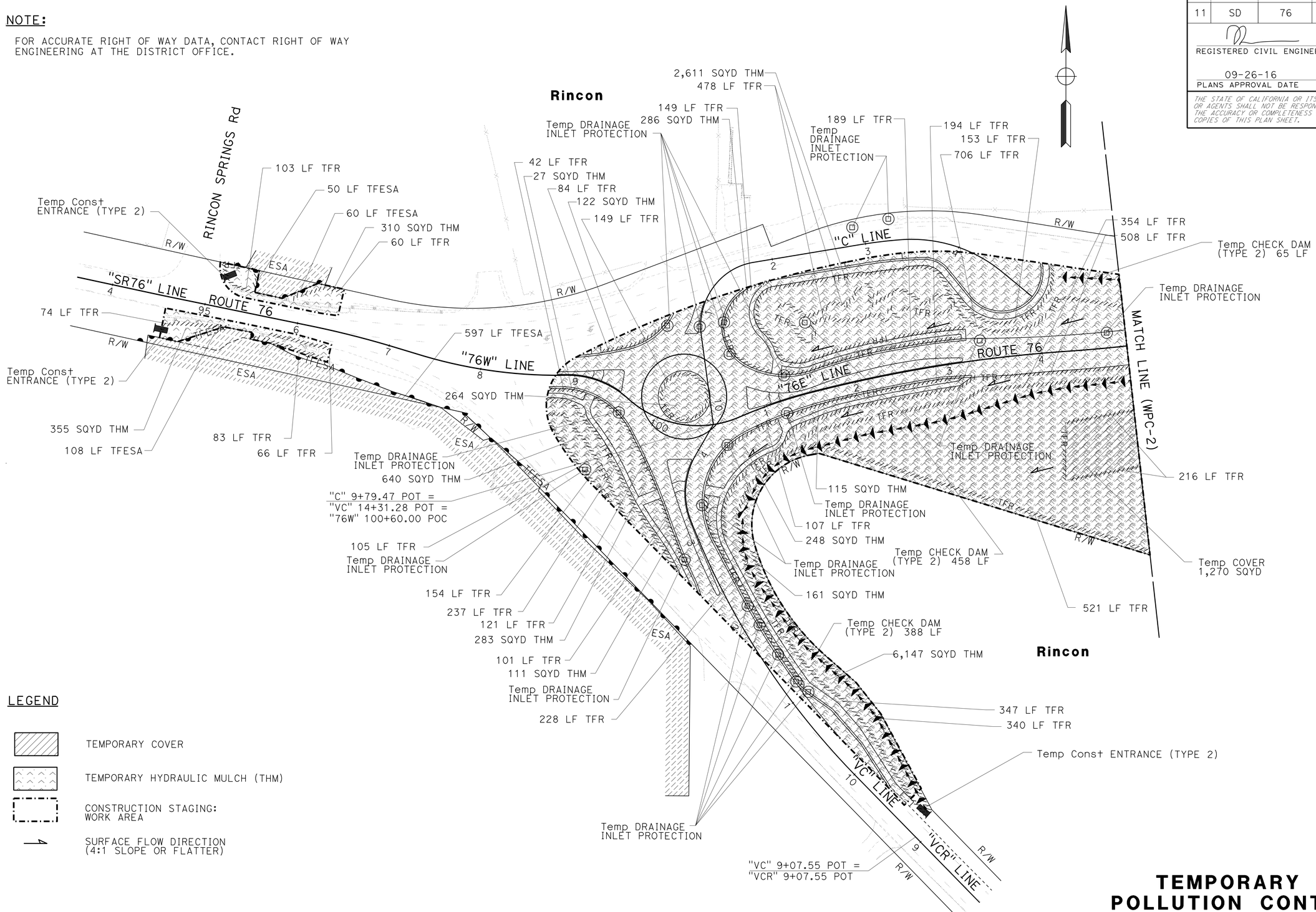

LEGEND

- TEMPORARY COVER
- TEMPORARY HYDRAULIC MULCH (THM)
- CONSTRUCTION STAGING: WORK AREA
- SURFACE FLOW DIRECTION (4:1 SLOPE OR FLATTER)

APPROVED FOR TEMPORARY WATER POLLUTION CONTROL WORK ONLY

TEMPORARY WATER POLLUTION CONTROL PLAN

STAGE 1

SCALE: 1" = 50'

WPC-1

STATE OF CALIFORNIA - DEPARTMENT OF TRANSPORTATION
Caltrans
TRAFFIC PROJECT DEVELOPMENT

FUNCTIONAL SUPERVISOR: JOSE LUIS ROBLES
CALCULATED-DESIGNED BY: EVANGELINA PALMA
CHECKED BY: WENDY M. DANDENEAU
REVISED BY
DATE REVISED

LAST REVISION 09-27-16
DATE PLOTTED => 30-SEP-2016
TIME PLOTTED => 13:45

Dist	COUNTY	ROUTE	POST MILES TOTAL PROJECT	SHEET No.	TOTAL SHEETS
11	SD	76	32.6/33.3	55	269

REGISTERED CIVIL ENGINEER DATE 09-20-16

PLANS APPROVAL DATE 09-26-16

REGISTERED PROFESSIONAL ENGINEER WENDY M. DANDENEAU No. C76330 Exp. 12/31/16 CIVIL STATE OF CALIFORNIA

THE STATE OF CALIFORNIA OR ITS OFFICERS OR AGENTS SHALL NOT BE RESPONSIBLE FOR THE ACCURACY OR COMPLETENESS OF SCANNED COPIES OF THIS PLAN SHEET.

NOTE:

FOR ACCURATE RIGHT OF WAY DATA, CONTACT RIGHT OF WAY ENGINEERING AT THE DISTRICT OFFICE.

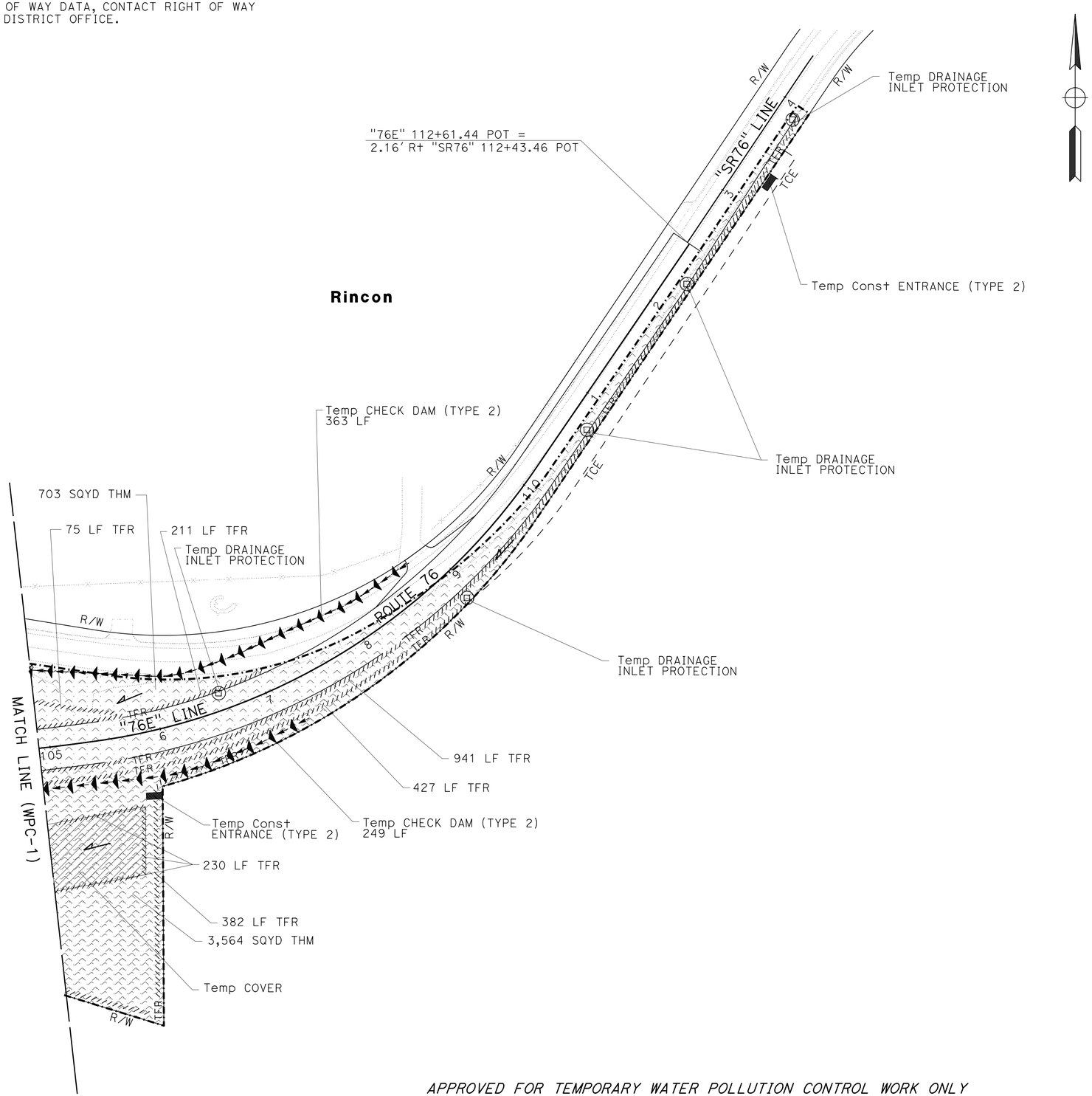

APPROVED FOR TEMPORARY WATER POLLUTION CONTROL WORK ONLY

TEMPORARY WATER POLLUTION CONTROL PLAN

STAGE 1

SCALE: 1" = 50'

WPC-2

STATE OF CALIFORNIA - DEPARTMENT OF TRANSPORTATION

Caltrans

TRAFFIC PROJECT DEVELOPMENT

FUNCTIONAL SUPERVISOR: JOSE LUIS ROBLES

CALCULATED-DESIGNED BY: EVANGELINA PALMA

CHECKED BY: WENDY M. DANDENEAU

REVISED BY / DATE REVISED

LAST REVISION 09-27-16 | DATE PLOTTED => 30-SEP-2016 | TIME PLOTTED => 13:45

Dist	COUNTY	ROUTE	POST MILES TOTAL PROJECT	SHEET No.	TOTAL SHEETS
11	SD	76	32.6/33.3	56	269

REGISTERED CIVIL ENGINEER 09-20-16 DATE

09-26-16
PLANS APPROVAL DATE

REGISTERED PROFESSIONAL ENGINEER
WENDY M. DANDENEAU
No. C76330
Exp. 12/31/16
CIVIL
STATE OF CALIFORNIA

THE STATE OF CALIFORNIA OR ITS OFFICERS OR AGENTS SHALL NOT BE RESPONSIBLE FOR THE ACCURACY OR COMPLETENESS OF SCANNED COPIES OF THIS PLAN SHEET.

NOTES:

1. FOR ACCURATE RIGHT OF WAY DATA, CONTACT RIGHT OF WAY ENGINEERING AT THE DISTRICT OFFICE.
2. FOR WATER POLLUTION CONTROL, CONSTRUCTION BEST MANAGEMENT PRACTICES USED IN PREVIOUS STAGE CAN REMAIN IN PLACE AND MAINTAINED FOR EACH PRECEDING STAGE AS DIRECTED BY ENGINEER.

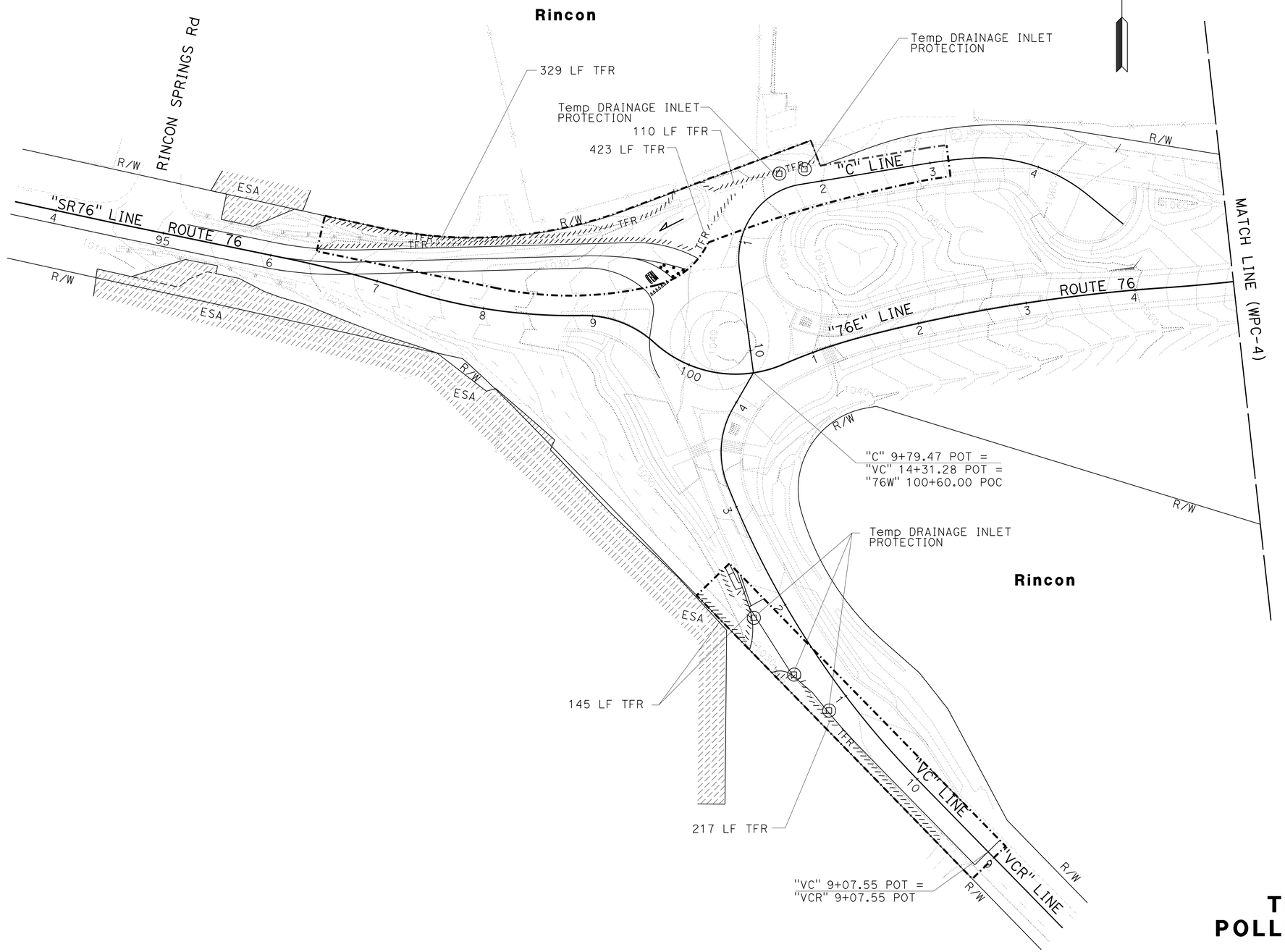

TEMPORARY WATER POLLUTION CONTROL PLAN

STAGE 2

APPROVED FOR TEMPORARY WATER POLLUTION CONTROL WORK ONLY

SCALE: 1" = 50'

WPC-3

STATE OF CALIFORNIA - DEPARTMENT OF TRANSPORTATION
Caltrans
TRAFFIC PROJECT DEVELOPMENT

FUNCTIONAL SUPERVISOR: JOSE LUIS ROBLES
CALCULATED-DESIGNED BY: EVANGELINA PALMA
CHECKED BY: WENDY M. DANDENEAU
REVISED BY
DATE REVISED

LAST REVISION 09-27-16
DATE PLOTTED => 30-SEP-2016
TIME PLOTTED => 13:45

Dist	COUNTY	ROUTE	POST MILES TOTAL PROJECT	SHEET No.	TOTAL SHEETS
11	SD	76	32.6/33.3	57	269

REGISTERED CIVIL ENGINEER DATE 09-20-16

PLANS APPROVAL DATE 09-26-16

REGISTERED PROFESSIONAL ENGINEER WENDY M. DANDENEAU No. C76330 Exp. 12/31/16 CIVIL STATE OF CALIFORNIA

THE STATE OF CALIFORNIA OR ITS OFFICERS OR AGENTS SHALL NOT BE RESPONSIBLE FOR THE ACCURACY OR COMPLETENESS OF SCANNED COPIES OF THIS PLAN SHEET.

NOTES:

1. FOR ACCURATE RIGHT OF WAY DATA, CONTACT RIGHT OF WAY ENGINEERING AT THE DISTRICT OFFICE.
2. FOR WATER POLLUTION CONTROL, CONSTRUCTION BEST MANAGEMENT PRACTICES USED IN PREVIOUS STAGE CAN REMAIN IN PLACE AND MAINTAINED FOR EACH PRECEDING STAGE AS DIRECTED BY ENGINEER.

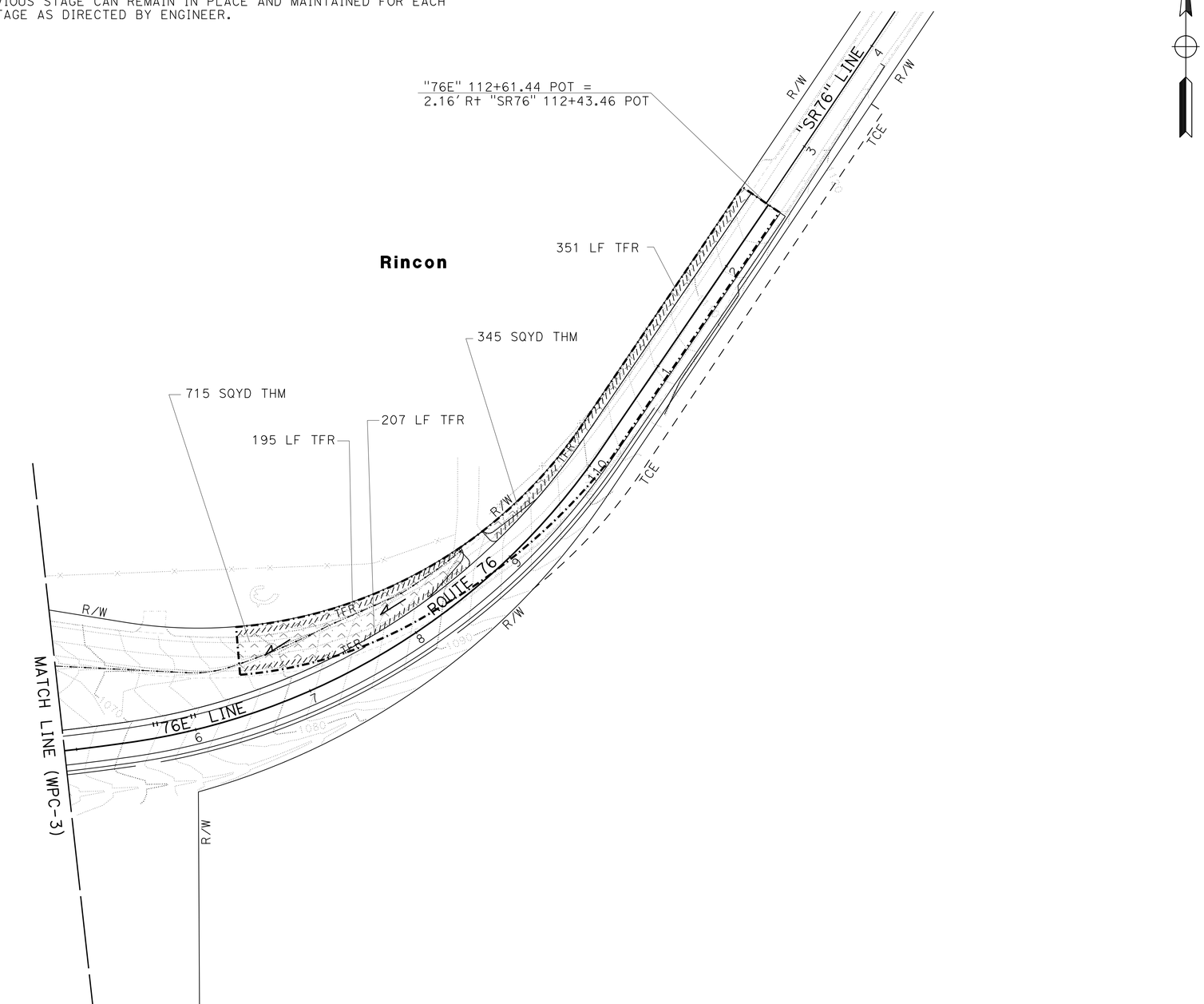

TEMPORARY WATER POLLUTION CONTROL PLAN

STAGE 2

APPROVED FOR TEMPORARY WATER POLLUTION CONTROL WORK ONLY

SCALE: 1" = 50'

WPC-4

STATE OF CALIFORNIA - DEPARTMENT OF TRANSPORTATION

Caltrans

TRAFFIC PROJECT DEVELOPMENT

FUNCTIONAL SUPERVISOR: JOSE LUIS ROBLES

CALCULATED-DESIGNED BY: EVANGELINA PALMA

CHECKED BY: WENDY M. DANDENEAU

REVISED BY

DATE REVISED

LAST REVISION DATE PLOTTED => 30-SEP-2016 TIME PLOTTED => 13:45

09-27-16

BORDER LAST REVISED 7/2/2010

USERNAME => s127284
DGN FILE => 1100020265gb004.dgn

RELATIVE BORDER SCALE IS IN INCHES 0 1 2 3

UNIT 2771

PROJECT NUMBER & PHASE 11000202651

Dist	COUNTY	ROUTE	POST MILES TOTAL PROJECT	SHEET No.	TOTAL SHEETS
11	SD	76	32.6/33.3	58	269

REGISTERED CIVIL ENGINEER 09-20-16 DATE

09-26-16
PLANS APPROVAL DATE

REGISTERED PROFESSIONAL ENGINEER
WENDY M. DANDENEAU
No. C76330
Exp. 12/31/16
CIVIL
STATE OF CALIFORNIA

THE STATE OF CALIFORNIA OR ITS OFFICERS OR AGENTS SHALL NOT BE RESPONSIBLE FOR THE ACCURACY OR COMPLETENESS OF SCANNED COPIES OF THIS PLAN SHEET.

NOTES:

1. FOR ACCURATE RIGHT OF WAY DATA, CONTACT RIGHT OF WAY ENGINEERING AT THE DISTRICT OFFICE.
2. FOR WATER POLLUTION CONTROL, CONSTRUCTION BEST MANAGEMENT PRACTICES USED IN PREVIOUS STAGE CAN REMAIN IN PLACE AND MAINTAINED FOR EACH PRECEDING STAGE AS DIRECTED BY ENGINEER.

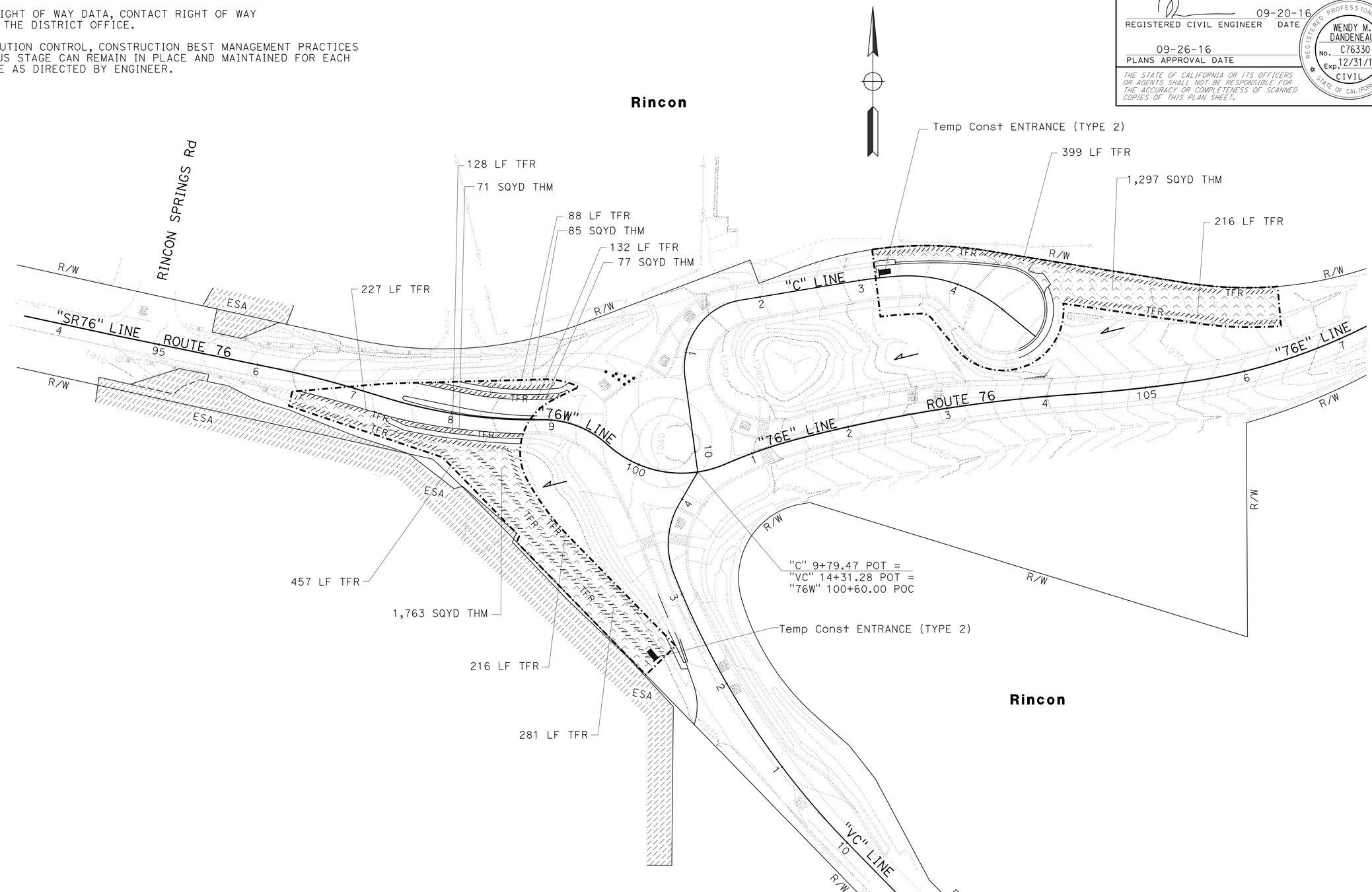

APPROVED FOR TEMPORARY WATER POLLUTION CONTROL WORK ONLY

TEMPORARY WATER POLLUTION CONTROL PLAN

STAGE 3

SCALE: 1" = 50'

WPC-5

REVISED BY | DATE REVISED
EVANGELINA PALMA | WENDY M. DANDENEAU
CALCULATED-DESIGNED BY | CHECKED BY
FUNCTIONAL SUPERVISOR
JOSE LUIS ROBLES

STATE OF CALIFORNIA - DEPARTMENT OF TRANSPORTATION
Caltrans
TRAFFIC PROJECT DEVELOPMENT

LAST REVISION 09-27-16 | DATE PLOTTED => 30-SEP-2016 | TIME PLOTTED => 13:45

Dist	COUNTY	ROUTE	POST MILES TOTAL PROJECT	SHEET No.	TOTAL SHEETS
11	SD	76	32.6/33.3	59	269

REGISTERED CIVIL ENGINEER 09-20-16 DATE

09-26-16
PLANS APPROVAL DATE

REGISTERED PROFESSIONAL ENGINEER
WENDY M. DANDENEAU
No. C76330
Exp. 12/31/16
CIVIL
STATE OF CALIFORNIA

THE STATE OF CALIFORNIA OR ITS OFFICERS OR AGENTS SHALL NOT BE RESPONSIBLE FOR THE ACCURACY OR COMPLETENESS OF SCANNED COPIES OF THIS PLAN SHEET.

NOTES:

1. FOR ACCURATE RIGHT OF WAY DATA, CONTACT RIGHT OF WAY ENGINEERING AT THE DISTRICT OFFICE.
2. FOR WATER POLLUTION CONTROL, CONSTRUCTION BEST MANAGEMENT PRACTICES USED IN PREVIOUS STAGE CAN REMAIN IN PLACE AND MAINTAINED FOR EACH PRECEDING STAGE AS DIRECTED BY ENGINEER.

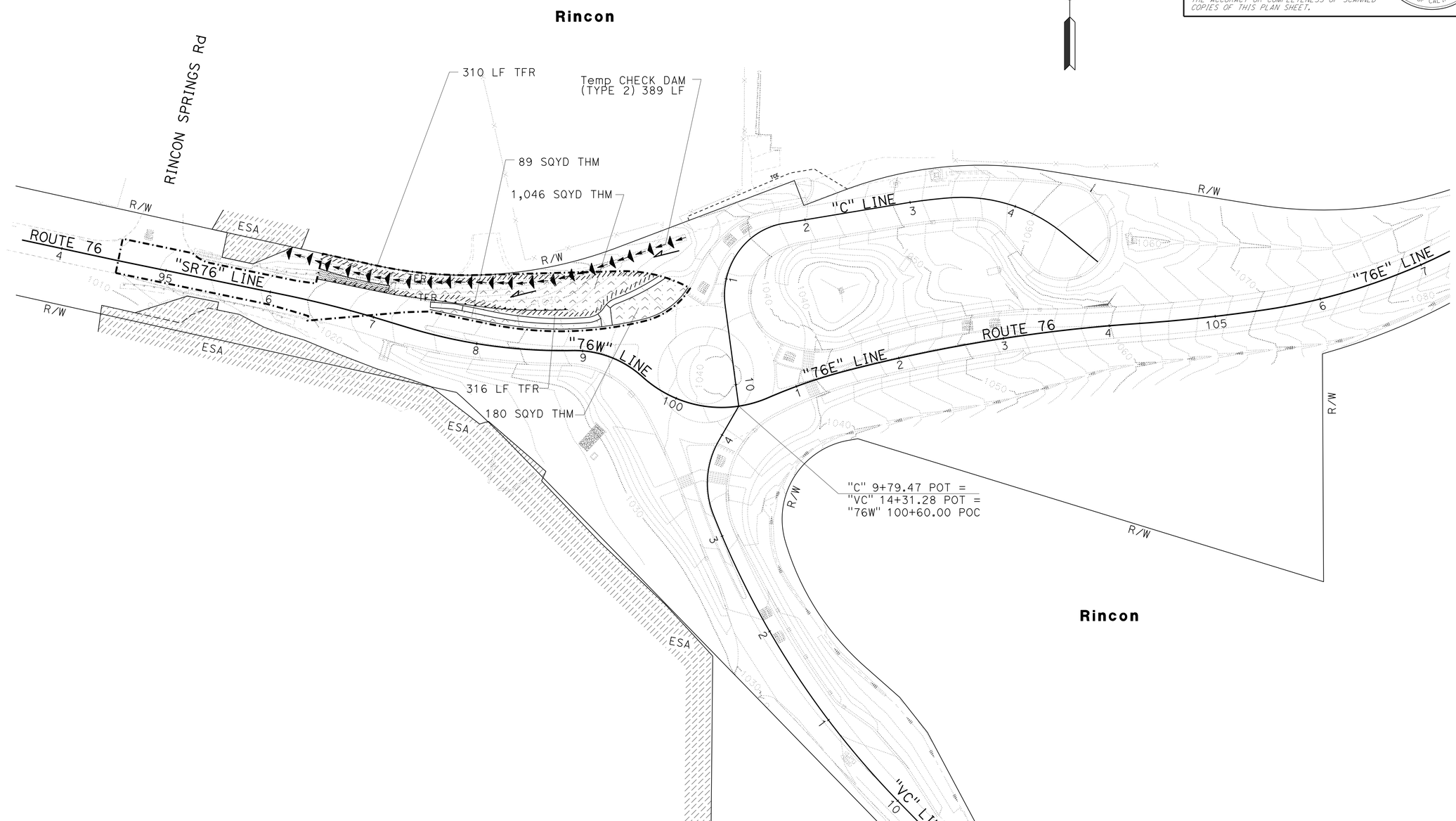

APPROVED FOR TEMPORARY WATER POLLUTION CONTROL WORK ONLY

TEMPORARY WATER POLLUTION CONTROL PLAN

STAGE 4

SCALE: 1" = 50'

WPC-6

STATE OF CALIFORNIA - DEPARTMENT OF TRANSPORTATION
Caltrans
TRAFFIC PROJECT DEVELOPMENT

FUNCTIONAL SUPERVISOR: JOSE LUIS ROBLES

CALCULATED-DESIGNED BY: EVANGELINA PALMA
CHECKED BY: WENDY M. DANDENEAU

REVISED BY | DATE REVISED

LAST REVISION 09-27-16 | DATE PLOTTED => 30-SEP-2016 | TIME PLOTTED => 13:45

Dist	COUNTY	ROUTE	POST MILES TOTAL PROJECT	SHEET No.	TOTAL SHEETS
11	SD	76	32.6/33.3	60	269

09-20-16
REGISTERED CIVIL ENGINEER DATE

09-26-16
PLANS APPROVAL DATE

REGISTERED PROFESSIONAL ENGINEER
WENDY M. DANDENEAU
No. C76330
Exp. 12/31/16
CIVIL
STATE OF CALIFORNIA

THE STATE OF CALIFORNIA OR ITS OFFICERS OR AGENTS SHALL NOT BE RESPONSIBLE FOR THE ACCURACY OR COMPLETENESS OF SCANNED COPIES OF THIS PLAN SHEET.

TEMPORARY WATER POLLUTION CONTROL SUMMARY

STAGE	SHEET	TEMPORARY FIBER ROLL	TEMPORARY CONSTRUCTION ENTRANCE (TYPE 2)	TEMPORARY DRAINAGE INLET PROTECTION	TEMPORARY HYDRAULIC MULCH	TEMPORARY CHECK DAM (TYPE 2)	TEMPORARY FENCE (TYPE ESA)	TEMPORARY COVER
		LF	EA	EA	SQYD	LF	LF	SQYD
1	WPC-1	5,869	3	21	11,680	911	815	1,270
	WPC-2	2,266	2	5	4,267	612		
2	WPC-3	1,224		5				
	WPC-4	753			1,060			
3	WPC-5	2,144	2		3,293			
4	WPC-6	626			1,315	389		
TOTAL		12,882	7	31	21,615	1,912	815	1,270

TEMPORARY WATER POLLUTION CONTROL QUANTITIES

WPCQ-1

STATE OF CALIFORNIA - DEPARTMENT OF TRANSPORTATION
Caltrans
TRAFFIC PROJECT DEVELOPMENT

FUNCTIONAL SUPERVISOR: JOSE LUIS ROBLES
CALCULATED-DESIGNED BY: EVANGELINA PALMA
CHECKED BY: WENDY M. DANDENEAU
REVISED BY
DATE REVISED

LAST REVISION 09-27-16
DATE PLOTTED => 30-SEP-2016
TIME PLOTTED => 13:45

Dist	COUNTY	ROUTE	POST MILES TOTAL PROJECT	SHEET No.	TOTAL SHEETS
11	SD	76	32.6/33.3	61	269

REGISTERED CIVIL ENGINEER 09-20-16 DATE

09-26-16
PLANS APPROVAL DATE

REGISTERED PROFESSIONAL ENGINEER
WENDY M. DANDENEAU
No. C76330
Exp. 12/31/16
CIVIL
STATE OF CALIFORNIA

THE STATE OF CALIFORNIA OR ITS OFFICERS OR AGENTS SHALL NOT BE RESPONSIBLE FOR THE ACCURACY OR COMPLETENESS OF SCANNED COPIES OF THIS PLAN SHEET.

NOTE:

FOR ACCURATE RIGHT OF WAY DATA, CONTACT RIGHT OF WAY ENGINEERING AT THE DISTRICT OFFICE.

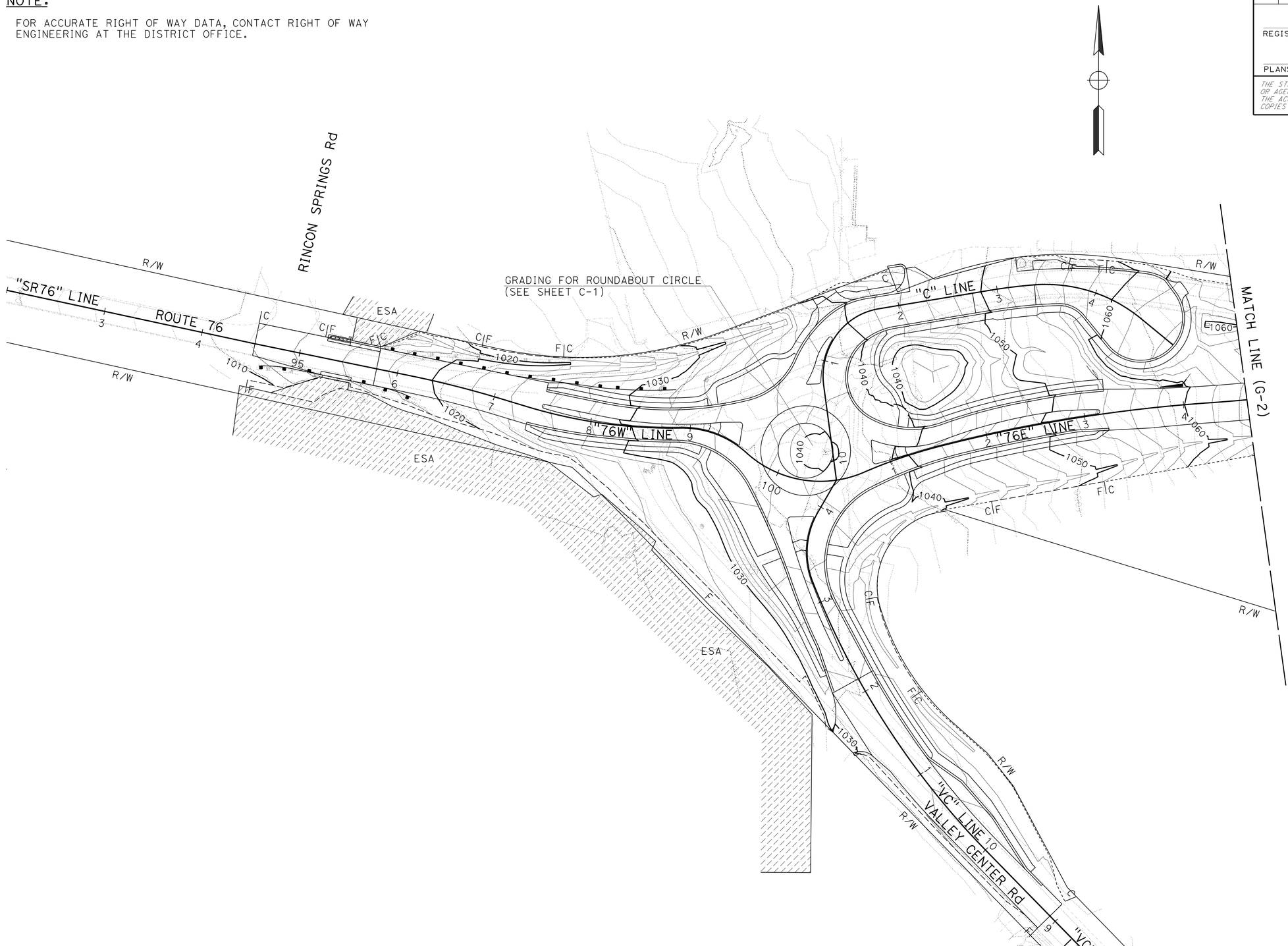

APPROVED FOR CONTOUR GRADING WORK ONLY

CONTOUR GRADING

SCALE: 1" = 50'

G-1

STATE OF CALIFORNIA - DEPARTMENT OF TRANSPORTATION
Caltrans
TRAFFIC PROJECT DEVELOPMENT

FUNCTIONAL SUPERVISOR: JOSE LUIS ROBLES
CALCULATED-DESIGNED BY: WAYNE NGUYEN
CHECKED BY: WENDY M. DANDENEAU
REVISED BY
DATE REVISED

LAST REVISION 09-27-16
DATE PLOTTED => 30-SEP-2016
TIME PLOTTED => 13:45

Dist	COUNTY	ROUTE	POST MILES TOTAL PROJECT	SHEET No.	TOTAL SHEETS
11	SD	76	32.6/33.3	62	269

REGISTERED CIVIL ENGINEER 09-20-16 DATE

09-26-16
PLANS APPROVAL DATE

REGISTERED PROFESSIONAL ENGINEER
WENDY M. DANDENEAU
No. C76330
Exp. 12/31/16
CIVIL
STATE OF CALIFORNIA

THE STATE OF CALIFORNIA OR ITS OFFICERS OR AGENTS SHALL NOT BE RESPONSIBLE FOR THE ACCURACY OR COMPLETENESS OF SCANNED COPIES OF THIS PLAN SHEET.

NOTE:

FOR ACCURATE RIGHT OF WAY DATA, CONTACT RIGHT OF WAY ENGINEERING AT THE DISTRICT OFFICE.

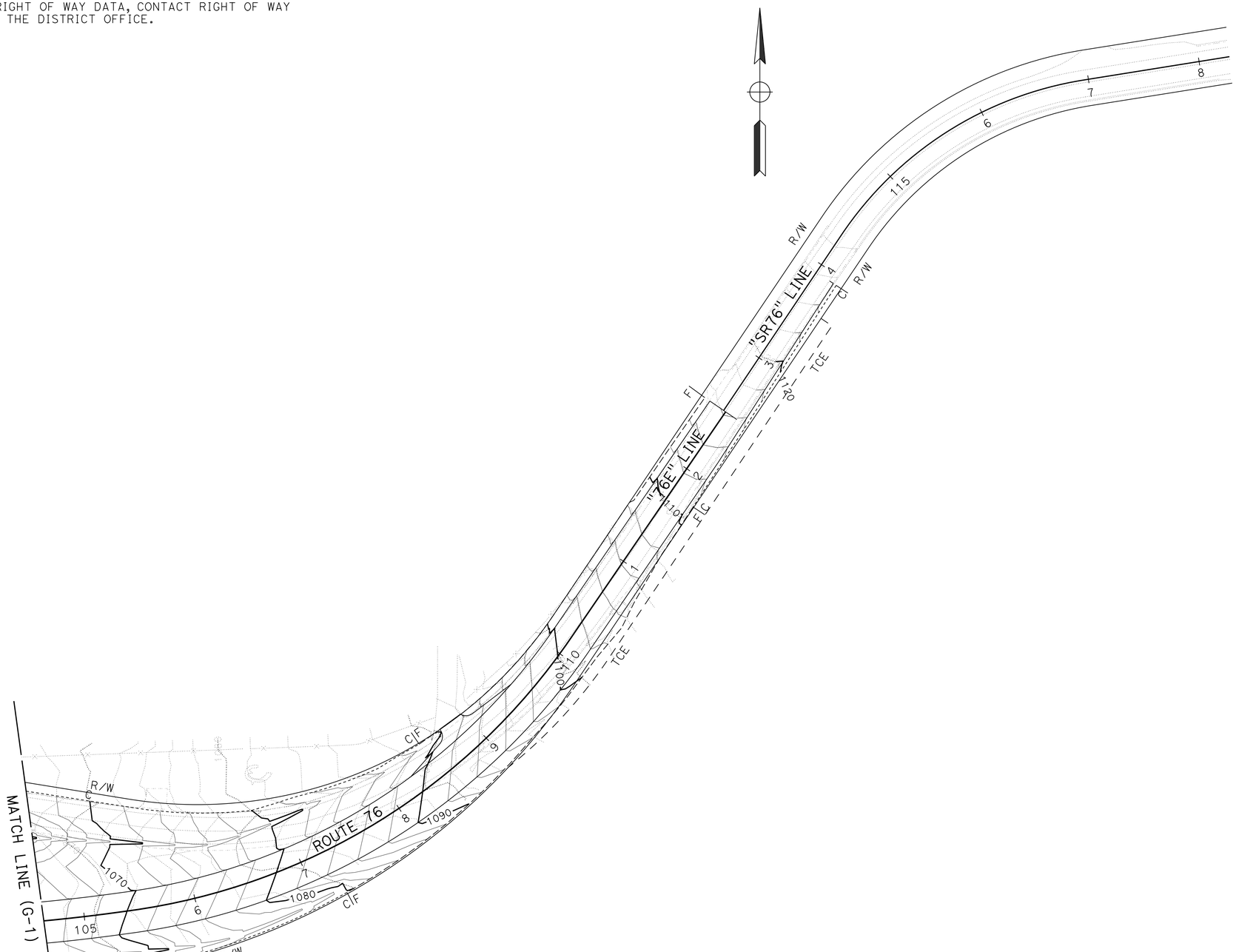

APPROVED FOR CONTOUR GRADING WORK ONLY

CONTOUR GRADING

SCALE: 1" = 50'

G-2

STATE OF CALIFORNIA - DEPARTMENT OF TRANSPORTATION
Caltrans
TRAFFIC PROJECT DEVELOPMENT

FUNCTIONAL SUPERVISOR: JOSE LUIS ROBLES
CALCULATED-DESIGNED BY: WAYNE NGUYEN
CHECKED BY: WENDY M. DANDENEAU
REVISED BY
DATE REVISED

LAST REVISION 09-27-16
DATE PLOTTED => 30-SEP-2016
TIME PLOTTED => 13:45

Dist	COUNTY	ROUTE	POST MILES TOTAL PROJECT	SHEET No.	TOTAL SHEETS
11	SD	76	32.6/33.3	63	269

REGISTERED CIVIL ENGINEER 09-20-16 DATE

09-26-16
PLANS APPROVAL DATE

REGISTERED PROFESSIONAL ENGINEER BARZAN A. ARAN No. C75167 Exp. 12/31/17 CIVIL STATE OF CALIFORNIA

THE STATE OF CALIFORNIA OR ITS OFFICERS OR AGENTS SHALL NOT BE RESPONSIBLE FOR THE ACCURACY OR COMPLETENESS OF SCANNED COPIES OF THIS PLAN SHEET.

NOTE:

FOR ACCURATE RIGHT OF WAY DATA, CONTACT RIGHT OF WAY ENGINEERING AT THE DISTRICT OFFICE.

ABBREVIATION:

OCB = OPENING CONCRETE BOX

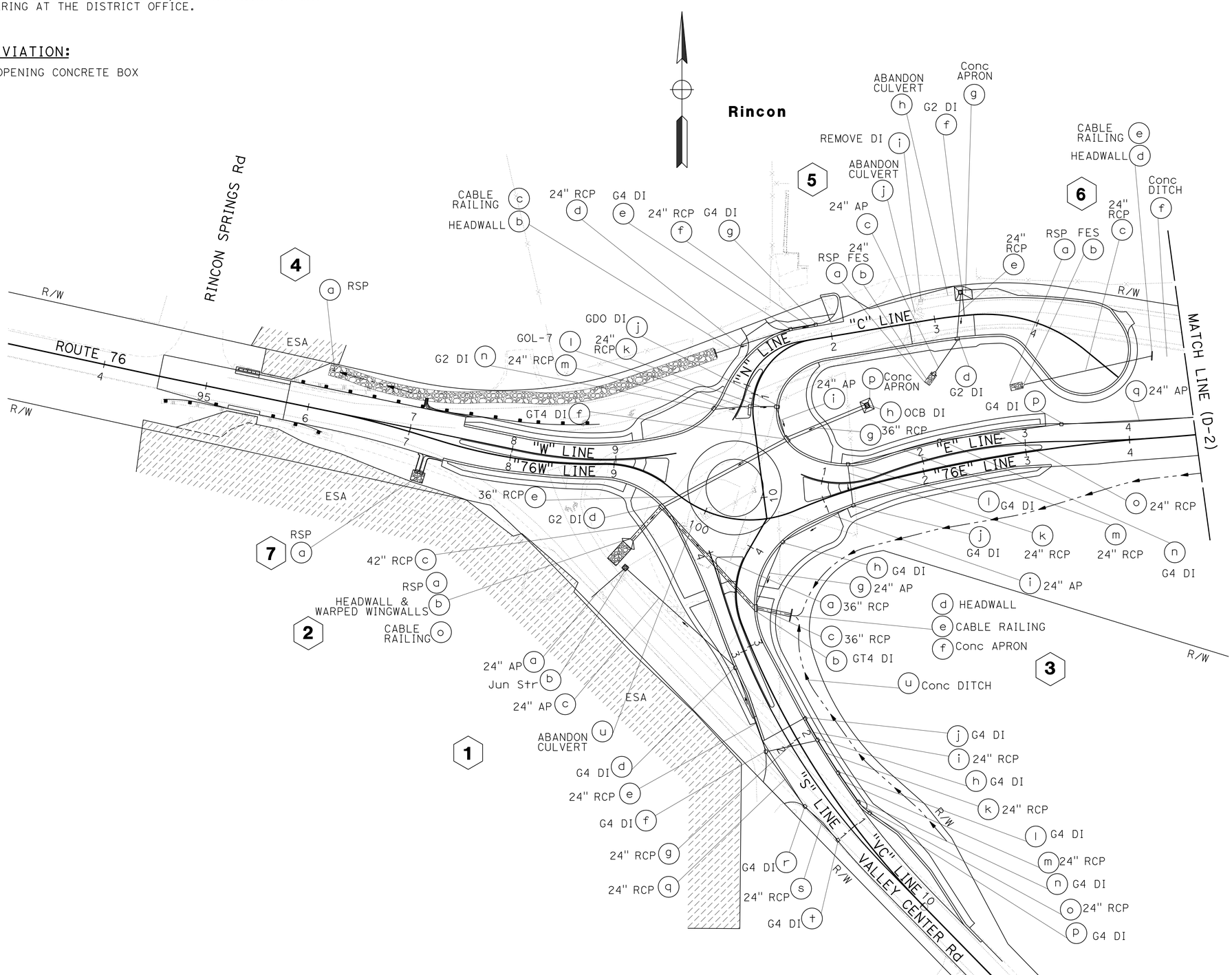

APPROVED FOR DRAINAGE WORK ONLY

SCALE: 1" = 50'

DRAINAGE PLAN
D-1

STATE OF CALIFORNIA - DEPARTMENT OF TRANSPORTATION
Caltrans
TRAFFIC PROJECT DEVELOPMENT

FUNCTIONAL SUPERVISOR: JOSE LUIS ROBLES
CALCULATED-DESIGNED BY: BARZAN A. ARAN
CHECKED BY: WENDY M. DANDENEAU
REVISED BY
DATE REVISED

LAST REVISION 09-27-16
DATE PLOTTED => 30-SEP-2016
TIME PLOTTED => 13:45

Dist	COUNTY	ROUTE	POST MILES TOTAL PROJECT	SHEET No.	TOTAL SHEETS
11	SD	76	32.6/33.3	64	269

09-20-16
REGISTERED CIVIL ENGINEER DATE

09-26-16
PLANS APPROVAL DATE

REGISTERED PROFESSIONAL ENGINEER
BARZAN A. ARAN
No. C75167
Exp. 12/31/17
CIVIL
STATE OF CALIFORNIA

THE STATE OF CALIFORNIA OR ITS OFFICERS OR AGENTS SHALL NOT BE RESPONSIBLE FOR THE ACCURACY OR COMPLETENESS OF SCANNED COPIES OF THIS PLAN SHEET.

NOTE:

FOR ACCURATE RIGHT OF WAY DATA, CONTACT RIGHT OF WAY ENGINEERING AT THE DISTRICT OFFICE.

Rincon

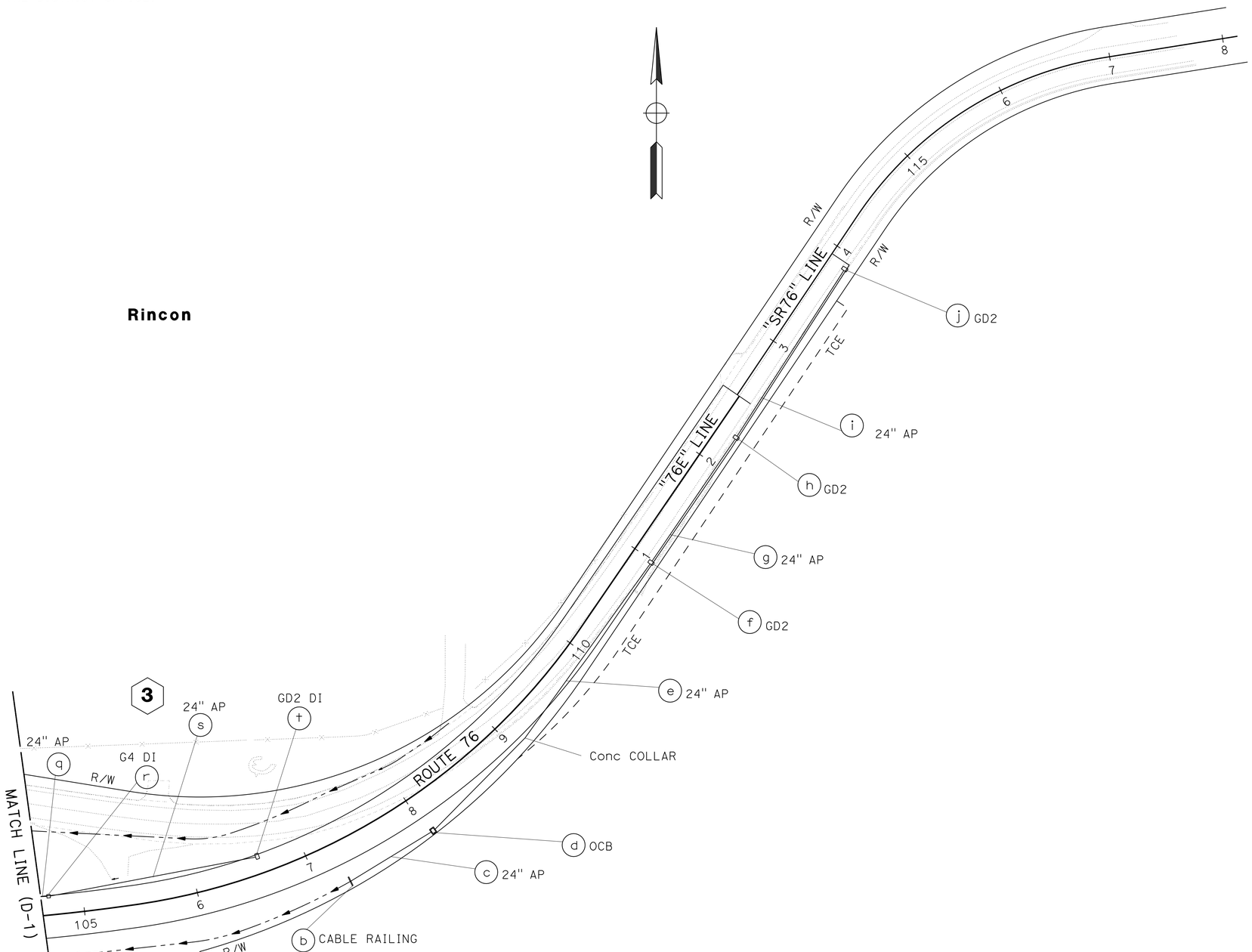

APPROVED FOR DRAINAGE WORK ONLY

SCALE: 1" = 50'

DRAINAGE PLAN
D-2

STATE OF CALIFORNIA - DEPARTMENT OF TRANSPORTATION
Caltrans
TRAFFIC PROJECT DEVELOPMENT

FUNCTIONAL SUPERVISOR: JOSE LUIS ROBLES
CALCULATED-DESIGNED BY: BARZAN A. ARAN
CHECKED BY: WENDY M. DANDENEAU
REVISED BY
DATE REVISED

LAST REVISION 09-27-16
DATE PLOTTED => 30-SEP-2016
TIME PLOTTED => 13:45

Dist	COUNTY	ROUTE	POST MILES TOTAL PROJECT	SHEET No.	TOTAL SHEETS
11	SD	76	32.6/33.3	65	269

REGISTERED CIVIL ENGINEER 09-20-16 DATE

09-26-16
PLANS APPROVAL DATE

BARZAN A. ARAN No. C75167 Exp. 12/31/17 CIVIL STATE OF CALIFORNIA REGISTERED PROFESSIONAL ENGINEER

THE STATE OF CALIFORNIA OR ITS OFFICERS OR AGENTS SHALL NOT BE RESPONSIBLE FOR THE ACCURACY OR COMPLETENESS OF SCANNED COPIES OF THIS PLAN SHEET.

ABBREVIATION:

OCB = OPENING CONCRETE BOX

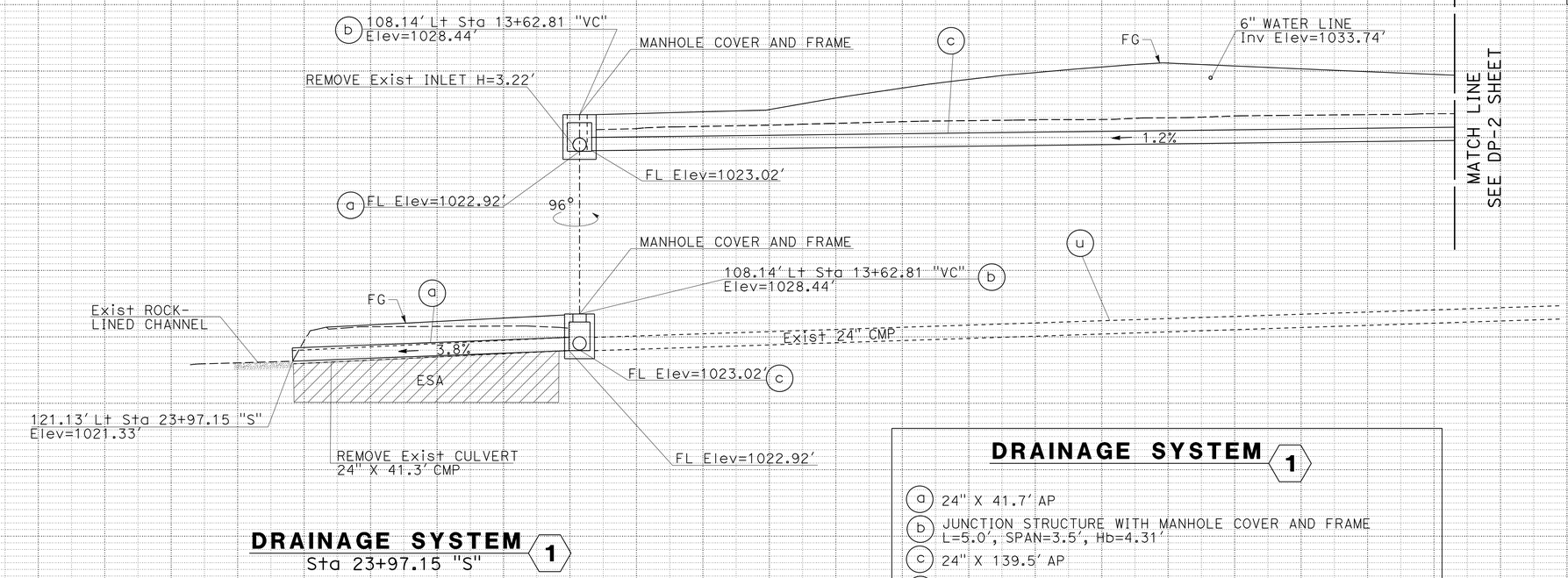

DRAINAGE SYSTEM (1)
Sta 23+97.15 "S"

DRAINAGE SYSTEM (1)

(a) 24" X 41.7' AP
(b) JUNCTION STRUCTURE WITH MANHOLE COVER AND FRAME L=5.0', SPAN=3.5', Hb=4.31'
(c) 24" X 139.5' AP
(d) TYPE G4 INLET WITH 24-12X GRATE, FRAME & CHAIN; H=8.79'
(e) 24" X 82.7' RCP
(f) TYPE G4 INLET WITH 24-12X GRATE, FRAME & CHAIN; H=5.36'
(g) 24" X 47.9' RCP
(h) TYPE G4 INLET WITH 24-12X GRATE, FRAME & CHAIN; H=5.06'
(i) 24" X 20.9' RCP
(j) TYPE G4 INLET WITH 24-12X GRATE, FRAME & CHAIN; H=4.30'
(k) 24" X 34.2' RCP
(l) TYPE G4 INLET WITH 24-12X GRATE, FRAME & CHAIN; H=4.54'
(m) 24" X 31.4' RCP
(n) TYPE G4 INLET WITH 24-12X GRATE, FRAME & CHAIN; H=4.40'
(o) 24" X 12.2' RCP
(p) TYPE G4 INLET WITH 24-12X GRATE, FRAME & CHAIN; H=4.20'
(q) 24" X 61.9' RCP
(r) TYPE G4 INLET WITH 24-12X GRATE, FRAME & CHAIN; H=4.30'
(s) 24" X 42.2' RCP
(t) TYPE G4 INLET WITH 24-12X GRATE, FRAME & CHAIN; H=4.30'
(u) ABANDON CULVERT, 24" X 145.8' CMP

DRAINAGE PROFILES

SCALE: Horiz 1" = 10'
Vert 1" = 10'

DP-1

STATE OF CALIFORNIA - DEPARTMENT OF TRANSPORTATION
Caltrans
TRAFFIC PROJECT DEVELOPMENT

FUNCTIONAL SUPERVISOR: JOSE LUIS ROBLES
CALCULATED-DESIGNED BY: BARZAN A. ARAN
CHECKED BY: W.M. DANDENEAU
REVISED BY
DATE REVISED

LAST REVISION 09-27-16
DATE PLOTTED => 30-SEP-2016
TIME PLOTTED => 13:45

Dist	COUNTY	ROUTE	POST MILES TOTAL PROJECT	SHEET No.	TOTAL SHEETS
11	SD	76	32.6/33.3	66	269

REGISTERED CIVIL ENGINEER 09-20-16 DATE

09-26-16
PLANS APPROVAL DATE

REGISTERED PROFESSIONAL ENGINEER BARZAN A. ARAN No. C75167 Exp. 12/31/17 CIVIL STATE OF CALIFORNIA

THE STATE OF CALIFORNIA OR ITS OFFICERS OR AGENTS SHALL NOT BE RESPONSIBLE FOR THE ACCURACY OR COMPLETENESS OF SCANNED COPIES OF THIS PLAN SHEET.

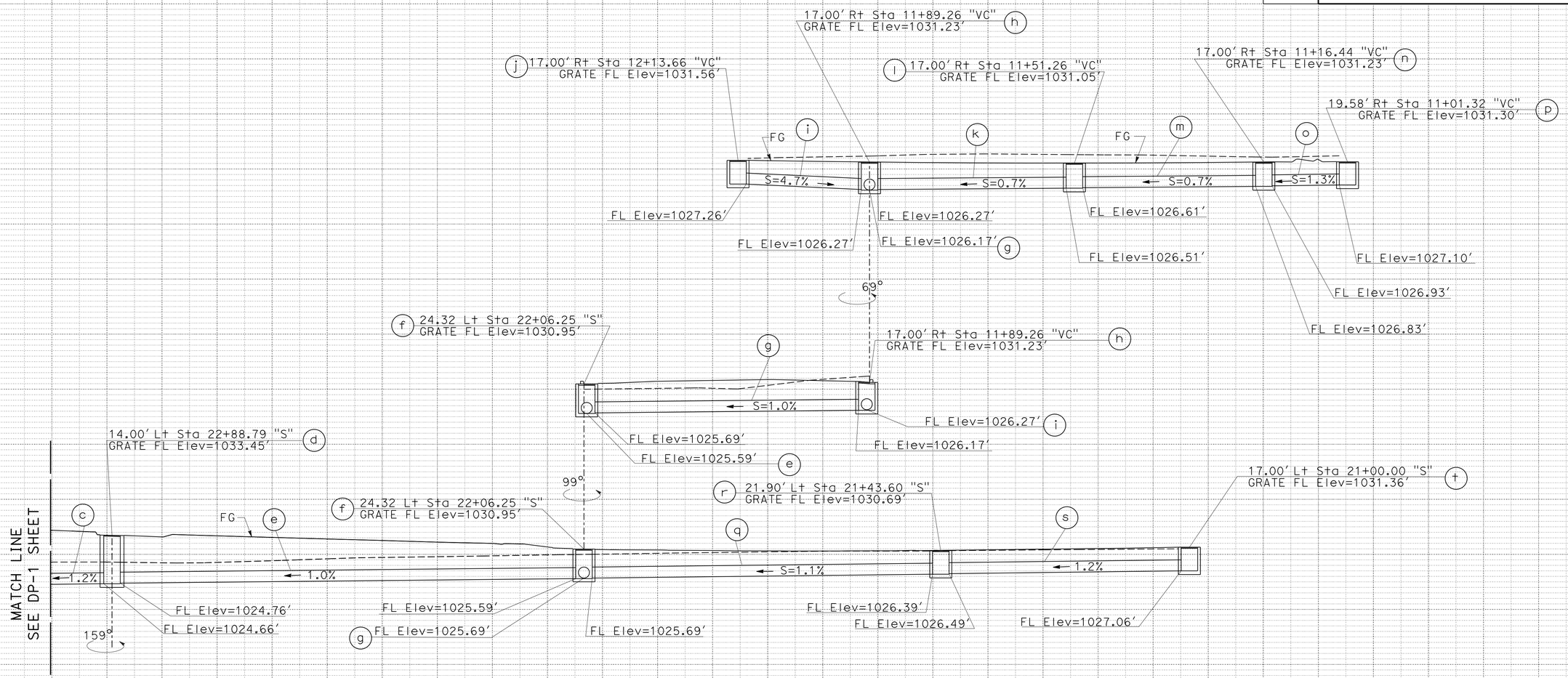

DRAINAGE SYSTEM 1

DRAINAGE PROFILES

SCALE: Horiz 1" = 10'
Vert 1" = 10'

DP-2

REVISED BY | DATE REVISED

BARZAN A. ARAN | W.M. DANDENEAU

CALCULATED-DESIGNED BY | CHECKED BY

FUNCTIONAL SUPERVISOR: JOSE LUIS ROBLES

STATE OF CALIFORNIA - DEPARTMENT OF TRANSPORTATION
Caltrans
TRAFFIC PROJECT DEVELOPMENT

LAST REVISION | DATE PLOTTED => 30-SEP-2016
09-27-16 | TIME PLOTTED => 13:45

Dist	COUNTY	ROUTE	POST MILES TOTAL PROJECT	SHEET No.	TOTAL SHEETS
11	SD	76	32.6/33.3	67	269

REGISTERED CIVIL ENGINEER 09-20-16 DATE

09-26-16
PLANS APPROVAL DATE

REGISTERED PROFESSIONAL ENGINEER BARZAN A. ARAN No. C75167 Exp. 12/31/17 CIVIL STATE OF CALIFORNIA

THE STATE OF CALIFORNIA OR ITS OFFICERS OR AGENTS SHALL NOT BE RESPONSIBLE FOR THE ACCURACY OR COMPLETENESS OF SCANNED COPIES OF THIS PLAN SHEET.

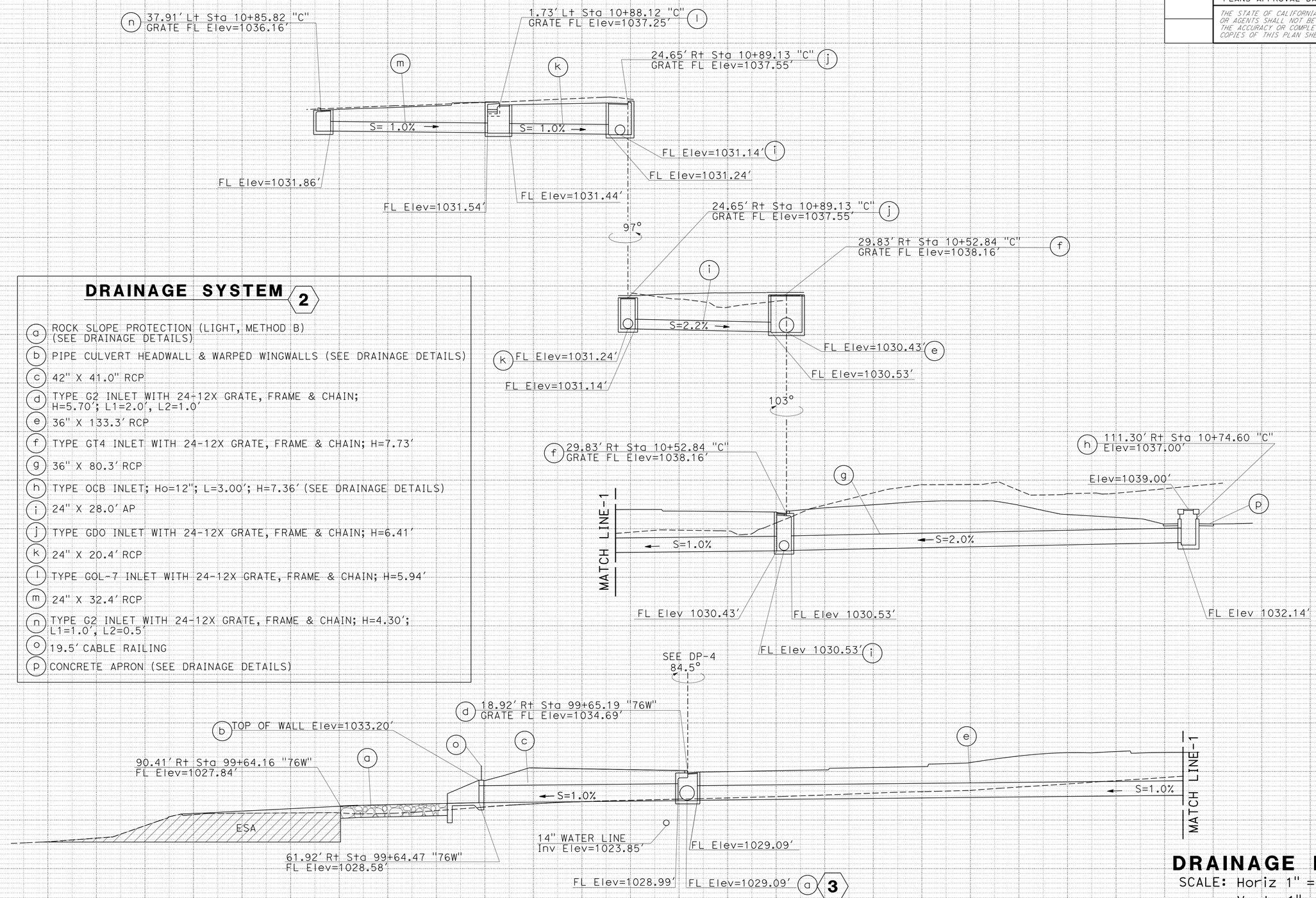

DRAINAGE SYSTEM 2

- a ROCK SLOPE PROTECTION (LIGHT, METHOD B) (SEE DRAINAGE DETAILS)
- b PIPE CULVERT HEADWALL & WARPED WINGWALLS (SEE DRAINAGE DETAILS)
- c 42" X 41.0" RCP
- d TYPE G2 INLET WITH 24-12X GRATE, FRAME & CHAIN; H=5.70'; L1=2.0', L2=1.0'
- e 36" X 133.3' RCP
- f TYPE GT4 INLET WITH 24-12X GRATE, FRAME & CHAIN; H=7.73'
- g 36" X 80.3' RCP
- h TYPE OCB INLET; Ho=12"; L=3.00'; H=7.36' (SEE DRAINAGE DETAILS)
- i 24" X 28.0' AP
- j TYPE GDO INLET WITH 24-12X GRATE, FRAME & CHAIN; H=6.41'
- k 24" X 20.4' RCP
- l TYPE GOL-7 INLET WITH 24-12X GRATE, FRAME & CHAIN; H=5.94'
- m 24" X 32.4' RCP
- n TYPE G2 INLET WITH 24-12X GRATE, FRAME & CHAIN; H=4.30'; L1=1.0', L2=0.5'
- o 19.5' CABLE RAILING
- p CONCRETE APRON (SEE DRAINAGE DETAILS)

DRAINAGE PROFILES

SCALE: Horiz 1" = 10'
Vert 1" = 10'

DP-3

STATE OF CALIFORNIA - DEPARTMENT OF TRANSPORTATION
Caltrans
TRAFFIC PROJECT DEVELOPMENT

FUNCTIONAL SUPERVISOR: JOSE LUIS ROBLES
CALCULATED-DESIGNED BY: BARZAN A. ARAN
CHECKED BY: W.M. DANDENEAU
REVISED BY / DATE REVISED

LAST REVISION 09-27-16 | DATE PLOTTED => 30-SEP-2016 | TIME PLOTTED => 13:45

Dist	COUNTY	ROUTE	POST MILES TOTAL PROJECT	SHEET No.	TOTAL SHEETS
11	SD	76	32.6/33.3	68	269

REGISTERED CIVIL ENGINEER 09-20-16 DATE

09-26-16
PLANS APPROVAL DATE

REGISTERED PROFESSIONAL ENGINEER BARZAN A. ARAN No. C75167 Exp. 12/31/17 CIVIL STATE OF CALIFORNIA

THE STATE OF CALIFORNIA OR ITS OFFICERS OR AGENTS SHALL NOT BE RESPONSIBLE FOR THE ACCURACY OR COMPLETENESS OF SCANNED COPIES OF THIS PLAN SHEET.

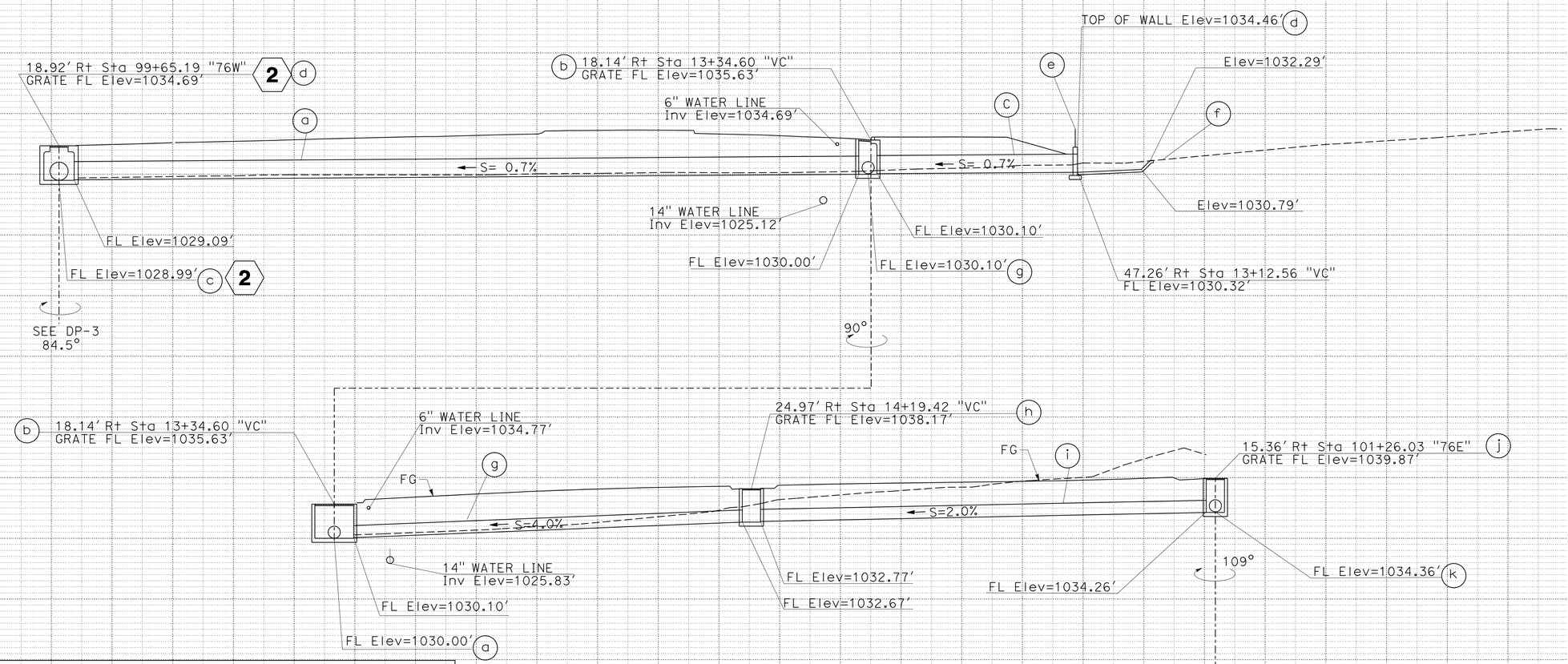

DRAINAGE SYSTEM 3

- a 36" X 129.1' RCP
- b TYPE GT4 INLET WITH 24-12X GRATES, FRAME & CHAIN; H=5.63'
- c 36" X 33.0' RCP
- d PIPE CULVERT HEADWALL; STRAIGHT, H=4'-8"
- e 12.0' CABLE RAILING
- f CONCRETE APRON (SEE DRAINAGE DETAILS)
- g 24" X 64.1' AP
- h TYPE G4 INLET WITH 24-12X GRATE, FRAME & CHAIN; H=5.50'
- i 24" X 73.5' AP
- j TYPE G4 INLET WITH 24-12X GRATE, FRAME & CHAIN; H=5.61'
- k 24" X 37.0' RCP
- l TYPE G4 INLET WITH 24-12X GRATE, FRAME & CHAIN; H=4.40'

DRAINAGE PROFILES

SCALE: Horiz 1" = 10'
Vert 1" = 10'

DP-4

STATE OF CALIFORNIA - DEPARTMENT OF TRANSPORTATION
TRAFFIC PROJECT DEVELOPMENT
Caltrans

FUNCTIONAL SUPERVISOR: JOSE LUIS ROBLES
CALCULATED-DESIGNED BY: BARZAN A. ARAN
CHECKED BY: W.M. DANDENEAU
REVISED BY / DATE REVISED

LAST REVISION 09-27-16
DATE PLOTTED => 30-SEP-2016
TIME PLOTTED => 13:45

Dist	COUNTY	ROUTE	POST MILES TOTAL PROJECT	SHEET No.	TOTAL SHEETS
11	SD	76	32.6/33.3	69	269

REGISTERED CIVIL ENGINEER 09-20-16 DATE

09-26-16
PLANS APPROVAL DATE

REGISTERED PROFESSIONAL ENGINEER BARZAN A. ARAN No. C75167 Exp. 12/31/17 CIVIL STATE OF CALIFORNIA

THE STATE OF CALIFORNIA OR ITS OFFICERS OR AGENTS SHALL NOT BE RESPONSIBLE FOR THE ACCURACY OR COMPLETENESS OF SCANNED COPIES OF THIS PLAN SHEET.

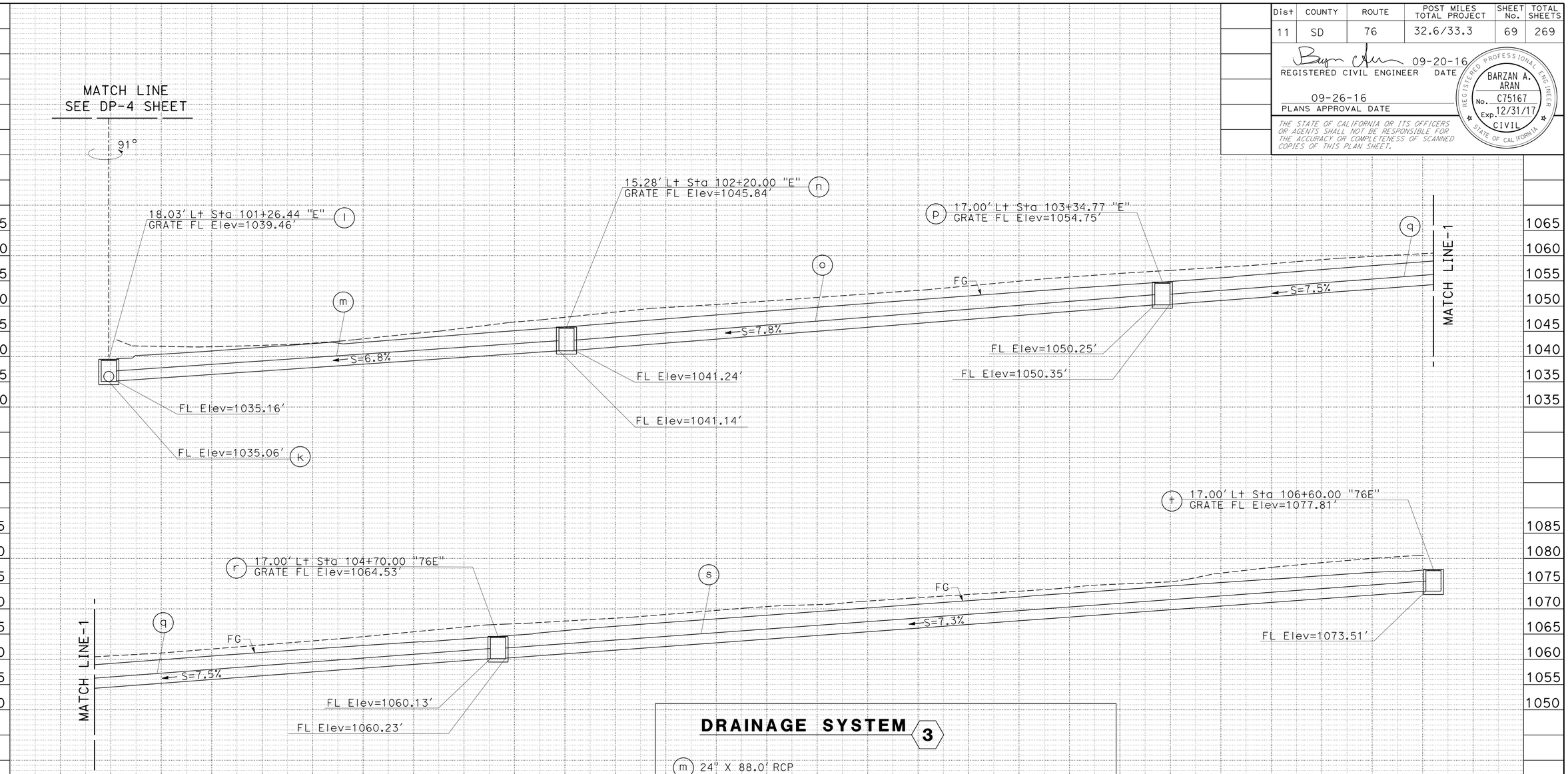

DRAINAGE SYSTEM 3

- (m) 24" X 88.0' RCP
- (n) TYPE G4 INLET WITH 24-12X GRATE, FRAME & CHAIN; H=4.70'
- (o) 24" X 115.5' RCP
- (p) TYPE G4 INLET WITH 24-12X GRATE, FRAME & CHAIN; H=4.50'
- (q) 24" X 131.1' AP
- (r) TYPE G4 INLET WITH 24-12X GRATE, FRAME & CHAIN; H=4.40'
- (s) 24" X 182.9' AP
- (t) TYPE GD2 INLET WITH 24-12X GRATE, FRAME & CHAIN; H=4.30'; L=0 (SEE DRAINAGE DETAILS)

DRAINAGE PROFILES

SCALE: Horiz 1" = 10'
Vert 1" = 10'

DP-5

REVISED BY | DATE REVISED
BARZAN A. ARAN | W.M. DANDENEAU
CALCULATED-DESIGNED BY | CHECKED BY
FUNCTIONAL SUPERVISOR: JOSE LUIS ROBLES

STATE OF CALIFORNIA - DEPARTMENT OF TRANSPORTATION
Caltrans
TRAFFIC PROJECT DEVELOPMENT

LAST REVISION 09-27-16 | DATE PLOTTED => 30-SEP-2016 | TIME PLOTTED => 13:45

Dist	COUNTY	ROUTE	POST MILES TOTAL PROJECT	SHEET No.	TOTAL SHEETS
11	SD	76	32.6/33.3	70	269

REGISTERED CIVIL ENGINEER 09-20-16 DATE

09-26-16
PLANS APPROVAL DATE

REGISTERED PROFESSIONAL ENGINEER BARZAN A. ARAN No. C75167 Exp. 12/31/17 CIVIL STATE OF CALIFORNIA

THE STATE OF CALIFORNIA OR ITS OFFICERS OR AGENTS SHALL NOT BE RESPONSIBLE FOR THE ACCURACY OR COMPLETENESS OF SCANNED COPIES OF THIS PLAN SHEET.

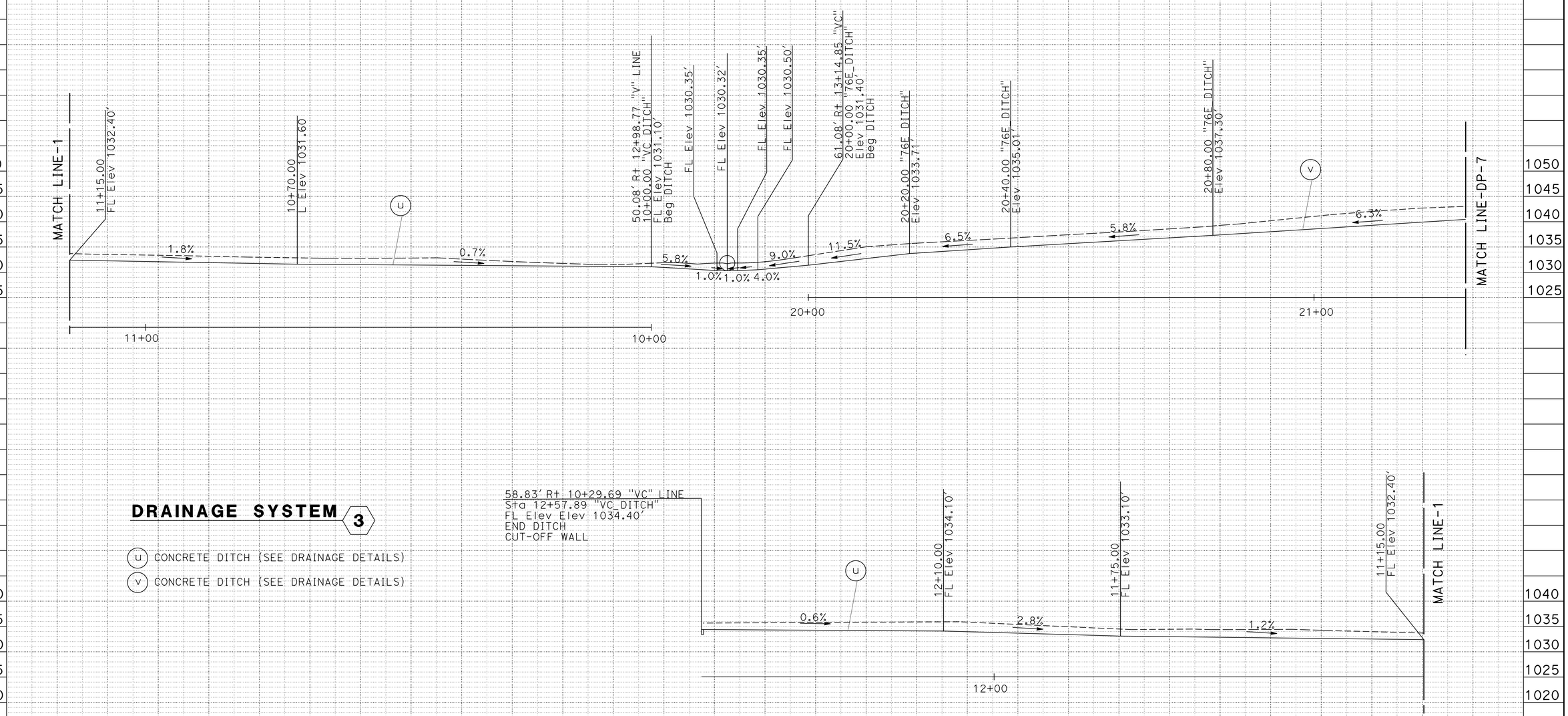

DRAINAGE SYSTEM 3

(U) CONCRETE DITCH (SEE DRAINAGE DETAILS)

(V) CONCRETE DITCH (SEE DRAINAGE DETAILS)

DRAINAGE PROFILES

SCALE: Horiz 1" = 10'
Vert 1" = 10'

DP-6

STATE OF CALIFORNIA - DEPARTMENT OF TRANSPORTATION
Caltrans
TRAFFIC PROJECT DEVELOPMENT

FUNCTIONAL SUPERVISOR: JOSE LUIS ROBLES
CALCULATED-DESIGNED BY: BARZAN A. ARAN
CHECKED BY: W.M. DANDENEAU
REVISED BY
DATE REVISED

LAST REVISION 09-27-16
DATE PLOTTED => 30-SEP-2016
TIME PLOTTED => 13:45

Dist	COUNTY	ROUTE	POST MILES TOTAL PROJECT	SHEET No.	TOTAL SHEETS
11	SD	76	32.6/33.3	71	269

REGISTERED CIVIL ENGINEER 09-20-16 DATE

09-26-16
PLANS APPROVAL DATE

REGISTERED PROFESSIONAL ENGINEER BARZAN A. ARAN No. C75167 Exp. 12/31/17 CIVIL STATE OF CALIFORNIA

THE STATE OF CALIFORNIA OR ITS OFFICERS OR AGENTS SHALL NOT BE RESPONSIBLE FOR THE ACCURACY OR COMPLETENESS OF SCANNED COPIES OF THIS PLAN SHEET.

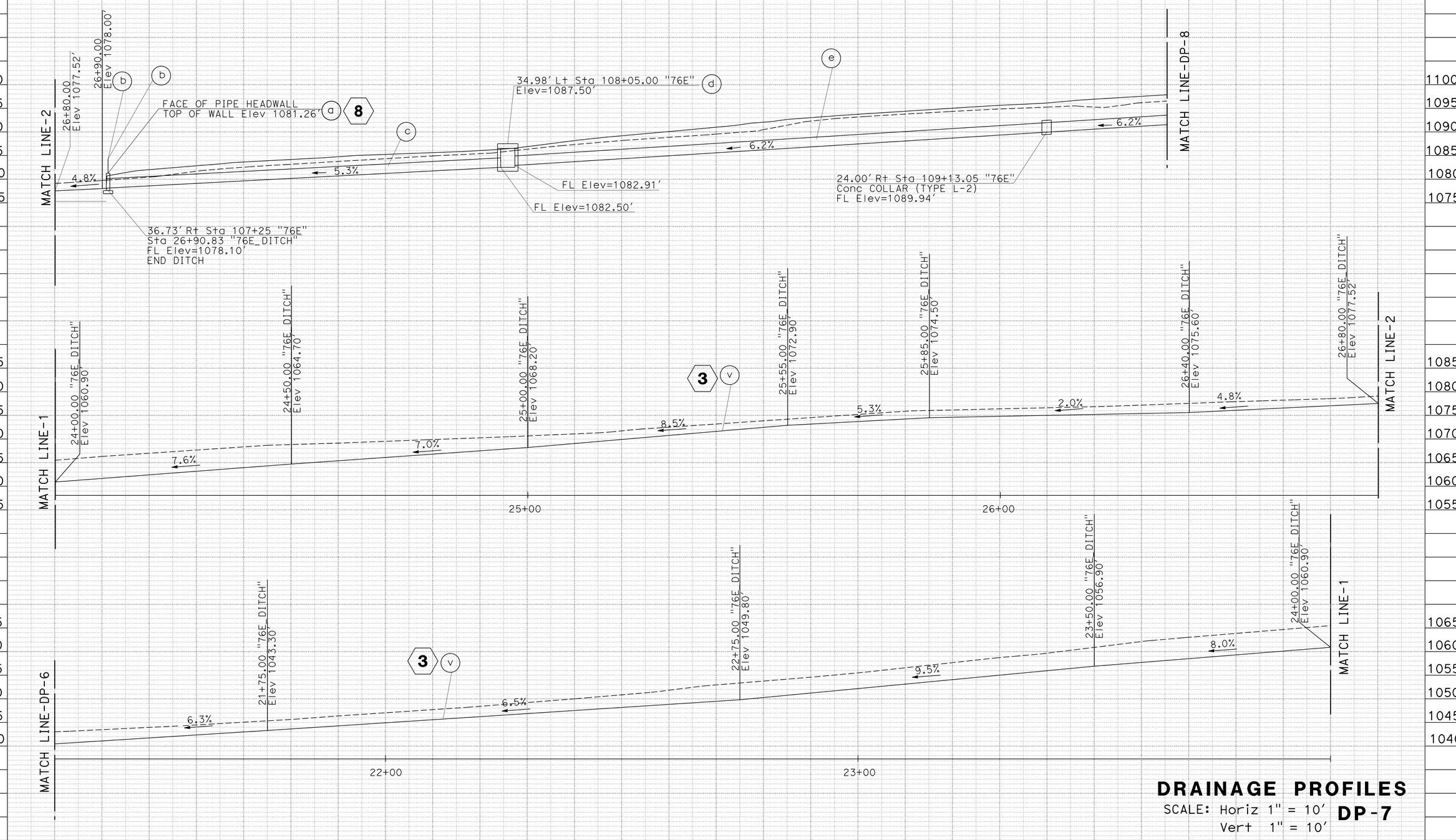

DRAINAGE PROFILES

SCALE: Horiz 1" = 10'
Vert 1" = 10'

DP-7

STATE OF CALIFORNIA - DEPARTMENT OF TRANSPORTATION
Caltrans
TRAFFIC PROJECT DEVELOPMENT

FUNCTIONAL SUPERVISOR: JOSE LUIS ROBLES
CALCULATED-DESIGNED BY: BARZAN A. ARAN
CHECKED BY: W.M. DANDENEAU
REVISED BY / DATE REVISED

LAST REVISION 09-27-16 | DATE PLOTTED => 30-SEP-2016 | TIME PLOTTED => 13:45

Dist	COUNTY	ROUTE	POST MILES TOTAL PROJECT	SHEET No.	TOTAL SHEETS
11	SD	76	32.6/33.3	72	269

REGISTERED CIVIL ENGINEER 09-20-16 DATE

09-26-16
PLANS APPROVAL DATE

REGISTERED PROFESSIONAL ENGINEER BARZAN A. ARAN No. C75167 Exp. 12/31/17 CIVIL STATE OF CALIFORNIA

THE STATE OF CALIFORNIA OR ITS OFFICERS OR AGENTS SHALL NOT BE RESPONSIBLE FOR THE ACCURACY OR COMPLETENESS OF SCANNED COPIES OF THIS PLAN SHEET.

DRAINAGE SYSTEM 8

- (a) PIPE CULVERT HEADWALL; STRAIGHT, H=3'-8"
- (b) 8.5' CABLE RAILING
- (c) 24" X 83.6' AP
- (d) TYPE OCB INLET (OMIT OPENINGS); L=0; H=5.0' (SEE DRAINAGE DETAILS)
- (e) 24" X 300.5' AP WITH Conc COLLAR (TYPE L-2) (SEE DRAINAGE DETAILS)
- (f) TYPE GD2 INLET WITH 24-12X GRATE, FRAME & CHAIN; H=4.50'; L=0 (SEE DRAINAGE DETAILS)
- (g) 24" X 129.2' AP
- (h) TYPE GD2 INLET WITH 24-12X GRATE, FRAME & CHAIN; H=4.70'; L=0 (SEE DRAINAGE DETAILS)
- (i) 24" X 172.7 AP
- (j) TYPE GD2 INLET WITH 24-12X GRATE, FRAME & CHAIN; H=4.30'; L=0 (SEE DRAINAGE DETAILS)

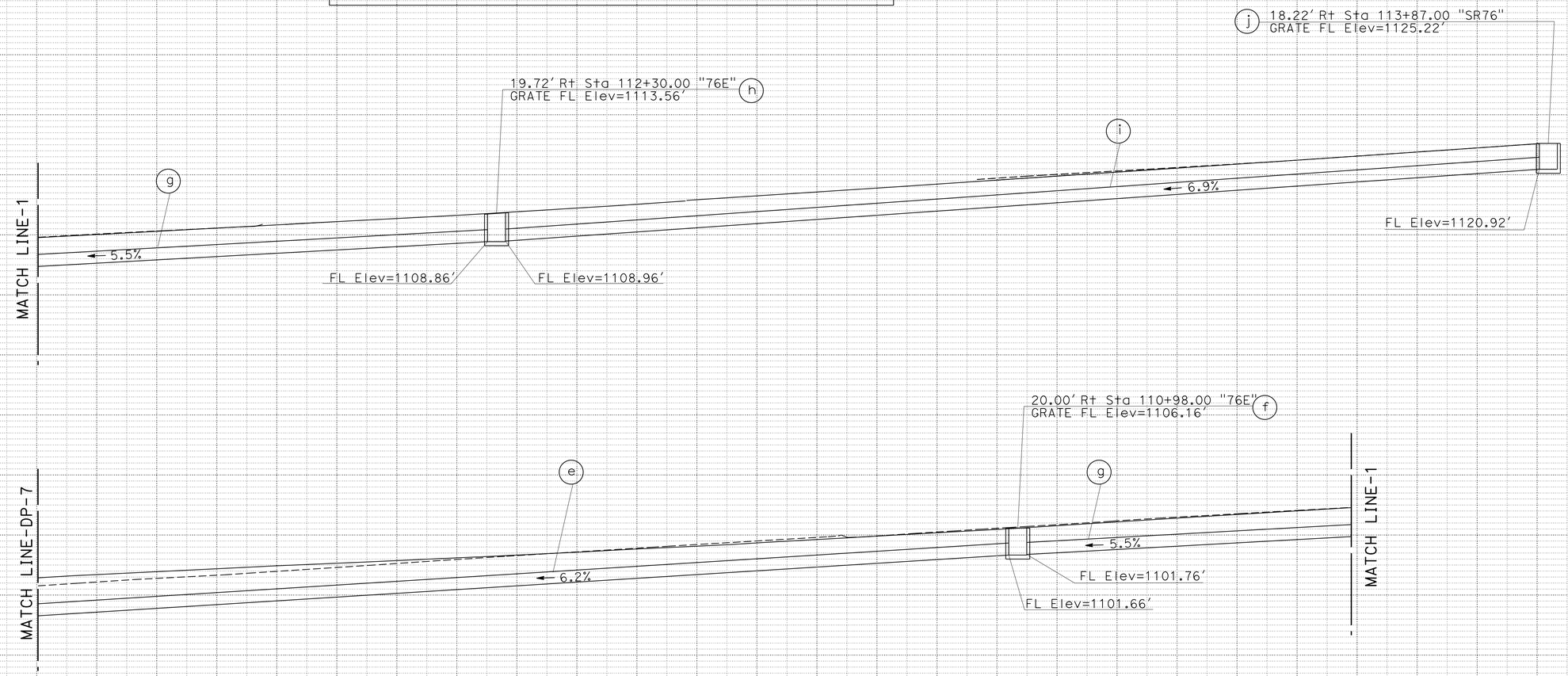

DRAINAGE PROFILES

SCALE: Horiz 1" = 10'
Vert 1" = 10'

DP-8

STATE OF CALIFORNIA - DEPARTMENT OF TRANSPORTATION
Caltrans
TRAFFIC PROJECT DEVELOPMENT

FUNCTIONAL SUPERVISOR: JOSE LUIS ROBLES
CALCULATED-DESIGNED BY: BARZAN A. ARAN
CHECKED BY: W.M. DANDENEAU
REVISED BY
DATE REVISED

LAST REVISION 09-27-16
DATE PLOTTED => 30-SEP-2016
TIME PLOTTED => 13:45

Dist	COUNTY	ROUTE	POST MILES TOTAL PROJECT	SHEET No.	TOTAL SHEETS
11	SD	76	32.6/33.3	73	269

REGISTERED CIVIL ENGINEER 09-20-16 DATE

09-26-16
PLANS APPROVAL DATE

REGISTERED PROFESSIONAL ENGINEER BARZAN A. ARAN No. C75167 Exp. 12/31/17 CIVIL STATE OF CALIFORNIA

THE STATE OF CALIFORNIA OR ITS OFFICERS OR AGENTS SHALL NOT BE RESPONSIBLE FOR THE ACCURACY OR COMPLETENESS OF SCANNED COPIES OF THIS PLAN SHEET.

DRAINAGE SYSTEM 5

- (a) ROCK SLOPE PROTECTION (NO. 1, METHOD B) (SEE DRAINAGE DETAILS)
- (b) 24" ALTERNATIVE FLARED END SECTION
- (c) 24" X 37.3' AP
- (d) TYPE G2 INLET WITH 24-12X GRATE, FRAME & CHAIN; H=4.40'; L1=1.0', L2=0.5'
- (e) 24" X 42.0' RCP
- (f) TYPE G2 INLET WITH 24-12X GRATE, FRAME & CHAIN; H=3.11'; L1=1.0'
- (g) CONCRETE APRON (SEE DRAINAGE DETAILS)
- (h) ABANDON CULVERT, 24" X 39.0' CMP
- (i) REMOVE INLET; H=2.70'
- (j) ABANDON CULVERT, 24" X 50.4' CMP

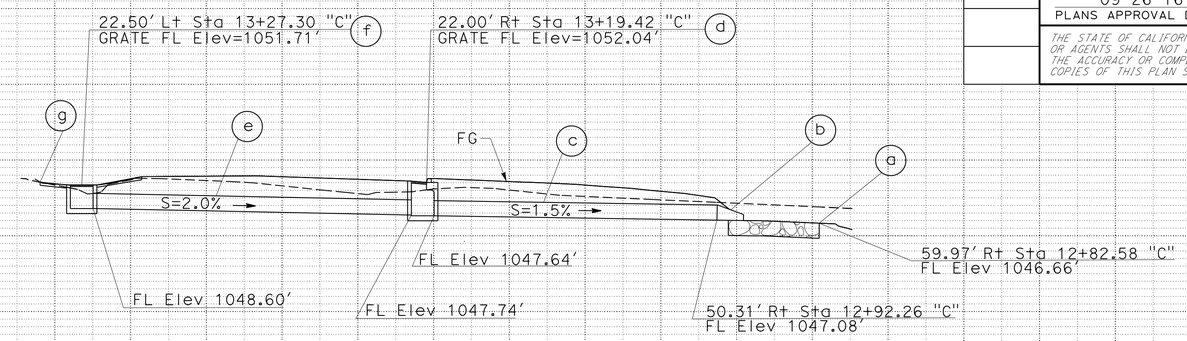

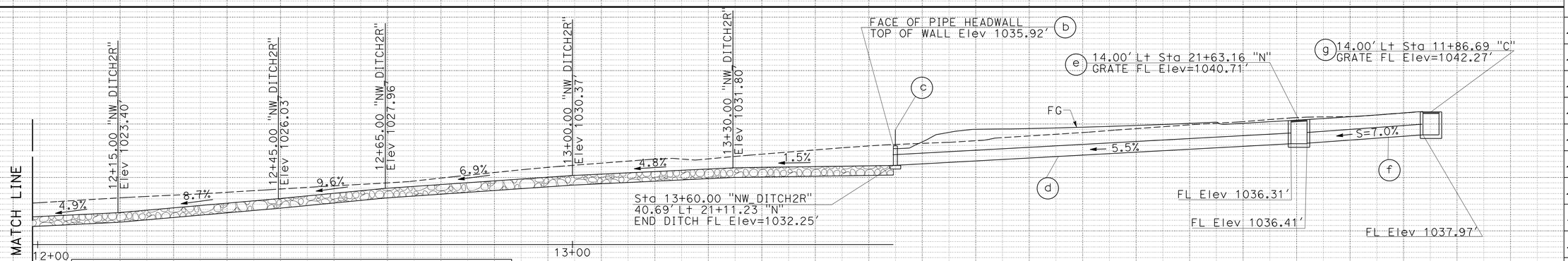

DRAINAGE SYSTEM 4

- (a) ROCK SLOPE PROTECTION (NO. 1, METHOD B) (SEE DRAINAGE DETAILS)
- (b) PIPE CULVERT HEADWALL; STRAIGHT; H=3'-8"; L=8-6"
- (c) 8.5' CABLE RAILING
- (d) 24" X 74.5' RCP
- (e) TYPE G4 INLET WITH 24-12X GRATE, FRAME & CHAIN; H=4.40'
- (f) 24" X 21.8' RCP
- (g) TYPE G4 INLET WITH 24-12X GRATE, FRAME & CHAIN; H=4.30'

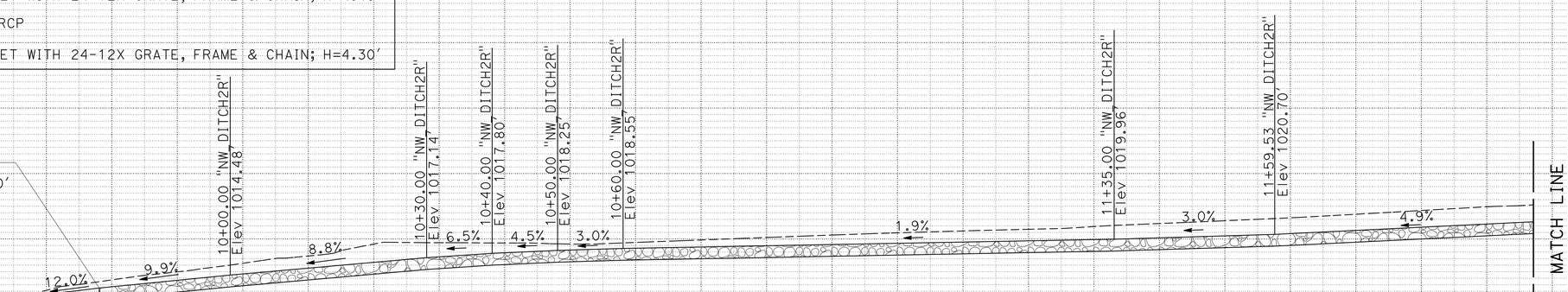

DRAINAGE PROFILES

SCALE: Horiz 1" = 10'
Vert 1" = 10'

DP-9

BARZAN A. ARAN — W.M. DANDENEAU — REVISED BY — DATE REVISED — CALCULATED-DESIGNED BY — CHECKED BY — FUNCTIONAL SUPERVISOR: JOSE LUIS ROBLES

STATE OF CALIFORNIA - DEPARTMENT OF TRANSPORTATION
Caltrans
TRAFFIC PROJECT DEVELOPMENT

LAST REVISION 09-27-16 — DATE PLOTTED => 30-SEP-2016 — TIME PLOTTED => 13:45

Dist	COUNTY	ROUTE	POST MILES TOTAL PROJECT	SHEET No.	TOTAL SHEETS
11	SD	76	32.6/33.3	74	269

REGISTERED CIVIL ENGINEER 09-20-16 DATE

09-26-16
PLANS APPROVAL DATE

REGISTERED PROFESSIONAL ENGINEER BARZAN A. ARAN No. C75167 Exp. 12/31/17 CIVIL STATE OF CALIFORNIA

THE STATE OF CALIFORNIA OR ITS OFFICERS OR AGENTS SHALL NOT BE RESPONSIBLE FOR THE ACCURACY OR COMPLETENESS OF SCANNED COPIES OF THIS PLAN SHEET.

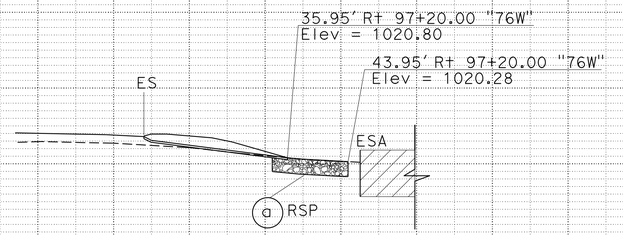

DRAINAGE SYSTEM 7

(a) ROCK SLOPE PROTECTION (NO. 1, METHOD B) (SEE DRAINAGE DETAILS)

DRAINAGE SYSTEM 6

(a) ROCK SLOPE PROTECTION (NO. 1, METHOD B) (SEE DRAINAGE DETAILS)
(b) 24" CONCRETE FLARED END SECTION
(c) 24" X 126.3' RCP
(d) PIPE CULVERT HEADWALL; STRAIGHT, H=3'-8"
(e) 8.5' CABLE RAILING
(f) CONCRETE DITCH (SEE DRAINAGE DETAILS)

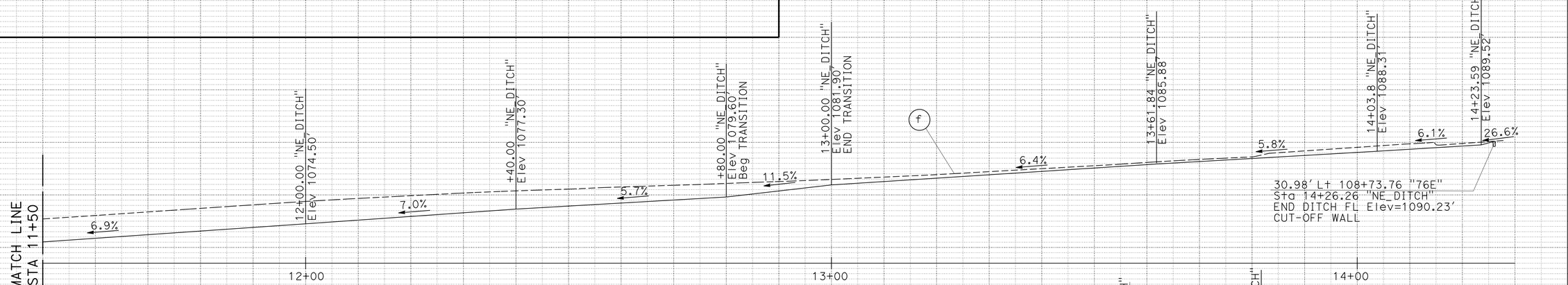

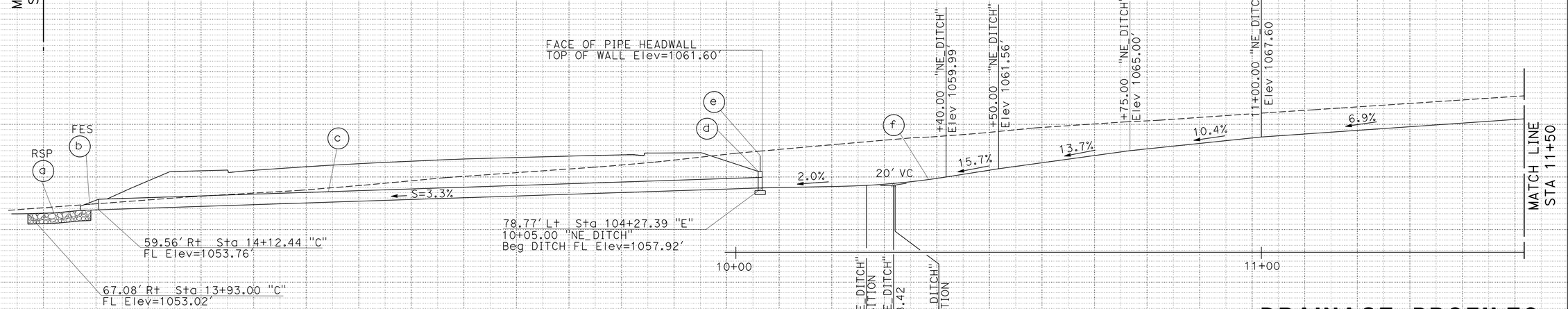

DRAINAGE PROFILES

SCALE: Horiz 1" = 10'
Vert 1" = 10'

DP-10

STATE OF CALIFORNIA - DEPARTMENT OF TRANSPORTATION
TRAFFIC PROJECT DEVELOPMENT
Caltrans

FUNCTIONAL SUPERVISOR: JOSE LUIS ROBLES
CALCULATED-DESIGNED BY: BARZAN A. ARAN
CHECKED BY: W.M. DANDENEAU
REVISED BY / DATE REVISED

LAST REVISION 09-27-16
DATE PLOTTED => 30-SEP-2016
TIME PLOTTED => 13:45

Dist	COUNTY	ROUTE	POST MILES TOTAL PROJECT	SHEET No.	TOTAL SHEETS
11	SD	76	32.6/33.3	75	269

REGISTERED CIVIL ENGINEER 09-20-16 DATE

09-26-16
PLANS APPROVAL DATE

REGISTERED PROFESSIONAL ENGINEER BARZAN A. ARAN No. C75167 Exp. 12/31/17 CIVIL STATE OF CALIFORNIA

THE STATE OF CALIFORNIA OR ITS OFFICERS OR AGENTS SHALL NOT BE RESPONSIBLE FOR THE ACCURACY OR COMPLETENESS OF SCANNED COPIES OF THIS PLAN SHEET.

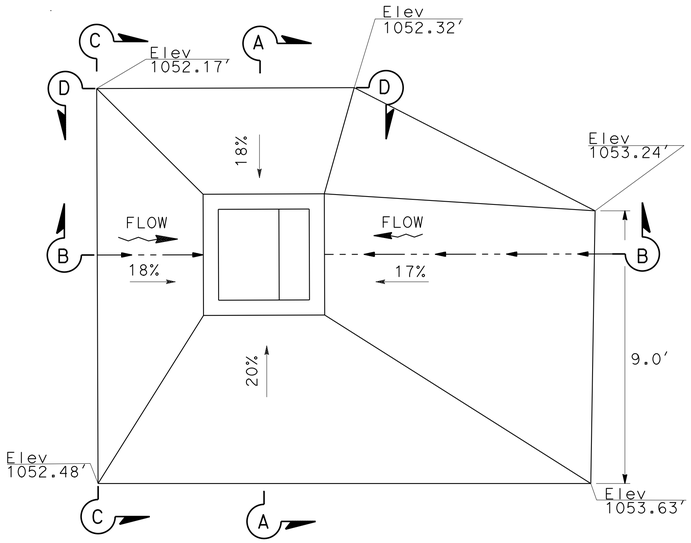

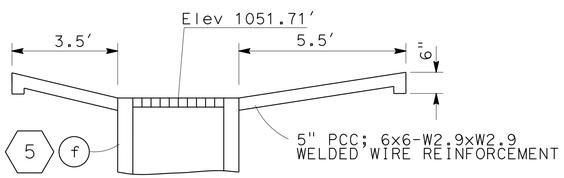

SECTION A-A

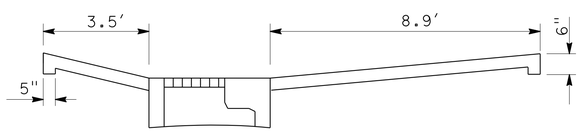

SECTION B-B

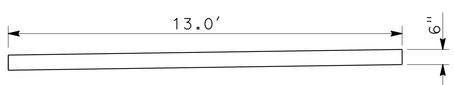

SECTION C-C

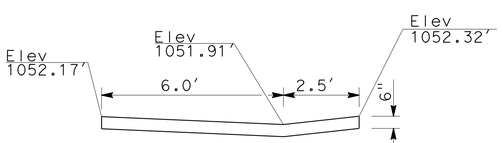

SECTION D-D

CONCRETE APRON FOR G2 INLET

5 g

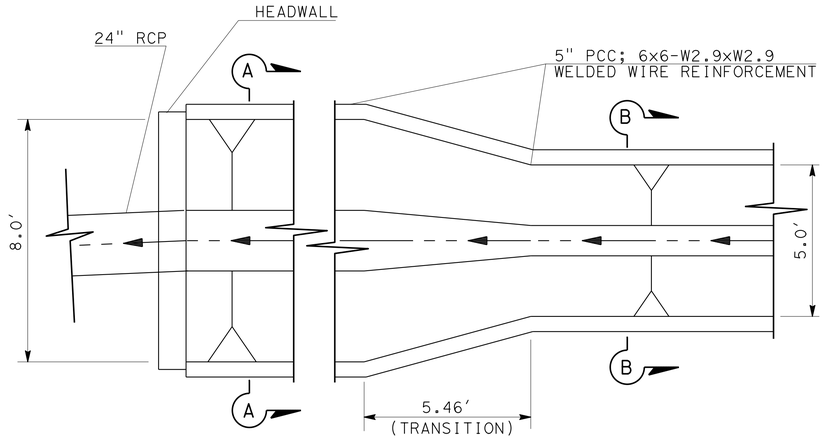

STA 10+24.84 TO 10+30.30 "NE_DITCH"

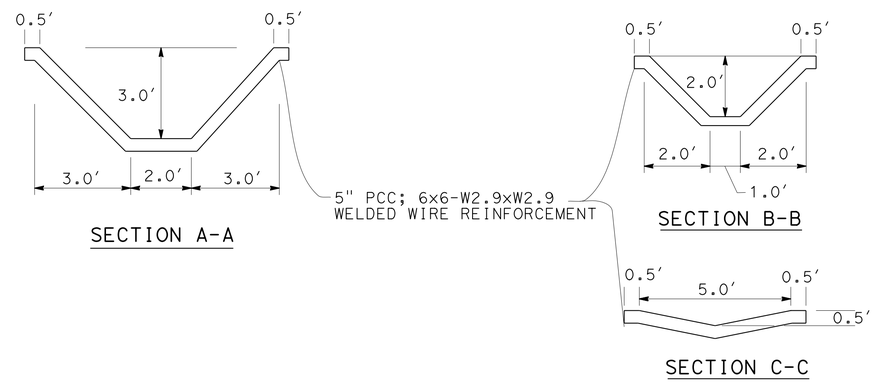

SECTION A-A

SECTION B-B

SECTION C-C

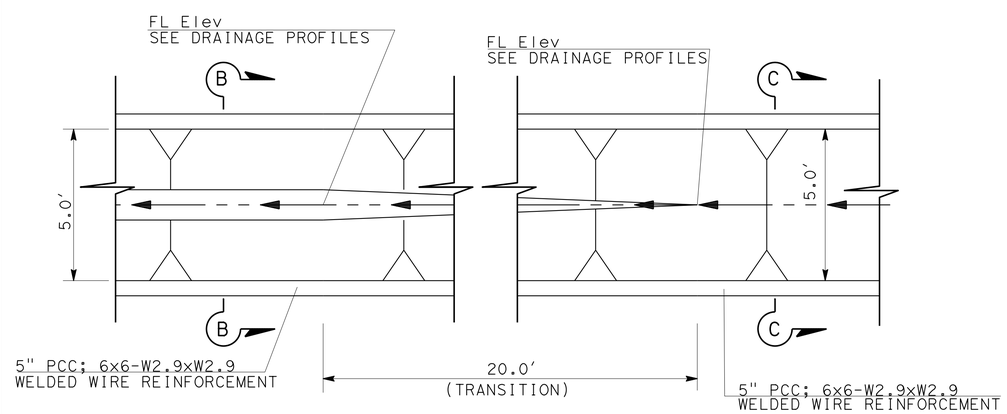

STA 12+80.00 TO 13+00.00 "NE_DITCH"

CONCRETE DITCH TRANSITION

6 f

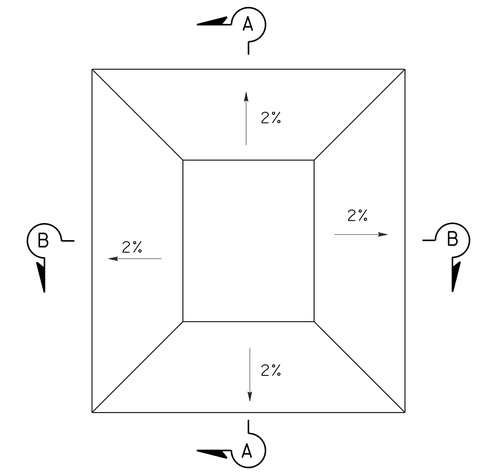

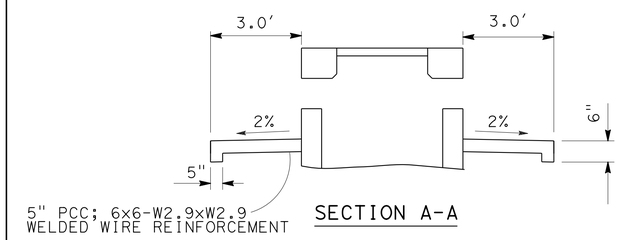

SECTION A-A

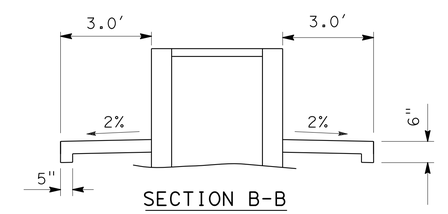

SECTION B-B

CONCRETE APRON FOR OCB INLET

2 P

DRAINAGE DETAILS

NO SCALE

DD-1

STATE OF CALIFORNIA - DEPARTMENT OF TRANSPORTATION
TRAFFIC PROJECT DEVELOPMENT
Caltrans

FUNCTIONAL SUPERVISOR: JOSE LUIS ROBLES
CALCULATED-DESIGNED BY: BARZAN A. ARAN
CHECKED BY: W.M. DANDENEAU
REVISED BY
DATE REVISED

LAST REVISION 09-27-16 | DATE PLOTTED => 30-SEP-2016 | TIME PLOTTED => 13:45

Dist	COUNTY	ROUTE	POST MILES TOTAL PROJECT	SHEET No.	TOTAL SHEETS
11	SD	76	32.6/33.3	76	269

REGISTERED CIVIL ENGINEER 09-20-16 DATE

09-26-16
PLANS APPROVAL DATE

REGISTERED PROFESSIONAL ENGINEER BARZAN A. ARAN No. C75167 Exp. 12/31/17 CIVIL STATE OF CALIFORNIA

THE STATE OF CALIFORNIA OR ITS OFFICERS OR AGENTS SHALL NOT BE RESPONSIBLE FOR THE ACCURACY OR COMPLETENESS OF SCANNED COPIES OF THIS PLAN SHEET.

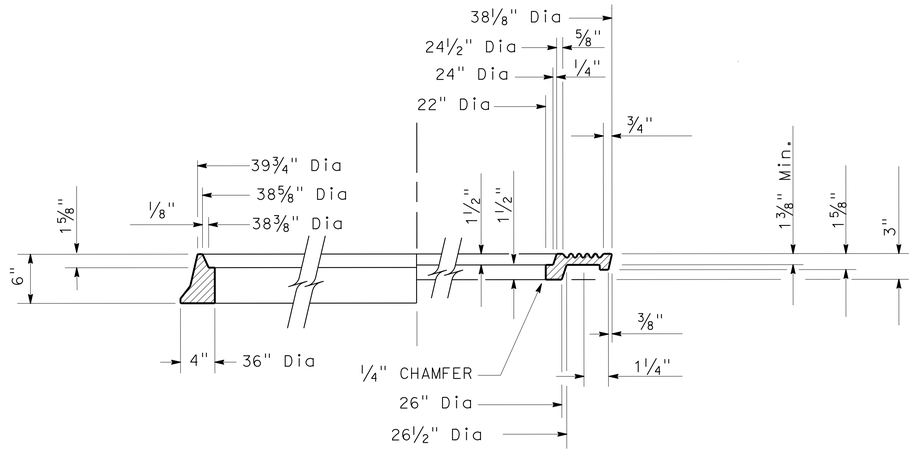

HALF SECTION FRAME AND COVER

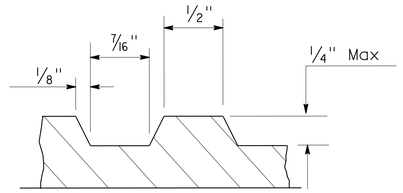

DETAIL A

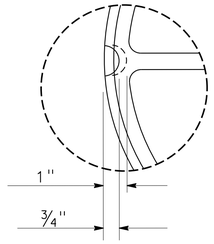

DETAIL F

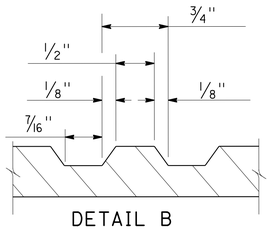

DETAIL B

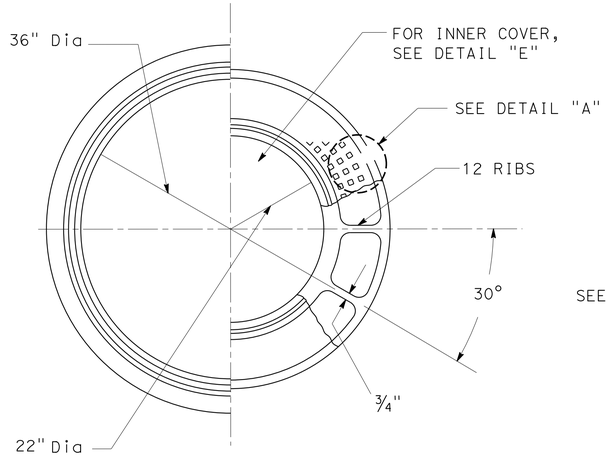

HALF PLAN FRAME AND COVER

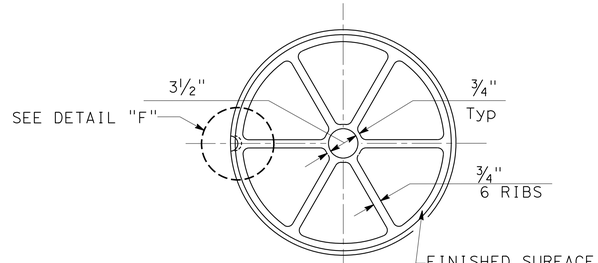

DETAIL E

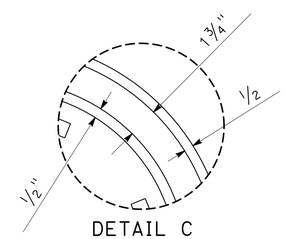

DETAIL C

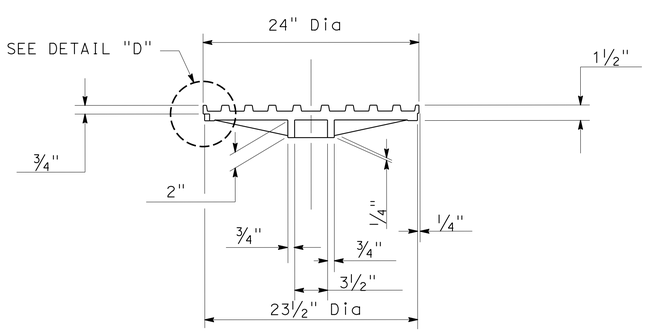

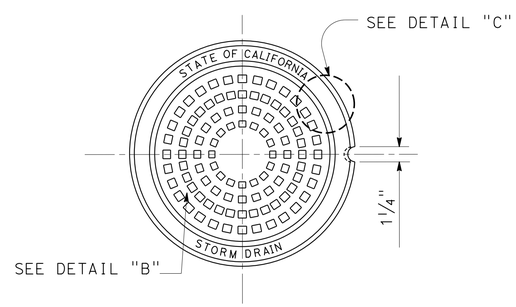

(TYPE A SHOWN)

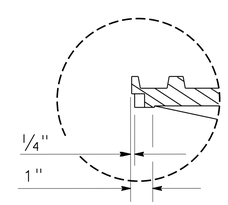

DETAIL D

36" MANHOLE FRAME AND TWO CONCENTRIC COVERS

HEAVY DUTY

NOTES:

1. FRAME AND COVER SHALL BE CAST IRON. CAST IRON SHALL CONFORM TO AASHTO M 105 CLASS 35B OR ASTM A 48,CLASS 35B.
2. WEIGHT: FRAME 314 - 363 LBS
   OUTER COVER 285 - 330 LBS
   INNER COVER 147 - 171 LBS
3. MACHINE ALL MATCHING SURFACES AND SEATS OF FRAME AND COVER TO PREVENT ROCKING.
4. IMPORTED FRAMES AND COVERS SHALL HAVE THE COUNTRY OF ORIGIN MARKED IN COMPLIANCE WITH FEDERAL REGULATIONS.

DRAINAGE DETAILS

NO SCALE

DD-2

STATE OF CALIFORNIA - DEPARTMENT OF TRANSPORTATION
Caltrans
TRAFFIC PROJECT DEVELOPMENT

FUNCTIONAL SUPERVISOR: JOSE LUIS ROBLES
CALCULATED-DESIGNED BY: BARZAN A. ARAN
CHECKED BY: W.M. DANDENEAU
REVISED BY
DATE REVISED

LAST REVISION 09-27-16
DATE PLOTTED => 30-SEP-2016
TIME PLOTTED => 13:45

Dist	COUNTY	ROUTE	POST MILES TOTAL PROJECT	SHEET No.	TOTAL SHEETS
11	SD	76	32.6/33.3	77	269

REGISTERED CIVIL ENGINEER 09-20-16 DATE

09-26-16
PLANS APPROVAL DATE

REGISTERED PROFESSIONAL ENGINEER BARZAN A. ARAN No. C75167 Exp. 12/31/17 CIVIL STATE OF CALIFORNIA

THE STATE OF CALIFORNIA OR ITS OFFICERS OR AGENTS SHALL NOT BE RESPONSIBLE FOR THE ACCURACY OR COMPLETENESS OF SCANNED COPIES OF THIS PLAN SHEET.

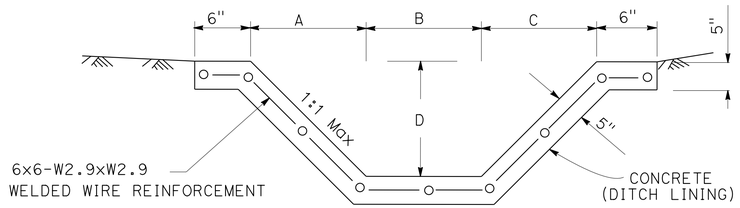

CONCRETE DITCH

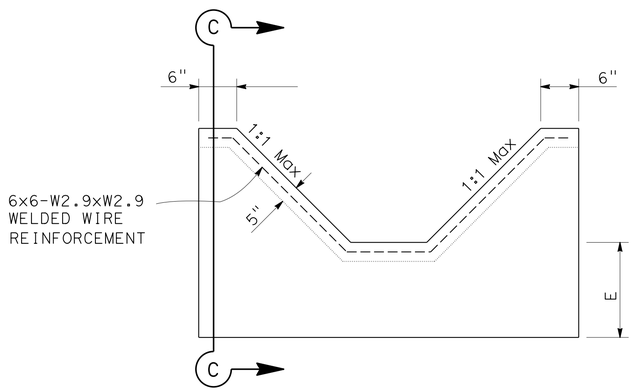

CUT-OFF WALL

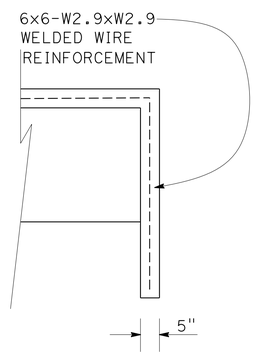

SECTION C-C

SYSTEM	UNIT	FROM STATION	TO STATION	ALIGNMENT	A	B	C	D	E
3	u	10+00.00	12+57.89	"VC-DITCH"	1.5′	2.0′	1.5′	1.5′	2.0′
3	v	20+00.00	26+90.83	"76E_DITCH"	1.5′	1.0′	1.5′	1.5′	2.0′
6	f	10+00.00	10+24.84*	"NE_DITCH"	3.0′	2.0′	3.0′	3.0′	2.0′
6	f	10+30.30*	12+81.47	"NE_DITCH"	2.0′	1.0′	2.0′	2.0′	2.0′

NOTE: Sta 10+24.84 TO 10+30.30 DITCH TRANSITION (SEE DD-1)
Sta 12+80.00 TO 13+00.00 DITCH TRANSITION (SEE DD-1)

CONCRETE DITCH

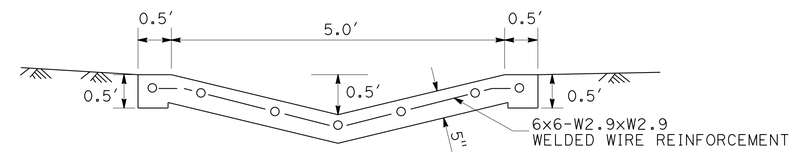

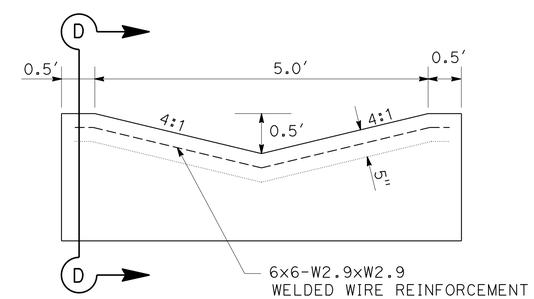

CUT-OFF WALL

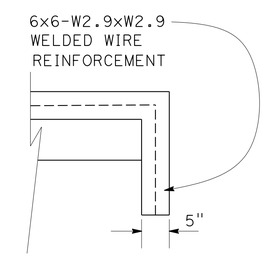

SECTION D-D

CONCRETE DITCH

UNIT 6f Sta 13+01.47 TO Sta 14+27.57 "NE_DITCH"

DRAINAGE DETAILS

NO SCALE

DD-3

STATE OF CALIFORNIA - DEPARTMENT OF TRANSPORTATION
Caltrans
TRAFFIC PROJECT DEVELOPMENT

FUNCTIONAL SUPERVISOR: JOSE LUIS ROBLES
CALCULATED-DESIGNED BY: BARZAN A. ARAN
CHECKED BY: W.M. DANDENEAU
REVISED BY
DATE REVISED

LAST REVISION 09-27-16 | DATE PLOTTED => 30-SEP-2016 | TIME PLOTTED => 13:45

Dist	COUNTY	ROUTE	POST MILES TOTAL PROJECT	SHEET No.	TOTAL SHEETS
11	SD	76	32.6/33.3	78	269

09-20-16
REGISTERED CIVIL ENGINEER DATE

09-26-16
PLANS APPROVAL DATE

REGISTERED PROFESSIONAL ENGINEER
BARZAN A. ARAN
No. C75167
Exp. 12/31/17
CIVIL
STATE OF CALIFORNIA

THE STATE OF CALIFORNIA OR ITS OFFICERS OR AGENTS SHALL NOT BE RESPONSIBLE FOR THE ACCURACY OR COMPLETENESS OF SCANNED COPIES OF THIS PLAN SHEET.

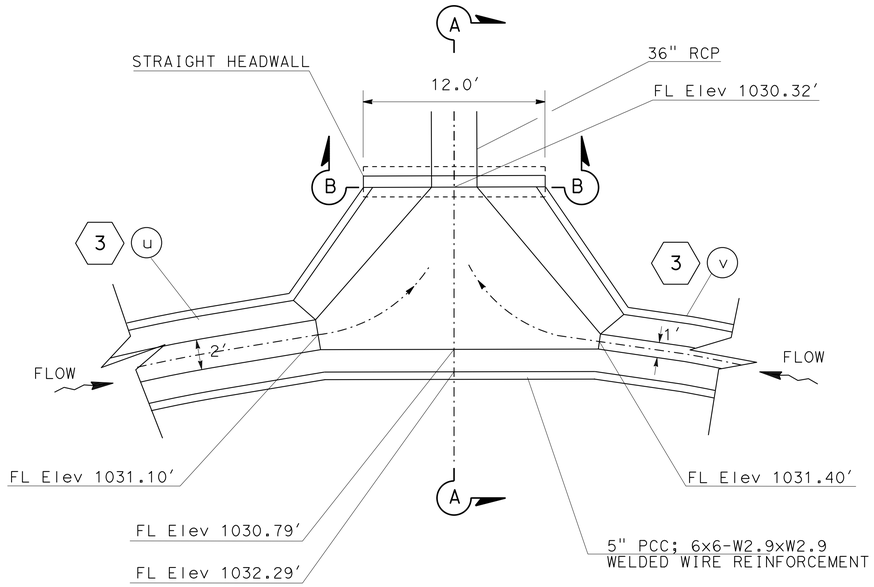

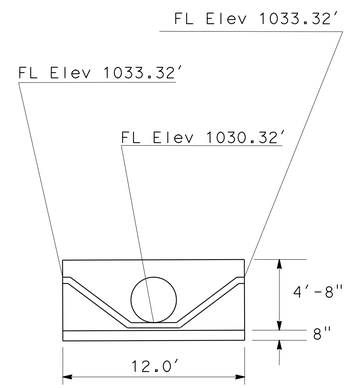

SECTION B-B

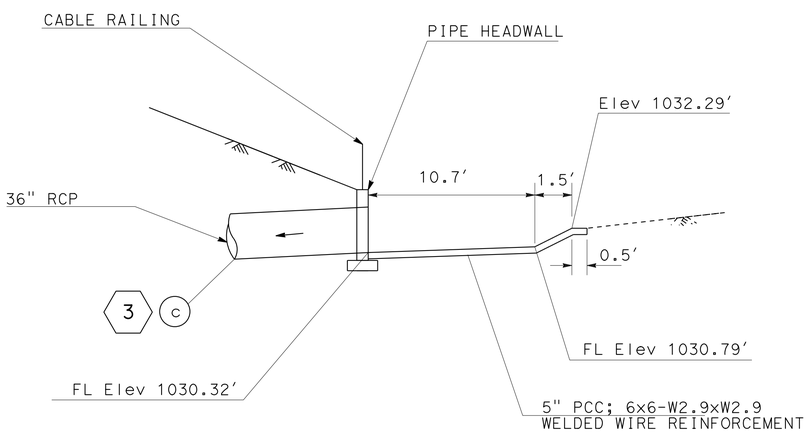

SECTION A-A

CONCRETE APRON FOR CULVERT ENTRANCE

3 f

NOTE:

SEE STANDARD PLAN D86B FOR ADDITIONAL INFORMATION.
ANGLE OF FLARE = 29°49′27"
"W" = 5.5′
"L" = 7.5′

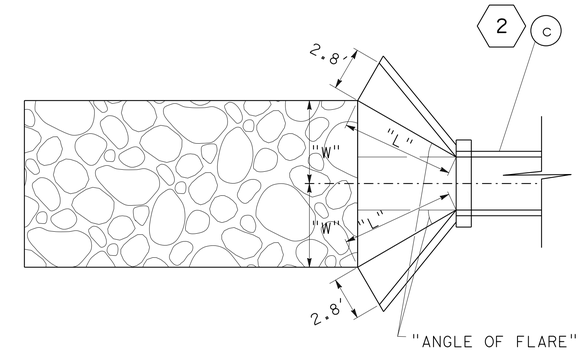

PLAN

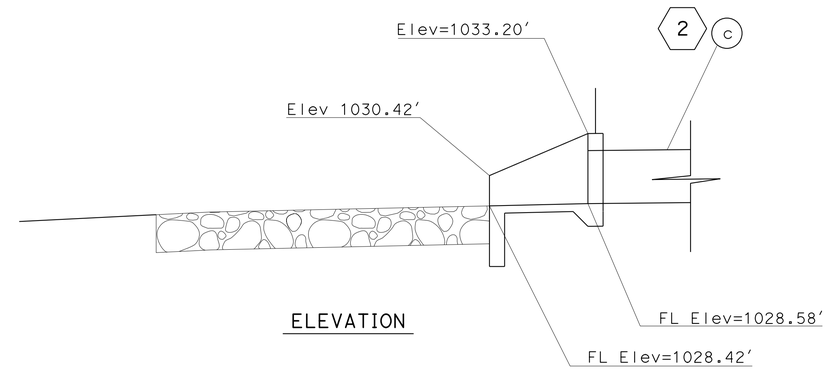

ELEVATION

PIPE CULVERT HEADWALL & WARPED WINGWALLS

2 b

DRAINAGE DETAILS

NO SCALE

DD-4

STATE OF CALIFORNIA - DEPARTMENT OF TRANSPORTATION
Caltrans
TRAFFIC PROJECT DEVELOPMENT

FUNCTIONAL SUPERVISOR: JOSE LUIS ROBLES
CALCULATED-DESIGNED BY: BARZAN A. ARAN
CHECKED BY: W.M. DANDENEAU
REVISED BY
DATE REVISED

LAST REVISION 09-27-16
DATE PLOTTED => 30-SEP-2016
TIME PLOTTED => 13:45

Dist	COUNTY	ROUTE	POST MILES TOTAL PROJECT	SHEET No.	TOTAL SHEETS
11	SD	76	32.6/33.3	79	269

REGISTERED CIVIL ENGINEER 09-20-16 DATE

09-26-16
PLANS APPROVAL DATE

REGISTERED PROFESSIONAL ENGINEER BARZAN A. ARAN No. C75167 Exp. 12/31/17 CIVIL STATE OF CALIFORNIA

THE STATE OF CALIFORNIA OR ITS OFFICERS OR AGENTS SHALL NOT BE RESPONSIBLE FOR THE ACCURACY OR COMPLETENESS OF SCANNED COPIES OF THIS PLAN SHEET.

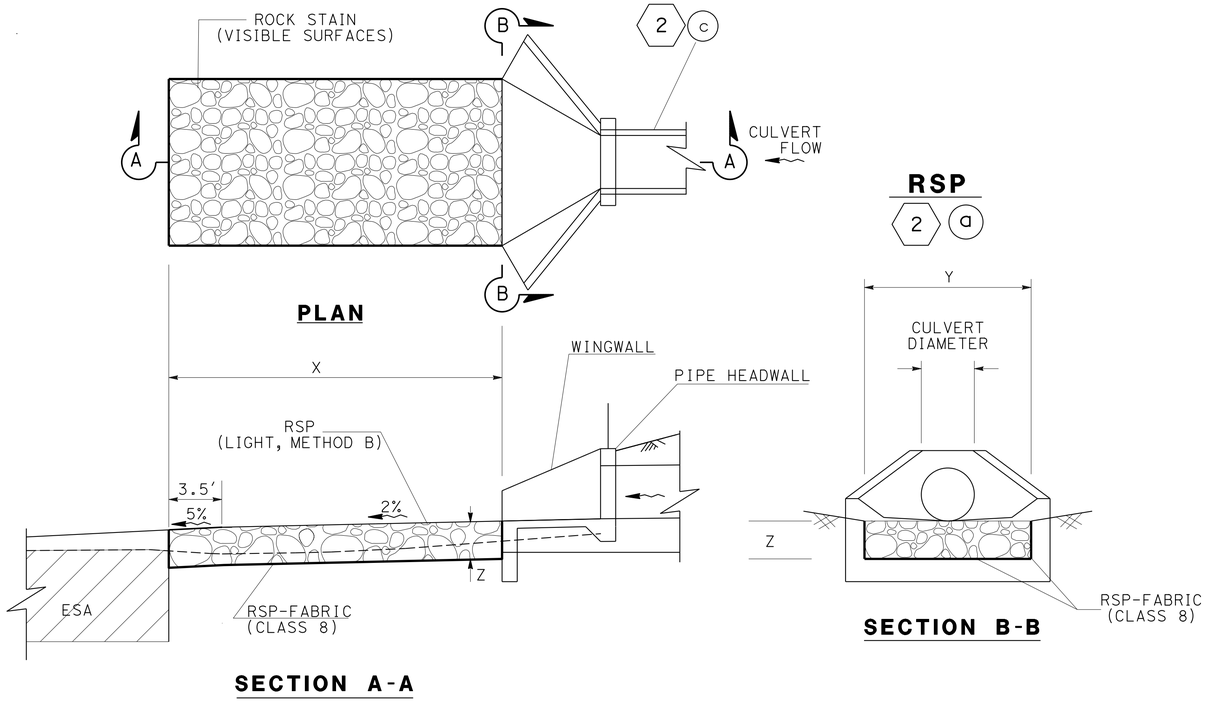

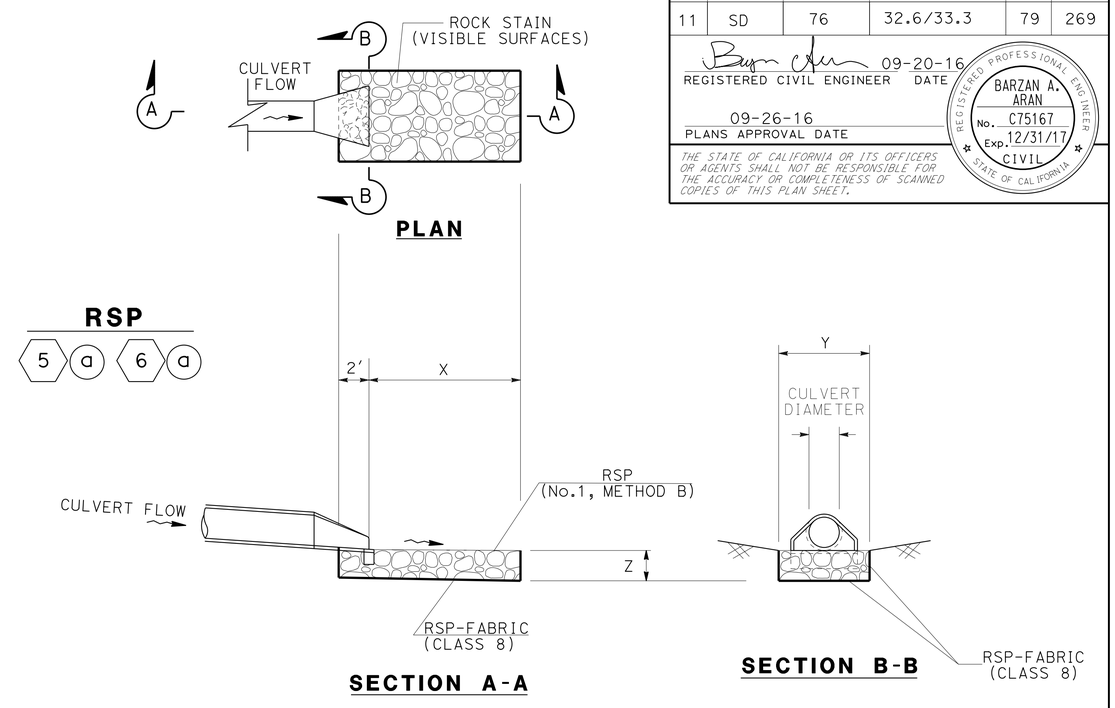

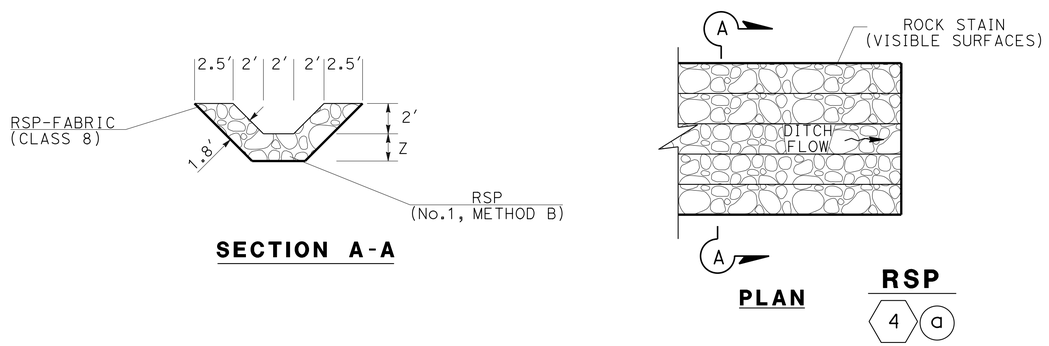

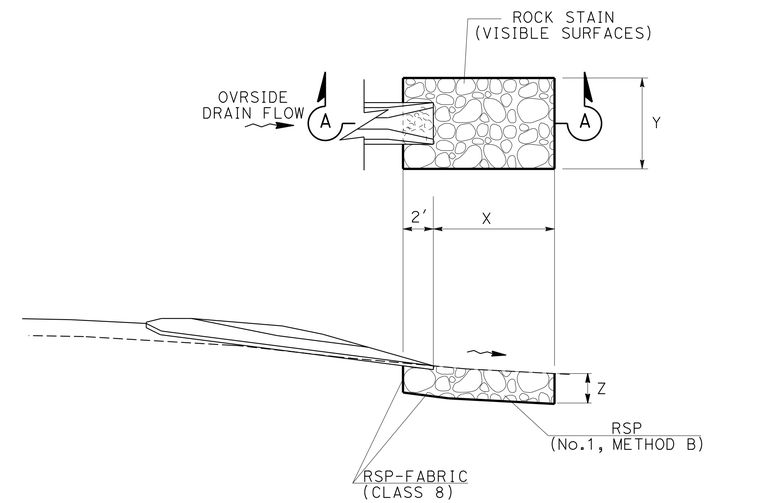

RSP
Sta 97+20.00 "76W" LINE 7 a

TABLE A

DRAINAGE SYSTEM ⬡	DRAINAGE UNIT ○	X	Y	Z	RSP
		LF	LF	LF	
2	a	22	11	2.5	LIGHT, METHOD B
4	a			1.8	No.1, METHOD B
5	a	10	6	2.0	No.1, METHOD B
6	a	10	6	2.0	No.1, METHOD B
7	a	8	12	2.0	No.1, METHOD B

ROCK SOPE PROTECTION DETAIL

DRAINAGE DETAILS

NO SCALE

DD-5

STATE OF CALIFORNIA - DEPARTMENT OF TRANSPORTATION
TRAFFIC PROJECT DEVELOPMENT
Caltrans

FUNCTIONAL SUPERVISOR: JOSE LUIS ROBLES
CALCULATED-DESIGNED BY: BARZAN A. ARAN
CHECKED BY: W.M. DANDENEAU
REVISED BY
DATE REVISED

LAST REVISION 09-28-16
DATE PLOTTED => 30-SEP-2016
TIME PLOTTED => 13:45

Dist	COUNTY	ROUTE	POST MILES TOTAL PROJECT	SHEET No.	TOTAL SHEETS
11	SD	76	32.6/33.3	80	269

09-20-16
REGISTERED CIVIL ENGINEER DATE

09-26-16
PLANS APPROVAL DATE

REGISTERED PROFESSIONAL ENGINEER
BARZAN A. ARAN
No. C75167
Exp. 12/31/17
CIVIL
STATE OF CALIFORNIA

THE STATE OF CALIFORNIA OR ITS OFFICERS OR AGENTS SHALL NOT BE RESPONSIBLE FOR THE ACCURACY OR COMPLETENESS OF SCANNED COPIES OF THIS PLAN SHEET.

NOTE:

SEE SHEETS DD-7, 8, 9, 10, AND 11 FOR ADDITIONAL INFORMATION.

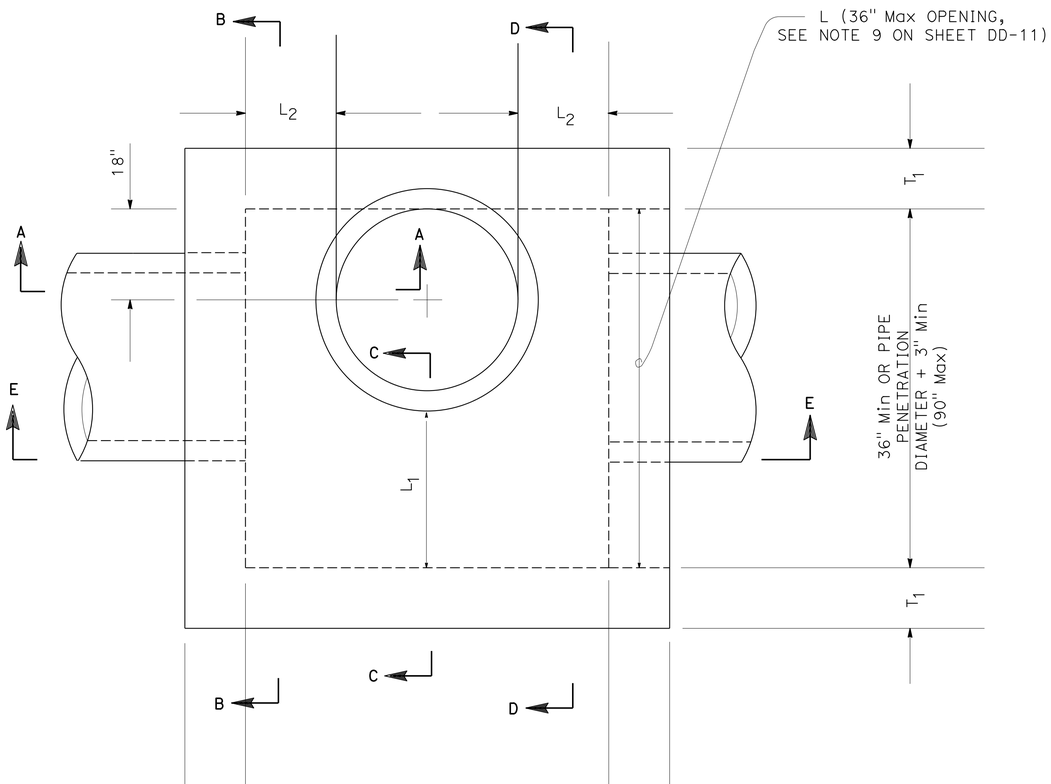

PLAN

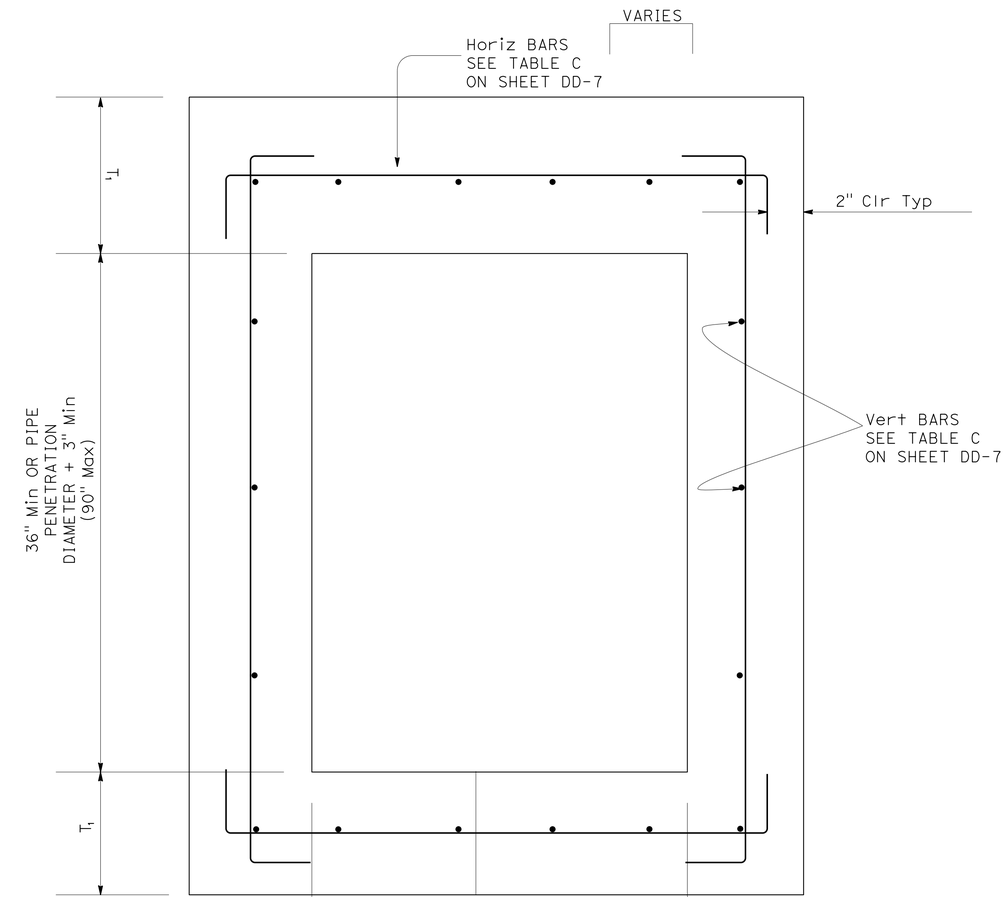

TYPICAL INLET PLAN

OPENING CONCRETE BOX (OCB)

2 h 8 d

DRAINAGE DETAILS

NO SCALE

DD-6

STATE OF CALIFORNIA - DEPARTMENT OF TRANSPORTATION
Caltrans
TRAFFIC PROJECT DEVELOPMENT

FUNCTIONAL SUPERVISOR: JOSE LUIS ROBLES
CALCULATED-DESIGNED BY: BARZAN A. ARAN
CHECKED BY: W.M. DANDENEAU
REVISED BY
DATE REVISED

LAST REVISION 09-28-16 | DATE PLOTTED => 30-SEP-2016 | TIME PLOTTED => 13:46

Dist	COUNTY	ROUTE	POST MILES TOTAL PROJECT	SHEET No.	TOTAL SHEETS
11	SD	76	32.6/33.3	81	269

REGISTERED CIVIL ENGINEER 09-20-16 DATE

09-26-16
PLANS APPROVAL DATE

REGISTERED PROFESSIONAL ENGINEER BARZAN A. ARAN No. C75167 Exp. 12/31/17 CIVIL STATE OF CALIFORNIA

THE STATE OF CALIFORNIA OR ITS OFFICERS OR AGENTS SHALL NOT BE RESPONSIBLE FOR THE ACCURACY OR COMPLETENESS OF SCANNED COPIES OF THIS PLAN SHEET.

NOTE:

SEE SHEETS DD-6, 8, 9, 10, AND 11 FOR ADDITIONAL INFORMATION.

TABLE 1		
L_1, L_2	T_1, T_2	Vert BARS
< 2'-10"	8"	#4 @ 12
> 2'-10"	12"	#5 @ 12

TABLE C - WALL REINFORCEMENT			
H ≤ 8		8 < H ≤ 20	
HORIZ	VERTICAL	HORIZ	VERTICAL
#5 @ 5	#5 @ 5	#6 @ 4	#6 @ 4.5

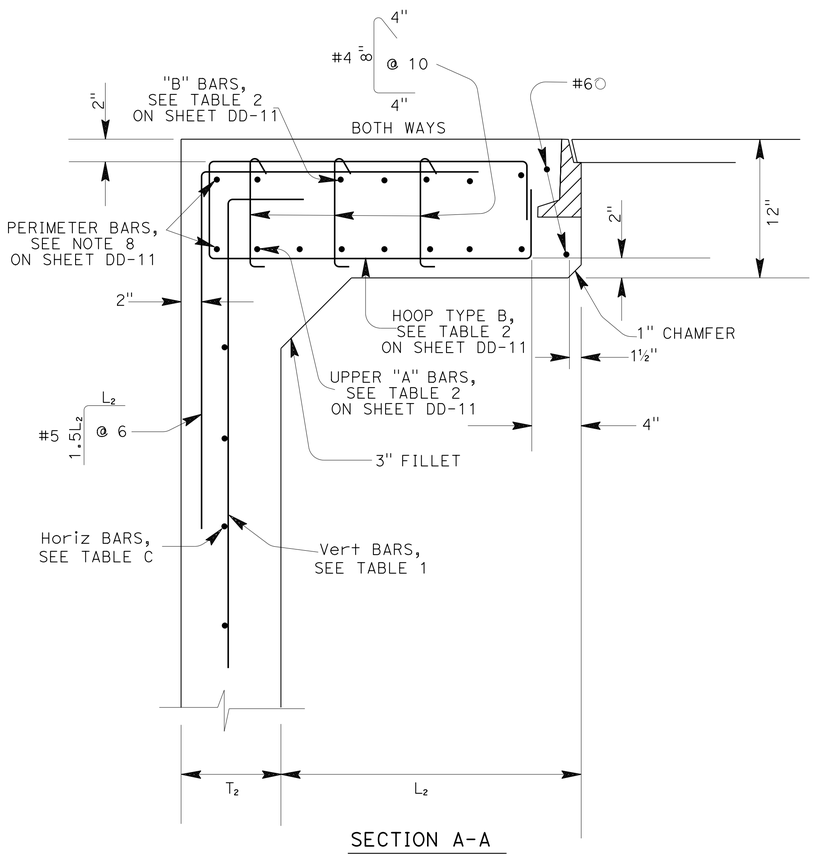

SECTION A-A

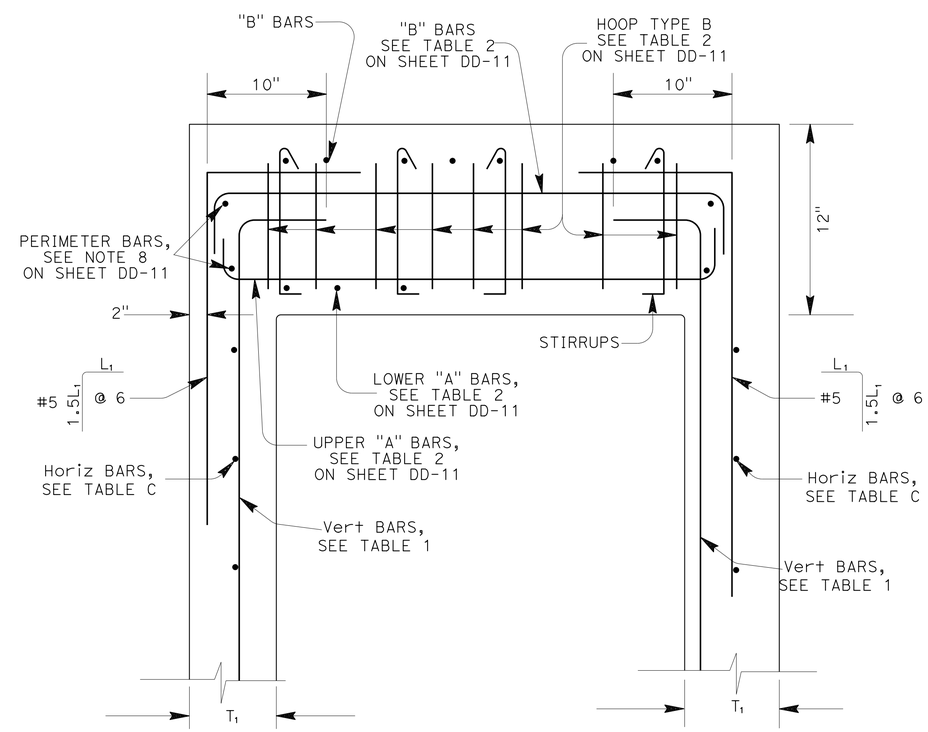

SECTION B-B

OPENING CONCRETE BOX (OCB)

DRAINAGE DETAILS

NO SCALE

DD-7

STATE OF CALIFORNIA - DEPARTMENT OF TRANSPORTATION
Caltrans
TRAFFIC PROJECT DEVELOPMENT

FUNCTIONAL SUPERVISOR: JOSE LUIS ROBLES
CALCULATED-DESIGNED BY: BARZAN A. ARAN
CHECKED BY: W.M. DANDENEAU
REVISED BY
DATE REVISED

LAST REVISION 09-28-16
DATE PLOTTED => 30-SEP-2016
TIME PLOTTED => 13:46

Dist	COUNTY	ROUTE	POST MILES TOTAL PROJECT	SHEET No.	TOTAL SHEETS
11	SD	76	32.6/33.3	82	269

REGISTERED CIVIL ENGINEER 09-20-16 DATE

09-26-16
PLANS APPROVAL DATE

REGISTERED PROFESSIONAL ENGINEER BARZAN A. ARAN No. C75167 Exp. 12/31/17 CIVIL STATE OF CALIFORNIA

THE STATE OF CALIFORNIA OR ITS OFFICERS OR AGENTS SHALL NOT BE RESPONSIBLE FOR THE ACCURACY OR COMPLETENESS OF SCANNED COPIES OF THIS PLAN SHEET.

NOTE:

SEE SHEETS DD-6, 7, 9, 10, AND 11 FOR ADDITIONAL INFORMATION.

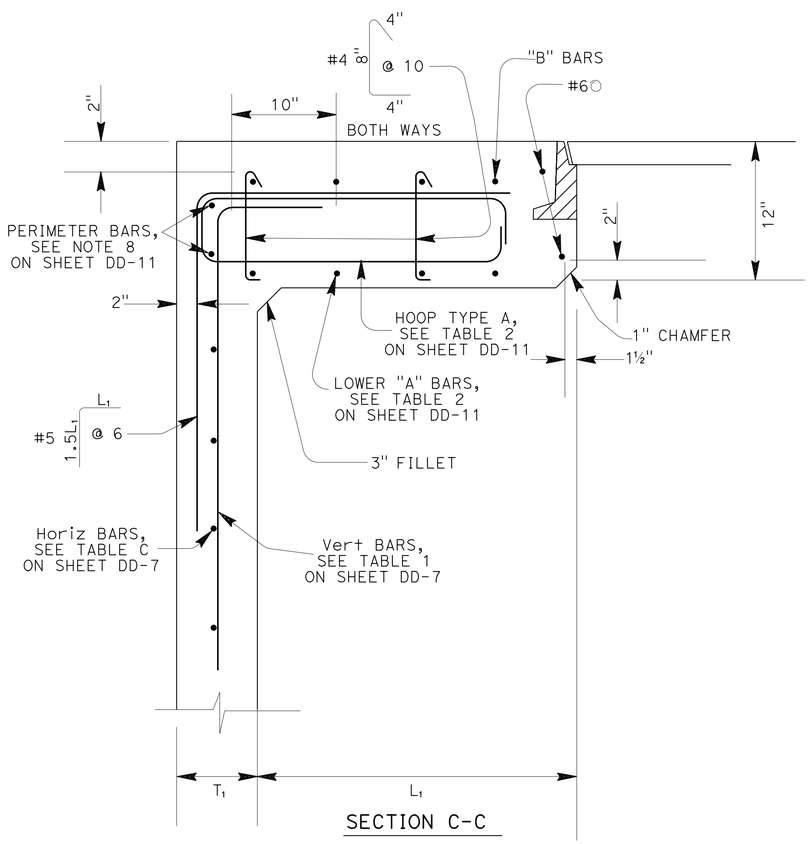

SECTION C-C

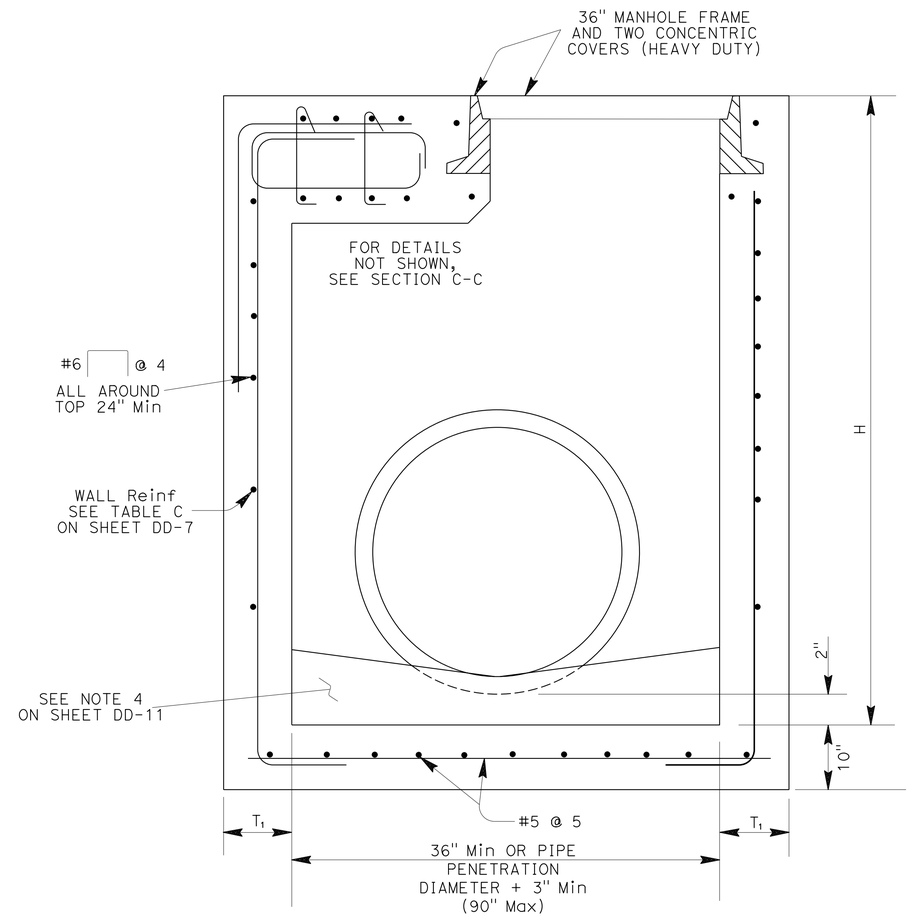

SECTION D-D

OPENING CONCRETE BOX (OCB)

DRAINAGE DETAILS

NO SCALE

DD-8

STATE OF CALIFORNIA - DEPARTMENT OF TRANSPORTATION
Caltrans
TRAFFIC PROJECT DEVELOPMENT

FUNCTIONAL SUPERVISOR: JOSE LUIS ROBLES
CALCULATED-DESIGNED BY: BARZAN A. ARAN
CHECKED BY: W.M. DANDENEAU
REVISED BY
DATE REVISED

LAST REVISION 09-28-16
DATE PLOTTED => 30-SEP-2016
TIME PLOTTED => 13:46

Dist	COUNTY	ROUTE	POST MILES TOTAL PROJECT	SHEET No.	TOTAL SHEETS
11	SD	76	32.6/33.3	83	269

09-20-16
REGISTERED CIVIL ENGINEER DATE

09-26-16
PLANS APPROVAL DATE

REGISTERED PROFESSIONAL ENGINEER
BARZAN A. ARAN
No. C75167
Exp. 12/31/17
CIVIL
STATE OF CALIFORNIA

THE STATE OF CALIFORNIA OR ITS OFFICERS OR AGENTS SHALL NOT BE RESPONSIBLE FOR THE ACCURACY OR COMPLETENESS OF SCANNED COPIES OF THIS PLAN SHEET.

NOTE:

SEE SHEETS DD-6, 7, 8, 10, AND 11 FOR ADDITIONAL INFORMATION.

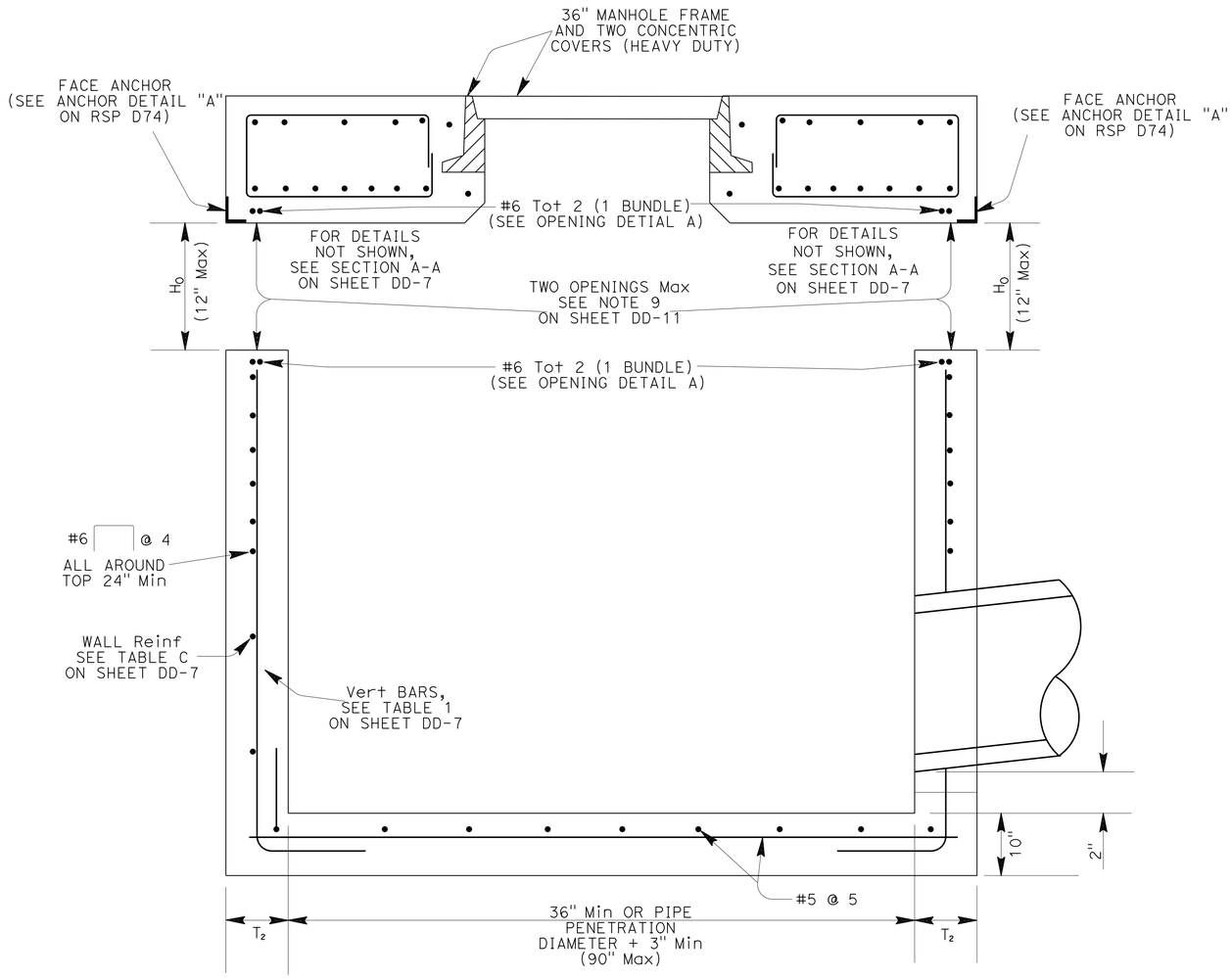

SECTION E-E

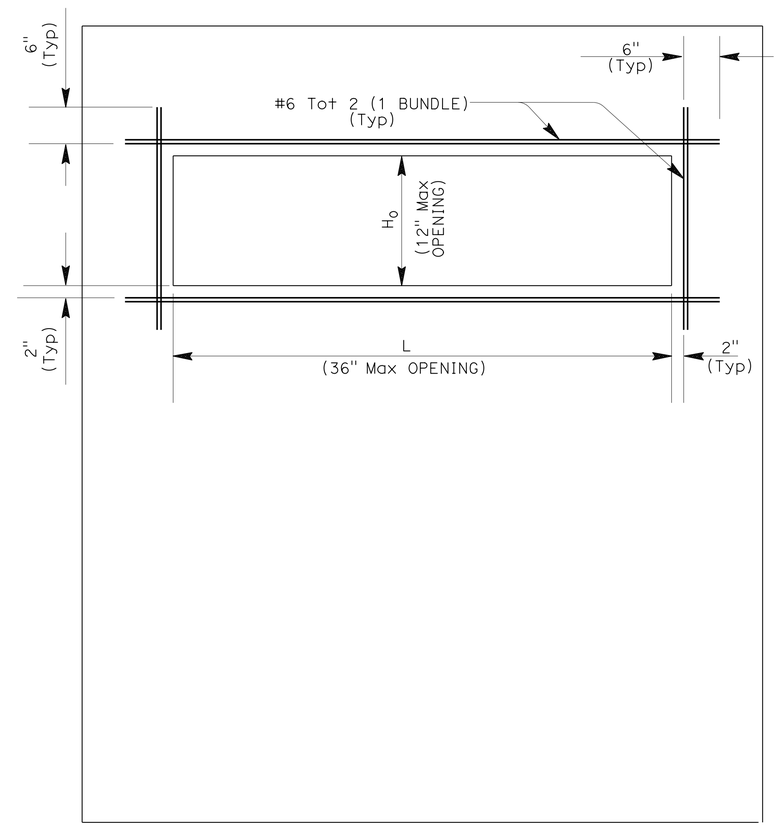

OPENING DETAIL A

OPENING CONCRETE BOX (OCB)

DRAINAGE DETAILS

NO SCALE

DD-9

STATE OF CALIFORNIA - DEPARTMENT OF TRANSPORTATION
Caltrans
TRAFFIC PROJECT DEVELOPMENT

FUNCTIONAL SUPERVISOR: JOSE LUIS ROBLES
CALCULATED-DESIGNED BY: BARZAN A. ARAN
CHECKED BY: W.M. DANDENEAU
REVISED BY
DATE REVISED

LAST REVISION 09-28-16
DATE PLOTTED => 30-SEP-2016
TIME PLOTTED => 13:46

Dist	COUNTY	ROUTE	POST MILES TOTAL PROJECT	SHEET No.	TOTAL SHEETS
11	SD	76	32.6/33.3	84	269

09-20-16
REGISTERED CIVIL ENGINEER DATE

09-26-16
PLANS APPROVAL DATE

REGISTERED PROFESSIONAL ENGINEER
BARZAN A. ARAN
No. C75167
Exp. 12/31/17
CIVIL
STATE OF CALIFORNIA

THE STATE OF CALIFORNIA OR ITS OFFICERS OR AGENTS SHALL NOT BE RESPONSIBLE FOR THE ACCURACY OR COMPLETENESS OF SCANNED COPIES OF THIS PLAN SHEET.

NOTE:

SEE SHEETS DD-6, 7, 8, 9, AND 11 FOR ADDITIONAL INFORMATION.

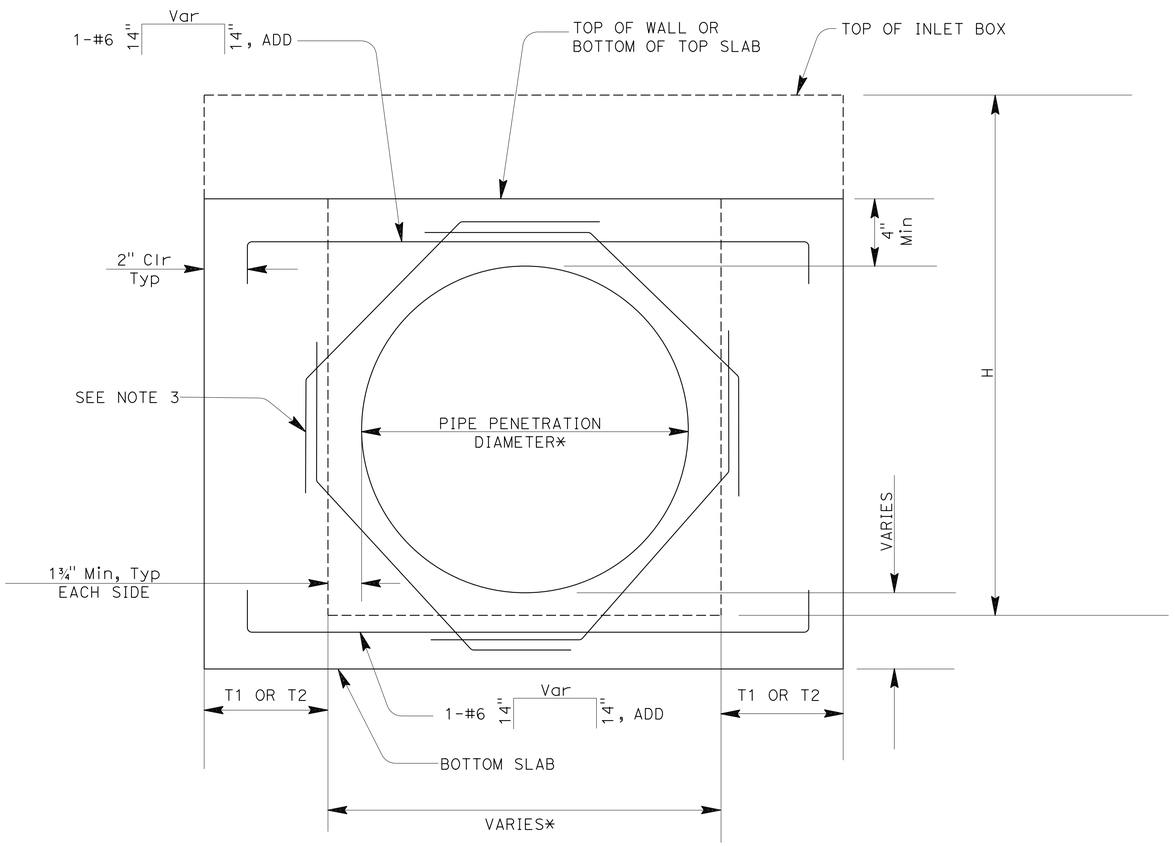

OPENING CONCRETE BOX (OCB)

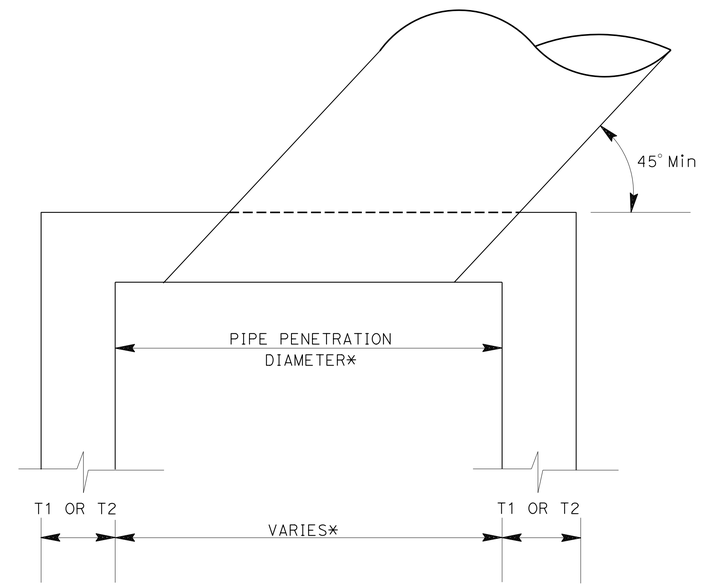

SKEWED PIPE PLAN

* ADJUST PIPE PENETRARTION AND BOX WIDTH FOR SKEWED PIPES

DRAINAGE DETAILS

NO SCALE

DD-10

STATE OF CALIFORNIA - DEPARTMENT OF TRANSPORTATION
Caltrans
TRAFFIC PROJECT DEVELOPMENT

FUNCTIONAL SUPERVISOR: JOSE LUIS ROBLES
CALCULATED-DESIGNED BY: BARZAN A. ARAN
CHECKED BY: W.M. DANDENEAU
REVISED BY
DATE REVISED

LAST REVISION 09-28-16
DATE PLOTTED => 30-SEP-2016
TIME PLOTTED => 13:46

Dist	COUNTY	ROUTE	POST MILES TOTAL PROJECT	SHEET No.	TOTAL SHEETS
11	SD	76	32.6/33.3	85	269

REGISTERED CIVIL ENGINEER 09-20-16 DATE

09-26-16
PLANS APPROVAL DATE

REGISTERED PROFESSIONAL ENGINEER BARZAN A. ARAN No. C75167 Exp. 12/31/17 CIVIL STATE OF CALIFORNIA

THE STATE OF CALIFORNIA OR ITS OFFICERS OR AGENTS SHALL NOT BE RESPONSIBLE FOR THE ACCURACY OR COMPLETENESS OF SCANNED COPIES OF THIS PLAN SHEET.

NOTE:

SEE SHEETS DD-6, 7, 8, 9, AND 10 FOR ADDITIONAL INFORMATION.

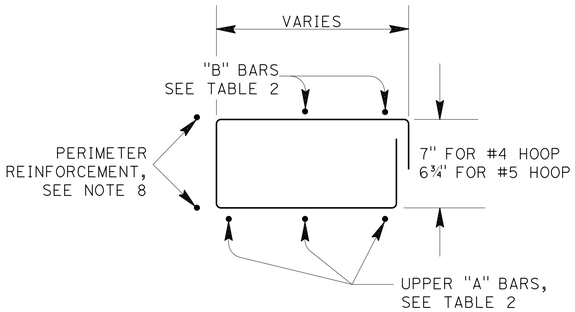

HOOP TYPE A

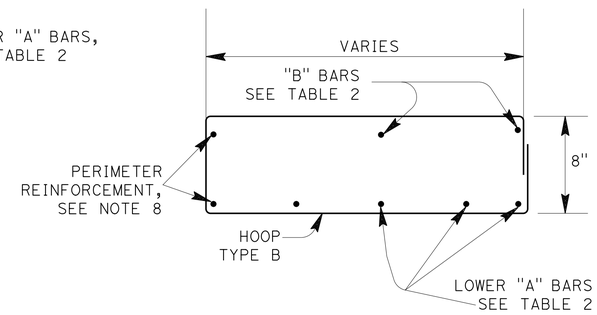

HOOP TYPE B

TABLE 2 - TOP SLAB REINFORCEMENT	
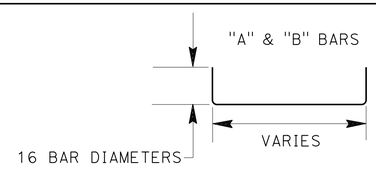	
"A" BARS	#5 @ 5 (3 BARS Min)
"B" BARS	#5 @ 5 (2 BARS Min)
HOOPS ("A" & "B")	#5 @ 5

ROTATE "A" AND "B" BARS SO HOOKED ENDS WILL MAINTAIN 2" CLEAR COVERAGE

NOTES

1. WALL REINFORCEMENT MUST BE PLACED IN CENTER OF THE WALL THICKNESS WITH HORIZONTAL BARS PLACED ON THE EXTERIOR FACE. BOTTOM SLAB CONCRETE COVER MUST BE 3." CLEAR ON THE INTERIOR FACE UNLESS OTHERWISE NOTED. TOP SLAB CONCRETE COVER MUST BE 2" CLEAR ON THE EXTERIOR FACE UNLESS OTHERWISE NOTED. REINOFRCEMENT SPACING IS IN INCHES UNLESS OTHERWISE NOTED.

2. STEPS - NONE REQUIRED WHERE "H" IS LESS THAN 2-6". WHERE "H" IS 2'-6" OR MORE, INSTALL STEPS WITH LOWEST RUNG 1'-0" ABOVE THE FLOOR AND HIGHEST RUNG NOT MORE THAN 6" BELOW THE BOTTOM OF LID. THE DISTANCE BETWEEN STEPS MUST NOT EXCEED 1'-0" AND BE UNIFORM THROUGHTOUT THE LENGTH OF THE WALL. PLACE STEPS IN THE WALL WITHOUT AN OPENING. STEPS INSERTS MAY BE SUBSTITUTED FOR THE BAR STEPS. STEP INSERTS MUST COMPLY WITH STATE INDUSTRIAL SAFETY REQUIREMENTS. SEE RSP D74 FOR STEP DETAILS.

3. PIPE(S) CAN BE PLACED IN ANY WALL. ADJACENT TO EACH SIDE OF THE OPENING, PLACE ADDITIONAL REINFORMCEMENT EQUIVALENT TO HALF THE INTERUPED MAIN REINFORCEMENT. FOR LARGER PIPES GREATER THAN OR EQUAL TO 42" DIAMTER, ALSO ADD 4 DIAGONAL BARS, 1 BAR EACH SIDE. BARS MUST BE THE SAME SIZE AS THE LARGER OF THE MAIN VERICAL OR HORIZONTAL BARS. EXTEND BARS ON DEVELOPMENT LENGTH PAST THE INTERSECTION WITH THE ADJACENT DIAGONAL BAR, OR WHERE BARS INTERSECT MID THINCKNESS OF ADACENT WALL BOTTOM OR TOP OF NON-CONTINOUS WALL, BEND END AS REQUIRED INTO SAME PLANE.

4. BASIN FLOORS MUST HAVE WOOD TROWEL FINISH AND A MINIMUM SLOPE OF 4:1 UNLESS OTHERWISE NOTED, FOR ALL DIRECTIONS TOWARD OUTLET PIPE BY BASTING GROUT FILL ON TOP OF THE BOTTOM SLAB. THE ADIITONAL VOLUE TO ACHIEVE THE 4:1 SLOPE MAY ALSO BE ACHIEVED BY BASTING THE BOTTOM SLAB AND FILL AS A COMPOSITE CONCRETE ELEMENT

5. DETIALS SHOWN APPLY TO METAL, CONCRETE AND PLASTIC PIPE(S)

6. THE CONTRACTOR MAY USE WELDED WIRE REINFORCEMENT (WWR) INSTEAD OF BAR REINFORCEMENT. THE RATION OF BAR REINFORCEMENT TO WWR SHALL BE BASED ON THE YIELD STRENGTH RATIO.

7. INLET TO BE FORMED AROUND ALL PIPES/STUBS INTERSECTION THE INLET AND CONCRETE POURED IN ONE CONTINOUS OPERATION.

8. PERMETER REINFORCEMENT MUST NOT BE SMALLER THAN MAIN BARS AND #4 AND SERVES AS A RIGID FRAME TO PSOITION AND ATTACHED THE REQUIRED STRUCTRUAL REINFORCEMENT AND MAY BE TACK WELDED AT OUTER CORNERS WHEN USING ASTM A706 WELDABLE BARS

9. TWO OPENINGS MAX. LOCATION AND NUMBER AS ORDERED BY THE ENGINEER. OPENINGS MUST ON OPPOSITE WALLS.

OPENING CONCRETE BOX (OCB)

DRAINAGE DETAILS

NO SCALE

DD-11

REVISED BY | DATE REVISED
BARZAN A. ARAN | W.M. DANDENEAU
CALCULATED-DESIGNED BY | CHECKED BY
FUNCTIONAL SUPERVISOR: JOSE LUIS ROBLES

STATE OF CALIFORNIA - DEPARTMENT OF TRANSPORTATION
Caltrans
TRAFFIC PROJECT DEVELOPMENT

LAST REVISION 09-28-16 | DATE PLOTTED => 30-SEP-2016 | TIME PLOTTED => 13:46

Dist	COUNTY	ROUTE	POST MILES TOTAL PROJECT	SHEET No.	TOTAL SHEETS
11	SD	76	32.6/33.3	86	269

REGISTERED CIVIL ENGINEER 09-20-16 DATE

09-26-16
PLANS APPROVAL DATE

REGISTERED PROFESSIONAL ENGINEER BARZAN A. ARAN No. C75167 Exp. 12/31/17 CIVIL STATE OF CALIFORNIA

THE STATE OF CALIFORNIA OR ITS OFFICERS OR AGENTS SHALL NOT BE RESPONSIBLE FOR THE ACCURACY OR COMPLETENESS OF SCANNED COPIES OF THIS PLAN SHEET.

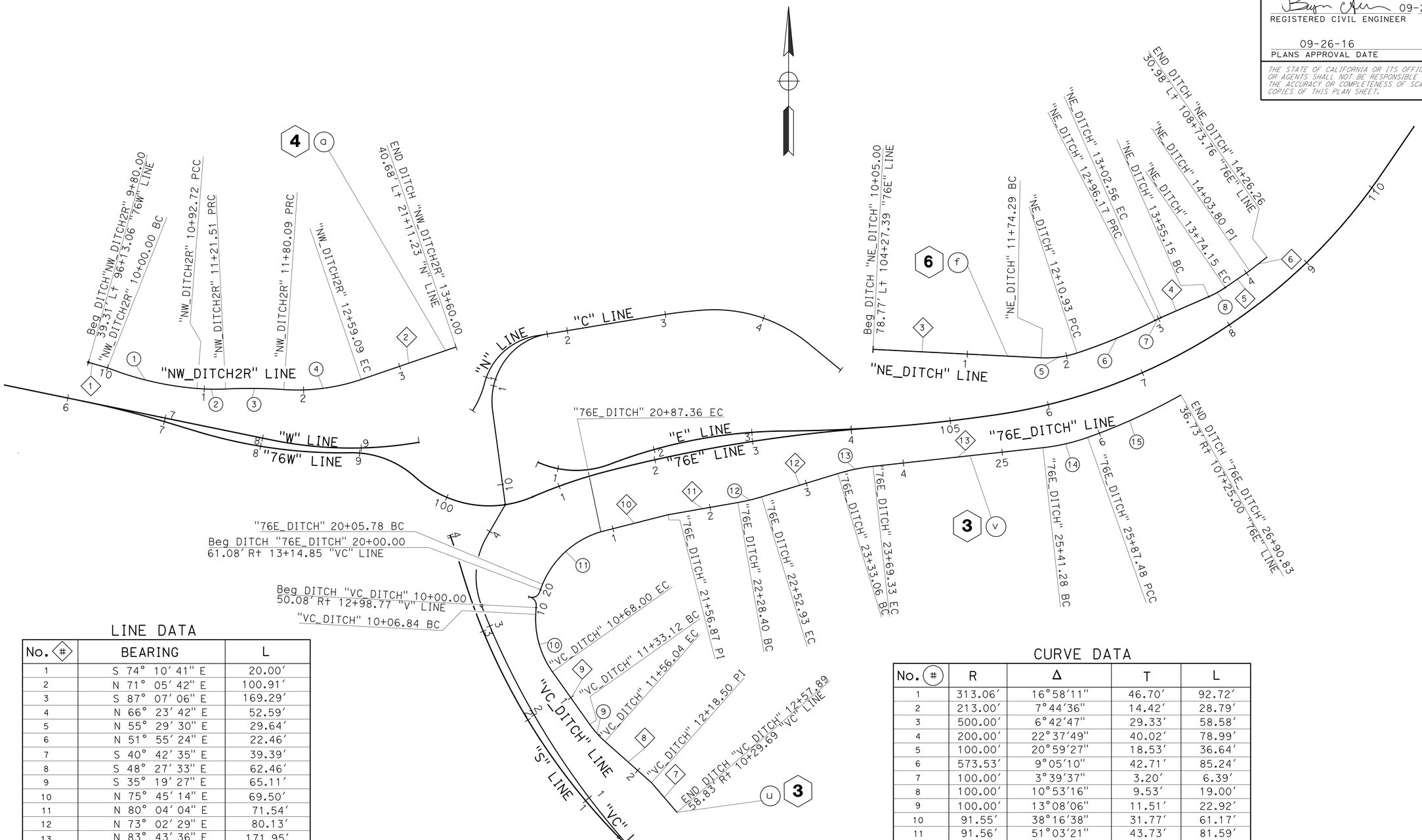

LINE DATA

No. (#)	BEARING	L
1	S 74° 10′ 41" E	20.00′
2	N 71° 05′ 42" E	100.91′
3	S 87° 07′ 06" E	169.29′
4	N 66° 23′ 42" E	52.59′
5	N 55° 29′ 30" E	29.64′
6	N 51° 55′ 24" E	22.46′
7	S 40° 42′ 35" E	39.39′
8	S 48° 27′ 33" E	62.46′
9	S 35° 19′ 27" E	65.11′
10	N 75° 45′ 14" E	69.50′
11	N 80° 04′ 04" E	71.54′
12	N 73° 02′ 29" E	80.13′
13	N 83° 43′ 36" E	171.95′

CURVE DATA

No. (#)	R	Δ	T	L
1	313.06′	16°58′11"	46.70′	92.72′
2	213.00′	7°44′36"	14.42′	28.79′
3	500.00′	6°42′47"	29.33′	58.58′
4	200.00′	22°37′49"	40.02′	78.99′
5	100.00′	20°59′27"	18.53′	36.64′
6	573.53′	9°05′10"	42.71′	85.24′
7	100.00′	3°39′37"	3.20′	6.39′
8	100.00′	10°53′16"	9.53′	19.00′
9	100.00′	13°08′06"	11.51′	22.92′
10	91.55′	38°16′38"	31.77′	61.17′
11	91.56′	51°03′21"	43.73′	81.59′
12	200.00′	7°01′35"	12.28′	24.53′
13	194.50′	10°41′07"	18.19′	36.27′
14	200.00′	13°13′58"	23.20′	46.19′
15	594.00′	7°58′10"	51.81′	103.35′

DRAINAGE DITCH ALIGNMENTS

3 (u) (v) 4 (a) 6 (f)

DRAINAGE DETAILS

NO SCALE

DD-12

STATE OF CALIFORNIA - DEPARTMENT OF TRANSPORTATION
Caltrans
TRAFFIC PROJECT DEVELOPMENT

FUNCTIONAL SUPERVISOR: JOSE LUIS ROBLES
CALCULATED-DESIGNED BY: BARZAN A. ARAN
CHECKED BY: W.M. DANDENEAU
REVISED BY / DATE REVISED

LAST REVISION 09-28-16 | DATE PLOTTED => 30-SEP-2016 | TIME PLOTTED => 13:46

Dist	COUNTY	ROUTE	POST MILES TOTAL PROJECT	SHEET No.	TOTAL SHEETS
11	SD	76	32.6/33.3	87	269

REGISTERED CIVIL ENGINEER 09-20-16 DATE

09-26-16
PLANS APPROVAL DATE

REGISTERED PROFESSIONAL ENGINEER BARZAN A. ARAN No. C75167 Exp. 12/31/17 CIVIL STATE OF CALIFORNIA

THE STATE OF CALIFORNIA OR ITS OFFICERS OR AGENTS SHALL NOT BE RESPONSIBLE FOR THE ACCURACY OR COMPLETENESS OF SCANNED COPIES OF THIS PLAN SHEET.

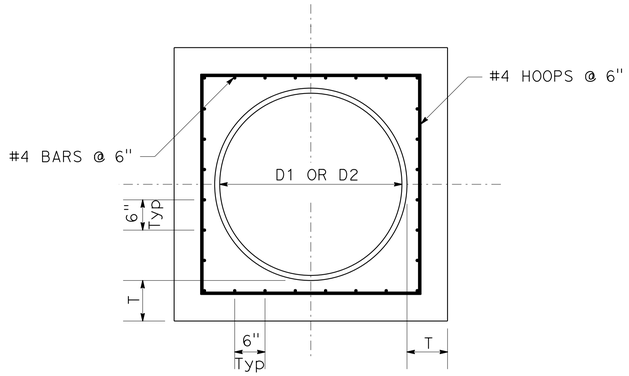

SECTION B-B

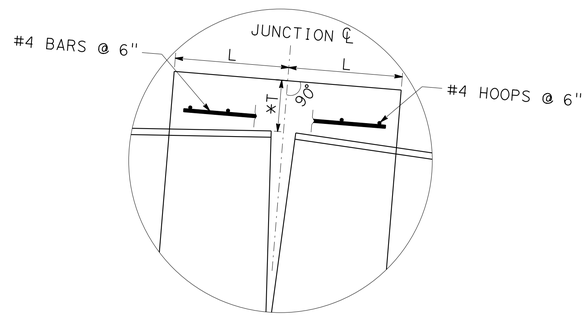

DETAIL C

*MEASURED ALONG JUNCTION ℄

TABLE D

D	L (Min)	T (Min)
1'-6"	1'-0"	6"
2'-0"	1'-0"	6"
3'-0"	1'-6"	8"
4'-0"	1'-6"	8"
4'-6"	1'-6"	9"
5'-0"	2'-0"	1'-0"
5'-6"	2'-0"	1'-0"
6'-0"	2'-0"	1'-0"

NOTES:

1. WHERE PIPES OF DIFFERENT DIAMETERS ARE JOINED WITH A Conc COLLAR, L & T SHALL CORRESPOND WITH THE LARGER OF THE TWO PIPE DIAMETERS.
2. JOIN PIPES AT INVERTS

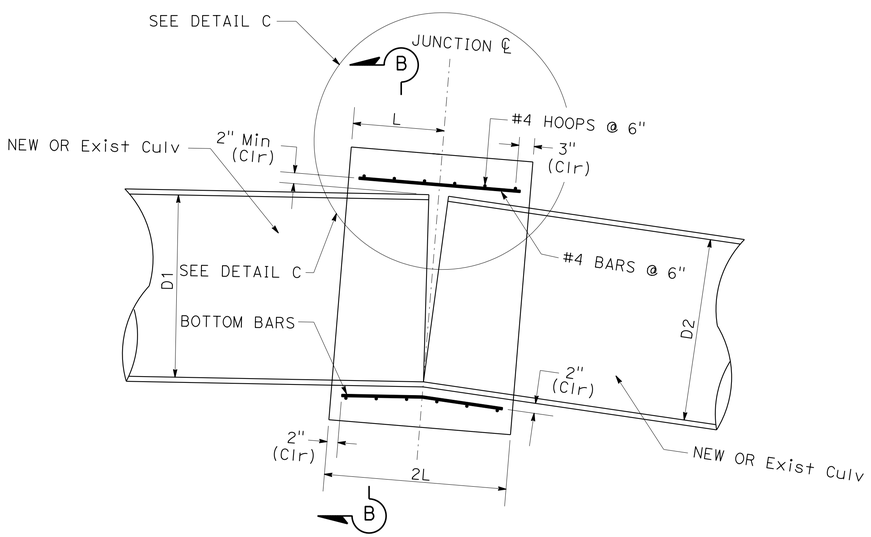

SECTION A-A

NOTE:
BEND BOTTOM BARS AS NECESSARY TO MAINTAIN 2" CLEARANCE

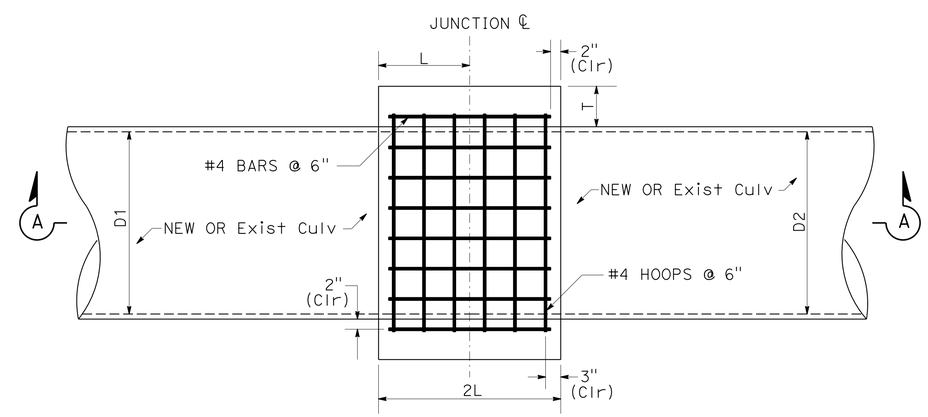

CONCRETE COLLAR PLAN

CONCRETE COLLAR (TYPE L-2)

8 e

DRAINAGE DETAILS

NO SCALE

DD-13

STATE OF CALIFORNIA - DEPARTMENT OF TRANSPORTATION
Caltrans
TRAFFIC PROJECT DEVELOPMENT

FUNCTIONAL SUPERVISOR: JOSE LUIS ROBLES
CALCULATED-DESIGNED BY: BARZAN ARAN
CHECKED BY: WENDY M. DANDENEAU
REVISED BY
DATE REVISED

LAST REVISION 09-28-16
DATE PLOTTED => 30-SEP-2016
TIME PLOTTED => 13:46

Dist	COUNTY	ROUTE	POST MILES TOTAL PROJECT	SHEET No.	TOTAL SHEETS
11	SD	76	32.6/33.3	88	269

REGISTERED CIVIL ENGINEER 09-20-16 DATE

09-26-16
PLANS APPROVAL DATE

REGISTERED PROFESSIONAL ENGINEER BARZAN A. ARAN No. C75167 Exp. 12/31/17 CIVIL STATE OF CALIFORNIA

THE STATE OF CALIFORNIA OR ITS OFFICERS OR AGENTS SHALL NOT BE RESPONSIBLE FOR THE ACCURACY OR COMPLETENESS OF SCANNED COPIES OF THIS PLAN SHEET.

MISCELLANEOUS IRON & STEEL		
GRATE TYPE	No. OF GRATES	WEIGHT
24 - 12	2	616 lbs
24 - 10C	2	373 lbs
24 - 10S	2	438 lbs
24 - 12X	2	478 lbs
24 - 13	2	356 lbs

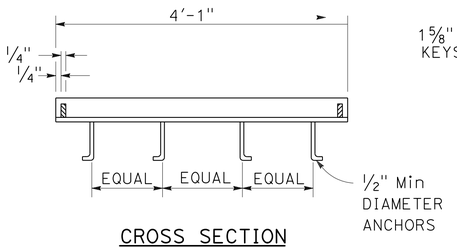

CROSS SECTION
(THRU FRAME)

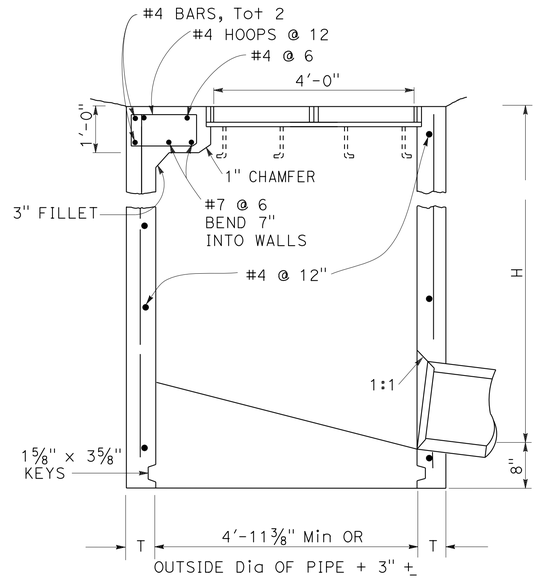

SECTION B-B

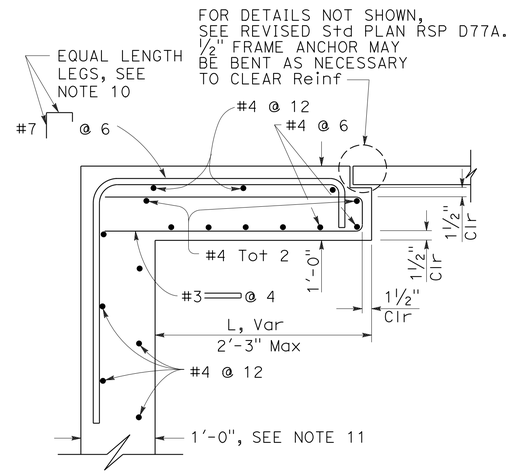

SECTION C-C

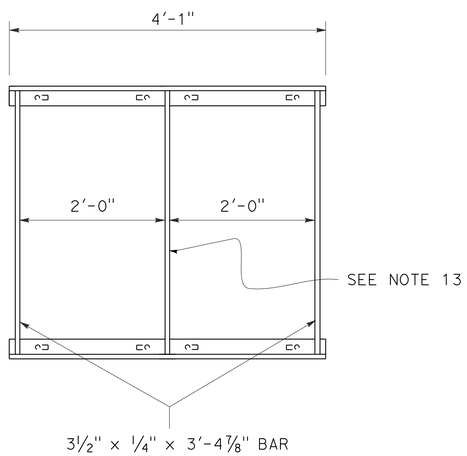

GRATE FRAME

RECTANGULAR FRAME DETAILS

(FOR DOUBLE RECTANGULAR GRATES)

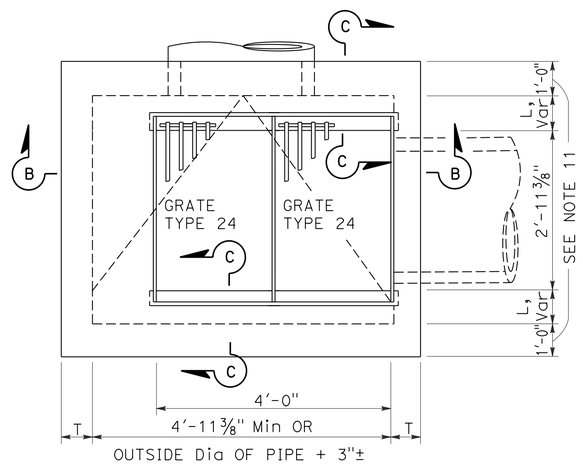

PLAN

TYPE GD2 DETAILS

NOTES:

1. "H" IS THE DIFFERENCE IN ELEVATION BETWEEN THE OUTLET PIPE FLOW LINE AND THE NORMAL GUTTER GRADE LINE UNDEPRESSED.
2. FOR "T" WALL THICKNESS, SEE TABLE A BELOW.
3. WALL REINFORCING NOT REQUIRED WHEN "H" IS 8'-0" OR LESS AND THE UNSUPPORTED WIDTH OR LENGTH IS 7'-0" OR LESS. WALLS EXCEEDING THESE LIMITS SHALL BE REINFORCED WITH #4 BARS @ 12" ± CENTERS PLACED 1 " CLEAR TO INSIDE OF BOX UNLESS OTHERWISE SHOWN.
4. STEPS-NONE REQUIRED WHERE "H" IS LESS THAN 2'-6". WHERE "H" IS 2'-6" OR MORE, INSTALL STEPS WITH LOWEST RUNG 1'-0" ABOVE THE FLOOR AND HIGHEST RUNG NOT MORE THAN 6" BELOW TOP OF INLET. THE DISTANCE BETWEEN STEPS SHALL NOT EXCEED 1'-0" AND SHALL BE UNIFORM THROUGHOUT THE LENGTH OF THE WALL. PLACE STEPS IN THE WALL WITHOUT AN OPENING. STEPS INSERTS MAY BE SUBSTITUTED FOR THE BAR STEPS. STEP INSERTS SHALL COMPLY WITH STATE INDUSTRIAL SAFETY REQUIREMENTS. SEE RSP D74 FOR STEP DETAILS.
5. DETAILS SHOWN APPLY TO BOTH METAL AND CONCRETE PIPE.
6. PIPE(S) CAN BE PLACED IN ANY WALL.
7. BASIN FLOORS SHALL HAVE WOOD TROWEL FINISH AND A MINIMUM SLOPE OF 12:3 FROM ALL DIRECTIONS TOWARD OUTLET PIPE.
8. SET INLET SO THAT GRATE BARS ARE PARALLEL TO DIRECTION OF PRINCIPAL surface flow.
9. SEE REVISED STANDARD PLANS RSP D77A AND RSP D77B FOR GRATE AND FRAME DETAILS NOT SHOWN HERE.
10. BAR MAY BE ROTATED AS NECESSARY TO CLEAR OPENING. WHERE "L" IS 6" OR LESS, BAR MAY BE OMITTED.
11. WHERE "L" IS 6" OR LESS, WALL THICKNESS SHALL BE AS SHOWN IN TABLE A.
12. CAST-IN-PLACE INLETS TO BE FORMED AROUND ALL PIPES/STUBS INTERSECTING THE INLET, AND CONCRETE POURED IN ONE CONTINUOUS OPERATION.
13. WHEN TYPE 24-10S, 24-12X OR 24-13 GRATES ARE USED WITH GD2 INLETS, A " X 3 " X 3'-4 " STEEL BAR SHALL BE WELDED ACROSS THE CENTER OF INLET FRAME TO SEPARATE THE INDIVIDUAL GRATES.
14. CONNECT CHAIN TO GRATE AND FRAME ONLY AT LOCATIONS SHOWN ON THE PLANS. WHEN CHAIN IS REQUIRED, DO NOT USE CAST DUCTILE IRON GRATES. SEE REVISED STANDARD PLAN RSP D77A FOR DETAILS.

TABLE A

CONCRETE QUANTITIES				
	H=3'-0" TO 8'-0" (T= 6")		H=8'-1"TO 20'-0" (T= 8")	
TYPE	H=3'-0" (CY)	ADDITIONAL PCC PER FOOT (CY)	H=8'-1" (CY)	ADDITIONAL PCC PER FOOT (CY)
GD2	2.84	0.552	6.15	0.615

TABLE BASED ON 8" FLOOR SLAB. NO DEDUCTIONS OR ADJUSTMENTS ARE TO BE MADE TO THESE QUANTITIES BECAUSE OF PIPE OPENINGS, DIFFERENT FLOOR ALTERNATIVES OR DIFFERENT CURB TYPES.

QUANTITIES FOR TYPE GD2 INLETS BASED ON Min INTERIOR DIMENSIONS SHOWN.

DRAINAGE DETAILS

NO SCALE

DD-14

STATE OF CALIFORNIA - DEPARTMENT OF TRANSPORTATION
Caltrans
TRAFFIC PROJECT DEVELOPMENT

FUNCTIONAL SUPERVISOR: JOSE LUIS ROBLES
CALCULATED-DESIGNED BY: BARZAN A. ARAN
CHECKED BY: W.M. DANDENEAU
REVISED BY
DATE REVISED

LAST REVISION 09-28-16 | DATE PLOTTED => 30-SEP-2016 | TIME PLOTTED => 13:46

Dist	COUNTY	ROUTE	POST MILES TOTAL PROJECT	SHEET No.	TOTAL SHEETS
11	SD	76	32.6/33.3	89	269

REGISTERED CIVIL ENGINEER 09-20-16 DATE

09-26-16
PLANS APPROVAL DATE

REGISTERED PROFESSIONAL ENGINEER BARZAN A. ARAN No. C75167 Exp. 12/31/17 CIVIL STATE OF CALIFORNIA

THE STATE OF CALIFORNIA OR ITS OFFICERS OR AGENTS SHALL NOT BE RESPONSIBLE FOR THE ACCURACY OR COMPLETENESS OF SCANNED COPIES OF THIS PLAN SHEET.

NOTE:

ALL PIPE JOINTS ARE STANDARD.

LEGEND:

OCB = OPENING CONCRETE BOX

ALLOWABLE PIPE MATERIAL		
DESIGNATION	RCP SIZE	CSP SIZE
24" AP	24"	24"

DRAINAGE QUANTITIES

DRAINAGE SHEET No.	DRAINAGE SYSTEM	DRAINAGE UNIT	42" RCP LF	36" RCP LF	24" AP Culv LF	24" RCP LF	Max FILL HEIGHT (N) LF	REMOVE INLET (N) EA	REMOVE INLET EA	STRUCTURAL Conc, DRAINAGE INLET CY	Misc IRON AND STEEL LB	HEIGHT OF INLET (N) LF	ABANDON CULVERT EA	ROCK SLOPE PROTECTION (NO. 1, METHOD B) CY	ROCK SLOPE PROTECTION (LIGHT, METHOD B) CY	ROCK SLOPE PROTECTION FABRIC (CLASS 8) SQYD	24" Conc FLARED END SECTION EA	24" Alt FLARED END SECTION EA	SAND BACKFILL CY	CONCRETE (DITCH LINING) CY	CABLE RAILING LF	CONCRETE (CONCRETE APRON) CY	STRUCTURAL Conc, HEADWALL CY	CONCRETE COLLAR (TYPE L-2) (N) N	DESCRIPTION	STATION	DRAINAGE SHEET No.	DRAINAGE SYSTEM	DRAINAGE UNIT
D-1	1	a			41.7		3.5																		24" X 41.7' AP		D-1	1	a
D-1		b						1		3.51	864														JUNCTION STRUCTURE WITH MANHOLE COVER AND FRAME;L=5.0', SPAN=3.5', Hb=4.31'	13+62.81 "VC"	D-1		b
D-1		c			139.5		10																		24" X 139.5' AP		D-1		c
D-1		d								5.47	242	8.79													TYPE G4 INLET WITH 24-12X GRATE, FRAME & CHAIN; H=8.79'	22+88.79 "S"	D-1		d
D-1		e				82.7	6.6																		24" X 82.7' RCP		D-1		e
D-1		f								2.96	242	5.36													TYPE G4 INLET WITH 24-12X GRATE, FRAME & CHAIN; H=5.36'	22+06.25 "S"	D-1		f
D-1		g				47.9	3.7																		24" X 47.9' RCP		D-1		g
D-1		h								2.84	242	5.06													TYPE G4 INLET WITH 24-12X GRATE, FRAME & CHAIN; H=5.06'	11+89.26 "VC"	D-1		h
D-1		i				20.9	2.9																		24" X 20.9' RCP		D-1		i
D-1		j								2.52	242	4.30													TYPE G4 INLET WITH 24-12X GRATE, FRAME & CHAIN; H=4.30'	12+13.66 "VC"	D-1		j
D-1		k				34.2	2.9																		24" X 34.2' RCP		D-1		k
D-1		l								2.62	242	4.54													TYPE G4 INLET WITH 24-12X GRATE, FRAME & CHAIN; H=4.54'	11+51.26 "VC"	D-1		l
D-1		m				31.4	2.4																		24" X 31.4' RCP		D-1		m
D-1		n								2.57	242	4.40													TYPE G4 INLET WITH 24-12X GRATE, FRAME & CHAIN; H=4.40'	11+16.44 "VC"	D-1		n
D-1		o				12.2	2.6																		24" X 12.2' RCP		D-1		o
D-1		p								2.48	242	4.20													TYPE G4 INLET WITH 24-12X GRATE, FRAME & CHAIN; H=4.20'	11+01.32 "VC"	D-1		p
D-1		q				61.9	3.2																		24" X 61.9' RCP		D-1		q
D-1		r								2.52	242	4.30													TYPE G4 INLET WITH 24-12X GRATE, FRAME & CHAIN; H=4.30'	21+43.60 "S"	D-1		r
D-1		s				42.2	2.3																		24" X 42.2' RCP		D-1		s
D-1		t								2.52	242	4.30													TYPE G4 INLET WITH 24-12X GRATE, FRAME & CHAIN; H=4.30'	21+00.00 "S"	D-1		t
D-1		u											1						16.96						ABANDON 24" X 145.8' CMP		D-1		u
D-1	2	a													22.40	45.22									ROCK SLOPE PROTECTION (LIGHT, METHOD B)	99+64.16 "76W"	D-1	2	a
D-1		b																					6.06		PIPE CULVERT HEADWALL & WARPED WINGWALLS (COLORED Conc)	99+64.47 "76W"	D-1		b
D-1		c	41.0				7.0																		42" X 41.0' RCP		D-1		c
D-1		d								4.41	242	5.70													TYPE G2 INLET WITH 24-12X GRATE, FRAME & CHAIN; H=5.70', L=2.0', L2=1.0'	99+65.19 "76W"	D-1		d
D-1		e		133.3			6.2																		36" X 133.3' RCP		D-1		e
D-1		f								5.34	484	7.73													TYPE GT4 INLET WITH 24-12X GRATE, FRAME & CHAIN; H=7.73'	10+52.84 "C"	D-1		f
D-1		g		80.3			6.6																		36" X 80.3' RCP		D-1		g
D-1		h								4.18	864	7.36													TYPE OCB INLET WITH MANHOLE COVER AND FRAME; Ho=12"; L=36"; H=7.36' (COLORED Conc)	10+74.60 "C"	D-1		h
D-1		i			28.0		6.0																		24" X 28.0' AP		D-1		i
D-1		j								2.84	479	6.41													TYPE GDO INLET WITH 24-12X GRATE, FRAME & CHAIN; H=6.41'	10+89.13 "C"	D-1		j
D-1		k				20.4	4.5																		24" X 20.4' RCP		D-1		k
D-1		l								3.40	242	5.94													TYPE GOL-7 INLET WITH 24-12X GRATE, FRAME & CHAIN; H=5.94'	10+88.12 "C"	D-1		l
D-1		m				32.4	4.3																		24" X 32.4' RCP		D-1		m
D-1		n								3.09	242	4.30													TYPE G2 INLET WITH 24-12X GRATE, FRAME & CHAIN; H=4.30', L1=1.0', L2=0.5'	10+85.82 "C"	D-1		n
D-1		o																			13.5				13.5' CABLE RAILING		D-1		o
D-1		p																				1.45			CONCRETE APRON (COLORED CONCRETE)		D-1		p
D-1	3	a		129.1			4.5																		36" X 129.1' RCP		D-1	3	a
D-1		b								4.22	484	5.63													TYPE GT4 INLET WITH 24-12X GRATE, FRAME & CHAIN; H=5.63'	13+34.60 "VC"	D-1		b
D-1		c		33.0			3.0																		36" X 33.0' RCP		D-1		c
D-1		d																					1.95		PIPE CULVERT HEADWALL; STRAIGHT, H=4'-8" (COLORED CONCRETE)	13+12.56 "VC"	D-1		d
SUBTOTAL 1			41.0	375.7	209.2	386.2				57.49	6,079		1		22.40	45.22			16.96		13.5	1.45	8.01						

(N) - NOT A SEPARATE PAY ITEM, FOR INFORMATION ONLY.

DRAINAGE QUANTITIES
DQ-1

STATE OF CALIFORNIA - DEPARTMENT OF TRANSPORTATION
Caltrans
TRAFFIC PROJECT DEVELOPMENT

FUNCTIONAL SUPERVISOR: JOSE LUIS ROBLES
CALCULATED-DESIGNED BY: BARZAN A. ARAN
CHECKED BY: W.M. DANDENEAU
REVISED BY
DATE REVISED

LAST REVISION DATE PLOTTED => 30-SEP-2016
09-28-16 TIME PLOTTED => 13:46

Dist	COUNTY	ROUTE	POST MILES TOTAL PROJECT	SHEET No.	TOTAL SHEETS
11	SD	76	32.6/33.3	90	269

09-20-16
REGISTERED CIVIL ENGINEER DATE

09-26-16
PLANS APPROVAL DATE

REGISTERED PROFESSIONAL ENGINEER
BARZAN A. ARAN
No. C75167
Exp. 12/31/17
CIVIL
STATE OF CALIFORNIA

THE STATE OF CALIFORNIA OR ITS OFFICERS OR AGENTS SHALL NOT BE RESPONSIBLE FOR THE ACCURACY OR COMPLETENESS OF SCANNED COPIES OF THIS PLAN SHEET.

NOTE:
ALL PIPE JOINTS ARE STANDARD.

DRAINAGE QUANTITIES

DRAINAGE SHEET No.	DRAINAGE SYSTEM	DRAINAGE UNIT	42" RCP LF	36" RCP LF	24" AP Culv LF	24" RCP LF	Max FILL HEIGHT (N) LF	REMOVE INLET (N) EA	REMOVE INLET EA	STRUCTURAL Conc, DRAINAGE INLET CY	Misc IRON AND STEEL LB	HEIGHT OF INLET (N) LF	ABANDON CULVERT EA	ROCK SLOPE PROTECTION (NO. 1, METHOD B) CY	ROCK SLOPE PROTECTION (LIGHT, METHOD B) CY	ROCK SLOPE PROTECTION FABRIC (CLASS 8) SQYD	24" Conc FLARED END SECTION EA	24" Alt FLARED END SECTION EA	SAND BACKFILL CY	CONCRETE (DITCH LINING) CY	CABLE RAILING LF	CONCRETE (CONCRETE APRON) CY	STRUCTURAL Conc, HEADWALL CY	CONCRETE COLLAR (TYPE L-2) (N) EA	DESCRIPTION	STATION	DRAINAGE SHEET No.	DRAINAGE SYSTEM	DRAINAGE UNIT
D-1	3	e																			12.0				12.0′ CABLE RAILING		D-1	3	e
D-1		f																				3.31			CONCRETE APRON (COLORED CONCRETE)		D-1		f
D-1		g			64.1		4.4																		24" X 64.1 AP		D-1		g
D-1		h								3.02	242	5.50													TYPE G4 INLET WITH 24-12X GRATES, FRAME & CHAIN; H=5.50′	14+19.42 "VC"	D-1		h
D-1		i			73.5		3.9																		24" X 73.5′ AP		D-1		i
D-1		j								2.58	242	5.61													TYPE G4 INLET WITH 24-12X GRATE, FRAME & CHAIN; H=5.61′	101+26.03 "76E"	D-1		j
D-1		k				37.0	4.2																		24" X 37.0′ RCP		D-1		k
D-1		l								2.57	242	4.40													TYPE G4 INLET WITH 24-12X GRATE, FRAME & CHAIN; H=4.40′	101+26.44 "E"	D-1		l
D-1		m				88.0	2.8																		24" x 88.0′ RCP		D-1		m
D-1		n								2.69	242	4.70													TYPE G4 INLET WITH 24-12X GRATE, FRAME & CHAIN; H=4.70′	102+20.0 "E"	D-1		n
D-1		o				115.5	2.7																		24" x 115.5′ RCP		D-1		o
D-1		p								2.61	242	4.50													TYPE G4 INLET WITH 24-12X GRATE, FRAME & CHAIN; H=4.50′	103+34.77 "E"	D-1		p
D-1/2		q			131.1		2.5																		24" X 131.1′ AP		D-1/2		q
D-2		r								2.57	242	4.40													TYPE G4 INLET WITH 24-12X GRATE, FRAME & CHAIN; H=4.40′	104+70 "76E"	D-2		r
D-2		s			182.9		2.7																		24" X 182.9′ AP		D-2		s
D-2		t								3.56	484	4.30													TYPE GD2 INLET WITH 24-12X GRATE, FRAME & CHAIN; H=4.30′; L=0	106+60 "76E"	D-2		t
D-1		u																		29.02					CONCRETE DITCH (COLORED CONCRETE)		D-1		u
D-1/2		v																		66.53					CONCRETE DITCH (COLORED CONCRETE)		D-1/2		v
D-1	4	a												277.35		601.20									ROCK SLOPE PROTECTION (NO.1, METHOD B)	9+67.55 "NW_DITCH2R"	D-1	4	a
D-1		b																					1.20		PIPE CULVERT HEADWALL; STRAIGHT, H=3′-8"; L=8′-6"	21+11.23 "N"	D-1		b
D-1		c																			8.5				8.5′ CABLE RAILING		D-1		c
D-1		d				74.5	3.9																		24" X 74.5′ RCP		D-1		d
D-1		e								2.57	242	4.40													TYPE G4 INLET WITH 24-12X GRATE, FRAME & CHAIN; H=4.40′	21+63.13 "N"	D-1		e
D-1		f				21.8	2.4																		24" X 21.8′ RCP		D-1		f
D-1		g								2.52	242	4.30													TYPE G4 INLET WITH 24-12X GRATE, FRAME & CHAIN; H=4.30′	11+86.69 "C"	D-1		g
D-1	5	a												5.33		16.00									ROCK SLOPE PROTECTION (NO. 1, METHOD B)		D-1	5	a
D-1		b																1							24" ALTERNATIVE FLARED END SECTION		D-1		b
D-1		c			37.3		4.9																		24" X 37.3′ AP		D-1		c
D-1		d								2.89	242	4.40													TYPE G2 INLET WITH 24-12X GRATE, FRAME & CHAIN; H=4.40′; L=0.5′	13+19.42 "C"	D-1		d
D-1		e				42.0	2.7																		24" X 42.0′ RCP		D-1		e
D-1		f								2.05	242	3.22													TYPE G2 INLET WITH 24-12X GRATE, FRAME & CHAIN; H=3.22′; L=0′	13+27.30 "C"	D-1		f
D-1		g																				2.80			CONCRETE APRON (COLORED CONCRETE)		D-1		g
D-1		h											1						4.53						ABANDON CULVERT, 24" X 39.0′ CMP		D-1		h
D-1		i							1																REMOVE INLET; H=2.7′		D-1		i
D-1		j											1						5.86						ABANDON CULVERT, 24" X 50.4′ CMP		D-1		j
SUBTOTAL 2					488.9	378.8			1	29.63	2,904		2	282.68		617.20		1	10.39	95.55	20.5	6.11	1.20						

(N) - NOT A SEPARATE PAY ITEM, FOR INFORMATION ONLY.

DRAINAGE QUANTITIES
DQ-2

STATE OF CALIFORNIA - DEPARTMENT OF TRANSPORTATION
Caltrans®
TRAFFIC PROJECT DEVELOPMENT

FUNCTIONAL SUPERVISOR: JOSE LUIS ROBLES
CALCULATED-DESIGNED BY: BARZAN A. ARAN
CHECKED BY: W.M. DANDENEAU
REVISED BY
DATE REVISED

LAST REVISION 09-28-16
DATE PLOTTED => 30-SEP-2016
TIME PLOTTED => 13:46

Dist	COUNTY	ROUTE	POST MILES TOTAL PROJECT	SHEET No.	TOTAL SHEETS
11	SD	76	32.6/33.3	91	269

09-20-16
REGISTERED CIVIL ENGINEER DATE

09-26-16
PLANS APPROVAL DATE

REGISTERED PROFESSIONAL ENGINEER
BARZAN A. ARAN
No. C75167
Exp. 12/31/17
CIVIL
STATE OF CALIFORNIA

THE STATE OF CALIFORNIA OR ITS OFFICERS OR AGENTS SHALL NOT BE RESPONSIBLE FOR THE ACCURACY OR COMPLETENESS OF SCANNED COPIES OF THIS PLAN SHEET.

NOTE:
ALL PIPE JOINTS ARE STANDARD.

DRAINAGE QUANTITIES

DRAINAGE SHEET No.	DRAINAGE SYSTEM	DRAINAGE UNIT	42" RCP LF	36" RCP LF	24" AP Culv LF	24" RCP LF	Max FILL HEIGHT (N) EA	REMOVE INLET (N) EA	REMOVE INLET EA	STRUCTURAL Conc, DRAINAGE INLET CY	Misc IRON AND STEEL LB	HEIGHT OF INLET (N) LF	ABANDON CULVERT EA	ROCK SLOPE PROTECTION (NO. 1, METHOD B) CY	ROCK SLOPE PROTECTION (LIGHT, METHOD B) CY	ROCK SLOPE PROTECTION FABRIC (CLASS 8) SQYD	24" Conc FLARED END SECTION EA	24" Alt FLARED END SECTION EA	SAND BACKFILL CY	CONCRETE (DITCH LINING) CY	CABLE RAILING LF	CONCRETE (CONCRETE APRON) CY	STRUCTURAL Conc, HEADWALL CY	CONCRETE COLLAR (TYPE L-2) (N) EA	DESCRIPTION	STATION	DRAINAGE SHEET No.	DRAINAGE SYSTEM	DRAINAGE UNIT
D-1	6	a												5.33		16.00									ROCK SLOPE PROTECTION (NO. 1, METHOD B)	13+93.00 "C"	D-1	6	a
D-1		b															1								24" CONCRETE FLARED END SECTION		D-1		b
D-1		c				126.3																			24" X 121.3' RCP		D-1		c
D-1		d																					1.20		PIPE CULVERT HEADWALL; STRAIGHT, H= 3'-8", L=8'-6" (COLORED Conc)	104+27.39 "E"	D-1		d
D-1		e																			8.5				CABLE RAILING		D-1		e
D-1/2		f																		48.12					CONCRETE DITCH (COLORED CONCRETE)		D-1/2		f
D-1	7	a												8.89		23.11									ROCK SLOPE PROTECTION (NO. 1, METHOD B)	97+20.00 "76W"	D-1	7	a
D-2	8	a																					1.20		PIPE CULVERT HEADWALL; STRAIGHT, H=3'-8" (COLORED CONCRETE)	107+25 "76E"	D-2	8	a
		b																			8.5				8.5' CABLE RAILING				b
		c			83.6		2.4																		24" X 83.6' AP				c
		d								3.18	864	5.0													TYPE OCB INLET; (OMIT OPENING); H=5.0'	108+05.00 "76E"			d
		e			300.5		5.0																	1	24" X 300.5' AP WITH Conc COLLAR (TYPE L-2) (SEE DRAINAGE DETAILS)				e
		f								3.67	484	4.50													TYPE GD2 INLET WITH 24-12X GRATE, FRAME & CHAIN; H=4.50'; L=0	110+98 .00 "76E"			f
		g			129.2		2.7																		24" X 129.2' AP				g
		h								3.78	484	4.70													TYPE GD2 INLET WITH 24-12X GRATE, FRAME & CHAIN; H=4.70'; L=0	112+30.00 "76E"			h
		i			172.7		2.7																		24" X 172.7' AP				i
		j								3.56	484	4.30													TYPE GD2 INLET WITH 24-12X GRATE, FRAME & CHAIN; H=4.30'; L=0	113+87.00 "SR76"			j
SUBTOTAL					686.0	126.3				14.19	2,316			14.22		39.11	1			48.12	17.0		2.40						
SUBTOTAL 1			41.0	375.7	209.2	386.2				57.49	6,079		1		22.40	45.22			16.96		13.5	1.45	8.01						
SUBTOTAL 2					488.9	378.8			1	29.63	2,904		2	282.68		617.20		1	10.39	95.55	20.5	6.11	1.20						
TOTAL			41.0	375.7	1,384.1	891.3			1	101.31	11,299		3	296.90	22.40	701.53	1	1	27.35	143.67	51.0	7.56	11.61						

(N) - NOT A SEPARATE PAY ITEM, FOR INFORMATION ONLY.

DRAINAGE QUANTITIES
DQ-3

STATE OF CALIFORNIA - DEPARTMENT OF TRANSPORTATION
Caltrans
TRAFFIC PROJECT DEVELOPMENT

FUNCTIONAL SUPERVISOR: JOSE LUIS ROBLES
CALCULATED-DESIGNED BY: BARZAN A. ARAN
CHECKED BY: W.M. DANDENEAU
REVISED BY
DATE REVISED

LAST REVISION 09-28-16
DATE PLOTTED => 30-SEP-2016
TIME PLOTTED => 13:46

Dist	COUNTY	ROUTE	POST MILES TOTAL PROJECT	SHEET No.	TOTAL SHEETS
11	SD	76	32.6/33.3	92	269

REGISTERED CIVIL ENGINEER DATE 09-21-16

PLANS APPROVAL DATE 09-26-16

REGISTERED PROFESSIONAL ENGINEER ARTURO REYES No. C75491 Exp. 06/30/18 CIVIL STATE OF CALIFORNIA

THE STATE OF CALIFORNIA OR ITS OFFICERS OR AGENTS SHALL NOT BE RESPONSIBLE FOR THE ACCURACY OR COMPLETENESS OF SCANNED COPIES OF THIS PLAN SHEET.

NOTES:

1. FOR ACCURATE RIGHT OF WAY DATA, CONTACT RIGHT OF WAY ENGINEERING AT THE DISTRICT OFFICE.
2. LOCATION OF UTILITY FACILITIES SHOWN ON THESE PLANS WERE OBTAINED FROM OWNERS RECORDS AND/OR FROM STATE SURVEYS. ANY UTILITY INFORMATION SHOWN ON THESE PLANS IS APPROXIMATE.

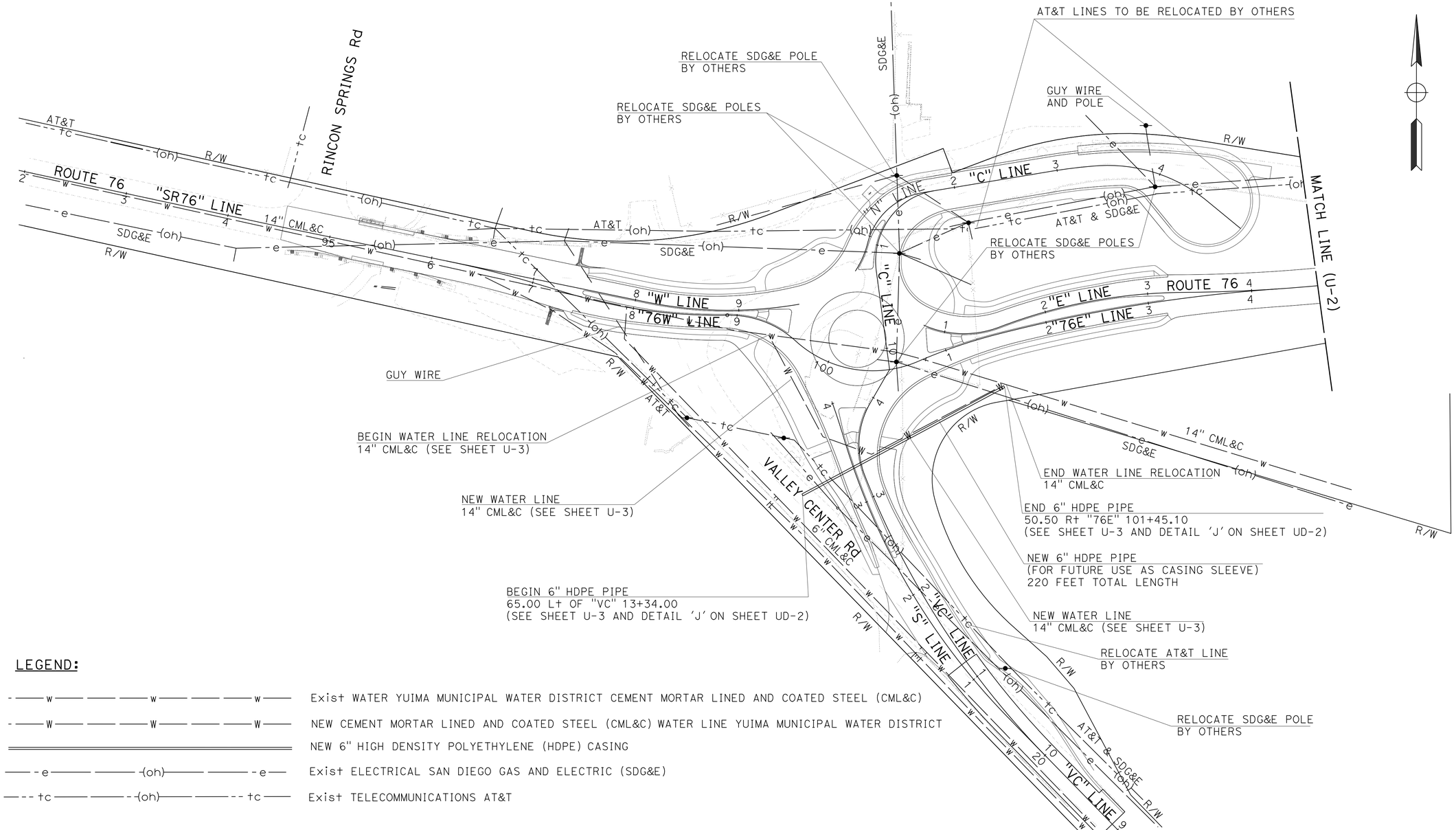

LEGEND:

—— w —— —— w —— —— w ——	Exist WATER YUIMA MUNICIPAL WATER DISTRICT CEMENT MORTAR LINED AND COATED STEEL (CML&C)
—— W —— —— W —— —— W ——	NEW CEMENT MORTAR LINED AND COATED STEEL (CML&C) WATER LINE YUIMA MUNICIPAL WATER DISTRICT
═══	NEW 6" HIGH DENSITY POLYETHYLENE (HDPE) CASING
—— e —— —— (oh) —— —— e ——	Exist ELECTRICAL SAN DIEGO GAS AND ELECTRIC (SDG&E)
—— tc —— —— (oh) —— —— tc ——	Exist TELECOMMUNICATIONS AT&T

APPROVED FOR UTILITY WORK ONLY

SCALE: 1" = 50'

UTILITY PLAN

U-1

STATE OF CALIFORNIA - DEPARTMENT OF TRANSPORTATION
Caltrans UTILITIES ENGINEERING

FUNCTIONAL SUPERVISOR: ABU-BAKR AL-JAFRI
CALCULATED-DESIGNED BY: MICHAEL PEDERSEN
CHECKED BY: ARTURO REYES
REVISED BY
DATE REVISED

LAST REVISION DATE PLOTTED => 30-SEP-2016
09-28-16 TIME PLOTTED => 13:46

Dist	COUNTY	ROUTE	POST MILES TOTAL PROJECT	SHEET No.	TOTAL SHEETS
11	SD	76	32.6/33.3	93	269

REGISTERED CIVIL ENGINEER DATE 09-21-16

09-26-16
PLANS APPROVAL DATE

REGISTERED PROFESSIONAL ENGINEER
ARTURO REYES
No. C75491
Exp. 06/30/18
CIVIL
STATE OF CALIFORNIA

THE STATE OF CALIFORNIA OR ITS OFFICERS OR AGENTS SHALL NOT BE RESPONSIBLE FOR THE ACCURACY OR COMPLETENESS OF SCANNED COPIES OF THIS PLAN SHEET.

NOTES:

1. FOR ACCURATE RIGHT OF WAY DATA, CONTACT RIGHT OF WAY ENGINEERING AT THE DISTRICT OFFICE.
2. LOCATION OF UTILITY FACILITIES SHOWN ON THESE PLANS WERE OBTAINED FROM OWNERS RECORDS AND/OR FROM STATE SURVEYS. ANY UTILITY INFORMATION SHOWN ON THESE PLANS IS APPROXIMATE.

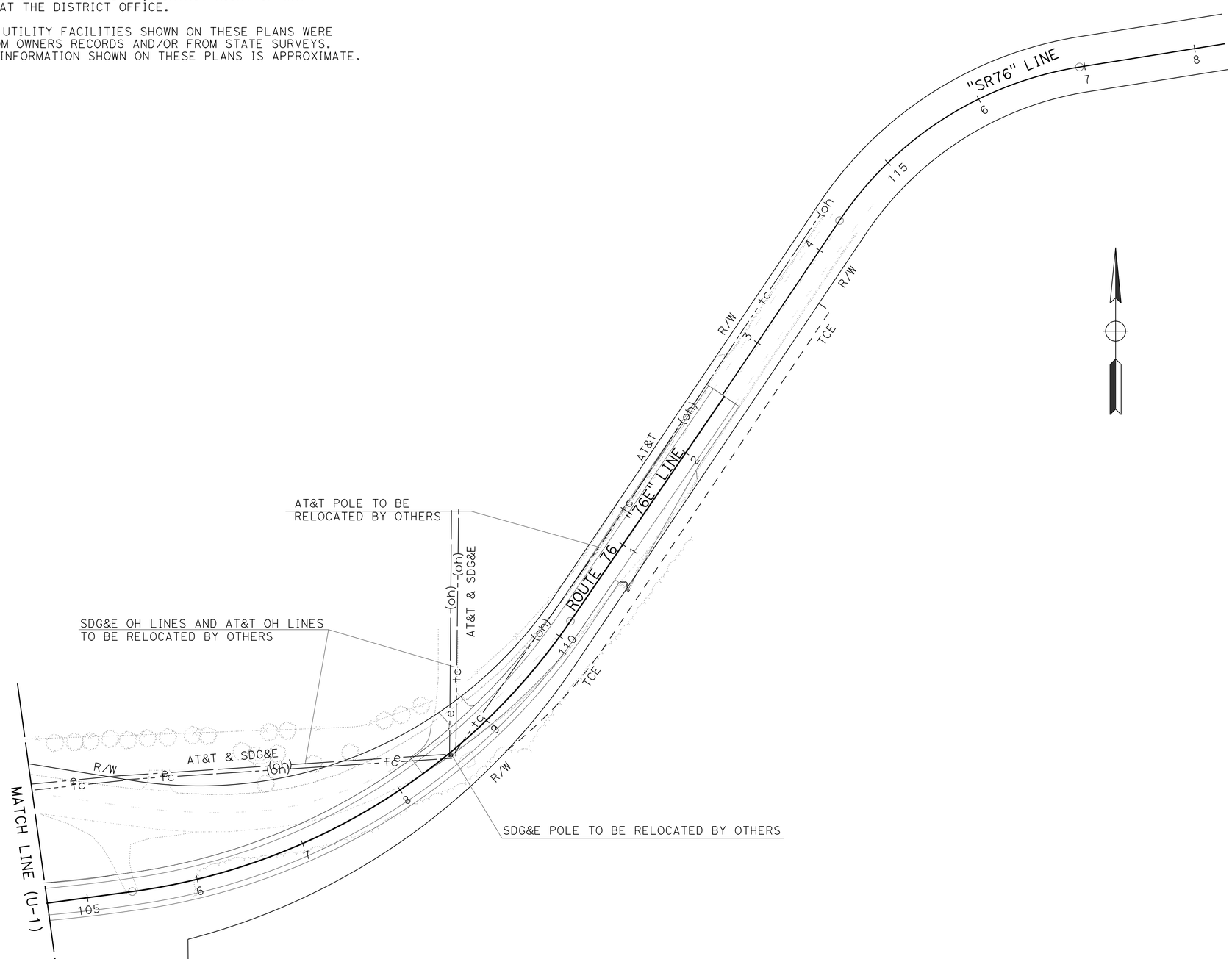

APPROVED FOR UTILITY WORK ONLY

UTILITY PLAN

SCALE: 1" = 50'

U-2

STATE OF CALIFORNIA - DEPARTMENT OF TRANSPORTATION
Caltrans UTILITIES ENGINEERING

FUNCTIONAL SUPERVISOR: ABU-BAKR AL-JAFRI
CALCULATED-DESIGNED BY: ARTURO REYES
CHECKED BY: MICHAEL PEDERSEN
REVISED BY
DATE REVISED

LAST REVISION 09-28-16
DATE PLOTTED => 30-SEP-2016
TIME PLOTTED => 13:46

Dist	COUNTY	ROUTE	POST MILES TOTAL PROJECT	SHEET No.	TOTAL SHEETS
11	SD	76	32.6/33.3	94	269

REGISTERED CIVIL ENGINEER 09-21-16 DATE

09-26-16
PLANS APPROVAL DATE

REGISTERED PROFESSIONAL ENGINEER ARTURO REYES No. C75491 Exp. 06/30/18 CIVIL STATE OF CALIFORNIA

THE STATE OF CALIFORNIA OR ITS OFFICERS OR AGENTS SHALL NOT BE RESPONSIBLE FOR THE ACCURACY OR COMPLETENESS OF SCANNED COPIES OF THIS PLAN SHEET.

YUIMA MUNICIPAL WATER DISTRICT
34928 VALLEY CENTER ROAD
PAUMA VALLEY, CA 92061

NOTES:

1. LOCATION OF UTILITY FACILITIES SHOWN ON THESE PLANS WERE OBTAINED FROM OWNERS RECORDS AND/OR FROM STATE SURVEYS.
2. ANY UTILITY INFORMATION SHOWN ON THESE PLANS IS APPROXIMATE.
3. CONTRACTOR SHALL COORDINATE WITH YUIMA MWD TO POTHOLE & VERIFY YUIMA'S 14" PIPELINE DEPTH AND LOCATION BASED UPON YUIMA MWD EAST LATERAL PIPELINE AS-BUILT PLANS, DATED 3/15/1965, PRIOR TO PIPE FABRICATION AND CONSTRUCTION.
4. EXISTING 14" PIPELINE IS CEMENT MORTAR LINED AND COATED (CML&C).
5. T = STEEL CYLINDER THICKNESS.

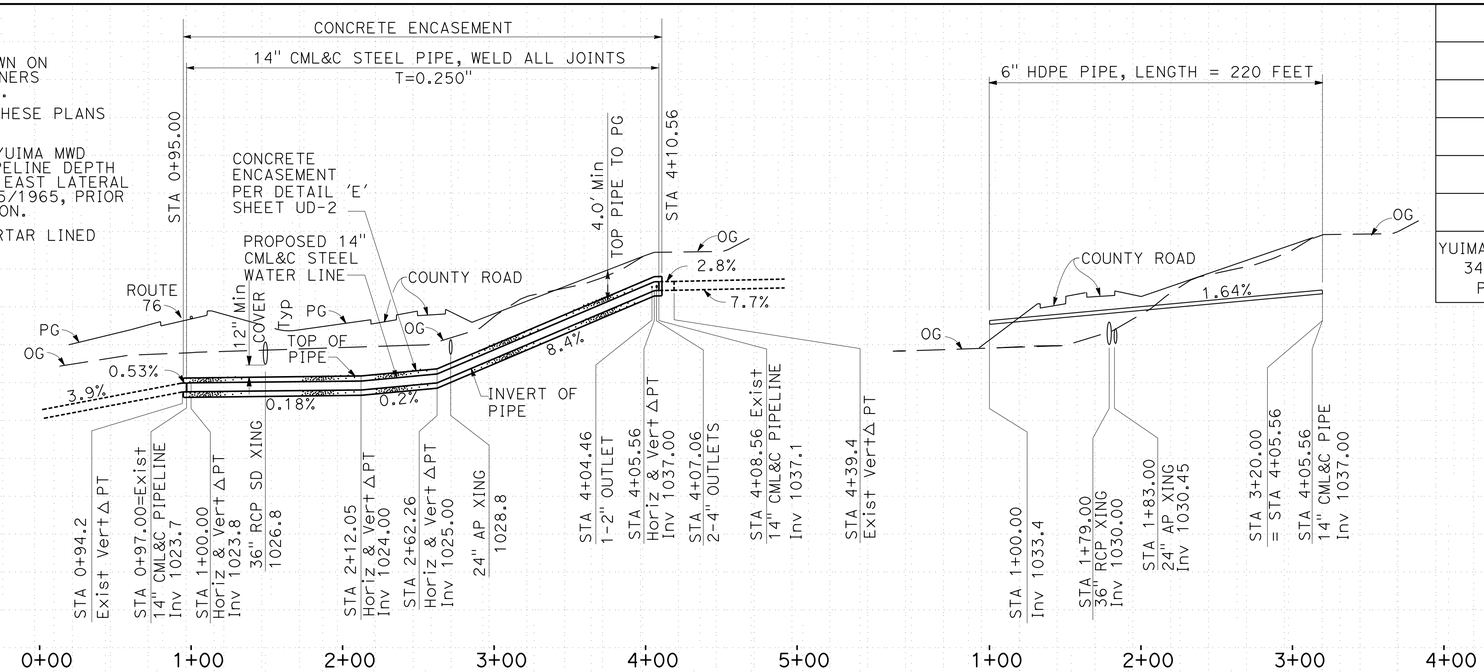

PROFILE
SCALE: 1"=50' Horiz
1"=10' Vert

PROFILE
SCALE: 1"=50' Horiz
1"=10' Vert

ABBREVIATION:

DEFL - DEFLECTION ANGLE

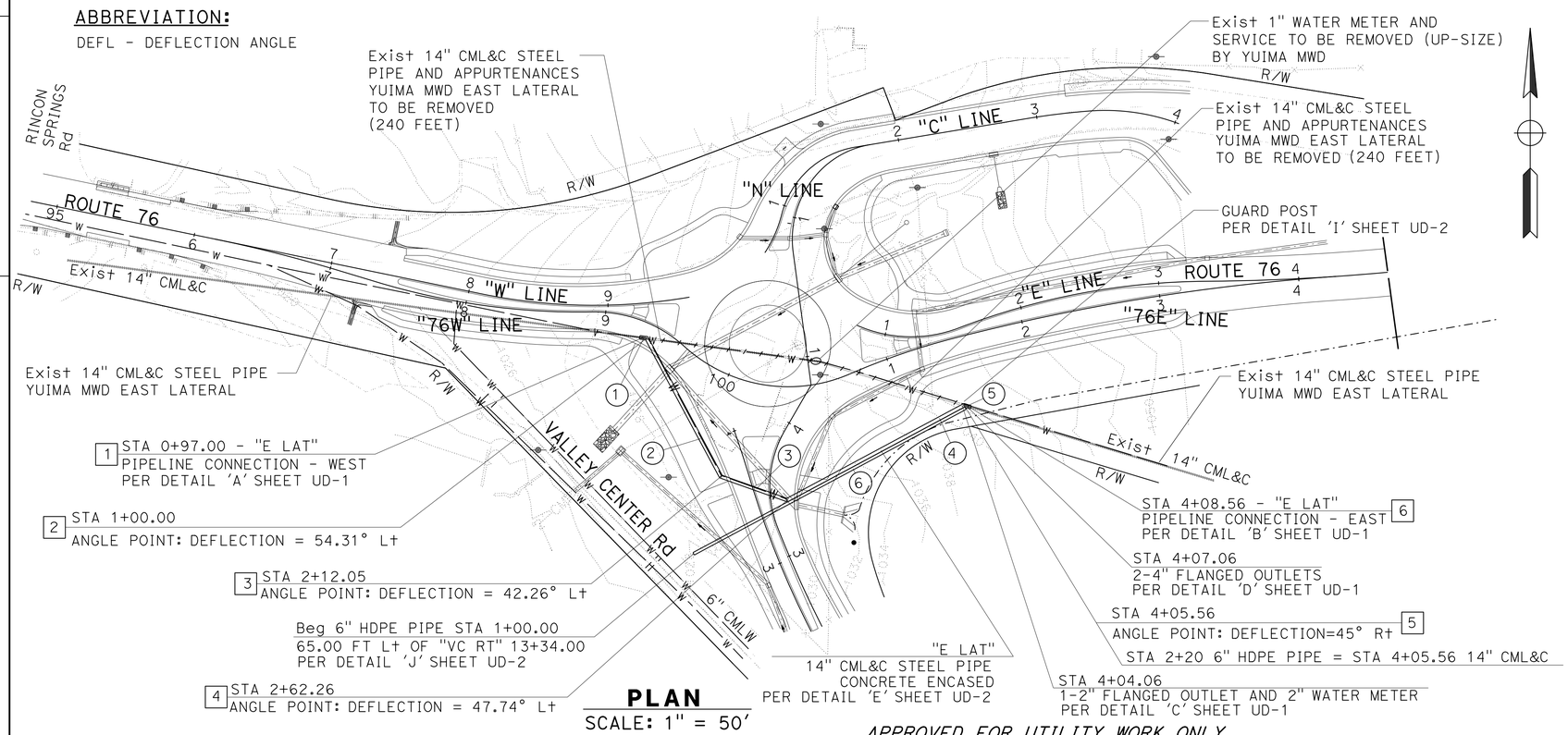

PLAN
SCALE: 1" = 50'

APPROVED FOR UTILITY WORK ONLY

COORDINATE TABLE

No.	STATION	NORTHING	EASTING	DESCRIPTION
1	0+97.00	2049253.09	6345190.09	POINT OF CONNECTION
2	1+00.00	2049252.70	6345193.06	ANGLE POINT
3	2+12.05	2049153.95	6345246.01	ANGLE POINT
4	2+62.26	2049137.16	6345293.33	ANGLE POINT
5	4+05.56	2049204.88	6345419.62	ANGLE POINT
6	4+08.56	2049204.01	6345422.49	POINT OF CONNECTION

14" PIPELINE DATA

No.	BEARING/DELTA	LENGTH
1	S82°30'46"E	3.00
2	S28°12'10"E	112.05
3	S70°27'39"E	50.21
4	N61°47'50"E	143.30
5	S73°12'00"E	3.00
	TOTAL	311.56

6" PIPELINE DATA

No.	BEARING/DELTA	LENGTH
6	N61°47'50"E	220.00

UTILITY PLAN
WATER LINE RELOCATION
U-3

SCALE AS SHOWN

REVISED BY | DATE REVISED
ARTURO REYES | MICHAEL PEDERSEN
CALCULATED-DESIGNED BY | CHECKED BY
FUNCTIONAL SUPERVISOR: ABU-BAKR AL-JAFRI
STATE OF CALIFORNIA - DEPARTMENT OF TRANSPORTATION
Caltrans UTILITIES ENGINEERING

LAST REVISION 09-28-16 | DATE PLOTTED => 30-SEP-2016 | TIME PLOTTED => 13:46

Dist	COUNTY	ROUTE	POST MILES TOTAL PROJECT	SHEET No.	TOTAL SHEETS
11	SD	76	32.6/33.3	95	269

REGISTERED CIVIL ENGINEER 09-21-16 DATE

09-26-16
PLANS APPROVAL DATE

REGISTERED PROFESSIONAL ENGINEER ARTURO REYES No. C75491 Exp. 06/30/18 CIVIL STATE OF CALIFORNIA

THE STATE OF CALIFORNIA OR ITS OFFICERS OR AGENTS SHALL NOT BE RESPONSIBLE FOR THE ACCURACY OR COMPLETENESS OF SCANNED COPIES OF THIS PLAN SHEET.

YUIMA MUNICIPAL WATER DISTRICT
34928 VALLEY CENTER ROAD
PAUMA VALLEY, CA 92061

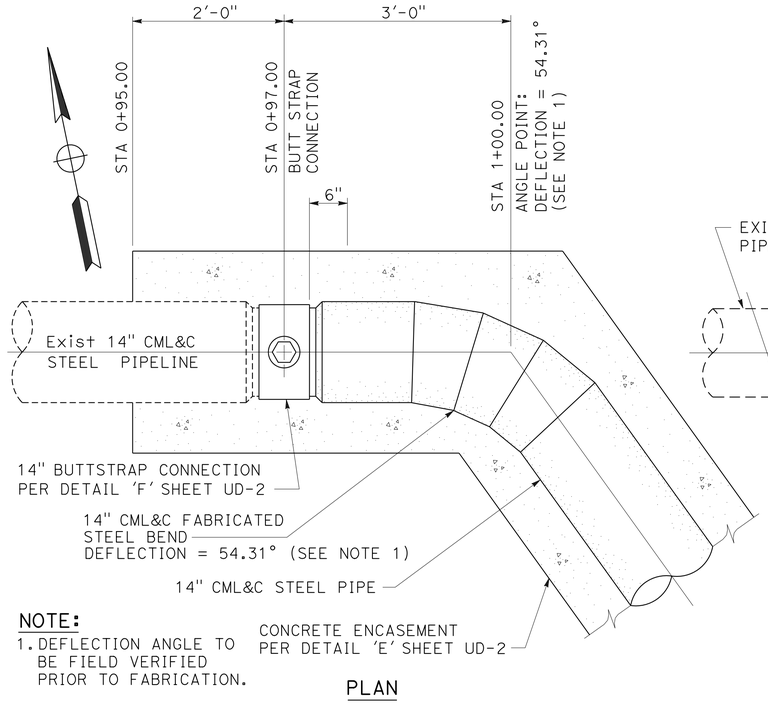

NOTE:
1. DEFLECTION ANGLE TO BE FIELD VERIFIED PRIOR TO FABRICATION.

PLAN

DETAIL 'A'
PIPELINE CONNECTION - WEST

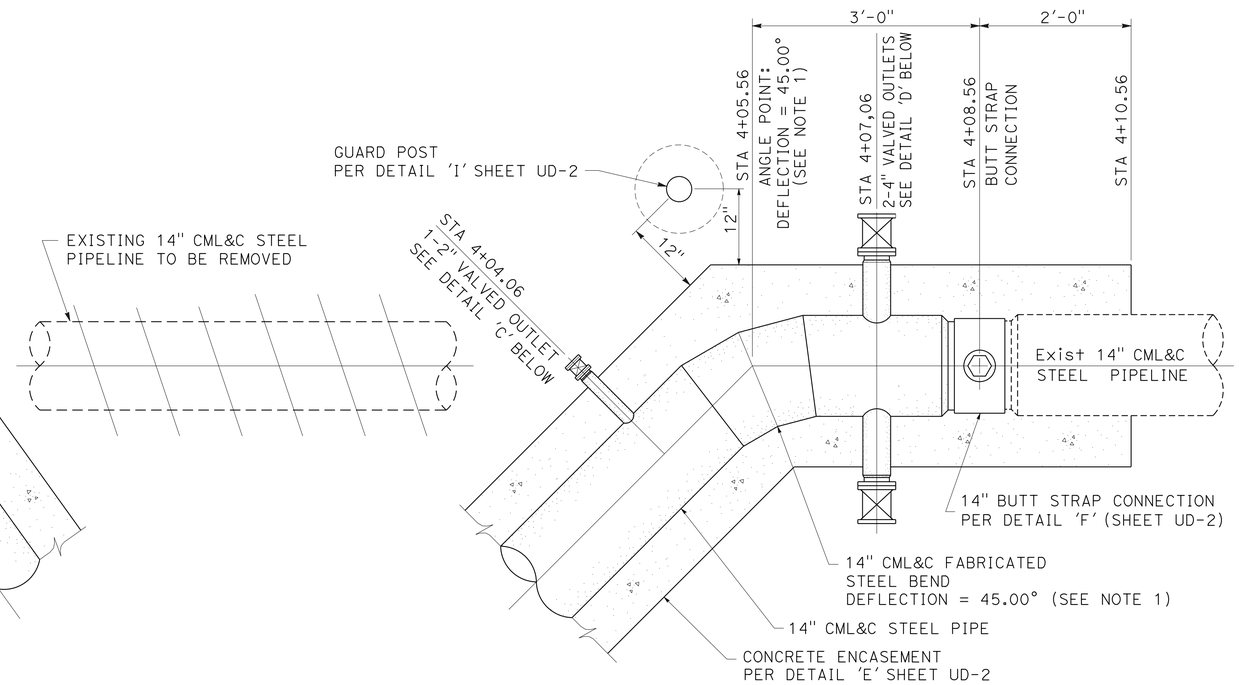

PLAN

DETAIL 'B'
PIPELINE CONNECTION - EAST

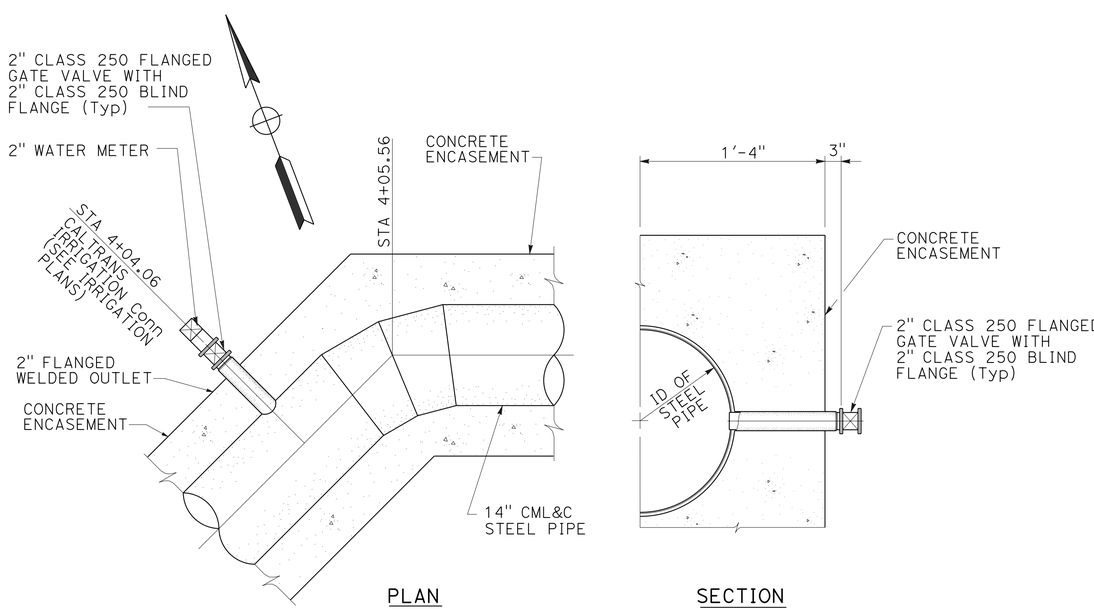

PLAN SECTION

DETAIL 'C'
2" VALVED OUTLET AT STA 4+04.06

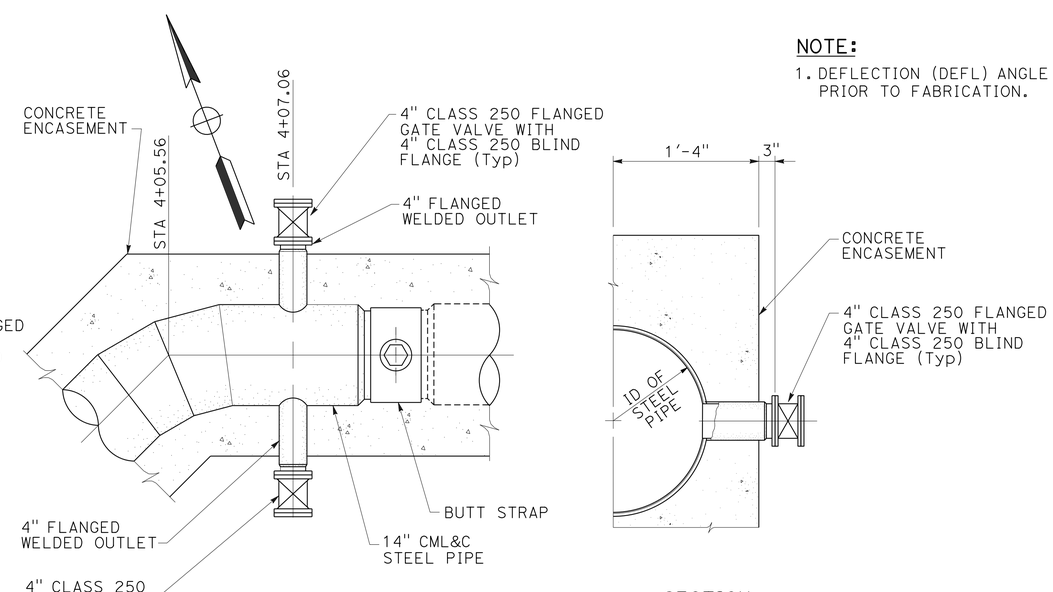

PLAN SECTION

DETAIL 'D'
4" VALVED OUTLETS AT STA 4+07.06

NOTE:
1. DEFLECTION (DEFL) ANGLE TO BE FIELD VERIFIED PRIOR TO FABRICATION.

NO SCALE

UTILITY DETAILS
UD-1

STATE OF CALIFORNIA - DEPARTMENT OF TRANSPORTATION
Caltrans UTILITIES ENGINEERING

FUNCTIONAL SUPERVISOR: ABU-BAKR AL-JAFRI
CALCULATED-DESIGNED BY: ARTURO REYES
CHECKED BY: MICHAEL PEDERSEN
REVISED BY
DATE REVISED

LAST REVISION 09-28-16
DATE PLOTTED => 30-SEP-2016
TIME PLOTTED => 13:46

Dist	COUNTY	ROUTE	POST MILES TOTAL PROJECT	SHEET No.	TOTAL SHEETS
11	SD	76	32.6/33.3	96	269

REGISTERED CIVIL ENGINEER 09-21-16 DATE

09-26-16
PLANS APPROVAL DATE

REGISTERED PROFESSIONAL ENGINEER ARTURO REYES No. C75491 Exp. 06/30/18 CIVIL STATE OF CALIFORNIA

THE STATE OF CALIFORNIA OR ITS OFFICERS OR AGENTS SHALL NOT BE RESPONSIBLE FOR THE ACCURACY OR COMPLETENESS OF SCANNED COPIES OF THIS PLAN SHEET.

YUIMA MUNICIPAL WATER DISTRICT
34928 VALLEY CENTER ROAD
PAUMA VALLEY, CA 92061

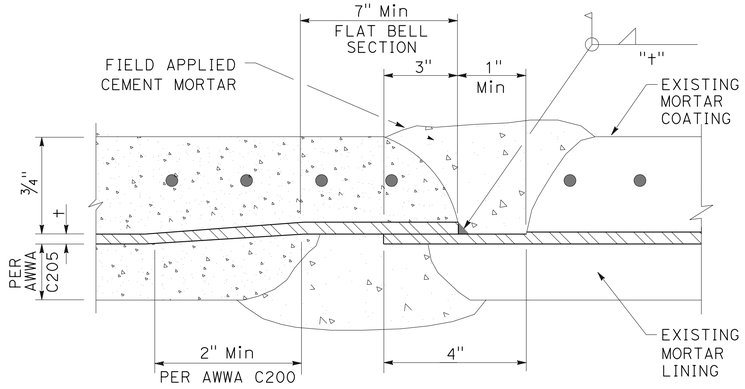

DETAIL 'D'
LAP WELD

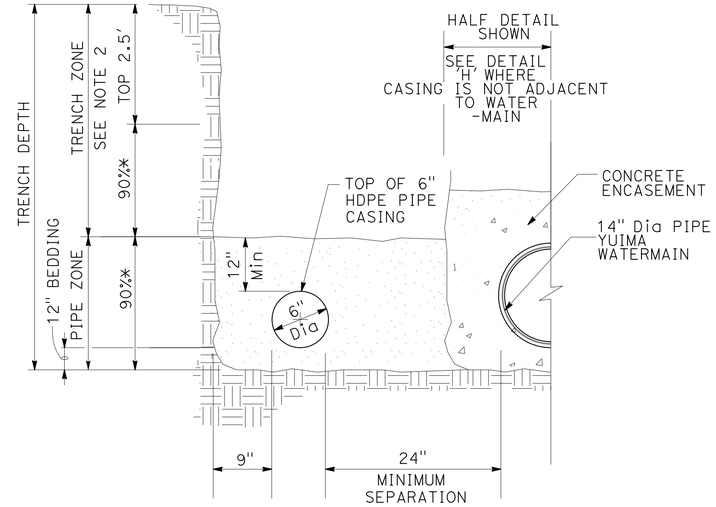

DETAIL 'J'
CASING PIPE ZONE AND TRENCH BACKFILL

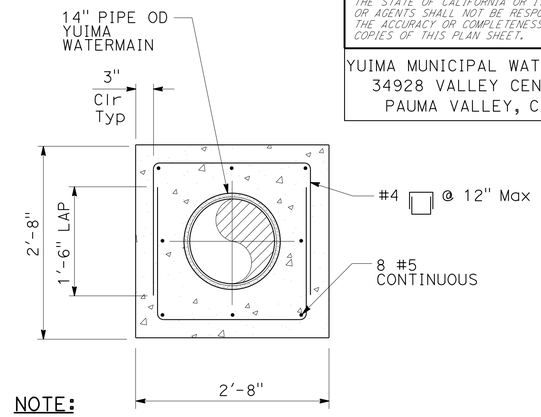

NOTE:

1. ENCASEMENT SHALL BE PLACED AGAINST UNDISTURBED NATURAL GROUND OR FILL COMPACTED TO 90% RELATIVE DENSITY

DETAIL 'E'
CONCRETE ENCASEMENT

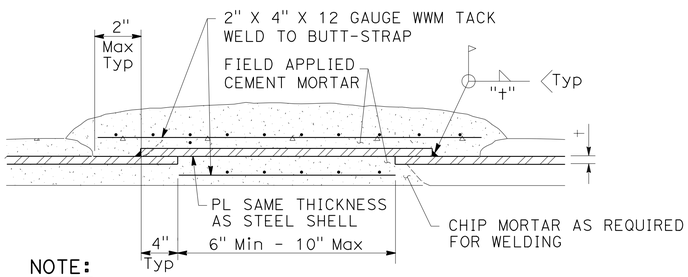

NOTE:

1. TWO HANDHOLES ARE REQUIRED AT EACH BUTT STRAP. SEE TYPICAL HANDHOLE DETAIL BELOW.

DETAIL 'F'
BUTT STRAP CONNECTION

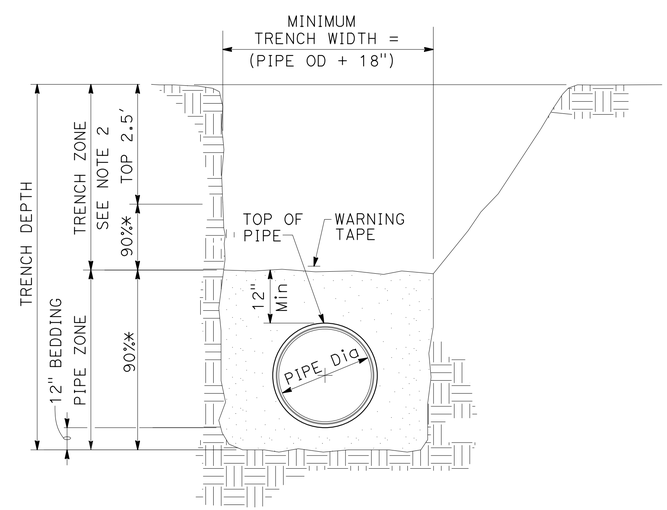

DETAIL 'H'
STANDARD PIPE ZONE AND TRENCH BACKFILL

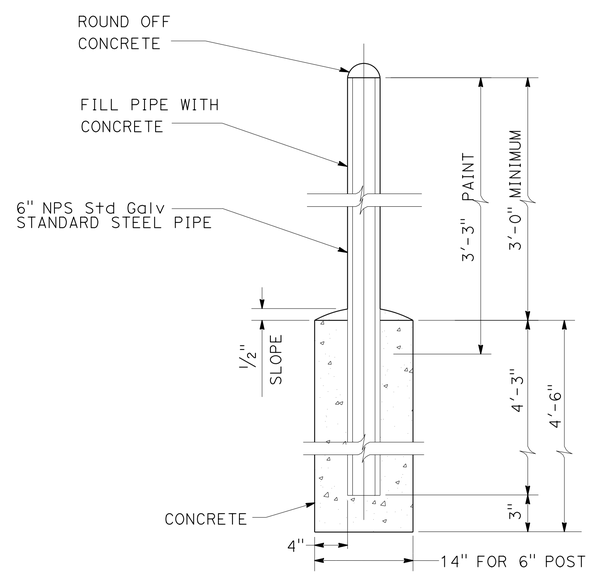

DETAIL 'I'
STANDARD GUARD POST INSTALLATION

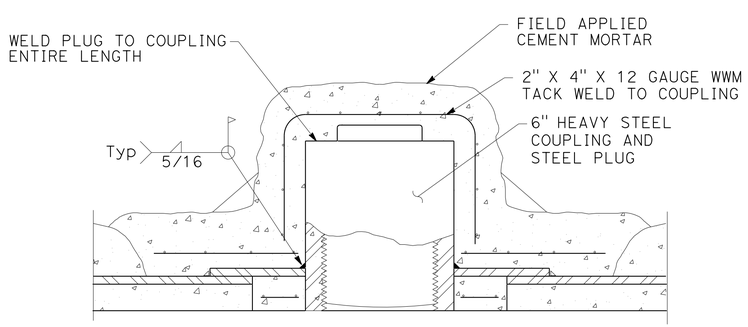

DETAIL 'G'
TYPICAL HANDHOLE

NOTES:

1. PAVING AND SUBGRADE PER TYPICAL CROSS SECTION PLANS.
2. TOP 2.5' SHALL BE COMPACTED TO 95% MINIMUM RELATIVE COMPACTION FOR PAVED AREAS AND 90% MINIMUM RELATIVE COMPACTION FOR UNPAVED AREAS.
3. (*) INDICATES MINIMUM RELATIVE COMPACTION.

NO SCALE

UTILITY DETAILS
UD-2

STATE OF CALIFORNIA - DEPARTMENT OF TRANSPORTATION
Caltrans® UTILITIES ENGINEERING

FUNCTIONAL SUPERVISOR: ABU-BAKR AL-JAFRI
CALCULATED-DESIGNED BY: ARTURO REYES
CHECKED BY: MICHAEL PEDERSEN
REVISED BY
DATE REVISED

LAST REVISION 09-28-16
DATE PLOTTED => 30-SEP-2016
TIME PLOTTED => 13:46

Dist	COUNTY	ROUTE	POST MILES TOTAL PROJECT	SHEET No.	TOTAL SHEETS
11	SD	76	32.6/33.3	97	269

REGISTERED CIVIL ENGINEER DATE 09-21-16

09-26-16
PLANS APPROVAL DATE

REGISTERED PROFESSIONAL ENGINEER
ARTURO REYES
No. C75491
Exp. 06/30/18
CIVIL
STATE OF CALIFORNIA

THE STATE OF CALIFORNIA OR ITS OFFICERS OR AGENTS SHALL NOT BE RESPONSIBLE FOR THE ACCURACY OR COMPLETENESS OF SCANNED COPIES OF THIS PLAN SHEET.

YUIMA MUNICIPAL WATER DISTRICT
34928 VALLEY CENTER ROAD
PAUMA VALLEY, CA 92061

WATER LINE QUANTITIES

SHEET	LINE	STATION LIMITS		REMOVE WATERLINE	14" CML&C STEEL WATER PIPE (0.25" THICK)	CONCRETE ENCASEMENT	6" HDPE PIPE
				LF	LF	CY	LF
U-3	"E-LAT"	0+97.00	4+08.56	240	320	71	220
			TOTAL	240	320	71	220

WATER APPURTENANCES QUANTITIES

SHEET	2" GATE VALVE (CLASS 250)	4" GATE VALVE (CLASS 250)	GUARD POST
	EA	EA	EA
U-3	1	2	1

UTILITY QUANTITIES

UQ-1

STATE OF CALIFORNIA - DEPARTMENT OF TRANSPORTATION
Caltrans UTILITIES ENGINEERING

FUNCTIONAL SUPERVISOR: ABU-BAKR AL-JAFRI
CALCULATED-DESIGNED BY: ARTURO REYES
CHECKED BY: MICHAEL PEDERSEN
REVISED BY
DATE REVISED

LAST REVISION 09-28-16
DATE PLOTTED => 30-SEP-2016
TIME PLOTTED => 13:46

Dist	COUNTY	ROUTE	POST MILES TOTAL PROJECT	SHEET No.	TOTAL SHEETS
11	SD	76	32.6/33.3	98	269

REGISTERED CIVIL ENGINEER 09-20-16 DATE

09-26-16
PLANS APPROVAL DATE

REGISTERED PROFESSIONAL ENGINEER SHAHIN T. ADIBI No. 54839 Exp. 06-30-18 CIVIL STATE OF CALIFORNIA

THE STATE OF CALIFORNIA OR ITS OFFICERS OR AGENTS SHALL NOT BE RESPONSIBLE FOR THE ACCURACY OR COMPLETENESS OF SCANNED COPIES OF THIS PLAN SHEET.

NOTES:

1. EXACT LOCATION OF CONSTRUCTION AREA SIGNS WILL BE DETERMINED BY THE ENGINEER.
2. FEDERAL MANUAL ON UNIFORM TRAFFIC CONTROL DEVICES (MUTCD) SIGN CODES ARE SHOWN UNLESS DESIGNATED BY (CA), INDICATING CALIFORNIA SIGN SPECIFICATIONS ARE USED.
3. EXISTING UTILITIES ARE NOT SHOWN ON THESE PLAN SHEETS. THE CONTRACTOR SHALL VERIFY LOCATIONS OF EXISTING UTILITIES AND ADJUST THE FIELD LOCATION OF THE SIGN POSTS IN CONSULTATION WITH THE ENGINEER.
4. SEE STAGE CONSTRUCTION AND TRAFFIC HANDLING PLANS FOR ADDITIONAL CONSTRUCTION AREA SIGNS.

LEGEND:

(X) = CONSTRUCTION AREA SIGN

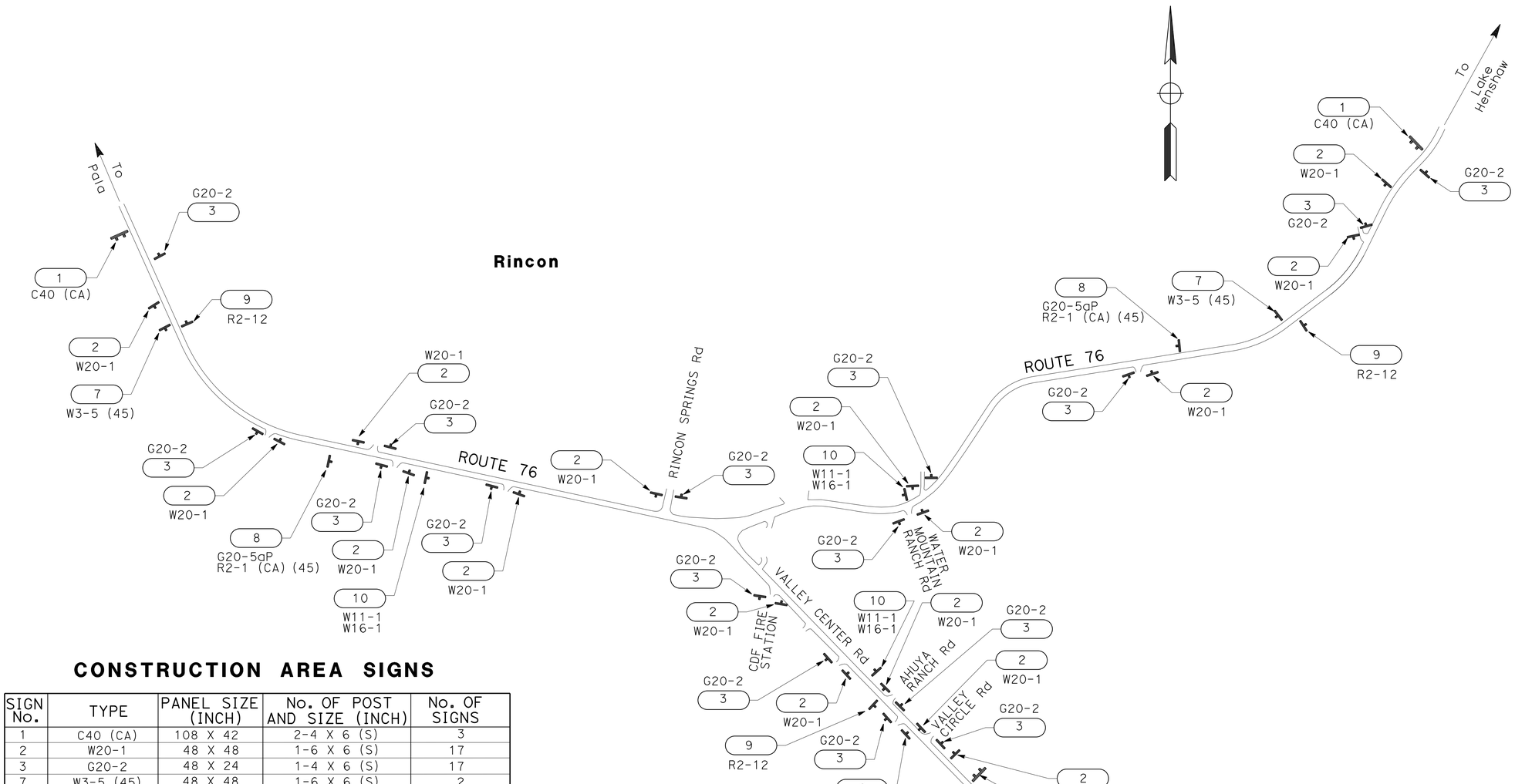

CONSTRUCTION AREA SIGNS

SIGN No.	TYPE	PANEL SIZE (INCH)	No. OF POST AND SIZE (INCH)	No. OF SIGNS
1	C40 (CA)	108 X 42	2-4 X 6 (S)	3
2	W20-1	48 X 48	1-6 X 6 (S)	17
3	G20-2	48 X 24	1-4 X 6 (S)	17
7	W3-5 (45)	48 X 48	1-6 X 6 (S)	2
8	G20-5aP	36 X 24	1-6 X 6 (S)	2
	R2-1 (CA) (45)	36 X 48		
9	R2-12	24 X 36	1-4 X 6 (S)	3
10	W11-1	30 X 30	1-6 X 6 (S)	3
	W16-1P	24 X 30		

(S) DENOTES STATIONARY MOUNTED SIGN

APPROVED FOR CONSTRUCTION AREA SIGN WORK ONLY

CONSTRUCTION AREA SIGNS

NO SCALE

CS-1

STATE OF CALIFORNIA - DEPARTMENT OF TRANSPORTATION
Caltrans® TRAFFIC DESIGN

FUNCTIONAL SUPERVISOR: CAMILLE ABOU FADEL

CALCULATED-DESIGNED BY: SHAHIN ADIBI
CHECKED BY: ROBERT EDEJER

REVISED BY
DATE REVISED

LAST REVISION 09-28-16 DATE PLOTTED => 30-SEP-2016 TIME PLOTTED => 13:46

Dist	COUNTY	ROUTE	POST MILES TOTAL PROJECT	SHEET No.	TOTAL SHEETS
11	SD	76	32.6/33.3	99	269

REGISTERED CIVIL ENGINEER 09-20-16 DATE

09-26-16
PLANS APPROVAL DATE

REGISTERED PROFESSIONAL ENGINEER WENDY M. DANDENEAU No. C76330 Exp. 12/31/16 CIVIL STATE OF CALIFORNIA

THE STATE OF CALIFORNIA OR ITS OFFICERS OR AGENTS SHALL NOT BE RESPONSIBLE FOR THE ACCURACY OR COMPLETENESS OF SCANNED COPIES OF THIS PLAN SHEET.

STAGE 1 CONSTRUCTION:

1. COLD PLANE EXIST RUMBLE STRIP AND PAVE WITH HMA.
2. REMOVE EXISTING PAVEMENT DELINEATION, AND PLACE TEMPORARY TRAFFIC CONTROL DEVICES AND PAVEMENT DELINEATION.
3. REMOVE CONTAMINATED SOIL.
4. COLLECT BOULDERS AND STOCKPILE, SEE LANDSCAPE DETAILS FOR BOULDER COLLECTION AREAS.
5. RELOCATE YUIMA WATER LINE, INSTALL IRRIGATION, AND COMPLETE LANDSCAPING IN CENTER ISLAND OF ROUNDABOUT.
6. CONSTRUCT DRAINAGE FACILITIES, ROUNDABOUT, ROADWAY STRUCTURAL SECTIONS, CURB AND GUTTERS, DIKES, AND SIDEWALKS.
7. ELECTRICAL WORK FOR SIGNS AND LIGHTING.
8. CONSTRUCT BRIDGE BARRIER FOR YUIMA CREEK BRIDGE.
9. PLACE BOULDERS AND OLIVE TREE IN CENTER OF ROUNDABOUT.
10. PLACE PERMANENT DELINEATION AND SIGNS FOR COMPLETED ROADWAY WITHIN THIS STAGE WORK AREA.

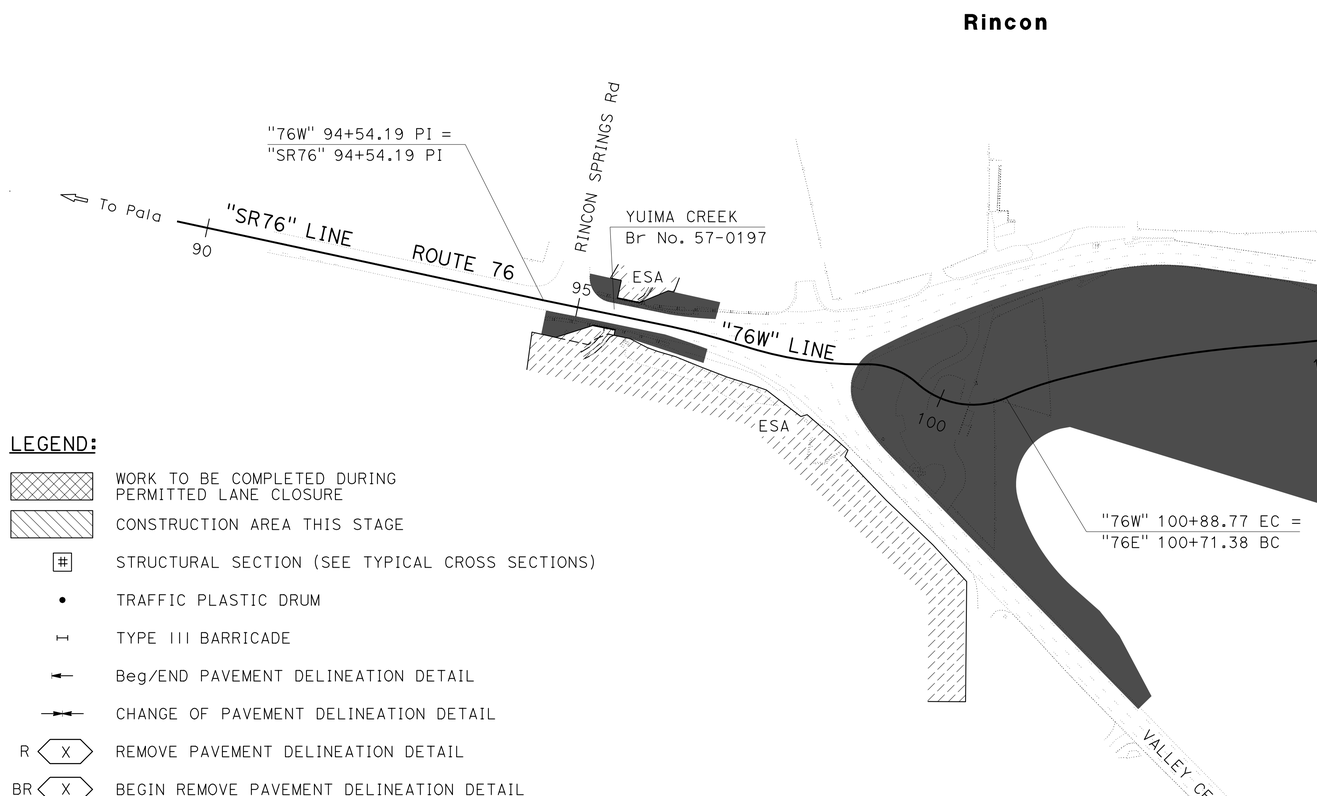

LEGEND:

- WORK TO BE COMPLETED DURING PERMITTED LANE CLOSURE
- CONSTRUCTION AREA THIS STAGE
- # STRUCTURAL SECTION (SEE TYPICAL CROSS SECTIONS)
- • TRAFFIC PLASTIC DRUM
- TYPE III BARRICADE
- Beg/END PAVEMENT DELINEATION DETAIL
- CHANGE OF PAVEMENT DELINEATION DETAIL
- R X REMOVE PAVEMENT DELINEATION DETAIL
- BR X BEGIN REMOVE PAVEMENT DELINEATION DETAIL
- ER X END REMOVE PAVEMENT DELINEATION DETAIL
- T X TEMPORARY PAVEMENT DELINEATION DETAIL
- X CONSTRUCTION AREA SIGN

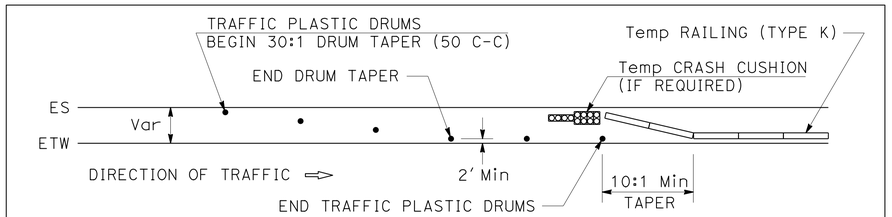

TYPICAL PLACEMENT OF TRAFFIC PLASTIC DRUMS

NO SCALE

APPROVED FOR STAGE CONSTRUCTION AND TRAFFIC HANDLING WORK ONLY

STAGE CONSTRUCTION AND TRAFFIC HANDLING PLAN

STAGE 1 INDEX

NO SCALE

SC-1

REVISED BY	DATE REVISED

CALCULATED-DESIGNED BY: WAYNE NGUYEN
CHECKED BY: WENDY M. DANDENEAU
FUNCTIONAL SUPERVISOR: JOSE LUIS ROBLES

STATE OF CALIFORNIA - DEPARTMENT OF TRANSPORTATION
Caltrans
TRAFFIC PROJECT DEVELOPMENT

LAST REVISION 09-28-16
DATE PLOTTED => 30-SEP-2016
TIME PLOTTED => 13:46

Dist	COUNTY	ROUTE	POST MILES TOTAL PROJECT	SHEET No.	TOTAL SHEETS
11	SD	76	32.6/33.3	100	269

REGISTERED CIVIL ENGINEER 09-20-16 DATE

09-26-16
PLANS APPROVAL DATE

REGISTERED PROFESSIONAL ENGINEER
WENDY M. DANDENEAU
No. C76330
Exp. 12/31/16
CIVIL
STATE OF CALIFORNIA

THE STATE OF CALIFORNIA OR ITS OFFICERS OR AGENTS SHALL NOT BE RESPONSIBLE FOR THE ACCURACY OR COMPLETENESS OF SCANNED COPIES OF THIS PLAN SHEET.

STAGE 2 CONSTRUCTION:

1. REMOVE TEMPORARY TRAFFIC CONTROL DEVICES FROM STAGE 1.
2. CONSTRUCT DRAINAGE FACILITIES, ROADWAY STRUCTURAL SECTIONS, CURB AND GUTTERS, DIKES, AND ROUNDABOUT CONNECTIONS WITHIN THIS STAGE WORK AREA.
3. CONSTRUCT TEMPORARY CONNECTION FOR ROUTE 76 WEST LEG.
4. CONSTRUCT TIE-IN FOR ROUTE 76 EAST LEG, VALLEY CENTER ROAD SOUTH LEG, AND NORTH LEG.
5. PLACE PERMANENT DELINEATION AND SIGNS FOR COMPLETED ROADWAY WITHIN THIS STAGE WORK AREA.

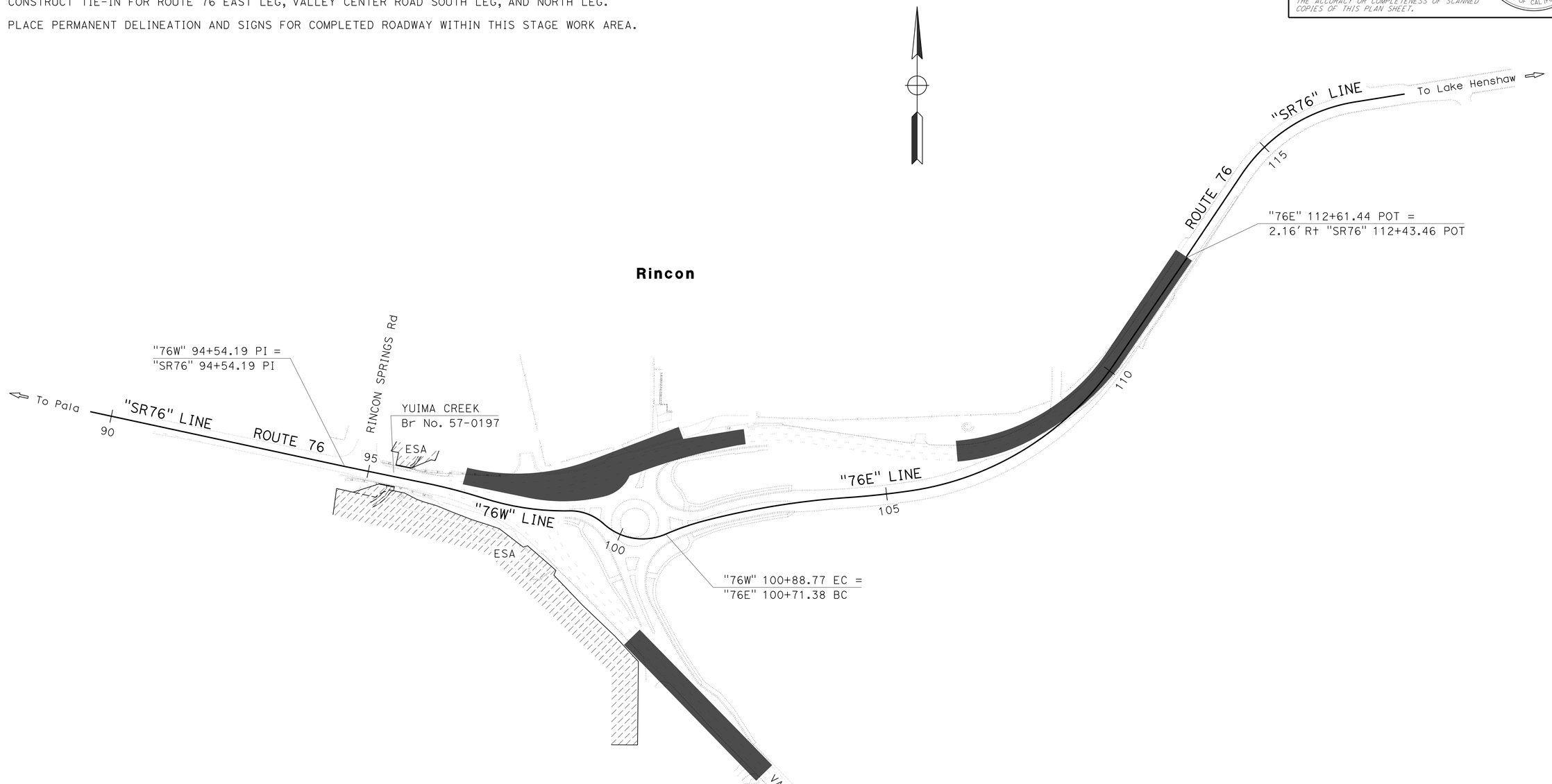

APPROVED FOR STAGE CONSTRUCTION AND TRAFFIC HANDLING WORK ONLY

STAGE CONSTRUCTION AND TRAFFIC HANDLING PLAN
STAGE 2 INDEX

NO SCALE

SC-2

STATE OF CALIFORNIA - DEPARTMENT OF TRANSPORTATION
Caltrans
TRAFFIC PROJECT DEVELOPMENT

FUNCTIONAL SUPERVISOR: JOSE LUIS ROBLES
CALCULATED-DESIGNED BY: WAYNE NGUYEN
CHECKED BY: WENDY M. DANDENEAU
REVISED BY
DATE REVISED

LAST REVISION 09-28-16
DATE PLOTTED => 30-SEP-2016
TIME PLOTTED => 13:46