INFORMATION HANDOUT

For Contract No. 11-2T1904
At 11-SD-15-M5.6/R6.0

Identified by
Project ID 1100020291

MATERIALS INFORMATION

1. Foundation Report for State Route 15 Mid City Commuter Bike Facility, Soil Nail Wall -392, EA 11-2T1901, EFIS 1100020291, dated October 10, 2012.
2. Culvert and Drainage Pipe Recommendations, dated March 14, 2014.
3. Downdrain Recommendations (Addendum), dated September 3, 2014.
4. Geotechnical Design Report, dated November 6, 2014.
5. Water source information, City of San Diego, dated June 30, 2014.

ELECTRONIC FILES

1. The horizontal geometric alignment files in a CAiCE format.
2. The vertical geometric alignment files in a CAiCE format.
3. Cross Sections in a 2D DGN and PDF format.
4. Surface files in a CaiCE format.

FOUNDATION REPORT

State Route 15 Mid City Commuter Bike Facility

Soil Nail Wall-392

11-SD-15 /PM 5.6/R6.0

EA 11-2T1901
EFIS 1100020291

October 10, 2012

Prepared By:

OFFICE OF GEOTECHNICAL DESIGN-SOUTH 2, BRANCH-D
7177 OPPORTUNITY ROAD
SAN DIEGO, CA 92111

State of California
DEPARTMENT OF TRANSPORTATION

Business, Transportation and Housing Agency

Memorandum

Flex your power!
Be energy efficient!

To: Mr. Gerard Chadergian
District 11/SR-15 Corridor Design
Design Manager/District Project Manager

Date: October 10, 2012

File: 11-SD-15-(PM) 5.6/R6.0
EA 11-2T1901
EFIS 1100020291

From: DIVISION OF ENGINEERING SERVICES
Geotechnical Services
Office of Geotechnical Design-South 2, Branch-D

Subject: Amended Foundation Report for Soil Nail Wall-392 on State Route 15 Mid City Commuter Bike Facility.

Pursuant to your request, the Office of Geotechnical Design-South 2 (OGDS2) Branch-D has prepared this amended Foundation Report (FR) for the State Route 15 Mid City Commuter Bike Facility, which extends from Adams Avenue to Camino Del Rio South in the City of San Diego, in San Diego County, California.

This FR documents existing foundation conditions and provides specific seismic and foundation recommendations for Soil Nail Wall-392 (SNW-392). The report defines the geotechnical conditions as evaluated from field investigation data and used in the development of the geotechnical design. This report provides recommendations and specifications for project design and construction.

A District Preliminary Geotechnical Report (DPGR) was prepared prior to the preparation of this FR. No Structure Preliminary Geotechnical Report (SPGR) and/or Preliminary Foundation Report (PFR) for SNW-392 were prepared prior to the preparation of this FR.

A FR was submitted for this project September 27, 2012 titled *State Route 15 Bike Path from Adams Avenue to Camino Del Rio South, Soil Nail Wall-392.* This amended FR supersedes the FR submitted September 27, 2012.

Please ensure that this FR is included in both the District and Structure Construction Resident Engineer (RE) Pending Files. OGDS2 Branch-D staff will be available for further assistance. Should you have any questions or comments regarding this report, please contact OGDS2 Branch-D.

Richard Rusnak P.E.
Transportation Engineer (Civil)
(858) 467-4065

REGISTERED PROFESSIONAL ENGINEER
RICHARD RUSNAK
C 69228
EXP 6/30/2014
CIVIL
STATE OF CALIFORNIA

Brian Hinman P.E.
Senior Transportation Engineer (Civil)
(858) 467-4051

REGISTERED PROFESSIONAL ENGINEER
BRIAN K. HINMAN
No. 55654
Exp. 12/31/12
CIVIL
STATE OF CALIFORNIA

Mike Fordham P.E.
Transportation Engineer (Civil)
(858) 467-3290

REGISTERED PROFESSIONAL ENGINEER
MICHAEL M. FORDHAM
C61341
EXP. 06/13
CIVIL
STATE OF CALIFORNIA

CARBON COPY (CC) LIST

John Stayton	Structures Office Engineer, Office of PS&E
Art Padilla	District Materials Engineer
Abbas Abghari	Office Chief, OGDS2
http://10.160.173.158/	Geotechnical Archive
Structure Construction R.E. Pending File	RE_Pending_File@dot.ca.gov
OGDS2 File Room	7177 Opportunity Road, San Diego, CA 92111

TABLE OF CONTENTS

Section **Page**

Title Sheet i
Letter of Transmittal ii
Carbon Copy (CC) List iii
Table of Contents iv
List of Figures v
List of Tables v
List of Appendices v

1.0 SCOPE OF WORK 1

2.0 PROJECT DESCRIPTION 1

3.0 AS-BUILT FOUNDATION DATA 2

4.0 FIELD INVESTIGATION AND TESTING PROGRAM 3

5.0 LABORATORY TESTING PROGRAM 3

6.0 SITE GEOLOGY AND SUBSURFACE CONDITIONS 3

7.0 SCOUR EVALUATION 5

8.0 CORROSION EVALUATION 5

9.0 SEISMIC EVALUATION 5

10.0 WALL SELECTION AND STABILITY EVALUATION 6

11.0 FOUNDATION RECOMMENDATIONS 7

12.0 NOTES TO DESIGNER 7

13.0 CONSTRUCTION CONSIDERATIONS 7

14.0 EXCEPTIONS TO POLICY 8

15.0 ACTUAL VS. REPORTED SITE CONDITIONS 8

16.0 REFERENCES 9

FIGURES

FIGURE 1: PROJECT LOCATION MAP AND AERIAL PHOTOGRAPH

FIGURE 2: PROJECT GENERAL PLAN

FIGURE 3: PROJECT TYPICAL CROSS SECTIONS

FIGURE 4: PROJECT PROFILE

FIGURE 5: GEOLOGIC OVERVIEW MAP

FIGURE 6: GEOLOGIC CROSS SECTIONS

FIGURE 7: GEOLOGIC PROFILE

FIGURE 8: CITY OF SAN DIEGO, GEOLOGIC HAZARDS AND FAULT MAP

TABLES

TABLE 1: REGIONAL ACTIVE FAULT(S)

TABLE 2: RETAINING WALL DESIGN PARAMETERS

TABLE 3: SOIL STRENGTH DESIGN PARAMETERS

TABLE 4A-4B: SOIL NAIL DESIGN PARAMETERS

APPENDICES

APPENDIX I LOG OF TEST BORING AND SITE DATA

APPENDIX II FIELD EXPLORATION DATA

APPENDIX III LABORATORY TEST DATA

APPENDIX IV ANALYSES AND CALCULATIONS

APPENDIX V PROJECT MEMORANDA

1.0 SCOPE OF WORK

This Foundation Report (FR) has been prepared by the Office of Geotechnical Design-South 2 (OGDS2), Branch-D to address the geotechnical design considerations for Soil Nail Wall-392 (SNW-392). The wall is a feature within the State Route 15 (SR-15) Mid City Commuter Bike Facility, which extends from Adams Avenue to the Camino Del Rio South, in the City of San Diego, San Diego County, California, hereafter referred to as the project. Figure 1 depicts the project location and an aerial photograph of the project site. Figure 2 is the SNW-392 general plan provided by Caltrans Headquarters Design and utilized in the preparation of this FR.

The purpose of this FR is to document subsurface geotechnical conditions, provide engineering evaluation of site conditions, and provide recommendations relevant to the design and construction of SNW-392. This report also establishes a geotechnical baseline to be used in assessing the existence and scope of changed site conditions. The geotechnical information, evaluations, recommendations, and advisories contained in this FR supersede any information that may have been previously conveyed through correspondences or documents concerning the retaining wall addressed herein.

The geotechnical investigation consisted of site reconnaissance, research of archived resources, subsurface exploration, engineering analyses, and retaining wall design. A list of documents utilized to prepare this FR is contained in Section 16.0. Coordinates, bearings, and grid distances are based on CCS, NAD83, Zone 6 (Epoch 1991.35). Unless otherwise noted, all Stations are referenced to the "BF1 LINE" depicted in Figure 2.

This FR was prepared in accordance with the guidelines set forth in the *Caltrans: Foundation Report Preparation for Retaining Walls, July 2010.* A District Preliminary Geotechnical Report (DPGR) titled *Bike Path Adjacent to Interstate-15 from Adams Avenue to Camino Del Rio South* was prepared prior to the preparation of this FR. No Structure Preliminary Geotechnical Report (SPGR) and/or Preliminary Foundation Report (PFR) were prepared prior to the preparation of this FR.

A FR for SNW-392 was submitted to the District Project Manager September 27, 2012 titled *State Route 15 Bike Path from Adams Avenue to Camino Del Rio South, Soil Nail Wall-392.* This amended FR supersedes the FR submitted September 27, 2012.

2.0 PROJECT DESCRIPTION

The project is on SR-15 between Post Mile (PM) 5.6 and R6.0. The project is encompassed by the much larger SR-15 Mid-City Bus Rapid Transit (BRT) Project, EA 11-2T1301/EFIS 1100000456, between PM R3.8 and R6.0. Features constructed for the project are generally configured to accommodate the freeway expansion and ultimate footprint of the SR-15 Mid-City BRT Project. Therefore, this FR is applicable to the segment of the SR-15 Mid-City BRT Project that coincides with the project limits.

Between Adams Avenue and Camino Del Rio South, northbound SR-15 descends approximately three hundred-feet (300ft) in elevation at a moderate gradient from San Diego Mesa near the communities of City Heights, Normal Heights, and Kensington into Mission Valley. The proposed bike facility will connect the urban communities on San Diego Mesa to established bike transit routes in Mission Valley and beyond.

In the project area, SR-15 is a multi-lane urban freeway with mixed flow lanes, auxiliary lanes, paved shoulders, and a paved and earthen median. The freeway alignment follows the tread of Ward Canyon, an incised canyon joined by several smaller tributary canyons and drainages. The margins of the existing freeway facility abut the canyon walls such that steep natural terrain, steep cut slopes, and canyon fill slopes border much of the freeway. SR-15 consists of a ten-lane Portland Cement Concrete (PCC) freeway with PCC shoulders. The existing freeway lanes are twelve-feet (12ft) wide with eight-foot (8ft) wide inside shoulders and ten-foot (10ft) wide outside shoulders. The existing median is approximately

thirty-feet (30ft) wide and consists of PCC shoulders, as well as PCC and unpaved areas between the median barriers that divide the northbound and southbound lanes. The on and off ramp lanes and shoulders are paved with asphalt concrete (AC).

Urban runoff from the project location is conveyed in a system of gutters, underground -drains, and pipes that discharge into a main pipe approximately twenty to thirty-feet (20ft-30ft) below the lanes of SR-15. The system conveys the urban runoff to the north and ultimately discharges into Mission Valley and the San Diego River.

The bike facility will be aligned with the outside shoulder of the northbound lanes of SR-15. The bike facility will be paved and striped to accommodate two way bicycle traffic. The bike facility must accommodate maintenance vehicles with room for cyclists to pass any active maintenance zones. Therefore, a minimum level width of roughly twelve-feet (12ft) is desirable for the bike facility corridor.

Due to the steep terrain within the narrow corridor, numerous retaining structures and steepened embankments, including SNW-392, will be necessary to accommodate the bike facility and provide the desired width and elevation within the available corridor.

SNW-392 is proposed to be a soil nail wall. Refer to Section 10.0 for the data pertaining to wall type selection. SNW-392 will accommodate the elevated alignment of the bike facility adjacent to the Adams Avenue northbound onramp. SNW-392 will roughly parallel SR-15 between Station 392+79.00 and Station 395+00. The wall will be approximately two hundred and twenty one-feet (221ft) in length with a maximum design height of approximately fourteen-feet (14ft). SNW-392 will be located on the slope above proposed Retaining Wall-391 (RW-391) and existing RW-33 and RW-33A.

RW-391 is proposed to be a Caltrans Standard Type-1 Retaining Wall approximately one hundred and ninety nine-feet (199.0ft) in length with a maximum design height of approximately sixteen-feet (16.0ft). Information pertaining to the subsurface geotechnical conditions, engineering evaluation of site conditions, and recommendations relevant to the design and construction of RW-391 are not included in this FR. Caltrans standard retaining walls proposed for the project, including RW-391, are addressed in a separate Geotechnical Design Report.

Figure 1 depicts the approximate location and alignment of SNW-392. Figure 2 is the general plan with the wall layout provided by Caltrans District 11 Design. Typical cross sections, perpendicular to the wall alignment, are shown in Figure 3. Figure 4 is the profile sheet provided by Caltrans District 11 Design and utilized in the preparation of this FR.

3.0 AS-BUILT FOUNDATION DATA

SNW-392 will be located approximately three hundred-feet (300ft) to the north of the Adams Avenue Overcrossing (OC). The Adams Avenue OC, Bridge No. 57-0500, was originally constructed in 1960 and widened in 1994. The 1994 As-Built LOTB for the Adams Avenue OC is included in Appendix I.

Two (2) retaining walls, RW-33 and RW-33A, which were constructed during the SR-15 widening in 1996, are located along the Adams Avenue northbound onramp. RW-33 is a Soil Nail Wall that connects to RW-33A. RW-33A is a Caltrans Standard Type-2 Retaining Wall. Combined, RW-33 and RW-33A are approximately three hundred and twelve-feet (312ft) in length and eight to eleven and one half-feet (8 to 11.5ft) in height. The retaining walls accommodate the severe grade difference between the onramp and the developed properties on the canyon rim above. The retaining walls also accommodate an onramp meter enforcement area. As-Built plans and LOTB for RW-33 and RW-33A are included in Appendix I.

As-built plans from 1996 and existing utility plans prepared by CH2MHill for the SR-15 Mid City BRT Project depict telephone and electrical utilities located in the vicinity of SNW-392.

4.0 FIELD INVESTIGATION AND TESTING PROGRAM

Limited geologic mapping along the alignment of SNW-392 was conducted as necessary to verify previously mapped site geology and to delineate the soil conditions anticipated to impact the design and construction of SNW-392.

Abundant archived data on geology and soil conditions was acquired from reports for other projects in the area. The lateral continuity of the horizontally layered sedimentary formations and exposures of geologic outcrops on existing slopes allow for the accurate characterization of site soils without an intensive subsurface investigation. . Due to this abundance of data, the limited geologic mapping and number of exploratory borings performed was judged to be sufficient to accurately characterize the prevailing soil conditions.

A subsurface investigation was conducted in May 2012 by CH2MHill. Three (3) boring, A-12-036, A-12-037, and A-12-038, were developed along the portion of the project alignment adjacent to the SR-15 Mid-City BRT Project. These three boring records are not in the alignment of the SNW-392, but were evaluated to confirm the accuracy of the field mapping and archived geologic data. The boring records are included in Appendix II.

5.0 LABORATORY TESTING PROGRAM

Due to the abundance of archived data that was acquired for other projects in the area, no laboratory testing program was conducted by OGDS2 for this project.

6.0 SITE GEOLOGY AND SUBSURFACE CONDITIONS

This section describes the project site geology and subsurface conditions. The project site geology was interpreted based on previous field investigations, current field investigation, geotechnical archives, as-built documents, and published reports.

The project geologic overview map is displayed in Figure 5. The geology depicted in the map was acquired from the *California Division of Mines and Geology, Geology of the San Diego Metropolitan Area, California: La Mesa Quadrangles, Kennedy, 1975*. The map depicts an overview of the geologic formations present along the highway cut slope at the proposed project site and surrounding area. The geologic overview map was modified to depict the approximate project alignment and delineate the presence of fill along the project alignment. Figure 6 depicts the geology of cross sections along the SNW-392 alignment. Figure 7 depicts a profile of the geology beneath the existing grade along the alignment of SNW-392

Regional Geology and Topography

The project site lies within the coastal plain section of the Peninsular Ranges Geomorphic Province of California. The Peninsular Ranges are a group of mountain ranges that extend nine hundred-miles (900mi) from the Transverse Ranges and the Los Angeles Basin in Southern California to the southern tip of Mexico's Baja California (Wikipedia 1). The southern segment of the Peninsular Ranges in Southern California is referred to as the San Diego Embayment. The San Diego Embayment consists of thick sequences of marine and non-marine sediments. The sedimentary rocks within the San Diego Embayment form an eastward thinning wedge of continental margin deposits that extend from Oceanside to the US-Mexico border.

The project alignment lies in the La Mesa Quadrangle. The project is located in the northbound lanes of SR-15 near the top of a large natural canyon that descends from Adams Avenue to Mission Valley/Interstate-8 (I-8). The communities of Normal Heights and Kensington are located on the mesa above and to the south, east, and west of the project. Relatively flat mesa terrain is located at the top of the canyon. SNW-392 will be located on the east side of SR-15 along the west facing slope of the

through cut. The approximate elevation of the top of the slope at the project site is three hundred and sixty five-feet (365ft) above mean sea level (MSL).

Soil and Rock

The geology underlying the mesa is comprised of a succession of relatively flat lying sedimentary formations. The Linda Vista formation (Ql) generally forms the mesa top and overlies the San Diego Formation (Tsd). The layered geology exposed in Ward Canyon is generally comprised of the San Diego Formation (Tsd), which overlies the Mission Valley Formation (Tmv), which lies conformably over the Stadium Conglomerate (Tst). Archived data and the recollection of OGDS2 staff indicate that Artificial Fill, the Lindavista Formation, and the San Diego Formation are present along the alignment of SNW-392. The presence of fill was verified by potholing.

Artificial Fill (Qaf) Artificial fill in the project area appear to be derived from material excavated from nearby cuts in the surrounding formations. Artificial fills encountered during the field investigation were determined to meet the requirements of engineered fill that conforms to Caltrans standards. Archived data indicates that debris may be encountered in the fill.

Lindavista Formation (Ql) consists of nearshore marine and nonmarine sediments deposited on a wave-cut platform. It is predominantly composed of moderate reddish-brown interbedded sandstone and conglomerate.

The *San Diego Formation (Tsd)* is comprised of marine, fine to medium-grained, yellowish-brown, poorly indurated sandstone with cobble conglomerate, thin beds bentonite, marl, and brown mudstone.

The *Mission Valley Formation (Tmv)* is comprised of marine, lagoonal, and non-marine, soft, friable, fine to medium grained, light olive gray sandstone with cobble conglomerate tongues identical to the lithology of the Stadium Conglomerate (Tst).

The *Stadium Conglomerate (Tst)* consists of a massive cobble conglomerate with dark yellowish-brown coarse-grained sandstone matrix and dispersed lenses of fossiliferous, crossbedded sandstone. (Kennedy/Peterson 1975)

Faulting

No active faults have been identified that transect the alignment of SNW-392. Figure 5 and Figure 8 depict a fault within Ward Canyon to the north the SNW-392 alignment and within the project alignment. Figure 8 describes the fault as a “potentially active, inactive, presumed inactive, or activity unknown fault.”

The closest regional active fault to the project site is the Newport Inglewood Rose Canyon Fault (San Diego Section) running on a north-northwest trend and located approximately four-miles (4.0mi) to the west of the project site. Data pertaining to the regional active faults are included in Table 1. There is a potential that regional earthquakes will produce ground motion at the project site due to the proximity of active and potentially active faults.

Pertinent Soil Conditions or Geologic Hazards

The project site is underlain by competent fill, sandstone, siltstone formations and conglomerate with no significantly unfavorable or adverse structure. Adverse conditions such as sanitary landfill, collapsible, or expansive soils have not been observed along the proposed alignment of SNW-392.

Depth to Bedrock

Sedimentary formation is located at the ground surface along the alignment of SNW-392 from Station 392+79 to 394+20. The sedimentary formation is estimated to be approximately twenty-feet (20ft) below the fill in between stations 394+20 to 395+00.

Groundwater

The 1996 LOTB indicate that wet soils were encountered approximately twenty-feet (20.0ft) below ground surface in the project area. OGDS2 staff present during the widening of SR-15 in 1996 conveyed that groundwater in the form of seeps was observed during construction of SR-15 and in the vicinity of RW-33 and RW-33A. Review of archived data indicates that underground drains were recommended to drain perched groundwater. The underground drains were to be installed at the surface of the original ground prior to the placement of fill between Stations 395+60.36 and 419+50 along the Route 15 Line.

7.0 SCOUR EVALUATION

SNW-392 is not located along a stream course. A scour evaluation for the retaining wall is not applicable to this project.

8.0 CORROSION EVALUATION

Caltrans currently considers a site to be corrosive to foundation elements if one or more of the following conditions exist: Chloride concentration is greater than or equal to five hundred-parts per million (500ppm), sulfate concentration is greater than or equal to two thousand-parts per million (2,000ppm), or the pH is five and one-half (5.5) or less.

Based on a review of archived data that included soil corrosion data from like formations on adjacent projects, the site is considered corrosive.

9.0 SEISMIC EVALUATION

This section includes the seismic study and addresses ground motion, soil liquefaction, surface fault rupture potential, seismic settlement, and seismically induced slope instability of the project site. The Caltrans Acceleration Response Spectra (ARS) Online Tool Version 1.0.4 (Caltrans ARS Online Tool) was used to determine pertinent seismic data. The Caltrans ARS Online Tool is a web based tool that calculates both deterministic and probabilistic ARS for any location in California based on the criteria set for in *Caltrans, Seismic Design Criteria Version 1.6, November 2010, Appendix B* (SDC Appendix B).

According to Figure B.12 in SDC Appendix B, Soil Profile Type C has Standard Penetration Test (SPT) results with the number of blows per twelve-inches (12in) greater than fifty (N>50). The archived LOTB developed along the alignments of the RW-33 and RW-33A had SPT results that were generally greater than fifty (50) blows per twelve-inches (12in) in sedimentary formation. Therefore, as defined in SDC Appendix B, the Soil Profile Type is “C” for sedimentary formation.

The latitude and longitude input into the Caltrans ARS Online Tool were 32.769811 and –117.112069, respectively. The shear wave velocity used in the ARS online tool was five hundred and sixty-meters per second (560m/s), which correspond to Soil Profile Type C. The closest regional active fault as indicated by the Caltrans ARS Online tool is the Newport Inglewood Rose Canyon Fault (San Diego Section). Data pertaining to the regional active faults are provided in Table 1.

Based on the results produced by the Caltrans ARS Online Tool, the anticipated Peak Ground Acceleration (PGA) for the project site, which is the Spectral Acceleration at a period of zero-seconds (0sec), is thirty nine one hundredths-gravity (0.39g). The results produced by the Caltrans ARS Online Tool and the Caltrans ARS Online Tool QA/QC Checklist are included in Appendix IV.

The project site is located within sedimentary formation and well above any groundwater table. There is no potential for liquefaction at the project site.

Since active faults are in the vicinity of the project site, ground motion will be produced by an earthquake. However, since no active faults transect the project site, there is no potential for surface fault rupture at the project site.

The approximate elevation of the top of the slope at the project site is three hundred and sixty five-feet (365ft) above MSL. There is no potential for the project site to be impacted by a tsunami.

SNW-392 will be constructed within dense sedimentary formation and engineered fill. There is no potential for seismically induced settlement.

Features that would create a potential for seismically induced instability in the form of landslides, mudslides, and/or rockslides as it relates to the safety and performance of SNW-392 do not exist at the project site.

Pseudo static modeling and slope stability analyses were conducted to assure that SNW-392 will meet stability requirements in a seismic event. Stability analyses are discussed in Section 10.0.

10.0 WALL SELECTION AND STABILITY EVALUATION

SNW-392 will be a soil nail retaining wall located along the east side of SR-15 and to the north of Adams Avenue. The wall will be approximately two hundred and twenty one-feet (221ft) in length with a maximum design height of approximately fourteen-feet (14ft). SNW-392 will retain a cut that will encroach further into an existing cut slope that is inclined as steep as one and one half horizontal to one vertical (1.5H:1V) or flatter. Fill and sedimentary formation underlies the slope. A residential property exists along the top of slope. The bike facility will extend between the toe of SNW-392 to the top of proposed RW-391 and the top of existing RW-33 and RW-33A.

A temporary back cut to facilitate the construction of any cast-in-place retaining wall of the proposed height would require considerable encroachment into the adjacent property. A self-shoring, top-down stage construction retaining wall system is appropriate for the site constraints, slope geometry, and sedimentary formation that exist at the proposed wall location. A soil nail wall is the most economical of such retaining wall systems. The retaining wall design parameters as provided by the project development team and as determined through the evaluation of site soils are presented in Table 2.

A global stability evaluation was performed to assure the stability of the combined retaining wall and slope configuration. The proposed configuration was determined to meet Caltrans criteria for both static and pseudo-static/seismic stability.

The soil nail wall design and global slope stability analyses for SNW-392 were performed using SnailWin 3.10 and STEDWIN with GSTABL7 v2.0. Both internal stability and global stability were evaluated by modeling various wall heights and adjoining slopes. Both static and pseudo-static/seismic stability analyses were conducted for the retaining wall and slope configuration. The influence of external loading such as the weight of buildings and possible transient loads above the wall were factored into the stability analyses. The criteria found to control the design length of the soil nails was the need to provide for global stability of the retaining wall and slope. The soil strength design parameters utilized in the analyses are presented in Table 3. The soil strength design parameters used for the analyses and construction of RW-33 and RW-33A were utilized for the analyses of SNW-392. The soil nail design parameters utilized in the analyses are presented in Table 4A and Table 4B. The graphic results of the stability analyses are presented in Appendix IV.

The earth retained by a soil nail wall must move in order to activate resisting forces along the nails. Minor deflection of the wall face and minor deformation of the earth behind the wall face should be

anticipated. The wall face deflection and maximum limit of adjacent ground surface deformation may be estimated based on guidelines presented in the *Manual for Design and Construction Monitoring of Soil Nail Walls, Publication No. FHWA-SA-96-069R*. A horizontal and vertical deflection of approximately one-half-inch (0.5in) should be anticipated for the upper wall face. The horizontal limit of potential ground deformation behind the wall face is anticipated to be approximately equal to the wall height. These estimated wall movements are not expected to impact the integrity of any existing facilities or utilities behind the wall.

11.0 FOUNDATION RECOMMENDATIONS

OGDS2 recommends that SNW-392 be designed and constructed as a soil nail retaining wall. The parameters that may be used for the structure design are presented in Table 2, Table 3, Table 4A, and Table 4B.

The recommended length of soil nails, the design pullout resistance values, and the strength and diameter of the reinforcing bars are provided in Table 4A and Table 4B.

Project site soils are considered corrosive. Soil nails should be designed accordingly.

12.0 NOTES TO DESIGNER

As currently planned, some soil nails will extend beyond the current freeway right-of-way. The soil nail anchor lengths should be considered when determining the right-of-way requirements.

The designs of SNW-392 should incorporate a drainage system behind the wall face such as vertical drainage strips connected to outlet pipes.

The placement of bioswales or other water detention features that may promote the infiltration of surface water in the vicinity of the retaining wall should be avoided. Features that promote infiltration could have an adverse impact on the performance of the retaining wall.

A soil nail retaining wall may be constructed with either a sculpted shotcrete or cast-in-place facade. Sculpted shotcrete is typically more economical.

13.0 CONSTRUCTION CONSIDERATIONS

The sedimentary formation and fill found along the alignment of SNW-392 may generally be excavated using standard excavation equipment. Nail shafts may generally be drilled with conventional nail drilling equipment.

Cobbles exist within the sedimentary formation and fill in and around the SNW-392 alignment. Excavation and drilling equipment capable of cutting through cobble should be utilized.

The estimated volume of grout necessary to fill drilled nail shafts should be increased to account for irregularly shaped shafts created by the displacement of cobble.

The occurrence of caving soils is anticipated to be minimal and is not anticipated to significantly impact retaining wall construction.

The occurrence of groundwater in the form of seeps may impact retaining wall construction.

A horizontal and vertical deflection of about one-half-inch (0.5in) should be anticipated for the upper wall face at the tallest portion of the retaining wall. The horizontal limit of potential ground deformation behind the wall face is anticipated to be about equal to the wall height.

The construction of the soil nail wall is not anticipated to have any adverse effect on existing facilities or utilities. However, a pre-construction survey of the adjacent private property and structure should be conducted to document the condition of the facility prior to construction.

Survey monuments should be placed on the ground surface a horizontal distance of twenty-feet (20ft) behind the wall face. The position of these monuments should be measured and recorded prior to any wall excavation and periodically throughout the project in order to monitor and document ground deformation behind the retaining wall.

The Contractor may elect to perform excavation stability testing to verify his proposed lift height and duration of exposure. Wall stability test zones (test zones) refer to locations along the wall alignment where the soil parameters are different. The site exploration discovered varying zones within fill and sedimentary formation that will host the wall; therefore, two (2) test zones are identified. The test zones Stations are identified in Table 2, Table 3, Table 4A, and Table 4B.

Production nails may be used as proof test nails. Eight-percent (8%) of the total nails installed should be proof tested. The proof tested nails should be distributed throughout the wall face.

Two (2) verification test nails must be installed and tested in each test zone.

RW-391 and RW-392 are in a tiered configuration between Station 392+79 and Station 392+99. The one half horizontal to one vertical (0.5:1) temporary cut necessary to construct the RW-391will not impact the portion of the slope that will be cut to construct RW-392. It is recommended that RW-391 be constructed prior to RW-392 to provide a working pad for the construction of RW-392. If the contractor proposes to build RW-392 prior to RW-391, the contractor should provide analysis showing the stability of the temporary construction slope geometry.

14.0 EXCEPTIONS TO POLICY

The number of exploratory borings performed for the investigation of the site is less than prescribed by generic guidelines offered by the Federal Highway Administration and others. Due to the availability of archived data and the abundant geologic exposures available for inspection in the existing cut slope and the lateral continuity of the sedimentary formation that will host the project features, the number of exploratory borings performed was judged to be sufficient to accurately characterize the prevailing soil conditions.

15.0 ACTUAL VS. REPORTED SITE CONDITIONS

The recommendations contained in this report are based on specific project information regarding structure type and locations that have been provided to OGDS2. If any conceptual changes are made during final project design, OGDS2 should review those changes to determine if these foundation recommendations are still applicable.

The information used to characterize the geotechnical conditions in this area was gathered from project plans, pertinent maps, geologic literature, archived reports, field reconnaissance, subsurface investigation, testing, and engineering analysis. Project design features may change, and localized soil conditions encountered during construction grading and excavation may vary from those described in this report. If suspected differing site conditions are encountered during construction, or if construction difficulties related to soil conditions are encountered, a representative of OGDS2 should be consulted to assist with the assessment of the prevailing geotechnical conditions and to assist in formulating appropriate strategies to facilitate project completion. Any questions regarding the above recommendations should be directed to the attention of Richard Rusnak, (858) 467-4065, Mike Fordham, (858) 467-3290, or Brian Hinman, (858) 467-4051.

16.0 REFERENCES

California Division of Mines and Geology, *Geology of the San Diego Metropolitan Area, California: Del Mar, La Jolla, Point Loma, La Mesa, Poway, and SW1/4 Escondido 7/12-Minute Quadrangles*, Bulletin 200, 1975

Caltrans, *Corrosion Guidelines*, Version 1.0, September 2003

Caltrans, *District Preliminary Geotechnical Report, Bike Path Adjacent to Interstate 15 from Adams Avenue to Camino Del Rio South*, 11-SD-15, PM 5.6/R6.0, EA 11-2T1900, EFIS 1100020291, September 2011

Caltrans, *Geotechnical Design Report, In San Diego from 0.6 Mile North of Route 805 to 0.3 Mile South of Route 8*, 11-SD-15, PM M3.4/R5.6, EA 11-048661, October 1994

Caltrans, *Memorandum, Slope Soil Classification*, April 1995

Caltrans, *Memorandum, Select Cut Slope and Retaining Wall Recommendations*, 11-SD-15, PM 3.4/5.6, EA 11-048661, May 1995

Caltrans, *Memorandum, Geotechnical Review of Proposed Sound Barriers*, 11-SD-15, KP 8.1/9.6, EA 11-0486H1, January 1999

Caltrans, *Memorandum, Cutoff Wall for Pipe Culvert Headwall at Sound Barrier No. 2*, 11-SD-15, KP 8.1-9.6, EA 11-0486H1, February 1999

Caltrans, *Memorandum, Foundation Materials at Soundwall 1*, 11-SD-15, PM R4.7/R6.1, EA 11-048663, March 2010

Caltrans, *Memorandum for Maintenance Support Pertaining to the Pavement Distress and Apparent Settlement in Interstate 15, North of Adams Avenue*, EA 11-375201, March 2009

Caltrans, *Geotechnical Services Design Manual*, Version 1.0, August 2009

Caltrans, *Memorandum to Designers 20-10, Surface Fault Rupture Displacement Hazard Investigations*, January 2007

Caltrans, *Seismic Design Criteria Version 1.6, Appendix B*, November 2010

Caltrans, *Soil and Rock Logging, Classification and Presentation Manual*, 2010

CH2MHill, *Draft Materials Report, State Route 15 Mid-City Bus Rapid Transit Project, State Route 15 between Interstate 805 and Interstate 8, San Diego, CA*, 11-SD-15, PM R3.8/R6.0, EA 2T1301, August 2012

CH2MHill, *Draft Geotechnical Design Report, State Route 15 Mid-City Bus Rapid Transit Project, State Route 15 between Interstate 805 and Interstate 8, San Diego, CA*, 11-SD-15, PM R3.8/R6.0, EA 2T1301, August 2012

CH2MHill, *Draft Foundation Report, State Route 15 Mid-City Bus Rapid Transit Project, State Route 15 between Interstate 805 and Interstate 8, San Diego, CA*, 11-SD-15, PM R3.8/R6.0, EA 2T1301, August 20123

FHWA, *Manual for Design and Construction Monitoring of Soil Nail Walls*, Publication No. FHWA-SA-96-069R

Moore & Taber AGRA, *Geotechnical Study, I-15 Construction Between Interstate 8 and Interstate 805, San Diego, CA*, October 1994

Wikipedia 1: http://en.wikipedia.org/wiki/Peninsular_Ranges

Wikipedia 2: http://en.wikipedia.org/wiki/Eocene

Wikipedia 3: http://en.wikipedia.org/wiki/Pleistocene

FIGURES

Foundation Report
State Route 15 Mid City Commuter Bike Facility
Soil Nail Wall-392
EA 11-2T1901/EFIS 1100020291

FIGURE 1: PROJECT LOCATION MAP AND AERIAL PHOTOGRAPH

DIST	COUNTY	ROUTE	POST MILES TOTAL PROJECT	SHEET No.	TOTAL SHEETS
11	SD	15	5.6/R6.0		

REGISTERED CIVIL ENGINEER X DATE

PLANS APPROVAL DATE

REGISTERED PROFESSIONAL ENGINEER RENEE ANDERSON No. 61040 Exp. 12-31-2012 CIVIL STATE OF CALIFORNIA

The State of California or its officers or agents shall not be responsible for the accuracy or completeness of electronic copies of this plan sheet.

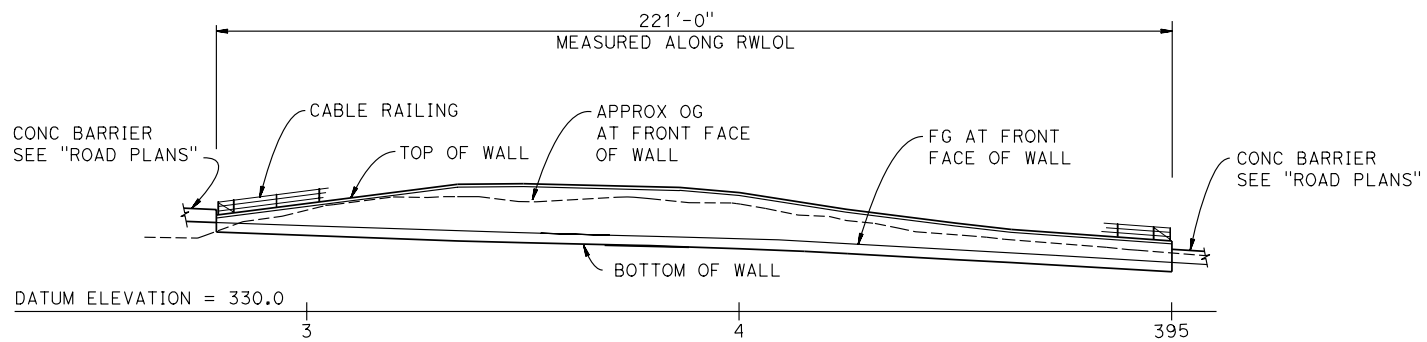

MIRRORED DEVELOPED ELEVATION

1" = 20'

NOTES:

1. Existing Electric Pole. Soil Nails must clear existing light pole
2. Existing electrolier

LEGEND:

-·-·-·-·- Indicates existing structure

——— Indicates new construction

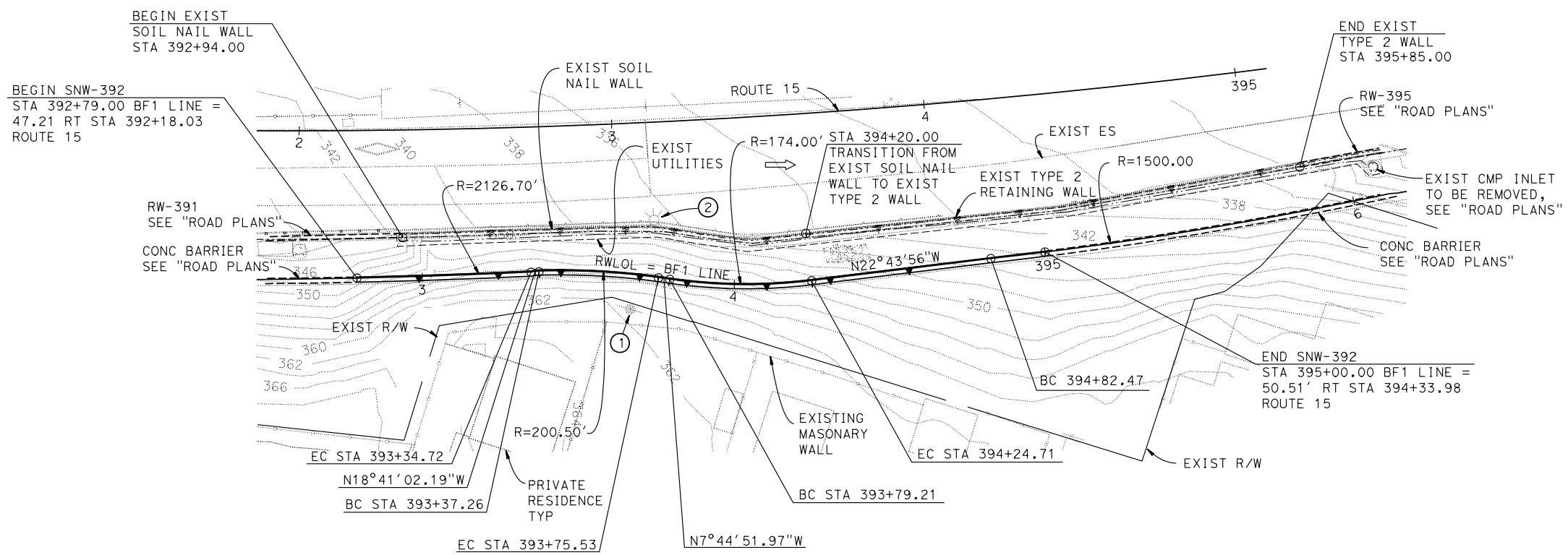

PLAN

1" = 20'

P & Q

NOTE:
THE CONTRACTOR SHALL VERIFY ALL CONTROLLING FIELD DIMENSIONS BEFORE ORDERING OR FABRICATING ANY MATERIAL.

DANIEL T. ADAMS, DESIGN ENGINEER	DESIGN	BY R. ANDERSON	CHECKED M. VO	LOAD & RESISTANCE FACTOR DESIGN	LIVE LOADING: HL93 W/"LOW-BOY"; PERMIT DESIGN VEHICLE
	DETAILS	BY R. KIRKLAND	CHECKED M. VO	LAYOUT BY R. ANDERSON	CHECKED M. VO
	QUANTITIES	BY R. ANDERSON	CHECKED M. VO	SPECIFICATIONS BY X	PLANS AND SPECS COMPARED X

ORIGINAL SCALE IN INCHES FOR REDUCED PLANS 0 1 2 3

STATE OF CALIFORNIA DEPARTMENT OF TRANSPORTATION

DIVISION OF ENGINEERING SERVICES STRUCTURE DESIGN DESIGN BRANCH 10

UNIT: 3589
PROJECT NUMBER & PHASE: 1100020291
CONTRACT NO.: 11-2T1900

BRIDGE NO. 57E0121
POST MILE M5.668

MID CITY BIKE FACILITY SNW-392
GENERAL PLAN

DISREGARD PRINTS BEARING EARLIER REVISION DATES

REVISION DATES 8-28-12 9-11-12 8-29-12

SHEET 1 OF X

USERNAME => s136549 DATE PLOTTED => 28-SEP-2012 TIME PLOTTED => 15:27

STRUCTURES DESIGN GENERAL PLAN SHEET (ENGLISH) (REV.09-01-10)

FILE => rw 392agp01.dgn

FIGURE 2
PROJECT GENERAL PLAN

DIST	COUNTY	ROUTE	POST MILES TOTAL PROJECT	SHEET No.	TOTAL SHEETS
11	SD	15	5.6/R6.0		

REGISTERED CIVIL ENGINEER X DATE

PLANS APPROVAL DATE

REGISTERED PROFESSIONAL ENGINEER RENEE ANDERSON No. 61040 Exp. 12-31-2012 CIVIL STATE OF CALIFORNIA

The State of California or its officers or agents shall not be responsible for the accuracy or completeness of electronic copies of this plan sheet.

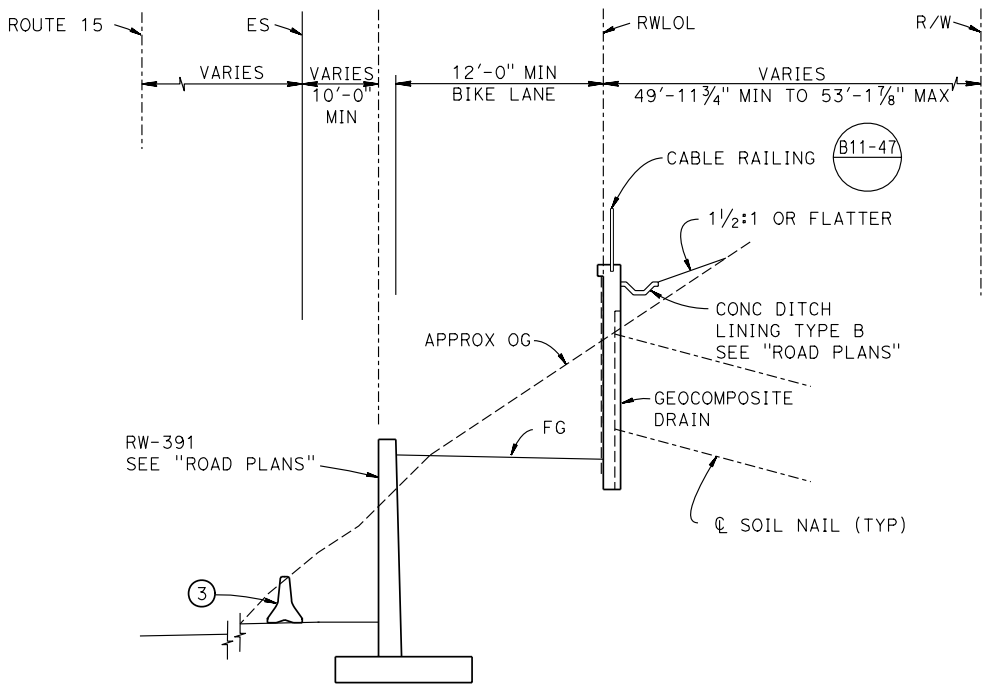

TYPICAL SECTION

1" = 5'

STA 392+79.00 to 392+94.00

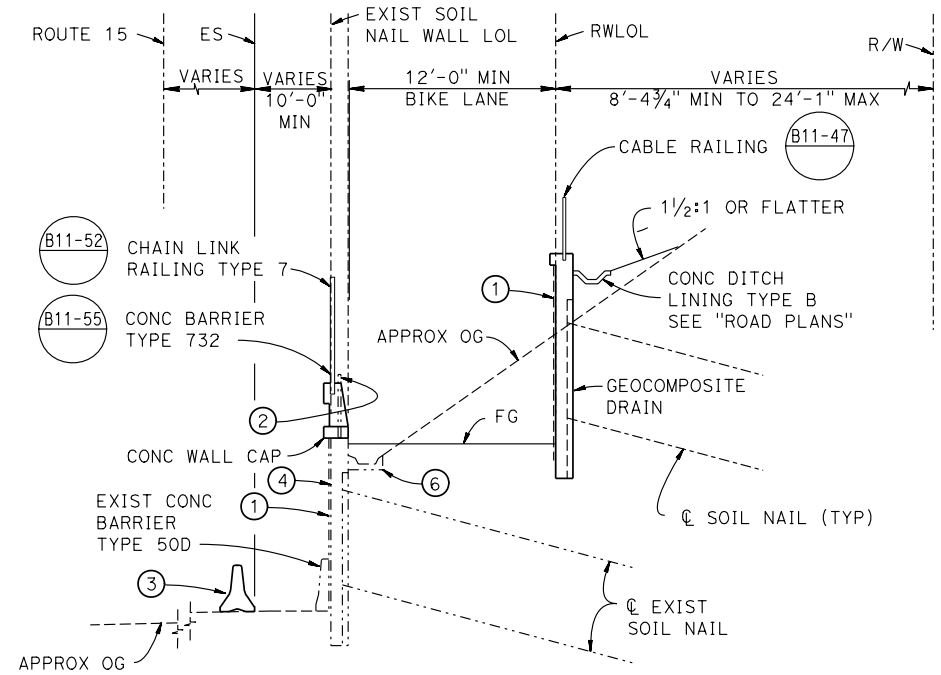

TYPICAL SECTION

1" = 5'

STA 392+94.00 TO STA 394+20.00

NOTES:

1. Architectural Treatment "Fractured Fin Texture"
2. Existing Cable Railing to be removed
3. Temporary Railing Type K, see "ROAD PLANS"
4. Existing Soil Nail Wall
5. Existing Type 2 Wall
6. Existing concrete gutter to be removed

INDEX TO PLANS

Sheet No.	Title
1	GENERAL PLAN
2	INDEX TO PLANS
3	STRUCTURE PLAN
4	TYPICAL SECTION
5	SOIL NAIL DETAILS
6	TEST NAIL DETAILS
7	WALL DRAIN DETAILS
8	DETAILS NO. 1
9	LOG OF TEST BORINGS
10	
11	
12	

RETAINING WALL ELEVATIONS

STATION	ELEV TOP OF WALL	ELEV OG (±)	ELEV FG
392+79	352.27	348.51	350.58
393+00	354.30	353.43	349.83
393+25	358.18	356.43	349.00
393+50	359.55	355.38	348.21
393+75	358.93	356.42	347.49
394+00	357.47	354.87	346.81
394+25	353.59	351.02	345.68
394+50	350.43	347.74	344.26
394+75	348.09	345.61	342.84
395+00	346.31	343.52	341.34

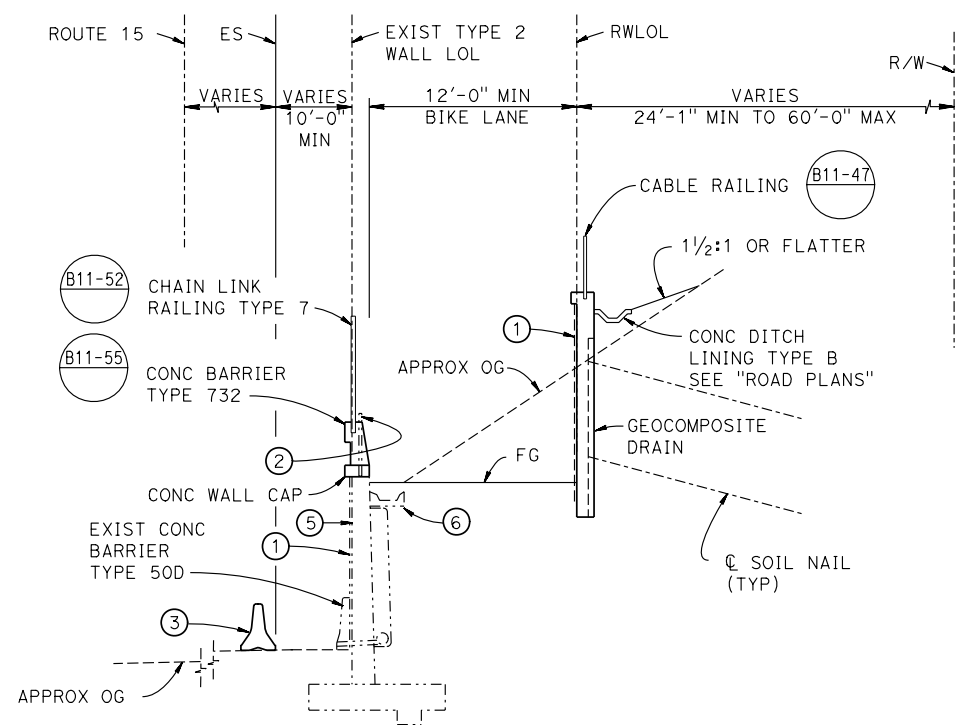

TYPICAL SECTION

1" = 5'

STA 394+20.00 to 395+00.00

STANDARD PLANS DATED 2010

A10A	ACRONYMS AND ABBREVIATIONS (SHEET 1 OF 2)
A10B	ACRONYMS AND ABBREVIATIONS (SHEET 2 OF 2)
A10C	SYMBOLS (SHEET 1 OF 2)
A10D	SYMBOLS (SHEET 2 OF 2)

STANDARD PLAN SHEET NO.

DETAIL NO.

NOTE:
THE CONTRACTOR SHALL VERIFY ALL CONTROLLING FIELD DIMENSIONS BEFORE ORDERING OR FABRICATING ANY MATERIAL.

	BY	CHECKED
DESIGN	R. ANDERSON	M. VO
DETAILS	R. KIRKLAND	M. VO
QUANTITIES	R. ANDERSON	M. VO

STATE OF CALIFORNIA DEPARTMENT OF TRANSPORTATION

DIVISION OF ENGINEERING SERVICES STRUCTURE DESIGN DESIGN BRANCH 10

BRIDGE NO. 57E0121 POST MILE M5.668

MID CITY BIKE FACILITY SNW-392

INDEX TO PLANS

STRUCTURES DESIGN DETAIL SHEET (ENGLISH) (REV. 09-01-10)

ORIGINAL SCALE IN INCHES FOR REDUCED PLANS 0 1 2 3

UNIT: 3589
PROJECT NUMBER & PHASE: 1100020291 CONTRACT NO.: 11-2T1900

DISREGARD PRINTS BEARING EARLIER REVISION DATES

REVISION DATES 6-28-12 7-24-12 8-28-12 9-11-12 SHEET 2 OF X

FILE => rw 392alt p02.dgn

USERNAME => s136549 DATE PLOTTED => 28-SEP-2012 TIME PLOTTED => 15:27

FIGURE 3
PROJECT TYPICAL CROSS SECTIONS

DIST	COUNTY	ROUTE	POST MILES TOTAL PROJECT	SHEET No.	TOTAL SHEETS
11	SD	15	5.6/R6.0		

REGISTERED CIVIL ENGINEER X DATE

PLANS APPROVAL DATE

REGISTERED PROFESSIONAL ENGINEER RENEE ANDERSON No. 61040 Exp. 12-31-2012 CIVIL STATE OF CALIFORNIA

The State of California or its officers or agents shall not be responsible for the accuracy or completeness of electronic copies of this plan sheet.

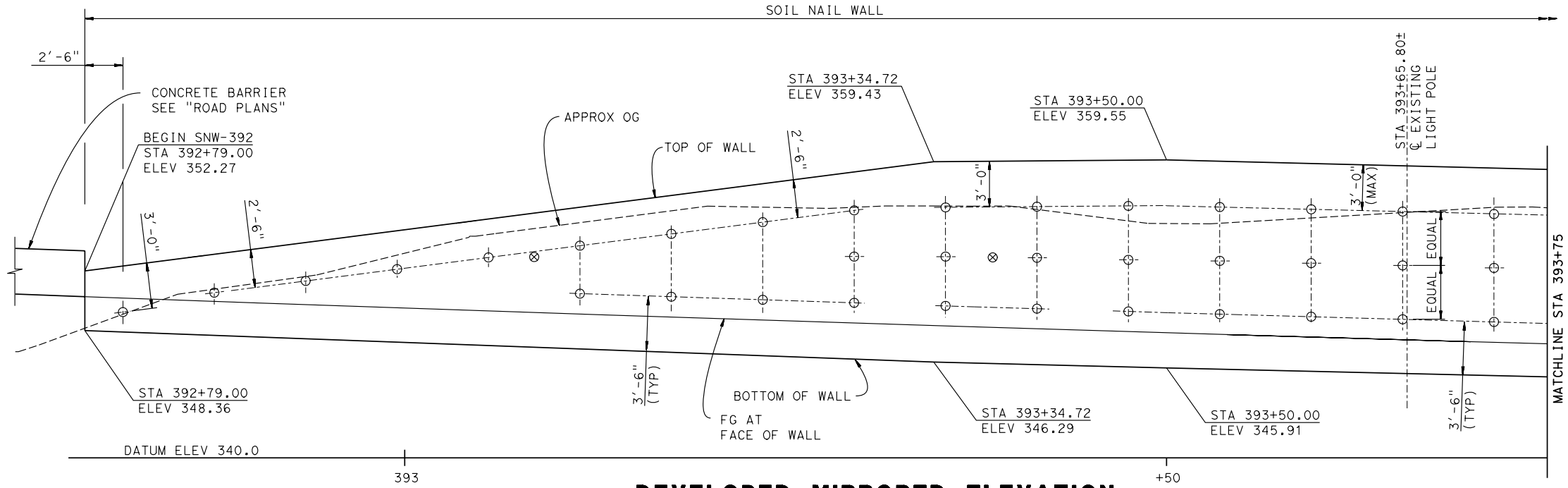

DEVELOPED MIRRORED ELEVATION

1/4" =2012-09-28

NOTE:
CABLE RAILING NOT SHOWN
FOR CLARITY

NOTES:

1. Horizontal spacing of Soil Nails is 6'-0". Place Soil Nails normal to RWLOL and at -15° inclination.
2. Soil Nail Length = 12'-0"
3. OG and FG are shown at RWLOL

LEGEND:

○ Indicates Soil Nail Bearing Plate location

⊗ Indicates Test Nail location. Location may be adjusted by the Engineer.

----- Indicates Soil Nail Profile Line.

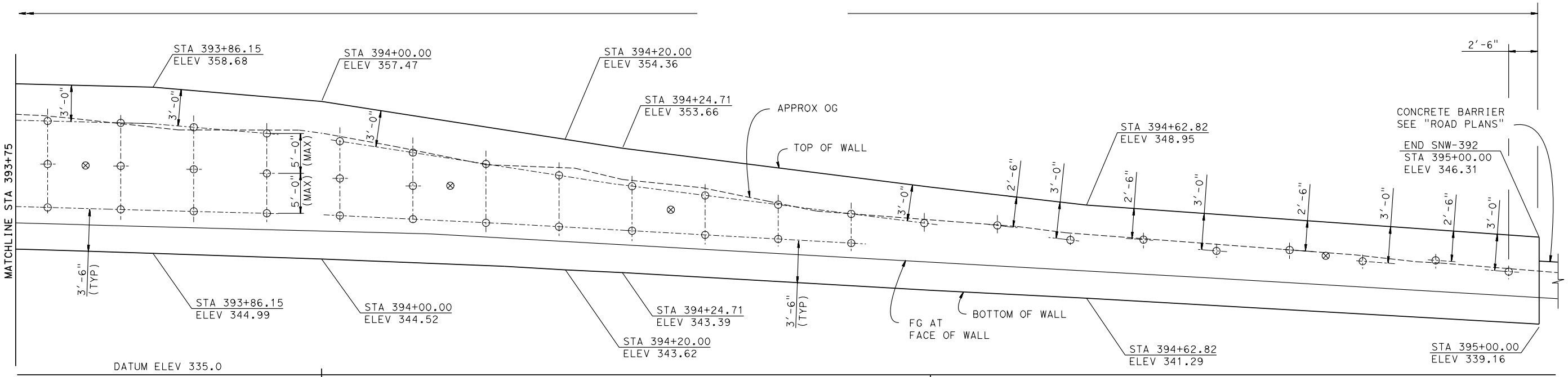

NOTE:
THE CONTRACTOR SHALL VERIFY ALL CONTROLLING FIELD DIMENSIONS BEFORE ORDERING OR FABRICATING ANY MATERIAL.

DEVELOPED MIRRORED ELEVATION

1/4" = 1'-0"

	BY	CHECKED
DESIGN	R. ANDERSON	M. VO
DETAILS	R. KIRKLAND	M. VO
QUANTITIES	R. ANDERSON	M. VO

STATE OF CALIFORNIA
DEPARTMENT OF TRANSPORTATION

DIVISION OF ENGINEERING SERVICES
STRUCTURE DESIGN
DESIGN BRANCH 10

BRIDGE NO. 57E0121
POST MILE M5.668

MID CITY BIKE FACILITY SNW-392
STRUCTURE PLAN

STRUCTURES DESIGN DETAIL SHEET (ENGLISH) (REV. 09-01-10)

ORIGINAL SCALE IN INCHES FOR REDUCED PLANS 0 1 2 3

UNIT: 3589
PROJECT NUMBER & PHASE: 1100020291
CONTRACT NO.: 11-2T1900

DISREGARD PRINTS BEARING EARLIER REVISION DATES

REVISION DATES 6-28-12 7-24-12 8-29-12 9-11-12

SHEET 3 OF X

FILE => rw 392csp03.dgn

USERNAME => s136549 DATE PLOTTED => 28-SEP-2012 TIME PLOTTED => 15:27

FIGURE 4
PROJECT PROFILE

GEOLOGY OF THE LA MESA QUADRANGLE
SAN DIEGO COUNTY, CALIFORNIA

by Michael P. Kennedy and G. L. Peterson

SCALE 1:24 000

1 MILE — 1000 0 1000 2000 3000 4000 5000 6000 7000 FEET — 1 KILOMETER

CONTOUR INTERVAL 20 FEET
DOTTED LINES REPRESENT 10-FOOT CONTOURS
DATUM IS MEAN SEA LEVEL

1975

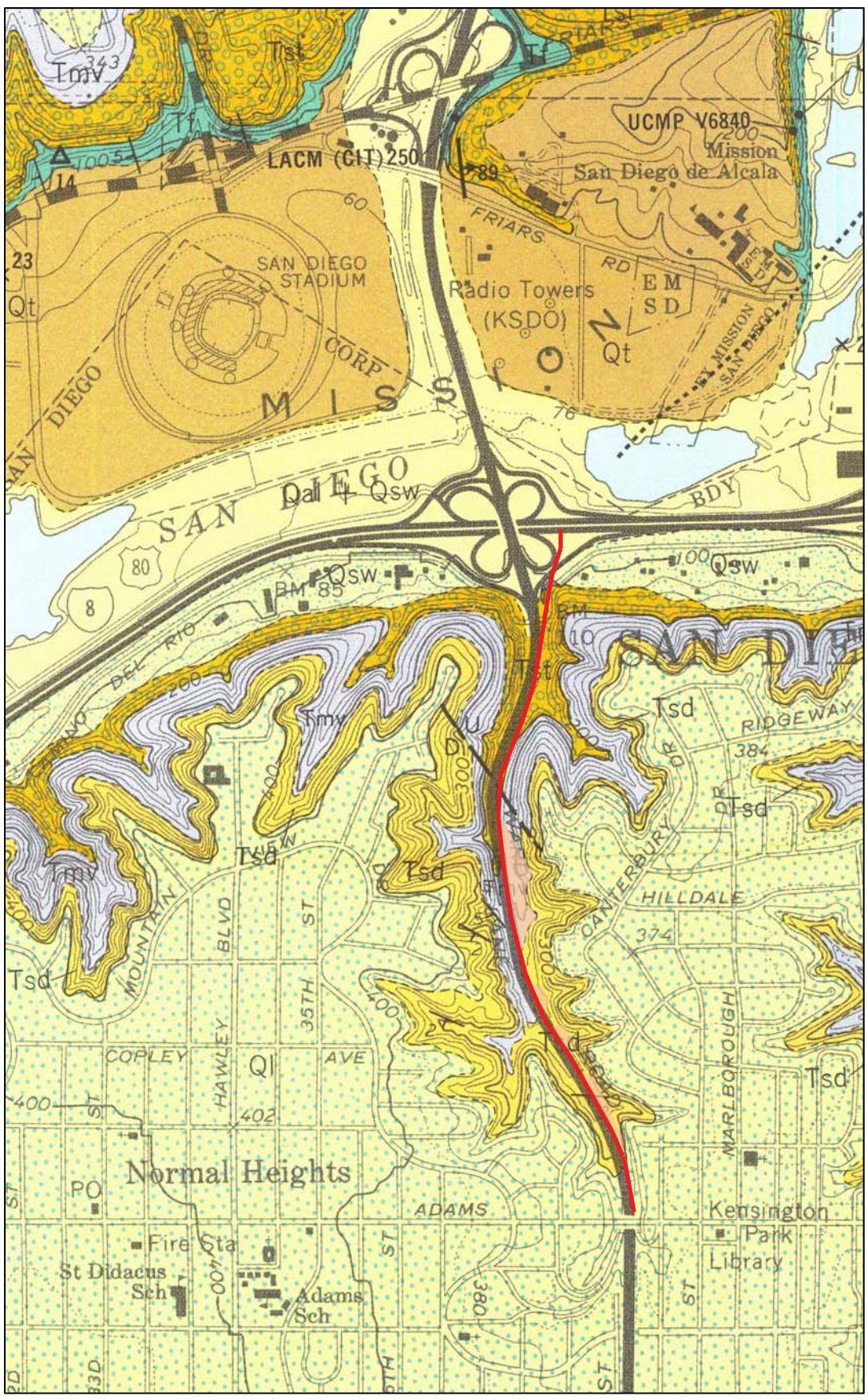

EXPLANATION

QUATERNARY — Holocene

Qsw / Qal + Qsw — Alluvium and Slopewash
Qsw, Slopewash; Qal & Qsw, Alluvium and Slopewash undifferentiated.

Qls — Landslide deposits

QUATERNARY — Pleistocene

Qt — Stream-terrace deposits

Ql — Lindavista Formation

TERTIARY — Pliocene

Tsd — San Diego Formation

TERTIARY — Eocene

Tp / Tmv / Tst — Poway Group
Tp, Pomerado Conglomerate; Tmv, Mission Valley Formation; Tst, Stadium Conglomerate. Conglomerate marked by circle pattern.

Tf — Friars Formation
Conglomerate marked by circle pattern.

CRETACEOUS

Kg — Granite rocks
Undifferentiated granitic rocks of the southern California batholith.

JURASSIC

Jsp — Santiago Peak Volcanics

SYMBOLS

Contact
(dashed where approximately located; dotted where concealed)

Fault, showing dip
(dashed where approximately located; dotted where concealed; U, upthrown side; D, downthrown side).

Strike and dip of bedding in sedimentary rocks.

Strike and dip of bedding in metasedimentary rocks.

Qls — Landslide with direction of movement indicated by arrows.

12-16 — Clay sample locality.

12-23 — Pit, quarry, or mine.

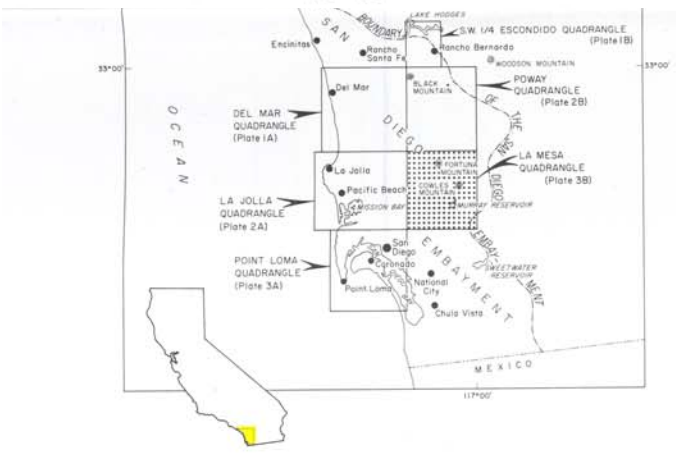

UTM GRID AND 1967 MAGNETIC NORTH DECLINATION AT CENTER OF SHEET

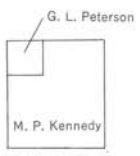

Index map showing authorship of geologic mapping 1972

FIGURE 5: GEOLOGIC OVERVIEW MAP

DIST	COUNTY	ROUTE	POST MILES TOTAL PROJECT	SHEET No.	TOTAL SHEETS
11	SD	15	5.6/R6.0		

REGISTERED CIVIL ENGINEER X DATE

PLANS APPROVAL DATE

REGISTERED PROFESSIONAL ENGINEER RENEE ANDERSON No. 61040 Exp. 12-31-2012 CIVIL STATE OF CALIFORNIA

The State of California or its officers or agents shall not be responsible for the accuracy or completeness of electronic copies of this plan sheet.

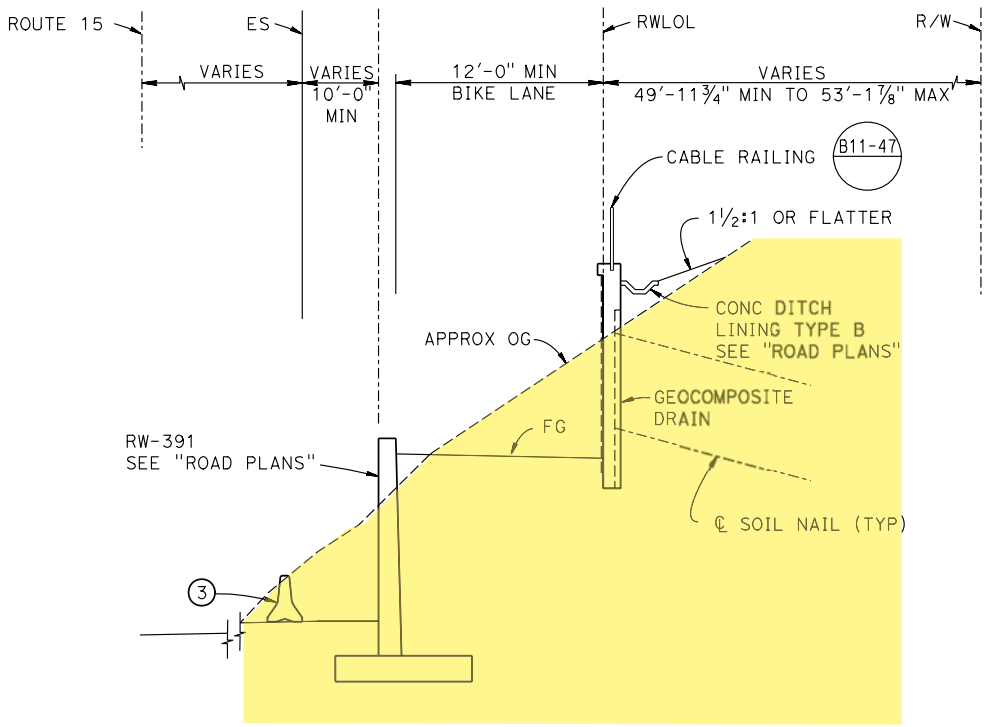

TYPICAL SECTION

1" = 5'

STA 392+79.00 to 392+94.00

Sedimentary Formation

Engineered fill

RETAINING WALL ELEVATIONS

STATION	ELEV TOP OF WALL	ELEV OG (±)	ELEV FG
392+79	352.27	348.51	350.58
393+00	354.30	353.43	349.83
393+25	358.18	356.43	349.00
393+50	359.55	355.38	348.21
393+75	358.93	356.42	347.49
394+00	357.47	354.87	346.81
394+25	353.59	351.02	345.68
394+50	350.43	347.74	344.26
394+75	348.09	345.61	342.84
395+00	346.31	343.52	341.34

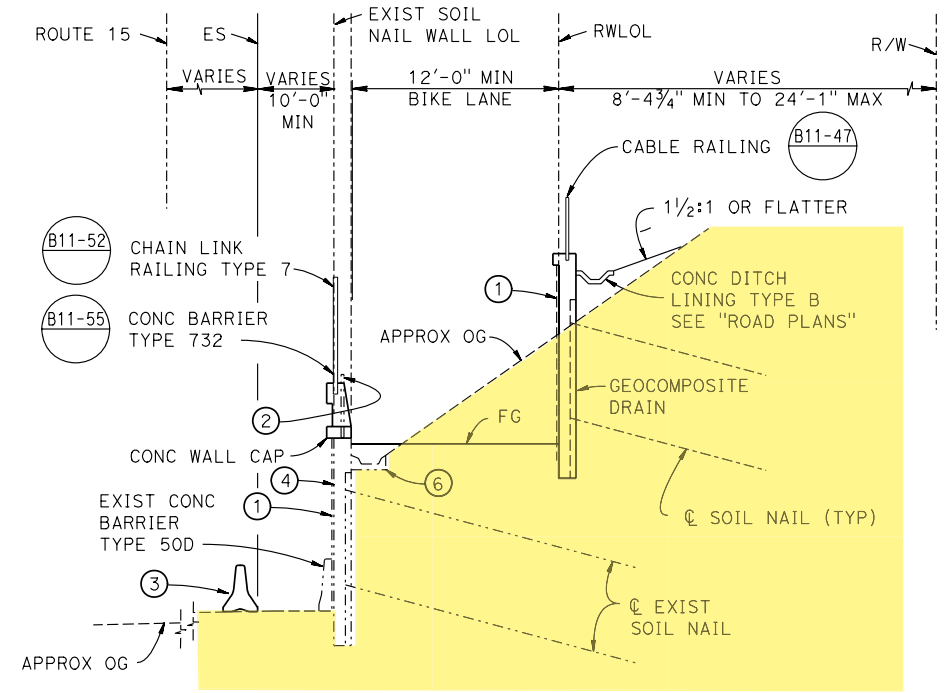

TYPICAL SECTION

1" = 5'

STA 392+94.00 TO STA 394+20.00

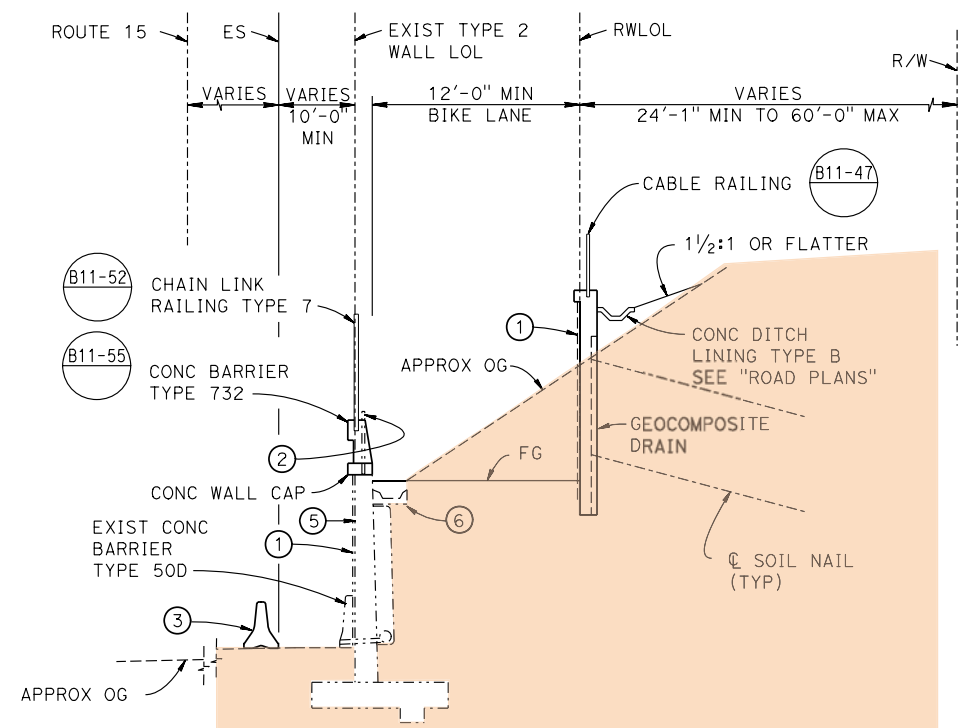

TYPICAL SECTION

1" = 5'

STA 394+20.00 to 395+00.00

NOTES:

1. Architectural Treatment "Fractured Fin Texture"
2. Existing Cable Railing to be removed
3. Temporary Railing Type K, see "ROAD PLANS"
4. Existing Soil Nail Wall
5. Existing Type 2 Wall
6. Existing concrete gutter to be removed

INDEX TO PLANS

Sheet No.	Title
1	GENERAL PLAN
2	INDEX TO PLANS
3	STRUCTURE PLAN
4	TYPICAL SECTION
5	SOIL NAIL DETAILS
6	TEST NAIL DETAILS
7	WALL DRAIN DETAILS
8	DETAILS NO. 1
9	LOG OF TEST BORINGS
10	
11	
12	

STANDARD PLANS DATED 2010

A10A	ACRONYMS AND ABBREVIATIONS (SHEET 1 OF 2)
A10B	ACRONYMS AND ABBREVIATIONS (SHEET 2 OF 2)
A10C	SYMBOLS (SHEET 1 OF 2)
A10D	SYMBOLS (SHEET 2 OF 2)

STANDARD PLAN SHEET NO.

DETAIL NO.

NOTE:
THE CONTRACTOR SHALL VERIFY ALL CONTROLLING FIELD DIMENSIONS BEFORE ORDERING OR FABRICATING ANY MATERIAL.

	BY	CHECKED
DESIGN	R. ANDERSON	M. VO
DETAILS	R. KIRKLAND	M. VO
QUANTITIES	R. ANDERSON	M. VO

STATE OF CALIFORNIA DEPARTMENT OF TRANSPORTATION

DIVISION OF ENGINEERING SERVICES STRUCTURE DESIGN DESIGN BRANCH 10

BRIDGE NO. 57E0121 POST MILE M5.668

MID CITY BIKE FACILITY SNW-392

INDEX TO PLANS

STRUCTURES DESIGN DETAIL SHEET (ENGLISH) (REV. 09-01-10)

ORIGINAL SCALE IN INCHES FOR REDUCED PLANS 0 1 2 3

UNIT: 3589
PROJECT NUMBER & PHASE: 1100020291 CONTRACT NO.: 11-2T1900

DISREGARD PRINTS BEARING EARLIER REVISION DATES

REVISION DATES 6-28-12 7-24-12 8-28-12 9-11-12 SHEET 2 OF X

FILE => rw 392alt p02.dgn

USERNAME => s136549 DATE PLOTTED => 28-SEP-2012 TIME PLOTTED => 15:27

FIGURE 6
GEOLOGIC CROSS SECTIONS

DIST	COUNTY	ROUTE	POST MILES TOTAL PROJECT	SHEET No.	TOTAL SHEETS
11	SD	15	5.6/R6.0		

REGISTERED CIVIL ENGINEER X DATE

PLANS APPROVAL DATE

REGISTERED PROFESSIONAL ENGINEER RENEE ANDERSON No. 61040 Exp. 12-31-2012 CIVIL STATE OF CALIFORNIA

The State of California or its officers or agents shall not be responsible for the accuracy or completeness of electronic copies of this plan sheet.

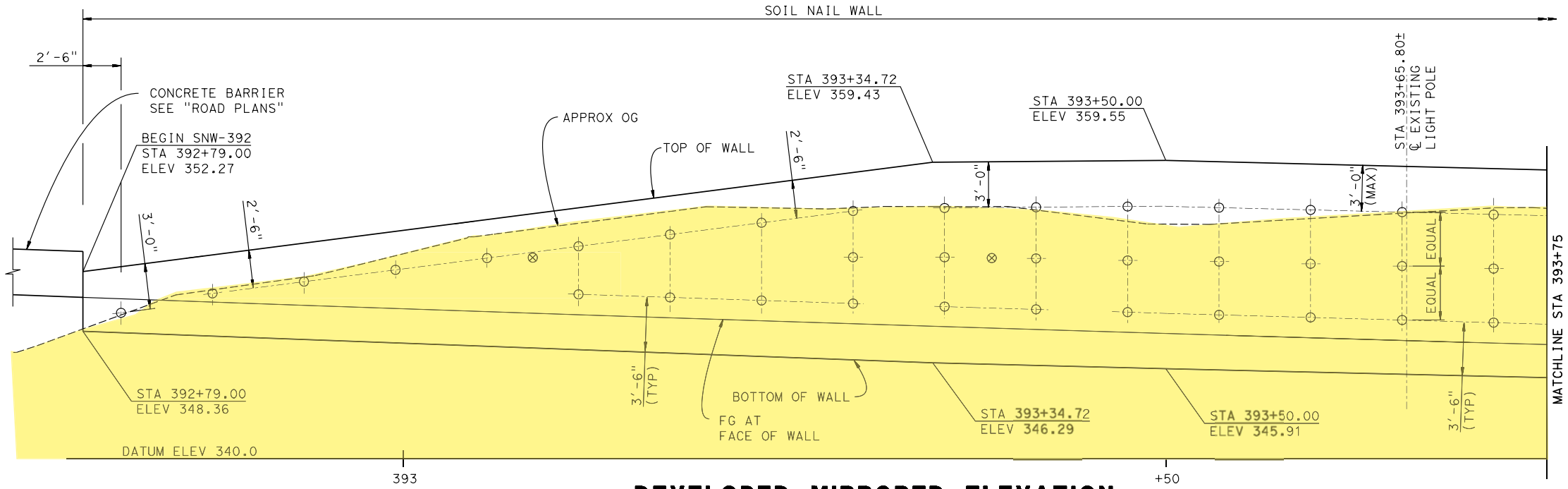

DEVELOPED MIRRORED ELEVATION

1/4" = 1'-0"

NOTE:
CABLE RAILING NOT SHOWN
FOR CLARITY

NOTES:

1. Horizontal spacing of Soil Nails is 6'-0". Place Soil Nails normal to RWLOL and at -15° inclination.
2. Soil Nail Length = 12'-0"
3. OG and FG are shown at RWLOL

LEGEND:

○ Indicates Soil Nail Bearing Plate location

⊗ Indicates Test Nail location. Location may be adjusted by the Engineer.

-·-·- Indicates Soil Nail Profile Line.

Sedimentary Formation

Engineered Fill

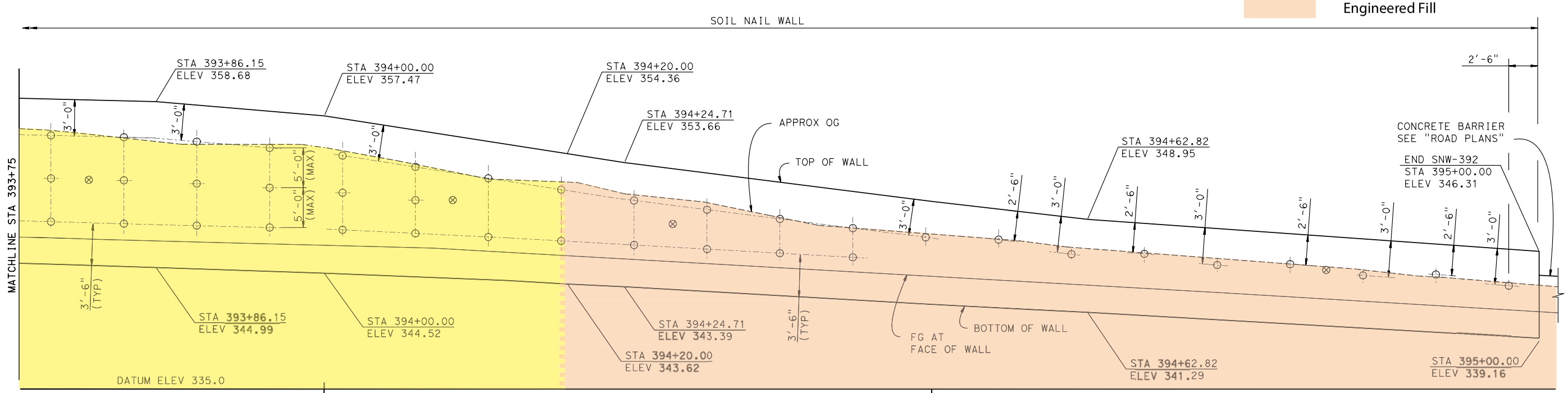

NOTE:
THE CONTRACTOR SHALL VERIFY ALL CONTROLLING FIELD DIMENSIONS BEFORE ORDERING OR FABRICATING ANY MATERIAL.

DEVELOPED MIRRORED ELEVATION

1/4" = 1'-0"

	BY	CHECKED
DESIGN	R. ANDERSON	M. VO
DETAILS	R. KIRKLAND	M. VO
QUANTITIES	R. ANDERSON	M. VO

STATE OF CALIFORNIA
DEPARTMENT OF TRANSPORTATION

DIVISION OF ENGINEERING SERVICES
STRUCTURE DESIGN
DESIGN BRANCH 10

BRIDGE NO. 57E0121
POST MILE M5.668

MID CITY BIKE FACILITY SNW-392
STRUCTURE PLAN

STRUCTURES DESIGN DETAIL SHEET (ENGLISH) (REV. 09-01-10)

ORIGINAL SCALE IN INCHES FOR REDUCED PLANS 0 1 2 3

UNIT: 3589
PROJECT NUMBER & PHASE: 1100020291
CONTRACT NO.: 11-2T1900

DISREGARD PRINTS BEARING EARLIER REVISION DATES

REVISION DATES: 6-26-12 7-24-12 8-29-12 9-11-12

SHEET 3 OF X

FILE => rw 392csp03.dgn

USERNAME => s136549 DATE PLOTTED => 28-SEP-2012 TIME PLOTTED => 15:27

FIGURE 7
GEOLOGIC PROFILE

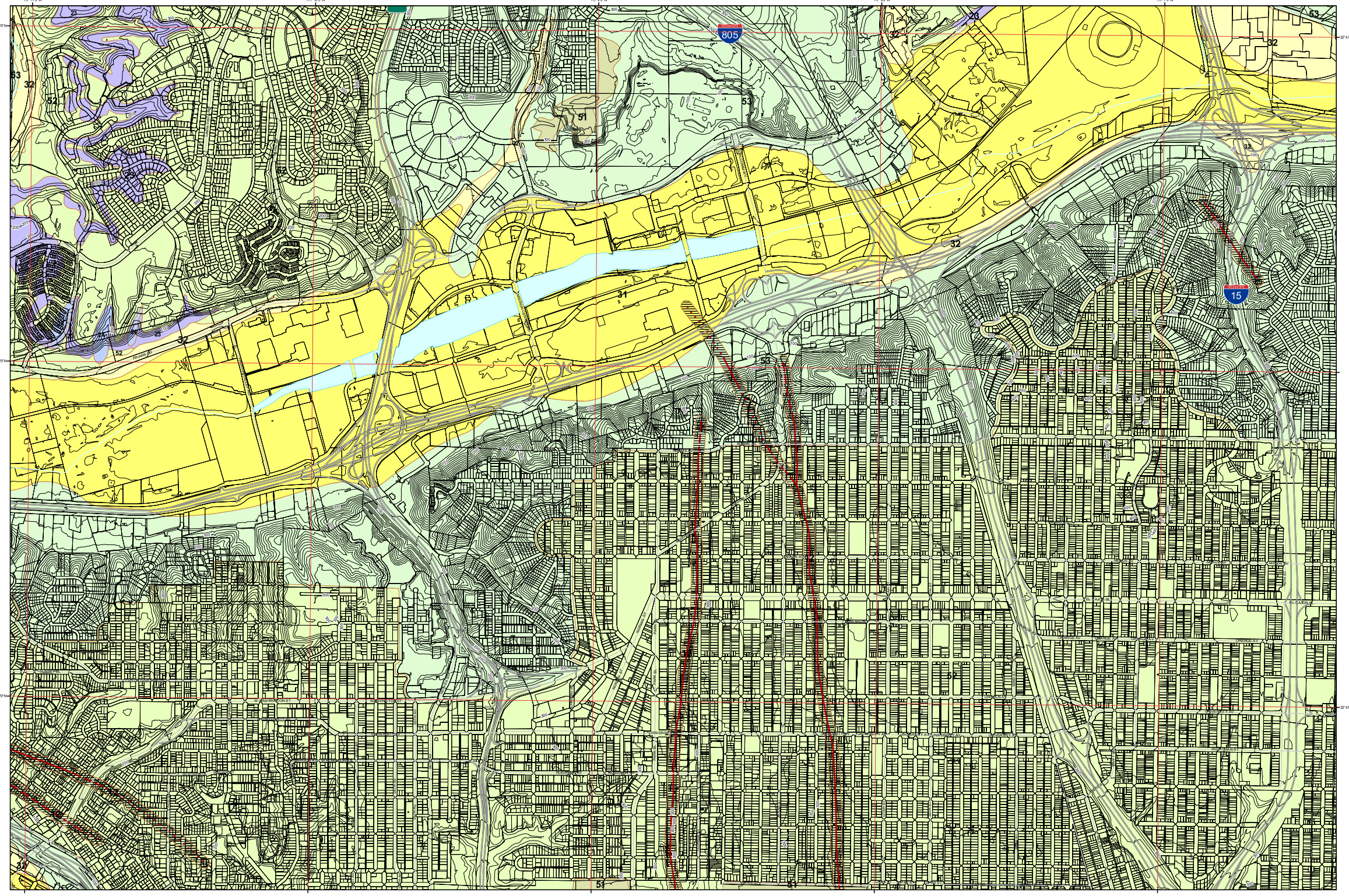

LEGEND

Geologic Hazard Categories

FAULT ZONES

- 11 Active, Alquist-Priolo Earthquake Fault Zone
- 12 Potentially Active, Inactive, Presumed Inactive, or Activity Unknown
- 13 Downtown special fault zone

LANDSLIDES

- 21 Confirmed, known, or highly suspected
- 22 Possible or conjectured

SLIDE-PRONE FORMATIONS

- 23 Friars: neutral or favorable geologic structure
- 24 Friars: unfavorable geologic structure
- 25 Ardath: neutral or favorable geologic structure
- 26 Ardath: unfavorable geologic structure
- 27 Otay, Sweetwater, and others

LIQUEFACTION

- 31 High Potential -- shallow groundwater major drainages, hydraulic fills
- 32 Low Potential -- fluctuating groundwater minor drainages

COASTAL BLUFFS

- 41 Generally unstable Numerous landslides, high steep bluffs, severe erosion, unfavorable geologic structure
- 42 Generally unstable Unfavorable bedding plains, high erosion
- 43 Generally unstable Unfavorable jointing, local high erosion
- 44 Moderately stable Mostly stable formations, local high erosion
- 45 Moderately stable Some minor landslides, minor erosion
- 46 Moderately stable Some unfavorable geologic structure, minor or no erosion
- 47 Generally stable Favorable geologic structure, minor or no erosion, no landslides
- 48 Generally stable Broad beach areas, developed harbor

OTHER TERRAIN

- 51 Level mesas -- underlain by terrace deposits and bedrock nominal risk
- 52 Other level areas, gently sloping to steep terrain, favorable geologic structure, Low risk
- 53 Level or sloping terrain, unfavorable geologic structure, Low to moderate risk
- 54 Steeply sloping terrain, unfavorable or fault controlled geologic structure, Moderate risk
- 55 Modified terrain (graded sites) Nominal risk

Water (Bays and Lakes)

FAULTS

- Fault
- Inferred Fault
- Concealed Fault
- Shear Zone

Index Map

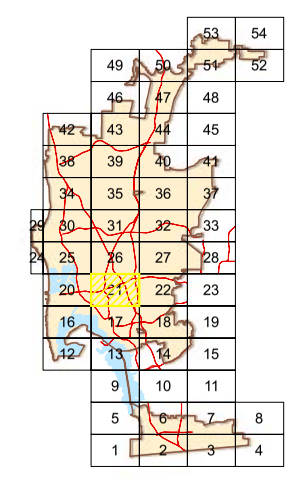

SanGIS Basemap Accuracy

SanGIS Land (Lot) basemap data for the City of San Diego tested 20.7' horizontal accuracy at the 95% confidence level.

This data meets the ASPRS Standard for Class 1 Map Accuracy at a scale of 1:12,000 (1"=1,000').

This assessment assumes utilization of the data on a citywide basis. Localized data may exceed or fail to meet this accuracy with errors in excess of 100' possible.

Every reasonable effort has been made to assure the accuracy of this map. However, neither the SanGIS participants nor San Diego Data Processing Corporation assume any liability arising from its use.

THIS MAP IS PROVIDED WITHOUT WARRANTY OF ANY KIND, EITHER EXPRESS OR IMPLIED, INCLUDING, BUT NOT LIMITED TO, THE IMPLIED WARRANTIES OF MERCHANTABILITY AND FITNESS FOR A PARTICULAR PURPOSE.

PROPRIETARY INFORMATION: The use of this information is pursuant to sublicense agreement only. Any resale or relicensing of this information is prohibited, except in accordance with such sublicensing agreements.

City of San Diego
SEISMIC SAFETY STUDY
Geologic Hazards and Faults

Development Services Department

0 400 800 1,600 2,400 Feet

0 120 240 480 720 960 Meters

GRID TILE: 21
GRID SCALE: 800
DATE: 4/3/2008

FIGURE 8
CITY OF SAN DIEGO GEOLOGIC HAZARDS AND FAULTS MAP

TABLES

TABLE 1: REGIONAL ACTIVE FAULT(S)

Fault Name (Initials)	FID	M_{MAX}	Fault Type	Fault Dip	Dip Direction	Z_{BOT}	Z_{TOR}	R_{RUP}	R_{JB}	R_X	F_{NM}	F_{RV}
Newport Inglewood-Rose Canyon fz (Silver Strand section)	423	7.5	RLSS	90º	Vertical	8.1mi (13.0km)	0.0	4.1mi (6.6km)	4.1mi (6.6km)	2.9mi (4.7km)	0	0
Newport Inglewood-Rose Canyon fz (San Diego section)	224	7.5	RLSS	90º	Vertical	8.1mi (13.0km)	0.0	4.0mi (6.5km)	4.0mi (6.5km)	4.0mi (6.5km)	0	0

Notes: FID = The fault ID number. Fault Identification Number (FID), used to identify a fault trace on the Caltrans Deterministic PGA Map.
M_{MAX} = Maximum Moment Magnitude: Defined as the largest earthquake a fault is capable of generating.
Fault Type = Right Lateral Strike Slip (RLSS).
Fault Dip = The angle between the fault plane and the horizontal plane.
Dip Direction = The direction the fault dips.
Z_{BOT} = The depth to the bottom of the rupture plane.
Z_{TOR} = The depth to the top of the rupture plane.
R_{RUP} = The closest distance to the fault rupture plane.
R_{JB} = The shortest horizontal distance to the surface projection of the rupture area (a.k.a. Joyner-Boone Distance).
R_X = The horizontal distance to the fault trace or surface projection of the top of the rupture plane.
F_{NM} = The faults identified as a normal fault.
F_{RV} = The faults identified as a reverse fault.

TABLE 2: RETAINING WALL DESIGN PARAMETERS

Retaining Wall	Wall Type	Test Zone	Beginning Station	Ending Station	L (ft)	H_{MAX} (ft)	Slope Below	Slope Above	Wall Batter	Cut/Fill
RW-392	Soil Nail	1	392+79 BF1 LINE	394+20 BF1 LINE	141	14.0	Horizontal	Varies 1.5:1 or flatter	Vertical	Cut
	Soil Nail	2	394+20 BF1 LINE	395+00 BF1 LINE	80	10.0	Horizontal	Varies 1.5:1 or flatter	Vertical	Cut

Notes: L = Wall Length
H_{MAX} =Approximate Maximum Wall Height

TABLE 3: SOIL STRENGTH DESIGN PARAMETERS

Retaining Wall	Test Zone	Beginning Station	Ending Station	Soil Type	φ Friction Angle (°)	C Cohesion (psf)	γ Unit Weight (pcf)
SNW-392	1	392+79 BF1 LINE	394+20 BF1 LINE	Sedimentary Formation[1]	34	300	125
	2	394+20 BF1 LINE	395+00 BF1 LINE	Fill	34	100	120

Notes: 1= Comparable soil strength design parameters used for the sedimentary formation retained by RW-33 were used for SNW-392.

TABLE 4A: SOIL NAIL DESIGN PARAMETERS

Retaining Wall	Test Zone	Beginning Station	Ending Station	Nail Strength (ksi)	Assumed Head Strength (kips)	Maximum Nail Horizontal Spacing (ft)	Maximum Nail Vertical Spacing (ft)	Nail Inclination Angle from the Horizontal (degrees)	$DTOP_{MAX}$ (ft)	$DBOT_{MAX}$ (ft)
SNW-392	1	392+79 BF1 LINE	394+20 BF1 LINE	36	45	6	5	15	3.0	3.5
	2	394+20 BF1 LINE	395+00 BF1 LINE	36	45	6	5	15	3.0	3.5

Notes: $DTOP_{MAX}$ = Maximum distance from the top of the wall to the top row of nails.
$DBOT_{MAX}$ = Maximum distance from the bottom of the wall to the bottom row of nails.

TABLE 4B: SOIL NAIL DESIGN PARAMETERS

Retaining Wall	Test Zone	Beginning Station	Ending Station	Design Pullout Resistance (lb/ft)	Reinforcing Bar Diameter (in)	Minimum Nail Length (ft)	Minimum Number of Rows
RW-392	1	392+79 BF1 LINE	394+20 BF1 LINE	2,262	1.0	12.0	1
	2	394+20 BF1 LINE	395+00 BF1 LINE	2,262	1.0	12.0	1

APPENDICES

APPENDIX I

LOG OF TEST BORING AND SITE DATA

DIST	COUNTY	ROUTE	POST MILE TOTAL PROJECT	
11	SD	5	4.5,5.5/R6.4	1 /173

STATE OF CALIFORNIA
DEPARTMENT OF TRANSPORTATION

F-P015(007)

PROJECT PLANS FOR CONSTRUCTION ON STATE HIGHWAY

SAN DIEGO COUNTY IN SAN DIEGO

AT WIGHTMAN STREET OVERCROSSING AND FROM 0.1 MILE SOUTH OF ADAMS AVENUE OVERCROSSING TO 0.3 MILE NORTH OF ROUTE 15/8 SEPARATION

To be supplemented by Standard Plans dated January, 1988

INDEX OF SHEETS

Sheet No.	1	Title and Location Map
" "	2-3	Typical Cross Section
" "	4	Standard Plans List
" "	5-10	Layout, Contour Grading
" "	11-13	Profiles
" "	14-15	Superelevation Diagrams
" "	16-20	Construction Details
" "	21-33	Drainage Plans, Profiles, Details, Quantities
" "	34-45	Sanitary Sewer Plans, Details, Quantities
" "	46-52,46A	Utility Plans, Details
" "	53-67	Stage Construction, Traffic Handling Plans
" "	68-71	Detours
" "	72-76	Construction Area Signs
" "	77-83	Pavement Delineation Plans, Sign Plans
" "	84-87	Summary of Quantities
" "	88-89	Highway Planting Plans
" "	90-107	Electrical Plans
" "	108-109	Traffic Control System
" "	110-115	Revised and New Standard Plans

STRUCTURE PLANS

" "	116-134	Wightman St OC Br. No. 57-994
" "	135-151	Adams Ave OC (lengthen) Br. No. 57-500
" "	152-173	Route 15/8 Separation (Widen) Br. No. 57-373

SAN DIEGO

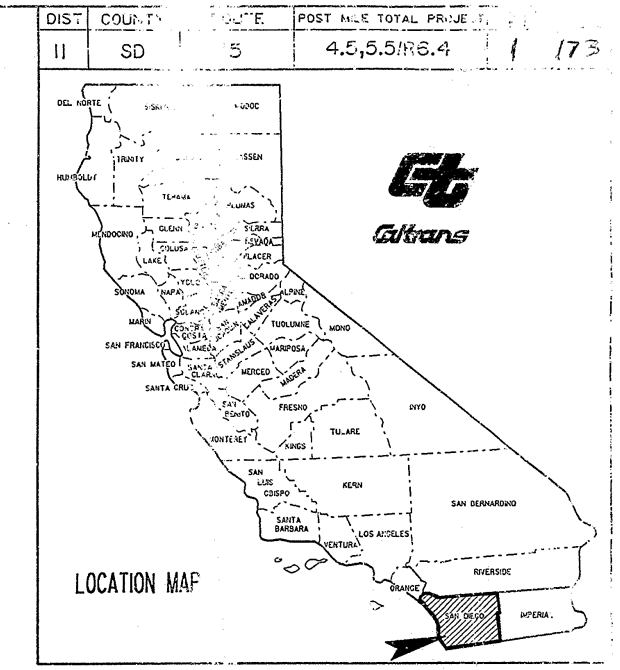

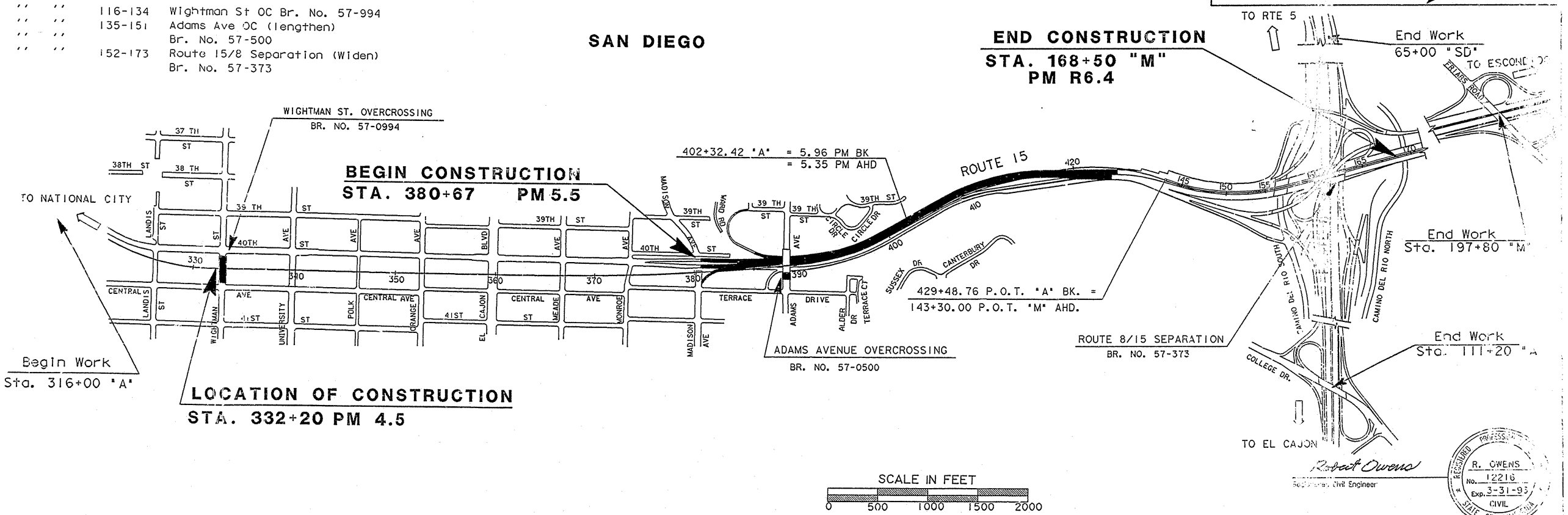

Robert Owens
Registered Civil Engineer

November 4, 1991
Approval Date

REGISTERED PROFESSIONAL ENGINEER
R. OWENS
No. 12216
Exp. 3-31-93
CIVIL
STATE OF CALIFORNIA

AS BUILT PLANS
CONTRACT NO 11-048644
DATE COMPLETED 09-30-94
RE: D. MARTIN

The Contractor shall possess the Class or Classes of license as specified in the "Notice to Contractors".

Contract No. 11-048644

FOR REDUCED PLANS ORIGINAL SCALE IS IN INCHES 0 1 2 3

EA 048644

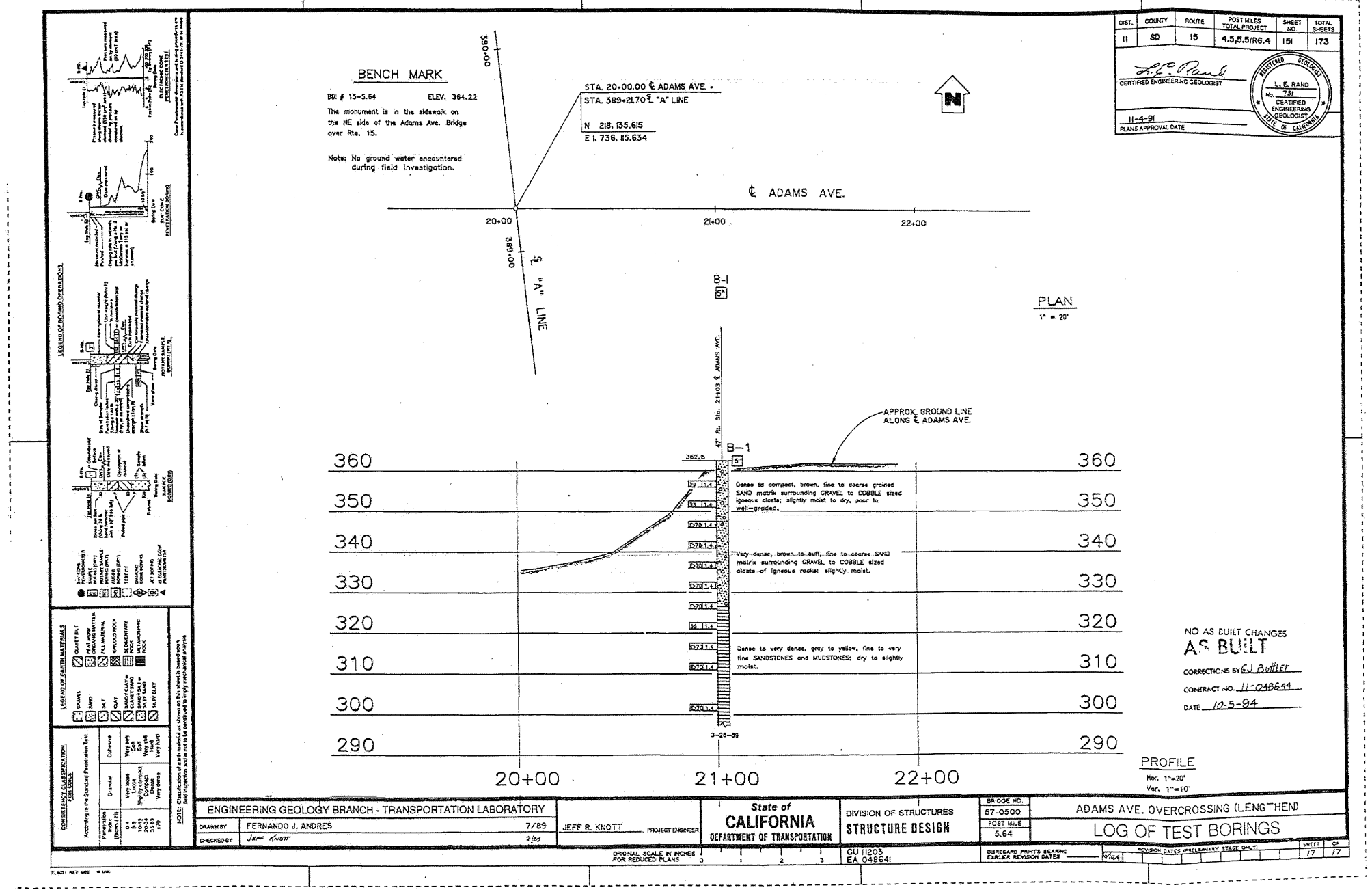
BENCH MARK
BM # 15-5.64 ELEV. 364.22
The monument is in the sidewalk on the NE side of the Adams Ave. Bridge over Rte. 15.
Note: No ground water encountered during field investigation.
STA. 20+00.00 ℄ ADAMS AVE. =
STA. 389+21.70 ℄ "A" LINE
N 218,135.615
E 1,736,115.634
℄ ADAMS AVE.
20+00
21+00
22+00
390+00
389+00
℄ "A" LINE
PLAN
1" = 20'
B-1
APPROX. GROUND LINE ALONG ℄ ADAMS AVE.
362.5
Dense to compact, brown, fine to coarse grained SAND matrix surrounding GRAVEL to COBBLE sized igneous clasts; slightly moist to dry, poor to well-graded.
Very dense, brown...to...buff, fine to coarse SAND matrix surrounding GRAVEL to COBBLE sized clasts of igneous rocks; slightly moist.
Dense to very dense, gray to yellow, fine to very fine SANDSTONES and MUDSTONES; dry to slightly moist.
3-28-89
360
350
340
330
320
310
300
290
20+00
21+00
22+00
PROFILE
Hor. 1"=20'
Ver. 1"=10'
NO AS BUILT CHANGES
AS BUILT
CORRECTIONS BY EJ Butler
CONTRACT NO. 11-048641
DATE 10-5-94
DIST. 11 | COUNTY SD | ROUTE 15 | POST MILES TOTAL PROJECT 4.5,5.5/R6.4 | SHEET NO. 151 | TOTAL SHEETS 173
CERTIFIED ENGINEERING GEOLOGIST
11-4-91
PLANS APPROVAL DATE
REGISTERED GEOLOGIST
L. E. RAND
No. 751
CERTIFIED ENGINEERING GEOLOGIST
STATE OF CALIFORNIA
LEGEND OF BORING OPERATIONS
LEGEND OF EARTH MATERIALS
CONSISTENCY CLASSIFICATION FOR COHESIVE SOILS
NOTE: Classification of earth material as shown on this sheet is based upon field inspection and is not to be construed to imply mechanical analysis.
ENGINEERING GEOLOGY BRANCH - TRANSPORTATION LABORATORY
DRAWN BY FERNANDO J. ANDRES 7/89
CHECKED BY JEFF R. KNOTT 3/89
JEFF R. KNOTT, PROJECT ENGINEER
State of CALIFORNIA DEPARTMENT OF TRANSPORTATION
DIVISION OF STRUCTURES
STRUCTURE DESIGN
BRIDGE NO. 57-0500
POST MILE 5.64
ADAMS AVE. OVERCROSSING (LENGTHEN)
LOG OF TEST BORINGS
ORIGINAL SCALE IN INCHES FOR REDUCED PLANS 0 1 2 3
CU 1203
EA 048641
DISREGARD PRINTS BEARING EARLIER REVISION DATES
REVISION DATES (PRELIMINARY STAGE ONLY)
SHEET 17 OF 17

DIST	COUNTY	ROUTE	POST MILE	SHEET TOTAL
11	SD	15	R3.8/R6.0	1049

ACNH1-015-4(168)10N

STATE OF CALIFORNIA
DEPARTMENT OF TRANSPORTATION

PROJECT PLANS FOR CONSTRUCTION ON STATE HIGHWAY

IN SAN DIEGO COUNTY IN SAN DIEGO FROM 0.4 MILE NORTH OF ROUTE 805 TO 0.1 MILE SOUTH OF ROUTE 8

To be supplemented by Standard Plans dated July , 1992

INDEX OF SHEETS

Sheet No. 1		Title and Location Map
'' ''	2-23	Typical Cross Sections
'' ''	24-25	Standard Plans List
'' ''	26-38	Layouts
'' ''	39-97	Profiles
'' ''	98-155	Construction Details
'' ''	156-231	Drainage Plans, Profiles, Details and Quantities and ContourGrading
'' ''	232-246	Sanitary Sewer Plans, Profiles, Details and Quantities
'' ''	247-297	Utility Plans
'' ''	298-394	Stage Construction Plans
'' ''	395-447	Detour Plans
'' ''	448-458	Construction Area Signs
'' ''	459-468	Summary of Quantities
'' ''	469-528	Sign and Pavement Delineation Plans, Details and Quantities
'' ''	529-609	Retaining Wall
'' ''	610-627	Sound Wall
'' ''	628-634	Highway Planting
'' ''	635-724	Electrical Plans
'' ''	725-728	Revised Standard Plans
'' ''	729	New Standard Plan
STRUCTURE PLANS		
'' ''	730-739	Soil Nail Retaining Wall "RW1"
'' ''	740-747	Soil Nail Retaining Wall "RW15"
'' ''	748-755	Soil Nail Retaining Wall "RW19"
'' ''	756-764	Soil Nail Retaining Wall "RW33"
'' ''	765-772	Soil Nail Retaining Wall "RW34"
'' ''	773-780	Soil Nail Retaining Wall "RW35"
'' ''	781-793	Landis St. Pedestrian O.C. Br. No. 57-1016
'' ''	794-808	University Ave. O.C. Br. No. 57-995
'' ''	809-828	University Ave. Plaza O.C. (North) Br. No. 57-995L
'' ''	829-848	University Ave. Plaza O.C. (South) Br. No. 57-995R
'' ''	849-874	Polk-Orange Ave. Tunnel Br. No. 57-1013
'' ''	875-896	Orange Ave. O.C. Br. No. 57-996
'' ''	897-911	El Cajon Blvd. O.C. Br. No. 57-997
'' ''	912-931	El Cajon Blvd. Plaza O.C. (North) Br. No. 57-997L
'' ''	932-951	El Cajon Blvd. Plaza O.C. (South) Br. No. 57-997R
'' ''	952-974	Meade Ave. O.C. Br. No. 57-998
'' ''	975-993	Monroe Ave. Pedestrian O.C. Br. No. 57-1011
'' ''	994-1049	Polk-Orange Ave. Tunnel (Control Bldg, Mechanical & Electrical) Br. No. 57-1013

STRUCTURE LIST

	NAME	BRIDGE
1	LANDIS ST PED OC	Br No 57-1016
2	UNIVERSITY AVE OC	Br No 57-995
3	UNIVERSITY AVE PLAZA OC (SOUTH)	Br No 57-995R
4	UNIVERSITY AVE PLAZA OC (NORTH)	Br No 57-995L
5	POLK-ORANGE AVE TUNNEL	Br No 57-1013
6	ORANGE AVE OC	Br No 57-996
7	EL CAJON BLVD OC	Br No 57-997
8	EL CAJON BLVD PLAZA OC (SOUTH)	Br No 57-997R
9	EL CAJON BLVD PLAZA OC (NORTH)	Br No 57-997L
10	MEADE AVE OC	Br No 57-998
11	MONROE AVE PED OC	Br No 57-1011

The State of California or its officers or agents shall not be responsible for the accuracy of completeness of electronic copies of this plan sheet.

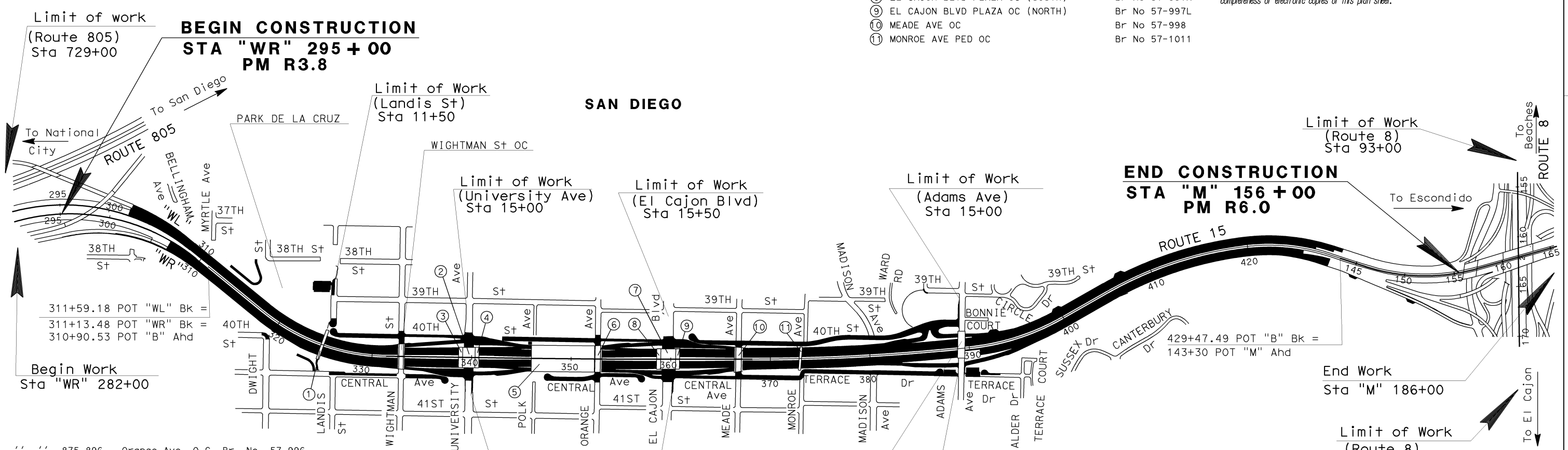

SCALE
0 500 1000 1500 2000

The Contractor shall possess the Class (or Classes) of license as specified in the ''Notice to Contractors''.

AS-BUILT PLANS
RESIDENT ENGINEER DATE
CONTRACT NO. 11-048661
DATE COMPLETED 03-15-01
REGISTERED PROFESSIONAL ENGINEER D. MARTIN No. 49389 Exp. 09-30-04 CIVIL STATE OF CALIFORNIA

Project Engineer
Registered Civil Engineer
REGISTERED PROFESSIONAL ENGINEER JESUS MORA No. 50347 Exp. 6-30-97 CIVIL STATE OF CALIFORNIA

November 27, 1995
Plans Approval Date

PROJECT ENGINEER JESUS MORA | DATE | PROJECT MANAGER GR GASTELUM | DATE | REVISION 0-0-00

APPENDIX I: LOG OF TEST BORING AND SITE DATA

Contract No. 11-048664

FORM DC-OE-93-PF (REV. 3/88)
FOR REDUCED PLANS ORIGINAL SCALE IS IN INCHES 0 1 2 3
CU 11288 | EA 048661

DIST	COUNTY	ROUTE	POST MILES TOTAL PROJECT	SHEET NO.	TOTAL SHEETS
11	SD	15	R3.8/R6.0	582	1049

REGISTERED CIVIL ENGINEER

11-27-95
PLANS APPROVAL DATE

REGISTERED PROFESSIONAL ENGINEER JESUS MORA No. 50347 Exp. 6-30-97 CIVIL STATE OF CALIFORNIA

The State of California or its officers or agents shall not be responsible for the accuracy or completeness of electronic copies of this plan sheet.

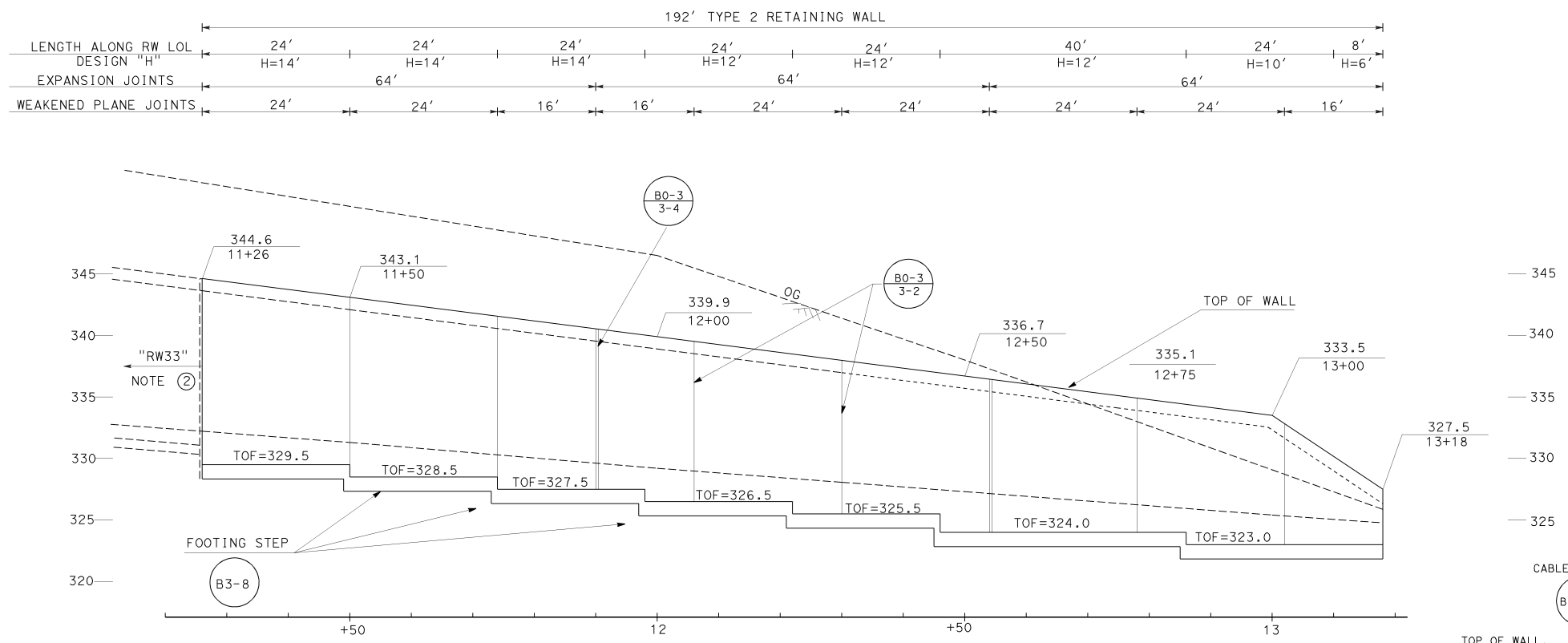

PROFILE
SCALE: 1" = 10' Horiz
1" = 5' Vert

"RW33A" FINISH GRADE	
STATION	ELEVATION
11+26.00	332.5
11+50.00	331.3
11+75.00	330.2
12+00.00	329.1
12+25.00	328.2
12+50.00	327.3
12+75.00	326.3
13+00.00	325.4
13+18.00	324.7

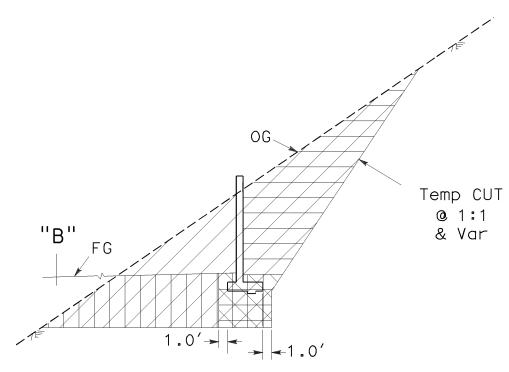

ROADWAY EXCAVATION
ROADWAY EMBANKMENT
STRUCTURE EXCAVATION
STRUCTURE BACKFILL

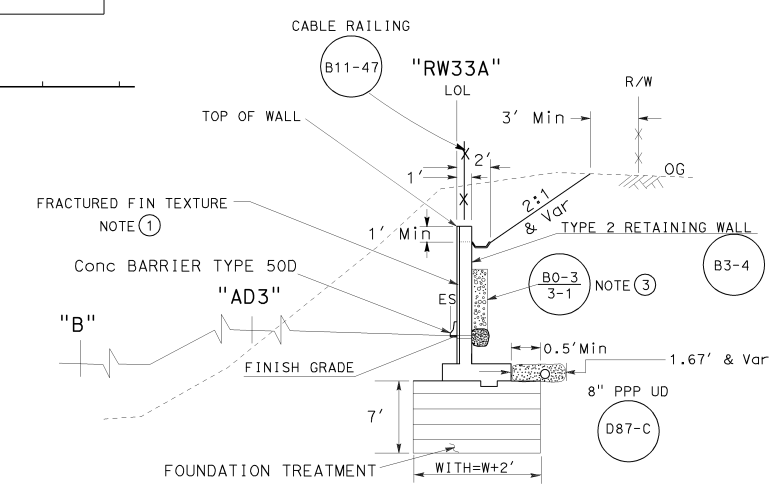

TYPICAL
NO SCALE

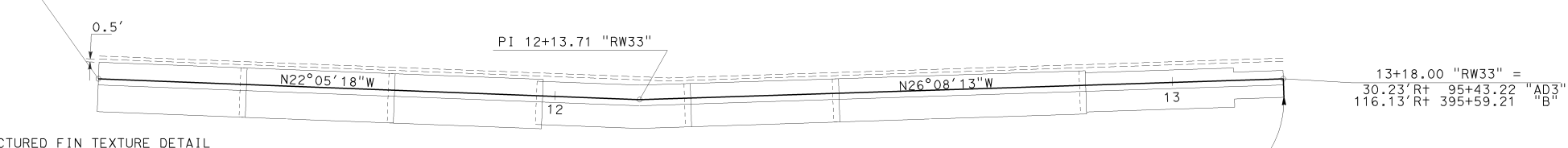

PLAN
NO SCALE

NOTES:

1. FOR FRACTURED FIN TEXTURE DETAIL SEE STRUCTURE PLANS (SOIL NAIL WALL)
2. SEE STRUCTURE PLANS FOR SOIL NAIL WALL FROM Sta 10+00 "RW33" TO Sta 11+26 "RW33"
3. SEE SHEET R-66 FOR ALTERNATIVE TO B0-3 / 3-1

AS-BUILT PLANS
CONTRACT NO. 11-048661
DATE COMPLETED 03-15-01
RE: D. MARTIN

RETAINING WALL PLAN
RW-33A
SCALE: AS NOTED

R-54

STATE OF CALIFORNIA - DEPARTMENT OF TRANSPORTATION
Caltrans **PROJECT DEVELOPMENT**
PROJECT ENGINEER **JESUS MORA**
CALCULATED/DESIGNED BY
CHECKED BY
DATE REVISED BY
DATE REVISED

LAST REVISION 05-27-95 (MAJOR CHANGES)

FOR REDUCED PLANS ORIGINAL SCALE IS IN INCHES 0 1 2 3
USERNAME =>
DGN FILE =>
CU 11288
EA 048661

DIST.	COUNTY	ROUTE	POST MILES TOTAL PROJECT	SHEET NO.	TOTAL SHEETS
11	SD	15	R3.8/R6.0	756	1049

REGISTERED ENGINEER - CIVIL

REGISTERED PROFESSIONAL ENGINEER M. L. NAPIER No. 46017 Exp. 12-31-98 CIVIL STATE OF CALIFORNIA

11-27-95
PLANS APPROVAL DATE

The State of California or its officers or agents shall not be responsible for the accuracy or completeness of electronic copies of this plan sheet

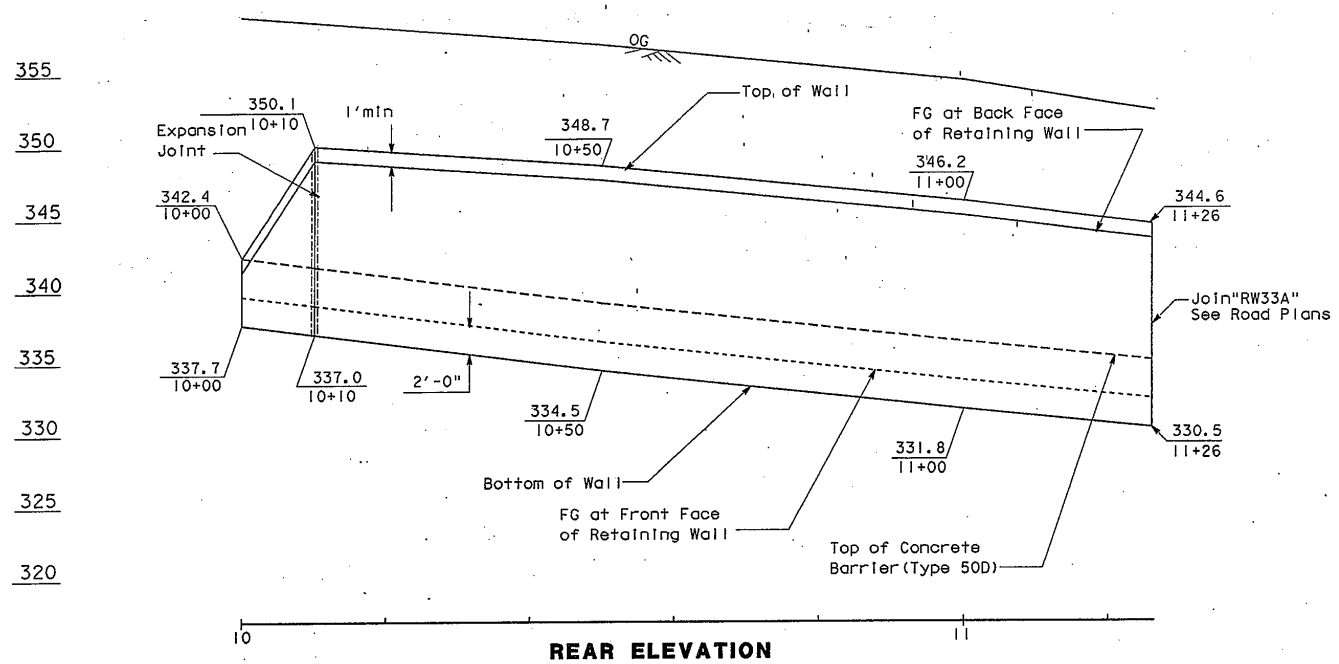

REAR ELEVATION

SCALE: 1" = 10' HORIZ
1" = 5' VERT

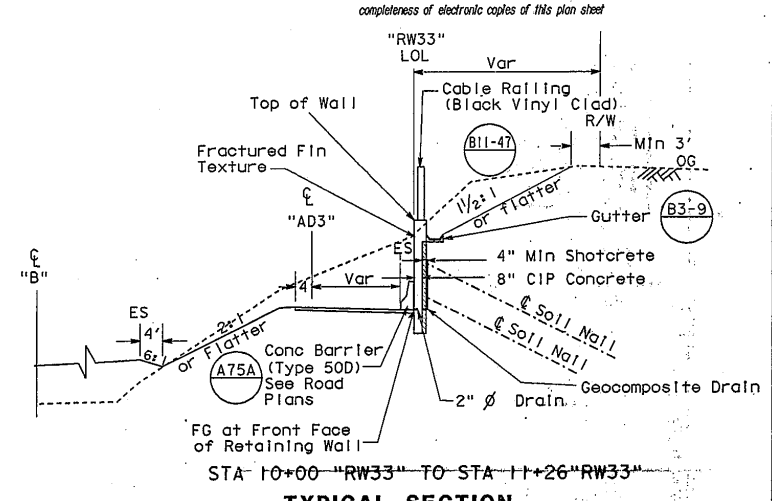

STA ~~10+00 "RW33" TO STA 11+26"RW33"~~

TYPICAL SECTION

NO SCALE

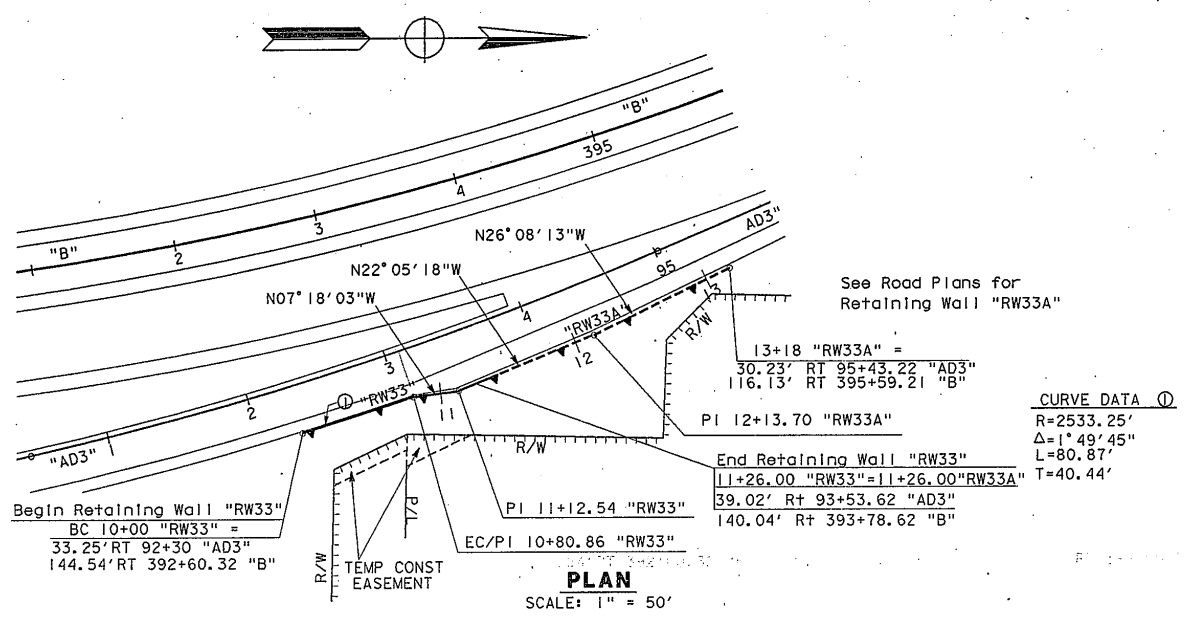

See Road Plans for Retaining Wall "RW33A"

CURVE DATA ①
R=2533.25'
Δ=1° 49' 45"
L=80.87'
T=40.44'

PLAN

SCALE: 1" = 50'

QUANTITIES

STRUCTURE EXCAVATION (SOIL NAIL WALL)	60	CY
STRUCTURE BACKFILL (SOIL NAIL WALL)	3	CY
SOIL NAIL ASSEMBLY	745	LF
STRUCTURAL CONCRETE, RETAINING WALL	48	CY
FRACTURED FIN TEXTURE	1,258	SQFT
BAR REINFORCING STEEL (RETAINING WALL)	6,190	LB
SHOTCRETE	18	CY
GEOCOMPOSITE DRAIN	170	SQFT
MINOR CONCRETE (GUTTER)	5	CY
CABLE RAILING (BLACK VINYL CLAD)	125	LF

INDEX TO PLANS

SHEET NO	TITLE
1	General Plan
2	Soil Nail Assembly Layout
3	Typical Section
4	Soil Nail Assembly Details
5	Details No. 1
6	Details No. 2
7	Details No. 3
8	Log of Test Borings 1 of 2
9	Log of Test Borings 2 of 2

STANDARD PLANS DATED JULY, 1995

A75A	Concrete Barrier Type 50
B3-9	Retaining Wall Details No. 2
B11-47	Cable Railing

Standard Plan Sheet No.
Detail No.

For 'General Notes' see "SOIL NAIL ASSEMBLY LAYOUT" Sheet.

PROJECT ENGINEER	DESIGN	BY M L NAPIER	CHECKED J MORA		
	DETAILS	BY J BRIGGS 05-95	CHECKED M L NAPIER	LAYOUT	BY M L NAPIER / CHECKED S AKHGARNIA
	QUANTITIES	BY M L NAPIER	CHECKED L A FARIA	SPECIFICATIONS	BY K.F. Meier 9/95 / PLANS AND SPECS COMPARED K.F. Meier 9/95

STATE OF CALIFORNIA
DEPARTMENT OF TRANSPORTATION

DISTRICT 11
STRUCTURE DESIGN B

CU 11288
EA 048661

BRIDGE NO.
POST MILE

SOIL NAIL RETAINING WALL "RW33"

GENERAL PLAN

DISREGARD PRINTS BEARING EARLIER REVISION DATES

REVISION DATES (PRELIMINARY STAGE ONLY) 12-20-94 05-10-95 05-16-95 05-31-95 06-07-95 06-10-95 06-14-95

SHEET 1 OF 9

ORIGINAL SCALE IN INCHES FOR REDUCED PLANS 0 1 2 3

DS 650 2138 (CADD 4/89)

DIST.	COUNTY	ROUTE	POST MILES TOTAL PROJECT	SHEET NO.	TOTAL SHEETS
11	SD	15	R3.8/R6.0	757	1049

REGISTERED ENGINEER - CIVIL

REGISTERED PROFESSIONAL ENGINEER JAVAD EHSAN No. 47251 Exp. 12-31-95 CIVIL STATE OF CALIFORNIA

11-27-95
PLANS APPROVAL DATE

The State of California or its officers or agents shall not be responsible for the accuracy or completeness of electronic copies of this plan sheet

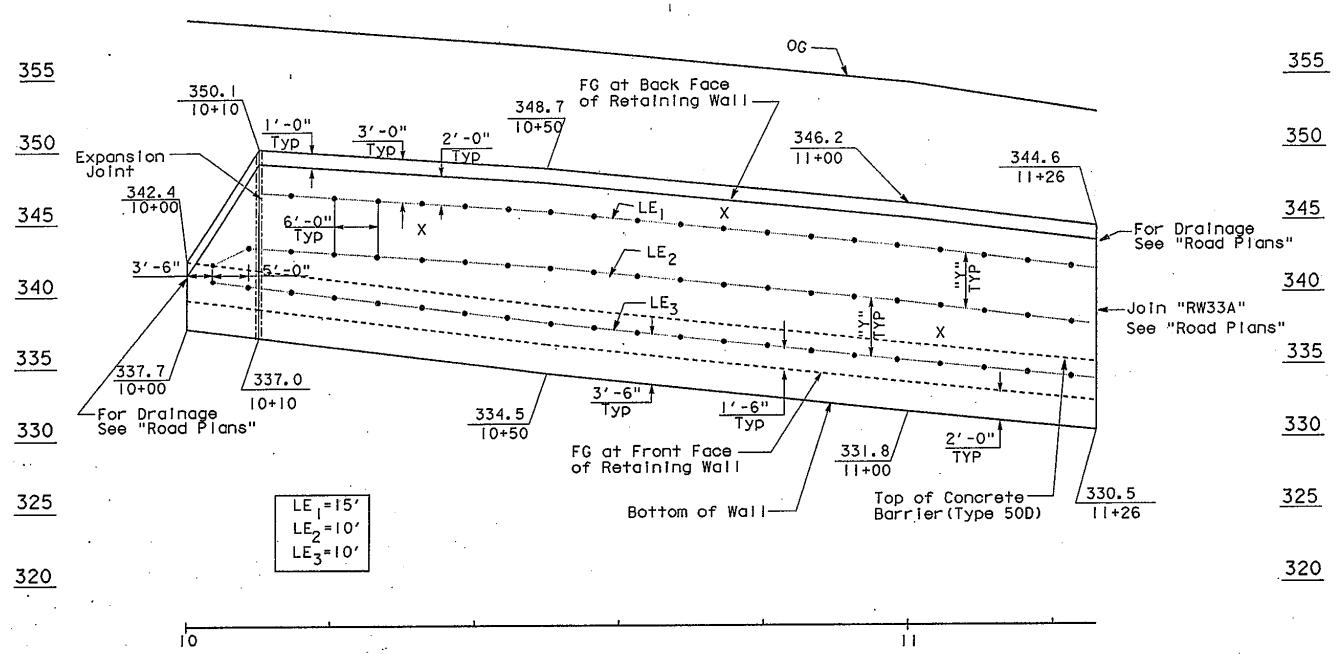

REAR ELEVATION

SCALE: 1" = 10' HORIZ
1" = 5' VERT

NOTES: 1. Soil nail layout:
Vertical spacing "Y" is half of distance between top and bottom rows of nails, 5'-0" center to center max
Horizontal spacing 6'-0" center to center max
Top row is located 3'-0" below top of retaining wall (unless noted otherwise)
Bottom row is located 3'-6" above bottom of wall (unless noted otherwise)
Min center to center spacing between soil nail assemblies is 1'-6"

2. Soil nail assembly:
Design Nail Load 2.3 kips/ft, Design hole diameter 6"
Min soil nail embedment length,
• LE, Varies as shown on wall elevation. Indicates location of soil nail
X assembly or as directed by the Engineer. Indicates location of test soil nail assembly or as directed by the Engineer.
Soil Nail inclination angle=15 degree typical (unless noted otherwise).
Bar size, min Diameter 1"

3. Horizontal distance between the beginning/end of wall and first/last nail 3'-6" max center to center spacing

GENERAL NOTES

DESIGN: BRIDGE DESIGN SPECIFICATIONS (1983 AASHTO with Interims and Revisions by CALTRANS)

REINFORCED CONCRETE: fy = 60,000 psi
f'c = 3,250 psi

STRUCTURAL STEEL: ASTM Designation:
A36, fy = 36,000 psi

SOIL NAILS: ASTM Designation:
A615, Grade 60,
fs = 45,000 psi

DESIGN PARAMETERS:
(Soil/Bedrock)
ϕ = 34°
C = 300 psf
γ = 125 pcf
μ = 10 psi (ultimate grout and drilled hole)

DESIGN	BY J EHSAN	CHECKED L WHITMORE	
DETAILS	BY J BRIGGS 03-95	CHECKED M L NAPIER	
QUANTITIES	BY M L NAPIER	CHECKED L A FARIA	

STATE OF CALIFORNIA
DEPARTMENT OF TRANSPORTATION

DISTRICT 11
STRUCTURE DESIGN B

BRIDGE NO.
POST MILE

SOIL NAIL RETAINING WALL "RW33"
SOIL NAIL ASSEMBLY LAYOUT

CU 11288
EA 048661

DISREGARD PRINTS BEARING EARLIER REVISION DATES

REVISION DATES (PRELIMINARY STAGE ONLY) 05-10-95 05-15-95 05-17-95 05-31-95 06-01-95 06-13-95 06-27-95 07-22-95

SHEET 2 OF 9

05 052 2138 (CADD 4/89)

ORIGINAL SCALE IN INCHES FOR REDUCED PLANS 0 1 2 3

DIST.	COUNTY	ROUTE	POST MILES TOTAL PROJECT	SHEET NO.	TOTAL SHEETS
11	SD	15	R3.8/R6.0	758	1049

REGISTERED ENGINEER - CIVIL

REGISTERED PROFESSIONAL ENGINEER M L NAPIER No. 46017 Exp. 12-31-98 CIVIL STATE OF CALIFORNIA

11-27-95
PLANS APPROVAL DATE

The State of California or its officers or agents shall not be responsible for the accuracy or completeness of electronic copies of this plan sheet

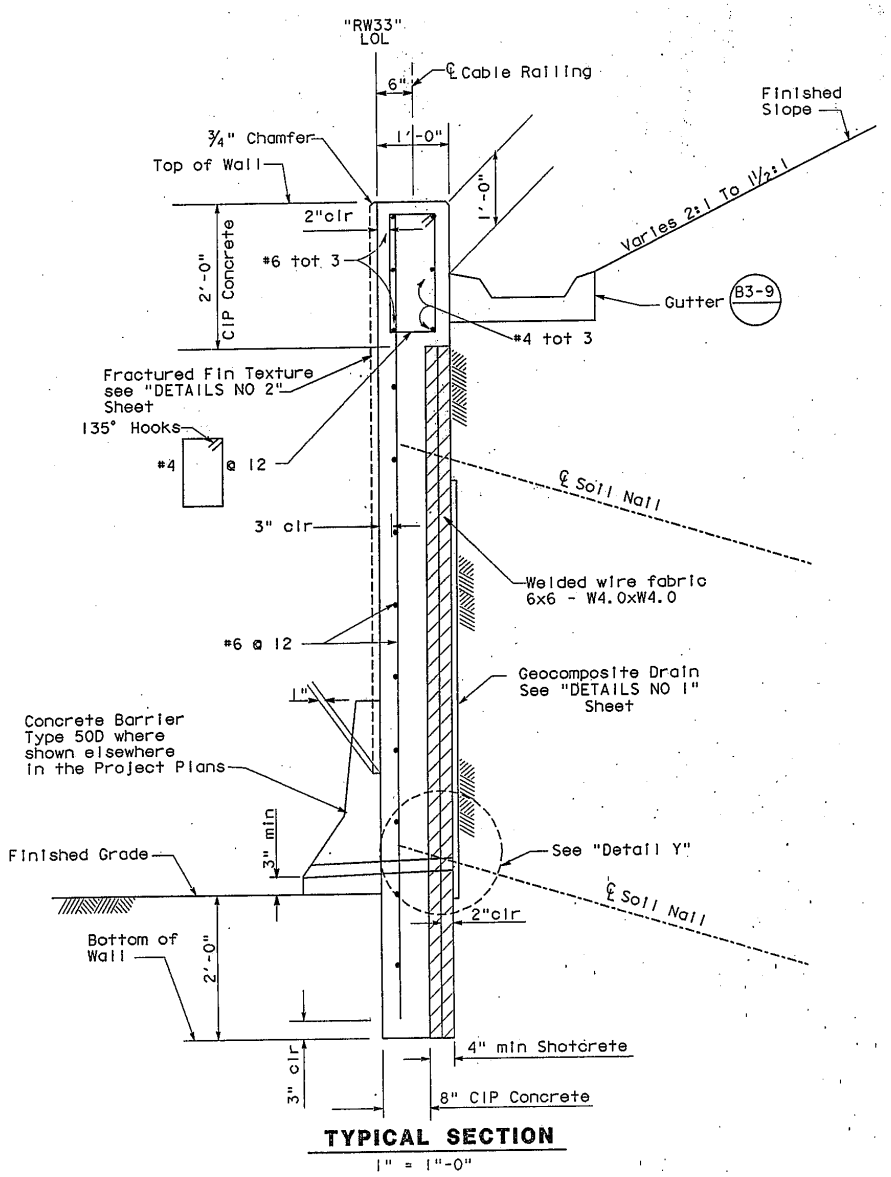

TYPICAL SECTION
1" = 1"-0"

Note: Cable railing not shown.

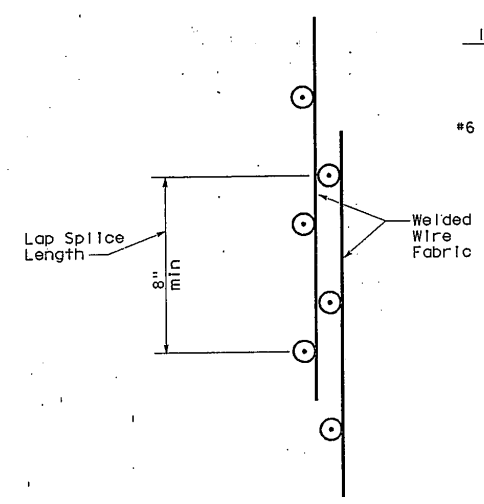

LAP SPLICE DETAIL
No Scale

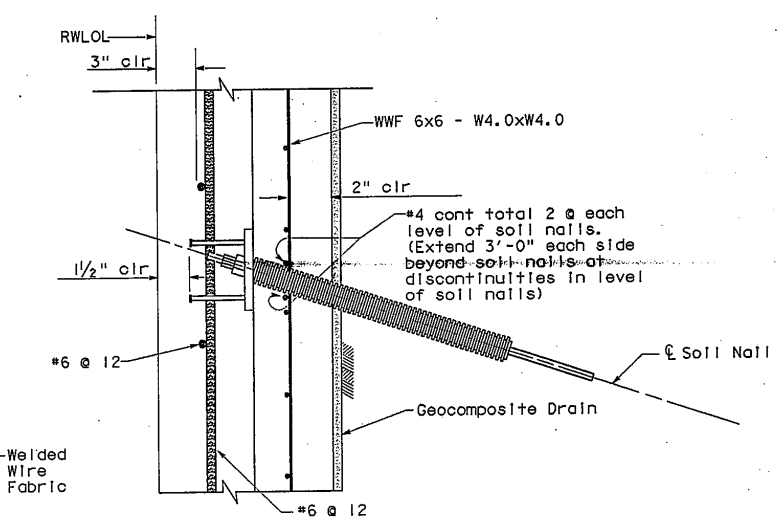

DETAIL Y
No Scale

DESIGN	BY M L NAPIER	CHECKED J MORA	
DETAILS	BY J BRIGGS 02-95	CHECKED M L NAPIER	
QUANTITIES	BY M L NAPIER	CHECKED L A FARIA	

STATE OF CALIFORNIA DEPARTMENT OF TRANSPORTATION

DISTRICT 11 STRUCTURE DESIGN B
CU 11288
EA048661

BRIDGE NO.
POST MILE

SOIL NAIL RETAINING WALL "RW33"
TYPICAL SECTION

DISREGARD PRINTS BEARING EARLIER REVISION DATES → 03-15-95 05-04-95 05-05-95 05-11-95 06-12-95 06-14-95

REVISION DATES (PRELIMINARY STAGE ONLY)

SHEET 3 OF 9

DS 050 2138 (CADD 4/89)

ORIGINAL SCALE IN INCHES FOR REDUCED PLANS 0 1 2 3

DIST.	COUNTY	ROUTE	POST MILES TOTAL PROJECT	SHEET NO.	TOTAL SHEETS
11	SD	15	R3.8/R6.0	759	1049

REGISTERED ENGINEER - CIVIL

REGISTERED PROFESSIONAL ENGINEER M L NAPIER No. 46017 Exp. 12-31-98 CIVIL STATE OF CALIFORNIA

11-27-95
PLANS APPROVAL DATE

The State of California or its officers or agents shall not be responsible for the accuracy or completeness of electronic copies of this plan sheet

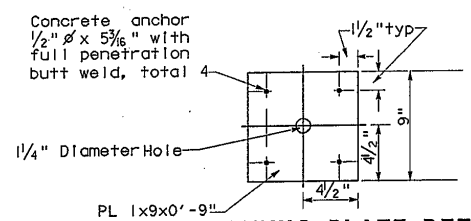

BEARING PLATE DETAIL
NO SCALE

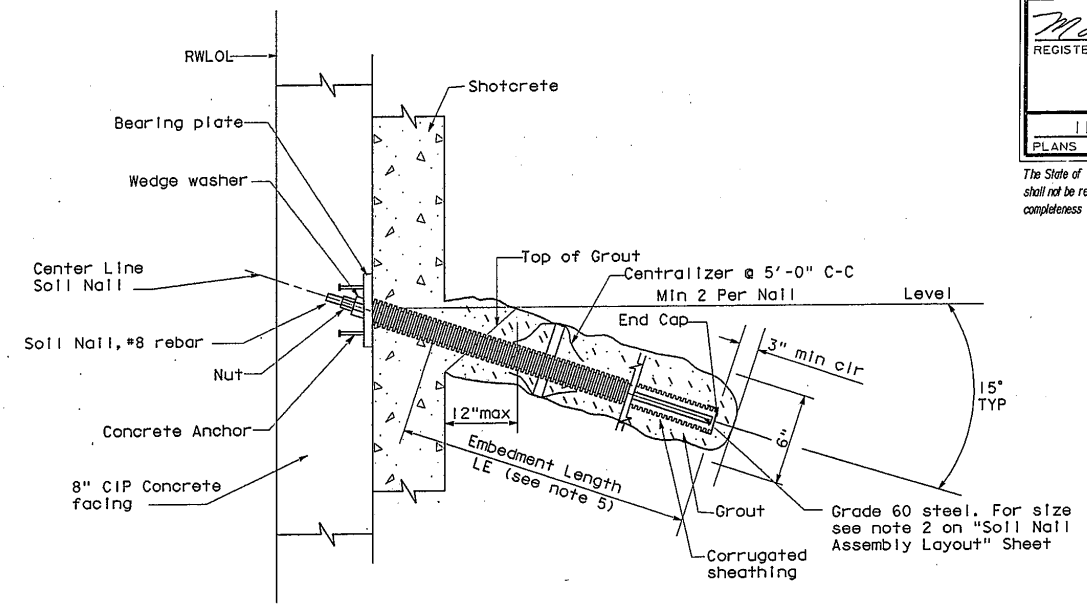

ENCAPSULATED SOIL NAIL DETAIL
No Scale

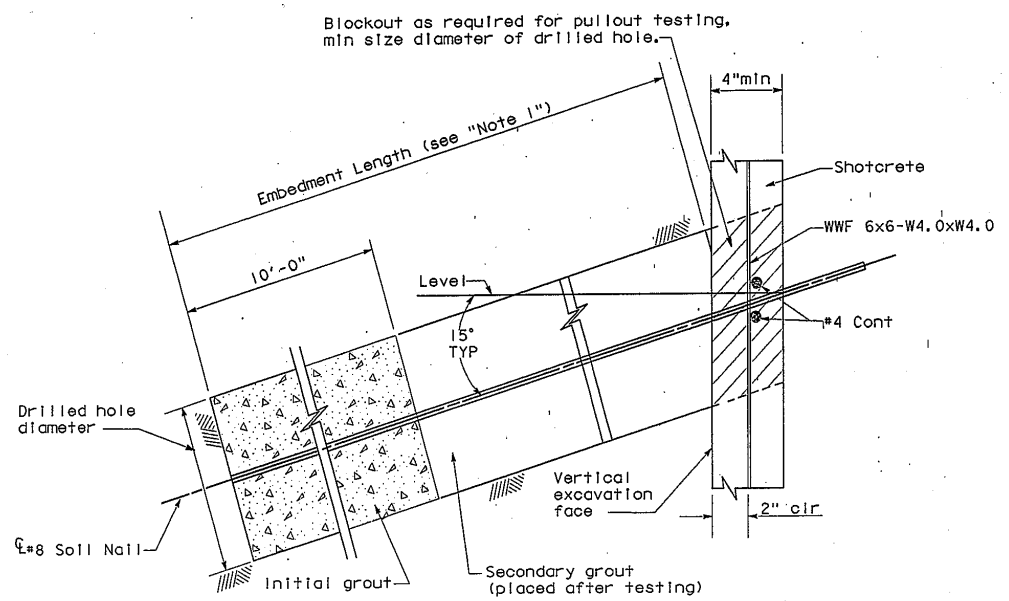

TEST SOIL NAIL ASSEMBLY DETAIL
No Scale

Notes:

1. Embedment length of test Soil Nail equals the embedment length of adjacent encapsulated soil nail assemblies for the row of nails below the test Soil Nail Assembly.
2. Total length of test soil nail assembly equals embedment length plus the length required for jacking equipment.
3. Use pull-out test load of 33.9 kips.
4. Inclination of test Soil Nail Assembly to be the same as adjacent Soil Nail Assemblies.
5. For embedment length of encapsulated Soil Nail Assembly, See LE on "Soil Nail Assembly Layout" sheet.

DESIGN	BY M L NAPIER	CHECKED J MORA	
DETAILS	BY J BRIGGS 2-95	CHECKED M L NAPIER	
QUANTITIES	BY M L NAPIER	CHECKED L A FARIA	

STATE OF CALIFORNIA
DEPARTMENT OF TRANSPORTATION

DISTRICT 11
STRUCTURE DESIGN B

CU 11288
EA 048661

BRIDGE NO.
POST MILE

SOIL NAIL RETAINING WALL "RW33"
SOIL NAIL ASSEMBLY DETAILS

DISREGARD PRINTS BEARING EARLIER REVISION DATES
REVISION DATES (PRELIMINARY STAGE ONLY) 05-09-95 05-11-95 06-13-95 06-27-95 08-28-95 07-22-95

SHEET 4 OF 9

DS C10 2/38 (CADD 4/89)

ORIGINAL SCALE IN INCHES FOR REDUCED PLANS 0 1 2 3

DIST.	COUNTY	ROUTE	POST MILES TOTAL PROJECT	SHEET NO.	TOTAL SHEETS
11	SD	15	R3.8/R6.0	760	1049

REGISTERED ENGINEER - CIVIL

REGISTERED PROFESSIONAL ENGINEER M L NAPIER No. 46017 Exp. 12-31-98 CIVIL STATE OF CALIFORNIA

11-27-95
PLANS APPROVAL DATE

The State of California or its officers or agents shall not be responsible for the accuracy or completeness of electronic copies of this plan sheet

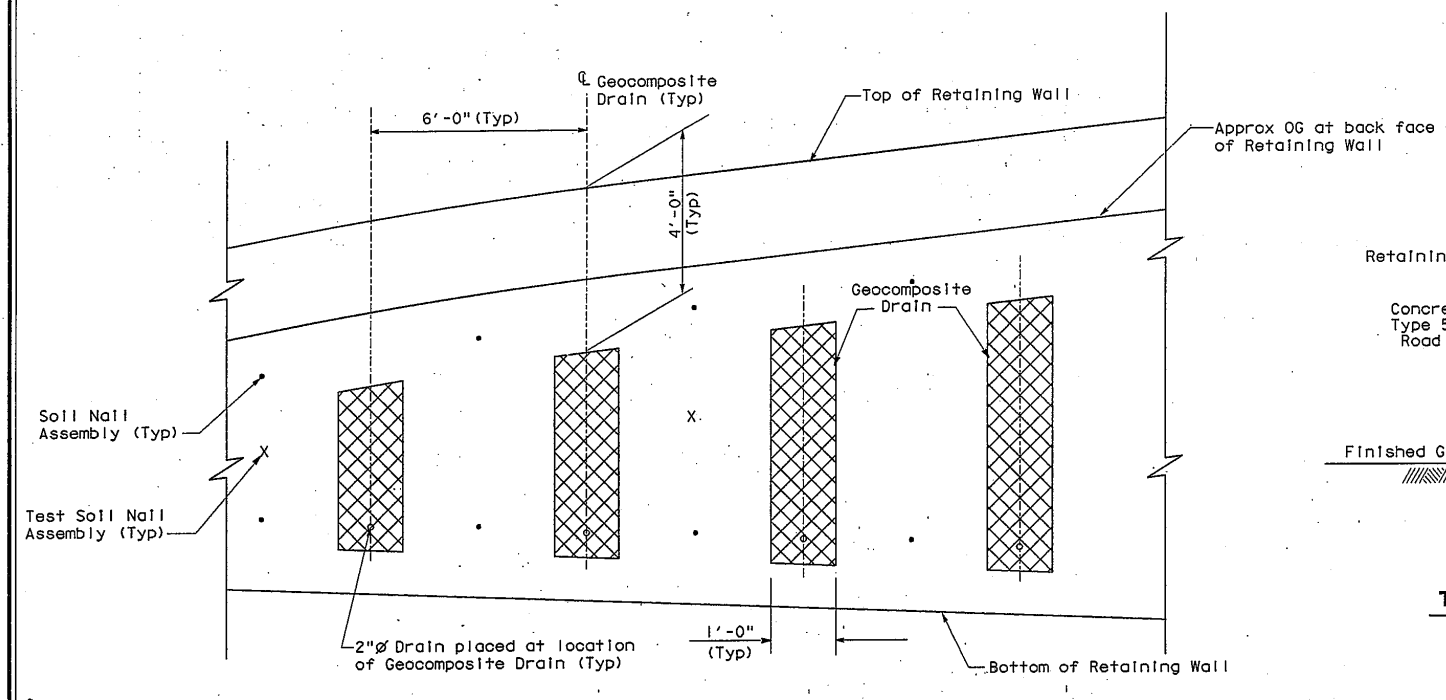

TYPICAL ELEVATION - GEOCOMPOSITE DRAIN

No Scale

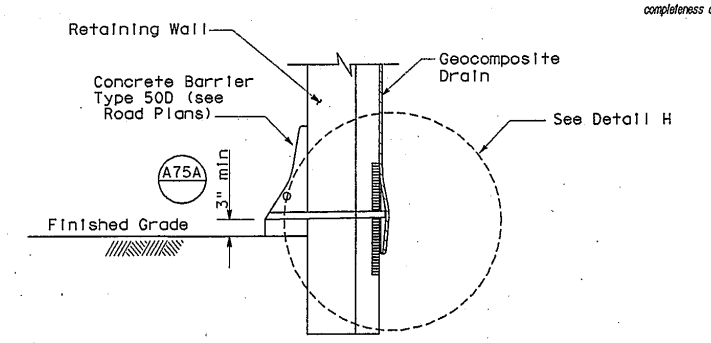

TYPICAL SECTION AT OUTLET PIPE

No Scale

Note: Fractured Fin Texture not shown.

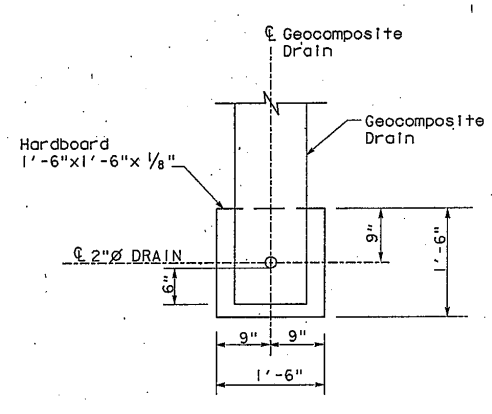

VIEW H-H

No Scale

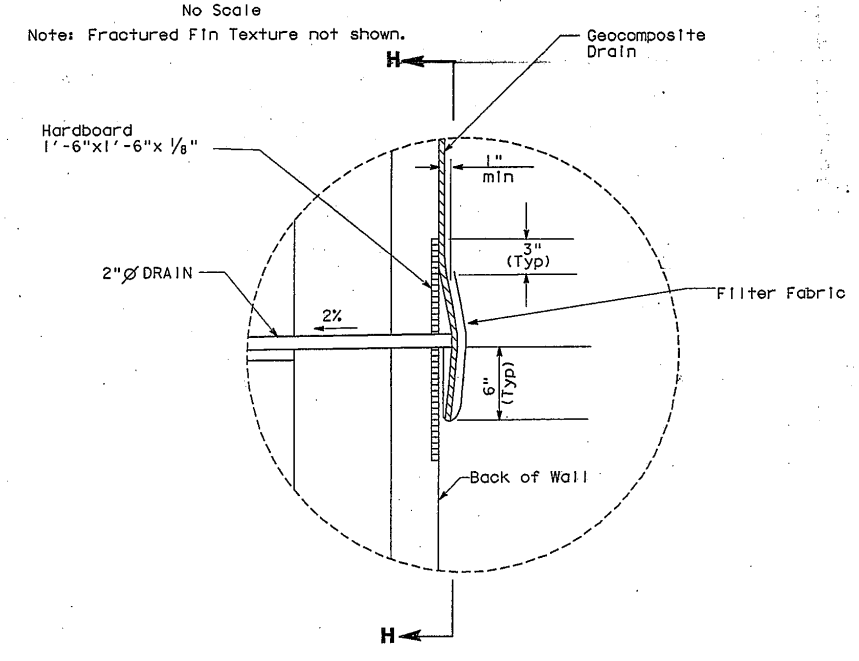

DETAIL H

No Scale

DESIGN	BY M L NAPIER	CHECKED J MORA	
DETAILS	BY J BRIGGS 02-95	CHECKED M L NAPIER	
QUANTITIES	BY M L NAPIER	CHECKED L A FARIA	

STATE OF CALIFORNIA DEPARTMENT OF TRANSPORTATION

DISTRICT 11 STRUCTURE DESIGN B

CU 11288
EA 048661

BRIDGE NO.
POST MILE

SOIL NAIL RETAINING WALL "RW33"

DETAILS NO 1

DS OSD 2138 (CADD 4/89)

ORIGINAL SCALE IN INCHES FOR REDUCED PLANS 0 1 2 3

DISREGARD PRINTS BEARING EARLIER REVISION DATES

REVISION DATES (PRELIMINARY STAGE ONLY) 05-10-95 05-11-95 06-13-95 06-27-95

SHEET 5 OF 9

DIST.	COUNTY	ROUTE	POST MILES TOTAL PROJECT	SHEET NO.	TOTAL SHEETS
11	SD	15	R3.8/R6.0	761	1049

REGISTERED ENGINEER - CIVIL

REGISTERED PROFESSIONAL ENGINEER M L NAPIER No. 46017 Exp. 12-31-98 CIVIL STATE OF CALIFORNIA

11-27-95
PLANS APPROVAL DATE

The State of California or its officers or agents shall not be responsible for the accuracy or completeness of electronic copies of this plan sheet

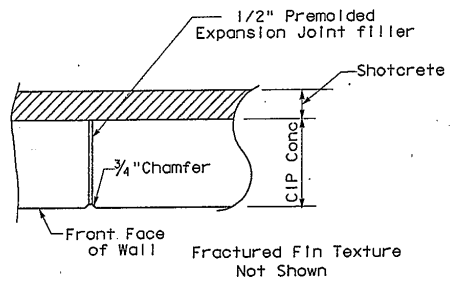

WALL EXPANSION JOINT
No Scale

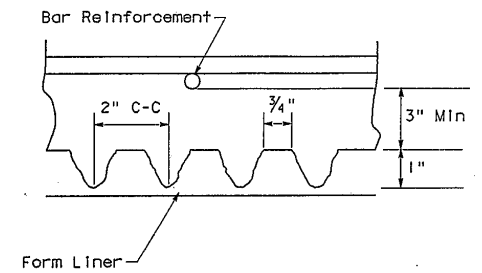

DETAIL
Typical

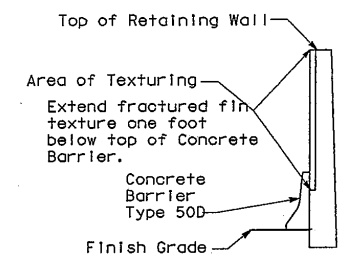

SECTION J-J
Typical

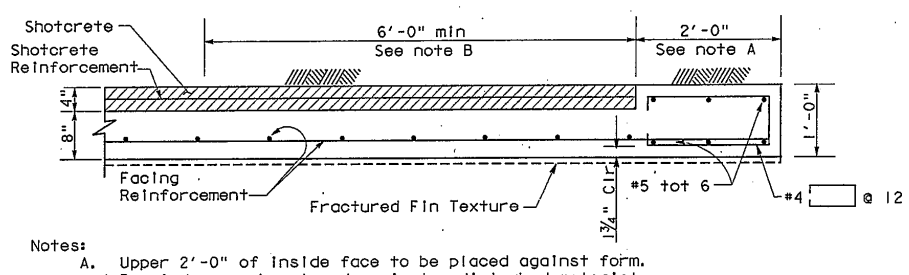

Notes:

A. Upper 2'-0" of inside face to be placed against form. Remainder may be placed against undisturbed material

B. Abrasive blast methods shall be used to clean the shotcrete surface to the extent that clean aggregate is exposed within these limits Prior to Constructing Cast in Place Concrete.

BEGIN/END OF WALL PLAN
1"=1'-0"

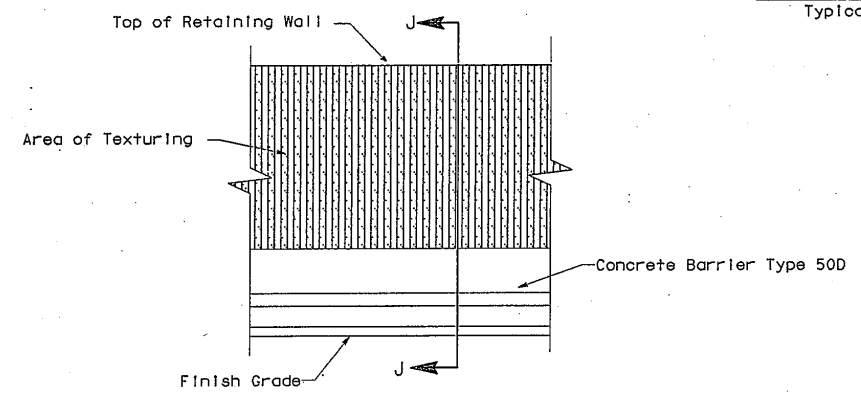

ELEVATION
Typical

FRACTURED FIN TEXTURE
No Scale

DESIGN	BY M L NAPIER	CHECKED J MORA	
DETAILS	BY J BRIGGS 03-95	CHECKED M L NAPIER	BY
QUANTITIES	BY M L NAPIER	CHECKED L A FARIA	BY

STATE OF CALIFORNIA
DEPARTMENT OF TRANSPORTATION

DISTRICT 11
STRUCTURE DESIGN B

BRIDGE NO.
POST MILE

SOIL NAIL RETAINING WALL "RW33"
DETAILS NO 2

DS 022 2138 (CADD 4/89)

ORIGINAL SCALE IN INCHES FOR REDUCED PLANS 0 1 2 3

CU 11288
EA 048661

DISREGARD PRINTS BEARING EARLIER REVISION DATES

REVISION DATES (PRELIMINARY STAGE ONLY) 05-11-95 06-09-95 06-19-95

SHEET 6 OF 9

DIST.	COUNTY	ROUTE	POST MILES TOTAL PROJECT	SHEET NO.	TOTAL SHEETS
11	SD	15	R3.8/R6.0	762	1049

REGISTERED ENGINEER - CIVIL

REGISTERED PROFESSIONAL ENGINEER M L NAPIER No. 46017 Exp. 12-31-98 CIVIL STATE OF CALIFORNIA

11-27-95
PLANS APPROVAL DATE

The State of California or its officers or agents shall not be responsible for the accuracy or completeness of electronic copies of this plan sheet

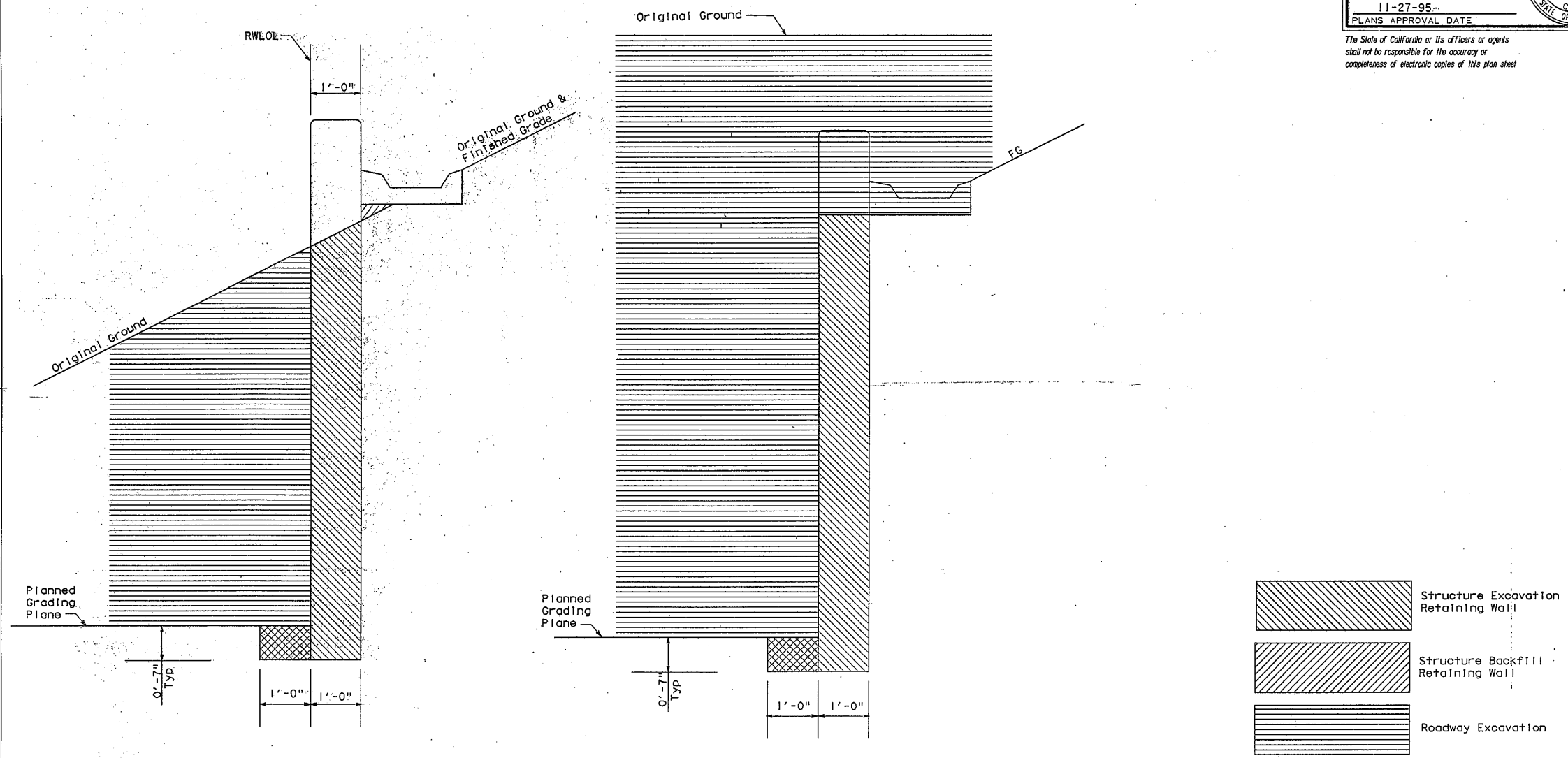

RETAINING WALL IN TYPICAL CUT

RETAINING WALL IN DEEP CUT

STRUCTURE EXCAVATION AND BACKFILL LIMITS

No Scale

DESIGN	BY M L NAPIER	CHECKED J MORA	
DETAILS	BY J BRIGGS 03-95	CHECKED M L NAPIER	
QUANTITIES	BY M L NAPIER	CHECKED L A FARIA	

STATE OF CALIFORNIA
DEPARTMENT OF TRANSPORTATION

DISTRICT 11
STRUCTURE DESIGN B

BRIDGE NO.
POST MILE

SOIL NAIL RETAINING WALL "RW33"

DETAILS NO 3

DS 050 2138 (CADD 4/89)

ORIGINAL SCALE IN INCHES FOR REDUCED PLANS 0 1 2 3

CU 11288
EA 048661

DISREGARD PRINTS BEARING EARLIER REVISION DATES

REVISION DATES (PRELIMINARY STAGE ONLY) 05-11-95 05-13-95 05-13-95

SHEET 7 OF 9

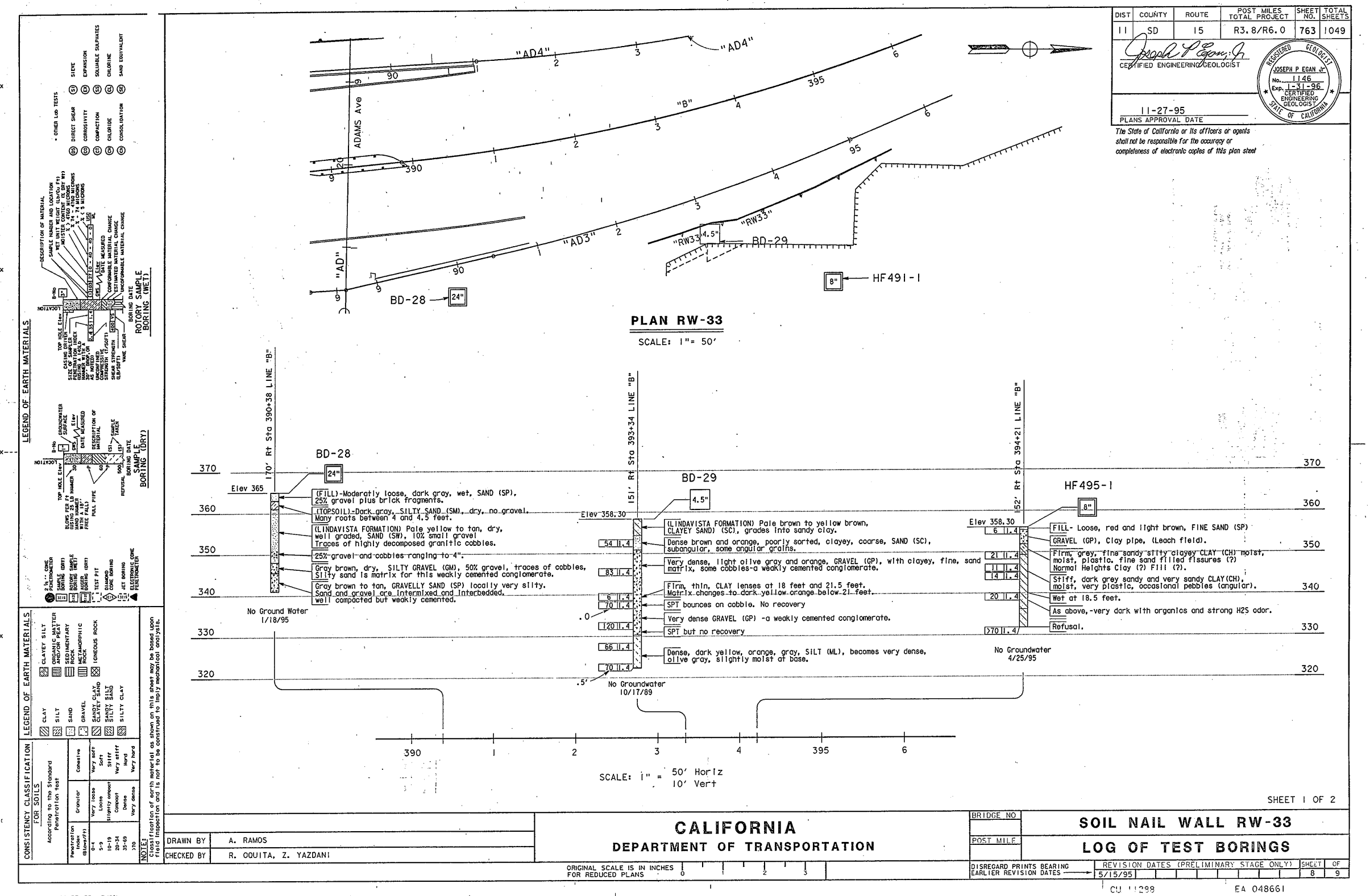
LEGEND OF EARTH MATERIALS
LEGEND OF EARTH MATERIALS
CONSISTENCY CLASSIFICATION FOR SOILS
According to the Standard Penetration Test
NOTES
Classification of earth material as shown on this sheet may be based upon field inspection and is not to be construed to imply mechanical analysis.
ROTARY SAMPLE BORING (WET)
SAMPLE BORING (DRY)
DISTRIBUTION OF MATERIAL
DESCRIPTION OF MATERIAL
SAMPLE NUMBER AND LOCATION
WET UNIT WEIGHT (LB/CU FT)
MOISTURE CONTENT (%)
BLOWS PER 6 INCHES
SIEVE
EXPANSION
SOLUBLE SULPHATES
CHLORINE
SAND EQUIVALENT
DIRECT SHEAR
CORROSIVITY
COMPACTION
CHLORIDE
CONSOLIDATION
* OTHER LAB TESTS
PLAN RW-33
SCALE: 1" = 50'
ADAMS Ave
"AD4"
"B"
"AD3"
"AD"
"RW33"
BD-28
BD-29
HF491-1
24"
4.5"
8"
170' Rt Sta 390+38 LINE "B"
151' Rt Sta 393+34 LINE "B"
152' Rt Sta 394+21 LINE "B"
Elev 365
Elev 358.30
(FILL)-Moderately loose, dark gray, wet, SAND (SP), 25% gravel plus brick fragments.
(TOPSOIL)-Dark gray, SILTY SAND (SM), dry, no gravel. Many roots between 4 and 4.5 feet.
(LINDAVISTA FORMATION) Pale yellow to tan, dry, well graded, SAND (SW), 10% small gravel Traces of highly decomposed granitic cobbles.
25% gravel and cobbles ranging to 4".
Gray brown, dry, SILTY GRAVEL (GM), 50% gravel, traces of cobbles, Silty sand is matrix for this weakly cemented conglomerate.
Gray brown to tan, GRAVELLY SAND (SP) locally very silty. Sand and gravel are intermixed and interbedded, well compacted but weakly cemented.
No Ground Water 1/18/95
(LINDAVISTA FORMATION) Pale brown to yellow brown, CLAYEY SAND (SC), grades into sandy clay.
Dense brown and orange, poorly sorted, clayey, coarse, SAND (SC), subangular, some angular grains.
Very dense, light olive gray and orange, GRAVEL (GP), with clayey, fine, sand matrix, some cobbles-a weakly cemented conglomerate.
Firm, thin, CLAY lenses at 18 feet and 21.5 feet. Matrix changes to dark yellow orange below 21 feet.
SPT bounces on cobble. No recovery
Very dense GRAVEL (GP) -a weakly cemented conglomerate.
SPT but no recovery
Dense, dark yellow, orange, gray, SILT (ML), becomes very dense, olive gray, slightly moist at base.
No Groundwater 10/17/89
FILL- Loose, red and light brown, FINE SAND (SP)
GRAVEL (GP), Clay pipe, (Leach field).
Firm, grey, fine sandy silty clayey CLAY (CH) moist, moist, plastic, fine sand filled fissures (?) Normal Heights Clay (?) Fill (?).
Stiff, dark grey sandy and very sandy CLAY(CH), moist, very plastic, occasional pebbles (angular).
Wet at 18.5 feet.
As above,-very dark with organics and strong H2S odor.
Refusal.
No Groundwater 4/25/95
SCALE: 1" = 50' Horiz
10' Vert
SHEET 1 OF 2
DIST 11 | COUNTY SD | ROUTE 15 | POST MILES TOTAL PROJECT R3.8/R6.0 | SHEET NO. 763 | TOTAL SHEETS 1049
CERTIFIED ENGINEERING GEOLOGIST
11-27-95
PLANS APPROVAL DATE
The State of California or its officers or agents shall not be responsible for the accuracy or completeness of electronic copies of this plan sheet
DRAWN BY A. RAMOS
CHECKED BY R. OOUITA, Z. YAZDANI
CALIFORNIA
DEPARTMENT OF TRANSPORTATION
SOIL NAIL WALL RW-33
LOG OF TEST BORINGS
BRIDGE NO
POST MILE
ORIGINAL SCALE IS IN INCHES FOR REDUCED PLANS
DISREGARD PRINTS BEARING EARLIER REVISION DATES
REVISION DATES (PRELIMINARY STAGE ONLY)
5/15/95
SHEET 8 OF 9
EA 048661
FORM DC-OE-92-PF (REV. 3/88)

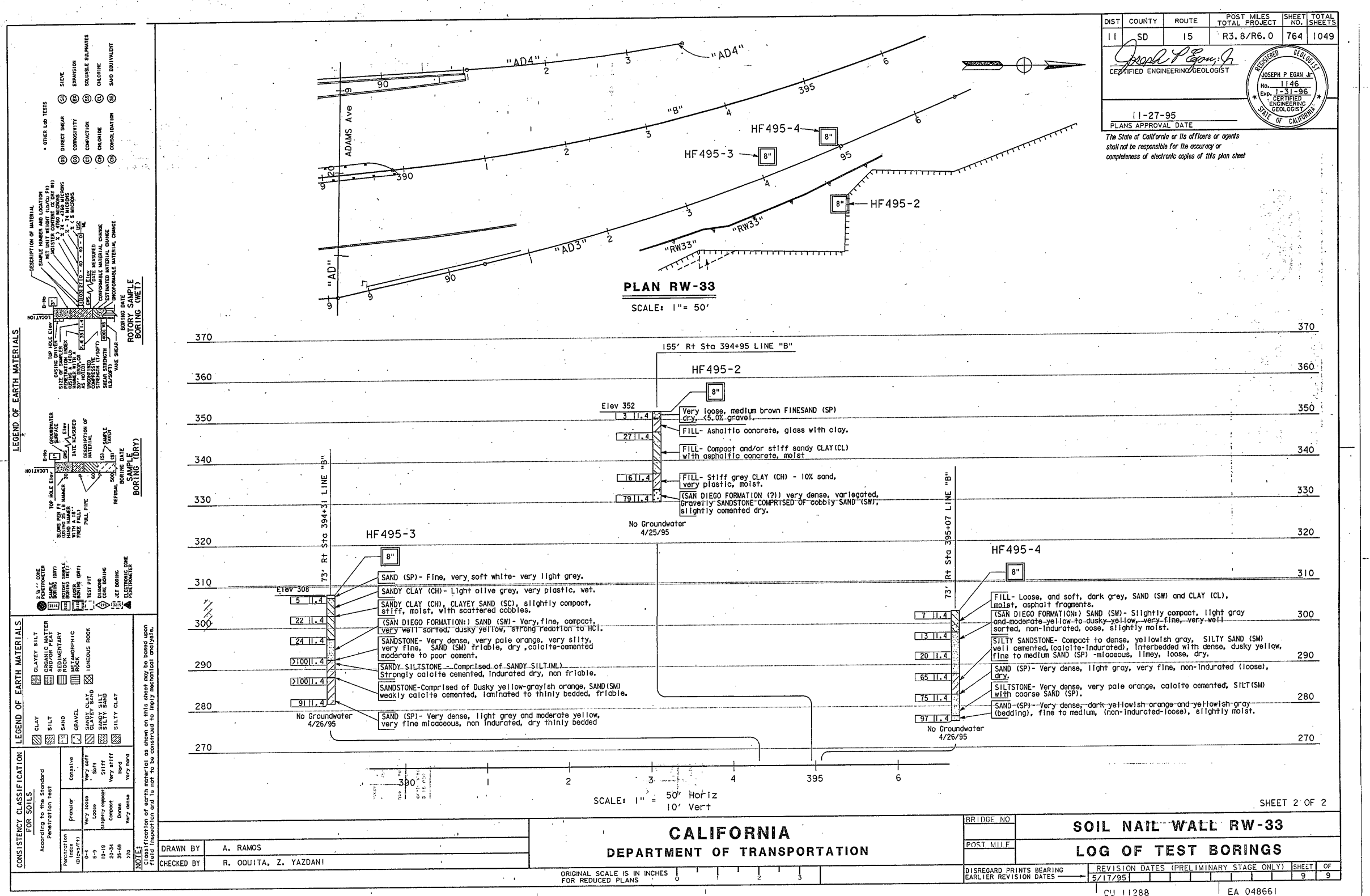
LEGEND OF EARTH MATERIALS
ROTARY SAMPLE BORING (WET)
SAMPLE BORING (DRY)
LEGEND OF EARTH MATERIALS
CLAYEY SILT
ORGANIC MATTER AND/OR PEAT
SEDIMENTARY ROCK
METAMORPHIC ROCK
IGNEOUS ROCK
CLAY
SILT
SAND
GRAVEL
CLAYEY SAND
SANDY CLAY
SANDY SILT
SILTY SAND
SILTY CLAY
CONSISTENCY CLASSIFICATION FOR SOILS
According to the Standard Penetration test
NOTE: Classification of earth material as shown on this sheet may be based upon field inspection and is not to be construed to imply mechanical analysis.
"AD4"
"B"
"AD3"
"AD"
"RW33"
ADAMS Ave
HF495-4
HF495-3
HF495-2
8"
PLAN RW-33
SCALE: 1"= 50'
155' Rt Sta 394+95 LINE "B"
HF495-2
Elev 352
Very loose, medium brown FINESAND (SP) dry, <5.0% gravel.
FILL- Ashaltic concrete, glass with clay.
FILL- Compact and/or stiff sandy CLAY(CL) with asphaltic concrete, moist
FILL- Stiff grey CLAY (CH) - 10% sand, very plastic, moist.
(SAN DIEGO FORMATION (?)) very dense, variegated, Gravelly SANDSTONE COMPRISED OF cobbly SAND (SW), slightly cemented dry.
No Groundwater 4/25/95
73' Rt Sta 394+31 LINE "B"
HF495-3
Elev 308
SAND (SP)- Fine, very soft white- very light grey.
SANDY CLAY (CH)- Light olive grey, very plastic, wet.
SANDY CLAY (CH), CLAYEY SAND (SC), slightly compact, stiff, moist, with scattered cobbles.
(SAN DIEGO FORMATION:) SAND (SW)- Very fine, compact, very well sorted, dusky yellow, strong reaction to HCl.
SANDSTONE- Very dense, very pale orange, very silty, very fine, SAND (SM) friable, dry ,calcite-cemented moderate to poor cement.
SANDY SILTSTONE - Comprised of SANDY SILT (ML) Strongly calcite cemented, indurated dry, non friable.
SANDSTONE-Comprised of Dusky yellow-grayish orange, SAND(SM) weakly calcite cemented, laminated to thinly bedded, friable.
SAND (SP)- Very dense, light grey and moderate yellow, very fine micaceous, non indurated, dry thinly bedded
No Groundwater 4/26/95
73' Rt Sta 395+07 LINE "B"
HF495-4
FILL- Loose, and soft, dark grey, SAND (SW) and CLAY (CL), moist, asphalt fragments.
(SAN DIEGO FORMATION:) SAND (SW)- Slightly compact, light gray and moderate yellow to dusky yellow, very fine, very well sorted, non-indurated, coose, slightly moist.
SILTY SANDSTONE- Compact to dense, yellowish gray, SILTY SAND (SM) well cemented,(calcite-indurated), interbedded with dense, dusky yellow, fine to medium SAND (SP) -micaceous, limoy, loose, dry.
SAND (SP)- Very dense, light gray, very fine, non-indurated (loose), dry.
SILTSTONE- Very dense, very pale orange, calcite cemented, SILT(SM) with coarse SAND (SP).
SAND (SP)- Very dense, dark yellowish orange and yellowish gray (bedding), fine to medium, (non-indurated-loose), slightly moist.
No Groundwater 4/26/95
SCALE: 1" = 50' Horiz
10' Vert
SHEET 2 OF 2
DIST 11 | COUNTY SD | ROUTE 15 | POST MILES TOTAL PROJECT R3.8/R6.0 | SHEET NO. 764 | TOTAL SHEETS 1049
CERTIFIED ENGINEERING GEOLOGIST
REGISTERED GEOLOGIST JOSEPH P EGAN JR No. 1146 Exp. 1-31-96 CERTIFIED ENGINEERING GEOLOGIST STATE OF CALIFORNIA
11-27-95
PLANS APPROVAL DATE
The State of California or its officers or agents shall not be responsible for the accuracy or completeness of electronic copies of this plan sheet
DRAWN BY A. RAMOS
CHECKED BY R. OOUITA, Z. YAZDANI
CALIFORNIA
DEPARTMENT OF TRANSPORTATION
ORIGINAL SCALE IS IN INCHES FOR REDUCED PLANS
BRIDGE NO.
POST MILE
SOIL NAIL WALL RW-33
LOG OF TEST BORINGS
DISREGARD PRINTS BEARING EARLIER REVISION DATES
REVISION DATES (PRELIMINARY STAGE ONLY) 5/17/95
SHEET 9 OF 9
CU 11288
EA 048661
FORM DC-OE-92-PF (REV. 3/88)

APPENDIX II

FIELD EXPLORATION DATA

LOGGED BY	BEGIN DATE	COMPLETION DATE	BOREHOLE LOCATION (Lat/Long or North/East and Datum)	HOLE ID
Minxing Zhao	5-15-12	5-15-12	32° 45' 49.44" / -117° 6' 31.53" WGS84	A-12-036
DRILLING CONTRACTOR: Pacific Drilling Co.			BOREHOLE LOCATION (Offset, Station, Line): 30.00' Rt Sta 90+30 Adams On Ramp	SURFACE ELEVATION: ~357.0 ft MSL
DRILLING METHOD: Hollow-Stem Auger			DRILL RIG: CME 75 HT	BOREHOLE DIAMETER: 8 in
SAMPLER TYPE(S) AND SIZE(S) (ID): SPT (1.5"), CAL (2.5")			SPT HAMMER TYPE: 140 lb. Auto Hammer, 30" Drop	HAMMER EFFICIENCY, ERi: 73%
BOREHOLE BACKFILL AND COMPLETION: Cuttings, Bentonite			GROUNDWATER READINGS: DURING DRILLING: Not Encountered; AFTER DRILLING (DATE):	TOTAL DEPTH OF BORING: 31.5 ft

ELEVATION (ft)	DEPTH (ft)	DESCRIPTION	Sample Location	Sample Number	Blows per 6 in.	Blows per foot	Recovery (%)	RQD (%)	Moisture Content (%)	Dry Unit Weight (pcf)	Shear Strength (tsf)	Drilling Method	Casing Depth	Remarks
	0	SEDIMENTARY ROCK, (POORLY INDURATED SANDSTONE); fine grained; moderate brown; moderately weathered; soft; (SILTY SAND with GRAVEL (SM); dense; moist; mostly fine sand; little fine gravel; little fines; (Lindavista Formation)).												
355.00	2			B01										
353.00	4													
	5	(Medium and fine sand; trace fine gravel).		S02	18 22 22	44								
351.00	6													
349.00	8													
347.00	10	(Very dense; coarse gravel).		S03	50/4"	REF								
345.00	12													
343.00	14													
	15			S04	50/2"	REF								no recovery.
341.00	16													
339.00	18													
337.00	20	SEDIMENTARY ROCK, (POORLY INDURATED CONGLOMERATE); coarse grained; moderate brown; moderately weathered; soft; (Poorly graded GRAVEL with SILT and COBBLES (GP-GM); very dense, moist; mostly coarse gravel; little fines; few fine sand; ~50% igneous COBBLES, hard;((San Diego).		S05	36 50/3"	50/3								
335.00	22													
333.00	24													
	25													

(continued)

CH2MHILL®

REPORT TITLE				HOLE ID
BORING RECORD				A-12-036
DIST. 11	COUNTY SD	ROUTE 15	POSTMILE 5.6/R6.0	EA 11-2T1901
PROJECT OR BRIDGE NAME: Route 15 Mid-City Commuter Bike Facility				
BRIDGE NUMBER	PREPARED BY: Minxing Zhao	DATE: 5-24-12	SHEET: 1 of 2	

5 BR - STANDARD SR-15 MID CITY_BIKE LANE.GPJ CALTRANS LIBRARY DEC09-W CH LOGO.GLB 9/26/12

ELEVATION (ft)	DEPTH (ft)	Material Graphics	DESCRIPTION	Sample Location	Sample Number	Blows per 6 in.	Blows per foot	Recovery (%)	RQD (%)	Moisture Content (%)	Dry Unit Weight (pcf)	Shear Strength (tsf)	Drilling Method	Casing Depth	Remarks
	25		SEDIMENTARY ROCK *(continued)*.		S06	50/5"	REF								no recovery.
331.00	26														
	27														
329.00	28		SEDIMENTARY ROCK, (POORLY INDURATED SILTSTONE); fine grained; grayish brown; moderately weathered; soft; (SANDY SILT (SM); very stiff to hard; moist; mostly fines; some fine sand).												
	29														
327.00	30				S07	13	41								
	31					17 24									
325.00	32		Bottom of borehole at 31.5 ft bgs												
	33		Boring terminated at a depth of 31.5 ft due to auger refusal.												
323.00	34		This Boring Record was prepared in accordance with the Caltrans Soil & Rock Logging, Classification, and Presentation Manuals (2010), except as follows:												
	35		1) Consistency of cohesive soil: relatively undisturbed samples were not obtained due to the limited fine grained materials encountered. The consistency of the fine grained soil was determined based on the Standard of Practice for Description and Identification of Soils, Visual-Manual Procedure, (ASTM D2488, Table 5).												
321.00	36														
	37		2) Bedding Spacing and Fracture Density: Drilling and sampling methods employed did not facilitate the evaluation of bedding and fractures. Based on the limited materials observed, and the regional geologic maps and reports reviewed, the Lindavista Formation is expected to be massively bedded; the San Diego Formation is expected to be from thickly to massively bedded. Fracture density for both formations is undetermined.												
319.00	38														
	39														
317.00	40		3) Description of cobbles: Drilling and sampling methods employed did not facilitate the evaluation of cobbles. Where observed, the description is provided on the Boring Record as complete as possible.												
	41														
315.00	42														
	43														
313.00	44														
	45														
311.00	46														
	47														
309.00	48														
	49														
307.00	50														
	51														
305.00	52														
	53														
303.00	54														
	55														

CH2MHILL

REPORT TITLE				HOLE ID
BORING RECORD				**A-12-036**
DIST. **11**	COUNTY **SD**	ROUTE **15**	POSTMILE **5.6/R6.0**	EA **11-2T1901**
PROJECT OR BRIDGE NAME **Route 15 Mid-City Commuter Bike Facility**				
BRIDGE NUMBER	PREPARED BY **Minxing Zhao**	DATE **5-24-12**	SHEET **2 of 2**	

5 BR - STANDARD SR-15 MID CITY_BIKE LANE.GPJ CALTRANS LIBRARY DEC09-W CH LOGO.GLB 9/26/12

LOGGED BY	BEGIN DATE	COMPLETION DATE	BOREHOLE LOCATION (Lat/Long or North/East and Datum)	HOLE ID
Minxing Zhao	5-16-12	5-16-12	32° 46' 0.68" / -117° 6' 37.51" WGS84	A-12-037
DRILLING CONTRACTOR: Pacific Drilling Co.			BOREHOLE LOCATION (Offset, Station, Line): 95.00' Rt Sta 402+67 SD-15	SURFACE ELEVATION: ~299.0 ft MSL
DRILLING METHOD: Hollow-Stem Auger			DRILL RIG: CME 75 HT	BOREHOLE DIAMETER: 8 in
SAMPLER TYPE(S) AND SIZE(S) (ID): SPT (1.5")			SPT HAMMER TYPE: 140 lb. Auto Hammer, 30" Drop	HAMMER EFFICIENCY, ERi: 73%
BOREHOLE BACKFILL AND COMPLETION: Cuttings, Bentonite			GROUNDWATER READINGS: DURING DRILLING Not Encountered; AFTER DRILLING (DATE)	TOTAL DEPTH OF BORING: 31.5 ft

ELEVATION (ft)	DEPTH (ft)	DESCRIPTION	Sample Location	Sample Number	Blows per 6 in.	Blows per foot	Recovery (%)	RQD (%)	Moisture Content (%)	Dry Unit Weight (pcf)	Shear Strength (tsf)	Drilling Method	Casing Depth	Remarks
	0	CLAYEY GRAVEL with SAND (GC); medium dense; brown; moist; mostly fine GRAVEL; little fines; little medium sand; weak cementation; (Artificial Fill).												
	1													
297.00	2			B01										
	3													
295.00	4													
	5	SEDIMENTARY ROCK, (POORLY INDURATED CONGLOMERATE); coarse grained; grayish brown; moderately weathered; soft; (CLAYEY GRAVEL (GC); medium dense; moist; mostly coarse gravel; some fines; trace medium and fine sand; COBBLES encountered, igneous, hard; (San Diego Formation)).		S02	15 14 13	27								
293.00	6													
	7													
291.00	8													
	9													
289.00	10	(Very dense; moderate brown; fine gravel).		S03	50/6"	REF								
	11													
287.00	12													
	13													
285.00	14													
	15	SEDIMENTARY ROCK, (POORLY INDURATED SANDSTONE); coarse grained; grayish brown; moderately weathered; soft; (Poorly graded SAND with CLAY (SP-SC); medium dense; moist; mostly medium and fine sand; few fines).		S04	13 14 12	26								
283.00	16													
	17													
281.00	18													
	19													
279.00	20	(Poorly-graded SAND with SILT (SP-SM); very dense; moderate brown).		S05	21 50/5"	50/5								
	21													
277.00	22													
	23													
275.00	24													
	25													

(continued)

CH2MHILL®

REPORT TITLE				HOLE ID
BORING RECORD				A-12-037
DIST. 11	COUNTY SD	ROUTE 15	POSTMILE 5.6/R6.0	EA 11-2T1901
PROJECT OR BRIDGE NAME: Route 15 Mid-City Commuter Bike Facility				
BRIDGE NUMBER	PREPARED BY: Minxing Zhao		DATE 5-24-12	SHEET 1 of 2

5 BR - STANDARD SR-15 MID CITY_BIKE LANE.GPJ CALTRANS LIBRARY DEC09-W CH LOGO.GLB 9/26/12

ELEVATION (ft)	DEPTH (ft)	Material Graphics	DESCRIPTION	Sample Location	Sample Number	Blows per 6 in.	Blows per foot	Recovery (%)	RQD (%)	Moisture Content (%)	Dry Unit Weight (pcf)	Shear Strength (tsf)	Drilling Method	Casing Depth	Remarks
	25		SEDIMENTARY ROCK *(continued)*. (Light gray).		S06	16 29 44	73								
273.00	26														
	27														
271.00	28														
	29														
269.00	30				S07	28 50/4"	50/4								
	31														
267.00	32		Bottom of borehole at 31.5 ft bgs Boring terminated at a planned depth. This Boring Record was prepared in accordance with the Caltrans Soil & Rock Logging, Classification, and Presentation Manuals (2010), except as follows: 1) Consistency of cohesive soil: relatively undisturbed samples were not obtained due to the limited fine grained materials encountered. The consistency of the fine grained soil was determined based on the Standard of Practice for Description and Identification of Soils, Visual-Manual Procedure, (ASTM D2488, Table 5). 2) Bedding Spacing and Fracture Density: Drilling and sampling methods employed did not facilitate the evaluation of bedding and fractures. Based on the limited materials observed, and the regional geologic maps and reports reviewed, the Lindavista Formation is expected to be massively bedded; the San Diego Formation is expected to be from thickly to massively bedded. Fracture density for both formations is undetermined. 3) Description of cobbles: Drilling and sampling methods employed did not facilitate the evaluation of cobbles. Where observed, the description is provided on the Boring Record as complete as possible.												
	33														
265.00	34														
	35														
263.00	36														
	37														
261.00	38														
	39														
259.00	40														
	41														
257.00	42														
	43														
255.00	44														
	45														
253.00	46														
	47														
251.00	48														
	49														
249.00	50														
	51														
247.00	52														
	53														
245.00	54														
	55														

CH2MHILL®

REPORT TITLE				HOLE ID
BORING RECORD				**A-12-037**
DIST. **11**	COUNTY **SD**	ROUTE **15**	POSTMILE **5.6/R6.0**	EA **11-2T1901**
PROJECT OR BRIDGE NAME **Route 15 Mid-City Commuter Bike Facility**				
BRIDGE NUMBER	PREPARED BY **Minxing Zhao**	DATE **5-24-12**	SHEET **2 of 2**	

5 BR - STANDARD SR-15 MID CITY_BIKE LANE.GPJ CALTRANS LIBRARY DEC09-W CH LOGO.GLB 9/26/12

LOGGED BY	BEGIN DATE	COMPLETION DATE	BOREHOLE LOCATION (Lat/Long or North/East and Datum)	HOLE ID
Minxing Zhao	5-16-12	5-16-12	32° 46' 26.33" / -117° 6' 42.3" WGS84	A-12-038
DRILLING CONTRACTOR: Pacific Drilling Co.			BOREHOLE LOCATION (Offset, Station, Line): 126.00' Rt Sta 431+00 SD-15	SURFACE ELEVATION: ~183.0 ft MSL
DRILLING METHOD: Hollow-Stem Auger			DRILL RIG: CME 75 HT	BOREHOLE DIAMETER: 8 in
SAMPLER TYPE(S) AND SIZE(S) (ID): SPT (1.5")			SPT HAMMER TYPE: 140 lb. Auto Hammer, 30" Drop	HAMMER EFFICIENCY, ERi: 73%
BOREHOLE BACKFILL AND COMPLETION: Cuttings, Bentonite			GROUNDWATER READINGS: DURING DRILLING: Not Encountered; AFTER DRILLING (DATE):	TOTAL DEPTH OF BORING: 27.0 ft

ELEVATION (ft)	DEPTH (ft)	DESCRIPTION	Sample Location	Sample Number	Blows per 6 in.	Blows per foot	Recovery (%)	RQD (%)	Moisture Content (%)	Dry Unit Weight (pcf)	Shear Strength (tsf)	Drilling Method	Casing Depth	Remarks
	0	SILTY GRAVEL (GM); very dense; brown; moist; mostly fine GRAVEL; little fines; few medium sand; COBBLES encountered, igneous, hard; (Artificial Fill).												
	1													
181.00	2			B01										
	3													
179.00	4													
	5			S02	50/6"	REF								
177.00	6													
	7													
175.00	8													
	9													
173.00	10			S03	50/3"	REF								
	11													
171.00	12													
	13													
169.00	14													
	15	SEDIMENTARY ROCK, (POORLY INDURATED CONGLOMERATE); coarse grained; grayish brown; moderately weathered; soft; (SILTY GRAVEL with SAND (GM); very dense, moist; mostly fine gravel; little fines; few fine sand; (San Diego Formation)).		S04	50/5"	REF								
167.00	16													
	17													
165.00	18													
	19													
163.00	20	(Trace medium sand; COBBLES encountered, igneous, hard).		S05	50/2"	REF								
	21													
161.00	22													
	23													
159.00	24													
	25													

(continued)

CH2MHILL

REPORT TITLE				HOLE ID
BORING RECORD				A-12-038
DIST. 11	COUNTY SD	ROUTE 15	POSTMILE 5.6/R6.0	EA 11-2T1901
PROJECT OR BRIDGE NAME: Route 15 Mid-City Commuter Bike Facility				
BRIDGE NUMBER	PREPARED BY: Minxing Zhao		DATE 5-24-12	SHEET 1 of 2

5 BR - STANDARD SR-15 MID CITY_BIKE LANE.GPJ CALTRANS LIBRARY DEC09-W CH LOGO.GLB 9/26/12

ELEVATION (ft)	DEPTH (ft)	Material Graphics	DESCRIPTION	Sample Location	Sample Number	Blows per 6 in.	Blows per foot	Recovery (%)	RQD (%)	Moisture Content (%)	Dry Unit Weight (pcf)	Shear Strength (tsf)	Drilling Method	Casing Depth	Remarks
	25		SEDIMENTARY ROCK *(continued)*.	X	S06	50/5"	REF								
157.00	26														
	27		Bottom of borehole at 27.0 ft bgs												
155.00	28		Boring terminated at a depth of 27 ft due to auger refusal.												
	29		This Boring Record was prepared in accordance with the Caltrans Soil & Rock Logging, Classification, and Presentation Manuals (2010), except as follows:												
153.00	30		1) Consistency of cohesive soil: relatively undisturbed samples were not obtained due to the limited fine grained materials encountered. The consistency of the fine grained soil was determined based on the Standard of Practice for Description and Identification of Soils, Visual-Manual Procedure, (ASTM D2488, Table 5).												
	31														
151.00	32		2) Bedding Spacing and Fracture Density: Drilling and sampling methods employed did not facilitate the evaluation of bedding and fractures. Based on the limited materials observed, and the regional geologic maps and reports reviewed, the Lindavista Formation is expected to be massively bedded; the San Diego Formation is expected to be from thickly to massively bedded. Fracture density for both formations is undetermined.												
	33														
149.00	34														
	35														
147.00	36		3) Description of cobbles: Drilling and sampling methods employed did not facilitate the evaluation of cobbles. Where observed, the description is provided on the Boring Record as complete as possible.												
	37														
145.00	38														
	39														
143.00	40														
	41														
141.00	42														
	43														
139.00	44														
	45														
137.00	46														
	47														
135.00	48														
	49														
133.00	50														
	51														
131.00	52														
	53														
129.00	54														
	55														

CH2MHILL

REPORT TITLE				HOLE ID
BORING RECORD				**A-12-038**
DIST. **11**	COUNTY **SD**	ROUTE **15**	POSTMILE **5.6/R6.0**	EA **11-2T1901**
PROJECT OR BRIDGE NAME **Route 15 Mid-City Commuter Bike Facility**				
BRIDGE NUMBER	PREPARED BY **Minxing Zhao**		DATE **5-24-12**	SHEET **2 of 2**

5 BR - STANDARD SR-15 MID CITY_BIKE LANE.GPJ CALTRANS LIBRARY DEC09-W CH LOGO.GLB 9/26/12

LOGGED BY	BEGIN DATE	COMPLETION DATE	BOREHOLE LOCATION (Lat/Long or North/East and Datum)	HOLE ID
Minxing Zhao	5-16-12	5-16-12	WGS84	Key Sheet
DRILLING CONTRACTOR: Pacific Drilling Co.			BOREHOLE LOCATION (Offset, Station, Line):	SURFACE ELEVATION: MSL
DRILLING METHOD: Hollow-Stem Auger			DRILL RIG: CME 75 HT	BOREHOLE DIAMETER: 8 in
SAMPLER TYPE(S) AND SIZE(S) (ID): SPT (1.5")			SPT HAMMER TYPE: 140 lb. Auto Hammer, 30" Drop	HAMMER EFFICIENCY, ERi: 73%
BOREHOLE BACKFILL AND COMPLETION			GROUNDWATER READINGS: DURING DRILLING / AFTER DRILLING (DATE)	TOTAL DEPTH OF BORING: 24.0 ft

ELEVATION (ft)	DEPTH (ft)	Material Graphics	DESCRIPTION	Sample Location	Sample Number	Blows per 6 in.	Blows per foot	Recovery (%)	RQD (%)	Moisture Content (%)	Dry Unit Weight (pcf)	Shear Strength (tsf)	Drilling Method	Casing Depth	Remarks
	0				B-0										
	1		Sample Interval: Top/Bottom (ft. bgs) Amount of Sample Recovered (ft)												
	2		bgs = below ground surface												
	3		Sample Type - Sample Number												
	4		(D) Modified California split-spoon drive sampler, 3.0-inch (76-mm) outside diameter, 2.4-inch (64-mm) inside diameter (with liners)												
	5				S-1	2	4	100							
	6		(S) Split-spoon drive sampler, 2.0-inch (50-mm) outside diameter 1.4-inch (35-mm) inside diameter (without liners)			2 2									
	7														
	8		(B) Bulk sample collected from drill cuttings												
	9		Standard Penetration Test Results												
	10		Number of blows required to advance driven sampler over three 6-inch (152-mm) increments. Number in parenthesis is the total number of blows required to advance the sampler 12-inch (305 mm) beyond the first 6-inch (152-mm) interval. Drive samplers advanced using a 140 lb (63.5 kg) Hammer with the 30-inch (762-mm) drop. The blow counts given have not been modified to account for field and/or depth conditions.												
	11														
	12														
	13		General Notes												
	14		1) Soil classifications are based on the Unified Soil Classification System. Classifications and descriptions made in the field have been modified based on the results of laboratory testing.												
	15														
	16		2) Boring logs depict subsurface conditions only at the specific locations and times the boring was made. Logs do not necessarily reflect strata variations that may exist between boring locations..												
	17														
	18														
	19														
	20														
	21														
	22														
	23														
	24		Bottom of borehole at 24.0 ft bgs												
	25														

CH2MHILL®

REPORT TITLE				HOLE ID
BORING RECORD				Key Sheet
DIST. 11	COUNTY SD	ROUTE 15	POSTMILE 5.6/R6.0	EA 11-2T1901
PROJECT OR BRIDGE NAME: Route 15 Mid-City Commuter Bike Facility				
BRIDGE NUMBER	PREPARED BY: Minxing Zhao	DATE 5-24-12	SHEET 1 of 1	

5 BR - STANDARD SR-15 MID CITY_BIKE LANE.GPJ CALTRANS LIBRARY DEC09-W CH LOGO.GLB 9/26/12

APPENDIX III
LABORATORY TEST DATA

NO LABORATORY TEST DATA ARE INCLUDED IN APPENDIX III OF THIS REPORT.

APPENDIX IV

ANALYSES AND CALCULATIONS

SELECT SITE LOCATION

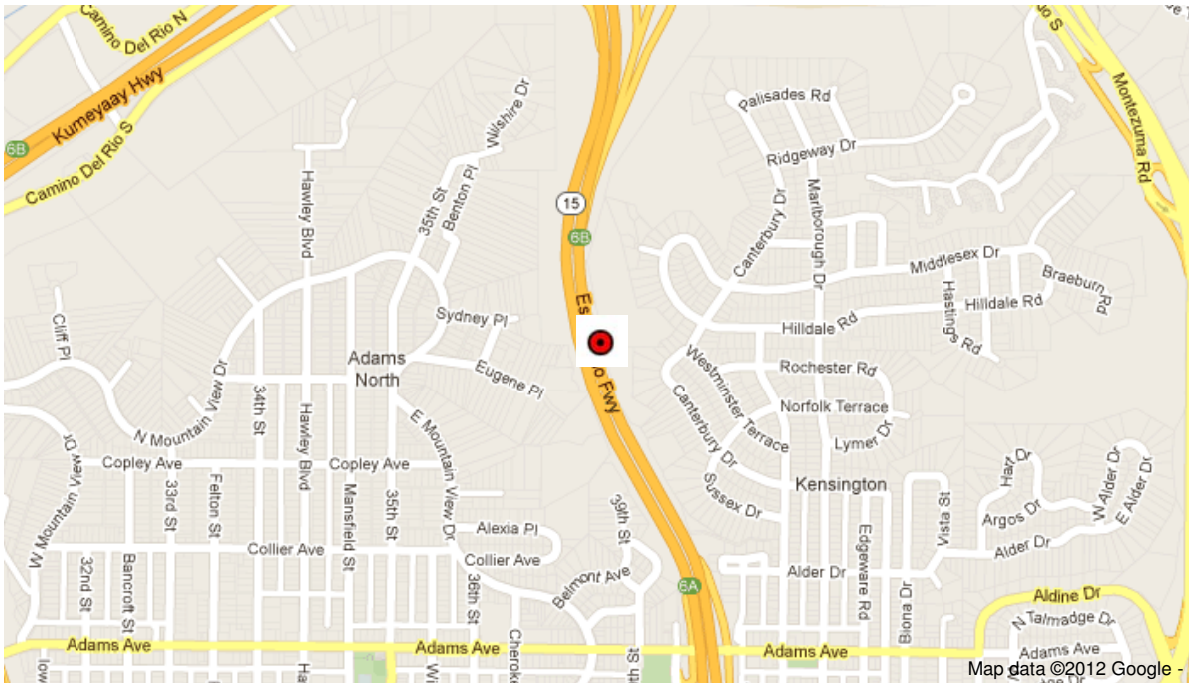

CALCULATED SPECTRA

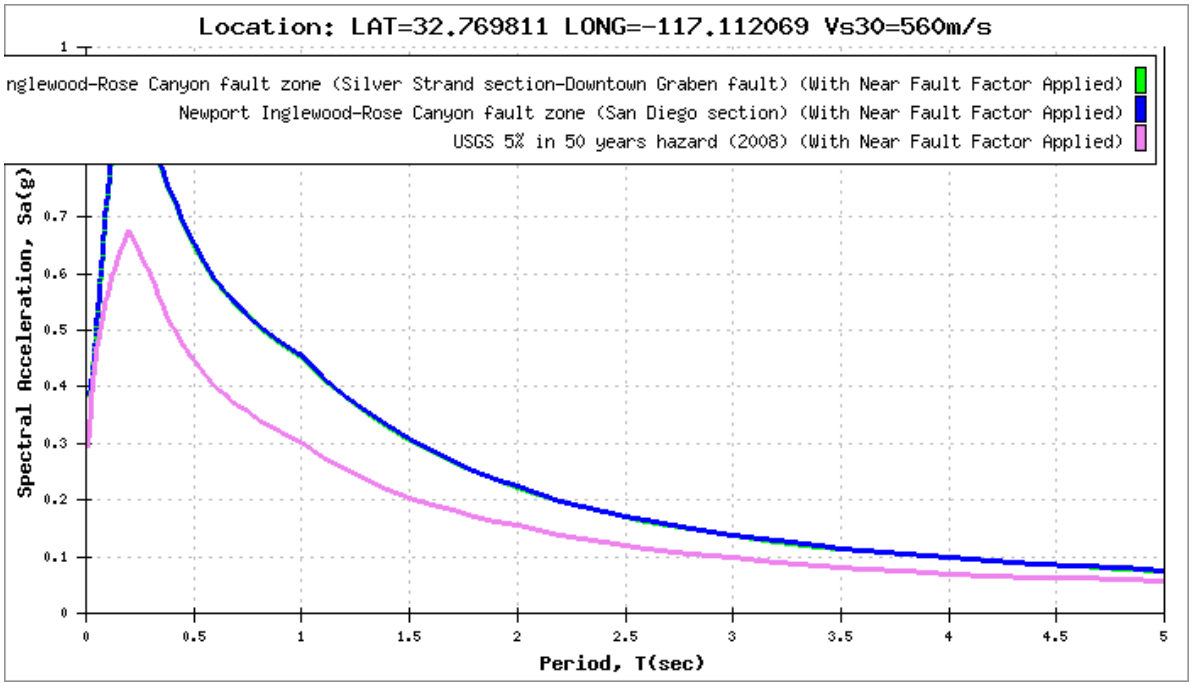

SITE DATA

Shear Wave Velocity, Vs_{30}:	560 m/s
Latitude:	32.769811
Longitude:	-117.112069
Depth to Vs = 1.0 km/s:	74 m
Depth to Vs = 2.5 km/s:	2.00 km

DETERMINISTIC

Newport Inglewood-Rose Canyon fault zone (Silver Strand section-Downtown Graben fault)

Fault ID:	423
Maximum Magnitude (MMax):	7.5
Fault Type:	RLSS
Fault Dip:	90 Deg
Dip Direction:	V
Bottom of Rupture Plane:	13.00 km
Top of Rupture Plane(Ztor):	0.00 km
Rrup	6.57 km
Rjb:	6.57 km
Rx:	4.65 km
Fnorm:	0
Frev:	0

Period	SA (Base Spectrum)	Basin Factor	Near Fault Factor (Applied)	SA (Final Spectrum)
0.01	0.385	1.000	1.000	0.385
0.02	0.392	1.000	1.000	0.392
0.022	0.398	1.000	1.000	0.398
0.025	0.406	1.000	1.000	0.406
0.029	0.417	1.000	1.000	0.417
0.03	0.420	1.000	1.000	0.420
0.032	0.428	1.000	1.000	0.428
0.035	0.441	1.000	1.000	0.441
0.036	0.445	1.000	1.000	0.445
0.04	0.462	1.000	1.000	0.462
0.042	0.471	1.000	1.000	0.471
0.044	0.480	1.000	1.000	0.480
0.045	0.485	1.000	1.000	0.485
0.046	0.489	1.000	1.000	0.489
0.048	0.498	1.000	1.000	0.498
0.05	0.507	1.000	1.000	0.507
0.055	0.533	1.000	1.000	0.533
0.06	0.559	1.000	1.000	0.559
0.065	0.584	1.000	1.000	0.584
0.067	0.594	1.000	1.000	0.594
0.07	0.608	1.000	1.000	0.608

0.075	0.632	1.000	1.000	0.632
0.08	0.655	1.000	1.000	0.655
0.085	0.678	1.000	1.000	0.678
0.09	0.699	1.000	1.000	0.699
0.095	0.720	1.000	1.000	0.720
0.1	0.740	1.000	1.000	0.740
0.11	0.773	1.000	1.000	0.773
0.12	0.802	1.000	1.000	0.802
0.13	0.827	1.000	1.000	0.827
0.133	0.833	1.000	1.000	0.833
0.14	0.847	1.000	1.000	0.847
0.15	0.865	1.000	1.000	0.865
0.16	0.877	1.000	1.000	0.877
0.17	0.886	1.000	1.000	0.886
0.18	0.894	1.000	1.000	0.894
0.19	0.900	1.000	1.000	0.900
0.2	0.904	1.000	1.000	0.904
0.22	0.895	1.000	1.000	0.895
0.24	0.883	1.000	1.000	0.883
0.25	0.877	1.000	1.000	0.877
0.26	0.868	1.000	1.000	0.868
0.28	0.852	1.000	1.000	0.852
0.29	0.843	1.000	1.000	0.843
0.3	0.834	1.000	1.000	0.834
0.32	0.814	1.000	1.000	0.814
0.34	0.793	1.000	1.000	0.793
0.35	0.783	1.000	1.000	0.783
0.36	0.773	1.000	1.000	0.773
0.38	0.753	1.000	1.000	0.753
0.4	0.734	1.000	1.000	0.734
0.42	0.715	1.000	1.000	0.715
0.44	0.697	1.000	1.000	0.697
0.45	0.689	1.000	1.000	0.689
0.46	0.680	1.000	1.000	0.680
0.48	0.664	1.000	1.000	0.664
0.5	0.648	1.000	1.000	0.648
0.55	0.603	1.000	1.020	0.615
0.6	0.565	1.000	1.040	0.587
0.65	0.531	1.000	1.060	0.563
0.667	0.521	1.000	1.067	0.555
0.7	0.502	1.000	1.080	0.542
0.75	0.475	1.000	1.100	0.523
0.8	0.451	1.000	1.120	0.506
0.85	0.430	1.000	1.140	0.490
0.9	0.411	1.000	1.160	0.476
0.95	0.393	1.000	1.180	0.464
1	0.377	1.000	1.200	0.452
1.1	0.346	1.000	1.200	0.415
1.2	0.319	1.000	1.200	0.383

1.3	0.295	1.000	1.200	0.354
1.4	0.274	1.000	1.200	0.329
1.5	0.256	1.000	1.200	0.307
1.6	0.238	1.000	1.200	0.286
1.7	0.223	1.000	1.200	0.267
1.8	0.209	1.000	1.200	0.250
1.9	0.196	1.000	1.200	0.235
2	0.185	1.000	1.200	0.222
2.2	0.165	1.000	1.200	0.198
2.4	0.149	1.000	1.200	0.179
2.5	0.142	1.000	1.200	0.170
2.6	0.135	1.000	1.200	0.162
2.8	0.124	1.000	1.200	0.149
3	0.114	1.000	1.200	0.137
3.2	0.106	1.000	1.200	0.127
3.4	0.099	1.000	1.200	0.118
3.5	0.095	1.000	1.200	0.114
3.6	0.092	1.000	1.200	0.110
3.8	0.086	1.000	1.200	0.104
4	0.081	1.000	1.200	0.097
4.2	0.077	1.000	1.200	0.092
4.4	0.073	1.000	1.200	0.087
4.6	0.069	1.000	1.200	0.083
4.8	0.066	1.000	1.200	0.079
5	0.063	1.000	1.200	0.076

Newport Inglewood-Rose Canyon fault zone (San Diego section)

Fault ID:	224
Maximum Magnitude (MMax):	7.5
Fault Type:	RLSS
Fault Dip:	90 Deg
Dip Direction:	V
Bottom of Rupture Plane:	13.00 km
Top of Rupture Plane(Ztor):	0.00 km
Rrup	6.51 km
Rjb:	6.51 km
Rx:	6.50 km
Fnorm:	0
Frev:	0

Period	SA (Base Spectrum)	Basin Factor	Near Fault Factor (Applied)	SA (Final Spectrum)
0.01	0.387	1.000	1.000	0.387
0.02	0.394	1.000	1.000	0.394
0.022	0.399	1.000	1.000	0.399
0.025	0.408	1.000	1.000	0.408
0.029	0.419	1.000	1.000	0.419
0.03	0.422	1.000	1.000	0.422
0.032	0.430	1.000	1.000	0.430

0.035	0.443	1.000	1.000	0.443
0.036	0.447	1.000	1.000	0.447
0.04	0.464	1.000	1.000	0.464
0.042	0.473	1.000	1.000	0.473
0.044	0.482	1.000	1.000	0.482
0.045	0.487	1.000	1.000	0.487
0.046	0.491	1.000	1.000	0.491
0.048	0.500	1.000	1.000	0.500
0.05	0.510	1.000	1.000	0.510
0.055	0.535	1.000	1.000	0.535
0.06	0.561	1.000	1.000	0.561
0.065	0.586	1.000	1.000	0.586
0.067	0.596	1.000	1.000	0.596
0.07	0.611	1.000	1.000	0.611
0.075	0.635	1.000	1.000	0.635
0.08	0.658	1.000	1.000	0.658
0.085	0.680	1.000	1.000	0.680
0.09	0.702	1.000	1.000	0.702
0.095	0.722	1.000	1.000	0.722
0.1	0.743	1.000	1.000	0.743
0.11	0.775	1.000	1.000	0.775
0.12	0.805	1.000	1.000	0.805
0.13	0.830	1.000	1.000	0.830
0.133	0.836	1.000	1.000	0.836
0.14	0.850	1.000	1.000	0.850
0.15	0.868	1.000	1.000	0.868
0.16	0.880	1.000	1.000	0.880
0.17	0.889	1.000	1.000	0.889
0.18	0.897	1.000	1.000	0.897
0.19	0.903	1.000	1.000	0.903
0.2	0.908	1.000	1.000	0.908
0.22	0.898	1.000	1.000	0.898
0.24	0.887	1.000	1.000	0.887
0.25	0.880	1.000	1.000	0.880
0.26	0.872	1.000	1.000	0.872
0.28	0.856	1.000	1.000	0.856
0.29	0.847	1.000	1.000	0.847
0.3	0.838	1.000	1.000	0.838
0.32	0.817	1.000	1.000	0.817
0.34	0.797	1.000	1.000	0.797
0.35	0.786	1.000	1.000	0.786
0.36	0.777	1.000	1.000	0.777
0.38	0.757	1.000	1.000	0.757
0.4	0.737	1.000	1.000	0.737
0.42	0.719	1.000	1.000	0.719
0.44	0.701	1.000	1.000	0.701
0.45	0.692	1.000	1.000	0.692
0.46	0.684	1.000	1.000	0.684
0.48	0.667	1.000	1.000	0.667

0.5	0.651	1.000	1.000	0.651
0.55	0.606	1.000	1.020	0.618
0.6	0.568	1.000	1.040	0.590
0.65	0.534	1.000	1.060	0.566
0.667	0.523	1.000	1.067	0.558
0.7	0.504	1.000	1.080	0.544
0.75	0.478	1.000	1.100	0.525
0.8	0.454	1.000	1.120	0.508
0.85	0.432	1.000	1.140	0.493
0.9	0.413	1.000	1.160	0.479
0.95	0.395	1.000	1.180	0.466
1	0.379	1.000	1.200	0.454
1.1	0.347	1.000	1.200	0.417
1.2	0.320	1.000	1.200	0.384
1.3	0.297	1.000	1.200	0.356
1.4	0.276	1.000	1.200	0.331
1.5	0.257	1.000	1.200	0.308
1.6	0.239	1.000	1.200	0.287
1.7	0.224	1.000	1.200	0.269
1.8	0.210	1.000	1.200	0.252
1.9	0.197	1.000	1.200	0.237
2	0.186	1.000	1.200	0.223
2.2	0.166	1.000	1.200	0.199
2.4	0.150	1.000	1.200	0.179
2.5	0.142	1.000	1.200	0.171
2.6	0.136	1.000	1.200	0.163
2.8	0.125	1.000	1.200	0.149
3	0.115	1.000	1.200	0.138
3.2	0.106	1.000	1.200	0.128
3.4	0.099	1.000	1.200	0.119
3.5	0.096	1.000	1.200	0.115
3.6	0.093	1.000	1.200	0.111
3.8	0.087	1.000	1.200	0.104
4	0.082	1.000	1.200	0.098
4.2	0.077	1.000	1.200	0.093
4.4	0.073	1.000	1.200	0.088
4.6	0.070	1.000	1.200	0.084
4.8	0.066	1.000	1.200	0.080
5	0.063	1.000	1.200	0.076

PROBABILISTIC

Probabilistic Model
USGS Seismic Hazard Map(2008) 975 Year Return Period

Period	SA (Base Spectrum)	Basin Factor	Near Fault Factor (Applied)	SA (Final Spectrum)
0.01	0.295	1.000	1.000	0.295

0.02	0.358	1.000	1.000	0.358
0.022	0.368	1.000	1.000	0.368
0.025	0.381	1.000	1.000	0.381
0.029	0.398	1.000	1.000	0.398
0.03	0.401	1.000	1.000	0.401
0.032	0.409	1.000	1.000	0.409
0.035	0.419	1.000	1.000	0.419
0.036	0.423	1.000	1.000	0.423
0.04	0.435	1.000	1.000	0.435
0.042	0.441	1.000	1.000	0.441
0.044	0.447	1.000	1.000	0.447
0.045	0.450	1.000	1.000	0.450
0.046	0.453	1.000	1.000	0.453
0.048	0.458	1.000	1.000	0.458
0.05	0.464	1.000	1.000	0.464
0.055	0.476	1.000	1.000	0.476
0.06	0.488	1.000	1.000	0.488
0.065	0.499	1.000	1.000	0.499
0.067	0.503	1.000	1.000	0.503
0.07	0.510	1.000	1.000	0.510
0.075	0.520	1.000	1.000	0.520
0.08	0.529	1.000	1.000	0.529
0.085	0.538	1.000	1.000	0.538
0.09	0.547	1.000	1.000	0.547
0.095	0.555	1.000	1.000	0.555
0.1	0.563	1.000	1.000	0.563
0.11	0.578	1.000	1.000	0.578
0.12	0.591	1.000	1.000	0.591
0.13	0.604	1.000	1.000	0.604
0.133	0.608	1.000	1.000	0.608
0.14	0.616	1.000	1.000	0.616
0.15	0.628	1.000	1.000	0.628
0.16	0.639	1.000	1.000	0.639
0.17	0.649	1.000	1.000	0.649
0.18	0.659	1.000	1.000	0.659
0.19	0.669	1.000	1.000	0.669
0.2	0.678	1.000	1.000	0.678
0.22	0.658	1.000	1.000	0.658
0.24	0.641	1.000	1.000	0.641
0.25	0.633	1.000	1.000	0.633
0.26	0.626	1.000	1.000	0.626
0.28	0.612	1.000	1.000	0.612
0.29	0.605	1.000	1.000	0.605
0.3	0.599	1.000	1.000	0.599
0.32	0.577	1.000	1.000	0.577
0.34	0.557	1.000	1.000	0.557
0.35	0.548	1.000	1.000	0.548
0.36	0.539	1.000	1.000	0.539
0.38	0.522	1.000	1.000	0.522

0.4	0.507	1.000	1.000	0.507
0.42	0.493	1.000	1.000	0.493
0.44	0.480	1.000	1.000	0.480
0.45	0.473	1.000	1.000	0.473
0.46	0.467	1.000	1.000	0.467
0.48	0.456	1.000	1.000	0.456
0.5	0.445	1.000	1.000	0.445
0.55	0.413	1.000	1.020	0.421
0.6	0.386	1.000	1.040	0.401
0.65	0.362	1.000	1.060	0.384
0.667	0.355	1.000	1.067	0.378
0.7	0.341	1.000	1.080	0.369
0.75	0.323	1.000	1.100	0.356
0.8	0.306	1.000	1.120	0.343
0.85	0.291	1.000	1.140	0.331
0.9	0.277	1.000	1.160	0.321
0.95	0.264	1.000	1.180	0.312
1	0.253	1.000	1.200	0.304
1.1	0.231	1.000	1.200	0.277
1.2	0.212	1.000	1.200	0.254
1.3	0.196	1.000	1.200	0.235
1.4	0.183	1.000	1.200	0.219
1.5	0.171	1.000	1.200	0.205
1.6	0.160	1.000	1.200	0.192
1.7	0.151	1.000	1.200	0.182
1.8	0.143	1.000	1.200	0.172
1.9	0.136	1.000	1.200	0.163
2	0.129	1.000	1.200	0.155
2.2	0.116	1.000	1.200	0.139
2.4	0.105	1.000	1.200	0.126
2.5	0.100	1.000	1.200	0.120
2.6	0.096	1.000	1.200	0.115
2.8	0.088	1.000	1.200	0.106
3	0.082	1.000	1.200	0.098
3.2	0.076	1.000	1.200	0.091
3.4	0.070	1.000	1.200	0.084
3.5	0.068	1.000	1.200	0.082
3.6	0.066	1.000	1.200	0.079
3.8	0.062	1.000	1.200	0.074
4	0.058	1.000	1.200	0.070
4.2	0.056	1.000	1.200	0.067
4.4	0.053	1.000	1.200	0.064
4.6	0.051	1.000	1.200	0.062
4.8	0.049	1.000	1.200	0.059
5	0.048	1.000	1.200	0.057

Envelope Data

Period	SA
0.01	0.385
0.02	0.392
0.022	0.398
0.025	0.406
0.029	0.417
0.03	0.420
0.032	0.428
0.035	0.441
0.036	0.445
0.04	0.462
0.042	0.471
0.044	0.480
0.045	0.485
0.046	0.489
0.048	0.498
0.05	0.507
0.055	0.533
0.06	0.559
0.065	0.584
0.067	0.594
0.07	0.608
0.075	0.632
0.08	0.655
0.085	0.678
0.09	0.699
0.095	0.720
0.1	0.740
0.11	0.773
0.12	0.802
0.13	0.827
0.133	0.833
0.14	0.847
0.15	0.865
0.16	0.877
0.17	0.886
0.18	0.894
0.19	0.900
0.2	0.904
0.22	0.895
0.24	0.883
0.25	0.877
0.26	0.868
0.28	0.852
0.29	0.843
0.3	0.834
0.32	0.814
0.34	0.793

0.35	0.783
0.36	0.773
0.38	0.753
0.4	0.734
0.42	0.715
0.44	0.697
0.45	0.689
0.46	0.680
0.48	0.664
0.5	0.648
0.55	0.615
0.6	0.587
0.65	0.563
0.667	0.555
0.7	0.542
0.75	0.523
0.8	0.506
0.85	0.490
0.9	0.476
0.95	0.464
1	0.452
1.1	0.415
1.2	0.383
1.3	0.354
1.4	0.329
1.5	0.307
1.6	0.286
1.7	0.267
1.8	0.250
1.9	0.235
2	0.222
2.2	0.198
2.4	0.179
2.5	0.170
2.6	0.162
2.8	0.149
3	0.137
3.2	0.127
3.4	0.118
3.5	0.114
3.6	0.110
3.8	0.104
4	0.097
4.2	0.092
4.4	0.087
4.6	0.083
4.8	0.079
5	0.076

Analysis of CY-CB Attenuation Prediction Equation vs ARS Online Results

Comparison of ARS Curves
(unlock sheet with "shmi")

Model Inputs

Fault		
Magnitude	7.5	(5 to 8.5)
F_{RV}	0	(input 1 = Rev)
F_{NM}	0	(input 1 = Normal)
Dip (degree)	90	(0 to 90)
Z_{TOR} *(km)*	0	
Distance		
R_{RUP} *(km)*	6.6	
R_{JB} *(km)*	6.6	
R_x *(km)*	4.7	
Hanging Wall?	☐ Yes?	
Near-Field Factor?	☑ Yes?	
Site		
V_{S30} *(m/sec)*	560	(270 to 1500 m/s)
$Z_{1.0}$ *(m)*	74	(0 - No Basin)
$Z_{2.5}$ *(km)*	2	(0 - No Basin)
No. Cal. Basin?	☐ Yes ?	(Check only for sites located within a Basin)
So. Cal. Basin?	☐ Yes ?	

Analysis

ARS Online vs CY-CB Spreadsheet Results
MAX. % Diff. = 1%

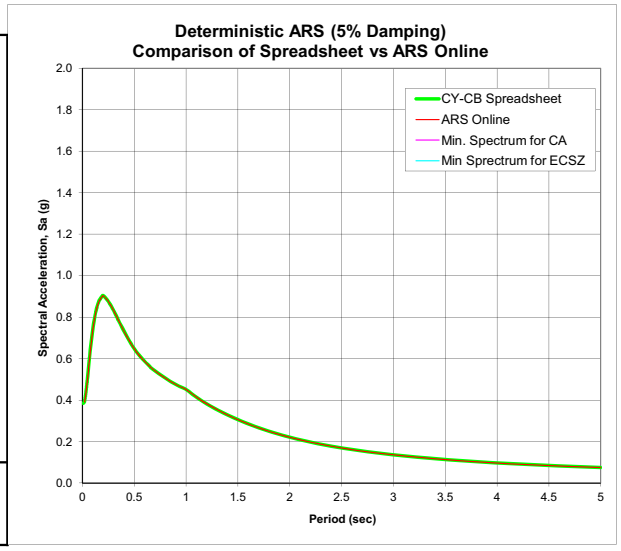

CY-CB Spreadsheet Results	
T (sec)	CB-CY S(a)
0.010	0.38506
0.020	0.39220
0.022	0.39774
0.025	0.40616
0.029	0.41709
0.030	0.42022
0.032	0.42840
0.035	0.44094
0.036	0.44531
0.040	0.46238
0.042	0.47137
0.044	0.48017
0.045	0.48481
0.046	0.48934
0.048	0.49833
0.050	0.50750
0.055	0.53316
0.060	0.55903
0.065	0.58395
0.067	0.59398
0.070	0.60832
0.075	0.63214
0.080	0.65498
0.085	0.67758
0.090	0.69893
0.095	0.71977
0.100	0.73977
0.110	0.77263
0.120	0.80176
0.130	0.82662
0.133	0.83288
0.140	0.84695
0.150	0.86462
0.160	0.87679
0.170	0.88603
0.180	0.89388

Place ARS Online Deterministic Data Here "Paste"					
T (sec)	Base S(a)	Basin Factor	Near Fault Factor	Final Adj. S(a)	Diff. (%)
0.01	0.385	1	1	0.385	0%
0.02	0.392	1	1	0.392	0%
0.022	0.398	1	1	0.398	0%
0.025	0.406	1	1	0.406	0%
0.029	0.417	1	1	0.417	0%
0.03	0.42	1	1	0.42	0%
0.032	0.428	1	1	0.428	0%
0.035	0.441	1	1	0.441	0%
0.036	0.445	1	1	0.445	0%
0.04	0.462	1	1	0.462	0%
0.042	0.471	1	1	0.471	0%
0.044	0.48	1	1	0.48	0%
0.045	0.485	1	1	0.485	0%
0.046	0.489	1	1	0.489	0%
0.048	0.498	1	1	0.498	0%
0.05	0.507	1	1	0.507	0%
0.055	0.533	1	1	0.533	0%
0.06	0.559	1	1	0.559	0%
0.065	0.584	1	1	0.584	0%
0.067	0.594	1	1	0.594	0%
0.07	0.608	1	1	0.608	0%
0.075	0.632	1	1	0.632	0%
0.08	0.655	1	1	0.655	0%
0.085	0.678	1	1	0.678	0%
0.09	0.699	1	1	0.699	0%
0.095	0.72	1	1	0.72	0%
0.1	0.74	1	1	0.74	0%
0.11	0.773	1	1	0.773	0%
0.12	0.802	1	1	0.802	0%
0.13	0.827	1	1	0.827	0%
0.133	0.833	1	1	0.833	0%
0.14	0.847	1	1	0.847	0%
0.15	0.865	1	1	0.865	0%
0.16	0.877	1	1	0.877	0%
0.17	0.886	1	1	0.886	0%
0.18	0.894	1	1	0.894	0%

For Comparsion Plots of Min. Sprectra, Paste Special into Cells			
Min. Spectrum for CA		Min Sprectrum for ECSZ	
T (sec)	S (a)	T (sec)	S (a)

Deterministic_Response_Spectrum_072809.xls 8/22/2012 3:07 PM

Comparison spreadsheet of the 2008 USGS Probabilistic Seismic Hazard Data and ARS Online Probabilistic Data (unlock spreadsheet "shmi")
Spectral Accelerations Points from USGS Website at http://earthquake.usgs.gov/research/hazmaps/products_data/2008/data/

*** Note: This spreadsheet uses the given latitude and longitude data provided by the user to estimate spectral acceleration values with a probability of exceedence 5% in 50 yrs (or 975 yr return period). The four spectral acceleration data points plotted on the graph are from the USGS website and are based on a 0.05 degree grid. Basic interpolation is used to estimate intermediate values inside each grid. Raw Data points are provided in the tabs of this spreadsheet. Corner grid spectral acceleration data are shown in the "calculation" tab.**

Input Site Information	
Latitude	Longitude
32.7698	-117.1121
V_{s30} (m/s) =	560
Near Fault Factor, Derived from USGS Deagg. Dist (km) =	17.3
$Z_{1.0}$ (m) =	74
$Z_{2.5}$ (km) =	2

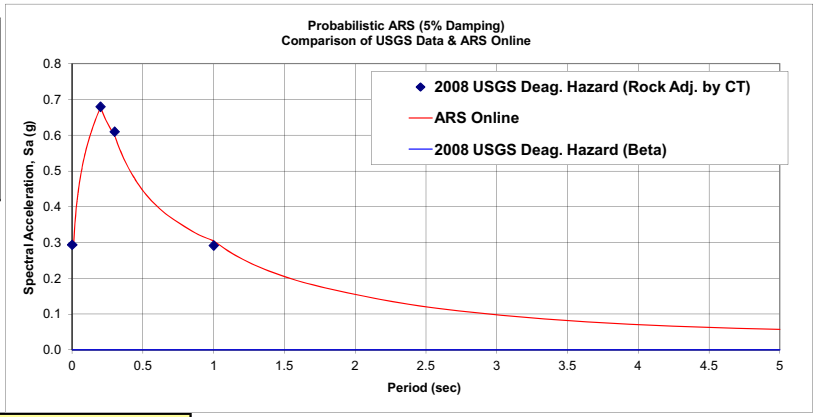

Place ARS Online Probabilistic Data Here "Paste"

T (sec)	Base Spectrum S(a)	Basin Factor	Near Fault Factor	Final Adj. Spectrum S(a)
0.01	0.295	1	1	0.295
0.02	0.358	1	1	0.358
0.022	0.368	1	1	0.368
0.025	0.381	1	1	0.381
0.029	0.398	1	1	0.398
0.03	0.401	1	1	0.401
0.032	0.409	1	1	0.409
0.035	0.419	1	1	0.419
0.036	0.423	1	1	0.423
0.04	0.435	1	1	0.435
0.042	0.441	1	1	0.441
0.044	0.447	1	1	0.447
0.045	0.45	1	1	0.45
0.046	0.453	1	1	0.453
0.048	0.458	1	1	0.458
0.05	0.464	1	1	0.464
0.055	0.476	1	1	0.476
0.06	0.488	1	1	0.488
0.065	0.499	1	1	0.499
0.067	0.503	1	1	0.503
0.07	0.51	1	1	0.51
0.075	0.52	1	1	0.52
0.08	0.529	1	1	0.529
0.085	0.538	1	1	0.538
0.09	0.547	1	1	0.547
0.095	0.555	1	1	0.555
0.1	0.563	1	1	0.563
0.11	0.578	1	1	0.578
0.12	0.591	1	1	0.591
0.13	0.604	1	1	0.604
0.133	0.608	1	1	0.608
0.14	0.616	1	1	0.616
0.15	0.628	1	1	0.628
0.16	0.639	1	1	0.639
0.17	0.649	1	1	0.649
0.18	0.659	1	1	0.659
0.19	0.669	1	1	0.669
0.2	0.678	1	1	0.678
0.22	0.658	1	1	0.658
0.24	0.641	1	1	0.641
0.25	0.633	1	1	0.633

Analysis of ARS Online Results vs USGS Deaggregation Hazard (Adj. By CT)

Period (sec)	USGS Interpolated Spectral Accel.	Adj. for Near Fault Effect	Adj. for Soil Amplification	Adj. For Basin Effect	Final Adj. USGS Spec Accel	ARS Online Final Adj. Spect. Accel.	% Difference (bet. USGS & ARS Online)
0	0.273	1.000	1.079	1.000	0.294	0.295	-0.3%
0.2	0.645	1.000	1.055	1.000	0.680	0.678	0.3%
0.3	0.530	1.000	1.152	1.000	0.610	0.599	1.8%
1	0.203	1.154	1.250	1.000	0.292	0.304	-4.0%

Max % Difference = 4.0%

USGS Deaggregation Hazard (Beta) with Near Field and Basin Factors

Period (sec)	INPUT USGS Deagg. Spec Accel	Adj. for Near Fault Effect	Adj. For Basin Effect	Final Adj. USGS Deagg Spec Accel	ARS Online Final Adj. Spect. Accel.	% Difference (bet. USGS & ARS Online)
0		1.000	1.000		0.295	0.0%
0.1		1.000	1.000		0.563	0.0%
0.2		1.000	1.000		0.678	0.0%
0.3		1.000	1.000		0.599	0.0%
0.5		1.000	1.000		0.445	0.0%
1		1.154	1.000		0.304	0.0%
2		1.154	1.000		0.155	0.0%
3		1.154	1.000		0.098	0.0%
4		1.154	1.000		0.07	0.0%
5		1.154	1.000		0.057	0.0%

Max % Difference = 0.0%

Probabilistic_Response_Spectrum_080409.xls 8/22/2012 3:07 PM

PSH Deaggregation on NEHRP C soil
Unnamed 117.728° W, 32.719 N.

Peak Horiz. Ground Accel.>=0.2573 g
Ann. Exceedance Rate .103E-02. Mean Return Time 975 years
Mean (R,M,ε_0) 17.3 km, 6.25, 0.59
Modal (R,M,ε_0) = 23.2 km, 7.24, 0.61 (from peak R,M bin)
Modal (R,M,ε*) = 23.3 km, 7.24, 1 to 2 sigma (from peak R,M,ε bin)
Binning: DeltaR 10. km, deltaM=0.2, Deltaε=1.0

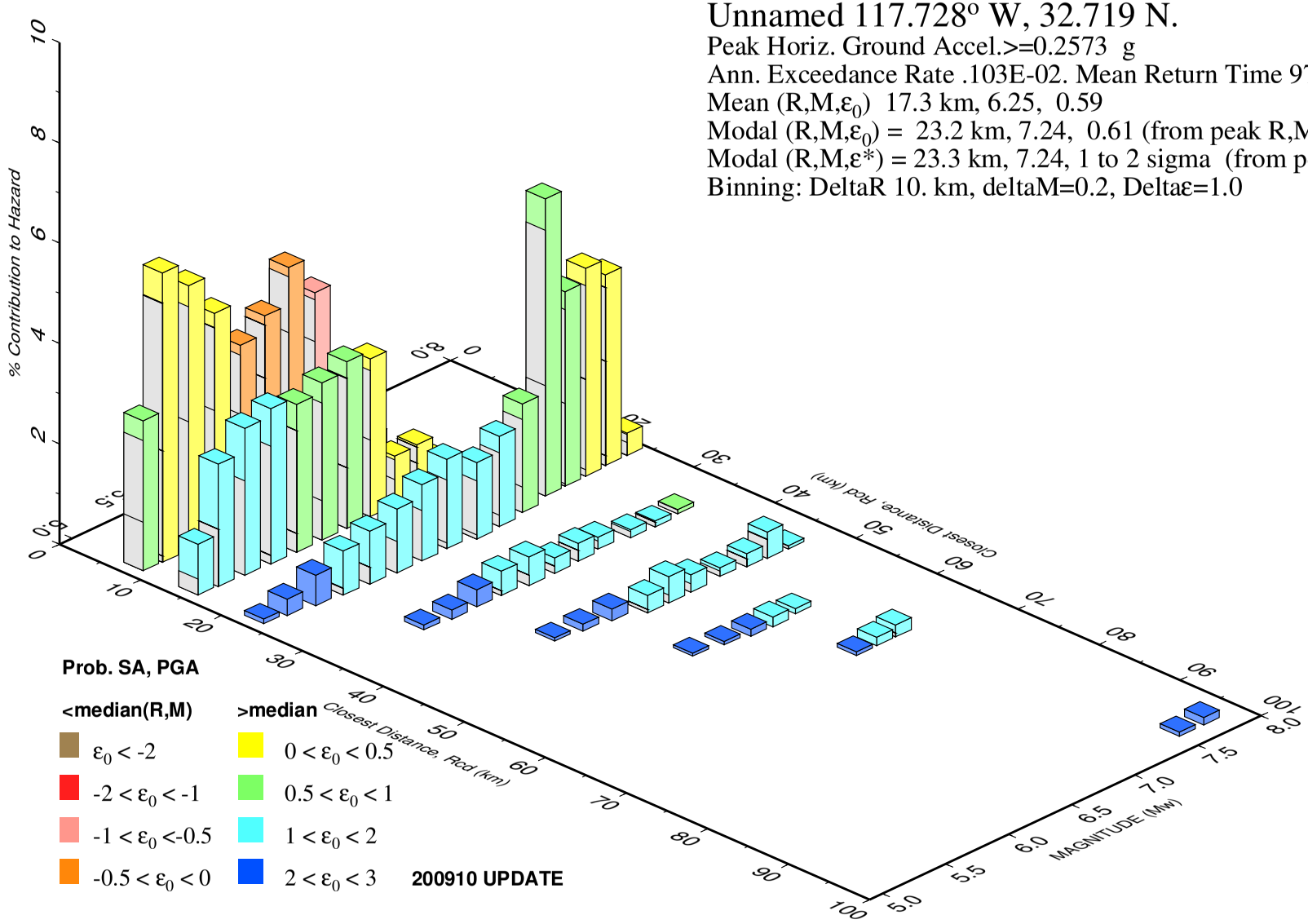

GMT 2012 Aug 22 20:15:01 **Distance (R), magnitude (M), epsilon (E0,E) deaggregation for a site on soil with average vs= 560. m/s top 30 m. USGS CGHT PSHA2008 UPDATE Bins with lt 0.05% contrib. omitted**

Fault & Site Data Input Sheet

The input sheet is to help the user organize the site data for developing the design response spectrum. Beta-Testers: If you fill out the fault and site information for each location, please provide this document and the *checker* to facilitate the QC/QA procedures listed in the 2009 Deterministic Fault Information & Seismic Procedures QC/QA checklist.

Project Information

Dist – EA: 11 – 2T1901 County: SD Route: 15 PM: 5.6/6.0

Bridge/Facility Name: N/A Bridge/Facility No.: N/A

Latitude: 32.769811 Longitude: -117.112169

Fault Information (#1)

Fault Name: Newport Inglewood Rose Canyon Fault ID#: 423

MMax: 7.5 Fault Type: RLSS

Fault Dip: 90° Dip Direction: V

Top of Rupture: 0 Bottom of Rupture: 13.0

Plan View

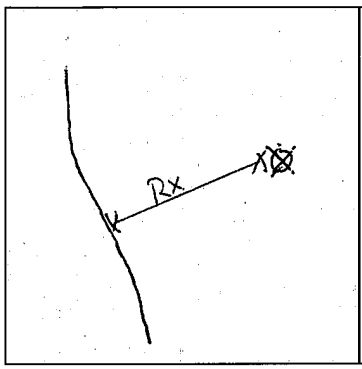

Elevation View

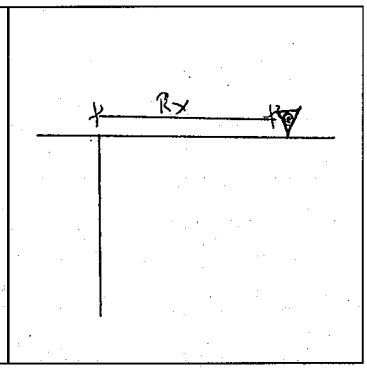

Calculated or Measure Distances

R_{RUP}: 6.57

R_{JB}: 6.57

R_X: 4.65

Determination of V_{S30}

V_{S30} (m/s): 560

Determination of Z1.0 and Z2.5

$Z_{1.0}$ (m/s): 74.0

$Z_{2.5}$ (km/s): 2.0

Notes:

Fault Information (#2)

Fault Name: _____ Fault ID#: _____

MMax: _____ Fault Type: _____

Fault Dip: _____ Dip Direction: _____

Top of Rupture: _____ Bottom of Rupture: _____

Plan View

Elevation View

Calculated or Measure Distances

R_{RUP}: _____

R_{JB}: _____

R_X: _____

Determination of V_{S30}

V_{S30} (m/s): _____

Determination of Z1.0 and Z2.5

$Z_{1.0}$ (m/s): _____

$Z_{2.5}$ (km/s): _____

Notes:

2009 Deterministic Fault Information & Seismic Procedure QC/QA Checklist

Determination of V_{S30}

V_{S30} (m/s): 560

Method of Determining V_{S30}: SPT CORR (e.g. P-S logging, Geophysics, SPT correlations, etc)

Additional Explanation (if needed): _____

Determination of Z1.0 and Z2.5 (if site located in designated California deep basin)

$Z_{1.0}$ (m/s): 74.0 $Z_{2.5}$ (km/s): 2.0

Method of Determining $Z_{1.0}$ & $Z_{2.5}$: ARS Online (e.g. ARS Online, SDC figure, other)

Additional Explanation (if needed): _____

Deterministic - Special Conditions

Yes	No	N/A	
☑	☐		Was the Errata Deterministic Fault Database Spreadsheet reviewed to ensure that the correct fault parameters used in the analysis.
☑	☐	☐	Were the Near-Fault Factors applied correctly? *Applies to sites with a R_{RUP} distance of 25 km or less, as defined in the SDC.*
☐	☐	☑	Were deep basin depths ($Z_{1.0}$ & $Z_{2.5}$) estimated correctly? *Applies to sites located in deep basins as shown in Figures B.5 - B.11 of the SDC or ARS Online.*
☐	☐	☑	If the site is located within the Eastern California Shear Zone (ECSZ), was the design ARS larger than the minimum spectrum for the ECSZ (as defined in the SDC, Appendix B, Figure B.2)?
☐	☐	☑	If the controlling fault is the Cascadia Subduction Zone, was the alternate seismic procedure applied correctly (as defined in the SDC, Appendix B)?
☐	☐	☑	If the deterministic ARS falls below the Minimum Deterministic Spectra (as defined in the SDC), did the Minimum Deterministic Spectra control the deterministic design spectrum?
☑	☐		Did the ARS Online deterministic spectrum correspond within 10% of the calculated deterministic spectrum? If not, note it in the comments section of this document and email a copy to the ARS Online development team, ARS_Online@dot.ca.gov, so that they may address the potential bug.

Probabilistic - Special Conditions

Yes	No	N/A	
☑	☐	☑	Were Near-Fault Factors applied correctly (as defined by SDC)? *Applies to sites with a deaggregation R distance of 25 km or less.*
☐	☐	☑	Were deep basin depths ($Z_{1.0}$ & $Z_{2.5}$) estimated correctly? *Applies to sites located in deep basins as shown in Figures B.5 - B.11 of the SDC or ARS Online.*
☐	☐	☑	If the site has a V_{S30} of less than 300 m/s, was the resulting ARS curve checked against spectral acceleration from USGS Interactive Deaggregation tool?
☐	☐	☑	If the USGS Interactive Deaggregation tool and spectral acceleration data were used, were the appropriate near-fault and basin correction factors applied?

2009 Deterministic Fault Information & Seismic Procedure QC/QA Checklist

This document is to be filled out by *checker* to evaluate the fault parameters and design response spectrum used for seismic design recommendations for bridge structures. To facilitate the quality check, the designer shall provide the checker all pertinent project information, geologic information and approved exceptions (if applicable) needed to complete this form. The *checker* must be familiar with the Seismic Design Criteria (Appendix B), Deterministic PGA Map and ARS Online Report, and Geotechnical Services Design Manual in order to successfully perform a quality check. Tools available to checkers include the Deterministic Response Spectrum Spreadsheet, Probabilistic Response Spectrum Spreadsheet (after USGS), 2008 USGS National Seismic Hazard Map and the ARS Online web tool. The above documents and tools are available at http://dap3.dot.ca.gov/shake_stable/technical.php.

Project Information

Dist – EA: 11-2T1901 County: SD Route: 15 PM: 5.6/6.0

Bridge/Facility Name: N/A Bridge/Facility No.: N/A

Latitude: 32.769811 Longitude: -117.112169

Deterministic Fault Information

Fault Name: Newport-Inglewood Rose Canyon Fault ID#: 423 M_{MAX}: 7.5 Fault Type: RLSS

Fault Dip: 90° Dip Direction: V Top of Rupture: 0 Bottom of Rupture: 13.0

Plan View

(rough sketch; show dimensions)

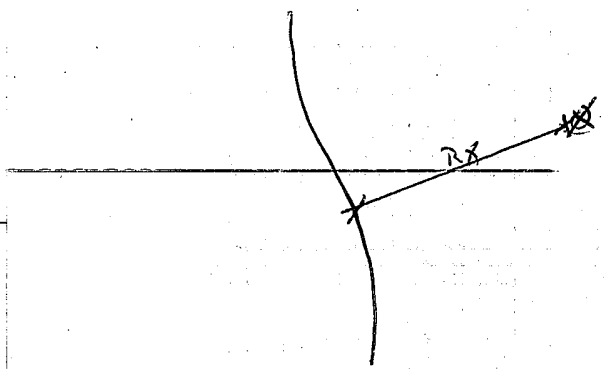

Elevation View

(rough sketch; show dimensions)

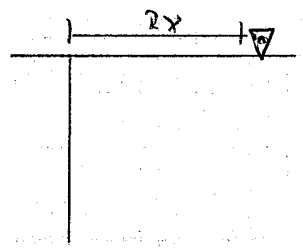

Calculated or Measured Distances

R_{RUP}:	6.57 km	☒	Calculated / graphically	☐	Same as Rx (by definition)
R_{JB}:	6.57 km	☒	Calculated / graphically	☐	Same as Rx (by definition)
R_X:	4.65 km	☒	"Ruler" function on ARS Online	☐	Deterministic PGA Map

2009 Deterministic Fault Information & Seismic Procedure QC/QA Checklist

Yes	No	N/A	
☐	☐	☑	If the probabilistic ARS falls below the Minimum Deterministic Spectra (as defined in the SDC), did the Minimum Deterministic Spectra control the design spectrum?
☑	☐		Did the ARS Online design spectrum correspond within 10% of the USGS spectral acceleration data from the verification spreadsheet? If not, note it in the comments section of this document and email a copy to the ARS Online development team, ARS_Online@dot.ca.gov, so that they may address the potential bug.

Comments / Observations Encountered during QC/QA process:

I certify that I have performed a quality check of the referenced fault information and design response spectrum provided by the geotechnical designer. The quality check is based on Seismic Design Criteria (Appendix B), Deterministic PGA Map and ARS Online Report, and the Geotechnical Services Design Manual.

Michael Fordham — T.E. CIVIL
Checker (Print) — Title

Mike Fordham — 9/27/2012
Checker (Signature) — Date

I certify that the referenced project complies with Geotechnical Service's Quality Control/Quality Assurance procedures, as described in the memorandum, "Quality Control/Quality Assurance for the 2009 Seismic Design Procedures", dated August 12, 2009.

BRIAN HINMAN — SENIOR T.E.
Functional Supervisor (Print) — Title

Brian Hinman — 9/27/12
Functional Supervisor (Signature) — Date

(This original checklist and signature sheet shall be placed in the geotechnical project file, and a copy sent to the Mark Willian of the Geotechnical Services Corporate Unit).

Bishop Modified sta 394+24 RW392 soil nail wall 10' global

c:\documents and settings\s113111\desktop\11-2t1901 sd-15-5.6,r6.0 mid city commuter bike facility\09 analysis\rw 392\stedwin\11-2t1301 sta 394+24 srw392 global seismic.pl2 Run By: fordham 9/5/2012 0

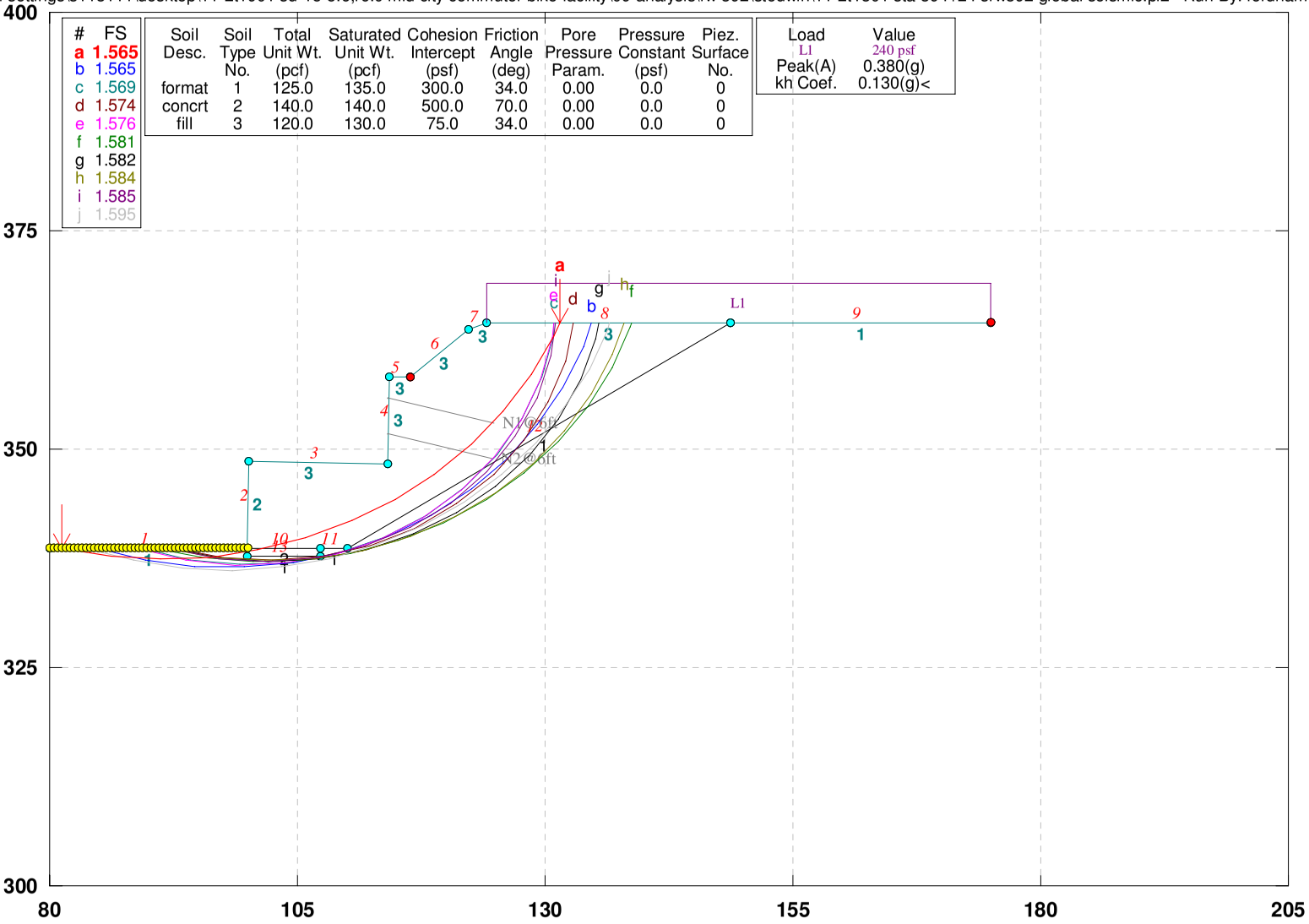

GSTABL7 v.2 FSmin=1.565
Safety Factors Are Calculated By The Modified Bishop Method

Bishop Modified sta 394+24 RW392 soil nail wall 10' global

c:\documents and settings\s113111\desktop\11-2t1901 sd-15-5.6,r6.0 mid city commuter bike facility\09 analysis\rw 392\stedwin\11-2t1301 sta 394+24 srw392 global.pl2 Run By: fordham 9/5/2012 02:5

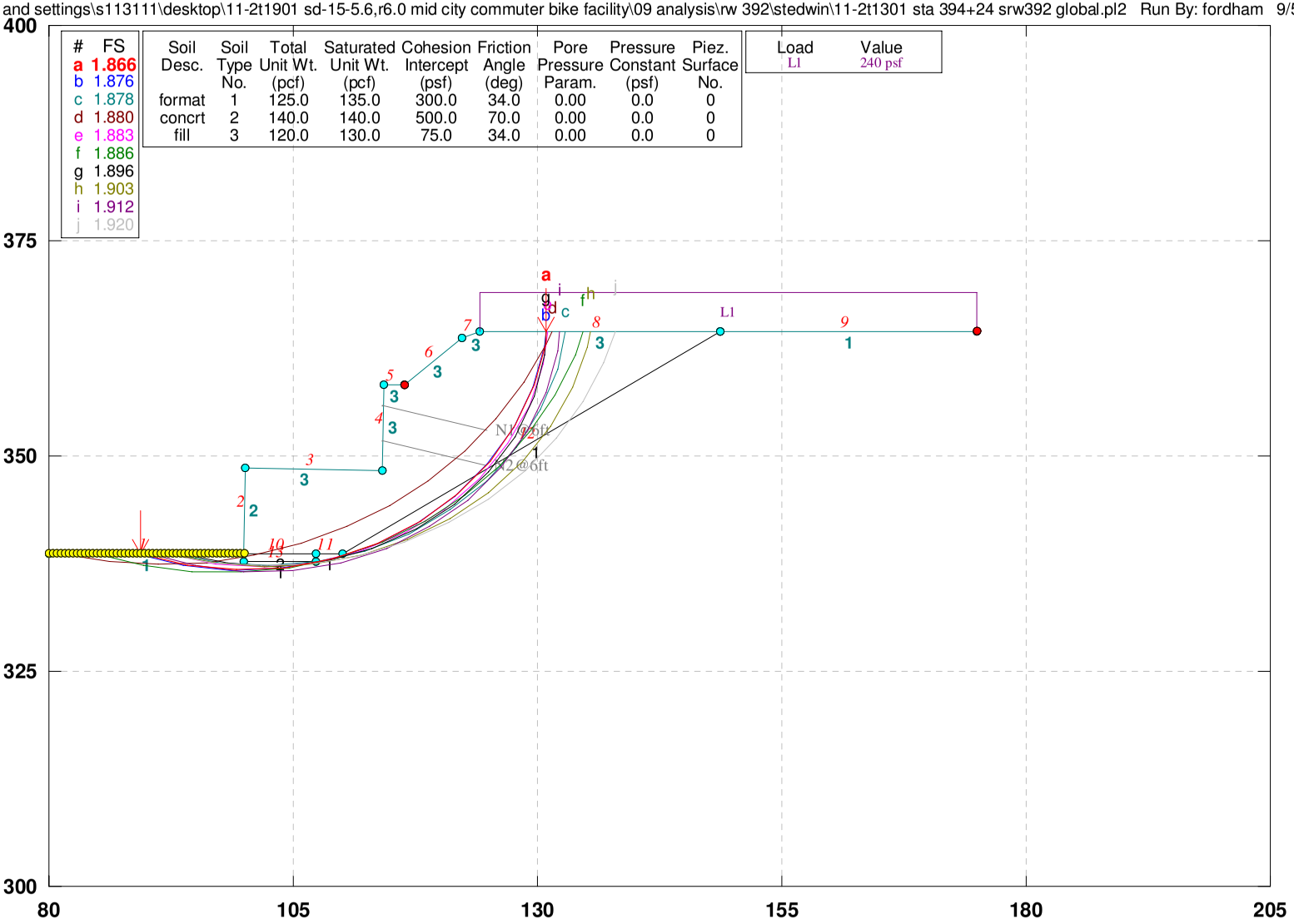

GSTABL7 v.2 FSmin=1.866
Safety Factors Are Calculated By The Modified Bishop Method

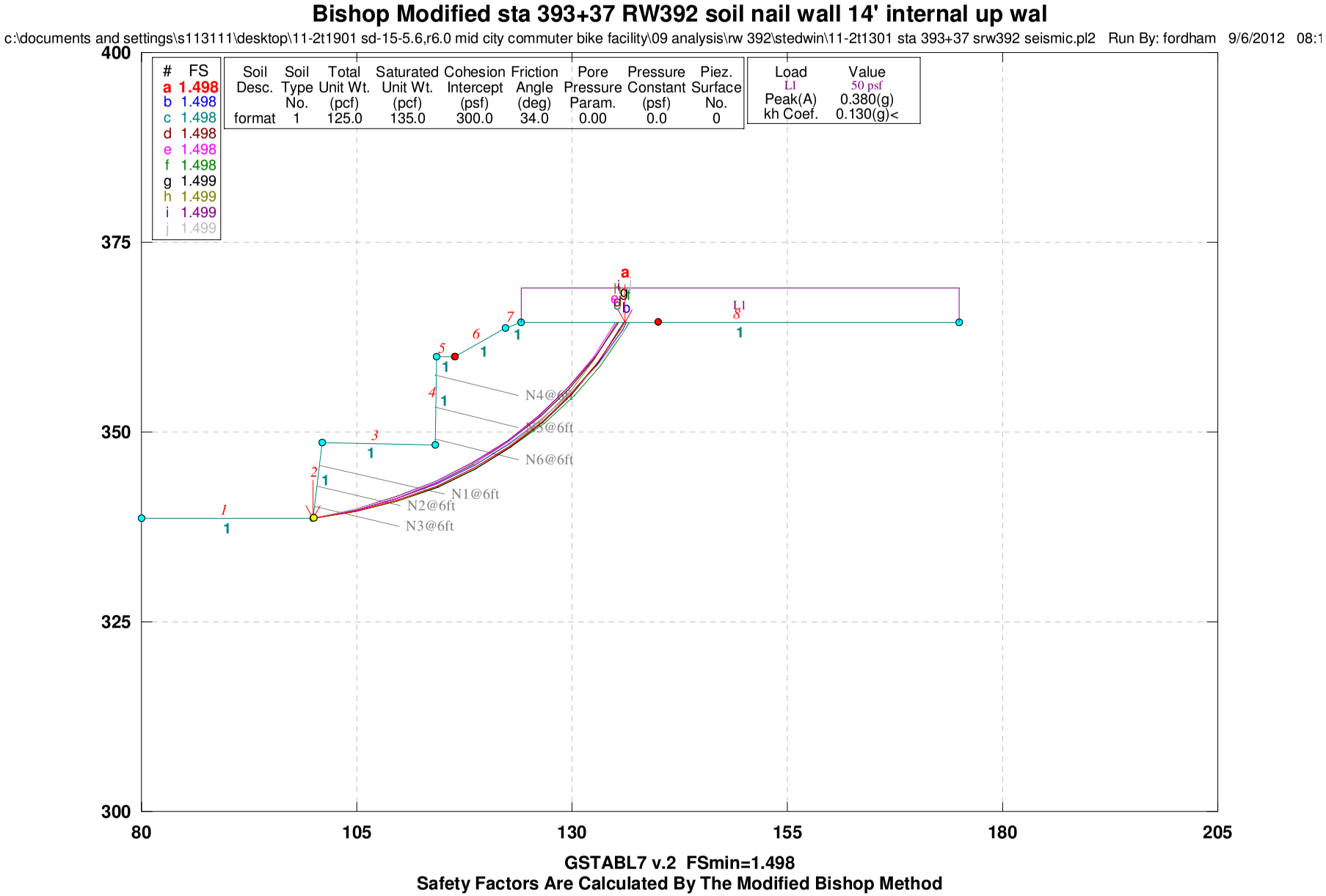
Bishop Modified sta 393+37 RW392 soil nail wall 14' internal up wal
c:\documents and settings\s113111\desktop\11-2t1901 sd-15-5.6,r6.0 mid city commuter bike facility\09 analysis\rw 392\stedwin\11-2t1301 sta 393+37 srw392 seismic.pl2 Run By: fordham 9/6/2012 08:1
FS
a 1.498
b 1.498
c 1.498
d 1.498
e 1.498
f 1.498
g 1.499
h 1.499
i 1.499
j 1.499
Soil Desc. | Soil Type No. | Total Unit Wt. (pcf) | Saturated Unit Wt. (pcf) | Cohesion Intercept (psf) | Friction Angle (deg) | Pore Pressure Param. | Pressure Constant (psf) | Piez. Surface No.
format 1 125.0 135.0 300.0 34.0 0.00 0.0 0
Load L1 | Value 50 psf
Peak(A) 0.380(g)
kh Coef. 0.130(g)<
N1@6ft
N2@6ft
N3@6ft
N4@6ft
N5@6ft
N6@6ft
400
375
350
325
300
80
105
130
155
180
205
GSTABL7 v.2 FSmin=1.498
Safety Factors Are Calculated By The Modified Bishop Method

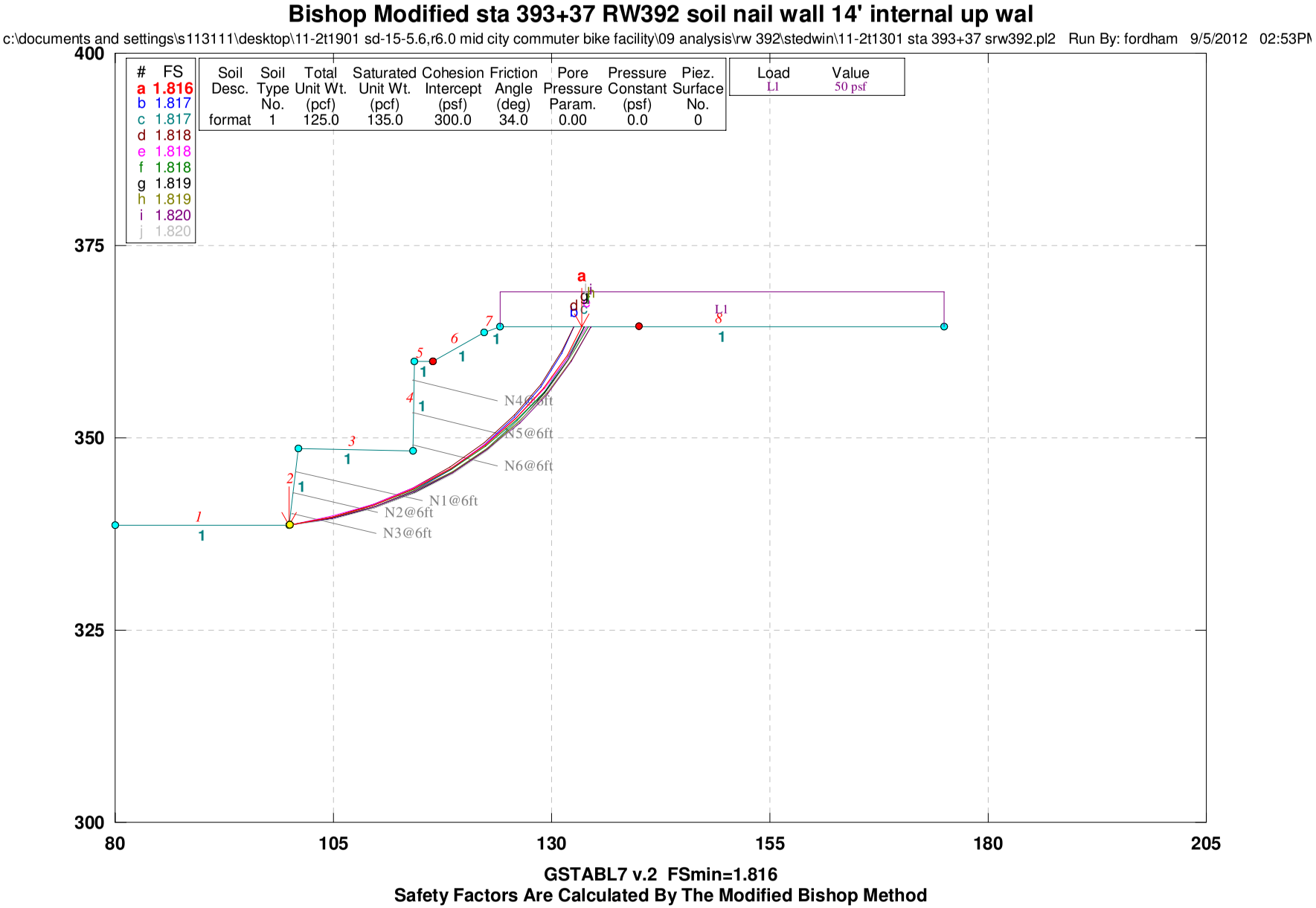
Bishop Modified sta 393+37 RW392 soil nail wall 14' internal up wal
c:\documents and settings\s113111\desktop\11-2t1901 sd-15-5.6,r6.0 mid city commuter bike facility\09 analysis\rw 392\stedwin\11-2t1301 sta 393+37 srw392.pl2 Run By: fordham 9/5/2012 02:53PM
FS
a 1.816
b 1.817
c 1.817
d 1.818
e 1.818
f 1.818
g 1.819
h 1.819
i 1.820
j 1.820
Soil Desc. | Soil Type No. | Total Unit Wt. (pcf) | Saturated Unit Wt. (pcf) | Cohesion Intercept (psf) | Friction Angle (deg) | Pore Pressure Param. | Pressure Constant (psf) | Piez. Surface No.
format 1 125.0 135.0 300.0 34.0 0.00 0.0 0
Load L1 | Value 50 psf
N4@6ft
N5@6ft
N6@6ft
N1@6ft
N2@6ft
N3@6ft
400
375
350
325
300
80
105
130
155
180
205
GSTABL7 v.2 FSmin=1.816
Safety Factors Are Calculated By The Modified Bishop Method

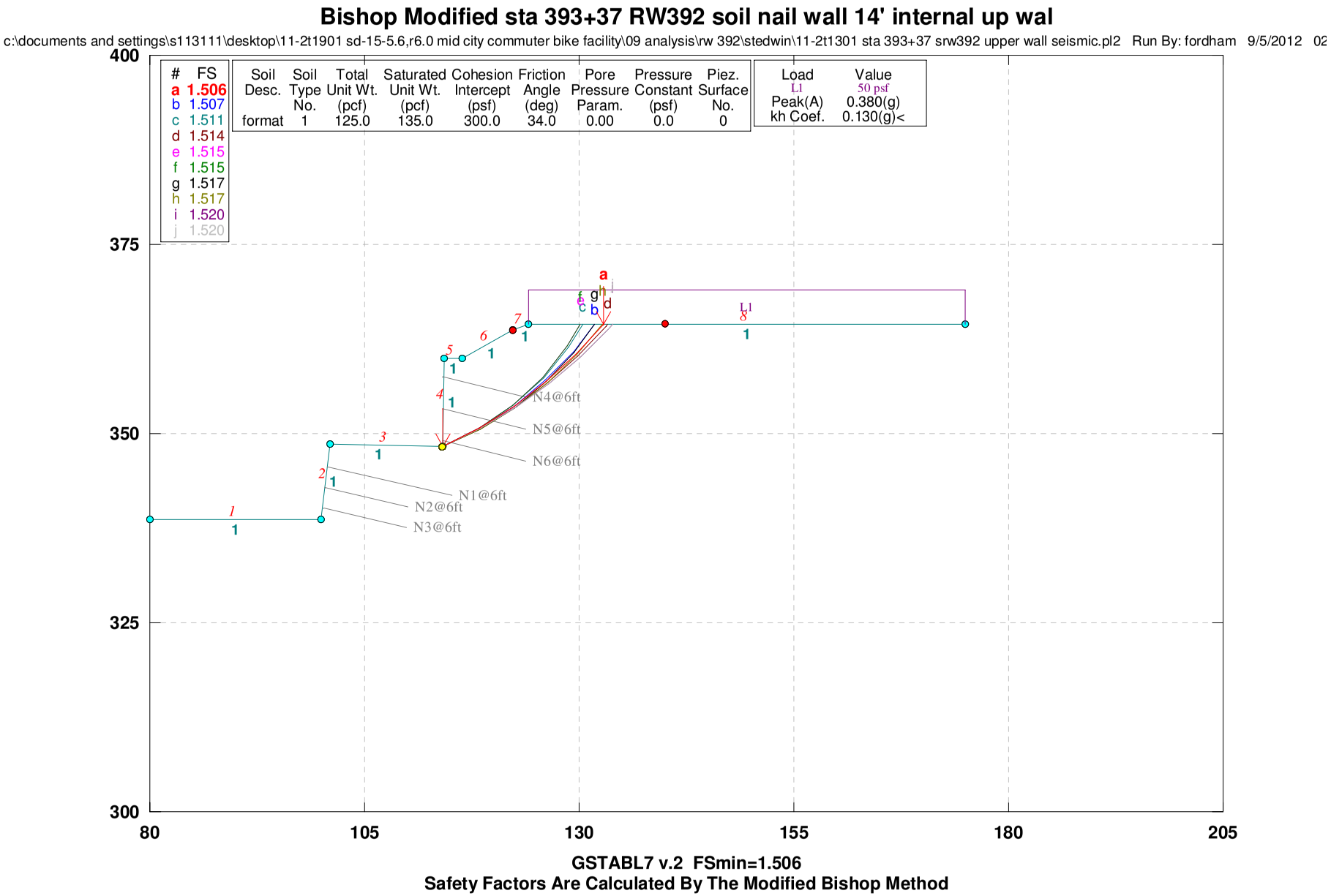
Bishop Modified sta 393+37 RW392 soil nail wall 14' internal up wal
c:\documents and settings\s113111\desktop\11-2t1901 sd-15-5.6,r6.0 mid city commuter bike facility\09 analysis\rw 392\stedwin\11-2t1301 sta 393+37 srw392 upper wall seismic.pl2 Run By: fordham 9/5/2012 02
FS
a 1.506
b 1.507
c 1.511
d 1.514
e 1.515
f 1.515
g 1.517
h 1.517
i 1.520
j 1.520
Soil Desc. format
Soil Type No. 1
Total Unit Wt. (pcf) 125.0
Saturated Unit Wt. (pcf) 135.0
Cohesion Intercept (psf) 300.0
Friction Angle (deg) 34.0
Pore Pressure Param. 0.00
Pressure Constant (psf) 0.0
Piez. Surface No. 0
Load L1 Peak(A) kh Coef.
Value 50 psf 0.380(g) 0.130(g)<
N1@6ft
N2@6ft
N3@6ft
N4@6ft
N5@6ft
N6@6ft
400
375
350
325
300
80
105
130
155
180
205
GSTABL7 v.2 FSmin=1.506
Safety Factors Are Calculated By The Modified Bishop Method
GSTABL7

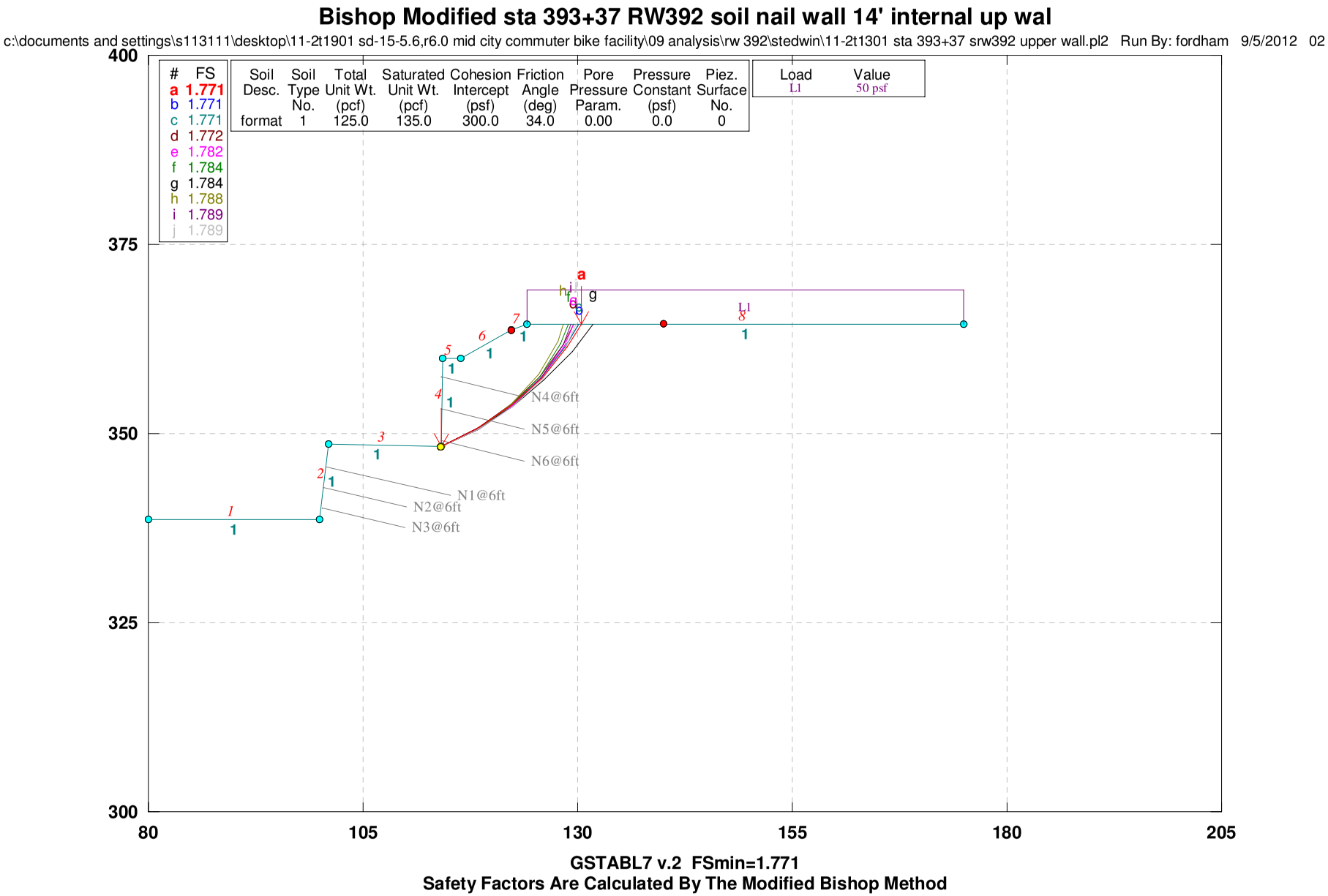
Bishop Modified sta 393+37 RW392 soil nail wall 14' internal up wal
c:\documents and settings\s113111\desktop\11-2t1901 sd-15-5.6,r6.0 mid city commuter bike facility\09 analysis\rw 392\stedwin\11-2t1301 sta 393+37 srw392 upper wall.pl2 Run By: fordham 9/5/2012 02
FS
a 1.771
b 1.771
c 1.771
d 1.772
e 1.782
f 1.784
g 1.784
h 1.788
i 1.789
j 1.789
Soil Desc. format
Soil Type No. 1
Total Unit Wt. (pcf) 125.0
Saturated Unit Wt. (pcf) 135.0
Cohesion Intercept (psf) 300.0
Friction Angle (deg) 34.0
Pore Pressure Param. 0.00
Pressure Constant (psf) 0.0
Piez. Surface No. 0
Load L1
Value 50 psf
N1@6ft
N2@6ft
N3@6ft
N4@6ft
N5@6ft
N6@6ft
400
375
350
325
300
80
105
130
155
180
205
GSTABL7 v.2 FSmin=1.771
Safety Factors Are Calculated By The Modified Bishop Method

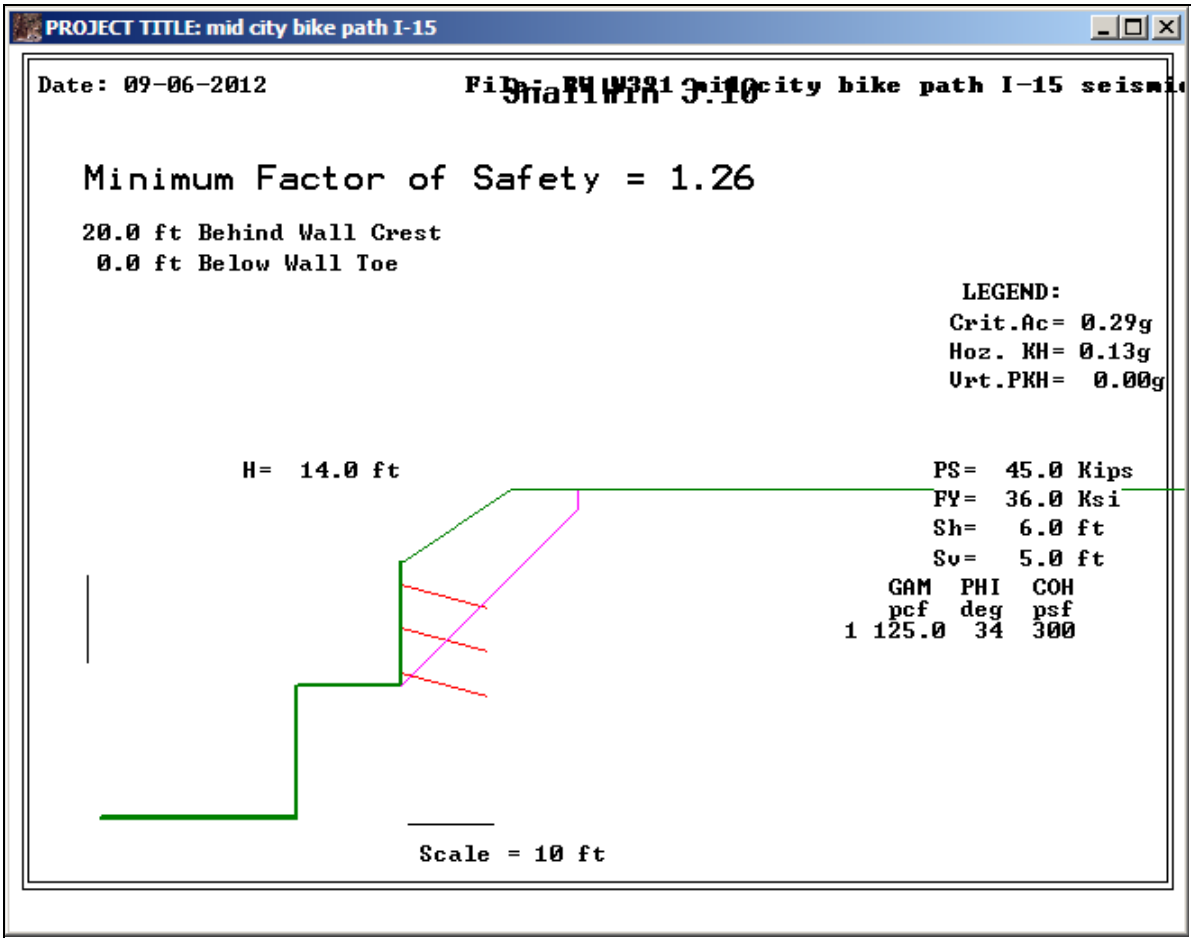
PROJECT TITLE: mid city bike path I-15
Date: 09-06-2012
Minimum Factor of Safety = 1.26
20.0 ft Behind Wall Crest
0.0 ft Below Wall Toe
LEGEND:
Crit.Ac= 0.29g
Hoz. KH= 0.13g
Vrt.PKH= 0.00g
H= 14.0 ft
PS= 45.0 Kips
FY= 36.0 Ksi
Sh= 6.0 ft
Sv= 5.0 ft
GAM PHI COH
pcf deg psf
1 125.0 34 300
Scale = 10 ft

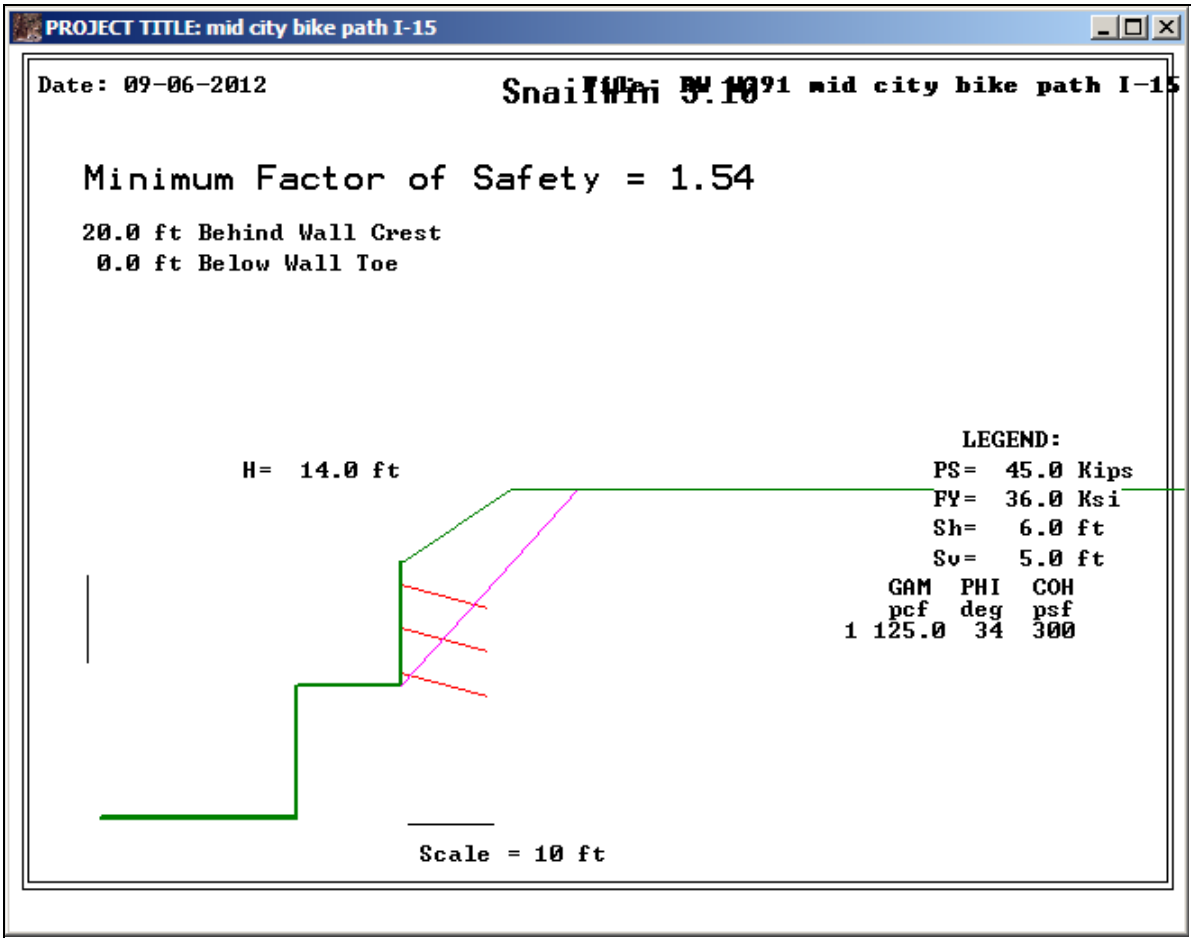
PROJECT TITLE: mid city bike path I-15
Date: 09-06-2012
Minimum Factor of Safety = 1.54
20.0 ft Behind Wall Crest
0.0 ft Below Wall Toe
H= 14.0 ft
LEGEND:
PS= 45.0 Kips
FY= 36.0 Ksi
Sh= 6.0 ft
Sv= 5.0 ft
GAM PHI COH
pcf deg psf
1 125.0 34 300
Scale = 10 ft

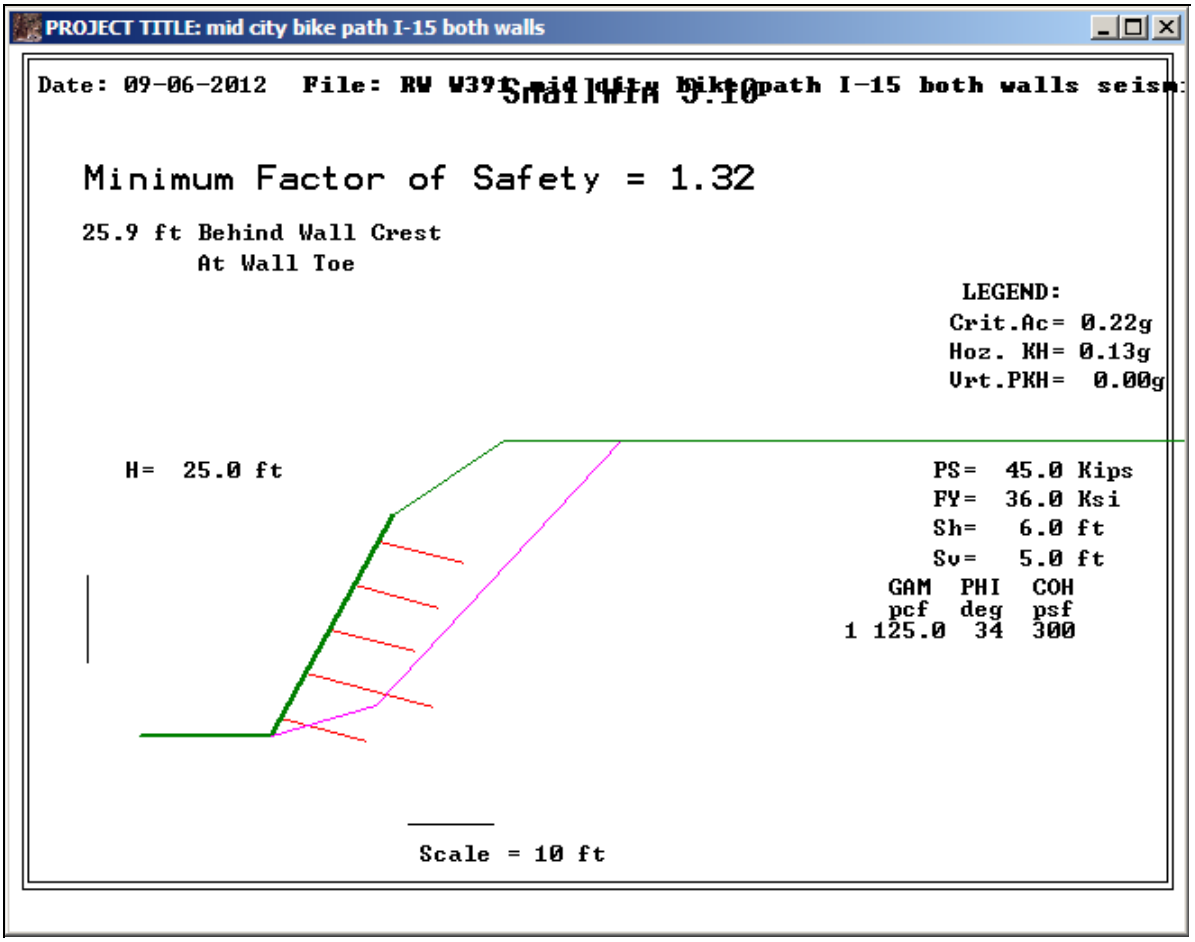
PROJECT TITLE: mid city bike path I-15 both walls
Date: 09-06-2012 File: RW W39
Minimum Factor of Safety = 1.32
25.9 ft Behind Wall Crest
At Wall Toe
LEGEND:
Crit.Ac= 0.22g
Hoz. KH= 0.13g
Vrt.PKH= 0.00g
H= 25.0 ft
PS= 45.0 Kips
FY= 36.0 Ksi
Sh= 6.0 ft
Sv= 5.0 ft
GAM PHI COH
pcf deg psf
1 125.0 34 300
Scale = 10 ft

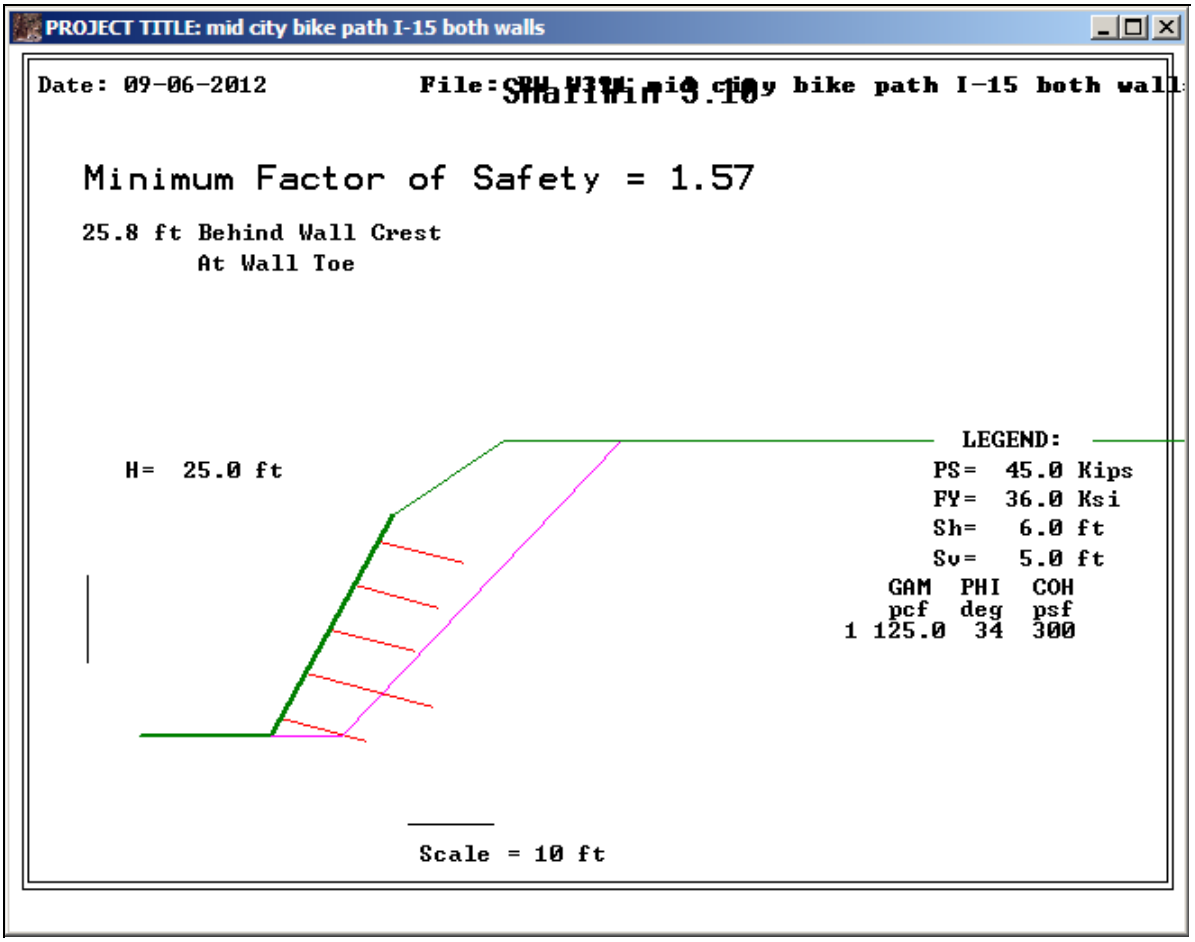
PROJECT TITLE: mid city bike path I-15 both walls
Date: 09-06-2012
Minimum Factor of Safety = 1.57
25.8 ft Behind Wall Crest
At Wall Toe
H= 25.0 ft
LEGEND:
PS= 45.0 Kips
FY= 36.0 Ksi
Sh= 6.0 ft
Sv= 5.0 ft
GAM PHI COH
pcf deg psf
1 125.0 34 300
Scale = 10 ft

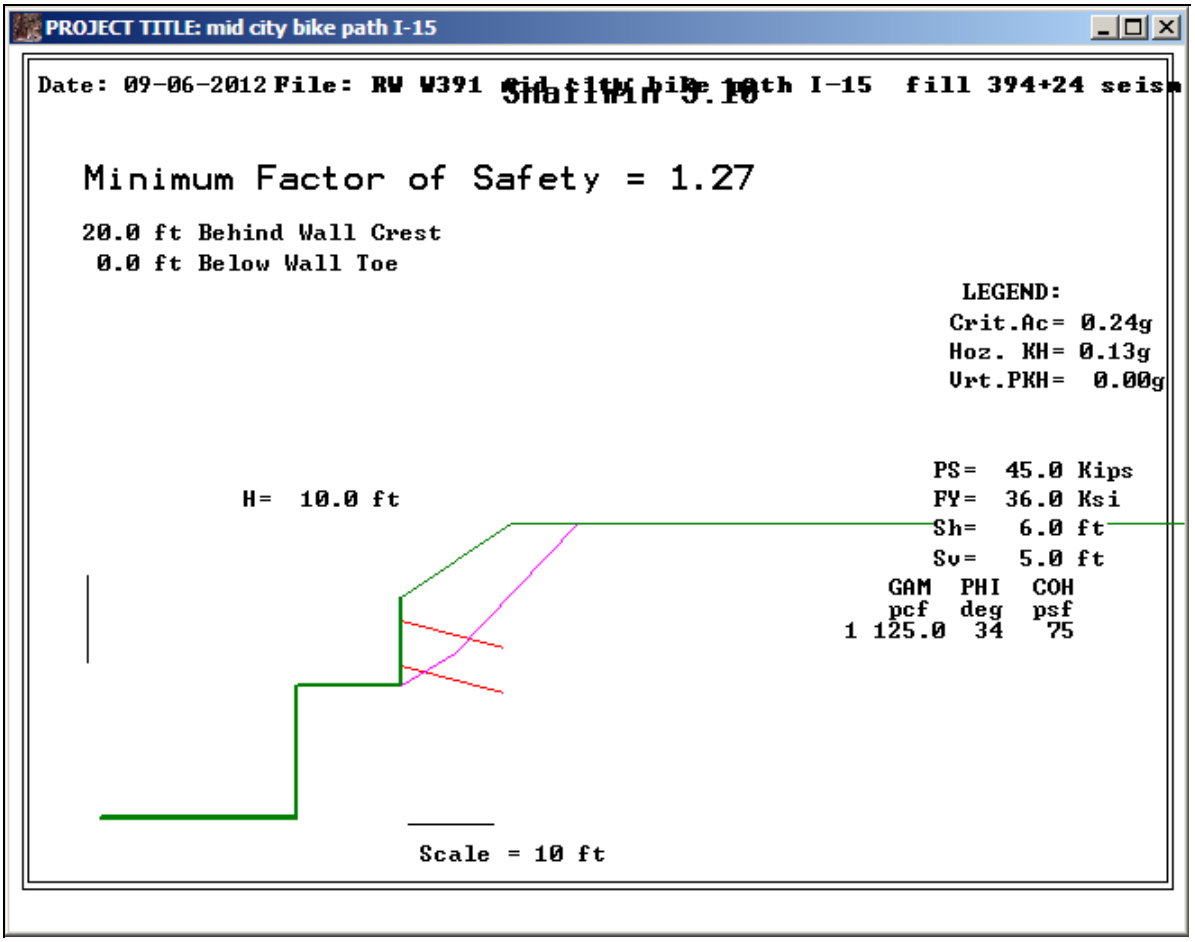
PROJECT TITLE: mid city bike path I-15
Date: 09-06-2012 File: RW W391 mid city bike path I-15 fill 394+24 seism
Shalimin 5.10
Minimum Factor of Safety = 1.27
20.0 ft Behind Wall Crest
0.0 ft Below Wall Toe
LEGEND:
Crit.Ac= 0.24g
Hoz. KH= 0.13g
Vrt.PKH= 0.00g
PS= 45.0 Kips
FY= 36.0 Ksi
Sh= 6.0 ft
Sv= 5.0 ft
H= 10.0 ft
GAM PHI COH
pcf deg psf
1 125.0 34 75
Scale = 10 ft

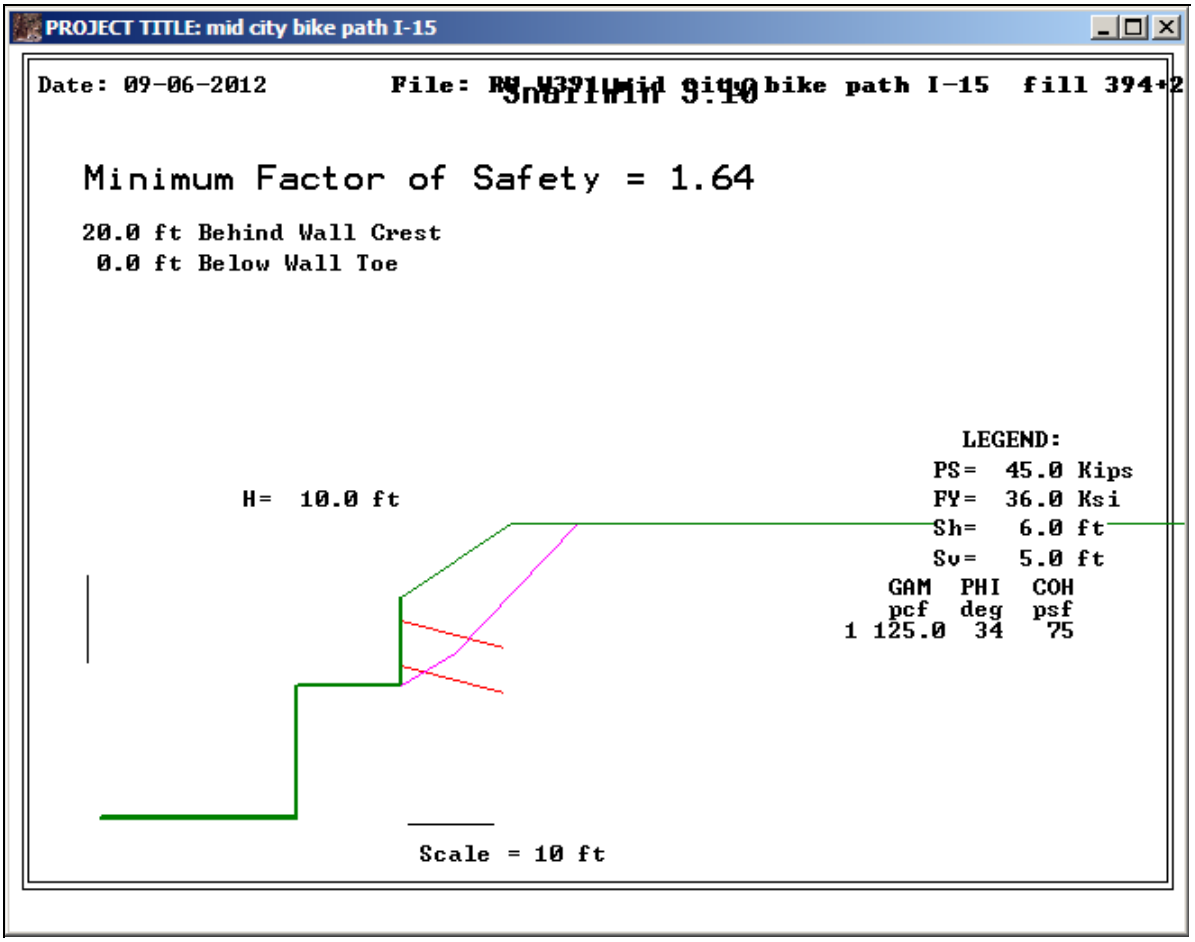
PROJECT TITLE: mid city bike path I-15
Date: 09-06-2012
Minimum Factor of Safety = 1.64
20.0 ft Behind Wall Crest
0.0 ft Below Wall Toe
LEGEND:
PS= 45.0 Kips
FY= 36.0 Ksi
Sh= 6.0 ft
Sv= 5.0 ft
GAM PHI COH
pcf deg psf
1 125.0 34 75
H= 10.0 ft
Scale = 10 ft

APPENDIX V

PROJECT MEMORANDA

NO PROJECT MEMORANDA OR CORRESPONDANCE ARE INCLUDED IN APPENDIX V OF THIS REPORT

State of California

Business, Transportation and Housing Agency

Memorandum

To : MIKE NICHOLS (MS 340)
Project Engineer
Design

Date: March 14, 2014

File: 11-SD-15
PM M5.6/ R6.0
EA 11-2T1901
ID 1100020291

From : DEPARTMENT OF TRANSPORTATION - DISTRICT 11
PAVEMENT ENGINEERING AND PLANT SERVICES

Subject: **CULVERT AND DRAINAGE PIPE RECOMMENDATIONS**

In accordance with your request dated March 5, 2014, we have developed culvert and drainage pipe recommendations for the above project. The recommendations are based on a previous materials report adjacent to the project limits. Any metal/steel recommendations are excluded because the existing soils are very corrosive to metal/steel.

Recommendations for New Culverts and Pipes

1. High density polyethylene pipe (HDPE) or polyvinyl chloride pipe (PVC) which comply with section 64 of the 2010 Standard Specifications.

2. Reinforced concrete pipe (RCP) which complies with section 65 of the 2010 Standard Specifications.

These recommendations also apply to tying into any existing drainage structures. If you have questions or comments about this subject, please email R. Avila at ruben.avila@dot.ca.gov.

Ruben Avila
Transportation Engineer, CT/Civil

David Evans
District Pavement Engineer

REGISTERED PROFESSIONAL ENGINEER
DAVID S. EVANS
No. C48245
Exp. 6-30-14
CIVIL
STATE OF CALIFORNIA

cc: APadilla (MS 63)
P File

State of California

Business, Transportation and Housing Agency

Memorandum

To : MIKE NICHOLS (MS 340)
Project Engineer
Design

Date: September 3, 2014

File: 11-SD-15
PM M5.6/ R6.0
EA 11-2T1901
ID 1100020291

From : DEPARTMENT OF TRANSPORTATION - DISTRICT 11
PAVEMENT ENGINEERING AND PLANT SERVICES

Subject: **DOWN DRAIN RECOMMENDATIONS (ADDENDUM)**

This memorandum is an addendum to the memorandum dated March 14, 2014. In accordance with your request, we have developed recommendations for the construction of down drains. The Hydraulics department should review the following recommendations for minimum/maximum fill, structural adequacy, and abrasion considerations.

Recommendations for down drains

Type C or S high density polyethylene pipe (HDPE) or Type C or S polyvinyl chloride pipe (PVC) which comply with section 64 of the 2010 Standard Specifications.

If you have questions or comments about this subject, please email R. Avila at ruben.avila@dot.ca.gov.

Ruben Avila
Transportation Engineer, CT/Civil

David Evans
District Pavement Engineer

REGISTERED PROFESSIONAL ENGINEER
DAVID S. EVANS
No. C48245
Exp. 6-30-16
CIVIL
STATE OF CALIFORNIA

cc: APadilla (MS 63)
P File

GEOTECHNICAL DESIGN REPORT

State Route 15 Mid City Commuter Bike Facility

11-SD-15 /PM M5.6/R6.0

EA 11-2T1901
EFIS 1100020291

November 6, 2014

Prepared By:

OFFICE OF GEOTECHNICAL DESIGN-SOUTH 2, BRANCH-D
7177 OPPORTUNITY ROAD
SAN DIEGO, CA 92111

State of California
DEPARTMENT OF TRANSPORTATION

Business, Transportation and Housing Agency

Memorandum

Flex your power!
Be energy efficient!

To: Mr. Harwell Ontoy
Design Manager

Date: November 6, 2014

File: 11-SD-15-(PM) M5.6/R6.0
EA 11-2T1901
EFIS 1100020291

From: DIVISION OF ENGINEERING SERVICES
Geotechnical Services
Office of Geotechnical Design-South 2, Branch-D

Subject: Geotechnical Design Report for the State Route 15 Mid City Commuter Bike Facility.

Pursuant to your request, the Office of Geotechnical Design-South 2 (OGDS2), Branch-D has prepared this Geotechnical Design Report (GDR) for the State Route 15 Mid City Commuter Bike Facility in the City of San Diego, in San Diego County, California.

This GDR documents the prevailing site conditions and provides specific recommendations for the project features. The report defines the geotechnical conditions as evaluated from field investigations data and used in the geotechnical analyses and design. This report provides recommendations for project design and construction.

Please ensure that this GDR is included in the District Resident Engineer (RE) Pending File. OGDS2 staff will be available for further assistance. Should you have any questions or comments regarding this report, please contact OGDS2, Branch-D.

Richard Rusnak P.E.
Transportation Engineer (Civil)
(858) 467-4065

Brian Hinman P.E.
Senior Transportation Engineer (Civil)
(858) 705-1344

REGISTERED PROFESSIONAL ENGINEER
RICHARD RUSNAK
C 69228
EXP 6/30/16
CIVIL
STATE OF CALIFORNIA

REGISTERED PROFESSIONAL ENGINEER
BRIAN K. HINMAN
No. 55654
Exp. 12/31/14
CIVIL
STATE OF CALIFORNIA

CARBON COPY (CC) LIST

Andrew Rice	District Project Manager
Joshua Reese	Assistant Project Manager
Art Padilla	District Materials Engineer
Abbas Abghari	Office Chief, OGDS2
Shawn Wei	Senior Supervisor, OGDS2
http://svgcgeodog.dot.ca.gov/	Geotechnical Archive (GeoDOG)

TABLE OF CONTENTS

Section **Page**

Title Sheet i
Letter of Transmittal ii
Carbon Copy List iii
Table of Contents iv
List of Figures vi
List of Tables vi
List of Appendices vi

1.0 INTRODUCTION 1

2.0 EXISTING FACILITIES AND PROPOSED IMPROVEMENTS 1
2.1 Existing Facilities 2
2.2 Proposed Improvements 3

3.0 PERTINENT REPORTS AND INVESTIGATIONS 4

4.0 PHYSICAL SETTING 5
4.1 Climate 5
4.2 Topography & Drainage 5
4.3 Man-Made and Natural Features of Engineering and Construction Significance 5
4.4 Regional Geology and Seismicity 5
4.5 Soil Survey Mapping 6

5.0 FIELD EXPLORATION 6
5.1 Drilling and Sampling 6
5.2 Geologic Mapping 7
5.3 Geophysical Studies 7
5.4 Instrumentation 7
5.5 Exploration Notes 7

6.0 GEOTECHNICAL TESTING 7
6.1 In Situ Testing 7
6.2 Laboratory Testing 7

7.0 GEOTECHNICAL CONDITIONS 7
7.1 Site Geology 7
7.1.1 Lithology 8
7.1.2 Structure 8
7.1.3 Existing Slope Stability 8
7.2 Subsurface Conditions 8
7.2.1 Soil 8
7.2.2 Groundwater 8
7.2.3 Corrosion 9
7.3 Surface Water 9
7.3.1 Scour 9
7.3.2 Erosion 9
7.3.3 Tsunamis 9
7.4 Site Seismicity 9

TABLE OF CONTENTS (continued)

Section **Page**

8.0 GEOTECHNICAL ANALYSIS AND DESIGN 10
8.1 Dynamic Analysis 10
8.2 Liquefaction Analysis 10
8.3 Cuts and Excavations 10
8.3.1 Stability 10
8.3.2 Rippability 11
8.3.3 Grading Factors 12
8.4 Embankments 12
8.5 Earth Retaining Systems 12
8.6 Culvert Foundations 12
8.7 Soundwall Foundations 12
8.8 Overhead Sign Foundations 12
8.9 Barrier Foundations 13
8.10 Luminaire Foundations 13
9.0 MATERIAL SOURCES 14
10.0 MATERIAL DISPOSAL 14
11.0 RECOMMENDATIONS 14
12.0 DESIGN ADVISORIES 15
13.0 CONSTRUCTION CONSIDERATIONS 15
14.0 ACTUAL VS. REPORTED SITE CONDITIONS 16
15.0 REFERENCES 17

FIGURES

Figure 1	Project Location Map and Aerial Photograph
Figure 2	Geologic Overview Map
Figure 3.1 - 3.5	Geologic Contour Grading Maps
Figure 4.1 - 4.30	Geologic Cross Sections
Figure 5	City of San Diego Geologic Hazard and Faults Map
Figure 6	Geosynthetic Reinforced Embankment Schematic

TABLES

Table 1	Earth Retaining Systems (ERS) and Geosynthetic Reinforced Embankment (GRE)
Table 2	Regional Active Faults
Table 3	Soil Strength Parameters
Table 4	Geosynthetic Reinforced Embankment (GRE) Design Parameters
Table 5	Shallow Foundation Design Data for Retaining Walls on Fill

APPENDICES

Appendix A	Project Plans
Appendix B	As-Built Data
Appendix C	Field Exploration
Appendix D	Laboratory Data
Appendix E	Analyses
Appendix F	Miscellaneous

1.0 INTRODUCTION

This Geotechnical Design Report (GDR) has been prepared by the Office of Geotechnical Design South-2 (OGDS2), Branch-D to address the geotechnical design considerations for the State Route 15 (SR-15) Mid City Commuter Bike Facility, in the City of San Diego, San Diego County, California, hereafter referred to as the project. Figure 1 depicts the project location and aerial photograph of the project site.

Between Adams Avenue and Camino Del Rio South, northbound SR-15 descends approximately 300-feet in elevation at a moderate gradient from San Diego Mesa near the communities of City Heights, Normal Heights, and Kensington through Ward Canyon and into Mission Valley. The proposed bike facility will be aligned with the outside shoulder of the northbound lanes of SR-15 connecting the urban communities on San Diego Mesa to established bike transit routes in Mission Valley and beyond. Due to the steep terrain adjoining the freeway and the narrow corridor available, numerous retaining structures and steepened embankments will be necessary to accommodate the bike facility within the available corridor and provide the desired bike facility width and elevation.

The purpose of this GDR is to document subsurface geotechnical conditions, provide engineering evaluation of site conditions, and provide recommendations relevant to the design and construction of the project features. This report establishes a geotechnical baseline to be used in assessing the existence and scope of changed site conditions. The geotechnical information, evaluation, recommendations, and advisories contained in this GDR supersede any information that may have been previously conveyed through correspondences or documents concerning the project features addressed herein.

This GDR is based on site reconnaissance, research of archived resources, subsurface exploration, and engineering analyses. This GDR was prepared in accordance with the guidelines set forth in the *Caltrans: Guidelines for Preparing Geotechnical Design Report (GDR), Version 1.3, December 2006.*

Project layout plans, profile plans, and cross sections were provided by Caltrans District 11 Design and Caltrans Headquarters Design. Unless otherwise noted: all units referenced in this document are United States (U.S) Customary units; all elevations referenced in this report are in feet and referenced to the NAVD88 vertical datum; and all Stations are referenced to the "BF1" LINE. Pertinent project plans that were used during the development of this GDR are presented in Appendix A.

A District Preliminary Geotechnical Report (DPGR) was prepared for this project by OGDS2-Branch D in 2011.

2.0 EXISTING FACILITIES AND PROPOSED IMPROVEMENT

SR-15 originates at 32nd Street near Harbor Drive and extends north to the Interstate 8 (I-8). Between 32nd Street and I-8, SR-15 merges with Interstate 5 (I-5), State Route 94 (SR-94), and Interstate 805 (I-805). SR-15 seamlessly merges with I-15 at I-8.

Ward Road was the predecessor of SR-15 aligned through Ward Canyon. Remnants of Ward Road are found in Normal Heights near Madison Avenue and in Mission Valley near Rancho Mission Road. Historic aerial photographs reveal that Ward Road was realigned and connected to 40th Street at Adams Avenue between 1953 and 1966. Construction of I-15 to I-8 was completed in 1968. At this time, 40th Street and Wabash Boulevard were designated SR-15 from I-5 to the merge with I-8. The portion of SR-15 between I-805 and I-8 remained a city street and was referred to as the 40th Street Freeway until it was widened and transformed into the current configuration in the 1990's. SR-15 is not designated as an interstate due to portions of the freeway between 32nd Street and I-805 that are not designed and constructed to Interstate Standards.

2.1 Existing Facilities

In the project area, SR-15 is a multi-lane urban freeway with mixed flow lanes, auxiliary lanes, paved shoulders, and a paved and earthen median. The project is surrounded by the neighborhoods of Kensington to the east and Normal Heights to the west. The freeway alignment follows the tread of Ward Canyon, an incised canyon joined by several smaller tributary canyons and drainages. The margins of the existing freeway facility abut the canyon walls such that steep natural terrain, steep cut slopes, and canyon fill slopes border much of the freeway.

Land use adjacent to and on the mesa above the project is densely developed and consists of the residential neighborhood of Kensington. Existing development along Camino Del Rio South includes office complexes.

SR-15 consists of a ten-lane Portland Cement Concrete (PCC) freeway with PCC shoulders. The existing freeway lanes are 12-feet wide with 8-foot wide inside shoulders and 10-foot wide outside shoulders. The existing median is approximately 30-feet wide and consists of PCC shoulders, and paved and unpaved areas between the median barriers that divide the northbound and southbound lanes. The onramp and offramp lanes and shoulders are Asphalt Concrete (AC) paved. Pavement distress has been observed in southbound SR-15 to the north of the Adams Avenue offramp.

Existing facilities along the project alignment include: the Adams Avenue OC and Camino Del Rio South UC; four retaining walls; fill embankments; graded slopes; underground utilities; and highway drainage units.

Two retaining walls, RW-33 and RW-33A, which were constructed during the corridor widening in 1990s, are located along the Adams Avenue northbound onramp. RW-33 is a Soil Nail Wall that connects to RW-33A. RW33A is a Caltrans Standard Type-2 Retaining Wall. Combined, RW-33 and RW-33A are approximately 312-feet in length and 8 to 11.5-feet in height. The retaining walls accommodate the severe grade difference between the on ramp and the developed properties on the canyon rim above. The retaining wall also accommodates a ramp meter enforcement area.

RW-34 and RW-35, which were also constructed during the corridor widening in 1990s, are soil nail walls approximately 100-feet in length and 11-feet in height. RW-34 and RW-35 are located along the Camino Del Rio South off ramp. There are AC turnouts adjacent to RW-34 and RW-35 that include City of San Diego sewer manholes. These two walls appear to accommodate access to City of San Diego sewer manholes.

As-built data and associated Log of Test Boring (LOTB) and Boring Records for the Adams Avenue OC, RW-33/33A, RW-34, and RW-35 are included in Appendix B.

Older, steep, cut slopes that are many decades old exist along the proposed bike facility alignment. These older, steep, cut slopes were likely constructed to accommodate the alignment of Ward Road. The slopes are inclined as steep as 0.43H:1.0V with portions that appear near vertical.

Steep, non engineered fill slopes line much of the mesa rim where property owners have extended the level portions of their yards using engineered and non-engineered methods. Stable freeway embankment fill slopes inclined at 2.0H:1.0V extend into the tributary canyons that join Ward Canyon.

The more recent cut slopes along the corridor are slightly over a decade old, coinciding with construction of SR-15 through the area. These newer cut slopes are inclined as steep as 1.5H:1.0V.

Utilities present within the limits of the project include: sewer, telecommunication, and underground and overhead electrical lines. Plans depicting the existing utilities are included in Appendix B.

Appendix F contains photographs of retaining walls, slopes, and other features that currently exist along the project alignment.

2.2 Proposed Improvements

The proposed project will construct a bike facility along SR-15 between PM 5.6 and R6.0 from Adams Avenue to Camino Del Rio South. The bike facility will be paved and striped to accommodate two way bicycle traffic. The bike facility must accommodate maintenance vehicles with room for cyclists to pass any active maintenance zones. Therefore, a minimum level width of roughly 12-feet is desirable for the bike facility. The construction of numerous retaining structures, embankments, and barriers are necessary to accommodate the construction of the bike facility. The proposed improvements are depicted on the plans provided in Appendix A.

The use of both Caltrans standard retaining walls and special design retaining walls are proposed for the project. The retaining walls are necessary in areas where the proposed bike facility is constrained by limited right of way or topography. Caltrans standard retaining walls proposed for the project include: RW-390, RW-391, RW-395, RW-396, RW-400, RW-407, RW-426, RW-431, RW-435, and RW-438. Details of the proposed standard retaining walls are presented in Table 1. The special design retaining wall proposed for the project is Soil Nail Wall-392 (SNW-392). This special design retaining wall is referred to in this GDR. However, the details of SNW-392 are addressed in a separate Foundation Report.

No major cut or fill slopes are proposed for this project. The project will include grading of cut slopes above the retaining walls.

The use of Geosynthetic Reinforced Embankments (GRE) is proposed for the project. GRE-405 and GRE-408 are proposed in areas where existing shoulders are not wide enough to accommodate the proposed bike facility. Details of the proposed GRE are presented in Table1 and Section 8.4.

The relocation of a two-post overhead sign is proposed as part of the SR-15 Mid-City BRT Project. The post in the outside shoulder of the existing overhead sign is bound by a steep cut slope to the east and the lanes of the SR-15 to the west. Relocation of the existing overhead sign is proposed because considerable grading of the adjacent slope and the construction of a taller retaining wall would be required to construct the bike facility around the existing overhead sign. Details of the proposed overhead sign are presented in Section 8.8.

Barriers are proposed for this project to separate the SR-15 traffic from the bike facility. Plans depict multiple types of proposed barriers. Details of the proposed barriers are presented in Section 8.9.

Numerous luminaire are proposed for this project to illuminate the bike facility. Details of the proposed luminaire are presented in Section 8.10.

Bridge construction and/or improvements are not proposed as part of this project. Large culverts are not proposed as part of this project. Soundwalls and sound berms are not proposed as part of this project.

3.0 PERTINENT REPORTS AND INVESTIGATIONS

Pertinent reports and investigations utilized in the preparation of this GDR include:

California Division of Mines and Geology, *Geology of the San Diego Metropolitan Area, California: Del Mar, La Jolla, Point Loma, La Mesa, Poway, and SW1/4 Escondido 7/12-Minute Quadrangles*, Bulletin 200, 1975

Caltrans, *District Preliminary Geotechnical Report, Bike Path Adjacent to Interstate 15 from Adams Avenue to Camino Del Rio South*, 11-SD-15, PM 5.6/R6.0, EA 11-2T1900, EFIS 1100020291, September 2011

Caltrans, *Geotechnical Design Report, , State Route 15-40th Street, In San Diego from 0.6 Mile North of Route 805 to 0.3 Mile South of Route 8*, 11-SD-15, PM M3.4/R5.6, EA 11-048661, October 1994

Caltrans, *Geotechnical Design Report, Construct Soundwalls on Properties Adjacent to State Route 15 Between Interstate 8 and Adams Avenue in the Neighborhoods of Kensington and Normal Heights*, 11-SD-15-KP 14.5/15.8, 11-238701, November 2000

Caltrans, *Geologic Hazard Report for HOV Lanes*, 11-SD-15-PM 1.8/12.6, 11-27930K, January 2007

Caltrans, *Memorandum, Select Cut Slope and Retaining Wall Recommendations*, 11-SD-15, PM 3.4/5.6, EA 11-048661, May 1995

Caltrans, *Memorandum, Geotechnical Review of Proposed Sound Barriers*, 11-SD-15, KP 8.1/9.6, EA 11-0486H1, January 1999

Caltrans, *Memorandum, Cutoff Wall for Pipe Culvert Headwall at Sound Barrier No. 2*, 11-SD-15, KP 8.1-9.6, EA 11-0486H1, February 1999

Caltrans, *Memorandum, Foundation Materials at Soundwall 1*, 11-SD-15, PM R4.7/R6.1, EA 11-048663, March 2000

Caltrans, *Memorandum for Maintenance Support Pertaining to the Pavement Distress and Apparent Settlement in Interstate 15, North of Adams Avenue*, EA 11-375201, March 2009

CH2MHill, *Foundation Report, State Route 15 Mid-City Bus Rapid Transit Project, State Route 15 Between Interstate 805 and Interstate 8, San Diego, CA*, 11-SD-15, PM R3.8/R6.0, EA 2T1301, September 2013

CH2MHill, *Geotechnical Design Report, State Route 15 Mid-City Bus Rapid Transit Project, State Route 15 Between Interstate 805 and Interstate 8, San Diego, CA*, 11-SD-15, PM R3.8/R6.0, EA 2T1301, September 2013

CH2MHill, *Materials Report, State Route 15 Mid-City Bus Rapid Transit Project, State Route 15 Between Interstate 805 and Interstate 8, San Diego, CA*, 11-SD-15, PM R3.8/R6.0, EA 2T1301, September 2013

Moore & Taber AGRA, *Geotechnical Study, I-15 Construction Between Interstate 8 and Interstate 805, San Diego, CA*, October 1994

Moore & Taber, *Geotechnical Study, I-15Construction Between Route 8 and Route 805, San Diego, California*, February 1990

Additional references utilized in the preparation of this report are provided in Section 15.0.

4.0 PHYSICAL SETTING

The following section describes the physical setting of the project including: the climate; topography and drainage; man-made and natural features of engineering and construction significance; regional geology and seismicity; and soil survey mapping.

4.1 Climate

San Diego has a Mediterranean to semi-arid climate characterized by warm, dry summers and mild winters with some rain. San Diego has mild, mostly dry weather with approximately 200 days above 70°F. The extended summer and dry period lasts from May to October. Temperatures are mild to warm in the summer. The average high and low temperatures during the summer are 70 to 78°F and 55 to 66°F, respectively. Temperatures exceed 90°F approximately four days a year. Winter is the rainy period and lasts from November to April. Temperatures are mild with periods of moderate to heavy precipitation in the winter. The average high and low temperatures during the winter are 66 to 70°F and 50 to56°F, respectively. On average there are approximately 10-inches of rainfall in San Diego annually. However precipitation may range from 3.0 to 30.0-inches during any given year.

4.2 Topography & Drainage

The project area is located within the coastal plain physiographic province. The area is characterized by low relief mesa like topography with elevated, flat lying planer landforms incised by valleys, narrow steep canyons, and arroyos. The mesas are generally elongated in a northwest-southeasterly direction. The overall landform of San Diego Mesa is flat to gently sloping in the southwesterly direction. The approximate elevation of the mesa near Adams Avenue is 380-feet above Mean Sea Level (MSL).

San Diego Mesa is bounded by Mission Valley on the north. Mission Valley is a broad natural channel formed by the San Diego River as it cut down through the surrounding mesas. Camino Del Rio South skirts the southern flank of the valley. Near the north end of the proposed bike facility, the approximate elevation of Camino Del Rio South is 100-feet MSL.

On the mesa, urban runoff is gathered and conveyed by a system of gutters and storm drains. Runoff from the mesa is also directed to arroyos and small canyons trending toward SR-15. Flows contained within both the urban storm drain systems and the tributary canyons feed into a large storm drain system that occupies the ancestral tread of Ward Canyon underlying the freeway. This large trunk line conveys storm water northward ultimately discharging into the San Diego River.

4.3 Man-made and Natural Features of Engineering and Construction Significance

Ancient landslides, deep compressible soils, waterways, and massive adjoining structures are examples of natural and man-made features that often present unusual engineering and construction challenges for freeway projects. No man-made or natural features that would present an unusual engineering or construction challenge were found to exist within the project limits.

Older, steep cut slopes border portions of the proposed bike facility. These slopes are comprised of relatively competent sedimentary formations with fossiliferous beds of paleontological significance. These older, steep, cut slopes have performed well over several decades. RW-400 and RW-407 are proposed to be constructed at the base of these slopes. The upper portions of these steeps slopes are not proposed to be modified for the project.

4.4 Regional Geology and Seismicity

The project site lies within the San Diego Embayment section of the Peninsular Ranges Geomorphic Province of California. The Peninsular Range is a group of mountain ranges that extend 900-miles from the Transverse Ranges and the Los Angeles Basin in Southern California to the southern tip of Mexico's Baja California. The northern segment of the Peninsular Ranges in Southern California is referred to as

the Coastal Plain section. The San Diego Embayment consists of thick sequences of marine and non-marine sediments. The sedimentary rocks within the San Diego Embayment form an eastward thinning wedge of continental margin deposits that extend from Oceanside to the US-Mexico border.

San Diego is located in a seismically active region influenced by the San Andreas Fault system located at the boundary between the North American Plate and the Pacific Plate. Seismically, the Elsinore Fault Zone and the Newport-Inglewood-Rose Canyon Fault Zones also impact San Diego County. Additional active faults including the San Diego Trough Fault Zone lay farther west. Data pertaining to the pertinent regional active faults are included in Table 2.

4.5 Soil Survey Mapping

The proposed bike facility will be located almost entirely on cuts and fills in freshly scraped sedimentary formation or reworked soils. The Soil Survey of San Diego Area, California prepared by U.S. Department of Agriculture, Soil Conservation Service and Forest Service (Web Soil Survey) indicates that the project alignment is underlain by three soil units: Terrace Escarpment (TeF), Reiff Fine Sandy Loam (RkC), and Made Land (Md) a.k.a. Fill. The results of the Web Soil Survey are presented in Appendix F. Terrace Escarpment (TeF) is the predominant soil type lining the slopes of Ward Canyon and the adjoining arroyos. The Web Soil Survey describes the soils as follows:

Terrace Escarpment (TeF) is a 4 to 10-inch thick layer of loamy or gravelly soil over sedimentary bedrock.

Reiff Fine Sandy Loam (RkC) consists of very deep, well drained soils formed in coarse to medium textured alluvium.

Made Land (Md) unit is associated with the freeway and post construction improvements.

5.0 FIELD EXPLORATION

Limited geologic mapping and limited subsurface exploration along the project alignment were conducted to verify previously mapped site geology and to delineate the soil conditions anticipated to impact the design and construction of project features.

Archived data on the geology and soil conditions were acquired from reports for other projects in the area. The lateral continuity of the horizontally layered sedimentary formations and exposures of geologic outcrops on existing slopes allow for the accurate characterization of site soils without an intensive subsurface investigation. Due to this abundance of data, the limited geologic mapping and number of exploratory borings performed was judged to be sufficient to accurately characterize the prevailing soil conditions.

5.1 Drilling and Sampling

A subsurface investigation was conducted in May 2012 by CH2MHill. Three borings, A-12-036, A-12-037, and A-12-038, were developed along a portion of the project alignment. The borings were developed and evaluated to confirm the accuracy of the field mapping and archived geologic data. Boring Records are included in Appendix C. The approximate locations of A-12-036, A-12-037, and A-12-038, are depicted on Figure 3.1, Figure 3.2, and Figure 3.4, respectively.

Exploratory borings using a hand auger were conducted in August 2012 by OGDS2 staff. Seven hand auger exploratory borings were completed to determine the type and density of the subsurface soils along the alignments of GRE. The exploratory borings were completed with a 3-inch diameter auger to a depth ranging from 3-feet to approximately 7-feet. The borings were developed to the depth of refusal, which generally occurred whenever gravels and cobbles were encountered. Boring Records for the hand auger borings are included in Appendix C.

No samples were collected for laboratory analyses.

5.2 Geologic Mapping

Limited geologic mapping was conducted along the project alignment to verify previously mapped site geology and to delineate the soil conditions anticipated to impact the design and construction of project features. The project site geologic overview map is presented in Figure 2. The geologic map is a modified version of the *California Division of Mines and Geology, Geology of the San Diego Metropolitan Area, California: La Mesa Quadrangles, Kennedy, 1975*. The map depicts an overview of the geologic formations present at the project site and surrounding area. The modifications to the map display the approximate project alignment and the approximate extent of fill mapped by OGDS2.

5.3 Geophysical Studies

No geophysical studies were conducted for the preparation of this GDR.

5.4 Instrumentation

No geotechnical instrumentation was installed for the preparation of this GDR.

5.5 Exploration Notes

All boring were backfilled with cuttings and/or bentonite chips. When borings were performed along the shoulder or traveled way, bentonite chips were used to fill the drill hole below pavement elevation and then asphalt or cement was used to reestablish roadway grade.

No potentially hazardous waste was identified during this study.

6.0 GEOTECHNICAL TESTING

The sections below describe the in-situ and laboratory testing program performed for the proposed project.

6.1 In Situ Testing

Limited in situ geotechnical testing was performed for this report. Seven hand driven soil probe tests were conducted in August 2012. The soil probe tests were conducted to determine the density of subsurface materials along the alignments of the GRE. The soil probe tests were performed adjacent to the hand auger borings. Boring Records summarizing the soil probe tests are included in Appendix C.

6.2 Laboratory Testing

No laboratory tests were performed for the development of this report. Archived data and data from pertinent reports and investigations were used to determine the soil strength parameters provided in this report. Archived laboratory test data are provided in Appendix D.

7.0 GEOTECHNICAL CONDITIONS

The following section describes geotechnical conditions that will affect the project. A geologic overview map is presented in Figure 2. Contour grading plans depicting the existing geology are presented in Figure 3.1 through Figure 3.5. Cross sections depicting the existing geology and proposed project features are presented in Figure 4.1 through Figure 4.30. Figure 5 depicts the City of San Diego, Seismic Safety Study Geologic Hazards Map for the area.

7.1 Site Geology

The geology underlying the mesa is comprised of a succession of relatively flat lying sedimentary formations. The Linda Vista formation generally forms the mesa top and overlies the San Diego Formation. The layered geology exposed in Ward Canyon is generally comprised of the San Diego Formation, which overlies the Mission Valley Formation, which lies conformably over the Stadium Conglomerate. Archived data and the recollection of OGDS2 staff present during construction in the

1990s indicate that fill is present along portions of the alignment of RW-33 and RW-33A, and within the canyons trending toward SR-15 between Stations 410+00 and 425+00.

7.1.1 Lithology

Fill (Qf) in the project area appear to be derived from material excavated from nearby cuts in the surrounding formations. Fills encountered during the field investigation were determined to meet the requirements of engineered fill that conforms to Caltrans standards. Archived data indicates that debris may be encountered in the fill.

The *Linda Vista Formation (Ql)* consists of nearshore marine and nonmarine sediments deposited on a wave-cut platform. It is predominantly composed of reddish-brown interbedded sandstone and cobble conglomerate. Trace boulders may be found in the formation.

The *San Diego Formation (Tsd)* is comprised of marine, fine to medium-grained, yellowish-brown, poorly indurated sandstone with cobble conglomerate beds, and thin beds of bentonite, marl, and brown mudstone.

The *Mission Valley Formation (Tmv)* is comprised of marine, lagoonal, and non-marine, soft, friable, fine to medium grained, light olive gray sandstone with locally interstratified carbonate cemented beds; cobble conglomerate tongues similar to the lithology of the Stadium Conglomerate; and interbeds and tongues of claystone of brackish water origin.

The *Stadium Conglomerate (Tst)* consists of a massive cobble conglomerate with dark yellowish-brown coarse-grained sandstone matrix and dispersed lenses of fossiliferous, crossbedded sandstone. (Kennedy/Peterson 1975)

7.1.2 Structure

The sedimentary formations found beneath San Diego Mesa are generally flat lying and laterally continuous for large distances. However, the area around existing RW-34 is complicated by deformation and an offset that occurred along an ancient fault. Because of the relative movement between the geologic structures, the sedimentary stratum in the project area displays an abrupt change in lateral continuity. Figure 2 and Figure 5 depict the fault.

7.1.3 Existing Slope Stability

The bike facility abuts natural slopes, fill slopes, and cut slopes of varying age. Natural slopes as steep as 1.3H:1.0V generally line the tributary canyons. The natural slopes are stable and performing well.

7.2 Subsurface Conditions

The following sections describe the relevant geotechnical conditions that impact project design and excavations.

7.2.1 Soil

The bike facility alignment is underlain by highly competent sandstone and cobble conglomerate with significant portions of the alignment underlain by good quality fill derived from sandstone and cobble conglomerate. Soils in the project alignment are not expansive. Soil strength parameters for the geologic units present within the project limits are based on archival data and an understanding of the soil strength parameters of similar geologic units. These strength parameters have been used in the engineering evaluations of the proposed project features. Soil strength parameters for the geologic units present within the project limits are presented in Table 3.

7.2.2 Groundwater

Occasional and sporadic seeps of perched groundwater are known to exist along the canyon walls and bottoms.

Mild seepage was observed through the weep holes at the base of RW-35. The seepage was also described in archived data pertaining to the construction of RW-35.

As is common within canyon fills, perched groundwater is known to exist within the fill surrounding the main culvert trunk line beneath SR-15. Perched groundwater is anticipated to occur at the base of the fill that lies in relic valleys beneath the freeway embankment.

Archived LOTB indicate that wet soils were encountered approximately 20-feet below ground surface near existing RW-33 and RW-33A. OGDS2 staff present during the corridor widening in the 1990s conveyed that groundwater in the form of seeps was observed during construction of SR-15 and in the vicinity of RW-33 and RW-33A. Archived data indicates that underground drains were recommended to drain perched groundwater. The underground drains were to be installed at the surface of the original ground prior to the placement of fill between "SD-15 Line" Stations 395+60.36 and 419+50.

7.2.3 Corrosion

Caltrans currently considers a site to be corrosive to foundation elements if one or more of the following conditions exist: chloride concentration is greater than or equal to 500-parts per million (ppm), sulfate concentration is greater than or equal to 2,000 ppm, or the pH is 5.5 or less.

Archived data indicates that the chloride concentration is greater than or equal to 500 ppm. Therefore, the site is considered corrosive. Archived corrosion data are presented in Appendix D.

7.3 Surface Water

No perennial streams or large bodies of water exist within the project limits.

7.3.1 Scour

A scour evaluation for the project features is not applicable.

7.3.2 Erosion

Field observations indicate that native slopes and cut slopes along the proposed project are largely resistant to the forces of erosion. This is likely due to the indurated and somewhat cemented nature of the sedimentary formations that host the slopes. Occasional sloughs and rills on the slopes are indications that the underlying formation contains less resistant zones.

7.3.3 Tsunamis

The California Emergency Management Agency, San Diego County, and California Geological Survey Inundation Maps indicate that the project alignment is not located within a tsunami inundation area. The project alignment is over 150-feet above MSL. The project site is not susceptible to tsunamis.

7.4 Site Seismicity

No known active fault trace crosses the project alignment. However, the project is located in proximity to several active fault zones. Data pertaining to the regional active faults are included in Table 2. Ground motion caused by nearby and distant seismic events should be anticipated during the life of the freeway facilities. The closest active fault zone is the Newport Inglewood-Rose Canyon Fault Zone, trending in a northwesterly direction and laying roughly 4-miles west of the project site.

The project is located outside of any State of California Alquist Priolo Special Study Zone. Since no known active fault trace crosses the project alignment, ground surface rupture caused by active faulting is considered unlikely.

8.0 GEOTECHNICAL ANALYSIS AND DESIGN

The following section describes the geotechnical analyses, parameters, and design criteria that should be utilized by project designers in the continued development of the project.

8.1 Dynamic Analysis

This section describes the seismic parameters selected and dynamic analysis developed for the project.

The Caltrans Acceleration Response Spectra Online Tool Version 1.0.4 (Caltrans ARS Online Tool) was used to determine pertinent seismic data. The Caltrans ARS Online Tool is a web based tool that calculates both deterministic and probabilistic ARS for any location in California based on the criteria set for in *Caltrans, Seismic Design Criteria Version 1.6, November 2010, Appendix B* (SDC Appendix B).

According to the SDC Appendix B, Figure B.12, Soil Profile Type C has Standard Penetration Test (SPT) results with the number of blows per 12-inches greater than fifty (N>50). Archived LOTB and the results from the three borings developed by CH2MHill had SPT results that were generally greater than 50 blows per 12-inches in sedimentary formation. Therefore, as defined in SDC Appendix B, the Soil Profile Type is "C" for the sedimentary formation.

The latitude and longitude input were 32.769811 and –117.112069, respectively. The shear wave velocity used was 560-meters per second, which correspond to Soil Profile Type C.

Based on the results produced by the Caltrans ARS Online Tool, the closest regional active fault is the Newport Inglewood Rose Canyon Fault (San Diego Section). Data pertaining to the regional active faults are provided in Table 2. The anticipated Peak Ground Acceleration (PGA) for the project site is 0.38-gravity. The PGA corresponds to the Spectral Acceleration at a period of zero-seconds. The results produced by the Caltrans ARS Online Tool and the Caltrans ARS Online Tool QA/QC Checklist are included in Appendix E.

The review of the seismic data provided an effective seismic horizontal coefficient, K_h, for use in pseudo-static (a.k.a. seismic) slope stability analyses. The K_h used is defined by the Caltrans Guidelines for Foundation Investigation and Reports (Version 1.2) as 1/3 the PGA of the project site. The horizontal acceleration used for the seismic evaluation of the proposed project features is 0.13-gravity.

8.2 Liquefaction Analysis

Liquefaction involves the sudden loss of shear strength of a saturated, cohesionless soil subjected to cyclic loading produced by an earthquake. The cyclic loading and loss of shear strength cause the soil to temporarily exhibit the strength characteristic of a fluid mass. Typically, liquefaction occurs in areas where groundwater is less than 50-feet from the surface and where the soils are predominantly comprised of poorly consolidated poorly graded fine sands, silty sands, and non plastic silts.

The project primarily resides on dense sedimentary formation with minor portions of embankment fill. There is no potential for soil liquefaction to adversely impact project features.

8.3 Cuts and Excavations

Existing and proposed slopes were briefly described in Section 2.0 and 7.0. This section presents the analyses used to determine the stability, rippability, and grading factors of materials in proposed cuts or excavations.

8.3.1 Stability

Poorly to moderately-indurated conglomerate, sandstone, and fossiliferous beds are exposed within the older steep cut slopes. These steep slopes display minor raveling, and wedge sloughing; however, the cuts have demonstrated stability. More recent cut slopes along the corridor are slightly over a decade old, coinciding with the widening of the corridor. These newer cut slopes are stable and performing well.

The current Caltrans criteria is that new highway slopes must be evaluated as having a static factor of safety of 1.5 or greater and a pseudo-static (seismic) factor of safety of 1.1 or greater. The older, steep, cut slopes were analyzed and found not to satisfy Caltrans static and seismic stability criteria. The steep, older slopes were evaluated as having a static and seismic factor of safety against outer wedge failure of 1.2 and 1.0, respectively. However, the addition of retaining walls at the base of these slopes will act to buttress and increase the static and seismic factors of safety. Given the slopes long history of satisfactory performance, the absence of slope saturation, the aesthetic slope character, and the low probability that a sloughing event would spread beyond the base of the slope, the project team may consider leaving these steep, older slopes in place. The slopes are likely to continue to erode and slough occasional wedges of weathered sandstone. A fence and/or barrier may be placed along the base of the slopes to prevent eroded material from entering the bike facility and to inhibit cyclists from loitering near the slopes.

Temporary cut slopes may be defined as slopes that exist for a limited duration to facilitate construction of project features. The placement of Caltrans Standard retaining walls will require temporary back cuts to facilitate retaining wall construction. The exact configurations of temporary excavations are proposed by the Contractor and subject to the approval of the Engineer. Conceptual temporary cut slopes were evaluated to provide project development staff with useful criteria for the development of final design plans, construction staging plans, and final right-of-way requirements. Conceptual temporary cut slopes were also evaluated to provide guidance and limitations on slope inclination to the Contractor and Engineer. Conceptual temporary cut slopes were evaluated using the soil strength parameters provided in Table 3 of this GDR.

Existing-steep and conceptual-temporary cut slopes were evaluated for stability based on the observed performance of slopes in the project area and by using the computer program GSTABL7 with STEDwin v.2. The graphic results of computer based slope stability analyses for the existing-steep and conceptual-temporary cut slopes are provided in Appendix E.

Temporary cut slopes in fill should be inclined no steeper than 1.0H:1.0V.

Temporary cut slopes in sedimentary formation should be inclined no steeper than 0.5H:1.0V.

8.3.2 Rippability

The sedimentary formations in the project area range from very soft and friable to moderately hard. The conglomerate and calcarious portions are often moderately-indurated.

Generally, the sedimentary formations within the project area are rippable and may be excavated by conventional heavy duty grading equipment. Additionally, footing and drilled shaft excavations greater than 18-inches in minimum dimension should be readily accomplished using conventional equipment. However, the conglomerate layers contain cobble size material that present difficulties for narrow excavations, particularly for the excavation of small diameter shafts such as those drilled for the installation of soil nails. Difficult excavation conditions may be mitigated by the selection of appropriate excavation methods and by increasing material quantity estimates to allow for the ragged walls of footings and shafts.

Occasional cemented zones within the sedimentary formations may yield oversized blocks (concretions) of rock like material. Occasional spheroid and lens shaped concretions have high compressive strengths and can present an obstacle to drilling, trench excavating, and tunneling. These hard units are anticipated to be one-percent of the stratigraphy of the project alignment underlain by sedimentary formation.

8.3.3 Grading Factors

Earthwork factors relate the in place volume of material to be excavated to the in place volume of material after placement as fill. The factors are defined as in place volume of compacted fill divided by in place volume of material to be excavated.

$$G_f = V_{fill}/V_{exc}$$

An estimated grading factor of 0.98 may be used for material generated from cuts within existing fill and 1.05 may be used for the material generated from cuts within the sedimentary formation.

8.4 Embankments

The proposed bike facility will cross small arroyos centered near stations 405+80 and 409+20 that were tributaries to the ancestral Ward Canyon. At present, freeway embankment fill slopes inclined at 2.0H:1.0V descend from the freeway shoulder backing to the culverts at the base of these arroyos. It is proposed that embankment widening to accommodate the bike facility be achieved by the placement of GRE-405 and GRE-408. A schematic depicting the conceptual geogrid spacing, the filter fabric placement, and rock filled wire basket slope facing are presented in Figure 6. GRE design parameters are included in Table 1 and Table 4.

Stability evaluations were performed to assure the stability of the combined GRE and slope configuration. The proposed configuration was determined to meet Caltrans stability criteria. Results of the stability analyses for the GRE are included in Appendix E.

8.5 Earth Retaining Systems

The project will incorporate retaining walls where the planned bike facility is constrained by limited right-of-way and severe topography. The proposed retaining wall alignments are depicted on the plans provided in Appendix A. Standard Plan retaining wall descriptions and design parameters are provided in Table 1. Refer to Section 11.0, Section 12.0, and Section 13.0 for recommendations, design advisories, and construction considerations pertaining to alternative wall designs.

Stability analyses were performed to assure the stability of the combined retaining wall and slope configurations. The proposed configurations were determined to meet Caltrans criteria for both static and seismic stability. Results of the stability analyses for the retaining walls are included in Appendix E.

The Caltrans Standard Plan retaining walls will be constructed on fill and formational material. The bearing capacity of the fill and formational material that will host the retaining walls satisfies the strength criteria detailed in the Standard Plan. Shallow foundation data for proposed cast-in-place retaining walls founded on fill are provided in Table 5. The table only includes data representative of wall heights selected to assure stability. Archived data indicates sedimentary formations are dense to very dense, therefore, no shallow foundation data are provided for proposed cast-in-place retaining walls founded on sedimentary formation.

8.6 Culvert Foundations

The proposed project does not include the construction of large culverts.

8.7 Soundwall Foundations

No soundwalls are proposed for this project.

8.8 Overhead Sign Foundations

The relocation of one overhead sign is proposed for this project. The overhead sign has two posts and is currently located near Station 401+00 along the “SD-15 Line”. The overhead sign will be relocated to Station 399+30 along the “SD-15 Line”. The eastern post is proposed to be constructed on the barrier on the west side of the bike facility. The western post is proposed to be constructed within the median. The

subsurface material in which the overhead sign is proposed to be constructed is a layer of fill underlain by sedimentary formation. It is anticipated that the fill and sedimentary formation will be suitable for standard Cast-In-Drill Hole (CIDH) pile foundation. It is not anticipated that significant groundwater will be encountered during pile excavation for the overhead signs. Minor seeps may be encountered during pile excavation. Minor caving may occur during pile excavation within fill. No caving is anticipated within the sedimentary formation. The California Division of Occupational Safety and Health (Cal/OSHA) Soil Type is C.

8.9 Barrier Foundations

Type 736A and Type 60D barriers are proposed for the tops of certain walls. Geotechnical recommendations are not necessary for the proposed Type 736A and Type 60D barriers.

The Type 60 barrier depicted on the plans is a concrete barrier constructed where there is little to no offset between roadbed surfaces on opposing sides of the barrier. The Type 60C barrier is a concrete barrier constructed where there is an offset between roadbed surfaces on opposing sides of the barrier. The Type 60C barrier is intended to be used as a transitional barrier, between barriers or structures, where there is an offset between horizontal roadbed surfaces on opposing sides of the barrier with little to no forces acting on the barrier. The Standard Plans depict a maximum of 36-inches and minimum of 1.5-inches of offset between the upper and lower roadbed structural sections. The plans depict no embedment of the Type 60C barrier below the lower roadbed section. The Type 60C barrier is not intended to be used where there is an offset between the roadbed surface and a retained soil slope on the opposing side of the barrier.

It is recommended that an Embedded Concrete Barrier be used where there is an offset between the roadbed surface and a retained soil slope on the opposing side of the barrier. Embedded Concrete Barriers are modified versions of the Caltrans Standard Plan Concrete Barriers. Embedded Concrete Barriers are proposed to include a footing with a minimum embedment of 24-inches. The Embedded Concrete Barrier is recommended where there is a minimum of 6-inches and a maximum of 36-inches of retained soil slope above the barrier. The Type 60C barrier can be used where there is a minimum of 1.5-inches and a maximum of 6-inches of offset between the roadbed surface and a retained soil slope on the opposing side of the barrier. Determination of the steel reinforcement requirements for the Embedded Concrete Barrier is beyond the scope of this report. The project Engineer is responsible for the modification of any Standard Plan barrier.

It is anticipated that the fill and sedimentary formations within the project alignment will be suitable for placement of the Type 60, Type 60C, and Embedded Concrete Barriers. Removal and re-compaction of soils to accommodate the barriers are not anticipated.

8.10 Luminaire Foundations

The project plans depict multiple luminaire along the bike facility alignment. The luminaire posts are proposed to be constructed on the east side of the bike facility within fill and sedimentary formation, and atop retaining walls and barriers.

It is anticipated that the fill and sedimentary formations within the project alignment will be suitable for placement of the luminaire foundations. Removal and re-compaction of soil to accommodate the luminaire is not anticipated. It is anticipated that no significant groundwater will be encountered during pile excavation for the luminaire. Minor seeps may be encountered during pile excavation. Minor caving may occur during pile excavation within fill. No caving is anticipated during pile excavation in the sedimentary formation. Cobble excavated in borings within the sedimentary formations may produce ragged and uneven excavation walls.

9.0 MATERIAL SOURCES

No off-site material source has been identified for this project. Material generated from on-site excavations will consist primarily of sand, silt, and cobble derived from sedimentary formation and fill. The material generated on-site is anticipated to be suitable for use as roadway embankment.

The materials derived from fill and sedimentary formations are anticipated to be suitable for use as GRE backfill. Material generated from sedimentary formations will likely require screening to remove materials greater than those prescribed in the GRE specifications.

Overall, the material derived from fill and sedimentary formation is not anticipated to be suitable for use as structure backfill. However, the Contractor may be able to selectively excavate materials from the fill and/or sedimentary formations and process these materials to meet structure backfill specifications.

The slopes composed of the Mission Valley Formation and Stadium Conglomerate and contain cobbles of ideal size range for the rock fill in the wire basket slope facing of the GRE. The rock utilized to fill the GRE wire baskets may be derived by processing excess material generated by project excavations within the Mission Valley Formation and the Stadium Conglomerate. Cobble conglomerate tongues within the Mission Valley Formation comprise up to 30-percent of the formation. An estimate of the cobble that can be extracted from the Stadium Conglomerate is 50-percent by volume of excavated material.

10.0 MATERIAL DISPOSAL

Examples of material unsuitable for embankment subgrade or fill include organic mud, highly expansive clay, stockpiled trash, and debris. Unsuitable materials are not anticipated to be encountered.

Material generated during construction that is found to be unsuitable for use as roadway subgrade, embankment fill, or topsoil should be placed in a suitable location within the projects limits or hauled offsite. Consideration may be given to place excess or unsuitable material within or atop the existing fill between Stations 410+00 and 425+00.

11.0 RECOMMENDATIONS

Retaining wall RW-426, RW-431, RW-435, and RW-438 may be constructed as Caltrans standard Type 1 retaining walls.

Consider constructing RW-426, RW-431, RW-435, and RW-438 as soldier pile retaining walls with the same alignment and top profile of the planned Type 1 retaining wall. Soldier pile retaining walls would act as their own shoring systems, provide the upper cantilever heights to allow for the planned slope/wall drainage systems, require reduced design heights by the elimination of footing steps, and result in much less disturbance of the sedimentary formation comprising adjacent slopes. Further, the site soils are well suited to the excavation of drilled pile shafts estimated to be approximately 18-feet in depth.

Consider constructing RW-426, RW-431, RW-435, and RW-438 as soil nail retaining walls. The substitution of a soil nail retaining walls for the planned Type 1 retaining walls would require modifications of the tops of wall profiles and the slope/wall drainage systems, would likely result in a shorter retaining walls, and would result in much less disturbance of the sedimentary formation comprising the adjacent slopes.

Design parameters for the Type 7B portion of RW-426 are provided in Table 1.

Retaining wall backfill slopes constructed at inclinations exceeding 2.0H:1.0V should incorporate geogrid reinforcement horizontally spaced at 5-foot intervals. The geogrid material and placement should conform to the provisions provided for the GRE.

Robust erosion control should be placed on all fill slopes super adjacent to retaining walls. Fill slopes inclined steeper than 2H:1V should be vigorously armored against erosion. An example of robust slope

armoring is the Geoweb® Cellular Confinement System. Other comparably robust slope armoring systems may be provided by the District 11 Landscape Architect.

The designs of the retaining walls and barriers should incorporate a drainage system behind the wall face such as vertical drainage strips connected to outlet pipes. Concentrated storm runoff should be controlled with appropriate drainage features.

GRE should be designed according to the parameters presented in Table 4.

The material derived from excavations in the sandstone, siltstone, conglomerate, and engineered fills within the project will be suitable for use as embankment fill.

It is recommended that the Type 60C barrier be used only as a transitional barrier, between barriers or structures, where there is a minimum of 1.5-inches and a maximum of 36-inches and of offset between the upper and lower roadbed structural sections.

It is recommended that an Embedded Concrete Barrier be used where there is an offset between the roadbed surface and a retained soil slope on the opposing side of the barrier. Embedded Concrete Barriers are modified versions of the Caltrans Standard Plan Concrete Barriers. Embedded Concrete Barriers are proposed to include a footing with a minimum embedment of 24-inches. The Embedded Concrete Barrier is recommended where there is a minimum of 6-inches and a maximum of 36-inches of retained soil slope above the barrier. The Type 60C barrier can be used where there is a minimum of 1.5-inches and a maximum of 6-inches of offset between the roadbed surface and a retained soil slope on the opposing side of the barrier.

12.0 DESIGN ADVISORIES

The information presented on Section 8 of this report should be thoroughly reviewed by project planners and designers.

OGDS2 understands that Structure Design has performed appropriate analyses for internal stability of the Type 1 retaining walls with the slope configurations and loading conditions that will act on the retaining walls. The sedimentary formations hosting the retaining walls possess ample bearing resistance to support the wall foundations.

The slopes above RW-426, RW-431, RW-435, and RW-438 are comprised of sedimentary formations that possess poor induration making them somewhat resistant to erosion from surficial and concentrated runoff. Minimizing disturbance of the slopes above these retaining walls will minimize subsequent erosion from surficial and concentrated runoff and minimize the need for robust slope armoring.

The subsurface condition at the proposed overhead sign location is suitable for Caltrans Standard CIDH pile foundations.

The subsurface conditions at the proposed luminaire locations are suitable for the proposed pile foundations.

Cobble conglomerate tongues within the Mission Valley Formation comprise up to 30-percent of the formation. An estimate of the cobble that can be extracted from the Stadium Conglomerate is 50-percent by volume of excavated material.

13.0 CONSTRUCTION CONSIDERATIONS

The on-site soils may generally be excavated with conventional heavy grading equipment. It should be anticipated that the presence of cobble, boulders, and concretions may create occasional difficulties during drilling and trenching operations. Trenching and boring methods should be capable of excavating through hard concretions. The total volume of concretions excavated on the project is not anticipated to exceed 100-cubic yards.

The exact configurations of temporary excavations are proposed by the Contractor and subject to the approval of the Engineer. Temporary cut slopes shall be designed using the soil strength parameters provided in Table 3 of this GDR. Under no circumstances shall temporary cut slopes within fill be inclined steeper than 1.0H:1.0V. Under no circumstances shall temporary cut slopes within sedimentary formation be inclined steeper than 0.5H:1.0V.

The slope retained by RW-426 ranges in inclination from 1.3H:1V to 1.7H:1V and extends over 120 feet above roadway grade. A significant temporary excavation will be necessary to construct RW-426 as a Type 1 retaining wall. Photographs of the slope that will host RW-426 are presented in Appendix F.

Consideration may be given to placing excess material generated during construction within or atop the existing fill between Station 410+00 and 425+00.

Cobble conglomerate tongues within the Mission Valley Formation comprise up to 30-percent of the formation. An estimate of the cobble that can be extracted from the Stadium Conglomerate is 50-percent by volume of excavated material.

Cobble or concretions excavated from the sedimentary formations may produce ragged and uneven excavation walls. Project elements constructed within the sedimentary formations may require additional backfill or concrete.

Concentrated storm runoff should be controlled with appropriate drainage features to reduce erosion.

Portions of the retaining walls near Adams Avenue are in a tiered configuration. The 0.5H:1.0V temporary cut necessary to construct the lowers walls in sedimentary formation should not impact the portion of the slope that will be cut to construct the upper walls. In this section, it is recommended that the lower walls be constructed prior to the upper walls to provide a working pad for the construction of upper walls. If the contractor proposes to build the walls simultaneously or build the upper walls prior to the lower walls, the contractor should provide analysis showing the stability of the temporary construction slope geometry.

Refer to Table 1 for locations where temporary shoring is anticipated.

14.0 ACTUAL VS. REPORTED SITE CONDITIONS

The characterizations of geotechnical conditions along the project alignment and presented in this report are based on the review of the design information provided, proposed project features, as-built plans, geologic maps, geologic literature, archival reports, exploration by OGDS2 and CH2MHill, and laboratory testing. The evaluations and recommendations contained in this report are based on the information discovered and data gathered. If conditions are encountered during the project that appear to differ from the conditions conveyed in this report, or if construction difficulties related to soil conditions are encountered, a representative of OGDS2 Branch D should be consulted to assist with the assessment of the prevailing geotechnical conditions and to assist in formulating appropriate strategies to facilitate project completion.

Should project design features vary significantly from those described in this report an updated GDR should be prepared by OGDS2 Branch D to address the geotechnical considerations related to those features.

15.0 REFERENCES

AASHTO, *LRFD Bridge Design Specifications*, Customary U.S. Units, 4th Edition, 2007

Caltrans, *Corrosion Guidelines*, Version 2.0, November 2012

Caltrans, *Geotechnical Services Design Manual*, Version 1.0, August 2009

Caltrans, *Memorandum to Designers 20-10, Surface Fault Rupture Displacement Hazard Investigations*, January 2007

Caltrans, *Seismic Design Criteria Version 1.6, Appendix B*, November 2010

Caltrans, *Soil and Rock Logging, Classification and Presentation Manual*, 2010

http://www.aaroads.com/california/i-015_ca.html

http://en.wikipedia.org/wiki/California_State_Route_15

http://www.americanroads.us/forum/index.php?topic=222.0

http://www.conservation.ca.gov/cgs/geologic_hazards/Tsunami/Inundation_Maps/SanDiego/Pages/SanDiego.aspx

http://websoilsurvey.sc.egov.usda.gov/App/HomePage.htm

FIGURES

FIGURE 1: PROJECT LOCATION MAP AND AERIAL PHOTOGRAPH

GEOLOGY OF THE LA MESA QUADRANGLE
SAN DIEGO COUNTY, CALIFORNIA

by Michael P. Kennedy and G. L. Peterson

NOT TO SCALE

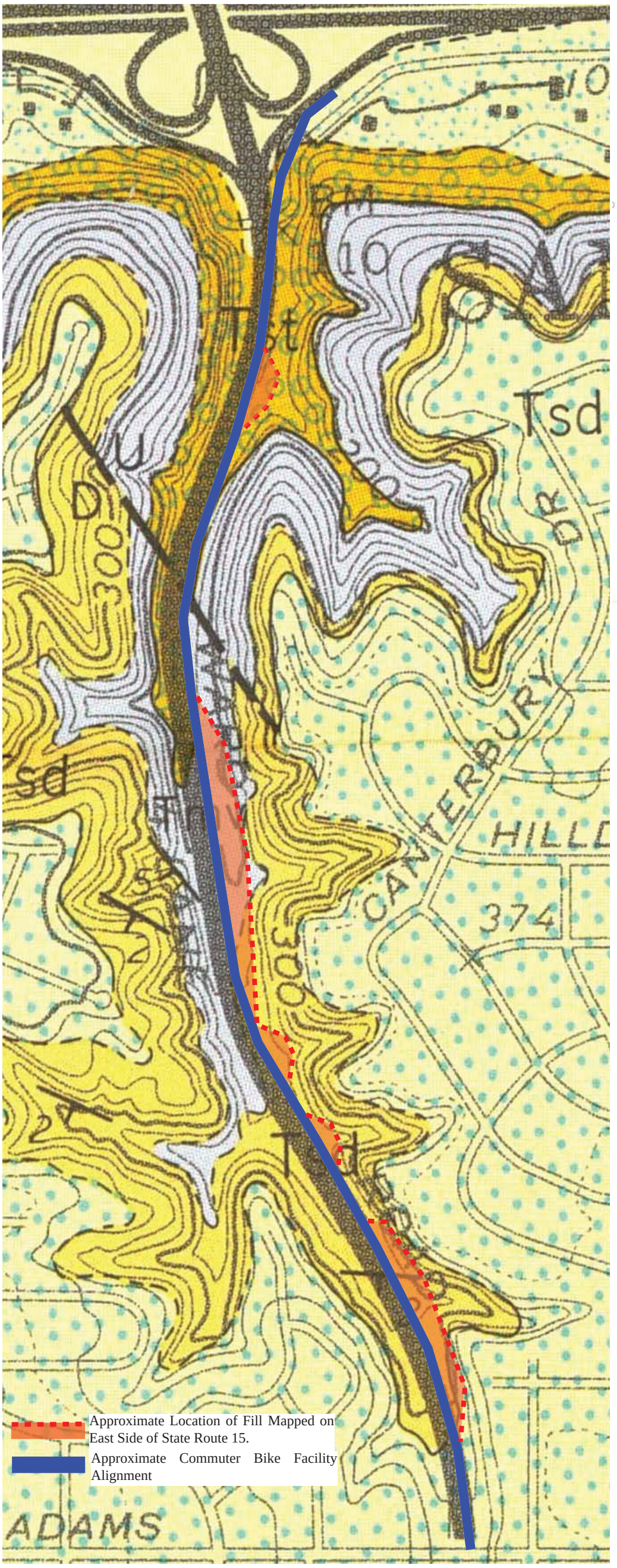

CONTOUR INTERVAL 20 FEET
DOTTED LINES REPRESENT 10-FOOT CONTOURS
DATUM IS MEAN SEA LEVEL

1975

EXPLANATION

QUATERNARY — Holocene

Qsw / Qal + Qsw — Alluvium and Slopewash
Qsw, Slopewash; Qal & Qsw, Alluvium and Slopewash undifferentiated.

Qls — Landslide deposits

QUATERNARY — Pleistocene

Qt — Stream-terrace deposits

Ql — Lindavista Formation

TERTIARY — Pliocene

Tsd — San Diego Formation

TERTIARY — Eocene

Tp / Tmv / Tst — Poway Group
Tp, Pomerado Conglomerate; Tmv, Mission Valley Formation; Tst, Stadium Conglomerate. Conglomerate marked by circle pattern.

Tf — Friars Formation
Conglomerate marked by circle pattern.

CRETACEOUS

Kg — Granite rocks
Undifferentiated granitic rocks of the southern California batholith.

JURASSIC

Jsp — Santiago Peak Volcanics

SYMBOLS

Contact
(dashed where approximately located; dotted where concealed)

Fault, showing dip
(dashed where approximately located; dotted where concealed; U, upthrown side; D, downthrown side).

5
Strike and dip of bedding in sedimentary rocks.

40
Strike and dip of bedding in metasedimentary rocks.

Qls
Landslide with direction of movement indicated by arrows.

12-16
Clay sample locality.

12-23
Pit, quarry, or mine.

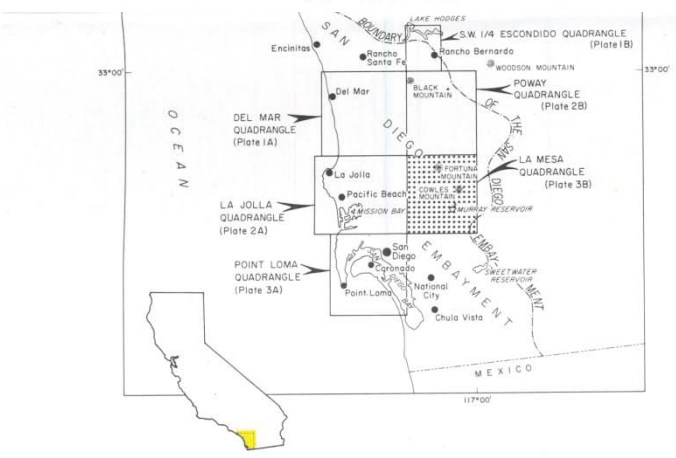

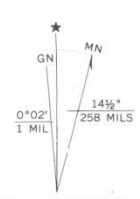

UTM GRID AND 1967 MAGNETIC NORTH DECLINATION AT CENTER OF SHEET

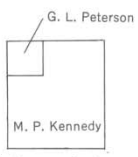

Index map showing authorship of geologic mapping 1972

FIGURE 2: GEOLOGIC OVERVIEW MAP

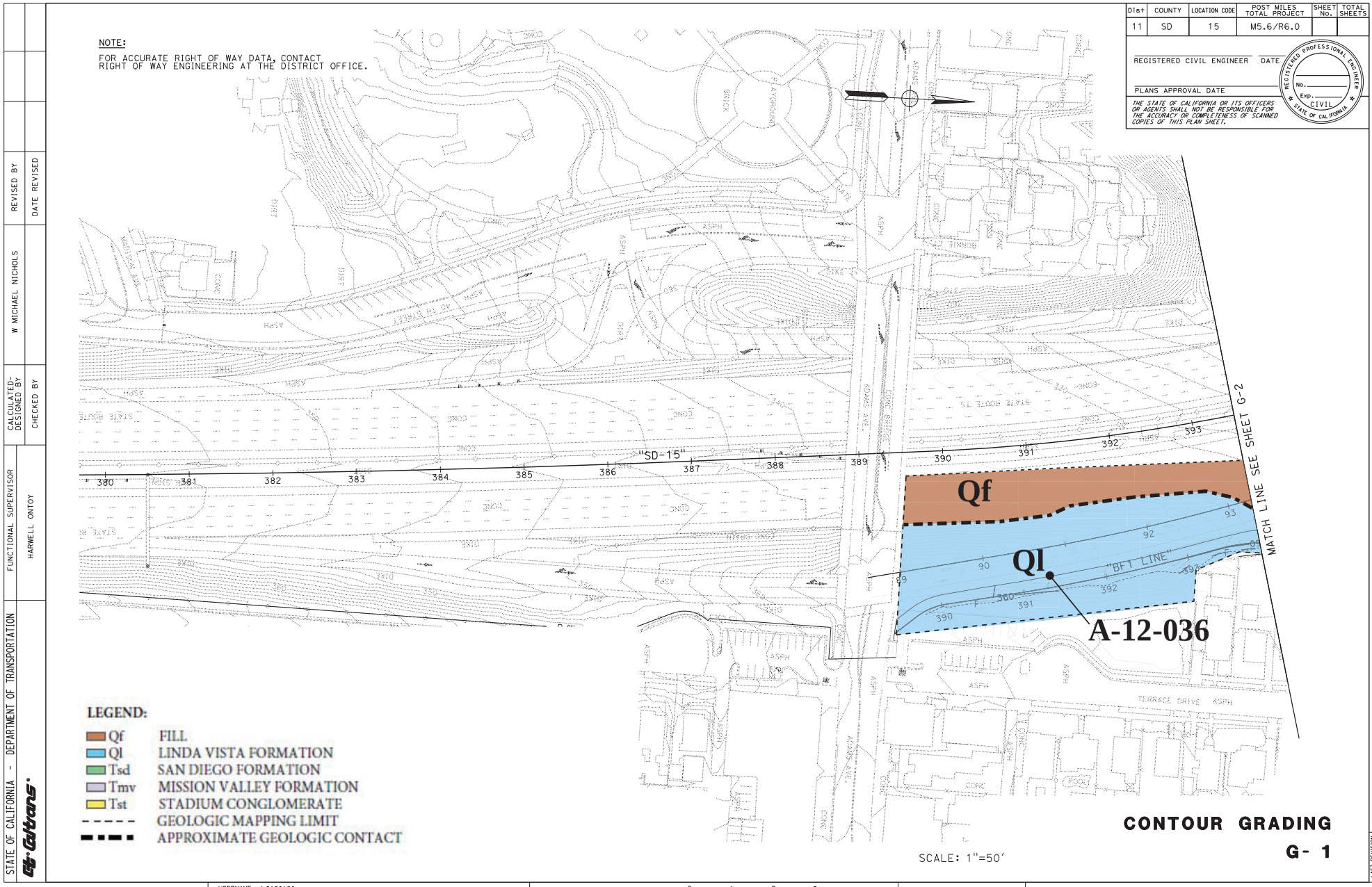
NOTE:
FOR ACCURATE RIGHT OF WAY DATA, CONTACT RIGHT OF WAY ENGINEERING AT THE DISTRICT OFFICE.
Dist
COUNTY
LOCATION CODE
POST MILES TOTAL PROJECT
SHEET No.
TOTAL SHEETS
11
SD
15
M5.6/R6.0
REGISTERED CIVIL ENGINEER
DATE
PLANS APPROVAL DATE
THE STATE OF CALIFORNIA OR ITS OFFICERS OR AGENTS SHALL NOT BE RESPONSIBLE FOR THE ACCURACY OR COMPLETENESS OF SCANNED COPIES OF THIS PLAN SHEET.
REGISTERED PROFESSIONAL ENGINEER
No.
Exp.
CIVIL
STATE OF CALIFORNIA
"SD-15"
380
381
382
383
384
385
386
387
388
389
390
391
392
393
Qf
Ql
"BFT LINE"
A-12-036
MATCH LINE SEE SHEET G-2
TERRACE DRIVE
LEGEND:
Qf FILL
Ql LINDA VISTA FORMATION
Tsd SAN DIEGO FORMATION
Tmv MISSION VALLEY FORMATION
Tst STADIUM CONGLOMERATE
GEOLOGIC MAPPING LIMIT
APPROXIMATE GEOLOGIC CONTACT
SCALE: 1"=50'
CONTOUR GRADING
G- 1
STATE OF CALIFORNIA - DEPARTMENT OF TRANSPORTATION
Caltrans
FUNCTIONAL SUPERVISOR
HARWELL ONTOY
CALCULATED-DESIGNED BY
W MICHAEL NICHOLS
CHECKED BY
REVISED BY
DATE REVISED
LAST REVISION 05-08-14
DATE PLOTTED => 09-MAY-2014
TIME PLOTTED => 10:45
BORDER LAST REVISED 7/2/2010
USERNAME => S120126
DGN FILE => 1100020291ha001.dgn
RELATIVE BORDER SCALE IS IN INCHES
0 1 2 3
UNIT 2778
PROJECT NUMBER & PHASE
1100020291

Figure 3.1

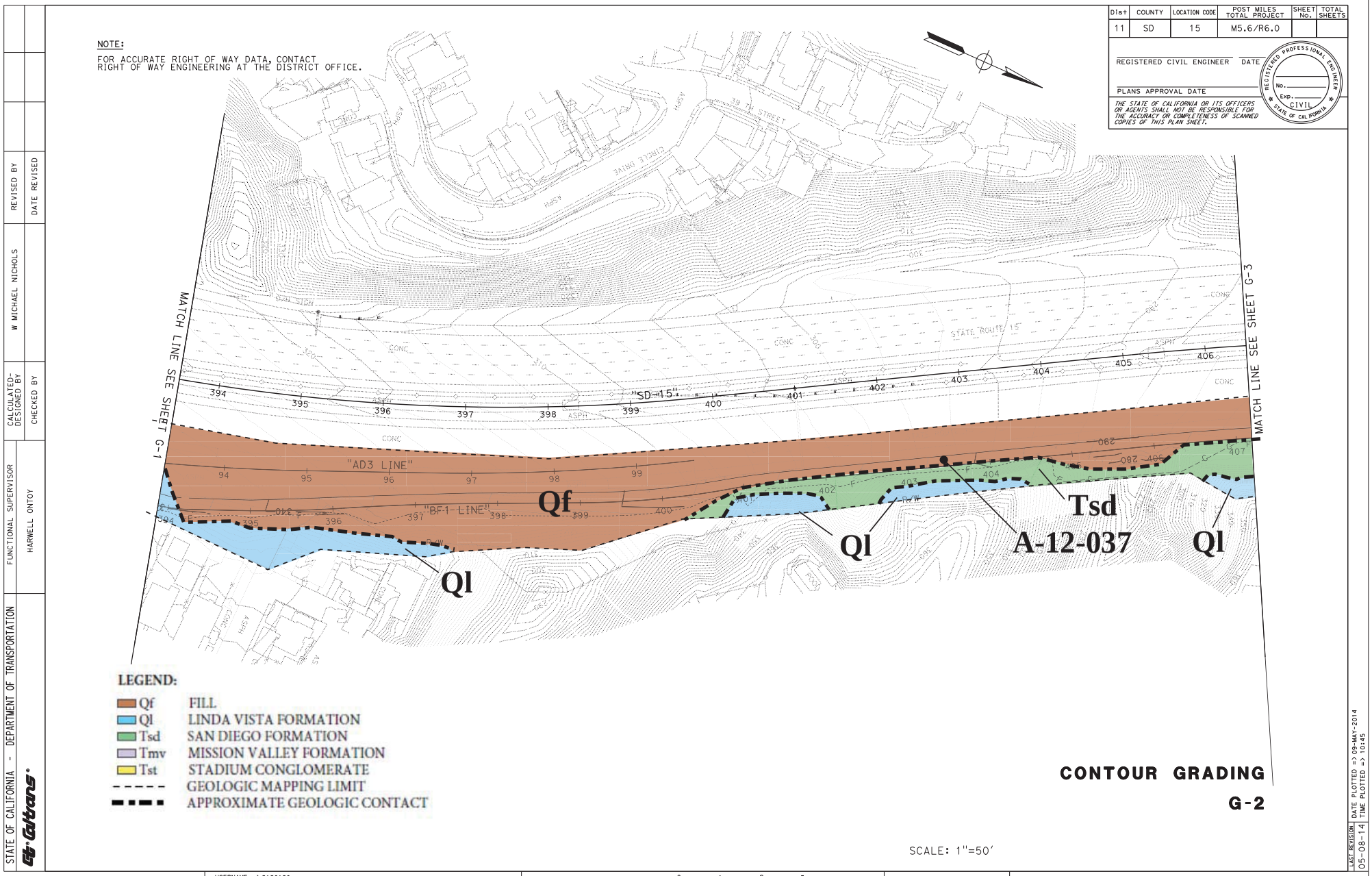
NOTE:
FOR ACCURATE RIGHT OF WAY DATA, CONTACT RIGHT OF WAY ENGINEERING AT THE DISTRICT OFFICE.
Dist | COUNTY | LOCATION CODE | POST MILES TOTAL PROJECT | SHEET No. | TOTAL SHEETS
11 | SD | 15 | M5.6/R6.0
REGISTERED CIVIL ENGINEER DATE
PLANS APPROVAL DATE
THE STATE OF CALIFORNIA OR ITS OFFICERS OR AGENTS SHALL NOT BE RESPONSIBLE FOR THE ACCURACY OR COMPLETENESS OF SCANNED COPIES OF THIS PLAN SHEET.
REGISTERED PROFESSIONAL ENGINEER
No.
Exp.
CIVIL
STATE OF CALIFORNIA
MATCH LINE SEE SHEET G-1
MATCH LINE SEE SHEET G-3
"SD-15"
"AD3 LINE"
"BF1 LINE"
STATE ROUTE 15
Qf
Ql
Tsd
A-12-037
LEGEND:
Qf FILL
Ql LINDA VISTA FORMATION
Tsd SAN DIEGO FORMATION
Tmv MISSION VALLEY FORMATION
Tst STADIUM CONGLOMERATE
GEOLOGIC MAPPING LIMIT
APPROXIMATE GEOLOGIC CONTACT
CONTOUR GRADING
G-2
SCALE: 1"=50'
STATE OF CALIFORNIA - DEPARTMENT OF TRANSPORTATION
FUNCTIONAL SUPERVISOR
HARWELL ONTOY
CALCULATED-DESIGNED BY
W MICHAEL NICHOLS
CHECKED BY
REVISED BY
DATE REVISED
LAST REVISION 05-08-14
DATE PLOTTED => 09-MAY-2014
TIME PLOTTED => 10:45
BORDER LAST REVISED 7/2/2010
USERNAME => S120126
DGN FILE => 1100020291ha002.dgn
RELATIVE BORDER SCALE IS IN INCHES
UNIT 2778
PROJECT NUMBER & PHASE
1100020291

Figure 3.2

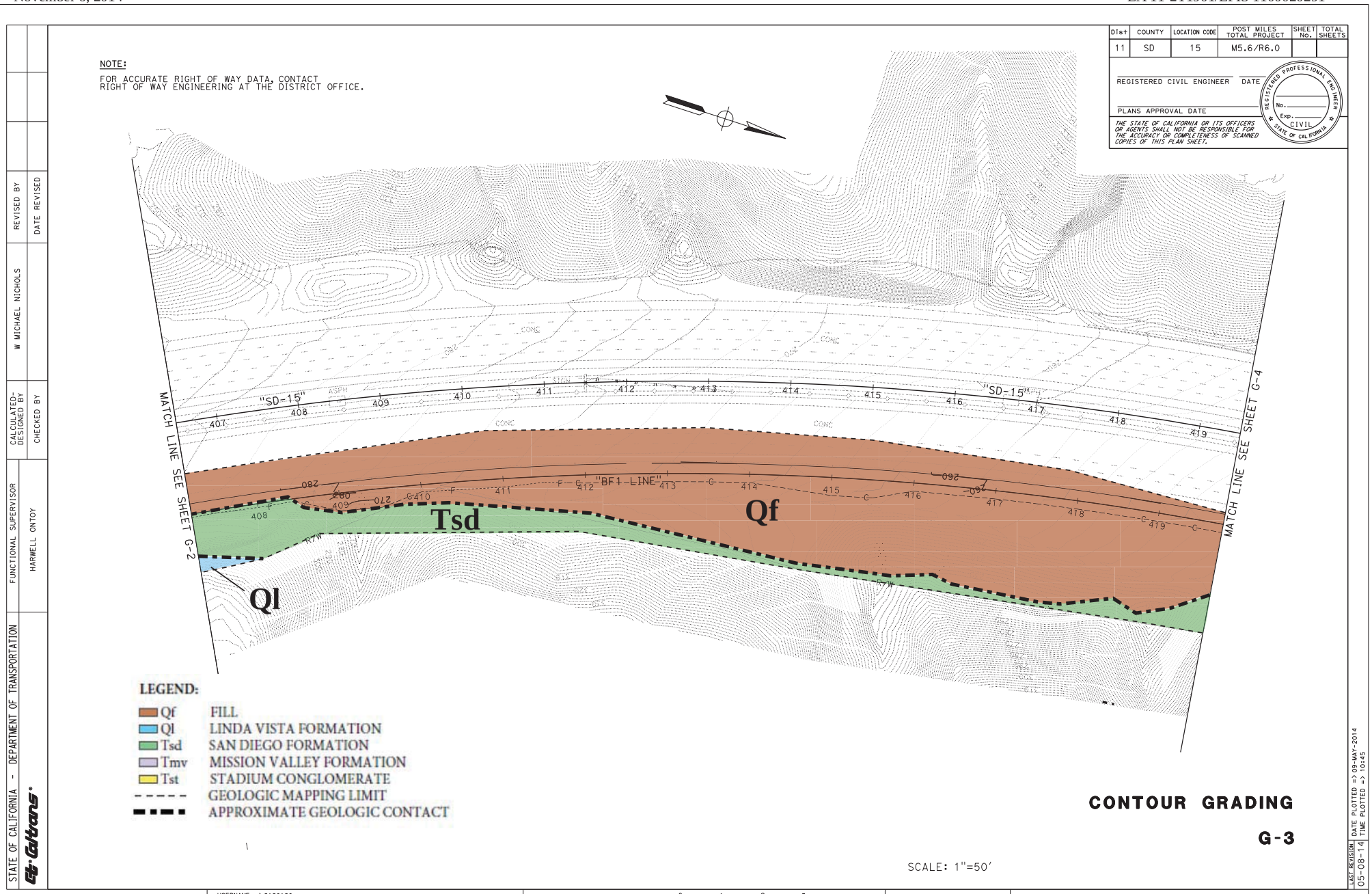
NOTE:
FOR ACCURATE RIGHT OF WAY DATA, CONTACT RIGHT OF WAY ENGINEERING AT THE DISTRICT OFFICE.
Dist | COUNTY | LOCATION CODE | POST MILES TOTAL PROJECT | SHEET No. | TOTAL SHEETS
11 | SD | 15 | M5.6/R6.0
REGISTERED CIVIL ENGINEER DATE
PLANS APPROVAL DATE
THE STATE OF CALIFORNIA OR ITS OFFICERS OR AGENTS SHALL NOT BE RESPONSIBLE FOR THE ACCURACY OR COMPLETENESS OF SCANNED COPIES OF THIS PLAN SHEET.
REGISTERED PROFESSIONAL ENGINEER
No.
Exp.
CIVIL
STATE OF CALIFORNIA
"SD-15"
"BF1-LINE"
MATCH LINE SEE SHEET G-2
MATCH LINE SEE SHEET G-4
Tsd
Qf
Ql
LEGEND:
Qf FILL
Ql LINDA VISTA FORMATION
Tsd SAN DIEGO FORMATION
Tmv MISSION VALLEY FORMATION
Tst STADIUM CONGLOMERATE
GEOLOGIC MAPPING LIMIT
APPROXIMATE GEOLOGIC CONTACT
CONTOUR GRADING
G-3
SCALE: 1"=50'
STATE OF CALIFORNIA - DEPARTMENT OF TRANSPORTATION
FUNCTIONAL SUPERVISOR
HARWELL ONTOY
CALCULATED-DESIGNED BY
CHECKED BY
W MICHAEL NICHOLS
REVISED BY
DATE REVISED
LAST REVISION 05-08-14
DATE PLOTTED => 09-MAY-2014
TIME PLOTTED => 10:45
BORDER LAST REVISED 7/2/2010
USERNAME => S120126
DGN FILE => 1100020291ha003.dgn
RELATIVE BORDER SCALE IS IN INCHES
UNIT 2778
PROJECT NUMBER & PHASE 1100020291

Figure 3.3

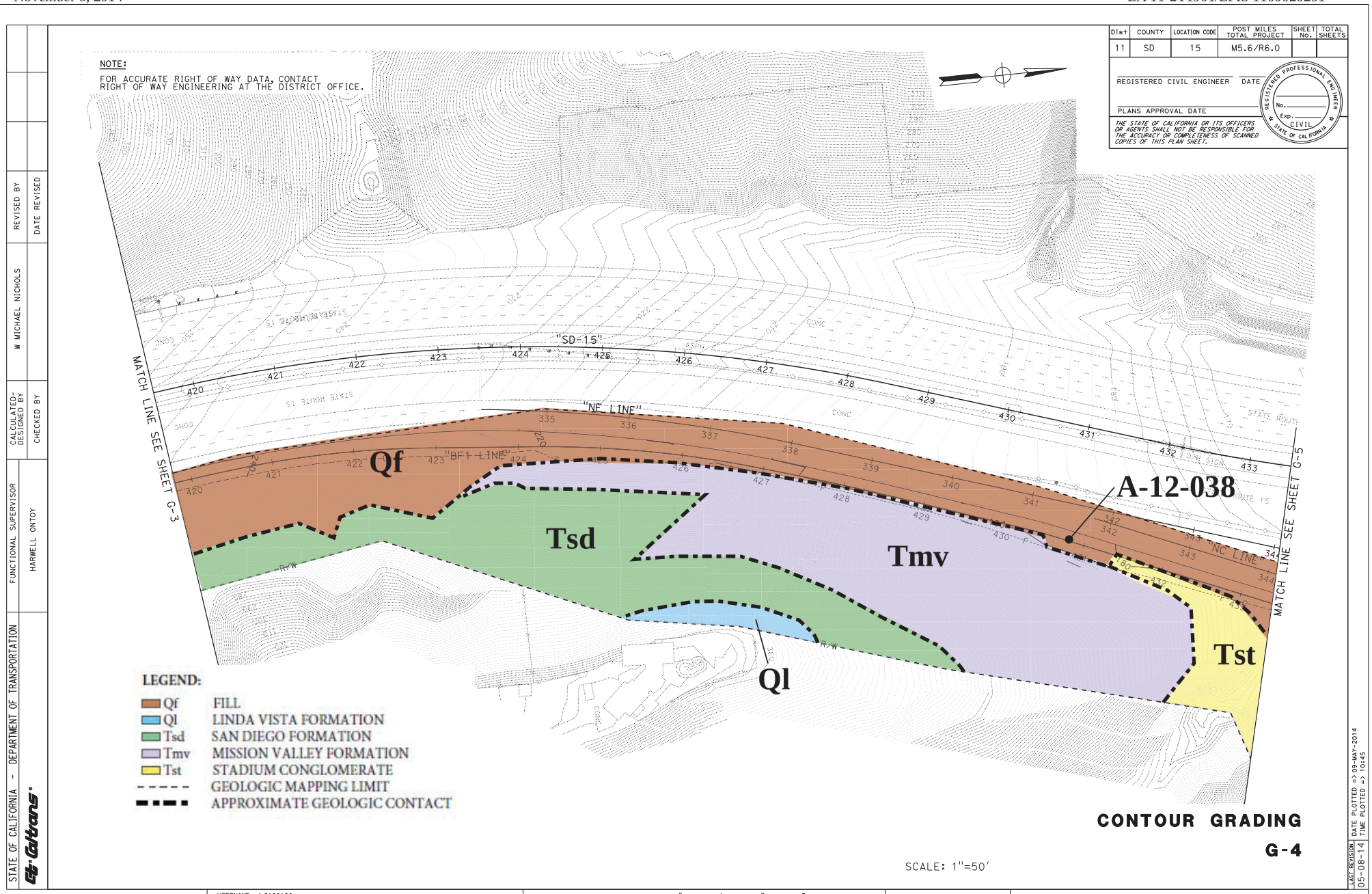
NOTE:
FOR ACCURATE RIGHT OF WAY DATA, CONTACT RIGHT OF WAY ENGINEERING AT THE DISTRICT OFFICE.
Dist | COUNTY | LOCATION CODE | POST MILES TOTAL PROJECT | SHEET No. | TOTAL SHEETS
11 | SD | 15 | M5.6/R6.0
REGISTERED CIVIL ENGINEER DATE
PLANS APPROVAL DATE
THE STATE OF CALIFORNIA OR ITS OFFICERS OR AGENTS SHALL NOT BE RESPONSIBLE FOR THE ACCURACY OR COMPLETENESS OF SCANNED COPIES OF THIS PLAN SHEET.
REGISTERED PROFESSIONAL ENGINEER
No.
Exp.
CIVIL
STATE OF CALIFORNIA
"SD-15"
"NE LINE"
"BF1 LINE"
"NC LINE"
MATCH LINE SEE SHEET G-3
MATCH LINE SEE SHEET G-5
Qf
Tsd
Tmv
Tst
Ql
A-12-038
LEGEND:
Qf FILL
Ql LINDA VISTA FORMATION
Tsd SAN DIEGO FORMATION
Tmv MISSION VALLEY FORMATION
Tst STADIUM CONGLOMERATE
GEOLOGIC MAPPING LIMIT
APPROXIMATE GEOLOGIC CONTACT
CONTOUR GRADING
G-4
SCALE: 1"=50'
STATE OF CALIFORNIA - DEPARTMENT OF TRANSPORTATION
Caltrans
FUNCTIONAL SUPERVISOR
HARWELL ONTOY
CALCULATED-DESIGNED BY
CHECKED BY
W MICHAEL NICHOLS
REVISED BY
DATE REVISED
LAST REVISION 05-08-14
DATE PLOTTED => 09-MAY-2014
TIME PLOTTED => 10:45
BORDER LAST REVISED 7/2/2010
USERNAME => S120126
DGN FILE => 1100020291ha004.dgn
RELATIVE BORDER SCALE IS IN INCHES
UNIT 2778
PROJECT NUMBER & PHASE
1100020291

Figure 3.4

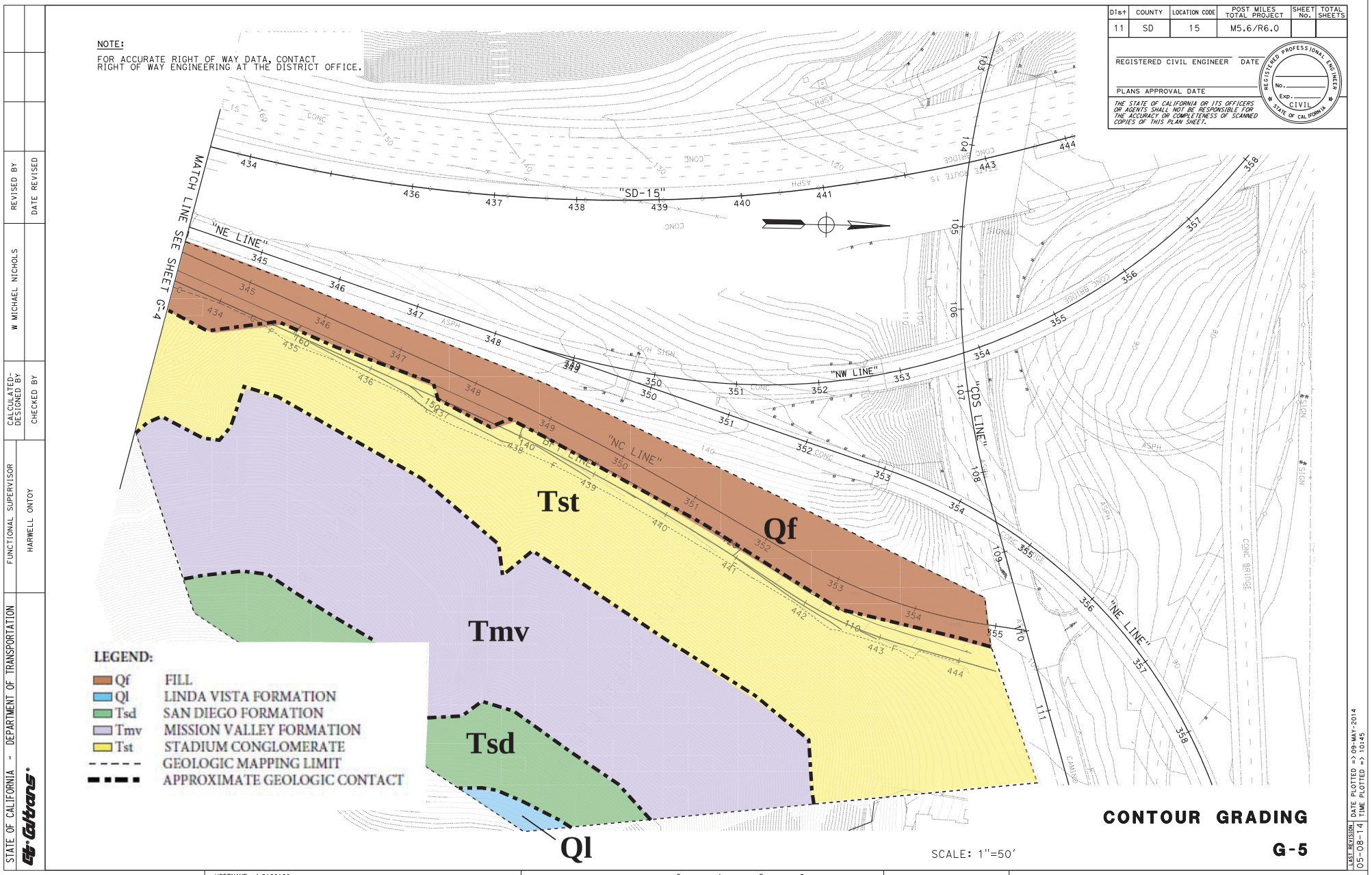
NOTE:
FOR ACCURATE RIGHT OF WAY DATA, CONTACT RIGHT OF WAY ENGINEERING AT THE DISTRICT OFFICE.
Dist COUNTY LOCATION CODE POST MILES TOTAL PROJECT SHEET No. TOTAL SHEETS
11 SD 15 M5.6/R6.0
REGISTERED CIVIL ENGINEER DATE
PLANS APPROVAL DATE
THE STATE OF CALIFORNIA OR ITS OFFICERS OR AGENTS SHALL NOT BE RESPONSIBLE FOR THE ACCURACY OR COMPLETENESS OF SCANNED COPIES OF THIS PLAN SHEET.
REGISTERED PROFESSIONAL ENGINEER
No.
Exp.
CIVIL
STATE OF CALIFORNIA
"SD-15"
"NE LINE"
"NW LINE"
"NC LINE"
"CDS LINE"
MATCH LINE SEE SHEET G-4
Tst
Qf
Tmv
Tsd
Ql
LEGEND:
Qf FILL
Ql LINDA VISTA FORMATION
Tsd SAN DIEGO FORMATION
Tmv MISSION VALLEY FORMATION
Tst STADIUM CONGLOMERATE
GEOLOGIC MAPPING LIMIT
APPROXIMATE GEOLOGIC CONTACT
SCALE: 1"=50'
CONTOUR GRADING
G-5
STATE OF CALIFORNIA - DEPARTMENT OF TRANSPORTATION
FUNCTIONAL SUPERVISOR
HARWELL ONTOY
CALCULATED-DESIGNED BY
CHECKED BY
W MICHAEL NICHOLS
REVISED BY
DATE REVISED
LAST REVISION 05-08-14
DATE PLOTTED => 09-MAY-2014
TIME PLOTTED => 10:45
BORDER LAST REVISED 7/2/2010
USERNAME => S120126
DGN FILE => 1100020291ha005.dgn
RELATIVE BORDER SCALE IS IN INCHES
UNIT 2778
PROJECT NUMBER & PHASE 1100020291

Figure 3.5

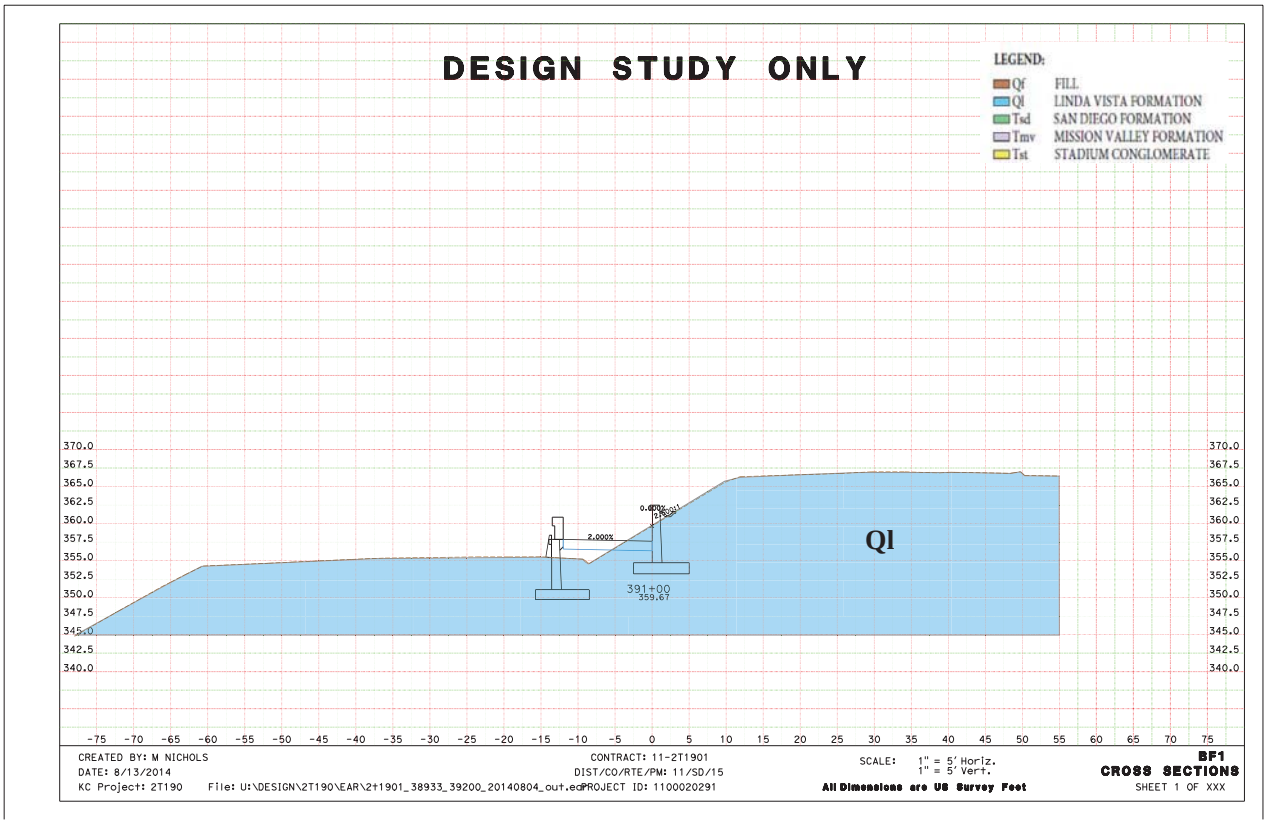

Figure 4.1

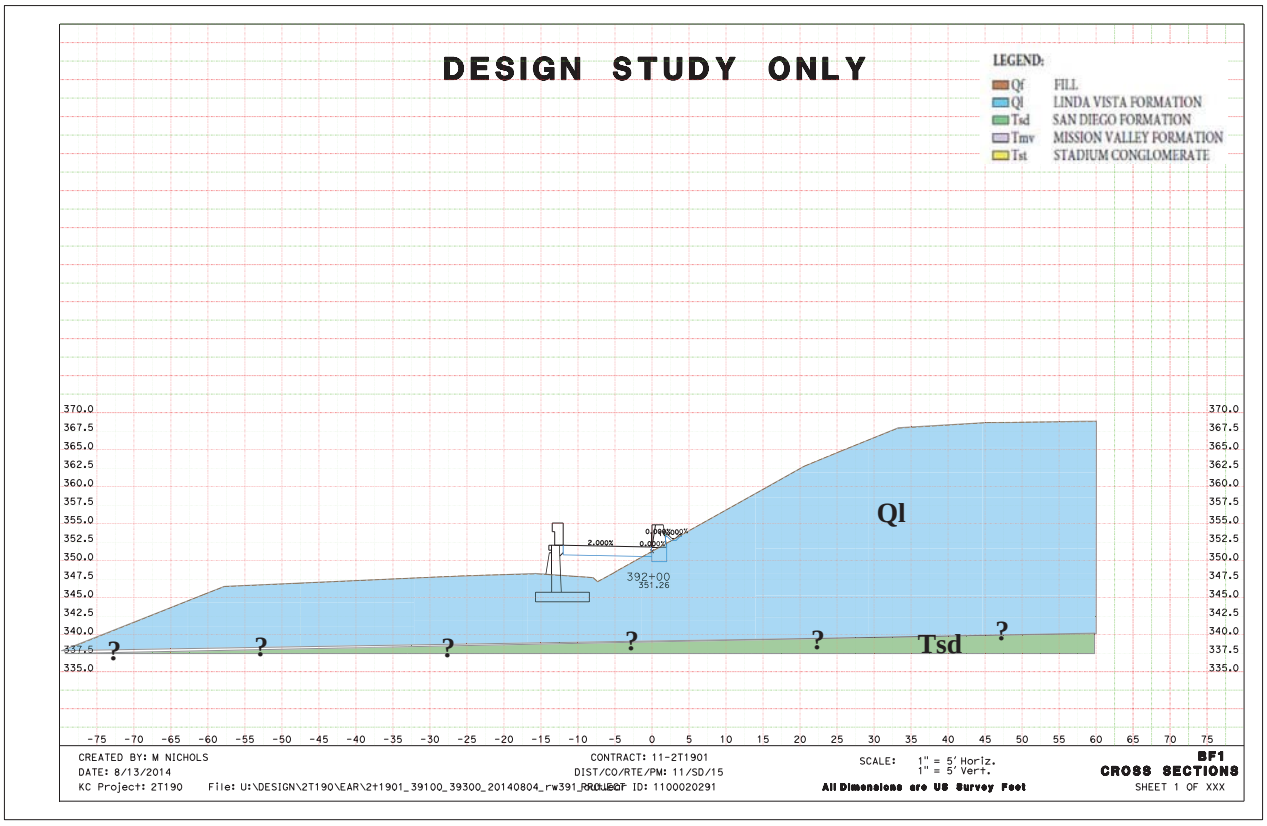

Figure 4.2

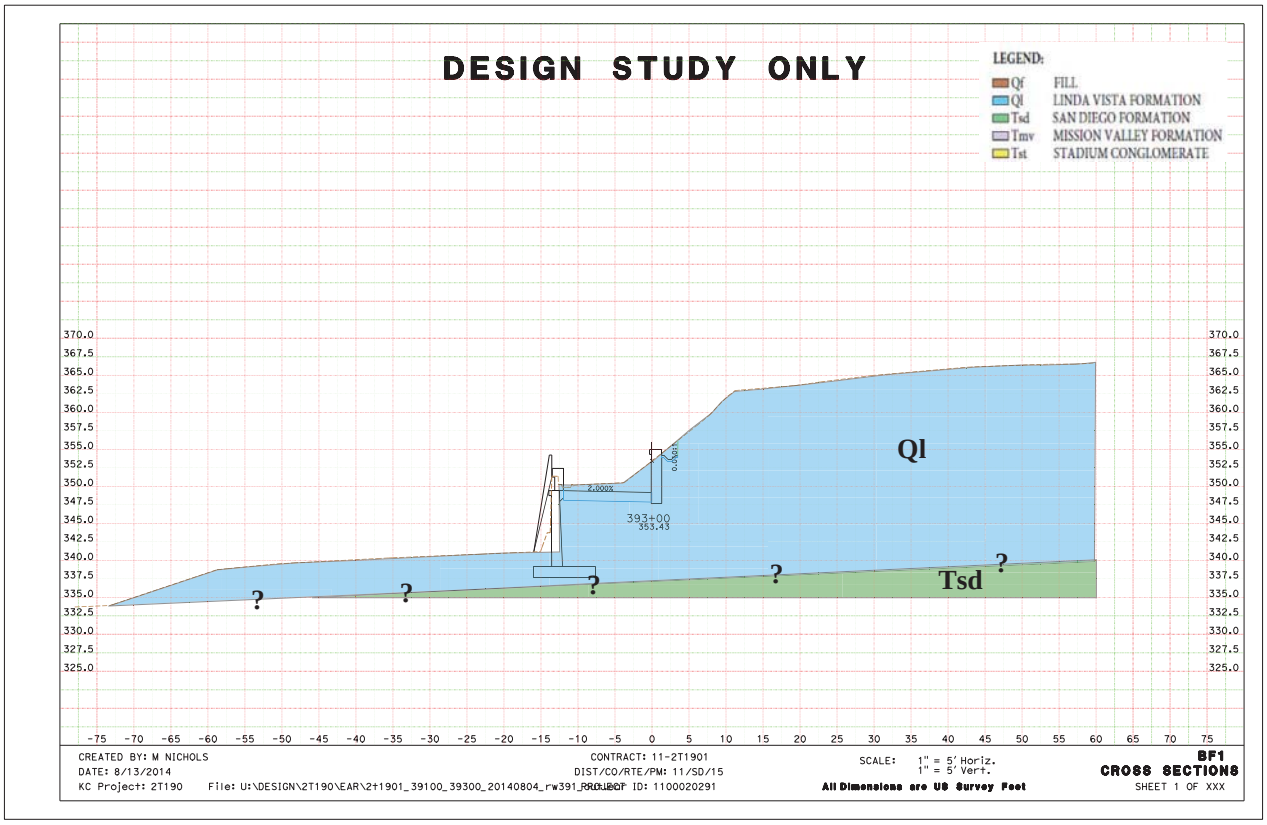

Figure 4.3

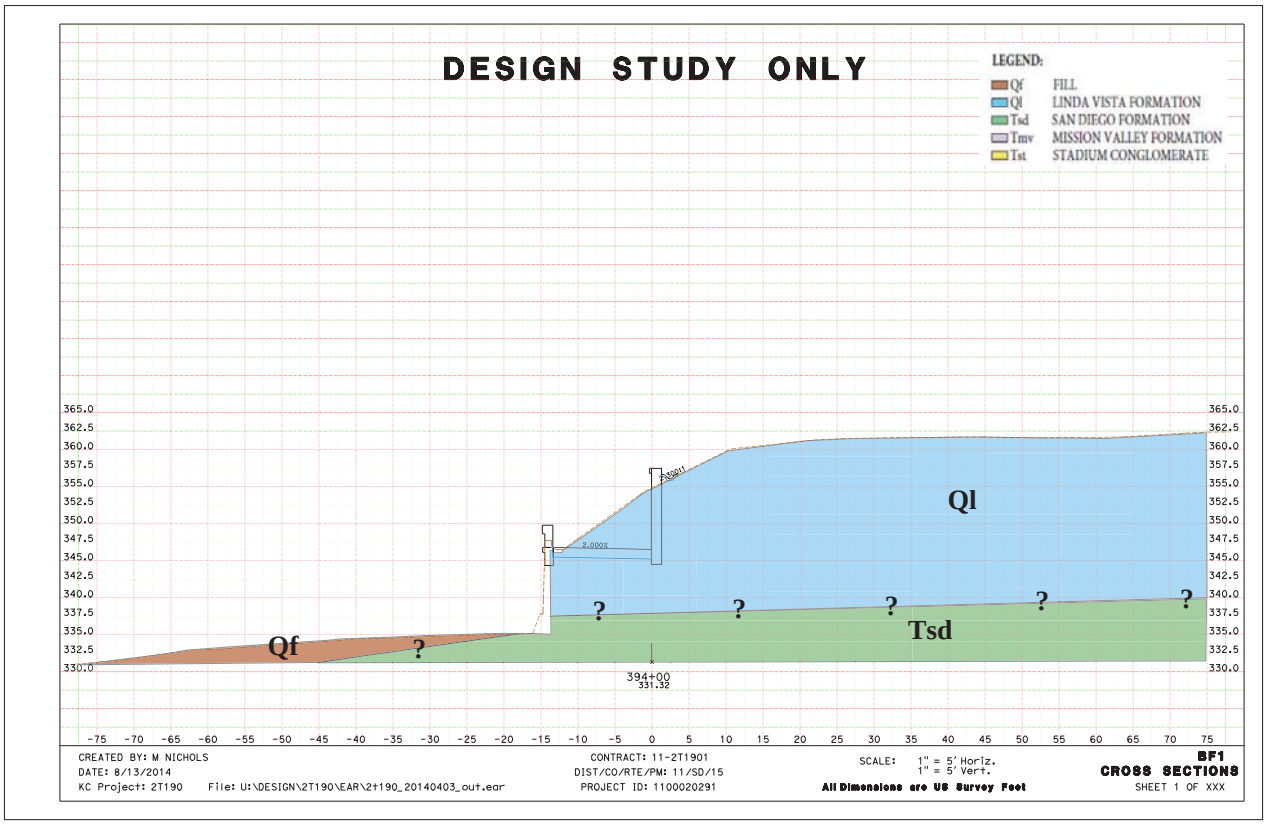

Figure 4.4

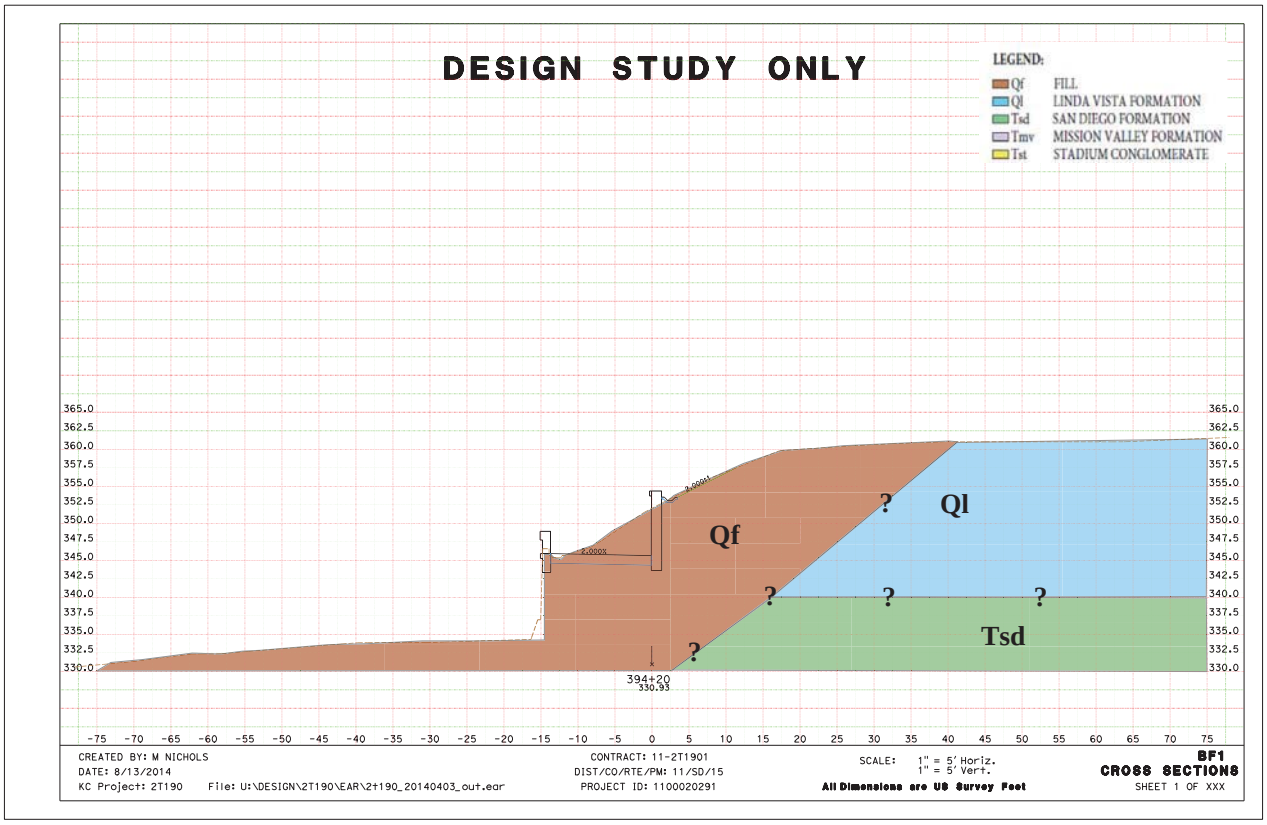

Figure 4.5

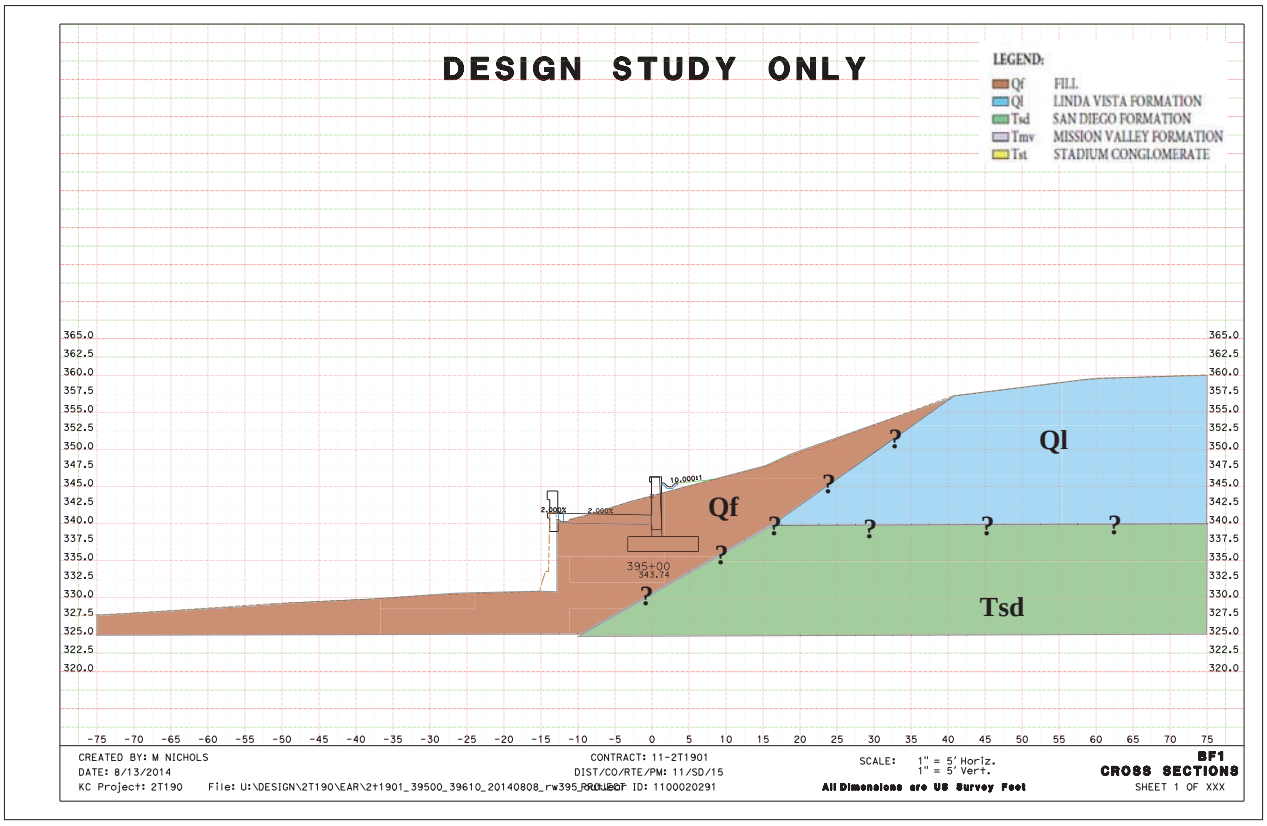

Figure 4.6

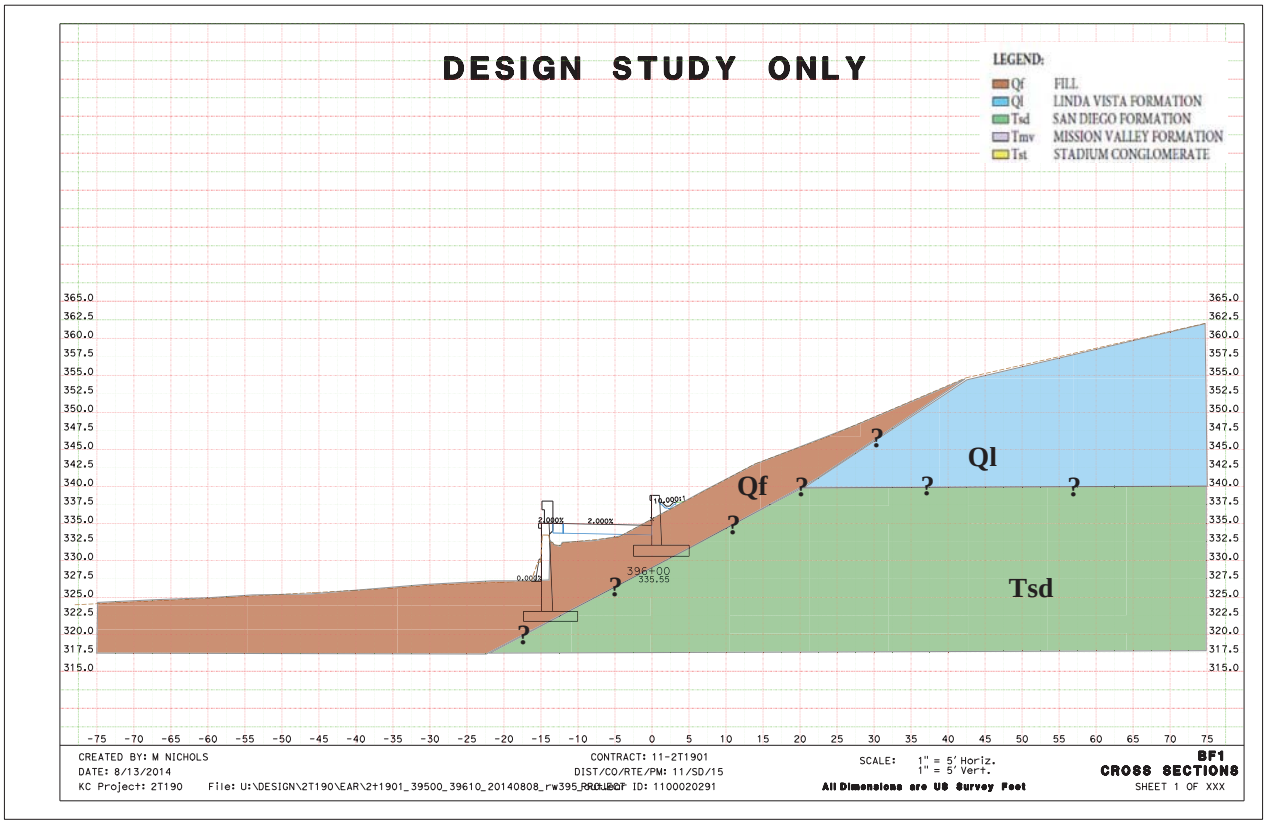

Figure 4.7

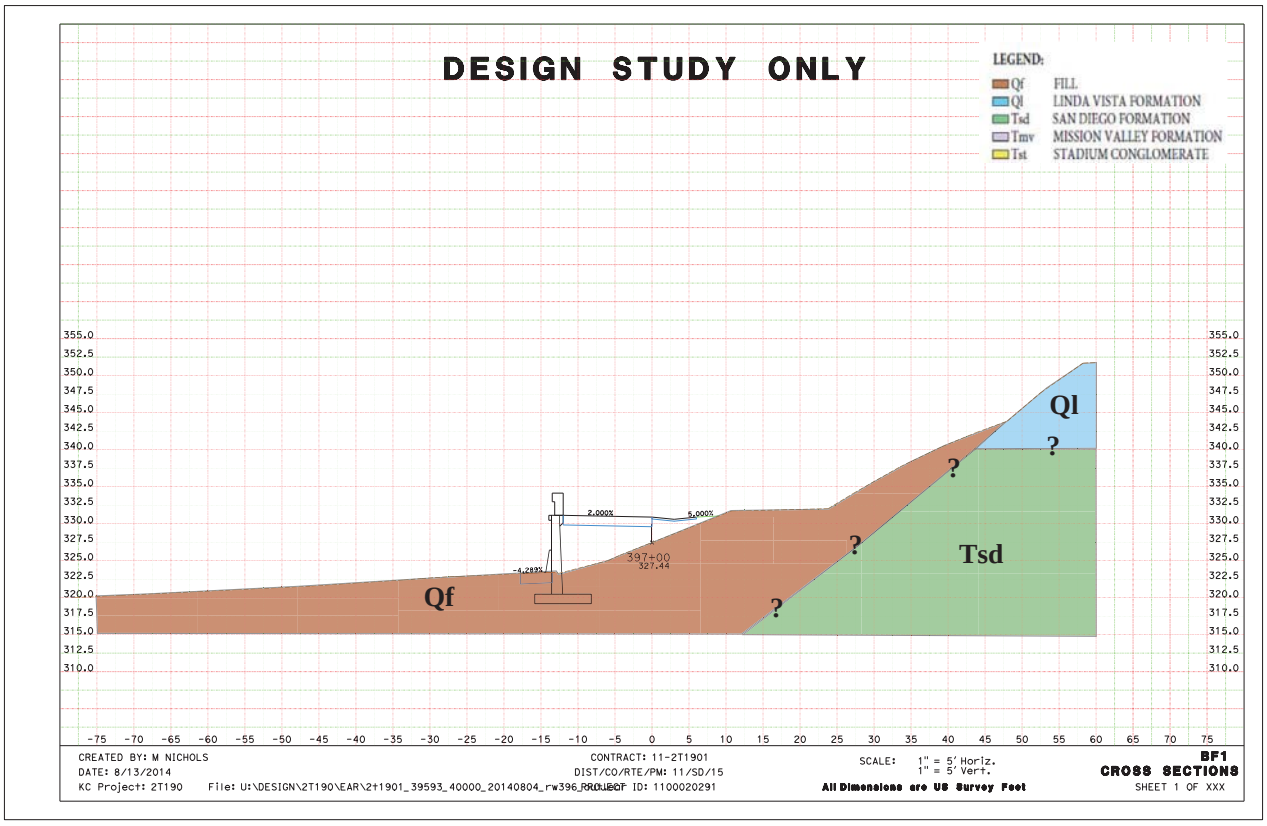

Figure 4.8

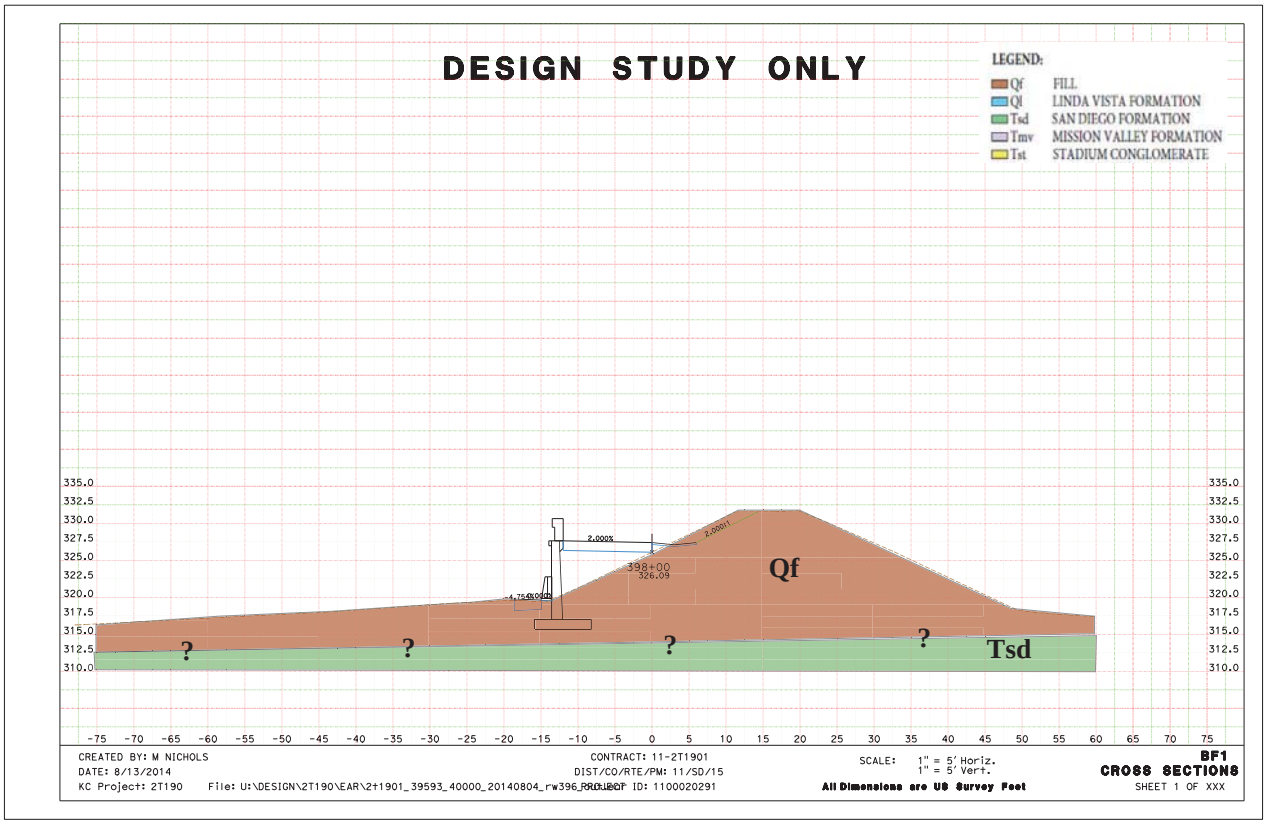

Figure 4.9

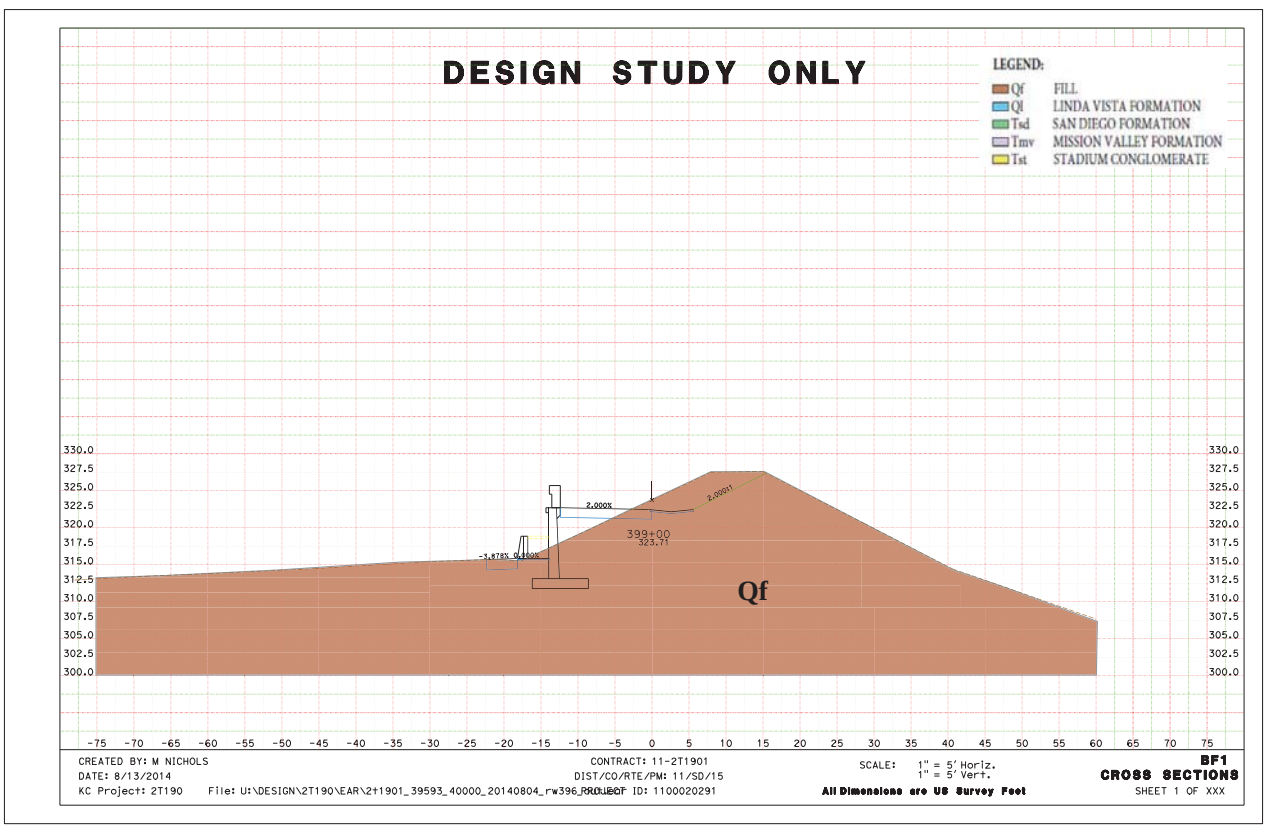

Figure 4.10

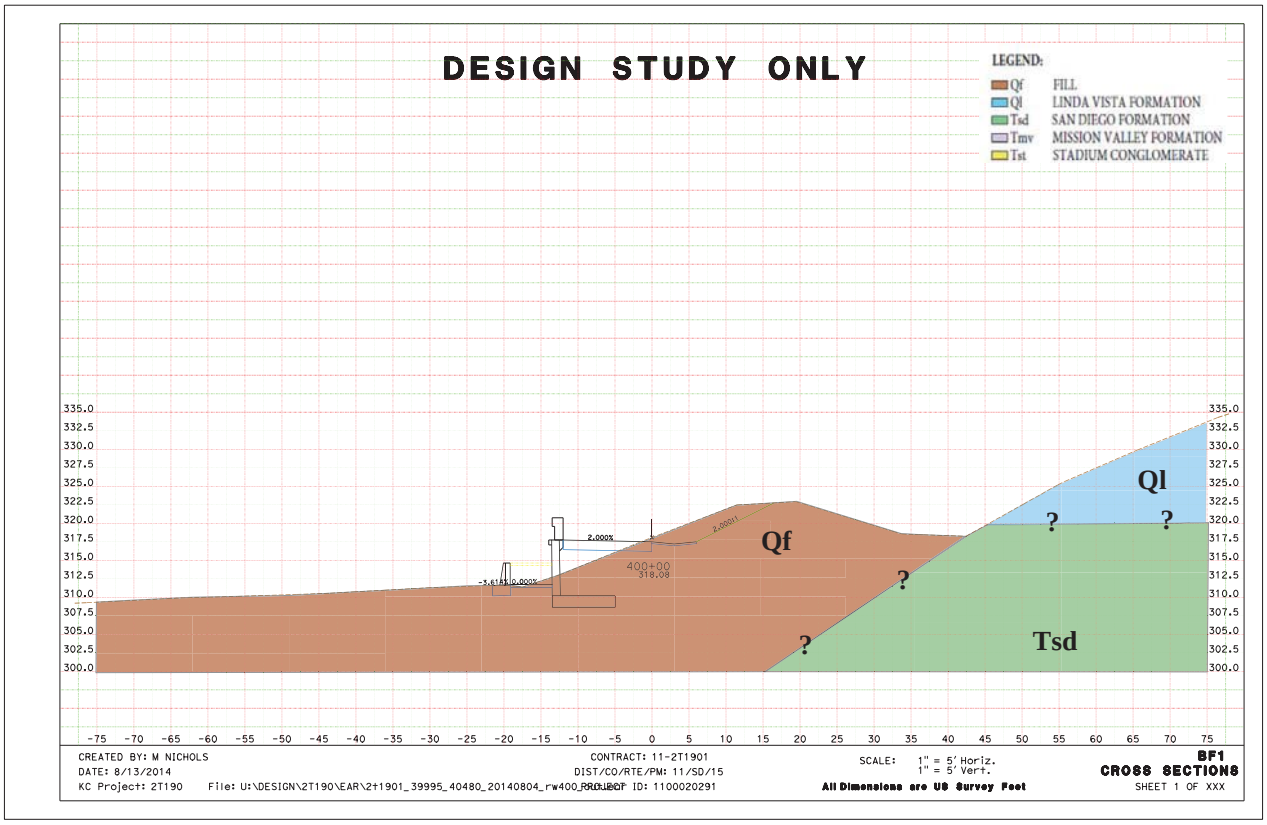

Figure 4.11

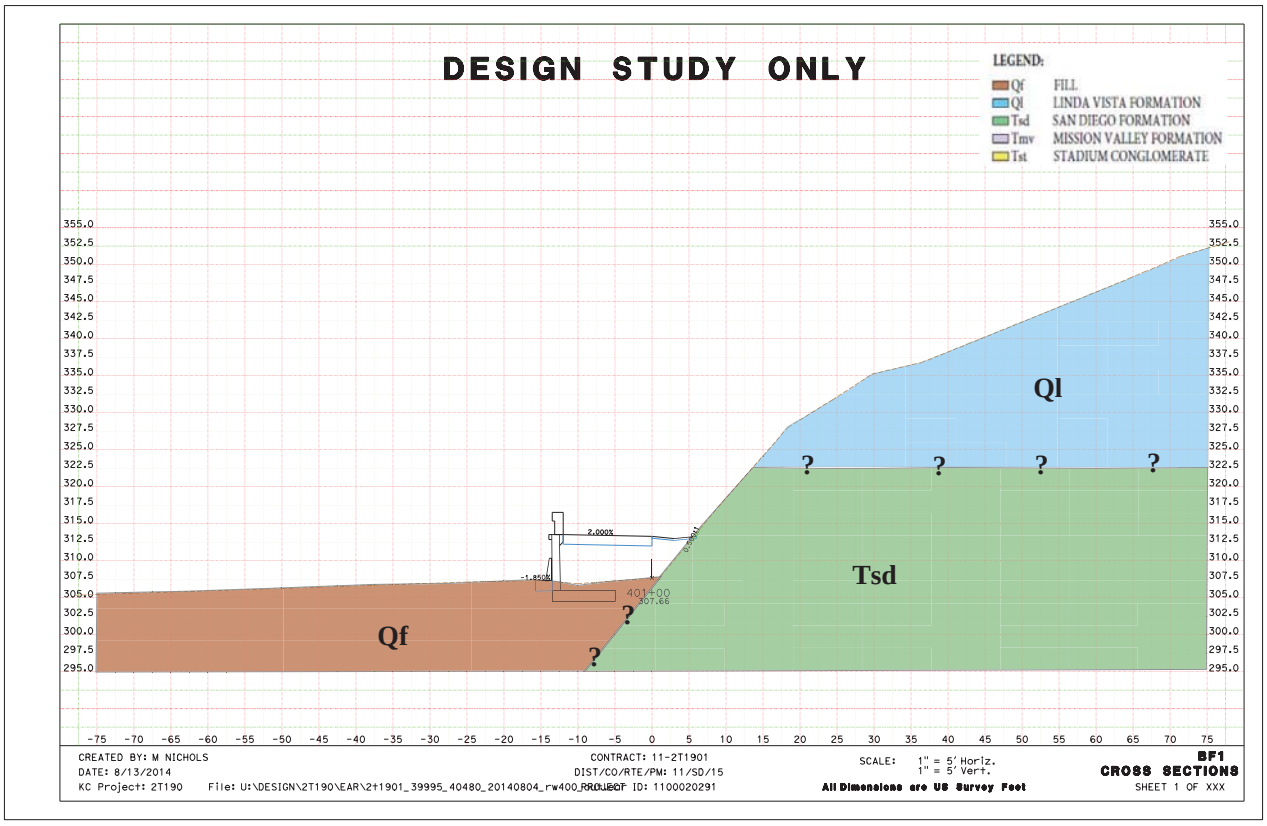

Figure 4.12

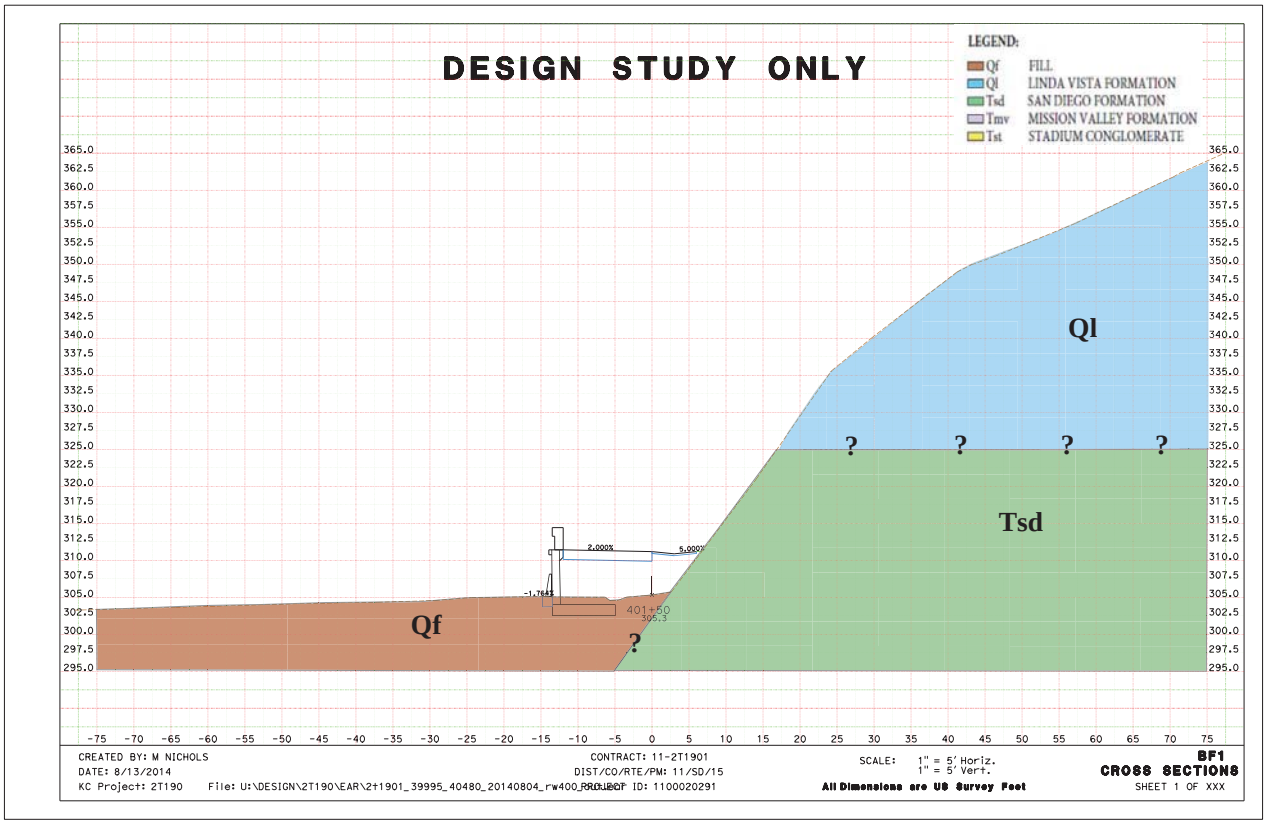

Figure 4.13

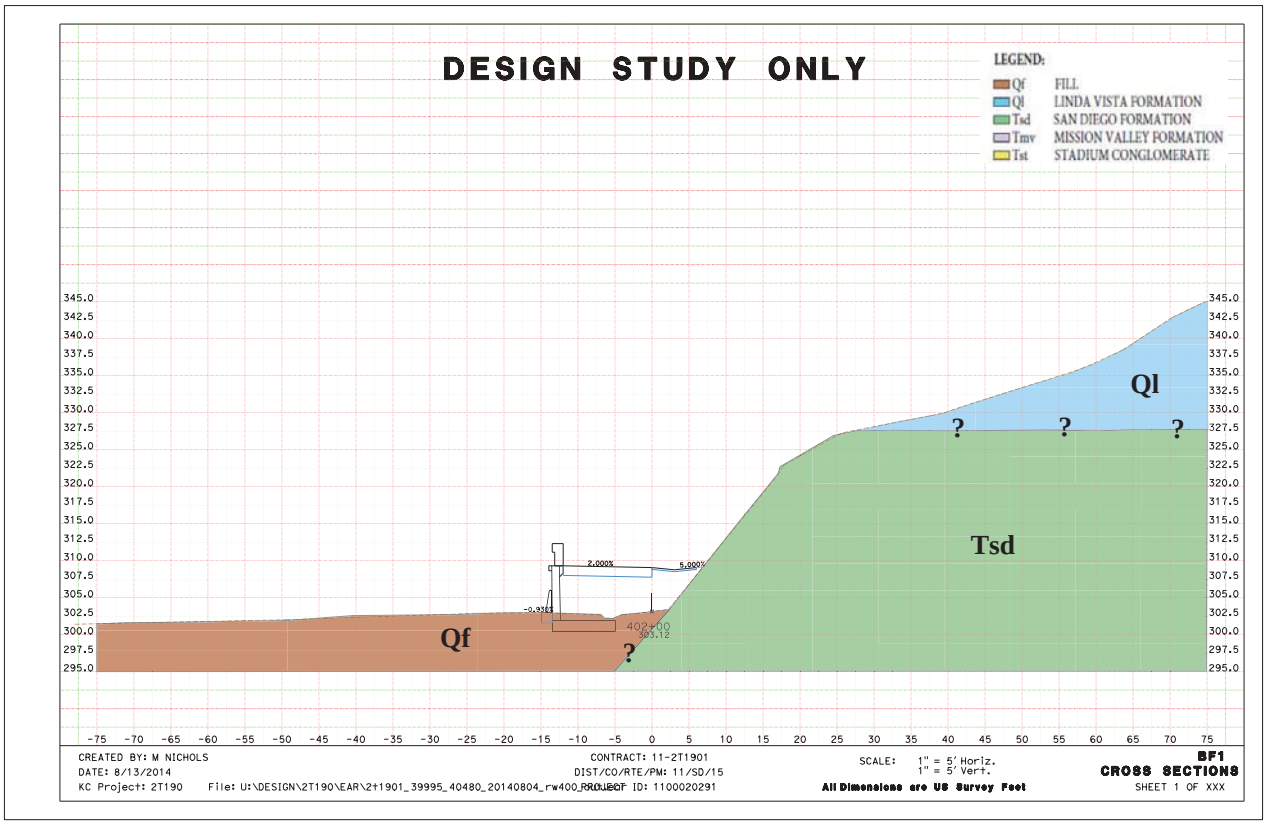

Figure 4.14

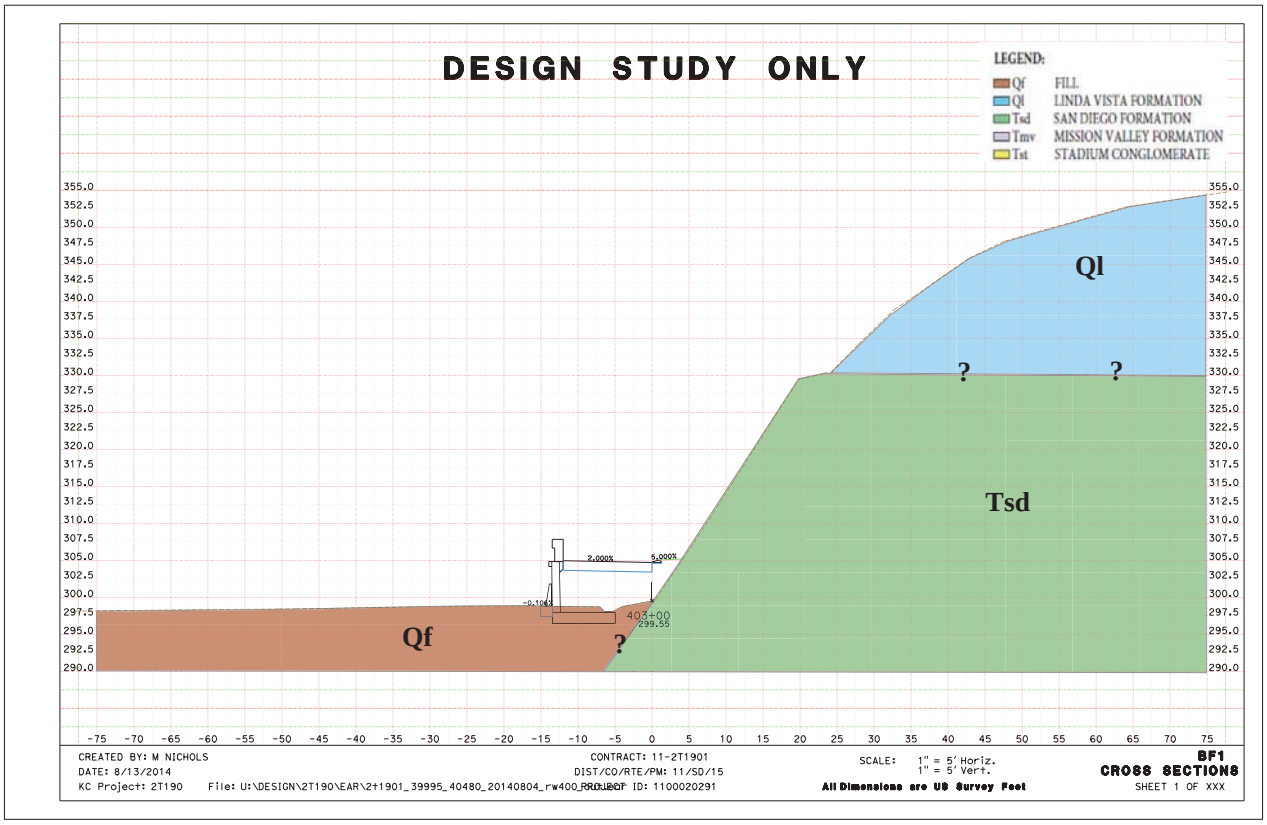

Figure 4.15

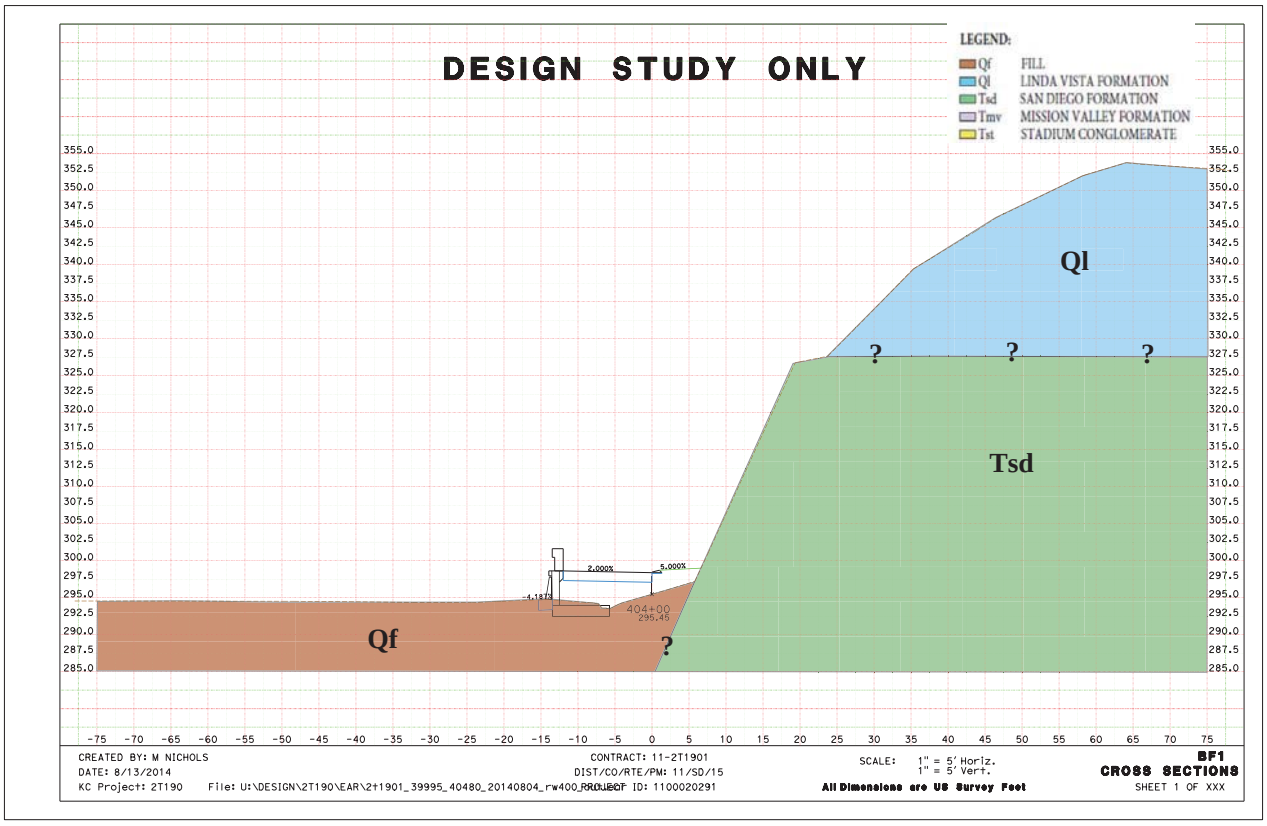

Figure 4.16

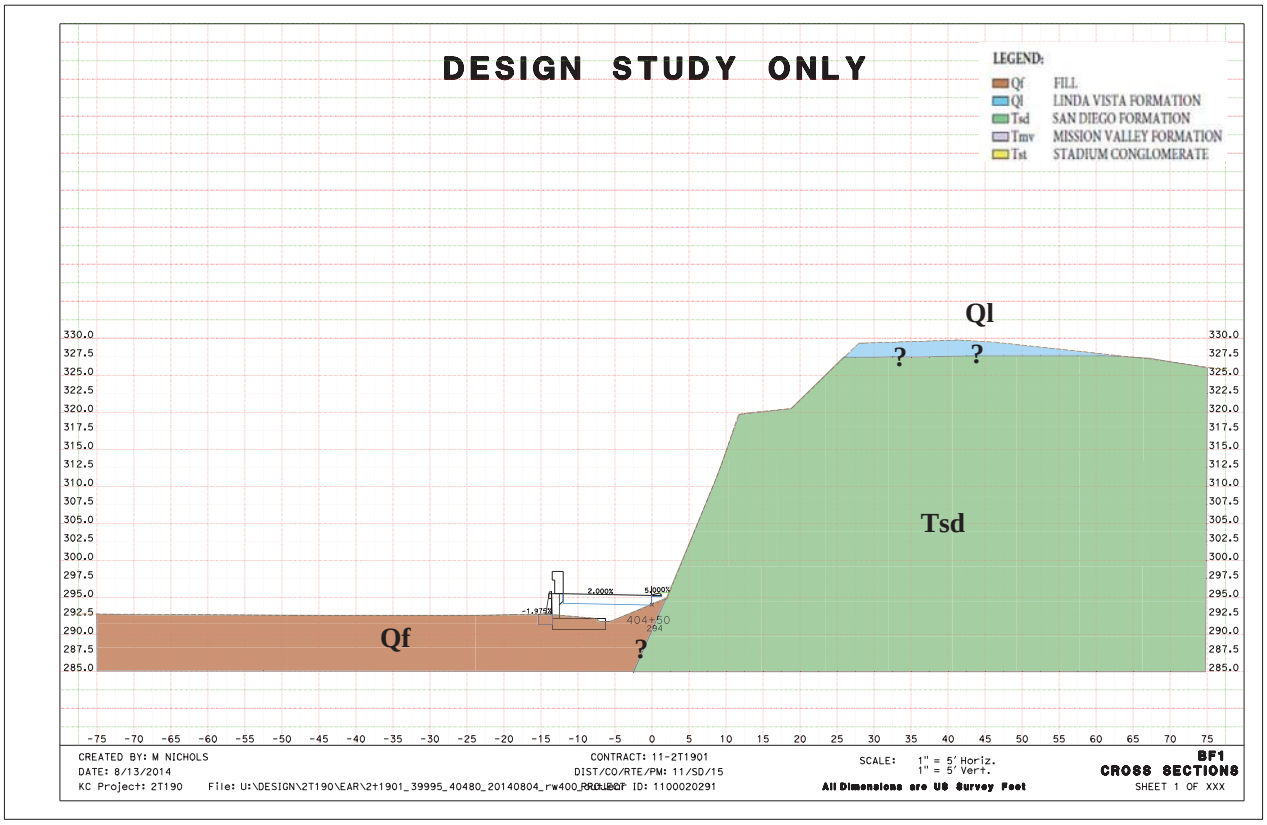

Figure 4.17

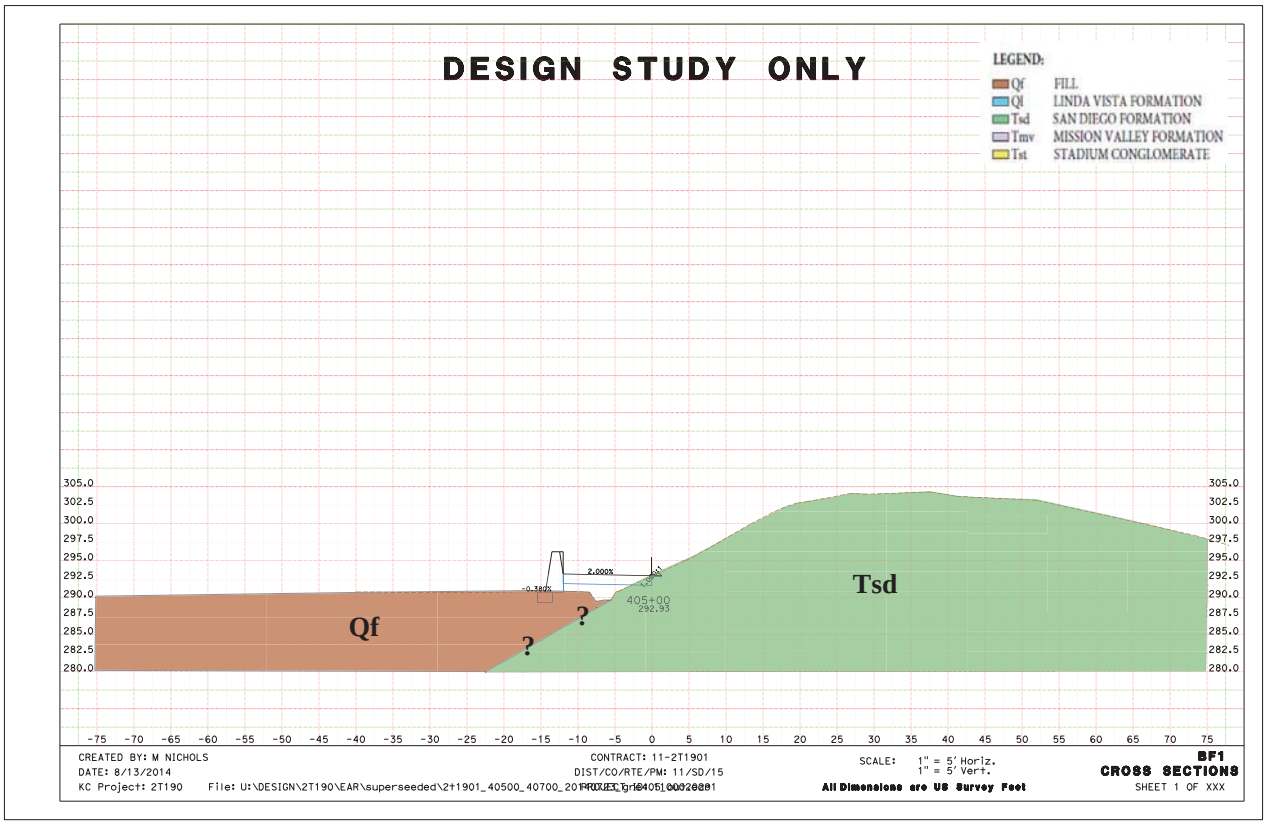

Figure 4.18

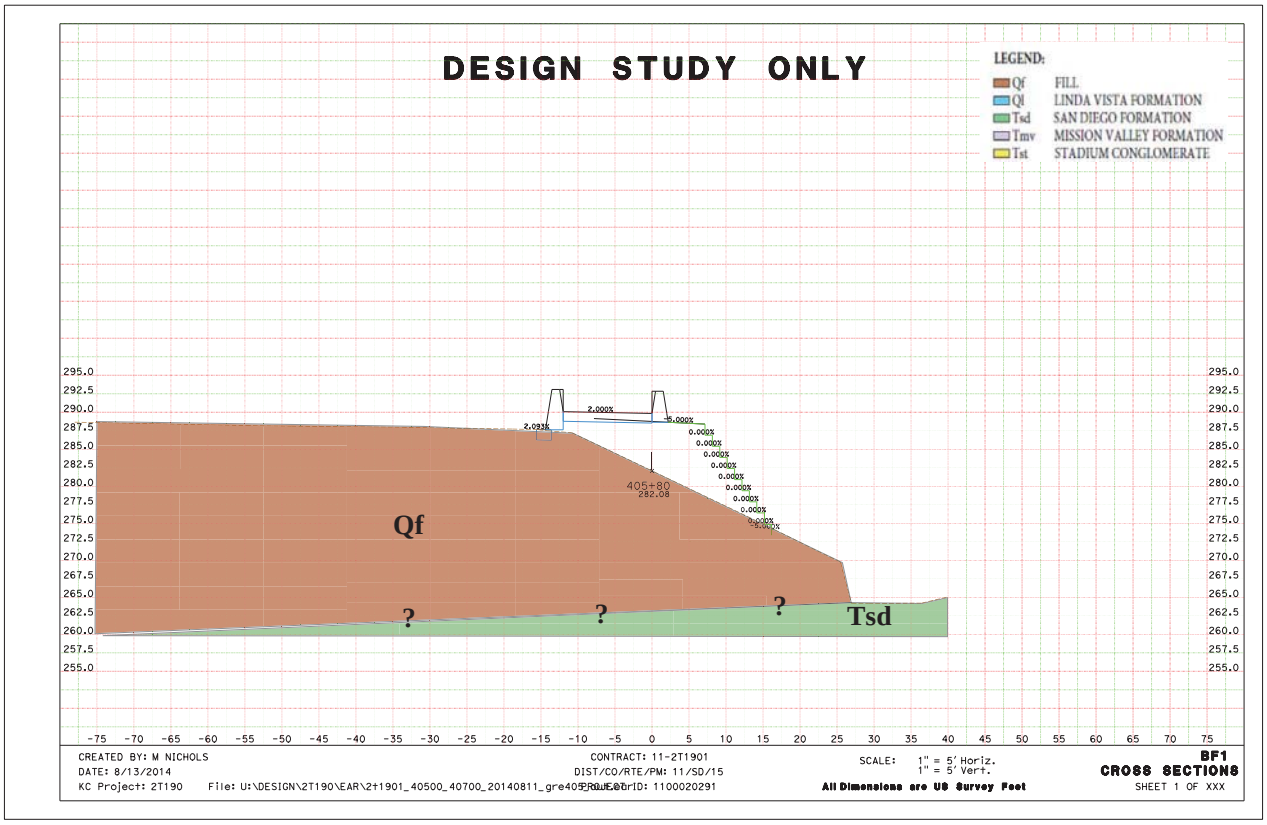

Figure 4.19

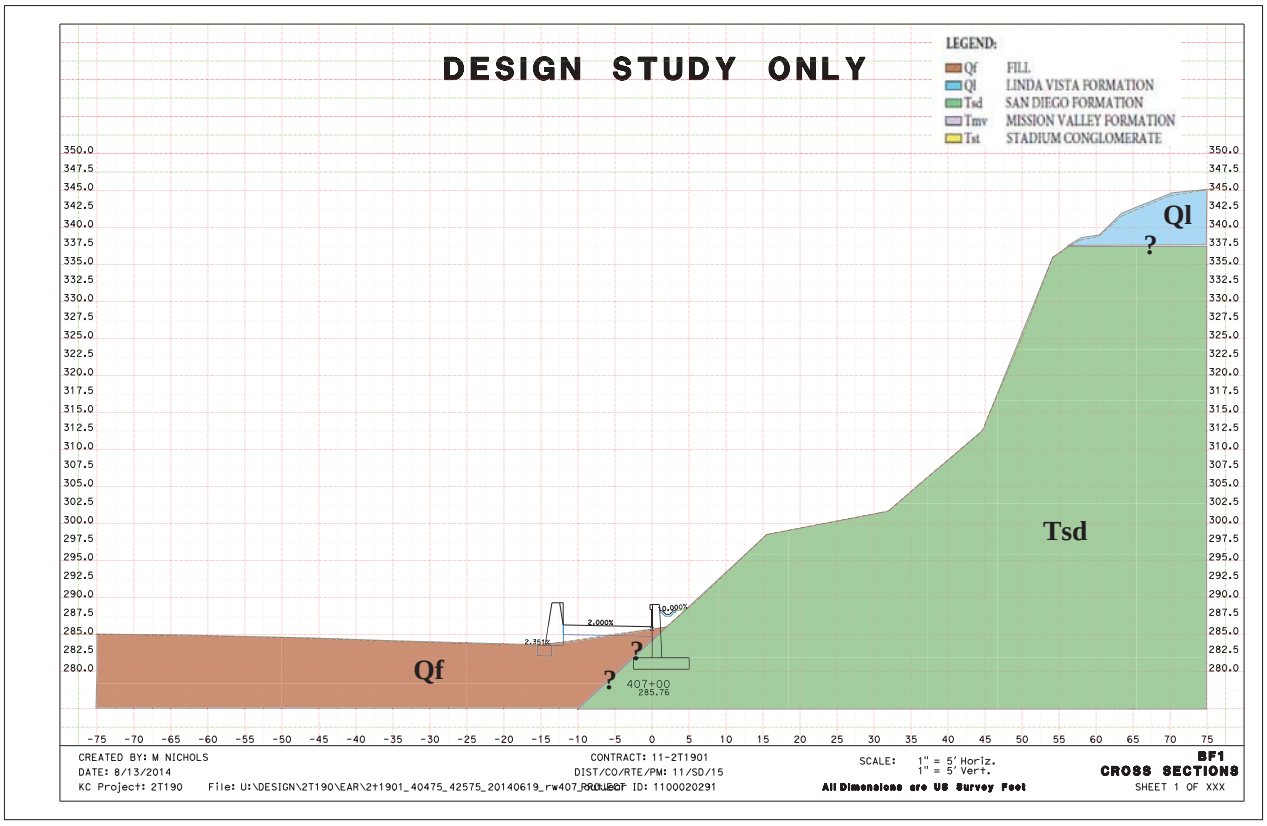

Figure 4.20

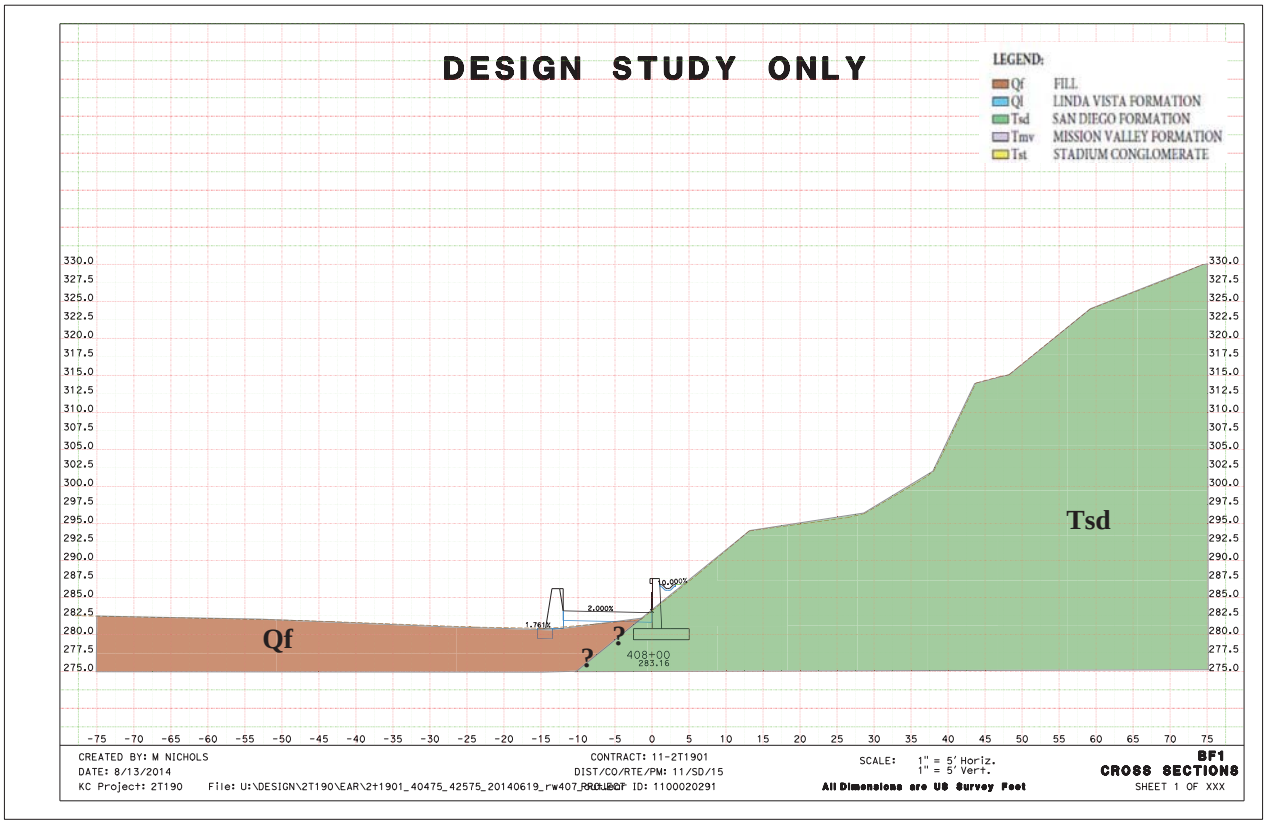

Figure 4.21

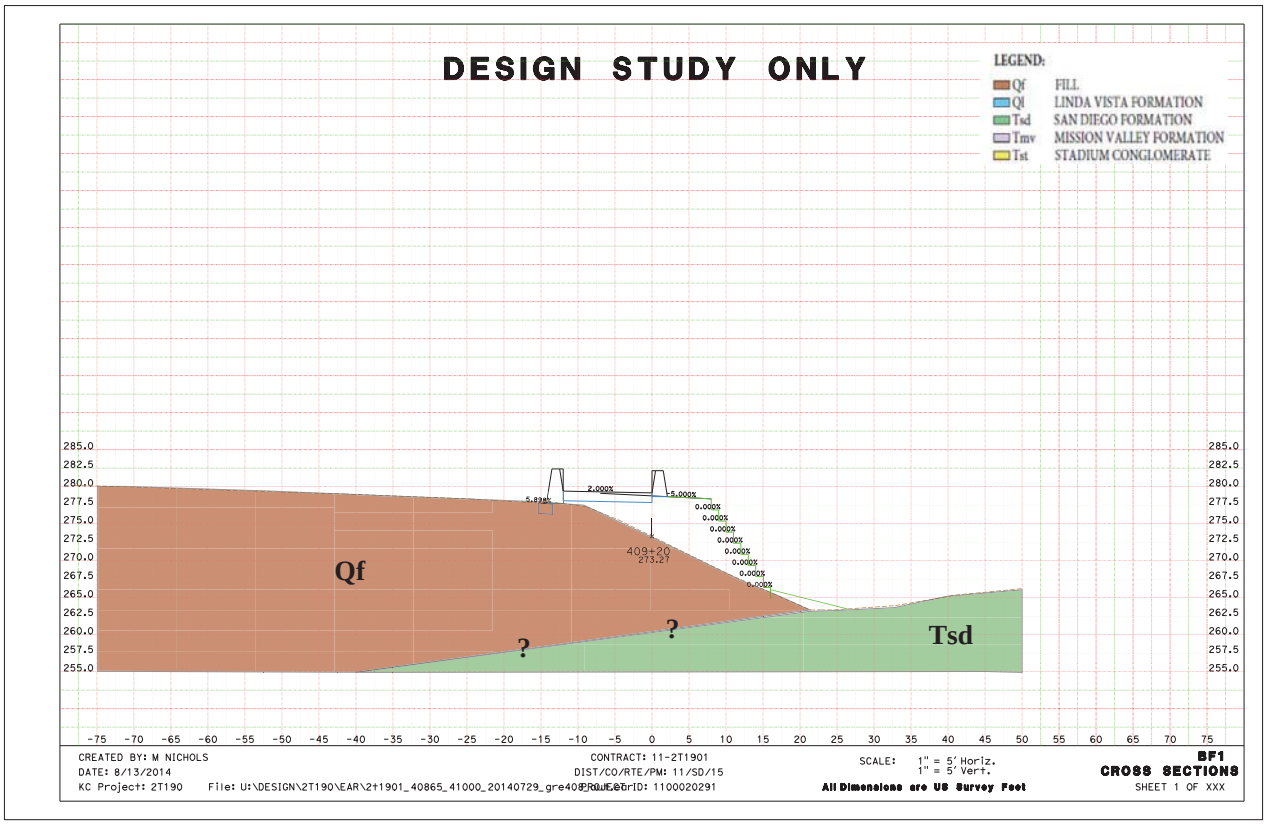

Figure 4.22

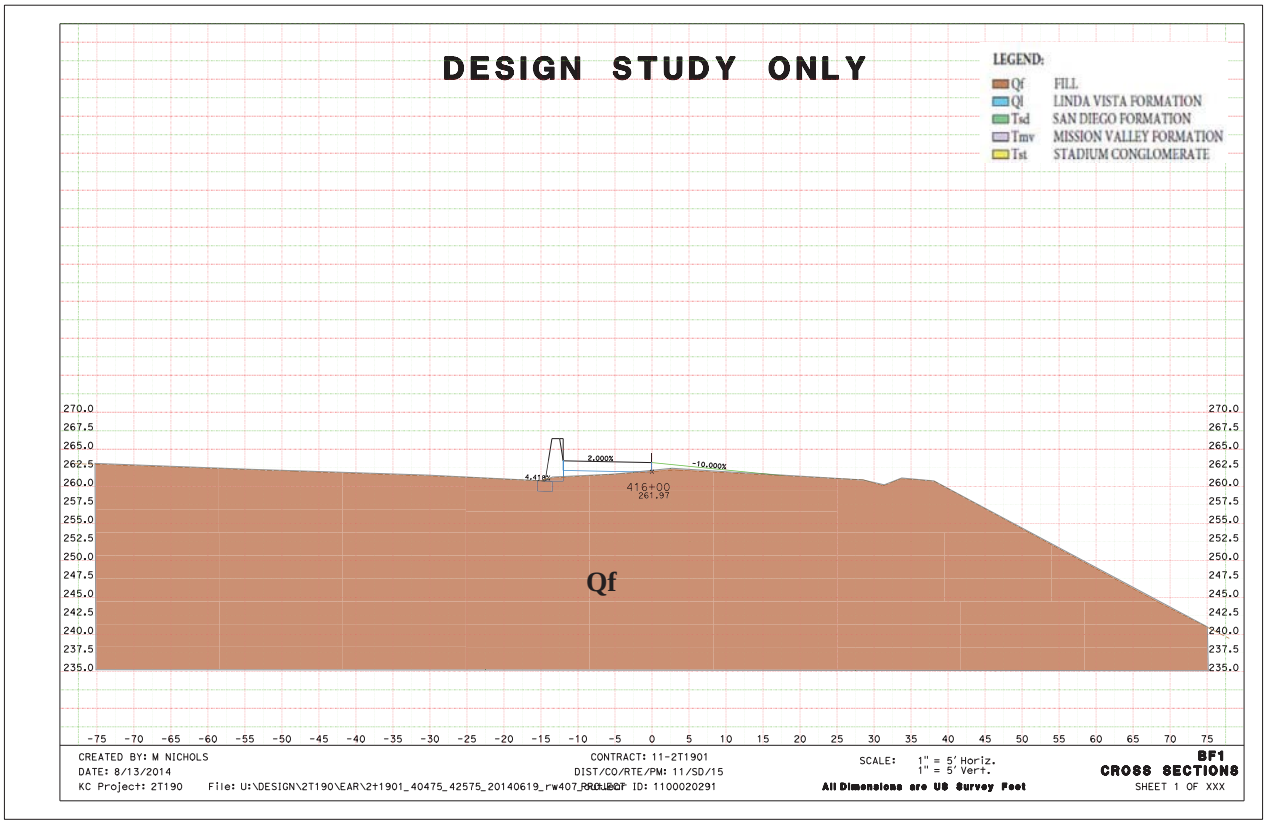

Figure 4.23

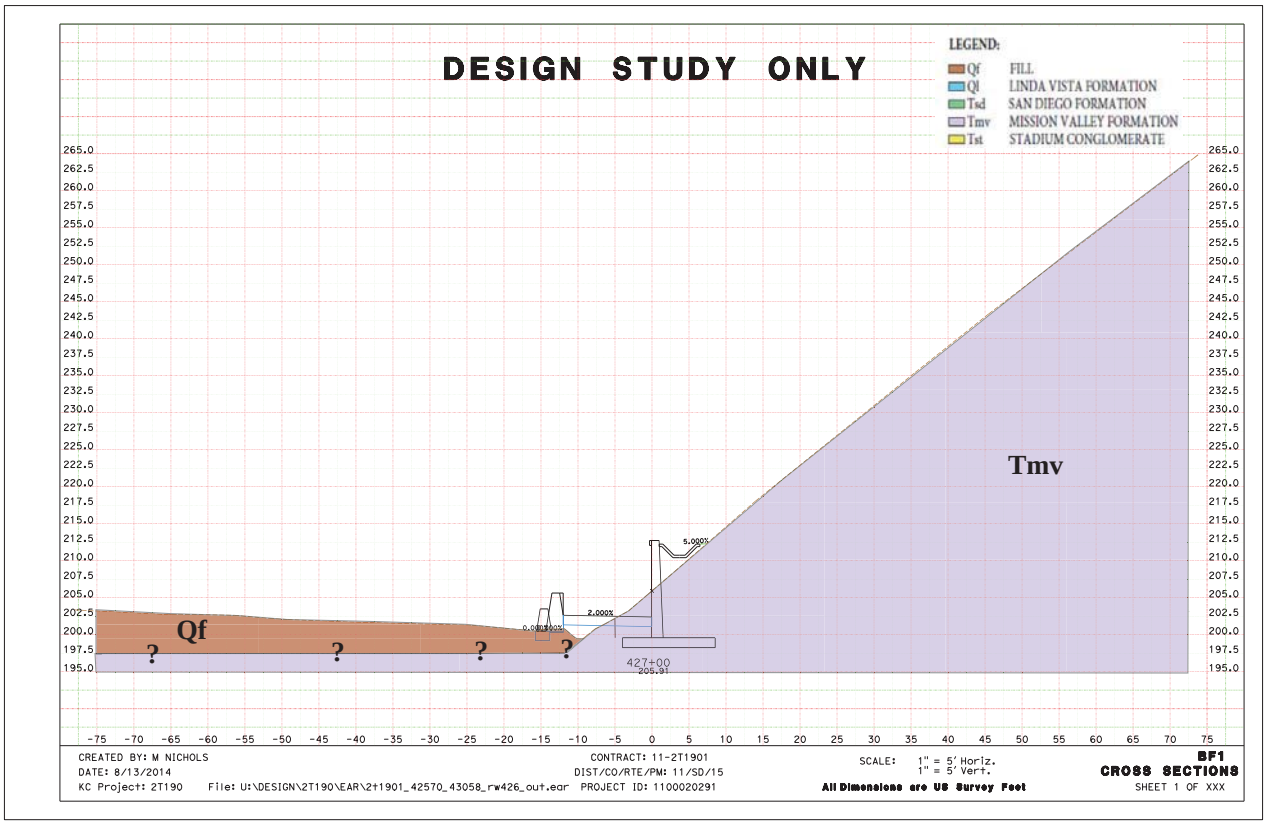

Figure 4.24

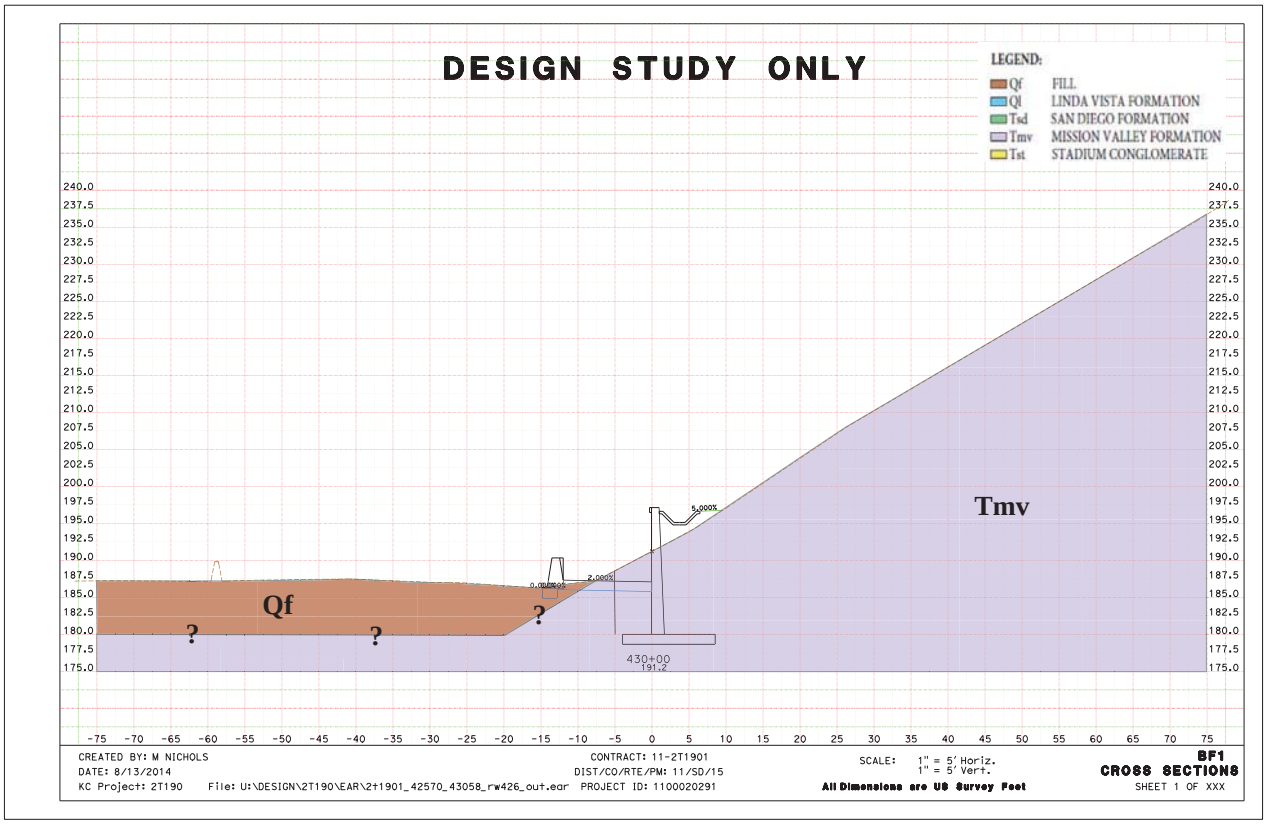

Figure 4.25

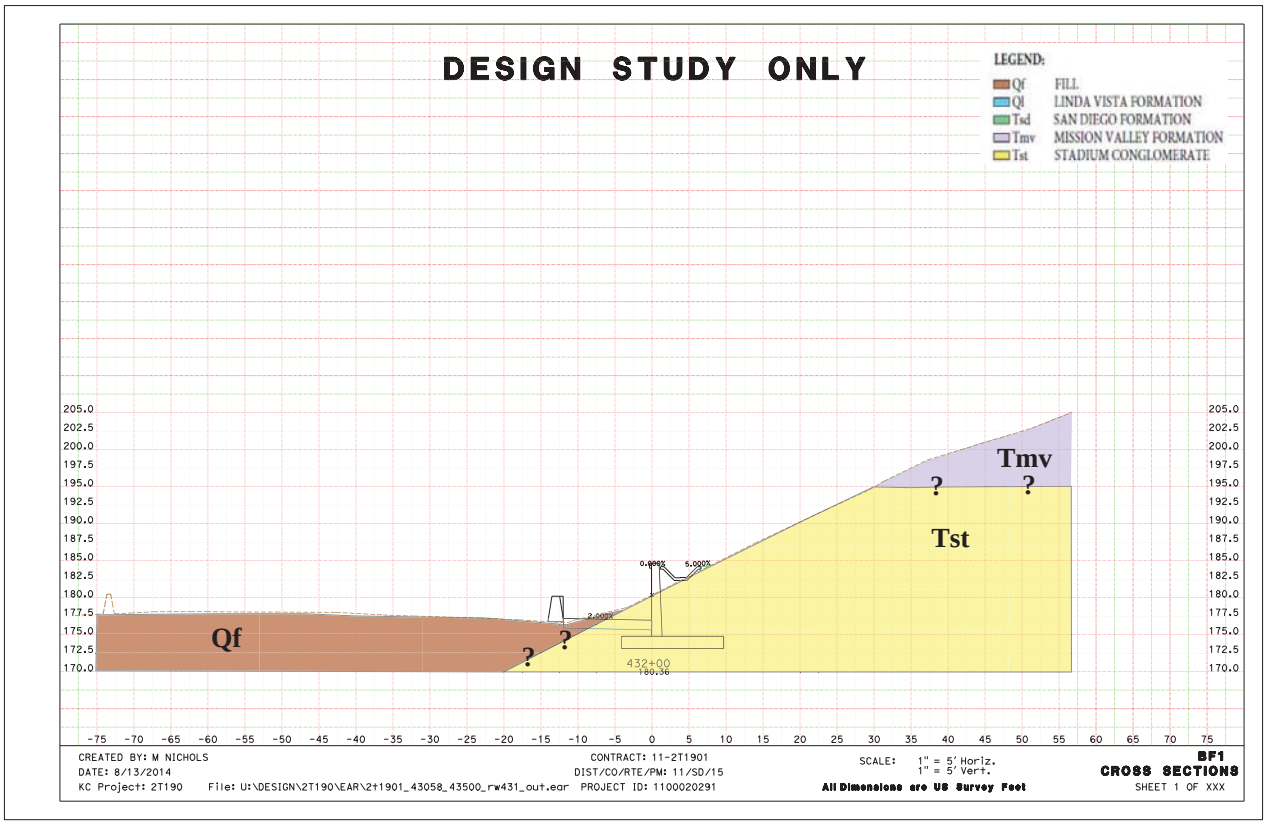

Figure 4.26

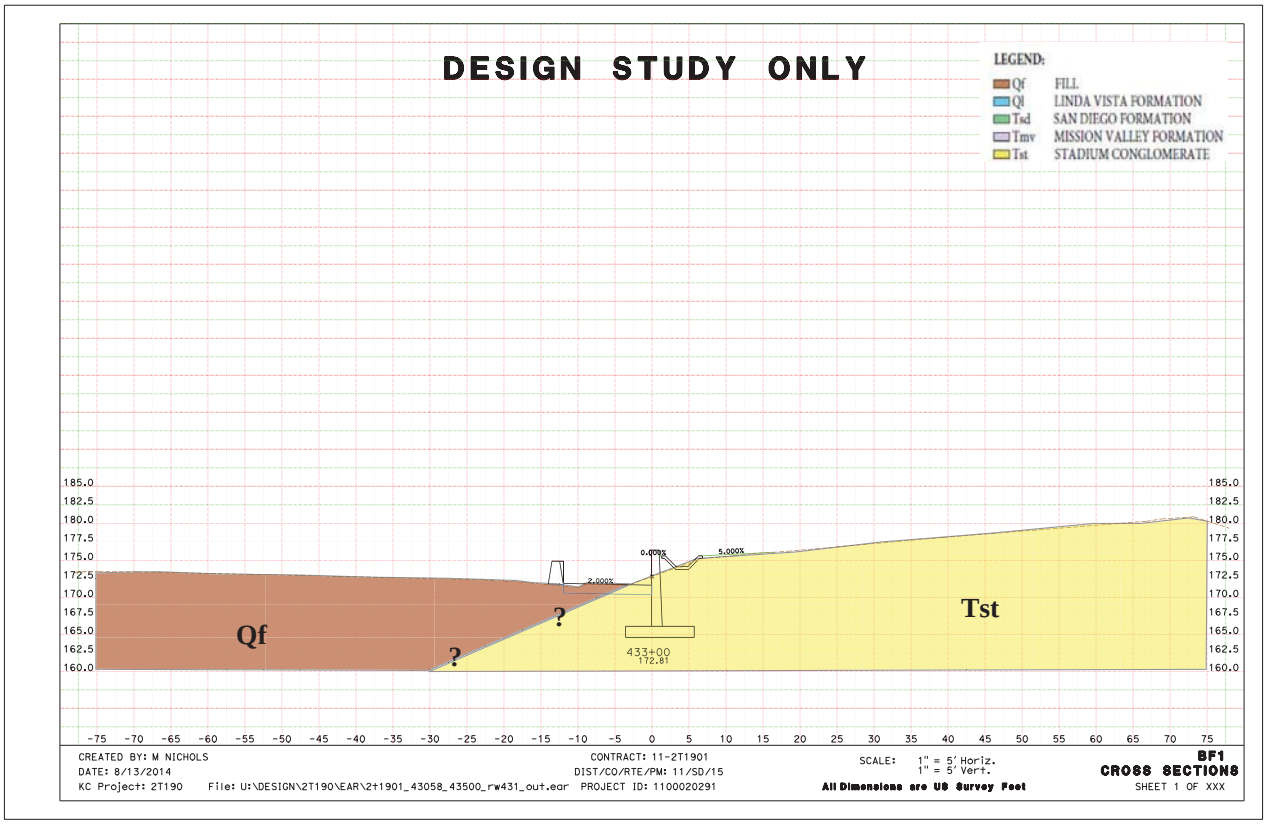

Figure 4.27

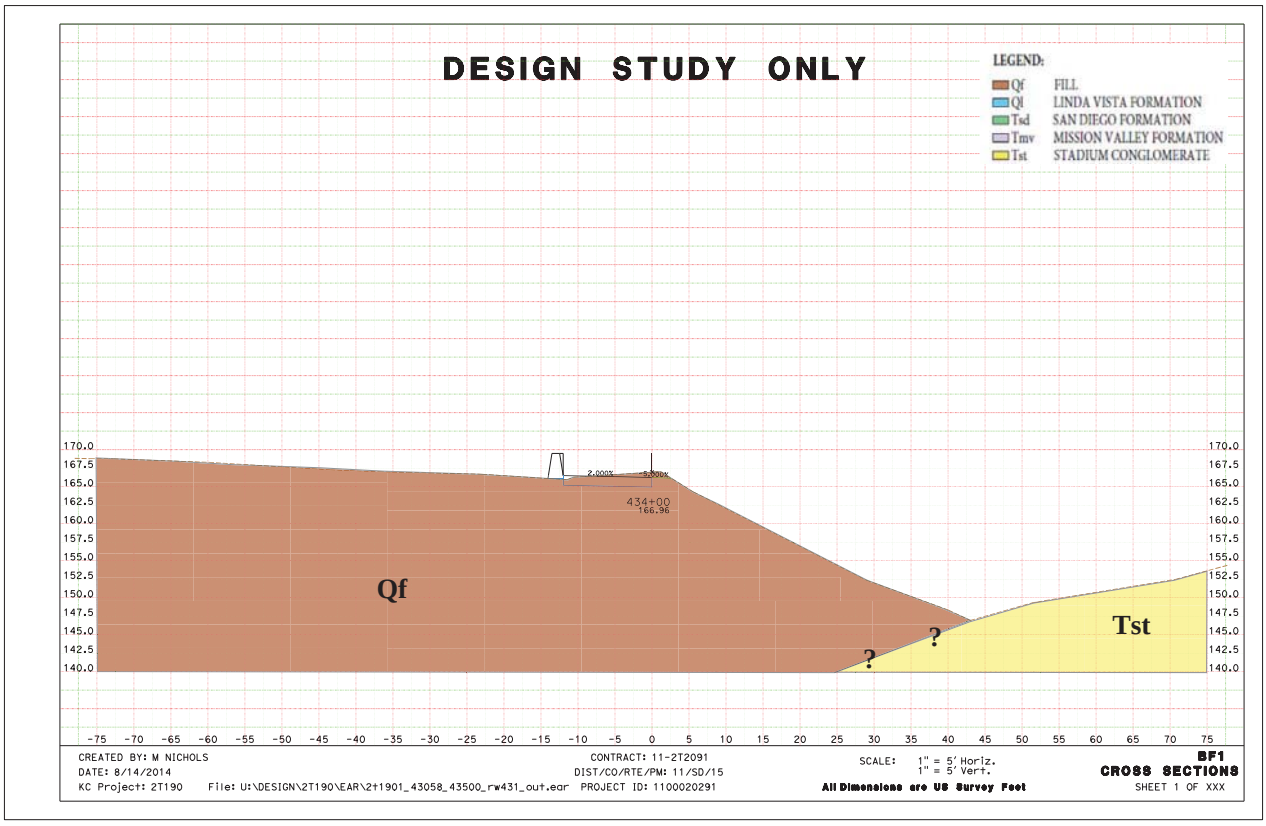

Figure 4.28

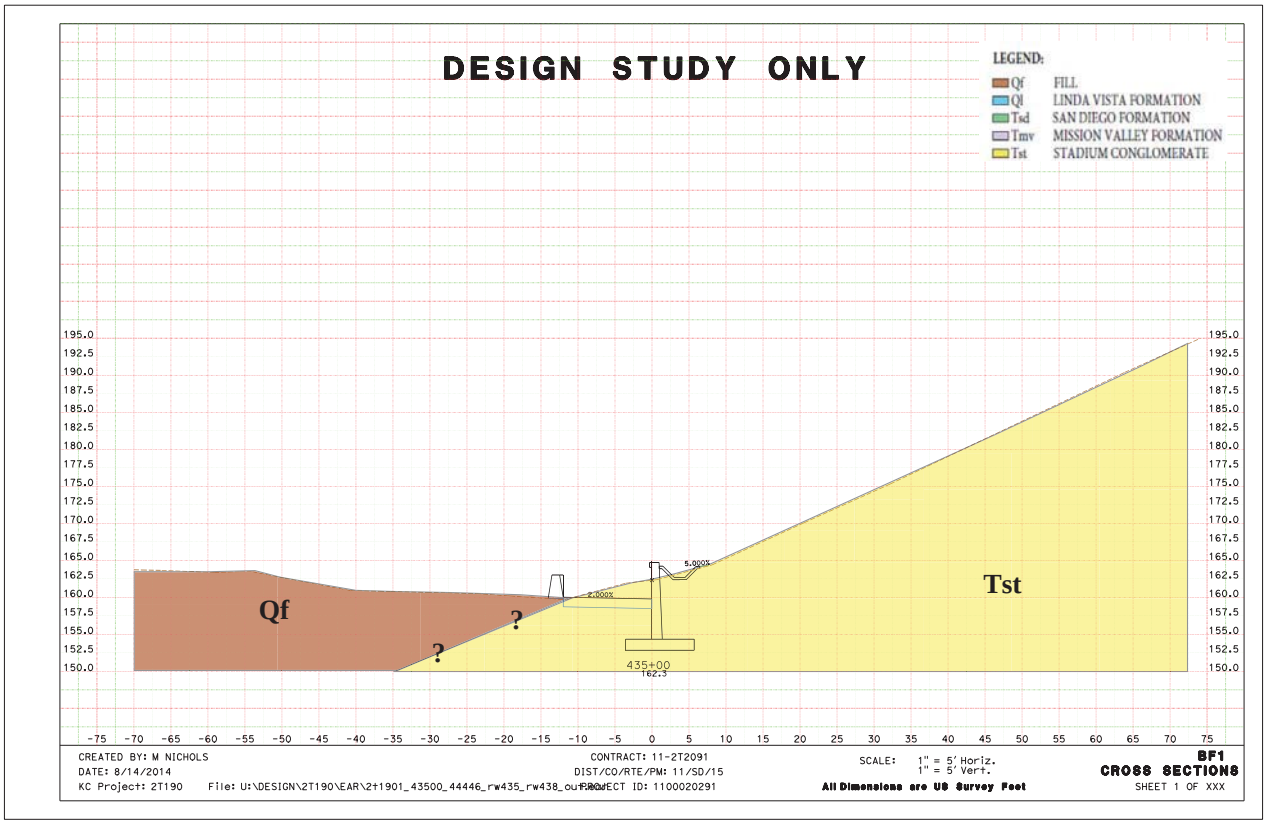

Figure 4.29

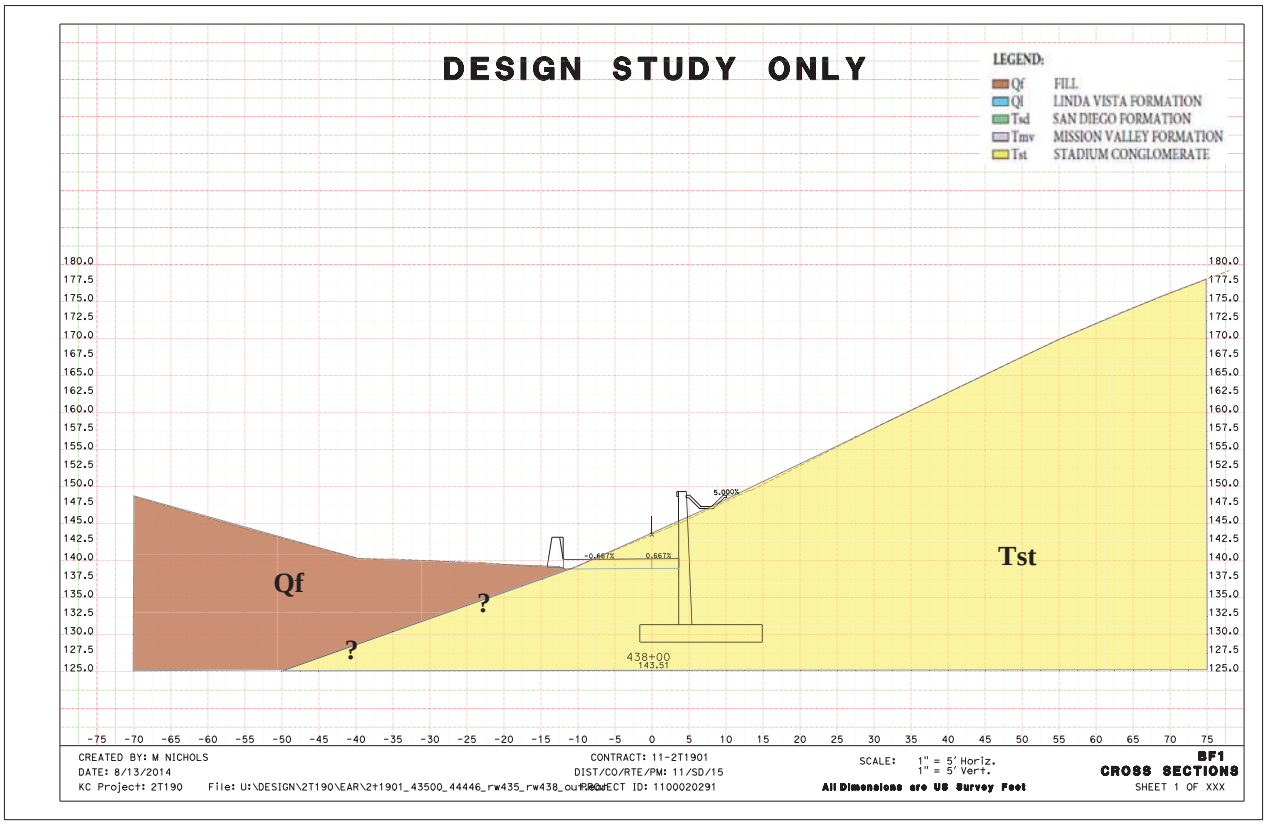

Figure 4.30

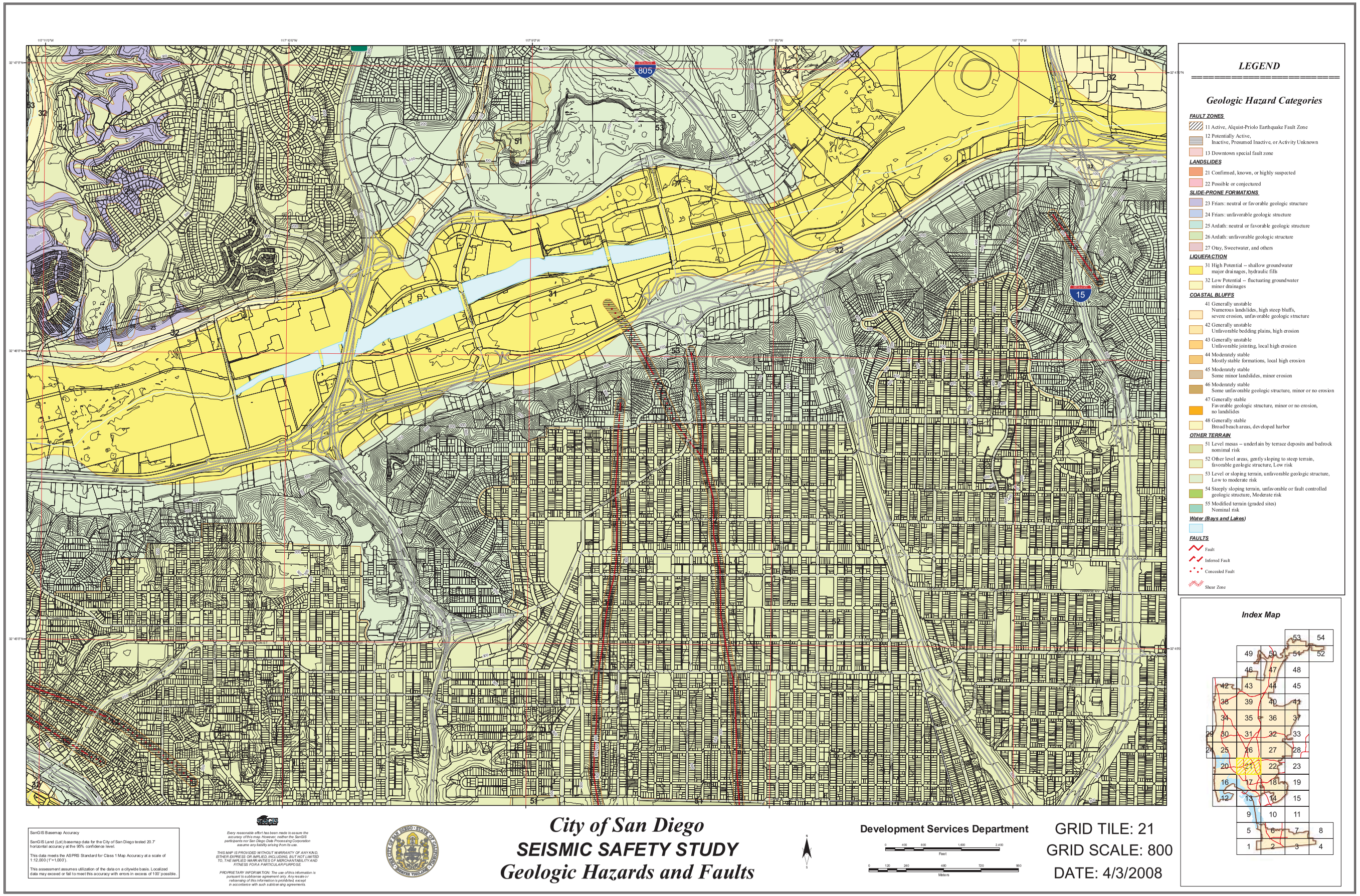

FIGURE 5: CITY OF SAN DIEGO GEOLOGIC HAZARDS AND FAULTS MAP

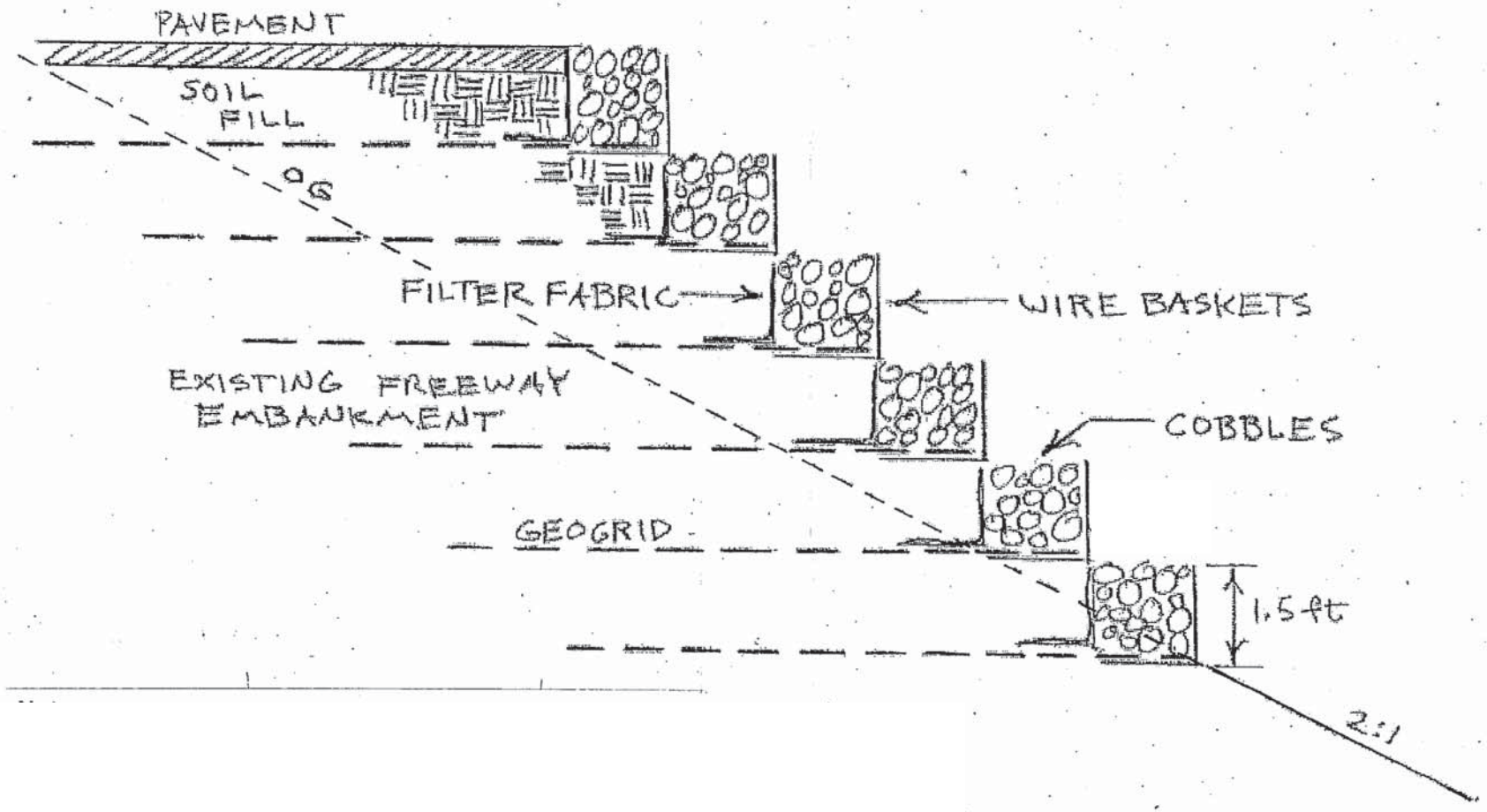

FIGURE 6: GEOSYNTHETIC REINFORCED EMBANKMENT

TABLES

Table 1: Earth Retaining Systems (ERS) and Geosynthetic Reinforced Embankments (GRE)

ERS or GRE	Begin Station BF1-Line	End Station BF1-Line	Approx. Length (ft)	Min Design Height (ft)	Max Design Height (ft)	Notes
West Side of Commuter Bike Facility						
RW-391 Type 1, Case 1	391+00.00	393+00.27	199	6	16	RW-391 will retain embankment fill upon which the bike facility will be constructed. Portions of RW-390 and RW-391 are in a tiered configuration. Portions of SNW-392 and RW-391 are in a tiered configuration. Temporary shoring is anticipated for portions of RW-391.
Existing RW-33/33A	392+99.00	395+93.00	294	---	---	RW-33 is a soil nail wall. RW-33A is a Type 2 retaining wall. A portion of the beginning of RW-33 will be demolished and replaced with the end of RW-391.
RW-396 Type 1, Case 1	395+93.00	399+95.47	402	10	12	RW-396 will retain embankment fill upon which the bike facility will be constructed. Portions of RW-395 and RW-396 are in a tiered configuration. Temporary shoring is anticipated for portions of RW-396.
RW-400 Type 5, Case 1	399+95.48	404+75.33	480	4	8	RW-400 will retain embankment fill upon which the bike facility will be constructed.
East Side of Commuter Bike Facility						
RW-390 Type 1, Case 2	390+05.00	391+95.06	190	4	6	RW-390 will retain a portion of the slope above the bike facility. Portions of RW-390 and RW-391 are in a tiered configuration. Temporary shoring is anticipated for portions of RW-390 adjacent to the existing soundwall.
SNW-392	392+79.00	395+00.00	221	---	---	SNW-392 will retain a portion of the slope above proposed RW-391 and existing RW-33/33A. Wall descriptions and complete information on the site conditions, analyses, advisories, and recommendations relevant to this retaining wall are presented in a separate Foundation Report
RW-395 Type 1, Case 2	395+00.00	396+10.00	110	6	8	RW-395 will retain a portion of the slope above the bike facility. Portions of RW-395 and RW-396 are in a tiered configuration. Temporary shoring is anticipated due to right-of-way limitations.
GRE-405	405+20.00	406+30.00	110	---	---	The slopes above and below GRE-405 are horizontal and variable, respectively. The face of GRE-405 is battered at 2H:3V.
RW-407 Type 1, Case 2	407+00.00	408+64.45	165	6	8	RW-407 will retain a portion of the slope above the bike facility.
GRE-408	408+80.00	410+00.00	120	---	---	The slopes above and below GRE-408 are horizontal and variable, respectively. The face of GRE-408 is battered at 2H:3V.
RW-426 Type 1, Case 2 Type 7B, Case 1	425+70.00	430+58.00	488	10 14	18 14	RW-426 will retain a portion of the slope above the bike facility. The Type 1 and Type 7B portions will be approximately 467ft and 21ft in length, respectively. Temporary shoring is anticipated for the majority of RW-426. The Type 7B portion is proposed to accommodate the existing Overhead Sign Pedestal. A Type 7B wall requires tie-down anchors for design heights greater than or equal to 16.0ft. An unbonded length of 15.0ft is recommended for the tiedown anchors to ensure that the anchors will not react directly against the wall footing when tensioned. Testing approximately thirty-percent (30%) of the tiedown anchors is recommended due to the relatively short wall length. This is equivalent to testing one (1) of the tiedown anchors. The bonded length of the tiedown anchors is to be determined by the Contractor. Preliminary calculations estimate a bonded length of 5.0-10.0ft, assuming a tiedown hole-diameter of 6.0in. The use of a larger diameter tiedown hole may yield a reduced bonded length. Drainage and utility plans depict a 24.0in Alternative Pipe Culvert and sanitary sewer lines and electrical lines, respectively, underground in the vicinity of the Type 7B portion of the retaining wall.
Existing RW-34	430+58.00	431+52.00	94	---	---	RW-34 is a soil nail wall.
RW-431 Type 1, Case 2	431+52.00	433+30.00	178	12	16	RW-431 will retain the slope above the bike facility.
RW-435 Type 1, Case 2	435+00.00	436+82.00	182	10	14	RW-435 will retain the slope above the bike facility.
Existing RW-35	436+82.00	437+81.00	99	---	---	RW-35 is a soil nail wall.
RW-438 Type1, Case 2	437+81.00	443+45.00	564	10	20	RW-438 will retain the slope above the bike facility.

Table 2: Regional Active Faults

Fault Name (Initials)	FID	M_{MAX}	PGA (g)	Fault Type	Fault Dip	Dip Direction	Z_{BOT}	Z_{TOR}	R_{RUP}	R_{JB}	R_X	F_{NM}	F_{RV}
Newport Inglewood-Rose Canyon fz (Silver Strand section)	423	7.5	0.38	RLSS	90º	Vertical	8.1mi (13.0km)	0.0	4.1mi (6.6km)	4.1mi (6.6km)	2.9mi (4.7km)	0	0
Newport Inglewood-Rose Canyon fz (San Diego section)	224	7.5	0.38	RLSS	90º	Vertical	8.1mi (13.0km)	0.0	4.0mi (6.5km)	4.0mi (6.5km)	4.0mi (6.5km)	0	0

Notes: FID = Fault Identification Number, used to identify a fault trace on the Caltrans Deterministic PGA Map.
M_{MAX} = Maximum Moment Magnitude: Defined as the largest earthquake a fault is capable of generating.
PGA = Peak Horizontal Ground Acceleration (g)
RLSS = Right Lateral Strike Slip.
Fault Dip = The angle between the fault plane and the horizontal plane.
Dip Direction = The direction the fault dips.
Z_{BOT} = The depth to the bottom of the rupture plane.
Z_{TOR} = The depth to the top of the rupture plane.
R_{RUP} = The closest distance to the fault rupture plane.
R_{JB} = The shortest horizontal distance to the surface projection of the rupture area (a.k.a. Joyner-Boone Distance).
R_X = The horizontal distance to the fault trace or surface projection of the top of the rupture plane.
F_{NM} = The faults identified as a normal fault.
F_{RV} = The faults identified as a reverse fault.

Table 3: Soil Strength Parameters

Geologic Unit	φ Friction angle (°)	C Cohesion (psf)	γ Unit Weight (pcf)
Fill (Qf)	34	100	120
Structure Backfill (Qsb)	32	0	120
Linda Vista Formation (Ql)	34	600	130
San Diego Formation (Tsd)	33	350	120
Mission Valley Formation (Tmv)	33	350	120
Stadium Conglomerate (Tst)	38	350	130

Table 4: Geosynthetic Reinforced Embankment (GRE) Design Parameters

GRE	Geogrid Layer (Layer 1 at bottom)	Geogrid Embedment (measured from the back of wire basket)	Geogrid Vertical Spacing	Long Term Design Strength
405	1-7	12	1.5ft	1,000plf
	8-12	18		
408	1-9	12	1.5ft	1,000plf

Table 5: Shallow Foundation Design Data for Retaining Walls on Fill

RW No. / Begin Station "BF1"	Type (Case) / End Station "BF1"	Design Height H (ft)	Bottom of Footing Elevation (ft)	Minimum Footing Embedment Depth (ft)	Bottom of Subexcavation Elevation (ft)	Settlement Calculated at Net Bearing Stress (in)	Total Permissible Settlement (in)	Loading Type	Effective Footing Width B' (ft)	Net Bearing Stress q'_o (ksf)	Permissible Net Contact Stress q_{pn} (ksf)	Gross Uniform Bearing Stress q_o (ksf)	Factored Gross Nominal Bearing Resistance q_r (ksf)
RW395	1 (2)	8	333.15	4	N/A	0.3	1.0	Service I	9.3	1.0	7.2	N/A	N/A
								Strength I	5.1	N/A	N/A	2.3	11.6
395+46	395+62							Extreme I	3.6	N/A	N/A	5.0	22.7
								Extreme II	N/A	N/A	N/A	N/A	N/A
RW396	1 (1)	12	317.76	3.5	N/A	0.4	1.0	Service I	6.3	2.0	7.5	N/A	N/A
								Strength I	3.2	N/A	N/A	4.0	8.9
397+21	397+53							Extreme I	2.8	N/A	N/A	4.8	18.9
								Extreme II	N/A	N/A	N/A	N/A	N/A
RW400	5 (1)	8	308.68	3.5	N/A	0.4	1.0	Service I	6.4	2.1	7.7	N/A	N/A
								Strength I	5.3	N/A	N/A	3.0	10.8
399+95.47	396+19.47							Extreme I	N/A	N/A	N/A	N/A	N/A
								Extreme II	3.8	N/A	N/A	3.2	21.1

APPENDICES

APPENDIX A

PROJECT PLANS

Dist	COUNTY	ROUTE	POST MILES TOTAL PROJECT	SHEET No.	TOTAL SHEETS
11	SD	15	M5.6/R6.0		

REGISTERED CIVIL ENGINEER DATE

PLANS APPROVAL DATE

THE STATE OF CALIFORNIA OR ITS OFFICERS OR AGENTS SHALL NOT BE RESPONSIBLE FOR THE ACCURACY OR COMPLETENESS OF SCANNED COPIES OF THIS PLAN SHEET.

REGISTERED PROFESSIONAL ENGINEER WILLIAM MICHAEL NICHOLS No. C74525 Exp. 12-31-15 CIVIL STATE OF CALIFORNIA

NOTES:

1. FOR ACCURATE RIGHT OF WAY AND ACCESS DATA, CONTACT RIGHT OF WAY ENGINEERING AT THE DISTRICT OFFICE.
2. SEE DRAINAGE PLANS FOR "REMOVE CONCRETE DITCH" LOCATIONS

LEGEND:

[X] TYPICAL STRUCTURAL SECTION (SEE TYPICAL CROSS SECTIONS)

(X) GUARDRAIL

ABBREVIATIONS:

S/L	SAWCUT LINE
SCD	SEE CONSTRUCTION DETAILS
GRE	GEOSYNTHETIC REINFORCED EMBANKMENT
SNW	SOIL NAIL WALL

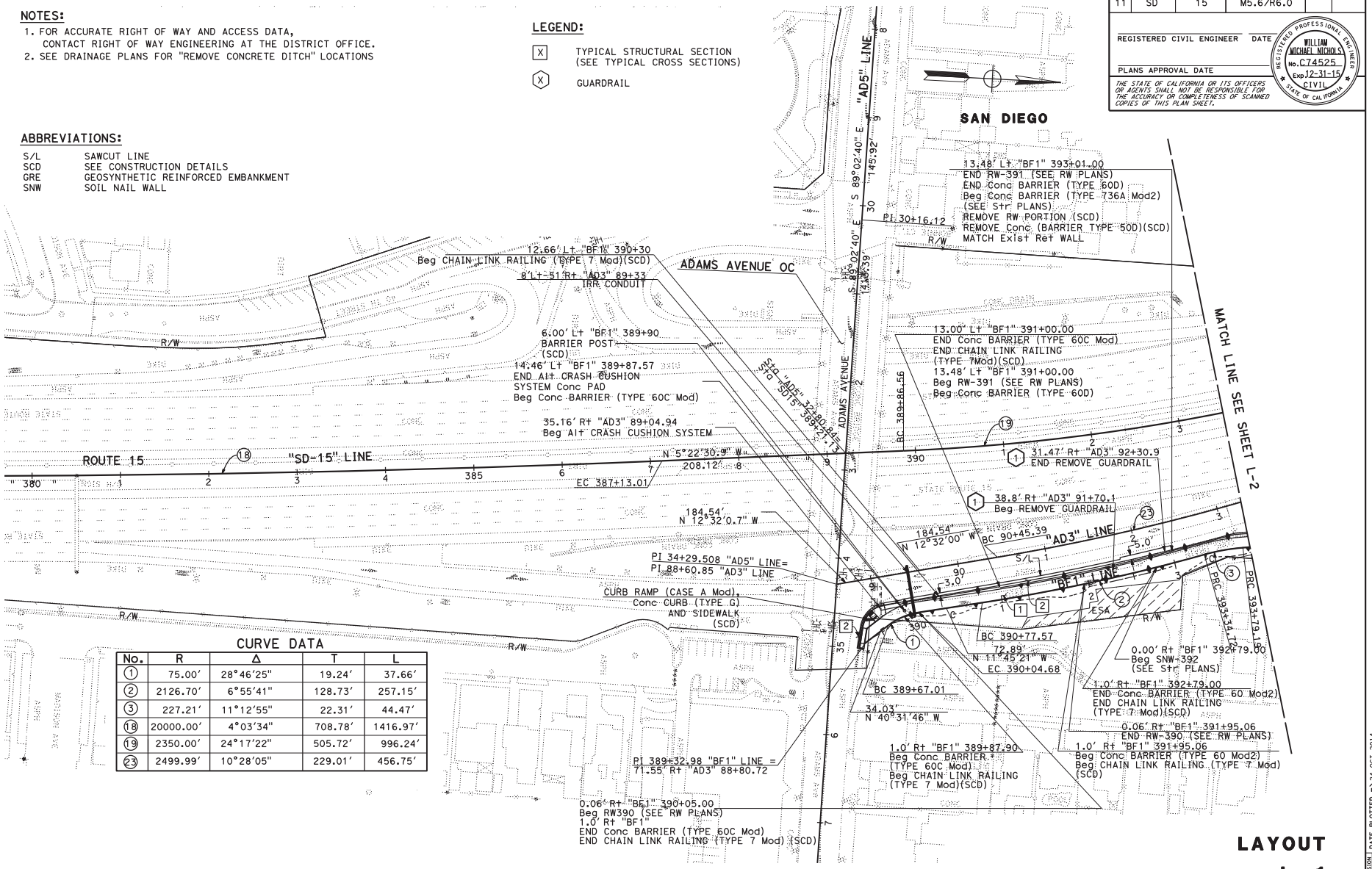

CURVE DATA

No.	R	Δ	T	L
1	75.00'	28°46'25"	19.24'	37.66'
2	2126.70'	6°55'41"	128.73'	257.15'
3	227.21'	11°12'55"	22.31'	44.47'
18	20000.00'	4°03'34"	708.78'	1416.97'
19	2350.00'	24°17'22"	505.72'	996.24'
23	2499.99'	10°28'05"	229.01'	456.75'

LAYOUT

SCALE: 1" = 50' **L- 1**

STATE OF CALIFORNIA - DEPARTMENT OF TRANSPORTATION
Caltrans DESIGN
FUNCTIONAL SUPERVISOR HARWELL ONTOY
CALCULATED-DESIGNED BY EVELYN FIGUEROA WILLIAM MICHAEL NICHOLS
CHECKED BY
REVISED BY DATE REVISED
LAST REVISION 10-06-14 DATE PLOTTED => 24-OCT-2014 TIME PLOTTED => 14:38

BORDER LAST REVISED 7/2/2010 | USERNAME => s112825 DGN FILE => 11000202291ea001.dgn | RELATIVE BORDER SCALE IS IN INCHES 0 1 2 3 | UNIT 2762 | PROJECT NUMBER & PHASE 11000202911

Dist	COUNTY	ROUTE	POST MILES TOTAL PROJECT	SHEET No.	TOTAL SHEETS
11	SD	15	M5.6/R6.0		

REGISTERED CIVIL ENGINEER DATE

PLANS APPROVAL DATE

REGISTERED PROFESSIONAL ENGINEER WILLIAM MICHAEL NICHOLS No. C74525 Exp. 12-31-15 CIVIL STATE OF CALIFORNIA

THE STATE OF CALIFORNIA OR ITS OFFICERS OR AGENTS SHALL NOT BE RESPONSIBLE FOR THE ACCURACY OR COMPLETENESS OF SCANNED COPIES OF THIS PLAN SHEET.

NOTE:
FOR ACCURATE RIGHT OF WAY DATA, CONTACT RIGHT OF WAY ENGINEERING AT THE DISTRICT OFFICE.

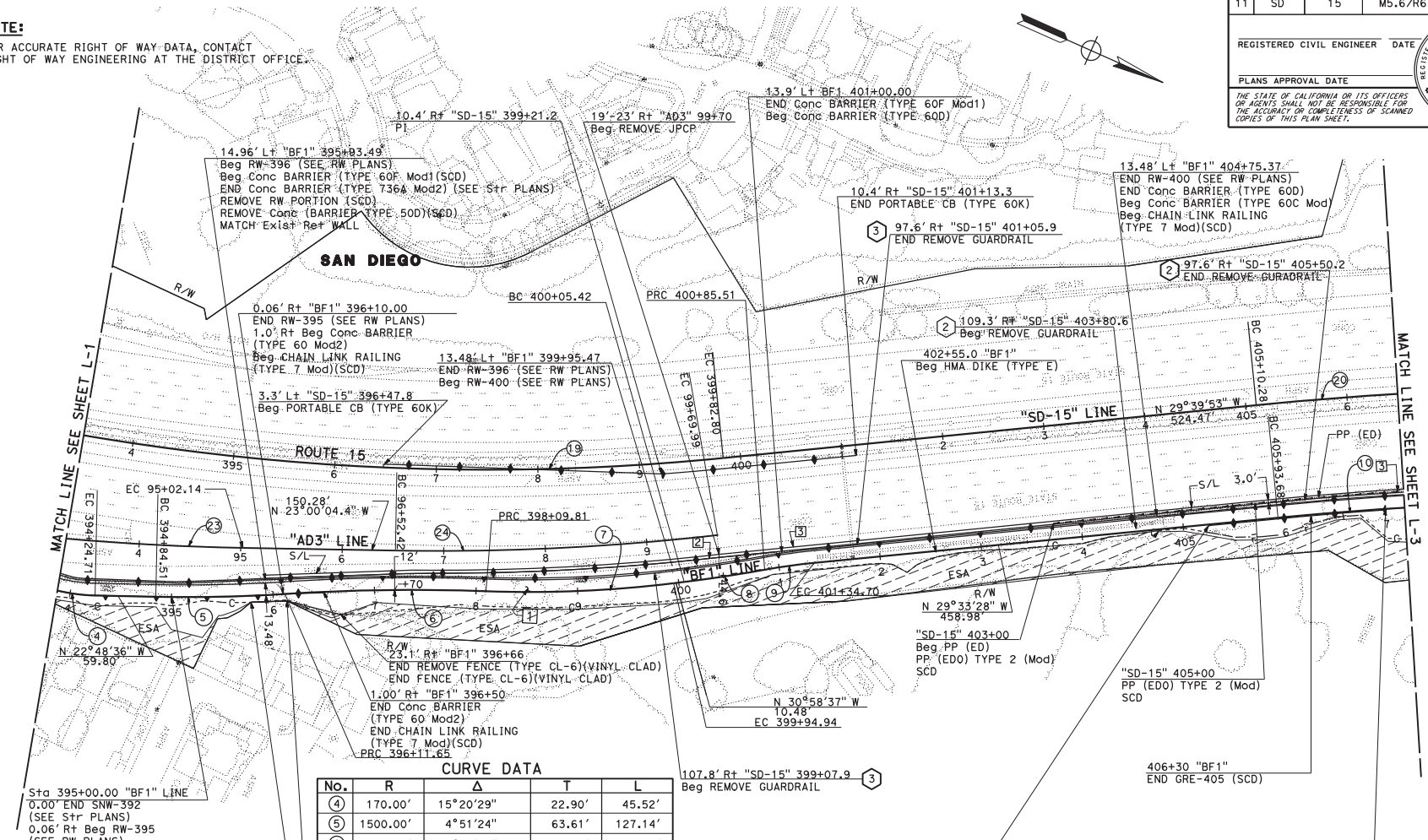

CURVE DATA

No.	R	Δ	T	L
4	170.00'	15°20'29"	22.90'	45.52'
5	1500.00'	4°51'24"	63.61'	127.14'
6	1970.00'	5°45'48"	99.16'	198.16'
7	1169.00'	9°04'25"	92.76'	185.13'
8	1400.00'	3°16'40"	40.06'	80.09'
9	600.00'	4°41'49"	24.61'	49.19'
10	3565.00'	21°18'28"	670.64'	1325.79'
19	2350.00'	24°17'22"	505.72'	996.24'
20	3700.00'	22°34'01"	738.22'	1457.30'
23	2499.99'	10°28'05"	229.01'	456.75'
24	2426.99'	7°29'50"	159.01'	317.57'

LAYOUT

SCALE: 1" = 50' **L-2**

STATE OF CALIFORNIA - DEPARTMENT OF TRANSPORTATION
Caltrans DESIGN
FUNCTIONAL SUPERVISOR HARWELL ONTOY
CALCULATED-DESIGNED BY WILLIAM MICHAEL NICHOLS
CHECKED BY EVELYN FIGUEROA
REVISED BY
DATE REVISED

LAST REVISION 09-16-14
DATE PLOTTED => 24-OCT-2014
TIME PLOTTED => 14:38

BORDER LAST REVISED 7/2/2010
USERNAME => s112825
DGN FILE => 1100020291ea002.dgn
RELATIVE BORDER SCALE IS IN INCHES 0 1 2 3
UNIT 2762
PROJECT NUMBER & PHASE 11000202911

Dist	COUNTY	ROUTE	POST MILES TOTAL PROJECT	SHEET No.	TOTAL SHEETS
11	SD	15	M5.6/R6.0		

REGISTERED CIVIL ENGINEER DATE

PLANS APPROVAL DATE

REGISTERED PROFESSIONAL ENGINEER WILLIAM MICHAEL NICHOLS No. C74525 Exp. 12-31-15 CIVIL STATE OF CALIFORNIA

THE STATE OF CALIFORNIA OR ITS OFFICERS OR AGENTS SHALL NOT BE RESPONSIBLE FOR THE ACCURACY OR COMPLETENESS OF SCANNED COPIES OF THIS PLAN SHEET.

NOTE:

FOR ACCURATE RIGHT OF WAY DATA, CONTACT RIGHT OF WAY ENGINEERING AT THE DISTRICT OFFICE.

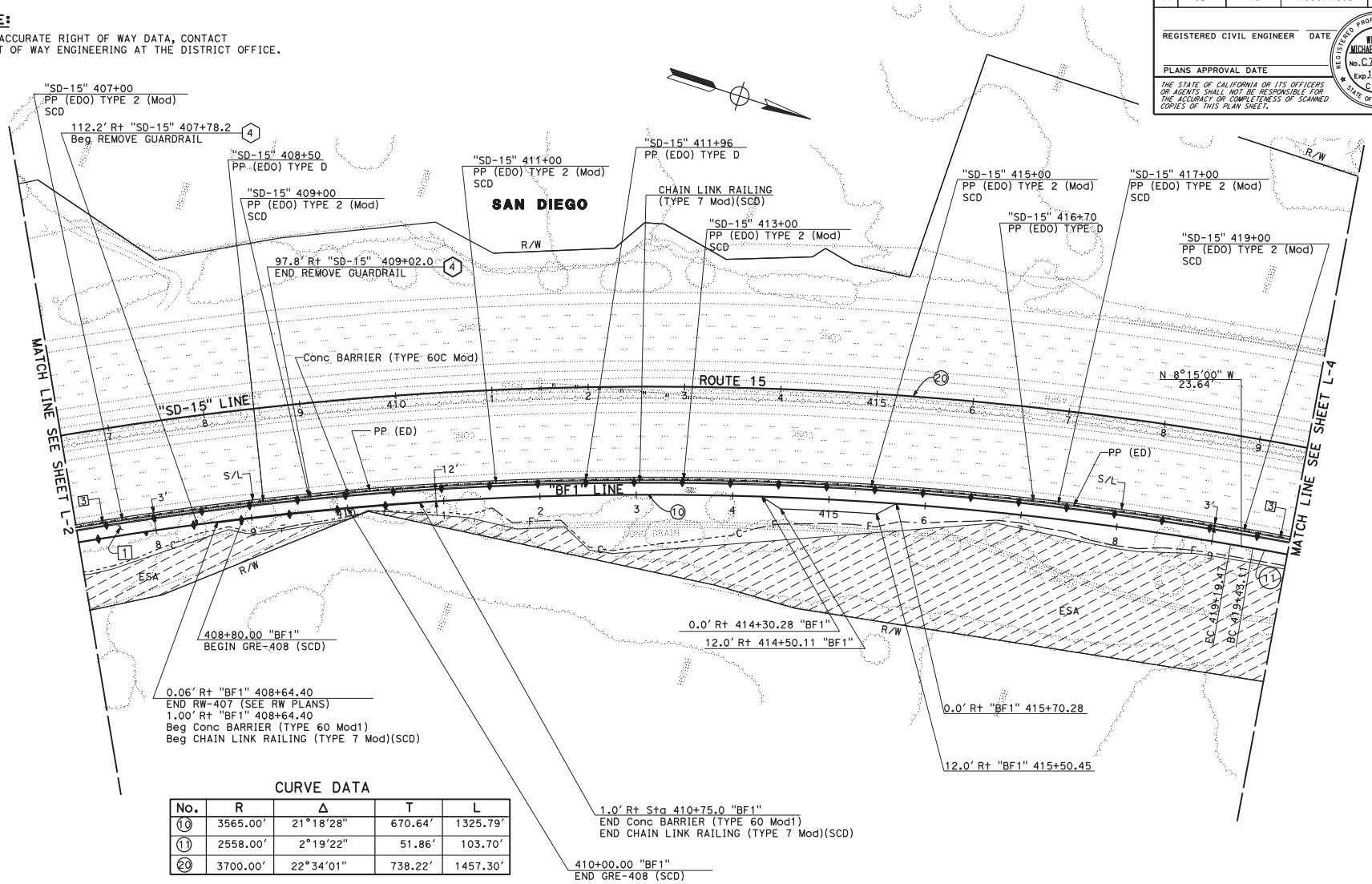

CURVE DATA

No.	R	Δ	T	L
10	3565.00'	21°18'28"	670.64'	1325.79'
11	2558.00'	2°19'22"	51.86'	103.70'
20	3700.00'	22°34'01"	738.22'	1457.30'

LAYOUT L-3

SCALE: 1" = 50'

STATE OF CALIFORNIA - DEPARTMENT OF TRANSPORTATION
Caltrans
DESIGN

FUNCTIONAL SUPERVISOR: HARWELL ONTOY
CALCULATED-DESIGNED BY: WILLIAM MICHAEL NICHOLS
CHECKED BY: EVELYN FIGUEROA
REVISED BY / DATE REVISED

LAST REVISION 09-16-14 | DATE PLOTTED => 24-OCT-2014 | TIME PLOTTED => 14:38

BORDER LAST REVISED 7/2/2010 | USERNAME => s112825 | DGN FILE => 1100020291ea003.dgn | RELATIVE BORDER SCALE IS IN INCHES 0 1 2 3 | UNIT 2762 | PROJECT NUMBER & PHASE 11000202911

Dist	COUNTY	ROUTE	POST MILES TOTAL PROJECT	SHEET No.	TOTAL SHEETS
11	SD	15	M5.6/R6.0		

REGISTERED CIVIL ENGINEER DATE

PLANS APPROVAL DATE

REGISTERED PROFESSIONAL ENGINEER WILLIAM MICHAEL NICHOLS No. C74525 Exp. 12-31-15 CIVIL STATE OF CALIFORNIA

THE STATE OF CALIFORNIA OR ITS OFFICERS OR AGENTS SHALL NOT BE RESPONSIBLE FOR THE ACCURACY OR COMPLETENESS OF SCANNED COPIES OF THIS PLAN SHEET.

NOTE:
FOR ACCURATE RIGHT OF WAY DATA, CONTACT RIGHT OF WAY ENGINEERING AT THE DISTRICT OFFICE.

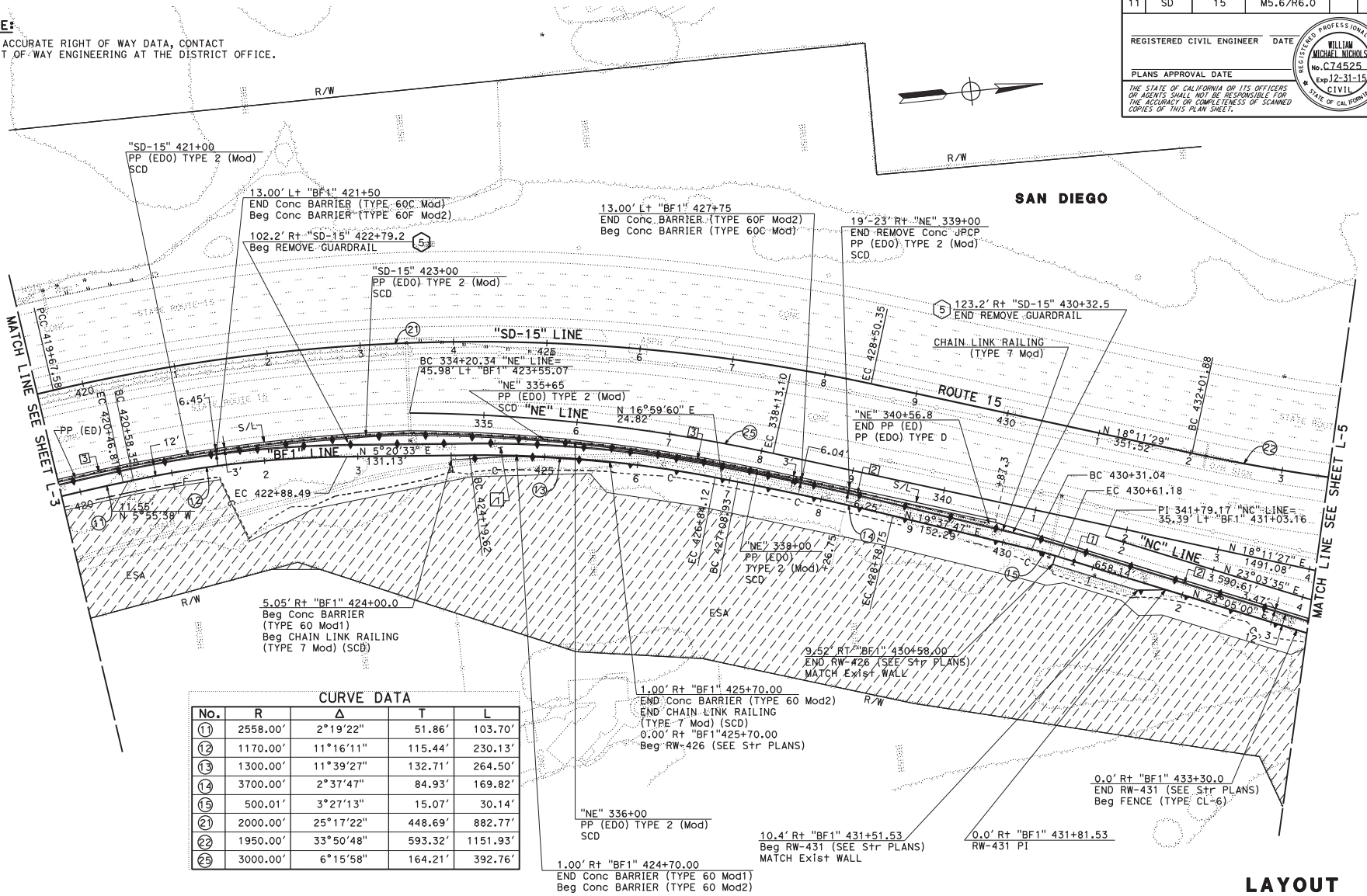

CURVE DATA

No.	R	Δ	T	L
11	2558.00'	2°19'22"	51.86'	103.70'
12	1170.00'	11°16'11"	115.44'	230.13'
13	1300.00'	11°39'27"	132.71'	264.50'
14	3700.00'	2°37'47"	84.93'	169.82'
15	500.01'	3°27'13"	15.07'	30.14'
21	2000.00'	25°17'22"	448.69'	882.77'
22	1950.00'	33°50'48"	593.32'	1151.93'
25	3000.00'	6°15'58"	164.21'	392.76'

LAYOUT L-4

SCALE: 1" = 50'

STATE OF CALIFORNIA - DEPARTMENT OF TRANSPORTATION
Caltrans
DESIGN
FUNCTIONAL SUPERVISOR HARWELL ONTOY
CALCULATED-DESIGNED BY WILLIAM MICHAEL NICHOLS
CHECKED BY EVELYN FIGUEROA
REVISED BY
DATE REVISED
LAST REVISION 00-09-14
DATE PLOTTED => 24-OCT-2014
TIME PLOTTED => 14:38

BORDER LAST REVISED 7/2/2010 | USERNAME => s112825 DGN FILE => 1100020291ea004.dgn | RELATIVE BORDER SCALE IS IN INCHES 0 1 2 3 | UNIT 2762 | PROJECT NUMBER & PHASE 11000202911

Dist	COUNTY	ROUTE	POST MILES TOTAL PROJECT	SHEET No.	TOTAL SHEETS
11	SD	15	M5.6/R6.0		

REGISTERED CIVIL ENGINEER DATE

PLANS APPROVAL DATE

THE STATE OF CALIFORNIA OR ITS OFFICERS OR AGENTS SHALL NOT BE RESPONSIBLE FOR THE ACCURACY OR COMPLETENESS OF SCANNED COPIES OF THIS PLAN SHEET.

REGISTERED PROFESSIONAL ENGINEER WILLIAM MICHAEL NICHOLS No. C74525 Exp. 12-31-15 CIVIL STATE OF CALIFORNIA

NOTE:
FOR ACCURATE RIGHT OF WAY DATA, CONTACT RIGHT OF WAY ENGINEERING AT THE DISTRICT OFFICE.

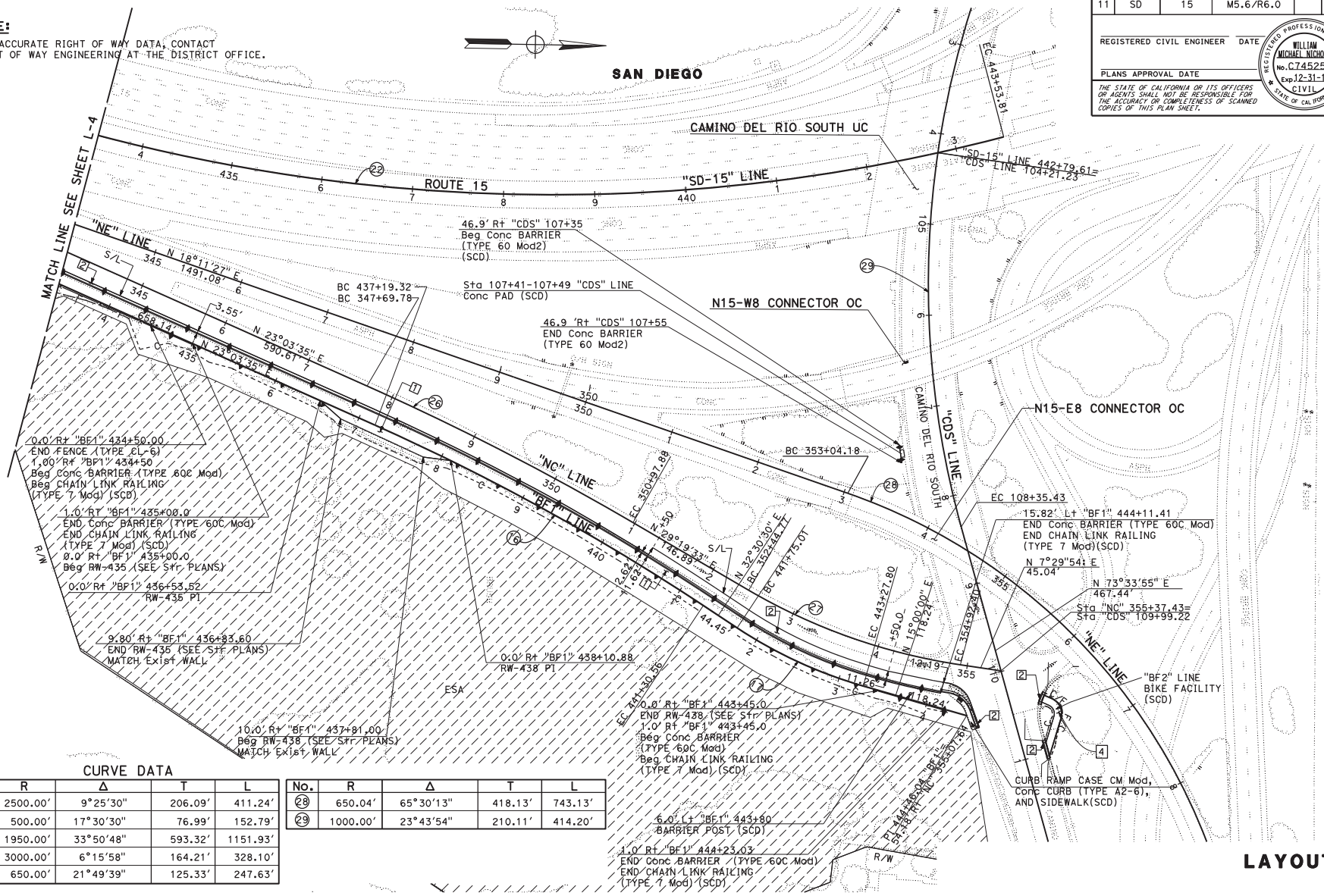

CURVE DATA

No.	R	Δ	T	L
16	2500.00'	9°25'30"	206.09'	411.24'
17	500.00'	17°30'30"	76.99'	152.79'
22	1950.00'	33°50'48"	593.32'	1151.93'
26	3000.00'	6°15'58"	164.21'	328.10'
27	650.00'	21°49'39"	125.33'	247.63'

No.	R	Δ	T	L
28	650.04'	65°30'13"	418.13'	743.13'
29	1000.00'	23°43'54"	210.11'	414.20'

LAYOUT

SCALE: 1" = 50' **L-5**

STATE OF CALIFORNIA - DEPARTMENT OF TRANSPORTATION
Caltrans
DESIGN
FUNCTIONAL SUPERVISOR HARWELL ONTOY
CALCULATED-DESIGNED BY WILLIAM MICHAEL NICHOLS
CHECKED BY EVELYN FIGUEROA
REVISED BY
DATE REVISED

LAST REVISION 09-16-14
DATE PLOTTED => 24-OCT-2014
TIME PLOTTED => 14:38

BORDER LAST REVISED 7/2/2010
USERNAME => s112825
DGN FILE => 1100020291ea005.dgn
RELATIVE BORDER SCALE IS IN INCHES 0 1 2 3
UNIT 2762
PROJECT NUMBER & PHASE 11000202911

Dist	COUNTY	ROUTE	POST MILES TOTAL PROJECT	SHEET No.	TOTAL SHEETS
11	SD	15	M5.6/R6.0		

REGISTERED CIVIL ENGINEER DATE

PLANS APPROVAL DATE

REGISTERED PROFESSIONAL ENGINEER WILLIAM MICHAEL NICHOLS No. C74525 Exp. 12-31-15 CIVIL STATE OF CALIFORNIA

THE STATE OF CALIFORNIA OR ITS OFFICERS OR AGENTS SHALL NOT BE RESPONSIBLE FOR THE ACCURACY OR COMPLETENESS OF SCANNED COPIES OF THIS PLAN SHEET.

NOTES:

1. FOR ACCURATE RIGHT OF WAY DATA, SEE RIGHT OF WAY RECORD MAPS AT DISTRICT OFFICE.
2. FOR DETAILS NOT SHOWN SEE REVISED STANDARD PLANS RSP B3-1B
3. FOR ARCHITECTURAL TREATMENT DETAIL, SEE RETAINING WALL DETAIL SHEET.

CURVE DATA

No.	R	Δ	T	L
1	2126.76′	3°09′54"	58.76′	117.49′

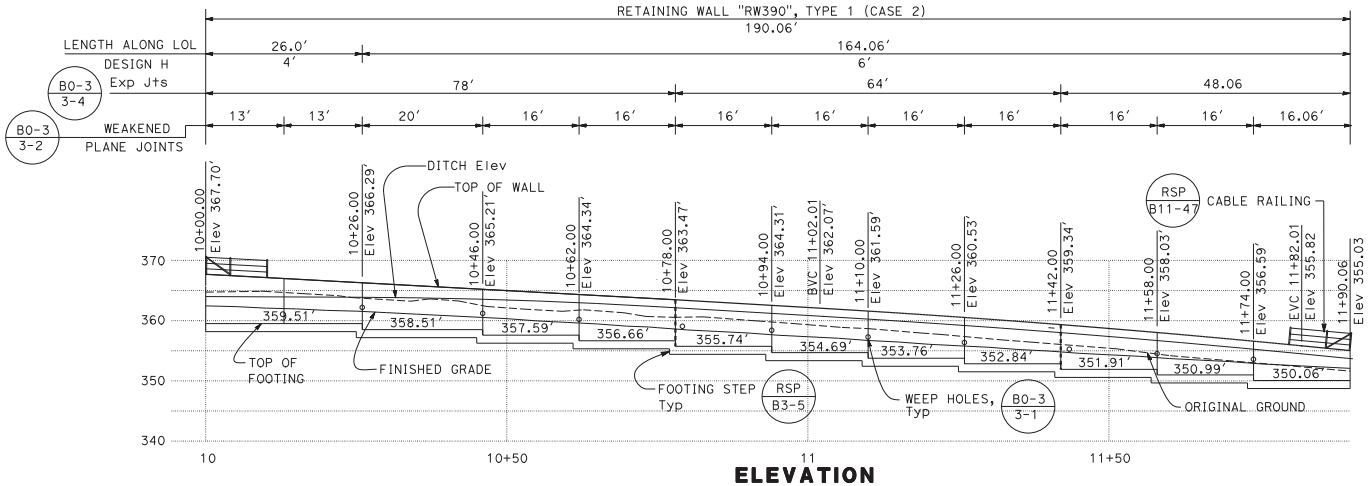

ELEVATION

SCALE: Horiz 1"=10′
Vert 1"=10′

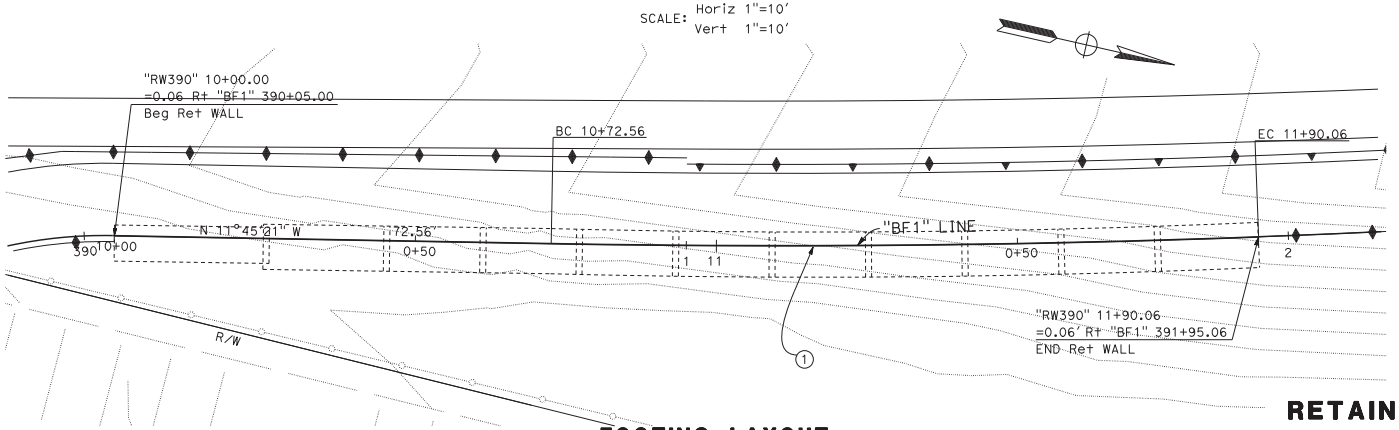

FOOTING LAYOUT

APPROVED FOR RETAINING WALL WORK ONLY

SCALE: 1"=10′

RETAINING WALL PLAN
R1-1
RETAINING WALL RW390

STATE OF CALIFORNIA - DEPARTMENT OF TRANSPORTATION
Caltrans
DESIGN

FUNCTIONAL SUPERVISOR	CALCULATED-DESIGNED BY	REVISED BY	DATE REVISED
HARWELL ONTOY	MICHAEL NICHOLS		
	EVELYN FIGUEROA		
	CHECKED BY		

LAST REVISION 10-06-14 DATE PLOTTED => 05-NOV-2014 TIME PLOTTED => 15:08

BORDER LAST REVISED 7/2/2010 | USERNAME => s112825 DGN FILE => 1100020291qa001.dgn | RELATIVE BORDER SCALE IS IN INCHES 0 1 2 3 | UNIT 2762 | PROJECT NUMBER & PHASE 11000202911

Dist	COUNTY	ROUTE	POST MILES TOTAL PROJECT	SHEET No.	TOTAL SHEETS
11	SD	15	M5.6/R6.0		

REGISTERED CIVIL ENGINEER DATE

PLANS APPROVAL DATE

REGISTERED PROFESSIONAL ENGINEER WILLIAM MICHAEL NICHOLS No.C74525 Exp.12-31-15 CIVIL STATE OF CALIFORNIA

THE STATE OF CALIFORNIA OR ITS OFFICERS OR AGENTS SHALL NOT BE RESPONSIBLE FOR THE ACCURACY OR COMPLETENESS OF SCANNED COPIES OF THIS PLAN SHEET.

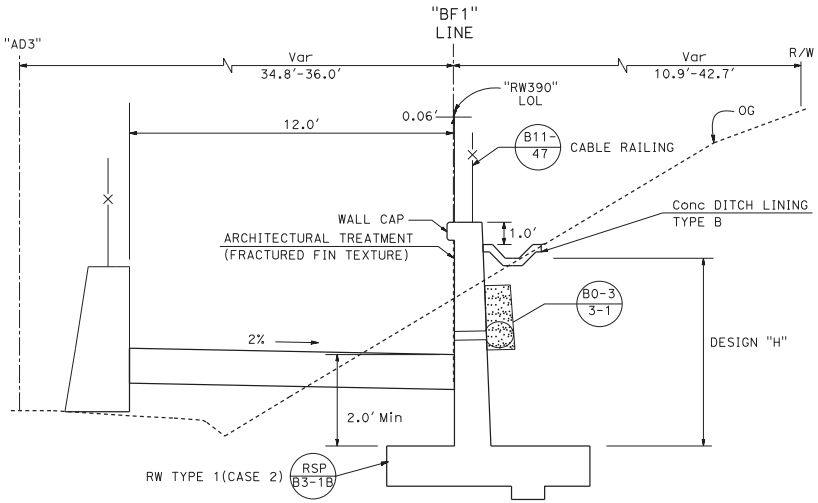

TYPICAL SECTION

Sta 390+05.0 TO 391+95.0 "BF1"

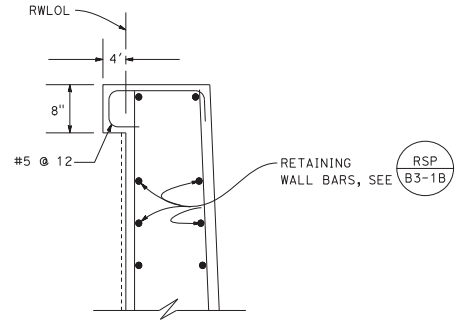

WALL CAP DETAIL

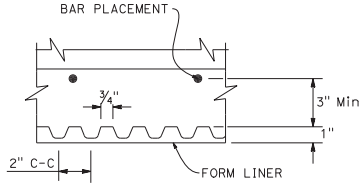

SECTION E-E

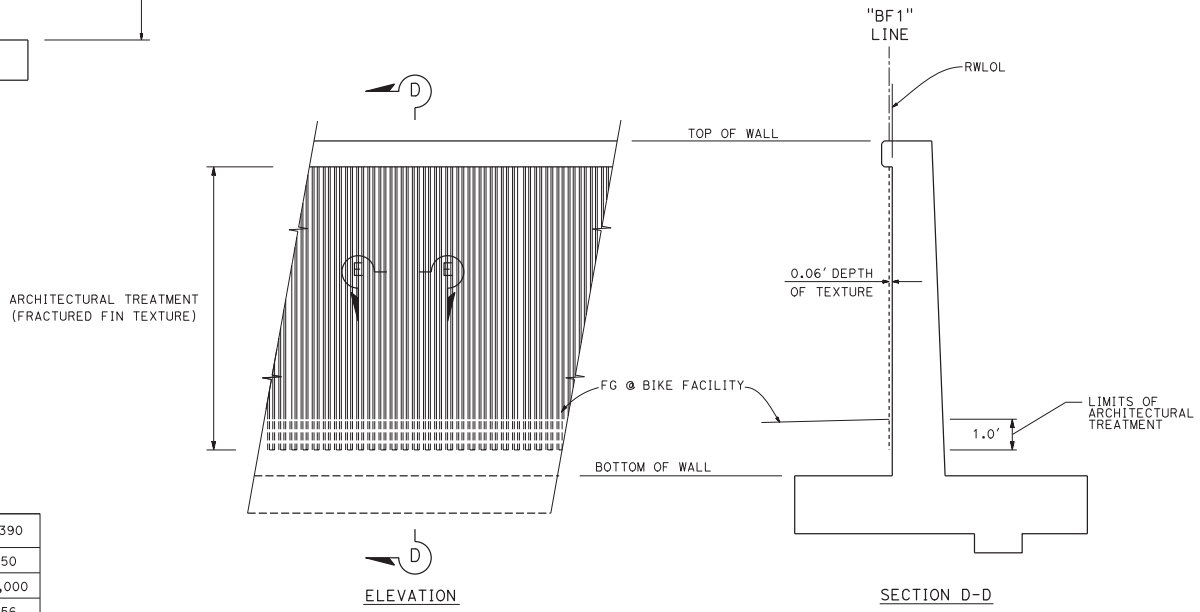

ELEVATION

SECTION D-D

FRACTURED FIN TEXTURE

QUANTITIES		RW390
STRUCTURAL CONCRETE (Ret WALL)	CY	150
BAR REINFORCING STEEL (Ret WALL)	LB	11,000
STRUCTURE EXCAVATION (Ret WALL)	CY	356
STRUCTURE BACKFILL (Ret WALL)	CY	248
PERVIOUS BACKFILL MATERIAL (Ret WALL)	CY	10
FRACTURED FIN TEXTURE	SQFT	933
CABLE RAILING	LF	190.1

RETAINING WALL DETAILS

"RW390"

NO SCALE

R1-2

STATE OF CALIFORNIA - DEPARTMENT OF TRANSPORTATION
Caltrans
DESIGN

FUNCTIONAL SUPERVISOR: HARWELL ONTOY
CALCULATED-DESIGNED BY: WILLIAM MICHAEL NICHOLS
CHECKED BY: EVELYN FIGUEROA
REVISED BY
DATE REVISED

LAST REVISION 09-18-14
DATE PLOTTED => 05-NOV-2014
TIME PLOTTED => 15:09

BORDER LAST REVISED 7/2/2010
USERNAME => s112825
DGN FILE => 1100020291qa002.dgn
RELATIVE BORDER SCALE IS IN INCHES 0 1 2 3
UNIT 2762
PROJECT NUMBER & PHASE 11000202911

Dist	COUNTY	ROUTE	POST MILES TOTAL PROJECT	SHEET No.	TOTAL SHEETS
11	SD	15	M5.6/R6.0		

REGISTERED CIVIL ENGINEER DATE

PLANS APPROVAL DATE

REGISTERED PROFESSIONAL ENGINEER WILLIAM MICHAEL NICHOLS No. C74525 Exp. 12-31-15 CIVIL STATE OF CALIFORNIA

THE STATE OF CALIFORNIA OR ITS OFFICERS OR AGENTS SHALL NOT BE RESPONSIBLE FOR THE ACCURACY OR COMPLETENESS OF SCANNED COPIES OF THIS PLAN SHEET.

NOTES:

1. FOR ACCURATE RIGHT OF WAY DATA, CONTACT RIGHT-OF-WAY ENGINEERING AT THE DISTRICT OFFICE.
2. REFER TO REVISED STD PLAN RSP B11-56 FOR ADDITIONAL INFORMATION ON CONCRETE BARRIER.
3. REFER TO STD PLAN B11-52 FOR ADDITIONAL INFORMATION ON CHAIN LINK RAILING.
4. FOR DETAILS NOT SHOWN SEE REVISED STANDARD PLANS RSP B3-1A.
5. FOR ARCHITECTURAL TREATMENT DETAIL, SEE RETAINING WALL DETAIL SHEET.
6. SEE ELECTRICAL PLANS FOR BARRIER LIGHTING.

CURVE DATA

No.	R	Δ	T	L
1	2113.22′	5°24′55″	99.94′	199.73′

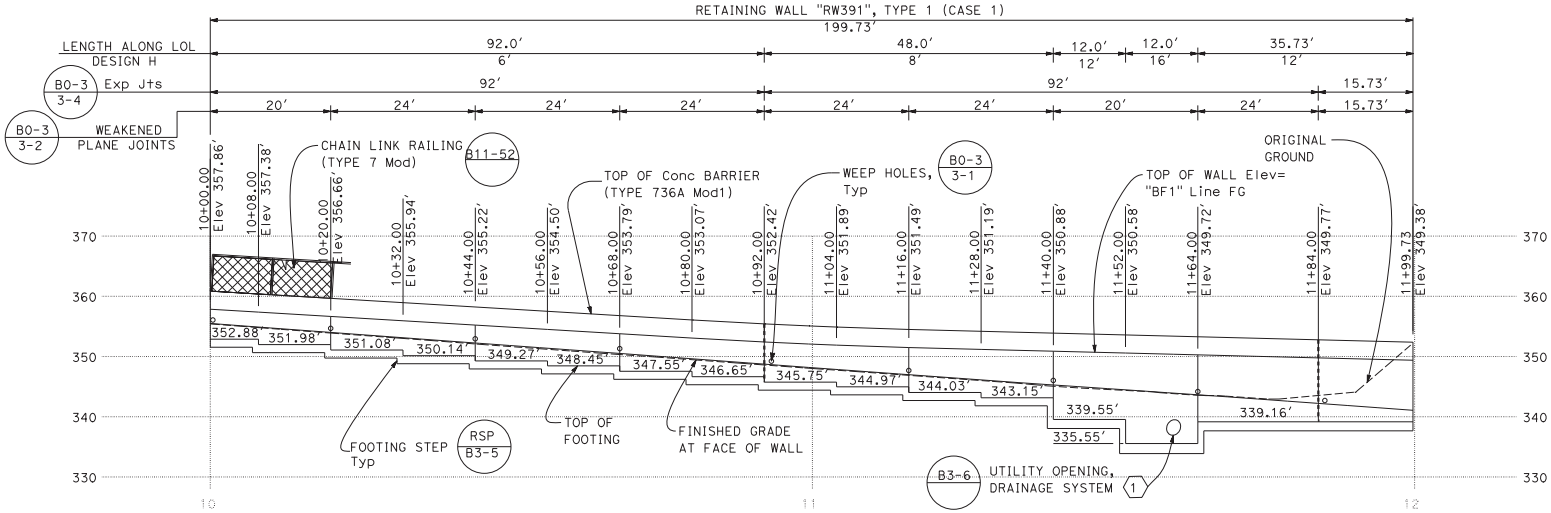

ELEVATION

SCALE: Horiz 1"=10′ Vert 1"=10′

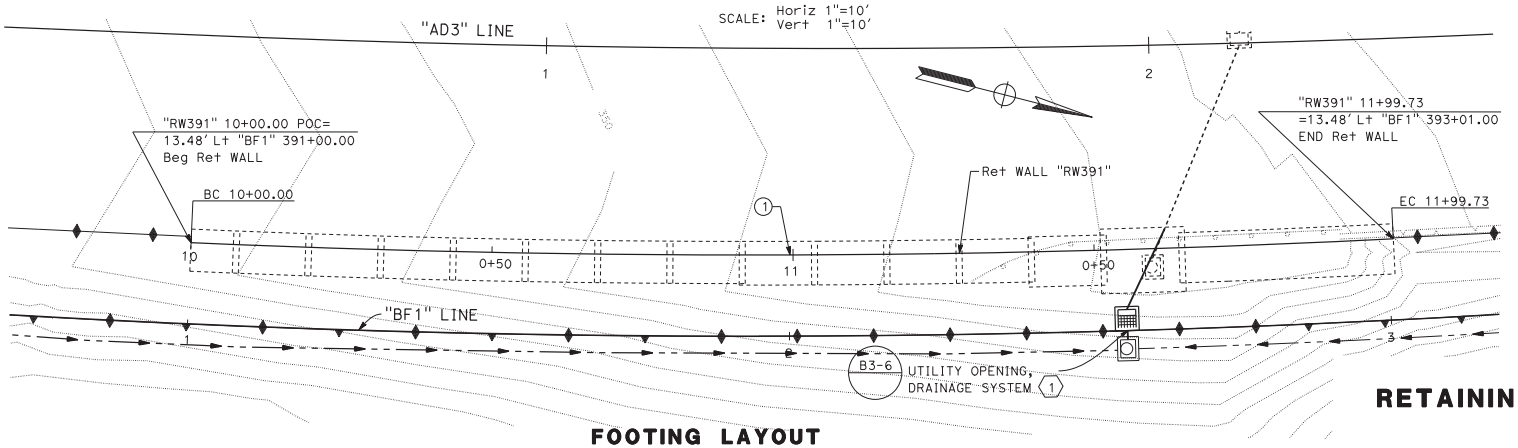

FOOTING LAYOUT

SCALE: 1"=10′

RETAINING WALL PLAN
R2-1
RETAINING WALL RW391

APPROVED FOR RETAINING WALL WORK ONLY

STATE OF CALIFORNIA - DEPARTMENT OF TRANSPORTATION
Caltrans DESIGN
FUNCTIONAL SUPERVISOR HARWELL ONTOY
CALCULATED-DESIGNED BY MICHAEL NICHOLS CHECKED BY EVELYN FIGUEROA
REVISED BY DATE REVISED

LAST REVISION 09-18-14 DATE PLOTTED => 05-NOV-2014 TIME PLOTTED => 15:09

BORDER LAST REVISED 7/2/2010 | USERNAME => s112825 DGN FILE => 1100020291qb001.dgn | RELATIVE BORDER SCALE IS IN INCHES 0 1 2 3 | UNIT 2762 | PROJECT NUMBER & PHASE 11000202911

Dist	COUNTY	ROUTE	POST MILES TOTAL PROJECT	SHEET No.	TOTAL SHEETS
11	SD	15	M5.6/R6.0		

REGISTERED CIVIL ENGINEER DATE

PLANS APPROVAL DATE

REGISTERED PROFESSIONAL ENGINEER WILLIAM MICHAEL NICHOLS No. C74525 Exp. 12-31-15 CIVIL STATE OF CALIFORNIA

THE STATE OF CALIFORNIA OR ITS OFFICERS OR AGENTS SHALL NOT BE RESPONSIBLE FOR THE ACCURACY OR COMPLETENESS OF SCANNED COPIES OF THIS PLAN SHEET.

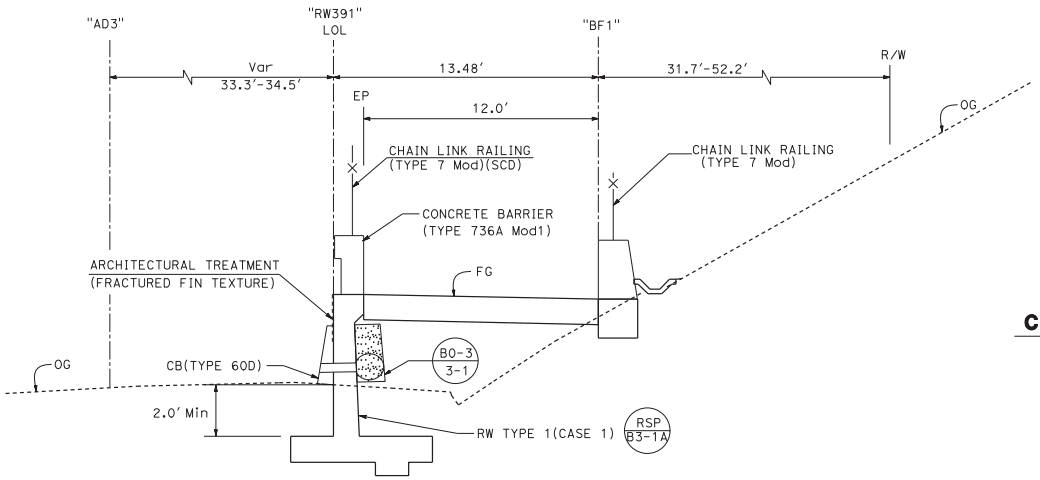

TYPICAL SECTION

Sta 391+00.0 TO 393+01.0 "BF1"

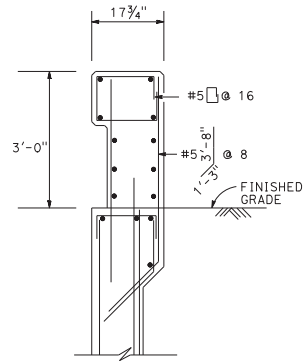

CONCRETE BARRIER (TYPE 736A Mod 1)

SEE NOTE 2

QUANTITIES		RW391
STRUCTURAL CONCRETE (Ret WALL)	CY	167
BAR REINFORCING STEEL (Ret WALL)	LB	19,200
STRUCTURE EXCAVATION (Ret WALL)	CY	300
STRUCTURE BACKFILL (Ret WALL)	CY	314
PERVIOUS BACKFILL MATERIAL (Ret WALL)	CY	10
FRACTURED FIN TEXTURE	SQFT	378
CONCRETE BARRIER (TYPE 736A Mod 1)	LF	199
CHAIN LINK RAILING (TYPE 7 Mod)	LF	199

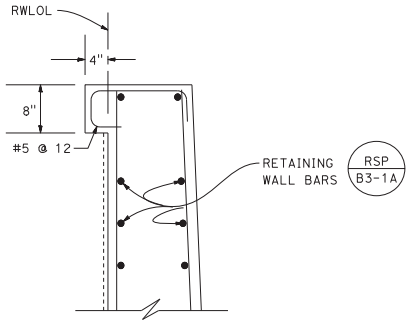

WALL CAP DETAIL

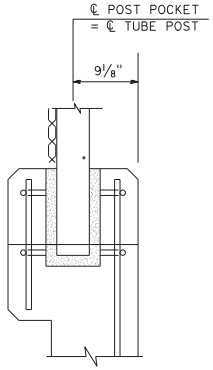

POST ANCHORAGE DETAIL

SEE NOTE 3

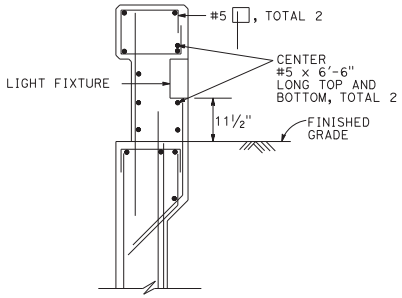

LIGHT FIXTURE ON CONCRETE BARRIER

SEE NOTE 2, 6

RETAINING WALL DETAILS

"RW391"

NO SCALE

R2-2

STATE OF CALIFORNIA - DEPARTMENT OF TRANSPORTATION
Caltrans
DESIGN

FUNCTIONAL SUPERVISOR: HARWELL ONTOY
CALCULATED-DESIGNED BY: WILLIAM MICHAEL NICHOLS
CHECKED BY: EVELYN FIGUEROA
REVISED BY
DATE REVISED

LAST REVISION 09-19-14
DATE PLOTTED => 05-NOV-2014
TIME PLOTTED => 15:09

BORDER LAST REVISED 7/2/2010
USERNAME => s112825
DGN FILE => 1100020291qb002.dgn
RELATIVE BORDER SCALE IS IN INCHES 0 1 2 3
UNIT 2762
PROJECT NUMBER & PHASE 11000202911

Dist	COUNTY	ROUTE	POST MILES TOTAL PROJECT	SHEET No.	TOTAL SHEETS
11	SD	15	M5.6/R6.0		

REGISTERED CIVIL ENGINEER DATE

PLANS APPROVAL DATE

REGISTERED PROFESSIONAL ENGINEER WILLIAM MICHAEL NICHOLS No.C74525 Exp.12-31-15 CIVIL STATE OF CALIFORNIA

THE STATE OF CALIFORNIA OR ITS OFFICERS OR AGENTS SHALL NOT BE RESPONSIBLE FOR THE ACCURACY OR COMPLETENESS OF SCANNED COPIES OF THIS PLAN SHEET.

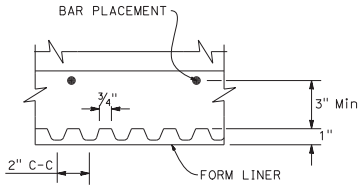

SECTION E-E

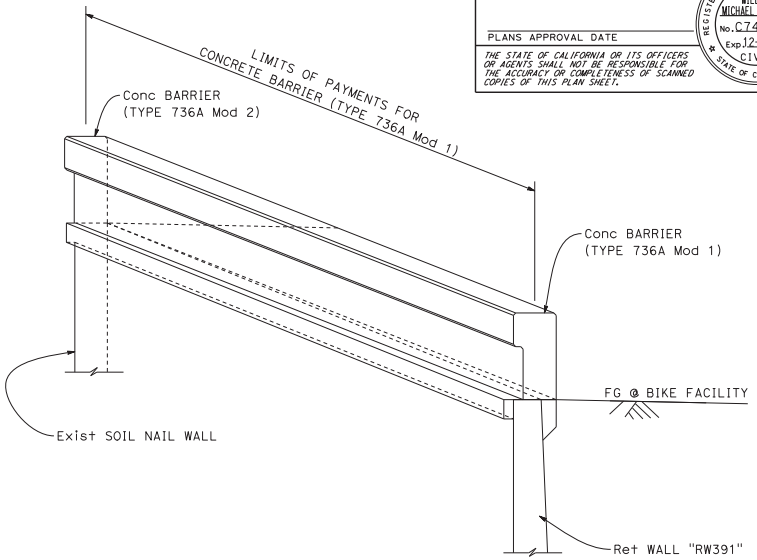

CONCRETE BARRIER TRANSITION (TYPE 736A Mod1) TO CONCRETE BARRIER (TYPE 736A Mod2)

Sta 392+81.00 TO Sta 393+01.00 "BF1"

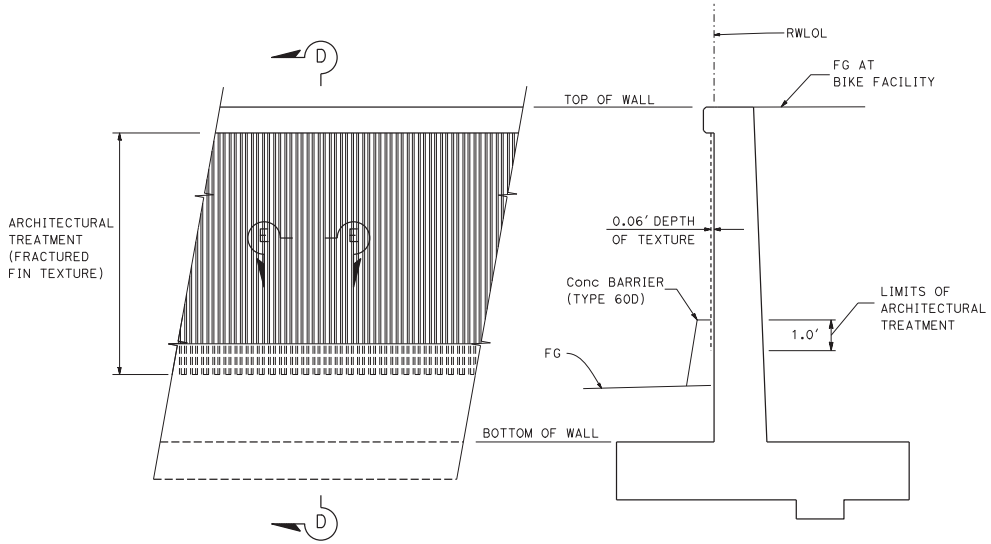

ELEVATION

SECTION D-D

FRACTURED FIN TEXTURE

Sta 10+92 - 11+99.00

RETAINING WALL DETAILS

"RW391"

NO SCALE

R2-3

STATE OF CALIFORNIA - DEPARTMENT OF TRANSPORTATION

Caltrans

DESIGN

FUNCTIONAL SUPERVISOR: HARWELL ONTOY

CALCULATED-DESIGNED BY: WILLIAM MICHAEL NICHOLS

CHECKED BY: EVELYN FIGUEROA

REVISED BY

DATE REVISED

LAST REVISION 07-31-14

DATE PLOTTED => 05-NOV-2014

TIME PLOTTED => 15:09

BORDER LAST REVISED 7/2/2010

USERNAME => s112825
DGN FILE => 1100020291qb003.dgn

RELATIVE BORDER SCALE IS IN INCHES 0 1 2 3

UNIT 2762

PROJECT NUMBER & PHASE 11000202911

November 6, 2014

DIST	COUNTY	ROUTE	POST MILES TOTAL PROJECT	SHEET No.	TOTAL SHEETS
11	SD	15	5.6/R6.0		

Renee M. Anderson 10-01-14
REGISTERED CIVIL ENGINEER DATE

PLANS APPROVAL DATE

REGISTERED PROFESSIONAL ENGINEER RENEE ANDERSON No. 61040 Exp. 12-31-2014 CIVIL STATE OF CALIFORNIA

The State of California or its officers or agents shall not be responsible for the accuracy or completeness of electronic copies of this plan sheet.

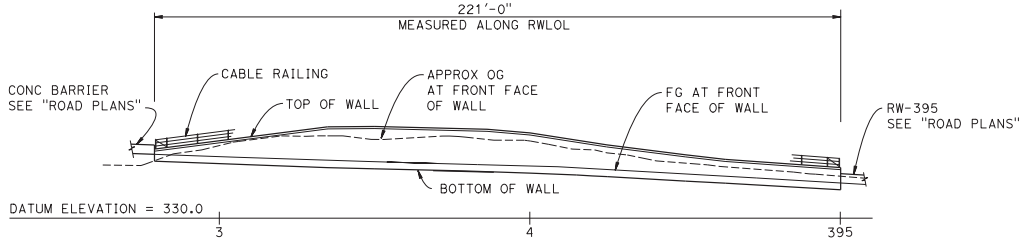

MIRRORED DEVELOPED ELEVATION

1" = 20'

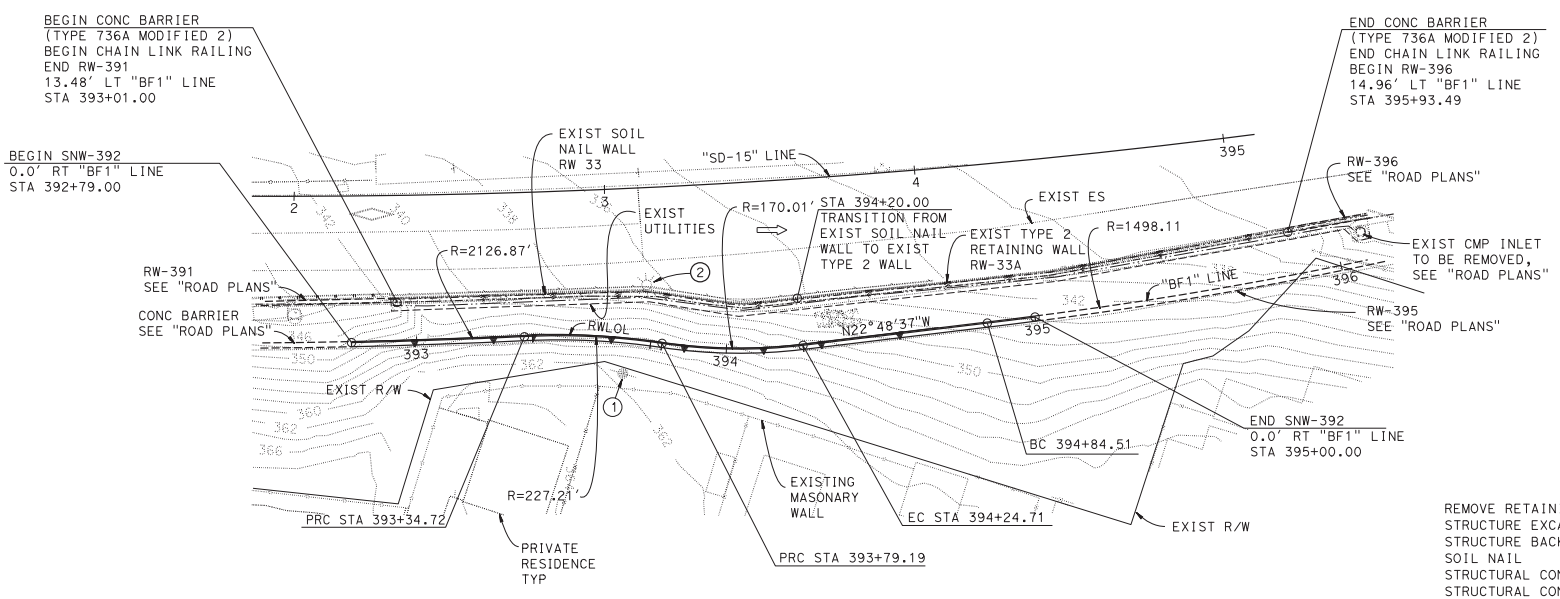

NOTES:

1. Existing Electric Pole. Soil Nails must clear existing light pole
2. Existing electrolier

LEGEND:

-·-·-·-·- Indicates existing structure

——— Indicates new construction

PLAN

1" = 20'

NOTE:
THE CONTRACTOR SHALL VERIFY ALL CONTROLLING FIELD DIMENSIONS BEFORE ORDERING OR FABRICATING ANY MATERIAL.

QUANTITIES

REMOVE RETAINING WALL (PORTION)	27	CY
STRUCTURE EXCAVATION (SOIL NAIL WALL)	144	CY
STRUCTURE BACKFILL (SOIL NAIL WALL)	32	CY
SOIL NAIL	996	LF
STRUCTURAL CONCRETE, RETAINING WALL	95	CY
STRUCTURAL CONCRETE, CAP	30	CY
FRACTURED FIN TEXTURE	2,437	SQFT
BAR REINFORCING STEEL (RETAINING WALL)	25,298	LB
STRUCTURAL SHOTCRETE	20	CY
GEOCOMPOSITE DRAIN	246	SQFT
CHAIN LINK RAILING (TYPE 7 MODIFIED)	292	LF
CABLE RAILING	221	LF
CONCRETE BARRIER (TYPE 736A MODIFIED2)	292	LF

DANIEL T. ADAMS
DESIGN ENGINEER

	BY	CHECKED
DESIGN	R. ANDERSON	M. VO
DETAILS	R. KIRKLAND	M. VO
QUANTITIES	R. ANDERSON	M. VO

LOAD & RESISTANCE FACTOR DESIGN — LIVE LOADING: HL93 W/"LOW-BOY"; PERMIT DESIGN VEHICLE

LAYOUT: R. ANDERSON — CHECKED: M. VO
SPECIFICATIONS: V. Renganathan — PLANS AND SPECS COMPARED: V. Renganathan

STATE OF CALIFORNIA
DEPARTMENT OF TRANSPORTATION

DIVISION OF ENGINEERING SERVICES
STRUCTURE DESIGN
DESIGN BRANCH 10

BRIDGE NO. 57E0121
POST MILE M5.668

MID CITY BIKE FACILITY SNW-392
GENERAL PLAN

ORIGINAL SCALE IN INCHES FOR REDUCED PLANS 0 1 2 3

UNIT: 3589
PROJECT NUMBER & PHASE: 1100020291
CONTRACT NO.: 11-2T1900

DISREGARD PRINTS BEARING EARLIER REVISION DATES
REVISION DATES: 6-29-12 10-30-14 10-24-14
SHEET 1 OF 10

STRUCTURES DESIGN GENERAL PLAN SHEET (ENGLISH) (REV.09-01-10)
FILE => 57e0121gap01.dgn

DIST	COUNTY	ROUTE	POST MILES TOTAL PROJECT	SHEET No.	TOTAL SHEETS
11	SD	15	5.6/R6.0		

Renee M. Anderson 10-01-14
REGISTERED CIVIL ENGINEER DATE

PLANS APPROVAL DATE

REGISTERED PROFESSIONAL ENGINEER RENEE ANDERSON NO. 61040 Exp. 12-31-2014 CIVIL STATE OF CALIFORNIA

The State of California or its officers or agents shall not be responsible for the accuracy or completeness of electronic copies of this plan sheet.

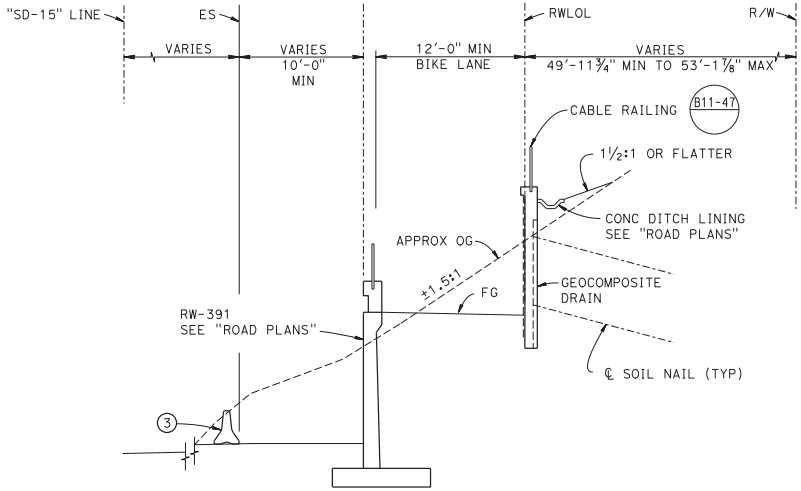

TYPICAL SECTION

1" = 5'

BEGIN SNW-392 TO STA 393+01.00

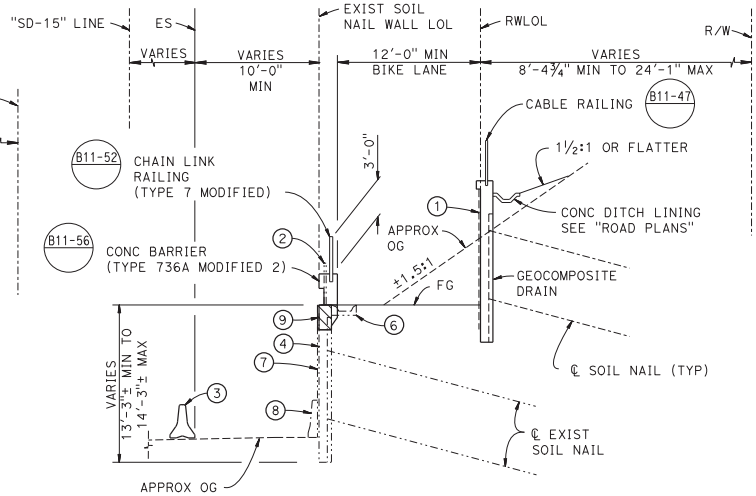

TYPICAL SECTION

1" = 5'

STA 393+01.00 TO STA 394+20.00

NOTES:

1. Architectural Treatment "Fractured Fin Texture" to match existing
2. Existing Cable Railing to be removed
3. Temporary Railing Type K, see "ROAD PLANS"
4. Existing Soil Nail Wall RW33
5. Existing Type 2 Wall RW-33A
6. Existing concrete gutter to be abandoned
7. Existing Architectural Treatment
8. Existing Concrete Barrier Type 50D
9. Concrete Wall Cap

LEGEND:

INDICATES REMOVE RETAINING WALL (PORTION)

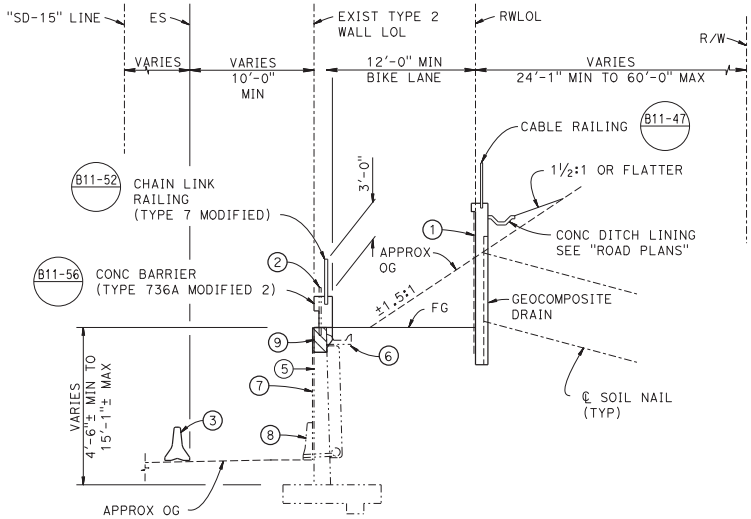

TYPICAL SECTION

1" = 5'

STA 394+20.00 to END SNW-392

INDEX TO PLANS

Sheet No.	Title
1	GENERAL PLAN
2	INDEX TO PLANS
3	STRUCTURE PLAN
4	TYPICAL SECTION
5	SOIL NAIL DETAILS
6	TEST NAIL DETAILS
7	WALL DRAIN DETAILS
8	DETAILS NO. 1
9	LOG OF TEST BORINGS 1 OF 2
10	LOG OF TEST BORINGS 2 OF 2

STANDARD PLANS DATED 2010

	A10A	ACRONYMS AND ABBREVIATIONS (SHEET 1 OF 2)
(RSP)	A10B	ACRONYMS AND ABBREVIATIONS (SHEET 2 OF 2)
	A10C	SYMBOLS (SHEET 1 OF 2)
	A10D	SYMBOLS (SHEET 2 OF 2)
	B11-52	CHAIN LINK RAILING TYPE 7
(RSP)	B11-47	CABLE RAILING
	B11-56	CONCRETE BARRIER TYPE 736

STANDARD PLAN SHEET NO.

DETAIL NO.

NOTE:
THE CONTRACTOR SHALL VERIFY ALL CONTROLLING FIELD DIMENSIONS BEFORE ORDERING OR FABRICATING ANY MATERIAL.

	BY	CHECKED
DESIGN	R. ANDERSON	M. VO
DETAILS	R. KIRKLAND	M. VO
QUANTITIES	R. ANDERSON	M. VO

STATE OF CALIFORNIA
DEPARTMENT OF TRANSPORTATION

DIVISION OF ENGINEERING SERVICES
STRUCTURE DESIGN
DESIGN BRANCH 10

BRIDGE NO. 57E0121
POST MILE M5.668

MID CITY BIKE FACILITY SNW-392
INDEX TO PLANS

STRUCTURES DESIGN DETAIL SHEET (ENGLISH) (REV. 09-01-10)

ORIGINAL SCALE IN INCHES FOR REDUCED PLANS 0 1 2 3

UNIT: 3589
PROJECT NUMBER & PHASE: 1100020291
CONTRACT NO.: 11-2T1900

DISREGARD PRINTS BEARING EARLIER REVISION DATES

REVISION DATES: 6-29-12 10-30-14 10-24-14

SHEET 2 OF 10

FILE => 57e0121alrp02.dgn

DIST	COUNTY	ROUTE	POST MILES TOTAL PROJECT	SHEET No.	TOTAL SHEETS
11	SD	15	5.6/R6.0		

Renee M. Anderson 10-01-14
REGISTERED CIVIL ENGINEER DATE

PLANS APPROVAL DATE

REGISTERED PROFESSIONAL ENGINEER RENEE ANDERSON NO. 61040 Exp. 12-31-2014 CIVIL STATE OF CALIFORNIA

The State of California or its officers or agents shall not be responsible for the accuracy or completeness of electronic copies of this plan sheet.

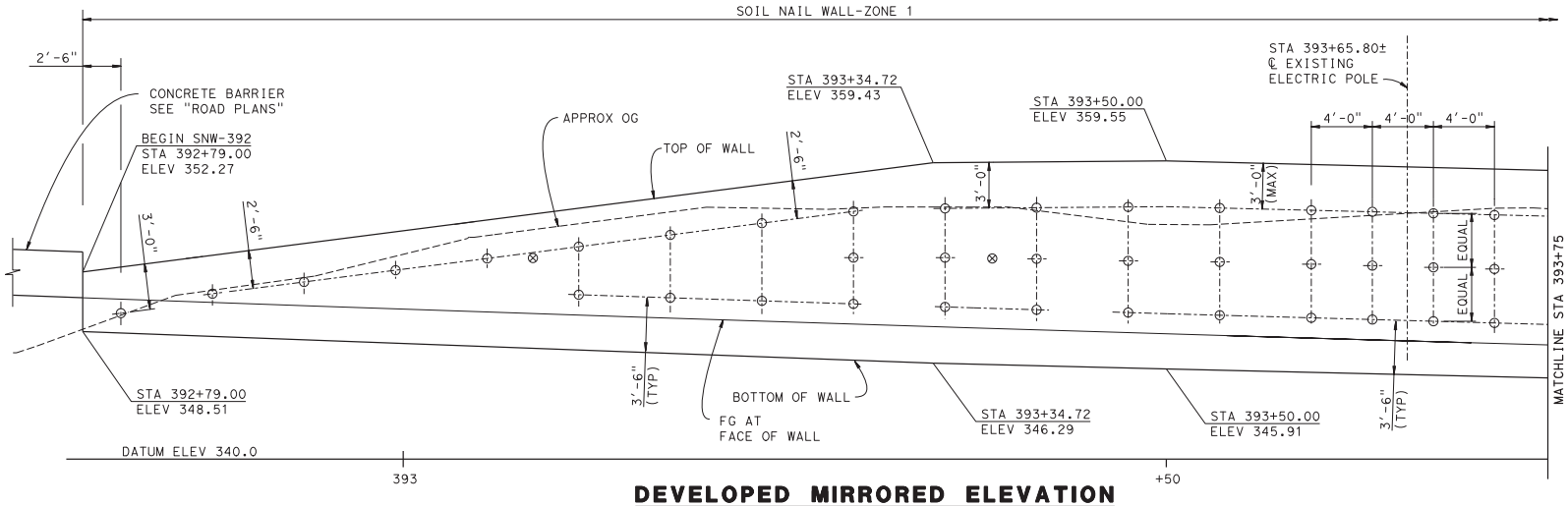

DEVELOPED MIRRORED ELEVATION

1/4" = 1'-0"

NOTE:
CABLE RAILING NOT SHOWN
FOR CLARITY

NOTES:

1. Horizontal spacing of Soil Nails is 6'-0" max. Place Soil Nails normal to RWLOL and at -15° inclination.
2. Soil Nail Length = 12'-0"
3. OG and FG are shown at RWLOL
4. See "TYPICAL SECTION" sheet for Soil Nail Wall Zone design parameters

LEGEND:

○ Indicates Soil Nail Bearing Plate location

⊗ Indicates Test Nail location. Location may be adjusted by the Engineer.

-·-·- Indicates Soil Nail Profile Line.

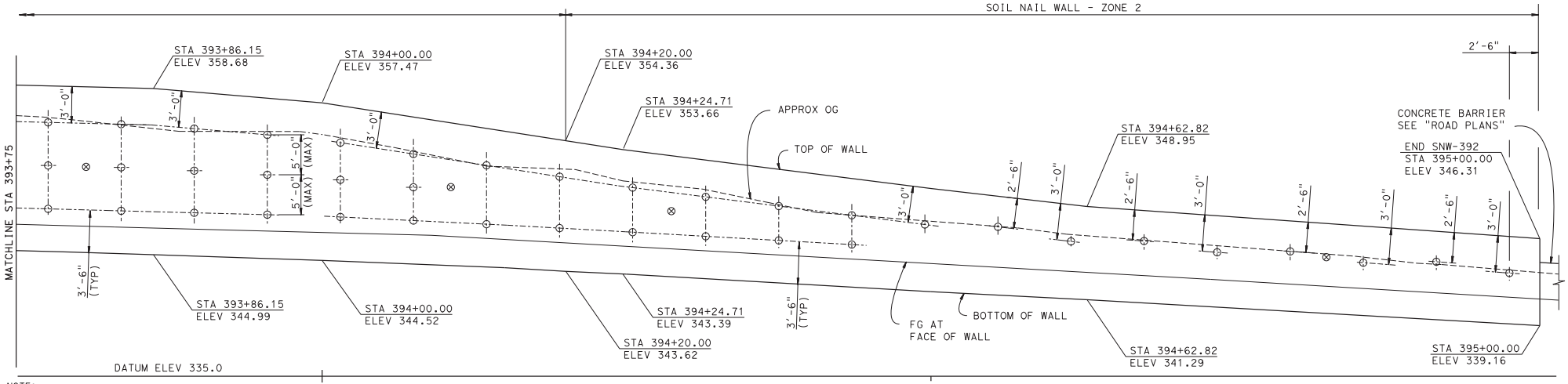

NOTE:
THE CONTRACTOR SHALL VERIFY ALL CONTROLLING FIELD DIMENSIONS BEFORE ORDERING OR FABRICATING ANY MATERIAL.

DEVELOPED MIRRORED ELEVATION

1/4" = 1'-0"

	BY	CHECKED
DESIGN	R. ANDERSON	M. VO
DETAILS	R. KIRKLAND	M. VO
QUANTITIES	R. ANDERSON	M. VO

STATE OF CALIFORNIA
DEPARTMENT OF TRANSPORTATION

DIVISION OF ENGINEERING SERVICES
STRUCTURE DESIGN
DESIGN BRANCH 10

BRIDGE NO. 57E0121
POST MILE M5.668

MID CITY BIKE FACILITY SNW-392
STRUCTURE PLAN

STRUCTURES DESIGN DETAIL SHEET (ENGLISH) (REV. 09-01-10)

ORIGINAL SCALE IN INCHES FOR REDUCED PLANS 0 1 2 3

UNIT: 3589
PROJECT NUMBER & PHASE: 1100020291
CONTRACT NO.: 11-2T1900

DISREGARD PRINTS BEARING EARLIER REVISION DATES

REVISION DATES 8-29-02 9-23-14 4-23-14

SHEET 3 OF 10

FILE => 57e0121csp03.dgn

DIST	COUNTY	ROUTE	POST MILES TOTAL PROJECT	SHEET No.	TOTAL SHEETS
11	SD	15	5.6/R6.0		

Renee M. Anderson 10-01-14
REGISTERED CIVIL ENGINEER DATE

PLANS APPROVAL DATE

REGISTERED PROFESSIONAL ENGINEER RENEE ANDERSON No. 61040 Exp. 12-31-2014 CIVIL STATE OF CALIFORNIA

The State of California or its officers or agents shall not be responsible for the accuracy or completeness of electronic copies of this plan sheet.

GENERAL NOTES
LOAD FACTOR DESIGN

DESIGN: CALTRANS BRIDGE DESIGN SPECIFICATIONS (1996 SIXTEENTH EDITION AASHTO with Interims and Revisions by CALTRANS)

REINFORCED CONCRETE: f_y = 60 ksi
f'_c = 3600 psi

SOIL NAILS Inclination Angle = 15°

DESIGN PARAMETERS: (Soil)

WALL ZONE	SOIL TYPE	Begin Station	End Station	ϕ (°)	C (psf)	γ (pcf)	Design Pullout Resistance Q_d (lb/ft)
1	Sedimentary Formation	392+79.00	394+20.00	34	300	125	2,262
2	Engineered Fill	394+20.00	395+00.00	34	100	120	2,262

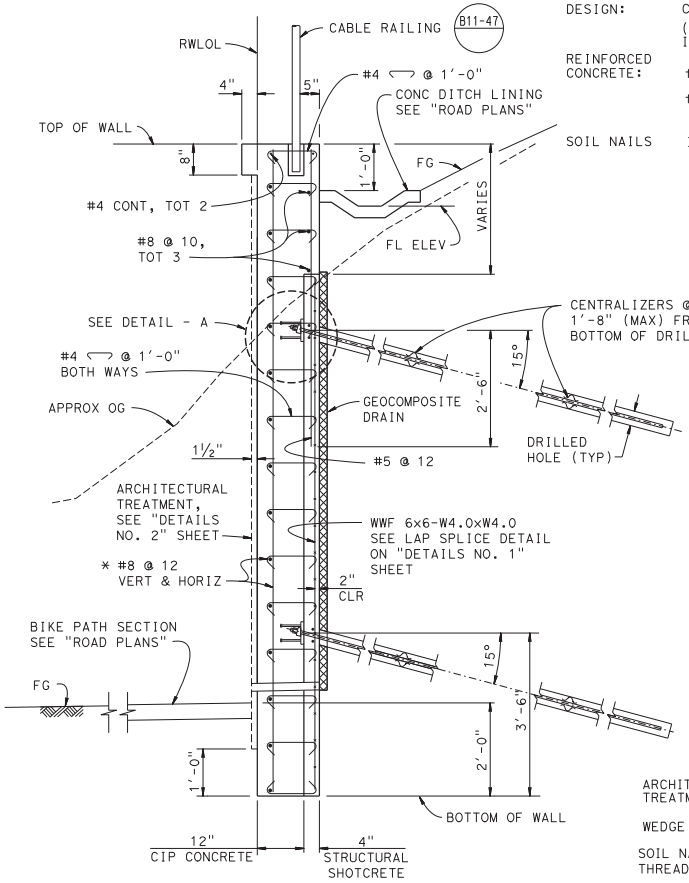

TYPICAL SECTION

¾" = 1'-0"

* BAR LENGTH VARIES. CUT OFF BAR AS NEEDED TO MAINTAIN 2" CLR TO BOTTOM OF WALL

NOTE:
THE CONTRACTOR SHALL VERIFY ALL CONTROLLING FIELD DIMENSIONS BEFORE ORDERING OR FABRICATING ANY MATERIAL.

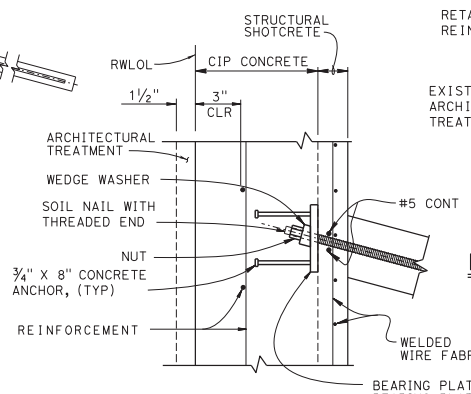

DETAIL - A

NO SCALE

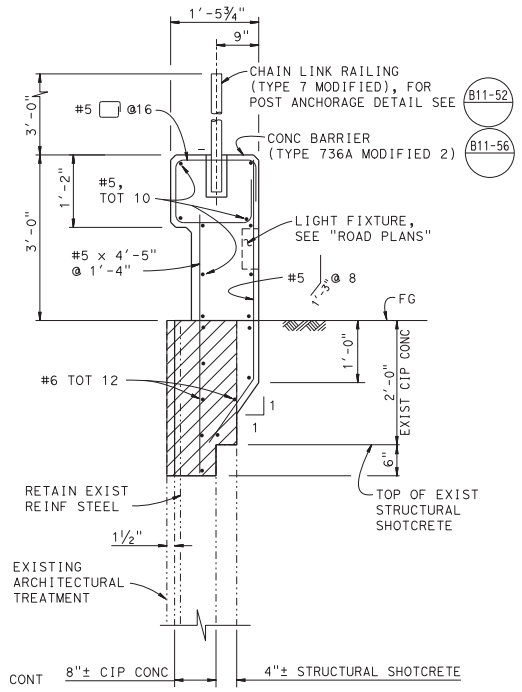

BARRIER AT EXIST SOIL NAIL WALL

NO SCALE

NOTE:
EXISTING CABLE RAILING AT TOP OF WALL AND EXISTING GUTTER NOT SHOWN FOR CLARITY

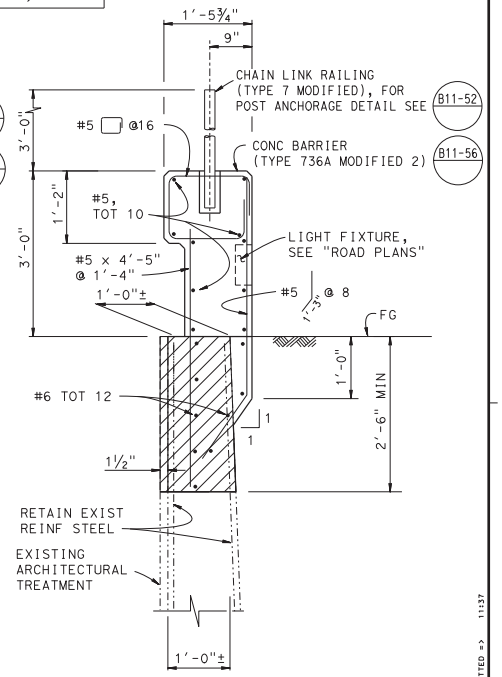

BARRIER AT EXIST TYPE 2 WALL

NO SCALE

LEGEND:
- INDICATES EXISTING CONSTRUCTION
- INDICATES NEW STRUCTURE
- INDICATES REMOVE RETAINING WALL (PORTION)

DESIGN	BY R. ANDERSON	CHECKED M. VO	
DETAILS	BY R. KIRKLAND	CHECKED M. VO	
QUANTITIES	BY R. ANDERSON	CHECKED M. VO	

STATE OF CALIFORNIA DEPARTMENT OF TRANSPORTATION

DIVISION OF ENGINEERING SERVICES STRUCTURE DESIGN DESIGN BRANCH 10

BRIDGE NO. 57E0121
POST MILE M5.668

MID CITY BIKE FACILITY SNW-392
TYPICAL SECTION

STRUCTURES DESIGN DETAIL SHEET (ENGLISH) (REV. 09-01-10)

ORIGINAL SCALE IN INCHES FOR REDUCED PLANS 0 1 2 3

UNIT: 3589
PROJECT NUMBER & PHASE: 1100020291 CONTRACT NO.: 11-2T1900

DISREGARD PRINTS BEARING EARLIER REVISION DATES

REVISION DATES 8-29-12 10-30-14 10-24-14 SHEET 4 OF 10

FILE => 57e0121kts04.dgn

TIME PLOTTED => 11:37
DATE PLOTTED => 30-OCT-2014
FILENAME => 41KA48

DIST	COUNTY	ROUTE	POST MILES TOTAL PROJECT	SHEET No.	TOTAL SHEETS
11	SD	15	5.6/R6.0		

Renee M. Anderson 10-01-14
REGISTERED CIVIL ENGINEER DATE

PLANS APPROVAL DATE

REGISTERED PROFESSIONAL ENGINEER RENEE ANDERSON NO. 61040 Exp. 12-31-2014 CIVIL STATE OF CALIFORNIA

The State of California or its officers or agents shall not be responsible for the accuracy or completeness of electronic copies of this plan sheet.

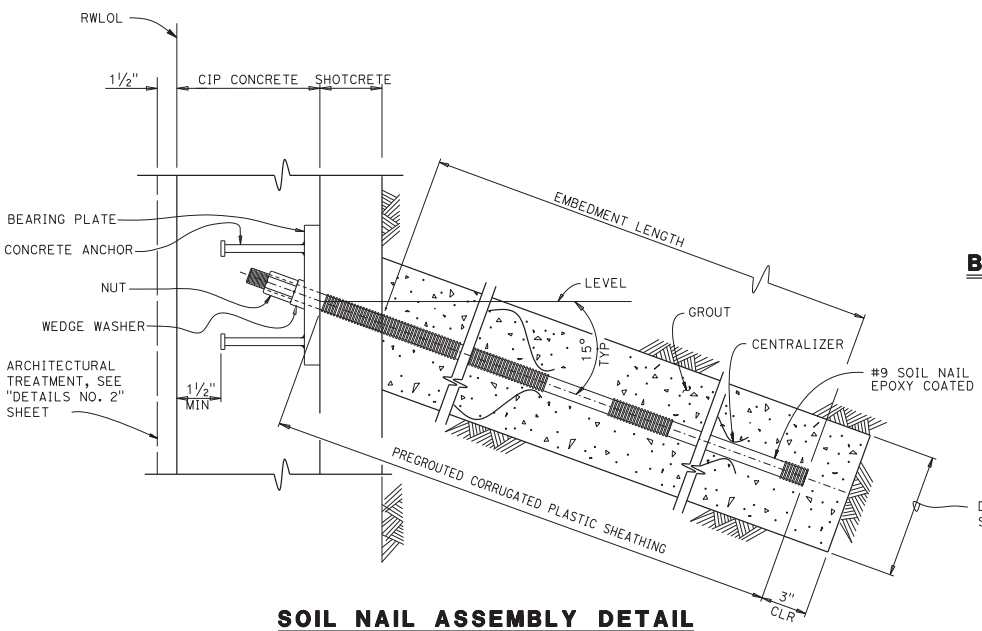

SOIL NAIL ASSEMBLY DETAIL

NO SCALE

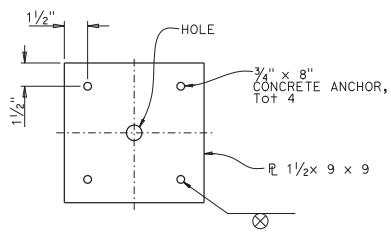

BEARING PLATE DETAIL

NO SCALE

NOTES:

1. Required size and strength of reinforcing bar for Test Soil Nail to be determined by the contractor
2. Minimum hole diameter is bar diameter plus 4" or 2" grout cover.

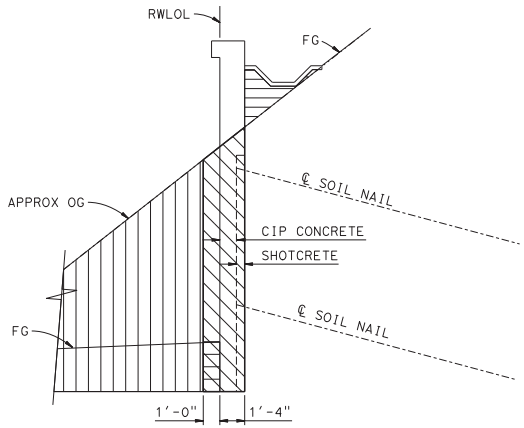

EXCAVATION & BACKFILL LIMITS

NO SCALE

LEGEND:

- STRUCTURE EXCAVATION (SOIL NAIL WALL)
- ROADWAY EXCAVATION SEE "ROAD PLANS"
- STRUCTURE BACKFILL (SOIL NAIL WALL)

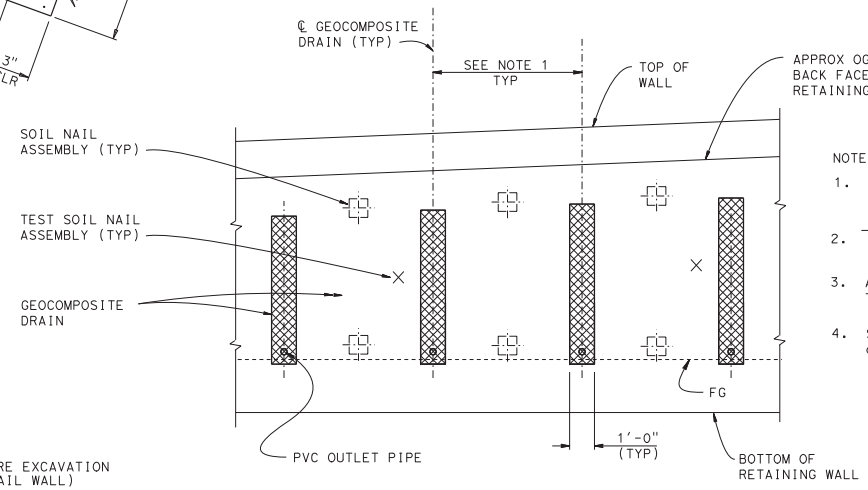

NOTES:

1. Center Geocomposite drain between Soil Nail assemblies.
2. - Indicates Soil Nail Assembly.
3. Adjust Geocomposite Drain to clear Test Soil Nails.
4. Start Geocomposite Drain at elevation of top row of nails.

TYPICAL ELEVATION - GEOCOMPOSITE DRAIN

NO SCALE

	BY	CHECKED
DESIGN	R. ANDERSON	M. VO
DETAILS	R. KIRKLAND	M. VO
QUANTITIES	R. ANDERSON	M. VO

STATE OF CALIFORNIA DEPARTMENT OF TRANSPORTATION

DIVISION OF ENGINEERING SERVICES STRUCTURE DESIGN DESIGN BRANCH 10

BRIDGE NO. 57E0121 POST MILE M5.668

MID CITY BIKE FACILITY SNW-392

SOIL NAIL DETAILS

STRUCTURES DESIGN DETAIL SHEET (ENGLISH) (REV. 09-01-10)

ORIGINAL SCALE IN INCHES FOR REDUCED PLANS 0 1 2 3

UNIT: 3589
PROJECT NUMBER & PHASE: 1100020291
CONTRACT NO.: 11-2T1900

DISREGARD PRINTS BEARING EARLIER REVISION DATES

REVISION DATES 8-29-02 9-23-14 4-29-14

SHEET 5 OF 10

FILE => 57e0121usndt05.dgn

DIST	COUNTY	ROUTE	POST MILES TOTAL PROJECT	SHEET No.	TOTAL SHEETS
11	SD	15	5.6/R6.0		

Renee M. Anderson 10-01-14
REGISTERED CIVIL ENGINEER DATE

PLANS APPROVAL DATE

REGISTERED PROFESSIONAL ENGINEER
RENEE ANDERSON
No. 61040
Exp. 12-31-2014
CIVIL
STATE OF CALIFORNIA

The State of California or its officers or agents shall not be responsible for the accuracy or completeness of electronic copies of this plan sheet.

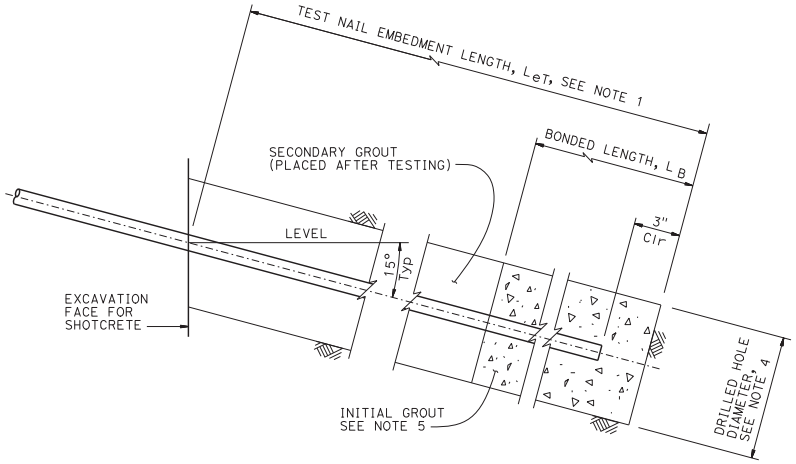

TEST NAIL DETAIL

3" = 1'-0

NOTES:

1. The test nail embedment length LeT, shall be equal to 2/3 of the embedment length, Le, of adjacent production soil nail assemblies, but not less than 12'-0".
2. The total length of the test nail assembly equals the embedment length plus the length required for jacking equipment.
3. For location of proof test nail see "STRUCTURE PLAN" sheets. Additional proof test nails will be installed and tested per special provisions.
4. Contractor to determine drilled hole diameter.
5. Finished grout surface to be normal to the bar.

STANDARD DRAWING
FILE NO. xs12-020
APPROVAL DATE July 2011

STATE OF CALIFORNIA
DEPARTMENT OF TRANSPORTATION

DIVISION OF ENGINEERING SERVICES

BRIDGE NO. 57E0121
POST MILE M5.668

MID CITY BIKE FACILITY SNW-392
TEST NAIL DETAILS

DS OSD 2147A (ENGLISH STANDARD DRAWING "XS" BORDER REV. (02-02-11)

ORIGINAL SCALE IN INCHES FOR REDUCED PLANS 0 1 2 3

UNIT: 3589
PROJECT NUMBER & PHASE: 1100020291
CONTRACT NO.: 11-2T1900

DISREGARD PRINTS BEARING EARLIER REVISION DATES
REVISION DATES 1-24-14 4-28-14 9-23-14

SHEET 6 OF 10

FILE => 57e0121xs12-020-06.dgn

DATE PLOTTED => 30-OCT-2014 TIME PLOTTED => 11:37

DIST	COUNTY	ROUTE	POST MILES TOTAL PROJECT	SHEET No.	TOTAL SHEETS
11	SD	15	5.6/R6.0		

Renee M. Anderson 10-01-14
REGISTERED CIVIL ENGINEER DATE

PLANS APPROVAL DATE

REGISTERED PROFESSIONAL ENGINEER RENEE ANDERSON NO. 61040 Exp. 12-31-2014 CIVIL STATE OF CALIFORNIA

The State of California or its officers or agents shall not be responsible for the accuracy or completeness of electronic copies of this plan sheet.

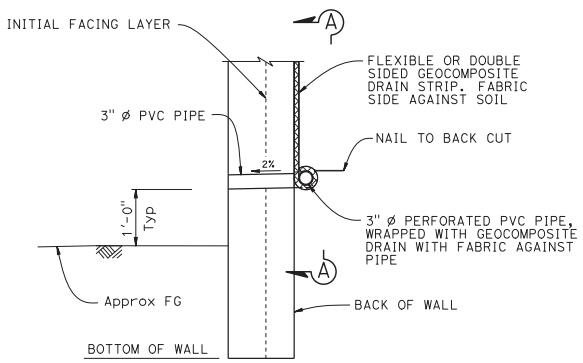

WALL DRAIN DETAIL AT WEEPHOLE
OPTION A
No scale

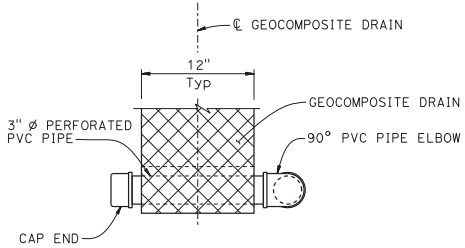

VIEW A-A
No scale

NOTES:

1. Geocomposite drain strip per Section 88 Geosynthetics of the Standard Specifications
2. Elevation of drains and weepholes as shown on "SOIL NAIL DETAILS" sheet.

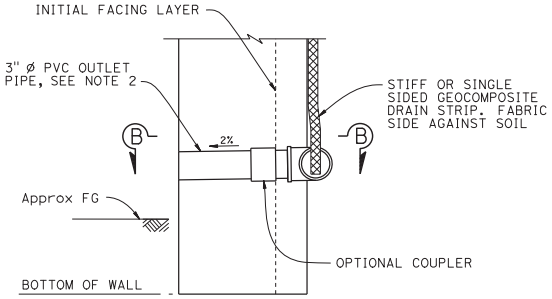

WALL DRAIN DETAIL AT WEEPHOLE
OPTION B
No scale

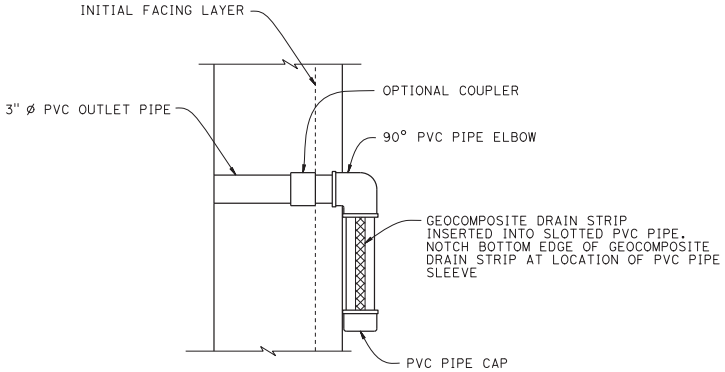

SECTION B-B
No Scale

DESIGN	BY R. ANDERSON	CHECKED M. VO	
DETAILS	BY R. KIRKLAND	CHECKED M. VO	
QUANTITIES	BY R. ANDERSON	CHECKED M. VO	

STATE OF CALIFORNIA
DEPARTMENT OF TRANSPORTATION

DIVISION OF ENGINEERING SERVICES
STRUCTURE DESIGN
DESIGN BRANCH 10

BRIDGE NO. 57E0121
POST MILE M5.668

MID CITY BIKE FACILITY SNW-392
WALL DRAIN DETAILS

STRUCTURES DESIGN DETAIL SHEET (ENGLISH) (REV. 09-01-10)

ORIGINAL SCALE IN INCHES FOR REDUCED PLANS 0 1 2 3

UNIT: 3589
PROJECT NUMBER & PHASE: 1100020291
CONTRACT NO.: 11-2T1900

DISREGARD PRINTS BEARING EARLIER REVISION DATES

REVISION DATES 8-29-12 9-23-14 4-29-14

SHEET 7 OF 10

FILE => 57e0121xs12-021-07.dgn

DIST	COUNTY	ROUTE	POST MILES TOTAL PROJECT	SHEET No.	TOTAL SHEETS
11	SD	15	5.6/R6.0		

Renee M. Anderson 10-01-14
REGISTERED CIVIL ENGINEER DATE

PLANS APPROVAL DATE

REGISTERED PROFESSIONAL ENGINEER RENEE ANDERSON NO. 61040 Exp. 12-31-2014 CIVIL STATE OF CALIFORNIA

The State of California or its officers or agents shall not be responsible for the accuracy or completeness of electronic copies of this plan sheet.

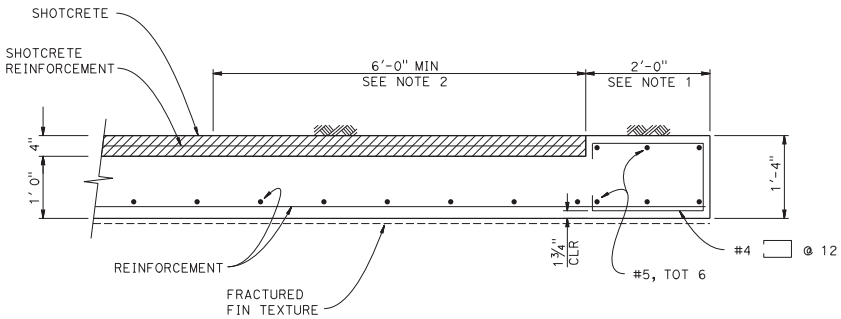

NOTES:

1. Upper 2'-0" of inside face to be placed against form. Remainder may be placed against undisturbed material.
2. Abrasive blast methods shall be used to clean the shotcrete surface to the extent that clean aggregate is exposed within these limits prior to constructing cast in place concrete.

BEGIN/END OF WALL PLAN

1"=1'-0"

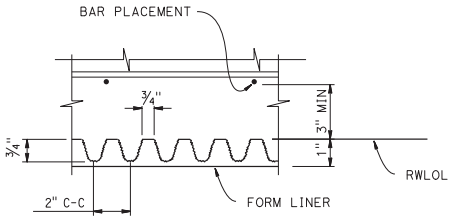

SECTION B-B

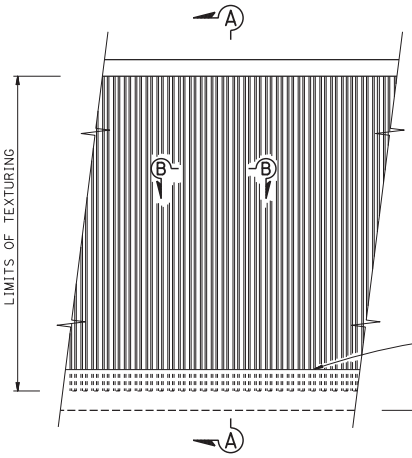

ELEVATION

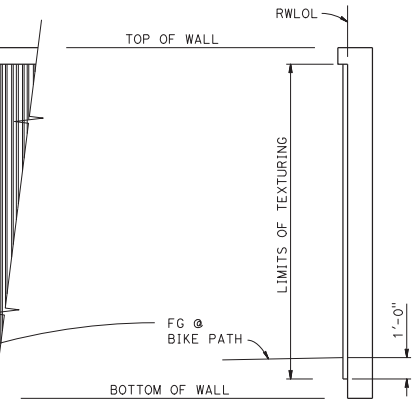

SECTION A-A

FRACTURED FIN TEXTURE

NO SCALE

DESIGN	BY R. ANDERSON	CHECKED M. VO	
DETAILS	BY R. KIRKLAND	CHECKED M. VO	
QUANTITIES	BY R. ANDERSON	CHECKED M. VO	

STATE OF CALIFORNIA DEPARTMENT OF TRANSPORTATION

DIVISION OF ENGINEERING SERVICES STRUCTURE DESIGN DESIGN BRANCH 10

BRIDGE NO. 57E0121 POST MILE M5.668

MID CITY BIKE FACILITY SNW-392

DETAILS NO. 1

STRUCTURES DESIGN DETAIL SHEET (ENGLISH) (REV. 09-01-10)

ORIGINAL SCALE IN INCHES FOR REDUCED PLANS 0 1 2 3

UNIT: 3589
PROJECT NUMBER & PHASE: 1100020291
CONTRACT NO.: 11-2T1900

DISREGARD PRINTS BEARING EARLIER REVISION DATES

REVISION DATES 8-29-02 9-23-14 4-29-14

SHEET 8 OF 10

FILE => 57e0121xsndt08.dgn

Dist	COUNTY	ROUTE	POST MILES TOTAL PROJECT	SHEET No.	TOTAL SHEETS
11	SD	15	M5.6/R6.0		

REGISTERED CIVIL ENGINEER DATE

PLANS APPROVAL DATE

REGISTERED PROFESSIONAL ENGINEER WILLIAM MICHAEL NICHOLS No. C74525 Exp. 12-31-15 CIVIL STATE OF CALIFORNIA

THE STATE OF CALIFORNIA OR ITS OFFICERS OR AGENTS SHALL NOT BE RESPONSIBLE FOR THE ACCURACY OR COMPLETENESS OF SCANNED COPIES OF THIS PLAN SHEET.

NOTES:

1. FOR ACCURATE RIGHT OF WAY DATA, SEE RIGHT OF WAY RECORD MAPS AT DISTRICT OFFICE.
2. FOR DETAILS NOT SHOWN SEE REVISED STANDARD PLANS RSP B3-1B
3. FOR ARCHITECTURAL TREATMENT DETAIL, SEE RETAINING WALL DETAIL SHEET.

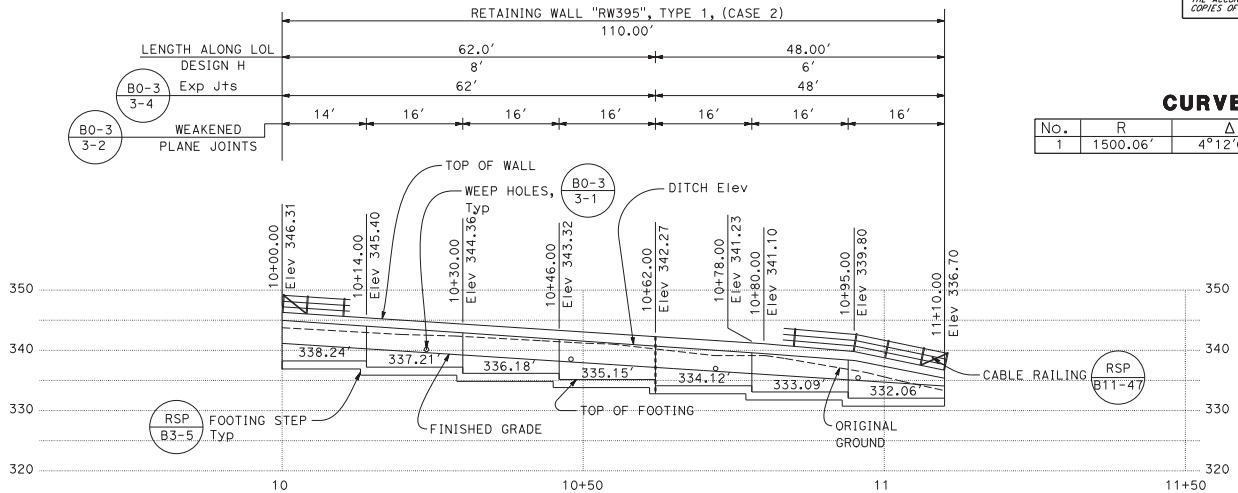

ELEVATION

SCALE: Horiz 1'=10'
Vert 1'=10'

CURVE DATA

No.	R	Δ	T	L
1	1500.06'	4°12'05"	55.02'	110.00

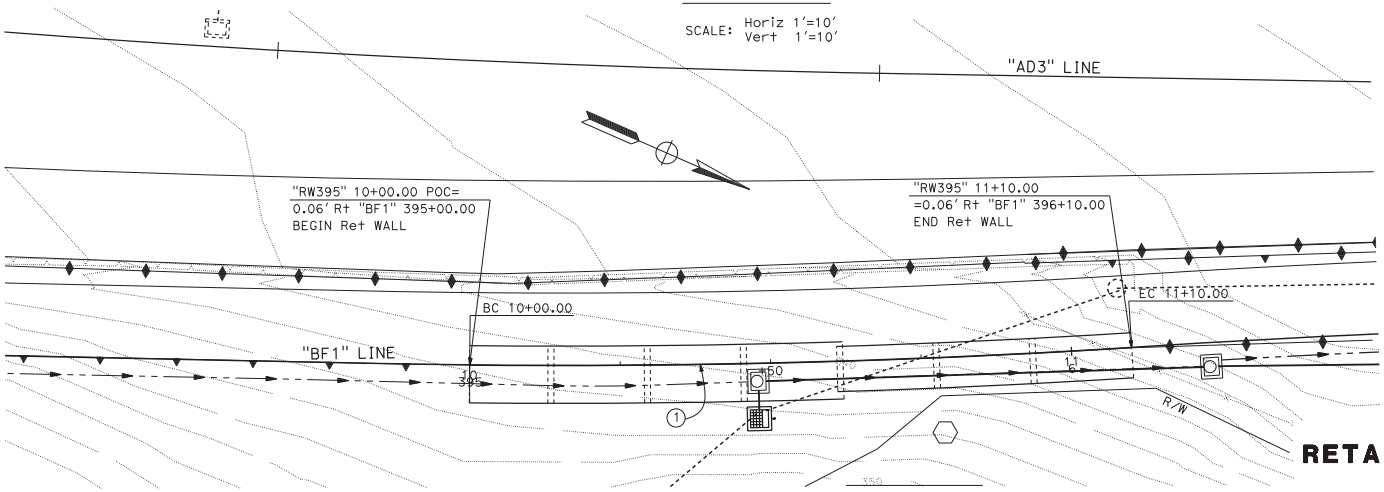

FOOTING LAYOUT

APPROVED FOR RETAINING WALL WORK ONLY

SCALE: 1"=10'

RETAINING WALL PLAN
R3-1
RETAINING WALL RW395

STATE OF CALIFORNIA - DEPARTMENT OF TRANSPORTATION
Caltrans DESIGN

FUNCTIONAL SUPERVISOR: HARWELL ONTOY
CALCULATED-DESIGNED BY: MICHAEL NICHOLS
CHECKED BY: EVELYN FIGUEROA
REVISED BY
DATE REVISED

LAST REVISION 09-18-14 DATE PLOTTED => 05-NOV-2014 TIME PLOTTED => 15:09

BORDER LAST REVISED 7/2/2010 | USERNAME => s112825 DGN FILE => 1100020291qc001.dgn | RELATIVE BORDER SCALE IS IN INCHES 0 1 2 3 | UNIT 2762 | PROJECT NUMBER & PHASE 11000202911

Dist	COUNTY	ROUTE	POST MILES TOTAL PROJECT	SHEET No.	TOTAL SHEETS
11	SD	15	M5.6/R6.0		

REGISTERED CIVIL ENGINEER DATE

PLANS APPROVAL DATE

THE STATE OF CALIFORNIA OR ITS OFFICERS OR AGENTS SHALL NOT BE RESPONSIBLE FOR THE ACCURACY OR COMPLETENESS OF SCANNED COPIES OF THIS PLAN SHEET.

REGISTERED PROFESSIONAL ENGINEER WILLIAM MICHAEL NICHOLS No.C74525 Exp.12-31-15 CIVIL STATE OF CALIFORNIA

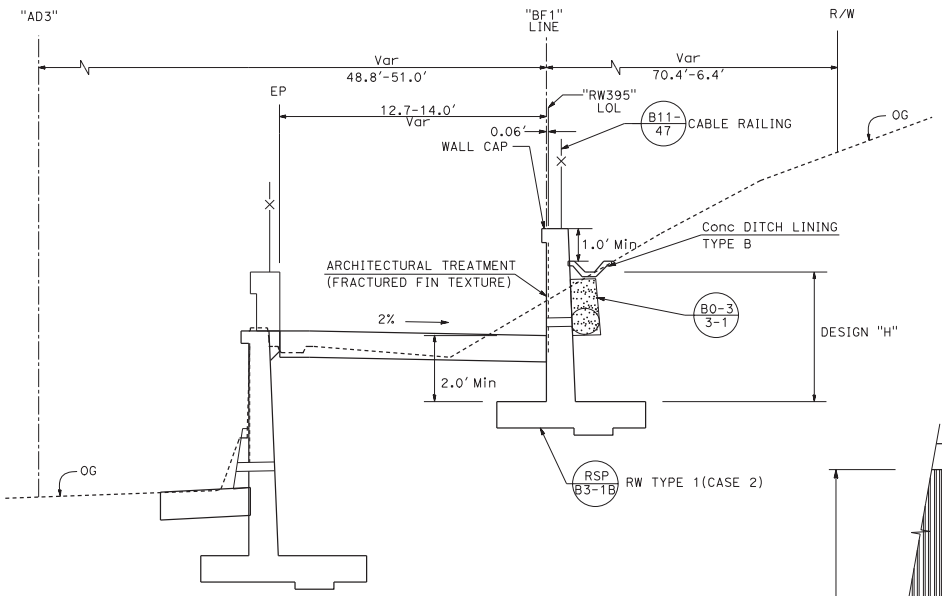

TYPICAL SECTION

Sta 395+00.00 TO 396+10.00 "BF1"

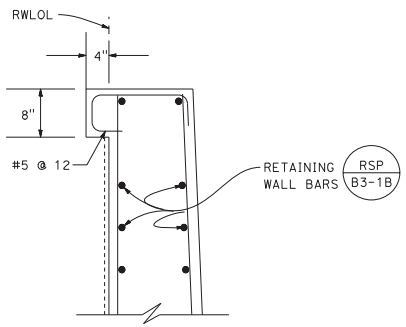

WALL CAP DETAIL

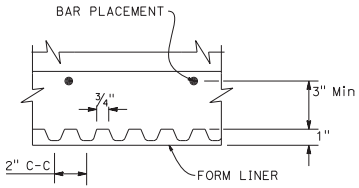

SECTION E-E

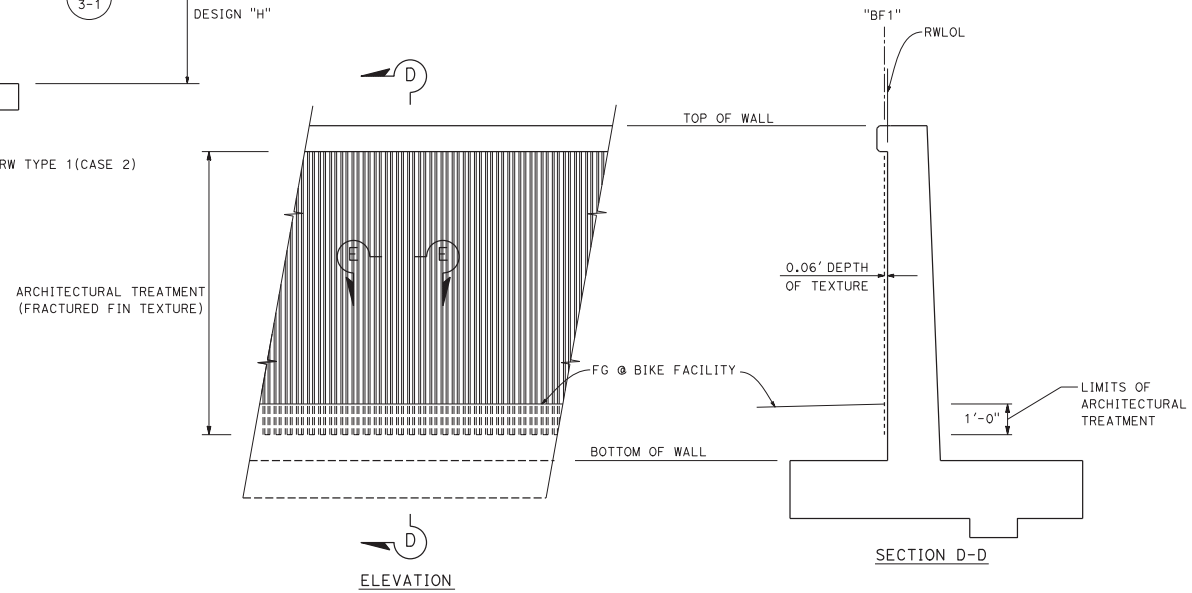

FRACTURED FIN TEXTURE

QUANTITIES		RW395
STRUCTURAL CONCRETE (Ret WALL)	CY	106
BAR REINFORCING STEEL (Ret WALL)	LB	8,600
STRUCTURE EXCAVATION (Ret WALL)	CY	232
STRUCTURE BACKFILL (Ret WALL)	CY	164
PERVIOUS BACKFILL MATERIAL (Ret WALL)	CY	10
FRACTURED FIN TEXTURE	SQFT	576
CABLE RAILING	LF	110.0

RETAINING WALL DETAILS

"RW395"

NO SCALE

R3-2

STATE OF CALIFORNIA - DEPARTMENT OF TRANSPORTATION
Caltrans DESIGN

FUNCTIONAL SUPERVISOR HARWELL ONTOY
CALCULATED-DESIGNED BY WILLIAM MICHAEL NICHOLS
CHECKED BY EVELYN FIGUEROA
REVISED BY
DATE REVISED

LAST REVISION 09-18-14
DATE PLOTTED => 05-NOV-2014
TIME PLOTTED => 15:09

BORDER LAST REVISED 7/2/2010
USERNAME => s112825
DGN FILE => 1100020291qc002.dgn
RELATIVE BORDER SCALE IS IN INCHES 0 1 2 3
UNIT 2762
PROJECT NUMBER & PHASE 11000202911

Dist	COUNTY	ROUTE	POST MILES TOTAL PROJECT	SHEET No.	TOTAL SHEETS
11	SD	15	M5.6/R6.0		

REGISTERED CIVIL ENGINEER DATE

PLANS APPROVAL DATE

REGISTERED PROFESSIONAL ENGINEER WILLIAM MICHAEL NICHOLS No. C74525 Exp. 12-31-15 CIVIL STATE OF CALIFORNIA

THE STATE OF CALIFORNIA OR ITS OFFICERS OR AGENTS SHALL NOT BE RESPONSIBLE FOR THE ACCURACY OR COMPLETENESS OF SCANNED COPIES OF THIS PLAN SHEET.

NOTES:

1. FOR ACCURATE RIGHT OF WAY DATA, CONTACT RIGHT-OF-WAY ENGINEERING AT THE DISTRICT OFFICE.
2. REFER TO REVISED STD PLAN RSP B11-56 FOR ADDITIONAL INFORMATION ON CONCRETE BARRIER.
3. REFER TO STD PLAN B11-52 FOR ADDITIONAL INFORMATION ON CHAIN LINK RAILING.
4. FOR DETAILS NOT SHOWN SEE REVISED STANDARD PLANS RSP B3-1A.
5. FOR ARCHITECTURAL TREATMENT DETAIL, SEE RETAINING WALL DETAIL SHEET.
6. SEE ELECTRICAL PLANS FOR BARRIER LIGHTING.

CURVE DATA

No.	R	Δ	T	L
1	1983.48′	3°55′51″	68.07′	136.08′

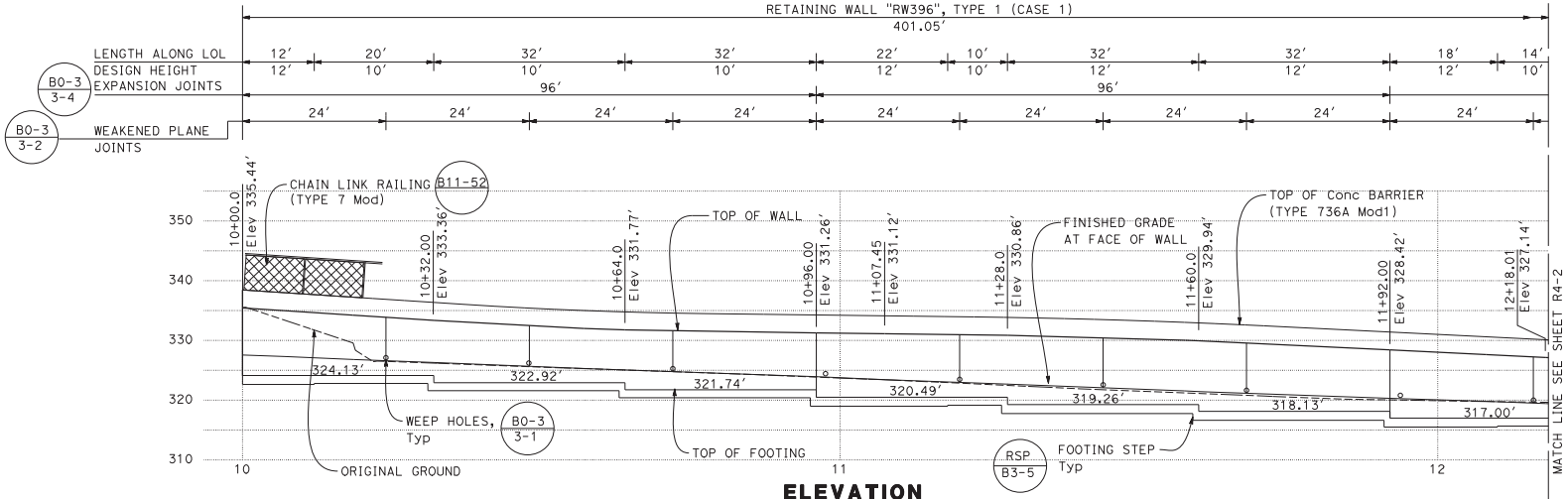

ELEVATION

SCALE: Horiz 1"=10′
Vert 1"=10′

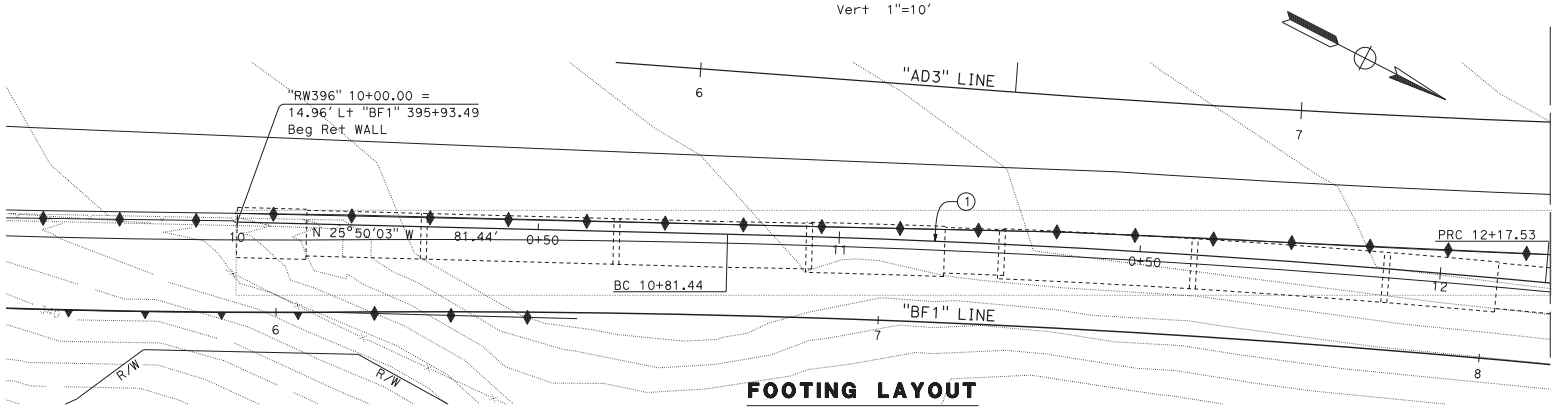

FOOTING LAYOUT

APPROVED FOR RETAINING WALL WORK ONLY

SCALE: 1"=10′

RETAINING WALL PLAN
R4-1
RETAINING WALL RW396

STATE OF CALIFORNIA - DEPARTMENT OF TRANSPORTATION
Caltrans
DESIGN
FUNCTIONAL SUPERVISOR HARWELL ONTOY
CALCULATED-DESIGNED BY MICHAEL NICHOLS
CHECKED BY EVELYN FIGUEROA
REVISED BY
DATE REVISED

LAST REVISION 09-18-14
DATE PLOTTED => 05-NOV-2014
TIME PLOTTED => 15:09

BORDER LAST REVISED 7/2/2010
USERNAME => s112825
DGN FILE => 1100020291qd001.dgn
RELATIVE BORDER SCALE IS IN INCHES 0 1 2 3
UNIT 2762
PROJECT NUMBER & PHASE 11000202911

Dist	COUNTY	ROUTE	POST MILES TOTAL PROJECT	SHEET No.	TOTAL SHEETS
11	SD	15	M5.6/R6.0		

REGISTERED CIVIL ENGINEER DATE

PLANS APPROVAL DATE

REGISTERED PROFESSIONAL ENGINEER WILLIAM MICHAEL NICHOLS No. C74525 Exp. 12-31-15 CIVIL STATE OF CALIFORNIA

THE STATE OF CALIFORNIA OR ITS OFFICERS OR AGENTS SHALL NOT BE RESPONSIBLE FOR THE ACCURACY OR COMPLETENESS OF SCANNED COPIES OF THIS PLAN SHEET.

CURVE DATA

No.	R	Δ	T	L
2	1155.52′	9°04′24"	91.69′	182.99′

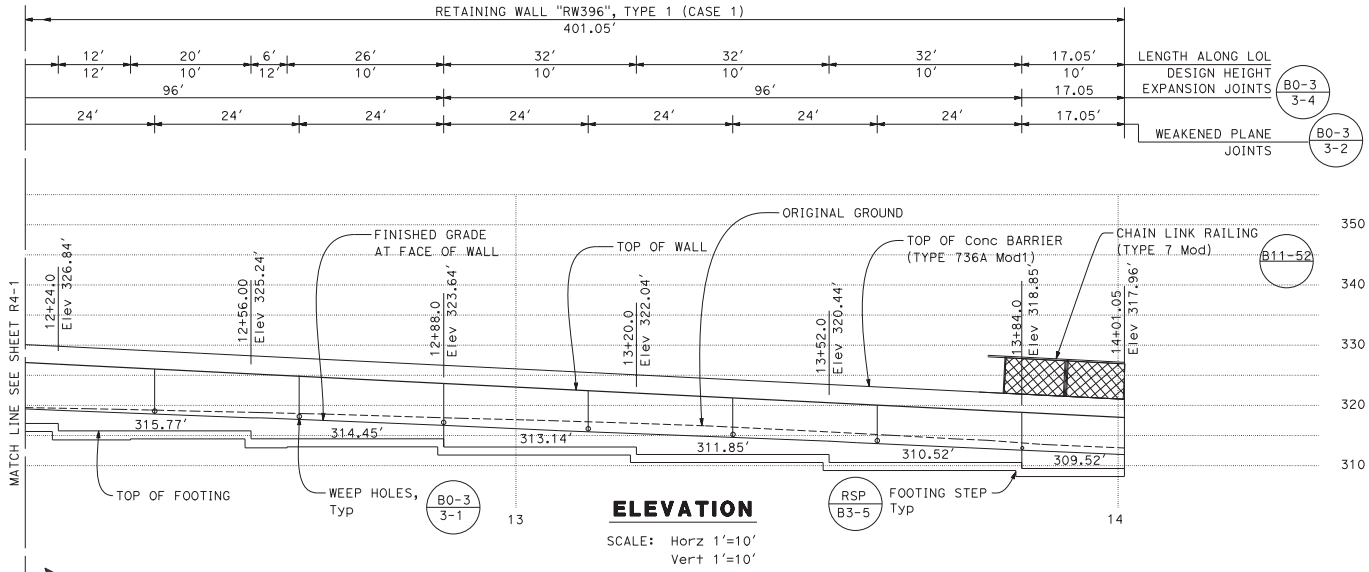

ELEVATION

SCALE: Horz 1′=10′
Vert 1′=10′

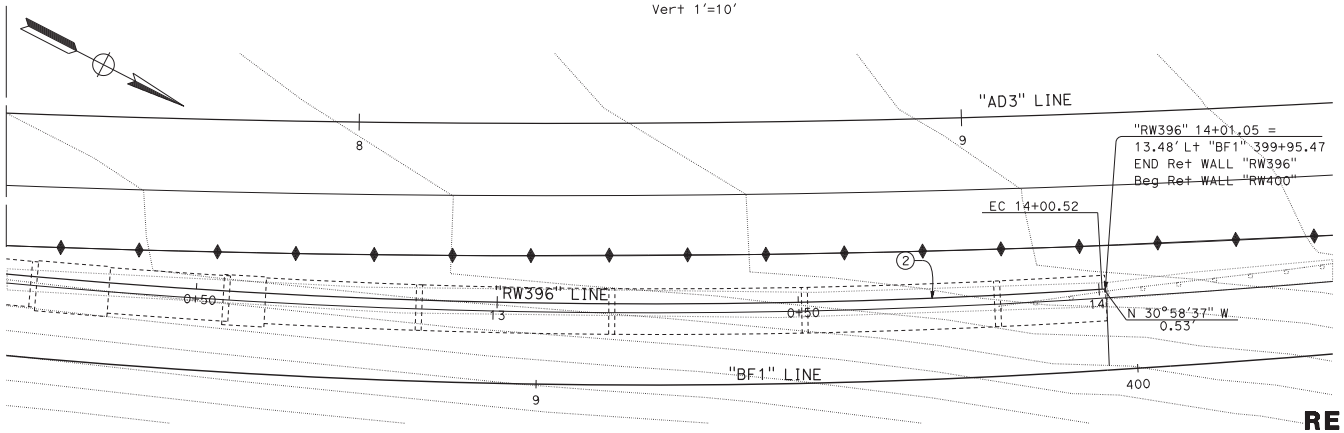

FOOTING LAYOUT

SCALE: 1"=10′

APPROVED FOR RETAINING WALL WORK ONLY

RETAINING WALL PLAN R4-2

RETAINING WALL RW396

STATE OF CALIFORNIA - DEPARTMENT OF TRANSPORTATION
Caltrans
DESIGN

FUNCTIONAL SUPERVISOR: HARWELL ONTOY
CALCULATED-DESIGNED BY: MICHAEL NICHOLS
CHECKED BY: EVELYN FIGUEROA
REVISED BY
DATE REVISED

LAST REVISION 09-18-14
DATE PLOTTED => 05-NOV-2014
TIME PLOTTED => 15:09

BORDER LAST REVISED 7/2/2010
USERNAME => s112825
DGN FILE => 1100020291qd002.dgn
RELATIVE BORDER SCALE IS IN INCHES 0 1 2 3
UNIT 2762
PROJECT NUMBER & PHASE 11000202911

Dist	COUNTY	ROUTE	POST MILES TOTAL PROJECT	SHEET No.	TOTAL SHEETS
11	SD	15	M5.6/R6.0		

REGISTERED CIVIL ENGINEER DATE

PLANS APPROVAL DATE

REGISTERED PROFESSIONAL ENGINEER WILLIAM MICHAEL NICHOLS No.C74525 Exp.12-31-15 CIVIL STATE OF CALIFORNIA

THE STATE OF CALIFORNIA OR ITS OFFICERS OR AGENTS SHALL NOT BE RESPONSIBLE FOR THE ACCURACY OR COMPLETENESS OF SCANNED COPIES OF THIS PLAN SHEET.

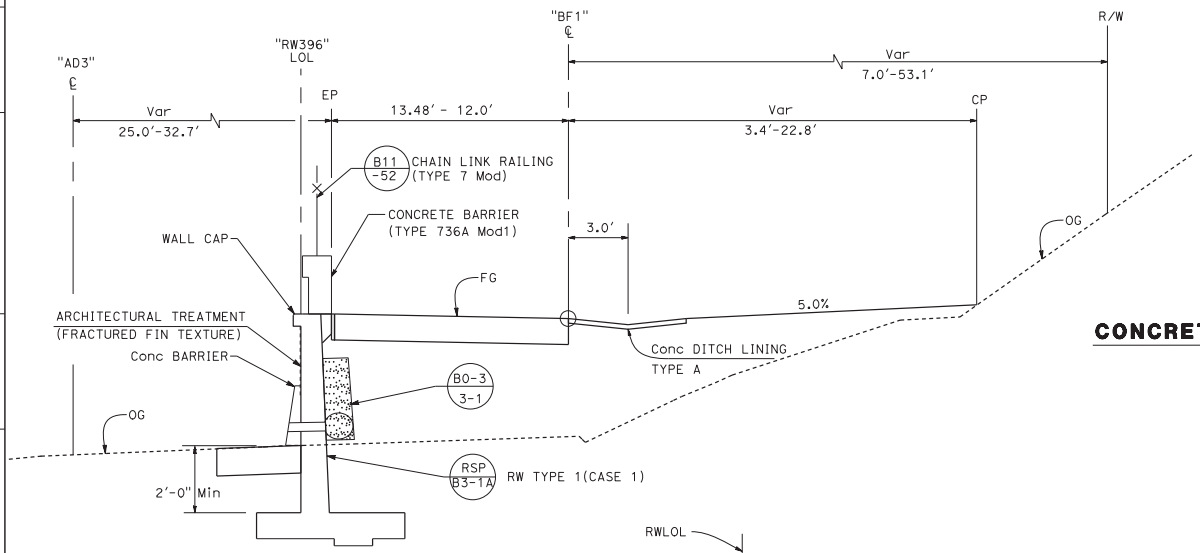

TYPICAL SECTION

Sta 395+93.49 TO 399+95.47 "BF1"

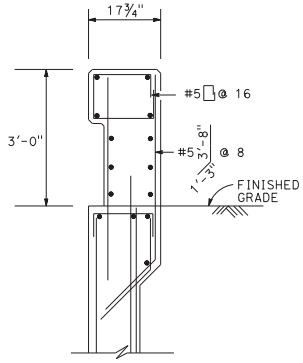

CONCRETE BARRIER (TYPE 736A Mod 1)

SEE NOTE 2

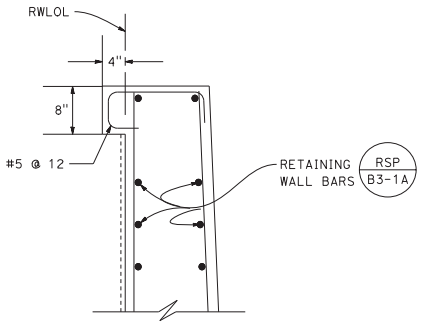

WALL CAP DETAIL

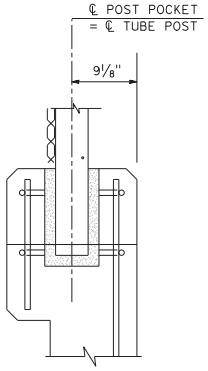

POST ANCHORAGE DETAIL

SEE NOTE 3

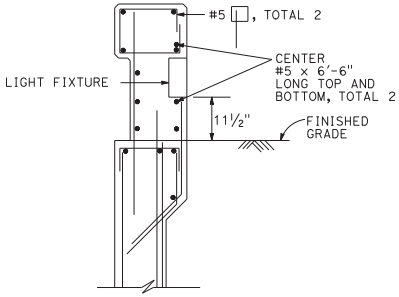

LIGHT FIXTURE ON CONCRETE BARRIER

SEE NOTE 2, 6

QUANTITIES		RW396
STRUCTURAL CONCRETE (Ret WALL)	CY	388
BAR REINFORCING STEEL (Ret WALL)	LB	41,500
STRUCTURE EXCAVATION (Ret WALL)	CY	694
STRUCTURE BACKFILL (Ret WALL)	CY	854
PERVIOUS BACKFILL MATERIAL (Ret WALL)	CY	70
FRACTURED FIN TEXTURE	SQFT	1,850
CONCRETE BARRIER (TYPE 736A Mod 1)	LF	401.4
CHAIN LINK RAILING (TYPE 7 Mod)	LF	401.4

RETAINING WALL DETAILS

"RW396"

NO SCALE

R4-3

STATE OF CALIFORNIA - DEPARTMENT OF TRANSPORTATION
Caltrans
DESIGN

FUNCTIONAL SUPERVISOR: HARWELL ONTOY
CALCULATED-DESIGNED BY: WILLIAM MICHAEL NICHOLS
CHECKED BY: EVELYN FIGUEROA
REVISED BY
DATE REVISED

LAST REVISION 09-19-14
DATE PLOTTED => 05-NOV-2014
TIME PLOTTED => 15:09

BORDER LAST REVISED 7/2/2010
USERNAME => s112825
DGN FILE => 1100020291qd003.dgn
RELATIVE BORDER SCALE IS IN INCHES 0 1 2 3
UNIT 2762
PROJECT NUMBER & PHASE 11000202911

Dist	COUNTY	ROUTE	POST MILES TOTAL PROJECT	SHEET No.	TOTAL SHEETS
11	SD	15	M5.6/R6.0		

REGISTERED CIVIL ENGINEER DATE

PLANS APPROVAL DATE

THE STATE OF CALIFORNIA OR ITS OFFICERS OR AGENTS SHALL NOT BE RESPONSIBLE FOR THE ACCURACY OR COMPLETENESS OF SCANNED COPIES OF THIS PLAN SHEET.

REGISTERED PROFESSIONAL ENGINEER WILLIAM MICHAEL NICHOLS No.C74525 Exp.12-31-15 CIVIL STATE OF CALIFORNIA

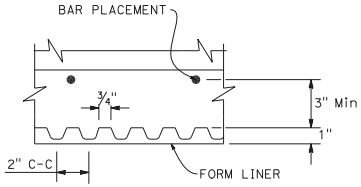

SECTION E-E

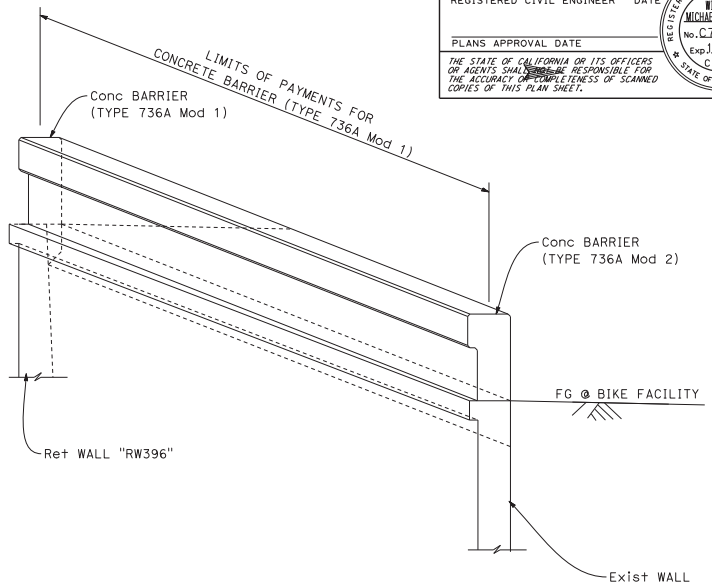

CONCRETE BARRIER TRANSITION (TYPE 736A Mod 2) TO CONCRETE BARRIER (TYPE 736A Mod 1)

Sta 395+93.49 TO Sta 396+13.49 "BF1"

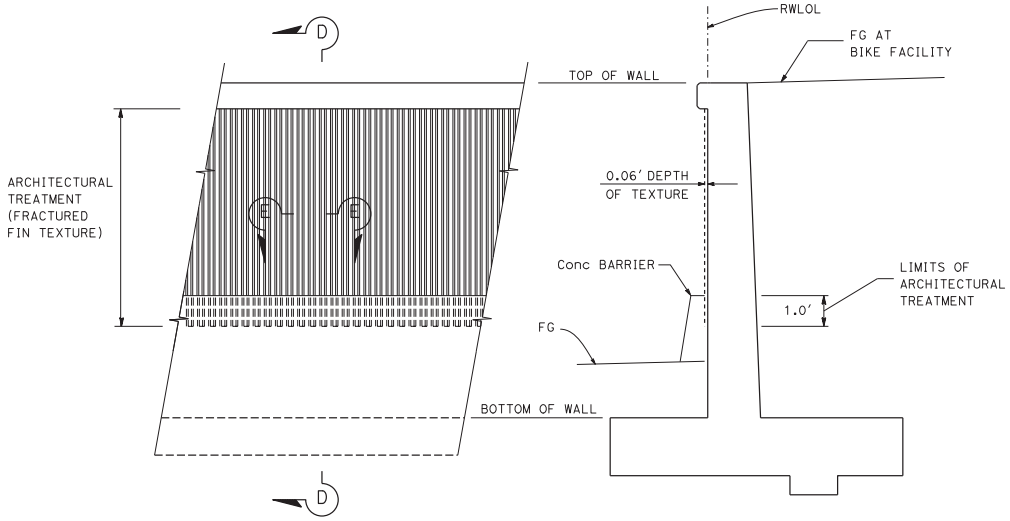

FRACTURED FIN TEXTURE

RETAINING WALL DETAILS

"RW396"

NO SCALE

R4-4

STATE OF CALIFORNIA - DEPARTMENT OF TRANSPORTATION
Caltrans
DESIGN
FUNCTIONAL SUPERVISOR HARWELL ONTOY
CALCULATED-DESIGNED BY WILLIAM MICHAEL NICHOLS
CHECKED BY EVELYN FIGUEROA
REVISED BY
DATE REVISED

LAST REVISION 07-28-14
DATE PLOTTED => 05-NOV-2014
TIME PLOTTED => 15:09

BORDER LAST REVISED 7/2/2010
USERNAME => s112825
DGN FILE => 1100020291qd004.dgn
RELATIVE BORDER SCALE IS IN INCHES 0 1 2 3
UNIT 2762
PROJECT NUMBER & PHASE 11000202911

Dist	COUNTY	ROUTE	POST MILES TOTAL PROJECT	SHEET No.	TOTAL SHEETS
11	SD	15	M5.6/R6.0		

REGISTERED CIVIL ENGINEER DATE

PLANS APPROVAL DATE

REGISTERED PROFESSIONAL ENGINEER WILLIAM MICHAEL NICHOLS No. C74525 Exp. 12-31-15 CIVIL STATE OF CALIFORNIA

THE STATE OF CALIFORNIA OR ITS OFFICERS OR AGENTS SHALL NOT BE RESPONSIBLE FOR THE ACCURACY OR COMPLETENESS OF SCANNED COPIES OF THIS PLAN SHEET.

NOTES:

1. FOR ACCURATE RIGHT OF WAY DATA, CONTACTRIGHT-OF-WAY ENGINEERING AT THE DISTRICT OFFICE.
2. REFER TO REVISED STD PLAN RSP B11-56 FOR ADDITIONAL INFORMATION ON CONCRETE BARRIER.
3. REFER TO STD PLAN B11-52 FOR ADDITIONAL INFORMATION ON CHAIN LINK RAILING.
4. FOR DETAILS NOT SHOWN SEE REVISED STANDARD PLANS RSP B3-4A.
5. FOR ARCHITECTURAL TREATMENT DETAIL, SEE RETAINING WALL DETAIL SHEET.
6. SEE ELECTRICAL PLANS FOR BARRIER LIGHTING.

CURVE DATA

No.	R	Δ	T	L
1	1,386.52′	3°16′40″	39.67′	79.32′
2	613.48′	4°41′49″	25.16′	50.29′

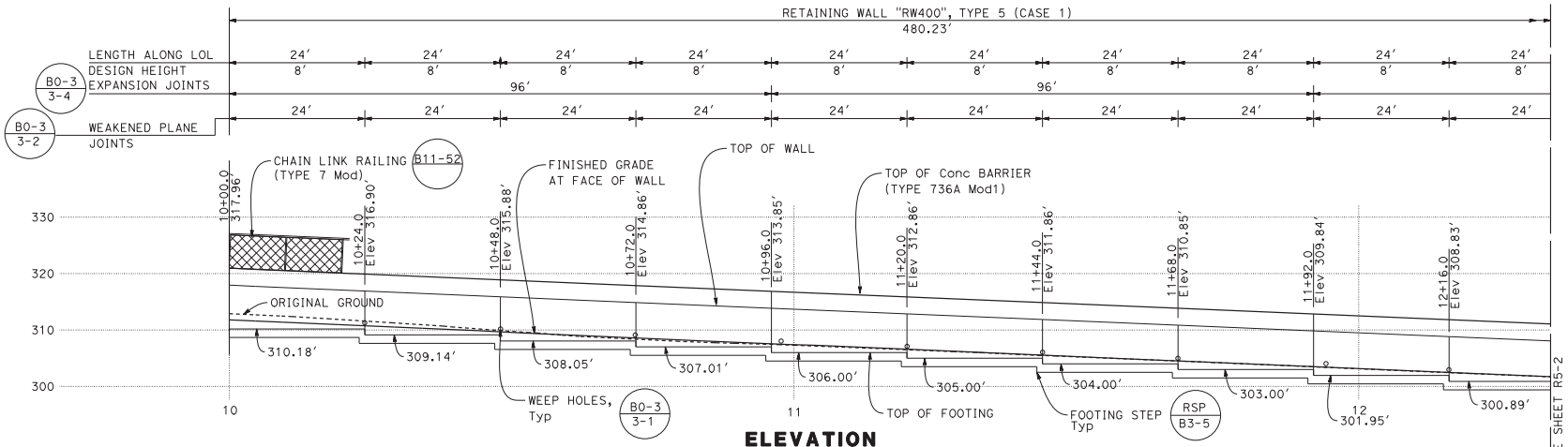

ELEVATION

SCALE: Horiz 1"=10′
Vert 1"=10′

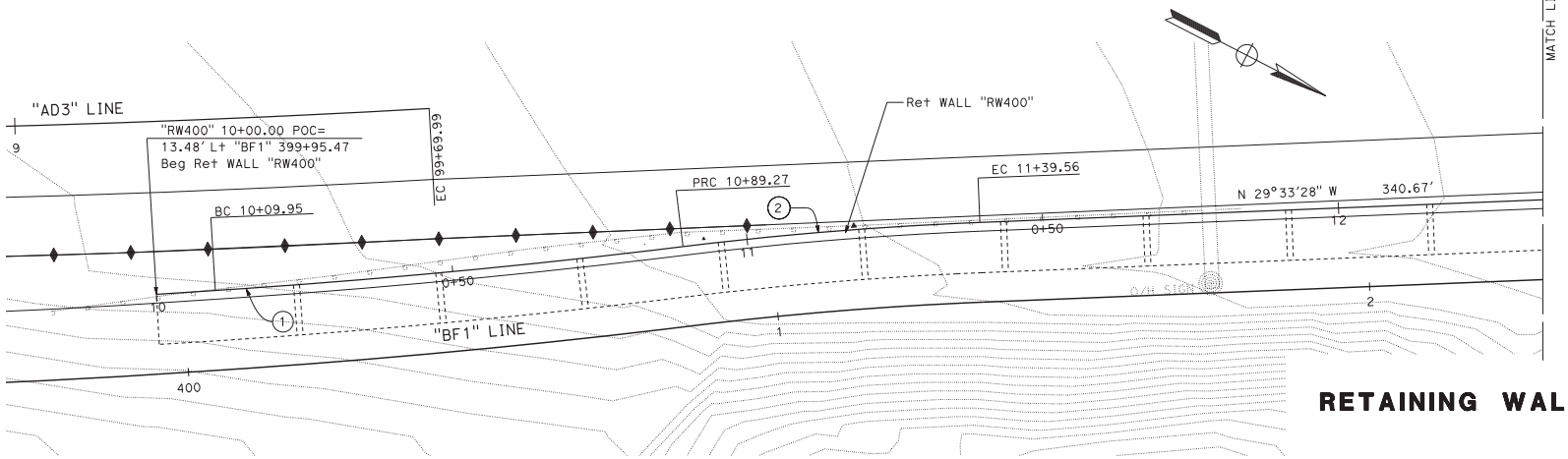

FOOTING LAYOUT

APPROVED FOR RETAINING WALL WORK ONLY

SCALE: 1"=10′

RETAINING WALL PLAN R5-1

RETAINING WALL RW400

STATE OF CALIFORNIA - DEPARTMENT OF TRANSPORTATION
Caltrans
DESIGN

FUNCTIONAL SUPERVISOR: HARWELL ONTOY
CALCULATED-DESIGNED BY: MICHAEL NICHOLS
CHECKED BY: EVELYN FIGUEROA
REVISED BY
DATE REVISED

LAST REVISION: DATE PLOTTED => 05-NOV-2014 TIME PLOTTED => 15:09

BORDER LAST REVISED 7/2/2010 | USERNAME => s112825 DGN FILE => 1100020291ge001.dgn | RELATIVE BORDER SCALE IS IN INCHES 0 1 2 3 | UNIT 2762 | PROJECT NUMBER & PHASE 11000202911

Dist	COUNTY	ROUTE	POST MILES TOTAL PROJECT	SHEET No.	TOTAL SHEETS
11	SD	15	M5.6/R6.0		

REGISTERED CIVIL ENGINEER DATE

PLANS APPROVAL DATE

REGISTERED PROFESSIONAL ENGINEER WILLIAM MICHAEL NICHOLS No. C74525 Exp. 12-31-15 CIVIL STATE OF CALIFORNIA

THE STATE OF CALIFORNIA OR ITS OFFICERS OR AGENTS SHALL NOT BE RESPONSIBLE FOR THE ACCURACY OR COMPLETENESS OF SCANNED COPIES OF THIS PLAN SHEET.

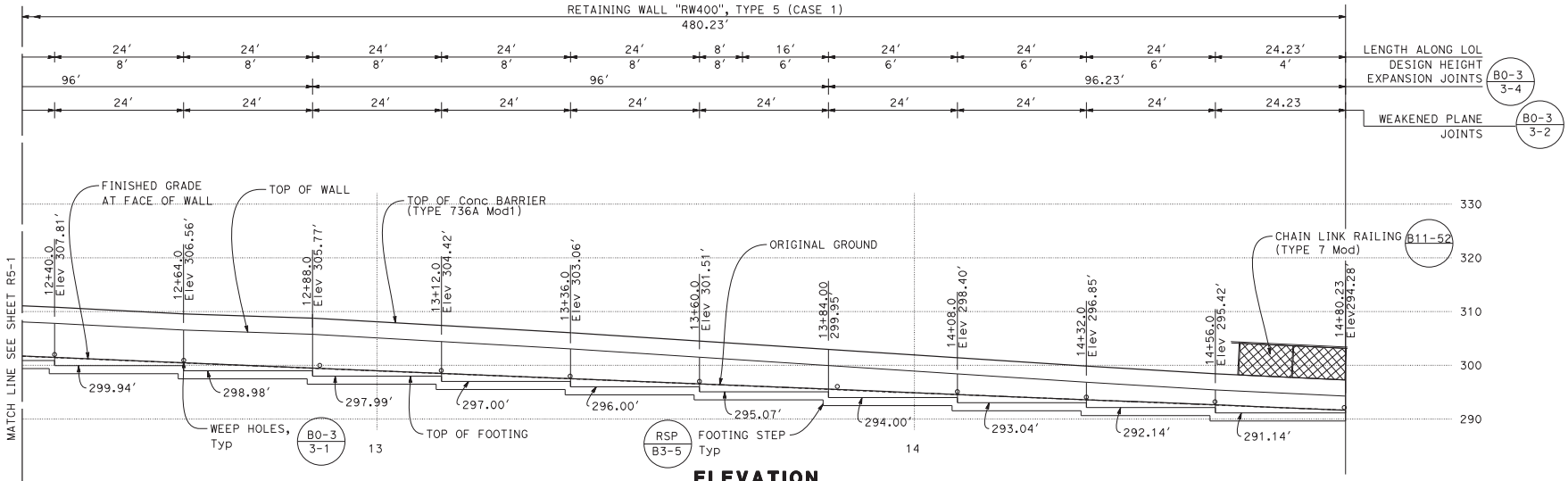

ELEVATION

SCALE: Horiz 1"=10'
Vert 1"=10'

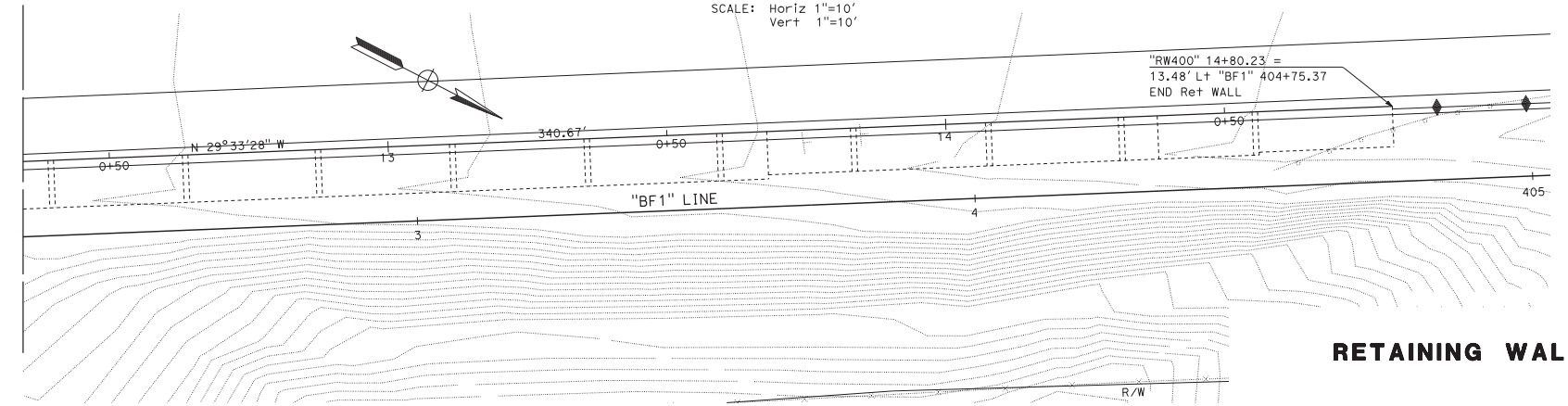

FOOTING LAYOUT

APPROVED FOR RETAINING WALL WORK ONLY

SCALE: 1"=10'

RETAINING WALL PLAN R5-2

RETAINING WALL RW400

STATE OF CALIFORNIA - DEPARTMENT OF TRANSPORTATION
Caltrans
DESIGN

FUNCTIONAL SUPERVISOR: HARWELL ONTOY
CALCULATED-DESIGNED BY: MICHAEL NICHOLS
CHECKED BY: EVELYN FIGUEROA
REVISED BY
DATE REVISED

LAST REVISION 07-31-14
DATE PLOTTED => 05-NOV-2014
TIME PLOTTED => 15:09

BORDER LAST REVISED 7/2/2010
USERNAME => s112825
DGN FILE => 1100020291ge002.dgn
RELATIVE BORDER SCALE IS IN INCHES 0 1 2 3
UNIT 2762
PROJECT NUMBER & PHASE 11000202911

Dist	COUNTY	ROUTE	POST MILES TOTAL PROJECT	SHEET No.	TOTAL SHEETS
11	SD	15	M5.6/R6.0		

REGISTERED CIVIL ENGINEER DATE

PLANS APPROVAL DATE

REGISTERED PROFESSIONAL ENGINEER WILLIAM MICHAEL NICHOLS No.C74525 Exp.12-31-15 CIVIL STATE OF CALIFORNIA

THE STATE OF CALIFORNIA OR ITS OFFICERS OR AGENTS SHALL NOT BE RESPONSIBLE FOR THE ACCURACY OR COMPLETENESS OF SCANNED COPIES OF THIS PLAN SHEET.

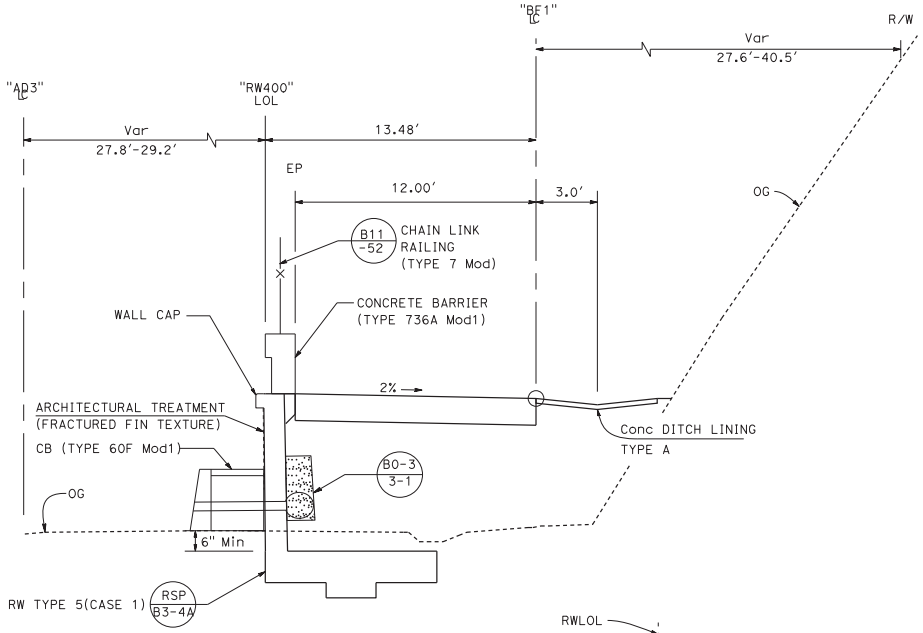

TYPICAL SECTION

Sta 399+95.47 TO 404+75.37 "BF1"

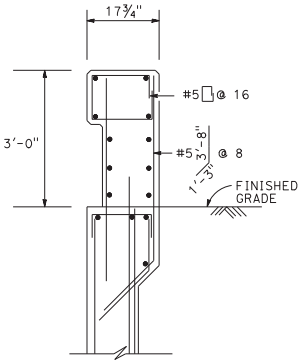

CONCRETE BARRIER (TYPE 736A Mod 1)

SEE NOTE 2

QUANTITIES		RW400
STRUCTURAL CONCRETE (Rev WALL)	CY	387
BAR REINFORCING STEEL (Rev WALL)	LB	39,400
STRUCTURE EXCAVATION (Rev WALL)	CY	457
STRUCTURE BACKFILL (Rev WALL)	CY	870
PERVIOUS BACKFILL MATERIAL (Rev WALL)	CY	40
FRACTURED FIN TEXTURE	SQFT	1,366
CONCRETE BARRIER (TYPE 736A Mod 1)	LF	480.1
CHAIN LINK RAILING (TYPE 7 Mod)	LF	480.1

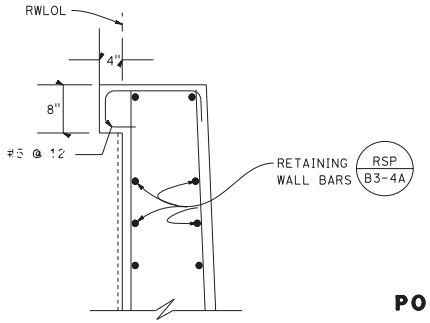

WALL CAP DETAIL

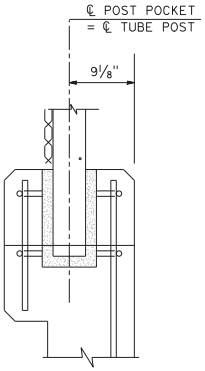

POST ANCHORAGE DETAIL

SEE NOTE 3

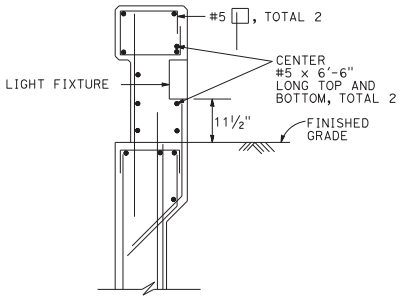

LIGHT FIXTURE ON CONCRETE BARRIER

SEE NOTE 2, 6

RETAINING WALL DETAILS

"RW400"

NO SCALE

R5-3

STATE OF CALIFORNIA - DEPARTMENT OF TRANSPORTATION
Caltrans
DESIGN

FUNCTIONAL SUPERVISOR: HARWELL ONTOY
CALCULATED-DESIGNED BY: WILLIAM MICHAEL NICHOLS
CHECKED BY: EVELYN FIGUEROA
REVISED BY
DATE REVISED

LAST REVISION 09-19-14
DATE PLOTTED => 05-NOV-2014
TIME PLOTTED => 15:09

BORDER LAST REVISED 7/2/2010
USERNAME => s112825
DGN FILE => 1100020291ge003.dgn
RELATIVE BORDER SCALE IS IN INCHES 0 1 2 3
UNIT 2762
PROJECT NUMBER & PHASE 11000202911

Dist	COUNTY	ROUTE	POST MILES TOTAL PROJECT	SHEET No.	TOTAL SHEETS
11	SD	15	M5.6/R6.0		

REGISTERED CIVIL ENGINEER DATE

PLANS APPROVAL DATE

REGISTERED PROFESSIONAL ENGINEER WILLIAM MICHAEL NICHOLS No.C74525 Exp.12-31-15 CIVIL STATE OF CALIFORNIA

THE STATE OF CALIFORNIA OR ITS OFFICERS OR AGENTS SHALL NOT BE RESPONSIBLE FOR THE ACCURACY OR COMPLETENESS OF SCANNED COPIES OF THIS PLAN SHEET.

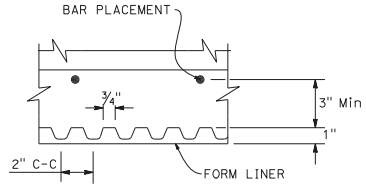

SECTION E-E

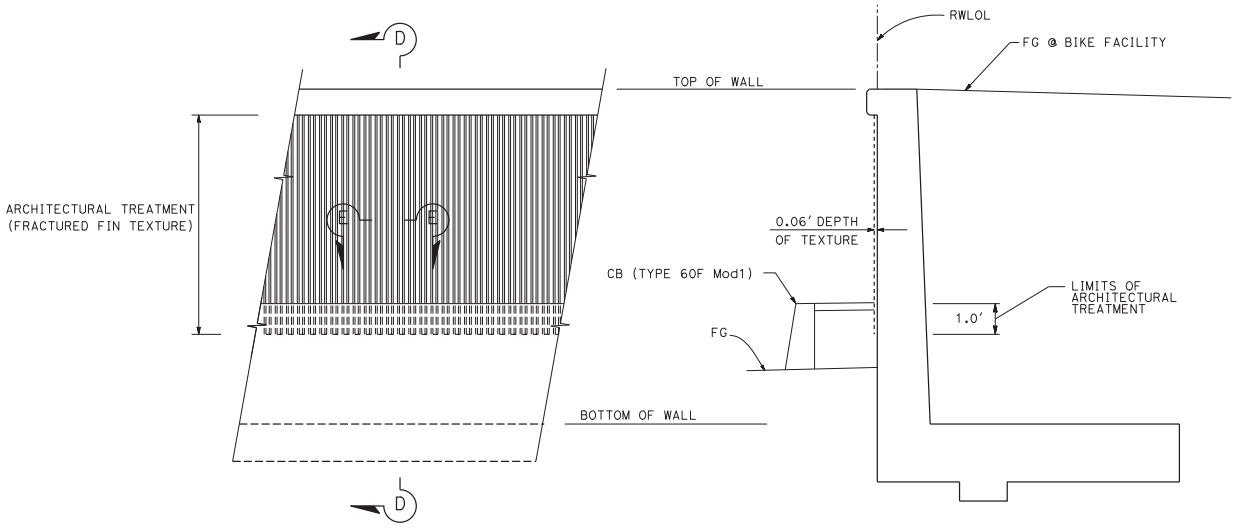

ELEVATION

SECTION D-D

FRACTURED FIN TEXTURE

RETAINING WALL DETAILS

"RW400"

NO SCALE

R5-4

STATE OF CALIFORNIA - DEPARTMENT OF TRANSPORTATION

Caltrans

DESIGN

FUNCTIONAL SUPERVISOR HARWELL ONTOY

CALCULATED-DESIGNED BY WILLIAM MICHAEL NICHOLS

CHECKED BY EVELYN FIGUEROA

REVISED BY

DATE REVISED

LAST REVISION 07-28-14

DATE PLOTTED => 05-NOV-2014
TIME PLOTTED => 15:09

BORDER LAST REVISED 7/2/2010

USERNAME => s112825
DGN FILE => 1100020291ge004.dgn

RELATIVE BORDER SCALE IS IN INCHES 0 1 2 3

UNIT 2762

PROJECT NUMBER & PHASE 11000202911

Dist	COUNTY	ROUTE	POST MILES TOTAL PROJECT	SHEET No.	TOTAL SHEETS
11	SD	15	M5.6/R6.0		

REGISTERED CIVIL ENGINEER DATE

PLANS APPROVAL DATE

REGISTERED PROFESSIONAL ENGINEER WILLIAM MICHAEL NICHOLS No. C74525 Exp. 12-31-15 CIVIL STATE OF CALIFORNIA

THE STATE OF CALIFORNIA OR ITS OFFICERS OR AGENTS SHALL NOT BE RESPONSIBLE FOR THE ACCURACY OR COMPLETENESS OF SCANNED COPIES OF THIS PLAN SHEET.

NOTES:

1. FOR ACCURATE RIGHT OF WAY DATA, SEE RIGHT OF WAY RECORD MAPS AT DISTRICT OFFICE.
2. FOR DETAILS NOT SHOWN SEE REVISED STANDARD PLANS RSP B3-1B
3. FOR ARCHITECTURAL TREATMENT DETAIL, SEE RETAINING WALL DETAIL SHEET.

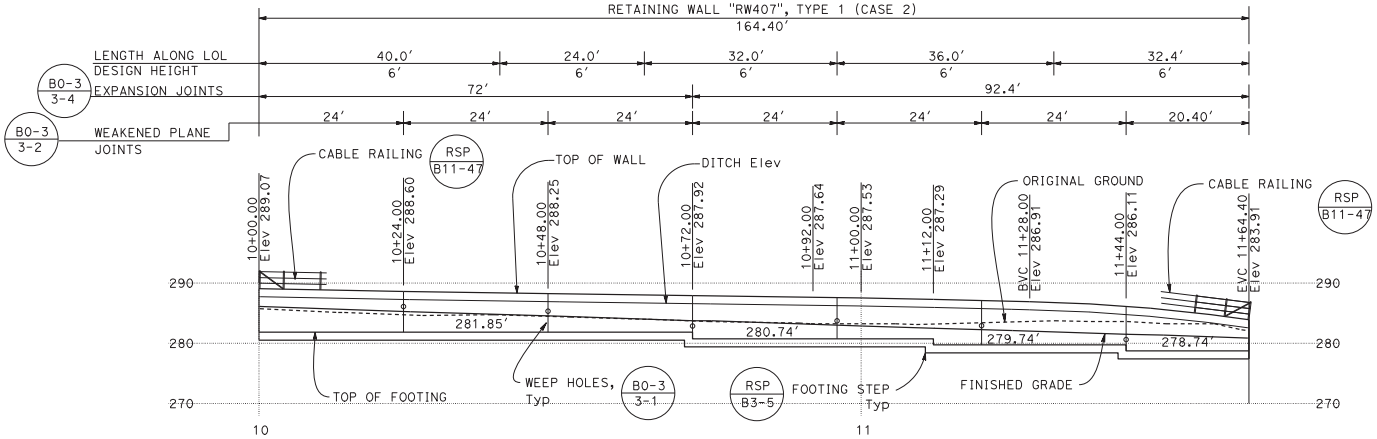

ELEVATION

SCALE: Horiz 1"=10'
Vert 1"=10'

CURVE DATA

No.	R	Δ	T	L
1	3564.94'	2°38'32"	82.21'	164.40'

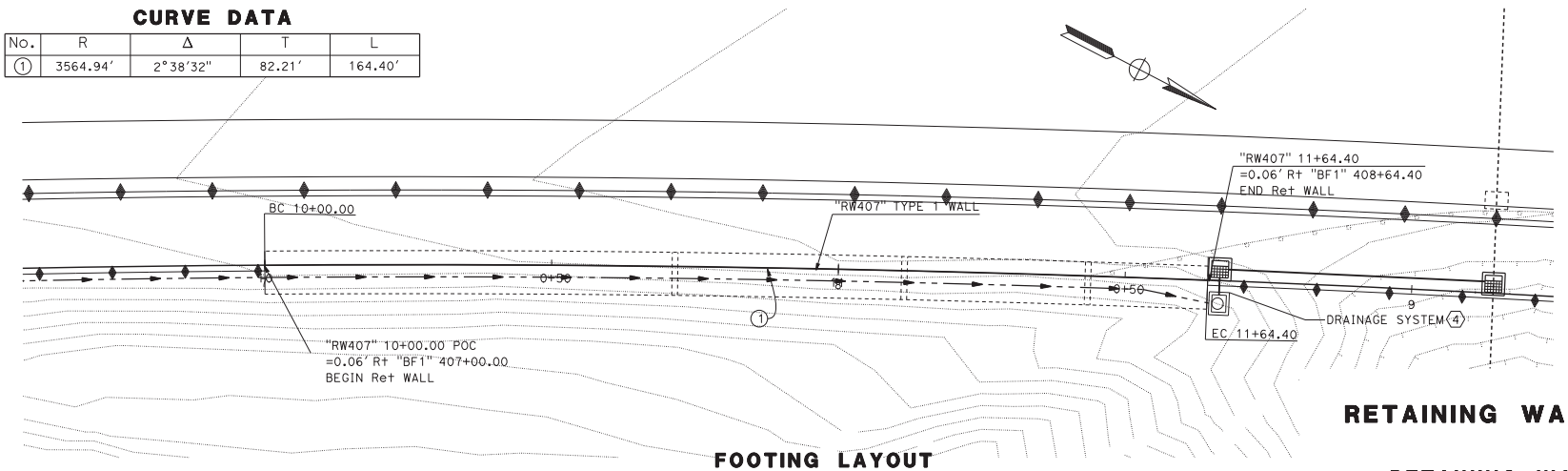

FOOTING LAYOUT

APPROVED FOR RETAINING WALL WORK ONLY

SCALE: 1"=10'

RETAINING WALL PLAN
R6-1
RETAINING WALL RW407

STATE OF CALIFORNIA - DEPARTMENT OF TRANSPORTATION
Caltrans
DESIGN

FUNCTIONAL SUPERVISOR: HARWELL ONTOY
CALCULATED-DESIGNED BY: MICHAEL NICHOLS
CHECKED BY: EVELYN FIGUEROA
REVISED BY
DATE REVISED

LAST REVISION 09-18-14
DATE PLOTTED => 05-NOV-2014
TIME PLOTTED => 15:09

BORDER LAST REVISED 7/2/2010
USERNAME => s112825
DGN FILE => 1100020291gf001.dgn
RELATIVE BORDER SCALE IS IN INCHES 0 1 2 3
UNIT 2762
PROJECT NUMBER & PHASE 11000202911

Dist	COUNTY	ROUTE	POST MILES TOTAL PROJECT	SHEET No.	TOTAL SHEETS
11	SD	15	M5.6/R6.0		

REGISTERED CIVIL ENGINEER DATE

PLANS APPROVAL DATE

REGISTERED PROFESSIONAL ENGINEER WILLIAM MICHAEL NICHOLS No. C74525 Exp. 12-31-15 CIVIL STATE OF CALIFORNIA

THE STATE OF CALIFORNIA OR ITS OFFICERS OR AGENTS SHALL NOT BE RESPONSIBLE FOR THE ACCURACY OR COMPLETENESS OF SCANNED COPIES OF THIS PLAN SHEET.

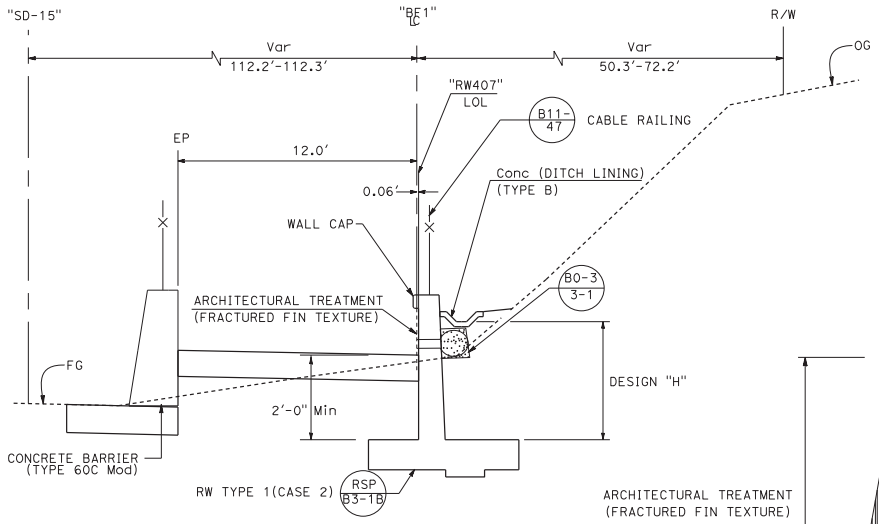

TYPICAL SECTION

Sta 10+00.0 TO 11+64.4

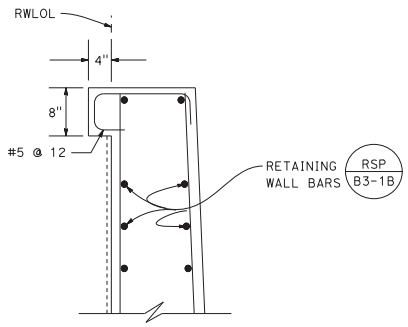

WALL CAP DETAIL

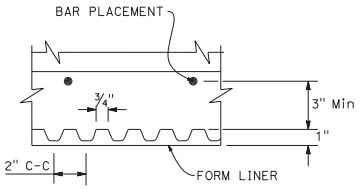

SECTION E-E

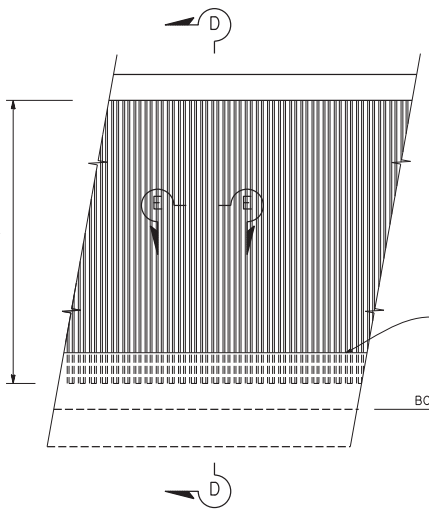

ELEVATION

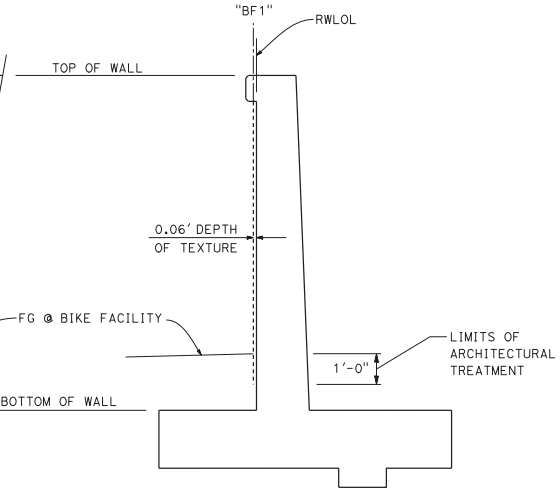

SECTION D-D

FRACTURED FIN TEXTURE

QUANTITIES		RW407
STRUCTURAL CONCRETE (Ret WALL)	CY	338
BAR REINFORCING STEEL (Ret WALL)	LB	9,900
STRUCTURE EXCAVATION (Ret WALL)	CY	270
STRUCTURE BACKFILL (Ret WALL)	CY	250
PERVIOUS BACKFILL MATERIAL (Ret WALL)	CY	10
FRACTURED FIN TEXTURE	SQFT	723
CABLE RAILING	LF	164.4

RETAINING WALL DETAILS

"RW407"

NO SCALE

R6-2

STATE OF CALIFORNIA - DEPARTMENT OF TRANSPORTATION
Caltrans
DESIGN

FUNCTIONAL SUPERVISOR: HARWELL ONTOY
CALCULATED-DESIGNED BY: WILLIAM MICHAEL NICHOLS
CHECKED BY: EVELYN FIGUEROA
REVISED BY
DATE REVISED

LAST REVISION 09-18-14
DATE PLOTTED => 05-NOV-2014
TIME PLOTTED => 15:09

BORDER LAST REVISED 7/2/2010
USERNAME => s112825
DGN FILE => 1100020291qf002.dgn
RELATIVE BORDER SCALE IS IN INCHES 0 1 2 3
UNIT 2762
PROJECT NUMBER & PHASE 11000202911

November 6, 2014

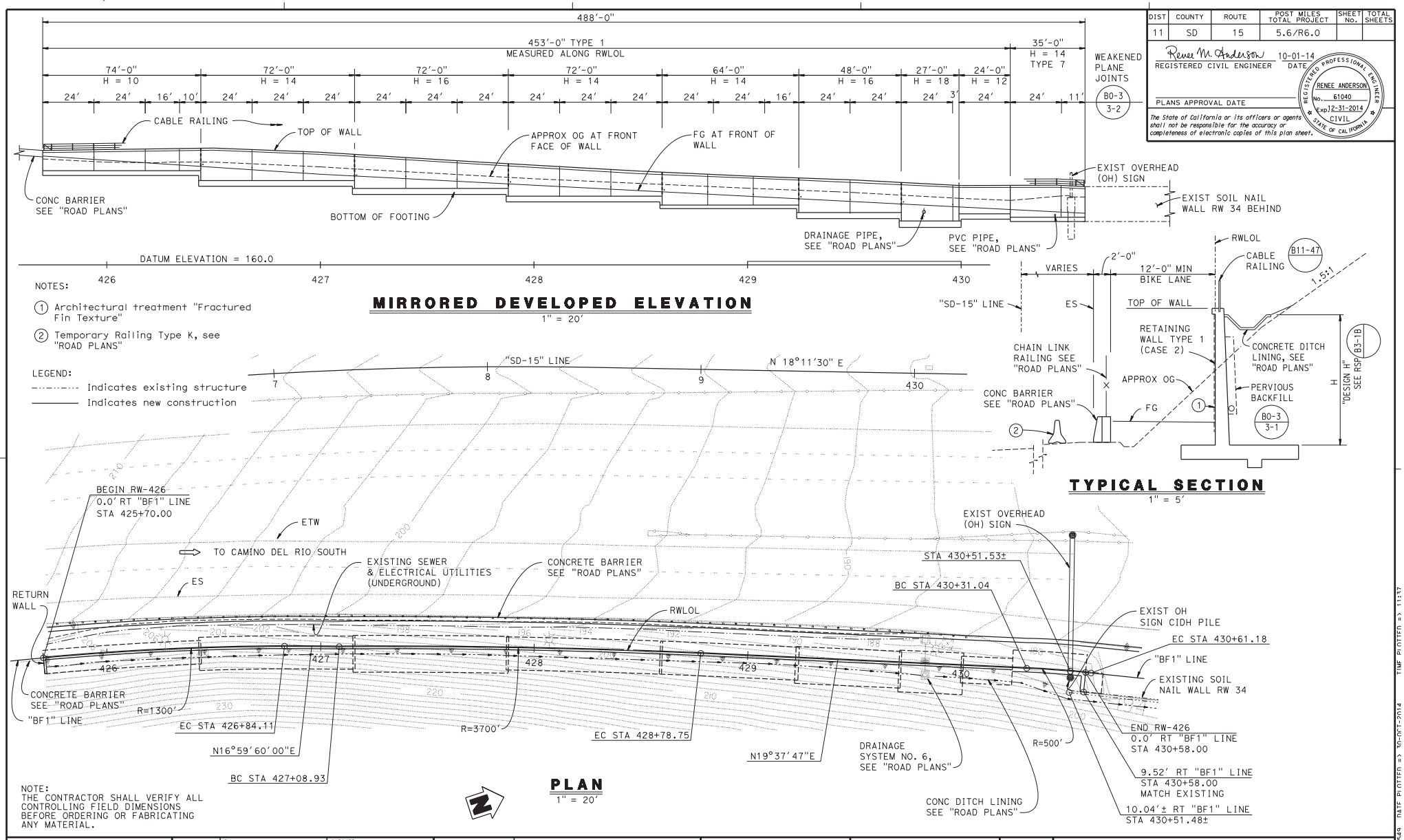

DIST	COUNTY	ROUTE	POST MILES TOTAL PROJECT	SHEET No.	TOTAL SHEETS
11	SD	15	5.6/R6.0		

Renee M. Anderson 10-01-14
REGISTERED CIVIL ENGINEER DATE

PLANS APPROVAL DATE

REGISTERED PROFESSIONAL ENGINEER RENEE ANDERSON NO. 61040 Exp. 12-31-2014 CIVIL STATE OF CALIFORNIA

The State of California or its officers or agents shall not be responsible for the accuracy or completeness of electronic copies of this plan sheet.

DESIGN	BY R. ANDERSON	CHECKED M. VO	LOAD & RESISTANCE FACTOR DESIGN	LIVE LOADING: HL93 W/"LOW-BOY"; PERMIT DESIGN VEHICLE	
DETAILS	BY R. KIRKLAND	CHECKED M. VO	LAYOUT	BY R. ANDERSON	CHECKED M. VO
QUANTITIES	BY R. ANDERSON	CHECKED M. VO	SPECIFICATIONS	BY V. RENGANATHAN	PLANS AND SPECS COMPARED V. RENGANATHAN

DANIEL T. ADAMS
DESIGN ENGINEER

ORIGINAL SCALE IN INCHES FOR REDUCED PLANS 0 1 2 3

STATE OF CALIFORNIA
DEPARTMENT OF TRANSPORTATION

DIVISION OF ENGINEERING SERVICES
STRUCTURE DESIGN
DESIGN BRANCH 10

BRIDGE NO. 57E0122
POST MILE R5.708

MID CITY BIKE FACILITY RW-426
GENERAL PLAN

UNIT: 3589
PROJECT NUMBER & PHASE: 1100020291
CONTRACT NO.: 11-2T1900

DISREGARD PRINTS BEARING EARLIER REVISION DATES

REVISION DATES 07-29-02 10-30-14 10-24-14

SHEET 1 OF 10

STRUCTURES DESIGN GENERAL PLAN SHEET (ENGLISH) (REV.09-01-10)

FILE => 57e0122gap01.dgn

ISCFRAMF => k1KK49 DATE PLOTTED => 30-OCT-2014 TIME PLOTTED => 11:37

DIST	COUNTY	ROUTE	POST MILES TOTAL PROJECT	SHEET No.	TOTAL SHEETS
11	SD	15	5.6/R6.0		

Renee M. Anderson 10-01-14
REGISTERED CIVIL ENGINEER DATE

PLANS APPROVAL DATE

REGISTERED PROFESSIONAL ENGINEER RENEE ANDERSON NO. 61040 Exp. 12-31-2014 CIVIL STATE OF CALIFORNIA

The State of California or its officers or agents shall not be responsible for the accuracy or completeness of electronic copies of this plan sheet.

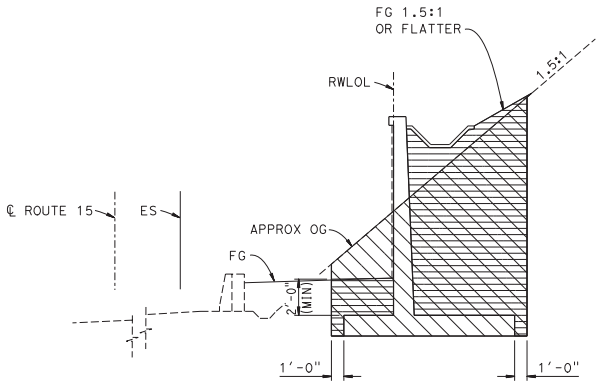

TYPE 1 WALL (TYP)

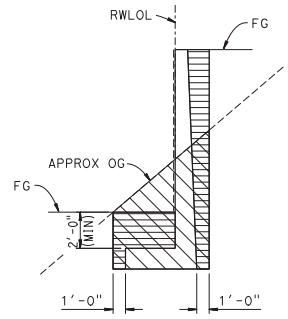

TYPE 7 WALL (TYP)

STRUCTURE EXCAVATION (RETAINING WALL)
STRUCTURE BACKFILL (RETAINING WALL)

EXCAVATION & BACKFILL LIMITS

NO SCALE

INDEX TO PLANS

Sheet No.	Title
1	GENERAL PLAN
2	INDEX TO PLANS
3	STRUCTURE PLAN NO. 1
4	STRUCTURE PLAN NO. 2
5	STRUCTURE PLAN NO. 3
6	STRUCTURE PLAN NO. 4
7	DETAILS NO. 1
8	DETAILS NO. 2
9	RETAINING WALL TYPE 7 DETAILS
10	LOG OF TEST BORINGS

STANDARD PLANS DATED 2010

A10A	ACRONYMS AND ABBREVIATIONS (SHEET 1 OF 2)
(RSP) A10B	ACRONYMS AND ABBREVIATIONS (SHEET 2 OF 2)
A10C	SYMBOLS (SHEET 1 OF 2)
A10D	SYMBOLS (SHEET 2 OF 2)
B0-3	BRIDGE DETAILS
(RSP) B3-1B	RETAINING WALL TYPE 1 (CASE 2)
(RSP) B3-5	RETAINING WALL DETAILS NO. 1
B3-6	RETAINING WALL DETAILS NO. 2
(RSP) B11-47	CABLE RAILING

QUANTITIES

STRUCTURE EXCAVATION (RETAINING WALL)	3,848	CY
STRUCTURE BACKFILL (RETAINING WALL)	2,827	CY
PERVIOUS BACKFILL MATERIAL (RETAINING WALL)	110	CY
STRUCTURAL CONCRETE, RETAINING WALL	1,181	CY
FRACTURED FIN TEXTURE	4,805	SQFT
BAR REINFORCING STEEL (RETAINING WALL)	125,245	LB
CABLE RAILING	498	LF

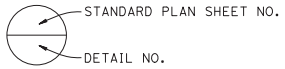

RSP = REVISED STANDARD PLAN

NOTE:
THE CONTRACTOR SHALL VERIFY ALL CONTROLLING FIELD DIMENSIONS BEFORE ORDERING OR FABRICATING ANY MATERIAL.

	BY	CHECKED
DESIGN	R. ANDERSON	M. VO
DETAILS	R. KIRKLAND	M. VO
QUANTITIES	R. ANDERSON	M. VO

STATE OF CALIFORNIA
DEPARTMENT OF TRANSPORTATION

DIVISION OF ENGINEERING SERVICES
STRUCTURE DESIGN
DESIGN BRANCH 10

BRIDGE NO. 57E0122
POST MILE R5.708

MID CITY BIKE FACILITY RW-426
INDEX TO PLANS

STRUCTURES DESIGN DETAIL SHEET (ENGLISH) (REV. 09-01-10)

ORIGINAL SCALE IN INCHES FOR REDUCED PLANS 0 1 2 3

UNIT: 3589
PROJECT NUMBER & PHASE: 1100020291
CONTRACT NO.: 11-2T1900

DISREGARD PRINTS BEARING EARLIER REVISION DATES

REVISION DATES 6-29-12 12-24-14 10-30-14

SHEET 2 OF 10

FILE => 57e0122aitp02.dgn

DIST	COUNTY	ROUTE	POST MILES TOTAL PROJECT	SHEET No.	TOTAL SHEETS
11	SD	15	5.6/R6.0		

Renee M. Anderson 10-01-14
REGISTERED CIVIL ENGINEER DATE

PLANS APPROVAL DATE

REGISTERED PROFESSIONAL ENGINEER RENEE ANDERSON NO. 61040 Exp. 12-31-2014 CIVIL STATE OF CALIFORNIA

The State of California or its officers or agents shall not be responsible for the accuracy or completeness of electronic copies of this plan sheet.

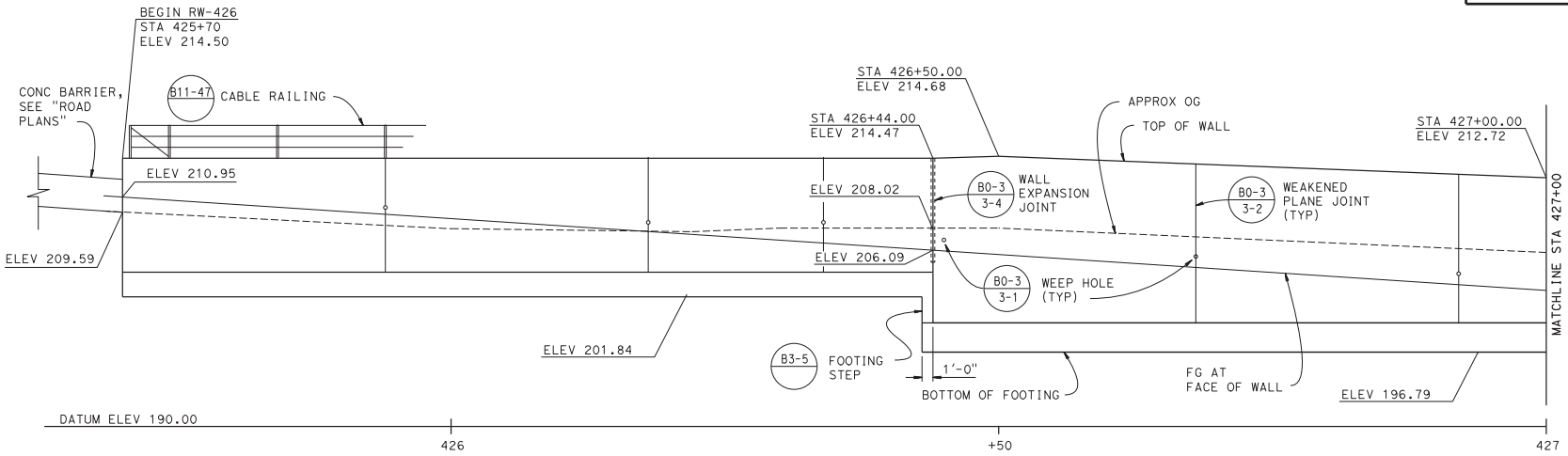

DEVELOPED MIRRORED ELEVATION

3/16" = 1'-0"

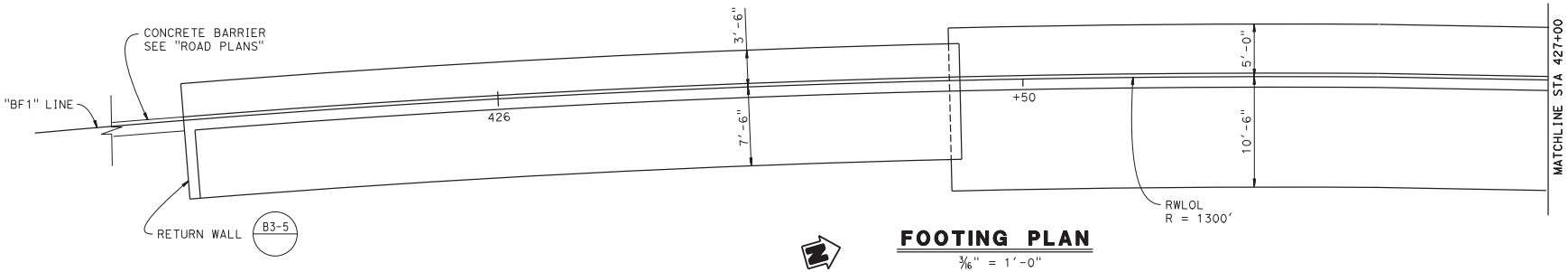

FOOTING PLAN

3/16" = 1'-0"

DESIGN	BY R. ANDERSON	CHECKED M. VO	
DETAILS	BY R. KIRKLAND	CHECKED M. VO	
QUANTITIES	BY R. ANDERSON	CHECKED M. VO	

STATE OF CALIFORNIA
DEPARTMENT OF TRANSPORTATION

DIVISION OF ENGINEERING SERVICES
STRUCTURE DESIGN
DESIGN BRANCH 10

BRIDGE NO. 57E0122
POST MILE R5.708

MID CITY BIKE FACILITY RW-426
STRUCTURE PLAN NO. 1

STRUCTURES DESIGN DETAIL SHEET (ENGLISH) (REV. 09-01-10)

ORIGINAL SCALE IN INCHES FOR REDUCED PLANS 0 1 2 3

UNIT: 3589
PROJECT NUMBER & PHASE: 1100020291
CONTRACT NO.: 11-2T1900

DISREGARD PRINTS BEARING EARLIER REVISION DATES

REVISION DATES 8-29-12 9-25-14 9-23-14

SHEET 3 OF 10

FILE => 57e0122csp03.dgn

DIST	COUNTY	ROUTE	POST MILES TOTAL PROJECT	SHEET No.	TOTAL SHEETS
11	SD	15	5.6/R6.0		

Renee M. Anderson 10-01-14
REGISTERED CIVIL ENGINEER DATE

PLANS APPROVAL DATE

REGISTERED PROFESSIONAL ENGINEER RENEE ANDERSON NO. 61040 Exp. 12-31-2014 CIVIL STATE OF CALIFORNIA

The State of California or its officers or agents shall not be responsible for the accuracy or completeness of electronic copies of this plan sheet.

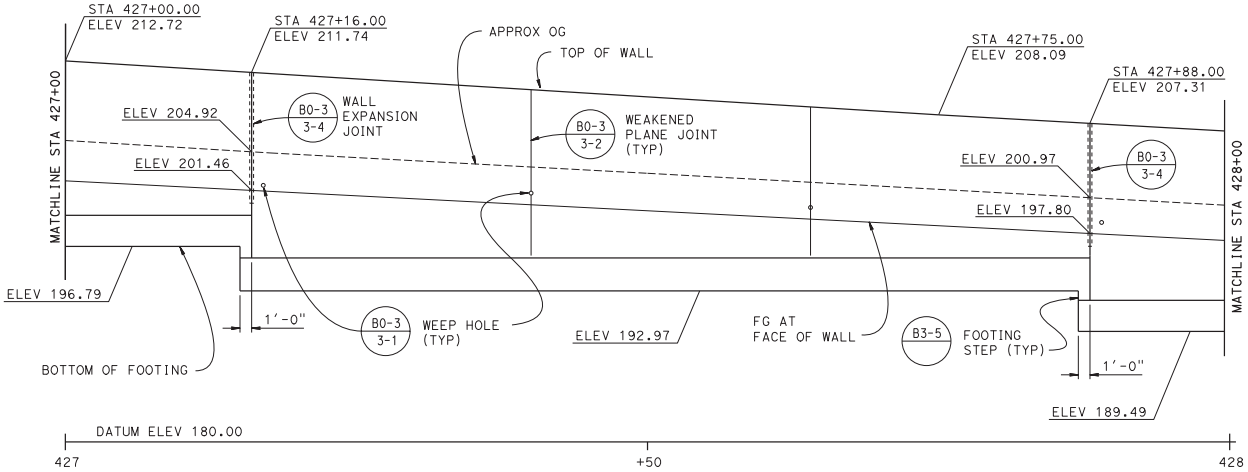

DEVELOPED MIRRORED ELEVATION

3/16" = 1'-0"

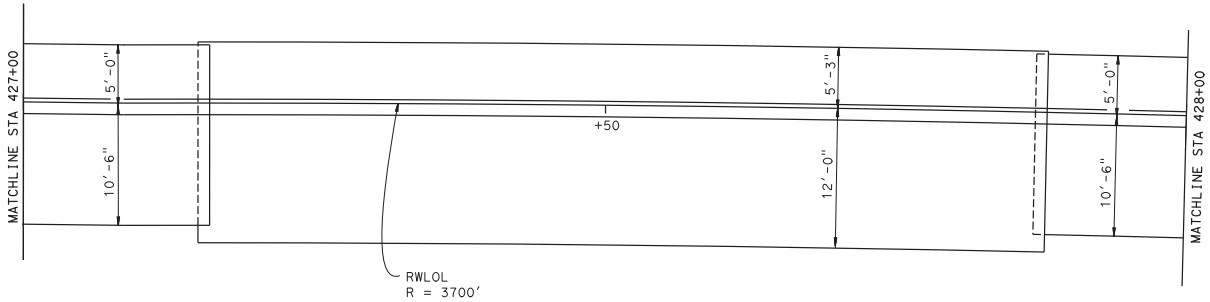

FOOTING PLAN

3/16" = 1'-0"

DESIGN	BY R. ANDERSON	CHECKED M. VO	
DETAILS	BY R. KIRKLAND	CHECKED M. VO	
QUANTITIES	BY R. ANDERSON	CHECKED M. VO	

STATE OF CALIFORNIA
DEPARTMENT OF TRANSPORTATION

DIVISION OF ENGINEERING SERVICES
STRUCTURE DESIGN
DESIGN BRANCH 10

BRIDGE NO. 57E0122
POST MILE R5.708

MID CITY BIKE FACILITY RW-426
STRUCTURE PLAN NO. 2

STRUCTURES DESIGN DETAIL SHEET (ENGLISH) (REV. 09-01-10)

ORIGINAL SCALE IN INCHES FOR REDUCED PLANS 0 1 2 3

UNIT: 3589
PROJECT NUMBER & PHASE: 1100020291
CONTRACT NO.: 11-2T1900

DISREGARD PRINTS BEARING EARLIER REVISION DATES

REVISION DATES 8-29-02 9-25-14 9-23-14

SHEET 4 OF 10

FILE => 57e0122csp04.dgn

DIST	COUNTY	ROUTE	POST MILES TOTAL PROJECT	SHEET No.	TOTAL SHEETS
11	SD	15	5.6/R6.0		

Renee M. Anderson 10-01-14
REGISTERED CIVIL ENGINEER DATE

PLANS APPROVAL DATE

REGISTERED PROFESSIONAL ENGINEER RENEE ANDERSON NO. 61040 Exp. 12-31-2014 CIVIL STATE OF CALIFORNIA

The State of California or its officers or agents shall not be responsible for the accuracy or completeness of electronic copies of this plan sheet.

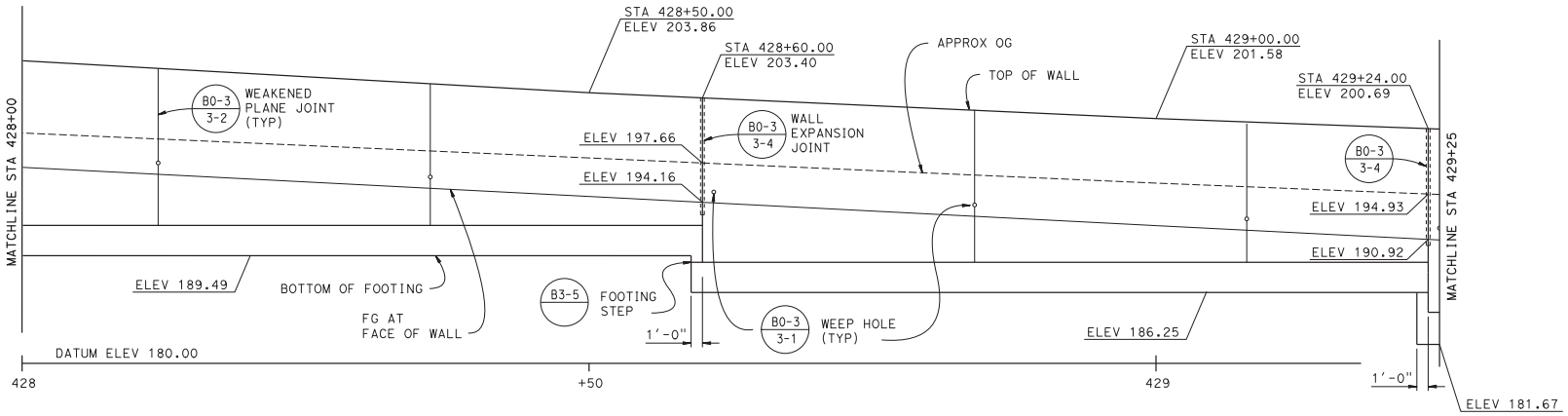

DEVELOPED MIRRORED ELEVATION

3/16" = 1'-0"

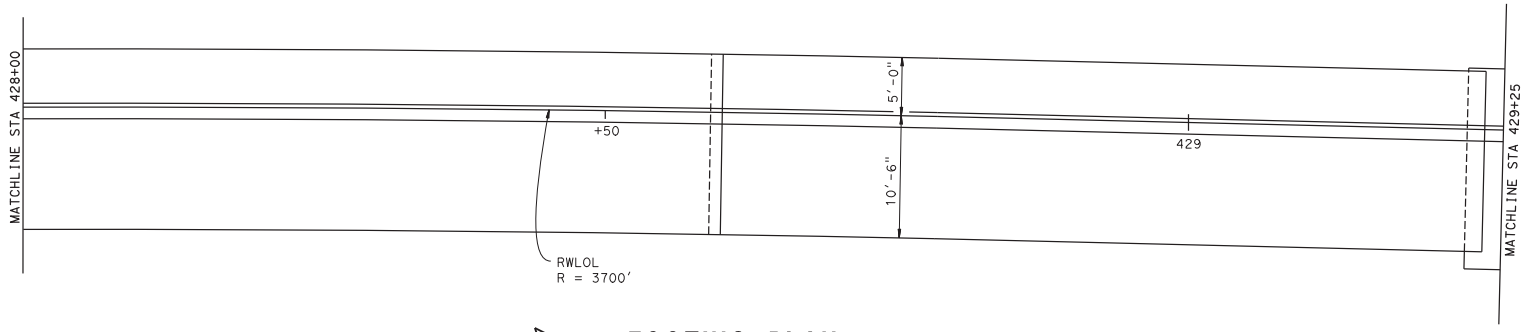

FOOTING PLAN

3/16" = 1'-0"

DESIGN	BY R. ANDERSON	CHECKED M. VO	
DETAILS	BY R. KIRKLAND	CHECKED M. VO	
QUANTITIES	BY R. ANDERSON	CHECKED M. VO	

STATE OF CALIFORNIA
DEPARTMENT OF TRANSPORTATION

DIVISION OF ENGINEERING SERVICES
STRUCTURE DESIGN
DESIGN BRANCH 10

BRIDGE NO. 57E0122
POST MILE R5.708

MID CITY BIKE FACILITY RW-426
STRUCTURE PLAN NO. 3

STRUCTURES DESIGN DETAIL SHEET (ENGLISH) (REV. 09-01-10)

ORIGINAL SCALE IN INCHES FOR REDUCED PLANS 0 1 2 3

UNIT: 3589
PROJECT NUMBER & PHASE: 1100020291
CONTRACT NO.: 11-2T1900

DISREGARD PRINTS BEARING EARLIER REVISION DATES

REVISION DATES 8-29-02 9-25-14 9-23-14

SHEET 5 OF 10

FILE => 57e0122csp05.dgn

DIST	COUNTY	ROUTE	POST MILES TOTAL PROJECT	SHEET No.	TOTAL SHEETS
11	SD	15	5.6/R6.0		

Renee M. Anderson 10-01-14
REGISTERED CIVIL ENGINEER DATE

PLANS APPROVAL DATE

REGISTERED PROFESSIONAL ENGINEER RENEE ANDERSON NO. 61040 Exp. 12-31-2014 CIVIL STATE OF CALIFORNIA

The State of California or its officers or agents shall not be responsible for the accuracy or completeness of electronic copies of this plan sheet.

NOTE:
For SECTION A-A, SECTION B-B AND
SECTION C-C, see "DETAILS NO. 1" sheet.

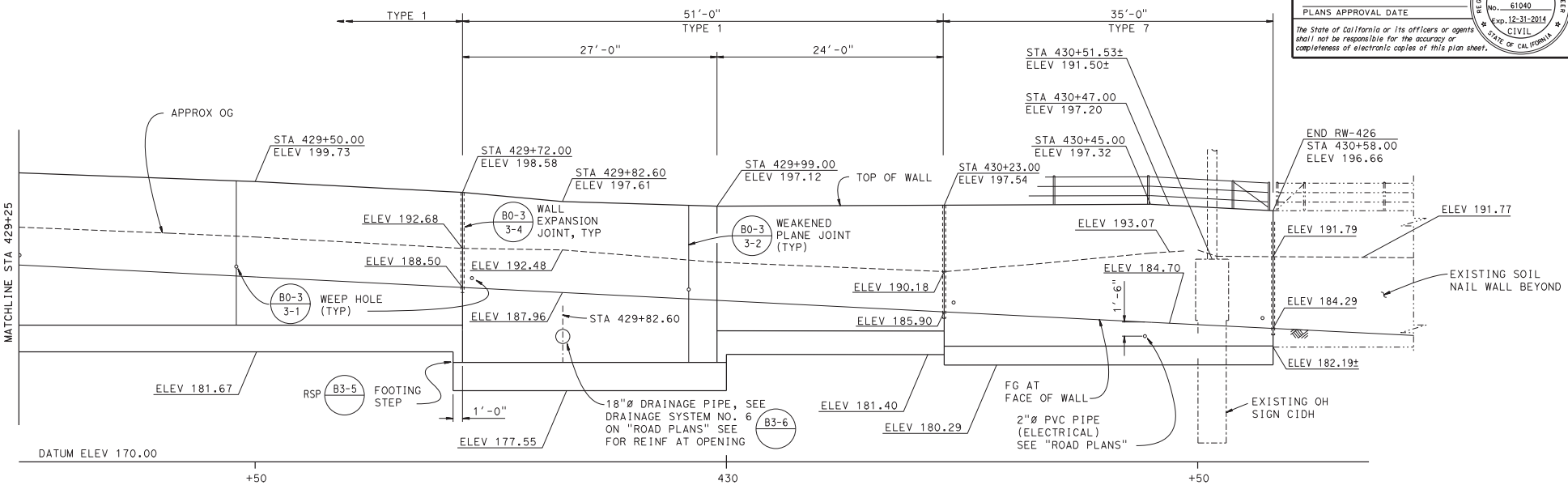

DEVELOPED MIRRORED ELEVATION

3/16" = 1'-0"

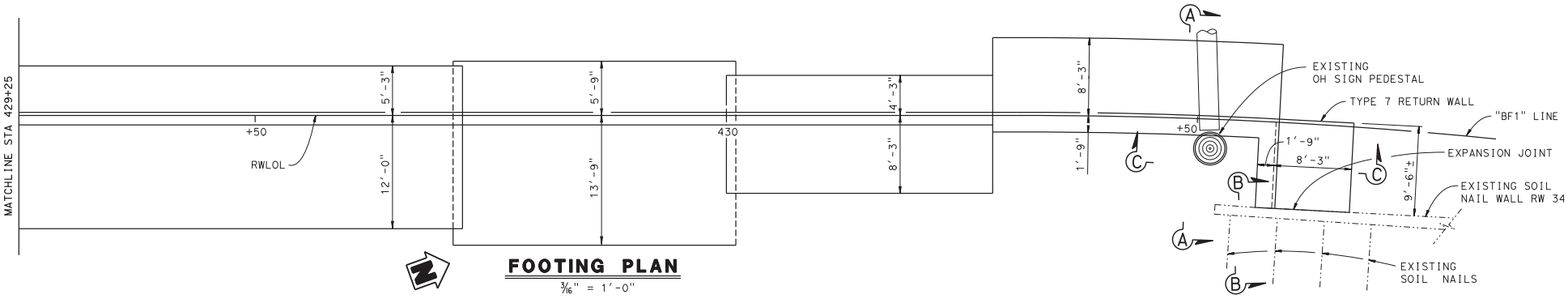

FOOTING PLAN

3/16" = 1'-0"

DESIGN	BY R. ANDERSON	CHECKED M. VO	
DETAILS	BY R. KIRKLAND	CHECKED M. VO	
QUANTITIES	BY R. ANDERSON	CHECKED M. VO	

STATE OF CALIFORNIA
DEPARTMENT OF TRANSPORTATION

DIVISION OF ENGINEERING SERVICES
STRUCTURE DESIGN
DESIGN BRANCH 10

BRIDGE NO. 57E0122
POST MILE R5.708

MID CITY BIKE FACILITY RW-426
STRUCTURE PLAN NO. 4

STRUCTURES DESIGN DETAIL SHEET (ENGLISH) (REV. 09-01-10)

ORIGINAL SCALE IN INCHES FOR REDUCED PLANS 0 1 2 3

UNIT: 3589
PROJECT NUMBER & PHASE: 1100020291
CONTRACT NO.: 11-2T1900

DISREGARD PRINTS BEARING EARLIER REVISION DATES

REVISION DATES: 8-29-12 | 12-24-14 | 10-30-14

SHEET 6 OF 10

FILE => 57e0122csp06.dgn

DIST	COUNTY	ROUTE	POST MILES TOTAL PROJECT	SHEET No.	TOTAL SHEETS
11	SD	15	5.6/R6.0		

Renee M. Anderson 10-01-14
REGISTERED CIVIL ENGINEER DATE

PLANS APPROVAL DATE

REGISTERED PROFESSIONAL ENGINEER RENEE ANDERSON NO. 61040 Exp. 12-31-2014 CIVIL STATE OF CALIFORNIA

The State of California or its officers or agents shall not be responsible for the accuracy or completeness of electronic copies of this plan sheet.

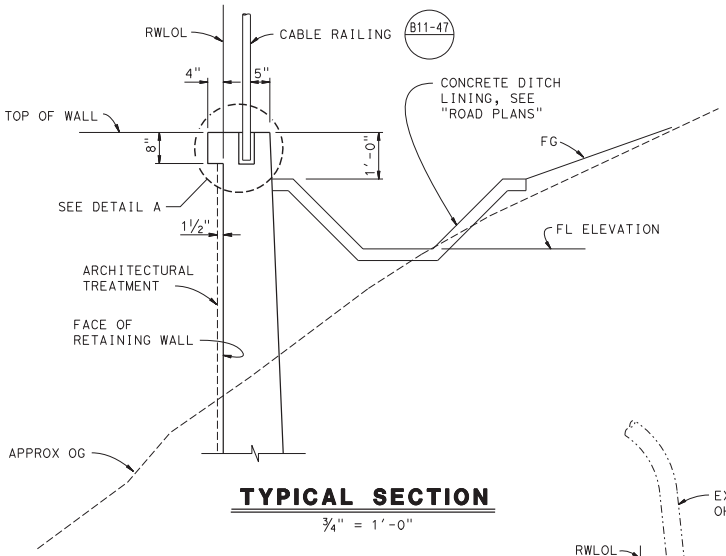

TYPICAL SECTION
¾" = 1'-0"

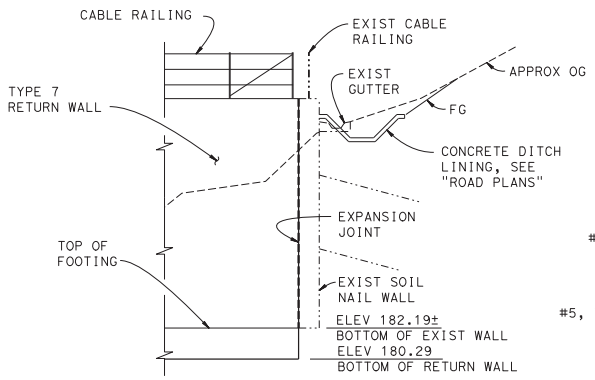

SECTION B-B
¼" = 1'-0"

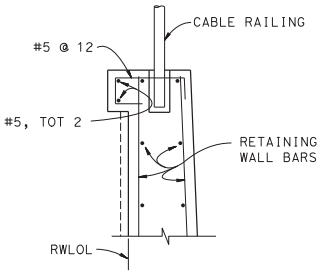

DETAIL A
1" = 1'-0"

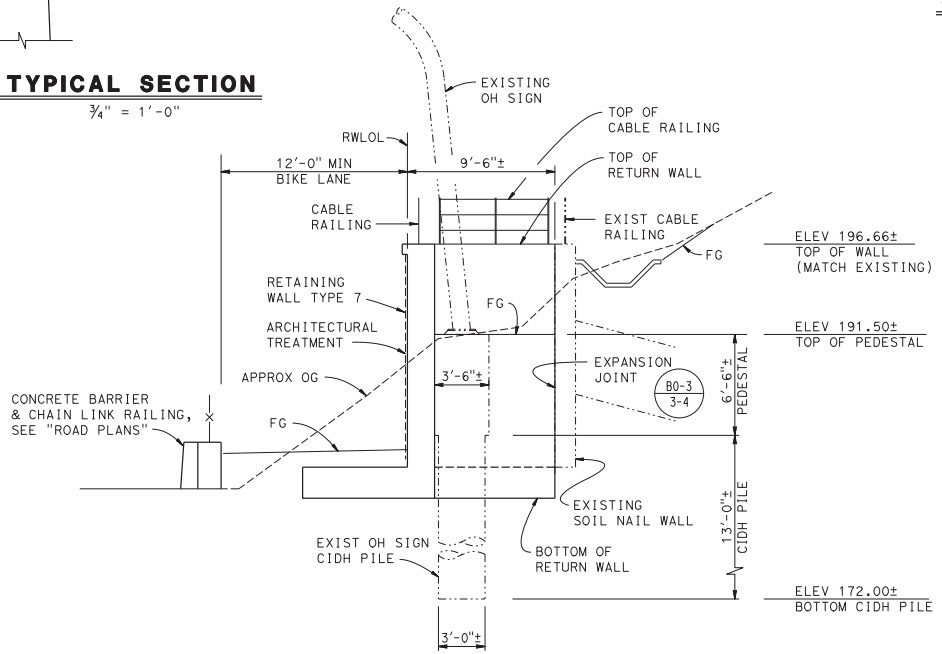

SECTION A-A
¼" = 1'-0"

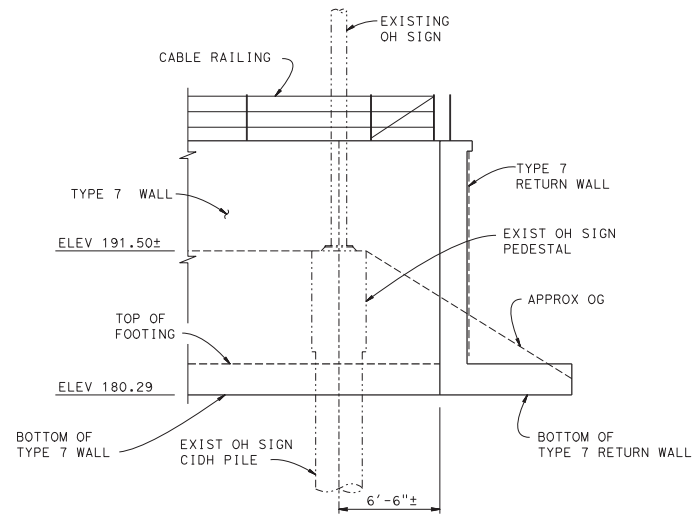

SECTION C-C
¼" = 1'-0"

	BY	CHECKED
DESIGN	R. ANDERSON	M. VO
DETAILS	R. KIRKLAND	M. VO
QUANTITIES	R. ANDERSON	M. VO

STATE OF CALIFORNIA
DEPARTMENT OF TRANSPORTATION

DIVISION OF ENGINEERING SERVICES
STRUCTURE DESIGN
DESIGN BRANCH 10

BRIDGE NO. 57E0122
POST MILE R5.708

MID CITY BIKE FACILITY RW-426
DETAILS NO.1

STRUCTURES DESIGN DETAIL SHEET (ENGLISH) (REV. 09-01-10)

ORIGINAL SCALE IN INCHES FOR REDUCED PLANS 0 1 2 3

UNIT: 3589
PROJECT NUMBER & PHASE: 1100020291
CONTRACT NO.: 11-2T1900

DISREGARD PRINTS BEARING EARLIER REVISION DATES

REVISION DATES 8-29-02 10-24-14 9-26-14

SHEET 7 OF 10

FILE => 57e0122usnd107.dgn

DIST	COUNTY	ROUTE	POST MILES TOTAL PROJECT	SHEET No.	TOTAL SHEETS
11	SD	15	5.6/R6.0		

Renee M. Anderson 10-01-14
REGISTERED CIVIL ENGINEER DATE

PLANS APPROVAL DATE

REGISTERED PROFESSIONAL ENGINEER RENEE ANDERSON NO. 61040 Exp. 12-31-2014 CIVIL STATE OF CALIFORNIA

The State of California or its officers or agents shall not be responsible for the accuracy or completeness of electronic copies of this plan sheet.

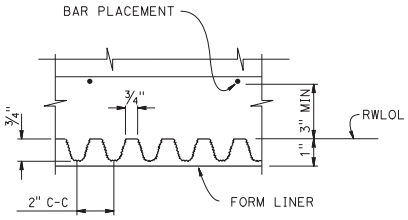

SECTION E-E

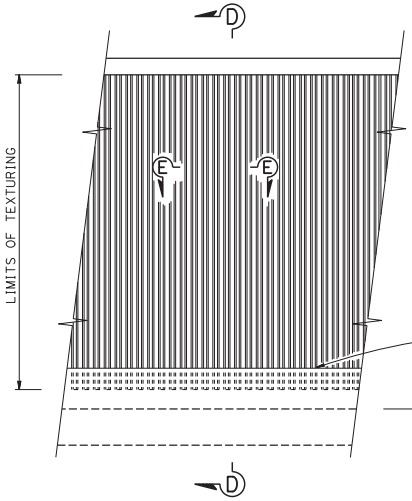

ELEVATION

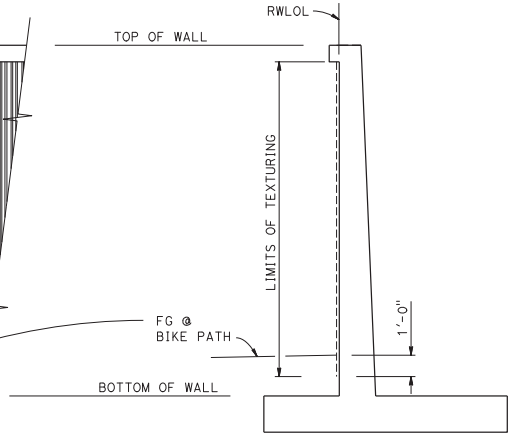

SECTION D-D

FRACTURED FIN TEXTURE

NO SCALE

DESIGN	BY R. ANDERSON	CHECKED M. VO	
DETAILS	BY R. KIRKLAND	CHECKED M. VO	
QUANTITIES	BY R. ANDERSON	CHECKED M. VO	

STATE OF CALIFORNIA DEPARTMENT OF TRANSPORTATION

DIVISION OF ENGINEERING SERVICES STRUCTURE DESIGN DESIGN BRANCH 10

BRIDGE NO. 57E0122 POST MILE R5.708

MID CITY BIKE FACILITY RW-426

DETAILS NO.2

STRUCTURES DESIGN DETAIL SHEET (ENGLISH) (REV. 09-01-10)

ORIGINAL SCALE IN INCHES FOR REDUCED PLANS 0 1 2 3

UNIT: 3589
PROJECT NUMBER & PHASE: 1100020291 CONTRACT NO.: 11-2T1900

DISREGARD PRINTS BEARING EARLIER REVISION DATES

REVISION DATES 8-29-02 9-25-14 9-23-14 SHEET 8 OF 10

FILE => 57e0122usndt08.dgn

DIST	COUNTY	ROUTE	POST MILES TOTAL PROJECT	SHEET No.	TOTAL SHEETS
11	SD	15	5.6/R6.0		

Renee M. Anderson 10-01-14
REGISTERED CIVIL ENGINEER DATE

PLANS APPROVAL DATE

The State of California or its officers or agents shall not be responsible for the accuracy or completeness of electronic copies of this plan sheet.

REGISTERED PROFESSIONAL ENGINEER RENEE ANDERSON No. 61040 Exp. 12-31-2014 CIVIL STATE OF CALIFORNIA

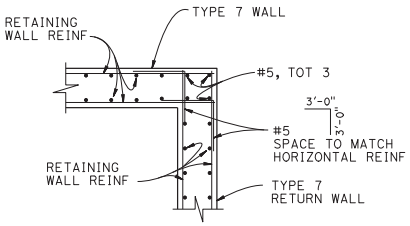

TYPE 7 WALLS AT INTERSECTION

No Scale

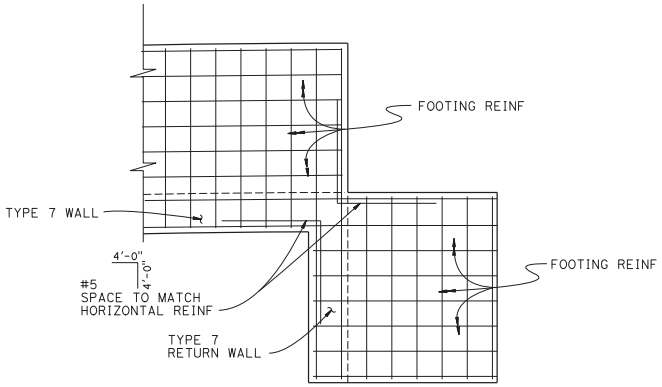

TYPE 7 WALLS AT FOOTING

No Scale

DESIGN DATA

Design: AASHTO LRFD Bridge Design Specifications, 4th edition with California Amendments

LS: Varied surcharge on level ground surface

CT: 54 kip maximum traffic impact loading evenly distributed over 10 feet at top of the barrier and 1:1 distribution down and outward

EQE: Mononabe-Okabe Method
K_h = 0.2
K_v = 0.0

Soil: ϕ = 34°
γ = 120 pcf

Reinforced Concrete: f'c = 3600 psi
fy = 60,000 psi

Load Combinations and Limit States

Service I Q=1.00DC+1.00EV+1.00EH+1.00LS+Td

Strength I Q=αDC+βEV+1.50EH+1.75LS+Td

Extreme I Q=1.00DC+1.00EV+1.00EH+1.00EQD+1.00EQE+Td

Extreme II Q=1.00DC+1.00EV+1.00EH+1.00CT+Td

Where:
- Q: Force Effects
- α: 1.25 or 0.90, Which ever Controls Design
- β: 1.35 or 1.00, which ever Controls Design
- DC: Dead Load of Structure Components
- EV: Vertical Earth Fill Pressure
- LS: Live Load Surcharge
- EQE: Seismic Earth Pressure
- EQD: Soil and Structure Components Inertia. Soil inertia ignored for stem design
- CT: Vehicular Collision Force
- Td: Anchor Design Load

NOTES:

1. For Retaining wall Architectural Treatment, see Details elsewhere in Project Plans
2. For Details not shown and Drainage Notes see RSP B3-5
3. Footing cover, 2'-0" minimum.

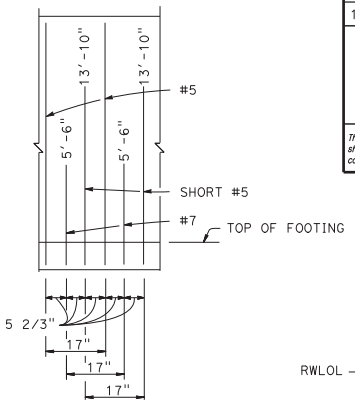

ELEVATION

No Scale

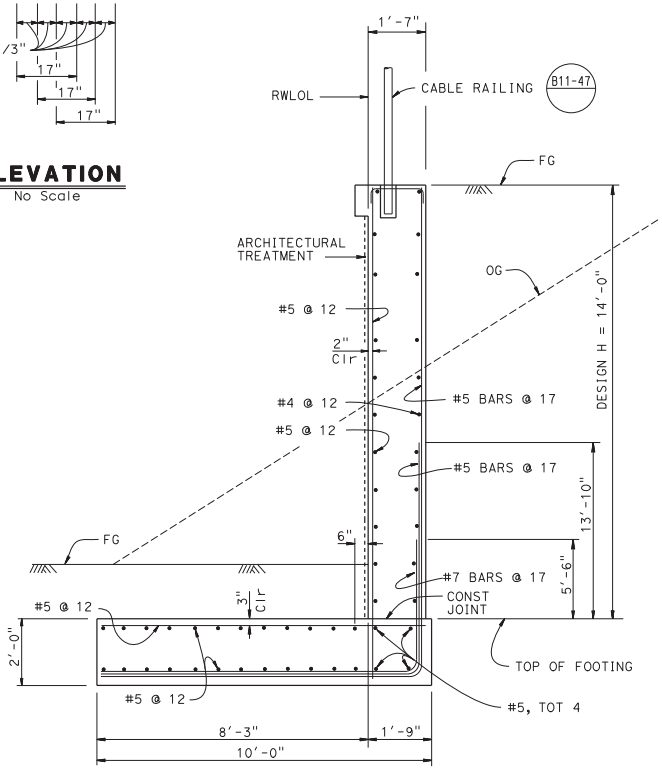

SPREAD FOOTING SECTION

No Scale

	BY	CHECKED
DESIGN	R. ANDERSON	M. VO
DETAILS	R. KIRKLAND	M. VO
QUANTITIES	R. ANDERSON	M. VO

STATE OF CALIFORNIA DEPARTMENT OF TRANSPORTATION

DIVISION OF ENGINEERING SERVICES STRUCTURE DESIGN DESIGN BRANCH 10

BRIDGE NO. 57E0122
POST MILE R5.708

MID CITY BIKE FACILITY RW-426
RETAINING WALL TYPE 7 DETAILS

STRUCTURES DESIGN DETAIL SHEET (ENGLISH) (REV. 09-01-10)

ORIGINAL SCALE IN INCHES FOR REDUCED PLANS 0 1 2 3

UNIT: 3589
PROJECT NUMBER & PHASE: 1100020291
CONTRACT NO.: 11-2T1900

DISREGARD PRINTS BEARING EARLIER REVISION DATES

REVISION DATES 8-29-02 10-24-14 9-26-14

SHEET 9 OF 10

FILE => 57e0122xs14-375-1 09.dgn

DIST	COUNTY	ROUTE	POST MILES TOTAL PROJECT	SHEET No.	TOTAL SHEETS
11	SD	15	5.6/R6.0		

Renee M. Anderson 10-01-14
REGISTERED CIVIL ENGINEER DATE

PLANS APPROVAL DATE

REGISTERED PROFESSIONAL ENGINEER RENEE ANDERSON NO. 61040 EXP. 12-31-2014 CIVIL STATE OF CALIFORNIA

The State of California or its officers or agents shall not be responsible for the accuracy or completeness of electronic copies of this plan sheet.

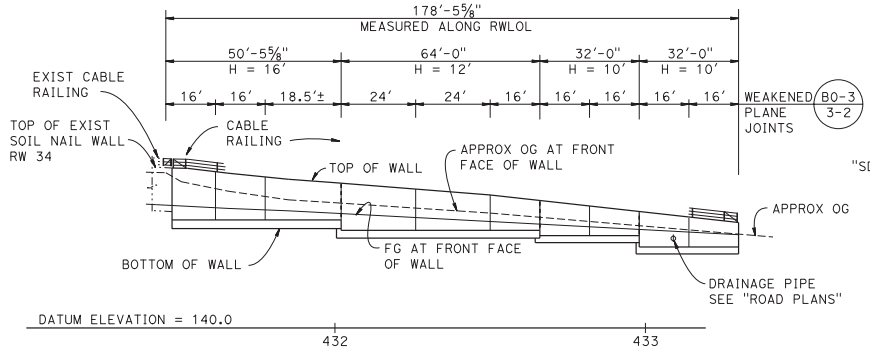

MIRRORED DEVELOPED ELEVATION

1" = 20'

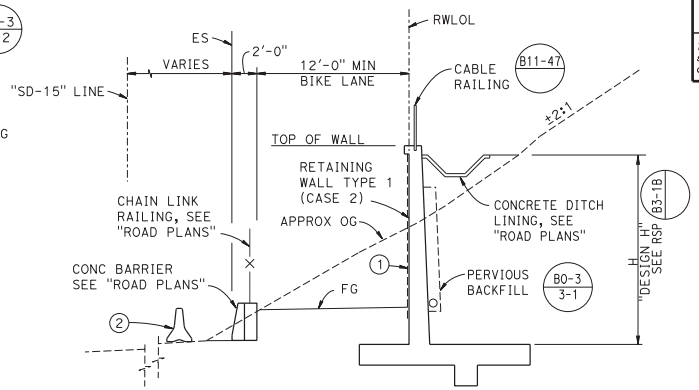

TYPICAL SECTION

1" = 5'

NOTES:

1. Architectural treatment "Fractured Fin Texture"
2. Temporary Railing Type K, see "ROAD PLAN"

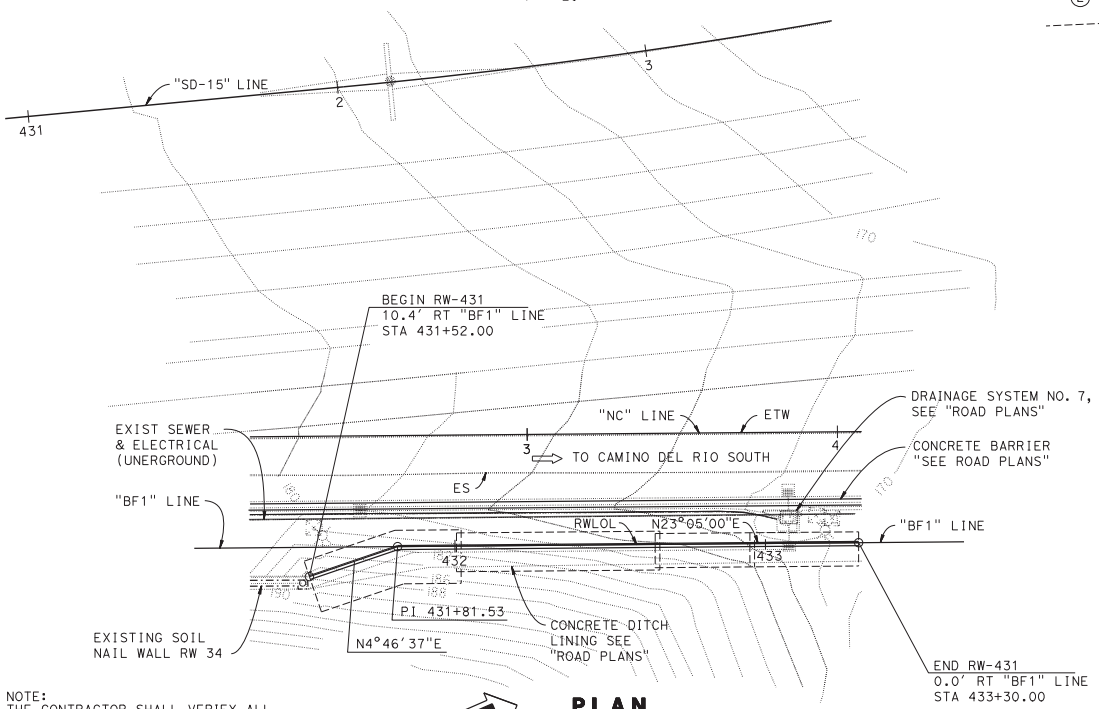

NOTE:
THE CONTRACTOR SHALL VERIFY ALL CONTROLLING FIELD DIMENSIONS BEFORE ORDERING OR FABRICATING ANY MATERIAL.

PLAN

1" = 20'

INDEX TO PLANS

Sheet No.	Title
1	GENERAL PLAN
2	STRUCTURE PLAN NO. 1
3	STRUCTURE PLAN NO. 2
4	DETAILS NO. 1
5	LOG OF TEST BORINGS 1 OF 1

STANDARD PLANS DATED 2010

A10A	ACRONYMS AND ABBREVIATIONS (SHEET 1 OF 2)
(RSP) A10B	ACRONYMS AND ABBREVIATIONS (SHEET 2 OF 2)
A10C	SYMBOLS (SHEET 1 OF 2)
A10D	SYMBOLS (SHEET 2 OF 2)
B0-3	BRIDGE DETAILS
(RSP) B3-1B	RETAINING WALL TYPE 1 (CASE 2)
(RSP) B3-5	RETAINING WALL DETAILS NO. 1
B3-6	RETAINING WALL DETAILS NO. 2
(RSP) B11-47	CABLE RAILING

LEGEND:

Indicates existing structure

Indicates new construction

STANDARD PLAN SHEET NO.

DETAIL NO.

QUANTITIES

STRUCTURE EXCAVATION (RETAINING WALL)	1,447	CY
STRUCTURE BACKFILL (RETAINING WALL)	726	CY
PERVIOUS BACKFILL MATERIAL (RETAINING WALL)	36	CY
STRUCTURAL CONCRETE, RETAINING WALL	335	CY
FRACTURED FIN TEXTURE	1,358	SQFT
BAR REINFORCING STEEL (RETAINING WALL)	35,472	LB
CABLE RAILING	179	LF

DANIEL T. ADAMS
DESIGN ENGINEER

	BY	CHECKED
DESIGN	R. ANDERSON	M. VO
DETAILS	R. KIRKLAND	M. VO
QUANTITIES	R. ANDERSON	M. VO

LOAD & RESISTANCE FACTOR DESIGN — LIVE LOADING: HL93 W/"LOW-BOY"; PERMIT DESIGN VEHICLE

LAYOUT: R. ANDERSON — CHECKED: M. VO
SPECIFICATIONS: V. RENGANATHAN — PLANS AND SPECS COMPARED: V. RENGANATHAN

ORIGINAL SCALE IN INCHES FOR REDUCED PLANS 0 1 2 3

STATE OF CALIFORNIA
DEPARTMENT OF TRANSPORTATION

DIVISION OF ENGINEERING SERVICES
STRUCTURE DESIGN
DESIGN BRANCH 10

BRIDGE NO. 57E0123
POST MILE R5.816

MID CITY BIKE FACILITY RW-431
GENERAL PLAN

UNIT: 3589
PROJECT NUMBER & PHASE: 1100020291
CONTRACT NO.: 11-2T1900

DISREGARD PRINTS BEARING EARLIER REVISION DATES

REVISION DATES: 8-29-12 | 10-30-14 | 10-24-14

SHEET 1 OF 5

STRUCTURES DESIGN GENERAL PLAN SHEET (ENGLISH) (REV.09-01-10)

FILE => 57e0123gap01.dgn

DIST	COUNTY	ROUTE	POST MILES TOTAL PROJECT	SHEET No.	TOTAL SHEETS
11	SD	15	5.6/R6.0		

Renee M. Anderson 10-01-14
REGISTERED CIVIL ENGINEER DATE

PLANS APPROVAL DATE

REGISTERED PROFESSIONAL ENGINEER RENEE ANDERSON NO. 61040 Exp. 12-31-2014 CIVIL STATE OF CALIFORNIA

The State of California or its officers or agents shall not be responsible for the accuracy or completeness of electronic copies of this plan sheet.

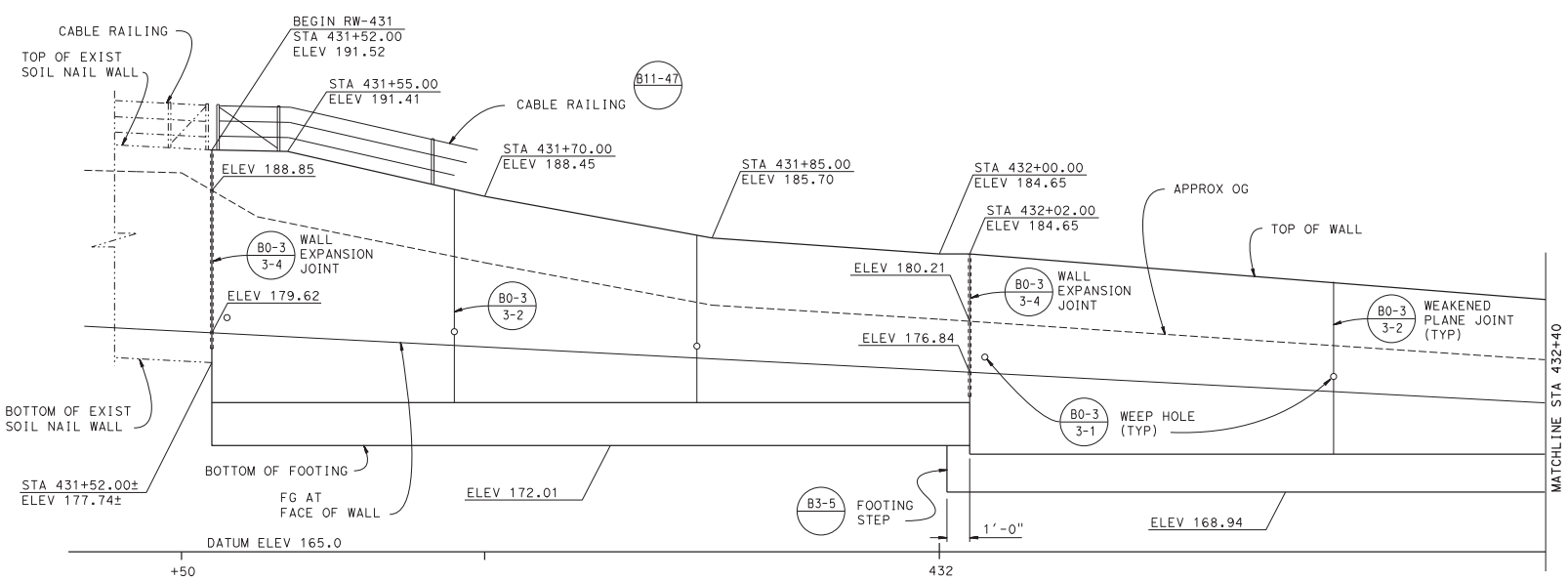

DEVELOPED MIRRORED ELEVATION

1/4" = 1'-0"

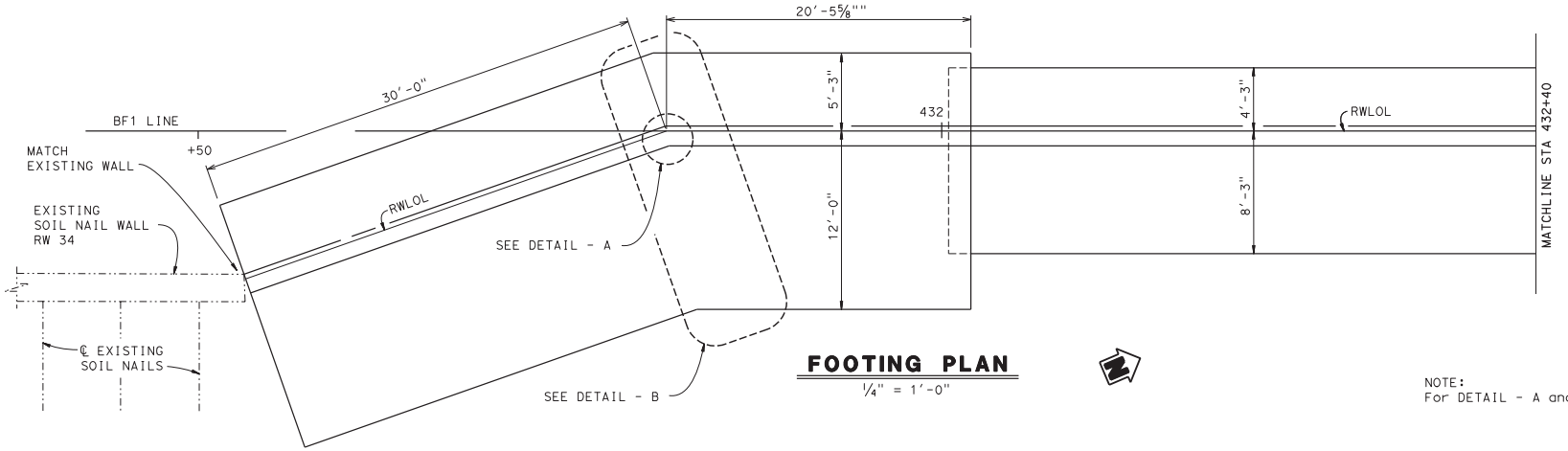

FOOTING PLAN

1/4" = 1'-0"

NOTE:
For DETAIL - A and DETAIL - B, see "DETAILS NO. 1" sheet

DESIGN	BY R. ANDERSON	CHECKED M. VO	
DETAILS	BY R. KIRKLAND	CHECKED M. VO	
QUANTITIES	BY R. ANDERSON	CHECKED M. VO	

STATE OF CALIFORNIA DEPARTMENT OF TRANSPORTATION

DIVISION OF ENGINEERING SERVICES STRUCTURE DESIGN DESIGN BRANCH 10

BRIDGE NO. 57E0123
POST MILE M5.816

MID CITY BIKE FACILITY RW-431
STRUCTURE PLAN NO. 1

STRUCTURES DESIGN DETAIL SHEET (ENGLISH) (REV. 09-01-10)

ORIGINAL SCALE IN INCHES FOR REDUCED PLANS 0 1 2 3

UNIT: 3589
PROJECT NUMBER & PHASE: 1100020291
CONTRACT NO.: 11-2T1900

DISREGARD PRINTS BEARING EARLIER REVISION DATES

REVISION DATES 8-29-02 10-30-14 9-29-14

SHEET 2 OF 5

FILE => 57e0123csp02.dgn

DIST	COUNTY	ROUTE	POST MILES TOTAL PROJECT	SHEET No.	TOTAL SHEETS
11	SD	15	5.6/R6.0		

Renee M. Anderson 10-01-14
REGISTERED CIVIL ENGINEER DATE

PLANS APPROVAL DATE

REGISTERED PROFESSIONAL ENGINEER RENEE ANDERSON No. 61040 Exp. 12-31-2014 CIVIL STATE OF CALIFORNIA

The State of California or its officers or agents shall not be responsible for the accuracy or completeness of electronic copies of this plan sheet.

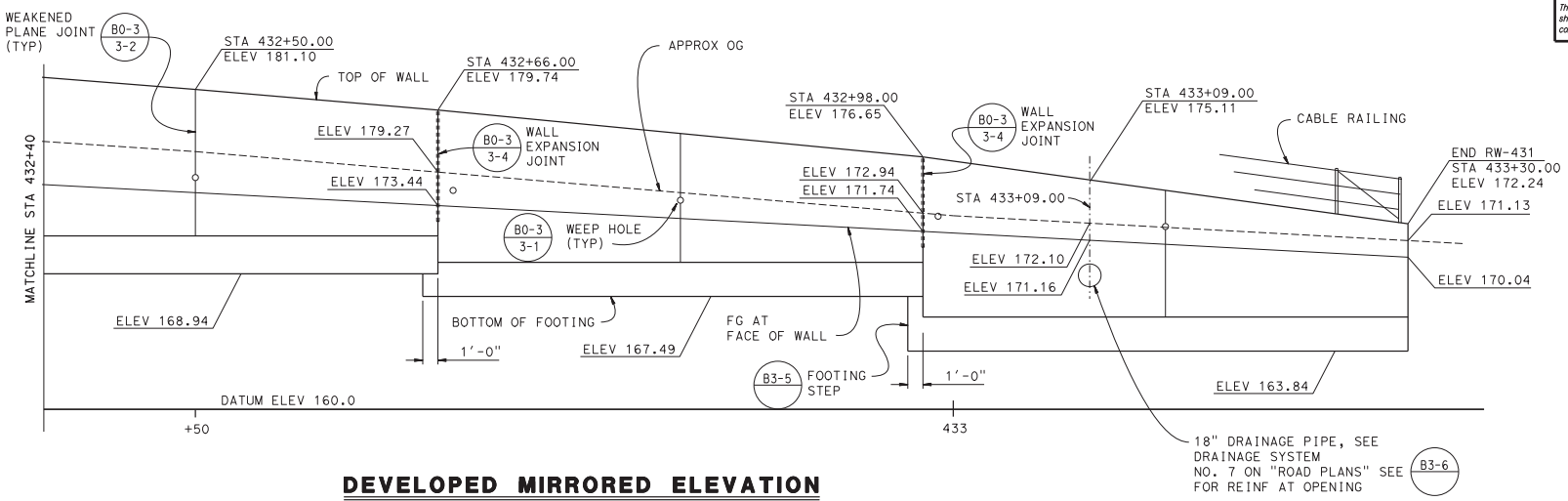

DEVELOPED MIRRORED ELEVATION

1/4" = 1'-0"

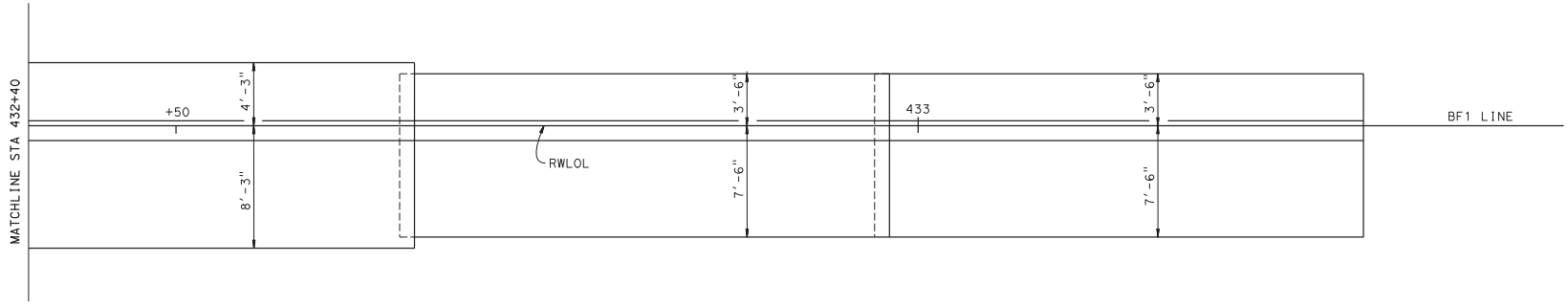

FOOTING PLAN

1/4" = 1'-0"

	BY	CHECKED
DESIGN	R. ANDERSON	M. VO
DETAILS	R. KIRKLAND	M. VO
QUANTITIES	R. ANDERSON	M. VO

STATE OF CALIFORNIA DEPARTMENT OF TRANSPORTATION

DIVISION OF ENGINEERING SERVICES STRUCTURE DESIGN DESIGN BRANCH 10

BRIDGE NO. 57E0123
POST MILE M5.816

MID CITY BIKE FACILITY RW-431
STRUCTURE PLAN NO. 2

STRUCTURES DESIGN DETAIL SHEET (ENGLISH) (REV. 09-01-10)

ORIGINAL SCALE IN INCHES FOR REDUCED PLANS 0 1 2 3

UNIT: 3589
PROJECT NUMBER & PHASE: 1100020291
CONTRACT NO.: 11-2T1900

DISREGARD PRINTS BEARING EARLIER REVISION DATES

REVISION DATES 8-29-12 9-25-14 9-23-14

SHEET 3 OF 5

FILE => 57e0123csp03.dgn

DIST	COUNTY	ROUTE	POST MILES TOTAL PROJECT	SHEET No.	TOTAL SHEETS
11	SD	15	5.6/R6.0		

Renee M. Anderson 10-01-14
REGISTERED CIVIL ENGINEER DATE

PLANS APPROVAL DATE

REGISTERED PROFESSIONAL ENGINEER RENEE ANDERSON No. 61040 Exp. 12-31-2014 CIVIL STATE OF CALIFORNIA

The State of California or its officers or agents shall not be responsible for the accuracy or completeness of electronic copies of this plan sheet.

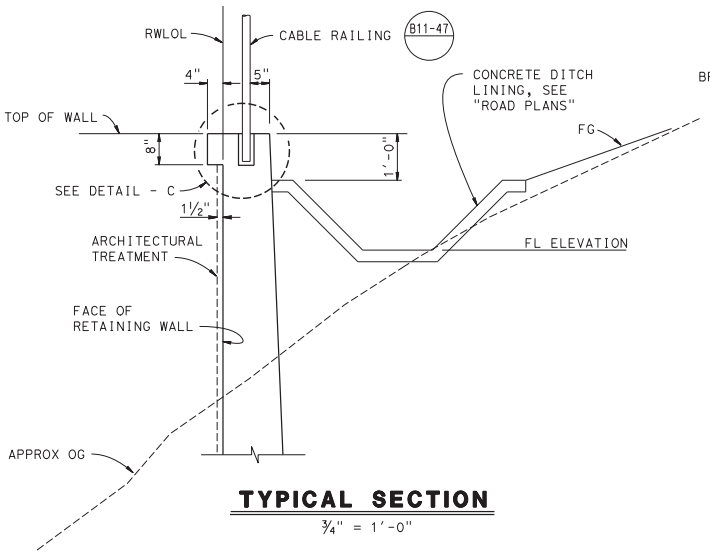

TYPICAL SECTION
¾" = 1'-0"

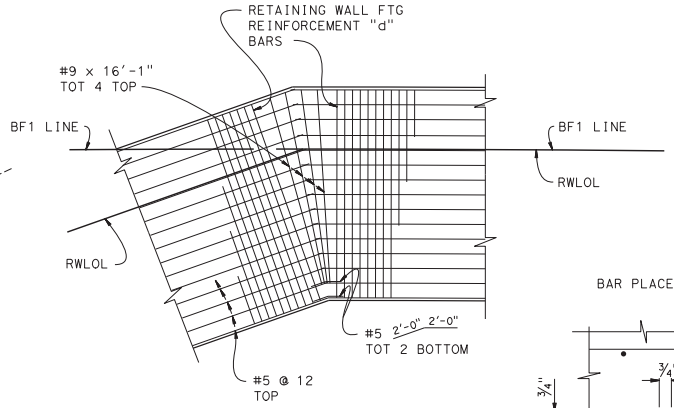

DETAIL - B
NO SCALE

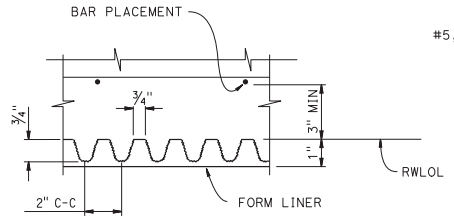

SECTION B-B

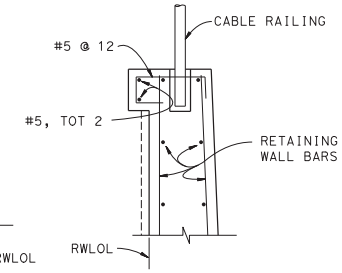

DETAIL - C
1" = 1'-0"

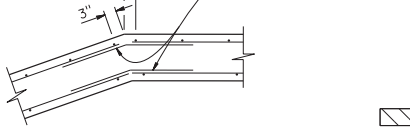

DETAIL - A
¾" = 1'-0"

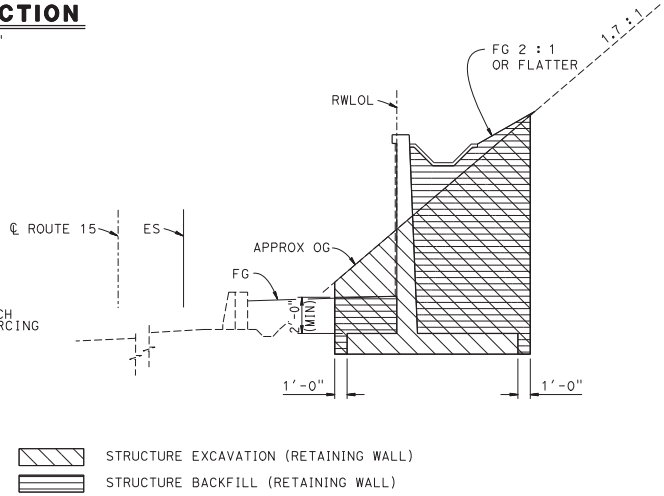

EXCAVATION & BACKFILL LIMITS
NO SCALE

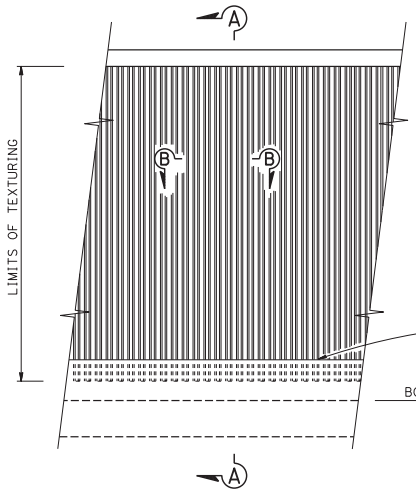

ELEVATION

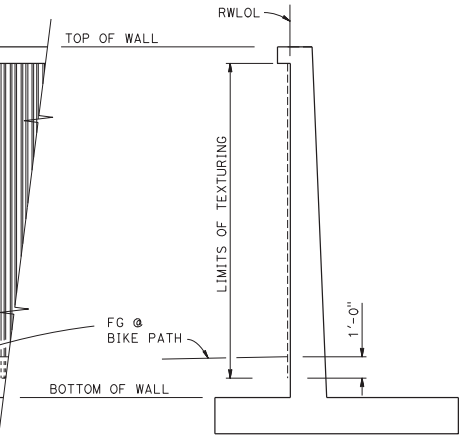

SECTION A-A

FRACTURED FIN TEXTURE
NO SCALE

DESIGN	BY R. ANDERSON	CHECKED M. VO	
DETAILS	BY R. KIRKLAND	CHECKED M. VO	
QUANTITIES	BY R. ANDERSON	CHECKED M. VO	

STATE OF CALIFORNIA
DEPARTMENT OF TRANSPORTATION

DIVISION OF ENGINEERING SERVICES
STRUCTURE DESIGN
DESIGN BRANCH 10

BRIDGE NO. 57E0123
POST MILE M5.816

MID CITY BIKE FACILITY RW-431
DETAILS NO. 1

STRUCTURES DESIGN DETAIL SHEET (ENGLISH) (REV. 09-01-10)

ORIGINAL SCALE IN INCHES FOR REDUCED PLANS 0 1 2 3

UNIT: 3589
PROJECT NUMBER & PHASE: 1100020291
CONTRACT NO.: 11-2T1900

DISREGARD PRINTS BEARING EARLIER REVISION DATES

REVISION DATES 8-29-02 10-24-14 9-29-14

SHEET 4 OF 5

FILE => 57e0123usndt04.dgn

DIST	COUNTY	ROUTE	POST MILES TOTAL PROJECT	SHEET No.	TOTAL SHEETS
11	SD	15			

Renee M. Anderson 10-01-14
REGISTERED CIVIL ENGINEER DATE

PLANS APPROVAL DATE

REGISTERED PROFESSIONAL ENGINEER RENEE ANDERSON NO. 61040 Exp. 12-31-2014 CIVIL STATE OF CALIFORNIA

The State of California or its officers or agents shall not be responsible for the accuracy or completeness of electronic copies of this plan sheet.

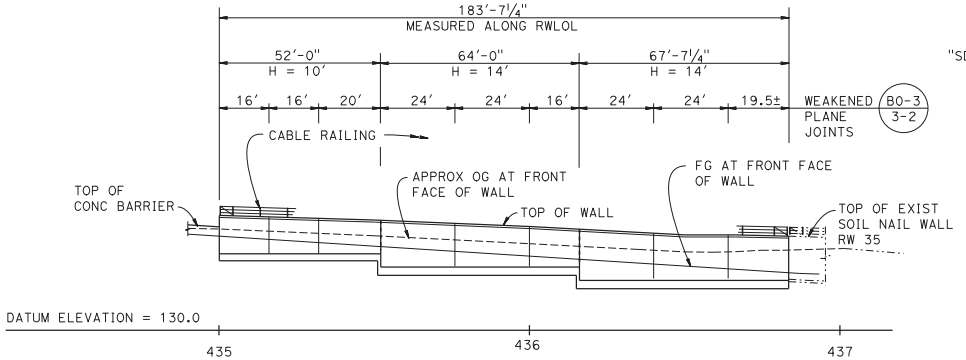

MIRRORED DEVELOPED ELEVATION

1" = 20'

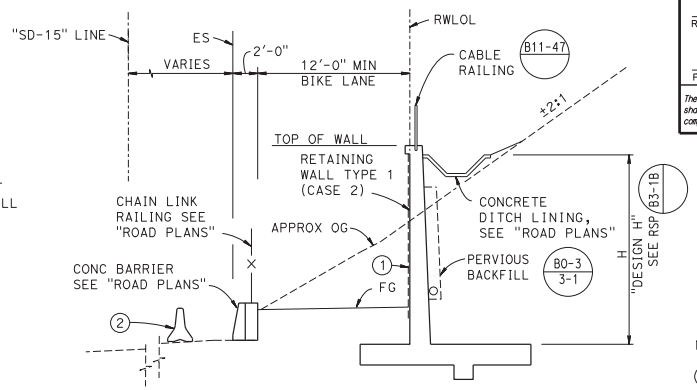

TYPICAL SECTION

1" = 5'

NOTES:

1. Architectural treatment "Fractured Fin Texture"
2. Temporary Railing Type K, see "ROAD PLAN"

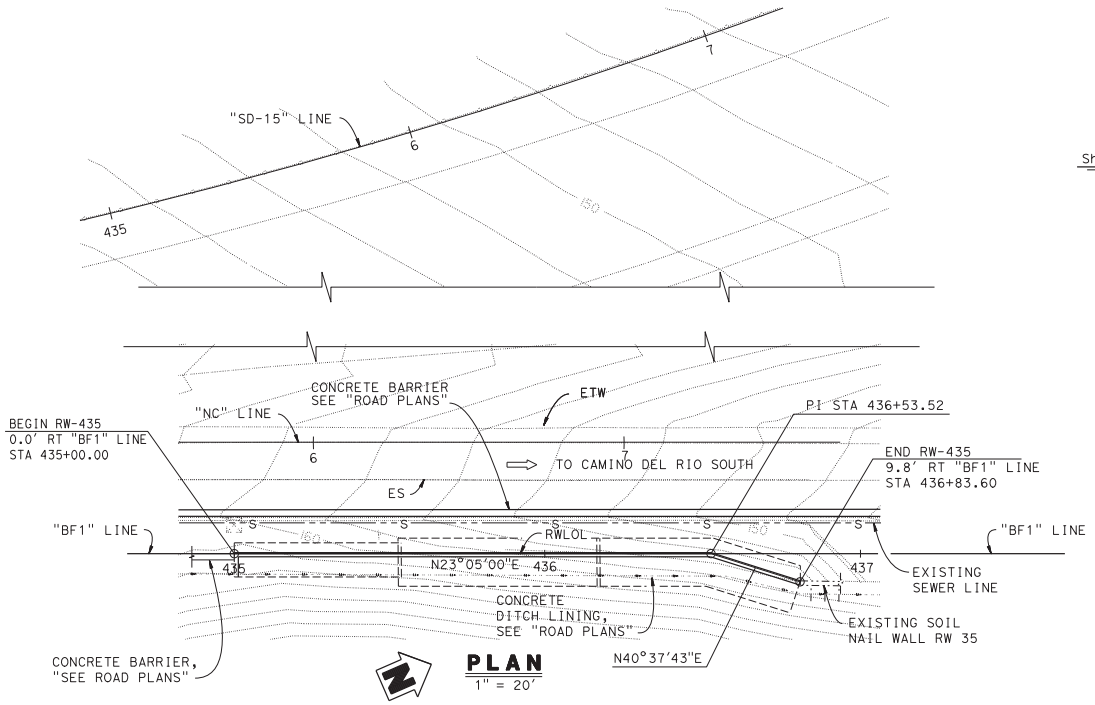

PLAN

1" = 20'

INDEX TO PLANS

Sheet No.	Title
1	GENERAL PLAN
2	STRUCTURE PLAN NO. 1
3	STRUCTURE PLAN NO. 2
4	DETAILS NO. 1
5	LOG OF TEST BORINGS 1 OF 1

STANDARD PLANS DATED 2010

	A10A	ACRONYMS AND ABBREVIATIONS (SHEET 1 OF 2)
(RSP)	A10B	ACRONYMS AND ABBREVIATIONS (SHEET 2 OF 2)
	A10C	SYMBOLS (SHEET 1 OF 2)
	A10D	SYMBOLS (SHEET 2 OF 2)
	B0-3	BRIDGE DETAILS
(RSP)	B3-1B	RETAINING WALL TYPE 1 (CASE 2)
(RSP)	B3-5	RETAINING WALL DETAILS NO. 1
(RSP)	B11-47	CABLE RAILING

LEGEND:

Indicates existing structure

Indicates new construction

STANDARD PLAN SHEET NO.

DETAIL NO.

QUANTITIES

STRUCTURE EXCAVATION (RETAINING WALL)	1,563	CY
STRUCTURE BACKFILL (RETAINING WALL)	893	CY
PERVIOUS BACKFILL MATERIAL (RETAINING WALL)	44	CY
STRUCTURAL CONCRETE, RETAINING WALL	390	CY
FRACTURED FIN TEXTURE	1,601	SQFT
BAR REINFORCING STEEL (RETAINING WALL)	39,117	LB
CABLE RAILING	184	LF

NOTE:
THE CONTRACTOR SHALL VERIFY ALL CONTROLLING FIELD DIMENSIONS BEFORE ORDERING OR FABRICATING ANY MATERIAL.

DANIEL T. ADAMS
DESIGN ENGINEER

	BY	CHECKED
DESIGN	R. ANDERSON	M. VO
DETAILS	R. KIRKLAND	M. VO
QUANTITIES	R. ANDERSON	M. VO

LOAD & RESISTANCE FACTOR DESIGN — LIVE LOADING: HL93 W/"LOW-BOY"; PERMIT DESIGN VEHICLE

LAYOUT: R. ANDERSON — CHECKED: M. VO
SPECIFICATIONS: V. Renganathan — PLANS AND SPECS COMPARED: V. Renganathan

ORIGINAL SCALE IN INCHES FOR REDUCED PLANS 0 1 2 3

STATE OF CALIFORNIA
DEPARTMENT OF TRANSPORTATION

DIVISION OF ENGINEERING SERVICES
STRUCTURE DESIGN
DESIGN BRANCH 10

BRIDGE NO. 57E0124
POST MILE R5.870

MID CITY BIKE FACILITY RW-435
GENERAL PLAN

UNIT: 3589
PROJECT NUMBER & PHASE: 1100020291
CONTRACT NO.: 11-2T1900

DISREGARD PRINTS BEARING EARLIER REVISION DATES

REVISION DATES: 07-29-02 10-30-14 10-24-14

SHEET 1 OF 5

STRUCTURES DESIGN GENERAL PLAN SHEET (ENGLISH) (REV.09-01-10)

FILE => 57e0124gap01.dgn

DIST	COUNTY	ROUTE	POST MILES TOTAL PROJECT	SHEET No.	TOTAL SHEETS
11	SD	15	5.6/R6.0		

Renee M. Anderson 10-01-14
REGISTERED CIVIL ENGINEER DATE

PLANS APPROVAL DATE

REGISTERED PROFESSIONAL ENGINEER RENEE ANDERSON NO. 61040 Exp. 12-31-2014 CIVIL STATE OF CALIFORNIA

The State of California or its officers or agents shall not be responsible for the accuracy or completeness of electronic copies of this plan sheet.

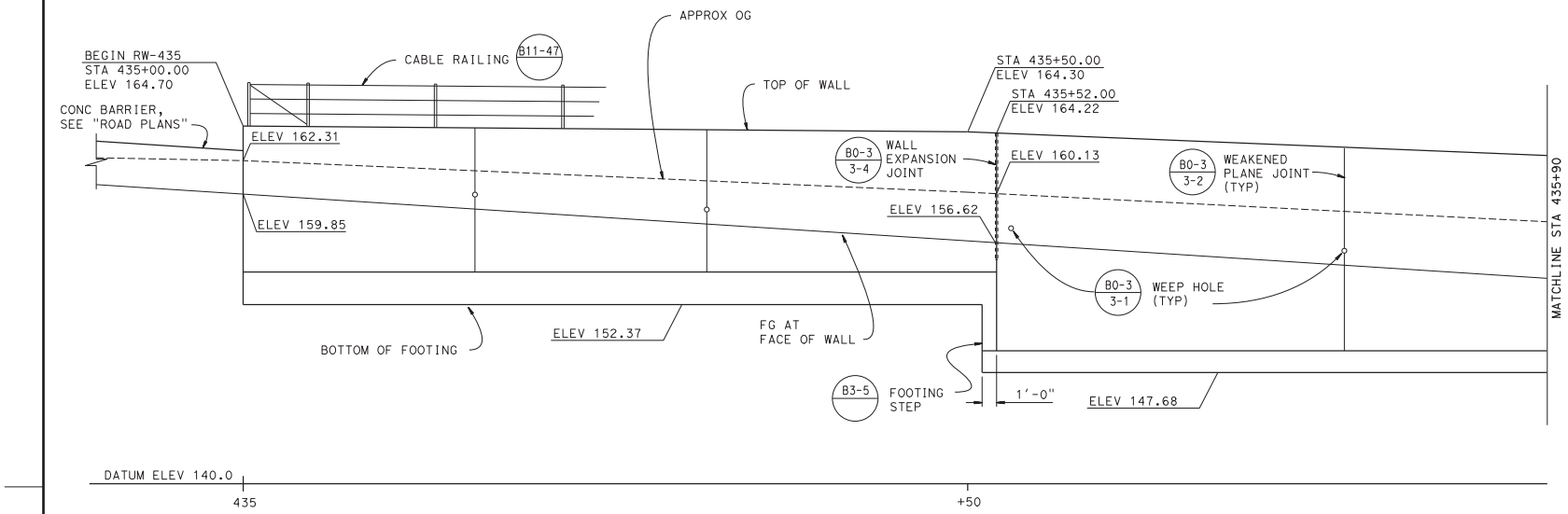

DEVELOPED MIRRORED ELEVATION

1/4" = 1'-0"

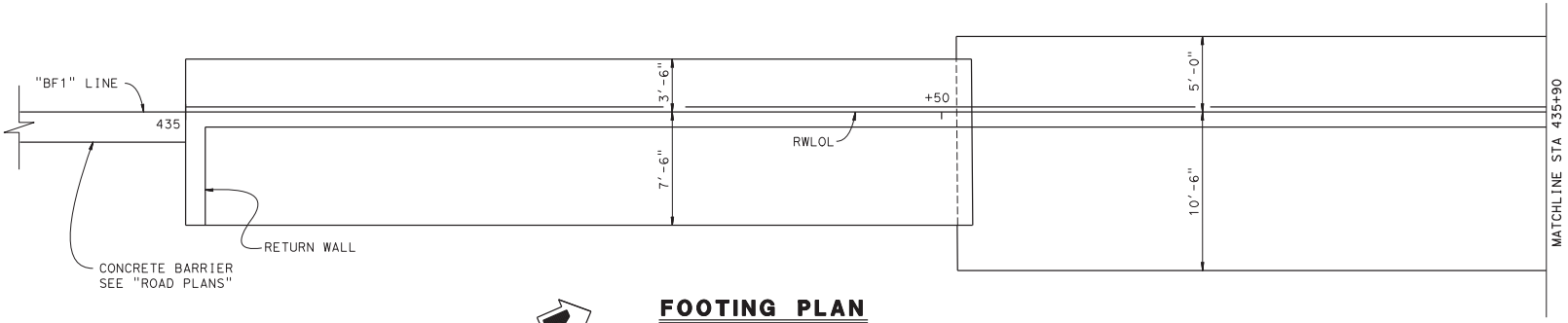

FOOTING PLAN

1/4" = 1'-0"

DESIGN	BY R. ANDERSON	CHECKED M. VO	
DETAILS	BY R. KIRKLAND	CHECKED M. VO	
QUANTITIES	BY R. ANDERSON	CHECKED M. VO	

STATE OF CALIFORNIA
DEPARTMENT OF TRANSPORTATION

DIVISION OF ENGINEERING SERVICES
STRUCTURE DESIGN
DESIGN BRANCH 10

BRIDGE NO. 57E0124
POST MILE M5.870

MID CITY BIKE FACILITY RW-435
STRUCTURE PLAN NO. 1

STRUCTURES DESIGN DETAIL SHEET (ENGLISH) (REV. 09-01-10)

ORIGINAL SCALE IN INCHES FOR REDUCED PLANS 0 1 2 3

UNIT: 3589
PROJECT NUMBER & PHASE: 1100020291
CONTRACT NO.: 11-2T1900

DISREGARD PRINTS BEARING EARLIER REVISION DATES

REVISION DATES 8-22-12 9-26-14 10-24-14

SHEET 2 OF 5

FILE => 57e0124csp02.dgn

DIST	COUNTY	ROUTE	POST MILES TOTAL PROJECT	SHEET No.	TOTAL SHEETS
11	SD	15	5.6/R6.0		

Renee M. Anderson 10-01-14
REGISTERED CIVIL ENGINEER DATE

PLANS APPROVAL DATE

REGISTERED PROFESSIONAL ENGINEER RENEE ANDERSON NO. 61040 Exp. 12-31-2014 CIVIL STATE OF CALIFORNIA

The State of California or its officers or agents shall not be responsible for the accuracy or completeness of electronic copies of this plan sheet.

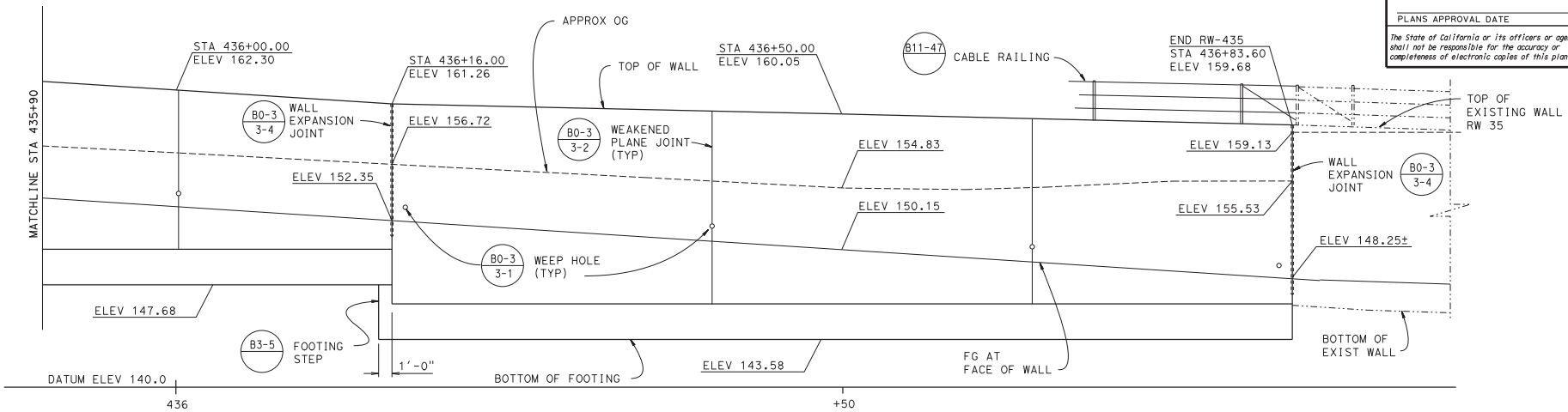

DEVELOPED MIRRORED ELEVATION

1/4" = 1'-0"

NOTE:
For DETAIL - A and DETAIL - B, see "DETAILS NO. 1" sheet

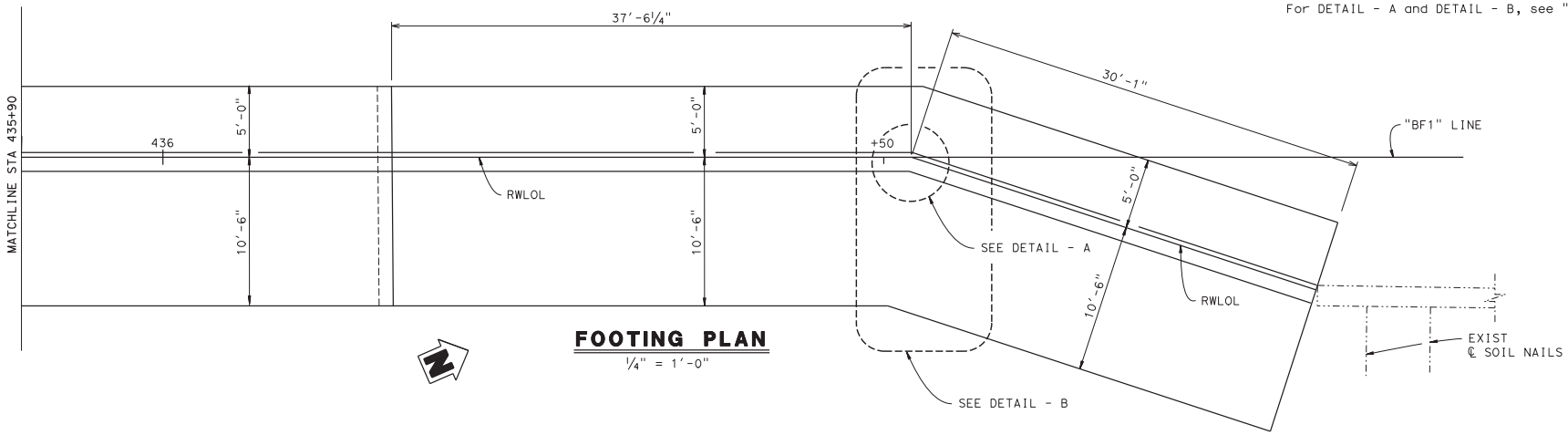

FOOTING PLAN

1/4" = 1'-0"

DESIGN	BY R. ANDERSON	CHECKED M. VO	
DETAILS	BY R. KIRKLAND	CHECKED M. VO	
QUANTITIES	BY R. ANDERSON	CHECKED M. VO	

STATE OF CALIFORNIA DEPARTMENT OF TRANSPORTATION

DIVISION OF ENGINEERING SERVICES STRUCTURE DESIGN DESIGN BRANCH 10

BRIDGE NO. 57E0124
POST MILE M5.870

MID CITY BIKE FACILITY RW-435
STRUCTURE PLAN NO. 2

STRUCTURES DESIGN DETAIL SHEET (ENGLISH) (REV. 09-01-10)

ORIGINAL SCALE IN INCHES FOR REDUCED PLANS 0 1 2 3

UNIT: 3589
PROJECT NUMBER & PHASE: 1100020291
CONTRACT NO.: 11-2T1900

DISREGARD PRINTS BEARING EARLIER REVISION DATES

REVISION DATES 8-29-12 10-30-14 10-24-14

SHEET 3 OF 5

FILE => 57e0124csp03.dgn

DIST	COUNTY	ROUTE	POST MILES TOTAL PROJECT	SHEET No.	TOTAL SHEETS
11	SD	15	5.6/R6.0		

Renee M. Anderson 10-01-14
REGISTERED CIVIL ENGINEER DATE

PLANS APPROVAL DATE

REGISTERED PROFESSIONAL ENGINEER RENEE ANDERSON NO. 61040 Exp. 12-31-2014 CIVIL STATE OF CALIFORNIA

The State of California or its officers or agents shall not be responsible for the accuracy or completeness of electronic copies of this plan sheet.

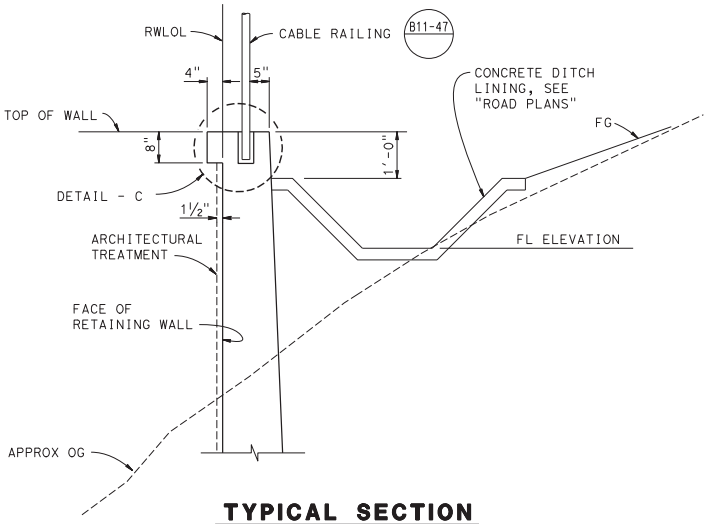

TYPICAL SECTION
¾" = 1'-0"

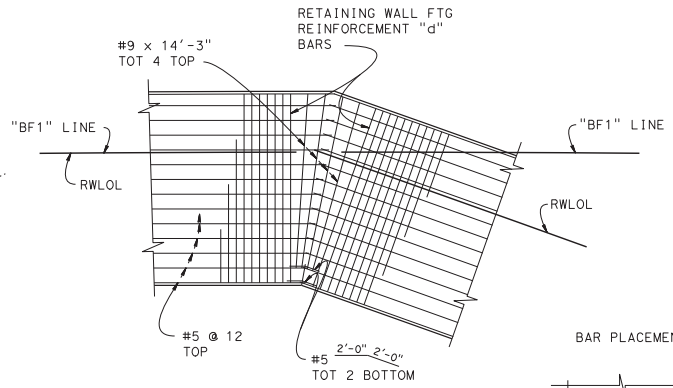

DETAIL - B
NO SCALE

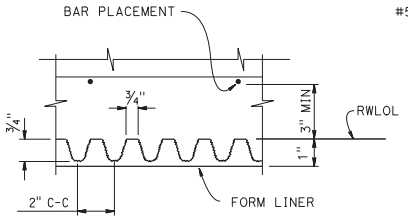

SECTION B-B

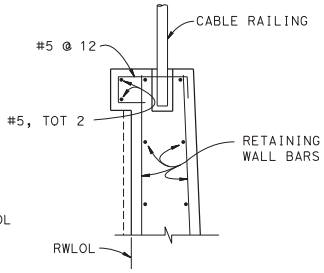

DETAIL - C
1" = 1'-0"

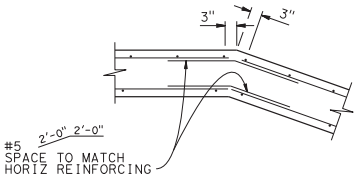

DETAIL - A
¾" = 1'-0"

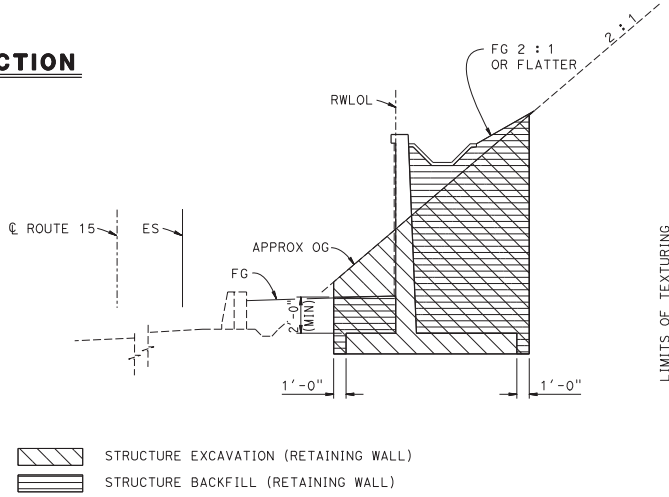

EXCAVATION & BACKFILL LIMITS
NO SCALE

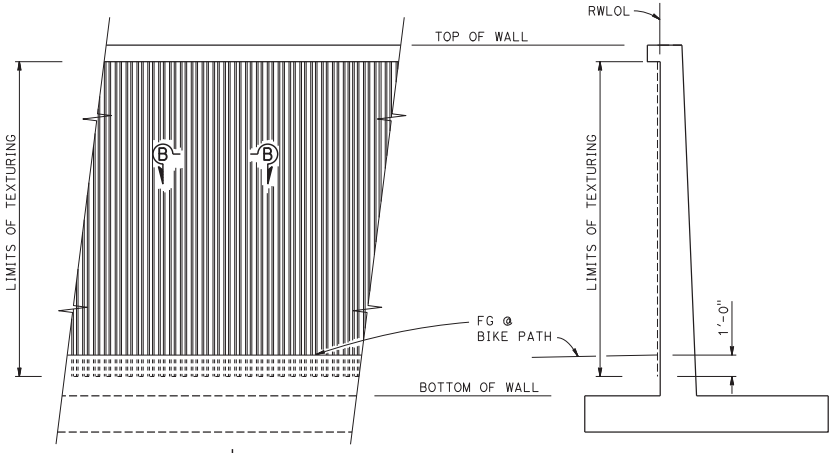

ELEVATION

SECTION A-A

FRACTURED FIN TEXTURE
NO SCALE

DESIGN	BY R. ANDERSON	CHECKED M. VO	
DETAILS	BY R. KIRKLAND	CHECKED M. VO	
QUANTITIES	BY R. ANDERSON	CHECKED M. VO	

STATE OF CALIFORNIA
DEPARTMENT OF TRANSPORTATION

DIVISION OF ENGINEERING SERVICES
STRUCTURE DESIGN
DESIGN BRANCH 10

BRIDGE NO. 57E0124
POST MILE M5.870

MID CITY BIKE FACILITY RW-435
DETAILS NO. 1

STRUCTURES DESIGN DETAIL SHEET (ENGLISH) (REV. 09-01-10)

ORIGINAL SCALE IN INCHES FOR REDUCED PLANS 0 1 2 3

UNIT: 3589
PROJECT NUMBER & PHASE: 1100020291
CONTRACT NO.: 11-2T1900

DISREGARD PRINTS BEARING EARLIER REVISION DATES

REVISION DATES 8-29-12 10-30-14 10-28-14

SHEET 4 OF 5

FILE => 57e0124usndt04.dgn

DIST	COUNTY	ROUTE	POST MILES TOTAL PROJECT	SHEET No.	TOTAL SHEETS
11	SD	15	5.6/R6.0		

Renee M. Anderson 10-01-14
REGISTERED CIVIL ENGINEER DATE

PLANS APPROVAL DATE

REGISTERED PROFESSIONAL ENGINEER RENEE ANDERSON NO. 61040 EXP. 12-31-2014 CIVIL STATE OF CALIFORNIA

The State of California or its officers or agents shall not be responsible for the accuracy or completeness of electronic copies of this plan sheet.

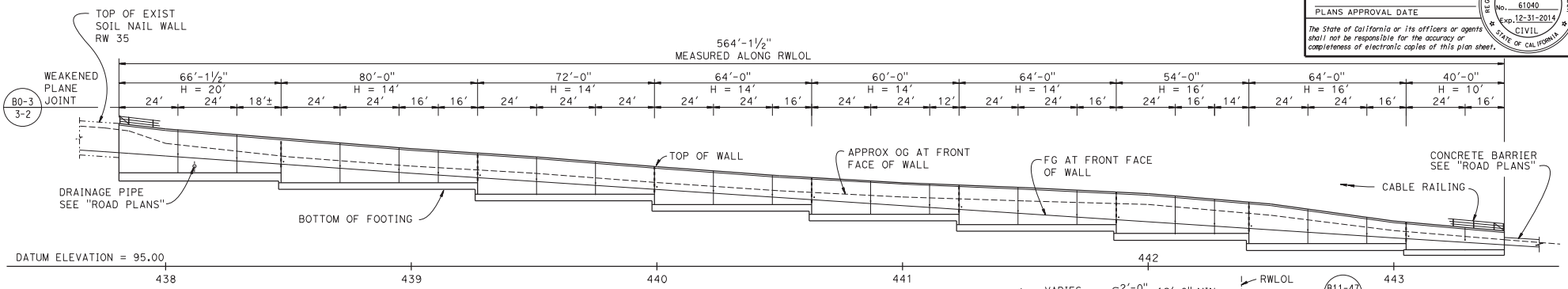

MIRRORED DEVELOPED ELEVATION

1" = 20'

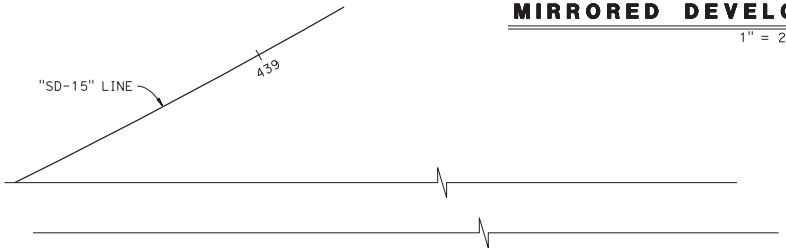

NOTES:

1. Architectural Treatment "Fractured Fin Texture"
2. Temporary Railing Type K, see "ROAD PLANS"

LEGEND:

-·-·-·- Indicates existing structure

——— Indicates new construction

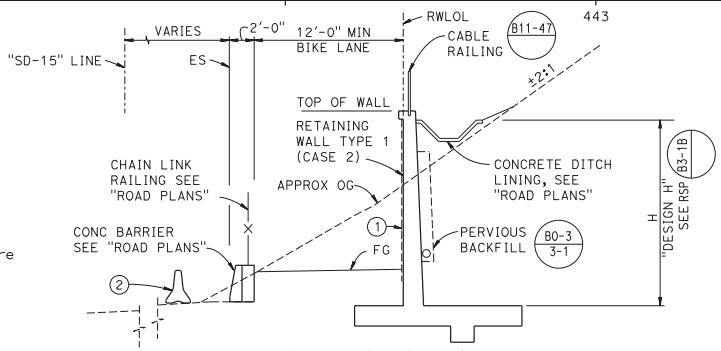

TYPICAL SECTION

1" = 5'

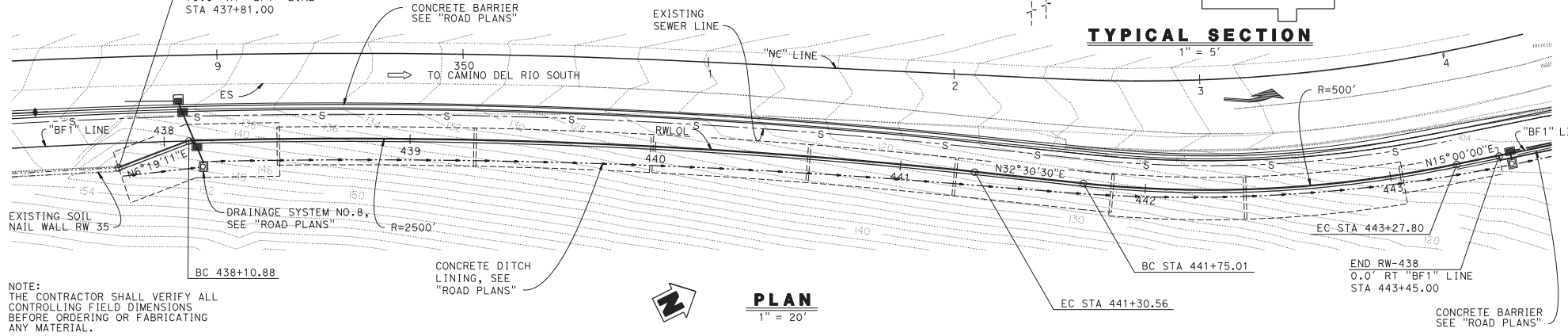

NOTE:
THE CONTRACTOR SHALL VERIFY ALL CONTROLLING FIELD DIMENSIONS BEFORE ORDERING OR FABRICATING ANY MATERIAL.

PLAN

1" = 20'

DESIGN	BY R. ANDERSON	CHECKED M.VO	LOAD & RESISTANCE FACTOR DESIGN	LIVE LOADING: HL93 W/"LOW-BOY"; PERMIT DESIGN VEHICLE		
DETAILS	BY R. KIRKLAND	CHECKED M. VO	LAYOUT	BY R. ANDERSON	CHECKED M. VO	
QUANTITIES	BY R. ANDERSON	CHECKED M. VO	SPECIFICATIONS	BY V. Renganathan	PLANS AND SPECS COMPARED V. Renganathan	

DANIEL T. ADAMS
DESIGN ENGINEER

ORIGINAL SCALE IN INCHES FOR REDUCED PLANS 0 1 2 3

STATE OF CALIFORNIA
DEPARTMENT OF TRANSPORTATION

DIVISION OF ENGINEERING SERVICES
STRUCTURE DESIGN
DESIGN BRANCH 10

BRIDGE NO. 57E0125
POST MILE R5.921

MID CITY BIKE FACILITY RW-438
GENERAL PLAN

UNIT: 3589
PROJECT NUMBER & PHASE: 1100020291
CONTRACT NO.: 11-2T1900

DISREGARD PRINTS BEARING EARLIER REVISION DATES

REVISION DATES 8-29-02 9-26-14 10-24-14

SHEET 1 OF 8

STRUCTURES DESIGN GENERAL PLAN SHEET (ENGLISH) (REV.09-01-10)

FILE => 57e0125gap01.dgn

USERNAME => s137549 DATE PLOTTED => 30-OCT-2014 TIME PLOTTED => 11:13

DIST	COUNTY	ROUTE	POST MILES TOTAL PROJECT	SHEET No.	TOTAL SHEETS
11	SD	15	5.6/R6.0		

Renee M. Anderson 10-01-14
REGISTERED CIVIL ENGINEER DATE

PLANS APPROVAL DATE

REGISTERED PROFESSIONAL ENGINEER RENEE ANDERSON NO. 61040 Exp. 12-31-2014 CIVIL STATE OF CALIFORNIA

The State of California or its officers or agents shall not be responsible for the accuracy or completeness of electronic copies of this plan sheet.

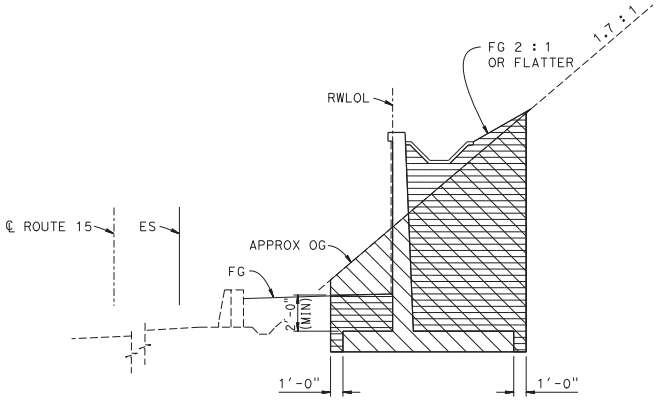

STRUCTURE EXCAVATION (RETAINING WALL)
STRUCTURE BACKFILL (RETAINING WALL)

EXCAVATION & BACKFILL LIMITS

NO SCALE

INDEX TO PLANS

Sheet No.	Title
1	GENERAL PLAN
2	INDEX TO PLANS
3	STRUCTURE PLAN NO. 1
4	STRUCTURE PLAN NO. 2
5	STRUCTURE PLAN NO. 3
6	STRUCTURE PLAN NO. 4
7	DETAILS NO. 1
8	LOG OF TEST BORINGS 1 OF 1

STANDARD PLANS DATED 2010

A10A	ACRONYMS AND ABBREVIATIONS (SHEET 1 OF 2)
(RSP) A10B	ACRONYMS AND ABBREVIATIONS (SHEET 2 OF 2)
A10C	SYMBOLS (SHEET 1 OF 2)
A10D	SYMBOLS (SHEET 2 OF 2)
B0-3	BRIDGE DETAILS
(RSP) B3-1B	RETAINING WALL TYPE 1 (CASE 2)
(RSP) B3-5	RETAINING WALL DETAILS NO. 1
B3-6	RETAINING WALL DETAILS NO. 2
(RSP) B11-47	CABLE RAILING

STANDARD PLAN SHEET NO.
DETAIL NO.

QUANTITIES

STRUCTURE EXCAVATION (RETAINING WALL)	5,583	CY
STRUCTURE BACKFILL (RETAINING WALL)	3,398	CY
PERVIOUS BACKFILL MATERIAL (RETAINING WALL)	113	CY
STRUCTURAL CONCRETE, RETAINING WALL	1,458	CY
FRACTURED FIN TEXTURE	4,920	SQFT
BAR REINFORCING STEEL (RETAINING WALL)	157,155	LB
CABLE RAILING	564	LF

NOTE:
THE CONTRACTOR SHALL VERIFY ALL CONTROLLING FIELD DIMENSIONS BEFORE ORDERING OR FABRICATING ANY MATERIAL.

	BY	CHECKED
DESIGN	R. ANDERSON	M. VO
DETAILS	R. KIRKLAND	M. VO
QUANTITIES	R. ANDERSON	M. VO

STATE OF CALIFORNIA DEPARTMENT OF TRANSPORTATION

DIVISION OF ENGINEERING SERVICES STRUCTURE DESIGN DESIGN BRANCH 10

BRIDGE NO. 57E0125
POST MILE R5.921

MID CITY BIKE FACILITY RW-438
INDEX TO PLANS

STRUCTURES DESIGN DETAIL SHEET (ENGLISH) (REV. 09-01-10)

ORIGINAL SCALE IN INCHES FOR REDUCED PLANS 0 1 2 3

UNIT: 3589
PROJECT NUMBER & PHASE: 1100020291
CONTRACT NO.: 11-2T1900

DISREGARD PRINTS BEARING EARLIER REVISION DATES

REVISION DATES 8-29-12 10-30-14 10-24-14

SHEET 2 OF 8

FILE => 57e0125aitp02.dgn

DIST	COUNTY	ROUTE	POST MILES TOTAL PROJECT	SHEET No.	TOTAL SHEETS
11	SD	15	5.6/R6.0		

Renee M. Anderson 10-01-14
REGISTERED CIVIL ENGINEER DATE

PLANS APPROVAL DATE

REGISTERED PROFESSIONAL ENGINEER RENEE ANDERSON NO. 61040 Exp. 12-31-2014 CIVIL STATE OF CALIFORNIA

The State of California or its officers or agents shall not be responsible for the accuracy or completeness of electronic copies of this plan sheet.

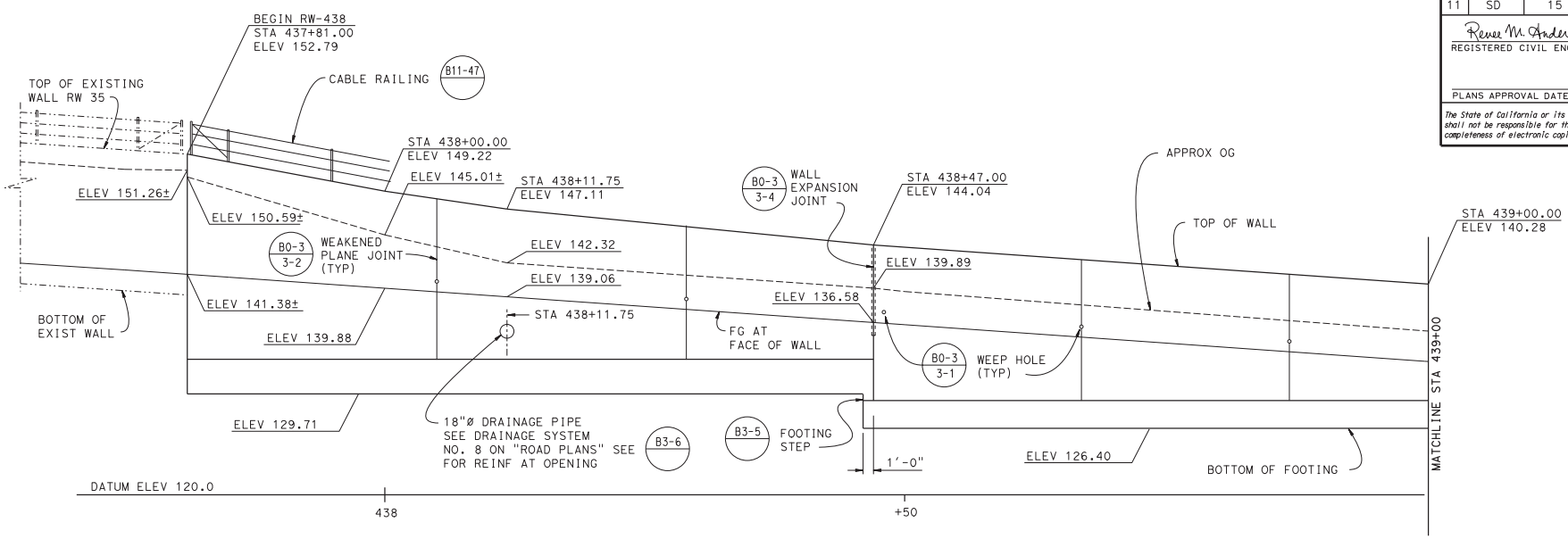

DEVELOPED MIRRORED ELEVATION

3/16" = 1'-0"

NOTE:
For DETAIL - A and DETAIL - B, see "DETAILS NO. 1" sheet.

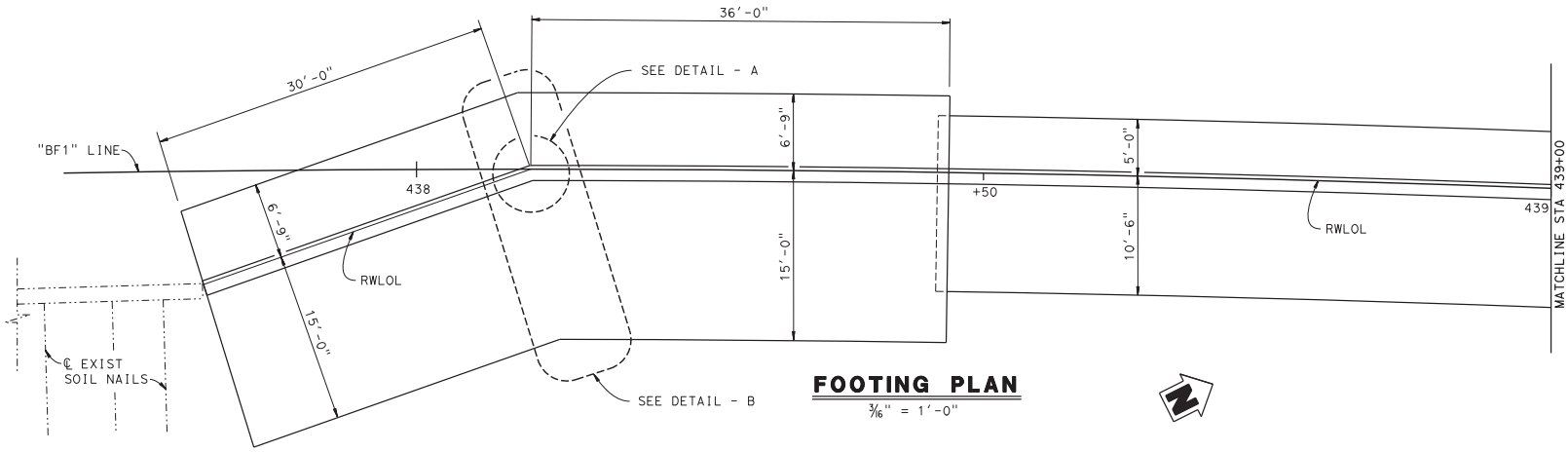

FOOTING PLAN

3/16" = 1'-0"

DESIGN	BY R. ANDERSON	CHECKED M. VO	
DETAILS	BY R. KIRKLAND	CHECKED M. VO	
QUANTITIES	BY R. ANDERSON	CHECKED M. VO	

STATE OF CALIFORNIA
DEPARTMENT OF TRANSPORTATION

DIVISION OF ENGINEERING SERVICES
STRUCTURE DESIGN
DESIGN BRANCH 10

BRIDGE NO. 57E0125
POST MILE R5.921

MID CITY BIKE FACILITY RW-438
STRUCTURE PLAN NO. 1

STRUCTURES DESIGN DETAIL SHEET (ENGLISH) (REV. 09-01-10)

ORIGINAL SCALE IN INCHES FOR REDUCED PLANS 0 1 2 3

UNIT: 3589
PROJECT NUMBER & PHASE: 1100020291
CONTRACT NO.: 11-2T1900

DISREGARD PRINTS BEARING EARLIER REVISION DATES

REVISION DATES 8-29-12 9-26-14 10-24-14

SHEET 3 OF 8

FILE => 57e0125csp03.dgn

DIST	COUNTY	ROUTE	POST MILES TOTAL PROJECT	SHEET No.	TOTAL SHEETS
11	SD	15	5.6/R6.0		

Renee M. Anderson 10-01-14
REGISTERED CIVIL ENGINEER DATE

PLANS APPROVAL DATE

REGISTERED PROFESSIONAL ENGINEER RENEE ANDERSON NO. 61040 Exp. 12-31-2014 CIVIL STATE OF CALIFORNIA

The State of California or its officers or agents shall not be responsible for the accuracy or completeness of electronic copies of this plan sheet.

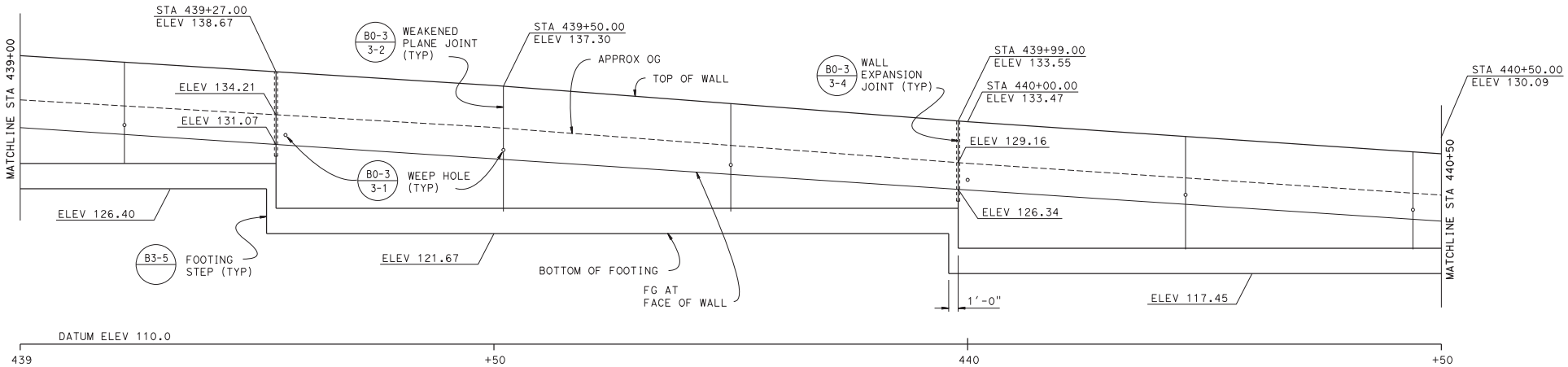

DEVELOPED MIRRORED ELEVATION

3/16" = 1'-0"

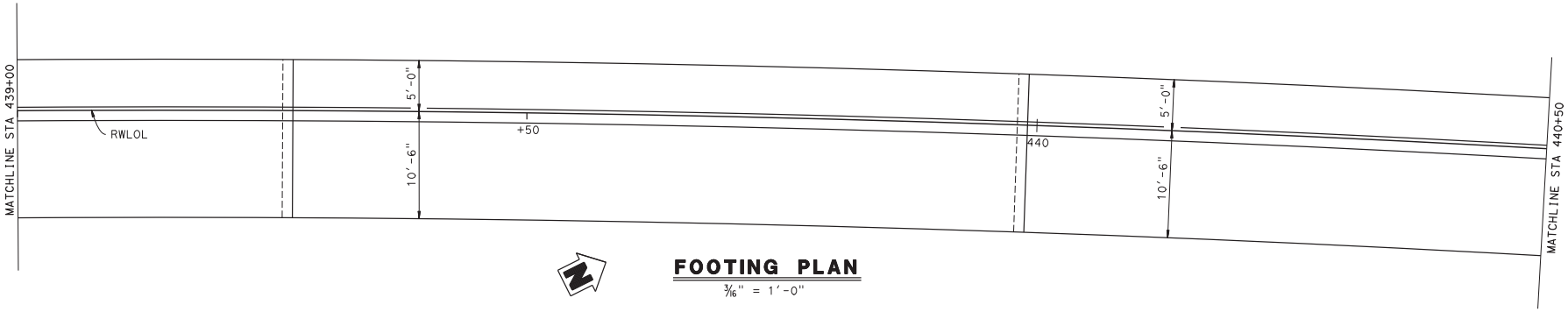

FOOTING PLAN

3/16" = 1'-0"

DESIGN	BY R. ANDERSON	CHECKED M. VO	
DETAILS	BY R. KIRKLAND	CHECKED M. VO	
QUANTITIES	BY R. ANDERSON	CHECKED M. VO	

STATE OF CALIFORNIA
DEPARTMENT OF TRANSPORTATION

DIVISION OF ENGINEERING SERVICES
STRUCTURE DESIGN
DESIGN BRANCH 10

BRIDGE NO. 57E0125
POST MILE R5.921

MID CITY BIKE FACILITY RW-438
STRUCTURE PLAN NO. 2

STRUCTURES DESIGN DETAIL SHEET (ENGLISH) (REV. 09-01-10)

ORIGINAL SCALE IN INCHES FOR REDUCED PLANS 0 1 2 3

UNIT: 3589
PROJECT NUMBER & PHASE: 1100020291
CONTRACT NO.: 11-2T1900

DISREGARD PRINTS BEARING EARLIER REVISION DATES

REVISION DATES 8-29-02 9-23-14 4-29-14

SHEET 4 OF 8

FILE => 57e0125csp04.dgn

DIST	COUNTY	ROUTE	POST MILES TOTAL PROJECT	SHEET No.	TOTAL SHEETS
11	SD	15	5.6/R6.0		

Renee M. Anderson 10-01-14
REGISTERED CIVIL ENGINEER DATE

PLANS APPROVAL DATE

REGISTERED PROFESSIONAL ENGINEER RENEE ANDERSON NO. 61040 Exp. 12-31-2014 CIVIL STATE OF CALIFORNIA

The State of California or its officers or agents shall not be responsible for the accuracy or completeness of electronic copies of this plan sheet.

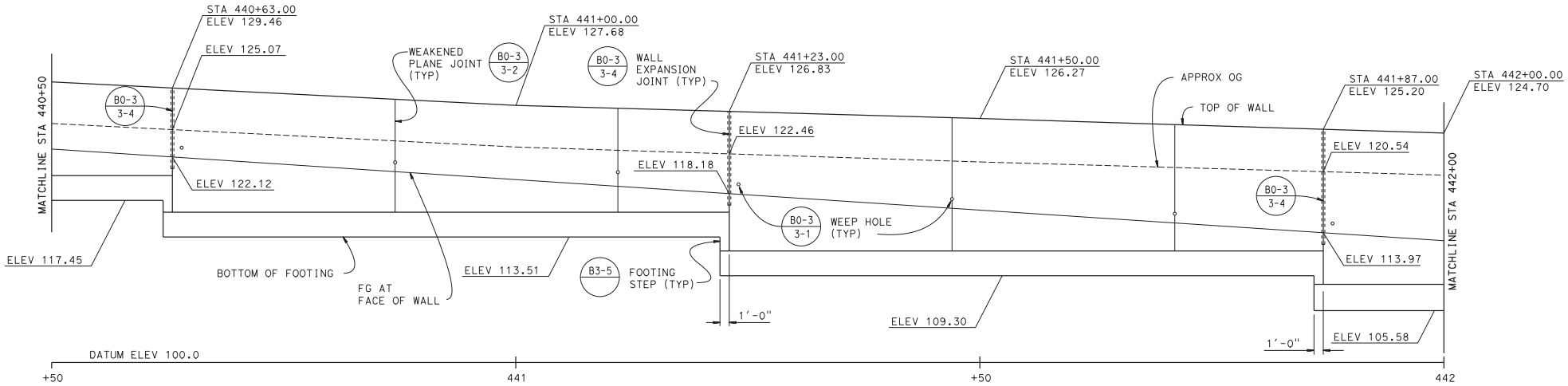

DEVELOPED MIRRORED ELEVATION

3/16" = 1'-0"

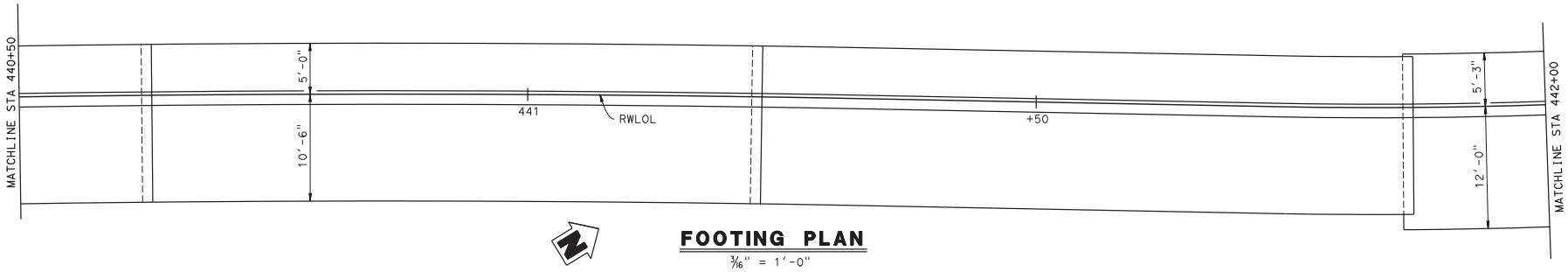

FOOTING PLAN

3/16" = 1'-0"

DESIGN	BY R. ANDERSON	CHECKED M. VO	
DETAILS	BY R. KIRKLAND	CHECKED M. VO	
QUANTITIES	BY R. ANDERSON	CHECKED M. VO	

STATE OF CALIFORNIA
DEPARTMENT OF TRANSPORTATION

DIVISION OF ENGINEERING SERVICES
STRUCTURE DESIGN
DESIGN BRANCH 10

BRIDGE NO. 57E0125
POST MILE R5.921

MID CITY BIKE FACILITY RW-438
STRUCTURE PLAN NO. 3

STRUCTURES DESIGN DETAIL SHEET (ENGLISH) (REV. 09-01-10)

ORIGINAL SCALE IN INCHES FOR REDUCED PLANS 0 1 2 3

UNIT: 3589
PROJECT NUMBER & PHASE: 1100020291
CONTRACT NO.: 11-2T1900

DISREGARD PRINTS BEARING EARLIER REVISION DATES

REVISION DATES 8-22-12 9-23-14 4-29-14

SHEET 5 OF 8

FILE => 57e0125csp05.dgn

DIST	COUNTY	ROUTE	POST MILES TOTAL PROJECT	SHEET No.	TOTAL SHEETS
11	SD	15	5.6/R6.0		

Renee M. Anderson 10-01-14
REGISTERED CIVIL ENGINEER DATE

PLANS APPROVAL DATE

REGISTERED PROFESSIONAL ENGINEER RENEE ANDERSON NO. 61040 Exp. 12-31-2014 CIVIL STATE OF CALIFORNIA

The State of California or its officers or agents shall not be responsible for the accuracy or completeness of electronic copies of this plan sheet.

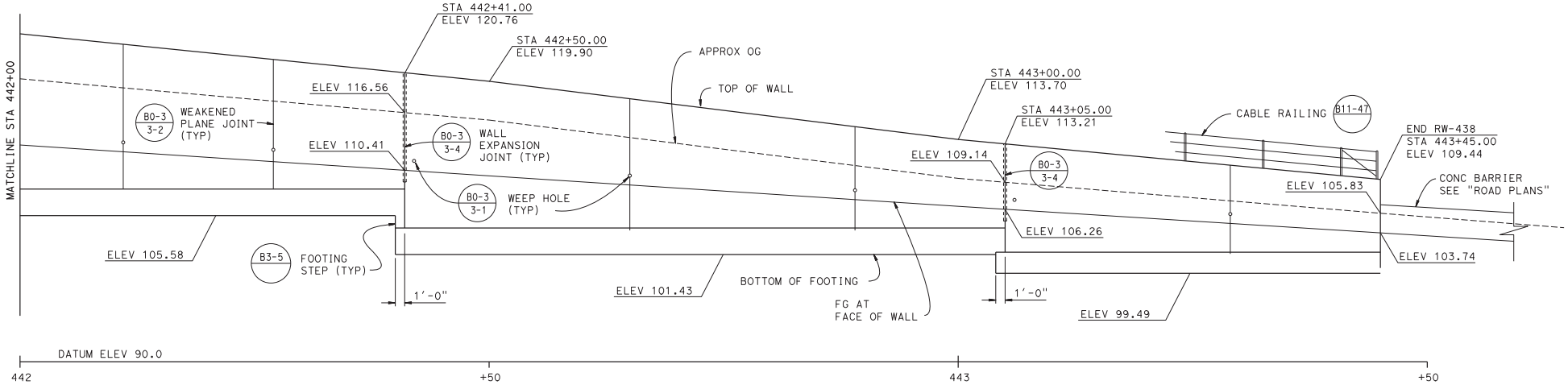

DEVELOPED MIRRORED ELEVATION

3/16" = 1'-0"

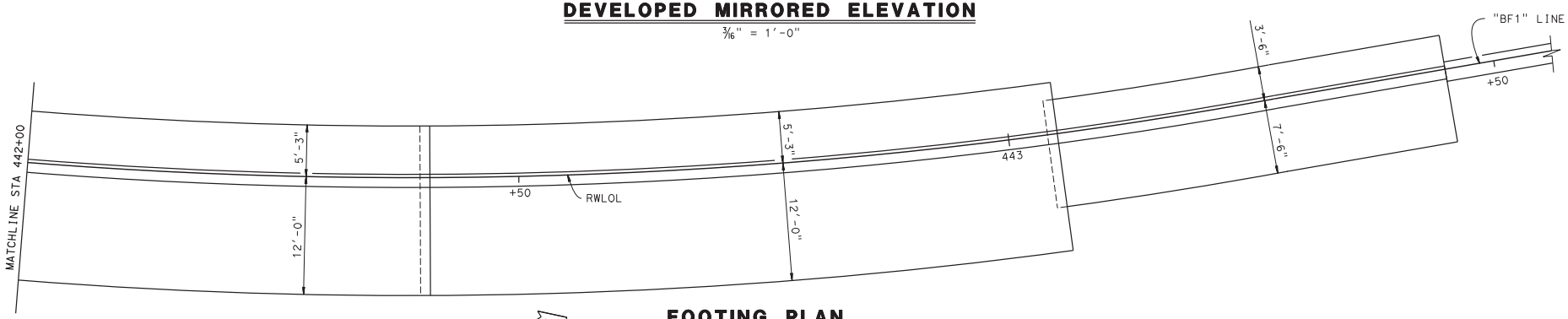

FOOTING PLAN

3/16" = 1'-0"

DESIGN	BY R. ANDERSON	CHECKED M. VO	
DETAILS	BY R. KIRKLAND	CHECKED M. VO	
QUANTITIES	BY R. ANDERSON	CHECKED M. VO	

STATE OF CALIFORNIA
DEPARTMENT OF TRANSPORTATION

DIVISION OF ENGINEERING SERVICES
STRUCTURE DESIGN
DESIGN BRANCH 10

BRIDGE NO. 57E0125
POST MILE R5.921

MID CITY BIKE FACILITY RW-438
STRUCTURE PLAN NO. 4

STRUCTURES DESIGN DETAIL SHEET (ENGLISH) (REV. 09-01-10)

ORIGINAL SCALE IN INCHES FOR REDUCED PLANS 0 1 2 3

UNIT: 3589
PROJECT NUMBER & PHASE: 1100020291
CONTRACT NO.: 11-2T1900

DISREGARD PRINTS BEARING EARLIER REVISION DATES

REVISION DATES 8-22-12 9-23-14 4-23-14

SHEET 6 OF 8

FILE => 57e0125csp06.dgn

DIST	COUNTY	ROUTE	POST MILES TOTAL PROJECT	SHEET No.	TOTAL SHEETS
11	SD	15	5.6/R6.0		

Renee M. Anderson 10-01-14
REGISTERED CIVIL ENGINEER DATE

PLANS APPROVAL DATE

REGISTERED PROFESSIONAL ENGINEER RENEE ANDERSON NO. 61040 Exp. 12-31-2014 CIVIL STATE OF CALIFORNIA

The State of California or its officers or agents shall not be responsible for the accuracy or completeness of electronic copies of this plan sheet.

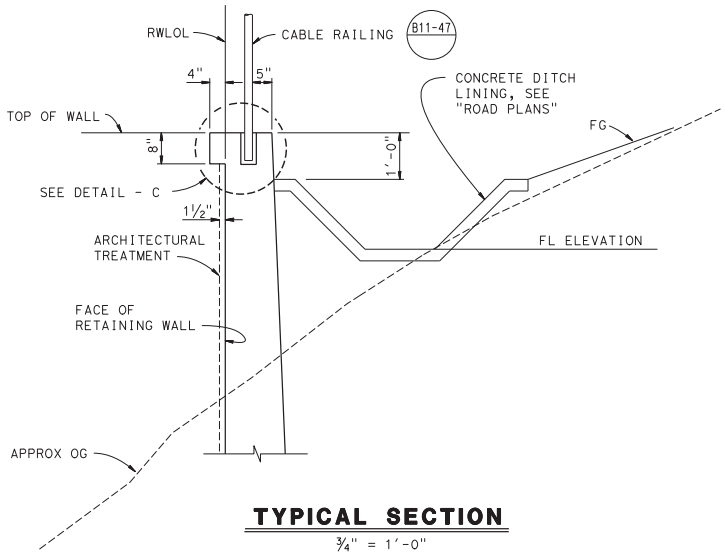

TYPICAL SECTION
¾" = 1'-0"

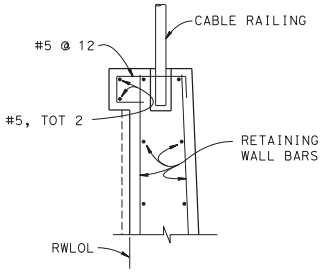

DETAIL - C
1" = 1'-0"

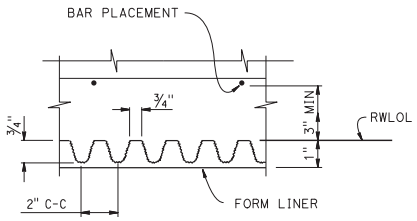

SECTION B-B

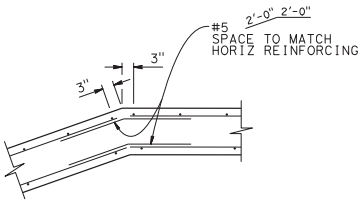

DETAIL - A
¾" = 1'-0"

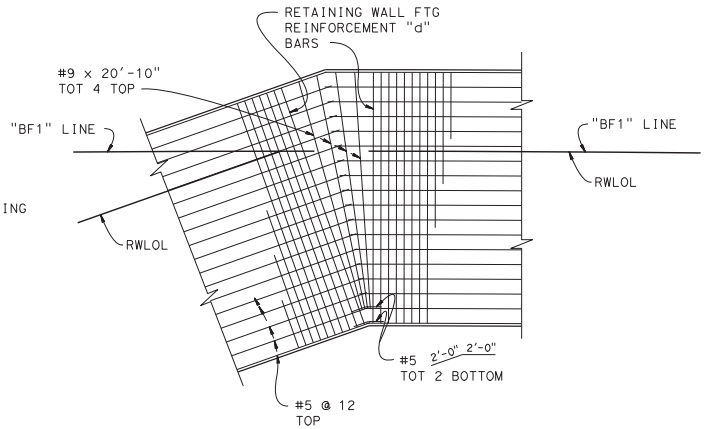

DETAIL - B
NO SCALE

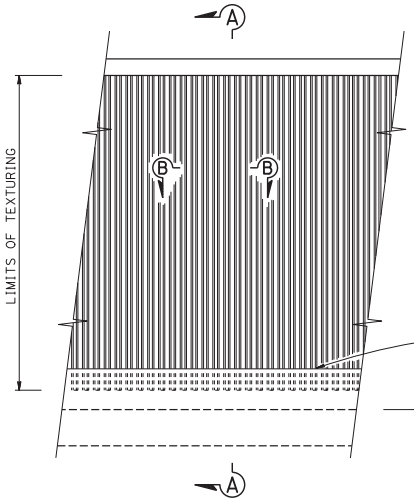

ELEVATION

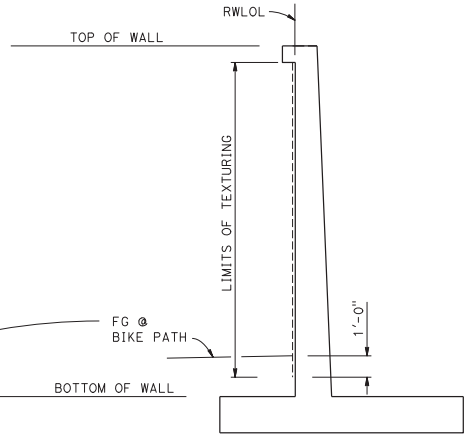

SECTION A-A

FRACTURED FIN TEXTURE
NO SCALE

DESIGN	BY R. ANDERSON	CHECKED M. VO	
DETAILS	BY R. KIRKLAND	CHECKED M. VO	
QUANTITIES	BY R. ANDERSON	CHECKED M. VO	

STATE OF CALIFORNIA
DEPARTMENT OF TRANSPORTATION

DIVISION OF ENGINEERING SERVICES
STRUCTURE DESIGN
DESIGN BRANCH 10

BRIDGE NO. 57E0125
POST MILE R5.921

MID CITY BIKE FACILITY RW-438
DETAILS NO. 1

STRUCTURES DESIGN DETAIL SHEET (ENGLISH) (REV. 09-01-10)

ORIGINAL SCALE IN INCHES FOR REDUCED PLANS 0 1 2 3

UNIT: 3589
PROJECT NUMBER & PHASE: 1100020291
CONTRACT NO.: 11-2T1900

DISREGARD PRINTS BEARING EARLIER REVISION DATES

REVISION DATES 8-29-02 9-26-14 10-24-14

SHEET 7 OF 8

FILE => 57e0125usnd07.dgn

APPENDIX B
AS-BUILT DATA

DIST	COUNTY	ROUTE	POST MILE TOTAL PROJECT
11	SD	5	4.5,5.5/R6.4

173

STATE OF CALIFORNIA
DEPARTMENT OF TRANSPORTATION

F-P015(007)

PROJECT PLANS FOR CONSTRUCTION ON STATE HIGHWAY

SAN DIEGO COUNTY IN SAN DIEGO

AT WIGHTMAN STREET OVERCROSSING AND FROM 0.1 MILE SOUTH OF ADAMS AVENUE OVERCROSSING TO 0.3 MILE NORTH OF ROUTE 15/8 SEPARATION

To be supplemented by Standard Plans dated January, 1988

INDEX OF SHEETS

Sheet No.	1	Title and Location Map
" "	2-3	Typical Cross Section
" "	4	Standard Plans List
" "	5-10	Layout, Contour Grading
" "	11-13	Profiles
" "	14-15	Superelevation Diagrams
" "	16-20	Construction Details
" "	21-33	Drainage Plans, Profiles, Details, Quantities
" "	34-45	Sanitary Sewer Plans, Details, Quantities
" "	46-52,46A	Utility Plans, Details
" "	53-67	Stage Construction, Traffic Handling Plans
" "	68-71	Detours
" "	72-76	Construction Area Signs
" "	77-83	Pavement Delineation Plans, Sign Plans
" "	84-87	Summary of Quantities
" "	88-89	Highway Planting Plans
" "	90-107	Electrical Plans
" "	108-109	Traffic Control System
" "	110-115	Revised and New Standard Plans
	STRUCTURE PLANS	
" "	116-134	Wightman St OC Br. No. 57-994
" "	135-151	Adams Ave OC (lengthen) Br. No. 57-500
" "	152-173	Route 15/8 Separation (Widen) Br. No. 57-373

SAN DIEGO

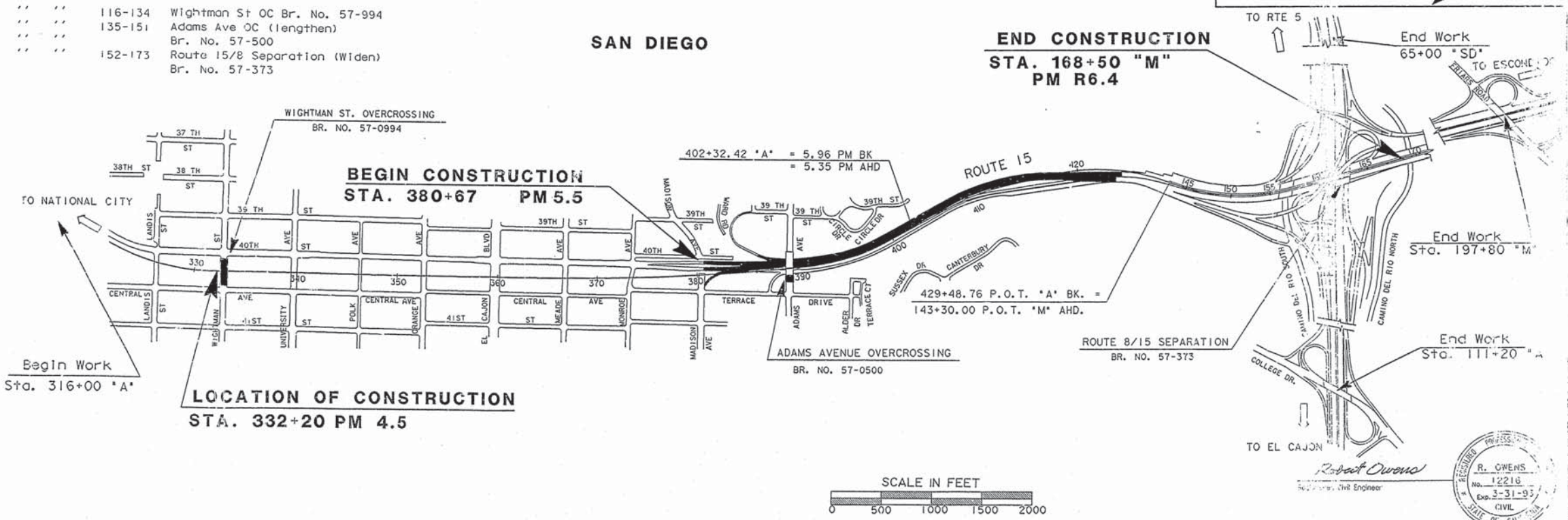

Robert Owens
Resident Civil Engineer

R. OWENS
No. 12216
Exp. 3-31-93
CIVIL
STATE OF CALIFORNIA

November 4, 1991
Date

AS BUILT PLANS
CONTRACT NO 11-048644
DATE COMPLETED 09-30-94
RE: D. MARTIN

The Contractor shall possess the Class or Classes of license as specified in the "Notice to Contractors".

FOR REDUCED PLANS
ORIGINAL SCALE IS IN INCHES 0 1 2 3

Contract No. 11-048644

EA 048644

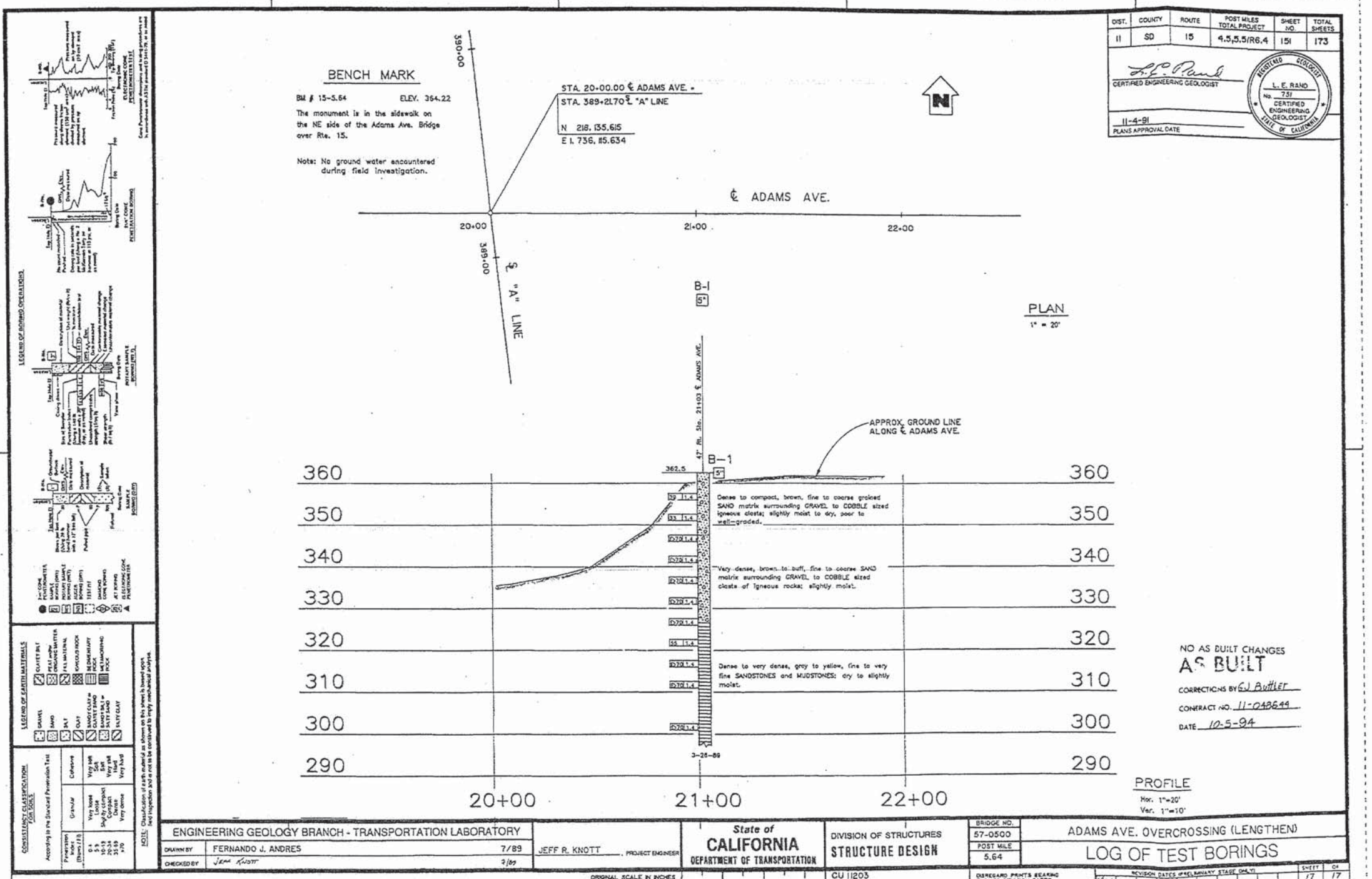
DIST. | COUNTY | ROUTE | POST MILES TOTAL PROJECT | SHEET NO. | TOTAL SHEETS
11 | SD | 15 | 4.5,5.5/R6.4 | 151 | 173
CERTIFIED ENGINEERING GEOLOGIST
L. E. RAND No. 751 CERTIFIED ENGINEERING GEOLOGIST STATE OF CALIFORNIA
11-4-91
PLANS APPROVAL DATE
BENCH MARK
BM # 15-5.64 ELEV. 364.22
The monument is in the sidewalk on the NE side of the Adams Ave. Bridge over Rte. 15.
Note: No ground water encountered during field investigation.
STA. 20+00.00 ℄ ADAMS AVE. =
STA. 389+21.70 ℄ "A" LINE
N 218,135.615
E I. 736,#5.634
590+00
589+00
℄ ADAMS AVE.
℄ "A" LINE
20+00
21+00
22+00
PLAN
1" = 20'
B-1
B-1
APPROX. GROUND LINE ALONG ℄ ADAMS AVE.
Dense to compact, brown, fine to coarse grained SAND matrix surrounding GRAVEL to COBBLE sized igneous clasts; slightly moist to dry, poor to well-graded.
Very dense, brown to buff, fine to coarse SAND matrix surrounding GRAVEL to COBBLE sized clasts of igneous rocks; slightly moist.
Dense to very dense, gray to yellow, fine to very fine SANDSTONES and MUDSTONES; dry to slightly moist.
362.5
3-26-89
360
350
340
330
320
310
300
290
20+00
21+00
22+00
PROFILE
Hor. 1"=20'
Ver. 1"=10'
NO AS BUILT CHANGES
AS BUILT
CORRECTIONS BY EJ Butler
CONTRACT NO. 11-048641
DATE 10-5-94
LEGEND OF ROTARY OPERATIONS
LEGEND OF EARTH MATERIALS
CONSISTENCY CLASSIFICATION FOR SOILS
NOTE: Classification of soils shown on this drawing is based upon visual inspection and should be confirmed by early mechanical analysis.
ENGINEERING GEOLOGY BRANCH - TRANSPORTATION LABORATORY
DRAWN BY FERNANDO J. ANDRES 7/89
CHECKED BY JEFF KNOTT 7/89
JEFF R. KNOTT, PROJECT ENGINEER
State of CALIFORNIA DEPARTMENT OF TRANSPORTATION
DIVISION OF STRUCTURES
STRUCTURE DESIGN
BRIDGE NO. 57-0500
POST MILE 5.64
ADAMS AVE. OVERCROSSING (LENGTHEN)
LOG OF TEST BORINGS
ORIGINAL SCALE IN INCHES FOR REDUCED PLANS 0 1 2 3
CU 11203
EA 048641
DISREGARD PRINTS BEARING EARLIER REVISION DATES
REVISION DATES (PRELIMINARY STAGE ONLY)
SHEET 17 OF 17

CALTRANS ENGR GEOLOGY
7177 OPPORTUNITY RD
SAN DIEGO, CA 92111

GEOTECHNICAL DESIGN REPORT

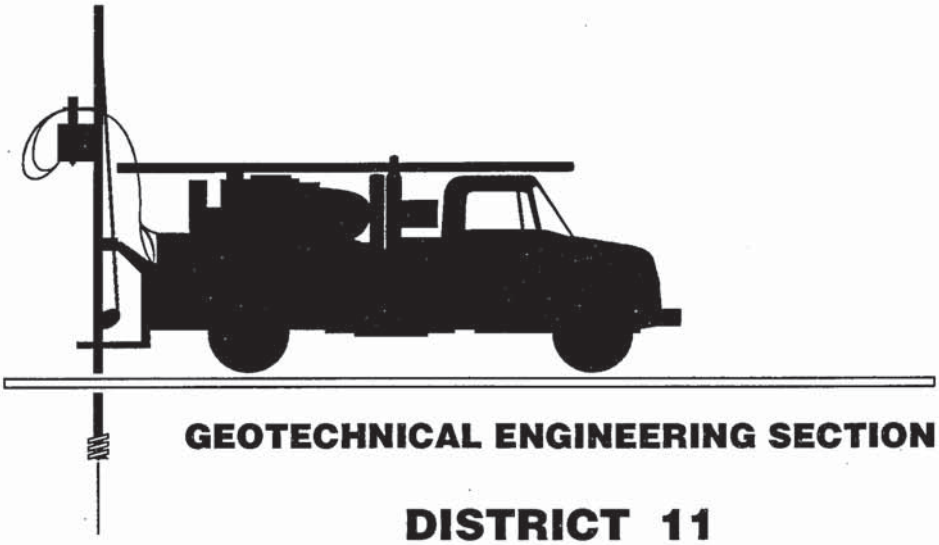

GEOTECHNICAL ENGINEERING SECTION

DISTRICT 11

11-SD-15
PM M3.4/R5.6
11-048661

In San Diego, from 0.6 Mile North of Route 805 to 0.3 Mile South of Route 8

CALIFORNIA DEPARTMENT OF TRANSPORTATION

DIST	COUNTY	ROUTE	POST MILES TOTAL PROJECT	SHEET NO.	TOTAL SHEETS
11	SD	15	M3.1/R5.6		

REGISTERED CIVIL ENGINEER

PLANS APPROVAL DATE

REGISTERED PROFESSIONAL ENGINEER No. Exp. CIVIL STATE OF CALIFORNIA

B-1R	WALL	392	(Sta 393+34,	151' Rt)
B-1R	WALL	383	(Sta 382+86,	86' Lt)
BA-7			(Sta 379+70,	12' Rt)
RJ91-3			(Sta 378+00,	180' Lt)
RJ91-7			(Sta 376+20,	90' Rt)
RJ91-5			(Sta 374+00,	98' Rt)
BA-1			(Sta 373+80,	110' Lt)
BA-2			(Sta 373+60,	100' Rt)
RJ91-6			(Sta 372+00,	110' Rt)
BA-6			(Sta 370+10,	17' Lt)
RJ91-1			(Sta 369+19,	107' Lt)
RJ91-4			(Sta 369+00,	155' Rt)
B-10			(Sta 367+00,	82' Lt)
B-8			(Sta 366+25,	157' Rt)
B-1R	WALL	361	(Sta 363+50,	123' Lt)
B-1R	WALL	362	(Sta 362+28,	140' Rt)
BA-5			(Sta 361+65,	25' Rt)
B-11			(Sta 360+55,	48' Lt)
B-9			(Sta 358+73,	133' Rt)
B-1R	WALL	353	(Sta 355+69,	131' Lt)
B-1R	WALL	354	(Sta 355+32,	131' Rt)
B-6			(Sta 353+50,	145' Rt)
B-7			(Sta 353+40,	120' Lt)
BA-4			(Sta 350+08,	13' Lt)
B-5			(Sta 349+60,	20' Rt)
B-4			(Sta 346+60,	130' Lt)
B-3			(Sta 346+60,	150' Rt)
B-1R	WALL	341	(Sta 345+15,	141' Lt)
B-1R	WALL	342	(Sta 345+13,	143' Rt)
BA-3			(Sta 338+80,	35' Lt)
B-1R	WALL	334	(Sta 335+70,	159' Rt)
B-1R	WALL	335	(Sta 335+60,	138' Lt)
BA-2			(Sta 330+20,	10' Lt)
BA-1			(Sta 320+00,	37' Rt)
B-1R	WALL	320	(Sta 319+52,	146' Lt)

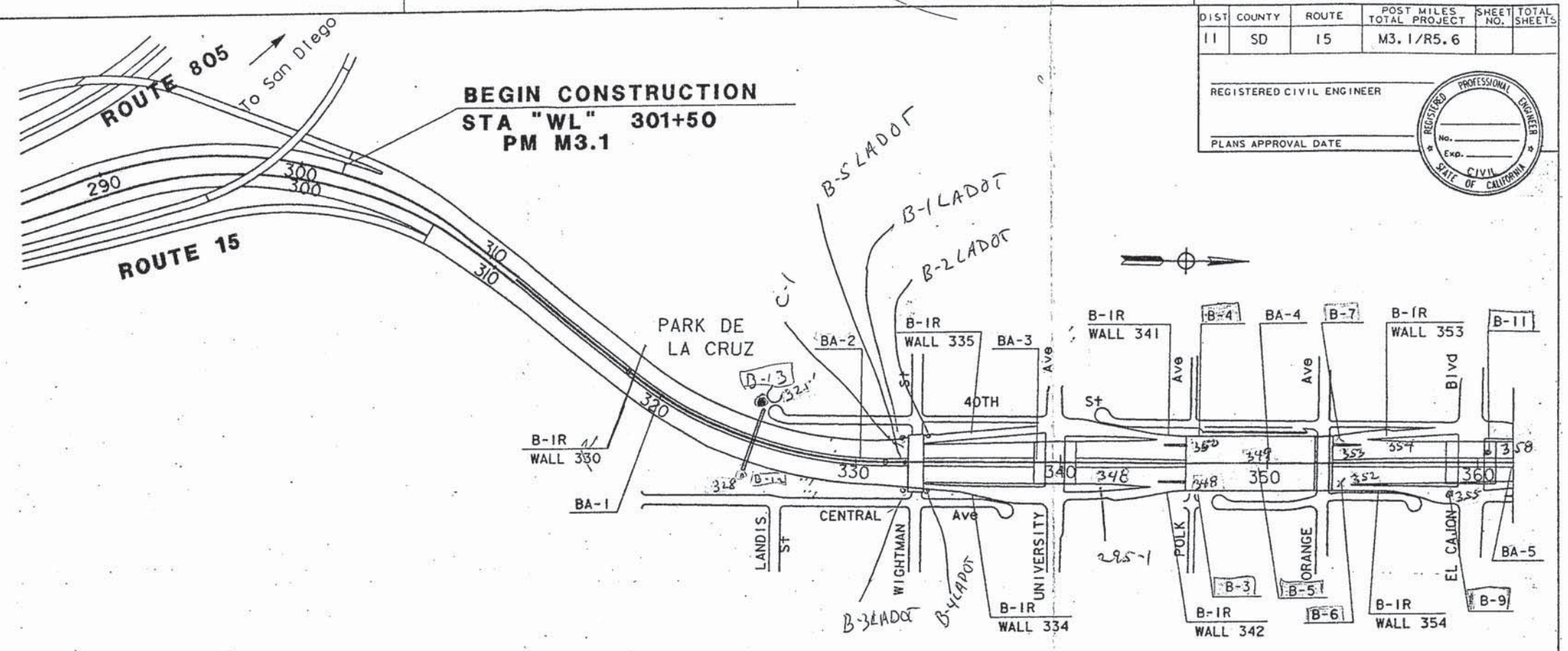

NOTE "A"-LINE = "B"-LINE

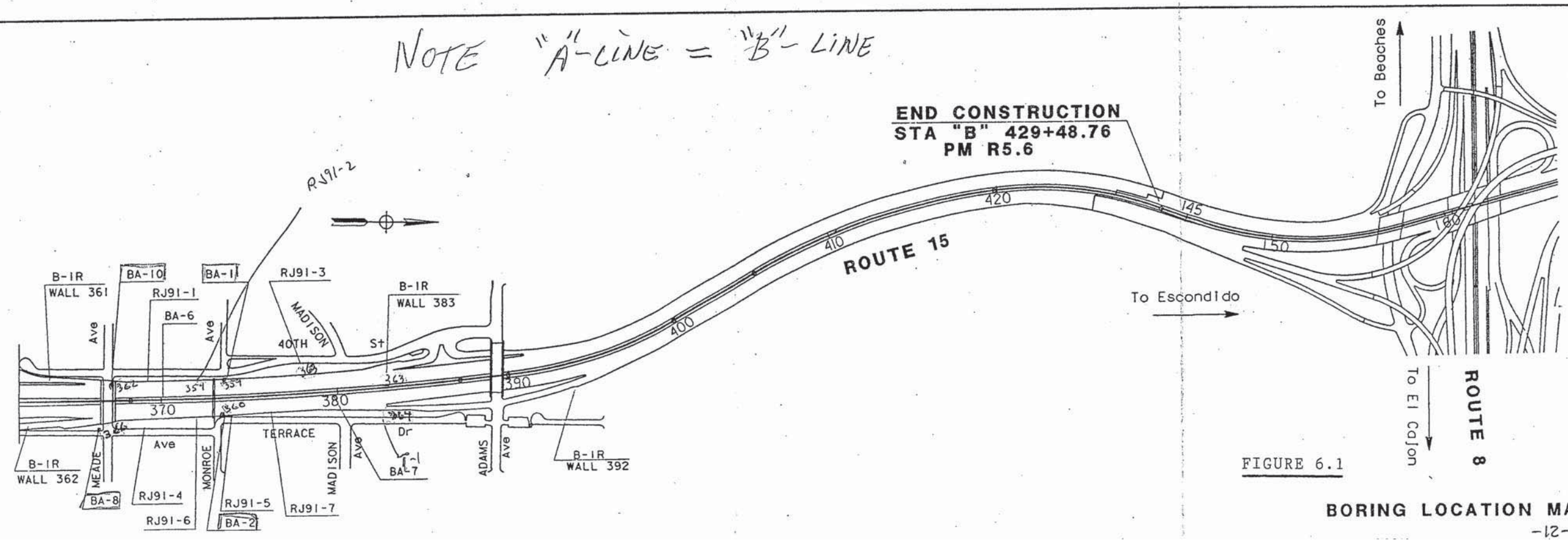

FIGURE 6.1

BORING LOCATION MAP

-21-

REVISED BY	DATE REVISED
DATE	
CALCULATED/DESIGNED BY	CHECKED BY
PROJECT ENGINEER	JESUS MORA
STATE OF CALIFORNIA · DEPARTMENT OF TRANSPORTATION	Caltrans PROJECT DEVELOPMENT

STANDARD SOIL SURVEY SHEET

DATE _____ ESAL _____ Traffic Index _____

LIMITS IN SAN DIEGO COUNTY IN SAN DIEGO FROM 0.6 MILE NORTH OF ROUTE 805 TO 0.3 MILE SOUTH OF ROUTE 8.

DIST	COUNTY	ROUTE	POST MILE	NO. SHEETS
11	SD	15	M3.4/R5.6	

DESCRIPTION: BORING/SAMPLE NO; TEST NUMBER; DATE SAMPLED; STATION; LINE; DISTANCE FROM LINE (RT or LT); DEPTH OR ELEVATION; TYPE OF MATERIAL

SIEVE ANALYSIS: 1½" SQUARE OPENING; ¾" SQUARE OPENING; ⅜" SQUARE OPENING; NO 4 (4760 MICRONS); NO 8 (2380 MICRONS); NO 16 (1190 MICRONS); NO 30 (590 MICRONS); NO 50 (297 MICRONS); NO 200 (74 MICRONS); 5 MICRON; 1 MICRON

COMPACTION: IN-PLACE DENSITY (DRY WT-lb/ft³); IN-PLACE MOISTURE (PERCENT); MAXIMUM DENSITY (DRY WT-lb/ft³); OPT MOISTURE (PERCENT); RELATIVE COMPACTION (PERCENT)

MISC: R-VALUE; SAND EQUIVALENT; LIQUID LIMIT; PLASTICITY INDEX

NOTES:
SOME SOIL CLASSIFICATIONS SHOWN ON THE LOG OF TEST BORINGS SHEETS ARE BASED ON THE GRADATION TEST PERFORMED ON THE SOIL MATRIX MATERIAL AND MAY NOT NECESSARILY REPRESENT THE CLASSIFICATION AT THE SOIL HORIZON WHICH ARE SHOWN SEPARATELY ON THE BORING LOGS.

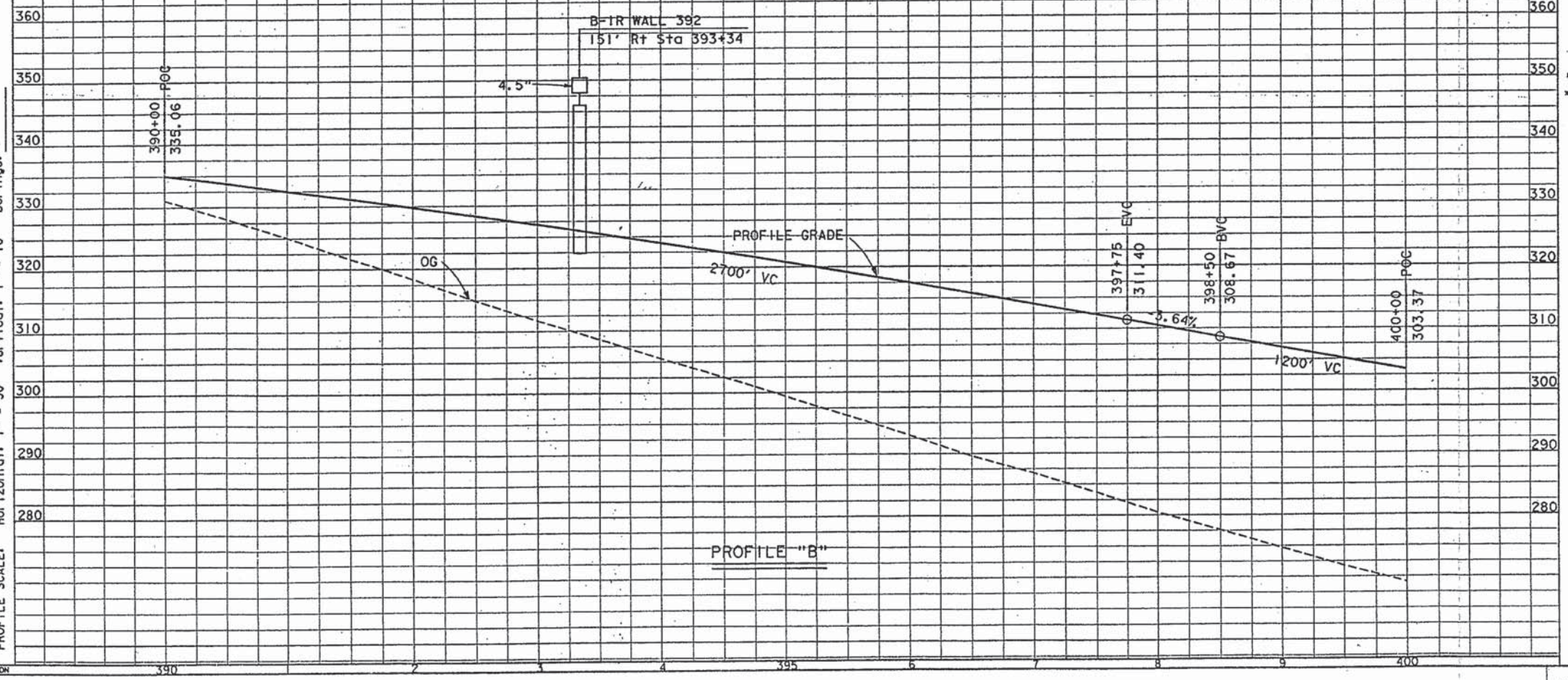

PROFILE SCALE: Horizontal: 1" = 50' Vertical: 1" = 10' Borings:

REGISTERED CIVIL ENGINEER

10-7-94
PLANS APPROVAL DATE

REGISTERED PROFESSIONAL ENGINEER J. A. LABAR No. 22385 Exp. 9-30-97 CIVIL STATE OF CALIFORNIA

The State of California or its officers or agents shall not be responsible for the accuracy or completeness of electronic copies of this plan sheet

LEGEND OF EARTH MATERIALS

CLAY; SILT; SAND; GRAVEL; SANDY CLAY CLAYEY SAND; SANDY SILT SILTY SAND; SILTY CLAY; CLAYEY SILT; ORGANIC MATTER AND/OR PEAT; SEDIMENTARY ROCK; METAMORPHIC ROCK; IGNEOUS ROCK

BORING TYPE: POWER BORING-NO.; 1" SOIL TUBE-NO.; ELECTRONIC CONE PENETRATION TEST-NO.; TEST HOLE AND/OR COMPACTION

EXPLORATION METHOD: AUGER BORING (HOLLOW STEM); ROTARY BORING; AUGER BORING (SOLID STEM); PUSH SAMPLER

SAMPLING METHODS: MODIFIED CALIFORNIA SAMPLER; STANDARD PENETRATION SAMPLER; AUGER CUTTING; CONTINUOUS AUGER (DRY CORE); DIAMOND CORE; SHELBY TUBE

UNCONFINED COMPRESSIVE STRENGTH: LABORATORY TEST; POCKET PENETROMETER

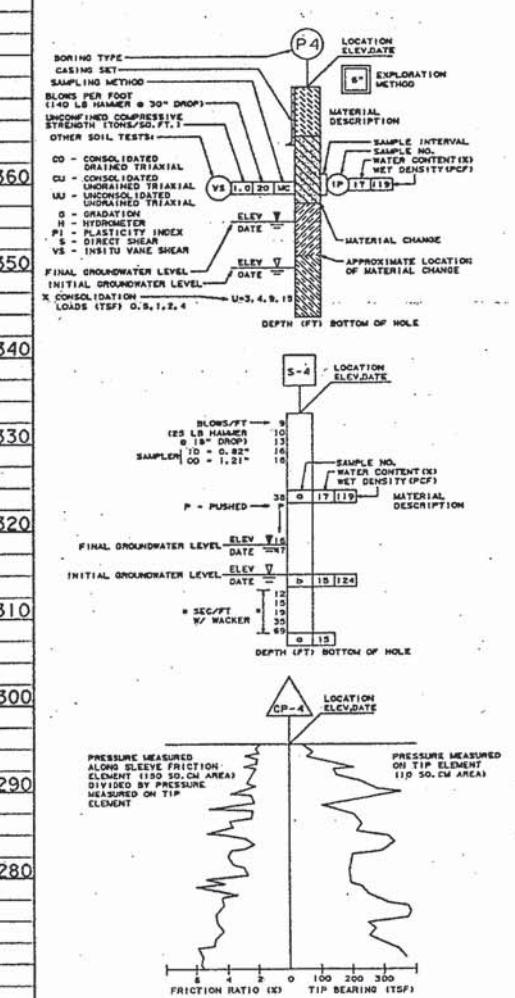

LOG OF TEST BORINGS
LTB-9

STATE OF CALIFORNIA - DEPARTMENT OF TRANSPORTATION
Caltrans
MATERIALS
DISTRICT 11
GEOTECHNICAL SECTION
PLOTTED BY
CHECKED BY
DATE
DATE

CU 11288 EA 048661

LOG OF TEST BORING

OPERATOR: CALTRANS
SPUD DATE: 10/17/89
COMPLETED: 10/17/89
GEOLOGIST: KERMODE
SCALE: 5

RIG TYPE: 3749 FAILING
SAMPLER: 1 4 SPLIT SPOON
HAMMER: 140 LBS
DROP: 30 IN

LOCATION: 11-SD-15
PM: 3.5/5.6
ELEVATION: 358.3
EA: 048661

LINE: "A" LINE
STATION: 393 + 34
OFFSET: 151 FT RT
BORING #: B-1R
FILE NAME:

NOTE: Classifications of earth materials as shown are based upon field observations and are not to be construed to imply mechanical analysis.

BORING: B-1R WALL 392

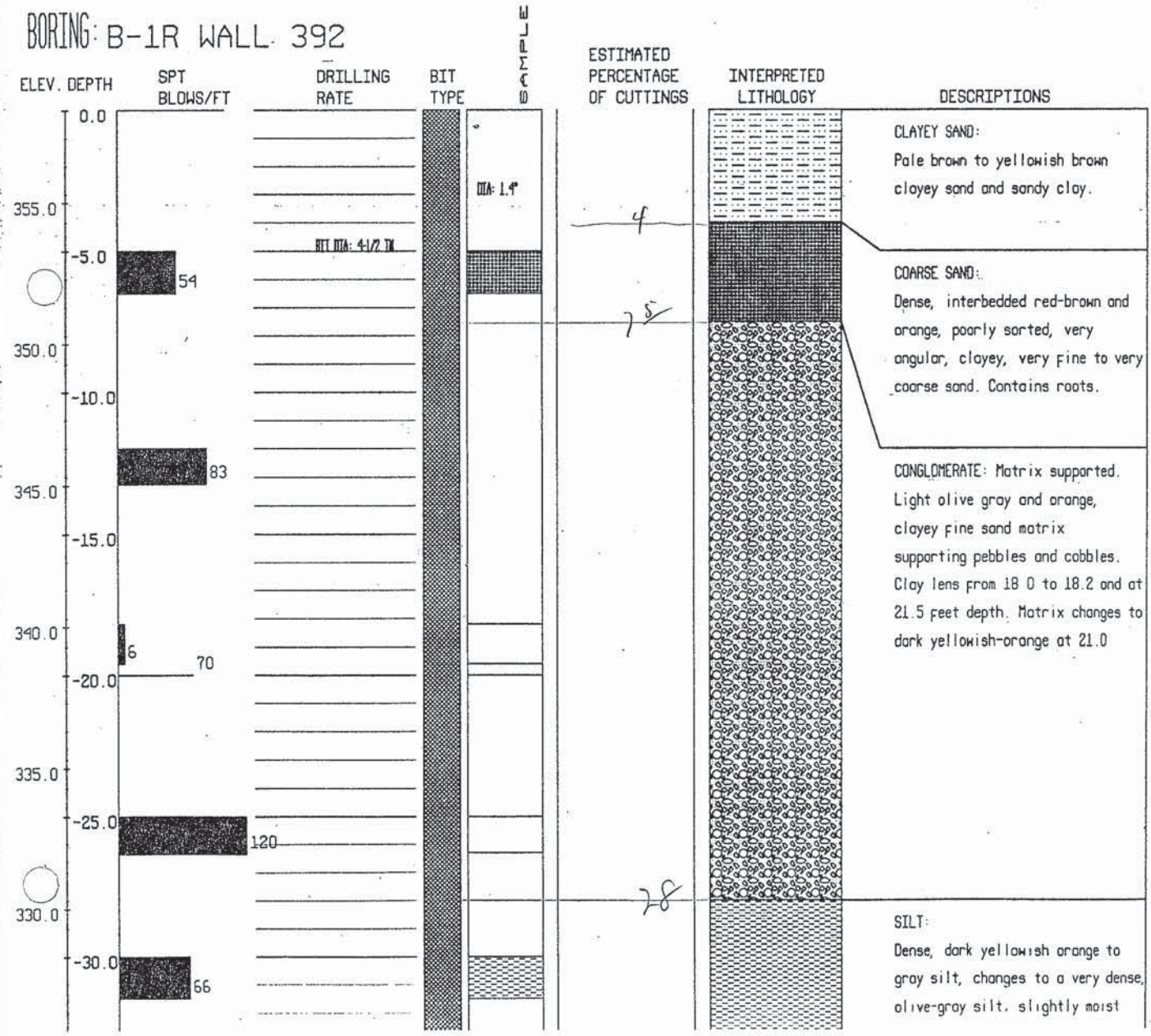

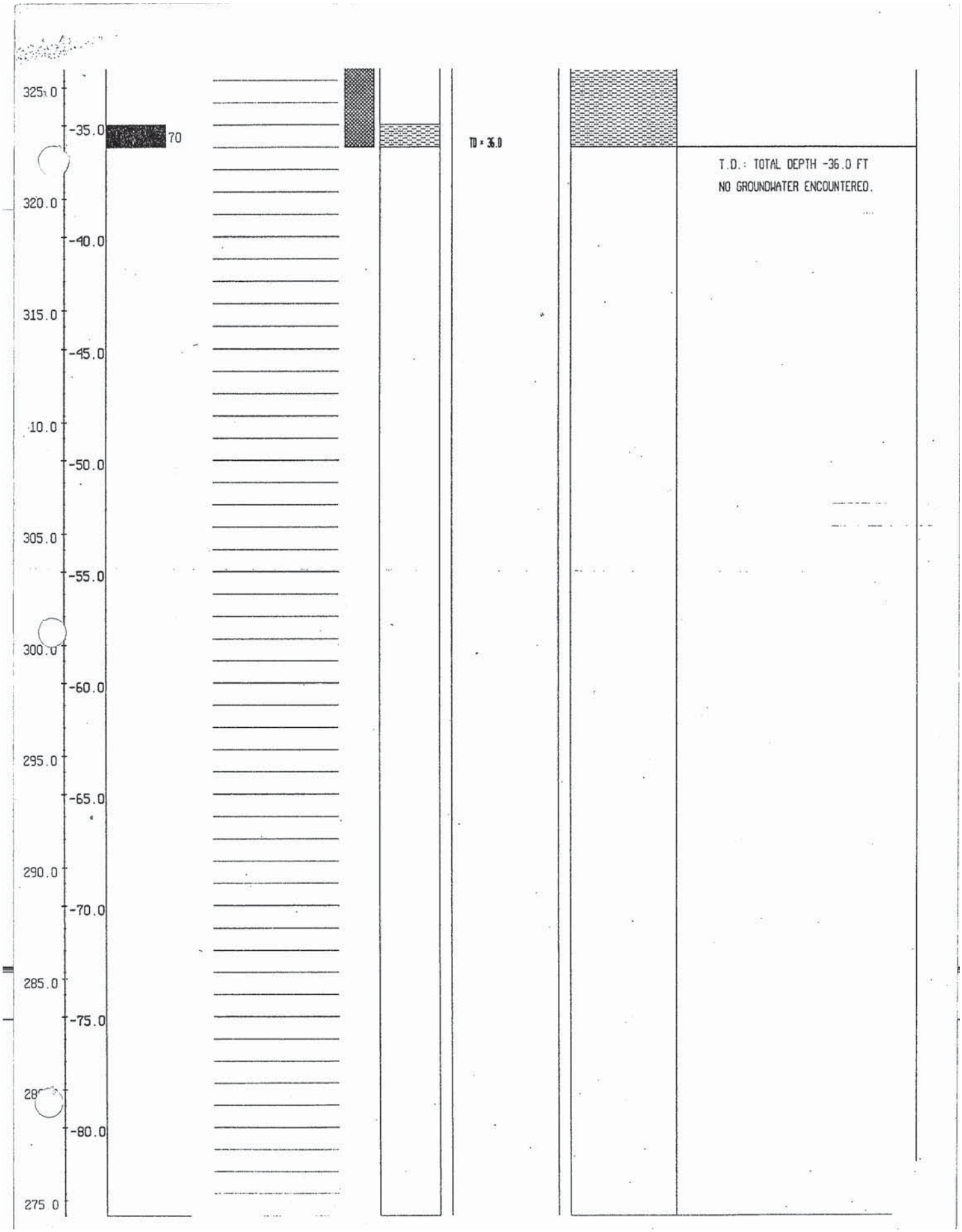
325.0
-35.0
70
TD = 36.0
T.D.: TOTAL DEPTH -36.0 FT
NO GROUNDWATER ENCOUNTERED.
320.0
-40.0
315.0
-45.0
310.0
-50.0
305.0
-55.0
300.0
-60.0
295.0
-65.0
290.0
-70.0
285.0
-75.0
280.0
-80.0
275.0

November 6, 2014

April 19, 1995

Mr. JOHN EHSAN
GEOTECHNICAL ENGINEER
CALTRANS OFFICE OF STRUCTURAL FOUNDATIONS ROADWAY SOUTH
HEADQUARTERS
SACRAMENTO, , CA

JOHN:

The following enclosures are Pseudo-columnar sections representing the stratigraphy at the specified retaining wall locations along 11-SD-15/ 40Th Street. This information was gleaned from surface exposures of the man-made slopes at the specified locations. We used hand tools to clear and expose fresh materials along the referenced slopes. In addition to visual inspection, we used a pocket penetrometer to make qualitative distinctions between the units. AS you know, the area is comprised of laminated and bedded sedimentary deposits of Tertiary Eocene and Pliocene , and Quaternary, Pleistocene and Holocene marine and terrestrial Sandstones, Conglomerates, Siltstones, and Claystones. These units vary from highly indurated to non-indurated, and from well consolidated to poorly consolidated. The Site stratigraphy exhibits a gentle southwest dip.

Please note that perched water was evident in the form of seeps and springs at foundation elevations of the proposed retaining wall 35 (RW35). For the purposes of design, you can assume the following generalized parameters for the Formations and Members:

Linda Vista Formation. $c \cong 800$ psf; $\varphi \cong 34°$; $\gamma \cong 130$ pcf pcf

San Diego Formation. $c \cong 500$; $\varphi \cong 36°$; $\gamma \cong 130$ pcf

Mission Valley Formation. $c \cong 650$; $\varphi \cong 33°$; $\gamma \cong 130$ pcf

Stadium Conglomerate. $c \cong 300$; $\varphi \cong 38°$; $\gamma \cong 135$ pcf

If you require additional information please contact me at CalNet 8-688-3339

JEFF KERMODE
ASSOCIATE ENGINEERING
GEOLOGIST, DISTRICT 11

ZIA YAZDANI
GEOTECHNICAL ENGINEER
DISTRICT 11

JK/jk

enclosures: Pseudo - Columnar Section Retaining Wall 15 (RW15)
Pseudo - Columnar Section Retaining Wall 35 (RW35)
Pseudo - Columnar Section Retaining Wall 34 (RW34)

cc:JEgan
ZYazdani
GGastelum

November 6, 2014

Slope Soil Classification
Prepared By : Jeff Kermode, Bruce Roberts

Retaining Wall; RW15 **April 13, 1995**
Record of Observed Geology
141′ North of Center Line Adams Ave. Bridge,
Elevation Top of Logging 386′ from MSL @ 336′

386
0.0′ - 4.2′
Loose, Light Brown to Tan Fine Sand with Scattered Cobbles average clast size up to 6".

381.8
4.2′ - 5.7′
Well Graded, Yellowish to Reddish Brown, Medium Sand, Linda Vista Formation.

380.3
5.7′ - 6.4′
Reddish Brown to Tan, Silt Stone,. Linda Vista Formation.

379.6
6.4′ - 11.5′
Variegated Conglomerate, comprised of 10% to 20 % pebbles and medium cobbles (5″ to 4″) in a yellowish, Medium to Coarse Sand Matrix. San Diego Formation.

374.5
11.5′ - 11.9′
Grayish, Silt Layer, Slightly Indurated, Friable.

374.1
11.9′ - 15.1′
Yellowish Brown, Medium, well sorted clean Sand, moist.San Diego Formation.

370.9
15.1′ - 20.3′
Yellowish, Coarse to Fine Sand in normally graded bedding, occasional cobble up to 2″. San Diego Formation.

365.7
20.3′ - 21.0′
Variegated Conglomerate, comprised of 50% clasts in a reddish orange sand matrix. San Diego Formation.

365
21.0′ - 23.1′
Yellowish to reddish orange, medium to coarse Sand, normally graded, San Diego Formation.

362.9
23.1′ - 36.3′
Variegated Conglomerate, lensatic, comprised of 90% clasts, ranging from small boulders to pebbles (6″ to < .5″),in a sand and clay matrix. The unit is a, variegated red purple yellow orange clasts in a matrix of gray sand and dark yellowish brown plastic moist clay, densely compacted, non-indurated, friable. Exhibits a moderate resistance to ≅

rilling, varies from clast supported to matrix supported. San Diego Formation.

349.7

36.3′ - 38.6′ Yellowish Tan, sub angular, fine to coarse sands, Well Compacted, friable, moist. 10% fine, 50% medium, 40% coarse, San Diego Formation.

Retaining Wall; RW34 April 14, 1995
Record of Observed Geology
79′ North of Drainage Inlet
Elevation Top of Logging 214.8′(mid-slope) from MSL @ 180′

214.8
0.0′ - 4.5′
Light gray with orange mottles, uniformly well sorted, poorly indurated - friable, silty very fine sandstone. Possibly clayey, somewhat fissile, possibly thinly bedded, jointed. Readily weathers; moderately high erosion potential - Induration sufficient to keep bore holes open. Induration decreases with depth.

210.3
4.5′ - 7.0′
Light gray with orange mottles, uniformly well sorted, poorly indurated - friable, silty very fine sandstone. with a moderately indurated light medium gray silty very fine sandstone, 30% - 40% silt, possibly poorly cemented. Thin large pebbles, small cobble stringers; Mission Valley Formation.

207.8;
7.0′ - 8.0′
Light yellowish gray mottled black and pink, very hard, highly indurated, cemented, silty, very fine sandstone, jointed, rings hammer. Mission Valley Formation.

206.8
8.0′ - 10.0′
Moderately to poorly indurated light medium gray silty, very fine sandstone, friable; Mission Valley Formation.

204.8
10.0′ - 14.0′
Dark gray, laminated,moderately to poorly indurated silty, very fine sandstone, friable poorly fissile, , very micaceous, (easy drilling, open borings, should be temporarily stable).Mission Valley Formation.**200.8**
14.0′ - 15.5′
Hard, medium gray silty very fine sandstone, poorly cemented, possibly silica cementation, (Hammer Ring). Mission Valley Formation.

199.3
15.5′ - 16.0′
Bluish gray silty, very fine sandstone, poorly indurated. Mission Valley Formation.

198.8
16.0′ - 27.7′
Bluish gray silty, very fine sandstone, very poorly indurated, possible due to surface affects

(borings may exhibit belling, very short term boring stability). Mission Valley Formation.

187.1

27.7′ - 34.8′
Conglomerate, 60% to 70% clasts in a fine yellowish brown sand matrix,

Retaining Wall; RW35 **April 14, 1995**

Record of Observed Geology
40.2′ South of DRAINAGE INLET
Elevation Top of Logging 217′(mid-slope) from MSL @ 140′

217

0.0′ - 66.0′
Variegated boulder-pebble-cobble Conglomerate, comprised of 90% - 95% clasts, lensatic, pebbles to small boulders, lens of silty sand 2 to 3 feet thick, 30% large cobbles, 5% small boulders, 30% pebbles, 25% small medium cobble, predominately matrix supported. Matrix varies from a sandy silt to a clayey sand to a silt. Stadium Conglomerate.

151

66.0′ - 77.0′
Variegated Conglomerate, 60% clasts, in a poorly sorted clayey silty sand matrix mottled, perched water at 66.0 ft. Stadium Conglomerate

INDEX OF SHEETS

Sheet No.	1	Title and Location Map
" "	2-23	Typical Cross Sections
" "	24-25	Standard Plans List
" "	26-38	Layouts
" "	39-97	Profiles
" "	98-155	Construction Details
" "	156-231	Drainage Plans, Profiles, Details and Quantities and ContourGrading
" "	232-246	Sanitary Sewer Plans, Profiles, Details and Quantities
" "	247-297	Utility Plans
" "	298-394	Stage Construction Plans
" "	395-447	Detour Plans
" "	448-458	Construction Area Signs
" "	459-468	Summary of Quantities
" "	469-528	Sign and Pavement Delineation Plans, Details and Quantities
" "	529-609	Retaining Wall
" "	610-627	Sound Wall
" "	628-634	Highway Planting
" "	635-724	Electrical Plans
" "	725-728	Revised Standard Plans
" "	729	New Standard Plan

STRUCTURE PLANS

" "	730-739	Soil Nail Retaining Wall "RW1"
" "	740-747	Soil Nail Retaining Wall "RW15"
" "	748-755	Soil Nail Retaining Wall "RW19"
" "	756-764	Soil Nail Retaining Wall "RW33"
" "	765-772	Soil Nail Retaining Wall "RW34"
" "	773-780	Soil Nail Retaining Wall "RW35"
" "	781-793	Landis St. Pedestrian O.C. Br. No. 57-1016
" "	794-808	University Ave. O.C. Br. No. 57-995
" "	809-828	University Ave. Plaza O.C. (North) Br. No. 57-995L
" "	829-848	University Ave. Plaza O.C. (South) Br. No. 57-995R
" "	849-874	Polk-Orange Ave. Tunnel Br. No. 57-1013
" "	875-896	Orange Ave. O.C. Br. No. 57-996
" "	897-911	El Cajon Blvd. O.C. Br. No. 57-997
" "	912-931	El Cajon Blvd. Plaza O.C. (North) Br. No. 57-997L
" "	932-951	El Cajon Blvd. Plaza O.C. (South) Br. No. 57-997R
" "	952-974	Meade Ave. O.C. Br. No. 57-998
" "	975-993	Monroe Ave. Pedestrian O.C. Br. No. 57-1011
" "	994-1049	Polk-Orange Ave. Tunnel (Control Bldg, Mechanical & Electrical) Br. No. 57-1013

STATE OF CALIFORNIA
DEPARTMENT OF TRANSPORTATION

ACNH1-015-4(168)10N

DIST	COUNTY	ROUTE	POST MILE TOTAL PROJECT	SHEET NO.	TOTAL SHEETS
11	SD	15	R3.8/R6.0	1	1049

PROJECT PLANS FOR CONSTRUCTION ON STATE HIGHWAY

IN SAN DIEGO COUNTY IN SAN DIEGO FROM 0.4 MILE NORTH OF ROUTE 805 TO 0.1 MILE SOUTH OF ROUTE 8

To be supplemented by Standard Plans dated July , 1992

STRUCTURE LIST

	NAME	BRIDGE
1	LANDIS ST PED OC	Br No 57-1016
2	UNIVERSITY AVE OC	Br No 57-995
3	UNIVERSITY AVE PLAZA OC (SOUTH)	Br No 57-995R
4	UNIVERSITY AVE PLAZA OC (NORTH)	Br No 57-995L
5	POLK-ORANGE AVE TUNNEL	Br No 57-1013
6	ORANGE AVE OC	Br No 57-996
7	EL CAJON BLVD OC	Br No 57-997
8	EL CAJON BLVD PLAZA OC (SOUTH)	Br No 57-997R
9	EL CAJON BLVD PLAZA OC (NORTH)	Br No 57-997L
10	MEADE AVE OC	Br No 57-998
11	MONROE AVE PED OC	Br No 57-1011

The State of California or its officers or agents shall not be responsible for the accuracy of completeness of electronic copies of this plan sheet.

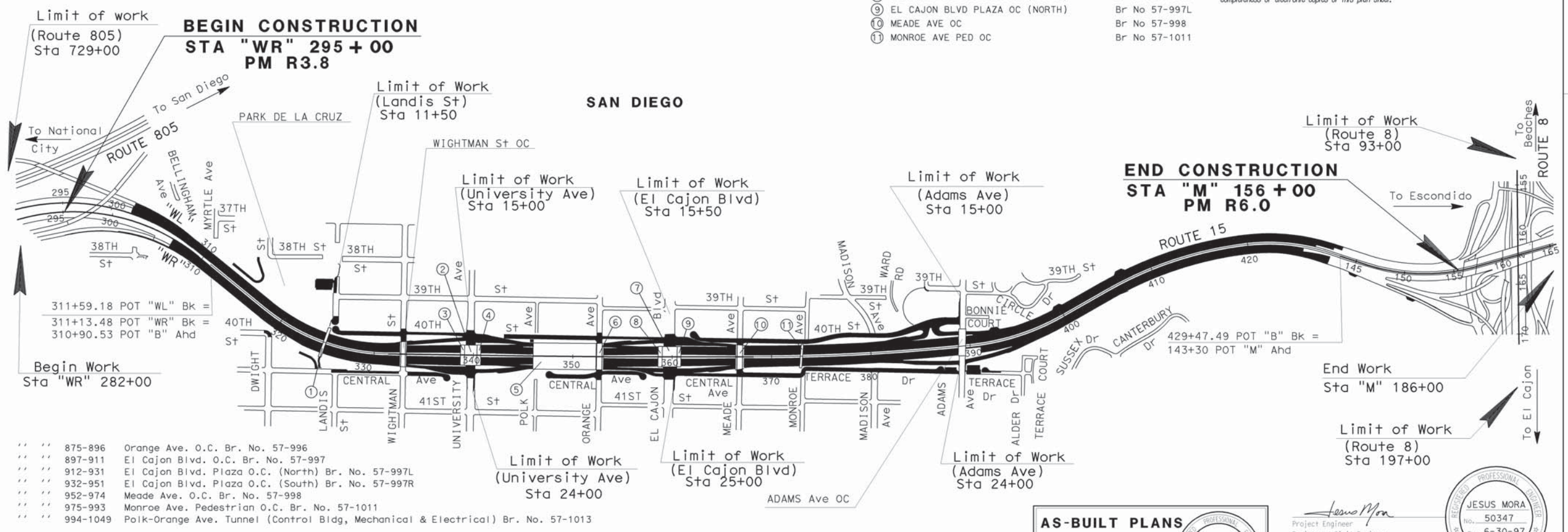

SCALE
0 500 1000 1500 2000

The Contractor shall possess the Class (or Classes) of license as specified in the "Notice to Contractors".

AS-BUILT PLANS
RESIDENT ENGINEER DATE
CONTRACT NO. 11-048661
DATE COMPLETED 03-15-01
REGISTERED PROFESSIONAL ENGINEER D. MARTIN No. 49389 Exp. 09-30-04 CIVIL STATE OF CALIFORNIA

Project Engineer
Registered Civil Engineer

REGISTERED PROFESSIONAL ENGINEER JESUS MORA No. 50347 Exp. 6-30-97 CIVIL STATE OF CALIFORNIA

November 27, 1995
Plans Approval Date

Contract No. **11-048664**

PROJECT ENGINEER JESUS MORA | PROJECT MANAGER GR GASTELUM | DATE | LAST REVISION 00-00-00

FORM DC-OE-93-PF (REV. 3/88)

FOR REDUCED PLANS ORIGINAL SCALE IS IN INCHES 0 1 2 3

CU 11288 | EA 048661

DIST	COUNTY	ROUTE	POST MILES TOTAL PROJECT	SHEET NO.	TOTAL SHEETS
11	SD	15	R3.8/R6.0	582	1049

REGISTERED CIVIL ENGINEER

11-27-95
PLANS APPROVAL DATE

REGISTERED PROFESSIONAL ENGINEER JESUS MORA No. 50347 Exp. 6-30-97 CIVIL STATE OF CALIFORNIA

The State of California or its officers or agents shall not be responsible for the accuracy or completeness of electronic copies of this plan sheet.

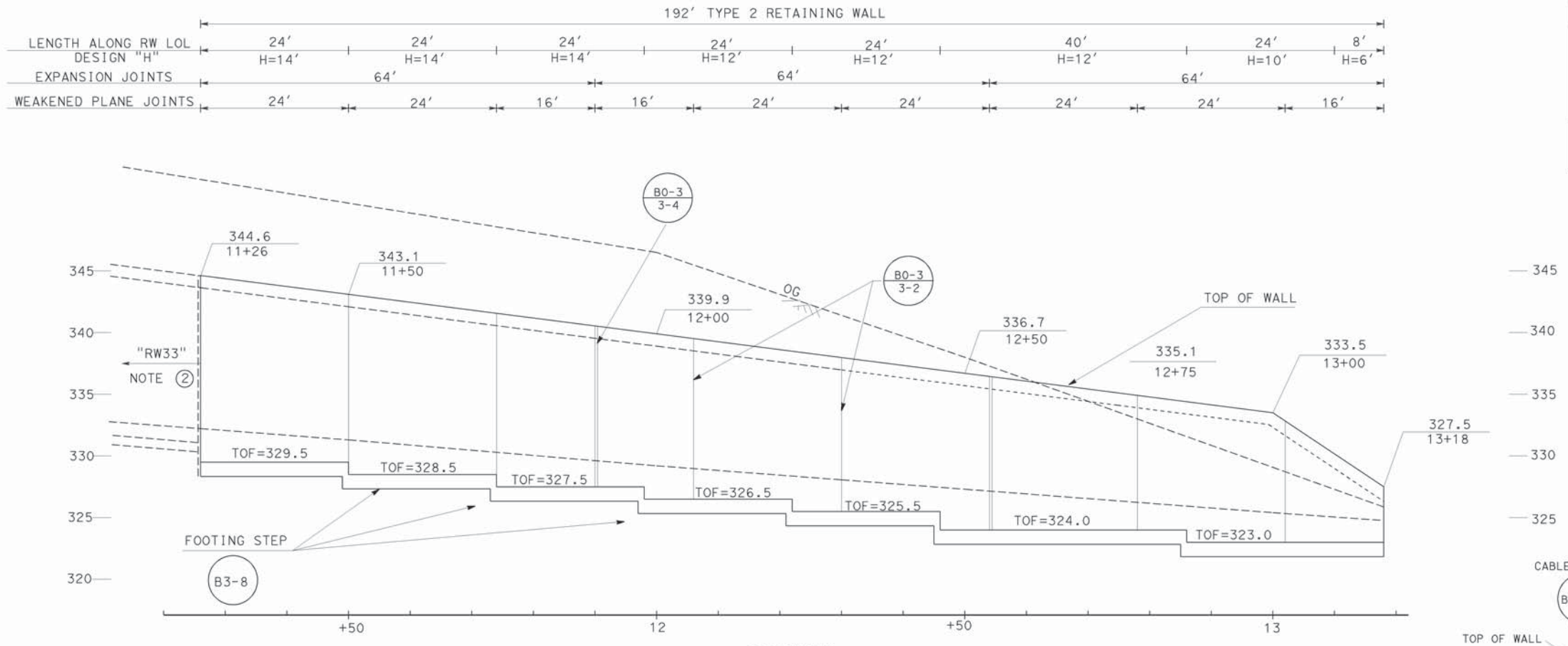

PROFILE
SCALE: 1" = 10' Horiz
1" = 5' Vert

"RW33A" FINISH GRADE	
STATION	ELEVATION
11+26.00	332.5
11+50.00	331.3
11+75.00	330.2
12+00.00	329.1
12+25.00	328.2
12+50.00	327.3
12+75.00	326.3
13+00.00	325.4
13+18.00	324.7

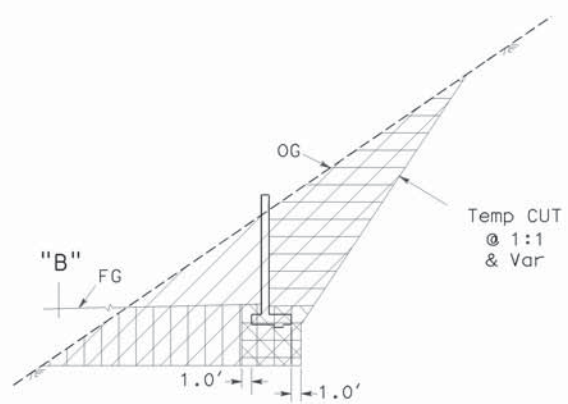

ROADWAY EXCAVATION
ROADWAY EMBANKMENT
STRUCTURE EXCAVATION
STRUCTURE BACKFILL

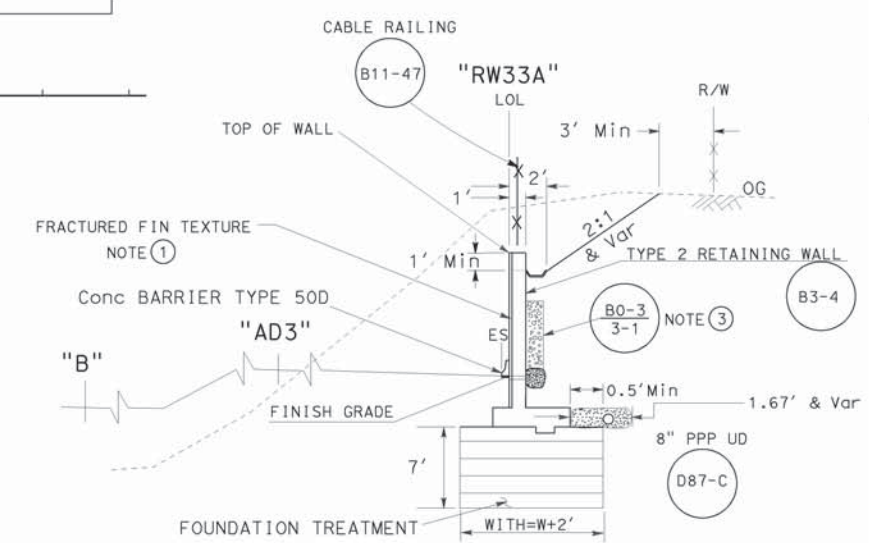

TYPICAL
NO SCALE

11+26.00 "RW33" =
39.02'Rt 93+53.62 "AD3"
140.04'Rt 393+78.62 "B"

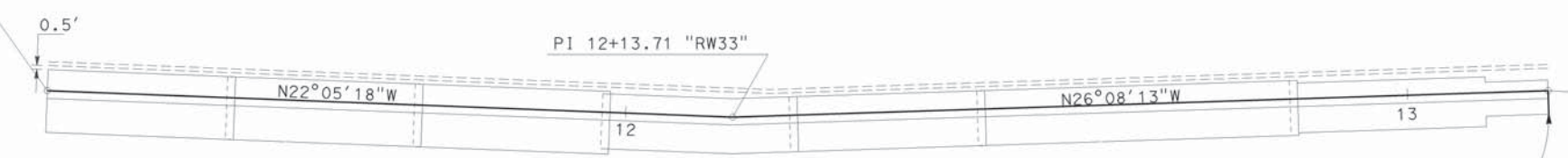

13+18.00 "RW33" =
30.23'Rt 95+43.22 "AD3"
116.13'Rt 395+59.21 "B"

AS-BUILT PLANS
CONTRACT NO. 11-048661
DATE COMPLETED 03-15-01
RE: D. MARTIN

NOTES:
1. FOR FRACTURED FIN TEXTURE DETAIL SEE STRUCTURE PLANS (SOIL NAIL WALL)
2. SEE STRUCTURE PLANS FOR SOIL NAIL WALL FROM Sta 10+00 "RW33" TO Sta 11+26 "RW33"
3. SEE SHEET R-66 FOR ALTERNATIVE TO B0-3 / 3-1

PLAN
NO SCALE

RETURN WALL TYPE D

RETAINING WALL PLAN
RW-33A
SCALE: AS NOTED

R-54

STATE OF CALIFORNIA - DEPARTMENT OF TRANSPORTATION
Caltrans **PROJECT DEVELOPMENT**
PROJECT ENGINEER **JESUS MORA**
CALCULATED/DESIGNED BY
CHECKED BY
DATE REVISED BY
DATE REVISED

LAST REVISION 05-27-95 (MAJOR CHANGES)

FOR REDUCED PLANS ORIGINAL SCALE IS IN INCHES 0 2 3
USERNAME =>
DGN FILE =>
CU 11288
EA 048661

DIST.	COUNTY	ROUTE	POST MILES TOTAL PROJECT	SHEET NO.	TOTAL SHEETS
11	SD	15	R3.8/R6.0	756	1049

REGISTERED ENGINEER - CIVIL

REGISTERED PROFESSIONAL ENGINEER M. L. NAPIER No. 46017 Exp. 12-31-98 CIVIL STATE OF CALIFORNIA

11-27-95
PLANS APPROVAL DATE

The State of California or its officers or agents shall not be responsible for the accuracy or completeness of electronic copies of this plan sheet

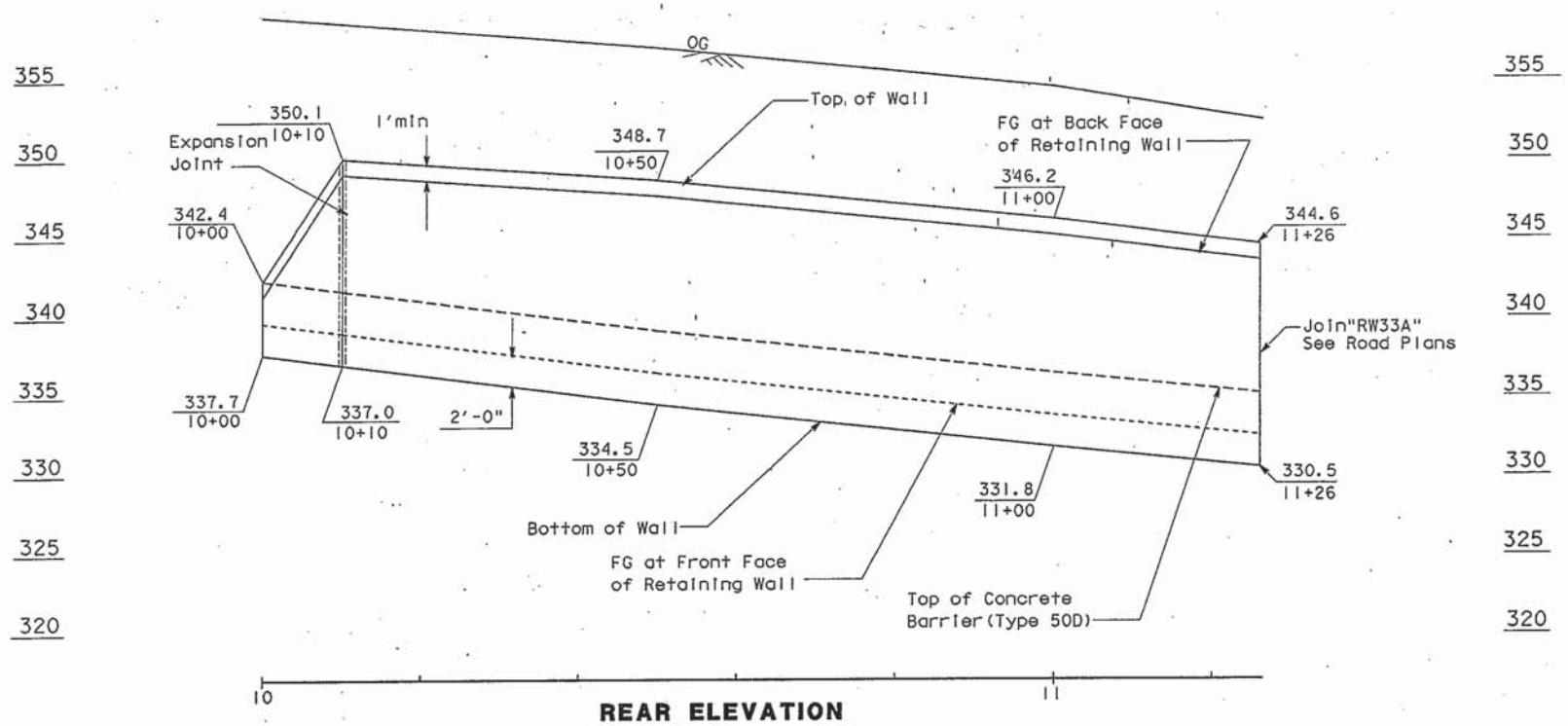

REAR ELEVATION

SCALE: 1" = 10' HORIZ
1" = 5' VERT

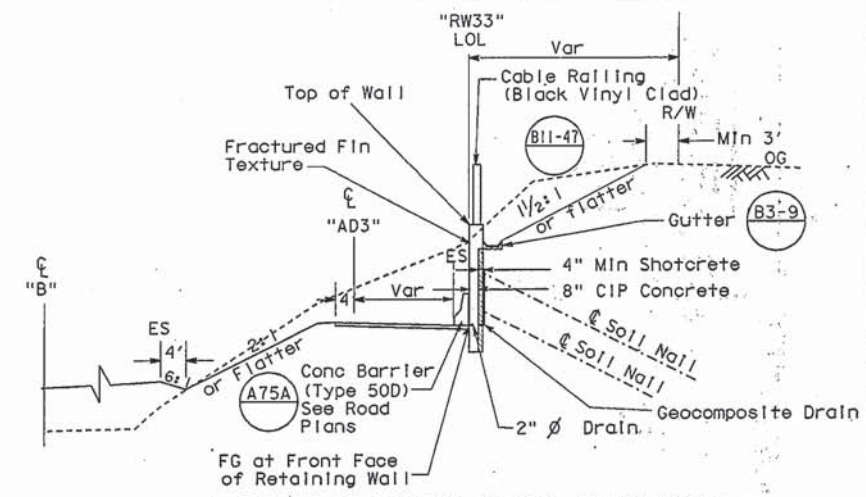

STA 10+00 "RW33" TO STA 11+26 "RW33"

TYPICAL SECTION

NO SCALE

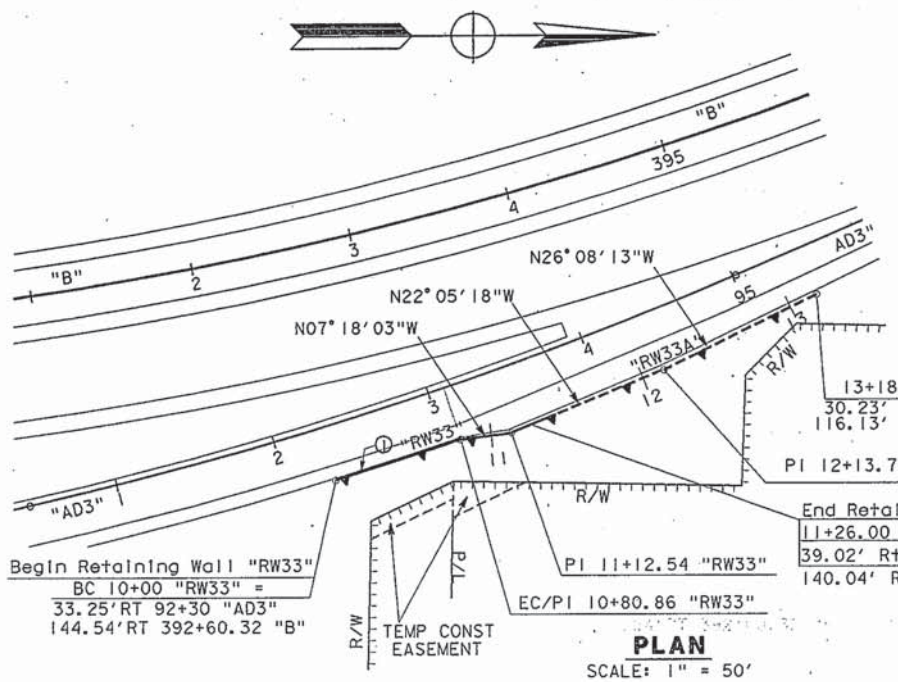

See Road Plans for Retaining Wall "RW33A"

13+18 "RW33A" =
30.23' RT 95+43.22 "AD3"
116.13' RT 395+59.21 "B"

PI 12+13.70 "RW33A"

End Retaining Wall "RW33"
11+26.00 "RW33"=11+26.00"RW33A"
39.02' Rt 93+53.62 "AD3"
140.04' Rt 393+78.62 "B"

PI 11+12.54 "RW33"

EC/PI 10+80.86 "RW33"

Begin Retaining Wall "RW33"
BC 10+00 "RW33" =
33.25'RT 92+30 "AD3"
144.54'RT 392+60.32 "B"

CURVE DATA ①
R=2533.25'
Δ=1° 49' 45"
L=80.87'
T=40.44'

PLAN

SCALE: 1" = 50'

QUANTITIES

STRUCTURE EXCAVATION (SOIL NAIL WALL)	60	CY
STRUCTURE BACKFILL (SOIL NAIL WALL)	3	CY
SOIL NAIL ASSEMBLY	745	LF
STRUCTURAL CONCRETE, RETAINING WALL	48	CY
FRACTURED FIN TEXTURE	1,258	SQFT
BAR REINFORCING STEEL (RETAINING WALL)	6,190	LB
SHOTCRETE	18	CY
GEOCOMPOSITE DRAIN	170	SQFT
MINOR CONCRETE (GUTTER)	5	CY
CABLE RAILING (BLACK VINYL CLAD)	125	LF

INDEX TO PLANS

SHEET NO	TITLE
1	General Plan
2	Soil Nail Assembly Layout
3	Typical Section
4	Soil Nail Assembly Details
5	Details No. 1
6	Details No. 2
7	Details No. 3
8	Log of Test Borings 1 of 2
9	Log of Test Borings 2 of 2

STANDARD PLANS DATED JULY, 1995

A75A	Concrete Barrier Type 50
B3-9	Retaining Wall Details No. 2
B11-47	Cable Railing

Standard Plan Sheet No.
Detail No.

For 'General Notes' see "SOIL NAIL ASSEMBLY LAYOUT" Sheet.

DESIGN	BY M L NAPIER	CHECKED J MORA		
DETAILS	BY J BRIGGS 05-95	CHECKED M L NAPIER	LAYOUT	BY M L NAPIER / CHECKED S AKHGARNIA
QUANTITIES	BY M L NAPIER	CHECKED L A FARIA	SPECIFICATIONS	BY KF Meier 9/95 / PLANS AND SPECS COMPARED KF Meier 9/95

PROJECT ENGINEER

STATE OF CALIFORNIA DEPARTMENT OF TRANSPORTATION

DISTRICT 11 STRUCTURE DESIGN B

CU 11288
EA 048661

BRIDGE NO.
POST MILE

SOIL NAIL RETAINING WALL "RW33"

GENERAL PLAN

DISREGARD PRINTS BEARING EARLIER REVISION DATES

REVISION DATES (PRELIMINARY STAGE ONLY) 12-20-94 05-10-95 05-16-95 05-31-95 06-07-95 06-10-95 06-14-95

SHEET 1 OF 9

ORIGINAL SCALE IN INCHES FOR REDUCED PLANS 0 1 2 3

DS 5/10 2138 (CADD 4/89)

DIST.	COUNTY	ROUTE	POST MILES TOTAL PROJECT	SHEET NO.	TOTAL SHEETS
11	SD	15	R3.8/R6.0	757	1049

REGISTERED ENGINEER - CIVIL

REGISTERED PROFESSIONAL ENGINEER JAVAD EHSAN No. 47251 Exp. 12-31-95 CIVIL STATE OF CALIFORNIA

11-27-95
PLANS APPROVAL DATE

The State of California or its officers or agents shall not be responsible for the accuracy or completeness of electronic copies of this plan sheet

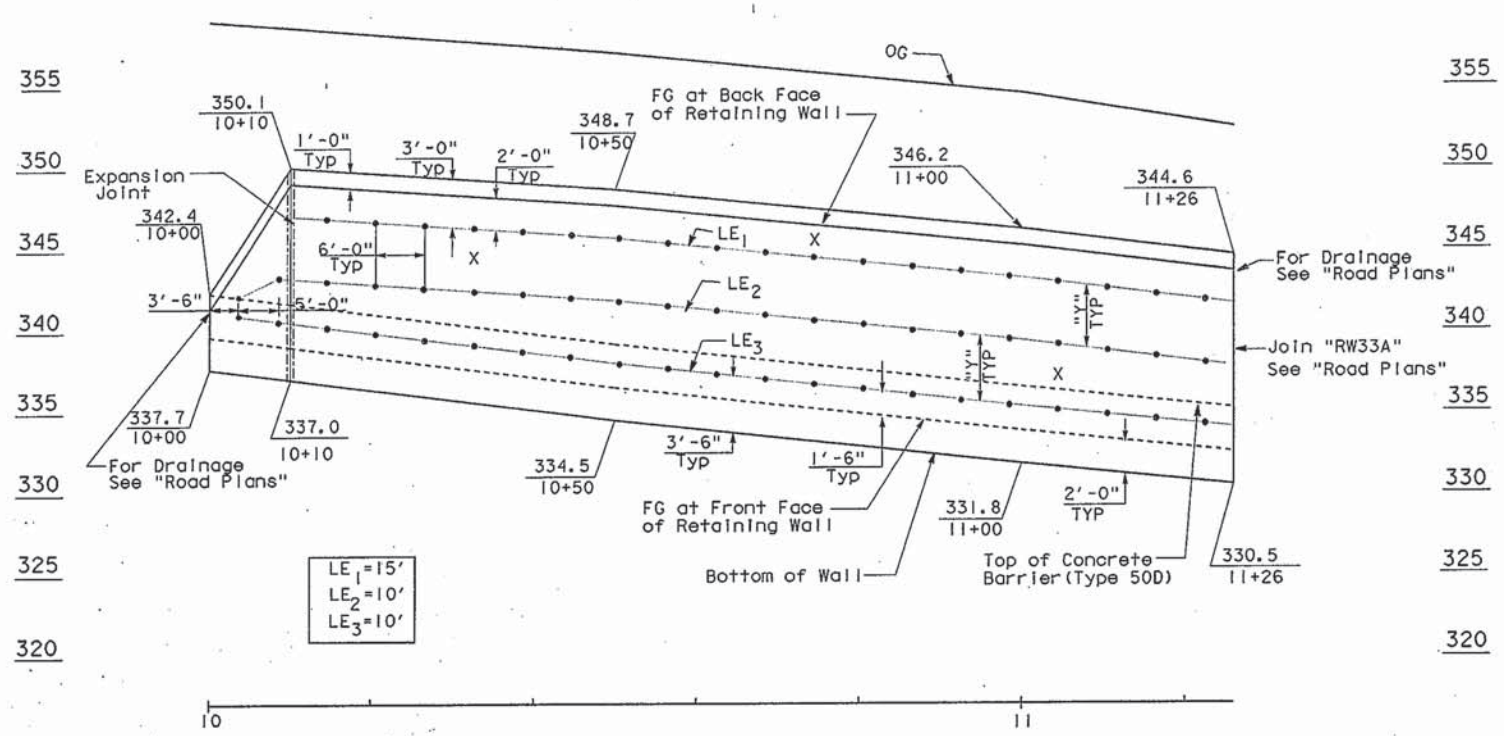

REAR ELEVATION

SCALE: 1" = 10' HORIZ
1" = 5' VERT

NOTES: 1. Soil nail layout:
Vertical spacing "Y" is half of distance between top and bottom rows of nails, 5'-0" center to center max
Horizontal spacing 6'-0" center to center max
Top row is located 3'-0" below top of retaining wall (unless noted otherwise)
Bottom row is located 3'-6" above bottom of wall (unless noted otherwise)
Min center to center spacing between soil nail assemblies is 1'-6"

2. Soil nail assembly:
Design Nail Load 2.3 kips/ft, Design hole diameter 6"
Min soil nail embedment length,
• LE, Varies as shown on wall elevation. Indicates location of soil nail
X assembly or as directed by the Engineer. Indicates location of test soil nail assembly or as directed by the Engineer.
Soil Nail Inclination angle=15 degree typical (unless noted otherwise).
Bar size, min Diameter 1"

3. Horizontal distance between the beginning/end of wall and first/last nail 3'-6" max center to center spacing

GENERAL NOTES

DESIGN: BRIDGE DESIGN SPECIFICATIONS (1983 AASHTO with Interims and Revisions by CALTRANS)

REINFORCED CONCRETE: fy = 60,000 psi
f'c = 3,250 psi

STRUCTURAL STEEL: ASTM Designation: A36, fy = 36,000 psi

SOIL NAILS: ASTM Designation: A615, Grade 60, fs = 45,000 psi

DESIGN PARAMETERS: (Soil/Bedrock)
Ø = 34°
C = 300 psf
γ = 125 pcf
μ = 10 psi (ultimate grout and drilled hole)

DESIGN	BY J EHSAN	CHECKED L WHITMORE	
DETAILS	BY J BRIGGS 03-95	CHECKED M L NAPIER	
QUANTITIES	BY M L NAPIER	CHECKED L A FARIA	

STATE OF CALIFORNIA
DEPARTMENT OF TRANSPORTATION

DISTRICT 11
STRUCTURE DESIGN B

CU 11288
EA 048661

BRIDGE NO.
POST MILE

SOIL NAIL RETAINING WALL "RW33"
SOIL NAIL ASSEMBLY LAYOUT

DS OSC 2138 (CADD 4/89)

ORIGINAL SCALE IN INCHES FOR REDUCED PLANS 0 1 2 3

DISREGARD PRINTS BEARING EARLIER REVISION DATES

REVISION DATES (PRELIMINARY STAGE ONLY)
05-10-95 05-15-95 05-17-95 05-31-95 06-07-95 06-13-95 06-27-95 07-22-95

SHEET 2 OF 9

DIST.	COUNTY	ROUTE	POST MILES TOTAL PROJECT	SHEET NO.	TOTAL SHEETS
11	SD	15	R3.8/R6.0	758	1049

REGISTERED ENGINEER - CIVIL

REGISTERED PROFESSIONAL ENGINEER M L NAPIER No. 46017 Exp. 12-31-98 CIVIL STATE OF CALIFORNIA

11-27-95
PLANS APPROVAL DATE

The State of California or its officers or agents shall not be responsible for the accuracy or completeness of electronic copies of this plan sheet

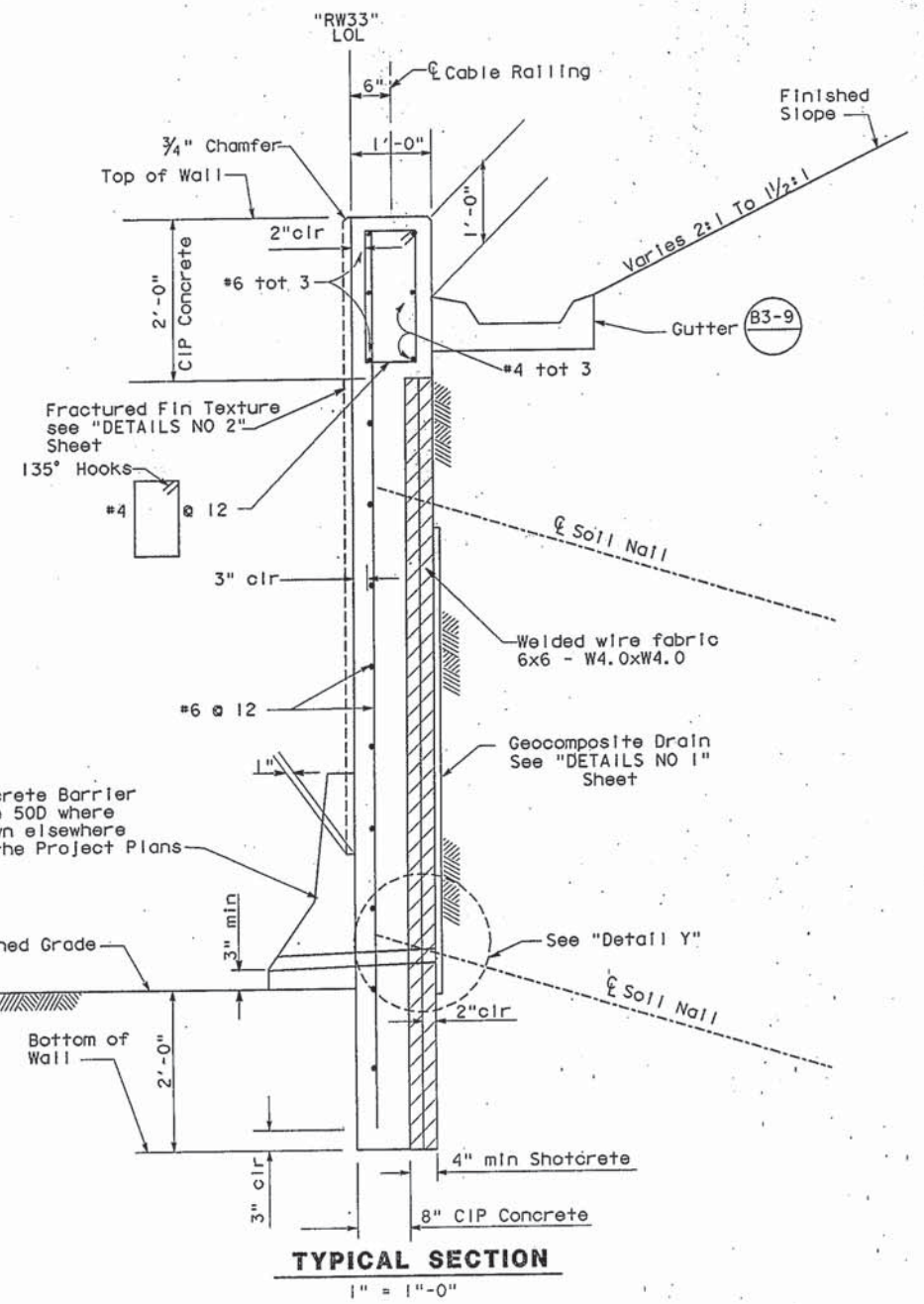

TYPICAL SECTION
1" = 1"-0"

Note: Cable railing not shown.

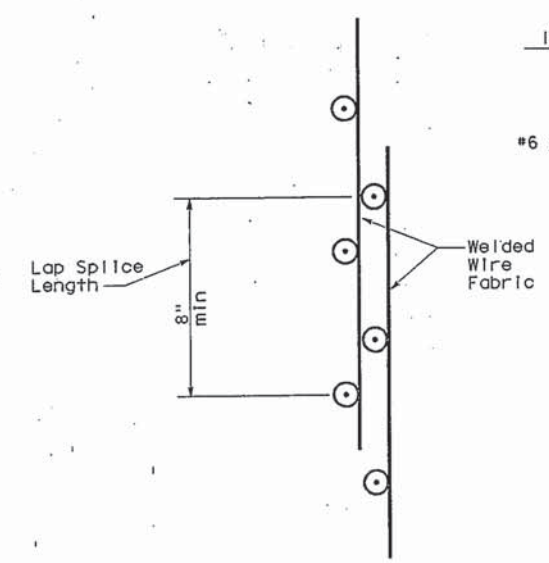

LAP SPLICE DETAIL
No Scale

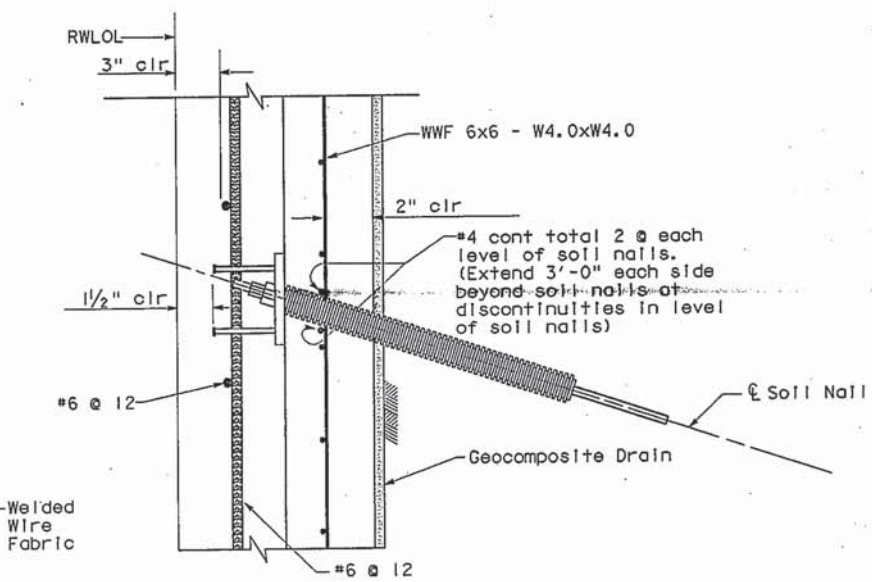

DETAIL Y
No Scale

DESIGN	BY M L NAPIER	CHECKED J MORA	
DETAILS	BY J BRIGGS 02-95	CHECKED M L NAPIER	
QUANTITIES	BY M L NAPIER	CHECKED L A FARIA	

DS 950 2138 (CADD 4/89)

ORIGINAL SCALE IN INCHES FOR REDUCED PLANS 0 1 2 3

STATE OF CALIFORNIA
DEPARTMENT OF TRANSPORTATION

DISTRICT 11
STRUCTURE DESIGN B

CU 11288
EA048661

BRIDGE NO.
POST MILE

SOIL NAIL RETAINING WALL "RW33"
TYPICAL SECTION

DISREGARD PRINTS BEARING EARLIER REVISION DATES

REVISION DATES (PRELIMINARY STAGE ONLY) 03-15-95 05-04-95 05-05-95 05-11-95 06-12-95 06-14-95

SHEET 3 OF 9

DIST.	COUNTY	ROUTE	POST MILES TOTAL PROJECT	SHEET NO.	TOTAL SHEETS
11	SD	15	R3.8/R6.0	759	1049

REGISTERED ENGINEER - CIVIL

REGISTERED PROFESSIONAL ENGINEER M L NAPIER No. 46017 Exp. 12-31-98 CIVIL STATE OF CALIFORNIA

11-27-95
PLANS APPROVAL DATE

The State of California or its officers or agents shall not be responsible for the accuracy or completeness of electronic copies of this plan sheet

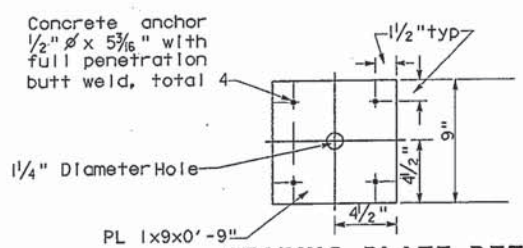

BEARING PLATE DETAIL

NO SCALE

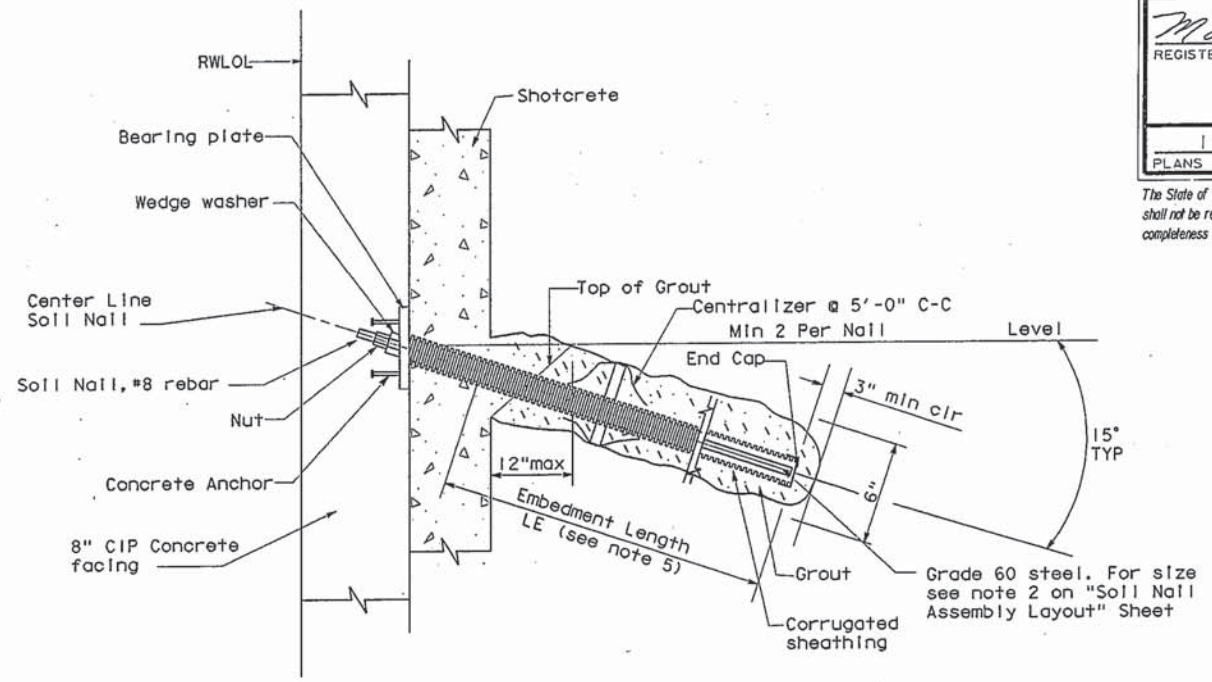

ENCAPSULATED SOIL NAIL DETAIL

No Scale

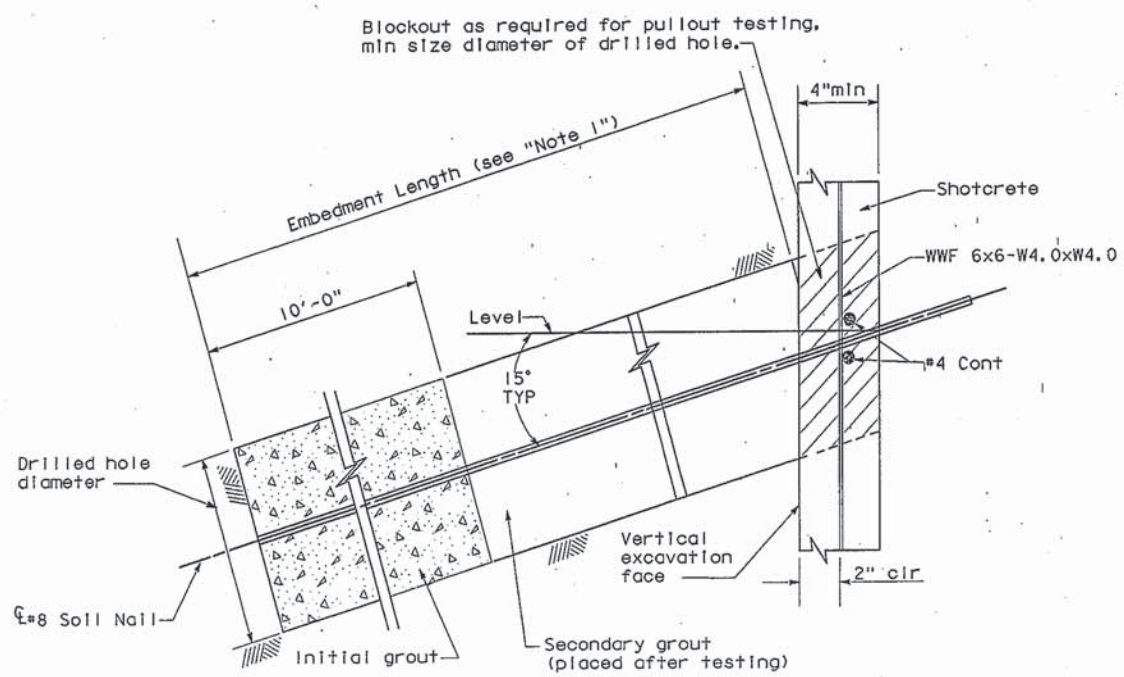

TEST SOIL NAIL ASSEMBLY DETAIL

No Scale

Notes:

1. Embedment length of test Soil Nail equals the embedment length of adjacent encapsulated soil nail assemblies for the row of nails below the test Soil Nail Assembly.
2. Total length of test soil nail assembly equals embedment length plus the length required for jacking equipment.
3. Use pull-out test load of 33.9 kips.
4. Inclination of test Soil Nail Assembly to be the same as adjacent Soil Nail Assemblies.
5. For embedment length of encapsulated Soil Nail Assembly, See LE on "Soil Nail Assembly Layout" sheet.

DESIGN	BY M L NAPIER	CHECKED J MORA	
DETAILS	BY J BRIGGS 2-95	CHECKED M L NAPIER	
QUANTITIES	BY M L NAPIER	CHECKED L A FARIA	

STATE OF CALIFORNIA
DEPARTMENT OF TRANSPORTATION

DISTRICT 11
STRUCTURE DESIGN B

BRIDGE NO.
POST MILE

SOIL NAIL RETAINING WALL "RW33"

SOIL NAIL ASSEMBLY DETAILS

DS GID 2128 (CADD 4/89)

ORIGINAL SCALE IN INCHES FOR REDUCED PLANS 0 1 2 3

CU 11288
EA 048661

DISREGARD PRINTS BEARING EARLIER REVISION DATES

REVISION DATES (PRELIMINARY STAGE ONLY) 05-09-95 05-11-95 05-13-95 06-27-95 06-28-95 07-22-95

SHEET 4 OF 9

DIST.	COUNTY	ROUTE	POST MILES TOTAL PROJECT	SHEET NO.	TOTAL SHEETS
11	SD	15	R3.8/R6.0	760	1049

REGISTERED ENGINEER - CIVIL

REGISTERED PROFESSIONAL ENGINEER M L NAPIER No. 46017 Exp. 12-31-98 CIVIL STATE OF CALIFORNIA

11-27-95
PLANS APPROVAL DATE

The State of California or its officers or agents shall not be responsible for the accuracy or completeness of electronic copies of this plan sheet

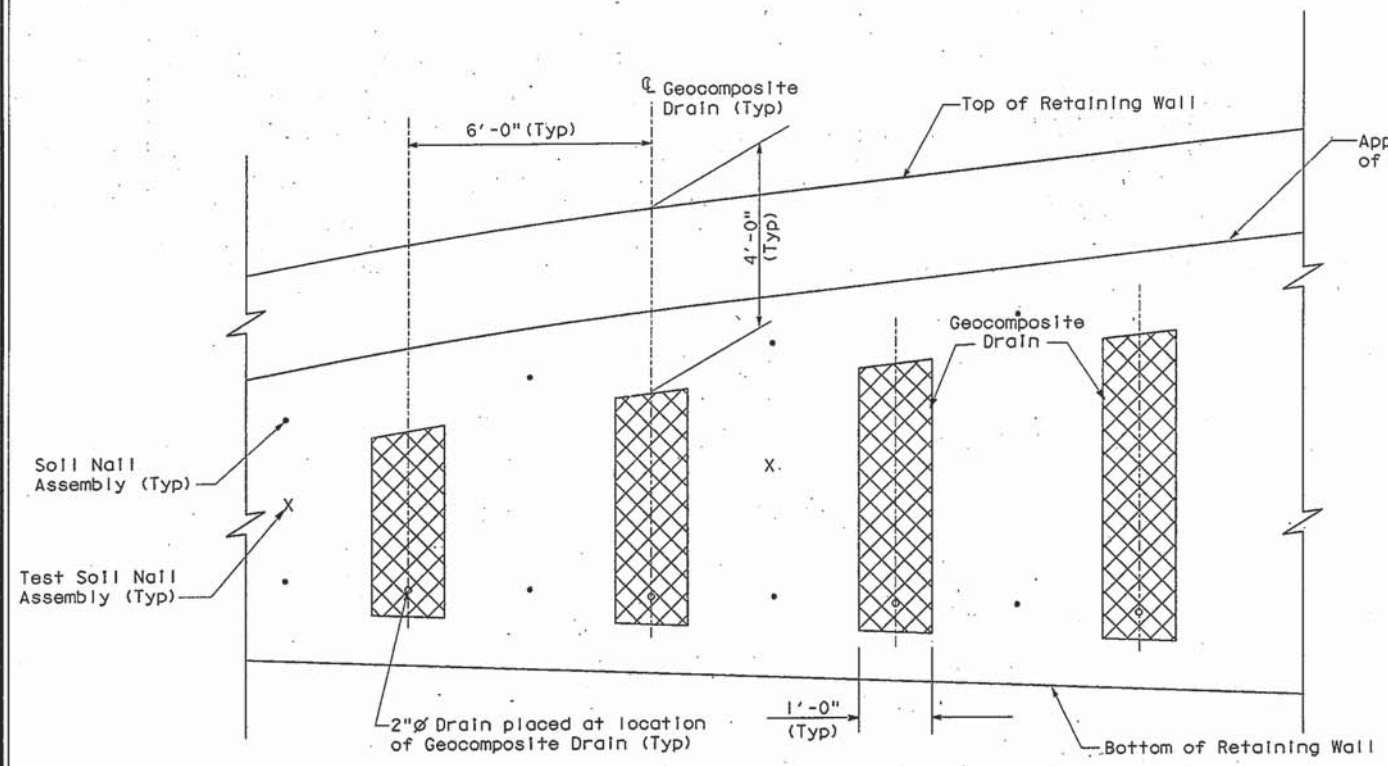

TYPICAL ELEVATION - GEOCOMPOSITE DRAIN

No Scale

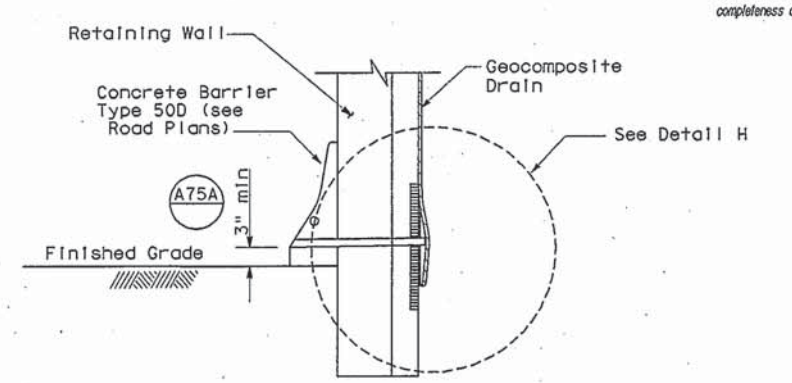

TYPICAL SECTION AT OUTLET PIPE

No Scale

Note: Fractured Fin Texture not shown.

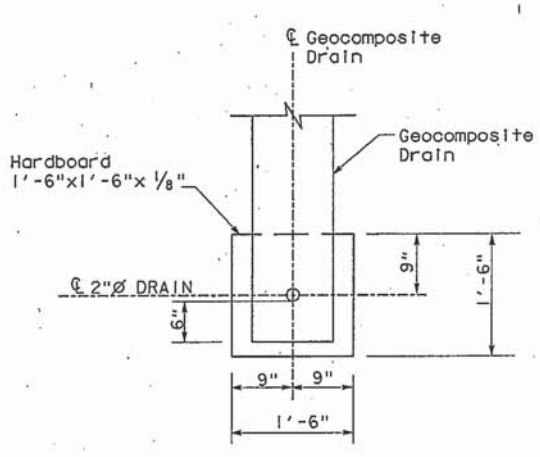

VIEW H-H

No Scale

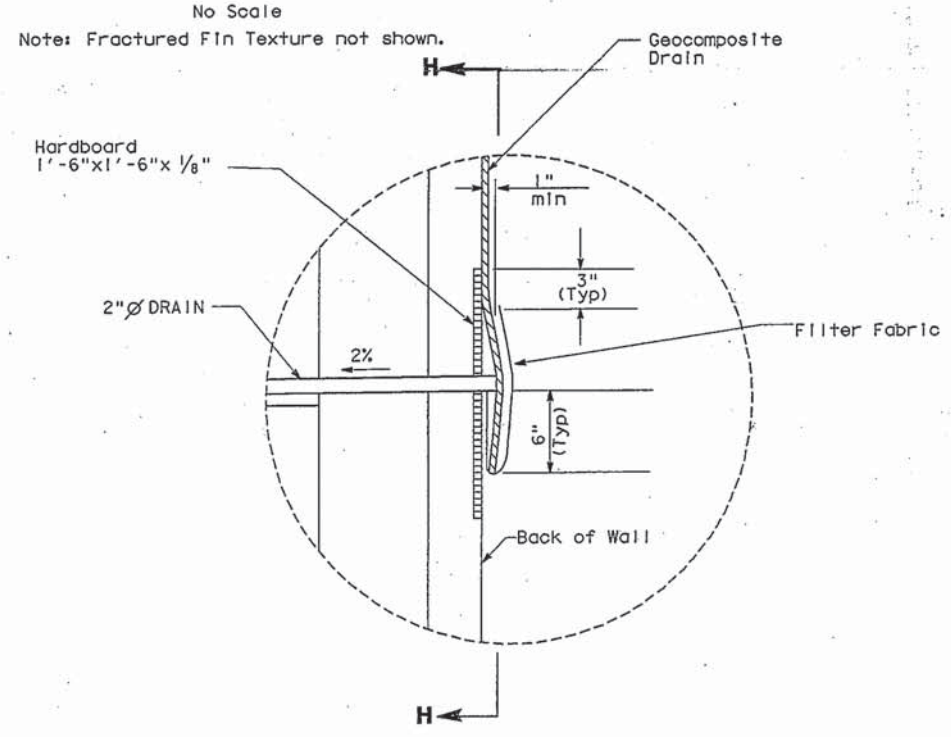

DETAIL H

No Scale

DESIGN	BY M L NAPIER	CHECKED J MORA	
DETAILS	BY J BRIGGS 02-95	CHECKED M L NAPIER	
QUANTITIES	BY M L NAPIER	CHECKED L A FARIA	

STATE OF CALIFORNIA DEPARTMENT OF TRANSPORTATION

DISTRICT 11 STRUCTURE DESIGN B

CU 11288
EA 048661

BRIDGE NO.
POST MILE

SOIL NAIL RETAINING WALL "RW33"

DETAILS NO 1

GS GCD 2138 (CADD 4/89)

ORIGINAL SCALE IN INCHES FOR REDUCED PLANS 0 1 2 3

DISREGARD PRINTS BEARING EARLIER REVISION DATES

REVISION DATES (PRELIMINARY STAGE ONLY) 05-10-95 05-11-95 06-13-95 06-27-95

SHEET 5 OF 9

DIST.	COUNTY	ROUTE	POST MILES TOTAL PROJECT	SHEET NO.	TOTAL SHEETS
11	SD	15	R3.8/R6.0	761	1049

REGISTERED ENGINEER - CIVIL

REGISTERED PROFESSIONAL ENGINEER M L NAPIER No. 46017 Exp. 12-31-98 CIVIL STATE OF CALIFORNIA

11-27-95
PLANS APPROVAL DATE

The State of California or its officers or agents shall not be responsible for the accuracy or completeness of electronic copies of this plan sheet

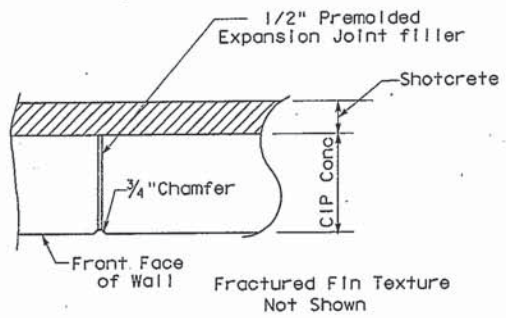

WALL EXPANSION JOINT
No Scale

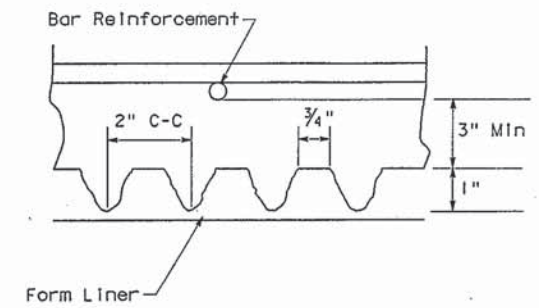

DETAIL
Typical

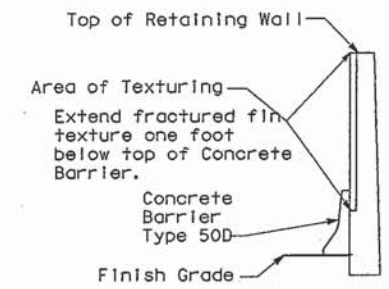

SECTION J-J
Typical

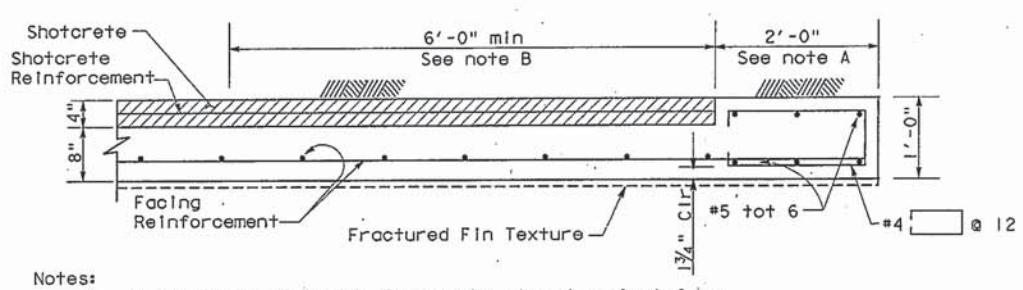

Notes:

A. Upper 2'-0" of inside face to be placed against form. Remainder may be placed against undisturbed material

B. Abrasive blast methods shall be used to clean the shotcrete surface to the extent that clean aggregate is exposed within these limits Prior to Constructing Cast In Place Concrete.

BEGIN/END OF WALL PLAN
1"=1'-0"

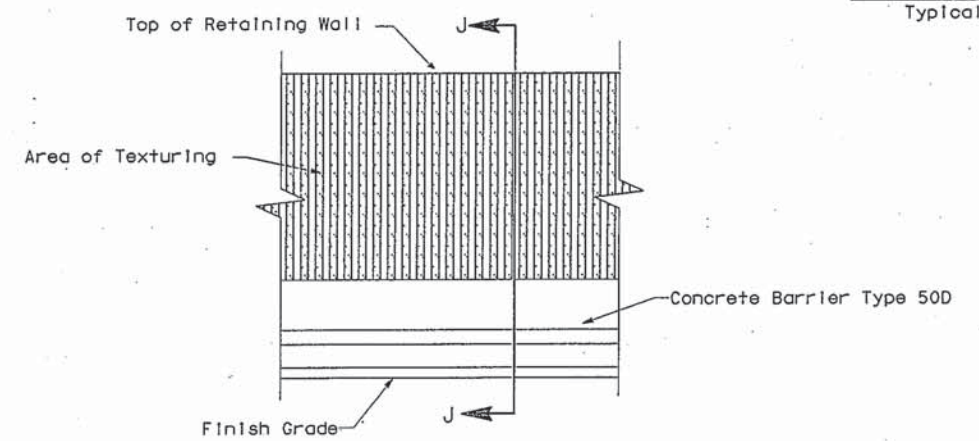

ELEVATION
Typical

FRACTURED FIN TEXTURE
No Scale

DESIGN	BY M L NAPIER	CHECKED J MORA	
DETAILS	BY J BRIGGS 03-95	CHECKED M L NAPIER	BY
QUANTITIES	BY M L NAPIER	CHECKED L A FARIA	BY

STATE OF CALIFORNIA
DEPARTMENT OF TRANSPORTATION

DISTRICT 11
STRUCTURE DESIGN B

BRIDGE NO.
POST MILE

SOIL NAIL RETAINING WALL "RW33"
DETAILS NO 2

DS 0.25 2138 (CADD 4/89)

ORIGINAL SCALE IN INCHES FOR REDUCED PLANS 0 1 2 3

CU 11288
EA 04866I

DISREGARD PRINTS BEARING EARLIER REVISION DATES

REVISION DATES (PRELIMINARY STAGE ONLY) 05-11-95 06-09-95 06-14-95

SHEET 6 OF 9

DIST.	COUNTY	ROUTE	POST MILES TOTAL PROJECT	SHEET NO.	TOTAL SHEETS
11	SD	15	R3.8/R6.0	762	1049

REGISTERED ENGINEER - CIVIL

REGISTERED PROFESSIONAL ENGINEER M L NAPIER No. 46017 Exp. 12-31-98 CIVIL STATE OF CALIFORNIA

11-27-95
PLANS APPROVAL DATE

The State of California or its officers or agents shall not be responsible for the accuracy or completeness of electronic copies of this plan sheet

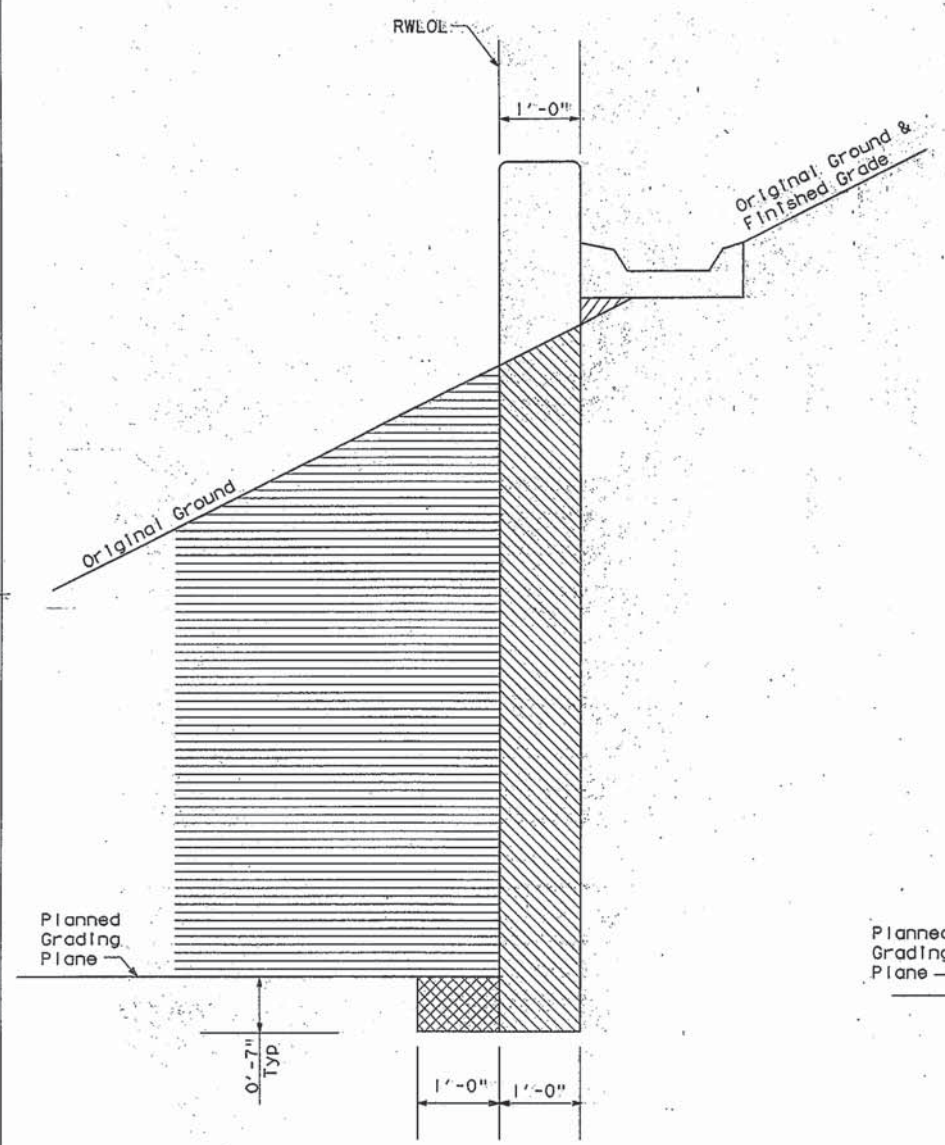

RETAINING WALL IN TYPICAL CUT

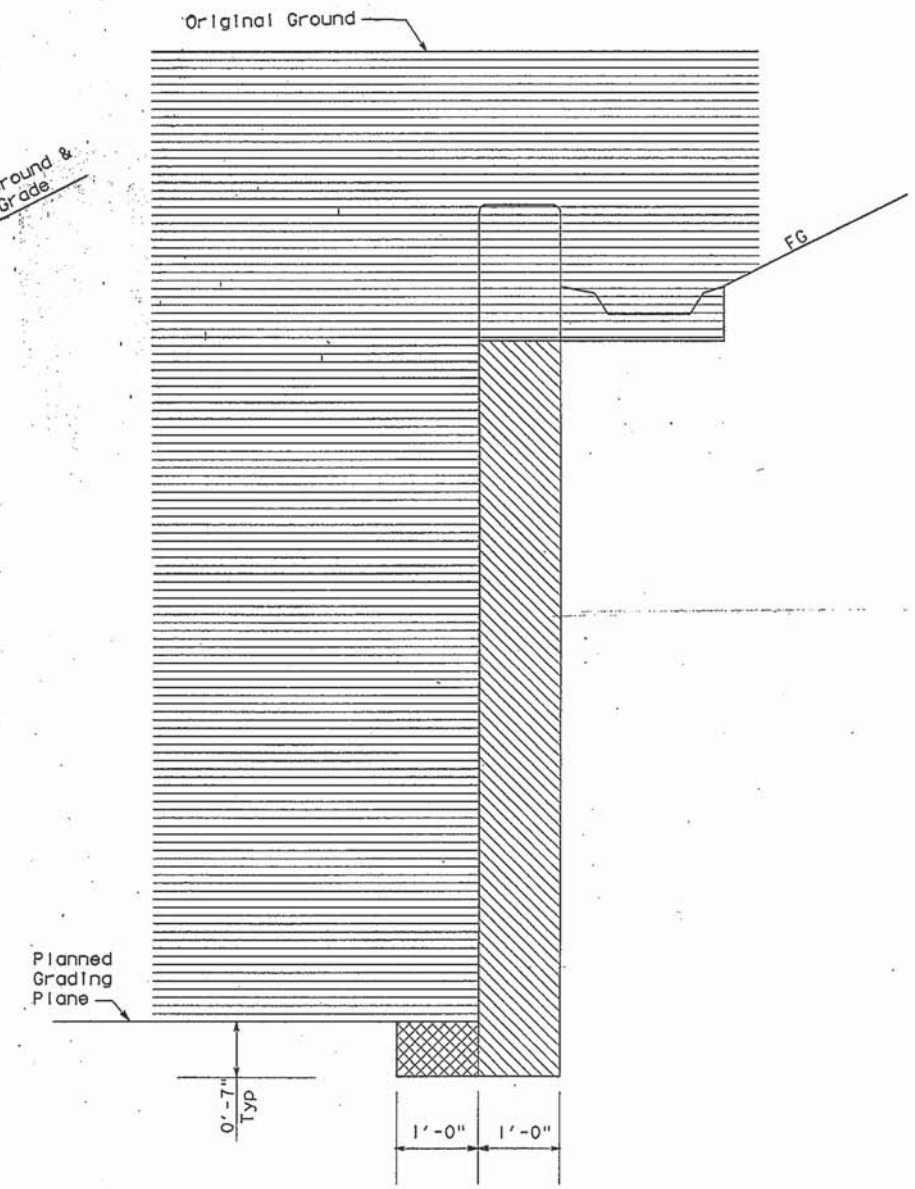

RETAINING WALL IN DEEP CUT

STRUCTURE EXCAVATION AND BACKFILL LIMITS

No Scale

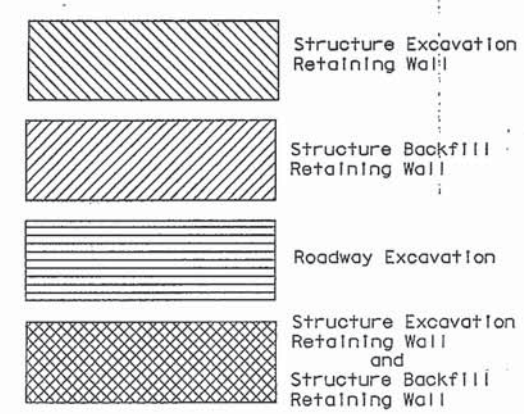

DESIGN	BY M L NAPIER	CHECKED J MORA	
DETAILS	BY J BRIGGS 03-95	CHECKED M L NAPIER	
QUANTITIES	BY M L NAPIER	CHECKED L A FARIA	

STATE OF CALIFORNIA DEPARTMENT OF TRANSPORTATION

DISTRICT 11 STRUCTURE DESIGN B

BRIDGE NO.
POST MILE

SOIL NAIL RETAINING WALL "RW33"

DETAILS NO 3

05 OSD 2138 (CADD 4/89)

ORIGINAL SCALE IN INCHES FOR REDUCED PLANS 0 1 2 3

CU 11288
EA 048661

DISREGARD PRINTS BEARING EARLIER REVISION DATES

REVISION DATES (PRELIMINARY STAGE ONLY) 05-11-95 05-13-95 06-13-95

SHEET 7 OF 9

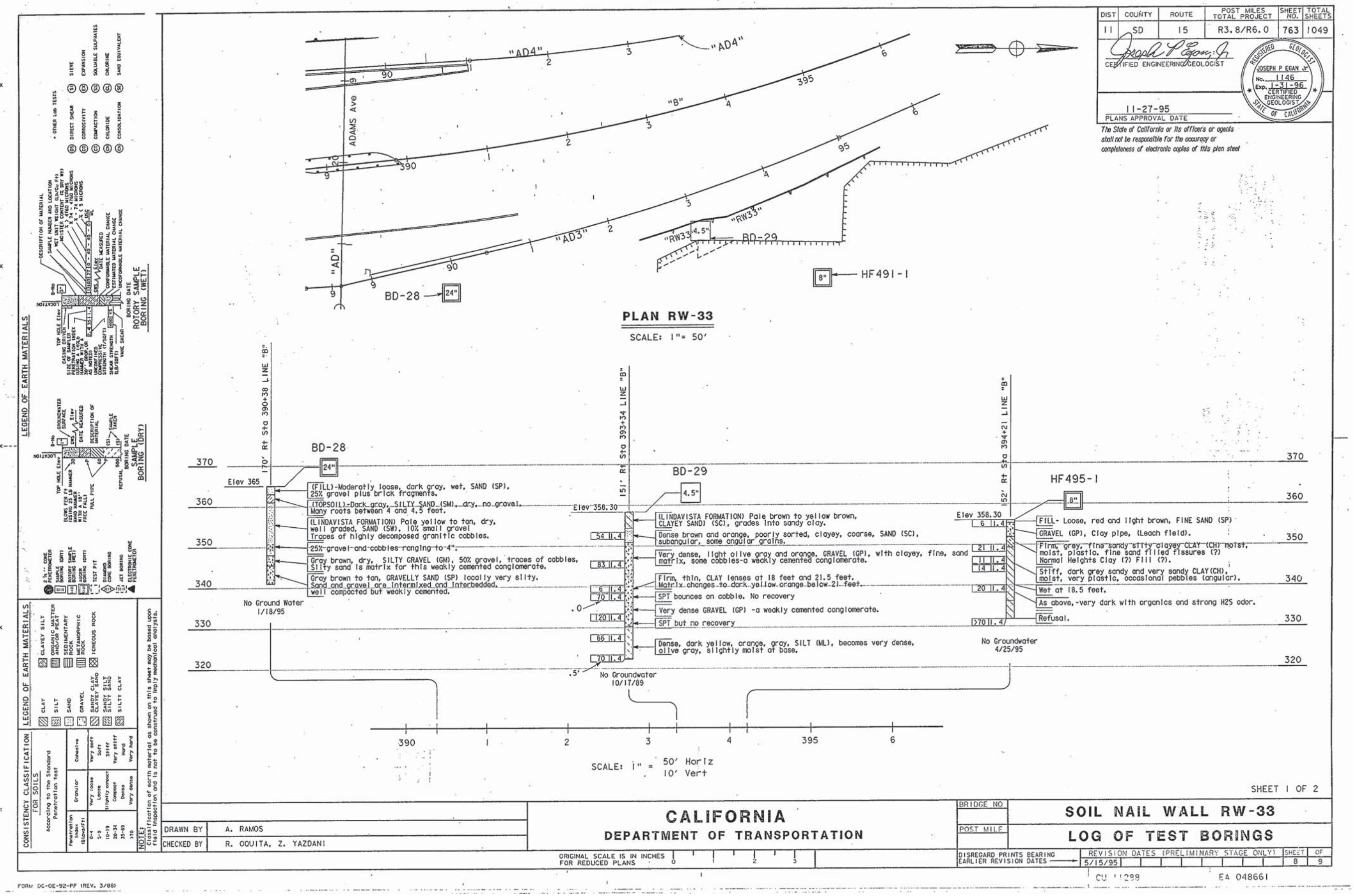
DIST | COUNTY | ROUTE | POST MILES TOTAL PROJECT | SHEET NO. | TOTAL SHEETS
11 | SD | 15 | R3.8/R6.0 | 763 | 1049
CERTIFIED ENGINEERING GEOLOGIST
REGISTERED GEOLOGIST JOSEPH P EGAN JR No. 1146 Exp. 1-31-96 CERTIFIED ENGINEERING GEOLOGIST STATE OF CALIFORNIA
11-27-95
PLANS APPROVAL DATE
The State of California or its officers or agents shall not be responsible for the accuracy or completeness of electronic copies of this plan sheet
PLAN RW-33
SCALE: 1" = 50'
ADAMS Ave
"AD4"
"B"
"AD3"
"AD"
"RW33"
BD-29
BD-28
HF491-1
170' Rt Sta 390+38 LINE "B"
151' Rt Sta 393+34 LINE "B"
152' Rt Sta 394+21 LINE "B"
Elev 365
(FILL)-Moderately loose, dark gray, wet, SAND (SP), 25% gravel plus brick fragments.
(TOPSOIL)-Dark gray, SILTY SAND (SM), dry, no gravel. Many roots between 4 and 4.5 feet.
(LINDAVISTA FORMATION) Pale yellow to tan, dry, well graded, SAND (SW), 10% small gravel Traces of highly decomposed granitic cobbles.
25% gravel and cobbles ranging to 4".
Gray brown, dry, SILTY GRAVEL (GM), 50% gravel, traces of cobbles, Silty sand is matrix for this weakly cemented conglomerate.
Gray brown to tan, GRAVELLY SAND (SP) locally very silty. Sand and gravel are intermixed and interbedded, well compacted but weakly cemented.
No Ground Water 1/18/95
Elev 358.30
(LINDAVISTA FORMATION) Pale brown to yellow brown, CLAYEY SAND (SC), grades into sandy clay.
Dense brown and orange, poorly sorted, clayey, coarse, SAND (SC), subangular, some angular grains.
Very dense, light olive gray and orange, GRAVEL (GP), with clayey, fine, sand matrix, some cobbles-a weakly cemented conglomerate.
Firm, thin, CLAY lenses at 18 feet and 21.5 feet. Matrix changes to dark yellow orange below 21 feet.
SPT bounces on cobble. No recovery
Very dense GRAVEL (GP) -a weakly cemented conglomerate.
SPT but no recovery
Dense, dark yellow, orange, gray, SILT (ML), becomes very dense, olive gray, slightly moist at base.
No Groundwater 10/17/89
FILL- Loose, red and light brown, FINE SAND (SP)
GRAVEL (GP), Clay pipe, (Leach field).
Firm, grey, fine sandy silty clayey CLAY (CH) moist, moist, plastic, fine sand filled fissures (?) Normal Heights Clay (?) Fill (?).
Stiff, dark grey sandy and very sandy CLAY(CH), moist, very plastic, occasional pebbles (angular).
Wet at 18.5 feet.
As above,-very dark with organics and strong H2S odor.
Refusal.
No Groundwater 4/25/95
SCALE: 1" = 50' Horiz 10' Vert
LEGEND OF EARTH MATERIALS
CONSISTENCY CLASSIFICATION FOR SOILS
According to the Standard Penetration Test
NOTE: Classification of earth material as shown on this sheet may be based upon field inspection and is not to be construed to imply mechanical analysis.
SHEET 1 OF 2
DRAWN BY A. RAMOS
CHECKED BY R. OOUITA, Z. YAZDANI
CALIFORNIA
DEPARTMENT OF TRANSPORTATION
BRIDGE NO
POST MILE
SOIL NAIL WALL RW-33
LOG OF TEST BORINGS
ORIGINAL SCALE IS IN INCHES FOR REDUCED PLANS
DISREGARD PRINTS BEARING EARLIER REVISION DATES
REVISION DATES (PRELIMINARY STAGE ONLY) 5/15/95
SHEET 8 OF 9
CU 11299
EA 048661
FORM DC-OE-92-PF (REV. 3/88)

DIST	COUNTY	ROUTE	POST MILES TOTAL PROJECT	SHEET NO.	TOTAL SHEETS
11	SD	15	R3.8/R6.0	764	1049

CERTIFIED ENGINEERING GEOLOGIST

REGISTERED GEOLOGIST JOSEPH P EGAN Jr No. 1146 Exp. 1-31-96 CERTIFIED ENGINEERING GEOLOGIST STATE OF CALIFORNIA

11-27-95
PLANS APPROVAL DATE

The State of California or its officers or agents shall not be responsible for the accuracy or completeness of electronic copies of this plan sheet

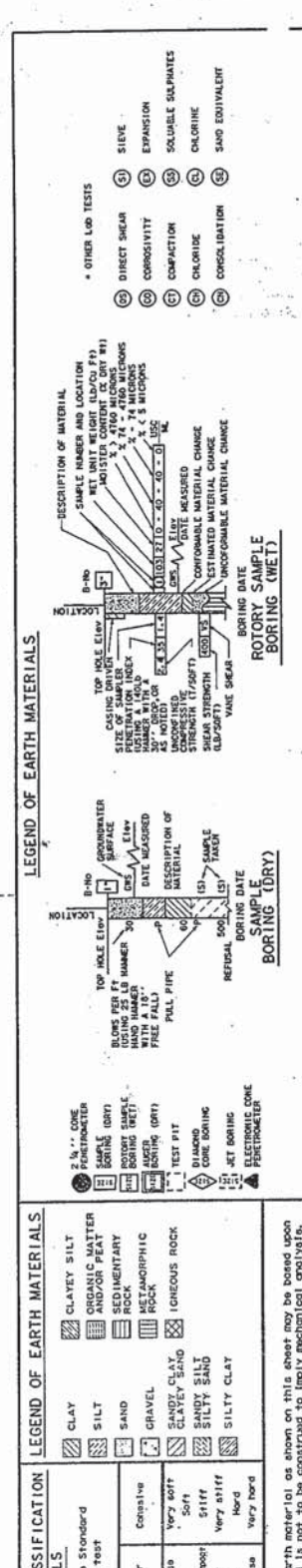

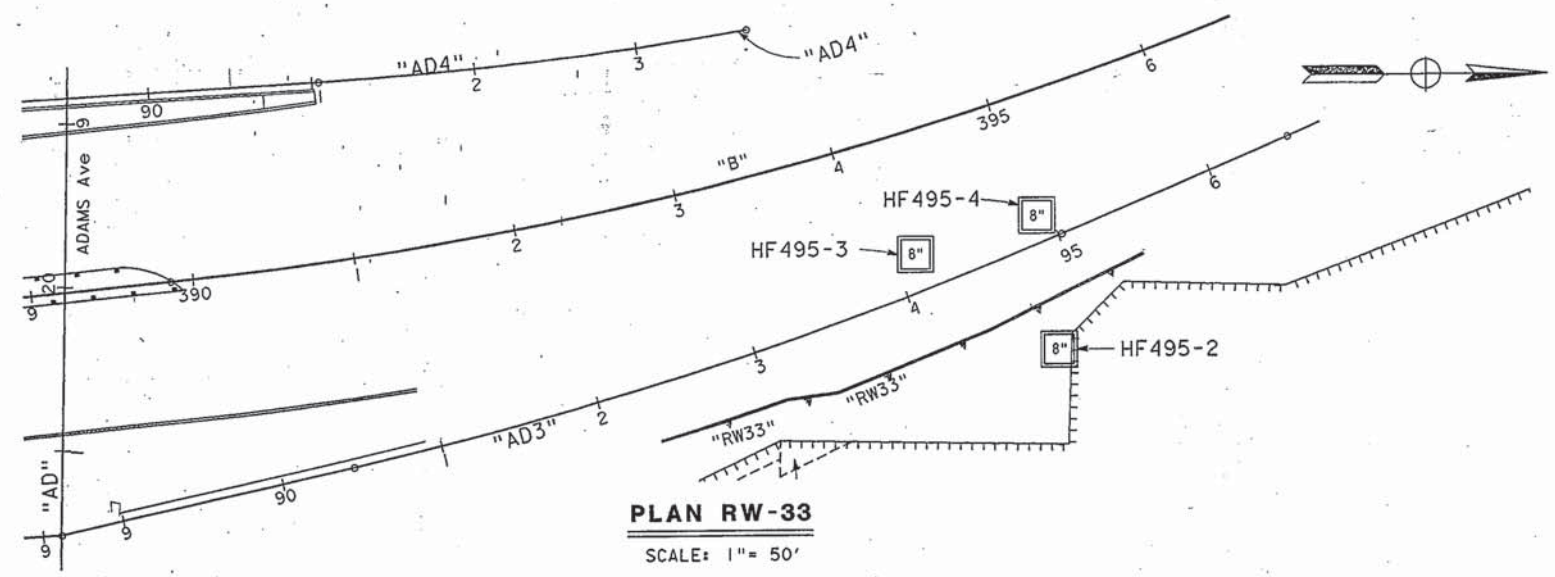

PLAN RW-33

SCALE: 1" = 50'

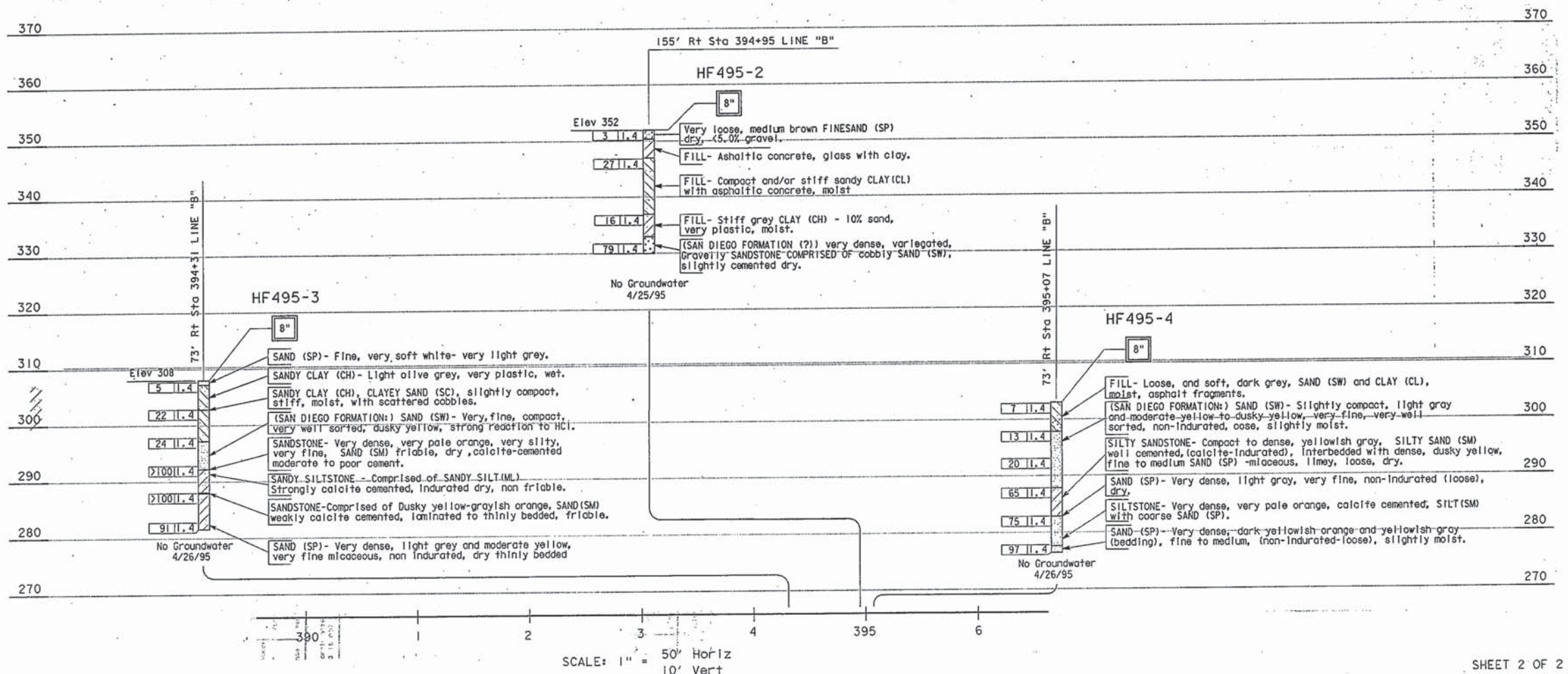

SHEET 2 OF 2

DRAWN BY	A. RAMOS	CALIFORNIA DEPARTMENT OF TRANSPORTATION	BRIDGE NO. / SOIL NAIL WALL RW-33
CHECKED BY	R. OOUITA, Z. YAZDANI		POST MILE / LOG OF TEST BORINGS

ORIGINAL SCALE IS IN INCHES FOR REDUCED PLANS 0 1 2 3

DISREGARD PRINTS BEARING EARLIER REVISION DATES → REVISION DATES (PRELIMINARY STAGE ONLY) 5/17/95 | SHEET 9 OF 9

CU 11288 EA 048661

FORM CC-OE-92-PF (REV. 3/88)

DIST.	COUNTY	ROUTE	POST MILES TOTAL PROJECT	SHEET NO.	TOTAL SHEETS
11	SD	15	R3.8/R6.0	765	1049

REGISTERED ENGINEER - CIVIL

REGISTERED PROFESSIONAL ENGINEER M. L. NAPIER No. 46017 Exp. 12-31-98 CIVIL STATE OF CALIFORNIA

11-27-95
PLANS APPROVAL DATE

The State of California or its officers or agents shall not be responsible for the accuracy or completeness of electronic copies of this plan sheet

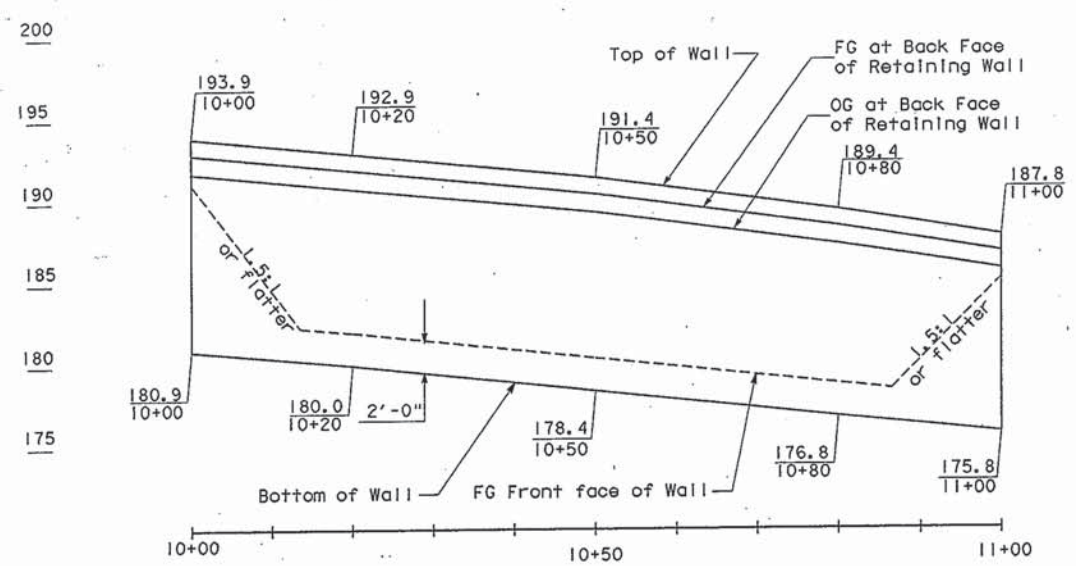

REAR ELEVATION
SCALE: 1" = 10' HORIZ
1" = 5' VERT

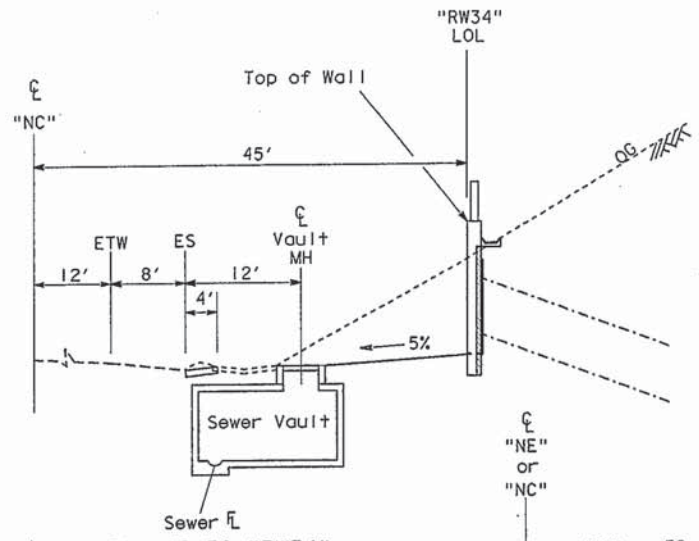

Sta 10+50 "RW34"

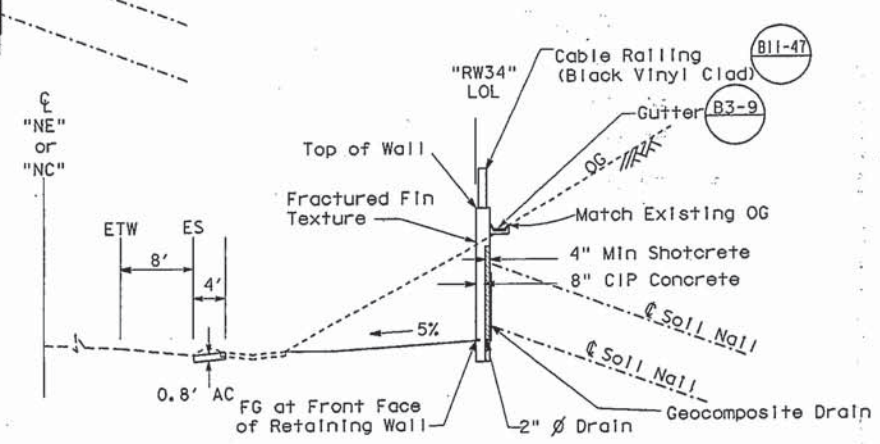

Sta 10+00 "RW34" to Sta 11+00 "RW34"

TYPICAL SECTION
No Scale

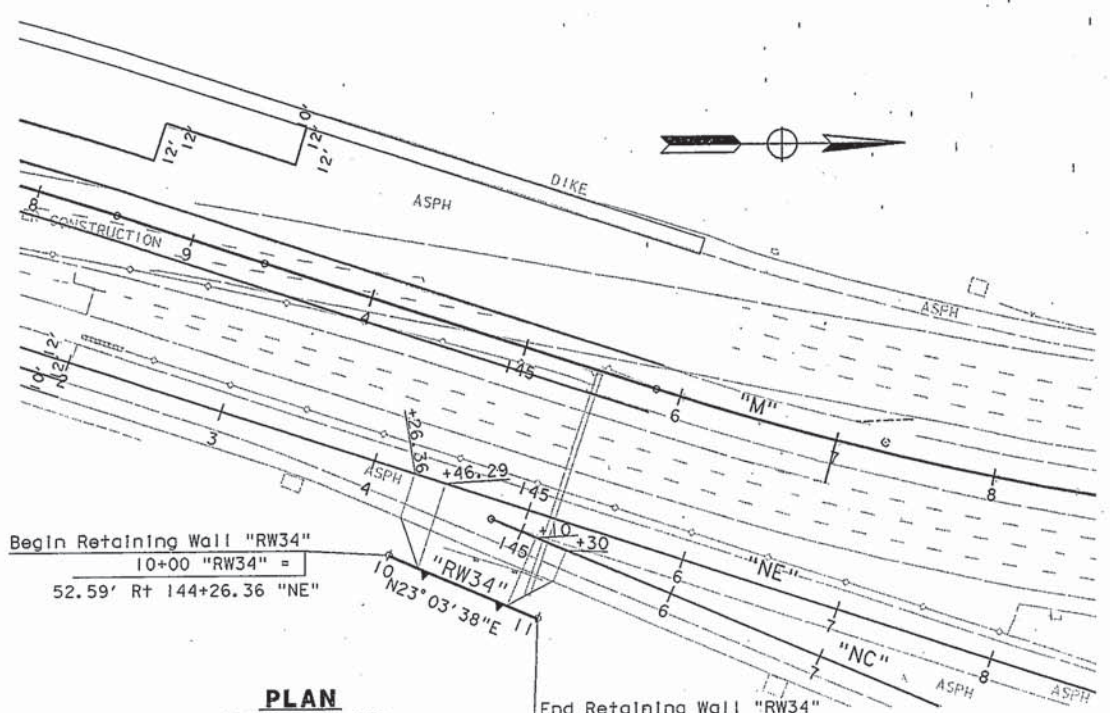

PLAN
SCALE: 1" = 50'

QUANTITIES

STRUCTURE EXCAVATION (SOIL NAIL WALL)	47	CY
STRUCTURE BACKFILL (SOIL NAIL WALL)	8	CY
SOIL NAIL ASSEMBLY	470	LF
STRUCTURAL CONCRETE, RETAINING WALL	36	CY
FRACTURED FIN TEXTURE	1,178	SQFT
BAR REINFORCING STEEL (RETAINING WALL)	4,600	LB
SHOTCRETE	13	CY
GEOCOMPOSITE DRAIN	112	SQFT
MINOR CONCRETE (GUTTER)	4	CY
CABLE RAILING (BLACK VINYL CLAD)	99	LF

INDEX TO PLANS

SHEET NO	TITLE
1	General Plan
2	Soil Nail Assembly Layout
3	Typical Section
4	Soil Nail Assembly Details
5	Details No. 1
6	Details No. 2
7	Details No. 3
8	Log of Test Borings

STANDARD PLANS DATED JULY, 1995

B3-9	Retaining Wall Details No. 2
B11-47	Cable Railing

Standard Plan Sheet No.
Detail No.
For 'General Notes' See "SOIL NAIL ASSEMBLY LAYOUT" Sheet.

DESIGN	BY M L NAPIER	CHECKED J MORA			
DETAILS	BY J BRIGGS 05-95	CHECKED M L NAPIER	LAYOUT	BY M L NAPIER	CHECKED S AKHGARNIA
QUANTITIES	BY M L NAPIER	CHECKED L A FARIA	SPECIFICATIONS	BY KF Meier 9/95	PLANS AND SPECS COMPARED KF Meier 9/95

PROJECT ENGINEER

STATE OF CALIFORNIA
DEPARTMENT OF TRANSPORTATION

DISTRICT 11
STRUCTURE DESIGN B

CU 11288
EA 048661

BRIDGE NO.
POST MILE

SOIL NAIL RETAINING WALL "RW34"
GENERAL PLAN

DISREGARD PRINTS BEARING EARLIER REVISION DATES

REVISION DATES (PRELIMINARY STAGE ONLY) 12-20-94 05-10-95 05-31-95 06-01-95 06-10-95 06-14-95

SHEET 1 OF 8

05 GGL 2138 (CADD 4/89)

ORIGINAL SCALE IN INCHES FOR REDUCED PLANS 0 1 2 3

DIST.	COUNTY	ROUTE	POST MILES TOTAL PROJECT	SHEET NO.	TOTAL SHEETS
11	SD	15	R3.8/R6.0	766	1049

REGISTERED ENGINEER - CIVIL

REGISTERED PROFESSIONAL ENGINEER JAVAD EHSAN No. 47251 Exp. 12-31-95 CIVIL STATE OF CALIFORNIA

11-27-95
PLANS APPROVAL DATE

The State of California or its officers or agents shall not be responsible for the accuracy or completeness of electronic copies of this plan sheet

NOTES: 1. Soil nail layout:
Vertical spacing 5'-6" center to center max.
Horizontal spacing 6'-0" center to center max.
Top row is located 4'-0" below top of retaining wall (unless noted otherwise)
Bottom row is located 3'-6" above bottom of wall (unless noted otherwise)
Min center to center spacing between soil nail assemblies is 1'-6"

2. Soil nail assembly:
Design Nail Load 2.3 kips/ft, design hole diameter 6"
Min soil nail embedment length, LE, Varies as shown on wall elevation.
• Indicates location of soil nail assembly or as directed by the Engineer.
X Indicates location of test soil nail assembly or as directed by the Engineer.
Soil Nail inclination angle=15 degree typical (unless noted otherwise).
Bar size, min Diameter 1".

3. Horizontal distance between the beginning/end of wall and first/last nail 3'-6" max center to center spacing

GENERAL NOTES

DESIGN: BRIDGE DESIGN SPECIFICATIONS (1983 AASHTO with Interims and Revisions by CALTRANS)

REINFORCED CONCRETE: fy = 60,000 psi
f'c = 3,250 psi

STRUCTURAL STEEL: ASTM Designation: A36, fy = 36,000 psi

SOIL NAILS: ASTM Designation: A615, Grade 60, fs = 45,000 psi

DESIGN PARAMETERS: (Soil/Bedrock)
Ø = 34°
C = 300 psf
γ = 125 pcf
μ = 10 psi (ultimate bond stress between grout and drilled hole)

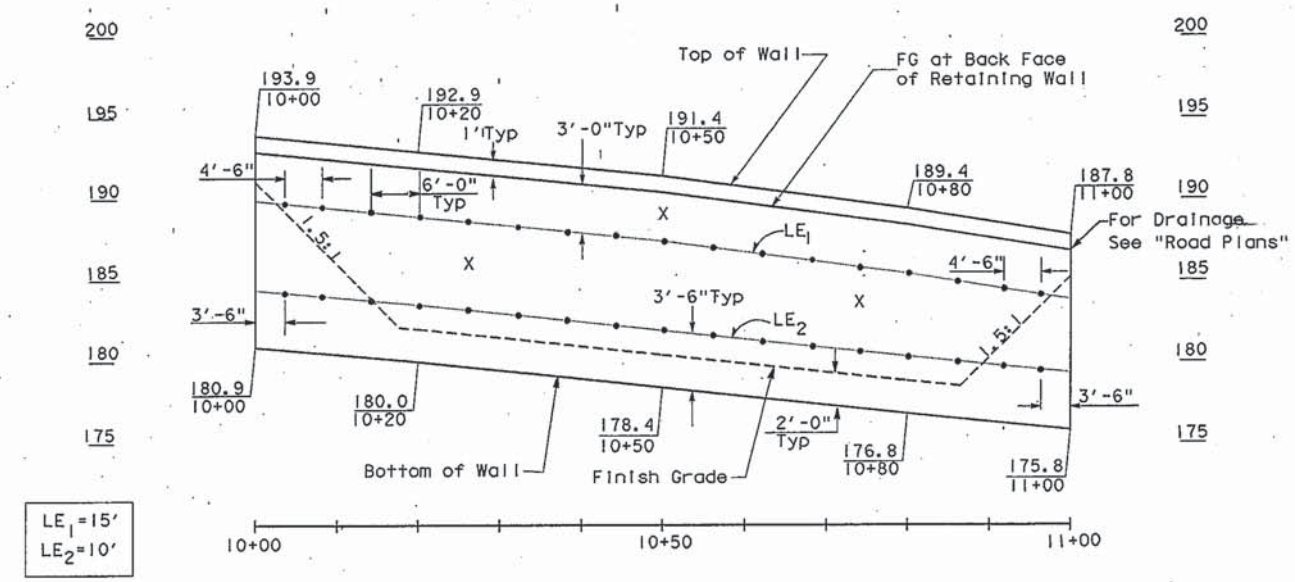

REAR ELEVATION
SCALE: 1" = 10' HORIZ
1" = 5' VERT

DESIGN	BY J EHSAN	CHECKED L WHITMORE	
DETAILS	BY J BRIGGS 03-95	CHECKED M L NAPIER	
QUANTITIES	BY M L NAPIER	CHECKED L A FARIA	

STATE OF CALIFORNIA
DEPARTMENT OF TRANSPORTATION

DISTRICT 11
STRUCTURE DESIGN B

BRIDGE NO.
POST MILE

SOIL NAIL RETAINING WALL "RW34"
SOIL NAIL ASSEMBLY LAYOUT

DS OSD 2138 (CADD 4/89)

ORIGINAL SCALE IN INCHES FOR REDUCED PLANS 0 1 2 3

CU 11288
EA 048661

DISREGARD PRINTS BEARING EARLIER REVISION DATES

REVISION DATES (PRELIMINARY STAGE ONLY) 05-02-95 05-05-95 05-24-95 06-13-95 07-22-95

SHEET 2 OF 8

DIST.	COUNTY	ROUTE	POST MILES TOTAL PROJECT	SHEET NO.	TOTAL SHEETS
11	SD	15	R3.8/R6.0	767	1049

REGISTERED ENGINEER - CIVIL

REGISTERED PROFESSIONAL ENGINEER M L NAPIER No. 46017 Exp. 12-31-98 CIVIL STATE OF CALIFORNIA

11-27-95
PLANS APPROVAL DATE

The State of California or its officers or agents shall not be responsible for the accuracy or completeness of electronic copies of this plan sheet

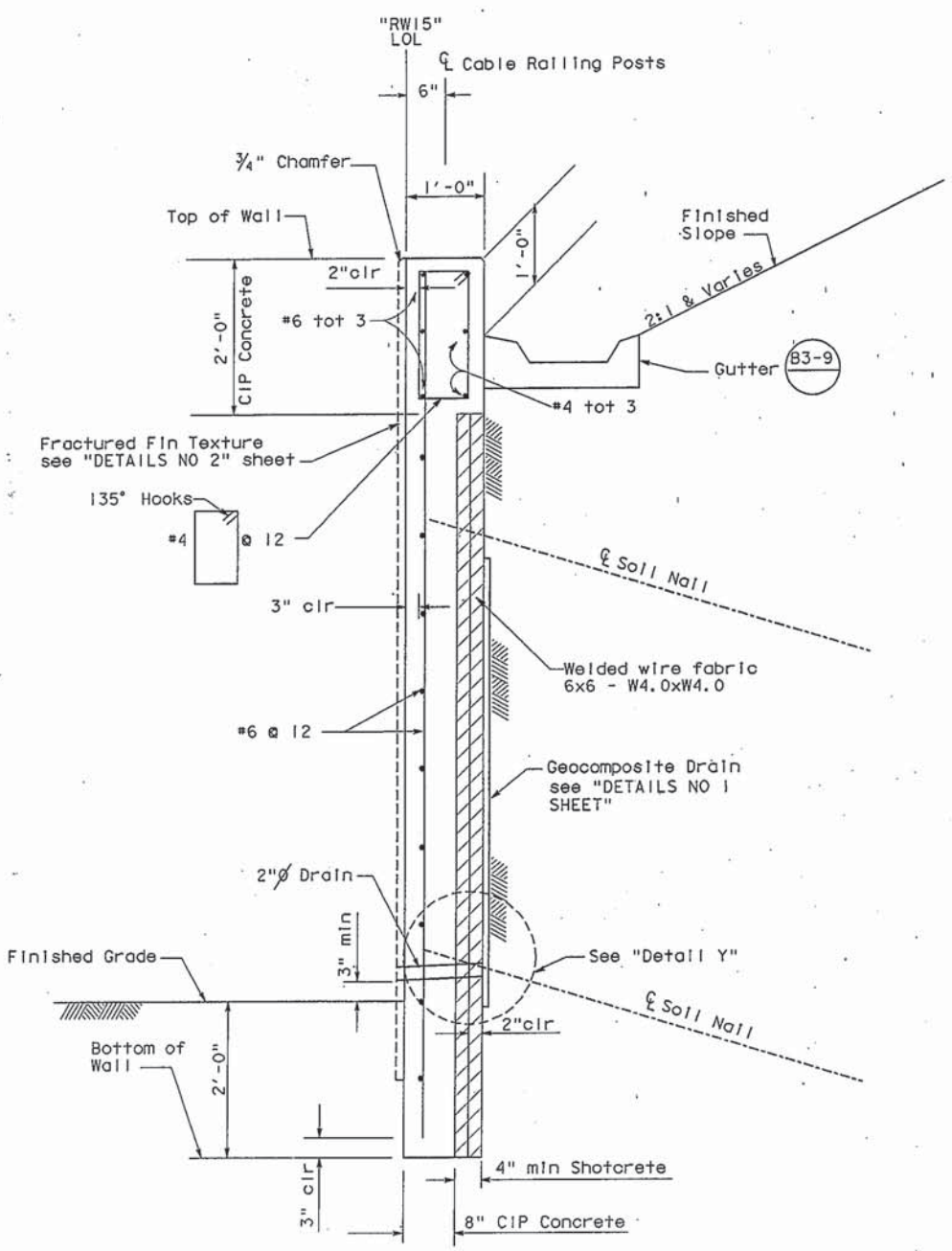

TYPICAL SECTION
1" = 1"-0"

Note: Cable railing not shown.

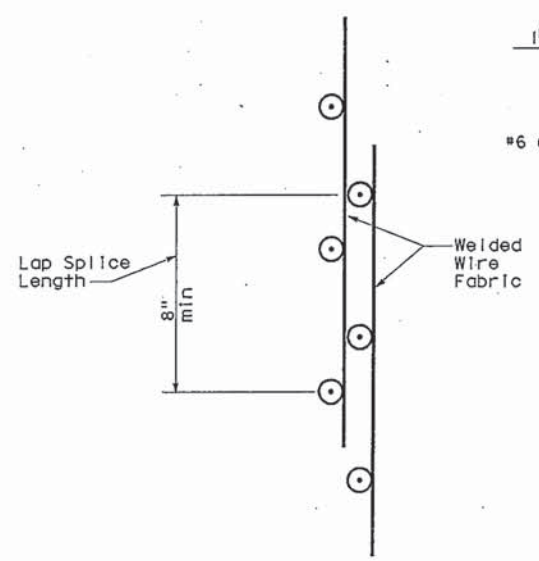

LAP SPLICE DETAIL
No Scale

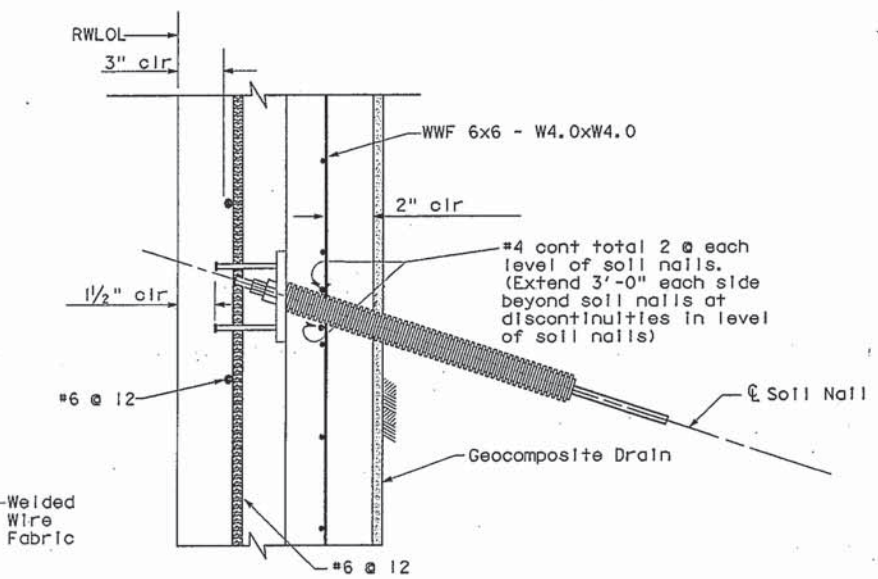

DETAIL Y
No Scale

DESIGN	BY M L NAPIER	CHECKED J MORA	
DETAILS	BY J BRIGGS 02-95	CHECKED M L NAPIER	
QUANTITIES	BY M L NAPIER	CHECKED L A FARIA	

STATE OF CALIFORNIA
DEPARTMENT OF TRANSPORTATION

DISTRICT 11
STRUCTURE DESIGN B

CU 11288
EA048661

BRIDGE NO.
POST MILE

SOIL NAIL RETAINING WALL "RW34"
TYPICAL SECTION

DS OSD 2138 (CADD 4/89)

ORIGINAL SCALE IN INCHES FOR REDUCED PLANS 0 1 2 3

DISREGARD PRINTS BEARING EARLIER REVISION DATES

REVISION DATES (PRELIMINARY STAGE ONLY) 03-15-95 05-04-95 05-05-95 05-11-95 06-12-95 06-14-95 07-31-95

SHEET 3 OF 8

DIST.	COUNTY	ROUTE	POST MILES TOTAL PROJECT	SHEET NO.	TOTAL SHEETS
11	SD	15	R3.8/R6.0	768	1049

REGISTERED ENGINEER - CIVIL

REGISTERED PROFESSIONAL ENGINEER M L NAPIER No. 46017 Exp. 12-31-98 CIVIL STATE OF CALIFORNIA

11-27-95
PLANS APPROVAL DATE

The State of California or its officers or agents shall not be responsible for the accuracy or completeness of electronic copies of this plan sheet

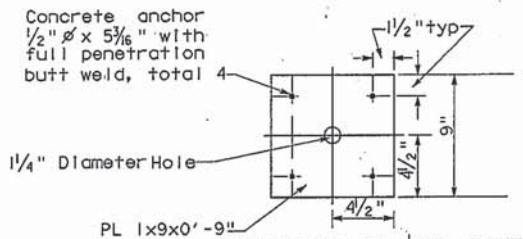

BEARING PLATE DETAIL
NO SCALE

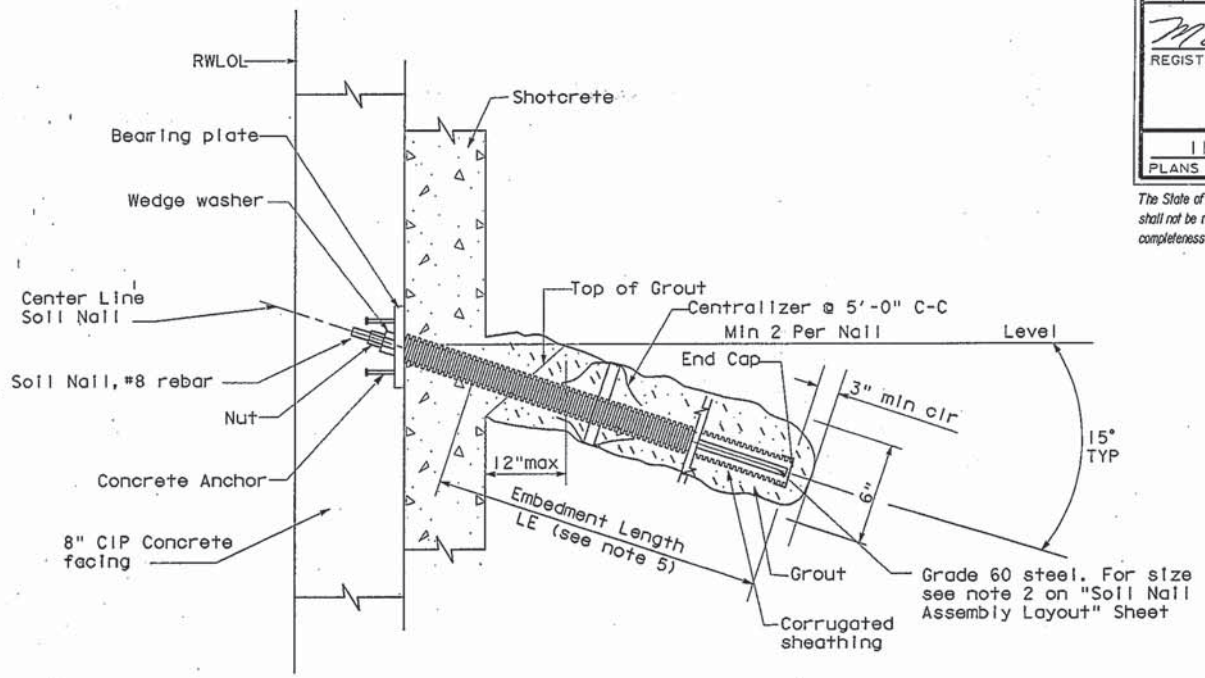

ENCAPSULATED SOIL NAIL DETAIL
No Scale

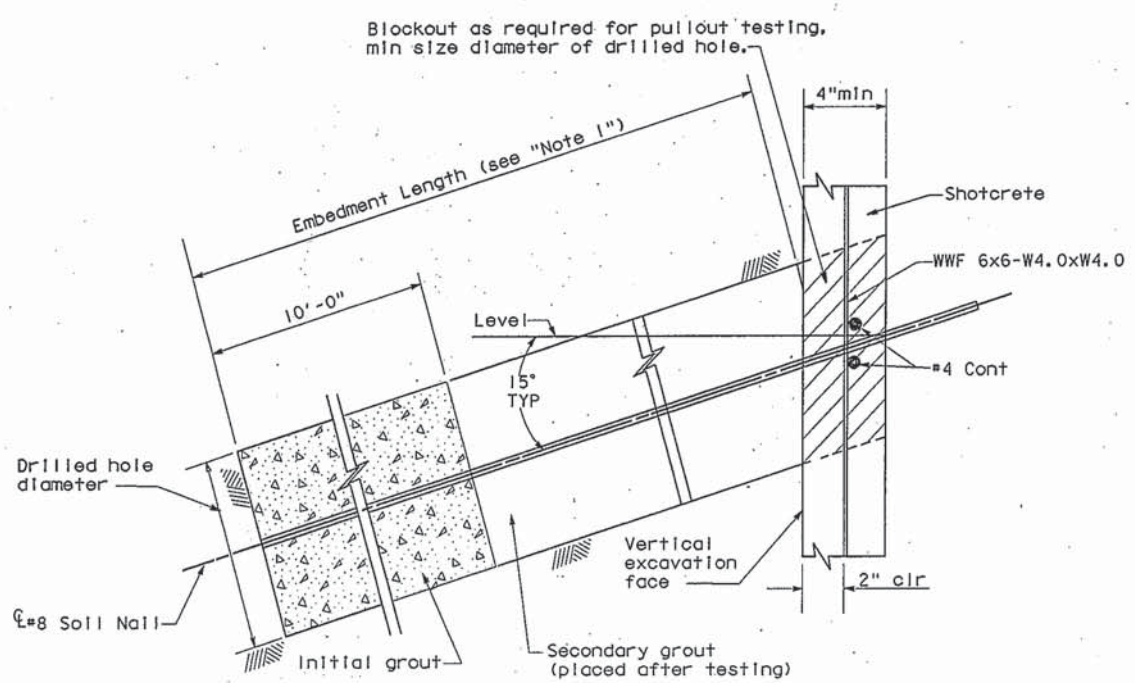

TEST SOIL NAIL ASSEMBLY DETAIL
No Scale

Notes:

1. Embedment length of test Soil Nail equals the embedment length of adjacent encapsulated soil nail assemblies for the row of nails below the test Soil Nail Assembly.
2. Total length of test soil nail assembly equals embedment length plus the length required for jacking equipment.
3. Use pull-out test load of 33.9 kips.
4. Inclination of test Soil Nail Assembly to be the same as adjacent Soil Nail Assemblies
5. For embedment length of encapsulated Soil Nail Assembly, See LE on "Soil Nail Assembly Layout" sheet.

DESIGN	BY M L NAPIER	CHECKED J MORA	
DETAILS	BY J BRIGGS 2-95	CHECKED M L NAPIER	
QUANTITIES	BY M L NAPIER	CHECKED L A FARIA	

STATE OF CALIFORNIA
DEPARTMENT OF TRANSPORTATION

DISTRICT 11
STRUCTURE DESIGN B

BRIDGE NO.
POST MILE

SOIL NAIL RETAINING WALL "RW34"
SOIL NAIL ASSEMBLY DETAILS

DS OSD 2138 (CADD 4/89)

ORIGINAL SCALE IN INCHES FOR REDUCED PLANS 0 1 2 3

CU 11288
EA 048661

DISREGARD PRINTS BEARING EARLIER REVISION DATES

REVISION DATES (PRELIMINARY STAGE ONLY) 05-09-95 05-11-95 06-13-95 06-27-95 06-28-95 07-22-95

SHEET 4 OF 8

DIST.	COUNTY	ROUTE	POST MILES TOTAL PROJECT	SHEET NO.	TOTAL SHEETS
11	SD	15	R3.8/R6.0	769	1049

REGISTERED ENGINEER - CIVIL

REGISTERED PROFESSIONAL ENGINEER M L NAPIER No. 46017 Exp. 12-31-98 CIVIL STATE OF CALIFORNIA

11-27-95
PLANS APPROVAL DATE

The State of California or its officers or agents shall not be responsible for the accuracy or completeness of electronic copies of this plan sheet

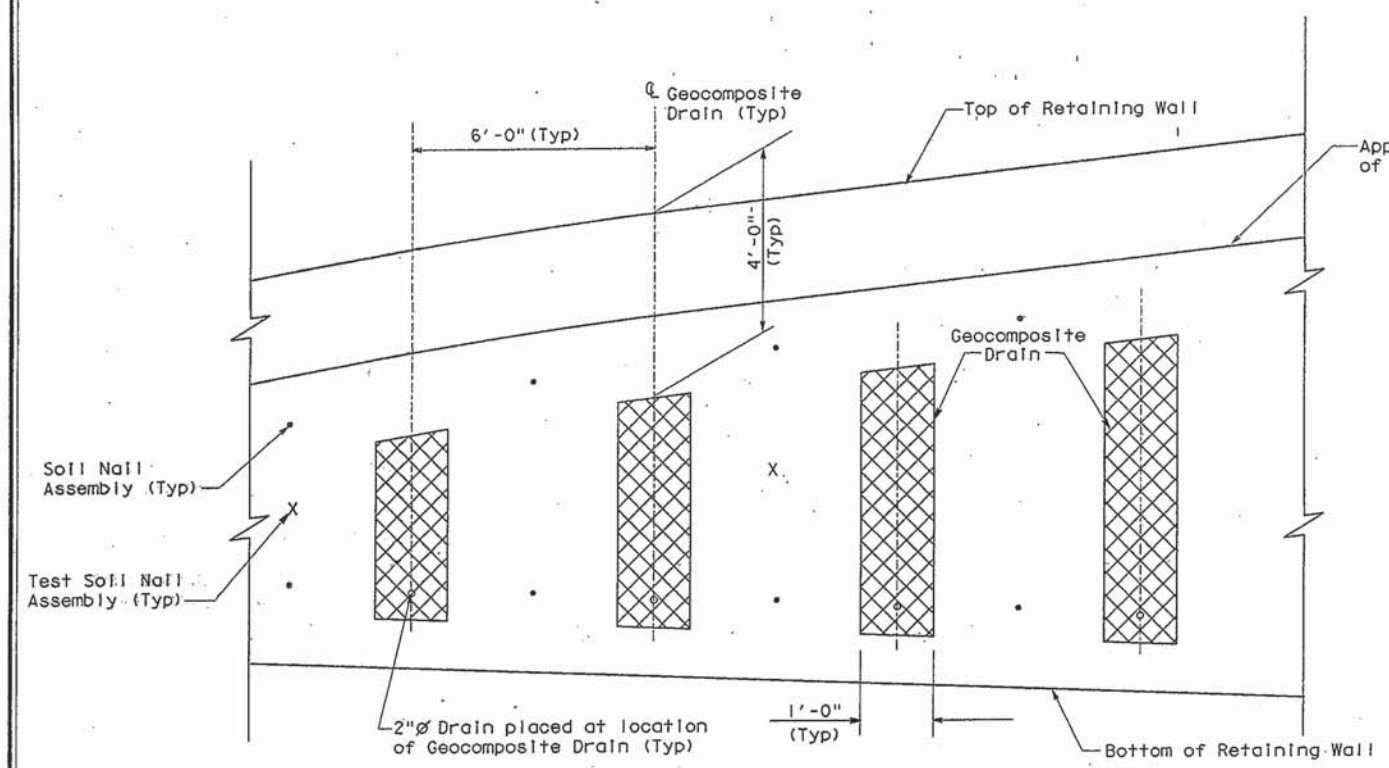

TYPICAL ELEVATION - GEOCOMPOSITE DRAIN

No Scale

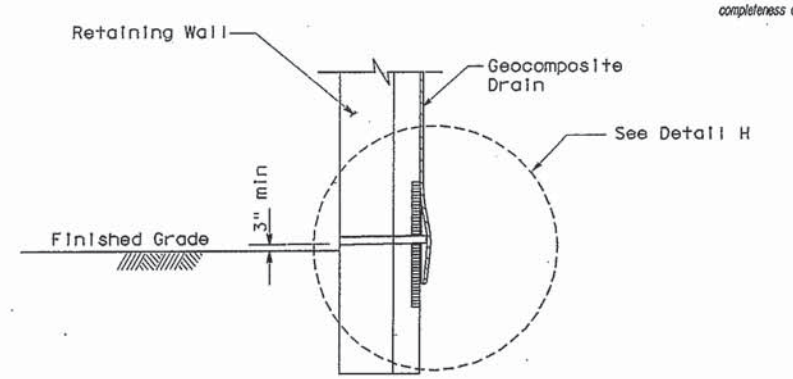

TYPICAL SECTION AT OUTLET PIPE

No Scale

Note: Fractured Fin Texture not shown.

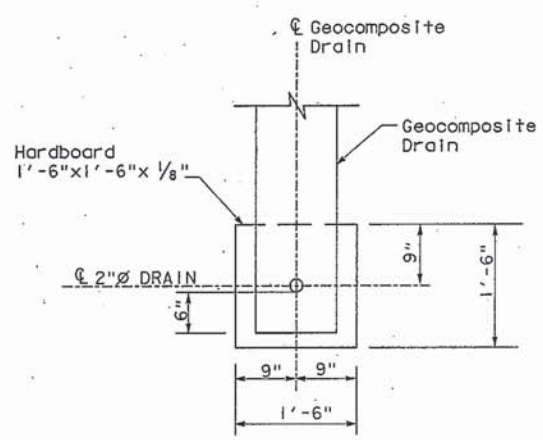

VIEW H-H

No Scale

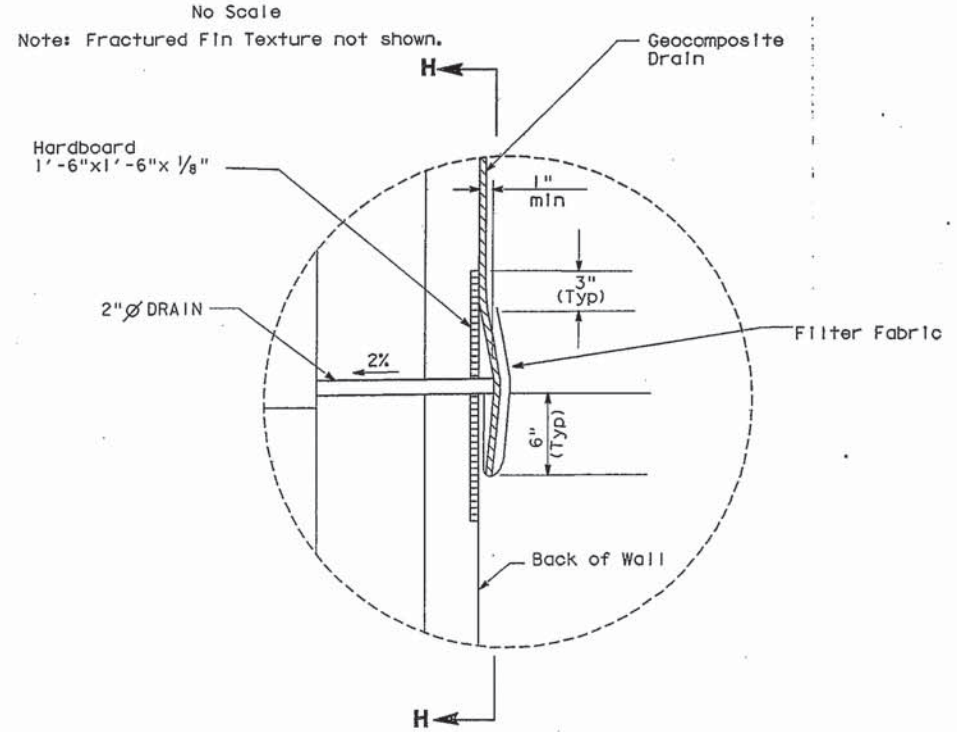

DETAIL H

No Scale

DESIGN	BY M L NAPIER	CHECKED J MORA	
DETAILS	BY J BRIGGS 02-95	CHECKED M L NAPIER	
QUANTITIES	BY M L NAPIER	CHECKED L A FARIA	

STATE OF CALIFORNIA
DEPARTMENT OF TRANSPORTATION

DISTRICT 11
STRUCTURE DESIGN B

BRIDGE NO.
POST MILE

SOIL NAIL RETAINING WALL "RW34"

DETAILS NO 1

DS 050 2138 (CADD 4/89)

ORIGINAL SCALE IN INCHES FOR REDUCED PLANS 0 1 2 3

CU 11288
EA 048661

DISREGARD PRINTS BEARING EARLIER REVISION DATES

REVISION DATES (PRELIMINARY STAGE ONLY) 05-10-95 05-11-95 06-14-95 06-27-95

SHEET 5 OF 8

DIST.	COUNTY	ROUTE	POST MILES TOTAL PROJECT	SHEET NO.	TOTAL SHEETS
11	SD	15	R3.8/R6.0	770	1049

REGISTERED ENGINEER - CIVIL

REGISTERED PROFESSIONAL ENGINEER M L NAPIER No. 46017 Exp. 12-31-98 CIVIL STATE OF CALIFORNIA

11-27-95
PLANS APPROVAL DATE

The State of California or its officers or agents shall not be responsible for the accuracy or completeness of electronic copies of this plan sheet

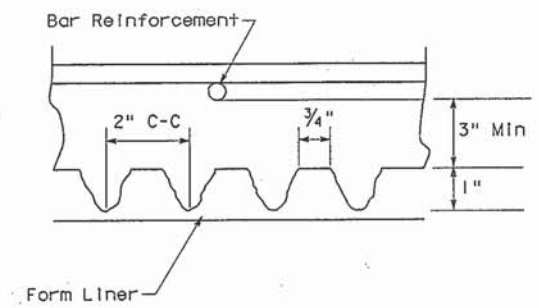

DETAIL
Typical

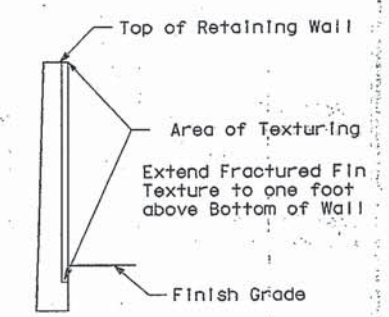

SECTION J-J
Typical

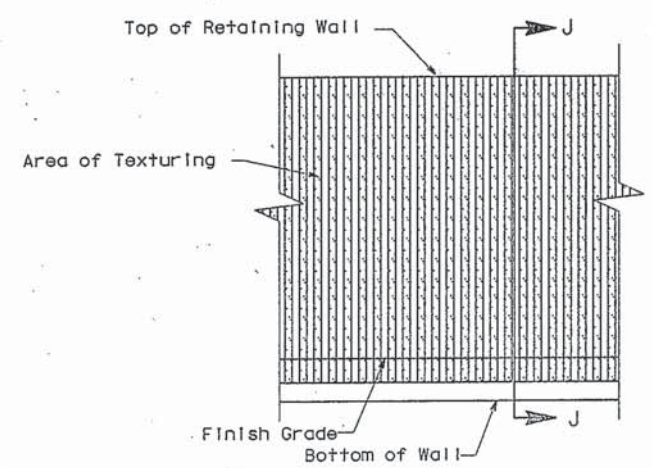

ELEVATION
Typical

FRACTURED FIN TEXTURE
No Scale

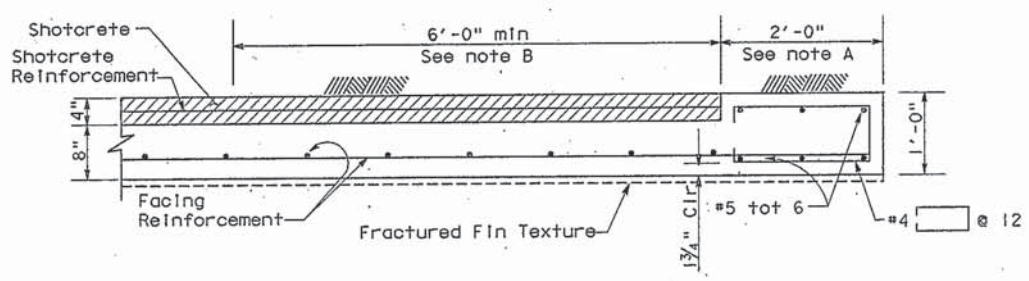

Notes:

A. Upper 2'-0" of inside face to be placed against form. Remainder may be placed against undisturbed material

B. Abrasive blast methods shall be used to clean the shotcrete surface to the extent that clean aggregate is exposed within these limits prior to constructing cast in place concrete.

BEGIN/END OF WALL PLAN
1"=1'-0"

DESIGN	BY M L NAPIER	CHECKED J MORA	
DETAILS	BY J BRIGGS 03-95	CHECKED M L NAPIER	
QUANTITIES	BY M L NAPIER	CHECKED L A FARIA	

STATE OF CALIFORNIA
DEPARTMENT OF TRANSPORTATION

DISTRICT 11
STRUCTURE DESIGN B

BRIDGE NO.
POST MILE

SOIL NAIL RETAINING WALL "RW34"
DETAILS NO 2

DS OSD 2138 (CADD 4/89)

ORIGINAL SCALE IN INCHES FOR REDUCED PLANS 0 1 2 3

CU 11288
EA 048661

DISREGARD PRINTS BEARING EARLIER REVISION DATES → 05-11-95 06-10-95 06-14-95 06-20-95

REVISION DATES (PRELIMINARY STAGE ONLY)

SHEET 6 OF 8

DIST.	COUNTY	ROUTE	POST MILES TOTAL PROJECT	SHEET NO.	TOTAL SHEETS
11	SD	15	R3.8/R6.0	771	1049

REGISTERED ENGINEER - CIVIL

REGISTERED PROFESSIONAL ENGINEER M L NAPIER No. 46017 Exp. 12-31-98 CIVIL STATE OF CALIFORNIA

11-27-95
PLANS APPROVAL DATE

The State of California or its officers or agents shall not be responsible for the accuracy or completeness of electronic copies of this plan sheet

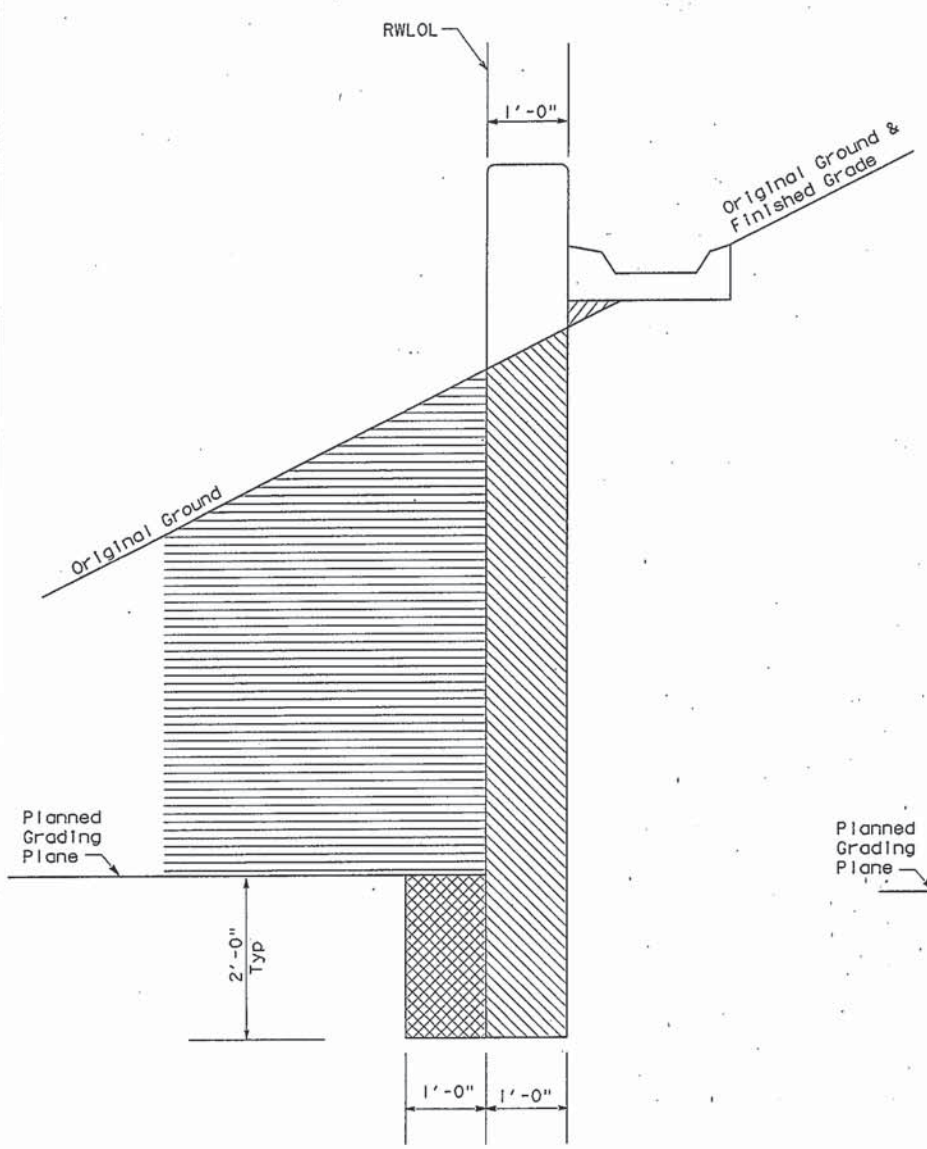

RETAINING WALL IN TYPICAL CUT

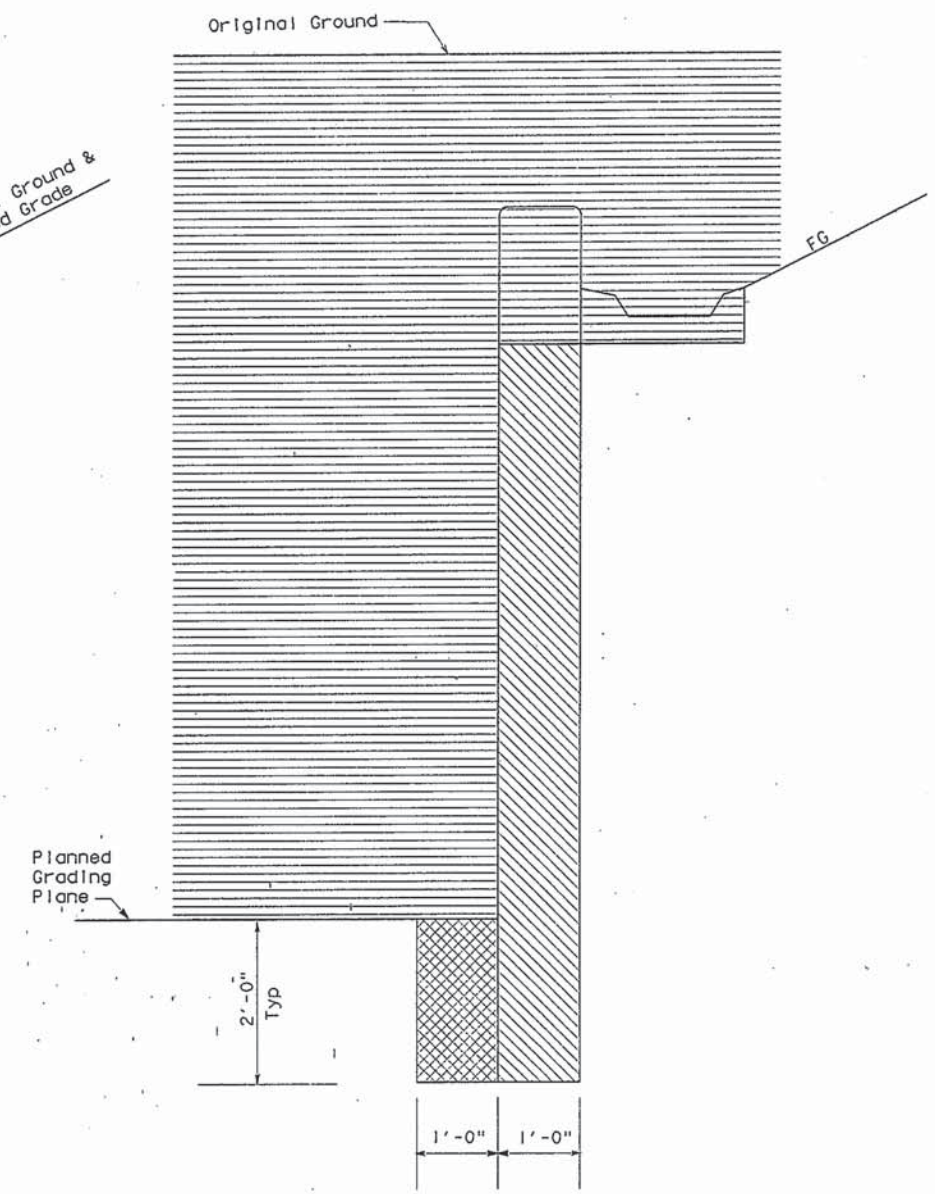

RETAINING WALL IN DEEP CUT

STRUCTURE EXCAVATION AND BACKFILL LIMITS

No Scale

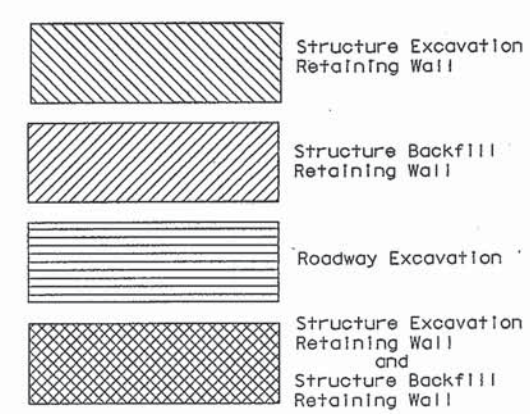

DESIGN	BY M L NAPIER	CHECKED J MORA	
DETAILS	BY J BRIGGS 03-95	CHECKED M L NAPIER	
QUANTITIES	BY M L NAPIER	CHECKED L A FARIA	

STATE OF CALIFORNIA
DEPARTMENT OF TRANSPORTATION

DISTRICT 11
STRUCTURE DESIGN B

BRIDGE NO.
POST MILE

SOIL NAIL RETAINING WALL "RW34"

DETAILS NO 3

DS 350 2138 (CADD 4/89)

ORIGINAL SCALE IN INCHES FOR REDUCED PLANS 0 1 2 3

CU 11288
EA 048661

DISREGARD PRINTS BEARING EARLIER REVISION DATES

REVISION DATES (PRELIMINARY STAGE ONLY) 05-11-95 06-13-95

SHEET 7 OF 8

DIST	COUNTY	ROUTE	POST MILES TOTAL PROJECT	SHEET NO.	TOTAL SHEETS
11	SD	15	R3.8/R6.0	772	1049

CERTIFIED ENGINEERING GEOLOGIST

REGISTERED GEOLOGIST JOSEPH P EGAN JR No. 1146 Exp. 1-31-96 CERTIFIED ENGINEERING GEOLOGIST STATE OF CALIFORNIA

11-27-95
PLANS APPROVAL DATE

The State of California or its officers or agents shall not be responsible for the accuracy or completeness of electronic copies of this plan sheet

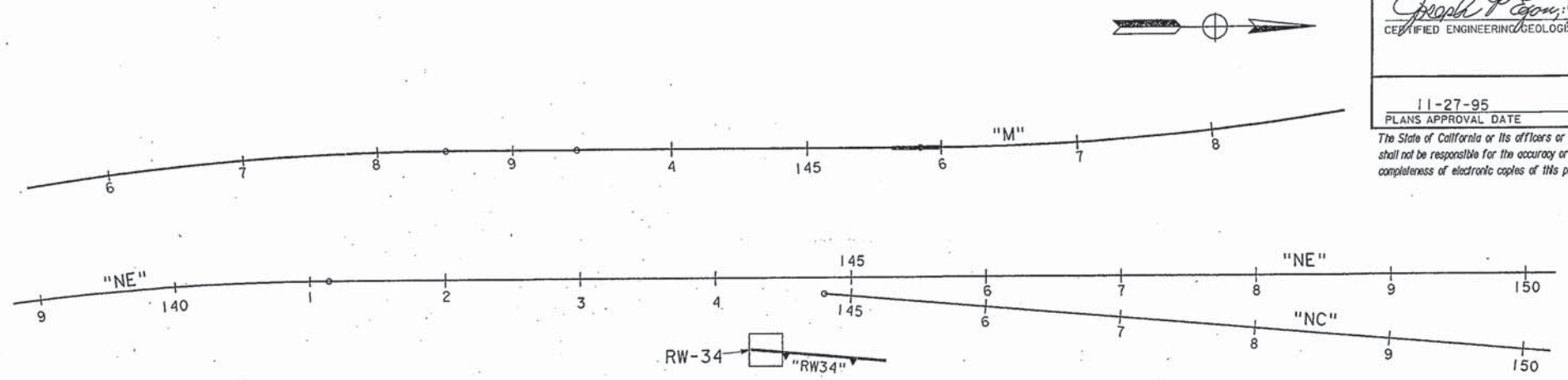

PLAN RW-34

SCALE: 1" = 50'

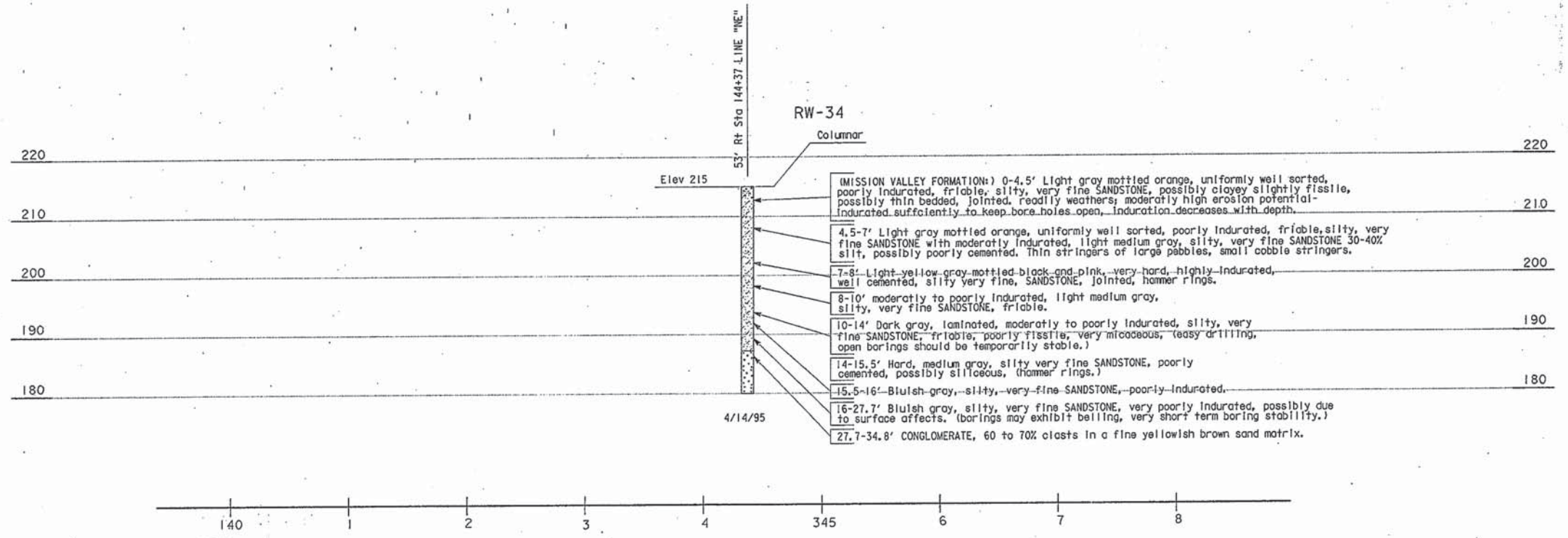

SCALE: 1" = 50' Horiz
10' Vert

LEGEND OF EARTH MATERIALS

CONSISTENCY CLASSIFICATION FOR SOILS — According to the Standard Penetration Test

Penetration Index (Blows/Ft)	Granular	Cohesive
0-4	Very loose	Very soft
5-9	Loose	Soft
10-19	Slightly compact	Stiff
20-34	Compact	Very stiff
35-69	Dense	Hard
>70	Very dense	Very hard

LEGEND OF EARTH MATERIALS: CLAY, SILT, SAND, GRAVEL, SANDY CLAY, CLAYEY SAND, SANDY SILT, SILTY SAND, SILTY CLAY, CLAYEY SILT, ORGANIC MATTER AND/OR PEAT, SEDIMENTARY ROCK, METAMORPHIC ROCK, IGNEOUS ROCK

NOTE: Classification of earth material as shown on this sheet may be based upon visual inspection and is not to be construed to imply mechanical analysis.

DRAWN BY A. RAMOS
CHECKED BY R. OOUITA, Z. YAZDANI

CALIFORNIA
DEPARTMENT OF TRANSPORTATION

ORIGINAL SCALE IS IN INCHES FOR REDUCED PLANS 0 1 2 3

BRIDGE NO — **SOIL NAIL WALL RW-34**
POST MILE — **LOG OF TEST BORINGS**

DISREGARD PRINTS BEARING EARLIER REVISION DATES — REVISION DATES (PRELIMINARY STAGE ONLY) 5/19/95 — SHEET 8 OF 8

CU 11288 EA 048661

FORM DC-OE-92-PF (REV. 3/88)

DIST.	COUNTY	ROUTE	POST MILES TOTAL PROJECT	SHEET NO.	TOTAL SHEETS
11	SD	15	R3.8/R6.0	773	1049

REGISTERED ENGINEER - CIVIL

REGISTERED PROFESSIONAL ENGINEER M. L. NAPIER No. 46017 Exp. 12-31-98 CIVIL STATE OF CALIFORNIA

11-27-95
PLANS APPROVAL DATE

The State of California or its officers or agents shall not be responsible for the accuracy or completeness of electronic copies of this plan sheet

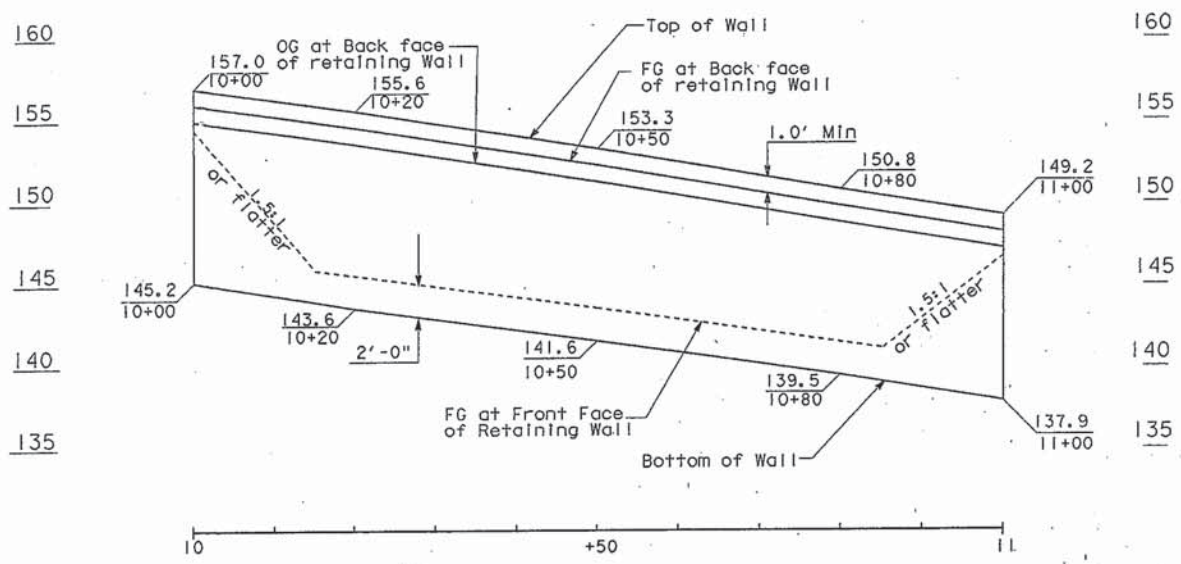

REAR ELEVATION

SCALE: 1" = 10' HORIZ
1" = 5' VERT

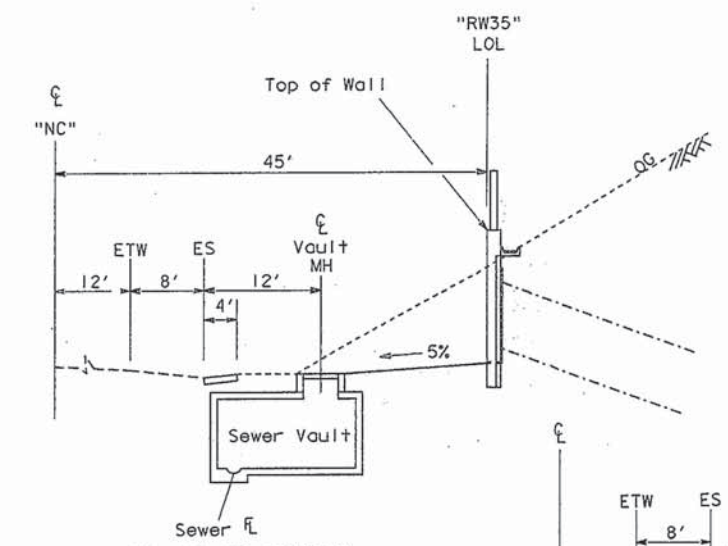

STA 10+50 "RW35"

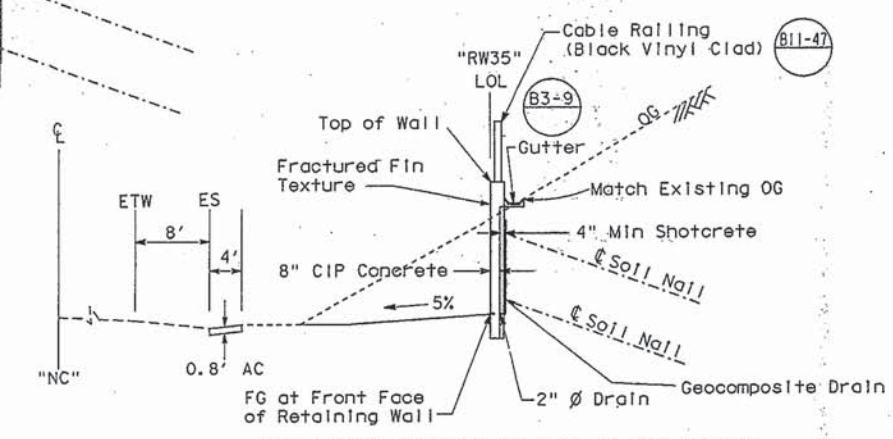

STA 10+00 "RW35" TO STA 11+00 "RW35"

TYPICAL SECTION

NO SCALE

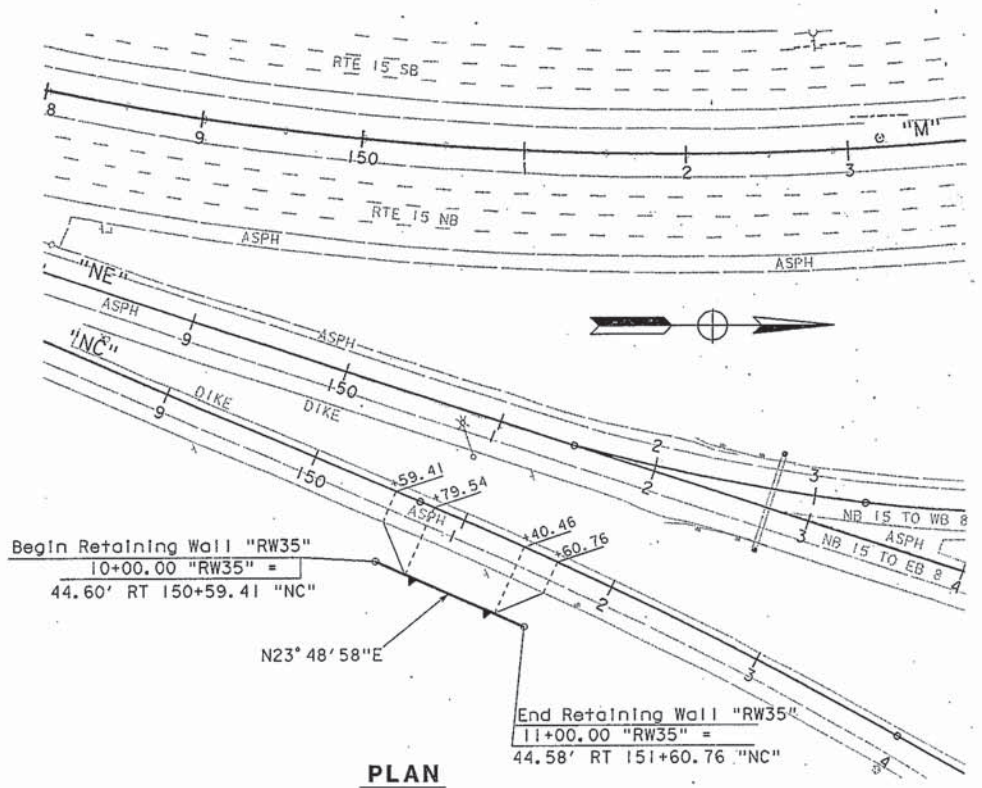

PLAN

SCALE: 1" = 50'

QUANTITIES

STRUCTURE EXCAVATION (SOIL NAIL WALL)	43	CY
STRUCTURE BACKFILL (SOIL NAIL WALL)	8	CY
SOIL NAIL ASSEMBLY	370	LF
STRUCTURAL CONCRETE, RETAINING WALL	33	CY
FRACTURED FIN TEXTURE	1,065	SQFT
BAR REINFORCING STEEL (RETAINING WALL)	4,550	LB
SHOTCRETE	12	CY
GEOCOMPOSITE DRAIN	94	SQFT
MINOR CONCRETE (GUTTER)	4	CY
CABLE RAILING (BLACK VINYL CLAD)	100	LF

INDEX TO PLANS

SHEET NO	TITLE
1	General Plan
2	Soil Nail Assembly Layout
3	Typical Section
4	Soil Nail Assembly Details
5	Details No. 1
6	Details No. 2
7	Details No. 3
8	Log of Test Borings
STANDARD PLANS DATED JULY, 1995	
B3-9	Retaining Wall Details No. 2
B11-47	Cable Railing

Standard Plan Sheet No.

For 'General Notes' See "SOIL NAIL ASSEMBLY LAYOUT" Sheet. Detail No.

DESIGN	BY M L NAPIER	CHECKED J MORA		
DETAILS	BY J BRIGGS 05-95	CHECKED M L NAPIER	LAYOUT	BY M L NAPIER CHECKED S AKHGARNIA
QUANTITIES	BY M L NAPIER	CHECKED L A FARIA	SPECIFICATIONS	BY KF Meier 9/95 PLANS AND SPECS COMPARED KF Meier 9/95

PROJECT ENGINEER

DS OSD 2138 (CADD 4/89)

ORIGINAL SCALE IN INCHES FOR REDUCED PLANS 0 1 2 3

STATE OF CALIFORNIA DEPARTMENT OF TRANSPORTATION

DISTRICT 11 STRUCTURE DESIGN B

CU 11247
EA 048661

BRIDGE NO.

POST MILE

DISREGARD PRINTS BEARING EARLIER REVISION DATES

REVISION DATES (PRELIMINARY STAGE ONLY) 05-02-95 05-10-95 05-31-95 06-10-95 06-14-95

SHEET 1 OF 8

SOIL NAIL RETAINING WALL "RW35"

GENERAL PLAN

DIST.	COUNTY	ROUTE	POST MILES TOTAL PROJECT	SHEET NO.	TOTAL SHEETS
11	SD	15	R3.8/R6.0	774	1049

REGISTERED ENGINEER - CIVIL

REGISTERED PROFESSIONAL ENGINEER JAVAD EHSAN No. 47251 Exp. 12-31-95 CIVIL STATE OF CALIFORNIA

11-27-95
PLANS APPROVAL DATE

The State of California or its officers or agents shall not be responsible for the accuracy or completeness of electronic copies of this plan sheet

NOTES: 1. Soil nail layout:
Vertical spacing 5'-0" center to center max.
Horizontal spacing 6'-0" center to center max.
Top row is located 4'-0" below top of retaining wall (unless noted otherwise)
Bottom row is located 3'-6" above bottom of wall (unless noted otherwise)
Min center to center spacing between soil nail assemblies is 1'-6"

2. Soil nail assembly:
Design Nail Load 2.3 kips/ft, design hole diameter 6"
Min soil nail embedment length, LE, Varies as shown on wall elevation.
• Indicates location of soil nail assembly or as directed by the Engineer.
X Indicates location of test soil nail assembly or as directed by the Engineer.
Soil Nail Inclination angle=15 degree typical (unless noted otherwise).
Bar size, min Diameter 1".

3. Horizontal distance between the beginning/end of wall and first/last nail 3'-6" max center to center spacing

GENERAL NOTES

DESIGN: BRIDGE DESIGN SPECIFICATIONS (1983 AASHTO with Interims and Revisions by CALTRANS)

REINFORCED CONCRETE: fy = 60,000 psi
f'c = 3,250 psi

STRUCTURAL STEEL: ASTM Designation:
A36, fy = 36,000 psi

SOIL NAILS: ASTM Designation:
A615, Grade 60,
fs = 45,000 psi

DESIGN PARAMETERS:
(Soil/Bedrock)
Ø = 34°
C = 300 psf
γ = 125 pcf
μ = 10 psi (ultimate bond stress between grout and drilled hole)

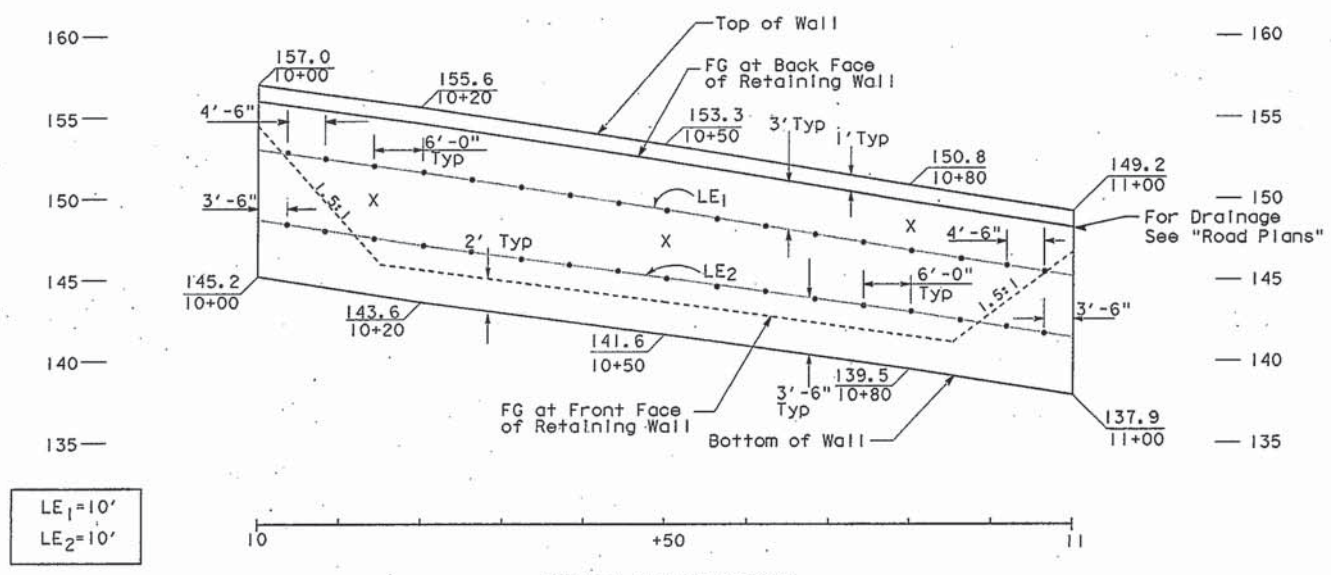

REAR ELEVATION
SCALE: 1" = 10' HORIZ
1" = 5' VERT

DESIGN	BY J EHSAN	CHECKED L WHITMORE	
DETAILS	BY J BRIGGS 03-95	CHECKED M L NAPIER	
QUANTITIES	BY M L NAPIER	CHECKED L A FARIA	

STATE OF CALIFORNIA
DEPARTMENT OF TRANSPORTATION

DISTRICT 11
STRUCTURE DESIGN B

BRIDGE NO.
POST MILE

SOIL NAIL RETAINING WALL "RW35"
SOIL NAIL ASSEMBLY LAYOUT

DS OSD 2138 (CADD 4/89)

ORIGINAL SCALE IN INCHES FOR REDUCED PLANS 0 1 2 3

CU 11288
EA 048661

DISREGARD PRINTS BEARING EARLIER REVISION DATES

REVISION DATES (PRELIMINARY STAGE ONLY) 15-05-95 05-31-95 06-07-95 06-13-95 07-22-95

SHEET 2 OF 8

DIST.	COUNTY	ROUTE	POST MILES TOTAL PROJECT	SHEET NO.	TOTAL SHEETS
11	SD	15	R3.8/R6.0	775	1049

REGISTERED ENGINEER - CIVIL

REGISTERED PROFESSIONAL ENGINEER M L NAPIER No. 46017 Exp. 12-31-98 CIVIL STATE OF CALIFORNIA

11-27-95
PLANS APPROVAL DATE

The State of California or its officers or agents shall not be responsible for the accuracy or completeness of electronic copies of this plan sheet

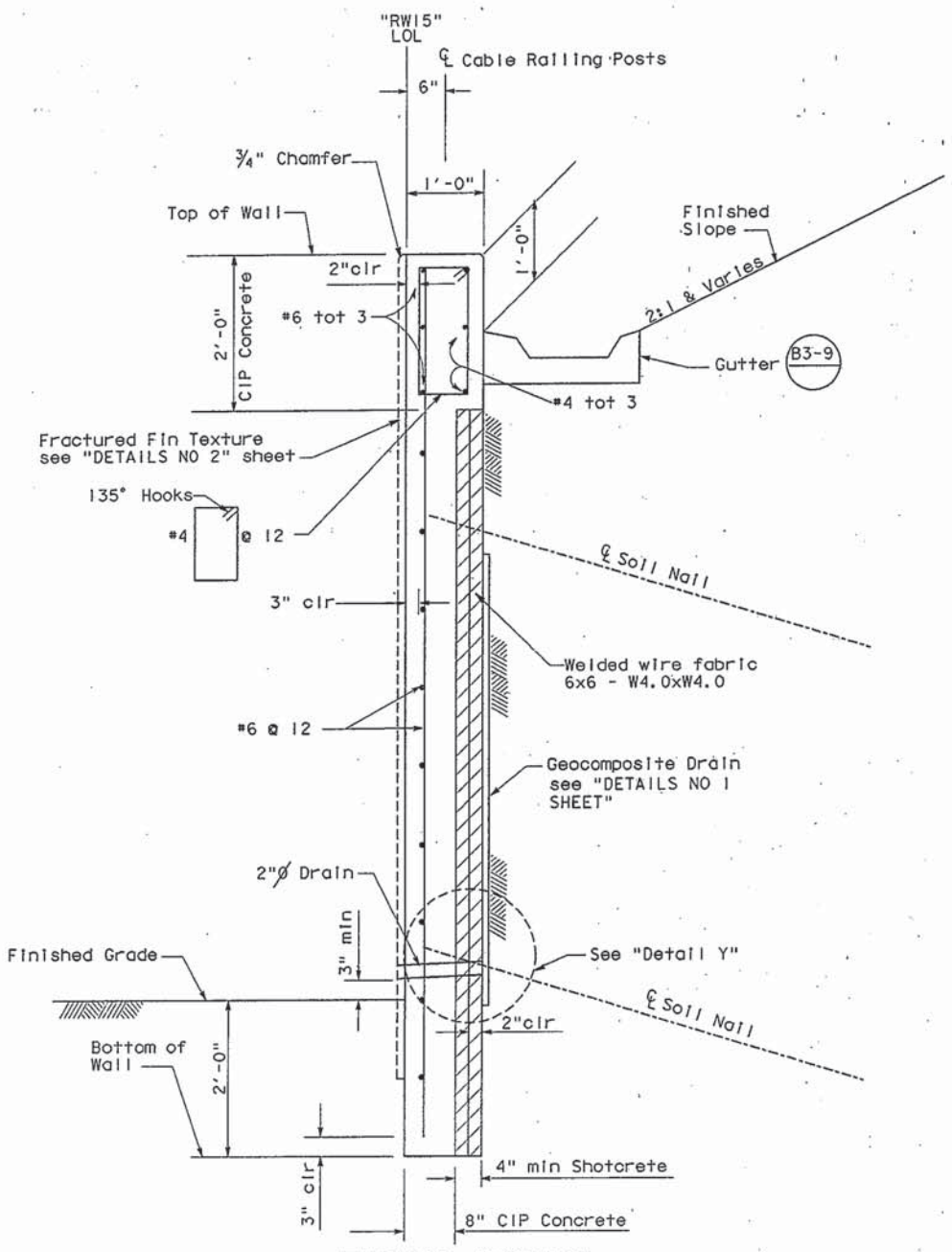

TYPICAL SECTION
1" = 1"-0"

Note: Cable railing not shown.

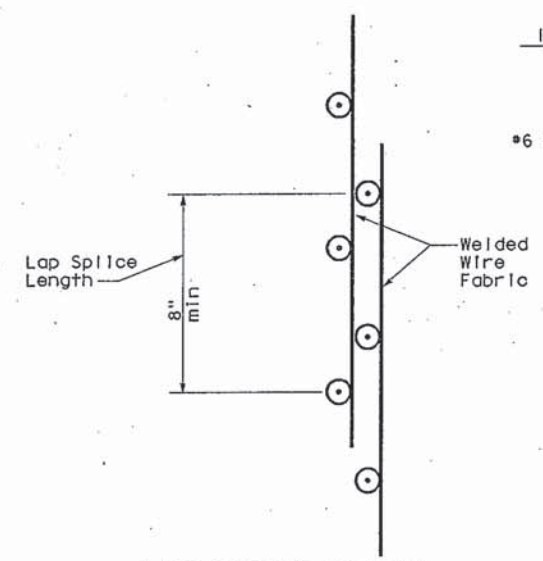

LAP SPLICE DETAIL
No Scale

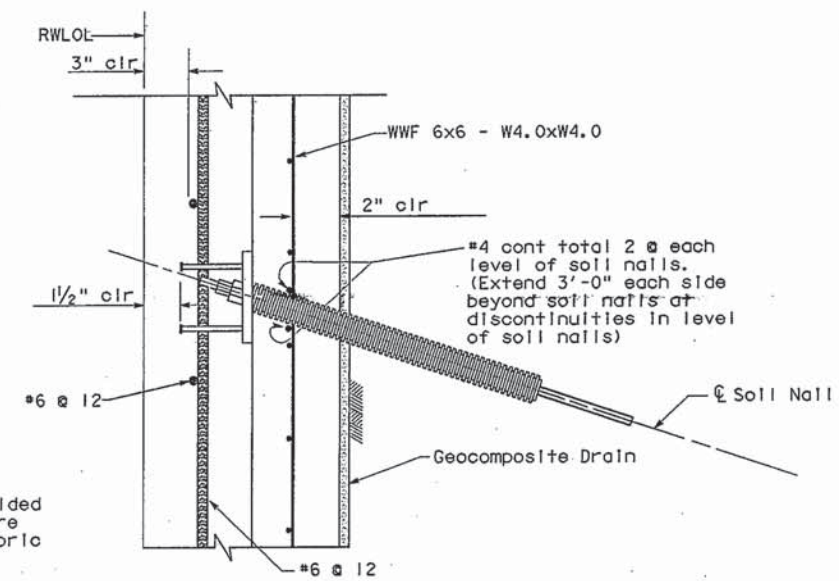

DETAIL Y
No Scale

DESIGN	BY M L NAPIER	CHECKED J MORA	
DETAILS	BY J BRIGGS 02-95	CHECKED M L NAPIER	
QUANTITIES	BY M L NAPIER	CHECKED L A FARIA	

STATE OF CALIFORNIA
DEPARTMENT OF TRANSPORTATION

DISTRICT 11
STRUCTURE DESIGN B

BRIDGE NO.
POST MILE

SOIL NAIL RETAINING WALL "RW35"
TYPICAL SECTION

DS CSD 2138 (CADD 4/89)

ORIGINAL SCALE IN INCHES FOR REDUCED PLANS 0 1 2 3

CU 11288
EA048661

DISREGARD PRINTS BEARING EARLIER REVISION DATES

REVISION DATES (PRELIMINARY STAGE ONLY) 03-15-95 05-02-95 05-05-95 05-11-95 06-12-95 06-14-95 07-31-95

SHEET 3 OF 8

DIST.	COUNTY	ROUTE	POST MILES TOTAL PROJECT	SHEET NO.	TOTAL SHEETS
11	SD	15	R3.8/R6.0	776	1049

REGISTERED ENGINEER - CIVIL

PROFESSIONAL ENGINEER REGISTERED M L NAPIER No. 46017 Exp. 12-31-98 CIVIL STATE OF CALIFORNIA

11-27-95
PLANS APPROVAL DATE

The State of California or its officers or agents shall not be responsible for the accuracy or completeness of electronic copies of this plan sheet

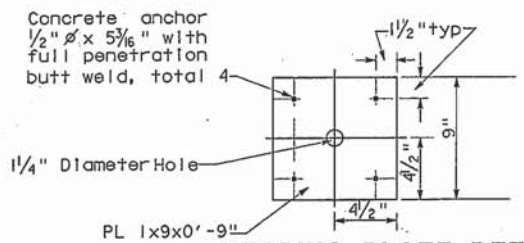

BEARING PLATE DETAIL

NO SCALE

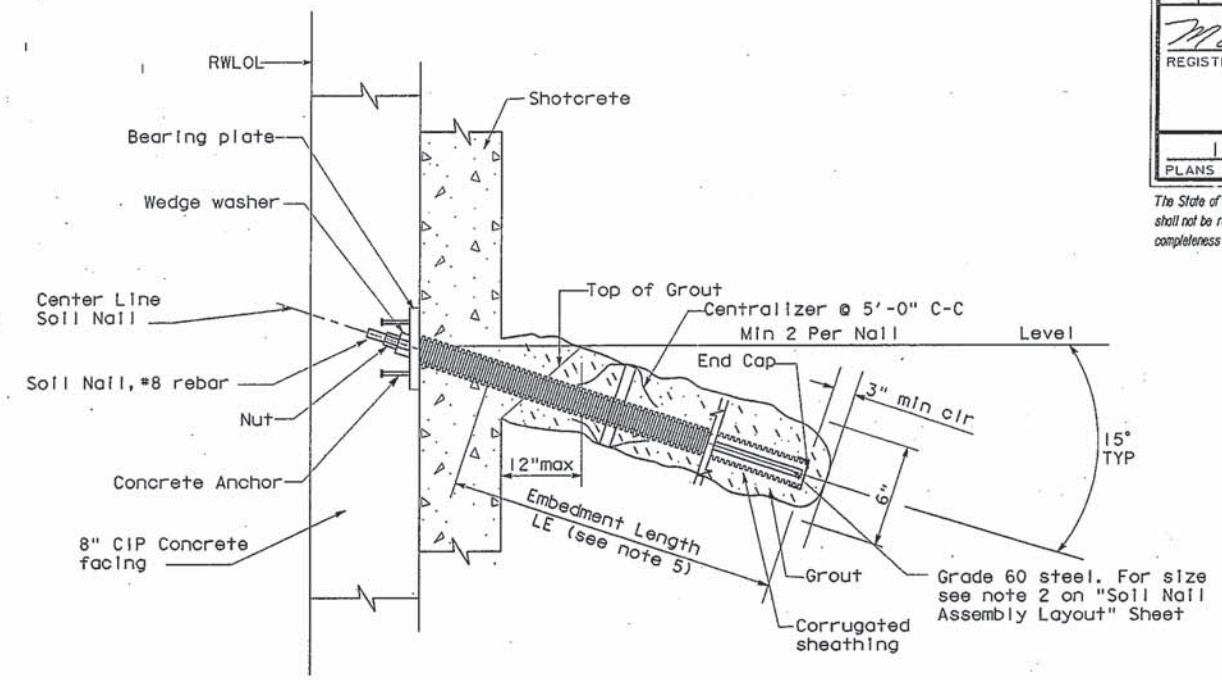

ENCAPSULATED SOIL NAIL DETAIL

No Scale

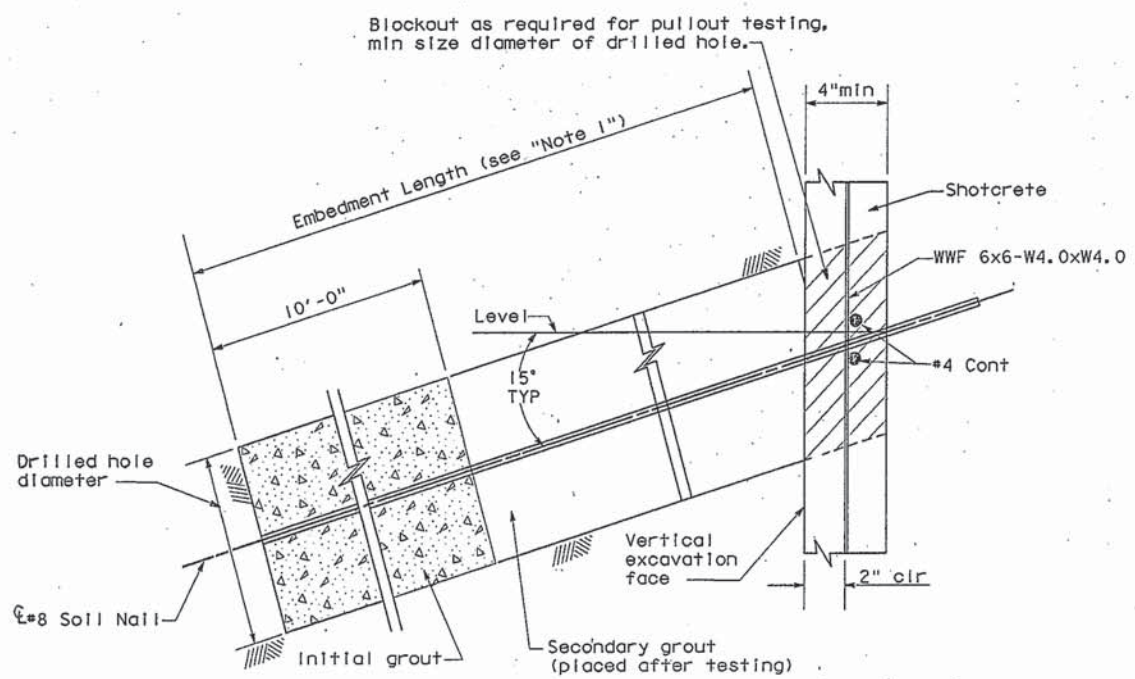

TEST SOIL NAIL ASSEMBLY DETAIL

No Scale

Notes:

1. Embedment length of test Soil Nail equals the embedment length of adjacent encapsulated soil nail assemblies for the row of nails below the test Soil Nail Assembly.
2. Total length of test soil nail assembly equals embedment length plus the length required for jacking equipment.
3. Use pull-out test load of 33.9 kips.
4. Inclination of test Soil Nail Assembly to be the same as adjacent Soil Nail Assemblies
5. For embedment length of encapsulated Soil Nail Assembly, See LE on "Soil Nail Assembly Layout" sheet.

DESIGN	BY M L NAPIER	CHECKED J MORA	
DETAILS	BY J BRIGGS 2-95	CHECKED M L NAPIER	
QUANTITIES	BY M L NAPIER	CHECKED L A FARIA	

DS 050 2038 (CADD 4/89)

ORIGINAL SCALE IN INCHES FOR REDUCED PLANS 0 1 2 3

STATE OF CALIFORNIA
DEPARTMENT OF TRANSPORTATION

DISTRICT 11
STRUCTURE DESIGN B

CU 11288
EA 048661

BRIDGE NO.
POST MILE

SOIL NAIL RETAINING WALL "RW35"

SOIL NAIL ASSEMBLY DETAILS

DISREGARD PRINTS BEARING EARLIER REVISION DATES

REVISION DATES (PRELIMINARY STAGE ONLY)
05-09-95 05-11-95 06-13-95 06-27-95 06-28-95 07-22-95

SHEET 4 OF 8

DIST.	COUNTY	ROUTE	POST MILES TOTAL PROJECT	SHEET NO.	TOTAL SHEETS
11	SD	15	R3.8/R6.0	777	1049

REGISTERED ENGINEER - CIVIL

REGISTERED PROFESSIONAL ENGINEER M L NAPIER No. 46017 Exp. 12-31-98 CIVIL STATE OF CALIFORNIA

11-27-95
PLANS APPROVAL DATE

The State of California or its officers or agents shall not be responsible for the accuracy or completeness of electronic copies of this plan sheet

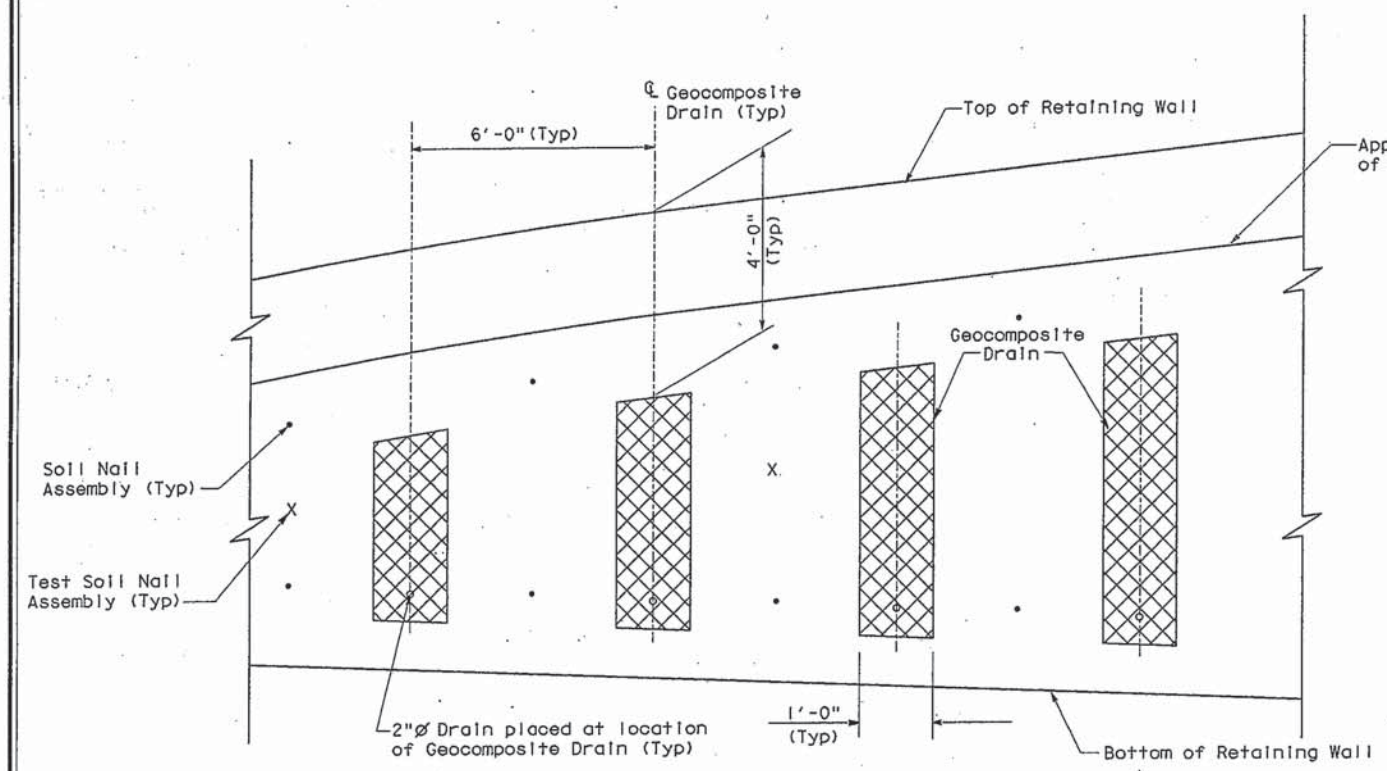

TYPICAL ELEVATION - GEOCOMPOSITE DRAIN

No Scale

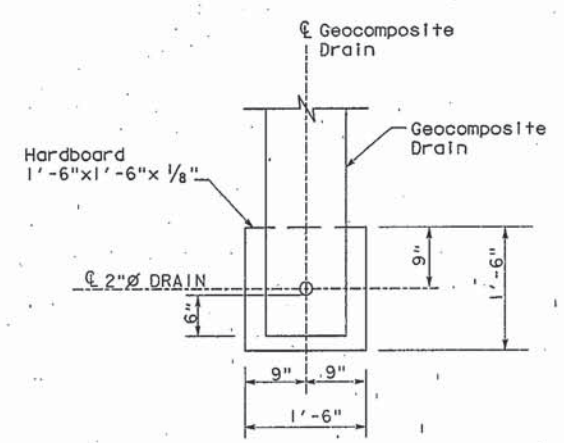

VIEW H-H

No Scale

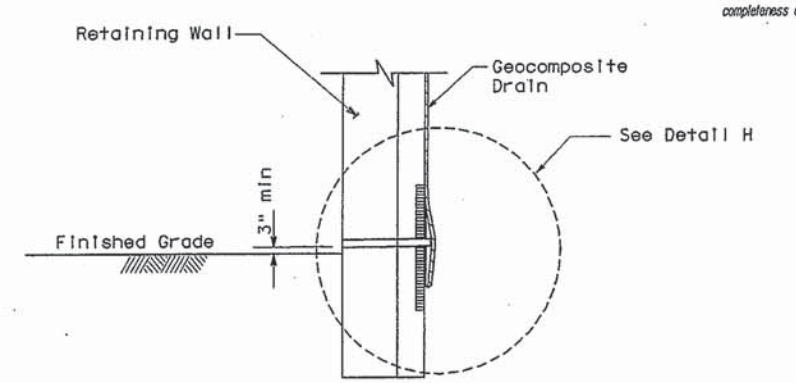

TYPICAL SECTION AT OUTLET PIPE

No Scale

Note: Fractured Fin Texture not shown.

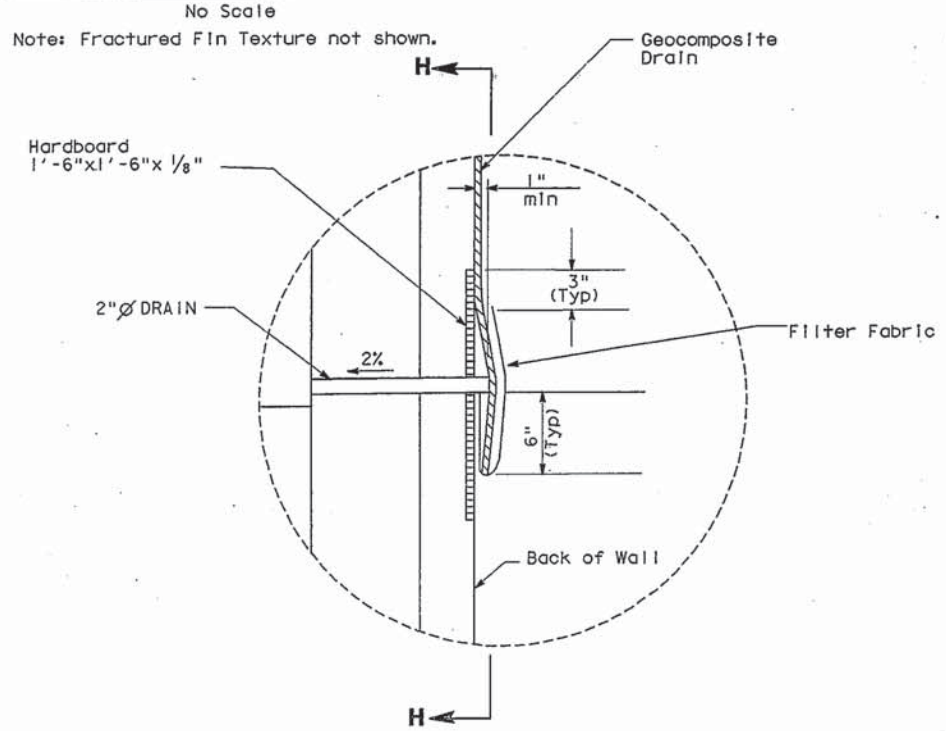

DETAIL H

No Scale

DESIGN	BY M L NAPIER	CHECKED J MORA	
DETAILS	BY J BRIGGS 02-95	CHECKED M L NAPIER	
QUANTITIES	BY M L NAPIER	CHECKED L A FARIA	

STATE OF CALIFORNIA
DEPARTMENT OF TRANSPORTATION

DISTRICT 11
STRUCTURE DESIGN B

BRIDGE NO.
POST MILE

SOIL NAIL RETAINING WALL "RW35"

DETAILS NO 1

DS CCD 2138 (CADD 4/89)

ORIGINAL SCALE IN INCHES FOR REDUCED PLANS 0 1 2 3

CU 11288
EA 048661

DISREGARD PRINTS BEARING EARLIER REVISION DATES

REVISION DATES (PRELIMINARY STAGE ONLY) 05-10-95 05-11-95 06-14-95 06-27-95

SHEET 5 OF 8

DIST.	COUNTY	ROUTE	POST MILES TOTAL PROJECT	SHEET NO.	TOTAL SHEETS
11	SD	15	R3.8/R6.0	778	1049

REGISTERED ENGINEER - CIVIL

REGISTERED PROFESSIONAL ENGINEER M L NAPIER No. 46017 Exp. 12-31-98 CIVIL STATE OF CALIFORNIA

11-27-95
PLANS APPROVAL DATE

The State of California or its officers or agents shall not be responsible for the accuracy or completeness of electronic copies of this plan sheet

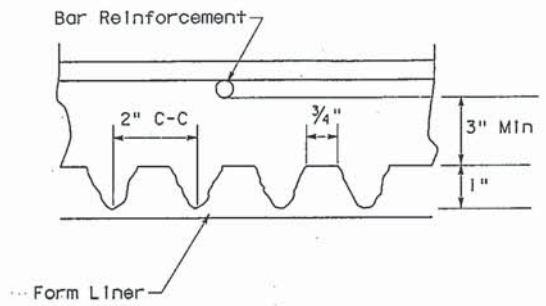

DETAIL
Typical

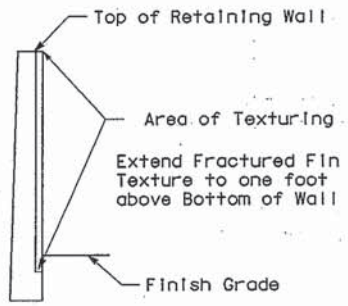

SECTION J-J
Typical

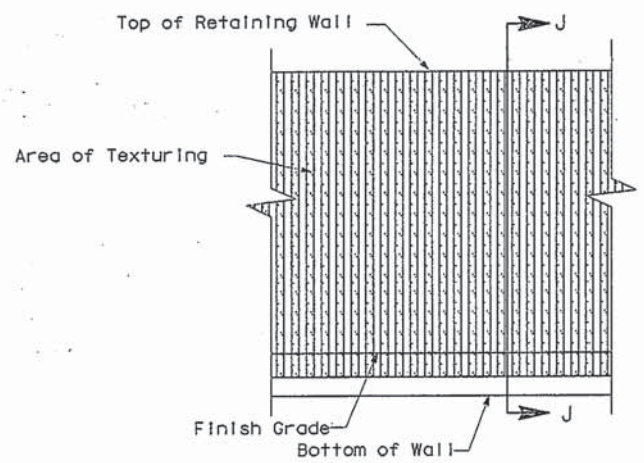

ELEVATION
Typical

FRACTURED FIN TEXTURE
No Scale

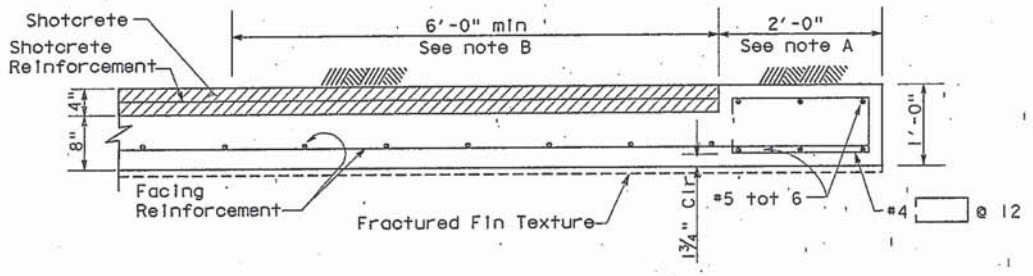

Notes:

A. Upper 2'-0" of inside face to be placed against form. Remainder may be placed against undisturbed material

B. Abrasive blast methods shall be used to clean the shotcrete surface to the extent that clean aggregate is exposed within these limits prior to constructing cast in place concrete.

BEGIN/END OF WALL PLAN
1"=1'-0"

DESIGN	BY M L NAPIER	CHECKED J MORA	
DETAILS	BY J BRIGGS 03-95	CHECKED M L NAPIER	
QUANTITIES	BY M L NAPIER	CHECKED L A FARIA	

STATE OF CALIFORNIA
DEPARTMENT OF TRANSPORTATION

DISTRICT 11
STRUCTURE DESIGN B

BRIDGE NO.
POST MILE

SOIL NAIL RETAINING WALL "RW35"
DETAILS NO 2

DS OSD 2138 (CADD 4/89)

ORIGINAL SCALE IN INCHES FOR REDUCED PLANS 0 1 2 3

CU 11288
EA 048661

DISREGARD PRINTS BEARING EARLIER REVISION DATES

REVISION DATES (PRELIMINARY STAGE ONLY) 05-11-95 06-10-95 06-14-95 06-20-95

SHEET 6 OF 8

DIST.	COUNTY	ROUTE	POST MILES TOTAL PROJECT	SHEET NO.	TOTAL SHEETS
11	SD	15	R3.8/R6.0	779	1049

REGISTERED ENGINEER - CIVIL

REGISTERED PROFESSIONAL ENGINEER M L NAPIER No. 46017 Exp. 12-31-98 CIVIL STATE OF CALIFORNIA

11-27-95
PLANS APPROVAL DATE

The State of California or its officers or agents shall not be responsible for the accuracy or completeness of electronic copies of this plan sheet

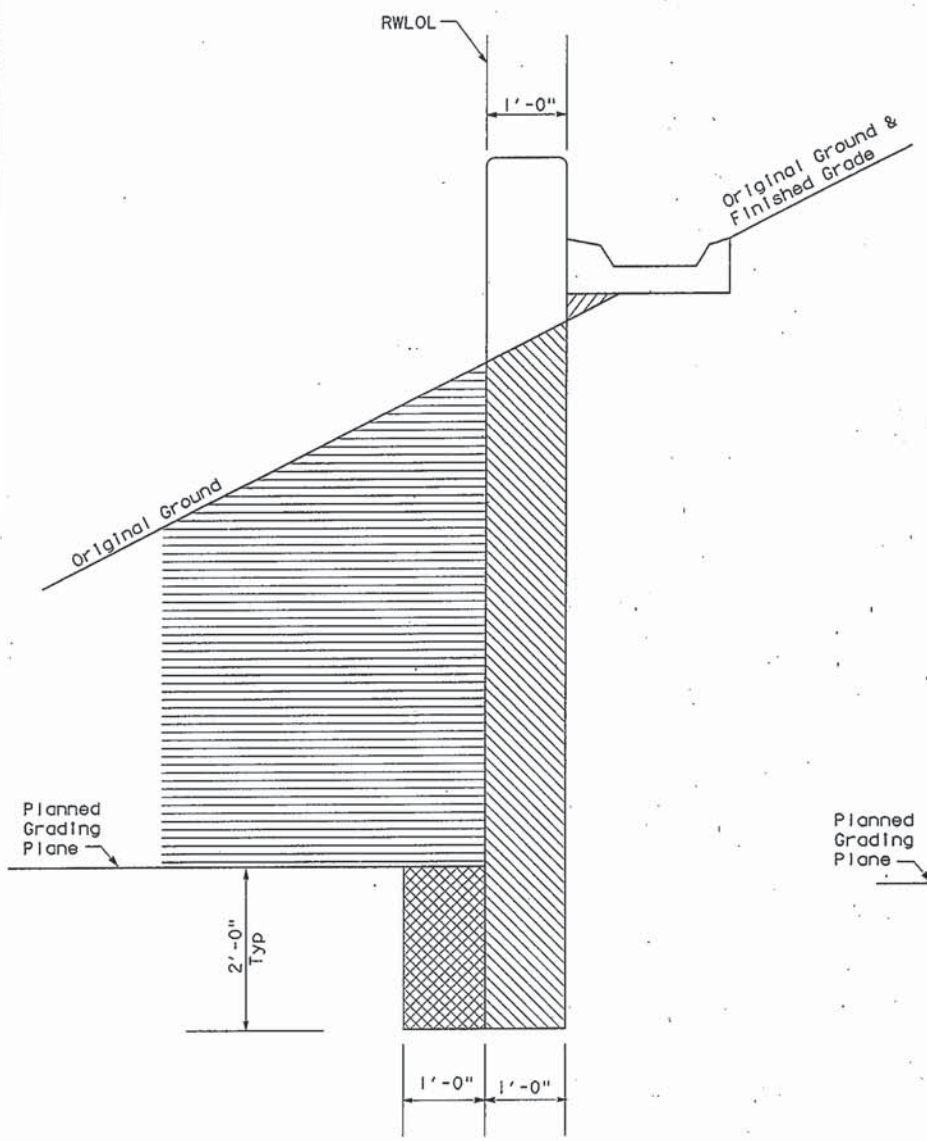

RETAINING WALL IN TYPICAL CUT

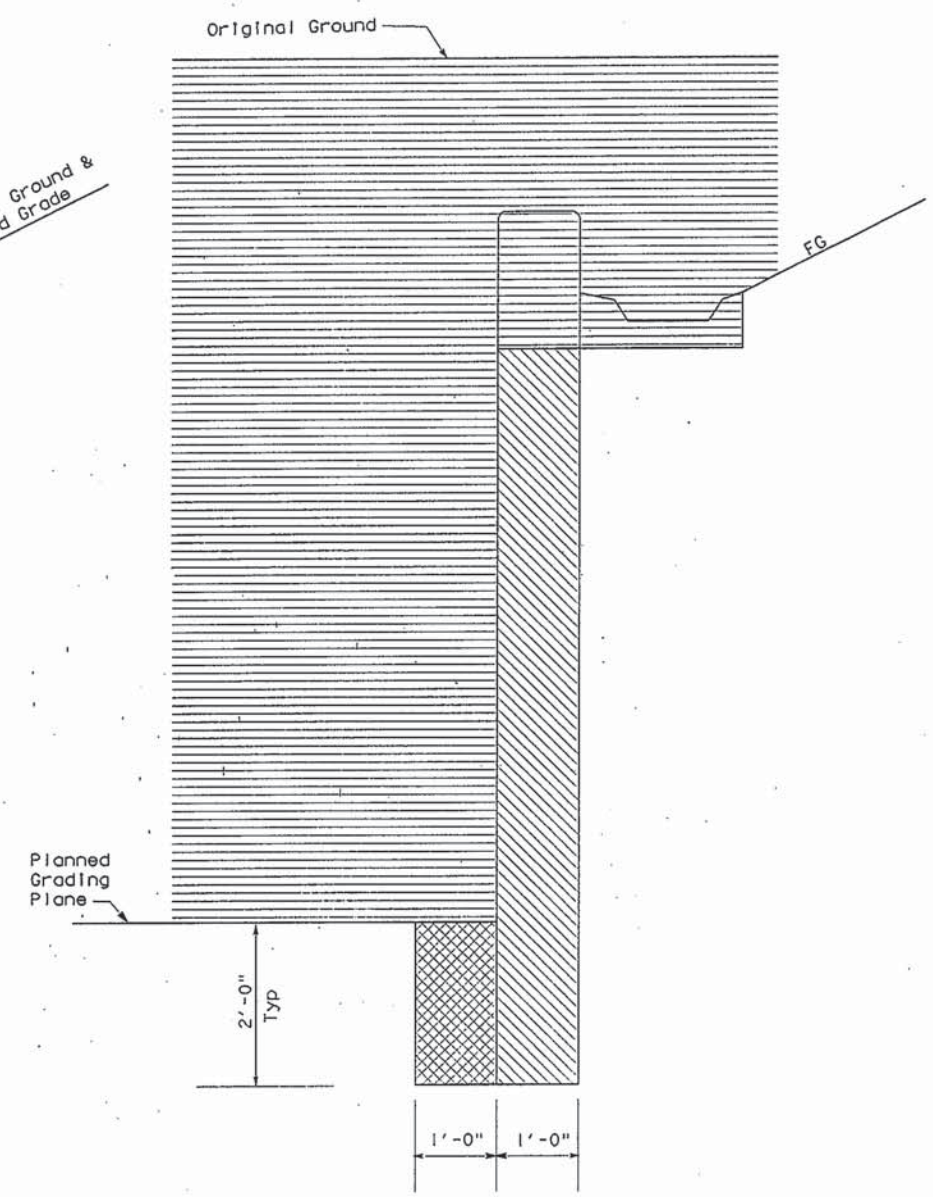

RETAINING WALL IN DEEP CUT

STRUCTURE EXCAVATION AND BACKFILL LIMITS

No Scale

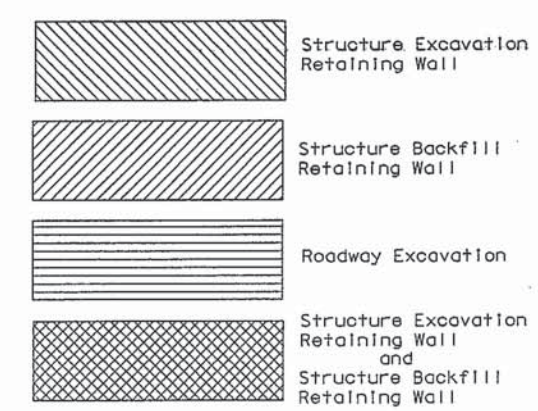

DESIGN	BY M L NAPIER	CHECKED J MORA	
DETAILS	BY J BRIGGS 03-95	CHECKED M L NAPIER	
QUANTITIES	BY M L NAPIER	CHECKED L A FARIA	

STATE OF CALIFORNIA
DEPARTMENT OF TRANSPORTATION

DISTRICT 11
STRUCTURE DESIGN B

CU 11288
EA 048661

BRIDGE NO.
POST MILE

SOIL NAIL RETAINING WALL "RW35"

DETAILS NO 3

DS OCD 2038 (CADD 4/89)

ORIGINAL SCALE IN INCHES FOR REDUCED PLANS 0 1 2 3

DISREGARD PRINTS BEARING EARLIER REVISION DATES

REVISION DATES (PRELIMINARY STAGE ONLY) 05-11-95 05-13-95

SHEET 7 OF 8

DIST	COUNTY	ROUTE	POST MILES TOTAL PROJECT	SHEET NO.	TOTAL SHEETS
11	SD	15	R3.8/R6.0	780	1049

CERTIFIED ENGINEERING GEOLOGIST

REGISTERED GEOLOGIST — JOSEPH P EGAN Jr — No. 1146 — Exp. 1-31-96 — CERTIFIED ENGINEERING GEOLOGIST — STATE OF CALIFORNIA

11-27-95
PLANS APPROVAL DATE

The State of California or its officers or agents shall not be responsible for the accuracy or completeness of electronic copies of this plan sheet

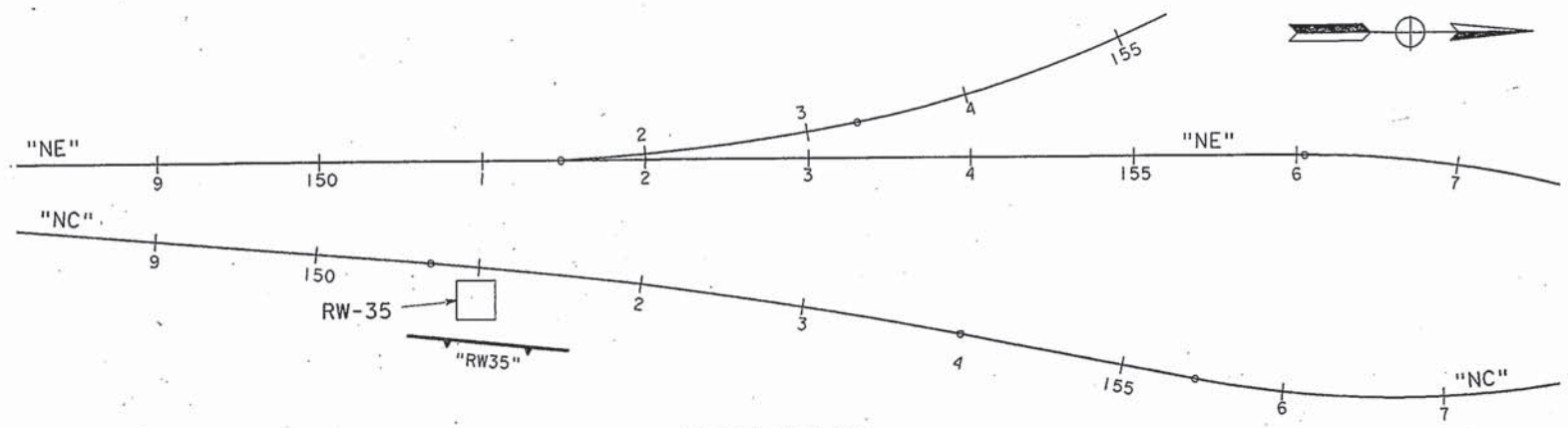

PLAN RW-35

SCALE: 1" = 50'

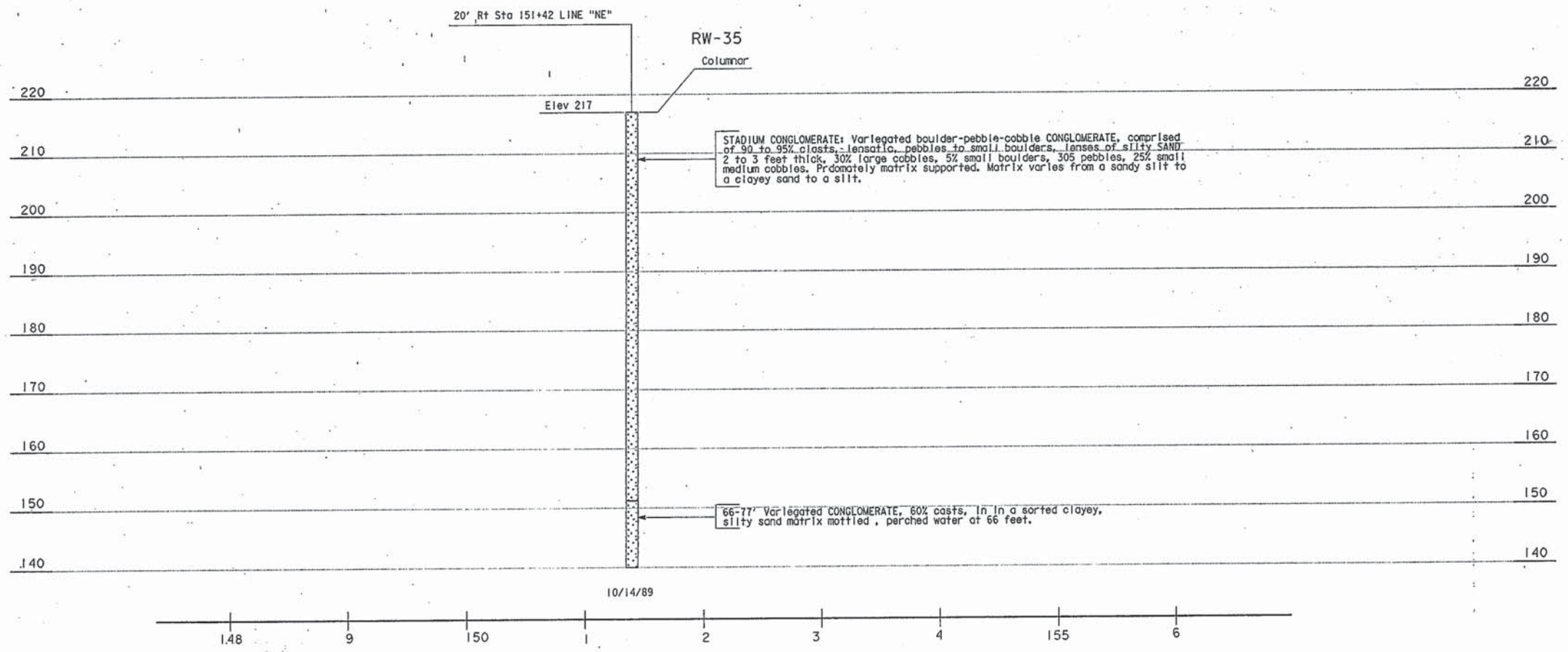

SCALE: 1" = 50' Horiz
10' Vert

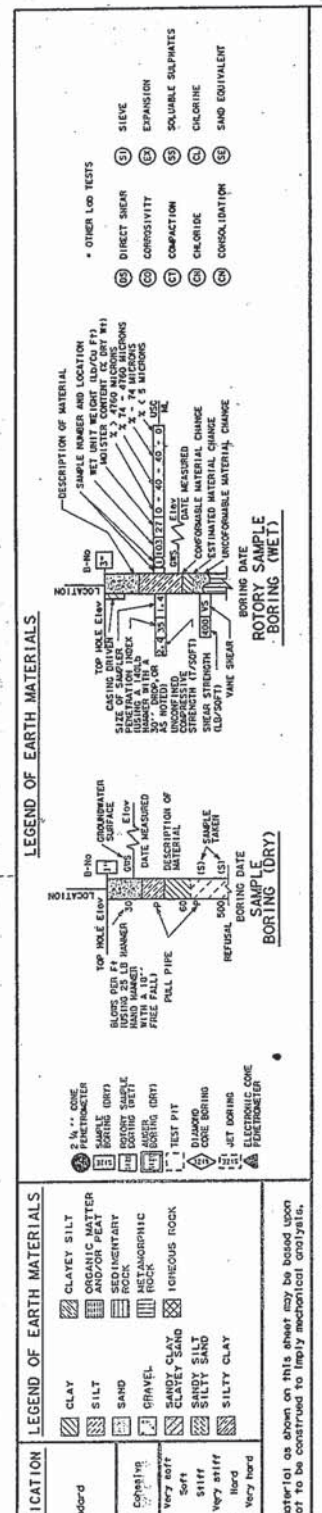

DRAWN BY	A. RAMOS
CHECKED BY	R. OOUITA, Z. YAZDANI

CALIFORNIA
DEPARTMENT OF TRANSPORTATION

ORIGINAL SCALE IS IN INCHES FOR REDUCED PLANS 0 1 2 3

BRIDGE NO
POST MILE

SOIL NAIL WALL RW-35
LOG OF TEST BORINGS

DISREGARD PRINTS BEARING EARLIER REVISION DATES → 5/22/95

REVISION DATES (PRELIMINARY STAGE ONLY) | SHEET 8 | OF 8

CU 11288 | EA 048661

FORM OC-OE-90-PF (REV. 3/88)

NOTE:

1. FOR COMPLETE RIGHT OF WAY AND ACCURATE ACCESS DATA, SEE RIGHT OF WAY RECORD MAP AT DISTRICT OFFICE.

SAN DIEGO ASSOCIATION OF GOVERNMENTS OR ITS OFFICERS, AGENTS OR CONSULTANTS SHALL NOT BE RESPONSIBLE FOR THE ACCURACY OR COMPLETENESS OF ELECTRONIC COPIES OF THIS PLAN SHEET.

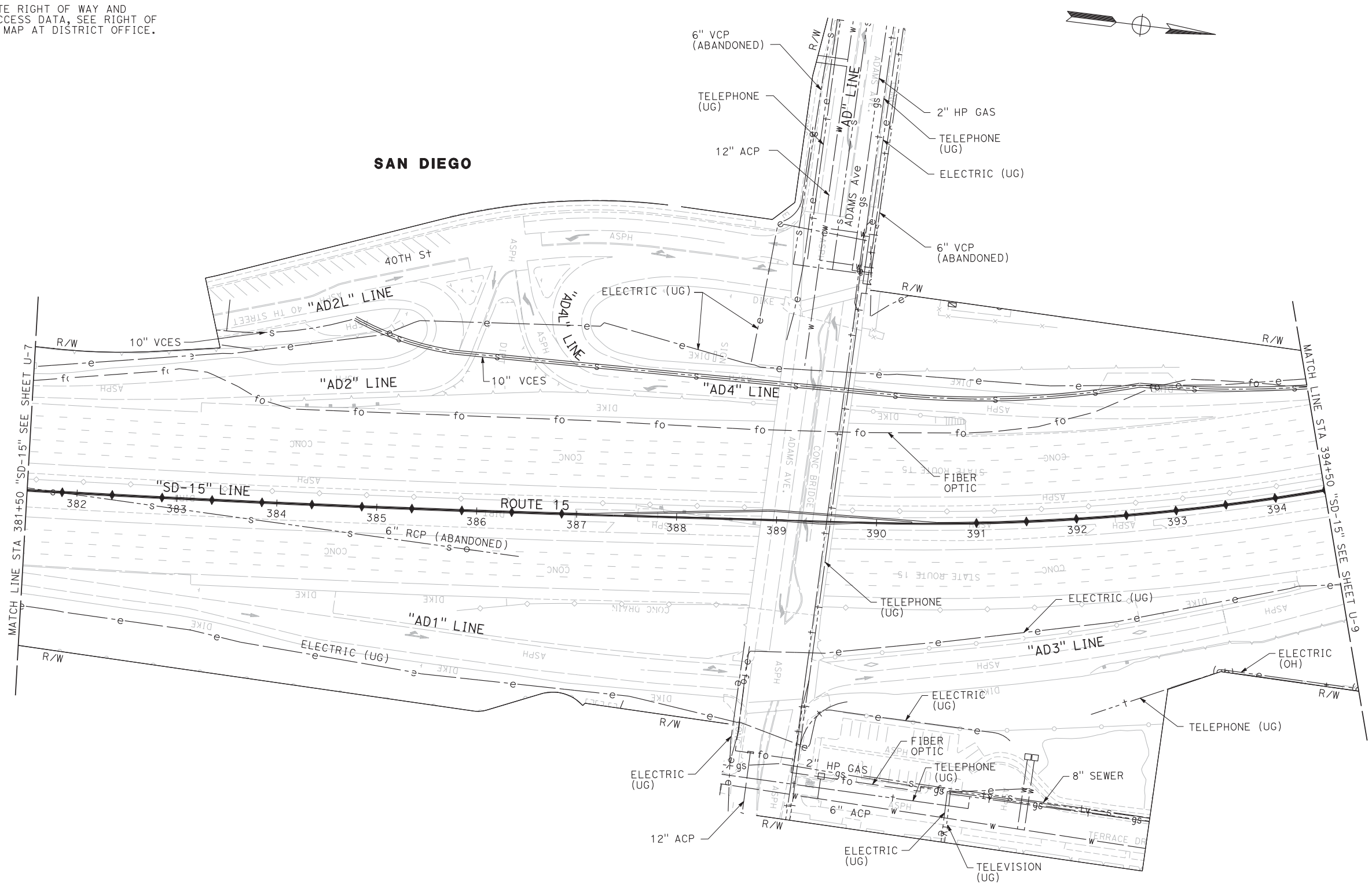

NO.	DATE	REVISIONS	BY	CHK	APRV

CH2MHILL
402 WEST BROADWAY
SUITE 1450
SAN DIEGO, CA 92101
(619) 687-0110

REGISTERED PROFESSIONAL ENGINEER — STATE OF CALIFORNIA

	DATE
DESIGNED BY	
DRAWN BY	
CHECKED BY	
PRJ. ENG.	

SANDAG

FILE => ka008.dgn

SR 15 MID-CITY BRT

EXISTING UTILITY PLAN

SCALE 1"=50'
CONTRACT NO.
DRAWING NO. U-8
SHEET NO.

FOR REDUCED PLANS ORIGINAL SCALE IS IN INCHES 0 1 2 3

USERNAME => rmunoz DATE PLOTTED => 31-JUL-2012 TIME PLOTTED => 11:25

NOTE:

1. FOR COMPLETE RIGHT OF WAY AND ACCURATE ACCESS DATA, SEE RIGHT OF WAY RECORD MAP AT DISTRICT OFFICE.

SAN DIEGO ASSOCIATION OF GOVERNMENTS OR ITS OFFICERS, AGENTS OR CONSULTANTS SHALL NOT BE RESPONSIBLE FOR THE ACCURACY OR COMPLETENESS OF ELECTRONIC COPIES OF THIS PLAN SHEET.

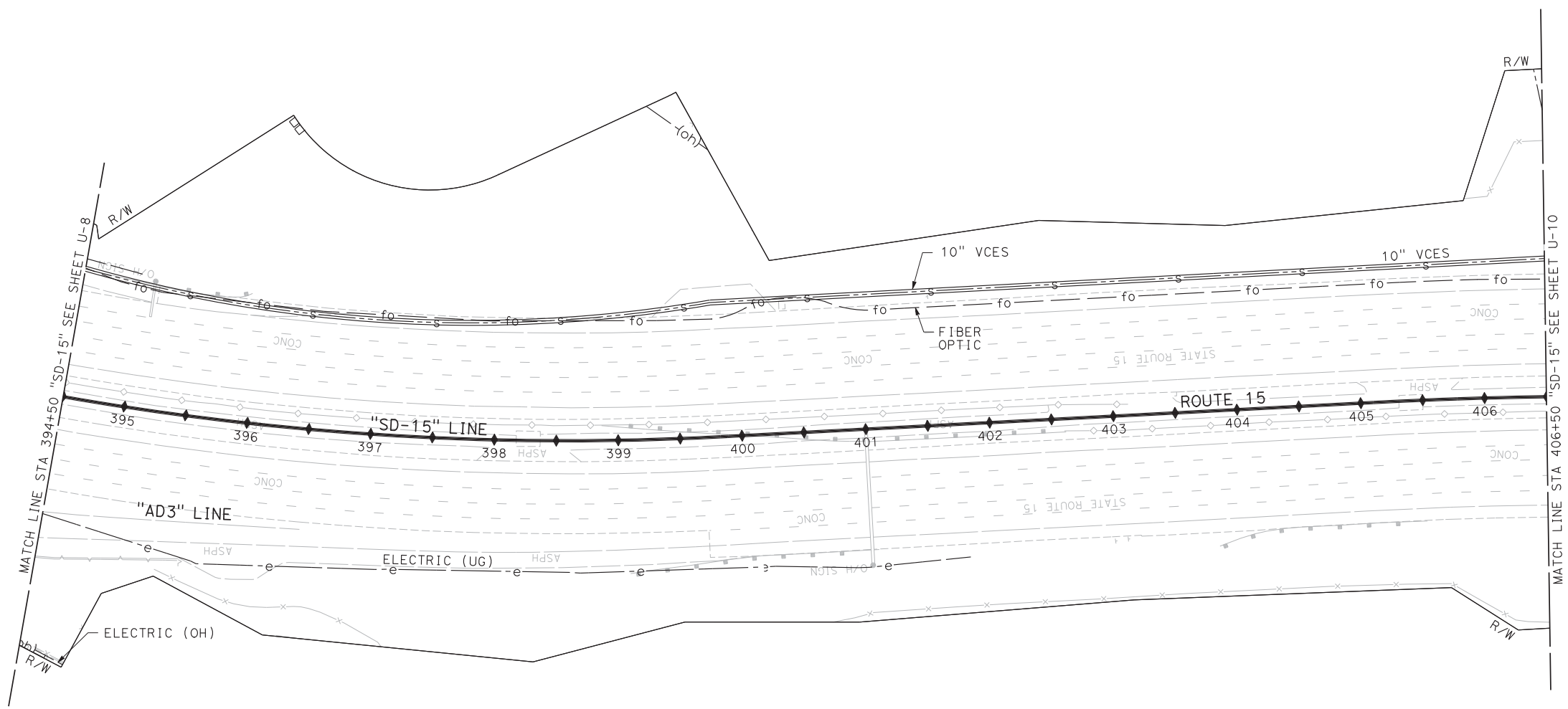

SAN DIEGO

NO.	DATE	REVISIONS	BY	CHK	APRV

CH2MHILL
402 WEST BROADWAY
SUITE 1450
SAN DIEGO, CA 92101
(619) 687-0110

REGISTERED PROFESSIONAL ENGINEER STATE OF CALIFORNIA

	DATE
DESIGNED BY	
DRAWN BY	
CHECKED BY	
PRJ. ENG.	

SANDAG

SR 15 MID-CITY BRT

EXISTING UTILITY PLAN

SCALE 1"=50'
CONTRACT NO.
DRAWING NO. U-9
SHEET NO.

FILE => ka009.dgn

FOR REDUCED PLANS ORIGINAL SCALE IS IN INCHES 0 1 2 3

USERNAME => rmunoz DATE PLOTTED => 31-JUL-2012 TIME PLOTTED => 11:25

NOTE:

1. FOR COMPLETE RIGHT OF WAY AND ACCURATE ACCESS DATA, SEE RIGHT OF WAY RECORD MAP AT DISTRICT OFFICE.

SAN DIEGO ASSOCIATION OF GOVERNMENTS OR ITS OFFICERS, AGENTS OR CONSULTANTS SHALL NOT BE RESPONSIBLE FOR THE ACCURACY OR COMPLETENESS OF ELECTRONIC COPIES OF THIS PLAN SHEET.

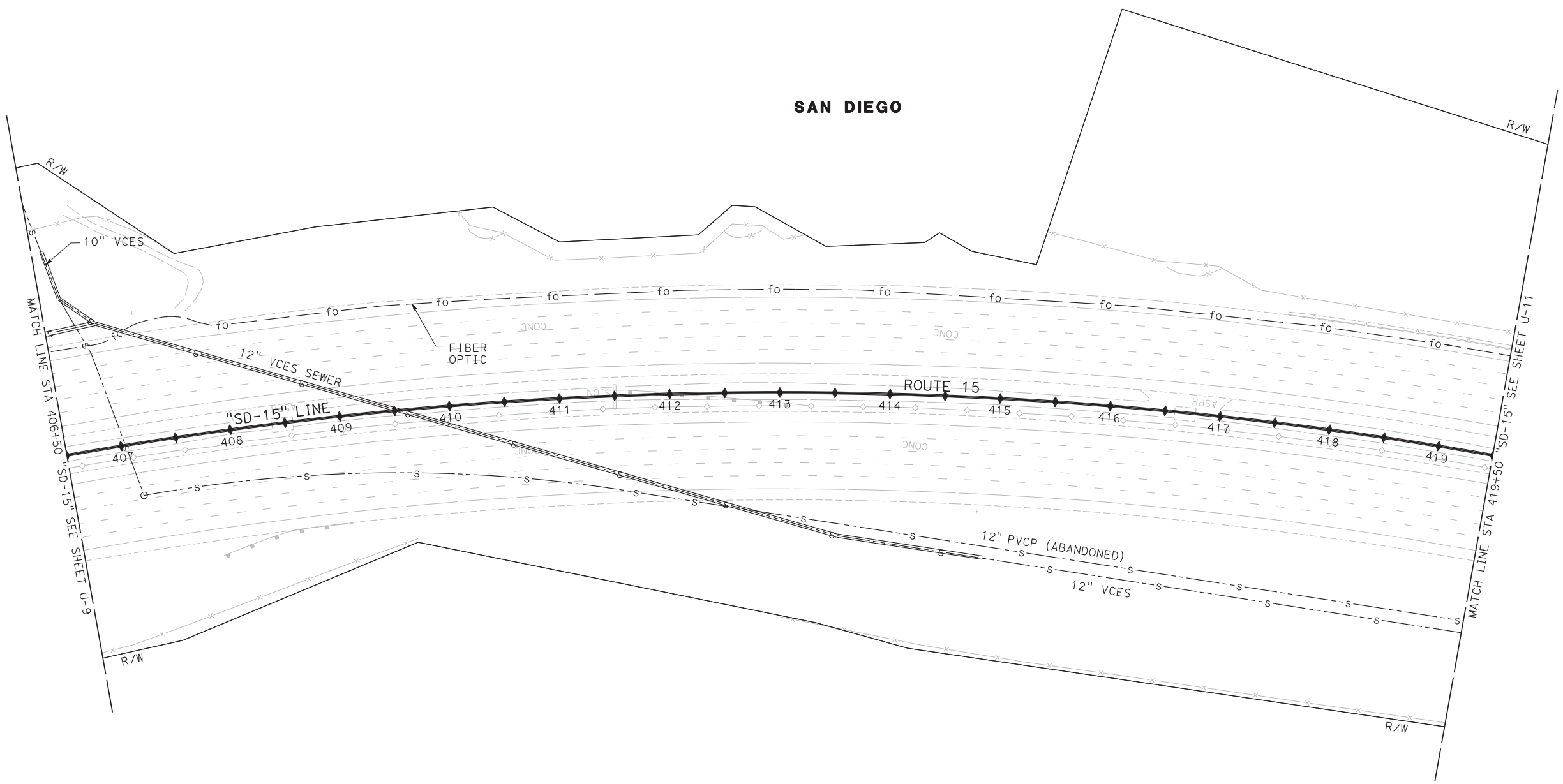

NO.	DATE	REVISIONS	BY	CHK	APRV

CH2MHILL
402 WEST BROADWAY
SUITE 1450
SAN DIEGO, CA 92101
(619) 687-0110

REGISTERED PROFESSIONAL ENGINEER — STATE OF CALIFORNIA

	DATE
DESIGNED BY	
DRAWN BY	
CHECKED BY	
PRJ. ENG.	

SANDAG

FILE => ka010.dgn

SR 15 MID-CITY BRT

EXISTING UTILITY PLAN

SCALE 1"=50'
CONTRACT NO.
DRAWING NO. U-10
SHEET NO.

FOR REDUCED PLANS ORIGINAL SCALE IS IN INCHES 0 1 2 3

USERNAME => rmunoz DATE PLOTTED => 31-JUL-2012 TIME PLOTTED => 11:25

NOTE:

1. FOR COMPLETE RIGHT OF WAY AND ACCURATE ACCESS DATA, SEE RIGHT OF WAY RECORD MAP AT DISTRICT OFFICE.

SAN DIEGO ASSOCIATION OF GOVERNMENTS OR ITS OFFICERS, AGENTS OR CONSULTANTS SHALL NOT BE RESPONSIBLE FOR THE ACCURACY OR COMPLETENESS OF ELECTRONIC COPIES OF THIS PLAN SHEET.

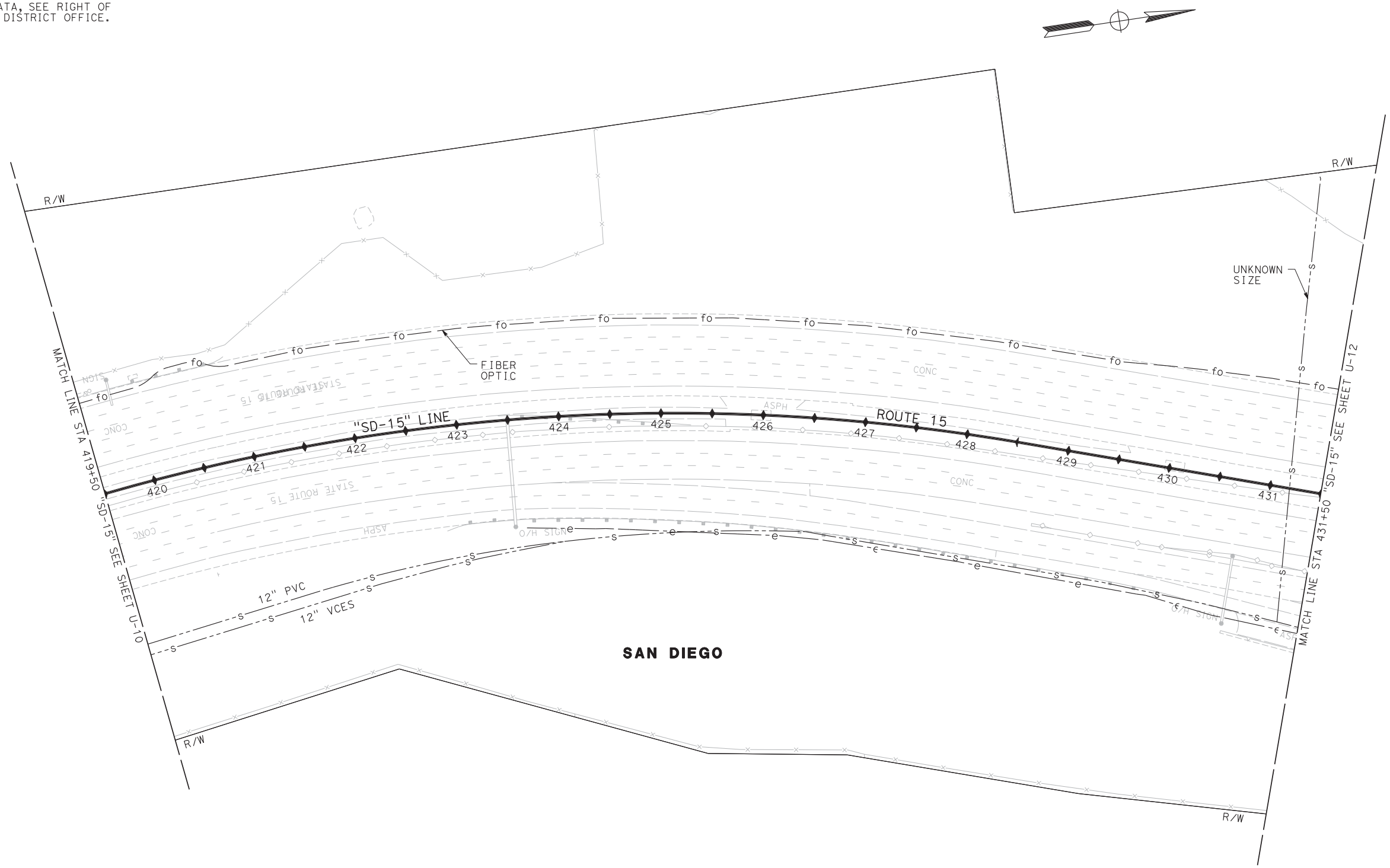

NO.	DATE	REVISIONS	BY	CHK	APRV

CH2MHILL
402 WEST BROADWAY
SUITE 1450
SAN DIEGO, CA 92101
(619) 687-0110

REGISTERED PROFESSIONAL ENGINEER — STATE OF CALIFORNIA

	DATE
DESIGNED BY	
DRAWN BY	
CHECKED BY	
PRJ. ENG.	

SANDAG

SR 15 MID-CITY BRT

EXISTING UTILITY PLAN

SCALE 1"=50'
CONTRACT NO.
DRAWING NO. U-11
SHEET NO.

FILE => ka011.dgn

FOR REDUCED PLANS ORIGINAL SCALE IS IN INCHES 0 1 2 3

USERNAME => rmunoz DATE PLOTTED => 31-JUL-2012 TIME PLOTTED => 11:25

NOTE:

1. FOR COMPLETE RIGHT OF WAY AND ACCURATE ACCESS DATA, SEE RIGHT OF WAY RECORD MAP AT DISTRICT OFFICE.

SAN DIEGO ASSOCIATION OF GOVERNMENTS OR ITS OFFICERS, AGENTS OR CONSULTANTS SHALL NOT BE RESPONSIBLE FOR THE ACCURACY OR COMPLETENESS OF ELECTRONIC COPIES OF THIS PLAN SHEET.

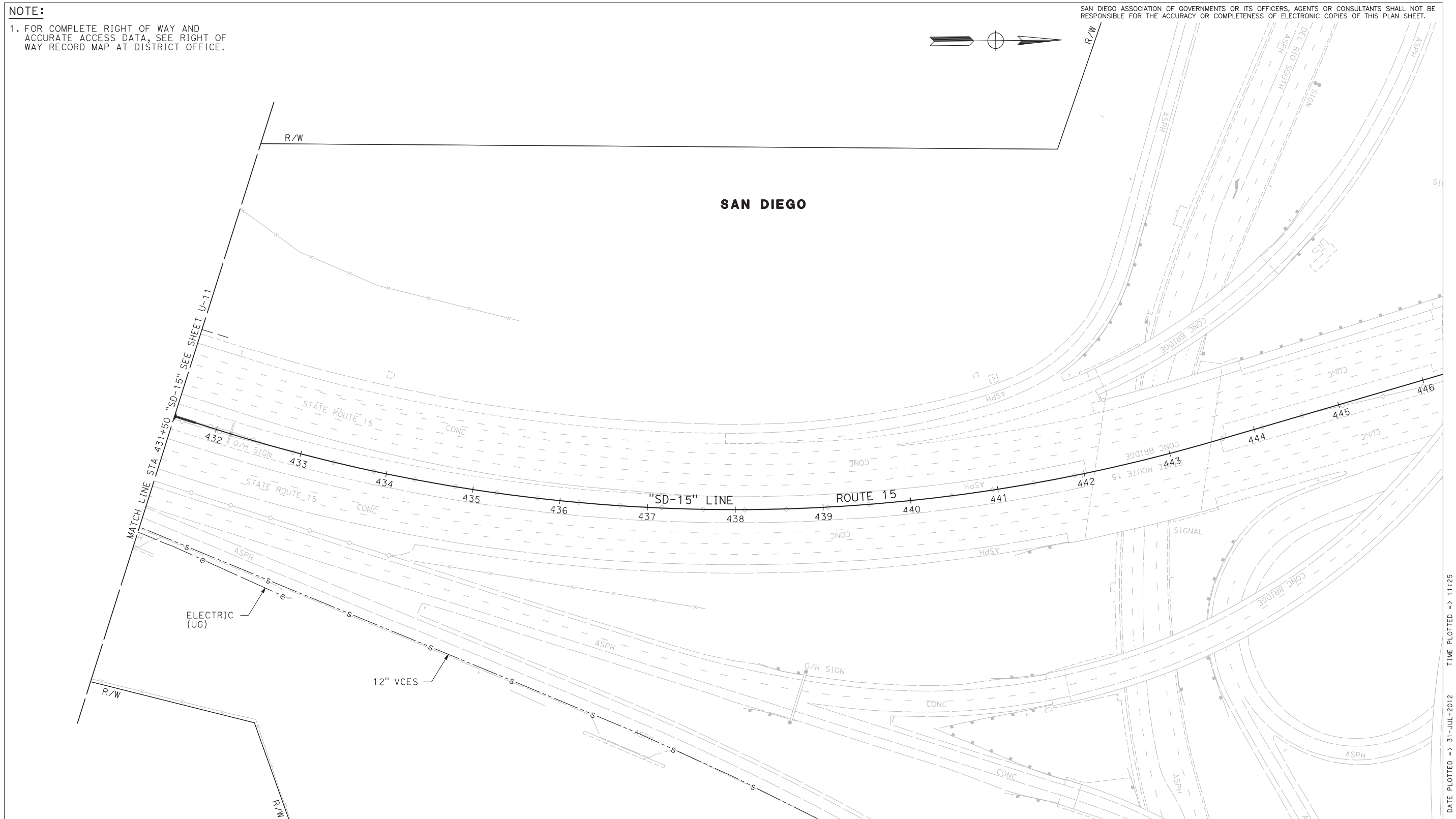

NO.	DATE	REVISIONS	BY	CHK	APRV

CH2MHILL
402 WEST BROADWAY
SUITE 1450
SAN DIEGO, CA 92101
(619) 687-0110

REGISTERED PROFESSIONAL ENGINEER
STATE OF CALIFORNIA

DESIGNED BY	DATE
DRAWN BY	
CHECKED BY	
PRJ. ENG.	

SANDAG

SR 15 MID-CITY BRT

EXISTING UTILITY PLAN

SCALE 1"=50'
CONTRACT NO.
DRAWING NO. U-12
SHEET NO.

FILE => ka012.dgn

FOR REDUCED PLANS ORIGINAL SCALE IS IN INCHES 0 1 2 3

USERNAME => rmunoz DATE PLOTTED => 31-JUL-2012 TIME PLOTTED => 11:25

APPENDIX C
FIELD EXPLORATION

LOGGED BY	BEGIN DATE	COMPLETION DATE	BOREHOLE LOCATION (Lat/Long or North/East and Datum)	HOLE ID
Minxing Zhao	5-15-12	5-15-12	32° 45' 49.44" / -117° 6' 31.53" WGS84	A-12-036
DRILLING CONTRACTOR: Pacific Drilling Co.			BOREHOLE LOCATION (Offset, Station, Line): 30.00' Rt Sta 90+30 Adams On Ramp	SURFACE ELEVATION: ~357.0 ft MSL
DRILLING METHOD: Hollow-Stem Auger			DRILL RIG: CME 75 HT	BOREHOLE DIAMETER: 8 in
SAMPLER TYPE(S) AND SIZE(S) (ID): SPT (1.5"), CAL (2.5")			SPT HAMMER TYPE: 140 lb. Auto Hammer, 30" Drop	HAMMER EFFICIENCY, ERi: 73%
BOREHOLE BACKFILL AND COMPLETION: Cuttings, Bentonite			GROUNDWATER READINGS: DURING DRILLING: Not Encountered; AFTER DRILLING (DATE):	TOTAL DEPTH OF BORING: 31.5 ft

ELEVATION (ft)	DEPTH (ft)	DESCRIPTION	Sample Location	Sample Number	Blows per 6 in.	Blows per foot	Recovery (%)	RQD (%)	Moisture Content (%)	Dry Unit Weight (pcf)	Shear Strength (tsf)	Drilling Method	Casing Depth	Remarks
	0	SEDIMENTARY ROCK, (POORLY INDURATED SANDSTONE); fine grained; moderate brown; moderately weathered; soft; (SILTY SAND with GRAVEL (SM); dense; moist; mostly fine sand; little fine gravel; little fines; (Lindavista Formation)).												
355.00	2			B01										
353.00	4													
	5	(Medium and fine sand; trace fine gravel).		S02	18 22 22	44								
351.00	6													
349.00	8													
347.00	10	(Very dense; coarse gravel).		S03	50/4"	REF								
345.00	12													
343.00	14													
	15			S04	50/2"	REF								no recovery.
341.00	16													
339.00	18													
337.00	20	SEDIMENTARY ROCK, (POORLY INDURATED CONGLOMERATE); coarse grained; moderate brown; moderately weathered; soft; (Poorly graded GRAVEL with SILT and COBBLES (GP-GM); very dense, moist; mostly coarse gravel; little fines; few fine sand; ~50% igneous COBBLES, hard;((San Diego).		S05	36 50/3"	50/3								
335.00	22													
333.00	24													
	25													

(continued)

CH2MHILL®

REPORT TITLE				HOLE ID
BORING RECORD				A-12-036
DIST. 11	COUNTY SD	ROUTE 15	POSTMILE 5.6/R6.0	EA 11-2T1901
PROJECT OR BRIDGE NAME: Route 15 Mid-City Commuter Bike Facility				
BRIDGE NUMBER	PREPARED BY: Minxing Zhao	DATE: 5-24-12	SHEET: 1 of 2	

5 BR - STANDARD SR-15 MID CITY_BIKE LANE.GPJ CALTRANS LIBRARY DEC09-W CH LOGO.GLB 9/26/12

ELEVATION (ft)	DEPTH (ft)	Material Graphics	DESCRIPTION	Sample Location	Sample Number	Blows per 6 in.	Blows per foot	Recovery (%)	RQD (%)	Moisture Content (%)	Dry Unit Weight (pcf)	Shear Strength (tsf)	Drilling Method	Casing Depth	Remarks
	25		SEDIMENTARY ROCK *(continued)*.		S06	50/5"	REF								no recovery.
331.00	26														
	27														
329.00	28		SEDIMENTARY ROCK, (POORLY INDURATED SILTSTONE); fine grained; grayish brown; moderately weathered; soft; (SANDY SILT (SM); very stiff to hard; moist; mostly fines; some fine sand).												
	29														
327.00	30				S07	13	41								
	31					17 24									
325.00	32		Bottom of borehole at 31.5 ft bgs												
	33		Boring terminated at a depth of 31.5 ft due to auger refusal.												
323.00	34		This Boring Record was prepared in accordance with the Caltrans Soil & Rock Logging, Classification, and Presentation Manuals (2010), except as follows:												
	35		1) Consistency of cohesive soil: relatively undisturbed samples were not obtained due to the limited fine grained materials encountered. The consistency of the fine grained soil was determined based on the Standard of Practice for Description and Identification of Soils, Visual-Manual Procedure, (ASTM D2488, Table 5).												
321.00	36														
	37		2) Bedding Spacing and Fracture Density: Drilling and sampling methods employed did not facilitate the evaluation of bedding and fractures. Based on the limited materials observed, and the regional geologic maps and reports reviewed, the Lindavista Formation is expected to be massively bedded; the San Diego Formation is expected to be from thickly to massively bedded. Fracture density for both formations is undetermined.												
319.00	38														
	39														
317.00	40		3) Description of cobbles: Drilling and sampling methods employed did not facilitate the evaluation of cobbles. Where observed, the description is provided on the Boring Record as complete as possible.												
	41														
315.00	42														
	43														
313.00	44														
	45														
311.00	46														
	47														
309.00	48														
	49														
307.00	50														
	51														
305.00	52														
	53														
303.00	54														
	55														

CH2MHILL®

REPORT TITLE				HOLE ID
BORING RECORD				**A-12-036**
DIST. **11**	COUNTY **SD**	ROUTE **15**	POSTMILE **5.6/R6.0**	EA **11-2T1901**
PROJECT OR BRIDGE NAME **Route 15 Mid-City Commuter Bike Facility**				
BRIDGE NUMBER	PREPARED BY **Minxing Zhao**	DATE **5-24-12**	SHEET **2 of 2**	

5 BR - STANDARD SR-15 MID CITY_BIKE LANE.GPJ CALTRANS LIBRARY DEC09-W CH LOGO.GLB 9/26/12

LOGGED BY	BEGIN DATE	COMPLETION DATE	BOREHOLE LOCATION (Lat/Long or North/East and Datum)	HOLE ID
Minxing Zhao	5-16-12	5-16-12	32° 46' 0.68" / -117° 6' 37.51" WGS84	A-12-037
DRILLING CONTRACTOR: Pacific Drilling Co.			BOREHOLE LOCATION (Offset, Station, Line): 95.00' Rt Sta 402+67 SD-15	SURFACE ELEVATION: ~299.0 ft MSL
DRILLING METHOD: Hollow-Stem Auger			DRILL RIG: CME 75 HT	BOREHOLE DIAMETER: 8 in
SAMPLER TYPE(S) AND SIZE(S) (ID): SPT (1.5")			SPT HAMMER TYPE: 140 lb. Auto Hammer, 30" Drop	HAMMER EFFICIENCY, ERi: 73%
BOREHOLE BACKFILL AND COMPLETION: Cuttings, Bentonite			GROUNDWATER READINGS: DURING DRILLING: Not Encountered; AFTER DRILLING (DATE):	TOTAL DEPTH OF BORING: 31.5 ft

ELEVATION (ft)	DEPTH (ft)	DESCRIPTION	Sample Location	Sample Number	Blows per 6 in.	Blows per foot	Recovery (%)	RQD (%)	Moisture Content (%)	Dry Unit Weight (pcf)	Shear Strength (tsf)	Drilling Method	Casing Depth	Remarks
	0	CLAYEY GRAVEL with SAND (GC); medium dense; brown; moist; mostly fine GRAVEL; little fines; little medium sand; weak cementation; (Artificial Fill).												
	1													
297.00	2			B01										
	3													
295.00	4													
	5	SEDIMENTARY ROCK, (POORLY INDURATED CONGLOMERATE); coarse grained; grayish brown; moderately weathered; soft; (CLAYEY GRAVEL (GC); medium dense; moist; mostly coarse gravel; some fines; trace medium and fine sand; COBBLES encountered, igneous, hard; (San Diego Formation)).		S02	15 14 13	27								
293.00	6													
	7													
291.00	8													
	9													
289.00	10	(Very dense; moderate brown; fine gravel).		S03	50/6"	REF								
	11													
287.00	12													
	13													
285.00	14													
	15	SEDIMENTARY ROCK, (POORLY INDURATED SANDSTONE); coarse grained; grayish brown; moderately weathered; soft; (Poorly graded SAND with CLAY (SP-SC); medium dense; moist; mostly medium and fine sand; few fines).		S04	13 14 12	26								
283.00	16													
	17													
281.00	18													
	19													
279.00	20	(Poorly-graded SAND with SILT (SP-SM); very dense; moderate brown).		S05	21 50/5"	50/5								
	21													
277.00	22													
	23													
275.00	24													
	25													

(continued)

CH2MHILL®

REPORT TITLE				HOLE ID
BORING RECORD				A-12-037
DIST. 11	COUNTY SD	ROUTE 15	POSTMILE 5.6/R6.0	EA 11-2T1901
PROJECT OR BRIDGE NAME: Route 15 Mid-City Commuter Bike Facility				
BRIDGE NUMBER	PREPARED BY: Minxing Zhao		DATE: 5-24-12	SHEET: 1 of 2

5 BR - STANDARD SR-15 MID CITY_BIKE LANE.GPJ CALTRANS LIBRARY DEC09-W CH LOGO.GLB 9/26/12

ELEVATION (ft)	DEPTH (ft)	Material Graphics	DESCRIPTION	Sample Location	Sample Number	Blows per 6 in.	Blows per foot	Recovery (%)	RQD (%)	Moisture Content (%)	Dry Unit Weight (pcf)	Shear Strength (tsf)	Drilling Method	Casing Depth	Remarks
	25		SEDIMENTARY ROCK *(continued)*. (Light gray).		S06	16 29 44	73								
273.00	26														
	27														
271.00	28														
	29														
269.00	30				S07	28 50/4"	50/4								
	31														
267.00	32		Bottom of borehole at 31.5 ft bgs Boring terminated at a planned depth. This Boring Record was prepared in accordance with the Caltrans Soil & Rock Logging, Classification, and Presentation Manuals (2010), except as follows: 1) Consistency of cohesive soil: relatively undisturbed samples were not obtained due to the limited fine grained materials encountered. The consistency of the fine grained soil was determined based on the Standard of Practice for Description and Identification of Soils, Visual-Manual Procedure, (ASTM D2488, Table 5). 2) Bedding Spacing and Fracture Density: Drilling and sampling methods employed did not facilitate the evaluation of bedding and fractures. Based on the limited materials observed, and the regional geologic maps and reports reviewed, the Lindavista Formation is expected to be massively bedded; the San Diego Formation is expected to be from thickly to massively bedded. Fracture density for both formations is undetermined. 3) Description of cobbles: Drilling and sampling methods employed did not facilitate the evaluation of cobbles. Where observed, the description is provided on the Boring Record as complete as possible.												
	33														
265.00	34														
	35														
263.00	36														
	37														
261.00	38														
	39														
259.00	40														
	41														
257.00	42														
	43														
255.00	44														
	45														
253.00	46														
	47														
251.00	48														
	49														
249.00	50														
	51														
247.00	52														
	53														
245.00	54														
	55														

CH2MHILL®

REPORT TITLE				HOLE ID
BORING RECORD				**A-12-037**
DIST. **11**	COUNTY **SD**	ROUTE **15**	POSTMILE **5.6/R6.0**	EA **11-2T1901**
PROJECT OR BRIDGE NAME **Route 15 Mid-City Commuter Bike Facility**				
BRIDGE NUMBER	PREPARED BY **Minxing Zhao**	DATE **5-24-12**	SHEET **2 of 2**	

5 BR - STANDARD SR-15 MID CITY_BIKE LANE.GPJ CALTRANS LIBRARY DEC09-W CH LOGO.GLB 9/26/12

LOGGED BY	BEGIN DATE	COMPLETION DATE	BOREHOLE LOCATION (Lat/Long or North/East and Datum)	HOLE ID
Minxing Zhao	5-16-12	5-16-12	32° 46' 26.33" / -117° 6' 42.3" WGS84	A-12-038
DRILLING CONTRACTOR: Pacific Drilling Co.			BOREHOLE LOCATION (Offset, Station, Line): 126.00' Rt Sta 431+00 SD-15	SURFACE ELEVATION: ~183.0 ft MSL
DRILLING METHOD: Hollow-Stem Auger			DRILL RIG: CME 75 HT	BOREHOLE DIAMETER: 8 in
SAMPLER TYPE(S) AND SIZE(S) (ID): SPT (1.5")			SPT HAMMER TYPE: 140 lb. Auto Hammer, 30" Drop	HAMMER EFFICIENCY, ERi: 73%
BOREHOLE BACKFILL AND COMPLETION: Cuttings, Bentonite			GROUNDWATER READINGS: DURING DRILLING: Not Encountered; AFTER DRILLING (DATE):	TOTAL DEPTH OF BORING: 27.0 ft

ELEVATION (ft)	DEPTH (ft)	DESCRIPTION	Sample Location	Sample Number	Blows per 6 in.	Blows per foot	Recovery (%)	RQD (%)	Moisture Content (%)	Dry Unit Weight (pcf)	Shear Strength (tsf)	Drilling Method	Casing Depth	Remarks
	0	SILTY GRAVEL (GM); very dense; brown; moist; mostly fine GRAVEL; little fines; few medium sand; COBBLES encountered, igneous, hard; (Artificial Fill).												
	1													
181.00	2			B01										
	3													
179.00	4													
	5			S02	50/6"	REF								
177.00	6													
	7													
175.00	8													
	9													
173.00	10			S03	50/3"	REF								
	11													
171.00	12													
	13													
169.00	14													
	15	SEDIMENTARY ROCK, (POORLY INDURATED CONGLOMERATE); coarse grained; grayish brown; moderately weathered; soft; (SILTY GRAVEL with SAND (GM); very dense, moist; mostly fine gravel; little fines; few fine sand; (San Diego Formation)).		S04	50/5"	REF								
167.00	16													
	17													
165.00	18													
	19													
163.00	20	(Trace medium sand; COBBLES encountered, igneous, hard).		S05	50/2"	REF								
	21													
161.00	22													
	23													
159.00	24													
	25													

(continued)

CH2MHILL®

REPORT TITLE				HOLE ID
BORING RECORD				A-12-038
DIST. 11	COUNTY SD	ROUTE 15	POSTMILE 5.6/R6.0	EA 11-2T1901
PROJECT OR BRIDGE NAME: Route 15 Mid-City Commuter Bike Facility				
BRIDGE NUMBER	PREPARED BY: Minxing Zhao		DATE 5-24-12	SHEET 1 of 2

5 BR - STANDARD SR-15 MID CITY_BIKE LANE.GPJ CALTRANS LIBRARY DEC09-W CH LOGO.GLB 9/26/12

ELEVATION (ft)	DEPTH (ft)	Material Graphics	DESCRIPTION	Sample Location	Sample Number	Blows per 6 in.	Blows per foot	Recovery (%)	RQD (%)	Moisture Content (%)	Dry Unit Weight (pcf)	Shear Strength (tsf)	Drilling Method	Casing Depth	Remarks
	25		SEDIMENTARY ROCK *(continued)*.	X	S06	50/5"	REF								
157.00	26														
	27		Bottom of borehole at 27.0 ft bgs												
155.00	28		Boring terminated at a depth of 27 ft due to auger refusal.												
	29		This Boring Record was prepared in accordance with the Caltrans Soil & Rock Logging, Classification, and Presentation Manuals (2010), except as follows:												
153.00	30		1) Consistency of cohesive soil: relatively undisturbed samples were not obtained due to the limited fine grained materials encountered. The consistency of the fine grained soil was determined based on the Standard of Practice for Description and Identification of Soils, Visual-Manual Procedure, (ASTM D2488, Table 5).												
	31														
151.00	32		2) Bedding Spacing and Fracture Density: Drilling and sampling methods employed did not facilitate the evaluation of bedding and fractures. Based on the limited materials observed, and the regional geologic maps and reports reviewed, the Lindavista Formation is expected to be massively bedded; the San Diego Formation is expected to be from thickly to massively bedded. Fracture density for both formations is undetermined.												
	33														
149.00	34														
	35														
147.00	36		3) Description of cobbles: Drilling and sampling methods employed did not facilitate the evaluation of cobbles. Where observed, the description is provided on the Boring Record as complete as possible.												
	37														
145.00	38														
	39														
143.00	40														
	41														
141.00	42														
	43														
139.00	44														
	45														
137.00	46														
	47														
135.00	48														
	49														
133.00	50														
	51														
131.00	52														
	53														
129.00	54														
	55														

CH2MHILL®

REPORT TITLE				HOLE ID
BORING RECORD				**A-12-038**
DIST. **11**	COUNTY **SD**	ROUTE **15**	POSTMILE **5.6/R6.0**	EA **11-2T1901**
PROJECT OR BRIDGE NAME **Route 15 Mid-City Commuter Bike Facility**				
BRIDGE NUMBER	PREPARED BY **Minxing Zhao**		DATE **5-24-12**	SHEET **2 of 2**

5 BR - STANDARD SR-15 MID CITY_BIKE LANE.GPJ CALTRANS LIBRARY DEC09-W CH LOGO.GLB 9/26/12

Note:

The SEDIMENTARY ROCK in Boring Record A-12-038 is described as “San Diego Formation.” Archived data describes the SEDIMENTARY ROCK in the vicinity of the boring as “Mission Valley Formation.”

LOGGED BY	BEGIN DATE	COMPLETION DATE	BOREHOLE LOCATION (Lat/Long or North/East and Datum)	HOLE ID
Minxing Zhao	5-16-12	5-16-12	WGS84	Key Sheet
DRILLING CONTRACTOR: Pacific Drilling Co.			BOREHOLE LOCATION (Offset, Station, Line):	SURFACE ELEVATION: MSL
DRILLING METHOD: Hollow-Stem Auger			DRILL RIG: CME 75 HT	BOREHOLE DIAMETER: 8 in
SAMPLER TYPE(S) AND SIZE(S) (ID): SPT (1.5")			SPT HAMMER TYPE: 140 lb. Auto Hammer, 30" Drop	HAMMER EFFICIENCY, ERi: 73%
BOREHOLE BACKFILL AND COMPLETION			GROUNDWATER READINGS: DURING DRILLING / AFTER DRILLING (DATE)	TOTAL DEPTH OF BORING: 24.0 ft

ELEVATION (ft)	DEPTH (ft)	Material Graphics	DESCRIPTION	Sample Location	Sample Number	Blows per 6 in.	Blows per foot	Recovery (%)	RQD (%)	Moisture Content (%)	Dry Unit Weight (pcf)	Shear Strength (tsf)	Drilling Method	Casing Depth	Remarks
	0				B-0										
	1		Sample Interval: Top/Bottom (ft. bgs) Amount of Sample Recovered (ft)												
	2		bgs = below ground surface												
	3		Sample Type - Sample Number												
	4		(D) Modified California split-spoon drive sampler, 3.0-inch (76-mm) outside diameter, 2.4-inch (64-mm) inside diameter (with liners)												
	5				S-1	2	4	100							
	6		(S) Split-spoon drive sampler, 2.0-inch (50-mm) outside diameter 1.4-inch (35-mm) inside diameter (without liners)			2 2									
	7														
	8		(B) Bulk sample collected from drill cuttings												
	9		Standard Penetration Test Results												
	10		Number of blows required to advance driven sampler over three 6-inch (152-mm) increments. Number in parenthesis is the total number of blows required to advance the sampler 12-inch (305 mm) beyond the first 6-inch (152-mm) interval. Drive samplers advanced using a 140 lb (63.5 kg) Hammer with the 30-inch (762-mm) drop. The blow counts given have not been modified to account for field and/or depth conditions.												
	11														
	12														
	13		General Notes												
	14		1) Soil classifications are based on the Unified Soil Classification System. Classifications and descriptions made in the field have been modified based on the results of laboratory testing.												
	15														
	16		2) Boring logs depict subsurface conditions only at the specific locations and times the boring was made. Logs do not necessarily reflect strata variations that may exist between boring locations..												
	17														
	18														
	19														
	20														
	21														
	22														
	23														
	24		Bottom of borehole at 24.0 ft bgs												
	25														

CH2MHILL

REPORT TITLE				HOLE ID
BORING RECORD				Key Sheet
DIST. 11	COUNTY SD	ROUTE 15	POSTMILE 5.6/R6.0	EA 11-2T1901
PROJECT OR BRIDGE NAME: Route 15 Mid-City Commuter Bike Facility				
BRIDGE NUMBER	PREPARED BY: Minxing Zhao	DATE 5-24-12	SHEET 1 of 1	

5 BR - STANDARD SR-15 MID CITY_BIKE LANE.GPJ CALTRANS LIBRARY DEC09-W CH LOGO.GLB 9/26/12

November 6, 2014

LOGGED BY Ali Lari	**BEGIN DATE** 08/15/12	**COMPLETION DATE** 08/15/12	**BOREHOLE LOCATION (Lat/Long or North/East and Datum)** Not Determined	**HOLE ID:** HA/HD-12-001
DRILLING CONTRACTOR Caltrans			**BOREHOLE LOCATION (Station, Offset, and Line)** 405+70, 5.0 ft Left, BF1 Line	**SURFACE ELEVATION** 284.0 ft
DRILLING METHOD Hand Auger			**DRILL RIG** Not Applicable	**BOREHOLE DIAMETER** 3"
SAMPLER TYPE(S) AND SIZE(S) [ID] Hand Driven Soil Probe			**SPT HAMMER TYPE** Not Applcable	**HAMMER EFFICIENCY (ER_i)** NA %
BOREHOLE BACKFILL AND COMPLETION Cuttings			**GROUNDWATER READINGS** **DURING DRILLING** Not Encountered **AFTER DRILLING (DATE)** Not Applicable	**TOTAL DEPTH OF BORING** 3.1 ft

ELEVATION (ft)	DEPTH (ft)	DESCRIPTION	Sample Location	Sample Number	Blows Per 6 in	Blows Per 1.0 ft	Recovery (%)	RQD (%)	Moisture Content (%)	Dry Unit Weight (pcf)	Shear Strength (tsf)	Drilling Method	Casing Depth	REMARKS
284.0		SILTY GRAVEL with SAND (GM); loose, light brown; fine to coarse GRAVEL; fine SAND (FILL)												Hand Auger boring developed adjacent to Hand Driven Soil Probe location.
	1					60								
	2					100								
	3					60								
280.9		Borehole terminated at 3.1ft.												Refusal at 3.1'
	4													
	5													
	6													
	7													
	8													
	9													
	10													
	11													
	12													
	13													
	14													
	15													
	16													
	17													
	18													
	19													
	20													

DEPARTMENT OF TRANSPORTATION	**REPORT TITLE** Geotechnical Design Report				**HOLE ID:** HA/HD-12-001
DIVISION OF ENGINEERING SERVICES	**DISTRICT** 11	**COUNTY** SD	**ROUTE** 15	**POST MILE** 5.6/R6.0	**PROJECT NUMBER** 1100020291
GEOTECHNICAL SERVICES	**PROJECT OR BRIDGE NAME** State Route 15 Mid City Commuter Bike Facility				
OFFICE OF GEOTECHNICAL DESIGN-SOUTH 2	**BRIDGE NUMBER** GRE-405	**PREPARED BY** R. Rusnak	**DATE** 05/01/14	**SHEET** 1 of 1	

2014-05-01 BR for GRE.xls - HA_HD-12-001

LOGGED BY Ali Lari	**BEGIN DATE** 08/15/12	**COMPLETION DATE** 08/15/12	**BOREHOLE LOCATION (Lat/Long or North/East and Datum)** Not Determined	**HOLE ID:** HA/HD-12-002
DRILLING CONTRACTOR Caltrans			**BOREHOLE LOCATION (Station, Offset, and Line)** 405+70, 10.0 ft Right, BF1 Line	**SURFACE ELEVATION** 277.0 ft
DRILLING METHOD Hand Auger			**DRILL RIG** Not Applicable	**BOREHOLE DIAMETER** 3"
SAMPLER TYPE(S) AND SIZE(S) [ID] Hand Driven Soil Probe			**SPT HAMMER TYPE** Not Applcable	**HAMMER EFFICIENCY (ER_i)** NA %
BOREHOLE BACKFILL AND COMPLETION Cuttings			**GROUNDWATER READINGS** DURING DRILLING: Not Encountered; AFTER DRILLING (DATE): Not Applicable	**TOTAL DEPTH OF BORING** 4.4 ft

ELEVATION (ft)	DEPTH (ft)	DESCRIPTION	Sample Location	Sample Number	Blows Per 6 in	Blows Per 1.0 ft	Recovery (%)	RQD (%)	Moisture Content (%)	Dry Unit Weight (pcf)	Shear Strength (tsf)	Drilling Method	Casing Depth	REMARKS
277.0		SILTY GRAVEL with SAND (GM); loose, light brown; fine to coarse GRAVEL; fine SAND (FILL)												Hand Auger boring developed adjacent to Hand Driven Soil Probe location.
	1					97								
	2					95								
	3					90								
	4					90								
272.6		Borehole terminated at 4.4ft.												Refusal at 4.4'
	5													
	6													
	7													
	8													
	9													
	10													
	11													
	12													
	13													
	14													
	15													
	16													
	17													
	18													
	19													
	20													

DEPARTMENT OF TRANSPORTATION	**REPORT TITLE** Geotechnical Design Report				**HOLE ID:** HA/HD-12-002
DIVISION OF ENGINEERING SERVICES	**DISTRICT** 11	**COUNTY** SD	**ROUTE** 15	**POST MILE** 5.6/R6.0	**PROJECT NUMBER** 1100020291
GEOTECHNICAL SERVICES	**PROJECT OR BRIDGE NAME** State Route 15 Mid City Commuter Bike Facility				
OFFICE OF GEOTECHNICAL DESIGN-SOUTH 2	**BRIDGE NUMBER** GRE-405	**PREPARED BY** R. Rusnak	**DATE** 05/01/14	**SHEET** 1 of 1	

2014-05-01 BR for GRE.xls - HA_HD-12-002

LOGGED BY Ali Lari	**BEGIN DATE** 08/15/12	**COMPLETION DATE** 08/15/12	**BOREHOLE LOCATION (Lat/Long or North/East and Datum)** Not Determined	**HOLE ID:** HA/HD-12-003
DRILLING CONTRACTOR Caltrans			**BOREHOLE LOCATION (Station, Offset, and Line)** 405+60, 4.0 ft Right, BF1 Line	**SURFACE ELEVATION** 280.0 ft
DRILLING METHOD Hand Auger			**DRILL RIG** Not Applicable	**BOREHOLE DIAMETER** 3"
SAMPLER TYPE(S) AND SIZE(S) [ID] Hand Driven Soil Probe			**SPT HAMMER TYPE** Not Applcable	**HAMMER EFFICIENCY (ER_i)** NA %
BOREHOLE BACKFILL AND COMPLETION Cuttings			**GROUNDWATER READINGS** **DURING DRILLING** Not Encountered **AFTER DRILLING (DATE)** Not Applicable	**TOTAL DEPTH OF BORING** 3.3 ft

ELEVATION (ft)	DEPTH (ft)	DESCRIPTION	Sample Location	Sample Number	Blows Per 6 in	Blows Per 1.0 ft	Recovery (%)	RQD (%)	Moisture Content (%)	Dry Unit Weight (pcf)	Shear Strength (tsf)	Drilling Method	Casing Depth	REMARKS
280.0		SILTY GRAVEL with SAND (GM); loose, light brown; fine to coarse GRAVEL; fine SAND (FILL)												Hand Auger boring developed adjacent to Hand Driven Soil Probe location.
	1					58								
	2					85								
	3					95								
276.7		Borehole terminated at 3.3ft.												Refusal at 3.3'
	4													
	5													
	6													
	7													
	8													
	9													
	10													
	11													
	12													
	13													
	14													
	15													
	16													
	17													
	18													
	19													
	20													

DEPARTMENT OF TRANSPORTATION	**REPORT TITLE** Geotechnical Design Report				**HOLE ID:** HA/HD-12-003
DIVISION OF ENGINEERING SERVICES	**DISTRICT** 11	**COUNTY** SD	**ROUTE** 15	**POST MILE** 5.6/R6.0	**PROJECT NUMBER** 1100020291
GEOTECHNICAL SERVICES	**PROJECT OR BRIDGE NAME** State Route 15 Mid City Commuter Bike Facility				
OFFICE OF GEOTECHNICAL DESIGN-SOUTH 2	**BRIDGE NUMBER** GRE-405	**PREPARED BY** R. Rusnak	**DATE** 05/01/14	**SHEET** 1 of 1	

2014-05-01 BR for GRE.xls - HA_HD-12-003

LOGGED BY Ali Lari	**BEGIN DATE** 08/15/12	**COMPLETION DATE** 08/15/12	**BOREHOLE LOCATION (Lat/Long or North/East and Datum)** Not Determined	**HOLE ID:** HA/HD-12-004
DRILLING CONTRACTOR Caltrans			**BOREHOLE LOCATION (Station, Offset, and Line)** 406+20, 0.0 ft Right, BF1 Line	**SURFACE ELEVATION** 284.0 ft
DRILLING METHOD Hand Auger			**DRILL RIG** Not Applicable	**BOREHOLE DIAMETER** 3"
SAMPLER TYPE(S) AND SIZE(S) [ID] Hand Driven Soil Probe			**SPT HAMMER TYPE** Not Applcable	**HAMMER EFFICIENCY (ER_i)** NA %
BOREHOLE BACKFILL AND COMPLETION Cuttings			**GROUNDWATER READINGS** DURING DRILLING: Not Encountered; AFTER DRILLING (DATE): Not Applicable	**TOTAL DEPTH OF BORING** 7.0 ft

ELEVATION (ft)	DEPTH (ft)	DESCRIPTION	Sample Location	Sample Number	Blows Per 6 in	Blows Per 1.0 ft	Recovery (%)	RQD (%)	Moisture Content (%)	Dry Unit Weight (pcf)	Shear Strength (tsf)	Drilling Method	Casing Depth	REMARKS
284.0		SEDIMENTARY ROCK (SANDSTONE); light brown; very soft; (SILTY SAND (SM) ; loose (San Diego Formation))												Hand Auger boring developed adjacent to Hand Driven Soil Probe location.
	1					30								
	2					50								
	3					80								
	4					120								
	5					85								
	6					110								
277.0	7	Borehole terminated at 7.0ft. Borehole terminated at planned depth.				130								
	8													
	9													
	10													
	11													
	12													
	13													
	14													
	15													
	16													
	17													
	18													
	19													
	20													

DEPARTMENT OF TRANSPORTATION	**REPORT TITLE** Geotechnical Design Report				**HOLE ID:** HA/HD-12-004
DIVISION OF ENGINEERING SERVICES	**DISTRICT** 11	**COUNTY** SD	**ROUTE** 15	**POST MILE** 5.6/R6.0	**PROJECT NUMBER** 1100020291
GEOTECHNICAL SERVICES	**PROJECT OR BRIDGE NAME** State Route 15 Mid City Commuter Bike Facility				
OFFICE OF GEOTECHNICAL DESIGN-SOUTH 2	**BRIDGE NUMBER** GRE-405	**PREPARED BY** R. Rusnak	**DATE** 05/01/14	**SHEET** 1 of 1	

LOGGED BY Ali Lari	**BEGIN DATE** 08/16/12	**COMPLETION DATE** 08/16/12	**BOREHOLE LOCATION (Lat/Long or North/East and Datum)** Not Determined	**HOLE ID:** HA/HD-12-005
DRILLING CONTRACTOR Caltrans			**BOREHOLE LOCATION (Station, Offset, and Line)** 409+00, 4.0 ft Right, BF1 Line	**SURFACE ELEVATION** 273.0 ft
DRILLING METHOD Hand Auger			**DRILL RIG** Not Applicable	**BOREHOLE DIAMETER** 3"
SAMPLER TYPE(S) AND SIZE(S) [ID] Hand Driven Soil Probe			**SPT HAMMER TYPE** Not Applcable	**HAMMER EFFICIENCY (ER_i)** NA %
BOREHOLE BACKFILL AND COMPLETION Cuttings			**GROUNDWATER READINGS** DURING DRILLING: Not Encountered; AFTER DRILLING (DATE): Not Applicable	**TOTAL DEPTH OF BORING** 1.5 ft

ELEVATION (ft)	DEPTH (ft)	DESCRIPTION	Sample Location	Sample Number	Blows Per 6 in	Blows Per 1.0 ft	Recovery (%)	RQD (%)	Moisture Content (%)	Dry Unit Weight (pcf)	Shear Strength (tsf)	Drilling Method	Casing Depth	REMARKS
273.0		SILTY GRAVEL with SAND (GM); loose; ight brown; fine to coarse GRAVEL; fine SAND; (FILL)												Hand Auger boring developed adjacent to Hand Driven Soil Probe location.
	1					105								
271.5		Borehole terminated at 1.5ft.												Refusal at 1.5'
	2													
	3													
	4													
	5													
	6													
	7													
	8													
	9													
	10													
	11													
	12													
	13													
	14													
	15													
	16													
	17													
	18													
	19													
	20													

DEPARTMENT OF TRANSPORTATION	**REPORT TITLE** Geotechnical Design Report				**HOLE ID:** HA/HD-12-005
DIVISION OF ENGINEERING SERVICES	**DISTRICT** 11	**COUNTY** SD	**ROUTE** 15	**POST MILE** 5.6/R6.0	**PROJECT NUMBER** 1100020291
GEOTECHNICAL SERVICES	**PROJECT OR BRIDGE NAME** State Route 15 Mid City Commuter Bike Facility				
OFFICE OF GEOTECHNICAL DESIGN-SOUTH 2	**BRIDGE NUMBER** GRE-408	**PREPARED BY** R. Rusnak	**DATE** 05/01/14	**SHEET** 1 of 1	

LOGGED BY Ali Lari	**BEGIN DATE** 08/16/12	**COMPLETION DATE** 08/16/12	**BOREHOLE LOCATION (Lat/Long or North/East and Datum)** Not Determined	**HOLE ID:** HA/HD-12-006
DRILLING CONTRACTOR Caltrans			**BOREHOLE LOCATION (Station, Offset, and Line)** 409+20, 8.0 ft Right, BF1 Line	**SURFACE ELEVATION** 268.0 ft
DRILLING METHOD Hand Auger			**DRILL RIG** Not Applicable	**BOREHOLE DIAMETER** 3"
SAMPLER TYPE(S) AND SIZE(S) [ID] Hand Driven Soil Probe			**SPT HAMMER TYPE** Not Applcable	**HAMMER EFFICIENCY (ER_i)** NA %
BOREHOLE BACKFILL AND COMPLETION Cuttings			**GROUNDWATER READINGS** **DURING DRILLING** Not Encountered **AFTER DRILLING (DATE)** Not Applicable	**TOTAL DEPTH OF BORING** 7.0 ft

ELEVATION (ft)	DEPTH (ft)	DESCRIPTION	Sample Location	Sample Number	Blows Per 6 in	Blows Per 1.0 ft	Recovery (%)	RQD (%)	Moisture Content (%)	Dry Unit Weight (pcf)	Shear Strength (tsf)	Drilling Method	Casing Depth	REMARKS
268.0		SILTY GRAVEL with SAND (GM); loose; ight brown; fine to coarse GRAVEL; fine SAND; (FILL)												Hand Auger boring developed adjacent to Hand Driven Soil Probe location.
	1					105								
	2					41								
	3					55								
	4					36								
	5					28								
	6					37								
261.0	7	Borehole terminated at 7.0ft. Borehole terminated at planned depth.				66								
	8													
	9													
	10													
	11													
	12													
	13													
	14													
	15													
	16													
	17													
	18													
	19													
	20													

DEPARTMENT OF TRANSPORTATION	**REPORT TITLE** Geotechnical Design Report				**HOLE ID:** HA/HD-12-006
DIVISION OF ENGINEERING SERVICES	**DISTRICT** 11	**COUNTY** SD	**ROUTE** 15	**POST MILE** 5.6/R6.0	**PROJECT NUMBER** 1100020291
GEOTECHNICAL SERVICES	**PROJECT OR BRIDGE NAME** State Route 15 Mid City Commuter Bike Facility				
OFFICE OF GEOTECHNICAL DESIGN-SOUTH 2	**BRIDGE NUMBER** GRE-408	**PREPARED BY** R. Rusnak	**DATE** 05/01/14	**SHEET** 1 of 1	

LOGGED BY Ali Lari	**BEGIN DATE** 08/16/12	**COMPLETION DATE** 08/16/12	**BOREHOLE LOCATION (Lat/Long or North/East and Datum)** Not Determined	**HOLE ID:** HA/HD-12-007
DRILLING CONTRACTOR Caltrans			**BOREHOLE LOCATION (Station, Offset, and Line)** 409+70, 6.0 ft Right, BF1 Line	**SURFACE ELEVATION** 273.0 ft
DRILLING METHOD Hand Auger (HA)			**DRILL RIG** Not Applicable	**BOREHOLE DIAMETER** 3"
SAMPLER TYPE(S) AND SIZE(S) [ID] Hand Driven Soil Probe (HD)			**SPT HAMMER TYPE** Not Applcable	**HAMMER EFFICIENCY (ER_i)** NA %
BOREHOLE BACKFILL AND COMPLETION Cuttings			**GROUNDWATER READINGS** **DURING DRILLING** Not Encountered **AFTER DRILLING (DATE)** Not Applicable	**TOTAL DEPTH OF BORING** 2.7 ft

ELEVATION (ft)	DEPTH (ft)	DESCRIPTION	Sample Location	Sample Number	Blows Per 6 in	Blows Per 1.0 ft	Recovery (%)	RQD (%)	Moisture Content (%)	Dry Unit Weight (pcf)	Shear Strength (tsf)	Drilling Method	Casing Depth	REMARKS
273.0		SEDIMENTARY ROCK (SANDSTONE); light grey; very soft; (SILTY SAND (SM) ; loose (San Diego Formation))												Hand Auger boring developed adjacent to Hand Driven Soil Probe location.
	1					30								
	2					50								
270.3		Borehole terminated at 2.7ft.												Refusal 2.7'
	3													
	4													
	5													
	6													
	7													
	8													
	9													
	10													
	11													
	12													
	13													
	14													
	15													
	16													
	17													
	18													
	19													
	20													

DEPARTMENT OF TRANSPORTATION	**REPORT TITLE** Geotechnical Design Report				**HOLE ID:** HA/HD-12-007
DIVISION OF ENGINEERING SERVICES	**DISTRICT** 11	**COUNTY** SD	**ROUTE** 15	**POST MILE** 5.6/R6.0	**PROJECT NUMBER** 1100020291
GEOTECHNICAL SERVICES	**PROJECT OR BRIDGE NAME** State Route 15 Mid City Commuter Bike Facility				
OFFICE OF GEOTECHNICAL DESIGN-SOUTH 2	**BRIDGE NUMBER** GRE-408	**PREPARED BY** R. Rusnak	**DATE** 05/01/14	**SHEET** 1 of 1	

APPENDIX D
LABORATORY DATA

CALTRANS ENGR GEOLOGY
7177 OPPORTUNITY RD
SAN DIEGO, CA 92111

GEOTECHNICAL DESIGN REPORT

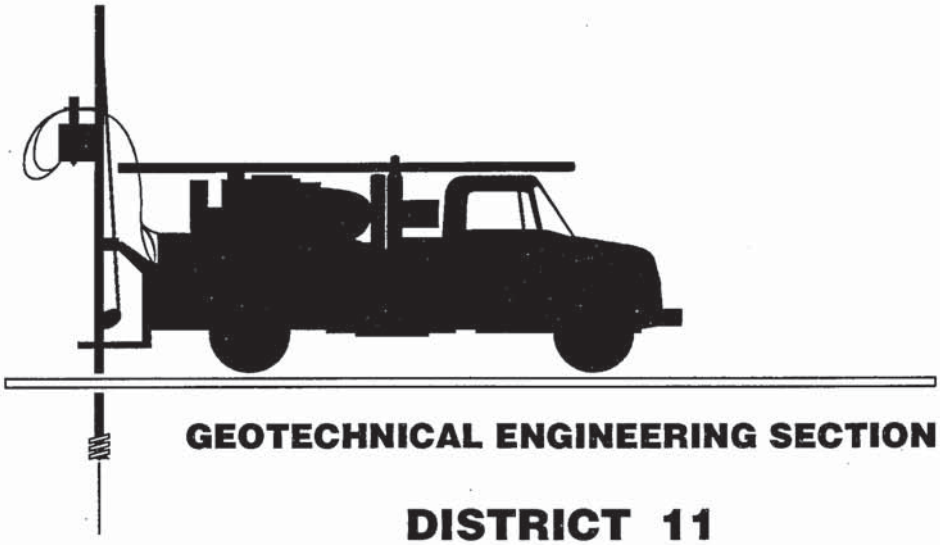

GEOTECHNICAL ENGINEERING SECTION

DISTRICT 11

11-SD-15
PM M3.4/R5.6
11-048661

In San Diego, from 0.6 Mile North of Route 805 to 0.3 Mile South of Route 8

CALIFORNIA DEPARTMENT OF TRANSPORTATION

9.6 Corrosion Investigation

9.6.1 General Conditions

Corrosion potential tests were performed on thirty-seven soil samples and on two water samples. The soil samples represent both foundation and proposed embankment conditions (from cut excavation areas). The water samples are from ponds located at two RCP outlets. Soil and water corrosion test data, locations, and elevations are tabulated in **Tables 9.6.1 and 9.6.2.**

Additional corrosion testing was performed by Moore & Tabor (Report Section 3.0, Reference 3) and is contained in Appendix 13.6. For their study they tested six soils for resistivity and pH, and eight soils for sulphate content.

Based on our corrosion testing, project formational soils are very corrosive to both metal and reinforced concrete. The metal corrosiveness is due to relatively low values of pH and resistivity and the reinforced concrete corrosiveness is because of high levels of chloride ion content. Premature invert failure on an 84-inch CSP and the abundance of formational gravel content make this site subject to abrasive flows.

For design input values into Caltrans' "CULVERT3.EXE" service design life computer program, we selected a pH value of 5.7, a minimum resistivity of 200 Ohm.cm, Chlorides of 1200 mg/kg, sulfates of less than 2000 mg/kg, and abrasive conditions.

9.6.2 General Recommendations

Due to the aggressive environment, the use of any metal pipe is not recommended when founded in on-site soils or in embankments constructed thereof.

On-site drainage inlets and pipes that would be entirely within the usually non-corrosive structural section materials can be 2.77 mm (12 gauge) galvanized corrugated (CSP) or spiral rib (SSRP) steel culvert pipe with a bituminous coating.

Due to cost, corrosion, and abrasion considerations, plastic pipe culverts should be considered for use at all applicable locations. Plastic pipe, without joints, can also be used for down-drains as long as the maximum fill height cover criteria is not exceeded.

Metal electrical conduit should not be used for this project. Plastic conduit meeting current design standards should be used at all locations.

9.6.3 Recommend Culvert Alternatives

1. Plastic Pipe Culverts - Type "S" Corrugated Polyethylene, Ribbed Profile Wall Polyethylene, or Ribbed Profile Wall Polyvinyl Chloride pipe that meet the current diameter and fill height requirements.

2. Reinforced Concrete Pipe - Based on a design chloride content value of 1200 mg/kg, one of the following chloride resistant alternatives is required for a theoretical 50-year maintenance free design life:

	Alternate 1	Alternate 2	Alternate 2
Cement Content, kg/m³	390	418	446
(Sack/CY)	(7.0)	(7.5)	(8.0)
Minimum Con. Cover mm	64	57	51
over Rebar (in.)	(2.50)	(2.25)	(2.00)
Maximum Mix Water, Percent by Volume	15	15	15

9.6.4 Reinforced Concrete Structures

Reinforced concrete to be used in bridges, retaining walls, and soundwalls that will be in contact with project soils requires a chloride resistant design as presented in the above RCP culvert alternatives (Section 9.6.3).

TABLE 9.6.1

11-SD-15 PM M3.4/R5.6
11-048661
October, 1994.

CORROSION TESTING SUMMARY

Test # 11-94-	Station "A" Line	Offset-Feet	Elevation Interval	Sample Code	pH Units	Resist. Ohms-Cm	Chloride Mg./Kg.	Sulfate Mg./Kg.
207	--	--	--	EC	6.4	1130	--	--
211	316+20	295 Lt.	260-258	F	5.7	2000	--	--
200	320+00	37 Rt.	323-288	C/F	6.4	200	1230	180
201	320+20	10 Lt.	321-305	C/F	8.5	980	75	108
208	321+20	800 Lt.	278	PW	7.0	480	230	195
209	321+20	820 Lt.	285-280	F	5.9	470	360	133
210	322+50	180 Lt.	285	PW	7.0	430	270	190
212	338+80	35 Lt.	353-342	C	8.0	740	38	30
202	338+80	35 Lt.	342-328.5	C/F	8.3	980	24	60
213	350+08	13 Lt.	365-353	C	5.1	160	1610	240
203	350+08	13 Lt.	353-345	C/F	6.0	250	840	150
214	361+65	25 Rt.	369-356	C	7.5	600	48	180
204	361+65	25 Rt.	356-343	C/F	7.3	630	45	225
215	370+10	17 Lt.	377.5-370	C	7.2	370	126	525
216	370+10	17 Lt.	370-362	C	5.9	200	525	810
217	370+10	17 Lt.	362-356.5	C	6.1	220	1000	270
205	370+10	17 Lt.	356.5-344	C/F	7.2	380	585	135
218	379+70	12 Rt.	375-371	C	5.0	450	180	420
219	379+70	12 Rt.	371-359.5	C	5.3	470	180	360
220	379+70	12 Rt.	359.5-355.5	C	6.1	140	1710	780
206	379+70	12 Rt.	355.5-340	C/F	7.5	330	735	150

Sample Codes: F = Foundation Soil Sample C = Cut Excavation Soil Sample
PW = Ponded Surface Water at RCP Outlet
EC = Soil below Failed Invert at Existing 84" CSP.

TABLE 9.6.2

11-SD-15 PM M3.4/R5.6
11-048661
October, 1994.

CORROSION TESTING SUMMARY

Test # 11-G91-	Station "A" Line	Offset-Feet	Elevation Interval	Sample Code	pH Units	Resist. Ohms-Cm	Chloride Mg./Kg.	Sulfate Mg./Kg.
600	369+00	155 Rt.	376-374.5	WF	6.8	330	194	1210
602	369+00	155 Rt.	366-364.5	WF	5.4	130	1900	3420
604	369+00	155 Rt.	356-354.8	WF	6.2	220	2190	495
584	369+19	107 Lt.	372-365.5	WF	5.9	460	ND	ND
586	369+19	107 Lt.	357.6-350.5	WF	6.3	330	834	259
614	372+00	110 Rt.	362-361.1	WF	6.0	330	384	828
615	372+00	110 Rt.	360-356.1	WF	6.7	460	384	270
617	372+00	110 Rt.	352.5-351.2	WF	7.2	330	768	357
618	372+00	110 Rt.	342-340.9	WF	7.6	730	369	<<2000
589	372+00	135 Lt.	374-372.5	WF	6.2	210	960	693
590	372+00	135 Lt.	369-358	WF	6.4	190	873	1320
592	372+00	135 Lt.	352.8-351.8	WF	6.7	730	608	243
606	374+00	98 Rt.	372-371.3	WF	7.2	690	155	518
610	374+00	98 Rt.	347.2-345.7	WF	6.9	495	338	306
619	376+20	90 Rt.	371-369.5	WF	7.6	560	ND	ND
593	378+00	180 Lt.	372-361.2	WF	6.4	330	336	376
596	378+00	180 Lt.	358.5-353	WF	6.3	260	912	243
598	378+00	180 Lt.	351-350	WF	6.6	200	1610	438

Sample Codes: WF = Wall Foundation Investigation Soil Sample
ND = Not Determined

APPENDIX 13.6

MOORE & TABER GEOTECHNICAL ENGINEERS AND GEOLOGISTS

LABORATORY TESTING

The laboratory testing was designed to fit the specific needs of this project and was limited to testing on-site materials. A brief description of each type of test is presented below. Specific results are given in Appendix A. The in situ moisture-density test results are shown on the Log of Test Borings.

Strength characteristics of the foundation soils were determined by in situ field tests and laboratory direct shear tests. Soil strength parameters were evaluated primarily from direct shear tests on undisturbed and remolded samples of material passing the No. 4 Sieve. The samples were either saturated and tested under three different normal pressures or tested at natural moisture content and overburden pressure in a 2.5 inch I.D. circular shear box using a controlled displacement rate of 0.04 inch per minute. The strength parameters obtained were then adjusted to account for the gravel and cobbles present in the foundation materials.

The concentration of soluble sulphates was determined for eight (8) samples of soil in accordance with California Test Method No. 417.

Grain size distribution of several samples was determined in accordance with ASTM D422. The fines content of several samples was determined in accordance with ASTM D1140.

Compaction tests were performed on seven (7) samples in order to determine the maximum dry density and optimum moisture content of representative soils. These laboratory tests were carried out in accordance with ASTM D1557.

Corrosivity tests were performed on six (6) soil samples to determine the pH and minimum electrical resistance of the soils. These tests were conducted in general accordance with California Test Method No. 643.

The remaining soil samples are now stored in our laboratory for future reference and analysis if desired. Unless notified to the contrary, all samples will be disposed of 60 days from the date of this report.

MOORE & TABER GEOTECHNICAL ENGINEERS AND GEOLOGISTS

DIRECT SHEAR TESTS ON UNDISTURBED SAMPLES

(ASTM D3080)

Boring No./ Sample No.	Normal Stress	Peak Shear Strength	Peak Shear Displacement	Shear Strength at 0.25 - Inch Displacement
	(psf)	(psf)	(inches)	(psf)
1/3	840	1127	0.047	994
2/4	1125	2178	0.035	975
2/4	2160	3154	0.045	2008
2/4	3195	3457	0.055	2718
3/6	1125	1174	0.035	994
3/6	2160	2604	0.045	1610
3/6	3195	2879	0.050	2450
4/2	517	2765	0.078	814
5/2	517	1818	0.100	1183
5/4	1125	3163	0.050	1421
5/4	2160	3333	0.042	1847
5/4	3195	3788	0.042	2519
6/1	517	1591	0.072	862
6/5	1125	2008	0.042	994
6/5	2160	2983	0.040	1648
6/5	3195	3930	0.045	2405
9/8	1125	1818	0.024	994
9/8	2160	3453	0.060	2121
9/8	3195	4006	0.100	2462
9/11	1552	2623	0.045	1250
10/3	1125	3471	0.050	1411
10/3	2160	4678	0.081	3049
10/3	3195	5076	0.060	3296

Job No. 689-108 - February 9, 1990

A-2

MOORE & TABER GEOTECHNICAL ENGINEERS AND GEOLOGISTS

DIRECT SHEAR TESTS ON REMOLDED SAMPLES

(ASTM D3080)

Boring No./ Sample No.	Normal Stress (psf)	Peak Shear Strength (psf)	Peak Shear Displacement (inches)	Shear Strength at 0.25 - Inch Displacement (psf)
2/5	1125	719	0.250	719
2/5	2160	833	0.250	833
2/5	3195	1155	0.250	1155
3/7	1125	1070	0.250	1070
3/7	2160	1780	0.250	1780
3/7	3195	2320	0.250	2320
6/3	1125	625	0.250	625
6/3	2160	966	0.250	966
6/3	3195	1496	0.250	1496
7/3	1125	653	0.250	653
7/3	2160	900	0.250	900
7/3	3195	1278	0.250	1278
9/3	1125	975	0.250	975
9/3	2160	1638	0.250	1638
9/3	3195	2055	0.250	2055
10/6	1125	985	0.086	701
10/6	2160	1629	0.150	1458
10/6	3195	2917	0.095	2216
11/3	1125	1354	0.250	1354
11/3	2160	1979	0.250	1979
11/3	3195	2443	0.250	2443

Job No. 689-108 - February 9, 1990

A-3

MOORE & TABER GEOTECHNICAL ENGINEERS AND GEOLOGISTS

SOLUBLE SULPHATE CONTENT

(Calif. 417)

Boring No./ Sample No.	Percent Soluble Sulphates
2/7	0.0144
3/7	0.0122
4/3	0.0128
5/7	0.0126
6/3	0.0131
7/3	0.0152
8/8	0.0176
11/3	0.0171

Job No. 689-108 - February 9, 1990

A-4

MOORE & TABER GEOTECHNICAL ENGINEERS AND GEOLOGISTS

COMPACTION TESTS

ASTM D 1557, METHOD A

Boring No./ Sample No.	Description	Maximum Dry Density (pcf)	Optimum Moisture Content (%)
2/5	Red-brown fine to coarse CLAYEY SAND	122.5	12.7
3/7	Gray fine to coarse CLAYEY SAND	124.0	11.5
6/3	Red-brown fine to coarse CLAYEY SAND with GRAVEL	120.5	13.0
7/3	Yellow-brown fine to coarse CLAYEY SAND with GRAVEL	123.0	12.0
9/3	Red-brown fine to medium SILTY SAND with CLAY	119.0	13.5
10/6	Gray-green fine to coarse SILTY SAND with GRAVEL	131.0	9.5
11/3	Yellow-brown fine to coarse SILTY SAND with GRAVEL	122.5	11.5

Job No. 689-108 - February 9, 1990

A-5

MOORE & TABER GEOTECHNICAL ENGINEERS AND GEOLOGISTS

CORROSIVITY TESTS

(Calif. 643)

Boring No./ Sample No.	Minimum Resistivity (ohm-cm)	pH
3/1	123	6.9
4/5	309	6.0
6/6	524	6.3
8/2	287	8.2
9/6	255	5.9
10/6	401	6.7

Job No. 689-108 - February 9, 1990

A-6

MOORE & TABER GEOTECHNICAL ENGINEERS AND GEOLOGISTS

TABLE I: SUMMARY OF GRAIN SIZE DISTRIBUTION

Boring No./ Sample No.	Percent of Grain Size Finer by Weight				Percent of-No. 4 Finer than 200
	3"	3/4"	No. 4	No. 200	
2/5	100	97	97	25	26
2/6	70	53	45	14	31
2/7	60	37	31	5	16
3/7	75	60	44	13	30
3/8	75	75	75	7	9
4/3	100	100	100	24	24
4/5	80	74	70	10	14
5/3	55	38	25	7	28
5/6	65	45	41	6	15
5/8	60	47	37	13	35
6/3	100	74	60	11	18
6/4	100	99	97	30	31
7/2	70	55	41	13	32
7/3	70	53	43	16	37
7/4	70	52	46	6	13
8/4	100	100	100	36	36
8/6	90	82	81	22	27
8/8	100	97	94	8	9
9/3	100	100	100	21	21
9/6	100	98	95	21	22
10/2	95	77	73	17	23
10/5	90	87	85	7	8
10/6	80	70	64	9	14
11/2	90	84	77	18	23
11/3	70	50	40	14	35
11/4	60	52	48	8	17

Job No. 689-108 - February 9, 1990

A-7

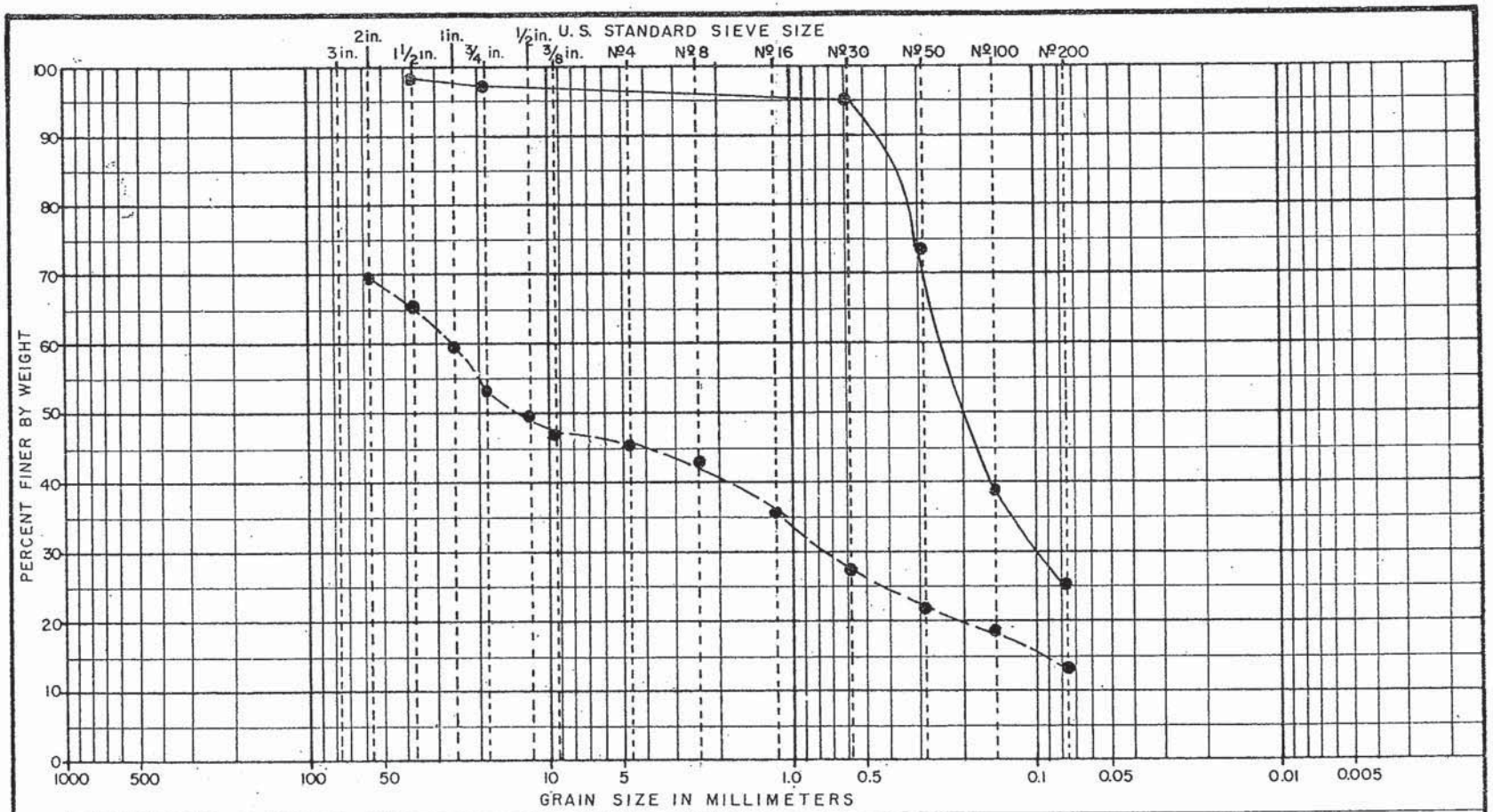

BOULDERS	COBBLES	GRAVEL		SAND			FINES (Silt and Clay)
		Coarse	Fine	Coarse	Medium	Fine	

Bor./Samp.№	Depth	Unified Soil Class.	Description	Nat. Water.	LL	PL	PI	SE	Max Dry Dens.	Opt. Moisture
2/5	15.0'	SC	CLAYEY SAND with GRAVEL	8.6						
2/6	19.0'	GC	CLAYEY GRAVEL with SAND	13.1						

GRAIN SIZE DISTRIBUTION

MOORE & TABER
Engineers — Geologists

Project I-15

By Pennie C. Date 10/2/89

Job No. 689-108

Job No. 689-108 - September 23, 1989

A-8

November 6, 2014

Job No. 689-108 - September 28, 1989

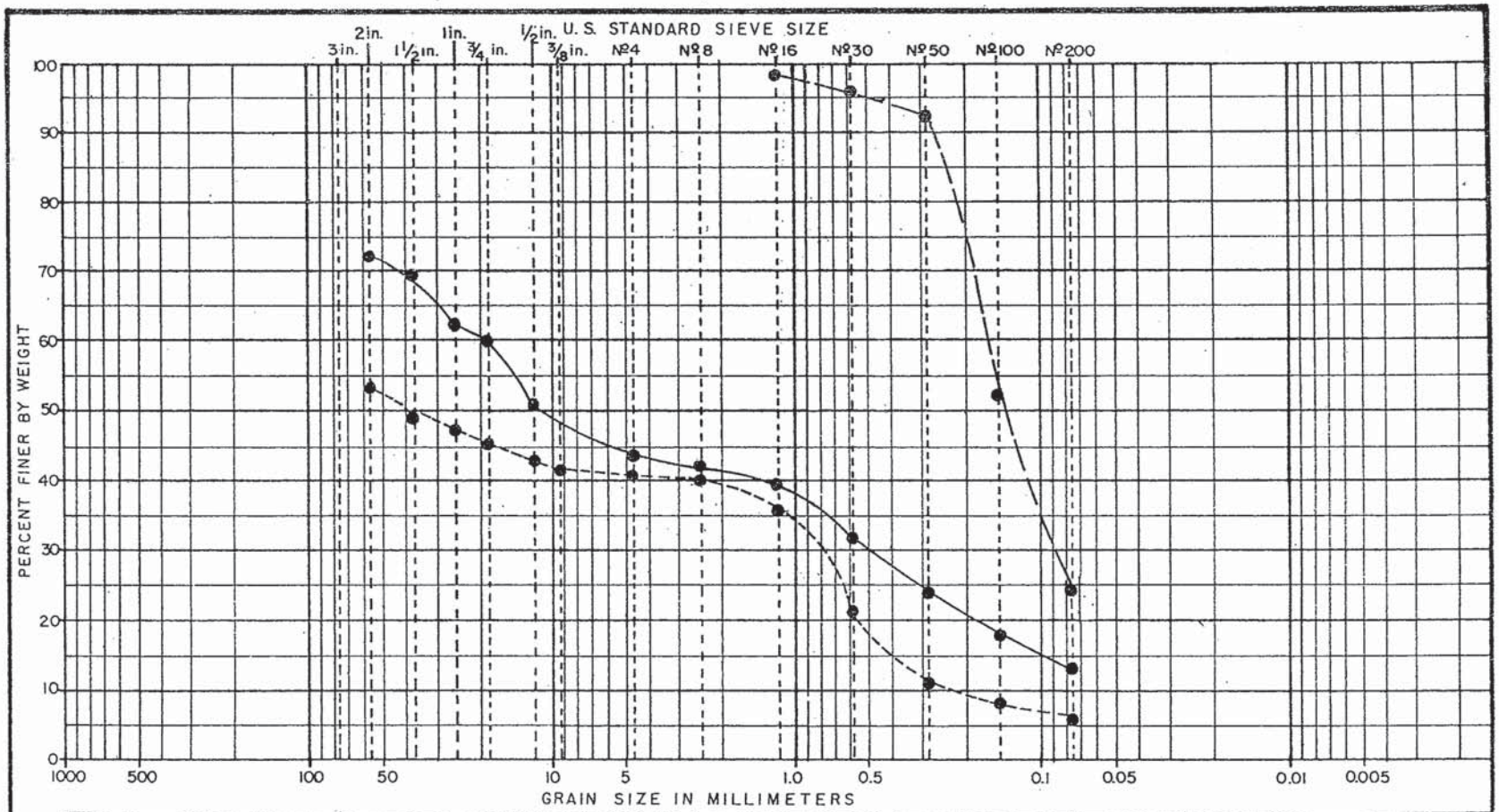

BOULDERS	COBBLES	GRAVEL		SAND			FINES (Silt and Clay)
		Coarse	Fine	Coarse	Medium	Fine	

Bor./Samp.№	Depth	Unified Soil Class.	Description	Nat. Water	LL	PL	PI	SE	Max Dry Dens.	Opt. Moisture
3/7	22.0	GC	CLAYEY GRAVEL with SAND	11.2						
4/3	12.0	SM	SILTY SAND	12.9						
5/6	21.0	GP-GC	Poorly graded GRAVEL with CLAY and SAND	8.0						

GRAIN SIZE DISTRIBUTION

MOORE & TABER
Engineers — Geologists

Project I-15

By Pennie C. Date 10/2/89

Job No. 689-108

A-9

November 6, 2014

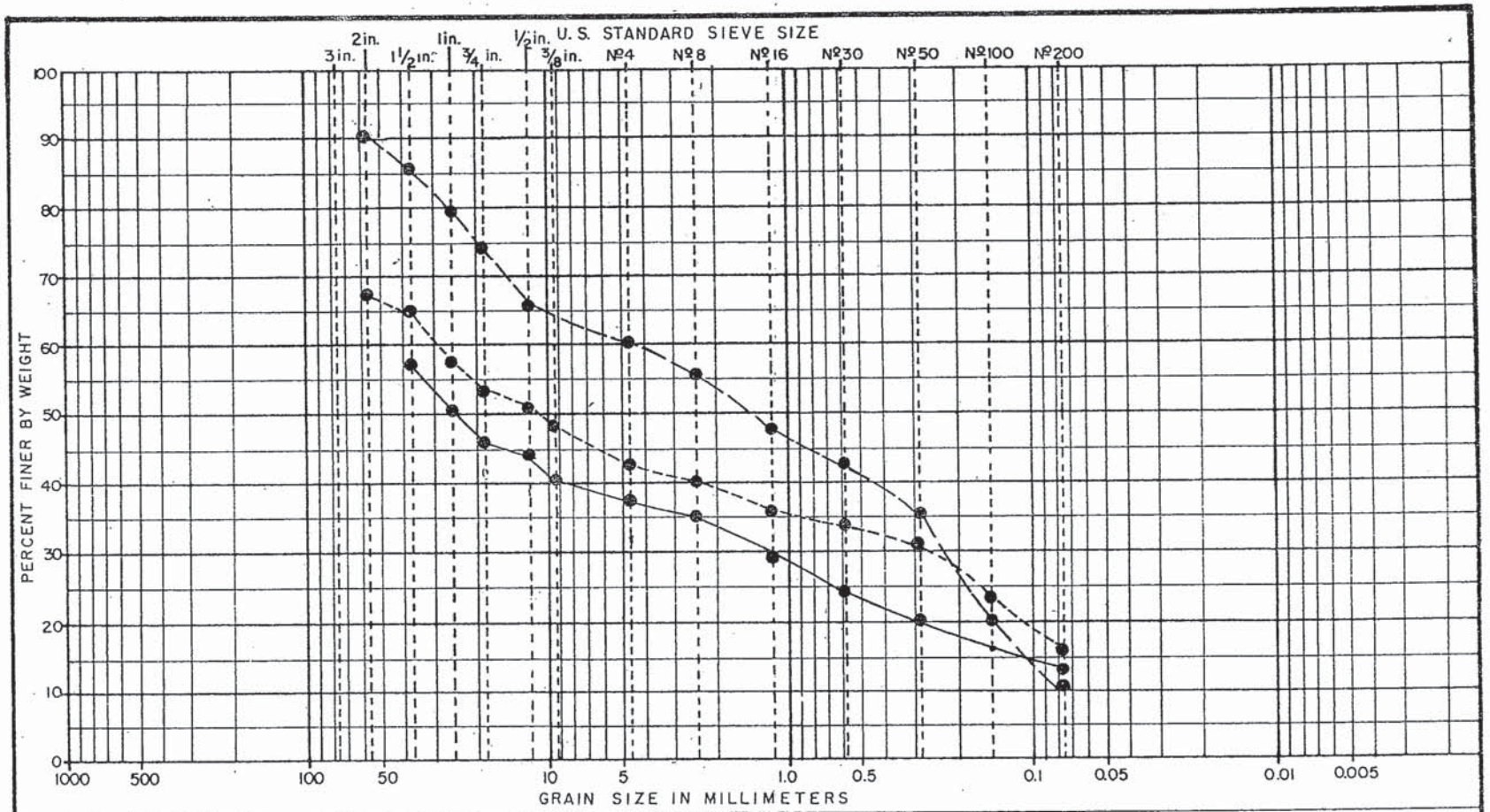

BOULDERS	COBBLES	GRAVEL		SAND			FINES (Silt and Clay)
		Coarse	Fine	Coarse	Medium	Fine	

Bor./Samp.№	Depth	Unified Soil Class.	Description	Nat. Water	LL	PL	PI	SE	Max Dry Dens.	Opt. Moisture
5/8	40.0'	GC	CLAYEY GRAVEL with SAND	11.5						
6/3	15.0'	SP-SC	Poorly graded SAND with CLAY and GRAVEL	12.6						
7/3	25.0'	GC	CLAYEY GRAVEL with SAND	12.1						

GRAIN SIZE DISTRIBUTION

MOORE & TABER
Engineers — Geologists

Project I-15

By Pennie C. Date 10/3/89

Job No. 689-108 - September 28, 1989

A-10

Job No. 689-108

November 6, 2014

Job No. 689-108 - September 28, 1989

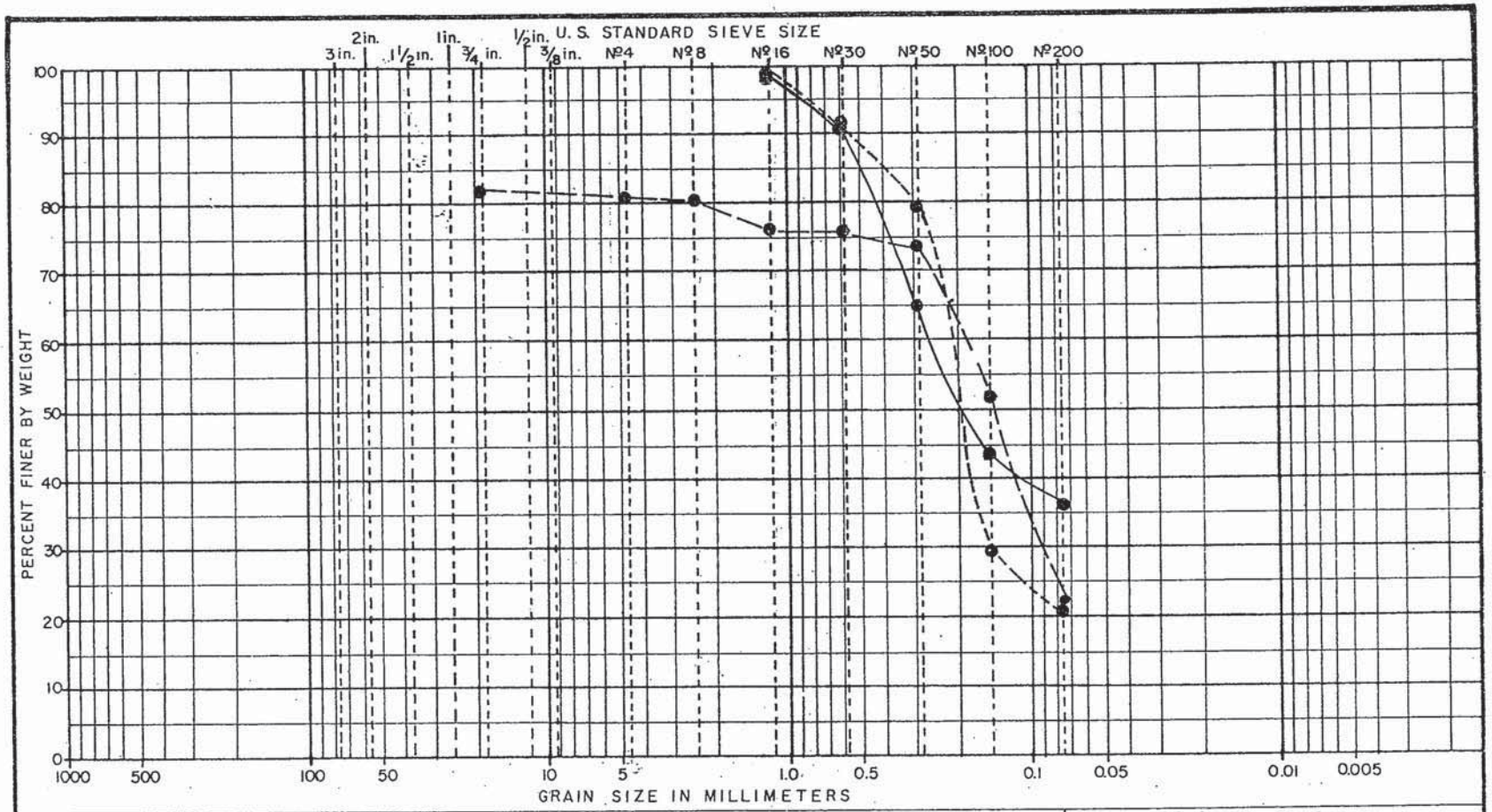

BOULDERS	COBBLES	GRAVEL		SAND			FINES (Silt and Clay)
		Coarse	Fine	Coarse	Medium	Fine	

Bor./Samp.№	Depth	Unified Soil Class.	Description	Nat. Water	LL	PL	PI	SE	Max Dry Dens.	Opt. Moisture
8/4	10.0'	SC	CLAYEY SAND	10.7						
8/6	15.0'	SC	CLAYEY SAND with GRAVEL	14.6						
9/3	10.0'	SM	SILTY SAND with CLAY	12.1						

GRAIN SIZE DISTRIBUTION

MOORE & TABER
Engineers — Geologists

Project I-15

By P.C. Date 10/3/89

A-11

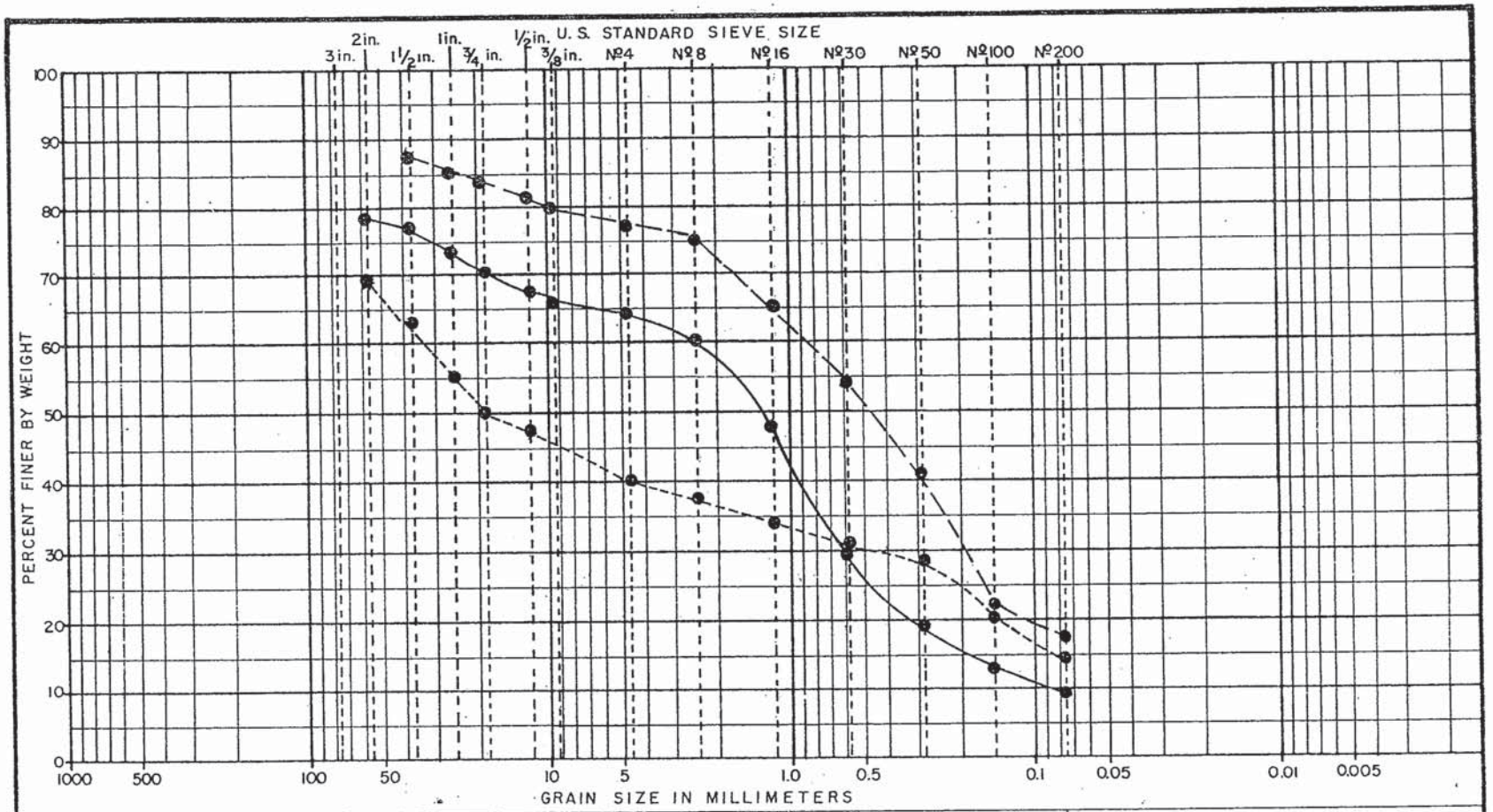

BOULDERS	COBBLES	GRAVEL		SAND			FINES (Silt and Clay)
		Coarse	Fine	Coarse	Medium	Fine	

Bor./Samp.№	Depth	Unified Soil Class.	Description	Nat. Water	LL	PL	PI	SE	Max Dry Dens.	Opt. Moisture
10/6	32.0'	SW-SC	well graded SAND with CLAY and GRAVEL	4.4						
11/2	10.0'	SC	CLAYEY SAND with GRAVEL	11.5						
11/3	11.0'	GC	CLAYEY GRAVEL and SAND	14.5						

GRAIN SIZE DISTRIBUTION

MOORE & TABER
Engineers — Geologists

Project I-15

By P.C. Date 10/3/89

Job No. 689-108 - September 28, 1989 -

A-12

APPENDIX E
ANALYSES

SELECT SITE LOCATION

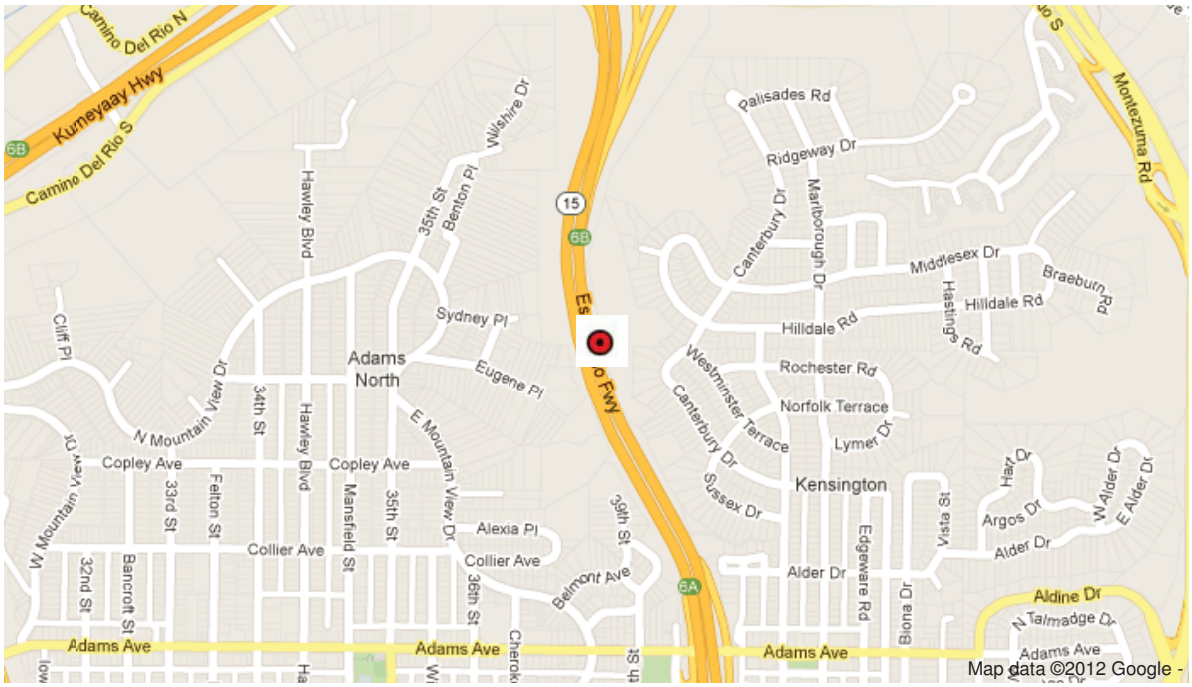

CALCULATED SPECTRA

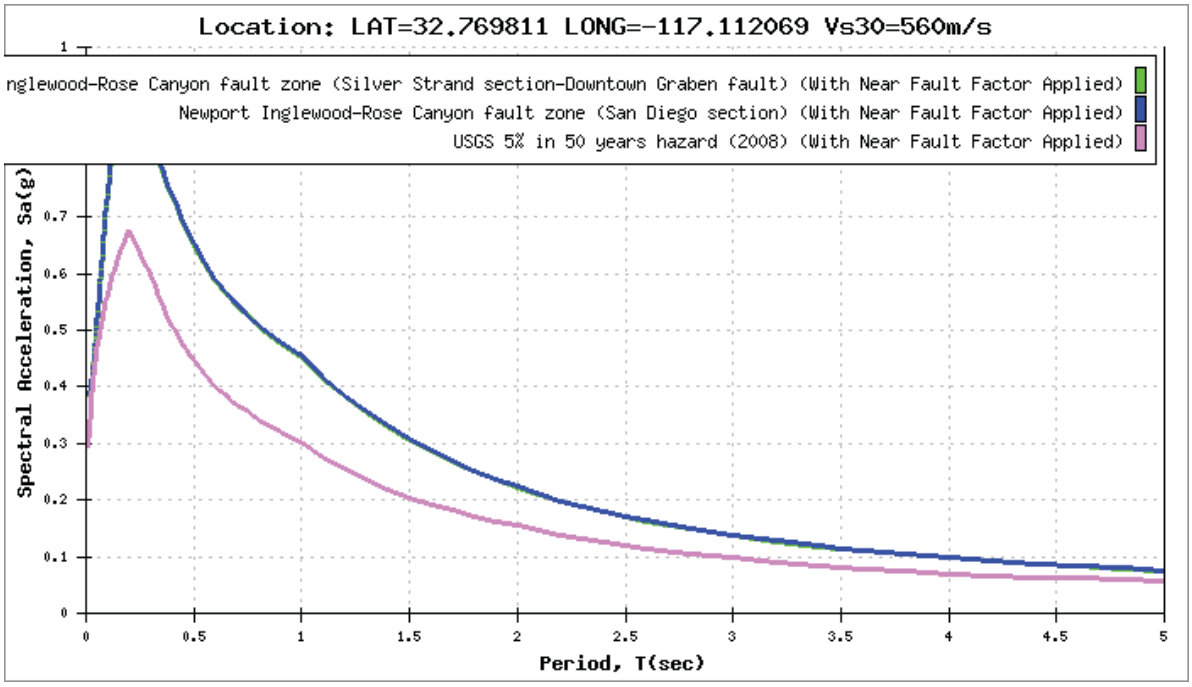

SITE DATA

Shear Wave Velocity, Vs_{30}:	560 m/s
Latitude:	32.769811
Longitude:	-117.112069
Depth to Vs = 1.0 km/s:	74 m
Depth to Vs = 2.5 km/s:	2.00 km

DETERMINISTIC

Newport Inglewood-Rose Canyon fault zone (Silver Strand section-Downtown Graben fault)

Fault ID:	423
Maximum Magnitude (MMax):	7.5
Fault Type:	RLSS
Fault Dip:	90 Deg
Dip Direction:	V
Bottom of Rupture Plane:	13.00 km
Top of Rupture Plane(Ztor):	0.00 km
Rrup	6.57 km
Rjb:	6.57 km
Rx:	4.65 km
Fnorm:	0
Frev:	0

Period	SA (Base Spectrum)	Basin Factor	Near Fault Factor (Applied)	SA (Final Spectrum)
0.01	0.385	1.000	1.000	0.385
0.02	0.392	1.000	1.000	0.392
0.022	0.398	1.000	1.000	0.398
0.025	0.406	1.000	1.000	0.406
0.029	0.417	1.000	1.000	0.417
0.03	0.420	1.000	1.000	0.420
0.032	0.428	1.000	1.000	0.428
0.035	0.441	1.000	1.000	0.441
0.036	0.445	1.000	1.000	0.445
0.04	0.462	1.000	1.000	0.462
0.042	0.471	1.000	1.000	0.471
0.044	0.480	1.000	1.000	0.480
0.045	0.485	1.000	1.000	0.485
0.046	0.489	1.000	1.000	0.489
0.048	0.498	1.000	1.000	0.498
0.05	0.507	1.000	1.000	0.507
0.055	0.533	1.000	1.000	0.533
0.06	0.559	1.000	1.000	0.559
0.065	0.584	1.000	1.000	0.584
0.067	0.594	1.000	1.000	0.594
0.07	0.608	1.000	1.000	0.608

0.075	0.632	1.000	1.000	0.632
0.08	0.655	1.000	1.000	0.655
0.085	0.678	1.000	1.000	0.678
0.09	0.699	1.000	1.000	0.699
0.095	0.720	1.000	1.000	0.720
0.1	0.740	1.000	1.000	0.740
0.11	0.773	1.000	1.000	0.773
0.12	0.802	1.000	1.000	0.802
0.13	0.827	1.000	1.000	0.827
0.133	0.833	1.000	1.000	0.833
0.14	0.847	1.000	1.000	0.847
0.15	0.865	1.000	1.000	0.865
0.16	0.877	1.000	1.000	0.877
0.17	0.886	1.000	1.000	0.886
0.18	0.894	1.000	1.000	0.894
0.19	0.900	1.000	1.000	0.900
0.2	0.904	1.000	1.000	0.904
0.22	0.895	1.000	1.000	0.895
0.24	0.883	1.000	1.000	0.883
0.25	0.877	1.000	1.000	0.877
0.26	0.868	1.000	1.000	0.868
0.28	0.852	1.000	1.000	0.852
0.29	0.843	1.000	1.000	0.843
0.3	0.834	1.000	1.000	0.834
0.32	0.814	1.000	1.000	0.814
0.34	0.793	1.000	1.000	0.793
0.35	0.783	1.000	1.000	0.783
0.36	0.773	1.000	1.000	0.773
0.38	0.753	1.000	1.000	0.753
0.4	0.734	1.000	1.000	0.734
0.42	0.715	1.000	1.000	0.715
0.44	0.697	1.000	1.000	0.697
0.45	0.689	1.000	1.000	0.689
0.46	0.680	1.000	1.000	0.680
0.48	0.664	1.000	1.000	0.664
0.5	0.648	1.000	1.000	0.648
0.55	0.603	1.000	1.020	0.615
0.6	0.565	1.000	1.040	0.587
0.65	0.531	1.000	1.060	0.563
0.667	0.521	1.000	1.067	0.555
0.7	0.502	1.000	1.080	0.542
0.75	0.475	1.000	1.100	0.523
0.8	0.451	1.000	1.120	0.506
0.85	0.430	1.000	1.140	0.490
0.9	0.411	1.000	1.160	0.476
0.95	0.393	1.000	1.180	0.464
1	0.377	1.000	1.200	0.452
1.1	0.346	1.000	1.200	0.415
1.2	0.319	1.000	1.200	0.383

1.3	0.295	1.000	1.200	0.354
1.4	0.274	1.000	1.200	0.329
1.5	0.256	1.000	1.200	0.307
1.6	0.238	1.000	1.200	0.286
1.7	0.223	1.000	1.200	0.267
1.8	0.209	1.000	1.200	0.250
1.9	0.196	1.000	1.200	0.235
2	0.185	1.000	1.200	0.222
2.2	0.165	1.000	1.200	0.198
2.4	0.149	1.000	1.200	0.179
2.5	0.142	1.000	1.200	0.170
2.6	0.135	1.000	1.200	0.162
2.8	0.124	1.000	1.200	0.149
3	0.114	1.000	1.200	0.137
3.2	0.106	1.000	1.200	0.127
3.4	0.099	1.000	1.200	0.118
3.5	0.095	1.000	1.200	0.114
3.6	0.092	1.000	1.200	0.110
3.8	0.086	1.000	1.200	0.104
4	0.081	1.000	1.200	0.097
4.2	0.077	1.000	1.200	0.092
4.4	0.073	1.000	1.200	0.087
4.6	0.069	1.000	1.200	0.083
4.8	0.066	1.000	1.200	0.079
5	0.063	1.000	1.200	0.076

Newport Inglewood-Rose Canyon fault zone (San Diego section)

Fault ID:	224
Maximum Magnitude (MMax):	7.5
Fault Type:	RLSS
Fault Dip:	90 Deg
Dip Direction:	V
Bottom of Rupture Plane:	13.00 km
Top of Rupture Plane(Ztor):	0.00 km
Rrup	6.51 km
Rjb:	6.51 km
Rx:	6.50 km
Fnorm:	0
Frev:	0

Period	SA (Base Spectrum)	Basin Factor	Near Fault Factor (Applied)	SA (Final Spectrum)
0.01	0.387	1.000	1.000	0.387
0.02	0.394	1.000	1.000	0.394
0.022	0.399	1.000	1.000	0.399
0.025	0.408	1.000	1.000	0.408
0.029	0.419	1.000	1.000	0.419
0.03	0.422	1.000	1.000	0.422
0.032	0.430	1.000	1.000	0.430

0.035	0.443	1.000	1.000	0.443
0.036	0.447	1.000	1.000	0.447
0.04	0.464	1.000	1.000	0.464
0.042	0.473	1.000	1.000	0.473
0.044	0.482	1.000	1.000	0.482
0.045	0.487	1.000	1.000	0.487
0.046	0.491	1.000	1.000	0.491
0.048	0.500	1.000	1.000	0.500
0.05	0.510	1.000	1.000	0.510
0.055	0.535	1.000	1.000	0.535
0.06	0.561	1.000	1.000	0.561
0.065	0.586	1.000	1.000	0.586
0.067	0.596	1.000	1.000	0.596
0.07	0.611	1.000	1.000	0.611
0.075	0.635	1.000	1.000	0.635
0.08	0.658	1.000	1.000	0.658
0.085	0.680	1.000	1.000	0.680
0.09	0.702	1.000	1.000	0.702
0.095	0.722	1.000	1.000	0.722
0.1	0.743	1.000	1.000	0.743
0.11	0.775	1.000	1.000	0.775
0.12	0.805	1.000	1.000	0.805
0.13	0.830	1.000	1.000	0.830
0.133	0.836	1.000	1.000	0.836
0.14	0.850	1.000	1.000	0.850
0.15	0.868	1.000	1.000	0.868
0.16	0.880	1.000	1.000	0.880
0.17	0.889	1.000	1.000	0.889
0.18	0.897	1.000	1.000	0.897
0.19	0.903	1.000	1.000	0.903
0.2	0.908	1.000	1.000	0.908
0.22	0.898	1.000	1.000	0.898
0.24	0.887	1.000	1.000	0.887
0.25	0.880	1.000	1.000	0.880
0.26	0.872	1.000	1.000	0.872
0.28	0.856	1.000	1.000	0.856
0.29	0.847	1.000	1.000	0.847
0.3	0.838	1.000	1.000	0.838
0.32	0.817	1.000	1.000	0.817
0.34	0.797	1.000	1.000	0.797
0.35	0.786	1.000	1.000	0.786
0.36	0.777	1.000	1.000	0.777
0.38	0.757	1.000	1.000	0.757
0.4	0.737	1.000	1.000	0.737
0.42	0.719	1.000	1.000	0.719
0.44	0.701	1.000	1.000	0.701
0.45	0.692	1.000	1.000	0.692
0.46	0.684	1.000	1.000	0.684
0.48	0.667	1.000	1.000	0.667

0.5	0.651	1.000	1.000	0.651
0.55	0.606	1.000	1.020	0.618
0.6	0.568	1.000	1.040	0.590
0.65	0.534	1.000	1.060	0.566
0.667	0.523	1.000	1.067	0.558
0.7	0.504	1.000	1.080	0.544
0.75	0.478	1.000	1.100	0.525
0.8	0.454	1.000	1.120	0.508
0.85	0.432	1.000	1.140	0.493
0.9	0.413	1.000	1.160	0.479
0.95	0.395	1.000	1.180	0.466
1	0.379	1.000	1.200	0.454
1.1	0.347	1.000	1.200	0.417
1.2	0.320	1.000	1.200	0.384
1.3	0.297	1.000	1.200	0.356
1.4	0.276	1.000	1.200	0.331
1.5	0.257	1.000	1.200	0.308
1.6	0.239	1.000	1.200	0.287
1.7	0.224	1.000	1.200	0.269
1.8	0.210	1.000	1.200	0.252
1.9	0.197	1.000	1.200	0.237
2	0.186	1.000	1.200	0.223
2.2	0.166	1.000	1.200	0.199
2.4	0.150	1.000	1.200	0.179
2.5	0.142	1.000	1.200	0.171
2.6	0.136	1.000	1.200	0.163
2.8	0.125	1.000	1.200	0.149
3	0.115	1.000	1.200	0.138
3.2	0.106	1.000	1.200	0.128
3.4	0.099	1.000	1.200	0.119
3.5	0.096	1.000	1.200	0.115
3.6	0.093	1.000	1.200	0.111
3.8	0.087	1.000	1.200	0.104
4	0.082	1.000	1.200	0.098
4.2	0.077	1.000	1.200	0.093
4.4	0.073	1.000	1.200	0.088
4.6	0.070	1.000	1.200	0.084
4.8	0.066	1.000	1.200	0.080
5	0.063	1.000	1.200	0.076

PROBABILISTIC

Probabilistic Model
USGS Seismic Hazard Map(2008) 975 Year Return Period

Period	SA (Base Spectrum)	Basin Factor	Near Fault Factor (Applied)	SA (Final Spectrum)
0.01	0.295	1.000	1.000	0.295

0.02	0.358	1.000	1.000	0.358
0.022	0.368	1.000	1.000	0.368
0.025	0.381	1.000	1.000	0.381
0.029	0.398	1.000	1.000	0.398
0.03	0.401	1.000	1.000	0.401
0.032	0.409	1.000	1.000	0.409
0.035	0.419	1.000	1.000	0.419
0.036	0.423	1.000	1.000	0.423
0.04	0.435	1.000	1.000	0.435
0.042	0.441	1.000	1.000	0.441
0.044	0.447	1.000	1.000	0.447
0.045	0.450	1.000	1.000	0.450
0.046	0.453	1.000	1.000	0.453
0.048	0.458	1.000	1.000	0.458
0.05	0.464	1.000	1.000	0.464
0.055	0.476	1.000	1.000	0.476
0.06	0.488	1.000	1.000	0.488
0.065	0.499	1.000	1.000	0.499
0.067	0.503	1.000	1.000	0.503
0.07	0.510	1.000	1.000	0.510
0.075	0.520	1.000	1.000	0.520
0.08	0.529	1.000	1.000	0.529
0.085	0.538	1.000	1.000	0.538
0.09	0.547	1.000	1.000	0.547
0.095	0.555	1.000	1.000	0.555
0.1	0.563	1.000	1.000	0.563
0.11	0.578	1.000	1.000	0.578
0.12	0.591	1.000	1.000	0.591
0.13	0.604	1.000	1.000	0.604
0.133	0.608	1.000	1.000	0.608
0.14	0.616	1.000	1.000	0.616
0.15	0.628	1.000	1.000	0.628
0.16	0.639	1.000	1.000	0.639
0.17	0.649	1.000	1.000	0.649
0.18	0.659	1.000	1.000	0.659
0.19	0.669	1.000	1.000	0.669
0.2	0.678	1.000	1.000	0.678
0.22	0.658	1.000	1.000	0.658
0.24	0.641	1.000	1.000	0.641
0.25	0.633	1.000	1.000	0.633
0.26	0.626	1.000	1.000	0.626
0.28	0.612	1.000	1.000	0.612
0.29	0.605	1.000	1.000	0.605
0.3	0.599	1.000	1.000	0.599
0.32	0.577	1.000	1.000	0.577
0.34	0.557	1.000	1.000	0.557
0.35	0.548	1.000	1.000	0.548
0.36	0.539	1.000	1.000	0.539
0.38	0.522	1.000	1.000	0.522

0.4	0.507	1.000	1.000	0.507
0.42	0.493	1.000	1.000	0.493
0.44	0.480	1.000	1.000	0.480
0.45	0.473	1.000	1.000	0.473
0.46	0.467	1.000	1.000	0.467
0.48	0.456	1.000	1.000	0.456
0.5	0.445	1.000	1.000	0.445
0.55	0.413	1.000	1.020	0.421
0.6	0.386	1.000	1.040	0.401
0.65	0.362	1.000	1.060	0.384
0.667	0.355	1.000	1.067	0.378
0.7	0.341	1.000	1.080	0.369
0.75	0.323	1.000	1.100	0.356
0.8	0.306	1.000	1.120	0.343
0.85	0.291	1.000	1.140	0.331
0.9	0.277	1.000	1.160	0.321
0.95	0.264	1.000	1.180	0.312
1	0.253	1.000	1.200	0.304
1.1	0.231	1.000	1.200	0.277
1.2	0.212	1.000	1.200	0.254
1.3	0.196	1.000	1.200	0.235
1.4	0.183	1.000	1.200	0.219
1.5	0.171	1.000	1.200	0.205
1.6	0.160	1.000	1.200	0.192
1.7	0.151	1.000	1.200	0.182
1.8	0.143	1.000	1.200	0.172
1.9	0.136	1.000	1.200	0.163
2	0.129	1.000	1.200	0.155
2.2	0.116	1.000	1.200	0.139
2.4	0.105	1.000	1.200	0.126
2.5	0.100	1.000	1.200	0.120
2.6	0.096	1.000	1.200	0.115
2.8	0.088	1.000	1.200	0.106
3	0.082	1.000	1.200	0.098
3.2	0.076	1.000	1.200	0.091
3.4	0.070	1.000	1.200	0.084
3.5	0.068	1.000	1.200	0.082
3.6	0.066	1.000	1.200	0.079
3.8	0.062	1.000	1.200	0.074
4	0.058	1.000	1.200	0.070
4.2	0.056	1.000	1.200	0.067
4.4	0.053	1.000	1.200	0.064
4.6	0.051	1.000	1.200	0.062
4.8	0.049	1.000	1.200	0.059
5	0.048	1.000	1.200	0.057

Envelope Data

Period	SA
0.01	0.385
0.02	0.392
0.022	0.398
0.025	0.406
0.029	0.417
0.03	0.420
0.032	0.428
0.035	0.441
0.036	0.445
0.04	0.462
0.042	0.471
0.044	0.480
0.045	0.485
0.046	0.489
0.048	0.498
0.05	0.507
0.055	0.533
0.06	0.559
0.065	0.584
0.067	0.594
0.07	0.608
0.075	0.632
0.08	0.655
0.085	0.678
0.09	0.699
0.095	0.720
0.1	0.740
0.11	0.773
0.12	0.802
0.13	0.827
0.133	0.833
0.14	0.847
0.15	0.865
0.16	0.877
0.17	0.886
0.18	0.894
0.19	0.900
0.2	0.904
0.22	0.895
0.24	0.883
0.25	0.877
0.26	0.868
0.28	0.852
0.29	0.843
0.3	0.834
0.32	0.814
0.34	0.793

0.35	0.783
0.36	0.773
0.38	0.753
0.4	0.734
0.42	0.715
0.44	0.697
0.45	0.689
0.46	0.680
0.48	0.664
0.5	0.648
0.55	0.615
0.6	0.587
0.65	0.563
0.667	0.555
0.7	0.542
0.75	0.523
0.8	0.506
0.85	0.490
0.9	0.476
0.95	0.464
1	0.452
1.1	0.415
1.2	0.383
1.3	0.354
1.4	0.329
1.5	0.307
1.6	0.286
1.7	0.267
1.8	0.250
1.9	0.235
2	0.222
2.2	0.198
2.4	0.179
2.5	0.170
2.6	0.162
2.8	0.149
3	0.137
3.2	0.127
3.4	0.118
3.5	0.114
3.6	0.110
3.8	0.104
4	0.097
4.2	0.092
4.4	0.087
4.6	0.083
4.8	0.079
5	0.076

Analysis of CY-CB Attenuation Prediction Equation vs ARS Online Results

Comparison of ARS Curves
(unlock sheet with "shmi")

Model Inputs

Fault		
Magnitude	7.5	(5 to 8.5)
F_{RV}	0	(input 1 = Rev)
F_{NM}	0	(input 1 = Normal)
Dip (degree)	90	(0 to 90)
Z_{TOR} *(km)*	0	
Distance		
R_{RUP} *(km)*	6.6	
R_{JB} *(km)*	6.6	
R_x *(km)*	4.7	
Hanging Wall?	☐ Yes?	
Near-Field Factor?	☑ Yes?	
Site		
V_{S30} *(m/sec)*	560	(270 to 1500 m/s)
$Z_{1.0}$ *(m)*	74	(0 - No Basin)
$Z_{2.5}$ *(km)*	2	(0 - No Basin)
No. Cal. Basin?	☐ Yes ?	(Check only for sites located within a Basin)
So. Cal. Basin?	☐ Yes ?	

Analysis

ARS Online vs CY-CB Spreadsheet Results
MAX. % Diff. = 1%

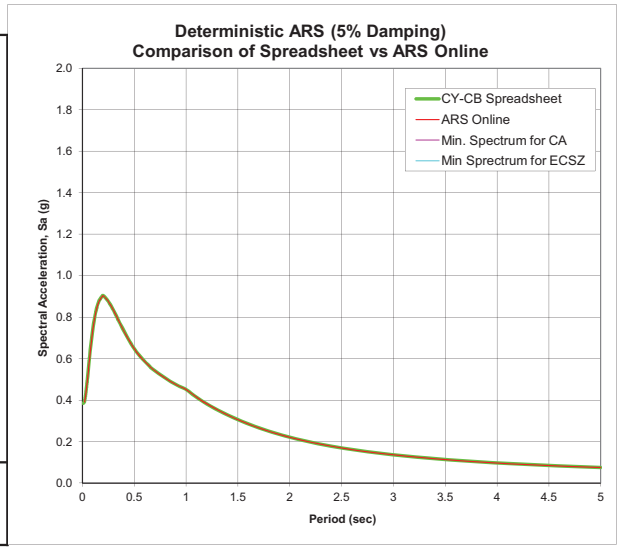

CY-CB Spreadsheet Results	
T (sec)	CB-CY S(a)
0.010	0.38506
0.020	0.39220
0.022	0.39774
0.025	0.40616
0.029	0.41709
0.030	0.42022
0.032	0.42840
0.035	0.44094
0.036	0.44531
0.040	0.46238
0.042	0.47137
0.044	0.48017
0.045	0.48481
0.046	0.48934
0.048	0.49833
0.050	0.50750
0.055	0.53316
0.060	0.55903
0.065	0.58395
0.067	0.59398
0.070	0.60832
0.075	0.63214
0.080	0.65498
0.085	0.67758
0.090	0.69893
0.095	0.71977
0.100	0.73977
0.110	0.77263
0.120	0.80176
0.130	0.82662
0.133	0.83288
0.140	0.84695
0.150	0.86462
0.160	0.87679
0.170	0.88603
0.180	0.89388

Place ARS Online Deterministic Data Here "Paste"					
T (sec)	Base S(a)	Basin Factor	Near Fault Factor	Final Adj. S(a)	Diff. (%)
0.01	0.385	1	1	0.385	0%
0.02	0.392	1	1	0.392	0%
0.022	0.398	1	1	0.398	0%
0.025	0.406	1	1	0.406	0%
0.029	0.417	1	1	0.417	0%
0.03	0.42	1	1	0.42	0%
0.032	0.428	1	1	0.428	0%
0.035	0.441	1	1	0.441	0%
0.036	0.445	1	1	0.445	0%
0.04	0.462	1	1	0.462	0%
0.042	0.471	1	1	0.471	0%
0.044	0.48	1	1	0.48	0%
0.045	0.485	1	1	0.485	0%
0.046	0.489	1	1	0.489	0%
0.048	0.498	1	1	0.498	0%
0.05	0.507	1	1	0.507	0%
0.055	0.533	1	1	0.533	0%
0.06	0.559	1	1	0.559	0%
0.065	0.584	1	1	0.584	0%
0.067	0.594	1	1	0.594	0%
0.07	0.608	1	1	0.608	0%
0.075	0.632	1	1	0.632	0%
0.08	0.655	1	1	0.655	0%
0.085	0.678	1	1	0.678	0%
0.09	0.699	1	1	0.699	0%
0.095	0.72	1	1	0.72	0%
0.1	0.74	1	1	0.74	0%
0.11	0.773	1	1	0.773	0%
0.12	0.802	1	1	0.802	0%
0.13	0.827	1	1	0.827	0%
0.133	0.833	1	1	0.833	0%
0.14	0.847	1	1	0.847	0%
0.15	0.865	1	1	0.865	0%
0.16	0.877	1	1	0.877	0%
0.17	0.886	1	1	0.886	0%
0.18	0.894	1	1	0.894	0%

For Comparsion Plots of Min. Sprectra, Paste Special into Cells			
Min. Spectrum for CA		Min Sprectrum for ECSZ	
T (sec)	S (a)	T (sec)	S (a)

Deterministic_Response_Spectrum_072809.xls 8/22/2012 3:07 PM

Comparison spreadsheet of the 2008 USGS Probabilistic Seismic Hazard Data and ARS Online Probabilistic Data (unlock spreadsheet "shmi")
Spectral Accelerations Points from USGS Website at http://earthquake.usgs.gov/research/hazmaps/products_data/2008/data/

*** Note: This spreadsheet uses the given latitude and longitude data provided by the user to estimate spectral acceleration values with a probability of exceedence 5% in 50 yrs (or 975 yr return period). The four spectral acceleration data points plotted on the graph are from the USGS website and are based on a 0.05 degree grid. Basic interpolation is used to estimate intermediate values inside each grid. Raw Data points are provided in the tabs of this spreadsheet. Corner grid spectral acceleration data are shown in the "calculation" tab.**

Input Site Information	
Latitude	Longitude
32.7698	-117.1121
V_{s30} (m/s) =	560
Near Fault Factor, Derived from USGS Deagg. Dist (km) =	17.3
$Z_{1.0}$ (m) =	74
$Z_{2.5}$ (km) =	2

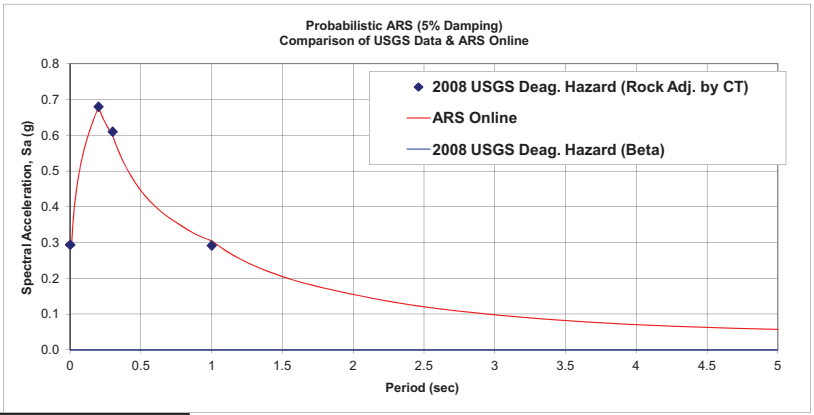

Place ARS Online Probabilistic Data Here "Paste"

T (sec)	Base Spectrum S(a)	Basin Factor	Near Fault Factor	Final Adj. Spectrum S(a)
0.01	0.295	1	1	0.295
0.02	0.358	1	1	0.358
0.022	0.368	1	1	0.368
0.025	0.381	1	1	0.381
0.029	0.398	1	1	0.398
0.03	0.401	1	1	0.401
0.032	0.409	1	1	0.409
0.035	0.419	1	1	0.419
0.036	0.423	1	1	0.423
0.04	0.435	1	1	0.435
0.042	0.441	1	1	0.441
0.044	0.447	1	1	0.447
0.045	0.45	1	1	0.45
0.046	0.453	1	1	0.453
0.048	0.458	1	1	0.458
0.05	0.464	1	1	0.464
0.055	0.476	1	1	0.476
0.06	0.488	1	1	0.488
0.065	0.499	1	1	0.499
0.067	0.503	1	1	0.503
0.07	0.51	1	1	0.51
0.075	0.52	1	1	0.52
0.08	0.529	1	1	0.529
0.085	0.538	1	1	0.538
0.09	0.547	1	1	0.547
0.095	0.555	1	1	0.555
0.1	0.563	1	1	0.563
0.11	0.578	1	1	0.578
0.12	0.591	1	1	0.591
0.13	0.604	1	1	0.604
0.133	0.608	1	1	0.608
0.14	0.616	1	1	0.616
0.15	0.628	1	1	0.628
0.16	0.639	1	1	0.639
0.17	0.649	1	1	0.649
0.18	0.659	1	1	0.659
0.19	0.669	1	1	0.669
0.2	0.678	1	1	0.678
0.22	0.658	1	1	0.658
0.24	0.641	1	1	0.641
0.25	0.633	1	1	0.633

Analysis of ARS Online Results vs USGS Deaggregation Hazard (Adj. By CT)

Period (sec)	USGS Interpolated Spectral Accel.	Adj. for Near Fault Effect	Adj. for Soil Amplification	Adj. For Basin Effect	Final Adj. USGS Spec Accel	ARS Online Final Adj. Spect. Accel.	% Difference (bet. USGS & ARS Online)
0	0.273	1.000	1.079	1.000	0.294	0.295	-0.3%
0.2	0.645	1.000	1.055	1.000	0.680	0.678	0.3%
0.3	0.530	1.000	1.152	1.000	0.610	0.599	1.8%
1	0.203	1.154	1.250	1.000	0.292	0.304	-4.0%

Max % Difference = 4.0%

USGS Deaggregation Hazard (Beta) with Near Field and Basin Factors

Period (sec)	INPUT USGS Deagg. Spec Accel	Adj. for Near Fault Effect	Adj. For Basin Effect	Final Adj. USGS Deagg Spec Accel	ARS Online Final Adj. Spect. Accel.	% Difference (bet. USGS & ARS Online)
0		1.000	1.000		0.295	0.0%
0.1		1.000	1.000		0.563	0.0%
0.2		1.000	1.000		0.678	0.0%
0.3		1.000	1.000		0.599	0.0%
0.5		1.000	1.000		0.445	0.0%
1		1.154	1.000		0.304	0.0%
2		1.154	1.000		0.155	0.0%
3		1.154	1.000		0.098	0.0%
4		1.154	1.000		0.07	0.0%
5		1.154	1.000		0.057	0.0%

Max % Difference = 0.0%

Probabilistic_Response_Spectrum_080409.xls 8/22/2012 3:07 PM

PSH Deaggregation on NEHRP C soil
Unnamed 117.728° W, 32.719 N.

Peak Horiz. Ground Accel.>=0.2573 g
Ann. Exceedance Rate .103E-02. Mean Return Time 975 years
Mean (R,M,ε_0) 17.3 km, 6.25, 0.59
Modal (R,M,ε_0) = 23.2 km, 7.24, 0.61 (from peak R,M bin)
Modal (R,M,ε*) = 23.3 km, 7.24, 1 to 2 sigma (from peak R,M,ε bin)
Binning: DeltaR 10. km, deltaM=0.2, Deltaε=1.0

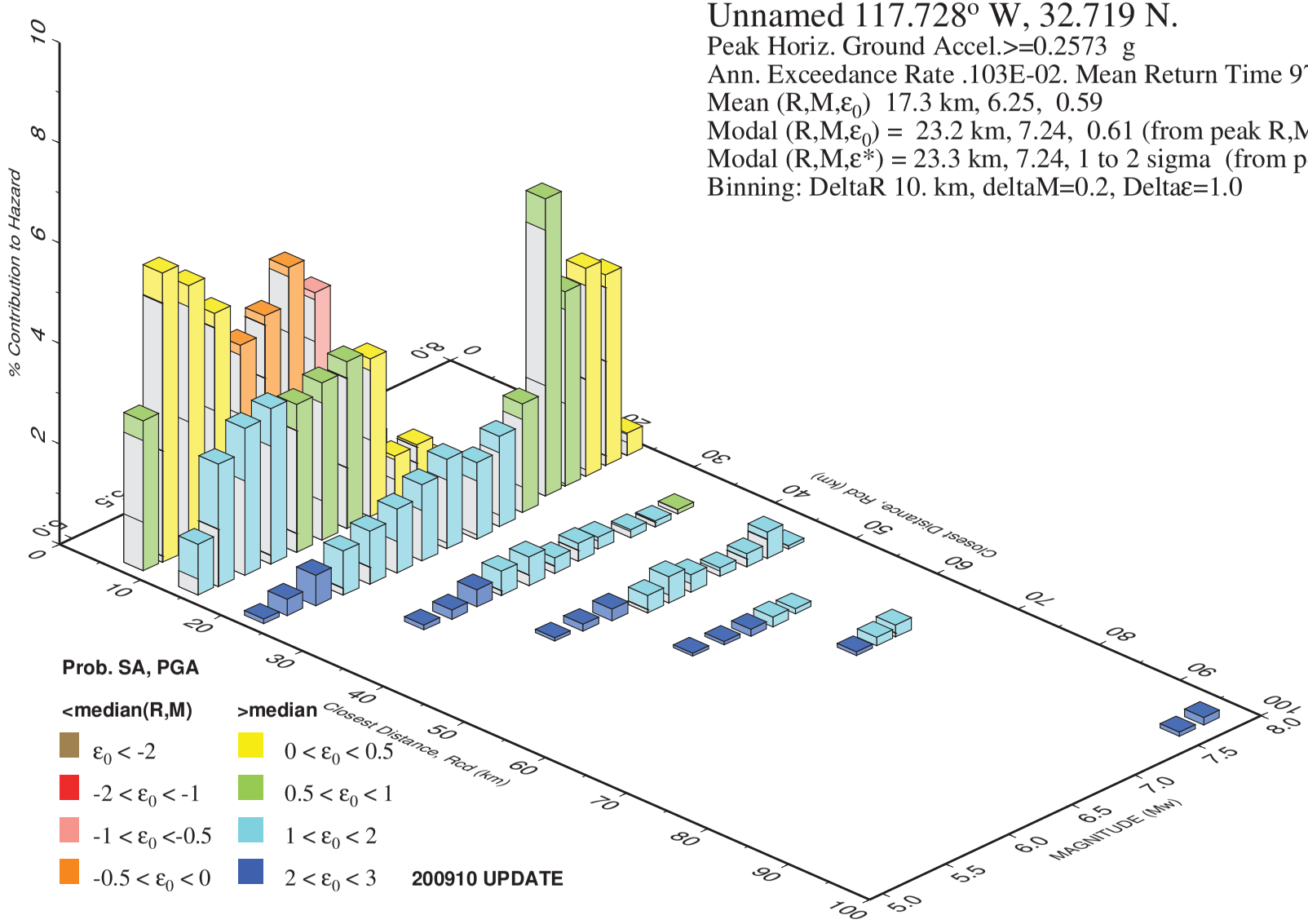

GMT 2012 Aug 22 20:15:01 Distance (R), magnitude (M), epsilon (E0,E) deaggregation for a site on soil with average vs= 560. m/s top 30 m. USGS CGHT PSHA2008 UPDATE Bins with lt 0.05% contrib. omitted

Fault & Site Data Input Sheet

The input sheet is to help the user organize the site data for developing the design response spectrum. Beta-Testers: If you fill out the fault and site information for each location, please provide this document and the *checker* to facilitate the QC/QA procedures listed in the 2009 Deterministic Fault Information & Seismic Procedures QC/QA checklist.

Project Information

Dist – EA: 11 – 2T1901 County: SD Route: 15 PM: 5.6/6.0

Bridge/Facility Name: N/A Bridge/Facility No.: N/A

Latitude: 32.769811 Longitude: -117.112169

Fault Information (#1)

Fault Name: Newport Inglewood Rose Canyon Fault ID#: 423

MMax: 7.5 Fault Type: RLSS

Fault Dip: 90° Dip Direction: V

Top of Rupture: 0 Bottom of Rupture: 13.0

Plan View **Elevation View**

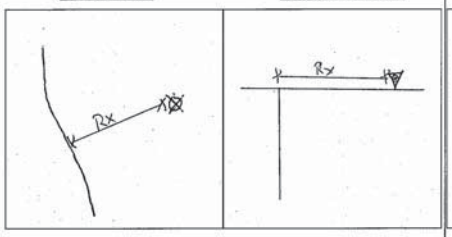

Calculated or Measure Distances

R_{RUP}: 6.57

R_{JB}: 6.57

R_X: 4.65

Determination of V_{S30}

V_{S30} (m/s): 560

Determination of Z1.0 and Z2.5

$Z_{1.0}$ (m/s): 74.0

$Z_{2.5}$ (km/s): 2.0

Notes:

Fault Information (#2)

Fault Name: _____ Fault ID#: _____

MMax: _____ Fault Type: _____

Fault Dip: _____ Dip Direction: _____

Top of Rupture: _____ Bottom of Rupture: _____

Plan View **Elevation View**

Calculated or Measure Distances

R_{RUP}: _____

R_{JB}: _____

R_X: _____

Determination of V_{S30}

V_{S30} (m/s): _____

Determination of Z1.0 and Z2.5

$Z_{1.0}$ (m/s): _____

$Z_{2.5}$ (km/s): _____

Notes:

2009 Deterministic Fault Information & Seismic Procedure QC/QA Checklist

Determination of V_{S30}

V_{S30} (m/s): 560

Method of Determining V_{S30}: SPTCORR (e.g. P-S logging, Geophysics, SPT correlations, etc)

Additional Explanation (if needed): _____

Determination of Z1.0 and Z2.5 (if site located in designated California deep basin)

$Z_{1.0}$ (m/s): 74.0 $Z_{2.5}$ (km/s): 2.0

Method of Determining $Z_{1.0}$ & $Z_{2.5}$: ARS online (e.g. ARS Online, SDC figure, other)

Additional Explanation (if needed): _____

Deterministic - Special Conditions

Yes	No	N/A	
☑	☐		Was the Errata Deterministic Fault Database Spreadsheet reviewed to ensure that the correct fault parameters used in the analysis.
☑	☐	☐	Were the Near-Fault Factors applied correctly? *Applies to sites with a R_{RUP} distance of 25 km or less, as defined in the SDC.*
☐	☐	☑	Were deep basin depths ($Z_{1.0}$ & $Z_{2.5}$) estimated correctly? *Applies to sites located in deep basins as shown in Figures B.5 - B.11 of the SDC or ARS Online.*
☐	☐	☑	If the site is located within the Eastern California Shear Zone (ECSZ), was the design ARS larger than the minimum spectrum for the ECSZ (as defined in the SDC, Appendix B, Figure B.2)?
☐	☐	☑	If the controlling fault is the Cascadia Subduction Zone, was the alternate seismic procedure applied correctly (as defined in the SDC, Appendix B)?
☐	☐	☑	If the deterministic ARS falls below the Minimum Deterministic Spectra (as defined in the SDC), did the Minimum Deterministic Spectra control the deterministic design spectrum?
☑	☐		Did the ARS Online deterministic spectrum correspond within 10% of the calculated deterministic spectrum? If not, note it in the comments section of this document and email a copy to the ARS Online development team, ARS_Online@dot.ca.gov, so that they may address the potential bug.

Probabilistic - Special Conditions

Yes	No	N/A	
☑	☐	☐	Were Near-Fault Factors applied correctly (as defined by SDC)? *Applies to sites with a deaggregation R distance of 25 km or less.*
☐	☐	☑	Were deep basin depths ($Z_{1.0}$ & $Z_{2.5}$) estimated correctly? *Applies to sites located in deep basins as shown in Figures B.5 - B.11 of the SDC or ARS Online.*
☐	☐	☑	If the site has a V_{S30} of less than 300 m/s, was the resulting ARS curve checked against spectral acceleration from USGS Interactive Deaggregation tool?
☐	☐	☑	If the USGS Interactive Deaggregation tool and spectral acceleration data were used, were the appropriate near-fault and basin correction factors applied?

2009 Deterministic Fault Information & Seismic Procedure QC/QA Checklist

This document is to be filled out by *checker* to evaluate the fault parameters and design response spectrum used for seismic design recommendations for bridge structures. To facilitate the quality check, the designer shall provide the checker all pertinent project information, geologic information and approved exceptions (if applicable) needed to complete this form. The *checker* must be familiar with the Seismic Design Criteria (Appendix B), Deterministic PGA Map and ARS Online Report, and Geotechnical Services Design Manual in order to successfully perform a quality check. Tools available to checkers include the Deterministic Response Spectrum Spreadsheet, Probabilistic Response Spectrum Spreadsheet (after USGS), 2008 USGS National Seismic Hazard Map and the ARS Online web tool. The above documents and tools are available at http://dap3.dot.ca.gov/shake_stable/technical.php.

Project Information

Dist – EA: 11-2T1901 County: SD Route: 15 PM: 5.6/6.0

Bridge/Facility Name: N/A Bridge/Facility No.: N/A

Latitude: 32.769811 Longitude: -117.112169

Deterministic Fault Information

Fault Name: Newport-Inglewood Rose Canyon Fault ID#: 423 M_{MAX}: 7.5 Fault Type: RLSS

Fault Dip: 90° Dip Direction: V Top of Rupture: 0 Bottom of Rupture: 13.0

Plan View
(rough sketch; show dimensions)

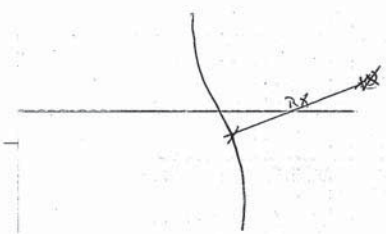

Elevation View
(rough sketch; show dimensions)

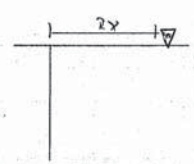

Calculated or Measured Distances

R_{RUP}: 6.57 km	☒ Calculated / graphically	☐ Same as Rx (by definition)
R_{JB}: 6.57 km	☒ Calculated / graphically	☐ Same as Rx (by definition)
R_X: 4.65 km	☒ "Ruler" function on ARS Online	☐ Deterministic PGA Map

2009 Deterministic Fault Information & Seismic Procedure QC/QA Checklist

Yes	No	N/A	
☐	☐	☑	If the probabilistic ARS falls below the Minimum Deterministic Spectra (as defined in the SDC), did the Minimum Deterministic Spectra control the design spectrum?
☑	☐		Did the ARS Online design spectrum correspond within 10% of the USGS spectral acceleration data from the verification spreadsheet? If not, note it in the comments section of this document and email a copy to the ARS Online development team, ARS_Online@dot.ca.gov, so that they may address the potential bug.

Comments / Observations Encountered during QC/QA process:

I certify that I have performed a quality check of the referenced fault information and design response spectrum provided by the geotechnical designer. The quality check is based on Seismic Design Criteria (Appendix B), Deterministic PGA Map and ARS Online Report, and the Geotechnical Services Design Manual.

Michael Fordham — T.E. CIVIL
Checker (Print) — Title

Mike Fordham — 9/27/2012
Checker (Signature) — Date

I certify that the referenced project complies with Geotechnical Service's Quality Control/Quality Assurance procedures, as described in the memorandum, "Quality Control/Quality Assurance for the 2009 Seismic Design Procedures", dated August 12, 2009.

BRIAN HINMAN — SENIOR T.E.
Functional Supervisor (Print) — Title

Brian Hinman — 9/27/12
Functional Supervisor (Signature) — Date

(This original checklist and signature sheet shall be placed in the geotechnical project file, and a copy sent to the Mark Willian of the Geotechnical Services Corporate Unit).

SR-15 MC CBF RW390, Sta. 390+75 H=6ft Static Global Stability

c:\slope stability\sr-15 mid city commuter bike facility_rusnak\sr-15_mc_cbf_rw390 sta 390+75 050_1.pl2 Run By: Rusnak 11/3/2014 09:25AM

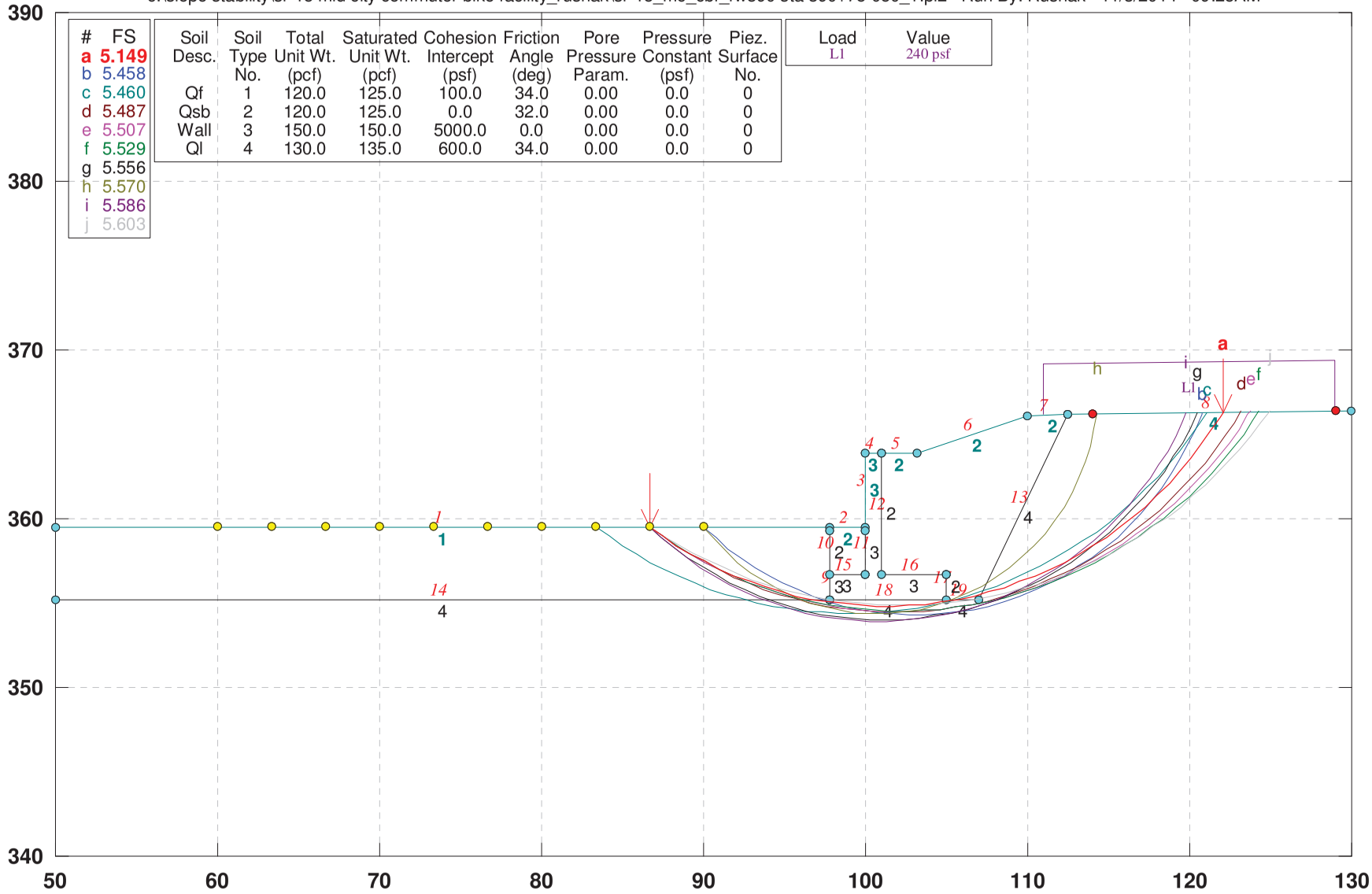

GSTABL7 v.2 FSmin=5.149

Safety Factors Are Calculated By The Modified Bishop Method

SR-15 MC CBF RW390, Sta. 390+75 H=6ft Seismic Global Stability

c:\slope stability\sr-15 mid city commuter bike facility_rusnak\sr-15_mc_cbf_rw390 sta 390+75 050_1.pl2 Run By: Rusnak 11/3/2014 09:26AM

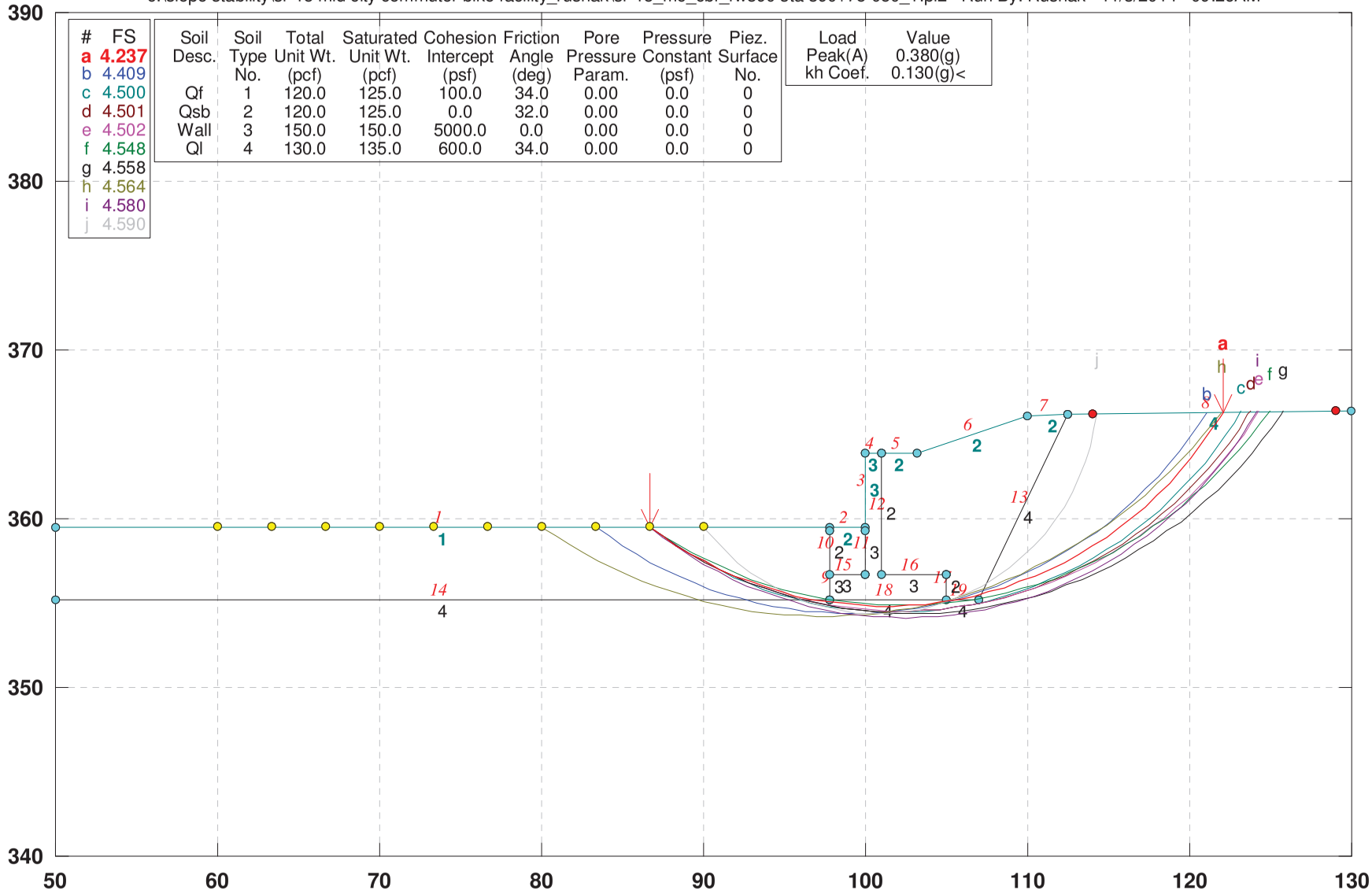

GSTABL7 v.2 FSmin=4.237

Safety Factors Are Calculated By The Modified Bishop Method

SR-15 MC CBF RW390, Sta. 390+75 Temporary Cut 0.5:1

c:\slope stability\sr-15 mid city commuter bike facility_rusnak\sr-15_mc_cbf_rw390 sta 390+75 temp cut.pl2 Run By: Rusnak 10/31/2014 12:17PM

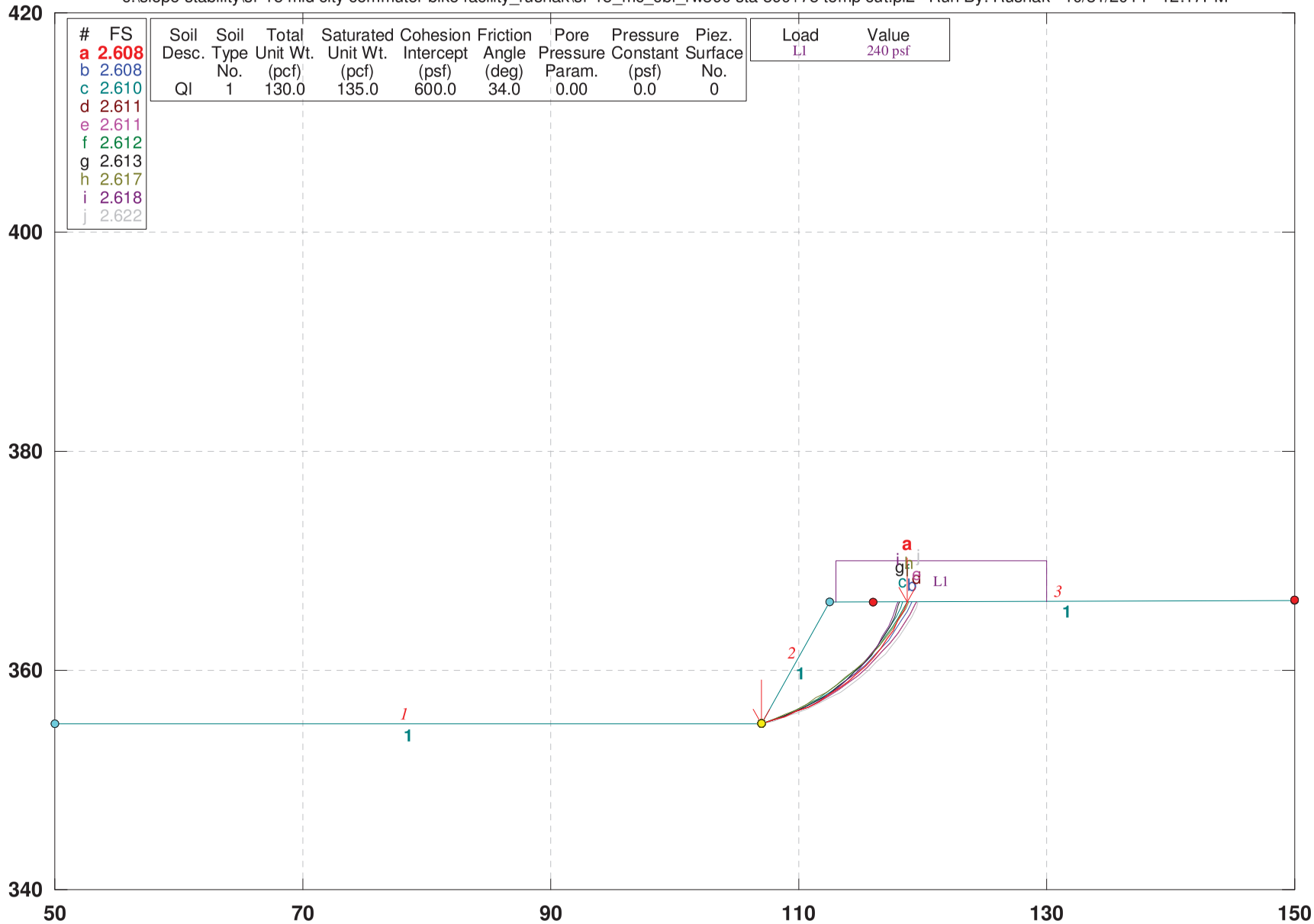

GSTABL7 v.2 FSmin=2.608

Safety Factors Are Calculated By The Modified Bishop Method

SR-15 MC CBF RW390-RW391, Sta. 391+50 H=6ft Static Global Stability

c:\slope stability\sr-15 mid city commuter bike facility_rusnak\sr-15_mc_cbf_rw390-rw391 sta 391+50 050_1.pl2 Run By: Rusnak 11/4/2014 07:15AM

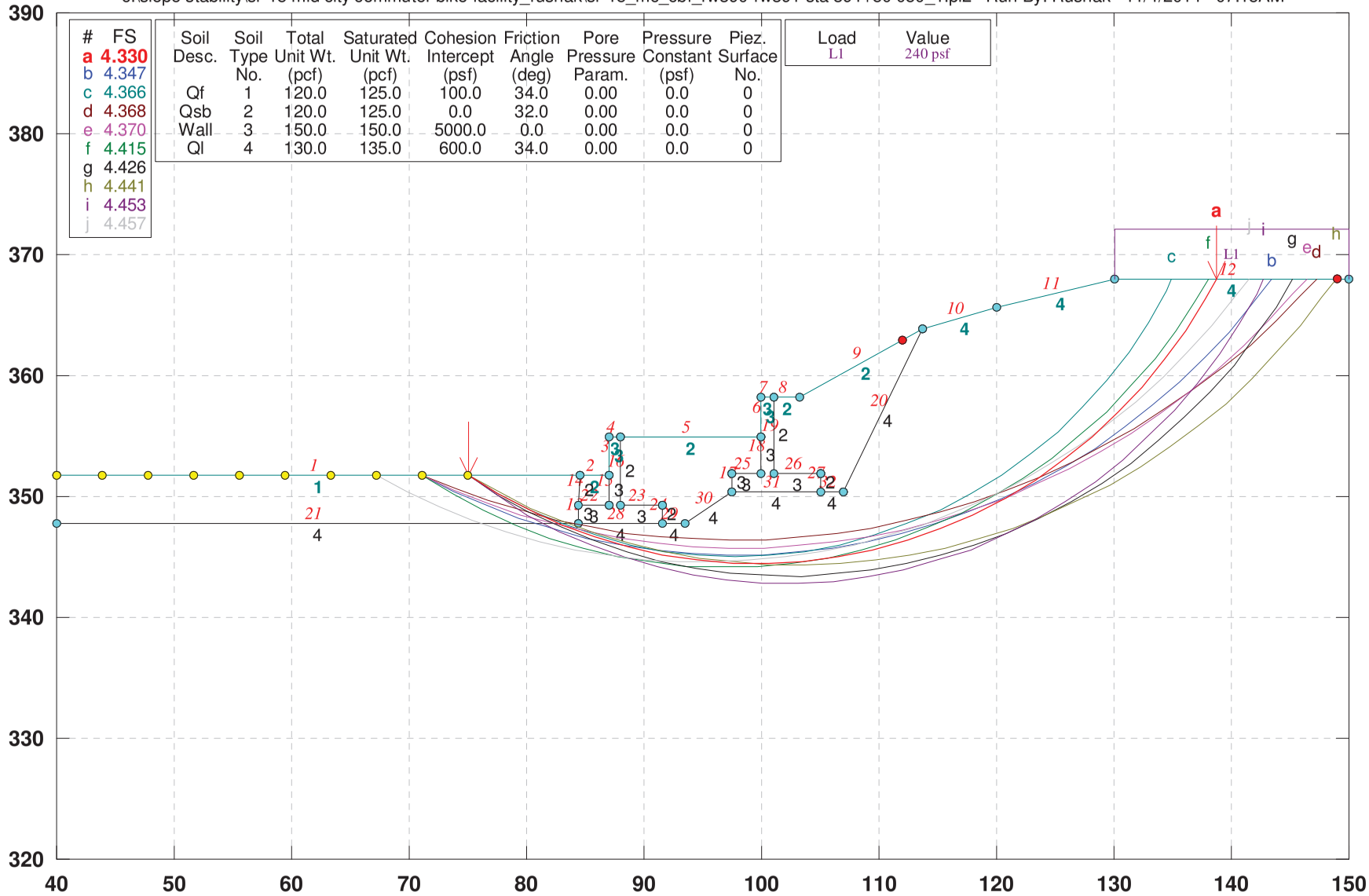

#	FS
a	4.330
b	4.347
c	4.366
d	4.368
e	4.370
f	4.415
g	4.426
h	4.441
i	4.453
j	4.457

Soil Desc.	Soil Type No.	Total Unit Wt. (pcf)	Saturated Unit Wt. (pcf)	Cohesion Intercept (psf)	Friction Angle (deg)	Pore Pressure Param.	Pressure Constant (psf)	Piez. Surface No.
Qf	1	120.0	125.0	100.0	34.0	0.00	0.0	0
Qsb	2	120.0	125.0	0.0	32.0	0.00	0.0	0
Wall	3	150.0	150.0	5000.0	0.0	0.00	0.0	0
Ql	4	130.0	135.0	600.0	34.0	0.00	0.0	0

Load	Value
L1	240 psf

GSTABL7 v.2 FSmin=4.330

Safety Factors Are Calculated By The Modified Bishop Method

SR-15 MC CBF RW390-RW391, Sta. 391+50 H=6ft Seismic Global Stability

c:\slope stability\sr-15 mid city commuter bike facility_rusnak\sr-15_mc_cbf_rw390-rw391 sta 391+50 050_1.pl2 Run By: Rusnak 11/4/2014 07:16AM

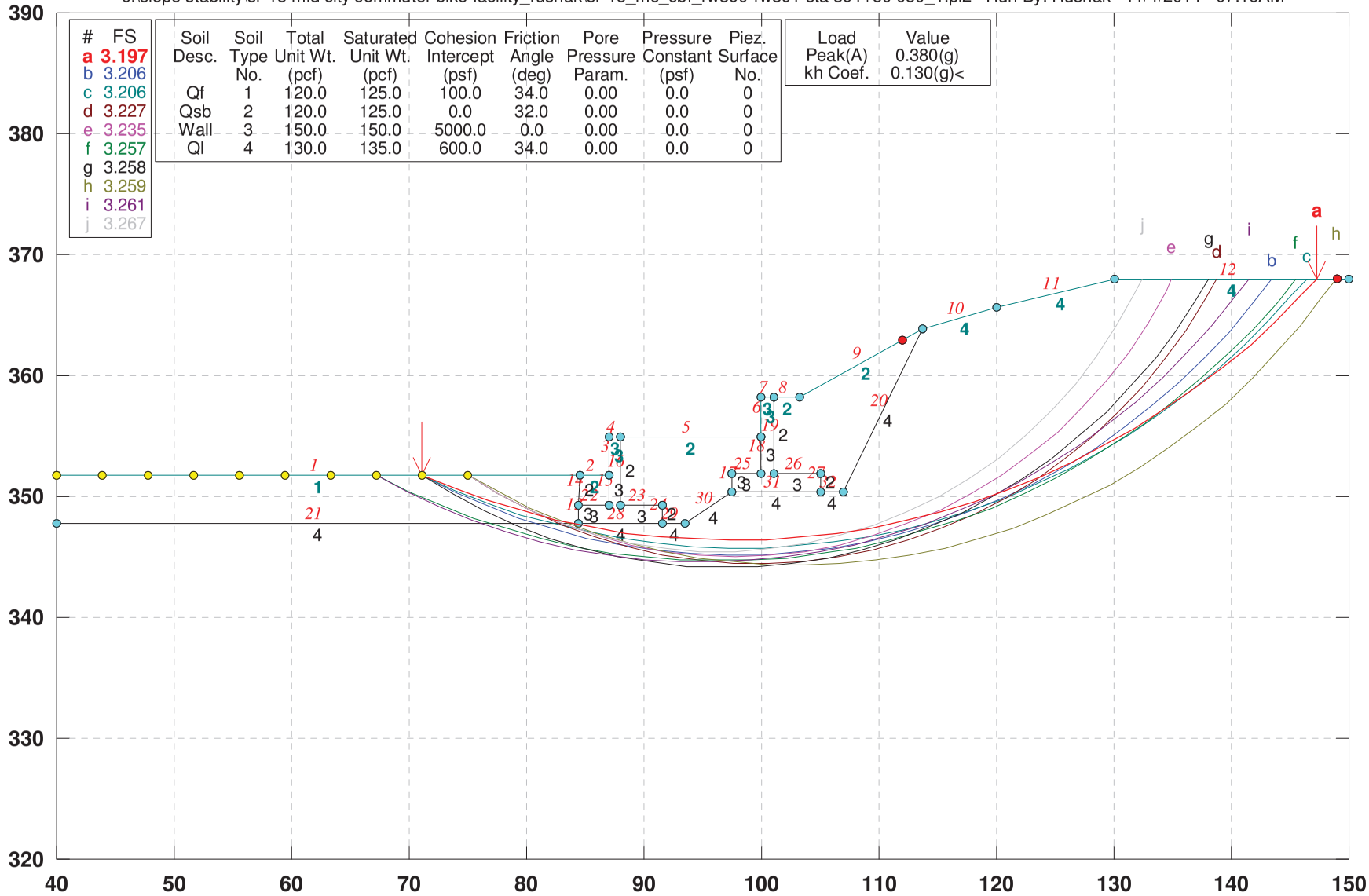

GSTABL7 v.2 FSmin=3.197

Safety Factors Are Calculated By The Modified Bishop Method

SR-15 MC CBF RW390-RW391, Sta. 391+50 H=6ft Static Stability

c:\slope stability\sr-15 mid city commuter bike facility_rusnak\sr-15_mc_cbf_rw390-rw391 sta 391+50 050_1.pl2 Run By: Rusnak 11/4/2014 07:22AM

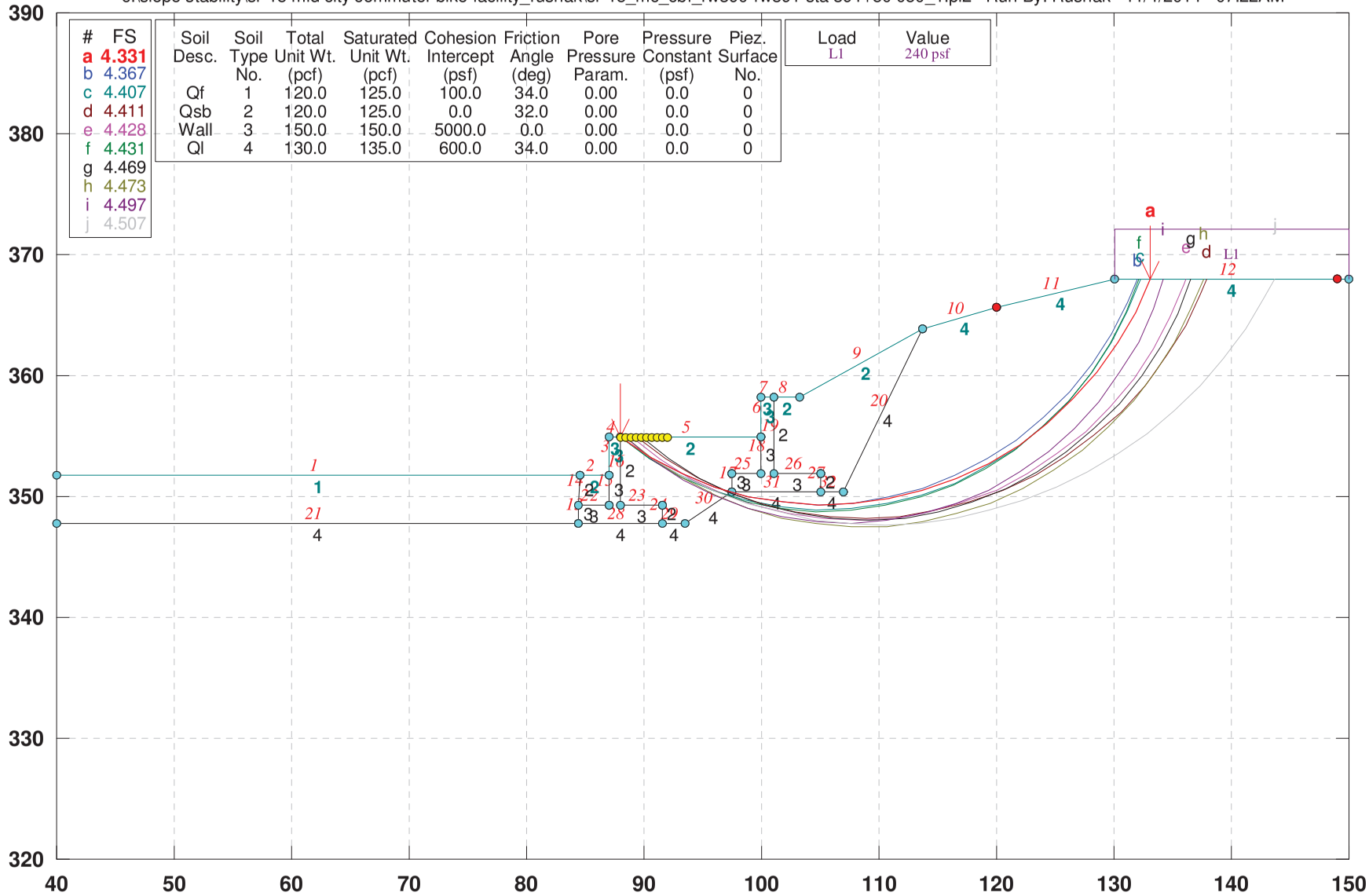

GSTABL7 v.2 FSmin=4.331

Safety Factors Are Calculated By The Modified Bishop Method

SR-15 MC CBF RW390-RW391, Sta. 391+50 H=6ft Seismic Stability

c:\slope stability\sr-15 mid city commuter bike facility_rusnak\sr-15_mc_cbf_rw390-rw391 sta 391+50 050_1.pl2 Run By: Rusnak 11/4/2014 07:21AM

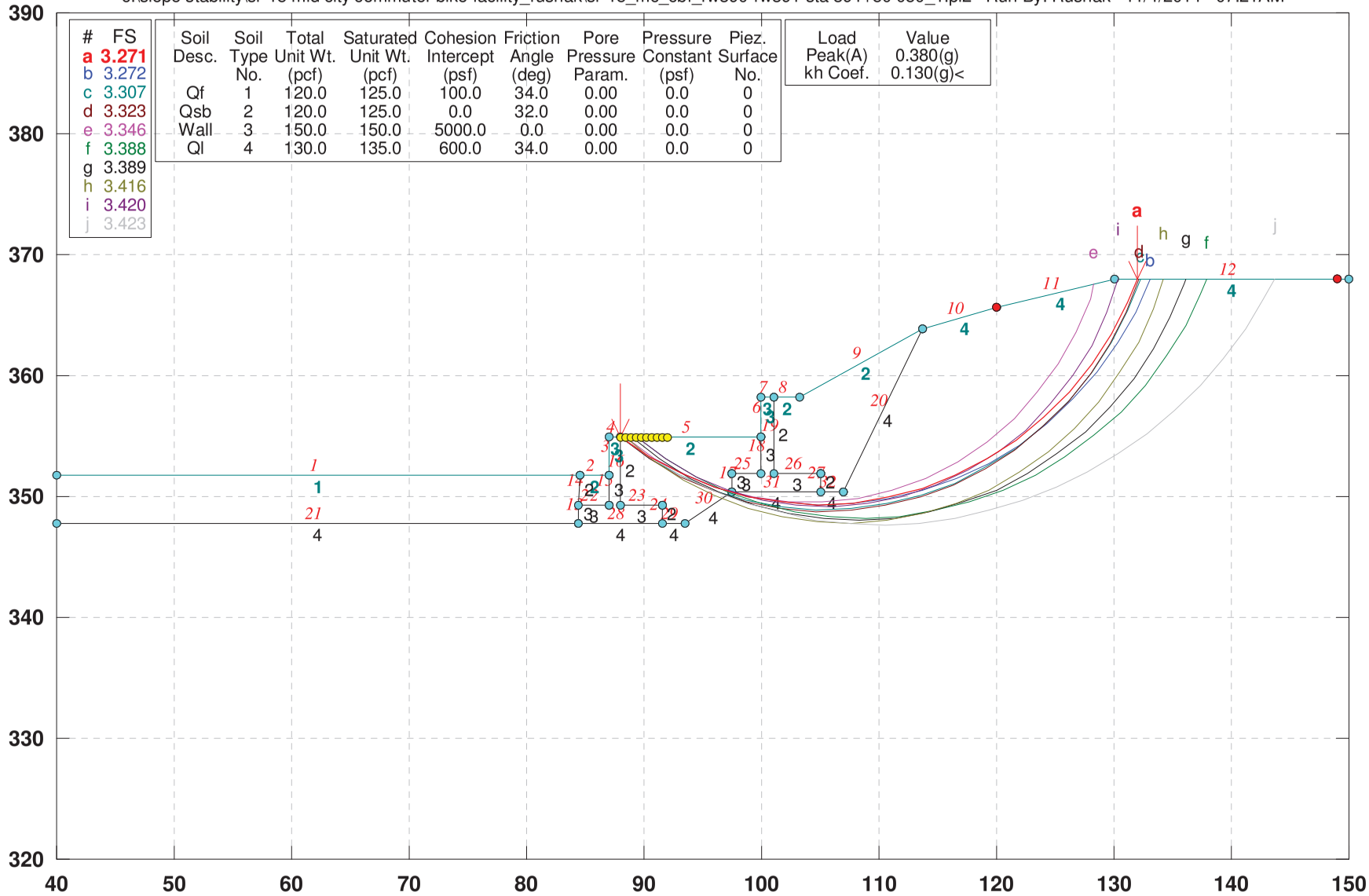

GSTABL7 v.2 FSmin=3.271

Safety Factors Are Calculated By The Modified Bishop Method

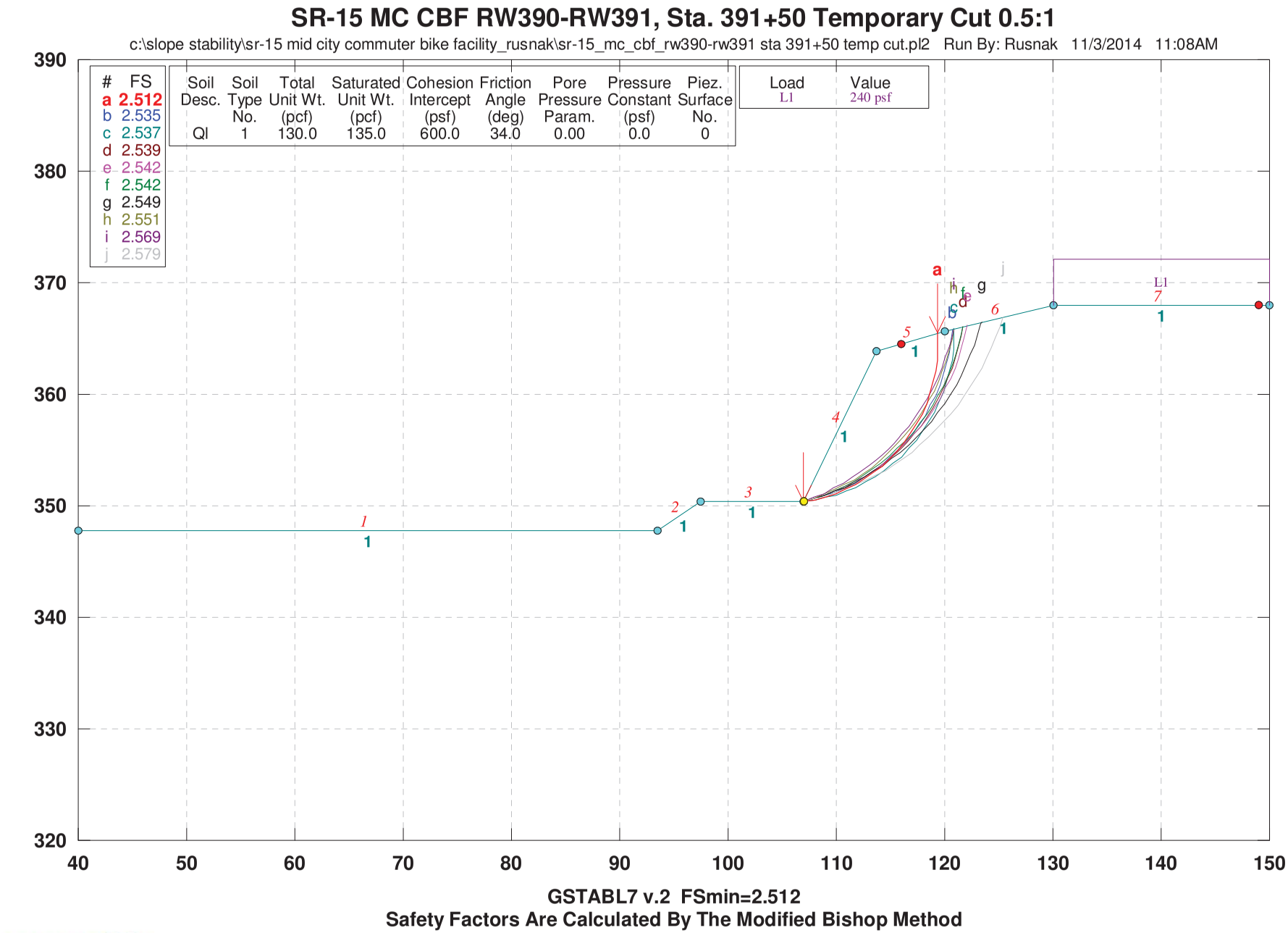
SR-15 MC CBF RW390-RW391, Sta. 391+50 Temporary Cut 0.5:1
c:\slope stability\sr-15 mid city commuter bike facility_rusnak\sr-15_mc_cbf_rw390-rw391 sta 391+50 temp cut.pl2 Run By: Rusnak 11/3/2014 11:08AM
FS
a 2.512
b 2.535
c 2.537
d 2.539
e 2.542
f 2.542
g 2.549
h 2.551
i 2.569
j 2.579
Soil Desc. Soil Type No. Total Unit Wt. (pcf) Saturated Unit Wt. (pcf) Cohesion Intercept (psf) Friction Angle (deg) Pore Pressure Param. Pressure Constant (psf) Piez. Surface No.
Ql 1 130.0 135.0 600.0 34.0 0.00 0.0 0
Load L1
Value 240 psf
390
380
370
360
350
340
330
320
40
50
60
70
80
90
100
110
120
130
140
150
GSTABL7 v.2 FSmin=2.512
Safety Factors Are Calculated By The Modified Bishop Method

SR-15 MC CBF RW391, Sta. 392+65.05 H=16ft Static Global Stability

c:\slope stability\sr-15 mid city commuter bike facility_rusnak\sr-15_mc_cbf_rw391 sta 392+65.05 050_1.pl2 Run By: Rusnak 11/5/2014 11:11AM

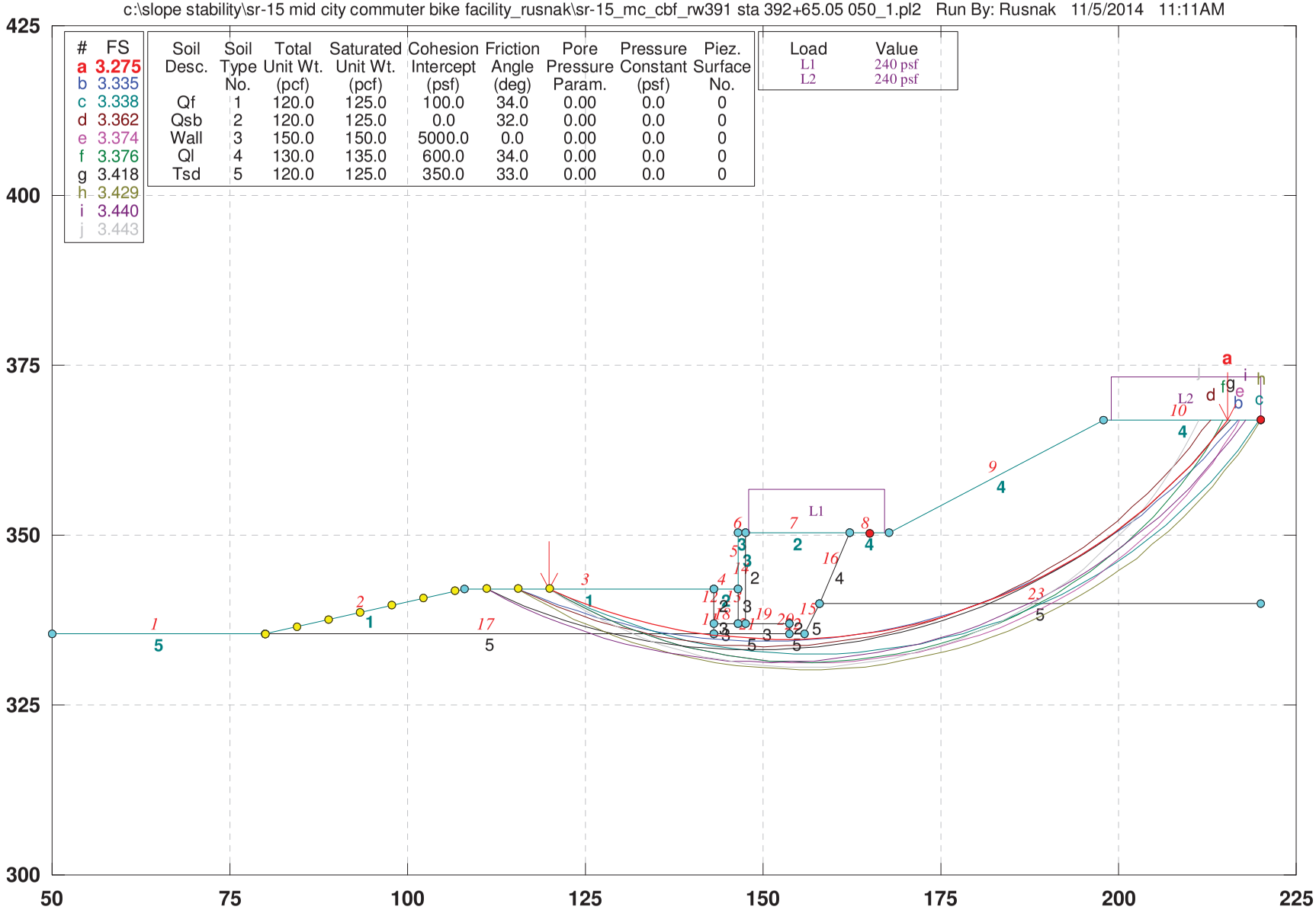

GSTABL7 v.2 FSmin=3.275

Safety Factors Are Calculated By The Modified Bishop Method

SR-15 MC CBF RW391, Sta. 392+65.05 H=16ft Seismic Global Stability

c:\slope stability\sr-15 mid city commuter bike facility_rusnak\sr-15_mc_cbf_rw391 sta 392+65.05 050_1.pl2 Run By: Rusnak 11/5/2014 11:12AM

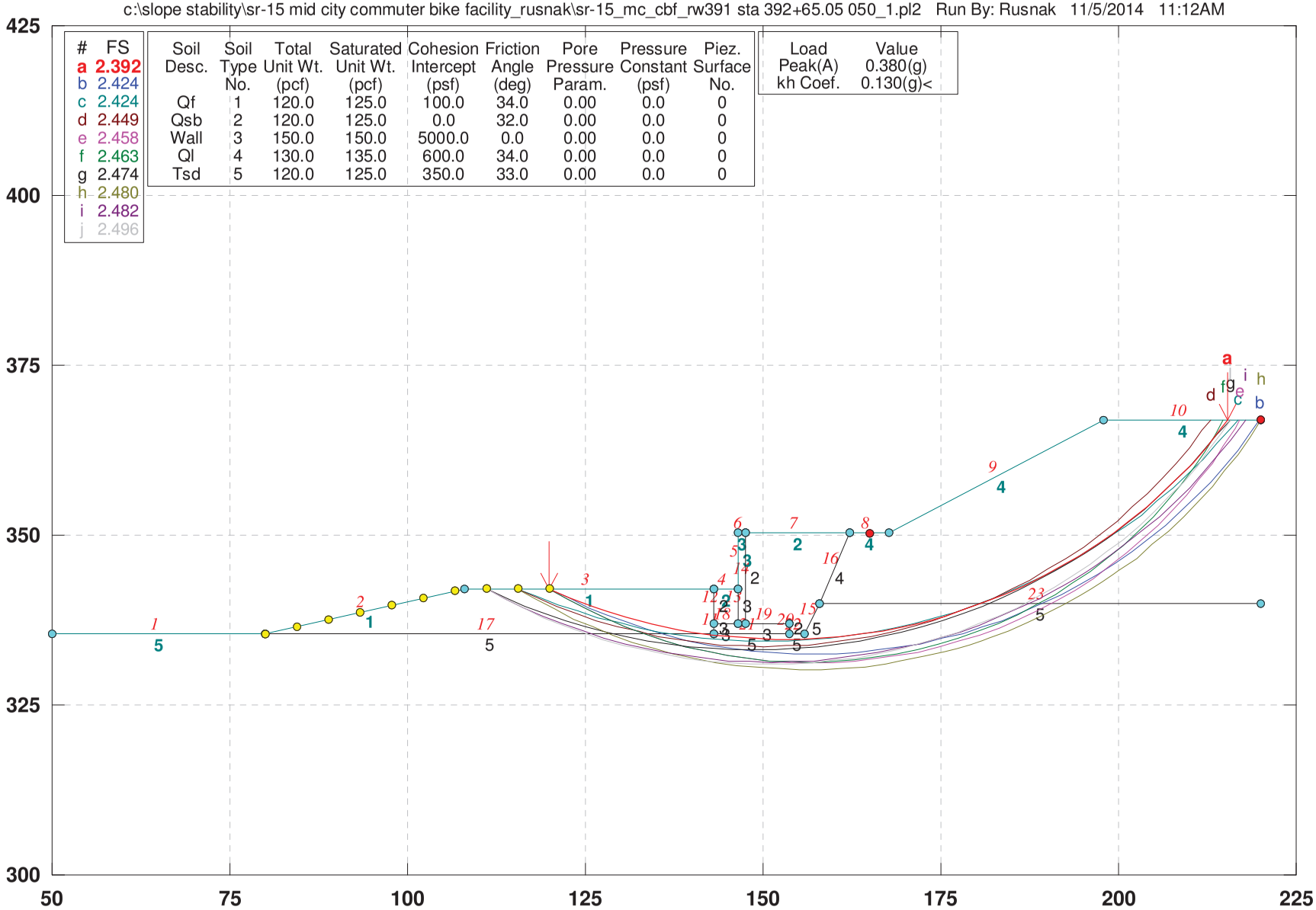

GSTABL7 v.2 FSmin=2.392

Safety Factors Are Calculated By The Modified Bishop Method

SR-15 MC CBF RW391, Sta. 392+65.05 H=16ft Temporary Cut 0.5:1

c:\slope stability\sr-15 mid city commuter bike facility_rusnak\sr-15_mc_cbf_rw391 sta 392+65.05 temp cut.pl2 Run By: Rusnak 11/5/2014 11:13AM

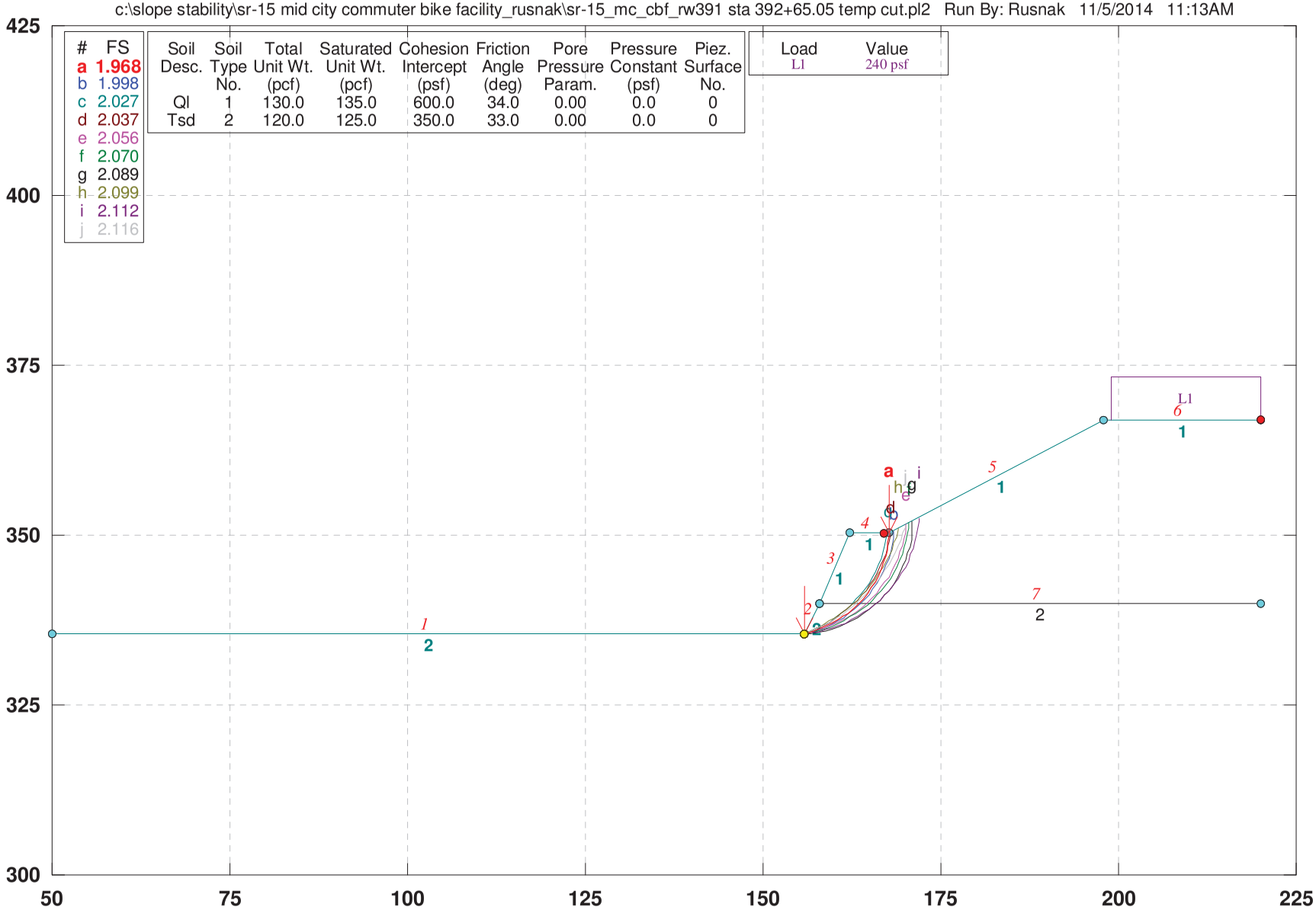

GSTABL7 v.2 FSmin=1.968

Safety Factors Are Calculated By The Modified Bishop Method

SR-15 MC CBF RW395-RW396, Sta. 395+94.01 H=12&8ft Static Global Stability

c:\slope stability\sr-15 mid city commuter bike facility_rusnak\sr-15_mc_cbf_rw395-rw396 sta 395+94.01 050_1.pl2 Run By: Rusnak 11/5/2014 11:18AM

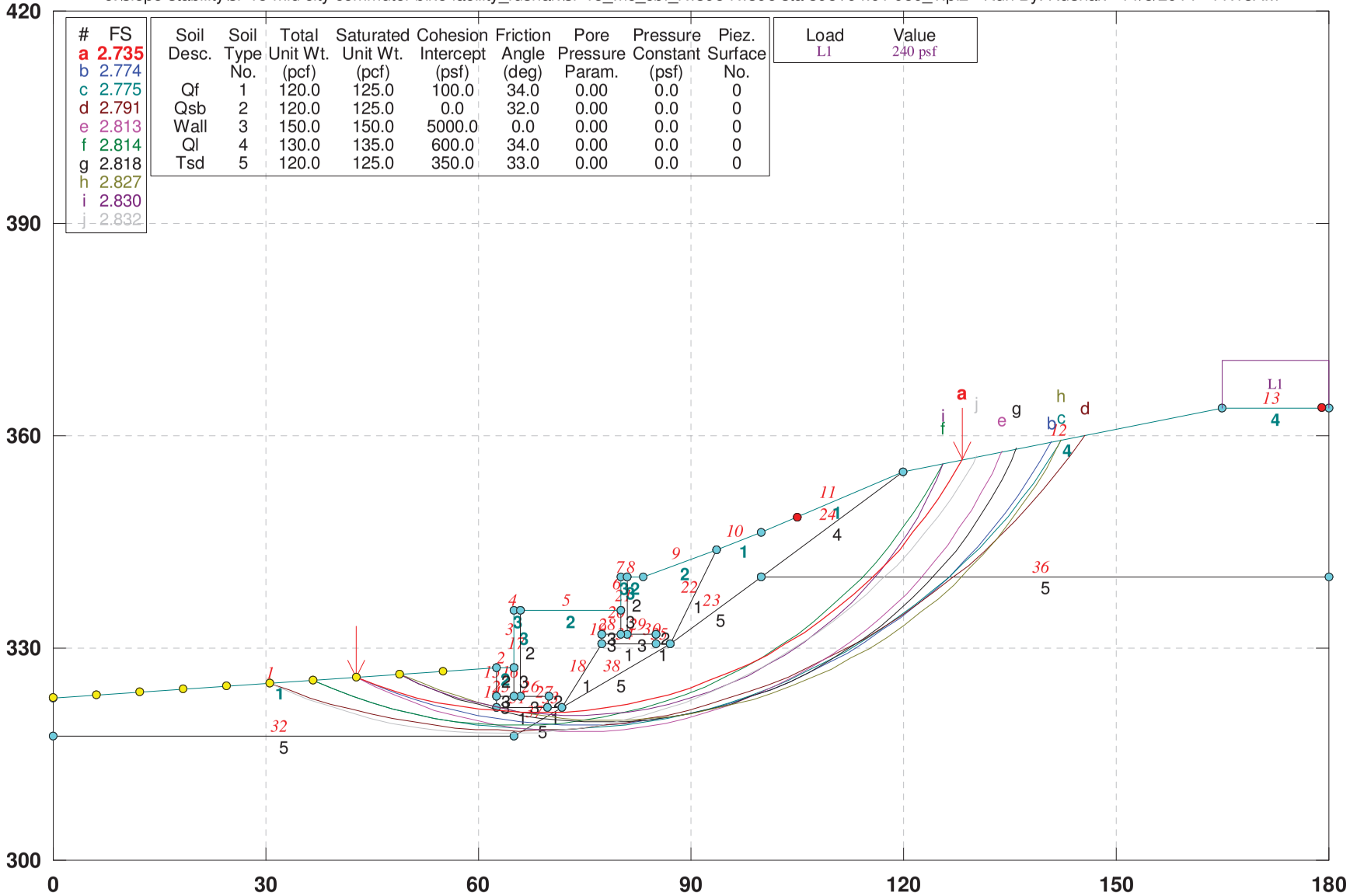

GSTABL7 v.2 FSmin=2.735

Safety Factors Are Calculated By The Modified Bishop Method

SR-15 MC CBF RW395-RW396, Sta. 395+94.01 H=12&8ft Seismic Global Stability

c:\slope stability\sr-15 mid city commuter bike facility_rusnak\sr-15_mc_cbf_rw395-rw396 sta 395+94.01 050_1.pl2 Run By: Rusnak 11/5/2014 11:17AM

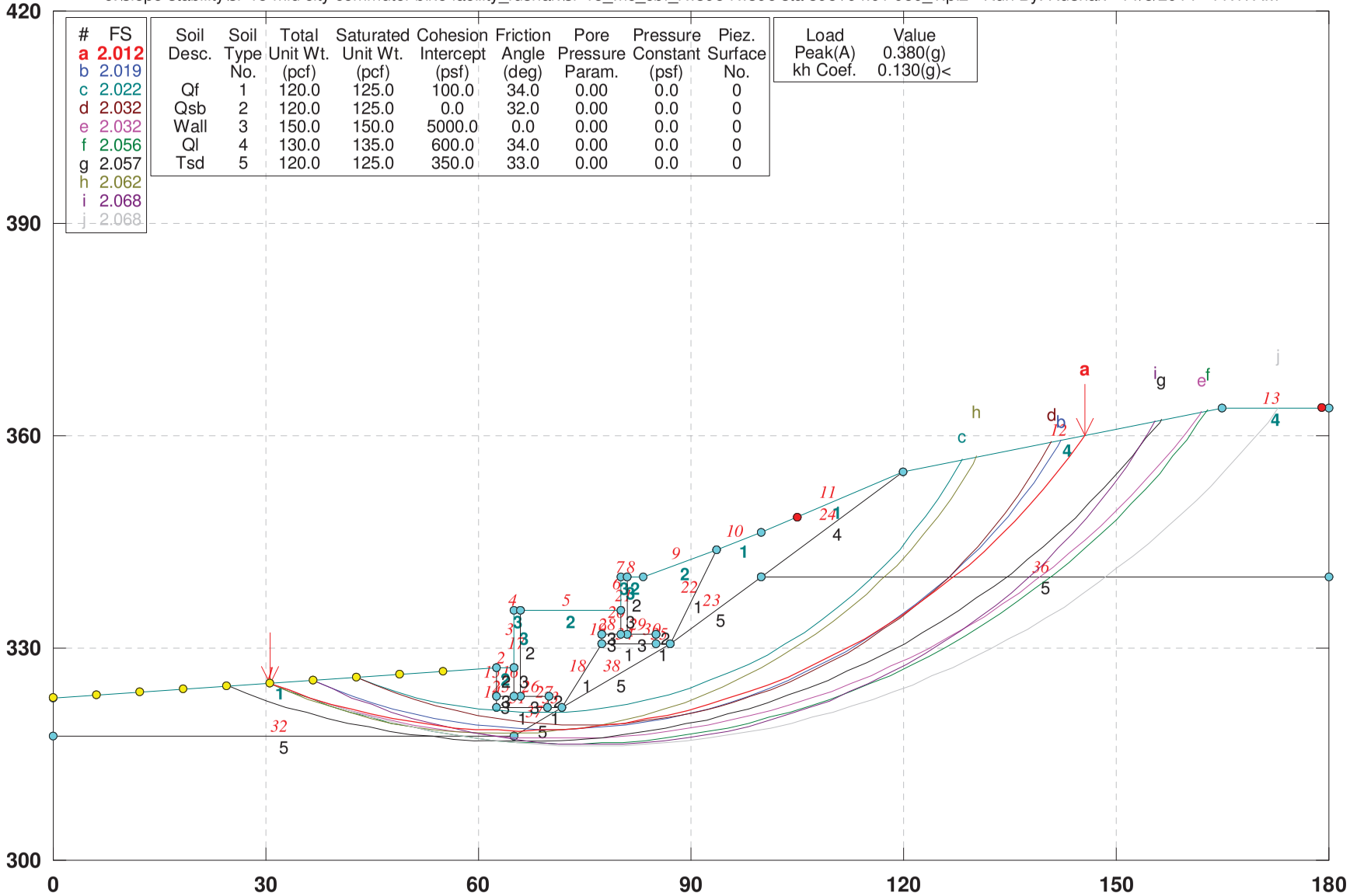

GSTABL7 v.2 FSmin=2.012

Safety Factors Are Calculated By The Modified Bishop Method

SR-15 MC CBF RW395-RW396, Sta. 395+94.01 H=12&8ft Static Stability

c:\slope stability\sr-15 mid city commuter bike facility_rusnak\sr-15_mc_cbf_rw395-rw396 sta 395+94.01 050_1.pl2 Run By: Rusnak 11/5/2014 11:14AM

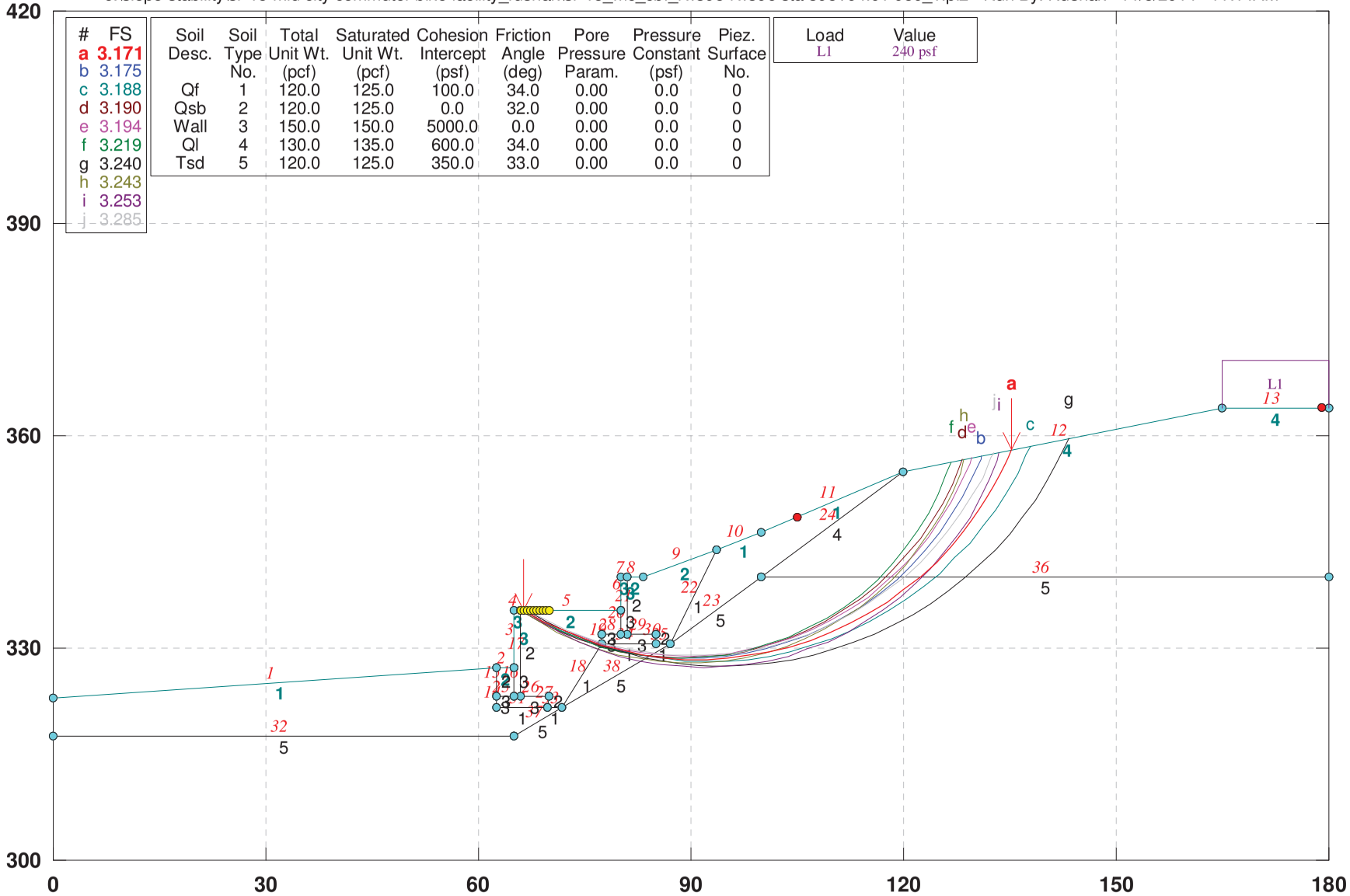

#	FS
a	3.171
b	3.175
c	3.188
d	3.190
e	3.194
f	3.219
g	3.240
h	3.243
i	3.253
j	3.285

Soil Desc.	Soil Type No.	Total Unit Wt. (pcf)	Saturated Unit Wt. (pcf)	Cohesion Intercept (psf)	Friction Angle (deg)	Pore Pressure Param.	Pressure Constant (psf)	Piez. Surface No.
Qf	1	120.0	125.0	100.0	34.0	0.00	0.0	0
Qsb	2	120.0	125.0	0.0	32.0	0.00	0.0	0
Wall	3	150.0	150.0	5000.0	0.0	0.00	0.0	0
Ql	4	130.0	135.0	600.0	34.0	0.00	0.0	0
Tsd	5	120.0	125.0	350.0	33.0	0.00	0.0	0

Load	Value
L1	240 psf

GSTABL7 v.2 FSmin=3.171

Safety Factors Are Calculated By The Modified Bishop Method

SR-15 MC CBF RW395-RW396, Sta. 395+94.01 H=12&8ft Seismic Stability

c:\slope stability\sr-15 mid city commuter bike facility_rusnak\sr-15_mc_cbf_rw395-rw396 sta 395+94.01 050_1.pl2 Run By: Rusnak 11/5/2014 11:15AM

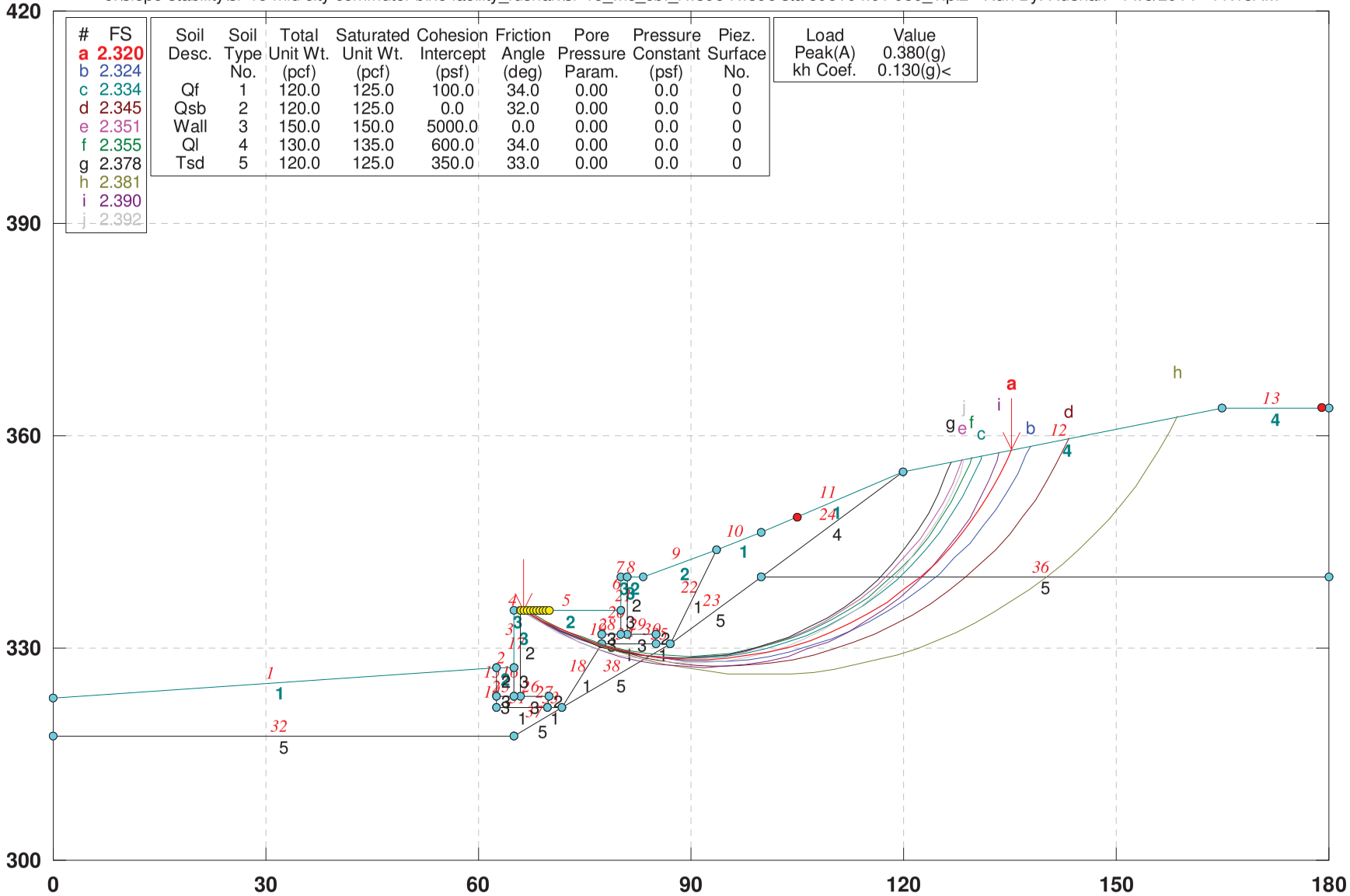

#	FS
a	2.320
b	2.324
c	2.334
d	2.345
e	2.351
f	2.355
g	2.378
h	2.381
i	2.390
j	2.392

Soil Desc.	Soil Type No.	Total Unit Wt. (pcf)	Saturated Unit Wt. (pcf)	Cohesion Intercept (psf)	Friction Angle (deg)	Pore Pressure Param.	Pressure Constant (psf)	Piez. Surface No.
Qf	1	120.0	125.0	100.0	34.0	0.00	0.0	0
Qsb	2	120.0	125.0	0.0	32.0	0.00	0.0	0
Wall	3	150.0	150.0	5000.0	0.0	0.00	0.0	0
Ql	4	130.0	135.0	600.0	34.0	0.00	0.0	0
Tsd	5	120.0	125.0	350.0	33.0	0.00	0.0	0

Load	Value
Peak(A)	0.380(g)
kh Coef.	0.130(g)<

GSTABL7 v.2 FSmin=2.320

Safety Factors Are Calculated By The Modified Bishop Method

SR-15 MC CBF RW395-RW396, Sta. 395+94.01 RW396 Temporary Cut 0.5:1

c:\slope stability\sr-15 mid city commuter bike facility_rusnak\sr-15_mc_cbf_rw395-rw396 sta 395+94.01 rw 396 temp cut 050_1.pl2 Run By: Rusnak 11/5/2014 11:20AM

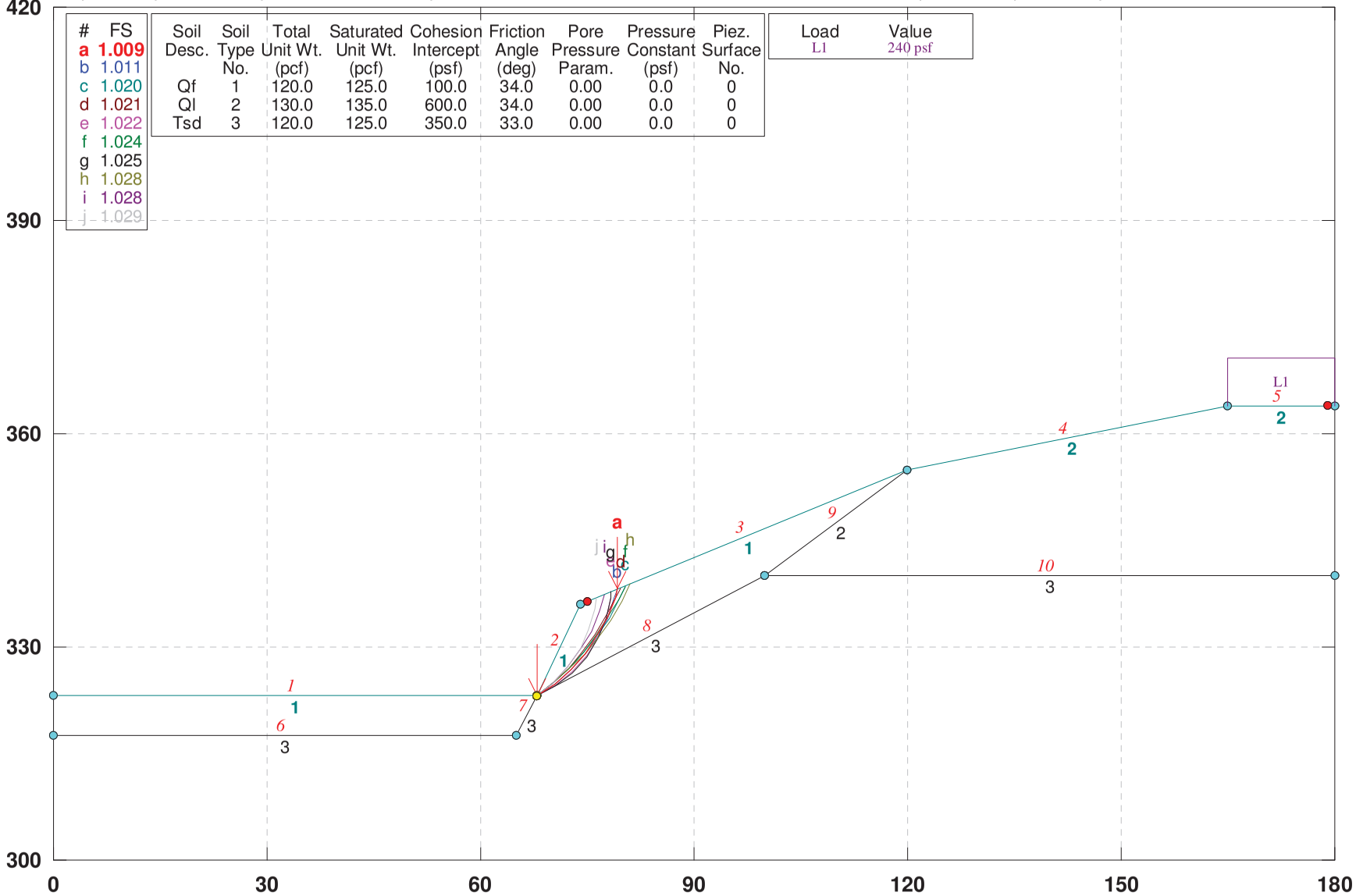

GSTABL7 v.2 FSmin=1.009

Safety Factors Are Calculated By The Modified Bishop Method

SR-15 MC CBF RW396, Sta. 397+00 H=12ft Static Global Stability

c:\slope stability\sr-15 mid city commuter bike facility_rusnak\sr-15_mc_cbf_rw396 sta 397+00 050_1.pl2 Run By: Rusnak 11/5/2014 11:32AM

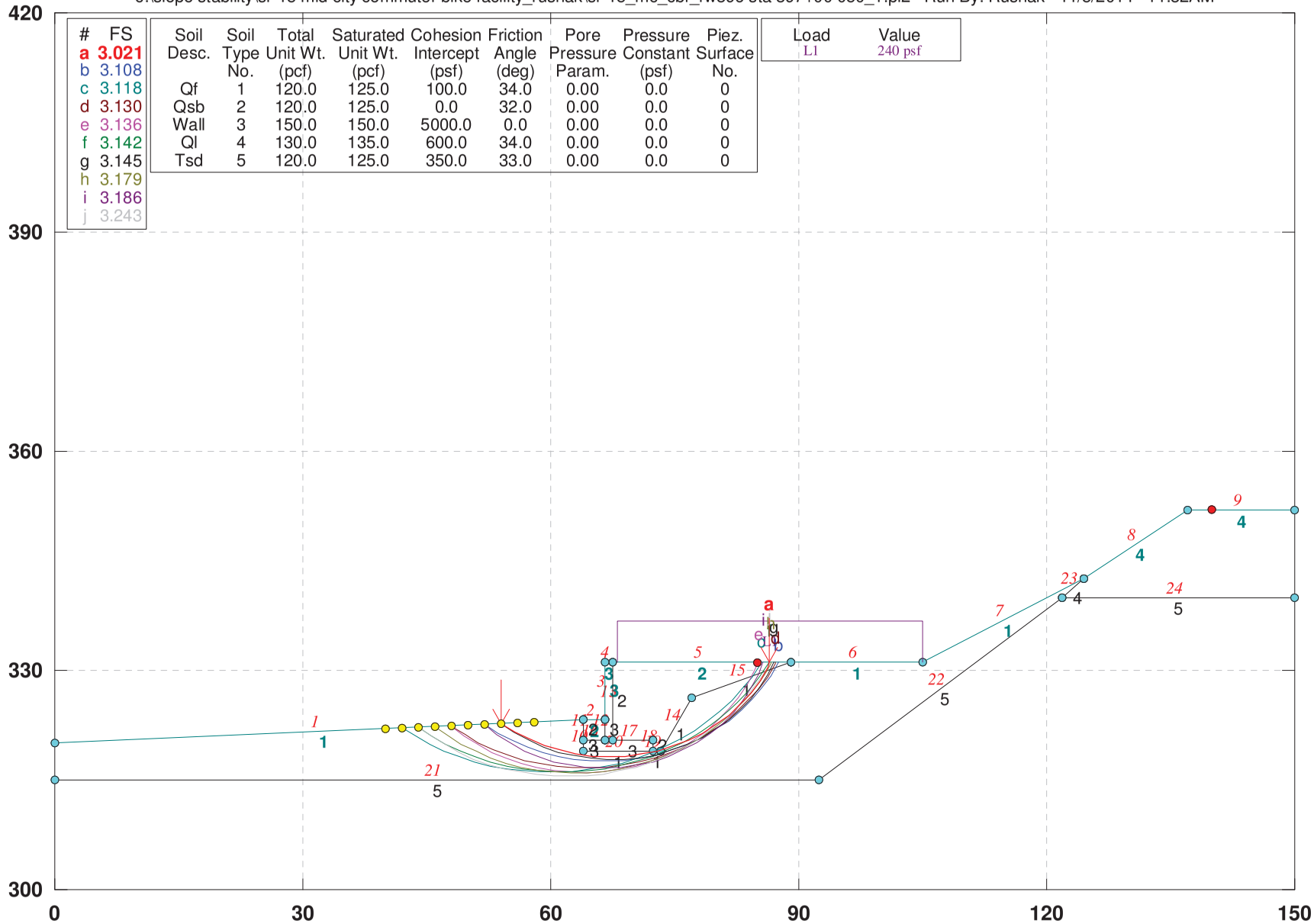

#	FS
a	3.021
b	3.108
c	3.118
d	3.130
e	3.136
f	3.142
g	3.145
h	3.179
i	3.186
j	3.243

Soil Desc.	Soil Type No.	Total Unit Wt. (pcf)	Saturated Unit Wt. (pcf)	Cohesion Intercept (psf)	Friction Angle (deg)	Pore Pressure Param.	Pressure Constant (psf)	Piez. Surface No.
Qf	1	120.0	125.0	100.0	34.0	0.00	0.0	0
Qsb	2	120.0	125.0	0.0	32.0	0.00	0.0	0
Wall	3	150.0	150.0	5000.0	0.0	0.00	0.0	0
Ql	4	130.0	135.0	600.0	34.0	0.00	0.0	0
Tsd	5	120.0	125.0	350.0	33.0	0.00	0.0	0

Load	Value
L1	240 psf

GSTABL7 v.2 FSmin=3.021

Safety Factors Are Calculated By The Modified Bishop Method

SR-15 MC CBF RW396, Sta. 397+00 H=12ft Seismic Global Stability

c:\slope stability\sr-15 mid city commuter bike facility_rusnak\sr-15_mc_cbf_rw396 sta 397+00 050_1.pl2 Run By: Rusnak 11/5/2014 11:30AM

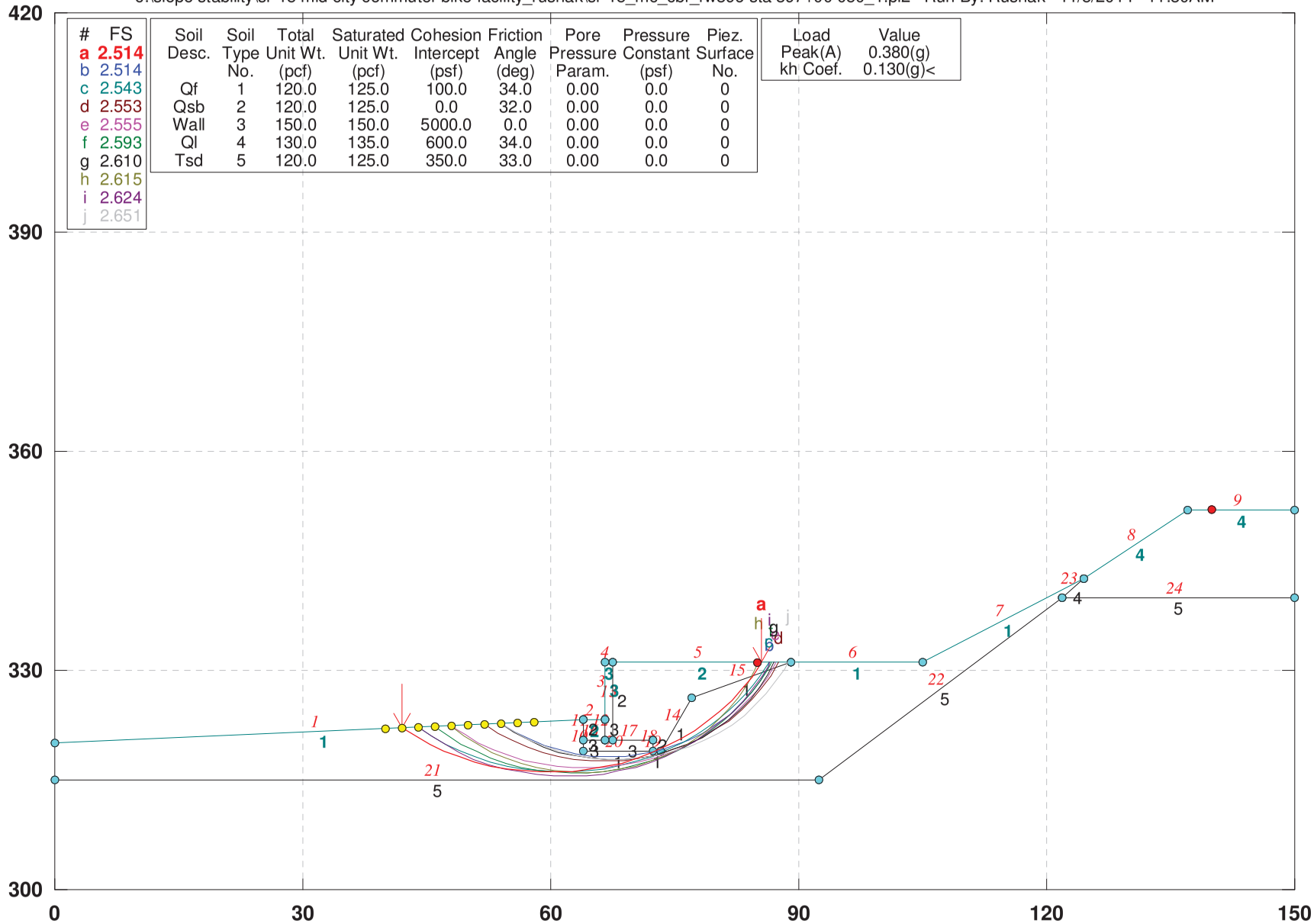

#	FS
a	2.514
b	2.514
c	2.543
d	2.553
e	2.555
f	2.593
g	2.610
h	2.615
i	2.624
j	2.651

Soil Desc.	Soil Type No.	Total Unit Wt. (pcf)	Saturated Unit Wt. (pcf)	Cohesion Intercept (psf)	Friction Angle (deg)	Pore Pressure Param.	Pressure Constant (psf)	Piez. Surface No.
Qf	1	120.0	125.0	100.0	34.0	0.00	0.0	0
Qsb	2	120.0	125.0	0.0	32.0	0.00	0.0	0
Wall	3	150.0	150.0	5000.0	0.0	0.00	0.0	0
Ql	4	130.0	135.0	600.0	34.0	0.00	0.0	0
Tsd	5	120.0	125.0	350.0	33.0	0.00	0.0	0

Load	Value
Peak(A)	0.380(g)
kh Coef.	0.130(g)<

GSTABL7 v.2 FSmin=2.514

Safety Factors Are Calculated By The Modified Bishop Method

GSTABL7

SR-15 MC CBF RW400, Sta 404+00, Existing Steep Slope Static Stability

c:\slope stability\sr-15 mid city commuter bike facility_rusnak\sr-15_mc_cbf_rw400 sta 404 existing.pl2 Run By: Rusnak 11/5/2014 11:41AM

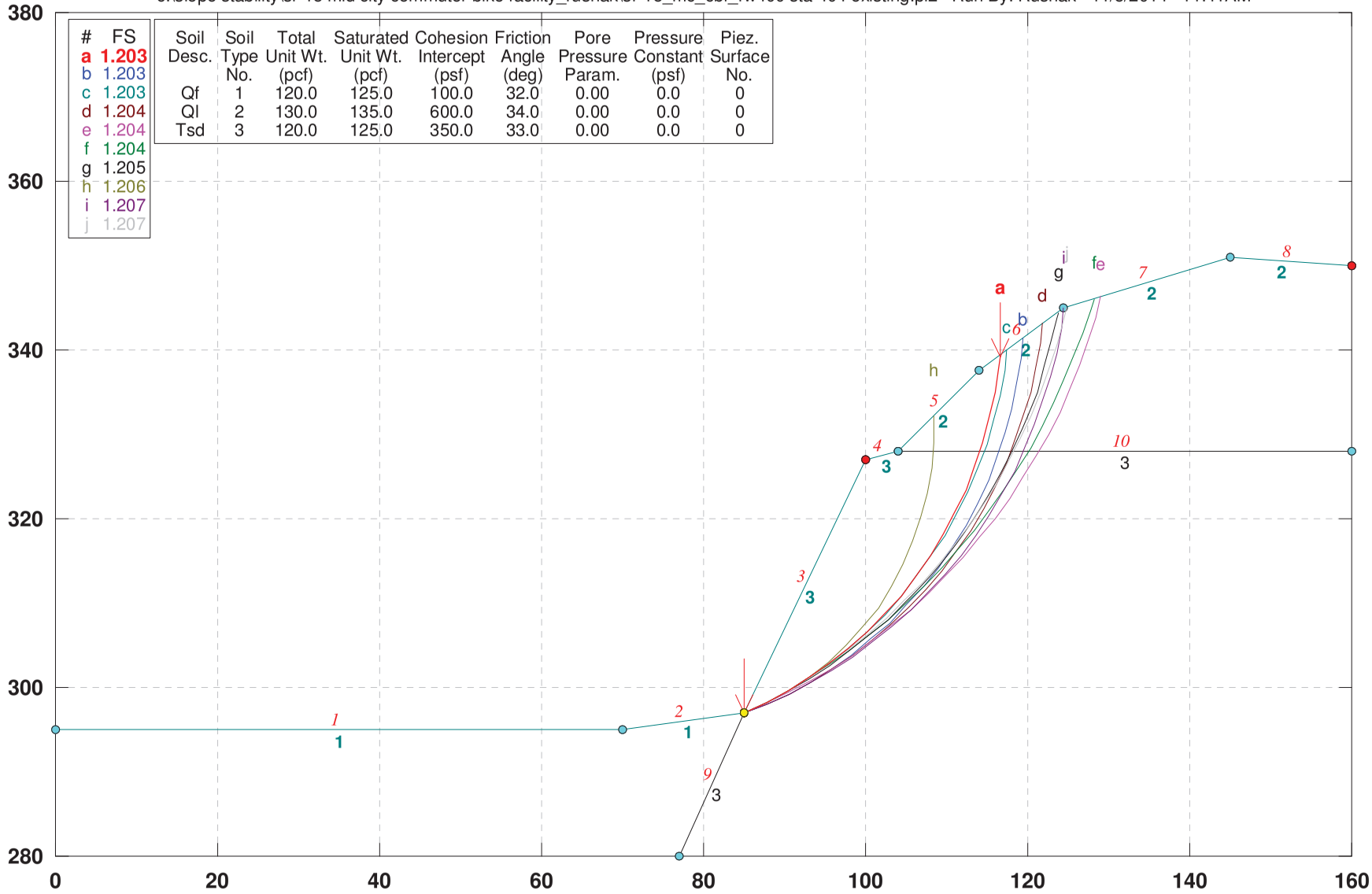

GSTABL7 v.2 FSmin=1.203

Safety Factors Are Calculated By The Modified Bishop Method

SR-15 MC CBF RW400, Sta 404+00, Existing Steep Slope Seismic Stability

c:\slope stability\sr-15 mid city commuter bike facility_rusnak\sr-15_mc_cbf_rw400 sta 404 existing.pl2 Run By: Rusnak 11/5/2014 11:34AM

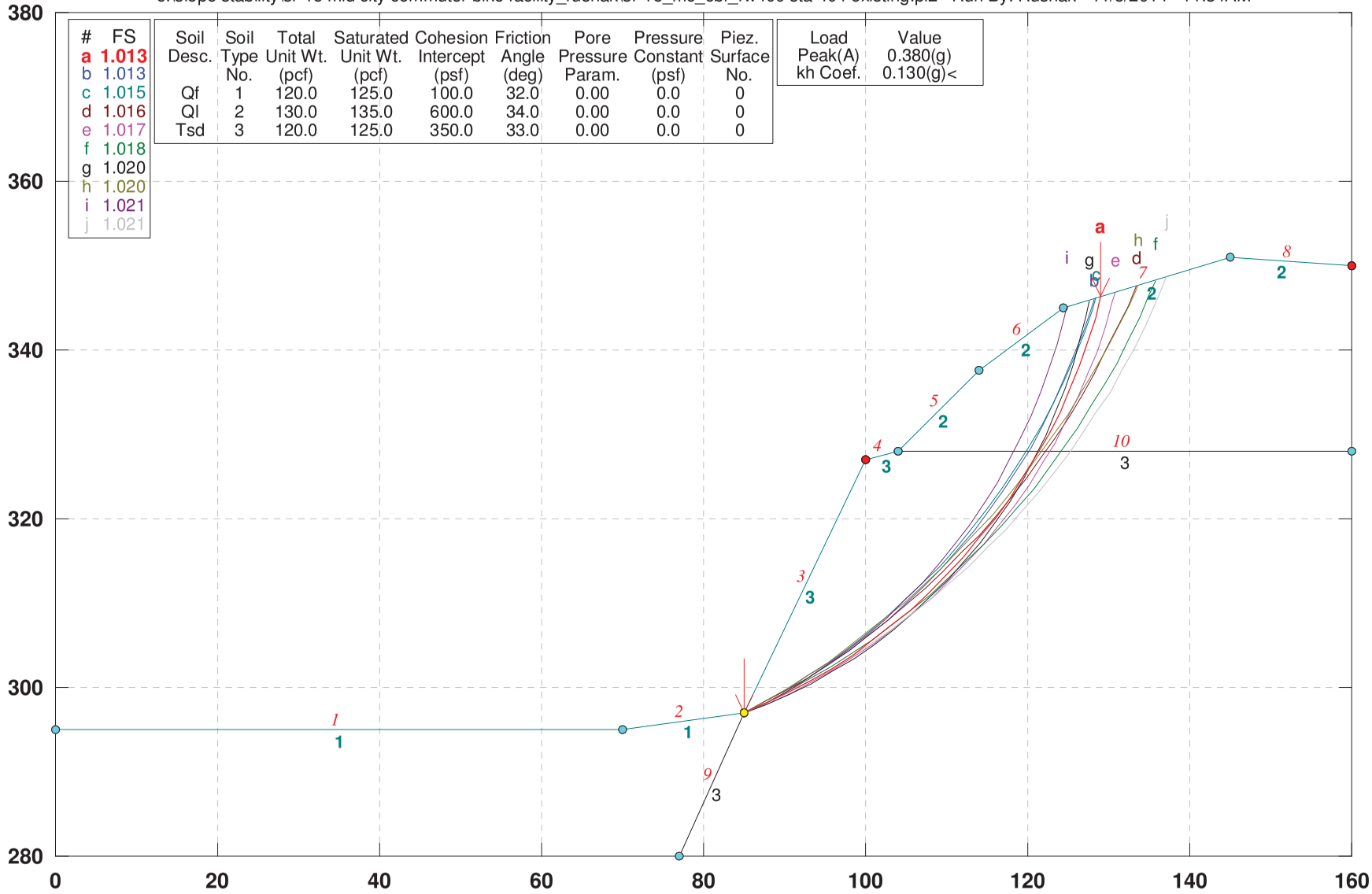

GSTABL7 v.2 FSmin=1.013

Safety Factors Are Calculated By The Modified Bishop Method

SR-15 MC CBF RW400, Sta 404+00, H=6ft Static Global Stability

c:\slope stability\sr-15 mid city commuter bike facility_rusnak\sr-15_mc_cbf_rw400 sta 404 050_1.pl2 Run By: Rusnak 11/5/2014 11:40AM

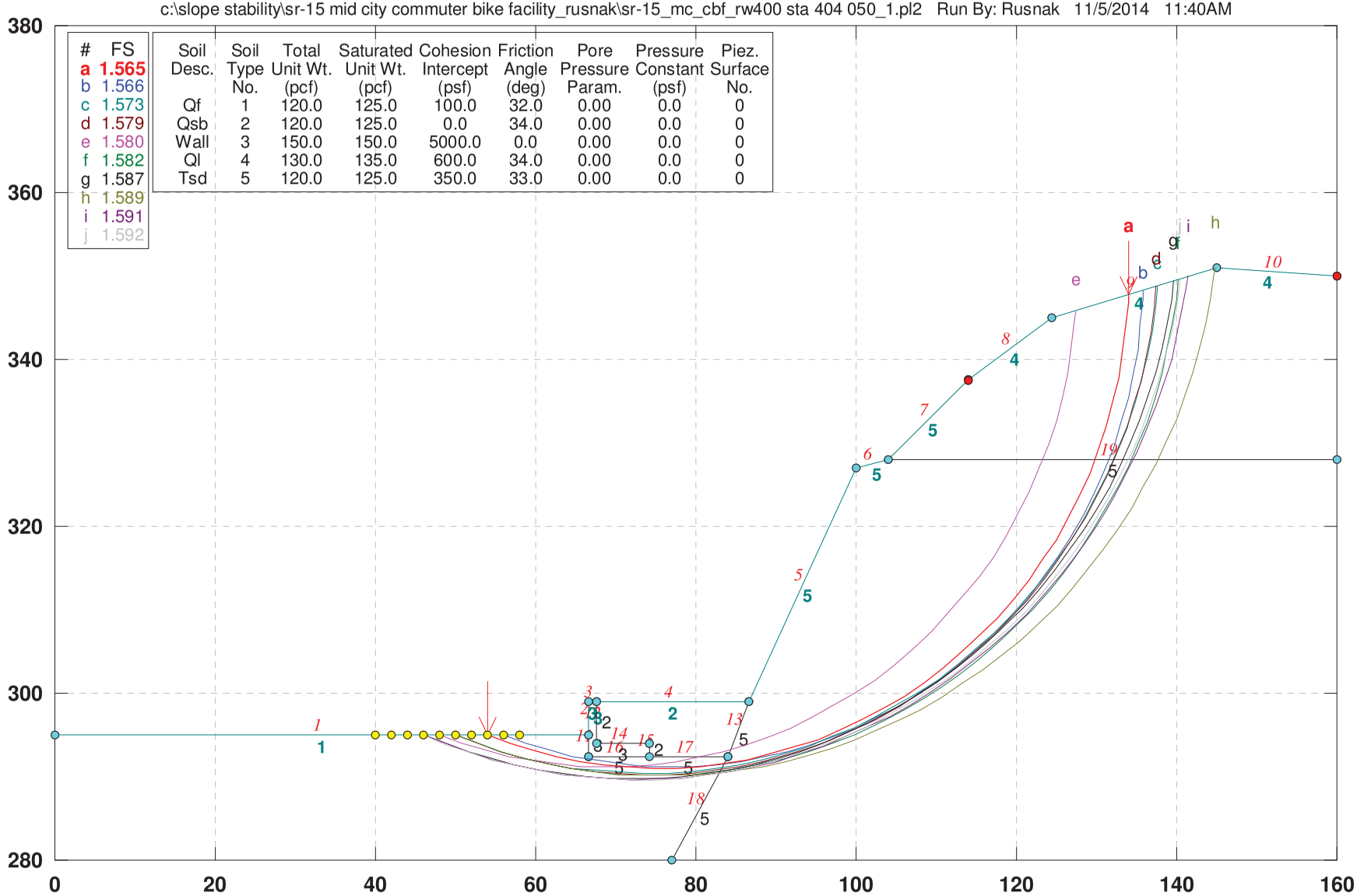

Soil Desc.	Soil Type No.	Total Unit Wt. (pcf)	Saturated Unit Wt. (pcf)	Cohesion Intercept (psf)	Friction Angle (deg)	Pore Pressure Param.	Pressure Constant (psf)	Piez. Surface No.
Qf	1	120.0	125.0	100.0	32.0	0.00	0.0	0
Qsb	2	120.0	125.0	0.0	34.0	0.00	0.0	0
Wall	3	150.0	150.0	5000.0	0.0	0.00	0.0	0
Ql	4	130.0	135.0	600.0	34.0	0.00	0.0	0
Tsd	5	120.0	125.0	350.0	33.0	0.00	0.0	0

GSTABL7 v.2 FSmin=1.565

Safety Factors Are Calculated By The Modified Bishop Method

SR-15 MC CBF RW400, Sta 404+00, H=6ft Seismic Global Stability

c:\slope stability\sr-15 mid city commuter bike facility_rusnak\sr-15_mc_cbf_rw400 sta 404 050_1.pl2 Run By: Rusnak 11/5/2014 11:38AM

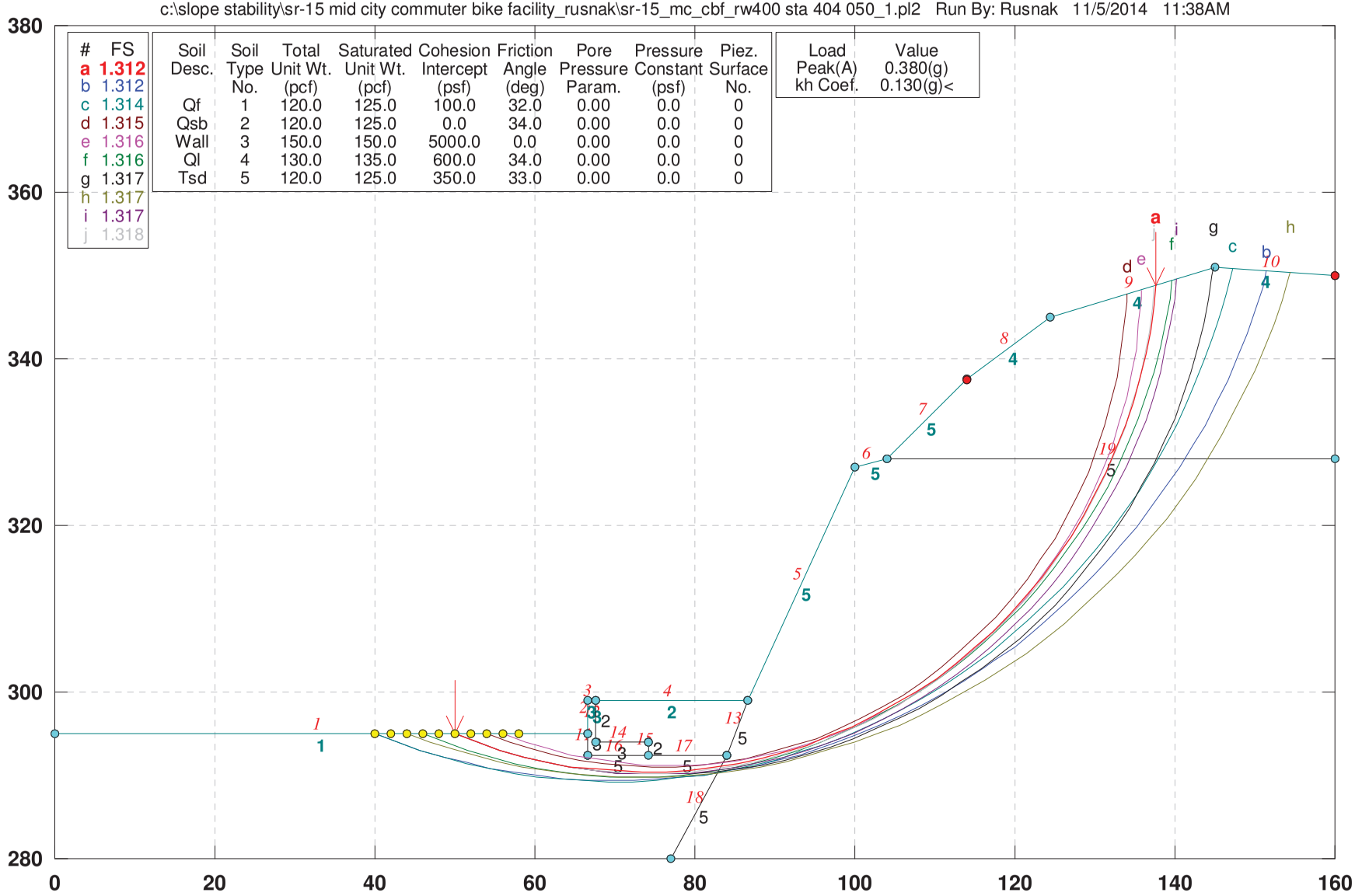

#	FS
a	1.312
b	1.312
c	1.314
d	1.315
e	1.316
f	1.316
g	1.317
h	1.317
i	1.317
j	1.318

Soil Desc.	Soil Type No.	Total Unit Wt. (pcf)	Saturated Unit Wt. (pcf)	Cohesion Intercept (psf)	Friction Angle (deg)	Pore Pressure Param.	Pressure Constant (psf)	Piez. Surface No.
Qf	1	120.0	125.0	100.0	32.0	0.00	0.0	0
Qsb	2	120.0	125.0	0.0	34.0	0.00	0.0	0
Wall	3	150.0	150.0	5000.0	0.0	0.00	0.0	0
Ql	4	130.0	135.0	600.0	34.0	0.00	0.0	0
Tsd	5	120.0	125.0	350.0	33.0	0.00	0.0	0

Load	Value
Peak(A)	0.380(g)
kh Coef.	0.130(g)<

GSTABL7 v.2 FSmin=1.312

Safety Factors Are Calculated By The Modified Bishop Method

SR-15 MC CBF GRE405 Sta 405+80 LTDS 1000lb/ft Geogrid 16ft_18ft,Static

c:\slope stability\sr-15 mid city commuter bike facility_rusnak\2014-08-28 gre stability analyses\sr-15_mid-city_commuter-bike-facility_gre405.pl2 Run By: Rusnak 11/4/2014 12:57PM

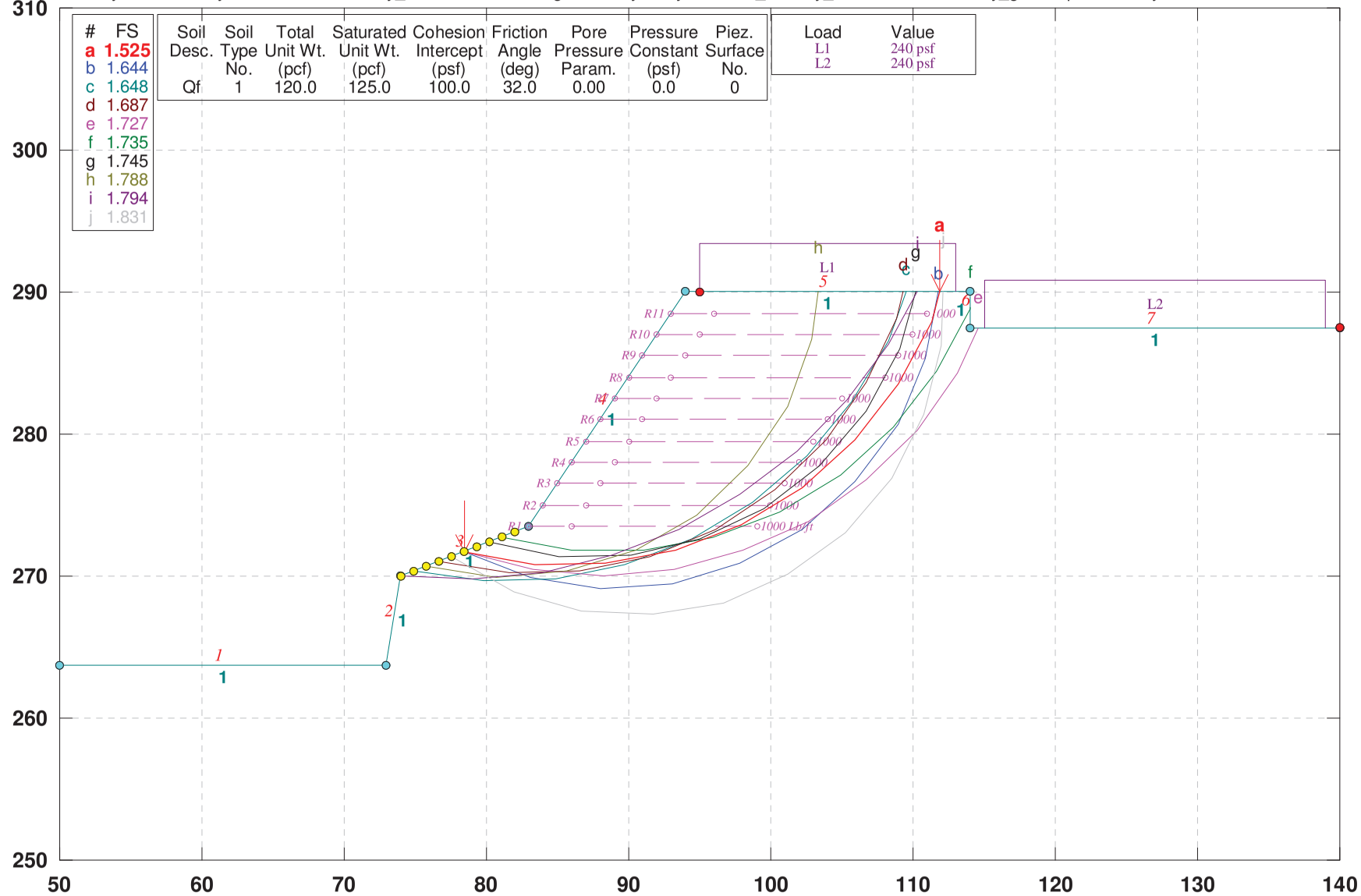

GSTABL7 v.2 FSmin=1.525

Safety Factors Are Calculated By The Simplified Janbu Method

SR-15 MC CBF GRE405 Sta 405+80 LTDS 1000lb/ft Geogrid 16ft_18ft,Seismic

c:\slope stability\sr-15 mid city commuter bike facility_rusnak\2014-08-28 gre stability analyses\sr-15_mid-city_commuter-bike-facility_gre405.pl2 Run By: Rusnak 11/4/2014 12:55PM

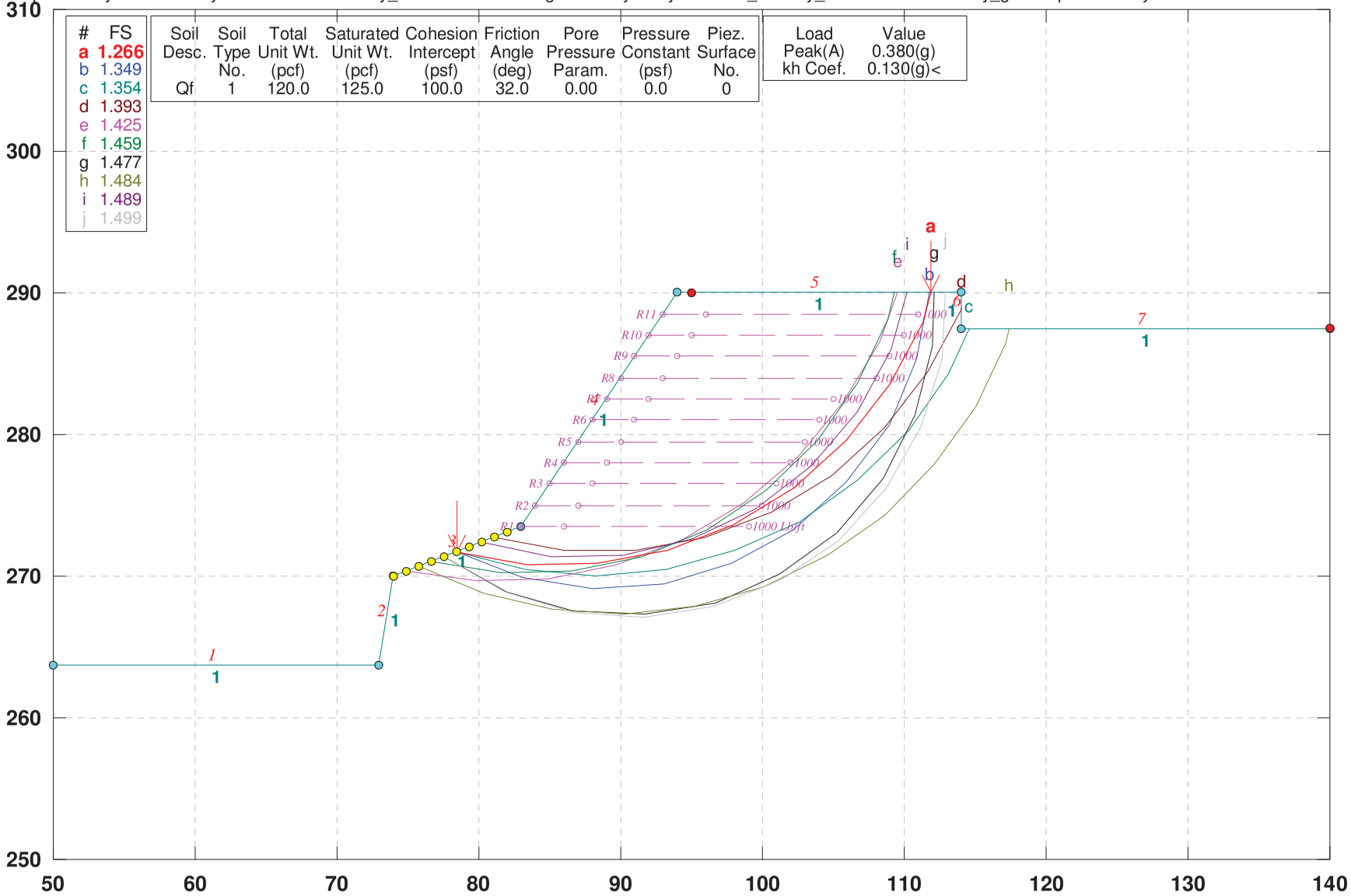

GSTABL7 v.2 FSmin=1.266

Safety Factors Are Calculated By The Simplified Janbu Method

SR-15 MC CBF RW407, Sta 407+00 H=6ft Static Global Stability

c:\slope stability\sr-15 mid city commuter bike facility_rusnak\sr-15_mc_cbf_rw407 sta 407 050_1.pl2 Run By: Rusnak 11/5/2014 11:48AM

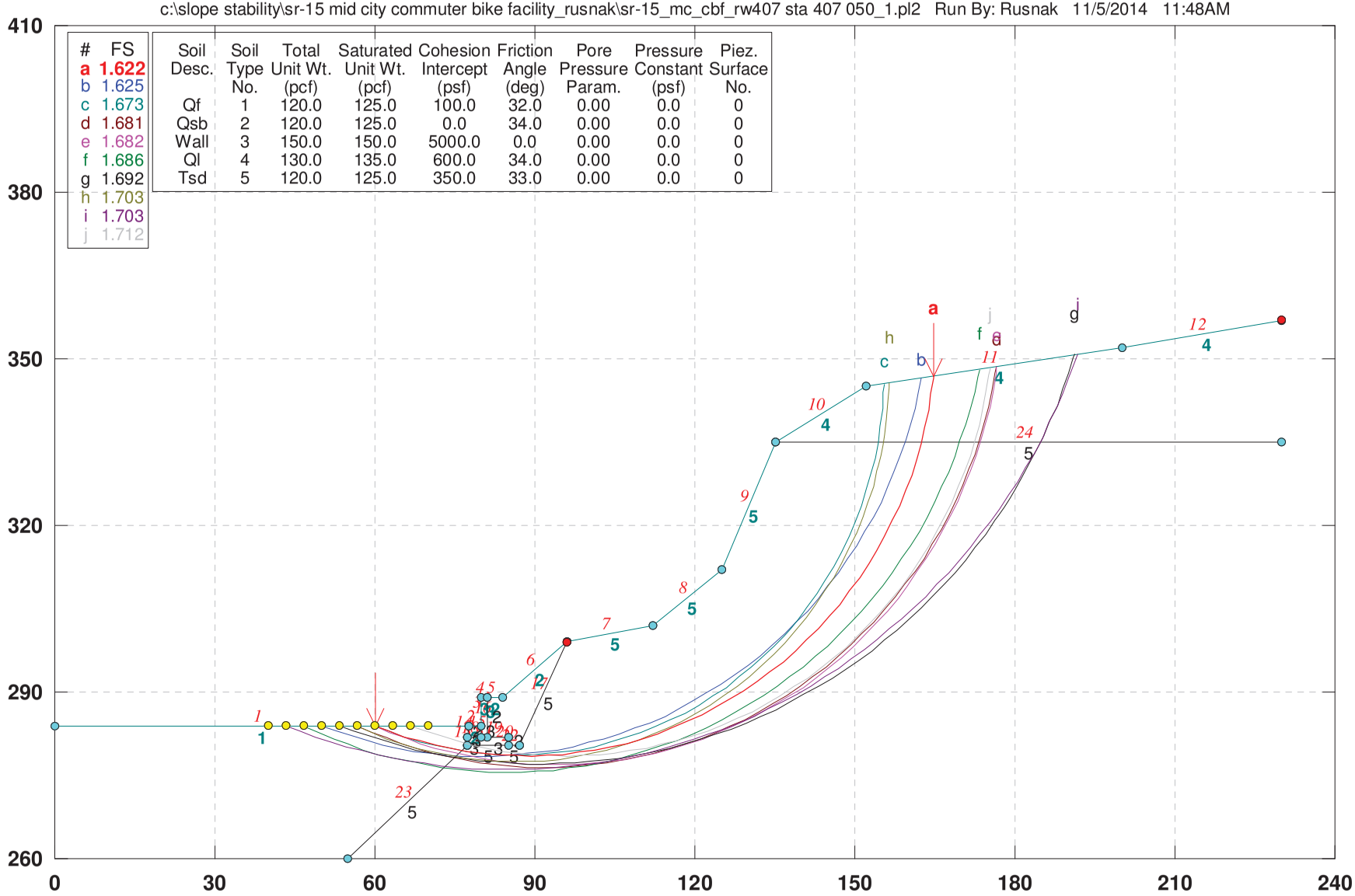

GSTABL7 v.2 FSmin=1.622

Safety Factors Are Calculated By The Modified Bishop Method

SR-15 MC CBF RW407, Sta 407+00 H=6ft Seismic Global Stability

c:\slope stability\sr-15 mid city commuter bike facility_rusnak\sr-15_mc_cbf_rw407 sta 407 050_1.pl2 Run By: Rusnak 11/5/2014 11:47AM

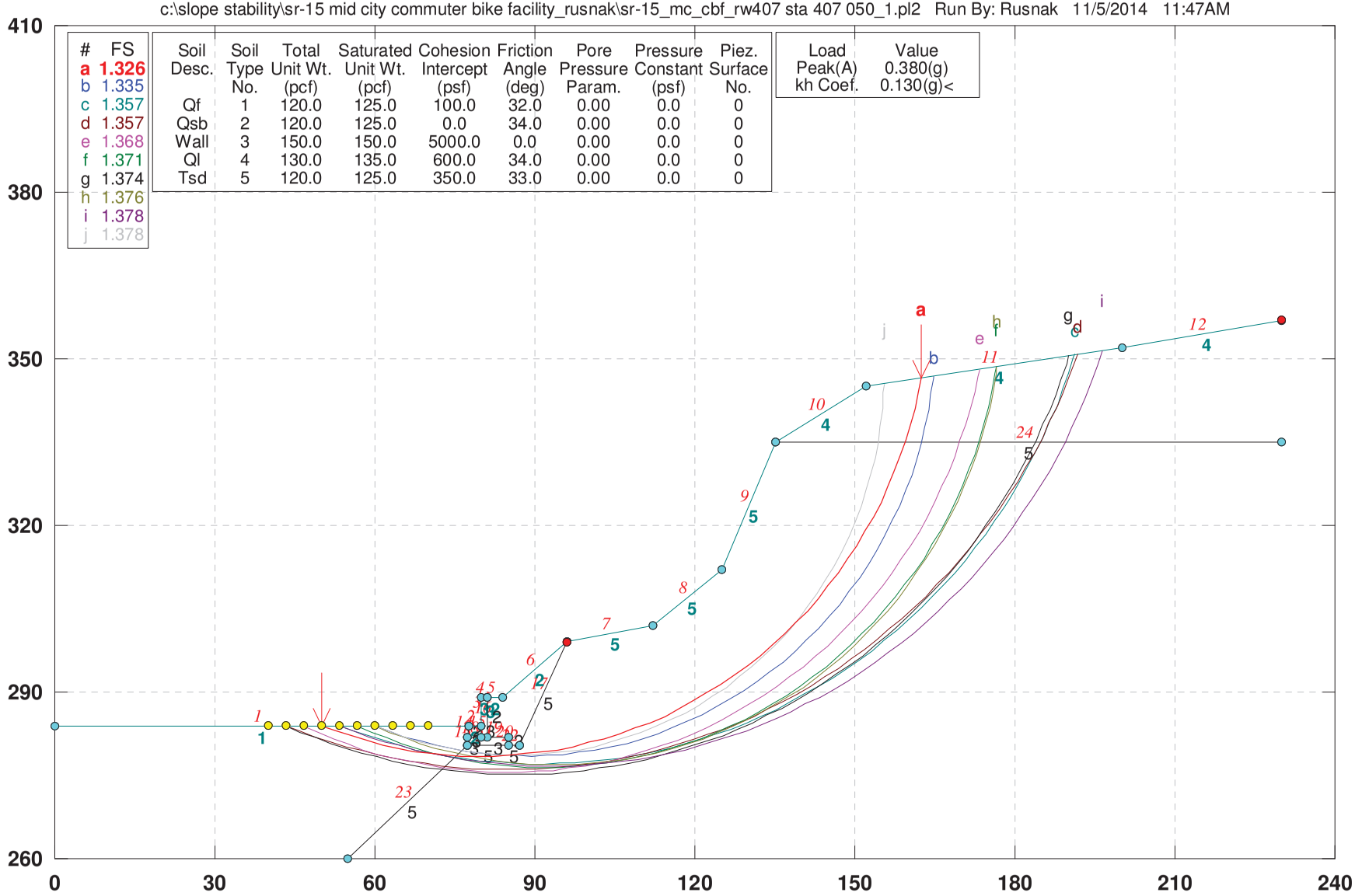

#	FS
a	1.326
b	1.335
c	1.357
d	1.357
e	1.368
f	1.371
g	1.374
h	1.376
i	1.378
j	1.378

Soil Desc.	Soil Type No.	Total Unit Wt. (pcf)	Saturated Unit Wt. (pcf)	Cohesion Intercept (psf)	Friction Angle (deg)	Pore Pressure Param.	Pressure Constant (psf)	Piez. Surface No.
Qf	1	120.0	125.0	100.0	32.0	0.00	0.0	0
Qsb	2	120.0	125.0	0.0	34.0	0.00	0.0	0
Wall	3	150.0	150.0	5000.0	0.0	0.00	0.0	0
Ql	4	130.0	135.0	600.0	34.0	0.00	0.0	0
Tsd	5	120.0	125.0	350.0	33.0	0.00	0.0	0

Load	Value
Peak(A)	0.380(g)
kh Coef.	0.130(g)<

GSTABL7 v.2 FSmin=1.326

Safety Factors Are Calculated By The Modified Bishop Method

SR-15 MC CBF RW407, Sta 407+00 H=6ft Temporary Cut 0.5:1

c:\slope stability\sr-15 mid city commuter bike facility_rusnak\sr-15_mc_cbf_rw407 sta 407 temp cut.pl2 Run By: Rusnak 11/5/2014 11:49AM

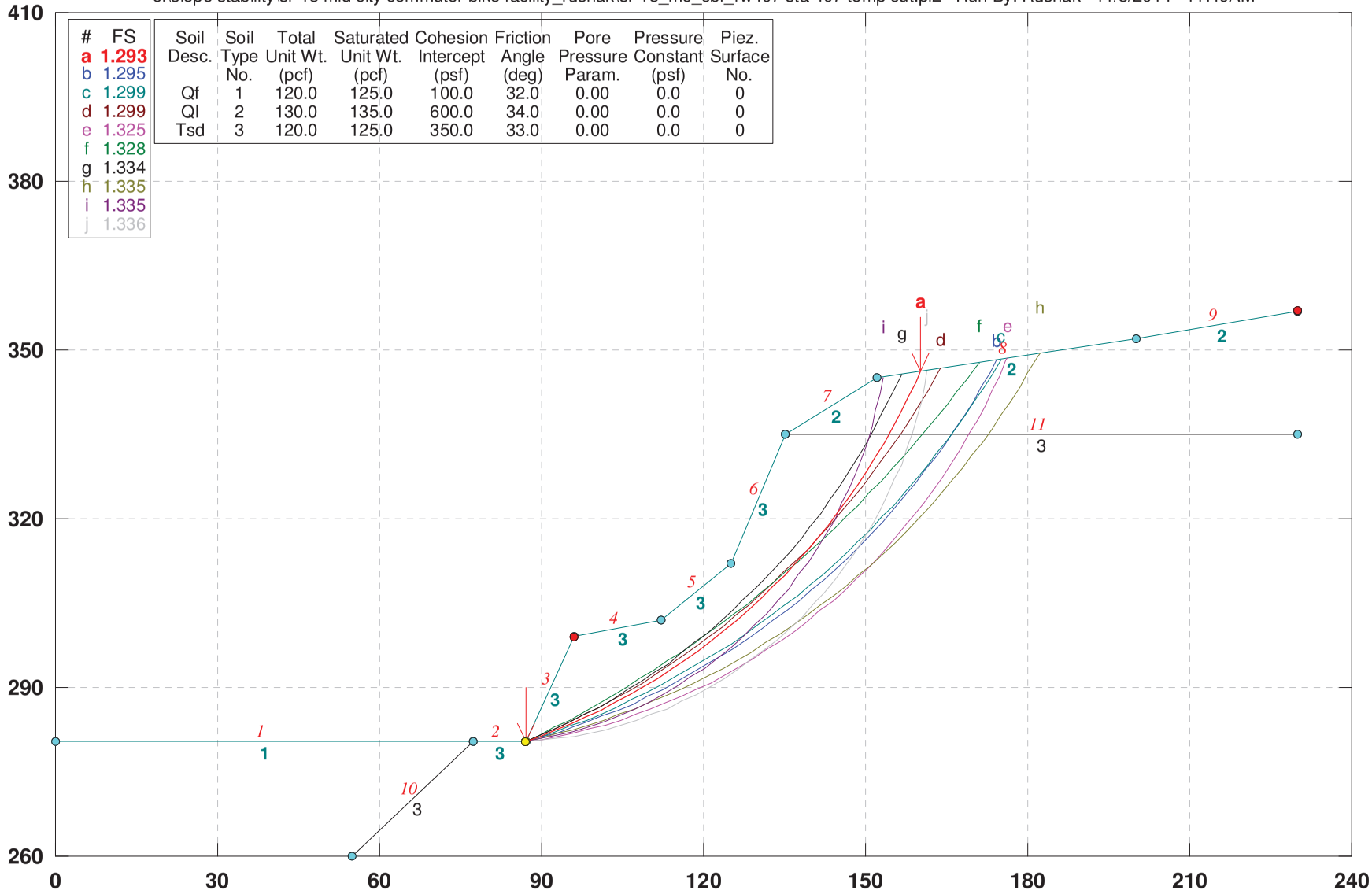

GSTABL7 v.2 FSmin=1.293

Safety Factors Are Calculated By The Modified Bishop Method

SR-15 MC CBF GRE408 Sta 409+20 LTDS 1000lb/ft Geogrid 14ft, Static

c:\slope stability\sr-15 mid city commuter bike facility_rusnak\2014-08-28 gre stability analyses\sr-15_mid-city_commuter-bike-facility_gre408.pl2 Run By: Rusnak 11/4/2014 12:59PM

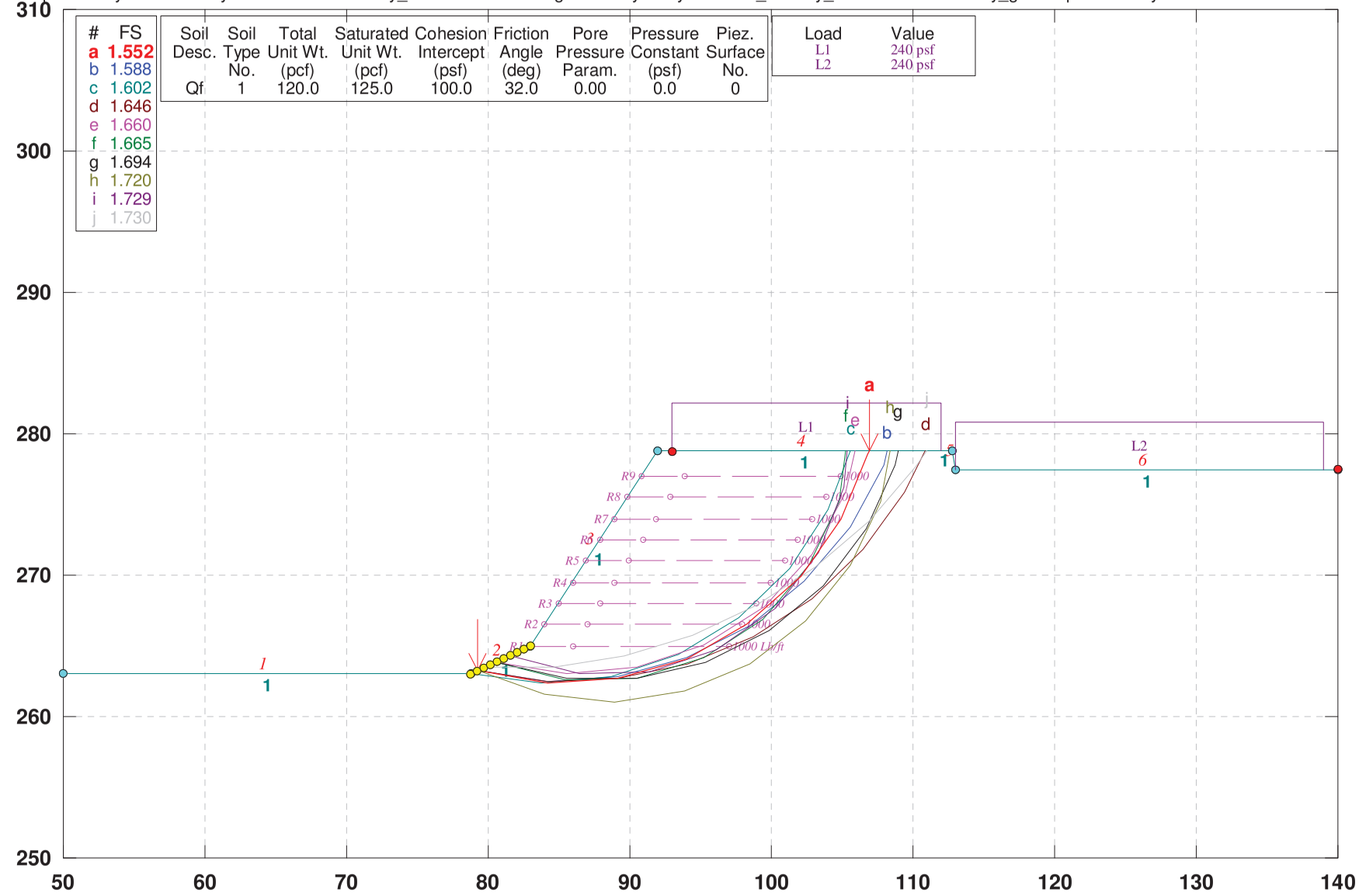

GSTABL7 v.2 FSmin=1.552

Safety Factors Are Calculated By The Simplified Janbu Method

SR-15 MC CBF GRE408 Sta 409+20 LTDS 1000lb/ft Geogrid 14ft, Seismic

c:\slope stability\sr-15 mid city commuter bike facility_rusnak\2014-08-28 gre stability analyses\sr-15_mid-city_commuter-bike-facility_gre408.pl2 Run By: Rusnak 11/4/2014 12:58PM

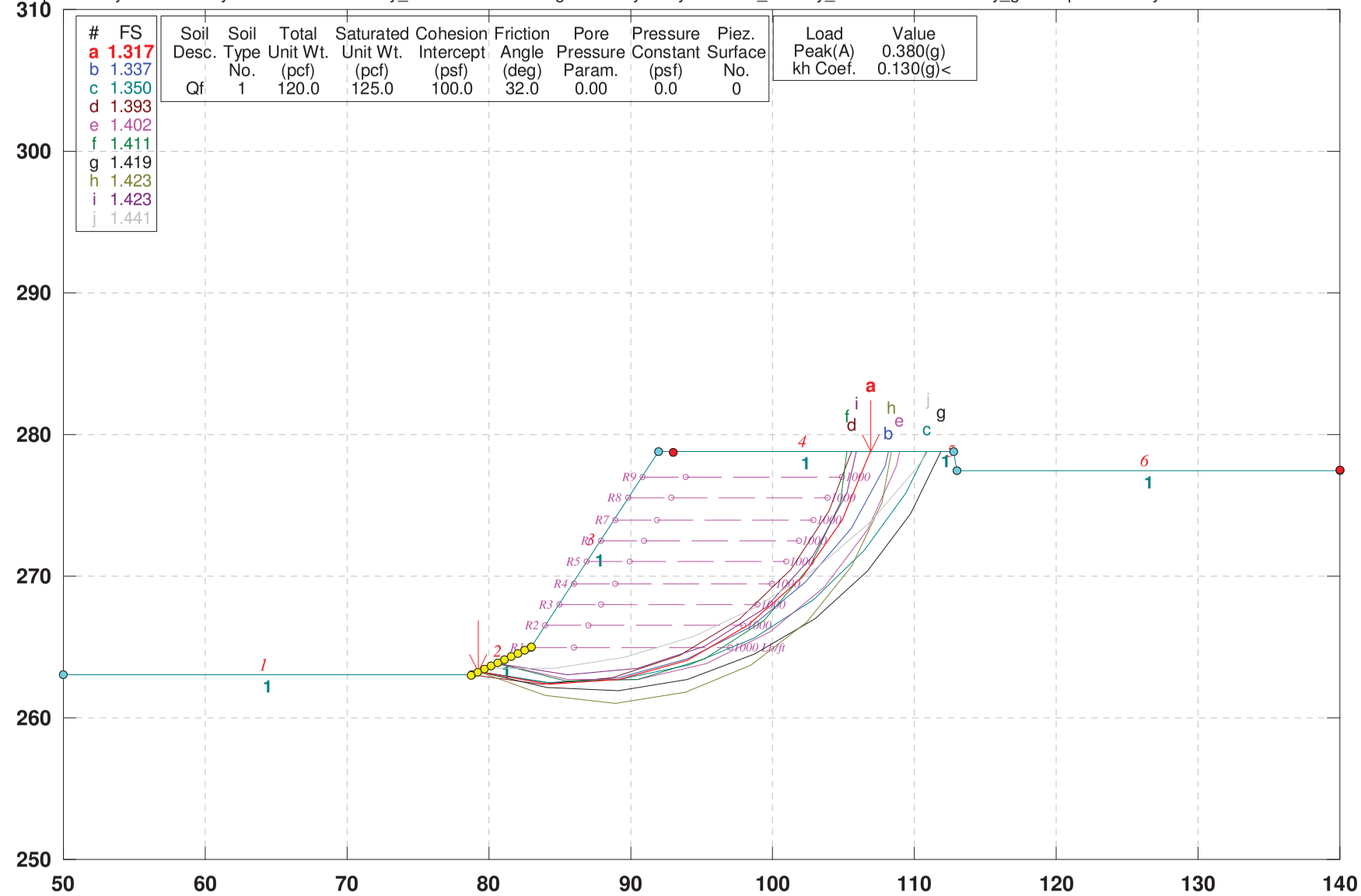

GSTABL7 v.2 FSmin=1.317

Safety Factors Are Calculated By The Simplified Janbu Method

SR-15 MC CBF RW426, Sta. 427+16.02 H=14ft, Static Slope Stability

c:\slope stability\sr-15 mid city commuter bike facility_rusnak\sr-15_mc_cbf_rw426 sta 427+16.02.pl2 Run By: Rusnak 11/12/2014 05:23PM

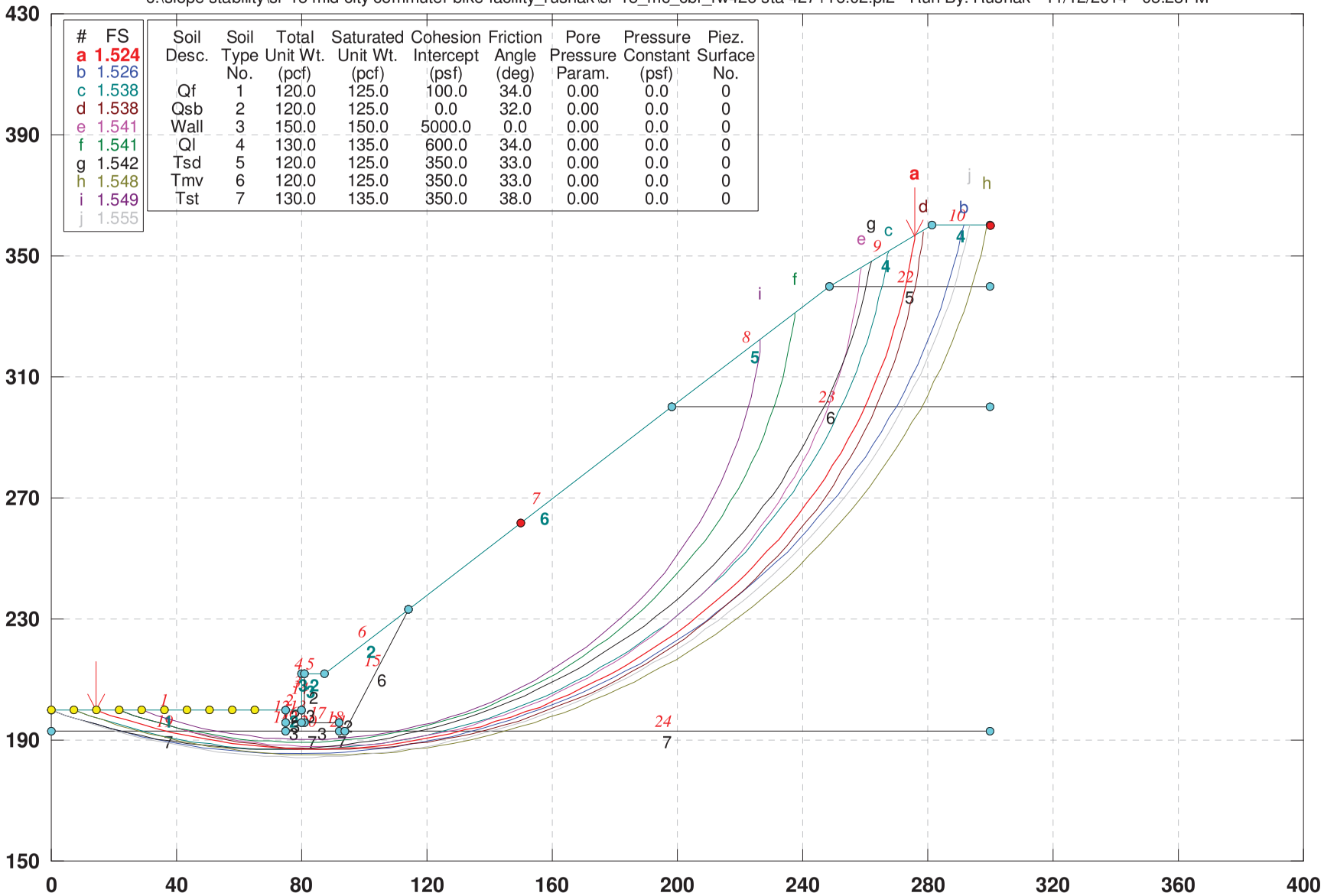

#	FS
a	1.524
b	1.526
c	1.538
d	1.538
e	1.541
f	1.541
g	1.542
h	1.548
i	1.549
j	1.555

Soil Desc.	Soil Type No.	Total Unit Wt. (pcf)	Saturated Unit Wt. (pcf)	Cohesion Intercept (psf)	Friction Angle (deg)	Pore Pressure Param.	Pressure Constant (psf)	Piez. Surface No.
Qf	1	120.0	125.0	100.0	34.0	0.00	0.0	0
Qsb	2	120.0	125.0	0.0	32.0	0.00	0.0	0
Wall	3	150.0	150.0	5000.0	0.0	0.00	0.0	0
Ql	4	130.0	135.0	600.0	34.0	0.00	0.0	0
Tsd	5	120.0	125.0	350.0	33.0	0.00	0.0	0
Tmv	6	120.0	125.0	350.0	33.0	0.00	0.0	0
Tst	7	130.0	135.0	350.0	38.0	0.00	0.0	0

GSTABL7 v.2 FSmin=1.524

Safety Factors Are Calculated By The Modified Bishop Method

SR-15 MC CBF RW426, Sta. 427+16.02 H=14ft, Seismic Slope Stability

c:\slope stability\sr-15 mid city commuter bike facility_rusnak\sr-15_mc_cbf_rw426 sta 427+16.02.pl2 Run By: Rusnak 11/12/2014 05:25PM

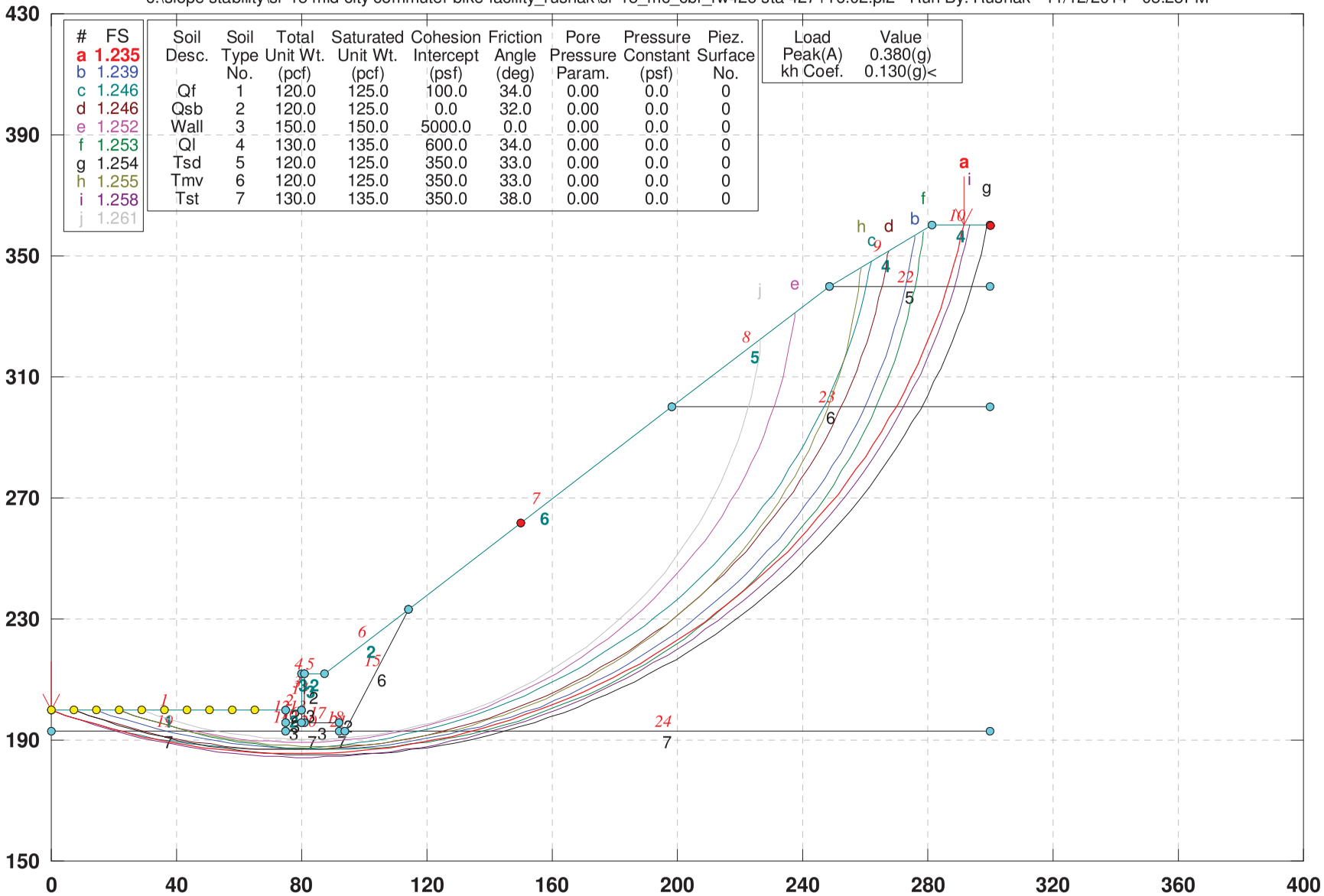

#	FS
a	1.235
b	1.239
c	1.246
d	1.246
e	1.252
f	1.253
g	1.254
h	1.255
i	1.258
j	1.261

Soil Desc.	Soil Type No.	Total Unit Wt. (pcf)	Saturated Unit Wt. (pcf)	Cohesion Intercept (psf)	Friction Angle (deg)	Pore Pressure Param.	Pressure Constant (psf)	Piez. Surface No.
Qf	1	120.0	125.0	100.0	34.0	0.00	0.0	0
Qsb	2	120.0	125.0	0.0	32.0	0.00	0.0	0
Wall	3	150.0	150.0	5000.0	0.0	0.00	0.0	0
Ql	4	130.0	135.0	600.0	34.0	0.00	0.0	0
Tsd	5	120.0	125.0	350.0	33.0	0.00	0.0	0
Tmv	6	120.0	125.0	350.0	33.0	0.00	0.0	0
Tst	7	130.0	135.0	350.0	38.0	0.00	0.0	0

Load	Value
Peak(A)	0.380(g)
kh Coef.	0.130(g)<

GSTABL7 v.2 FSmin=1.235

Safety Factors Are Calculated By The Modified Bishop Method

SR-15 MC CBF RW426, Sta. 427+16.02 Temporary Cut 0.5:1

c:\slope stability\sr-15 mid city commuter bike facility_rusnak\sr-15_mc_cbf_rw426 sta 427+16.02 temp cut 050_1.pl2 Run By: Rusnak 11/12/2014 05:33PM

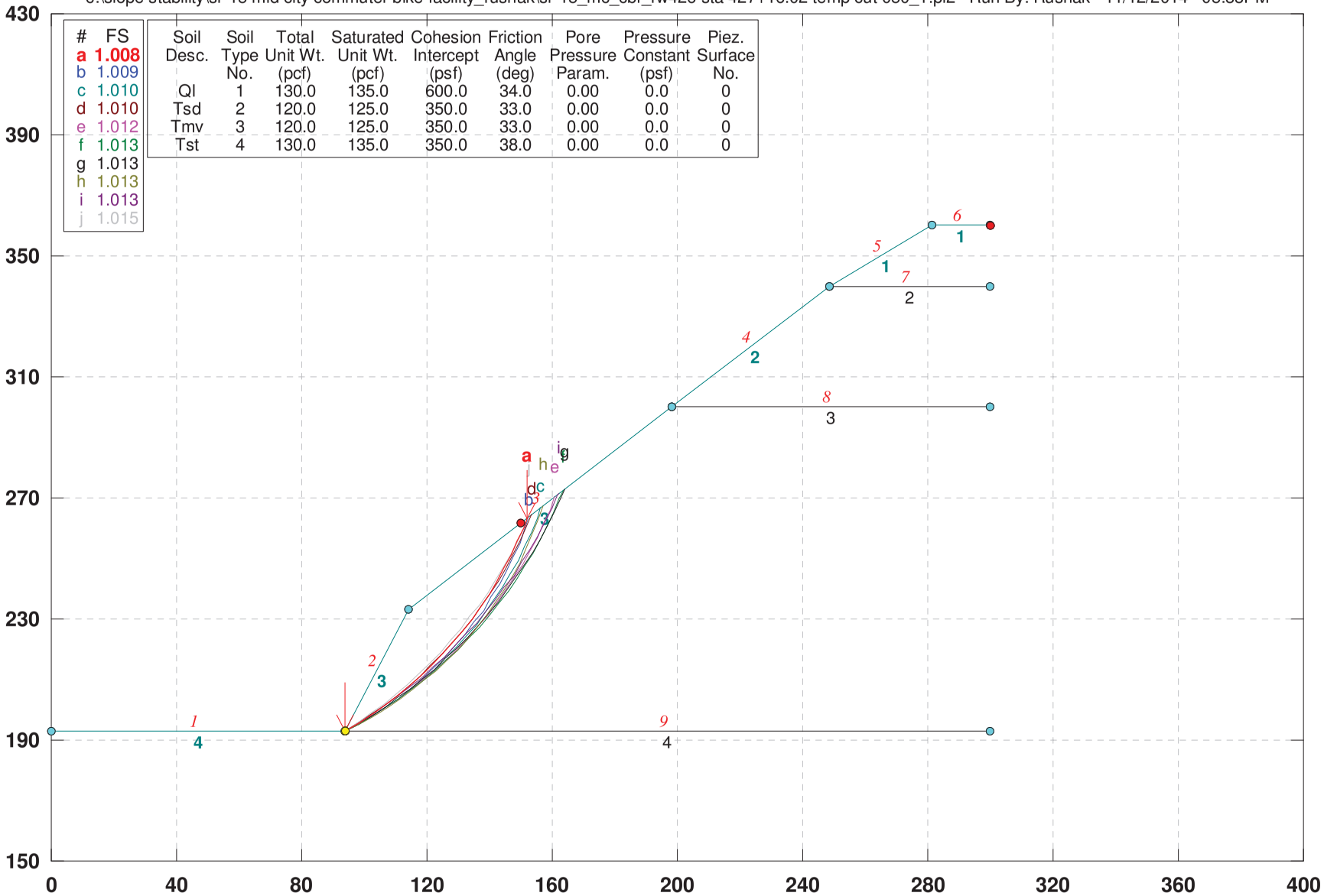

GSTABL7 v.2 FSmin=1.008

Safety Factors Are Calculated By The Modified Bishop Method

SR-15 MC CBF RW426, Sta. 427+16.02 Temporary Cut 0.75:1

c:\slope stability\sr-15 mid city commuter bike facility_rusnak\sr-15_mc_cbf_rw426 sta 427+16.02 temp cut 075_1.pl2 Run By: Rusnak 11/12/2014 05:33PM

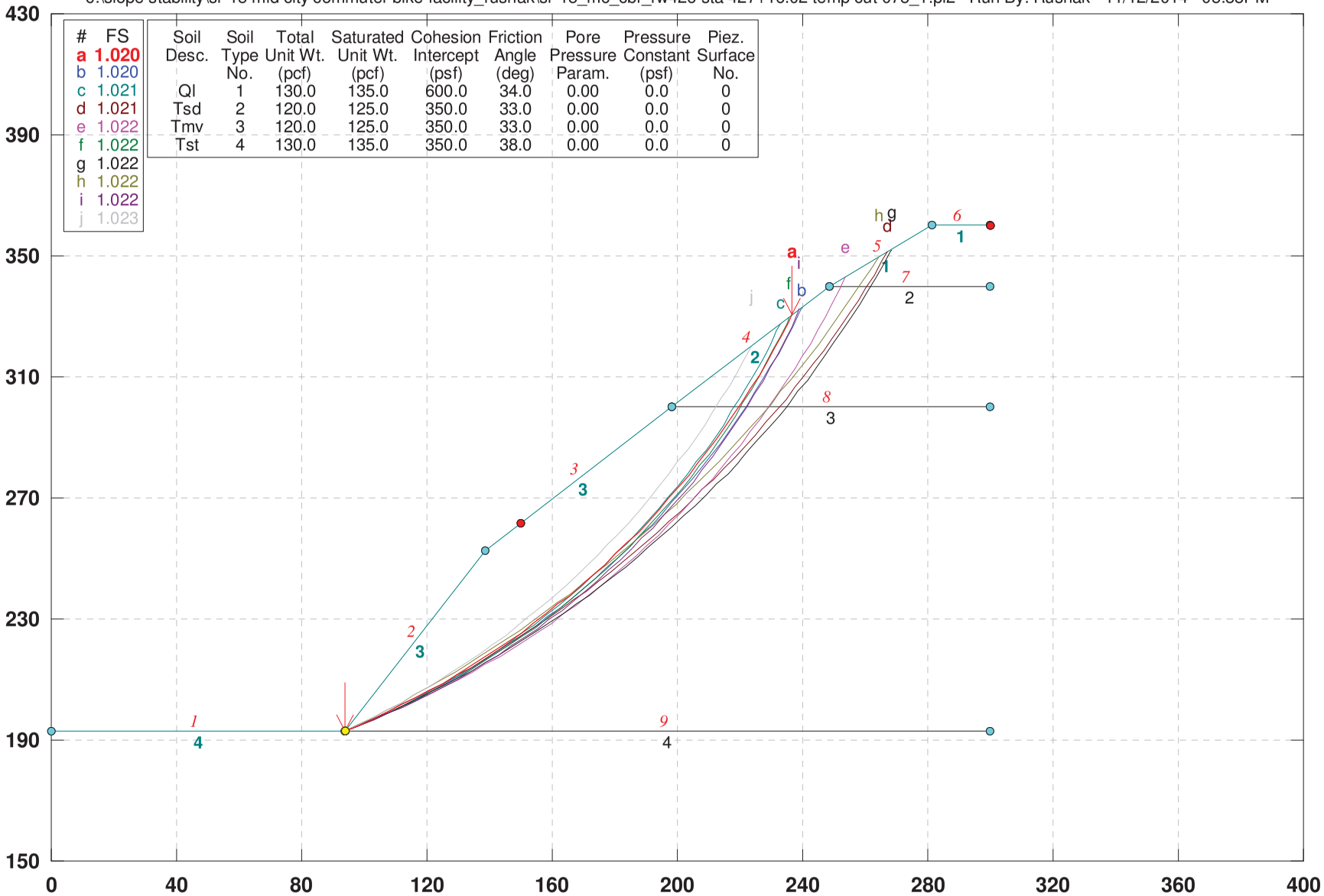

#	FS
a	1.020
b	1.020
c	1.021
d	1.021
e	1.022
f	1.022
g	1.022
h	1.022
i	1.022
j	1.023

Soil Desc.	Soil Type No.	Total Unit Wt. (pcf)	Saturated Unit Wt. (pcf)	Cohesion Intercept (psf)	Friction Angle (deg)	Pore Pressure Param.	Pressure Constant (psf)	Piez. Surface No.
Ql	1	130.0	135.0	600.0	34.0	0.00	0.0	0
Tsd	2	120.0	125.0	350.0	33.0	0.00	0.0	0
Tmv	3	120.0	125.0	350.0	33.0	0.00	0.0	0
Tst	4	130.0	135.0	350.0	38.0	0.00	0.0	0

GSTABL7 v.2 FSmin=1.020

Safety Factors Are Calculated By The Modified Bishop Method

SR-15 MC CBF RW431, Sta. 431+53.05 H=16ft, Static Global Stability

c:\slope stability\sr-15 mid city commuter bike facility_rusnak\sr-15_mc_cbf_rw431sta 431+51.05 tmv_tst.pl2 Run By: Rusnak 11/12/2014 06:55PM

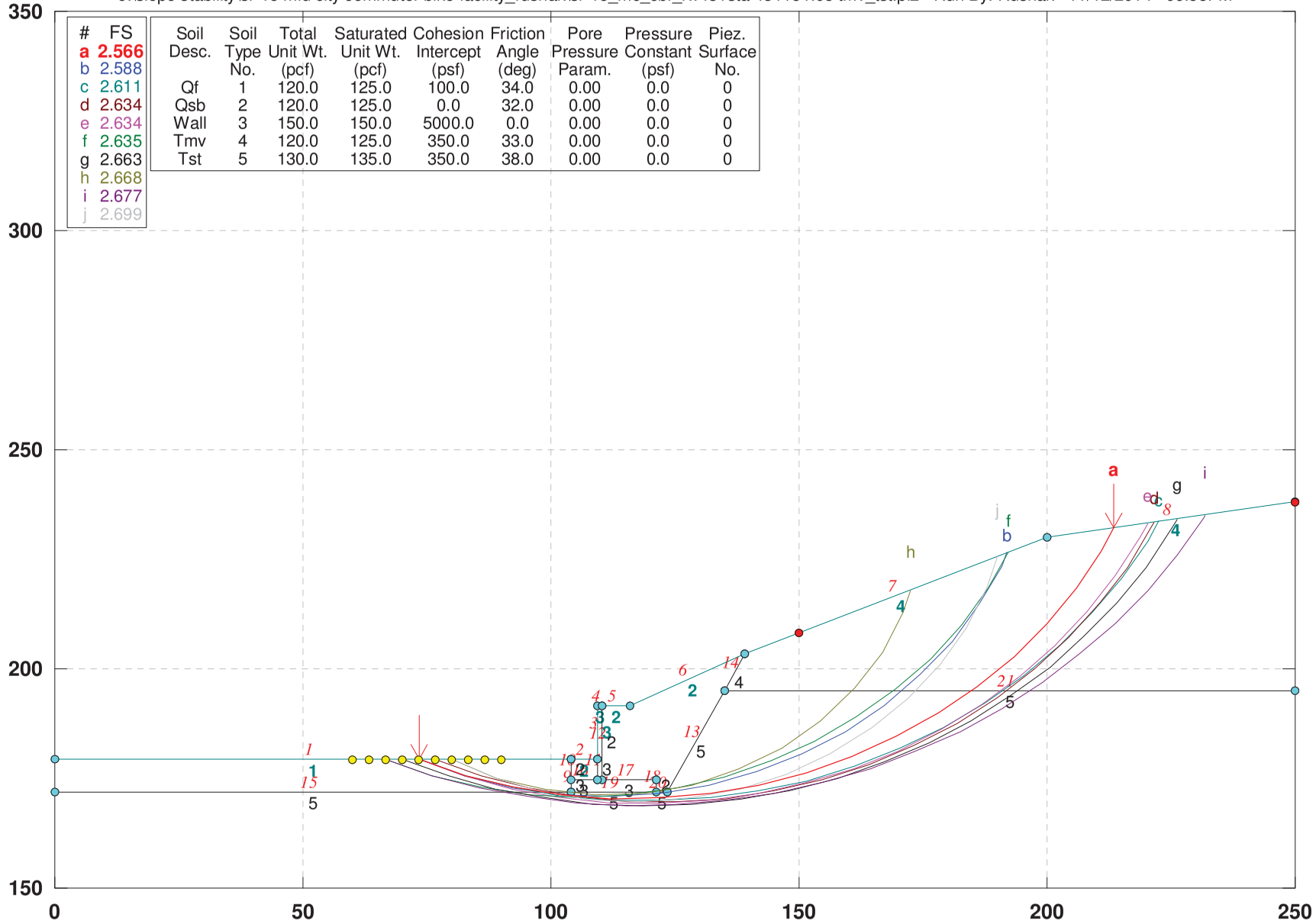

#	FS
a	2.566
b	2.588
c	2.611
d	2.634
e	2.634
f	2.635
g	2.663
h	2.668
i	2.677
j	2.699

Soil Desc.	Soil Type No.	Total Unit Wt. (pcf)	Saturated Unit Wt. (pcf)	Cohesion Intercept (psf)	Friction Angle (deg)	Pore Pressure Param.	Pressure Constant (psf)	Piez. Surface No.
Qf	1	120.0	125.0	100.0	34.0	0.00	0.0	0
Qsb	2	120.0	125.0	0.0	32.0	0.00	0.0	0
Wall	3	150.0	150.0	5000.0	0.0	0.00	0.0	0
Tmv	4	120.0	125.0	350.0	33.0	0.00	0.0	0
Tst	5	130.0	135.0	350.0	38.0	0.00	0.0	0

GSTABL7 v.2 FSmin=2.566
Safety Factors Are Calculated By The Modified Bishop Method

SR-15 MC CBF RW431, Sta. 431+53.05 H=16ft, Seismic Global Stability

c:\slope stability\sr-15 mid city commuter bike facility_rusnak\sr-15_mc_cbf_rw431sta 431+51.05 tmv_tst.pl2 Run By: Rusnak 11/12/2014 06:55PM

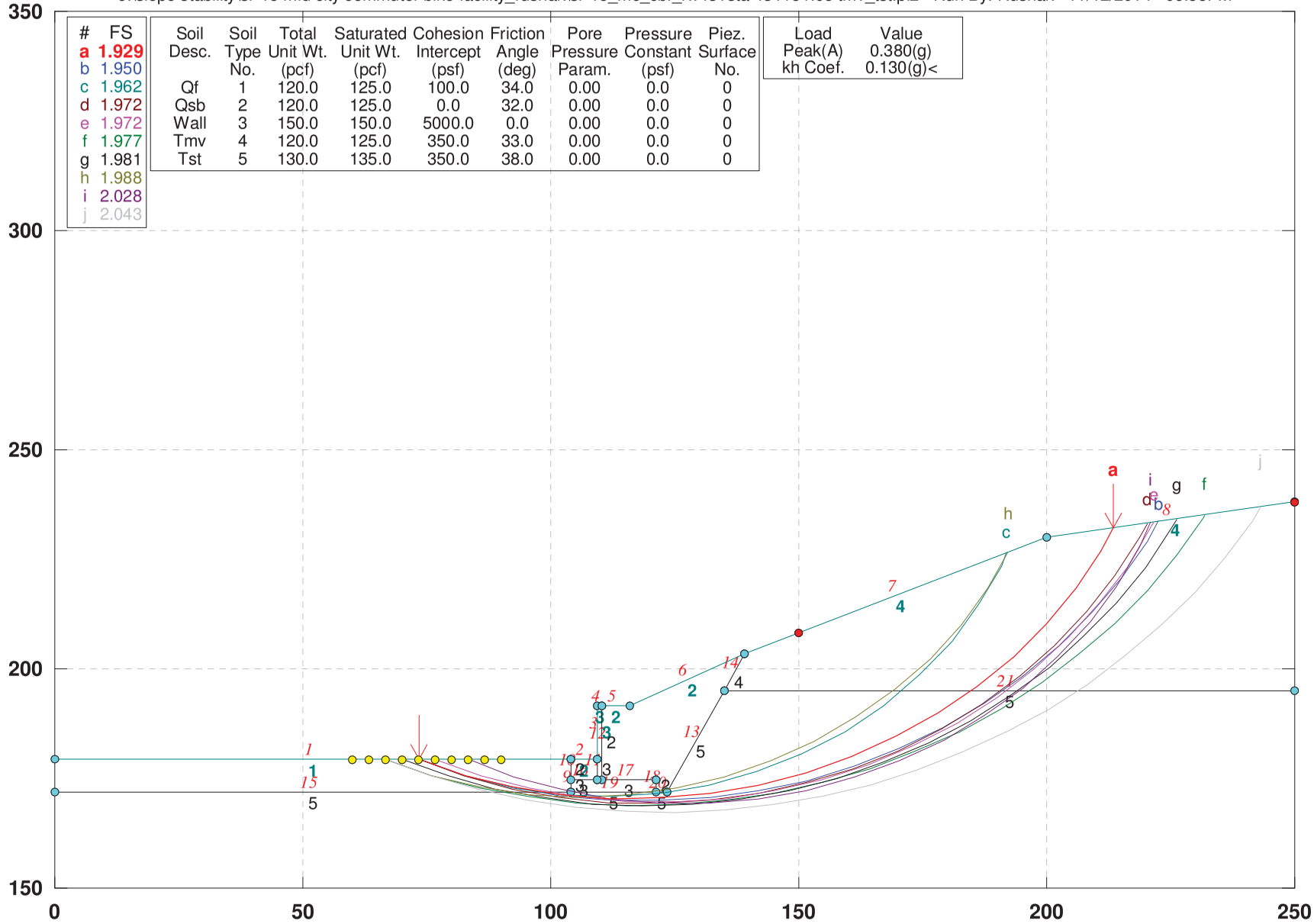

#	FS
a	1.929
b	1.950
c	1.962
d	1.972
e	1.972
f	1.977
g	1.981
h	1.988
i	2.028
j	2.043

Soil Desc.	Soil Type No.	Total Unit Wt. (pcf)	Saturated Unit Wt. (pcf)	Cohesion Intercept (psf)	Friction Angle (deg)	Pore Pressure Param.	Pressure Constant (psf)	Piez. Surface No.
Qf	1	120.0	125.0	100.0	34.0	0.00	0.0	0
Qsb	2	120.0	125.0	0.0	32.0	0.00	0.0	0
Wall	3	150.0	150.0	5000.0	0.0	0.00	0.0	0
Tmv	4	120.0	125.0	350.0	33.0	0.00	0.0	0
Tst	5	130.0	135.0	350.0	38.0	0.00	0.0	0

Load	Value
Peak(A)	0.380(g)
kh Coef.	0.130(g)<

GSTABL7 v.2 FSmin=1.929

Safety Factors Are Calculated By The Modified Bishop Method

GSTABL7

SR-15 MC CBF RW431, Sta. 431+53.05 Temporary Cut 0.5:1

c:\slope stability\sr-15 mid city commuter bike facility_rusnak\sr-15_mc_cbf_rw431sta 431+51.05 tmv_tst temp cut.pl2 Run By: Rusnak 11/12/2014 06:57PM

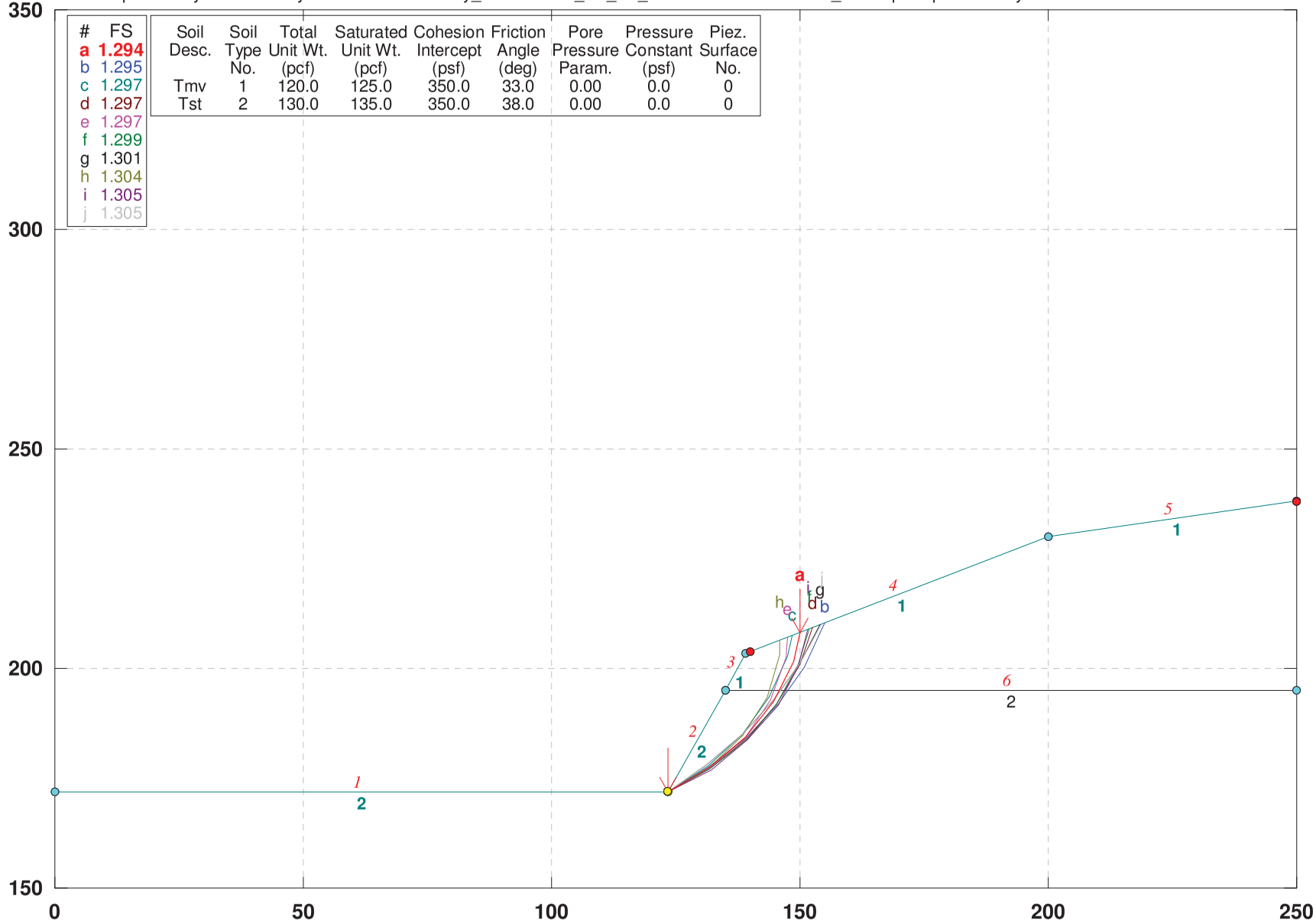

GSTABL7 v.2 FSmin=1.294

Safety Factors Are Calculated By The Modified Bishop Method

SR-15 MC CBF RW435, Sta. 436+16.02 H=14ft, Static Global Stability

c:\slope stability\sr-15 mid city commuter bike facility_rusnak\sr-15_mc_cbf_rw435sta 436+16.02 tmv_tst.pl2 Run By: Rusnak 11/12/2014 05:41PM

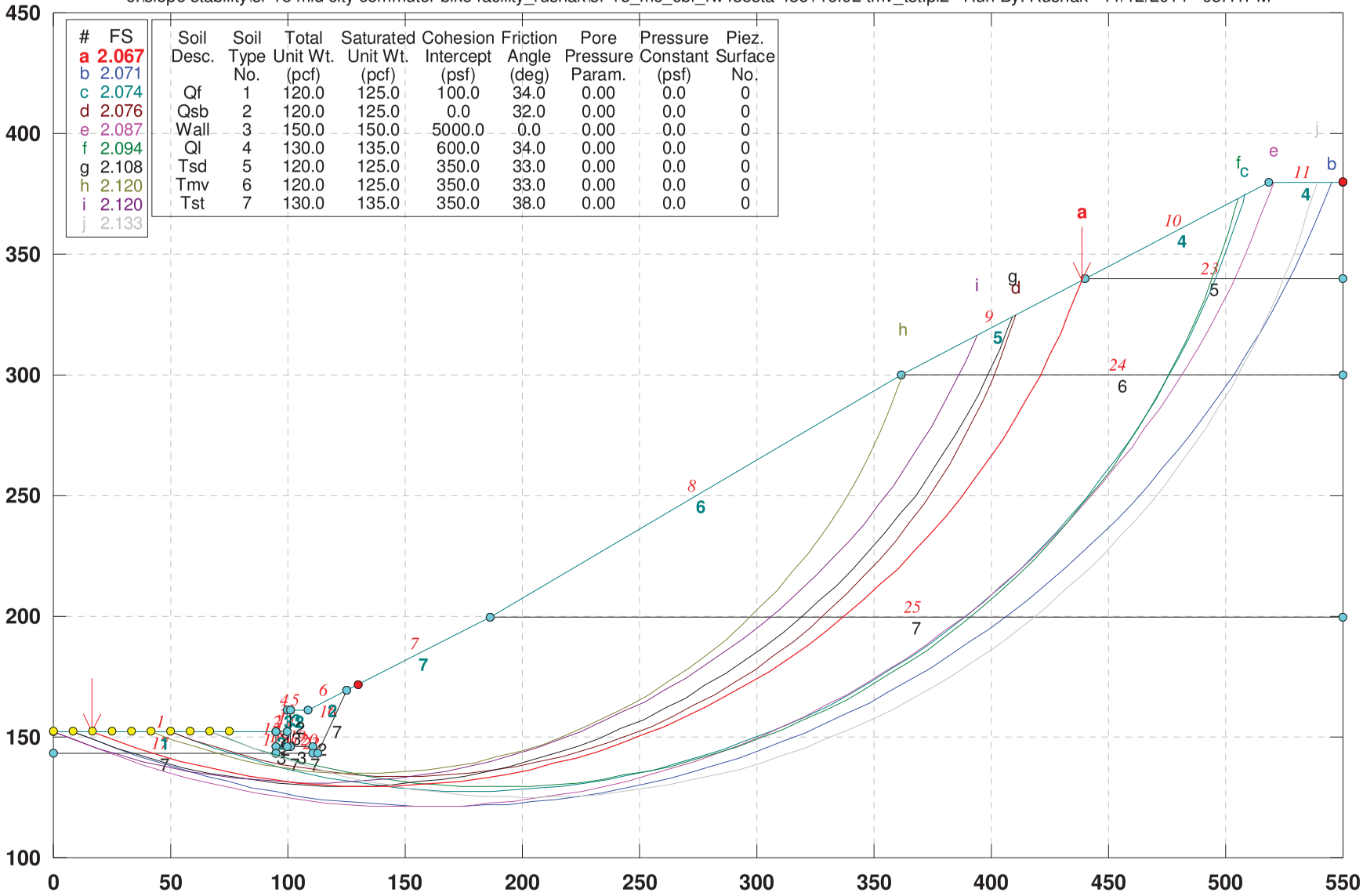

#	FS
a	2.067
b	2.071
c	2.074
d	2.076
e	2.087
f	2.094
g	2.108
h	2.120
i	2.120
j	2.133

Soil Desc.	Soil Type No.	Total Unit Wt. (pcf)	Saturated Unit Wt. (pcf)	Cohesion Intercept (psf)	Friction Angle (deg)	Pore Pressure Param.	Pressure Constant (psf)	Piez. Surface No.
Qf	1	120.0	125.0	100.0	34.0	0.00	0.0	0
Qsb	2	120.0	125.0	0.0	32.0	0.00	0.0	0
Wall	3	150.0	150.0	5000.0	0.0	0.00	0.0	0
Ql	4	130.0	135.0	600.0	34.0	0.00	0.0	0
Tsd	5	120.0	125.0	350.0	33.0	0.00	0.0	0
Tmv	6	120.0	125.0	350.0	33.0	0.00	0.0	0
Tst	7	130.0	135.0	350.0	38.0	0.00	0.0	0

GSTABL7 v.2 FSmin=2.067

Safety Factors Are Calculated By The Modified Bishop Method

SR-15 MC CBF RW435, Sta. 436+16.02 H=14ft, Seismic Global Stability

c:\slope stability\sr-15 mid city commuter bike facility_rusnak\sr-15_mc_cbf_rw435sta 436+16.02 tmv_tst.pl2 Run By: Rusnak 11/12/2014 05:41PM

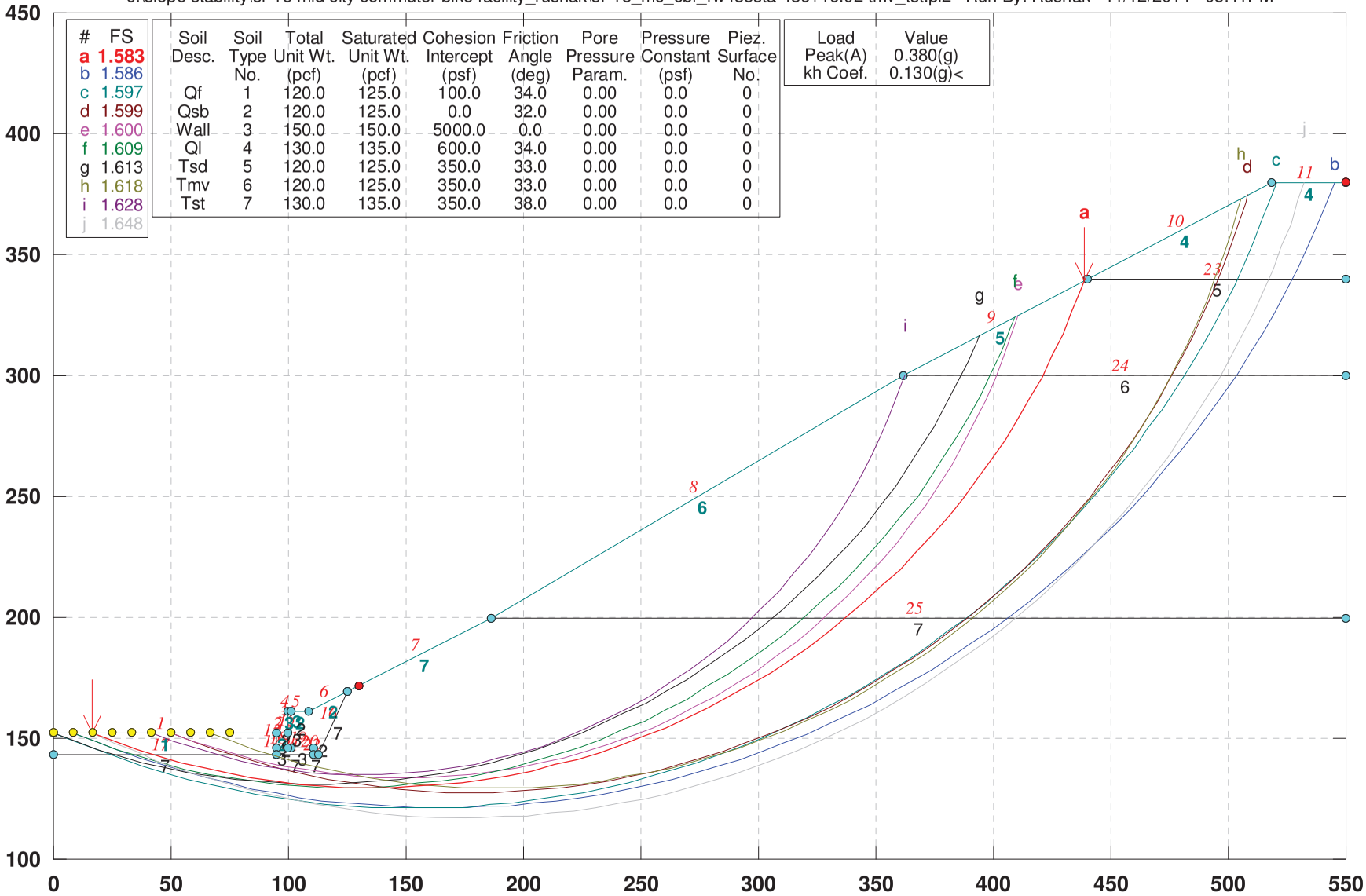

#	FS
a	1.583
b	1.586
c	1.597
d	1.599
e	1.600
f	1.609
g	1.613
h	1.618
i	1.628
j	1.648

Soil Desc.	Soil Type No.	Total Unit Wt. (pcf)	Saturated Unit Wt. (pcf)	Cohesion Intercept (psf)	Friction Angle (deg)	Pore Pressure Param.	Pressure Constant (psf)	Piez. Surface No.
Qf	1	120.0	125.0	100.0	34.0	0.00	0.0	0
Qsb	2	120.0	125.0	0.0	32.0	0.00	0.0	0
Wall	3	150.0	150.0	5000.0	0.0	0.00	0.0	0
Ql	4	130.0	135.0	600.0	34.0	0.00	0.0	0
Tsd	5	120.0	125.0	350.0	33.0	0.00	0.0	0
Tmv	6	120.0	125.0	350.0	33.0	0.00	0.0	0
Tst	7	130.0	135.0	350.0	38.0	0.00	0.0	0

Load	Value
Peak(A)	0.380(g)
kh Coef.	0.130(g)<

GSTABL7 v.2 FSmin=1.583
Safety Factors Are Calculated By The Modified Bishop Method

GSTABL7

SR-15 MC CBF RW435, Sta. 436+16.02 Temporary Cut 05:1.0

c:\slope stability\sr-15 mid city commuter bike facility_rusnak\sr-15_mc_cbf_rw435sta 436+16.02 tmv_tst temp cut.pl2 Run By: Rusnak 11/12/2014 05:44PM

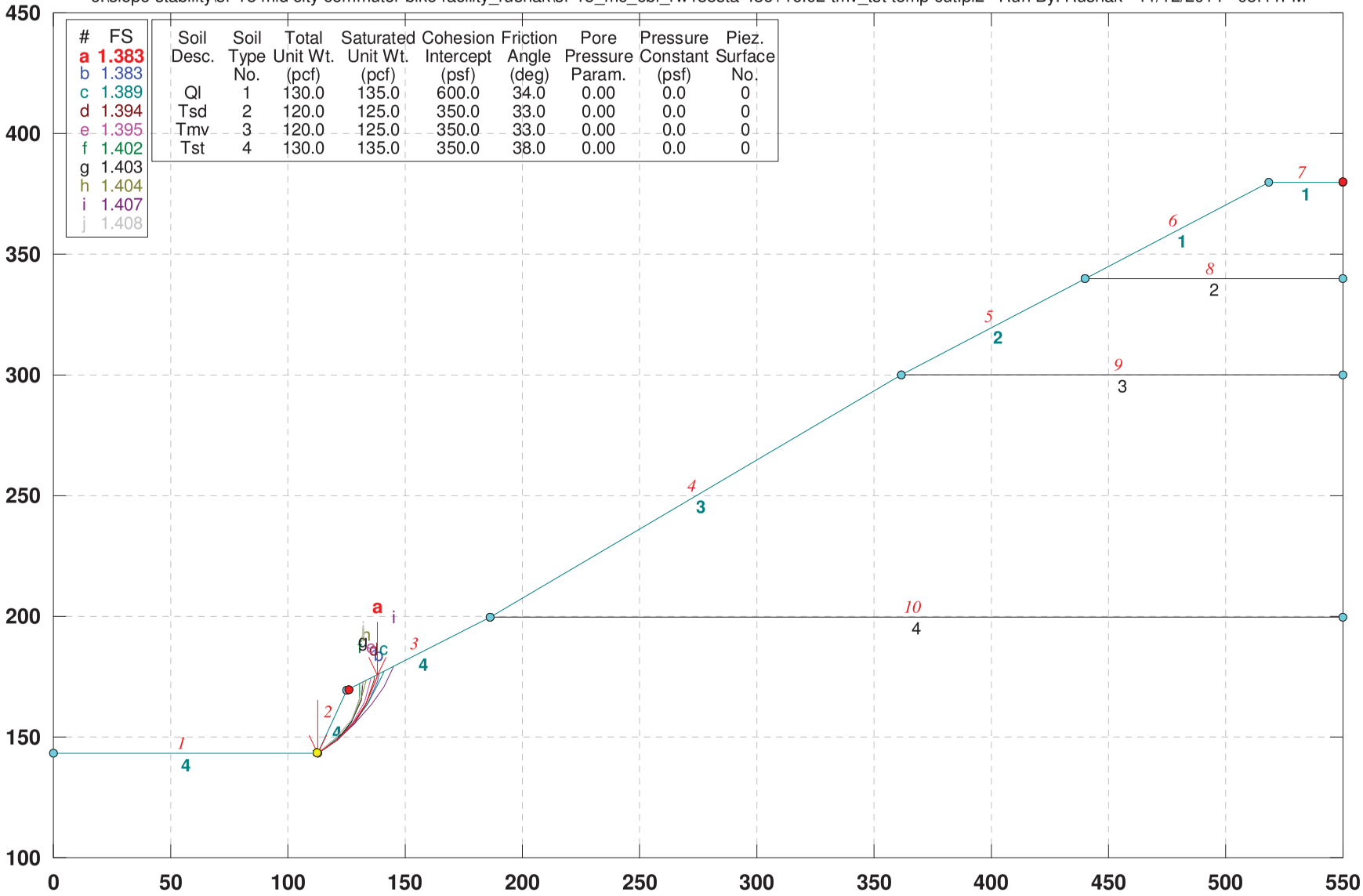

GSTABL7 v.2 FSmin=1.383

Safety Factors Are Calculated By The Modified Bishop Method

SR-15 MC CBF RW438, Sta. 437+82.40 Static Global Stability

c:\slope stability\sr-15 mid city commuter bike facility_rusnak\sr-15_mc_cbf_rw438sta 437+82.40 075_1 tmv_tst entire slope.pl2 Run By: Rusnak 11/12/2014 05:53PM

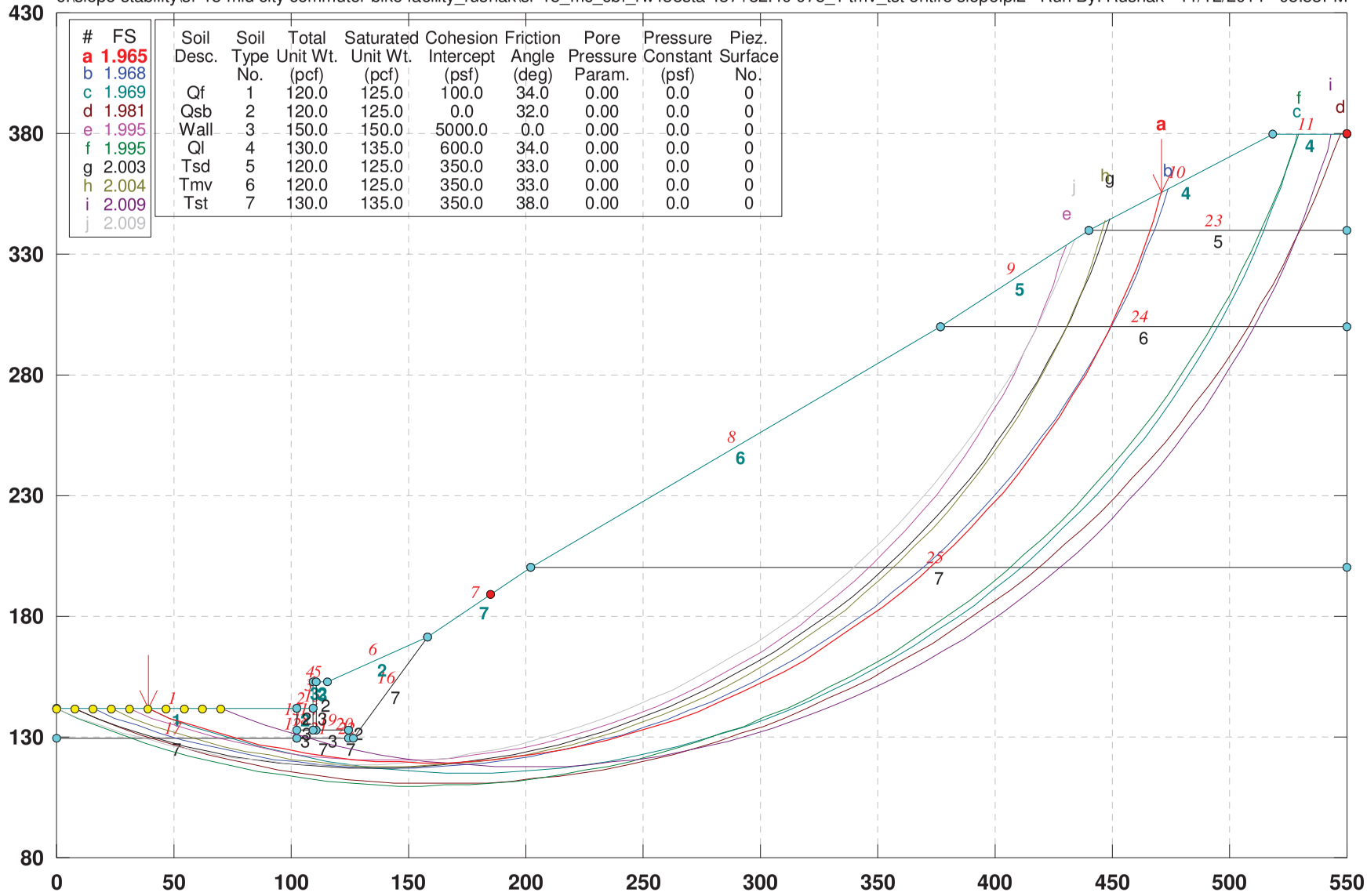

#	FS
a	1.965
b	1.968
c	1.969
d	1.981
e	1.995
f	1.995
g	2.003
h	2.004
i	2.009
j	2.009

Soil Desc.	Soil Type No.	Total Unit Wt. (pcf)	Saturated Unit Wt. (pcf)	Cohesion Intercept (psf)	Friction Angle (deg)	Pore Pressure Param.	Pressure Constant (psf)	Piez. Surface No.
Qf	1	120.0	125.0	100.0	34.0	0.00	0.0	0
Qsb	2	120.0	125.0	0.0	32.0	0.00	0.0	0
Wall	3	150.0	150.0	5000.0	0.0	0.00	0.0	0
Ql	4	130.0	135.0	600.0	34.0	0.00	0.0	0
Tsd	5	120.0	125.0	350.0	33.0	0.00	0.0	0
Tmv	6	120.0	125.0	350.0	33.0	0.00	0.0	0
Tst	7	130.0	135.0	350.0	38.0	0.00	0.0	0

GSTABL7 v.2 FSmin=1.965
Safety Factors Are Calculated By The Modified Bishop Method

SR-15 MC CBF RW438, Sta. 437+82.40 Seismic Global Stability

c:\slope stability\sr-15 mid city commuter bike facility_rusnak\sr-15_mc_cbf_rw438sta 437+82.40 075_1 tmv_tst entire slope.pl2 Run By: Rusnak 11/12/2014 05:53PM

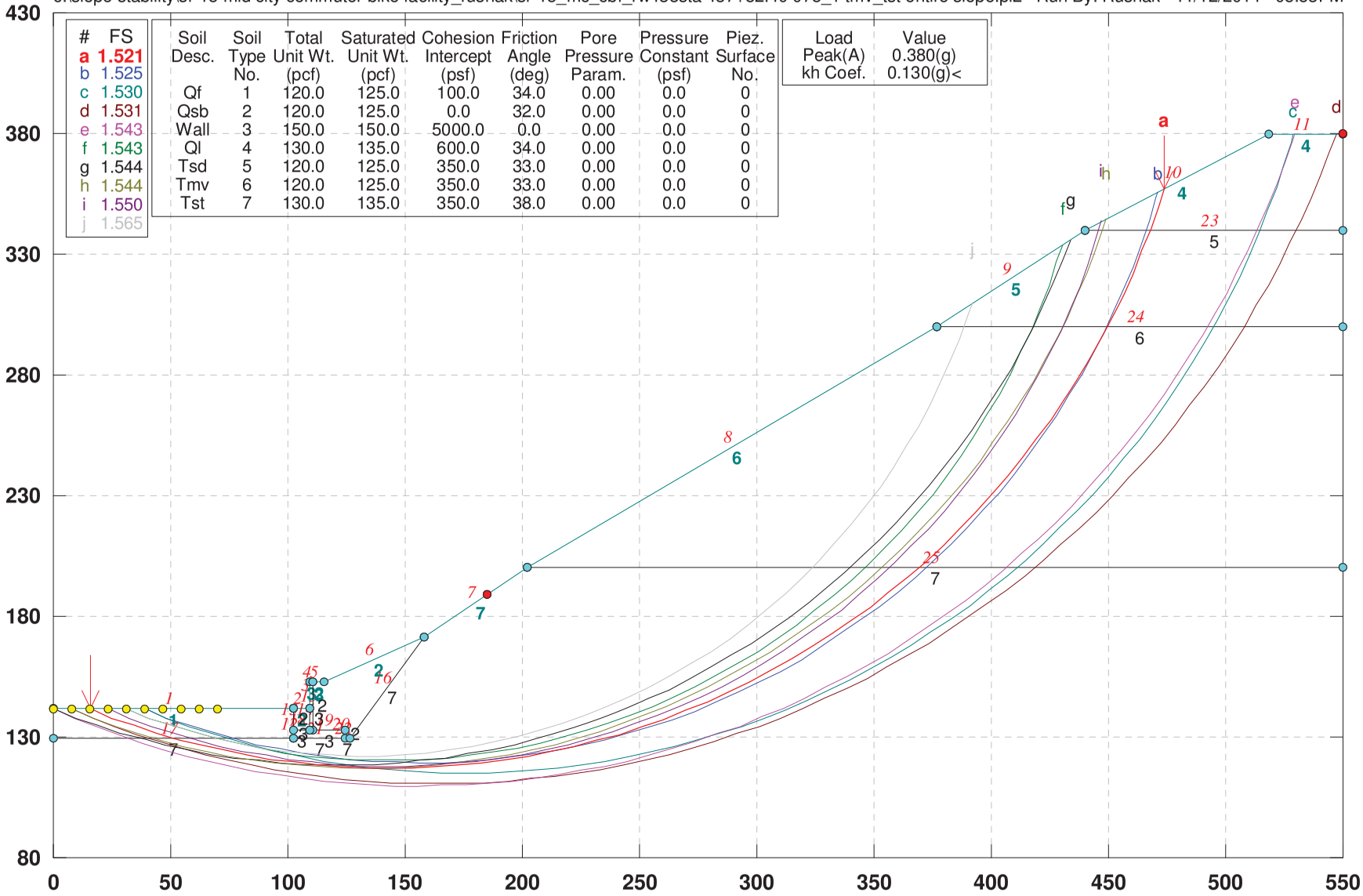

#	FS
a	1.521
b	1.525
c	1.530
d	1.531
e	1.543
f	1.543
g	1.544
h	1.544
i	1.550
j	1.565

Soil Desc.	Soil Type No.	Total Unit Wt. (pcf)	Saturated Unit Wt. (pcf)	Cohesion Intercept (psf)	Friction Angle (deg)	Pore Pressure Param.	Pressure Constant (psf)	Piez. Surface No.
Qf	1	120.0	125.0	100.0	34.0	0.00	0.0	0
Qsb	2	120.0	125.0	0.0	32.0	0.00	0.0	0
Wall	3	150.0	150.0	5000.0	0.0	0.00	0.0	0
Ql	4	130.0	135.0	600.0	34.0	0.00	0.0	0
Tsd	5	120.0	125.0	350.0	33.0	0.00	0.0	0
Tmv	6	120.0	125.0	350.0	33.0	0.00	0.0	0
Tst	7	130.0	135.0	350.0	38.0	0.00	0.0	0

Load	Value
Peak(A)	0.380(g)
kh Coef.	0.130(g)<

GSTABL7 v.2 FSmin=1.521
Safety Factors Are Calculated By The Modified Bishop Method

SR-15 MC CBF RW438, Sta. 437+82.40 Temporary Cut 0.75:1

c:\slope stability\sr-15 mid city commuter bike facility_rusnak\sr-15_mc_cbf_rw438sta 437+82.40 075_1 temp cut entire slope.pl2 Run By: Rusnak 11/12/2014 05:56PM

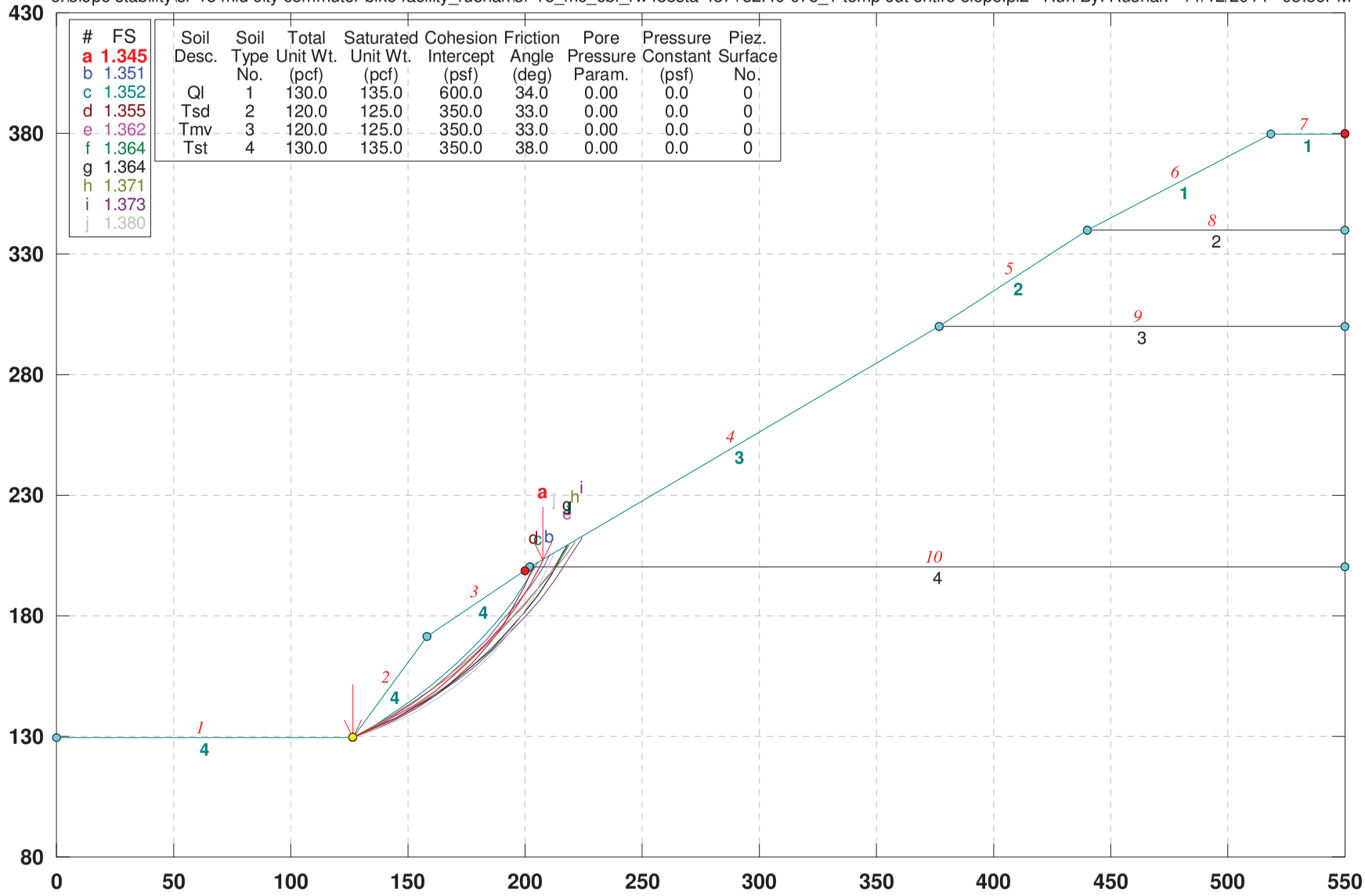

GSTABL7 v.2 FSmin=1.345

Safety Factors Are Calculated By The Modified Bishop Method

APPENDIX F
MISCELLANEOUS

RW33
ADAMS AVENUE ONRAMP

STEEP SLOPE

STEEP SLOPE

STEEP SLOPE

LOCATION FOR PROPOSED GRE 405

LOCATION FOR PROPOSED GRE 408

SLOPE ABOVE PROPOSED RW-426

TOE OF SLOPE AT PROPOSED RW-426

RW34
OVERHEAD SIGN FOUNDATION
AND LOCATION FOR PROPOSED
TYPE 7B PORTION OF RW426

RW35

Map Scale: 1:9,540 if printed on A portrait (8.5" x 11") sheet.

N

Meters: 0 100 200 400 600

Feet: 0 450 900 1800 2700

Map projection: Web Mercator Corner coordinates: WGS84 Edge tics: UTM Zone 11N WGS84

MAP LEGEND

Area of Interest (AOI)
- Area of Interest (AOI)

Soils
- Soil Map Unit Polygons
- Soil Map Unit Lines
- Soil Map Unit Points

Special Point Features
- Blowout
- Borrow Pit
- Clay Spot
- Closed Depression
- Gravel Pit
- Gravelly Spot
- Landfill
- Lava Flow
- Marsh or swamp
- Mine or Quarry
- Miscellaneous Water
- Perennial Water
- Rock Outcrop
- Saline Spot
- Sandy Spot
- Severely Eroded Spot
- Sinkhole
- Slide or Slip
- Sodic Spot
- Spoil Area
- Stony Spot
- Very Stony Spot
- Wet Spot
- Other
- Special Line Features

Water Features
- Streams and Canals

Transportation
- Rails
- Interstate Highways
- US Routes
- Major Roads
- Local Roads

Background
- Aerial Photography

MAP INFORMATION

The soil surveys that comprise your AOI were mapped at 1:24,000.

Warning: Soil Map may not be valid at this scale.

Enlargement of maps beyond the scale of mapping can cause misunderstanding of the detail of mapping and accuracy of soil line placement. The maps do not show the small areas of contrasting soils that could have been shown at a more detailed scale.

Please rely on the bar scale on each map sheet for map measurements.

Source of Map: Natural Resources Conservation Service
Web Soil Survey URL: http://websoilsurvey.nrcs.usda.gov
Coordinate System: Web Mercator (EPSG:3857)

Maps from the Web Soil Survey are based on the Web Mercator projection, which preserves direction and shape but distorts distance and area. A projection that preserves area, such as the Albers equal-area conic projection, should be used if more accurate calculations of distance or area are required.

This product is generated from the USDA-NRCS certified data as of the version date(s) listed below.

Soil Survey Area: San Diego County Area, California
Survey Area Data: Version 7, Nov 15, 2013

Soil map units are labeled (as space allows) for map scales 1:50,000 or larger.

Date(s) aerial images were photographed: Data not available.

The orthophoto or other base map on which the soil lines were compiled and digitized probably differs from the background imagery displayed on these maps. As a result, some minor shifting of map unit boundaries may be evident.

Map Unit Legend

San Diego County Area, California (CA638)			
Map Unit Symbol	**Map Unit Name**	**Acres in AOI**	**Percent of AOI**
Md	Made land	0.1	0.3%
RkC	Reiff fine sandy loam, 5 to 9 percent slopes	2.8	8.8%
TeF	Terrace escarpments	29.1	90.9%
Totals for Area of Interest		**32.0**	**100.0%**

Map Unit Description

The map units delineated on the detailed soil maps in a soil survey represent the soils or miscellaneous areas in the survey area. The map unit descriptions in this report, along with the maps, can be used to determine the composition and properties of a unit.

A map unit delineation on a soil map represents an area dominated by one or more major kinds of soil or miscellaneous areas. A map unit is identified and named according to the taxonomic classification of the dominant soils. Within a taxonomic class there are precisely defined limits for the properties of the soils. On the landscape, however, the soils are natural phenomena, and they have the characteristic variability of all natural phenomena. Thus, the range of some observed properties may extend beyond the limits defined for a taxonomic class. Areas of soils of a single taxonomic class rarely, if ever, can be mapped without including areas of other taxonomic classes. Consequently, every map unit is made up of the soils or miscellaneous areas for which it is named and some minor components that belong to taxonomic classes other than those of the major soils.

Most minor soils have properties similar to those of the dominant soil or soils in the map unit, and thus they do not affect use and management. These are called noncontrasting, or similar, components. They may or may not be mentioned in a particular map unit description. Other minor components, however, have properties and behavioral characteristics divergent enough to affect use or to require different management. These are called contrasting, or dissimilar, components. They generally are in small areas and could not be mapped separately because of the scale used. Some small areas of strongly contrasting soils or miscellaneous areas are identified by a special symbol on the maps. If included in the database for a given area, the contrasting minor components are identified in the map unit descriptions along with some characteristics of each. A few areas of minor components may not have been observed, and consequently they are not mentioned in the descriptions, especially where the pattern was so complex that it was impractical to make enough observations to identify all the soils and miscellaneous areas on the landscape.

The presence of minor components in a map unit in no way diminishes the usefulness or accuracy of the data. The objective of mapping is not to delineate pure taxonomic classes but rather to separate the landscape into landforms or landform segments that have similar use and management requirements. The delineation of such segments on the map provides sufficient information for the development of resource plans. If intensive use of small areas is planned, however, onsite investigation is needed to define and locate the soils and miscellaneous areas.

An identifying symbol precedes the map unit name in the map unit descriptions. Each description includes general facts about the unit and gives important soil properties and qualities.

Soils that have profiles that are almost alike make up a *soil series*. All the soils of a series have major horizons that are similar in composition, thickness, and arrangement. Soils of a given series can differ in texture of the surface layer, slope, stoniness, salinity, degree of erosion, and other characteristics that affect their use. On the basis of such differences, a soil series is divided into *soil phases*. Most of the areas shown on the detailed soil maps are phases of soil series. The name of a soil phase commonly indicates a feature that affects use or management. For example, Alpha silt loam, 0 to 2 percent slopes, is a phase of the Alpha series.

Some map units are made up of two or more major soils or miscellaneous areas. These map units are complexes, associations, or undifferentiated groups.

A *complex* consists of two or more soils or miscellaneous areas in such an intricate pattern or in such small areas that they cannot be shown separately on the maps. The pattern and proportion of the soils or miscellaneous areas are somewhat similar in all areas. Alpha-Beta complex, 0 to 6 percent slopes, is an example.

An *association* is made up of two or more geographically associated soils or miscellaneous areas that are shown as one unit on the maps. Because of present or anticipated uses of the map units in the survey area, it was not considered practical or necessary to map the soils or miscellaneous areas separately. The pattern and relative proportion of the soils or miscellaneous areas are somewhat similar. Alpha-Beta association, 0 to 2 percent slopes, is an example.

An *undifferentiated group* is made up of two or more soils or miscellaneous areas that could be mapped individually but are mapped as one unit because similar interpretations can be made for use and management. The pattern and proportion of the soils or miscellaneous areas in a mapped area are not uniform. An area can be made up of only one of the major soils or miscellaneous areas, or it can be made up of all of them. Alpha and Beta soils, 0 to 2 percent slopes, is an example.

Some surveys include *miscellaneous areas*. Such areas have little or no soil material and support little or no vegetation. Rock outcrop is an example.

Additional information about the map units described in this report is available in other soil reports, which give properties of the soils and the limitations, capabilities, and potentials for many uses. Also, the narratives that accompany the soil reports define some of the properties included in the map unit descriptions.

San Diego County Area, California

Md—Made land

Map Unit Composition
Made land: 100 percent

Description of Made Land

Typical profile
H1 - 0 to 6 inches: variable

Interpretive groups
Farmland classification: Not prime farmland
Land capability classification (irrigated): None specified

Land capability classification (nonirrigated): 8

Data Source Information

Soil Survey Area: San Diego County Area, California
Survey Area Data: Version 7, Nov 15, 2013

San Diego County Area, California

RkC—Reiff fine sandy loam, 5 to 9 percent slopes

Map Unit Setting

Elevation: 30 to 500 feet
Mean annual precipitation: 10 to 20 inches
Mean annual air temperature: 61 to 63 degrees F
Frost-free period: 240 to 275 days

Map Unit Composition

Reiff and similar soils: 85 percent
Minor components: 15 percent

Description of Reiff

Setting

Landform: Alluvial fans
Landform position (two-dimensional): Toeslope
Landform position (three-dimensional): Base slope, rise
Down-slope shape: Linear
Across-slope shape: Convex
Parent material: Alluvium derived from granite

Typical profile

H1 - 0 to 14 inches: fine sandy loam
H2 - 14 to 43 inches: stratified sandy loam to loam
H3 - 43 to 60 inches: stratified sandy loam to loam

Properties and qualities

Slope: 5 to 9 percent
Depth to restrictive feature: More than 80 inches
Natural drainage class: Well drained
Capacity of the most limiting layer to transmit water (Ksat): High (1.98 to 5.95 in/hr)
Depth to water table: More than 80 inches
Frequency of flooding: None
Frequency of ponding: None
Salinity, maximum in profile: Nonsaline (0.0 to 2.0 mmhos/cm)
Available water storage in profile: Moderate (about 8.6 inches)

Interpretive groups

Farmland classification: Farmland of statewide importance
Land capability classification (irrigated): 3e
Land capability classification (nonirrigated): 3e
Hydrologic Soil Group: A

Minor Components

Visalia

Percent of map unit: 5 percent

Ramona
Percent of map unit: 5 percent

Placentia
Percent of map unit: 5 percent

Data Source Information

Soil Survey Area: San Diego County Area, California
Survey Area Data: Version 7, Nov 15, 2013

San Diego County Area, California

TeF—Terrace escarpments

Map Unit Composition
Terrace escarpments: 100 percent

Description of Terrace Escarpments

Setting
Landform: Escarpments
Landform position (three-dimensional): Riser

Typical profile
H1 - 0 to 60 inches: variable

Interpretive groups
Farmland classification: Not prime farmland
Land capability classification (irrigated): None specified
Land capability classification (nonirrigated): 8

Data Source Information

Soil Survey Area: San Diego County Area, California
Survey Area Data: Version 7, Nov 15, 2013

Engineering Properties

This table gives the engineering classifications and the range of engineering properties for the layers of each soil in the survey area.

Hydrologic soil group is a group of soils having similar runoff potential under similar storm and cover conditions. The criteria for determining Hydrologic soil group is found in the National Engineering Handbook, Chapter 7 issued May 2007(http://directives.sc.egov.usda.gov/OpenNonWebContent.aspx?content=17757.wba). Listing HSGs by soil map unit component and not by soil series is a new concept for the engineers. Past engineering references contained lists of HSGs by soil series. Soil series are continually being defined and redefined, and the list of soil series names changes so frequently as to make the task of maintaining a single national list virtually impossible. Therefore, the criteria is now used to calculate the HSG using the component soil properties and no such national series lists will be maintained. All such references are obsolete and their use should be discontinued. Soil properties that influence runoff potential are those that influence the minimum rate of infiltration for a bare soil after prolonged wetting and when not frozen. These properties are depth to a seasonal high water table, saturated hydraulic conductivity after prolonged wetting, and depth to a layer with a very slow water transmission rate. Changes in soil properties caused by land management or climate changes also cause the hydrologic soil group to change. The influence of ground cover is treated independently. There are four hydrologic soil groups, A, B, C, and D, and three dual groups, A/D, B/D, and C/D. In the dual groups, the first letter is for drained areas and the second letter is for undrained areas.

The four hydrologic soil groups are described in the following paragraphs:

Group A. Soils having a high infiltration rate (low runoff potential) when thoroughly wet. These consist mainly of deep, well drained to excessively drained sands or gravelly sands. These soils have a high rate of water transmission.

Group B. Soils having a moderate infiltration rate when thoroughly wet. These consist chiefly of moderately deep or deep, moderately well drained or well drained soils that have moderately fine texture to moderately coarse texture. These soils have a moderate rate of water transmission.

Group C. Soils having a slow infiltration rate when thoroughly wet. These consist chiefly of soils having a layer that impedes the downward movement of water or soils of moderately fine texture or fine texture. These soils have a slow rate of water transmission.

Group D. Soils having a very slow infiltration rate (high runoff potential) when thoroughly wet. These consist chiefly of clays that have a high shrink-swell potential, soils that have a high water table, soils that have a claypan or clay layer at or near the surface, and soils that are shallow over nearly impervious material. These soils have a very slow rate of water transmission.

Depth to the upper and lower boundaries of each layer is indicated.

Texture is given in the standard terms used by the U.S. Department of Agriculture. These terms are defined according to percentages of sand, silt, and clay in the fraction of the soil that is less than 2 millimeters in diameter. "Loam," for example, is soil that is 7 to 27 percent clay, 28 to 50 percent silt, and less than 52 percent sand. If the content of particles coarser than sand is 15 percent or more, an appropriate modifier is added, for example, "gravelly."

Classification of the soils is determined according to the Unified soil classification system (ASTM, 2005) and the system adopted by the American Association of State Highway and Transportation Officials (AASHTO, 2004).

The Unified system classifies soils according to properties that affect their use as construction material. Soils are classified according to particle-size distribution of the fraction less than 3 inches in diameter and according to plasticity index, liquid limit, and organic matter content. Sandy and gravelly soils are identified as GW, GP, GM, GC, SW, SP, SM, and SC; silty and clayey soils as ML, CL, OL, MH, CH, and OH; and highly organic soils as PT. Soils exhibiting engineering properties of two groups can have a dual classification, for example, CL-ML.

The AASHTO system classifies soils according to those properties that affect roadway construction and maintenance. In this system, the fraction of a mineral soil that is less than 3 inches in diameter is classified in one of seven groups from A-1 through A-7 on the basis of particle-size distribution, liquid limit, and plasticity index. Soils in group A-1 are coarse grained and low in content of fines (silt and clay). At the other extreme, soils in group A-7 are fine grained. Highly organic soils are classified in group A-8 on the basis of visual inspection.

If laboratory data are available, the A-1, A-2, and A-7 groups are further classified as A-1-a, A-1-b, A-2-4, A-2-5, A-2-6, A-2-7, A-7-5, or A-7-6. As an additional refinement, the suitability of a soil as subgrade material can be indicated by a group index number. Group index numbers range from 0 for the best subgrade material to 20 or higher for the poorest.

Rock fragments larger than 10 inches in diameter and 3 to 10 inches in diameter are indicated as a percentage of the total soil on a dry-weight basis. The percentages are estimates determined mainly by converting volume percentage in the field to weight percentage.

Percentage (of soil particles) passing designated sieves is the percentage of the soil fraction less than 3 inches in diameter based on an ovendry weight. The sieves, numbers 4, 10, 40, and 200 (USA Standard Series), have openings of 4.76, 2.00, 0.420, and 0.074 millimeters, respectively. Estimates are based on laboratory tests of soils sampled in the survey area and in nearby areas and on estimates made in the field.

Liquid limit and *plasticity index* (Atterberg limits) indicate the plasticity characteristics of a soil. The estimates are based on test data from the survey area or from nearby areas and on field examination.

References:

American Association of State Highway and Transportation Officials (AASHTO). 2004. Standard specifications for transportation materials and methods of sampling and testing. 24th edition.

American Society for Testing and Materials (ASTM). 2005. Standard classification of soils for engineering purposes. ASTM Standard D2487-00.

Report—Engineering Properties

Absence of an entry indicates that the data were not estimated. The asterisk '*' denotes the representative texture; other possible textures follow the dash. The criteria for determining the hydrologic soil group for individual soil components is found in the National Engineering Handbook, Chapter 7 issued May 2007 (http://directives.sc.egov.usda.gov/OpenNonWebContent.aspx?content=17757.wba).

Engineering Properties–San Diego County Area, California														
Map unit symbol and soil name	Pct. of map unit	Hydrologic group	Depth	USDA texture	Classification		Fragments		Percentage passing sieve number—				Liquid limit	Plasticity index
					Unified	AASHTO	>10 inches	3-10 inches	4	10	40	200		
			In				Pct	Pct					Pct	
Md—Made land														
Made land	100		0-6	Variable	—	—	—	—	—	—	—	—	—	—
RkC—Reiff fine sandy loam, 5 to 9 percent slopes														
Reiff	85	A	0-14	Fine sandy loam	SM	A-4	0	0	95-100	85-100	55-85	35-50	20-30	NP-5
			14-43	Stratified sandy loam to loam	SM	A-4	0	0	95-100	85-100	55-80	35-50	20-30	NP-5
			43-60	Stratified sandy loam to loam	SM	A-4	0	0	95-100	85-100	55-80	35-50	20-30	NP-5
TeF—Terrace escarpments														
Terrace escarpments	100		0-60	Variable	—	—	—	—	—	—	—	—	—	—

Data Source Information

Soil Survey Area: San Diego County Area, California
Survey Area Data: Version 7, Nov 15, 2013

RUSLE2 Related Attributes

This report summarizes those soil attributes used by the Revised Universal Soil Loss Equation Version 2 (RUSLE2) for the map units in the selected area. The report includes the map unit symbol, the component name, and the percent of the component in the map unit. Soil property data for each map unit component include the hydrologic soil group, erosion factors Kf for the surface horizon, erosion factor T, and the representative percentage of sand, silt, and clay in the surface horizon.

Report—RUSLE2 Related Attributes

RUSLE2 Related Attributes–San Diego County Area, California								
Map symbol and soil name	Pct. of map unit	Slope length (ft)	Hydrologic group	Kf	T factor	Representative value		
						% Sand	% Silt	% Clay
Md—Made land								
Made land	100	351	—	—	—	—	—	—
RkC—Reiff fine sandy loam, 5 to 9 percent slopes								
Reiff	85	351	A	.28	5	66.9	20.1	13.0
TeF—Terrace escarpments								
Terrace escarpments	100	151	—	—	—	—	—	—

Data Source Information

Soil Survey Area: San Diego County Area, California
Survey Area Data: Version 7, Nov 15, 2013

Particle Size and Coarse Fragments

This table shows estimates of particle size distribution and coarse fragment content of each soil in the survey area. The estimates are based on field observations and on test data for these and similar soils.

Depth to the upper and lower boundaries of each layer is indicated.

Particle size is the effective diameter of a soil particle as measured by sedimentation, sieving, or micrometric methods. Particle sizes are expressed as classes with specific effective diameter class limits. The broad classes are sand, silt, and clay, ranging from the larger to the smaller.

Sand as a soil separate consists of mineral soil particles that are 0.05 millimeter to 2 millimeters in diameter. In this table, the estimated sand content of each soil layer is given as a percentage, by weight, of the soil material that is less than 2 millimeters in diameter.

Silt as a soil separate consists of mineral soil particles that are 0.002 to 0.05 millimeter in diameter. In this table, the estimated silt content of each soil layer is given as a percentage, by weight, of the soil material that is less than 2 millimeters in diameter.

Clay as a soil separate consists of mineral soil particles that are less than 0.002 millimeter in diameter. In this table, the estimated clay content of each soil layer is given as a percentage, by weight, of the soil material that is less than 2 millimeters in diameter.

The content of sand, silt, and clay affects the physical behavior of a soil. Particle size is important for engineering and agronomic interpretations, for determination of soil hydrologic qualities, and for soil classification.

The amount and kind of clay affect the fertility and physical condition of the soil and the ability of the soil to adsorb cations and to retain moisture. They influence shrink-swell potential, saturated hydraulic conductivity (Ksat), plasticity, the ease of soil dispersion, and other soil properties. The amount and kind of clay in a soil also affect tillage and earthmoving operations.

Total fragments is the content of fragments of rock and other materials larger than 2 millimeters in diameter on volumetric basis of the whole soil.

Fragments 2-74 mm refers to the content of coarse fragments in the 2 to 74 millimeter size fraction.

Fragments 75-249 mm refers to the content of coarse fragments in teh 75 to 249 millimeter size fraction.

Fragments 250-599 mm refers to the content of coarse fragments in the 250 to 599 millimeter size fraction.

Fragments >=600 mm refers to the content of coarse fragments in the greater than or equal to 600 millimeter size fraction.

Reference:
United States Department of Agriculture, Natural Resources Conservation Service. National soil survey handbook, title 430-VI. (http://soils.usda.gov)

Report—Particle Size and Coarse Fragments

Particle Size and Coarse Fragments–San Diego County Area, California										
Map symbol and soil name	Horizon	Depth	Sand	Silt	Clay	Total fragments	Fragments 2-74 mm	Fragments 75-249 mm	Fragments 250-599 mm	Fragments >=600 mm
		In	*L-RV-H Pct*	*L-RV-H Pct*	*L-RV-H Pct*	*RV Pct*	*RV Pct*	*RV Pct*	*RV Pct*	*RV Pct*
Md—Made land										
Made land	H1	0-6	—	—	—	—	—	—	—	—
RkC—Reiff fine sandy loam, 5 to 9 percent slopes										
Reiff	H1	0-14	-67-	-20-	8-13- 18	7	7	—	—	—
	H2	14-43	-45-	-42-	8-13- 18	7	7	—	—	—
	H3	43-60	-45-	-42-	8-13- 18	7	7	—	—	—
TeF—Terrace escarpments										
Terrace escarpments	H1	0-60	—	—	—	—	—	—	—	—

Data Source Information

Soil Survey Area: San Diego County Area, California
Survey Area Data: Version 7, Nov 15, 2013

Physical Soil Properties

This table shows estimates of some physical characteristics and features that affect soil behavior. These estimates are given for the layers of each soil in the survey area. The estimates are based on field observations and on test data for these and similar soils.

Depth to the upper and lower boundaries of each layer is indicated.

Particle size is the effective diameter of a soil particle as measured by sedimentation, sieving, or micrometric methods. Particle sizes are expressed as classes with specific effective diameter class limits. The broad classes are sand, silt, and clay, ranging from the larger to the smaller.

Sand as a soil separate consists of mineral soil particles that are 0.05 millimeter to 2 millimeters in diameter. In this table, the estimated sand content of each soil layer is given as a percentage, by weight, of the soil material that is less than 2 millimeters in diameter.

Silt as a soil separate consists of mineral soil particles that are 0.002 to 0.05 millimeter in diameter. In this table, the estimated silt content of each soil layer is given as a percentage, by weight, of the soil material that is less than 2 millimeters in diameter.

Clay as a soil separate consists of mineral soil particles that are less than 0.002 millimeter in diameter. In this table, the estimated clay content of each soil layer is given as a percentage, by weight, of the soil material that is less than 2 millimeters in diameter.

The content of sand, silt, and clay affects the physical behavior of a soil. Particle size is important for engineering and agronomic interpretations, for determination of soil hydrologic qualities, and for soil classification.

The amount and kind of clay affect the fertility and physical condition of the soil and the ability of the soil to adsorb cations and to retain moisture. They influence shrink-swell potential, saturated hydraulic conductivity (Ksat), plasticity, the ease of soil dispersion, and other soil properties. The amount and kind of clay in a soil also affect tillage and earthmoving operations.

Moist bulk density is the weight of soil (ovendry) per unit volume. Volume is measured when the soil is at field moisture capacity, that is, the moisture content at 1/3- or 1/10-bar (33kPa or 10kPa) moisture tension. Weight is determined after the soil is dried at 105 degrees C. In the table, the estimated moist bulk density of each soil horizon is expressed in grams per cubic centimeter of soil material that is less than 2 millimeters in diameter. Bulk density data are used to compute linear extensibility, shrink-swell potential, available water capacity, total pore space, and other soil properties. The moist bulk density of a soil indicates the pore space available for water and roots. Depending on soil texture, a bulk density of more than 1.4 can restrict water storage and root penetration. Moist bulk density is influenced by texture, kind of clay, content of organic matter, and soil structure.

Saturated hydraulic conductivity (Ksat) refers to the ease with which pores in a saturated soil transmit water. The estimates in the table are expressed in terms of micrometers per second. They are based on soil characteristics observed in the field, particularly structure, porosity, and texture. Saturated hydraulic conductivity (Ksat) is considered in the design of soil drainage systems and septic tank absorption fields.

Available water capacity refers to the quantity of water that the soil is capable of storing for use by plants. The capacity for water storage is given in inches of water per inch of soil for each soil layer. The capacity varies, depending on soil properties that affect retention of water. The most important properties are the content of organic matter, soil texture, bulk density, and soil structure. Available water capacity is an important factor in the choice of plants or crops to be grown and in the design and management of irrigation systems. Available water capacity is not an estimate of the quantity of water actually available to plants at any given time.

Linear extensibility refers to the change in length of an unconfined clod as moisture content is decreased from a moist to a dry state. It is an expression of the volume change between the water content of the clod at 1/3- or 1/10-bar tension (33kPa or 10kPa tension) and oven dryness. The volume change is reported in the table as percent change for the whole soil. The amount and type of clay minerals in the soil influence volume change.

Linear extensibility is used to determine the shrink-swell potential of soils. The shrink-swell potential is low if the soil has a linear extensibility of less than 3 percent; moderate if 3 to 6 percent; high if 6 to 9 percent; and very high if more than 9 percent. If the linear extensibility is more than 3, shrinking and swelling can cause damage to buildings, roads, and other structures and to plant roots. Special design commonly is needed.

Organic matter is the plant and animal residue in the soil at various stages of decomposition. In this table, the estimated content of organic matter is expressed as a percentage, by weight, of the soil material that is less than 2 millimeters in diameter. The content of organic matter in a soil can be maintained by returning crop residue to the soil.

Organic matter has a positive effect on available water capacity, water infiltration, soil organism activity, and tilth. It is a source of nitrogen and other nutrients for crops and soil organisms.

Erosion factors are shown in the table as the K factor (Kw and Kf) and the T factor. Erosion factor K indicates the susceptibility of a soil to sheet and rill erosion by water. Factor K is one of six factors used in the Universal Soil Loss Equation (USLE) and the Revised Universal Soil Loss Equation (RUSLE) to predict the average annual rate of soil loss by sheet and rill erosion in tons per acre per year. The estimates are based primarily on percentage of silt, sand, and organic matter and on soil structure and Ksat. Values of K range from 0.02 to 0.69. Other factors being equal, the higher the value, the more susceptible the soil is to sheet and rill erosion by water.

Erosion factor Kw indicates the erodibility of the whole soil. The estimates are modified by the presence of rock fragments.

Erosion factor Kf indicates the erodibility of the fine-earth fraction, or the material less than 2 millimeters in size.

Erosion factor T is an estimate of the maximum average annual rate of soil erosion by wind and/or water that can occur without affecting crop productivity over a sustained period. The rate is in tons per acre per year.

Wind erodibility groups are made up of soils that have similar properties affecting their susceptibility to wind erosion in cultivated areas. The soils assigned to group 1 are the most susceptible to wind erosion, and those assigned to group 8 are the least susceptible. The groups are described in the "National Soil Survey Handbook."

Wind erodibility index is a numerical value indicating the susceptibility of soil to wind erosion, or the tons per acre per year that can be expected to be lost to wind erosion. There is a close correlation between wind erosion and the texture of the surface layer, the size and durability of surface clods, rock fragments, organic matter, and a calcareous reaction. Soil moisture and frozen soil layers also influence wind erosion.

Reference:
United States Department of Agriculture, Natural Resources Conservation Service. National soil survey handbook, title 430-VI. (http://soils.usda.gov)

Report—Physical Soil Properties

Physical Soil Properties–San Diego County Area, California														
Map symbol and soil name	Depth	Sand	Silt	Clay	Moist bulk density	Saturated hydraulic conductivity	Available water capacity	Linear extensibility	Organic matter	Erosion factors			Wind erodibility group	Wind erodibility index
										Kw	Kf	T		
	In	*Pct*	*Pct*	*Pct*	*g/cc*	*micro m/sec*	*In/In*	*Pct*	*Pct*					
Md—Made land														
Made land	0-6	—	—	—	—	—	—	—	—					
RkC—Reiff fine sandy loam, 5 to 9 percent slopes														
Reiff	0-14	-67-	-20-	8-13- 18	1.50-1.60	14.00-42.00	0.10-0.13	0.0-2.9	0.5-1.0	.28	.28	5	3	86
	14-43	-45-	-42-	8-13- 18	1.50-1.60	14.00-42.00	0.14-0.16	0.0-2.9	0.0-0.5	.43	.43			
	43-60	-45-	-42-	8-13- 18	1.50-1.60	14.00-42.00	0.14-0.16	0.0-2.9	0.0-0.5	.43	.43			
TeF—Terrace escarpments														
Terrace escarpments	0-60	—	—	—	—	—	—	—	—					

Data Source Information

Soil Survey Area: San Diego County Area, California
Survey Area Data: Version 7, Nov 15, 2013

Soil Features

This table gives estimates of various soil features. The estimates are used in land use planning that involves engineering considerations.

A *restrictive layer* is a nearly continuous layer that has one or more physical, chemical, or thermal properties that significantly impede the movement of water and air through the soil or that restrict roots or otherwise provide an unfavorable root environment. Examples are bedrock, cemented layers, dense layers, and frozen layers. The table indicates the hardness and thickness of the restrictive layer, both of which significantly affect the ease of excavation. *Depth to top* is the vertical distance from the soil surface to the upper boundary of the restrictive layer.

Subsidence is the settlement of organic soils or of saturated mineral soils of very low density. Subsidence generally results from either desiccation and shrinkage, or oxidation of organic material, or both, following drainage. Subsidence takes place gradually, usually over a period of several years. The table shows the expected initial subsidence, which usually is a result of drainage, and total subsidence, which results from a combination of factors.

Potential for frost action is the likelihood of upward or lateral expansion of the soil caused by the formation of segregated ice lenses (frost heave) and the subsequent collapse of the soil and loss of strength on thawing. Frost action occurs when moisture moves into the freezing zone of the soil. Temperature, texture, density, saturated hydraulic conductivity (Ksat), content of organic matter, and depth to the water table are the most important factors considered in evaluating the potential for frost action. It is assumed that the soil is not insulated by vegetation or snow and is not artificially drained. Silty and highly structured, clayey soils that have a high water table in winter are the most susceptible to frost action. Well drained, very gravelly, or very sandy soils are the least susceptible. Frost heave and low soil strength during thawing cause damage to pavements and other rigid structures.

Risk of corrosion pertains to potential soil-induced electrochemical or chemical action that corrodes or weakens uncoated steel or concrete. The rate of corrosion of uncoated steel is related to such factors as soil moisture, particle-size distribution, acidity, and electrical conductivity of the soil. The rate of corrosion of concrete is based mainly on the sulfate and sodium content, texture, moisture content, and acidity of the soil. Special site examination and design may be needed if the combination of factors results in a severe hazard of corrosion. The steel or concrete in installations that intersect soil boundaries or soil layers is more susceptible to corrosion than the steel or concrete in installations that are entirely within one kind of soil or within one soil layer.

For uncoated steel, the risk of corrosion, expressed as *low*, *moderate*, or *high*, is based on soil drainage class, total acidity, electrical resistivity near field capacity, and electrical conductivity of the saturation extract.

For concrete, the risk of corrosion also is expressed as *low*, *moderate*, or *high*. It is based on soil texture, acidity, and amount of sulfates in the saturation extract.

Report—Soil Features

Soil Features–San Diego County Area, California									
Map symbol and soil name	Restrictive Layer				Subsidence		Potential for frost action	Risk of corrosion	
	Kind	Depth to top	Thickness	Hardness	Initial	Total		Uncoated steel	Concrete
		In	*In*		*In*	*In*			
Md—Made land									
Made land		—	—		—	—	Low		
RkC—Reiff fine sandy loam, 5 to 9 percent slopes									
Reiff		—	—		—	—	Low	High	Low
TeF—Terrace escarpments									
Terrace escarpments		—	—		—	—	Low		

Data Source Information

Soil Survey Area: San Diego County Area, California
Survey Area Data: Version 7, Nov 15, 2013

Chemical Soil Properties

This table shows estimates of some chemical characteristics and features that affect soil behavior. These estimates are given for the layers of each soil in the survey area. The estimates are based on field observations and on test data for these and similar soils.

Depth to the upper and lower boundaries of each layer is indicated.

Cation-exchange capacity is the total amount of extractable cations that can be held by the soil, expressed in terms of milliequivalents per 100 grams of soil at neutrality (pH 7.0) or at some other stated pH value. Soils having a low cation-exchange capacity hold fewer cations and may require more frequent applications of fertilizer than soils having a high cation-exchange capacity. The ability to retain cations reduces the hazard of ground-water pollution.

Effective cation-exchange capacity refers to the sum of extractable cations plus aluminum expressed in terms of milliequivalents per 100 grams of soil. It is determined for soils that have pH of less than 5.5.

Soil reaction is a measure of acidity or alkalinity. It is important in selecting crops and other plants, in evaluating soil amendments for fertility and stabilization, and in determining the risk of corrosion.

Calcium carbonate equivalent is the percent of carbonates, by weight, in the fraction of the soil less than 2 millimeters in size. The availability of plant nutrients is influenced by the amount of carbonates in the soil.

Gypsum is expressed as a percent, by weight, of hydrated calcium sulfates in the fraction of the soil less than 20 millimeters in size. Gypsum is partially soluble in water. Soils that have a high content of gypsum may collapse if the gypsum is removed by percolating water.

Salinity is a measure of soluble salts in the soil at saturation. It is expressed as the electrical conductivity of the saturation extract, in millimhos per centimeter at 25 degrees C. Estimates are based on field and laboratory measurements at representative sites of nonirrigated soils. The salinity of irrigated soils is affected by the quality of the irrigation water and by the frequency of water application. Hence, the salinity of soils in individual fields can differ greatly from the value given in the table. Salinity affects the suitability of a soil for crop production, the stability of soil if used as construction material, and the potential of the soil to corrode metal and concrete.

Sodium adsorption ratio (SAR) is a measure of the amount of sodium (Na) relative to calcium (Ca) and magnesium (Mg) in the water extract from saturated soil paste. It is the ratio of the Na concentration divided by the square root of one-half of the Ca + Mg concentration. Soils that have SAR values of 13 or more may be characterized by an increased dispersion of organic matter and clay particles, reduced saturated hydraulic conductivity and aeration, and a general degradation of soil structure.

Report—Chemical Soil Properties

Chemical Soil Properties–San Diego County Area, California								
Map symbol and soil name	Depth	Cation-exchange capacity	Effective cation-exchange capacity	Soil reaction	Calcium carbonate	Gypsum	Salinity	Sodium adsorption ratio
	In	*meq/100g*	*meq/100g*	*pH*	*Pct*	*Pct*	*mmhos/cm*	
Md—Made land								
Made land	0-6	—	—	—	—	—	0	0
RkC—Reiff fine sandy loam, 5 to 9 percent slopes								
Reiff	0-14	8.0-14	—	6.1-8.4	0	0	0	0
	14-43	8.0-14	—	6.6-8.4	0	0	0.0-2.0	0
	43-60	8.0-14	—	6.6-8.4	0	0	0.0-2.0	0
TeF—Terrace escarpments								
Terrace escarpments	0-60	—	—	—	—	—	—	—

Data Source Information

Soil Survey Area: San Diego County Area, California
Survey Area Data: Version 7, Nov 15, 2013

THE CITY OF SAN DIEGO

June 30, 2014

Mr. Michael Nichols
Project Engineer (I-5 Corridor)
Department of Transportation
District 11
4050 Taylor Street, M.S. 120
San Diego, CA 92110

Dear Mr. Nichols:

Subject: Mid-City Commuter Bike Facility Project (Contract 2T1901)

This is in response to your letter dated June 11, 2014 regarding Mid-City Commuter Bike Facility project. Based upon the volume and duration of the project you provided, the City of San Diego has sufficient and available potable water capacity to serve your project during the construction.

Please note that effective July 1, 2014, the City of San Diego will move to Level 1 Drought Alert per the attached memo dated June 24, 2014. The Level 1 Drought Watch Condition lists voluntary water conservation measures that are added to the City's existing permanant restrictions. Please also note that utilizing existing potable water and/or irrigation meters City-wide will be subject to any City of San Diego City Council drought actions to conserve water, if enacted by City Council.

If you have any questions, please call me at 619-446-5420 or email me at Mrastakhiz@sandiego.gov.

Sincerely,

Mehdi Rastakhiz, PE
Associate Civil Engineer
Development Services Department
Water and Sewer Development Review
1222 First Avenue, MS 401
San Diego, CA 92101

Attachment: Level 1 Drought Alert memo dated June 24, 2014

THE CITY OF SAN DIEGO

MEMORANDUM

DATE: June 24, 2014

TO: All Department Directors

FROM: Halla Razak, Director of Public Utilities

SUBJECT: Level 1 Drought Alert starting July 1, 2014

The City of San Diego was in a Stage 2 Drought Alert Condition from June 1, 2009, through May 26, 2011. During that time, City departments played a vital role in saving water and setting a good example for the citizens in our community. During the height of that drought, City departments reduced metered water consumption by 31.4% from pre-drought levels.

The City Council recently approved moving the City to a Level 1 Drought Watch Condition starting July 1, 2014. This memo is provided to assist Departments in identifying water saving opportunities, creating water conservation plans and complying with permanent and voluntary water use regulations.

PRIOR WATER CONSERVATION EFFORTS

From 1992 to 1999, the Water Department implemented a City Facilities Retrofit Program that installed more than 2,384 ultra-low flush toilets and 702 urinals in 494 City owned and operated facilities. The City wanted to show its commitment to water conservation by installing the water conserving plumbing fixtures in our own facilities. That program was completed in 1999 and the biggest retrofit job, that of Qualcomm Stadium in 1998 (365 toilets and 196 urinals) in time for Super Bowl XXXII, was used in a national water conservation publication/article.

The Public Utilities Department has also worked for many years with the Park and Recreation Department to create water use budgets for City parks. Water budgets are estimates of how much water existing landscapes need based on weather information, plant watering needs, type of soil and irrigation systems used, and these estimates are translated into run times per irrigation valve to allow them to use water efficiently. Throughout the last drought, Park and Recreation staff closely monitored water consumption in all its irrigated areas, and this diligence was evident in the achieved 31% water use reduction.

PERMANENT WATER USE RESTRICTIONS

Before the City lifted Level 2 mandatory restrictions in 2011, City Council and City staff agreed that some of these restrictions should remain in place. Hence the San Diego Municipal Code Section SDMC §67.3803 was revised to reflect the permanent water use restrictions that are in effect every day in San Diego. These include the following limitations:

a) No runoff/excessive irrigation leaving the property;
b) Repair leaks upon discovery or within seventy-two hours of notification;
c) No watering of paved areas;
d) No overfilling swimming pools and spas;
e) No non-recirculating decorative water fountains;
f) Car washing only in a commercial car wash or using a hose with shutoff nozzle or a bucket;
g) New buildings must recycle cooling system water and car wash water;
h) Restaurants will only serve and refill water upon request;
i) Hotel guests must have the option of not laundering towels and linens daily; and
j) No watering after 10 am and before 4 pm (winter)/before 6 pm (summer).

Please ensure that staff within your Department is aware of these permanent water use restrictions.

VOLUNTARY WATER USE RESTRICTIONS

The Level 1 Drought Watch Condition lists voluntary water conservation measures that are added to the City's existing permanent water restrictions. These voluntary measures go into effect on July 1, 2014. Although these measures are voluntary for citizens, it is advised that City Departments take the lead and treat them as mandatory:

1) Landscape irrigation limited to three days per week;
2) When watering without an irrigation system a shut-off nozzle or garden hose sprinkler system on a timer is required;
3) Washing vehicles limited to the same schedule as irrigation (except for: boats which may be washed after use; vehicles with health/safety issues; at a commercial carwash that recycles water);
4) Use recycled or non-potable water for construction purposes;

5) Fire hydrants for firefighting only;

6) Construction operations can use water only as required by regulatory agencies; and

7) Irrigation is not permitted during rain event.

RECOMMENDED CONSERVATION MEASURES

Indoor Water Use

If the facility is one of those that received water conserving plumbing fixtures through the City Facilities Retrofit Program, City staff can inspect these fixtures for proper operation and leaks. Self-closing faucets should shut off after a determined amount of seconds. Make sure the valves are not sticking, which would prevent the faucet from shutting off automatically. If faucet aerators have been removed, install new ones that use 1.0 gallons per minute. If the facility has tank style toilets, place dye tablets or food coloring inside the tank and observe if the coloring makes it way to the bowl. This would indicate a leak and would require an adjustment or replacement of the toilet flapper mechanism. Always repair leaks, as even small ones can waste hundreds of gallons of water.

If the facility still has high volume plumbing fixtures, replace them with water efficient ones, such as high-efficiency toilets and urinals, and faucets with self-closing features. There may be some incentives available for replacing these older fixtures. Check with the Water Conservation Program (Luis Generoso at 619-533-5258) for up-to-date information on incentives for public facilities.

Here are a few other measures City staff can take:

- Increase employee awareness of the need to conserve water. The Water Conservation Program (contact Luis Generoso at 619-533-5258) has various brochures and reference materials that can help you.
- Install signs encouraging water conservation in employee and customer restrooms.
- Assign an employee to monitor water use and waste within the facility. Read your water meter weekly to monitor the success of your water conservation efforts, and to detect leaks. Monitor water usage when reviewing water bills. Information on your historic water usage can be obtained calling our Water Conservation Program.
- Check for obvious leaks, where there are consistent water puddles.
- Repair dripping faucets and showers, and continuously running toilets.
- Install faucet aerators where possible.
- Shut off water supply to equipment rooms not in use.
- Shut off cooling equipment when not in use, and minimize water used in cooling units. There may be a need to replace the cooling tower conductivity controller. Check for incentives offered for these controllers.
- Review rebates available in Southern California at http://www.bewaterwise.com .

If there are other function areas like cafeterias/food preparation areas, please contact our Water Conservation Program for tips on how to conserve water specific to those areas.

Outdoor Consumption

Significant water savings can be realized if attention is given to how much water we use outdoors. Here are things City staff can readily implement to help reduce outdoor water consumption:

- Stop hosing down sidewalks, driveways and parking lots. If you need to do so for health and safety reasons, consider using a water broom or a water efficient power washer. For more information, visit our website at www.sandiego.gov/water/conservation.
- Operate your irrigation system to water before 10 a.m. or after 6:00 p.m. to minimize water loss from evaporation or windy conditions.
- Water landscape only when needed. Usually two to three times a week is sufficient. Or you can use the Landscape Watering Calculator at the website mentioned above to prepare a water efficient irrigation schedule based on your plants watering needs, weather date, soil type, and irrigation system used. This easy-to-use tool developed by the Public Utilities Department has been recognized with multiple awards, and is endorsed by a number of landscape industry professionals.
- Consider installing a weather based irrigation controller. These "smart controllers" automatically adjust irrigation run times as the season/weather changes and can shut off your system when it rains. Check with our Water Conservation Program for incentives that may be available.
- Make sure your sprinklers irrigate only the landscape area and not driveways and parking lots. Avoid irrigation runoff that causes storm water pollution.
- Do not water on windy days.
- Should landscape conversion be an option, consider water efficient plants and irrigation systems. These plants provide color and beauty, and the plant choices are numerous. Check our website or visit the Water Conservation Garden at Cuyamaca College (www.thegarden.org) for more information. Rebates for landscape and irrigation system conversions are also available.

More information on how you can save water at home and at work can be found on the following websites:

City of San Diego
http://www.WasteNoWater.org

San Diego County Water Authority
http://www.sdcwa.org/whenindrought

Metropolitan Water District of Southern California
http://www.bewaterwise.com/

RECYCLED WATER OPTION

If the facility is located along the existing recycled water pipeline route you might consider retrofitting your irrigation system to accept recycled water. Irrigation retrofit rebates are now available under a Metropolitan Water District pilot program. For an interactive "recycled water availability zone map" visit http://www.sandiego.gov/water/recycled/availability/index.shtml or contact Dawnn Jackson at 619-533-4264.

Thank you for the cooperation in conserving water at City facilities and for providing a good example to the public. Please let me know if you should have any questions.

Halla Razak
Director of Public Utilities

LSG/lsg