Dist	COUNTY	ROUTE	POST MILES TOTAL PROJECT	SHEET No.	TOTAL SHEETS
11	SD	805	4.7/5.6	1	650

STATE OF CALIFORNIA

DEPARTMENT OF TRANSPORTATION

PROJECT PLANS FOR CONSTRUCTION ON

STATE HIGHWAY

IN SAN DIEGO COUNTY IN CHULA VISTA FROM 0.4 MILE SOUTH OF EAST PALOMAR STREET OVERCROSSING TO 0.1 MILE NORTH OF NAPLES STREET UNDERCROSSING

TO BE SUPPLEMENTED BY STANDARD PLANS DATED 2010

INDEX OF PLANS

SHEET No.	DESCRIPTION
1	TITLE AND LOCATION MAP
2-14	TYPICAL CROSS SECTIONS
15	KEY MAP AND LINE INDEX
16	PROJECT CONTROL PLAN
17-23	LAYOUTS
24-44	PROFILE AND SUPERELEVATION DIAGRAMS
45-121	CONSTRUCTION DETAILS
122-141	TEMPORARY WATER POLLUTION CONTROL PLANS AND QUANTITIES
142-151	EROSION CONTROL PLAN AND QUANTITIES
152-158	CONTOUR GRADING
159-201	DRAINAGE PLANS, PROFILES, DETAILS AND QUANTITIES
202-239	UTILITY PLANS, PROFILES, DETAILS AND QUANTITIES
240	CONSTRUCTION AREA SIGNS
241-272	STAGE CONSTRUCTION AND TRAFFIC HANDLING PLANS, DETAILS AND QUANTITIES
273-281	TRAFFIC HANDLING PLANS
282-293	PAVEMENT DELINEATION PLANS, DETAILS AND QUANTITIES
294-319	SIGN PLANS, DETAILS AND QUANTITIES
320-328	SUMMARY OF QUANTITIES
329-401	RETAINING WALL PLANS, TYPICAL SECTIONS AND DETAILS
402-442	HIGHWAY PLANTING
443-473	ELECTRICAL PLANS
474-478	REVISED STANDARD PLANS

STRUCTURE PLANS

479-525	PALOMAR STREET OC Br No. 57-1222
526-559	PALOMAR STREET HOV ACCESS RAMP
560-570	RETAINING WALL No. 296R
571-579	RETAINING WALL No. 299R
580-605	RETAINING WALL No. 301L
606-615	RETAINING WALL No. 301R
616-628	RETAINING WALL No. 311R
629-640	RETAINING WALL No. 316R
641-650	SOUND WALL No. 303R

THE STANDARD PLANS LIST APPLICABLE TO THIS CONTRACT IS INCLUDED IN THE NOTICE TO BIDDERS AND SPECIAL PROVISIONS BOOK.

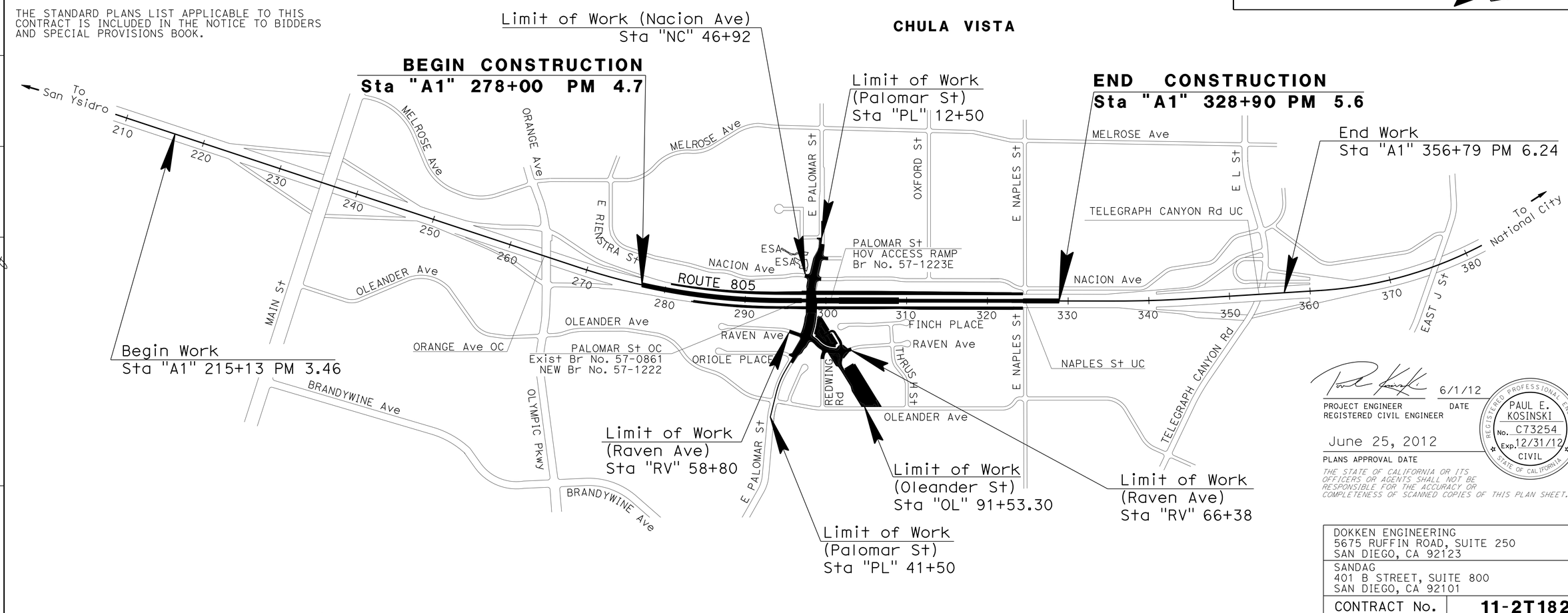

THE CONTRACTOR SHALL POSSESS THE CLASS (OR CLASSES) OF LICENSE AS SPECIFIED IN THE "NOTICE TO BIDDERS."

NO SCALE

PROJECT ENGINEER
REGISTERED CIVIL ENGINEER — DATE 6/1/12

June 25, 2012
PLANS APPROVAL DATE

REGISTERED PROFESSIONAL ENGINEER — PAUL E. KOSINSKI — No. C73254 — Exp. 12/31/12 — CIVIL — STATE OF CALIFORNIA

THE STATE OF CALIFORNIA OR ITS OFFICERS OR AGENTS SHALL NOT BE RESPONSIBLE FOR THE ACCURACY OR COMPLETENESS OF SCANNED COPIES OF THIS PLAN SHEET.

DOKKEN ENGINEERING
5675 RUFFIN ROAD, SUITE 250
SAN DIEGO, CA 92123

SANDAG
401 B STREET, SUITE 800
SAN DIEGO, CA 92101

CONTRACT No.	11-2T1824
PROJECT ID	1100020051

APPROVED AS TO IMPACT ON STATE FACILITIES AND CONFORMANCE WITH APPLICABLE STATE STANDARDS AND PRACTICES AND THAT TECHNICAL OVERSIGHT WAS PERFORMED.

CONSULTANT DESIGN ENGINEER	CALTRANS DESIGN OVERSIGHT APPROVAL	REGISTRATION No.	LICENSE Exp DATE	DATE SIGNED
GERARD LUMABAS	HARWELL ONTOY	55969	12/31/2012	06/06/12

LAST REVISION 06-07-12 — DATE PLOTTED => 12-SEP-2012 — TIME PLOTTED => 16:04

Dist	COUNTY	ROUTE	POST MILES TOTAL PROJECT	SHEET No.	TOTAL SHEETS
11	SD	805	4.7/5.6	2	650

REGISTERED CIVIL ENGINEER 6/1/12 DATE

06-25-12
PLANS APPROVAL DATE

REGISTERED PROFESSIONAL ENGINEER PAUL E. KOSINSKI No. C73254 Exp. 12/31/12 CIVIL STATE OF CALIFORNIA

THE STATE OF CALIFORNIA OR ITS OFFICERS OR AGENTS SHALL NOT BE RESPONSIBLE FOR THE ACCURACY OR COMPLETENESS OF SCANNED COPIES OF THIS PLAN SHEET.

DOKKEN ENGINEERING
5675 RUFFIN Rd
SUITE 250
SAN DIEGO, CA 92123

SANDAG
401 B St
SUITE 800
SAN DIEGO, CA 92101

NOTES:

1. DIMENSIONS OF THE PAVEMENT STRUCTURES (STRUCTURAL SECTIONS) ARE SUBJECT TO TOLERANCES SPECIFIED IN THE STANDARD SPECIFICATIONS.
2. SUPERELEVATIONS ARE SHOWN ON THE SUPERELEVATION DIAGRAMS.
3. EXACT LOCATIONS AND TYPES OF DIKES, CURBS, GUARD RAILING AND CONCRETE BARRIERS ARE SHOWN ON THE LAYOUTS AND THE SUMMARY OF QUANTITIES SHEETS.
4. EXISTING STRUCTURAL SECTIONS WERE OBTAINED THROUGH AS-BUILT RECORDS.
5. SEE CONSTRUCTION DETAILS FOR PAVEMENT EXTENSION UNDER DIKES AND CONCRETE BARRIERS.

DESIGN DESIGNATION (ROUTE 805)

2015	ADT = 180,200	D = 60%
2030	ADT = 212,900	T = 8%
	DHV = 16,090	V = 70 MPH

STRUCTURAL SECTION TYPES

1	0.90′ JPCP 0.25′ HMA (TYPE A) 0.65′ CL2-AB
2	0.85′ JPCP 0.25′ HMA (TYPE A) 0.65′ CL2-AB
3	0.60′ HMA (TYPE A) 1.75′ CL2-AB
4	0.33′ HMA (TYPE A) 1.00′ CL2-AB
5	0.85′ JPCP 0.25′ HMA (TYPE A) 0.50′ CL2-AB
6	0.50′ CL2-AB
7	0.33′ MINOR Conc (TYPE 1) (EXPOSED AGGREGATE)
8	0.50′ MINOR Conc (Misc Const) 1.00′ CL2-AB

EXISTING STRUCTURAL SECTION TYPES

A	0.70′ PCC 0.45′ CLA-CTB 0.90′ CL4-AS
B	0.20′ AC 0.40′ CL2-AB Var CL4-AS
C	0.30′ AC 0.50′ CLB-CTB 0.90′ CL4-AS

ABBREVIATIONS:

BL	BIKELANE
BSW	BACK OF SIDEWALK
FB	FACE OF BARRIER
GB	GRADE BREAK
S/C	SAWCUT

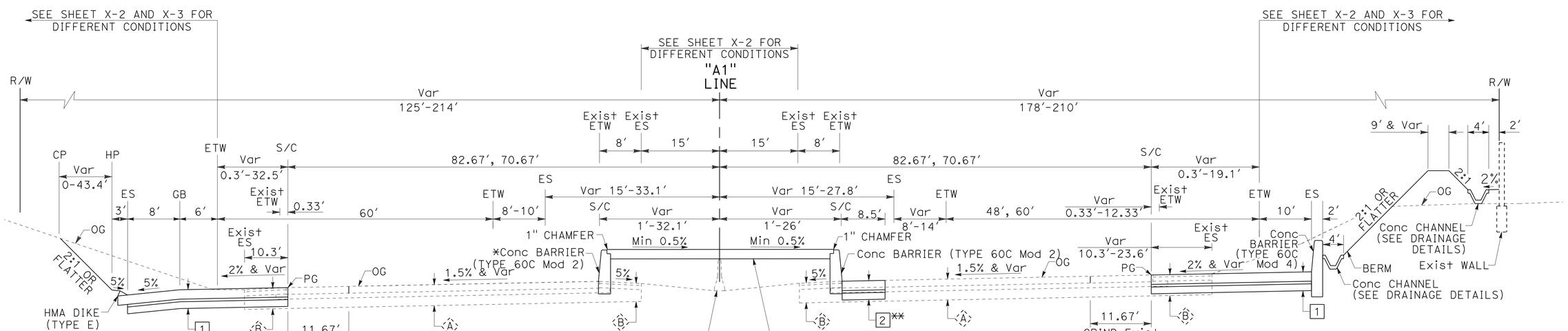

SOUTHBOUND
"A1" Sta 280+60 TO 297+50
*Conc BARRIER (60C Mod 3)
Sta "A1" 289+30.04 TO 295+50

NORTHBOUND
"A1" Sta 283+40 TO 296+57.85
** REPLACEMENT PAVEMENT FOR RCP TRENCH
Sta 289+81.52 TO 296+57.84

ROUTE 805

TYPICAL CROSS SECTIONS

NO SCALE

X-1

STATE OF CALIFORNIA - DEPARTMENT OF TRANSPORTATION
Caltrans

CONSULTANT FUNCTIONAL SUPERVISOR: GERARD LUMABAS
CALCULATED-DESIGNED BY: DARWIN CRUZ
CHECKED BY: PAUL KOSINSKI
REVISED BY
DATE REVISED

LAST REVISION 06-08-12
DATE PLOTTED => 12-SEP-2012
TIME PLOTTED => 16:04

Dist	COUNTY	ROUTE	POST MILES TOTAL PROJECT	SHEET No.	TOTAL SHEETS
11	SD	805	4.7/5.6	3	650

REGISTERED CIVIL ENGINEER 6/1/12 DATE

06-25-12
PLANS APPROVAL DATE

REGISTERED PROFESSIONAL ENGINEER PAUL E. KOSINSKI No. C73254 Exp. 12/31/12 CIVIL STATE OF CALIFORNIA

THE STATE OF CALIFORNIA OR ITS OFFICERS OR AGENTS SHALL NOT BE RESPONSIBLE FOR THE ACCURACY OR COMPLETENESS OF SCANNED COPIES OF THIS PLAN SHEET.

DOKKEN ENGINEERING
5675 RUFFIN Rd
SUITE 250
SAN DIEGO, CA 92123

SANDAG
401 B St
SUITE 800
SAN DIEGO, CA 92101

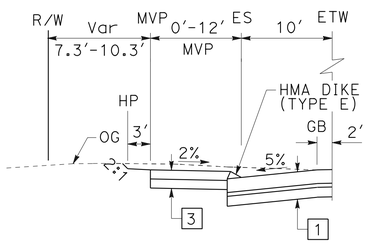

SOUTHBOUND
"A1" Sta 289+15 TO 290+01.13

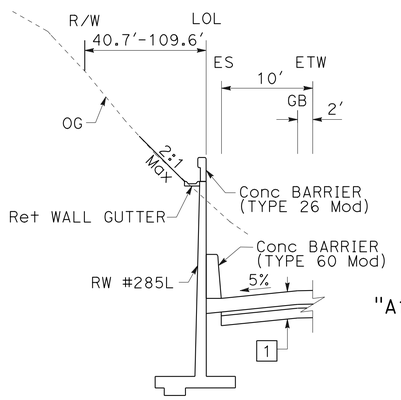

SOUTHBOUND
"A1" Sta 284+75 TO 288+44.82

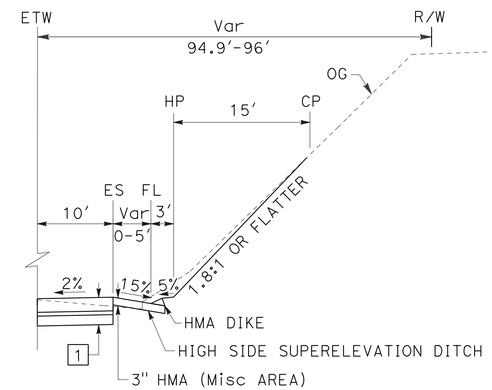

NORTHBOUND
"A1" Sta 283+40 TO 285+00

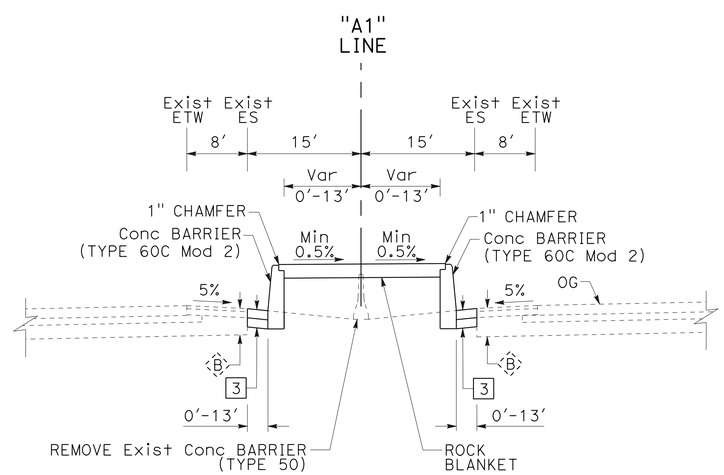

SOUTHBOUND
"A1" Sta 283+40 TO 286+20.02

NORTHBOUND
"A1" Sta 283+40 TO 287+60.86

ROUTE 805

TYPICAL CROSS SECTIONS

NO SCALE

X-2

STATE OF CALIFORNIA - DEPARTMENT OF TRANSPORTATION
Caltrans

CONSULTANT FUNCTIONAL SUPERVISOR: GERARD LUMABAS
CALCULATED-DESIGNED BY: DARWIN CRUZ
CHECKED BY: PAUL KOSINSKI
REVISED BY
DATE REVISED

LAST REVISION 06-08-12
DATE PLOTTED => 12-SEP-2012
TIME PLOTTED => 16:04

Dist	COUNTY	ROUTE	POST MILES TOTAL PROJECT	SHEET No.	TOTAL SHEETS
11	SD	805	4.7/5.6	4	650

REGISTERED CIVIL ENGINEER 6/1/12 DATE

06-25-12
PLANS APPROVAL DATE

REGISTERED PROFESSIONAL ENGINEER PAUL E. KOSINSKI No. C73254 Exp. 12/31/12 CIVIL STATE OF CALIFORNIA

THE STATE OF CALIFORNIA OR ITS OFFICERS OR AGENTS SHALL NOT BE RESPONSIBLE FOR THE ACCURACY OR COMPLETENESS OF SCANNED COPIES OF THIS PLAN SHEET.

DOKKEN ENGINEERING
5675 RUFFIN Rd
SUITE 250
SAN DIEGO, CA 92123

SANDAG
401 B St
SUITE 800
SAN DIEGO, CA 92101

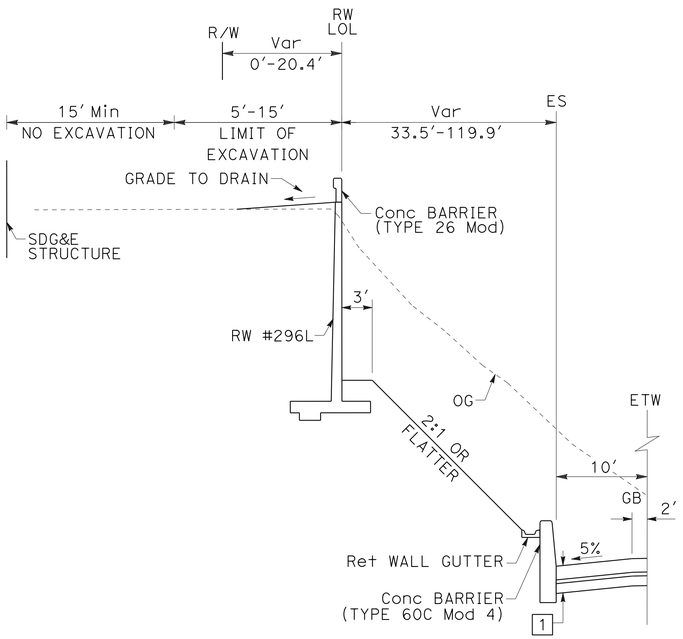

SOUTHBOUND
"A1" Sta 296+03.87 TO 297+32.70

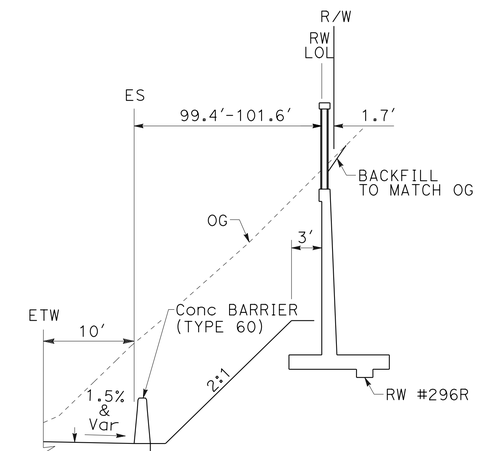

NORTHBOUND
"A1" Sta 296+42.67 TO 296+57.85

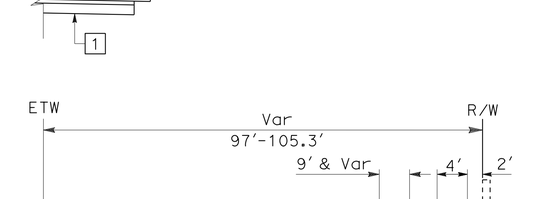

NORTHBOUND
"A1" Sta 285+00 TO 288+01.30

ROUTE 805

TYPICAL CROSS SECTIONS

NO SCALE

X-3

STATE OF CALIFORNIA - DEPARTMENT OF TRANSPORTATION
Caltrans

CONSULTANT FUNCTIONAL SUPERVISOR: GERARD LUMABAS
CALCULATED-DESIGNED BY: DARWIN CRUZ
CHECKED BY: PAUL KOSINSKI
REVISED BY
DATE REVISED

LAST REVISION 06-08-12
DATE PLOTTED => 12-SEP-2012
TIME PLOTTED => 16:04

Dist	COUNTY	ROUTE	POST MILES TOTAL PROJECT	SHEET No.	TOTAL SHEETS
11	SD	805	4.7/5.6	5	650

REGISTERED CIVIL ENGINEER 6/1/12 DATE

PAUL E. KOSINSKI No. C73254 Exp. 12/31/12 CIVIL STATE OF CALIFORNIA REGISTERED PROFESSIONAL ENGINEER

06-25-12
PLANS APPROVAL DATE

THE STATE OF CALIFORNIA OR ITS OFFICERS OR AGENTS SHALL NOT BE RESPONSIBLE FOR THE ACCURACY OR COMPLETENESS OF SCANNED COPIES OF THIS PLAN SHEET.

DOKKEN ENGINEERING
5675 RUFFIN Rd
SUITE 250
SAN DIEGO, CA 92123

SANDAG
401 B St
SUITE 800
SAN DIEGO, CA 92101

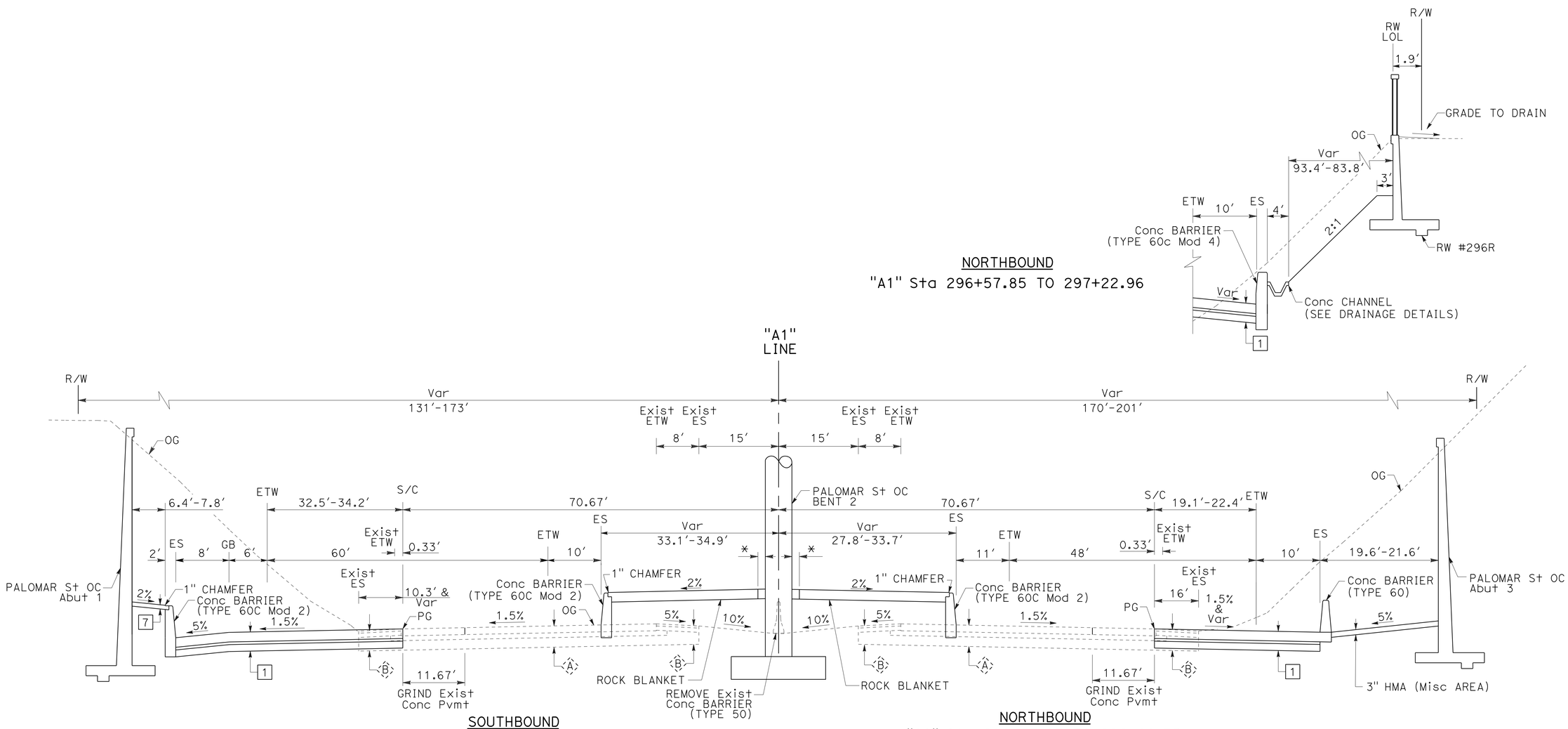

ROUTE 805

SEE STRUCTURE PLANS FOR PALOMAR St OC

* 6" x 4" (W x D) EXPANDED POLYSTYRENE AROUND ALL BRIDGE COLUMNS

TYPICAL CROSS SECTIONS

NO SCALE

X-4

STATE OF CALIFORNIA - DEPARTMENT OF TRANSPORTATION

Caltrans

CONSULTANT FUNCTIONAL SUPERVISOR: GERARD LUMABAS

CALCULATED-DESIGNED BY: DARWIN CRUZ

CHECKED BY: PAUL KOSINSKI

REVISED BY

DATE REVISED

LAST REVISION 06-08-12 | DATE PLOTTED => 12-SEP-2012 | TIME PLOTTED => 16:04

Dist	COUNTY	ROUTE	POST MILES TOTAL PROJECT	SHEET No.	TOTAL SHEETS
11	SD	805	4.7/5.6	6	650

REGISTERED CIVIL ENGINEER — DATE 6/1/12

06-25-12
PLANS APPROVAL DATE

REGISTERED PROFESSIONAL ENGINEER — PAUL E. KOSINSKI — No. C73254 — Exp. 12/31/12 — CIVIL — STATE OF CALIFORNIA

THE STATE OF CALIFORNIA OR ITS OFFICERS OR AGENTS SHALL NOT BE RESPONSIBLE FOR THE ACCURACY OR COMPLETENESS OF SCANNED COPIES OF THIS PLAN SHEET.

DOKKEN ENGINEERING
5675 RUFFIN Rd
SUITE 250
SAN DIEGO, CA 92123

SANDAG
401 B St
SUITE 800
SAN DIEGO, CA 92101

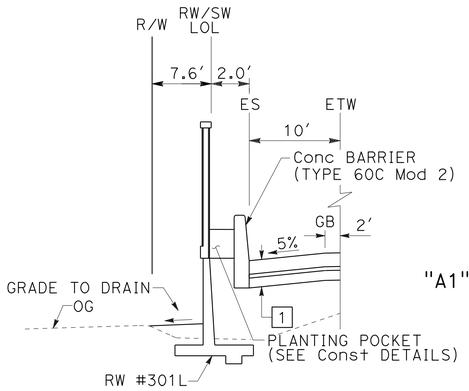

SOUTHBOUND
"A1" Sta 300+53.16 TO 301+65

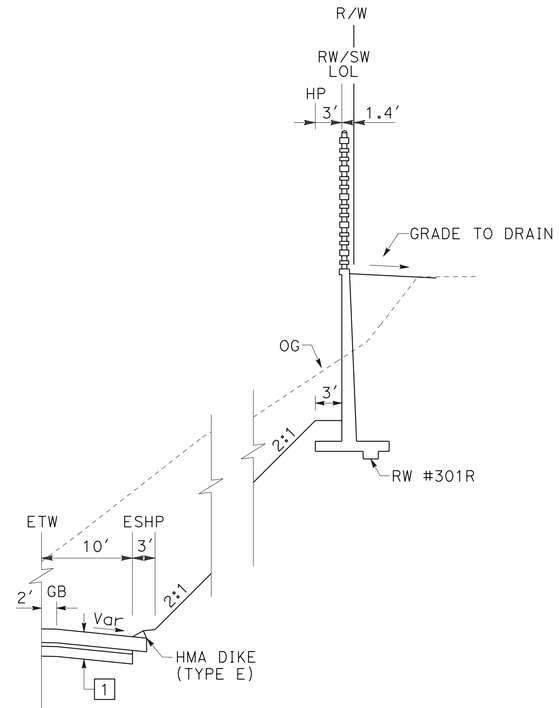

NORTHBOUND
"A1" Sta 300+65.62 TO 301+65

IDENTICAL

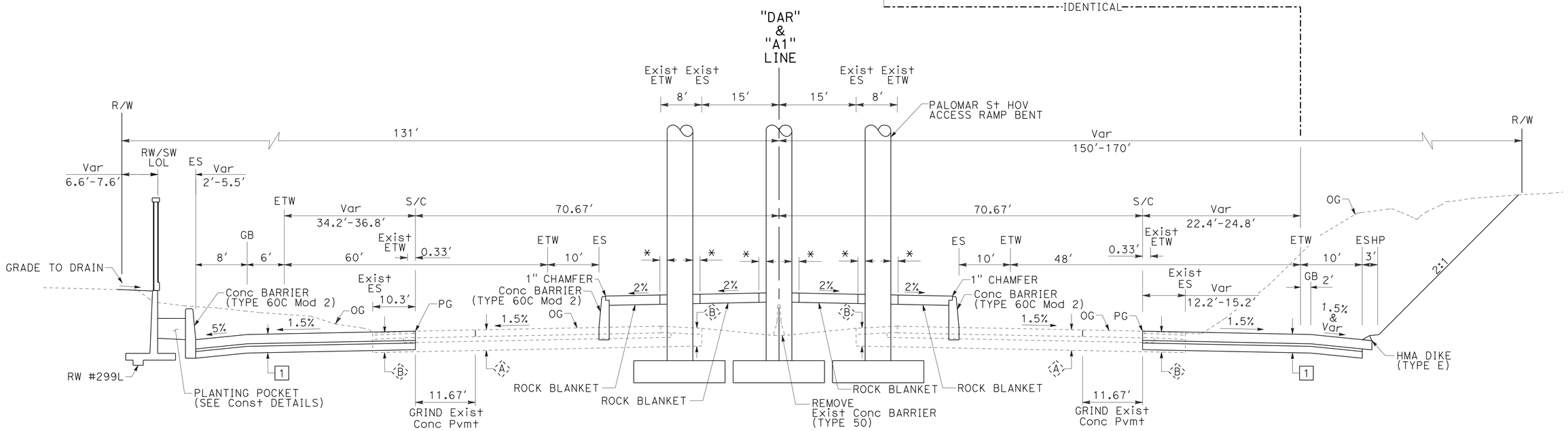

SOUTHBOUND
"DAR" & "A1" Sta 298+72.71 TO 301+65

NORTHBOUND
"DAR" & "A1" Sta 298+88.33 TO 301+65

* 6" x 4" (W x D) EXPANDED POLYSTYRENE AROUND ALL BRIDGE COLUMNS

ROUTE 805

SEE STRUCTURE PLANS FOR PALOMAR St HOV ACCESS RAMP

TYPICAL CROSS SECTIONS

NO SCALE

X-5

STATE OF CALIFORNIA - DEPARTMENT OF TRANSPORTATION
Caltrans

CONSULTANT FUNCTIONAL SUPERVISOR: GERARD LUMABAS
CALCULATED-DESIGNED BY: PAUL KOSINSKI
CHECKED BY: DARWIN CRUZ
REVISED BY
DATE REVISED

LAST REVISION 06-08-12
DATE PLOTTED => 12-SEP-2012
TIME PLOTTED => 16:04

Dist	COUNTY	ROUTE	POST MILES TOTAL PROJECT	SHEET No.	TOTAL SHEETS
11	SD	805	4.7/5.6	7	650

REGISTERED CIVIL ENGINEER 6/1/12 DATE

06-25-12
PLANS APPROVAL DATE

REGISTERED PROFESSIONAL ENGINEER PAUL E. KOSINSKI No. C73254 Exp. 12/31/12 CIVIL STATE OF CALIFORNIA

THE STATE OF CALIFORNIA OR ITS OFFICERS OR AGENTS SHALL NOT BE RESPONSIBLE FOR THE ACCURACY OR COMPLETENESS OF SCANNED COPIES OF THIS PLAN SHEET.

DOKKEN ENGINEERING
5675 RUFFIN Rd
SUITE 250
SAN DIEGO, CA 92123

SANDAG
401 B St
SUITE 800
SAN DIEGO, CA 92101

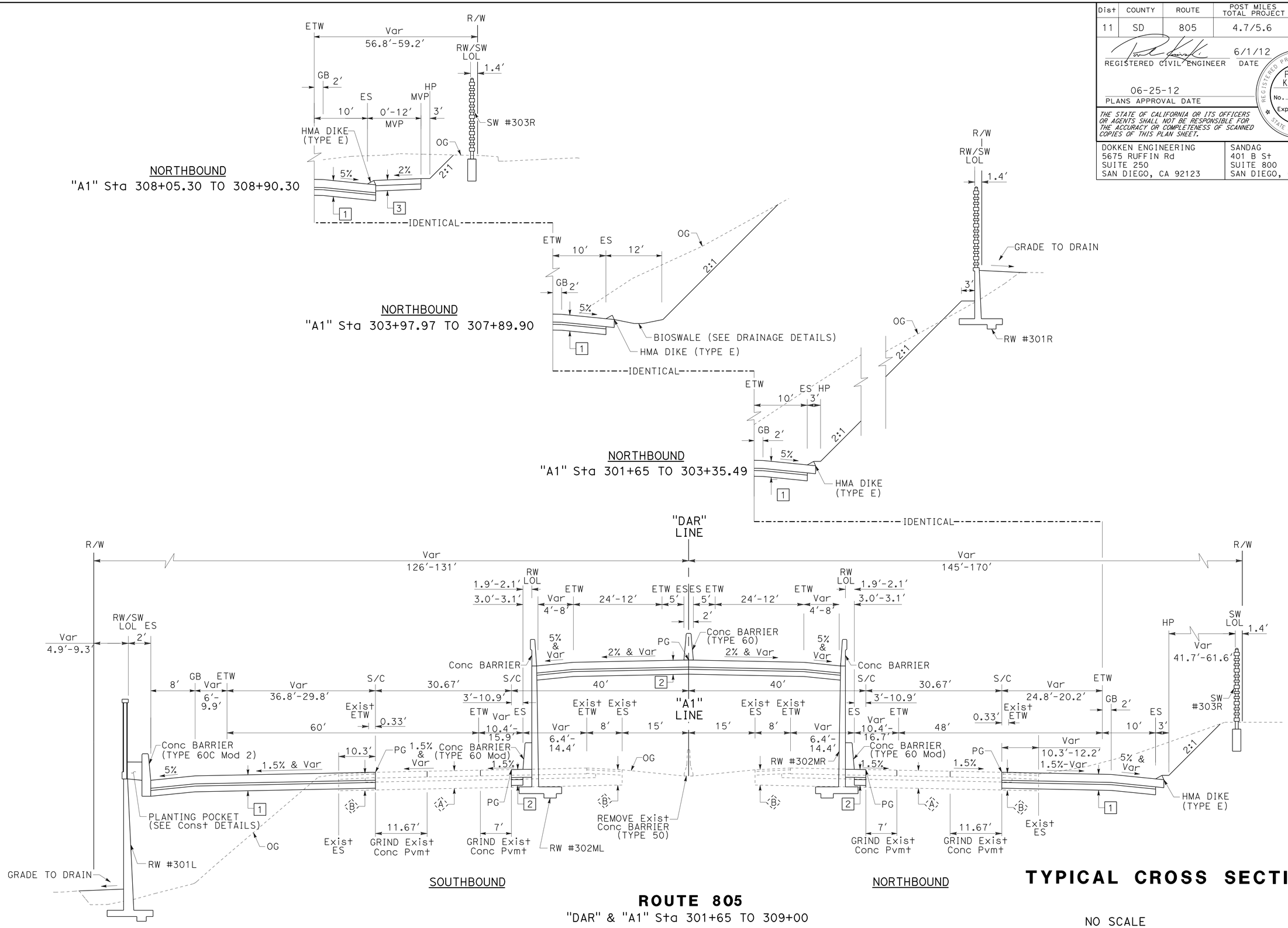

TYPICAL CROSS SECTIONS

ROUTE 805

"DAR" & "A1" Sta 301+65 TO 309+00

NO SCALE

X-6

STATE OF CALIFORNIA - DEPARTMENT OF TRANSPORTATION
Caltrans

CONSULTANT FUNCTIONAL SUPERVISOR: GERARD LUMABAS
CALCULATED-DESIGNED BY: DARWIN CRUZ
CHECKED BY: PAUL KOSINSKI
REVISED BY
DATE REVISED

LAST REVISION: DATE PLOTTED => 12-SEP-2012
TIME PLOTTED => 16:04
06-08-12

BORDER LAST REVISED 7/2/2010
USERNAME => s127400
DGN FILE => 1100020051ca006.dgn
RELATIVE BORDER SCALE IS IN INCHES 0 1 2 3
UNIT 2762
PROJECT NUMBER & PHASE 11000200511

Dist	COUNTY	ROUTE	POST MILES TOTAL PROJECT	SHEET No.	TOTAL SHEETS
11	SD	805	4.7/5.6	8	650

REGISTERED CIVIL ENGINEER 6/1/12 DATE

06-25-12
PLANS APPROVAL DATE

REGISTERED PROFESSIONAL ENGINEER PAUL E. KOSINSKI No. C73254 Exp. 12/31/12 CIVIL STATE OF CALIFORNIA

THE STATE OF CALIFORNIA OR ITS OFFICERS OR AGENTS SHALL NOT BE RESPONSIBLE FOR THE ACCURACY OR COMPLETENESS OF SCANNED COPIES OF THIS PLAN SHEET.

DOKKEN ENGINEERING
5675 RUFFIN Rd
SUITE 250
SAN DIEGO, CA 92123

SANDAG
401 B St
SUITE 800
SAN DIEGO, CA 92101

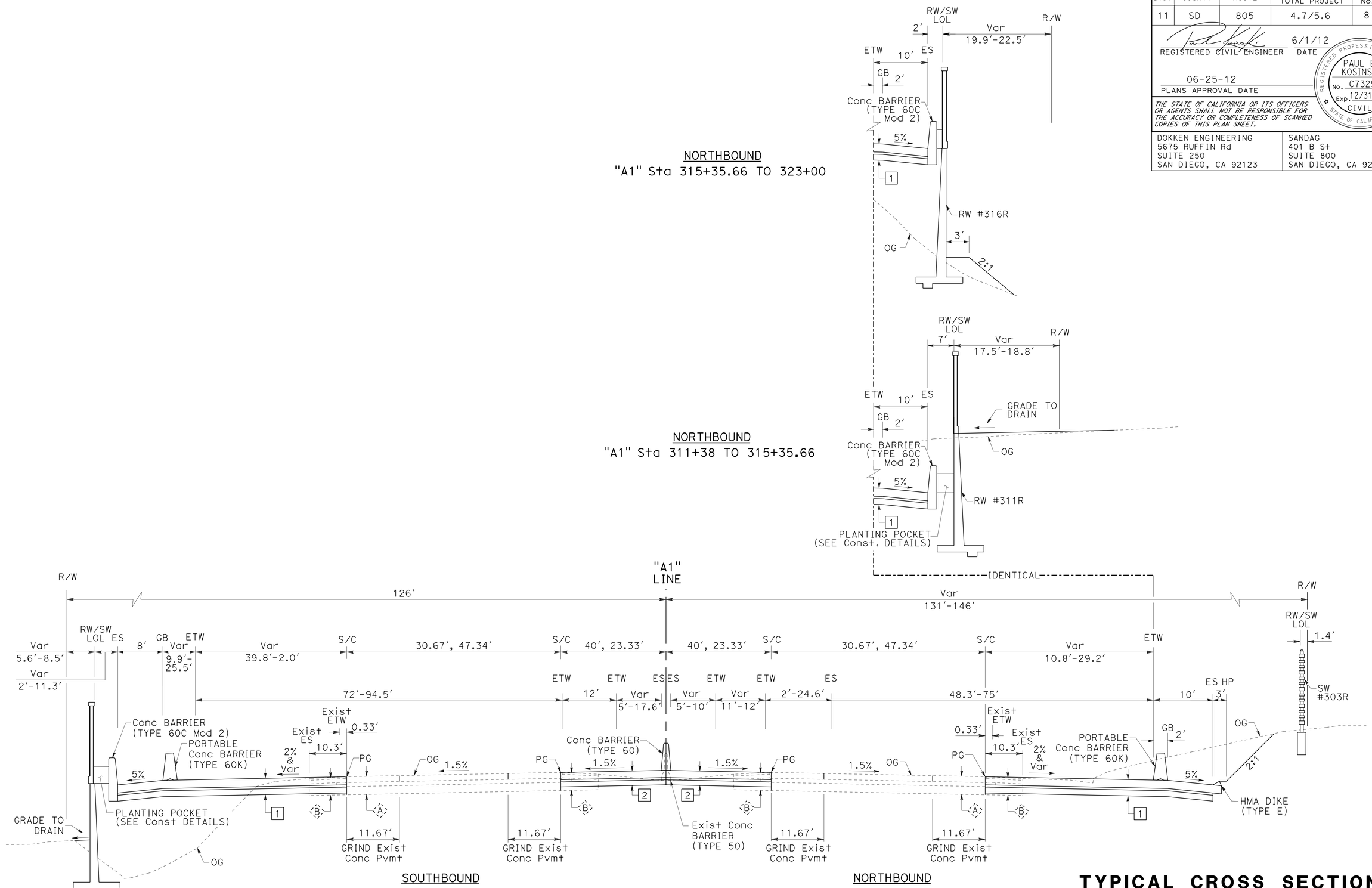

ROUTE 805
"A1" Sta 309+00 TO 323+00

TYPICAL CROSS SECTIONS

NO SCALE

X-7

STATE OF CALIFORNIA - DEPARTMENT OF TRANSPORTATION
Caltrans

CONSULTANT FUNCTIONAL SUPERVISOR: GERARD LUMABAS
CALCULATED-DESIGNED BY: DARWIN CRUZ
CHECKED BY: PAUL KOSINSKI
REVISED BY
DATE REVISED

LAST REVISION 06-08-12
DATE PLOTTED => 12-SEP-2012
TIME PLOTTED => 16:05

Dist	COUNTY	ROUTE	POST MILES TOTAL PROJECT	SHEET No.	TOTAL SHEETS
11	SD	805	4.7/5.6	9	650

REGISTERED CIVIL ENGINEER 6/1/12 DATE

06-25-12
PLANS APPROVAL DATE

REGISTERED PROFESSIONAL ENGINEER
PAUL E. KOSINSKI
No. C73254
Exp. 12/31/12
CIVIL
STATE OF CALIFORNIA

THE STATE OF CALIFORNIA OR ITS OFFICERS OR AGENTS SHALL NOT BE RESPONSIBLE FOR THE ACCURACY OR COMPLETENESS OF SCANNED COPIES OF THIS PLAN SHEET.

DOKKEN ENGINEERING
5675 RUFFIN Rd
SUITE 250
SAN DIEGO, CA 92123

SANDAG
401 B St
SUITE 800
SAN DIEGO, CA 92101

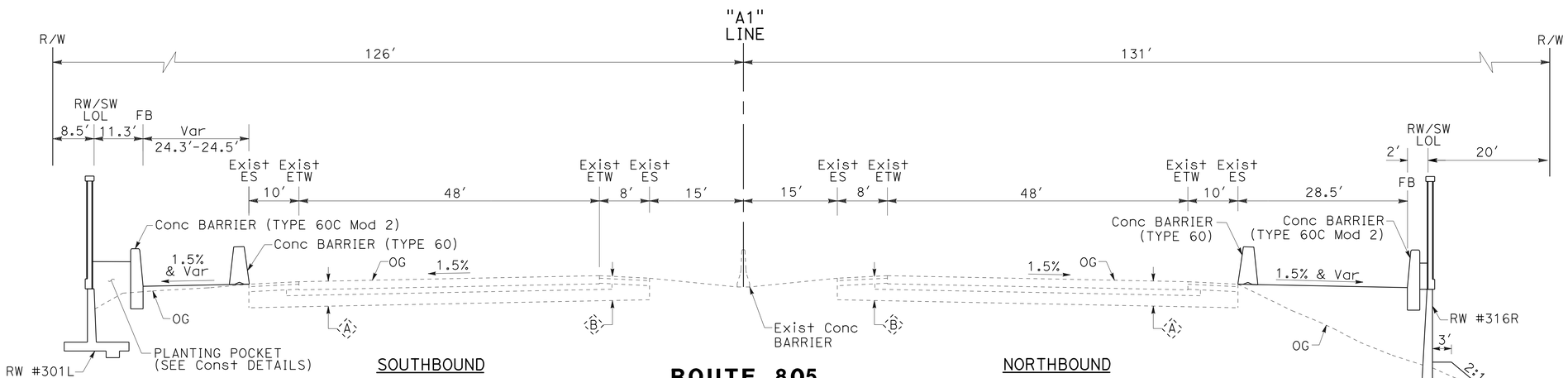

ROUTE 805
"A1" Sta 323+00 TO 323+35.15

TYPICAL CROSS SECTIONS

NO SCALE

X-8

STATE OF CALIFORNIA - DEPARTMENT OF TRANSPORTATION
Caltrans

CONSULTANT FUNCTIONAL SUPERVISOR: GERARD LUMABAS
CALCULATED-DESIGNED BY: DARWIN CRUZ
CHECKED BY: PAUL KOSINSKI
REVISED BY
DATE REVISED

LAST REVISION 06-08-12
DATE PLOTTED => 12-SEP-2012
TIME PLOTTED => 16:05

Dist	COUNTY	ROUTE	POST MILES TOTAL PROJECT	SHEET No.	TOTAL SHEETS
11	SD	805	4.7/5.6	10	650

REGISTERED CIVIL ENGINEER 6/1/12 DATE

06-25-12
PLANS APPROVAL DATE

REGISTERED PROFESSIONAL ENGINEER PAUL E. KOSINSKI No. C73254 Exp. 12/31/12 CIVIL STATE OF CALIFORNIA

THE STATE OF CALIFORNIA OR ITS OFFICERS OR AGENTS SHALL NOT BE RESPONSIBLE FOR THE ACCURACY OR COMPLETENESS OF SCANNED COPIES OF THIS PLAN SHEET.

DOKKEN ENGINEERING
5675 RUFFIN Rd
SUITE 250
SAN DIEGO, CA 92123

SANDAG
401 B St
SUITE 800
SAN DIEGO, CA 92101

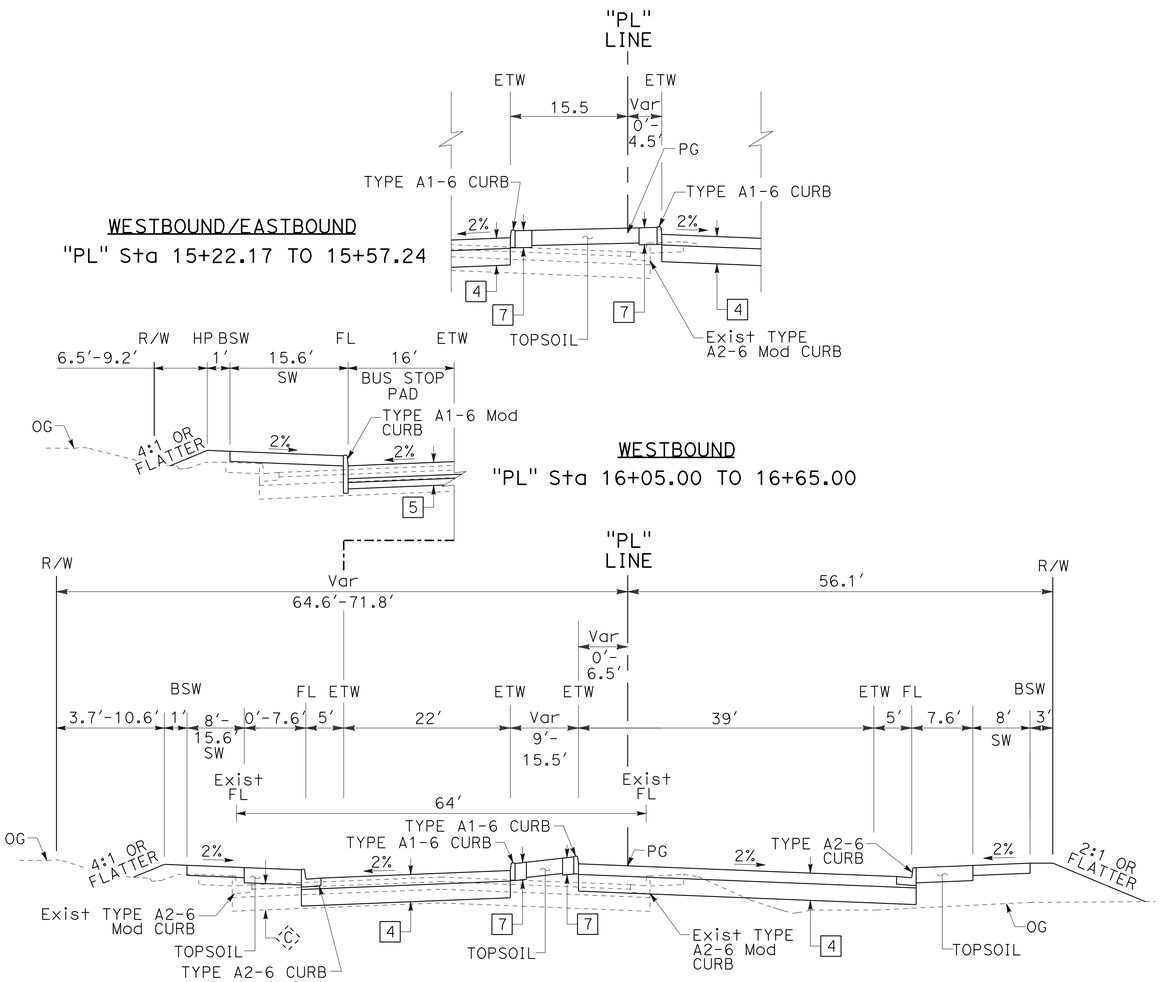

WESTBOUND/EASTBOUND
"PL" Sta 15+22.17 TO 15+57.24

WESTBOUND
"PL" Sta 16+05.00 TO 16+65.00

EAST PALOMAR STREET
"PL" Sta 15+22.17 TO 17+38.77

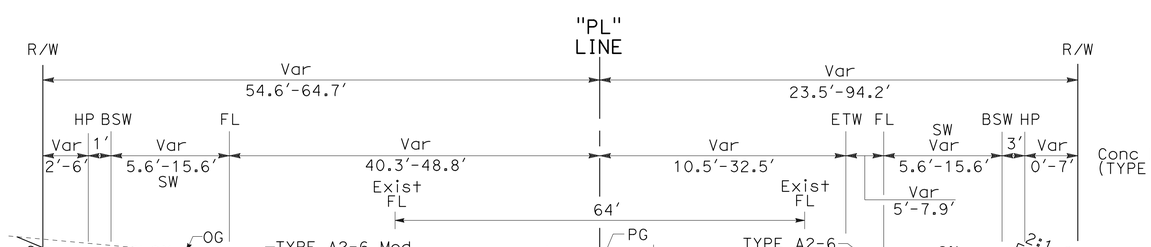

WESTBOUND
"PL" Sta 13+08.48 TO 15+22.17

EAST PALOMAR STREET

EASTBOUND
"PL" Sta 12+40.39 TO 15+22.17

EASTBOUND
"PL" Sta 18+06.24 TO 18+57.05

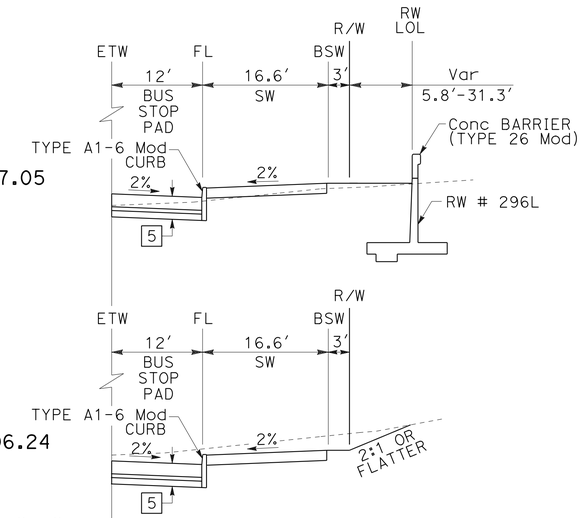

EASTBOUND
"PL" Sta 17+86.89 TO 18+06.24

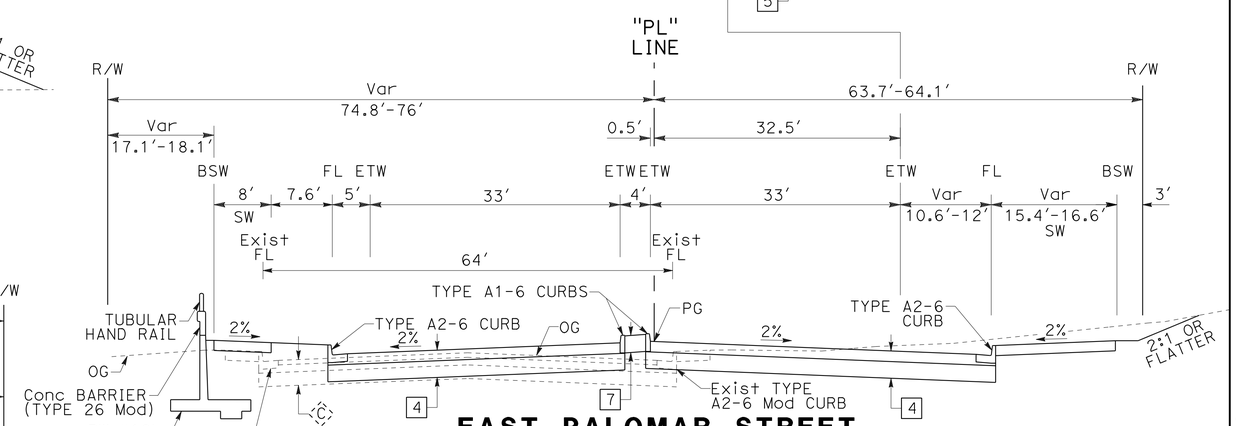

EAST PALOMAR STREET
"PL" Sta 17+38.77 TO 18+69.81
(*Sta 18+69.81 TO 21+80.01 SEE STRUCTURAL PLANS)

TYPICAL CROSS SECTIONS

NO SCALE

X-9

REVISED BY	DATE REVISED

CALCULATED-DESIGNED BY: DARWIN CRUZ
CHECKED BY: PAUL KOSINSKI
CONSULTANT FUNCTIONAL SUPERVISOR: GERARD LUMABAS

STATE OF CALIFORNIA - DEPARTMENT OF TRANSPORTATION
Caltrans

LAST REVISION 06-08-12
DATE PLOTTED => 12-SEP-2012
TIME PLOTTED => 16:05

Dist	COUNTY	ROUTE	POST MILES TOTAL PROJECT	SHEET No.	TOTAL SHEETS
11	SD	805	4.7/5.6	11	650

REGISTERED CIVIL ENGINEER 6/1/12 DATE

06-25-12
PLANS APPROVAL DATE

REGISTERED PROFESSIONAL ENGINEER PAUL E. KOSINSKI No. C73254 Exp. 12/31/12 CIVIL STATE OF CALIFORNIA

THE STATE OF CALIFORNIA OR ITS OFFICERS OR AGENTS SHALL NOT BE RESPONSIBLE FOR THE ACCURACY OR COMPLETENESS OF SCANNED COPIES OF THIS PLAN SHEET.

DOKKEN ENGINEERING
5675 RUFFIN Rd
SUITE 250
SAN DIEGO, CA 92123

SANDAG
401 B St
SUITE 800
SAN DIEGO, CA 92101

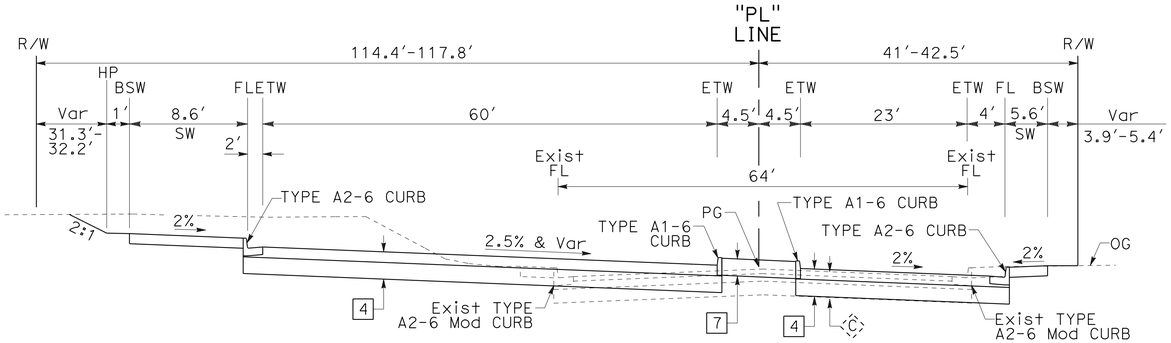

EAST PALOMAR STREET

"PL" Sta 24+84.00 TO 25+74.37

EASTBOUND

"PL" Sta 22+47.14 TO 23+87.14

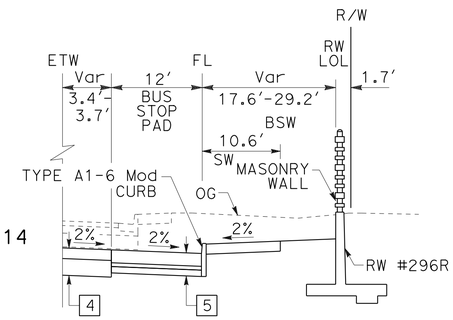

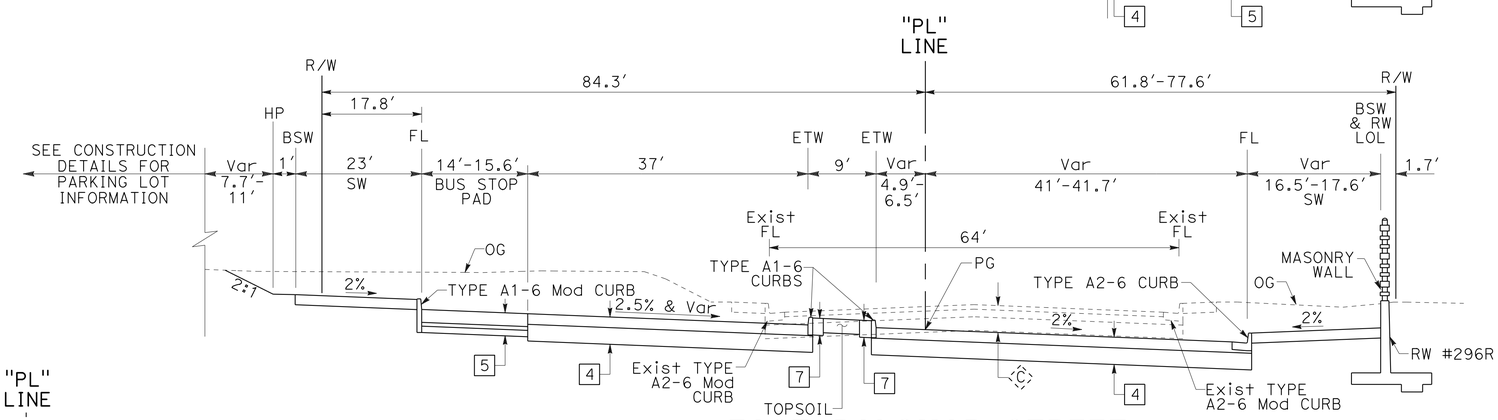

EAST PALOMAR STREET

"PL" Sta 22+34.44 TO 24+84.00

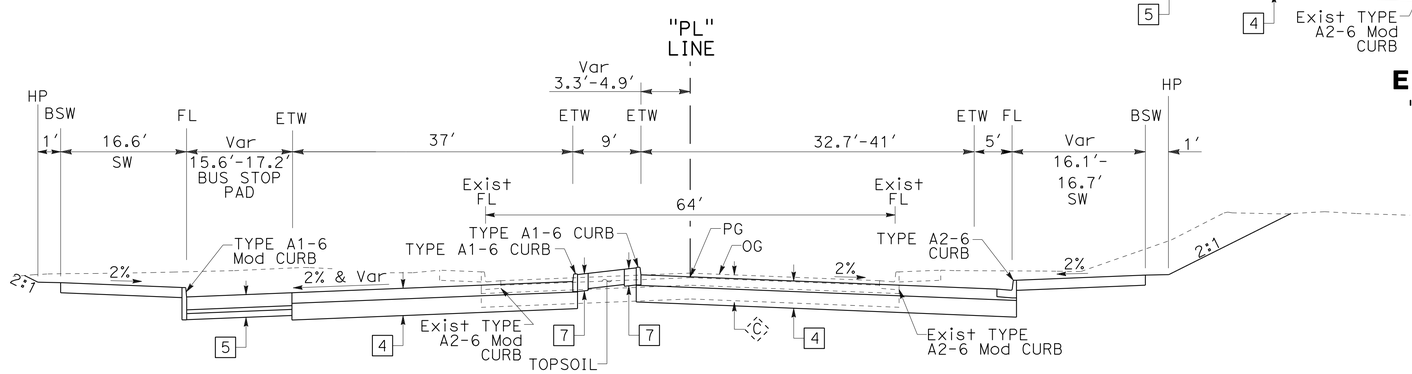

EAST PALOMAR STREET

"PL" Sta 21+80.01 TO 22+34.44

(*Sta 18+69.81 TO 21+80.01 SEE STRUCTURAL PLANS)

TYPICAL CROSS SECTIONS

NO SCALE

X-10

STATE OF CALIFORNIA - DEPARTMENT OF TRANSPORTATION

Caltrans

CONSULTANT FUNCTIONAL SUPERVISOR: GERARD LUMABAS

CALCULATED-DESIGNED BY: DARWIN CRUZ

CHECKED BY: PAUL KOSINSKI

REVISED BY | DATE REVISED

LAST REVISION 06-08-12 | DATE PLOTTED => 12-SEP-2012 | TIME PLOTTED => 16:05

Dist	COUNTY	ROUTE	POST MILES TOTAL PROJECT	SHEET No.	TOTAL SHEETS
11	SD	805	4.7/5.6	12	650

REGISTERED CIVIL ENGINEER 6/1/12 DATE

06-25-12
PLANS APPROVAL DATE

REGISTERED PROFESSIONAL ENGINEER PAUL E. KOSINSKI No. C73254 Exp. 12/31/12 CIVIL STATE OF CALIFORNIA

THE STATE OF CALIFORNIA OR ITS OFFICERS OR AGENTS SHALL NOT BE RESPONSIBLE FOR THE ACCURACY OR COMPLETENESS OF SCANNED COPIES OF THIS PLAN SHEET.

DOKKEN ENGINEERING
5675 RUFFIN Rd
SUITE 250
SAN DIEGO, CA 92123

SANDAG
401 B St
SUITE 800
SAN DIEGO, CA 92101

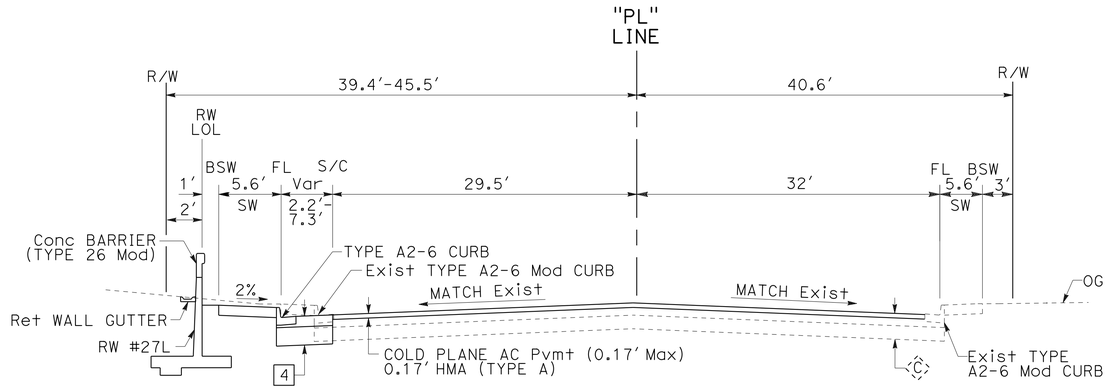

EAST PALOMAR STREET

"PL" Sta 27+75.27 TO 29+29.02

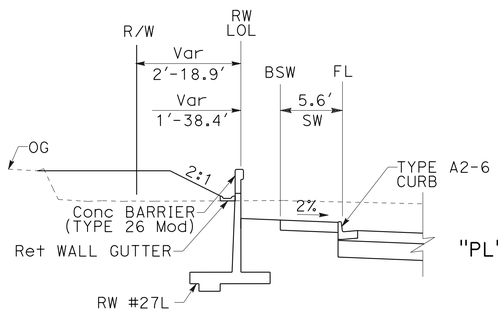

WESTBOUND

"PL" Sta 26+66.72 TO 27+75.34

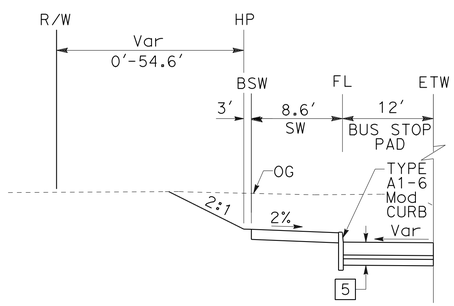

WESTBOUND

"PL" Sta 26+05.29 TO 26+75.62

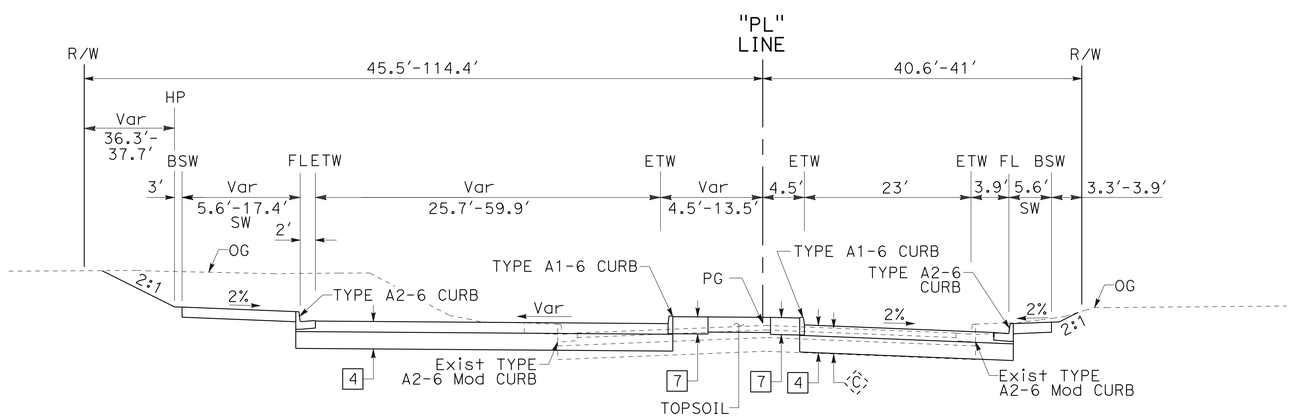

EAST PALOMAR STREET

"PL" Sta 25+74.37 TO 27+75.34

TYPICAL CROSS SECTIONS

NO SCALE

X-11

STATE OF CALIFORNIA - DEPARTMENT OF TRANSPORTATION
Caltrans

CONSULTANT FUNCTIONAL SUPERVISOR: GERARD LUMABAS
CALCULATED-DESIGNED BY: DARWIN CRUZ
CHECKED BY: PAUL KOSINSKI
REVISED BY
DATE REVISED

LAST REVISION 06-08-12
DATE PLOTTED => 12-SEP-2012
TIME PLOTTED => 16:05

Dist	COUNTY	ROUTE	POST MILES TOTAL PROJECT	SHEET No.	TOTAL SHEETS
11	SD	805	4.7/5.6	13	650

REGISTERED CIVIL ENGINEER 6/1/12 DATE

06-25-12
PLANS APPROVAL DATE

REGISTERED PROFESSIONAL ENGINEER PAUL E. KOSINSKI No. C73254 Exp. 12/31/12 CIVIL STATE OF CALIFORNIA

THE STATE OF CALIFORNIA OR ITS OFFICERS OR AGENTS SHALL NOT BE RESPONSIBLE FOR THE ACCURACY OR COMPLETENESS OF SCANNED COPIES OF THIS PLAN SHEET.

DOKKEN ENGINEERING
5675 RUFFIN Rd
SUITE 250
SAN DIEGO, CA 92123

SANDAG
401 B St
SUITE 800
SAN DIEGO, CA 92101

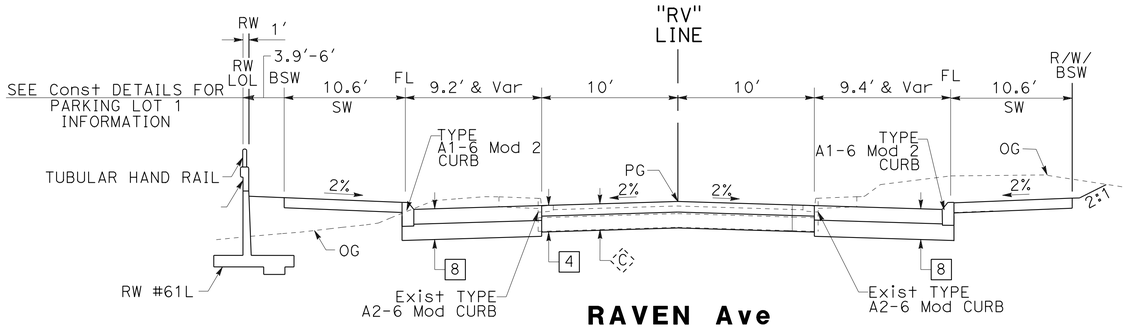

RAVEN Ave
"RV" Sta 63+58.87 TO 64+33.94

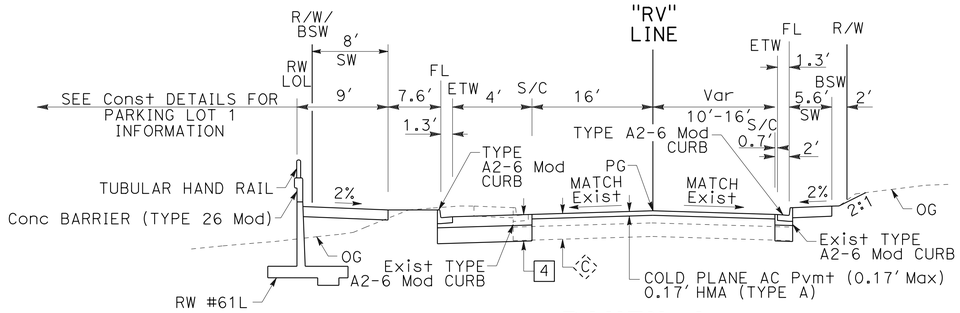

RAVEN Ave
"RV" Sta 61+05.84 TO 62+46.62

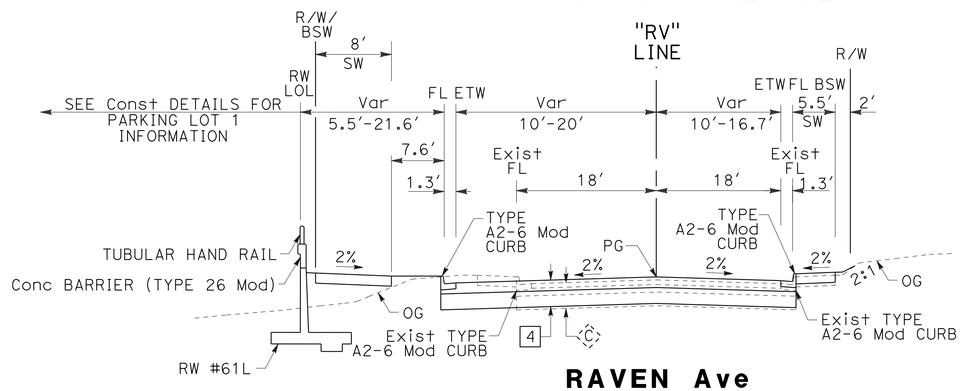

RAVEN Ave
"RV" Sta 60+90.67 TO 61+05.84 AND
"RV" Sta 62+46.62 TO 63+58.87 AND
"RV" Sta 64+33.94 TO 66+36.88

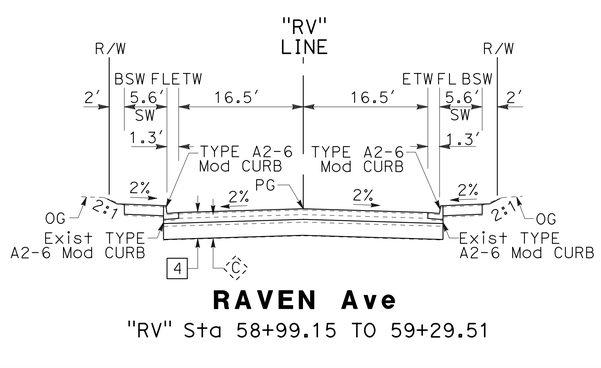

RAVEN Ave
"RV" Sta 58+99.15 TO 59+29.51

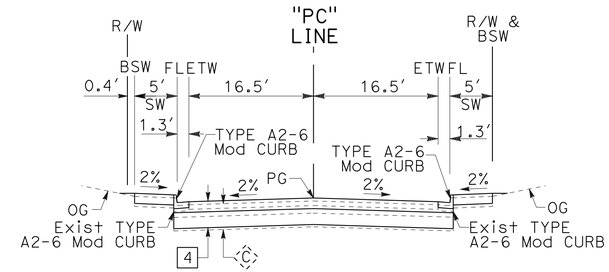

PECAN PLACE
"PC" Sta 40+94.92 TO 41+45.04

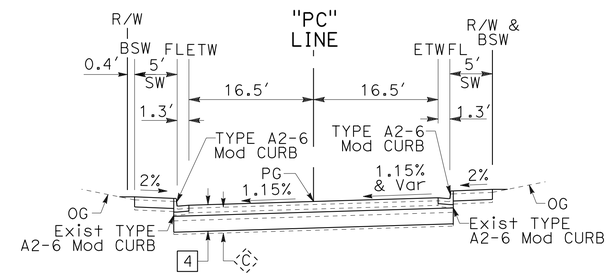

PECAN PLACE
"PC" Sta 40+82.41 TO 40+94.92

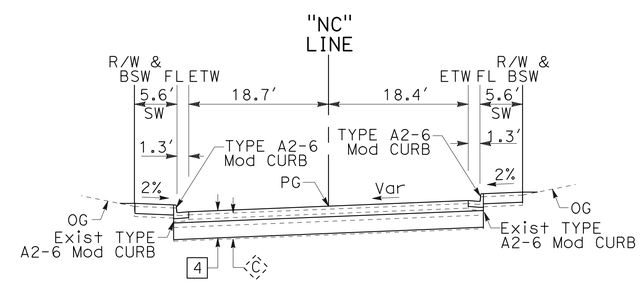

NACION Ave
"NC" Sta 50+78.14 TO 51+01.88

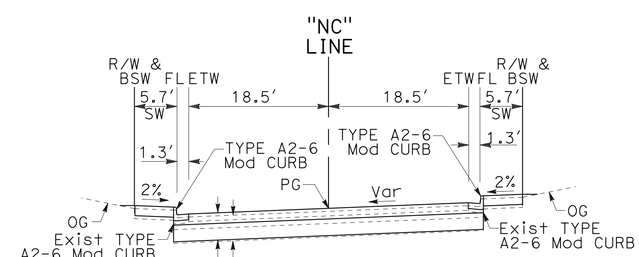

NACION Ave
"NC" Sta 48+95 TO 49+25.85

TYPICAL CROSS SECTIONS

NO SCALE

X-12

STATE OF CALIFORNIA - DEPARTMENT OF TRANSPORTATION
Caltrans

CONSULTANT FUNCTIONAL SUPERVISOR: GERARD LUMABAS
CALCULATED-DESIGNED BY: DARWIN CRUZ
CHECKED BY: PAUL KOSINSKI
REVISED BY
DATE REVISED

LAST REVISION 06-08-12
DATE PLOTTED => 12-SEP-2012
TIME PLOTTED => 16:05

Dist	COUNTY	ROUTE	POST MILES TOTAL PROJECT	SHEET No.	TOTAL SHEETS
11	SD	805	4.7/5.6	14	650

REGISTERED CIVIL ENGINEER 6/1/12 DATE

06-25-12
PLANS APPROVAL DATE

REGISTERED PROFESSIONAL ENGINEER PAUL E. KOSINSKI No. C73254 Exp. 12/31/12 CIVIL STATE OF CALIFORNIA

THE STATE OF CALIFORNIA OR ITS OFFICERS OR AGENTS SHALL NOT BE RESPONSIBLE FOR THE ACCURACY OR COMPLETENESS OF SCANNED COPIES OF THIS PLAN SHEET.

DOKKEN ENGINEERING
5675 RUFFIN Rd
SUITE 250
SAN DIEGO, CA 92123

SANDAG
401 B St
SUITE 800
SAN DIEGO, CA 92101

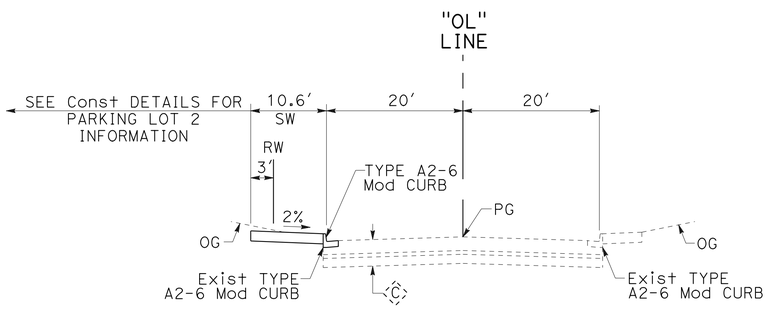

OLEANDER Ave
"OL" Sta 90+76.27 TO 93+27.00

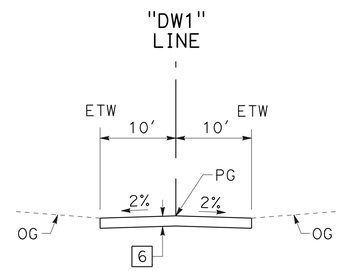

DRIVEWAY 1
SDG&E ACCESS ROAD
"DW1" 10+18.76 TO 11+49.79

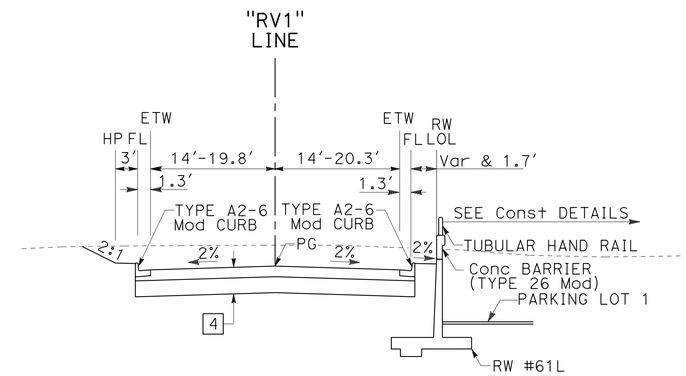

PARKING LOT 1 DRIVEWAY
"RV1" Sta 9+87.43 TO 13+23.65

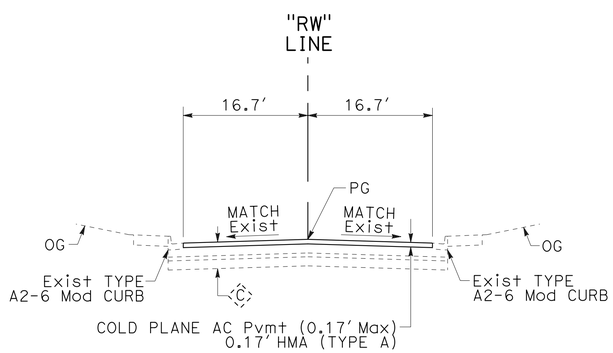

REDWING ROAD
"RW" Sta 100+44.64 TO 100+64.64

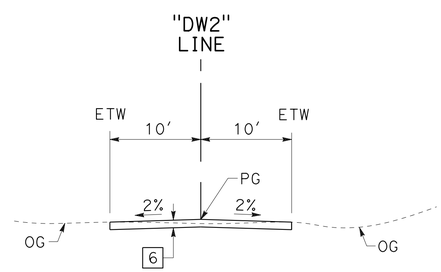

DRIVEWAY 2
SDG&E ACCESS ROAD
"DW2" 10+00.00 TO 10+80.97

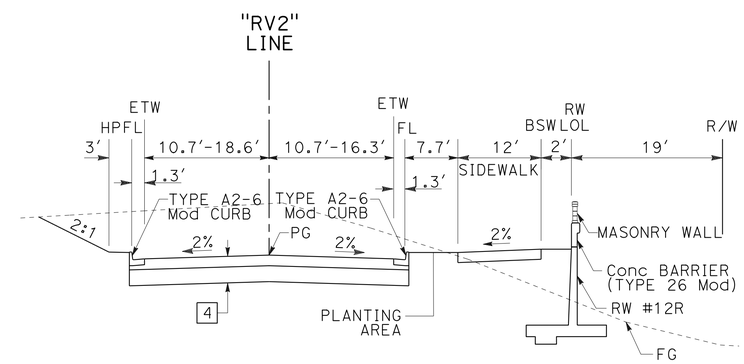

PARKING LOT 2 DRIVEWAY
"RV2" Sta 10+00.00 TO 12+29.75

TYPICAL CROSS SECTIONS

NO SCALE

X-13

REVISED BY	DATE REVISED

CALCULATED-DESIGNED BY: DARWIN CRUZ
CHECKED BY: PAUL KOSINSKI
CONSULTANT FUNCTIONAL SUPERVISOR: GERARD LUMABAS

STATE OF CALIFORNIA - DEPARTMENT OF TRANSPORTATION
Caltrans

LAST REVISION 06-08-12
DATE PLOTTED => 12-SEP-2012
TIME PLOTTED => 16:05

Dist	COUNTY	ROUTE	POST MILES TOTAL PROJECT	SHEET No.	TOTAL SHEETS
11	SD	805	4.7/5.6	15	650

REGISTERED CIVIL ENGINEER 6/1/12 DATE

06-25-12
PLANS APPROVAL DATE

REGISTERED PROFESSIONAL ENGINEER PAUL E. KOSINSKI No. C73254 Exp. 12/31/12 CIVIL STATE OF CALIFORNIA

THE STATE OF CALIFORNIA OR ITS OFFICERS OR AGENTS SHALL NOT BE RESPONSIBLE FOR THE ACCURACY OR COMPLETENESS OF SCANNED COPIES OF THIS PLAN SHEET.

DOKKEN ENGINEERING
5675 RUFFIN Rd
SUITE 250
SAN DIEGO, CA 92123

SANDAG
401 B St
SUITE 800
SAN DIEGO, CA 92101

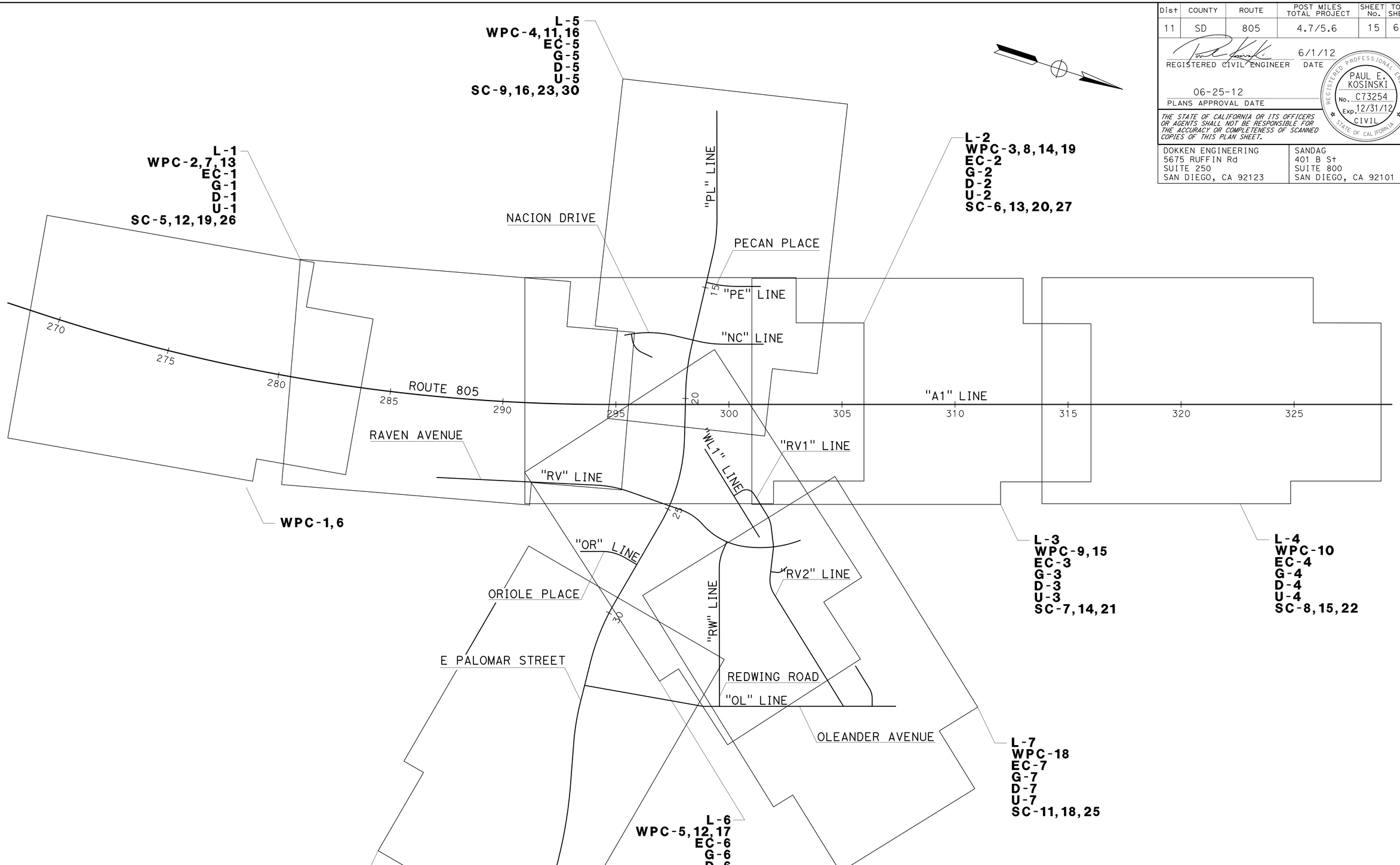

KEY MAP AND LINE INDEX

NO SCALE

K-1

STATE OF CALIFORNIA - DEPARTMENT OF TRANSPORTATION
Caltrans

CONSULTANT FUNCTIONAL SUPERVISOR: GERARD LUMABAS
CALCULATED-DESIGNED BY: PAUL KOSINSKI
CHECKED BY: DARWIN CRUZ
REVISED BY
DATE REVISED

LAST REVISION 06-08-12
DATE PLOTTED => 12-SEP-2012
TIME PLOTTED => 16:05

BORDER LAST REVISED 7/2/2010
USERNAME => s127400
DGN FILE => 11000200051da001.dgn
RELATIVE BORDER SCALE IS IN INCHES 0 1 2 3
UNIT 2762
PROJECT NUMBER & PHASE 11000200511

Dist	COUNTY	ROUTE	POST MILES TOTAL PROJECT	SHEET No.	TOTAL SHEETS
11	SD	805	4.7/5.6	16	650

06-08-12
PROFESSIONAL LAND SURVEYOR DATE

06-25-12
PLANS APPROVAL DATE

PROFESSIONAL LAND SURVEYOR MARK D. PHELAN L.S.7111 EXP:12-31-12 STATE OF CALIFORNIA

THE STATE OF CALIFORNIA OR ITS OFFICERS OR AGENTS SHALL NOT BE RESPONSIBLE FOR THE ACCURACY OR COMPLETENESS OF SCANNED COPIES OF THIS PLAN SHEET.

NOTES:

CONTACT DISTRICT 11'S LAND SURVEY DIVISION, PHONE (858)467-4305, FOR ADDITIONAL INFORMATION OR QUERIES REGARDING THIS SURVEY PROJECT CONTROL.

BASIS OF BEARINGS AND COORDINATES

FOR THIS PROJECT IS THE CALIFORNIA COORDINATE SYSTEM OF 1983, NSRS 2007 EPOCH, ZONE 6. PROJECT CONTROL STATIONS WERE ESTABLISHED ACCORDING TO CRITERIA SET FORTH IN THE FEDERAL GEODETIC CONTROL SUBCOMMITTEE'S "GEOMETRIC GEODETIC ACCURACY STANDARDS AND SPECIFICATIONS FOR USING GPS RELATIVE POSITIONING TECHNIQUES" REPRINTED AUGUST 1, 1989.

THIS GPS STATIC SURVEY WAS CONSTRAINED TO THE FOLLOWING FIRST ORDER STATIONS "805-4,9", "805-5.00" AND "805-5.2"

BASIS OF ELEVATIONS

FOR THIS PROJECT IS THE NORTH AMERICAN VERTICAL DATUM OF 1988 (NAVD88). ELEVATIONS ARE ESTABLISHED BY TRIGONOMETRIC LEVELING METHODS CONSTRAINING TO STATION "805-5.00".

IN THE EVENT GPS MACHINE CONTROL/GUIDANCE IS USED FOR THIS PROJECT, THE CONTRACTOR SHALL CONTACT OR MEET WITH DISTRICT 11'S LAND SURVEY DIVISION TO OBTAIN THE CONTROL NECESSARY TO ESTABLISH A PROJECT CALIBRATION COMPATIBLE FOR ALL USERS.

ABBREVIATIONS:

CADT CALIFORNIA DEPARTMENT OF TRANSPORTATION
IP IRON PIPE

LEGEND:

(1) 1ST ORDER STATION

CONTROL FOR DESIGN AND CONSTRUCTION

STATION DESIGNATION	ORDER	NORTHING	EASTING	ELEVATION	DESCRIPTION
805-4.9	1ST	1,803,405.23	6,319,193.34	271.11	2¼" CADT DISK SET IN 2" IP
805-5.00	1ST	1,804,448.16	6,319,094.42	300.93	2¼" CADT DISK IN SIDEWALK
805-5.2	1ST	1,805,309.17	6,318,820.95	292.49	2¼" CADT DISK IN Conc DRAIN
EPAL1	1ST	1,804,315.59	6,318,231.60	275.48	CHISELED "X" IN TOP OF CURB
EPAL7	1ST	1,804,396.15	6,320,399.06	260.95	CHISELED "X" IN SIDEWALK

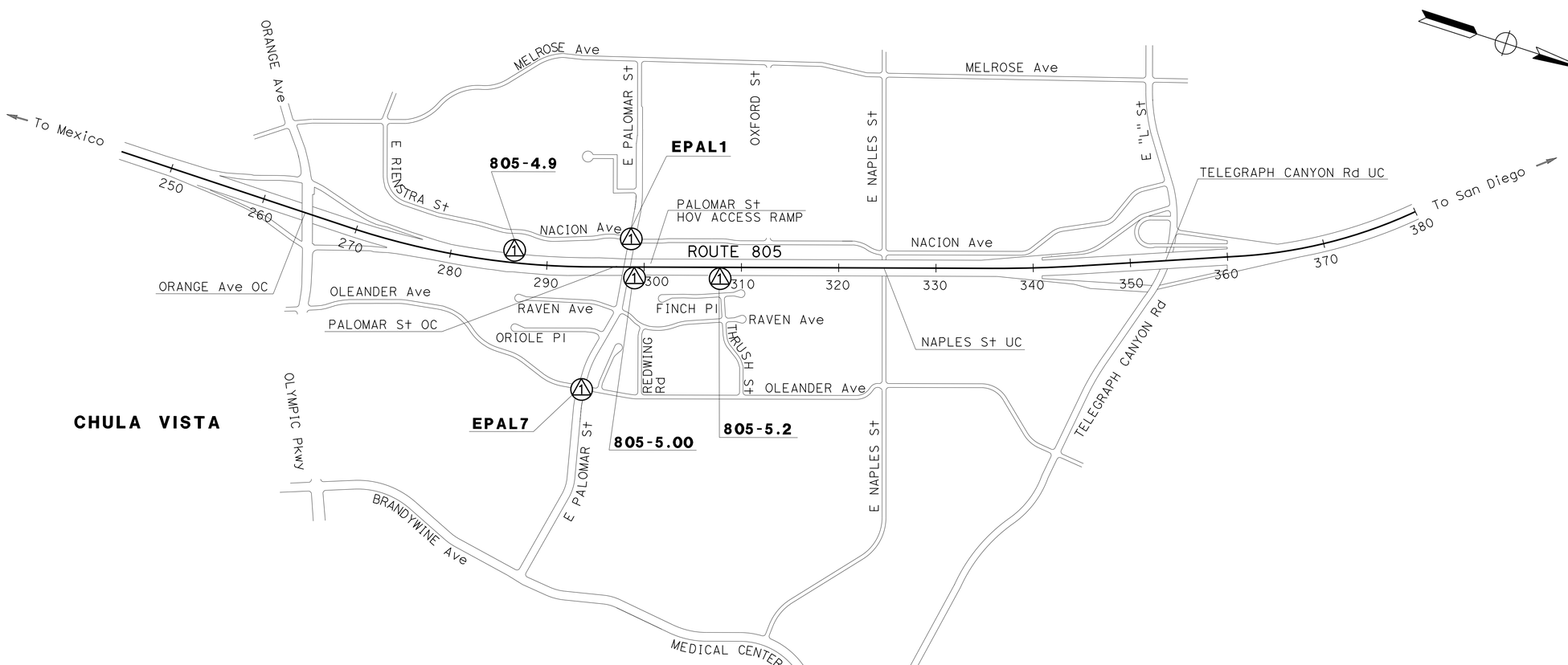

PROJECT CONTROL

NO SCALE

PC-1

APPROVED FOR PROJECT CONTROL INFORMATION ONLY

STATE OF CALIFORNIA - DEPARTMENT OF TRANSPORTATION
Caltrans LAND SURVEYS DIVISION

FUNCTIONAL SUPERVISOR: BRUCE UROUHART
CALCULATED-DESIGNED BY: MARK PHELAN
CHECKED BY
REVISED BY
DATE REVISED

LAST REVISION 06-08-12
DATE PLOTTED => 12-SEP-2012
TIME PLOTTED => 16:05

Dist	COUNTY	ROUTE	POST MILES TOTAL PROJECT	SHEET No.	TOTAL SHEETS
11	SD	805	4.7/5.6	17	650

REGISTERED CIVIL ENGINEER 6/1/12 DATE

06-25-12
PLANS APPROVAL DATE

REGISTERED PROFESSIONAL ENGINEER PAUL E. KOSINSKI No. C73254 Exp. 12/31/12 CIVIL STATE OF CALIFORNIA

THE STATE OF CALIFORNIA OR ITS OFFICERS OR AGENTS SHALL NOT BE RESPONSIBLE FOR THE ACCURACY OR COMPLETENESS OF SCANNED COPIES OF THIS PLAN SHEET.

DOKKEN ENGINEERING
5675 RUFFIN Rd
SUITE 250
SAN DIEGO, CA 92123

SANDAG
401 B St
SUITE 800
SAN DIEGO, CA 92101

NOTES:

1. FOR ACCURATE RIGHT OF WAY, CONTACT RIGHT OF WAY ENGINEERING AT THE DISTRICT OFFICE.
2. SEE Const DETAIL SHEETS FOR CURB RAMPS AND DRIVEWAY IMPROVEMENTS.
3. SEE SUMMARY OF QUANTITIES FOR LIMITS OF Conc CURB, SIDEWALK, MEDIAN, Exist WALL AND Exist FENCE REMOVAL.
4. SEE UTILITY PLANS FOR WATER METER WORK.
5. SEE CONSTRUCTION DETAIL SHEETS FOR HARDSCAPE, SITE FURNISHINGS AND TOPSOIL LOCATIONS.
6. SEE IRRIGATION PLANS FOR IRRIGATION SLEEVE AND IRRIGATION CROSSOVER LOCATIONS NOT SHOWN ON LAYOUTS.
7. SEE SUMMARY OF QUANTITIES FOR LOCATIONS, TYPES, AND QUANTITIES OF REMOVE FENCE.
8. SEE SUMMARY OF QUANTITIES FOR LOCATIONS AND QUANTITIES OF MASONRY BLOCK WALL (TYPE 1) AND FENCE (TYPE 1).
9. SEE SUMMARY OF QUANTITIES FOR LOCATIONS AND ITEMS OF REMOVE CONCRETE OUTSIDE OF R/W.

LEGEND:

- HMA (Misc AREAS)
- COLD PLANE ASHPHALT Conc Pvmt (0.15' Max) (SEE Const DETAILS)
- GRIND Exist Conc PAVEMENT
- DECOMPOSED GRANITE (Misc AREAS) (SEE Const DETAILS)

LEGEND (CONTINUED):

- Const Ease
- LIMIT OF EXCAVATION
- REMOVE/REPLACE FENCE (SEE Const Det)
- Mod TYPE 1 RW & SW
- MASONRY BLOCK WALL (PRIVACY WALL)
- SOUND WALL
- Conc BAND (SEE Const Det)
- CURVE DATA NUMBER
- MBGR (SEE SUMMARY OF QUANTITY SHEETS FOR DETAILS)
- STRUCTURAL SECTION SEE TYPICAL CROSS SECTION SHEETS FOR STRUCTURAL SECTION TYPES
- MINOR IMPROVEMENTS TO BE PROTECTED IN PLACE
- TREE GRATE (SEE Const DETAIL SHEET C-31)
- XXXXX PARCEL No.

ABBREVIATIONS:

APT	ANGLE POINT
BCB#(X)	Beg Conc BARRIER (TYPE X) (SEE QUANTITY TABLE)
ECB#(X)	END Conc BARRIER (TYPE X) (SEE QUANTITY TABLE)
BR	Beg REMOVE
ER	END REMOVE
BHD#(X)	Beg HMA DIKE (TYPE X) (SEE QUANTITY TABLE)
EHD#(X)	END HMA DIKE (TYPE X) (SEE QUANTITY TABLE)
CB#(X)	Conc BARRIER
HSSD	HIGH SIDE SUPERELEVATION DITCH
DAR	DIRECT ACCESS RAMP / HOV ACCESS RAMP
TW	TRAVELED WAY
PW	MASONRY BLOCK WALL (PRIVACY WALL)
PN	PARCEL No.
S/C	SAWCUT
CC	CRASH CUSHION

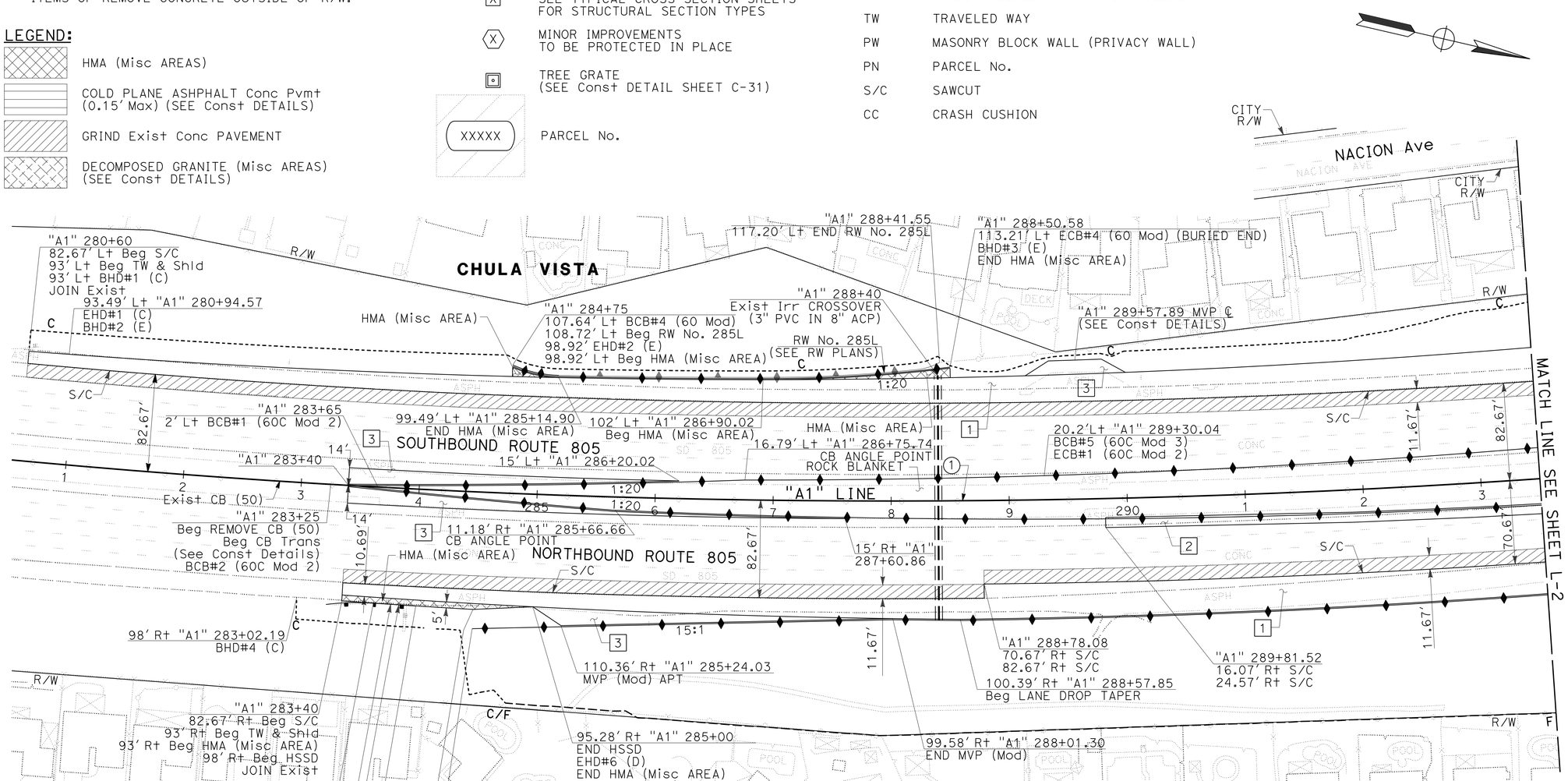

CURVE DATA

No.	R	Δ	T	L
1	8000.00'	18°11'49"	1281.17'	2540.79'

LAYOUT

L-1

SCALE: 1" = 50'

STATE OF CALIFORNIA - DEPARTMENT OF TRANSPORTATION
Caltrans

CONSULTANT FUNCTIONAL SUPERVISOR: GERARD LUMABAS
CALCULATED-DESIGNED BY: MATTHEW P. MAECHLER
CHECKED BY: DARWIN CRUZ
REVISED BY
DATE REVISED

LAST REVISION 06-22-12
DATE PLOTTED => 12-SEP-2012
TIME PLOTTED => 16:05

Dist	COUNTY	ROUTE	POST MILES TOTAL PROJECT	SHEET No.	TOTAL SHEETS
11	SD	805	4.7/5.6	18	650

REGISTERED CIVIL ENGINEER 6/1/12 DATE

06-25-12
PLANS APPROVAL DATE

REGISTERED PROFESSIONAL ENGINEER PAUL E. KOSINSKI No. C73254 Exp. 12/31/12 CIVIL STATE OF CALIFORNIA

THE STATE OF CALIFORNIA OR ITS OFFICERS OR AGENTS SHALL NOT BE RESPONSIBLE FOR THE ACCURACY OR COMPLETENESS OF SCANNED COPIES OF THIS PLAN SHEET.

DOKKEN ENGINEERING
5675 RUFFIN Rd
SUITE 250
SAN DIEGO, CA 92123

SANDAG
401 B St
SUITE 800
SAN DIEGO, CA 92101

NOTE:

FOR ACCURATE RIGHT OF WAY DATA, CONTACT RIGHT OF WAY ENGINEERING AT THE DISTRICT OFFICE.

LEGEND (THIS SHEET ONLY):

- (A) "NC" 50+00.00 POT= "PL" 17+38.77 POT
- (B) "NC" 50+21.47 BC
- (C) "PL" 17+66.65 BC
- (D) BB "PL" 19+00 PALOMAR St OC Br No. 57-1222 (SEE STRUCTURE PLANS)
- (E) "PL" 19+69.68 EC
- (F) "PL" 20+26.22 POT= "A1" 298+07.40 POT= "DAR" 298+07.40 POT
- (G) N73°45'48"E 206.14'
- (H) EB "PL" 21+50 PALOMAR St OC Br No. 57-1222 (SEE STRUCTURE PLANS)
- (I) "PL" 21+75.82 BC
- (J) 36.42' Lt "A1" 301+50 ECB#6 (60C Mod 2) BCB#12 (60 Mod)
- (K) 36.42' Rt "A1" 301+50 ECB#2 (60C Mod2) BCB#11 (60 Mod)
- (L) "A1" 301+48.19 36.39' Lt CB ANGLE POINT
- (M) "A1" 301+48.19 36.39' Rt CB ANGLE POINT
- (N) N85°23'46"E 414.80'
- (O) 123.42' Lt "A1" 300+53.16 END RW No. 299L Beg RW No. 301L
- (P) 44.5' Rt "PL" 18+57.05 Beg TAPER END A1-6 Mod CURB Beg A2-6 CURB
- (Q) 70.67'
- (R) 37.5' Rt "PL" 18+97.05 END TAPER
- (S) 42.5' Lt "PL" 18+95.74 END A2-6 CURB END SW
- (T) 37.5' Rt "PL" 19+03.47 END A2-6 CURB END SW
- (U) "DAR" 299+28.72 BCB#35 (60P)
- (V) 70.67'
- (W) 32.13' Lt "A1" 297+50 ECB#5 (60C Mod 3) BCB#6 (60C Mod 2)
- (X) 59.63' Rt "PLA" 20' 77.52' Rt "PLA" 20' CL-6 FENCE
- (Y) 167.11' Lt "A1" 296+09.21 END CL-6 FENCE
- (Z) 76.69' Rt "PL" 18+19.81 END CL-4 FENCE
- (AA) EXTEND FENCE (TOTAL 36)
- (AB) 118.02' Lt "A1" 297+42.12 ECB#7 (60C Mod 4) BCB#8 (60C Mod 2)
- (AC) 109.48' "PL" 18+45.54 Irr CROSSOVER
- (AD) 28.13' Rt "A1" 297+50 CB ANGLE POINT
- (AE) 35.13' Rt "A1" 299+60 CB ANGLE POINT
- (AF) 58.79' Lt "PL" 18+61.99 END RW No. 18L
- (AG) 4' CL-6 GATE
- (AH) 101.17' Rt "A1" 297+52.23 Beg HMA (Misc AREA)
- (AI) "WL1" 9+55.95 POT = 91.94' Lt "PL" 22+16.11 POT
- (AJ) HMA (Misc AREA) (FOR SLOPE UNDER BRIDGE)
- (AK) 191.7' Rt "A1" 297+23.12 Beg CL-6 FENCE
- (AL) 188.9' Rt "A1" 297+44.06 END CL-6 FENCE
- (AM) 170.4' Rt "A1" 298+86.91 Beg CL-6 FENCE
- (AN) 152.2' Rt "A1" 301+02.42 END CL-6 FENCE
- (AO) "A1" 296+57.84 25.73' Rt S/C 34.23' Rt S/C
- (AP) "DAR" 299+40.72 ECB#35 (60P) BCB#36 (60)
- (AQ) "DAR" 300+55 ECB#36 (60) BCB#37 (60P)
- (AR) "DAR" 300+67 ECB#37 (60P) BCB#10 (60)

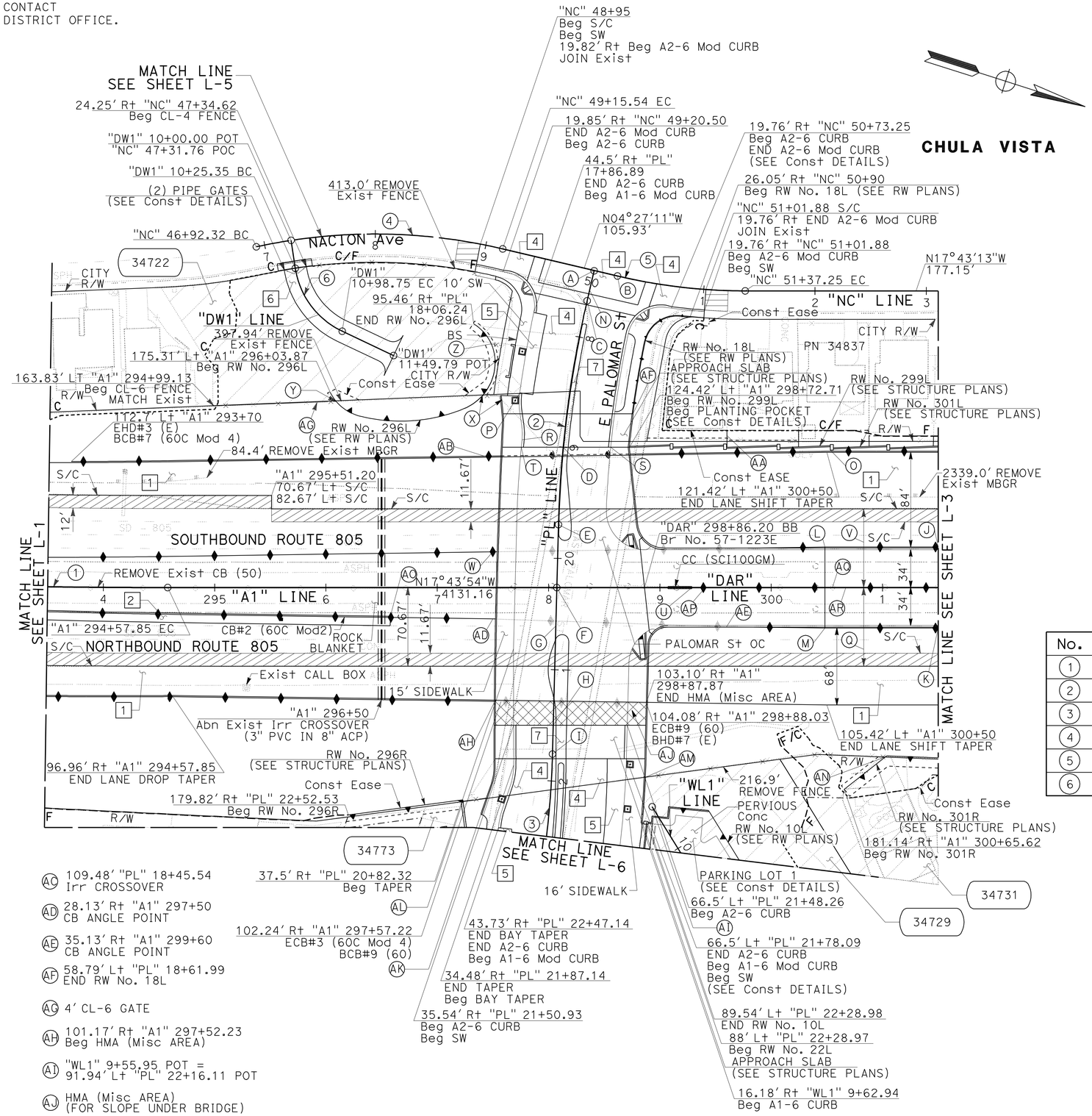

CURVE DATA

No.	R	Δ	T	L
1	8000.00'	18°11'23"	1280.66'	2539.77'
2	1000.00'	11°37'58"	101.87'	203.03'
3	800.00'	28°36'27"	203.97'	399.44'
4	500.00'	25°34'45"	113.50'	223.22'
5	500.00'	13°16'02"	58.15'	115.78'
6	75.00'	56°04'24"	39.94'	73.40'

SCALE: 1" = 50'

LAYOUT L-2

STATE OF CALIFORNIA - DEPARTMENT OF TRANSPORTATION
Caltrans

CONSULTANT FUNCTIONAL SUPERVISOR: GERARD LUMABAS
CALCULATED-DESIGNED BY: MATTHEW P. MAECHLER
CHECKED BY: DARWIN CRUZ
REVISED BY / DATE REVISED

LAST REVISION 06-22-12 | DATE PLOTTED => 14-SEP-2012 | TIME PLOTTED => 14:24

Dist	COUNTY	ROUTE	POST MILES TOTAL PROJECT	SHEET No.	TOTAL SHEETS
11	SD	805	4.7/5.6	19	650

REGISTERED CIVIL ENGINEER 6/1/12 DATE

06-25-12
PLANS APPROVAL DATE

REGISTERED PROFESSIONAL ENGINEER PAUL E. KOSINSKI No. C73254 Exp. 12/31/12 CIVIL STATE OF CALIFORNIA

THE STATE OF CALIFORNIA OR ITS OFFICERS OR AGENTS SHALL NOT BE RESPONSIBLE FOR THE ACCURACY OR COMPLETENESS OF SCANNED COPIES OF THIS PLAN SHEET.

DOKKEN ENGINEERING
5675 RUFFIN Rd
SUITE 250
SAN DIEGO, CA 92123

SANDAG
401 B St
SUITE 800
SAN DIEGO, CA 92101

NOTE:

FOR ACCURATE RIGHT OF WAY DATA, CONTACT RIGHT OF WAY ENGINEERING AT THE DISTRICT OFFICE.

LEGEND (THIS SHEET ONLY):

(A) "A1" 305+19
ECB#10 (60)
BCB#38 (60P)

(B) "A1" 305+31
ECB#38 (60P)
BCB#39 (60)

(C) "A1" 310+24
ECB#39 (60)
BCB#19 (60GA (Mod)) (SEE Const DETAILS)

(D) "A1" 310+56
ECB#19 (60GA (Mod)) (SEE Const DETAILS)
BCB#20 (60)

(E) "A1" 312+04
ECB#20 (60)
BCB#23 (60GA (Mod)) (SEE Const DETAILS)

(F) "A1" 312+36
ECB#23 (60GA (Mod)) (SEE Const DETAILS)
BCB#24 (60)

MINOR IMPROVEMENTS
TO BE PROTECTED IN PLACE

No.	PARCEL No.	ITEM DESCRIPTION
1	34744	Exist CHIMNEY
2	34745	Exist PATIO AND Conc SLAB

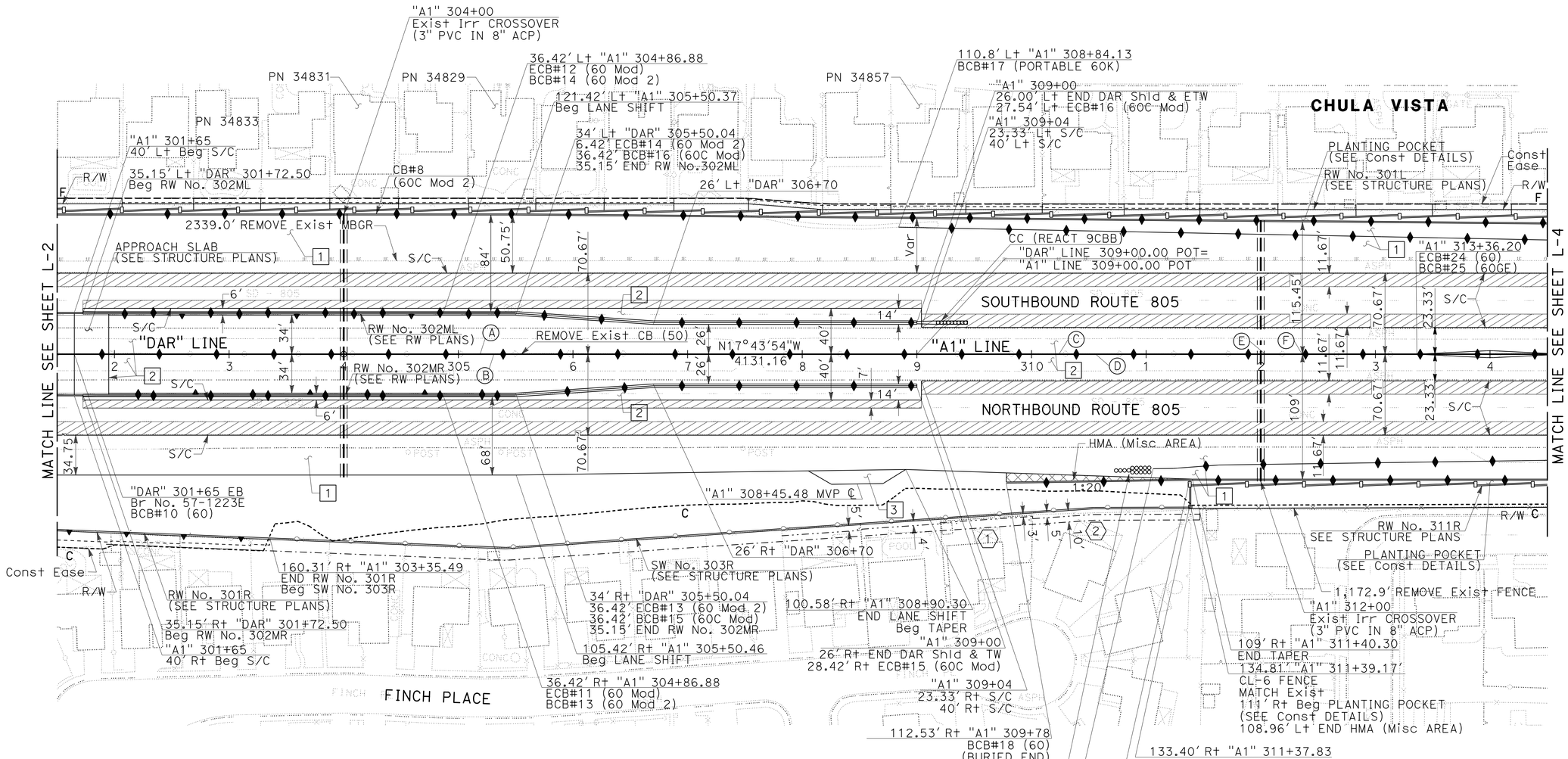

SCALE: 1" = 50'

LAYOUT

L-3

STATE OF CALIFORNIA - DEPARTMENT OF TRANSPORTATION
Caltrans

CONSULTANT FUNCTIONAL SUPERVISOR: GERARD LUMABAS
CALCULATED-DESIGNED BY: MATTHEW P. MAECHLER
CHECKED BY: DARWIN CRUZ
REVISED BY / DATE REVISED

LAST REVISION 06-27-12
DATE PLOTTED => 12-SEP-2012
TIME PLOTTED => 16:05

Dist	COUNTY	ROUTE	POST MILES TOTAL PROJECT	SHEET No.	TOTAL SHEETS
11	SD	805	4.7/5.6	20	650

REGISTERED CIVIL ENGINEER 6/1/12 DATE

06-25-12
PLANS APPROVAL DATE

REGISTERED PROFESSIONAL ENGINEER PAUL E. KOSINSKI No. C73254 Exp. 12/31/12 CIVIL STATE OF CALIFORNIA

THE STATE OF CALIFORNIA OR ITS OFFICERS OR AGENTS SHALL NOT BE RESPONSIBLE FOR THE ACCURACY OR COMPLETENESS OF SCANNED COPIES OF THIS PLAN SHEET.

DOKKEN ENGINEERING
5675 RUFFIN Rd
SUITE 250
SAN DIEGO, CA 92123

SANDAG
401 B St
SUITE 800
SAN DIEGO, CA 92101

NOTE:

FOR ACCURATE RIGHT OF WAY DATA, CONTACT RIGHT OF WAY ENGINEERING AT THE DISTRICT OFFICE.

MINOR IMPROVEMENTS TO BE PROTECTED IN PLACE

No.	PARCEL No.	ITEM DESCRIPTION
3	34847	Exist RETAINING WALL

LEGEND (THIS SHEET ONLY):

(A) "A1" 315+64
ECB#26 (60)
BCB#27 (60GA (Mod)) (SEE Const DETAILS)

(B) "A1" 315+96
ECB#27 (60GA (Mod)) (SEE Const DETAILS)
BCB#28 (60)

(C) "A1" 317+43
ECB#28 (60)
BCB#29 (60GA (Mod)) (SEE Const DETAILS)

(D) "A1" 317+77
ECB#29 (60GA (Mod)) (SEE Const DETAILS)
BCB#30 (60)

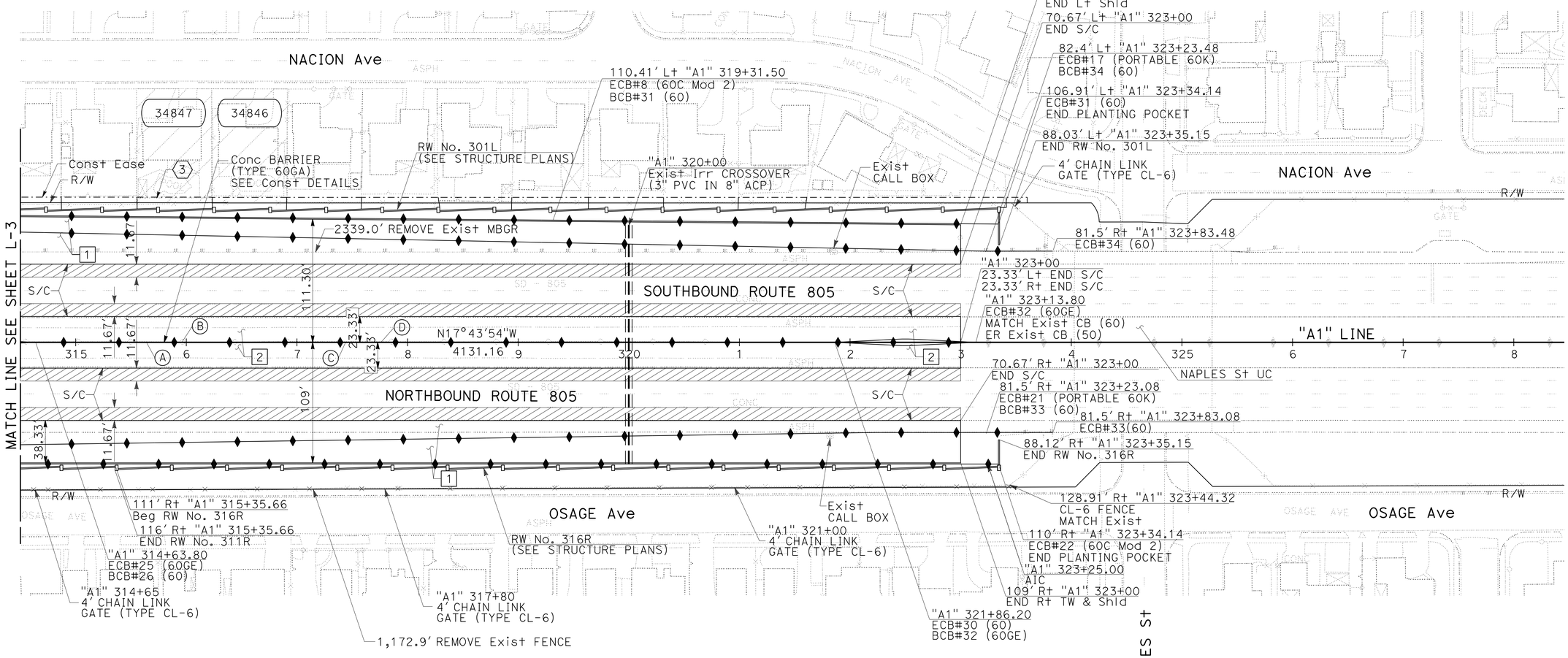

LAYOUT

L-4

SCALE: 1" = 50'

STATE OF CALIFORNIA - DEPARTMENT OF TRANSPORTATION

Caltrans

CONSULTANT FUNCTIONAL SUPERVISOR: GERARD LUMABAS

CALCULATED-DESIGNED BY: MATTHEW P. MAECHLER

CHECKED BY: DARWIN CRUZ

REVISED BY | DATE REVISED

LAST REVISION 06-12-12

DATE PLOTTED => 12-SEP-2012
TIME PLOTTED => 16:05

Dist	COUNTY	ROUTE	POST MILES TOTAL PROJECT	SHEET No.	TOTAL SHEETS
11	SD	805	4.7/5.6	21	650

REGISTERED CIVIL ENGINEER 6/1/12 DATE

06-25-12
PLANS APPROVAL DATE

REGISTERED PROFESSIONAL ENGINEER PAUL E. KOSINSKI No. C73254 Exp. 12/31/12 CIVIL STATE OF CALIFORNIA

THE STATE OF CALIFORNIA OR ITS OFFICERS OR AGENTS SHALL NOT BE RESPONSIBLE FOR THE ACCURACY OR COMPLETENESS OF SCANNED COPIES OF THIS PLAN SHEET.

DOKKEN ENGINEERING
5675 RUFFIN Rd
SUITE 250
SAN DIEGO, CA 92123

SANDAG
401 B St
SUITE 800
SAN DIEGO, CA 92101

NOTE:

FOR ACCURATE RIGHT OF WAY DATA, CONTACT RIGHT OF WAY ENGINEERING AT THE DISTRICT OFFICE.

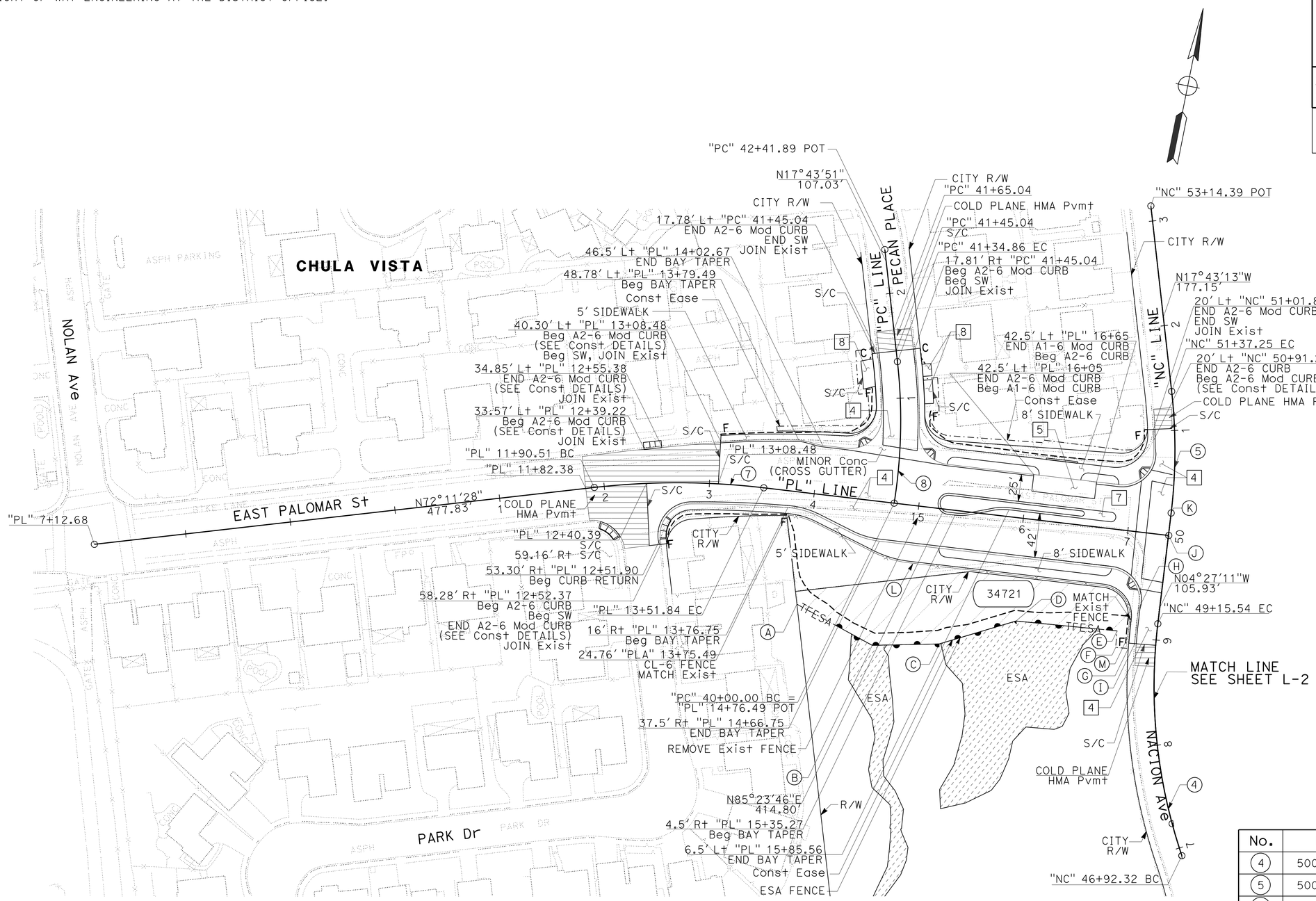

LEGEND (THIS SHEET ONLY):

- (A) 106.1' Rt "PL" 13+96 Beg Temp FENCE (TYPE ESA)
- (B) 136.5' Rt "PL" 14+72 ANGLE POINT Temp FENCE (TYPE ESA)
- (C) 127.7' Rt "PL" 15+34.50 ANGLE POINT Temp FENCE (TYPE ESA)
- (D) 97.6' Rt "PL" 16+04.50 ANGLE POINT Temp FENCE (TYPE ESA)
- (E) 37.7' Lt "NC" 49+05 ANGLE POINT Temp FENCE (TYPE ESA)
- (F) 37.7' Lt "NC" 48+90 ANGLE POINT Temp FENCE (TYPE ESA)
- (G) 99.71' Rt "PL" 17+12.06 END Temp FENCE (TYPE ESA)
- (H) 19.85' Lt "NC" 49+27.37 END A2-6 CURB END A2-6 Mod CURB (SEE Const DETAILS)
- (I) 19.85' Lt "NC" 48+95 Beg A2-6 Mod CURB END SW JOIN Exist
- (J) "NC" 50+00.00 POT= "PL" 17+38.77 POT
- (K) "NC" 50+21.47 BC
- (L) "PL" 15+00 4' CHAIN LINK GATE (TYPE CL-6)
- (M) 26.67' "NA" 49+00.97 CL-6 FENCE MATCH Exist

CURVE DATA

No.	R	Δ	T	L
4	500.00'	25°34'45"	113.50'	223.22'
5	500.00'	13°16'02"	58.15'	115.78'
7	700.00'	13°12'17"	81.02'	161.32'
8	500.00'	15°27'14"	67.84'	134.86'

LAYOUT

SCALE: 1" = 50'

L-5

STATE OF CALIFORNIA - DEPARTMENT OF TRANSPORTATION
Caltrans

CONSULTANT FUNCTIONAL SUPERVISOR: GERARD LUMABAS
CALCULATED-DESIGNED BY: MATTHEW P. MAECHLER
CHECKED BY: DARWIN CRUZ
REVISED BY
DATE REVISED

LAST REVISION 06-12-12
DATE PLOTTED => 12-SEP-2012
TIME PLOTTED => 16:05

Dist	COUNTY	ROUTE	POST MILES TOTAL PROJECT	SHEET No.	TOTAL SHEETS
11	SD	805	4.7/5.6	22	650

REGISTERED CIVIL ENGINEER 6/1/12 DATE

06-25-12
PLANS APPROVAL DATE

REGISTERED PROFESSIONAL ENGINEER PAUL E. KOSINSKI No. C73254 Exp. 12/31/12 CIVIL STATE OF CALIFORNIA

THE STATE OF CALIFORNIA OR ITS OFFICERS OR AGENTS SHALL NOT BE RESPONSIBLE FOR THE ACCURACY OR COMPLETENESS OF SCANNED COPIES OF THIS PLAN SHEET.

DOKKEN ENGINEERING
5675 RUFFIN Rd
SUITE 250
SAN DIEGO, CA 92123

SANDAG
401 B St
SUITE 800
SAN DIEGO, CA 92101

NOTE:

FOR ACCURATE RIGHT OF WAY DATA, CONTACT RIGHT OF WAY ENGINEERING AT THE DISTRICT OFFICE.

LEGEND (THIS SHEET ONLY):

- (A) "RV" 60+00.00 POT= "PL" 24+84.00 POC
- (B) "PL" 25+75.26 EC
- (C) "OR" 70+00.00 POT= "PL" 27+81.42 POT
- (D) "OR" 69+38.96 EC
- (E) "OR" 68+33.61 BC
- (F) "RV" 58+09.14 EC
- (G) "RV" 60+55.48 BC
- (H) "RV" 61+69.58 EC "RV" 61+69.58 BC
- (I) "RW" 100+00.00 POT= "RV" 63+03.12 POC
- (J) "RV" 63+77.24 EC "RV" 63+77.24 BC
- (K) "RW" 100+44.64 BC
- (L) 21.33' Lt "RV" 60+90.67 END A2-6 CURB Beg A2-6 Mod CURB (SEE Const DETAILS)
- (M) 12' Rt "RV" 61+01.42 Beg A2-6 CURB Beg A2-6 Mod CURB (SEE Const DETAILS)
- (N) 66.5' Lt "PL" 24+34.94 END A1-6 Mod CURB Beg A2-6 CURB
- (O) 42.5' Rt "PL" 23+87.14 END A1-6 Mod CURB Beg A2-6 CURB
- (P) 93.5' Lt "PL" 24+18.83 END RW No. 22L
- (Q) MONUMENT SIGN (SEE CONSTRUCTION DETAILS)

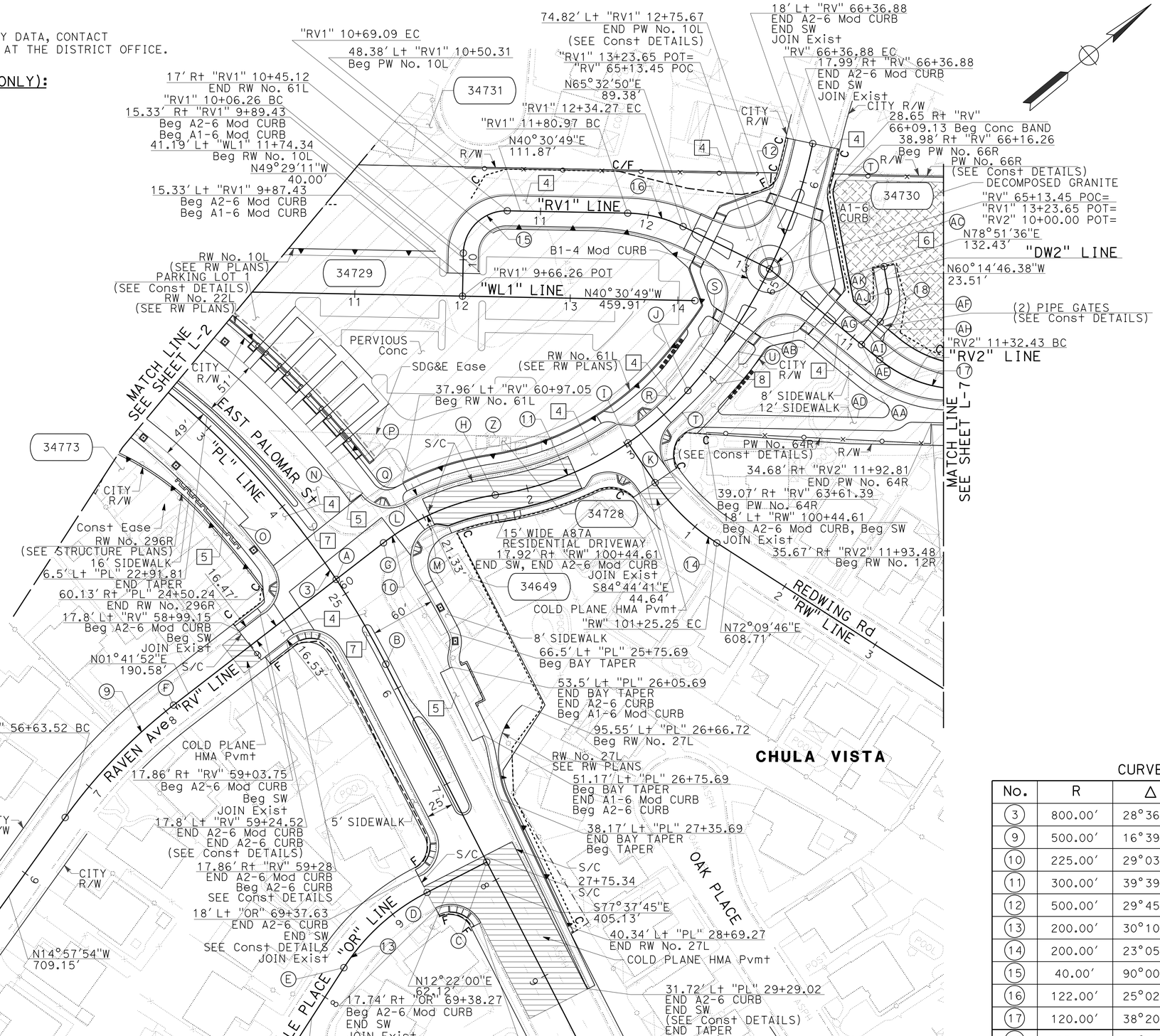

LEGEND CONTINUED:

- (R) 11.33' Lt "RV" 63+58.87 Lt END A2-6 Mod CURB Lt Beg A1-6 Mod2 CURB
- (S) 11.33' Lt "RV" 64+33.94 Lt Beg A2-6 Mod CURB Lt END A1-6 Mod2 CURB
- (T) 15.35' Rt "RV" 63+58.87 Rt Beg A1-6 Mod2 CURB Rt END A2-6 Mod CURB
- (U) 15.35' Rt "RV" 64+33.94 Rt END A1-6 Mod2 CURB Rt Beg A2-6 Mod CURB
- (Z) REMOVE Exist FENCE
- (AA) REMOVE Exist FENCE
- (AB) REMOVE Exist SOUNDWALL
- (AC) REMOVE Exist FENCE
- (AD) REMOVE Exist SOUNDWALL
- (AE) "RV2" 11+10.52 POT= "DW2" 10+00.00 POT
- (AF) "DW2" 10+27.46 BC
- (AG) 26.32 Lt "RV2" 11+01.19 END Conc BAND
- (AH) 26.36 Lt "RV2" 11+20.52 Beg Conc BAND
- (AI) N11°8'23.74"W 27.46'
- (AJ) "DW2" 10+57.46 EC
- (AK) "DW2" 10+80.97

CURVE DATA

No.	R	Δ	T	L
3	800.00'	28°36'27"	203.97'	399.44'
9	500.00'	16°39'46"	73.22'	145.41'
10	225.00'	29°03'18"	58.30'	114.10'
11	300.00'	39°39'36"	108.18'	207.66'
12	500.00'	29°45'12"	132.82'	259.65'
13	200.00'	30°10'48"	53.93'	105.35'
14	200.00'	23°05'33"	40.86'	80.61'
15	40.00'	90°00'00"	40.00'	62.83'
16	122.00'	25°02'01"	27.08'	53.30'
17	120.00'	38°20'47"	41.73'	80.31'
18	35.00'	60°14'46"	20.31'	30.00'

SCALE: 1" = 50'

LAYOUT L-6

STATE OF CALIFORNIA - DEPARTMENT OF TRANSPORTATION
Caltrans
CONSULTANT FUNCTIONAL SUPERVISOR: GERARD LUMABAS
CALCULATED-DESIGNED BY: MATTHEW P. MAECHLER
CHECKED BY: DARWIN CRUZ
REVISED BY / DATE REVISED

LAST REVISION 06-22-12 | DATE PLOTTED => 12-SEP-2012 | TIME PLOTTED => 16:05

Dist	COUNTY	ROUTE	POST MILES TOTAL PROJECT	SHEET No.	TOTAL SHEETS
11	SD	805	4.7/5.6	23	650

REGISTERED CIVIL ENGINEER 6/1/12 DATE

06-25-12
PLANS APPROVAL DATE

REGISTERED PROFESSIONAL ENGINEER PAUL E. KOSINSKI No. C73254 Exp. 12/31/12 CIVIL STATE OF CALIFORNIA

THE STATE OF CALIFORNIA OR ITS OFFICERS OR AGENTS SHALL NOT BE RESPONSIBLE FOR THE ACCURACY OR COMPLETENESS OF SCANNED COPIES OF THIS PLAN SHEET.

DOKKEN ENGINEERING
5675 RUFFIN Rd
SUITE 250
SAN DIEGO, CA 92123

SANDAG
401 B St
SUITE 800
SAN DIEGO, CA 92101

NOTE:

FOR ACCURATE RIGHT OF WAY DATA, CONTACT RIGHT OF WAY ENGINEERING AT THE DISTRICT OFFICE.

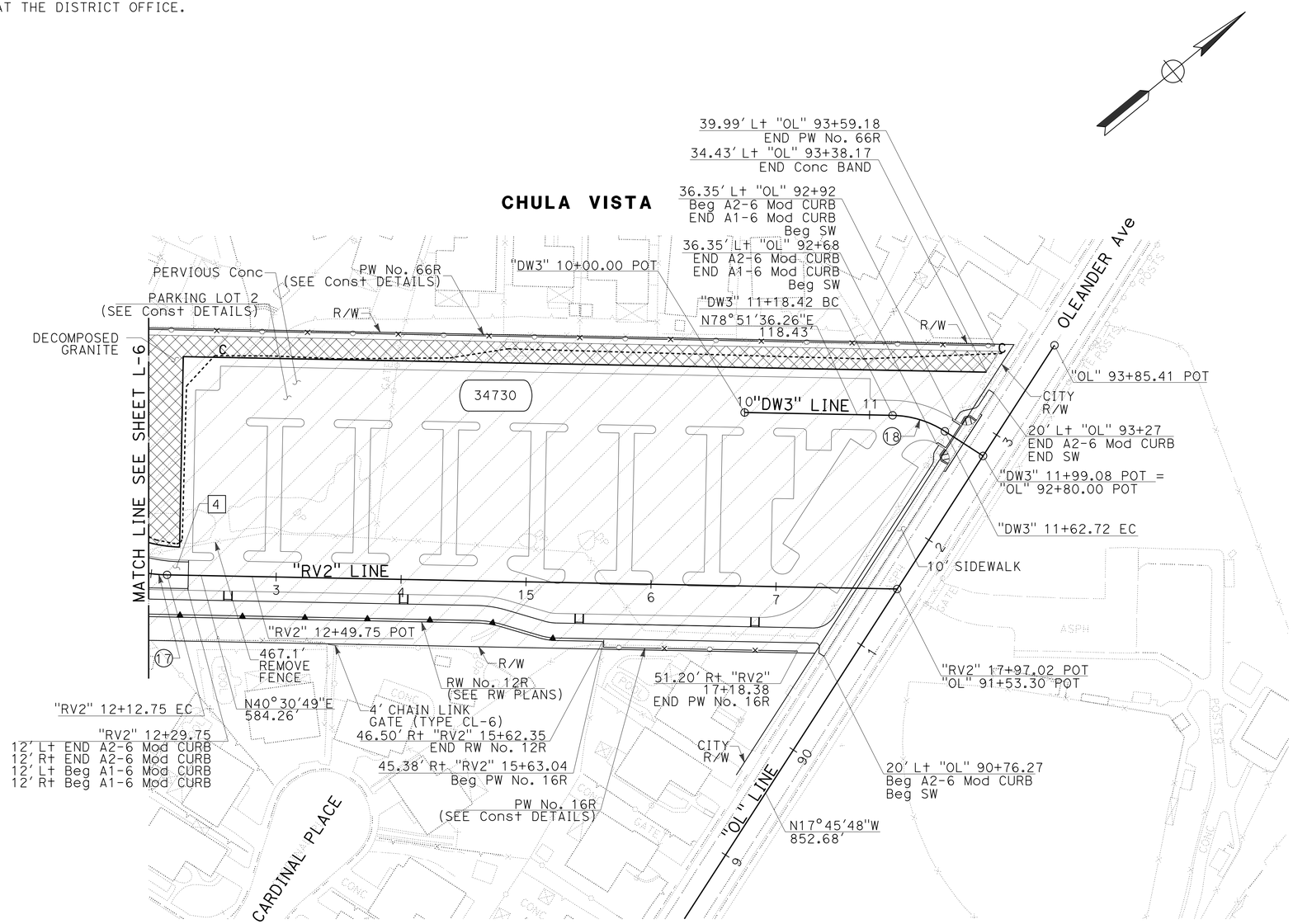

CURVE DATA

No.	R	Δ	T	L
17	120.00'	38°20'47"	41.73'	80.31'
18	80.00'	31°43'22	22.73'	44.29'

SCALE: 1" = 50'

LAYOUT

L-7

STATE OF CALIFORNIA - DEPARTMENT OF TRANSPORTATION

Caltrans

CONSULTANT FUNCTIONAL SUPERVISOR: GERARD LUMABAS

CALCULATED-DESIGNED BY: MATTHEW P. MAECHLER

CHECKED BY: DARWIN CRUZ

REVISED BY

DATE REVISED

LAST REVISION 06-12-12

DATE PLOTTED => 12-SEP-2012
TIME PLOTTED => 16:05

Dist	COUNTY	ROUTE	POST MILES TOTAL PROJECT	SHEET No.	TOTAL SHEETS
11	SD	805	4.7/5.6	24	650

REGISTERED CIVIL ENGINEER 6/1/12 DATE

06-25-12
PLANS APPROVAL DATE

REGISTERED PROFESSIONAL ENGINEER PAUL E. KOSINSKI No. C73254 Exp. 12/31/12 CIVIL STATE OF CALIFORNIA

THE STATE OF CALIFORNIA OR ITS OFFICERS OR AGENTS SHALL NOT BE RESPONSIBLE FOR THE ACCURACY OR COMPLETENESS OF SCANNED COPIES OF THIS PLAN SHEET.

DOKKEN ENGINEERING
5675 RUFFIN Rd
SUITE 250
SAN DIEGO, CA 92123

SANDAG
401 B St
SUITE 800
SAN DIEGO, CA 92101

NOTE:
HORIZONTAL DATUM: NAD83 (Hpgn)
VERTICAL DATUM: NGVD29

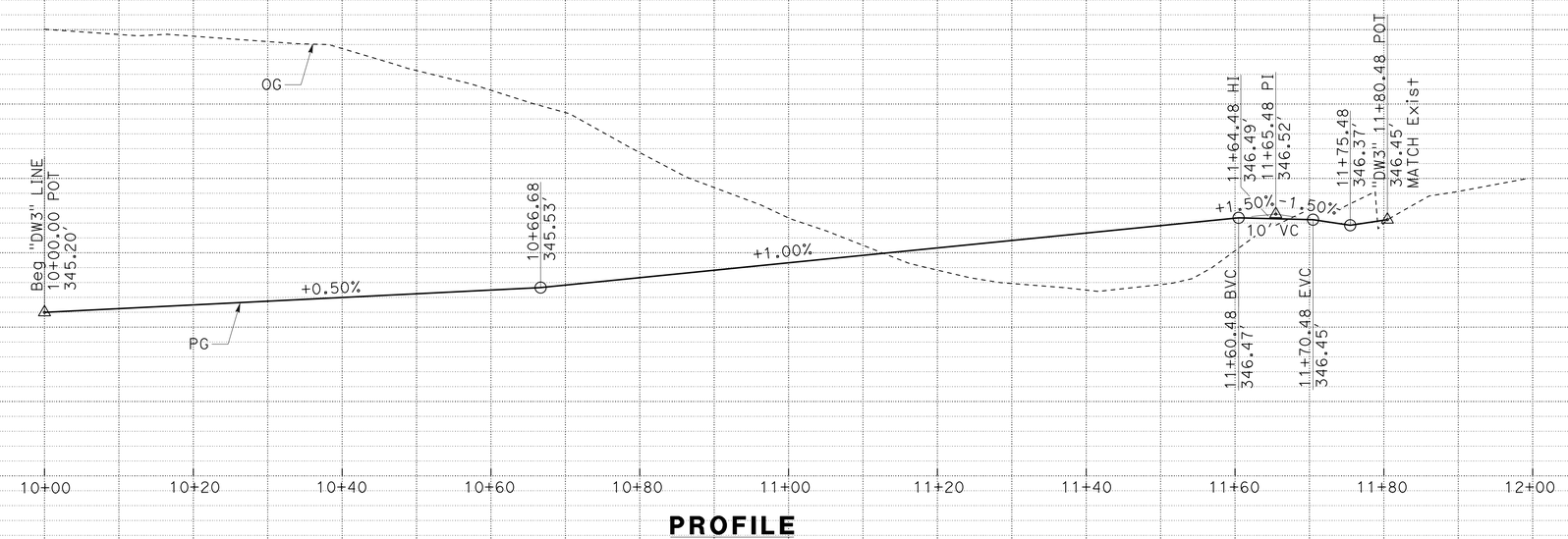

PROFILE
"DW3" LINE

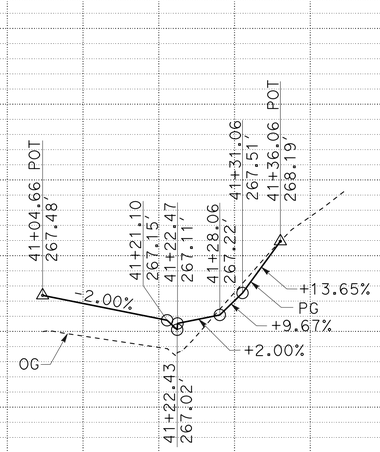

PROFILE
Dwy #1
PECAN PI

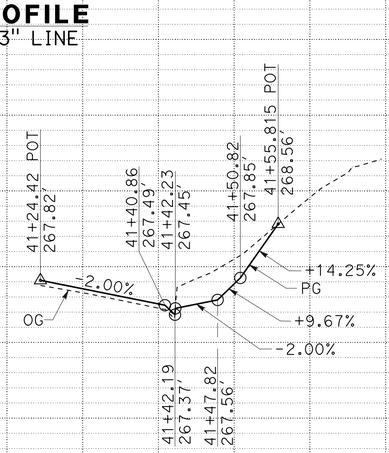

PROFILE
Dwy #2
PECAN PI

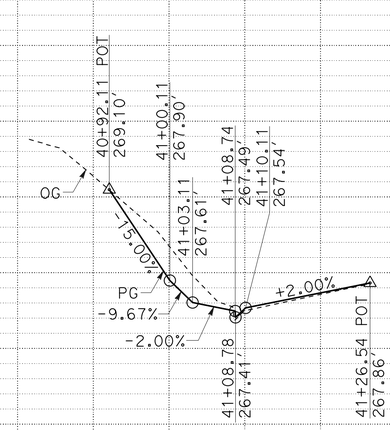

PROFILE
Dwy #3
PECAN PI

PROFILE
SCALE: Horiz 1"=10'
Vert 1"=1'

P-1

STATION		41+00	41+20	41+40	41+00	41+20	41+40	41+60	41+80	40+80	41+00	41+20	41+40	TOTAL
CY	Exc						81							
	Emb						9							

STATE OF CALIFORNIA - DEPARTMENT OF TRANSPORTATION
Caltrans
CONSULTANT FUNCTIONAL SUPERVISOR: GERARD LUMABAS
CALCULATED-DESIGNED BY: MATTHEW P. MAECHLER
CHECKED BY: DARWIN CRUZ
REVISED BY / DATE REVISED

LAST REVISION 06-08-12 | DATE PLOTTED => 12-SEP-2012 | TIME PLOTTED => 16:05

Dist	COUNTY	ROUTE	POST MILES TOTAL PROJECT	SHEET No.	TOTAL SHEETS
11	SD	805	4.7/5.6	25	650

REGISTERED CIVIL ENGINEER 6/1/12 DATE

06-25-12
PLANS APPROVAL DATE

REGISTERED PROFESSIONAL ENGINEER PAUL E. KOSINSKI No. C73254 Exp. 12/31/12 CIVIL STATE OF CALIFORNIA

THE STATE OF CALIFORNIA OR ITS OFFICERS OR AGENTS SHALL NOT BE RESPONSIBLE FOR THE ACCURACY OR COMPLETENESS OF SCANNED COPIES OF THIS PLAN SHEET.

DOKKEN ENGINEERING
5675 RUFFIN Rd
SUITE 250
SAN DIEGO, CA 92123

SANDAG
401 B St
SUITE 800
SAN DIEGO, CA 92101

LEGEND:

TW TRAVELED WAY
GB GRADE BREAK (SEE TYPICAL CROSS SECTIONS)

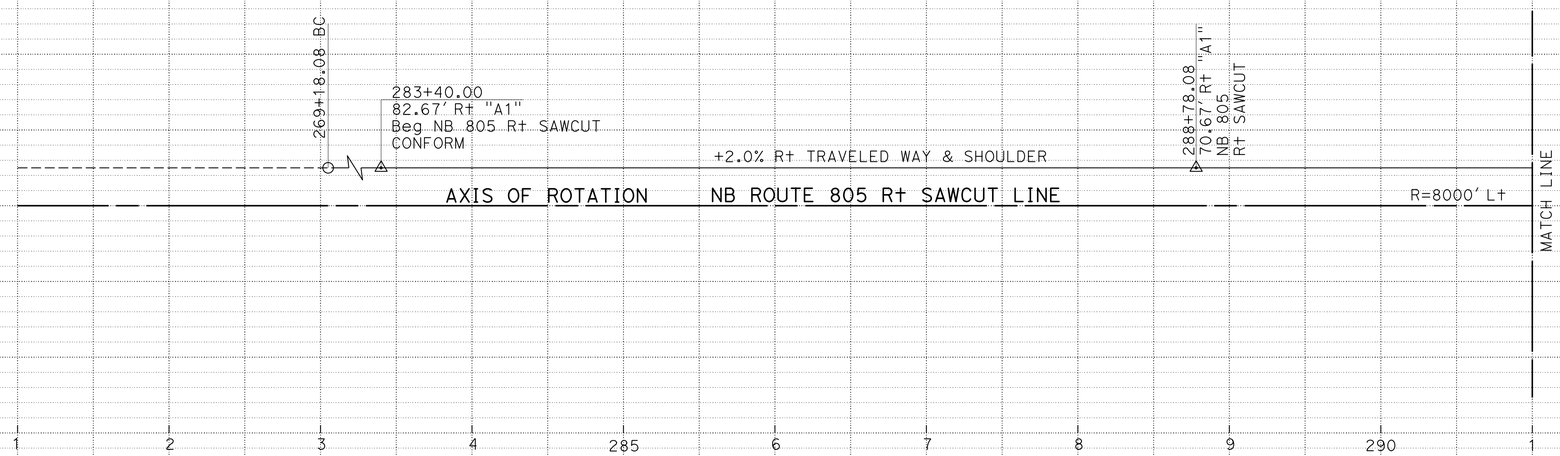

SUPERELEVATION DIAGRAM

82.67', 70.67' Rt "A1" LINE
(NB ROUTE 805 Rt SAWCUT LINE)

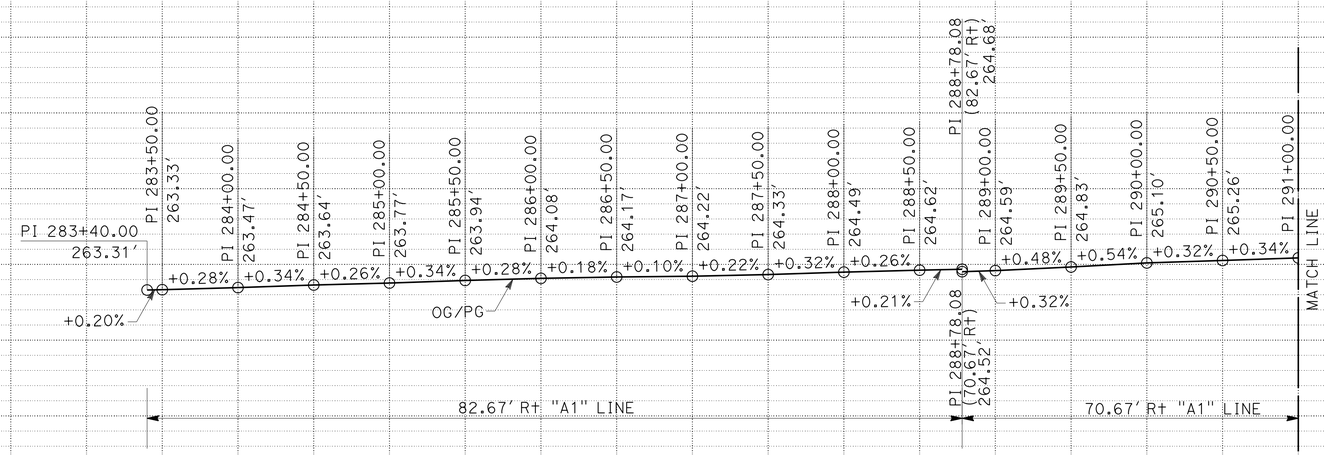

PROFILE

82.67', 70.67' Rt "A1" LINE
(NB ROUTE 805 Rt SAWCUT LINE)

PROFILE AND SUPERELEVATION DIAGRAM

SCALE: Horiz 1"=50'
Vert 1"=5'

PS-1

STATION		1	2	3	4	285	6	7	8	9	290	1	TOTAL
CY	Exc					2115							
	Emb					13,217							

STATE OF CALIFORNIA - DEPARTMENT OF TRANSPORTATION
Caltrans

CONSULTANT FUNCTIONAL SUPERVISOR: GERARD LUMABAS
CALCULATED-DESIGNED BY: MATTHEW P. MAECHLER
CHECKED BY: DARWIN CRUZ
REVISED BY
DATE REVISED

LAST REVISION 06-10-12
DATE PLOTTED => 12-SEP-2012
TIME PLOTTED => 16:05

Dist	COUNTY	ROUTE	POST MILES TOTAL PROJECT	SHEET No.	TOTAL SHEETS
11	SD	805	4.7/5.6	26	650

REGISTERED CIVIL ENGINEER 6/1/12 DATE

06-25-12
PLANS APPROVAL DATE

REGISTERED PROFESSIONAL ENGINEER
PAUL E. KOSINSKI
No. C73254
Exp. 12/31/12
CIVIL
STATE OF CALIFORNIA

THE STATE OF CALIFORNIA OR ITS OFFICERS OR AGENTS SHALL NOT BE RESPONSIBLE FOR THE ACCURACY OR COMPLETENESS OF SCANNED COPIES OF THIS PLAN SHEET.

DOKKEN ENGINEERING
5675 RUFFIN Rd
SUITE 250
SAN DIEGO, CA 92123

SANDAG
401 B St
SUITE 800
SAN DIEGO, CA 92101

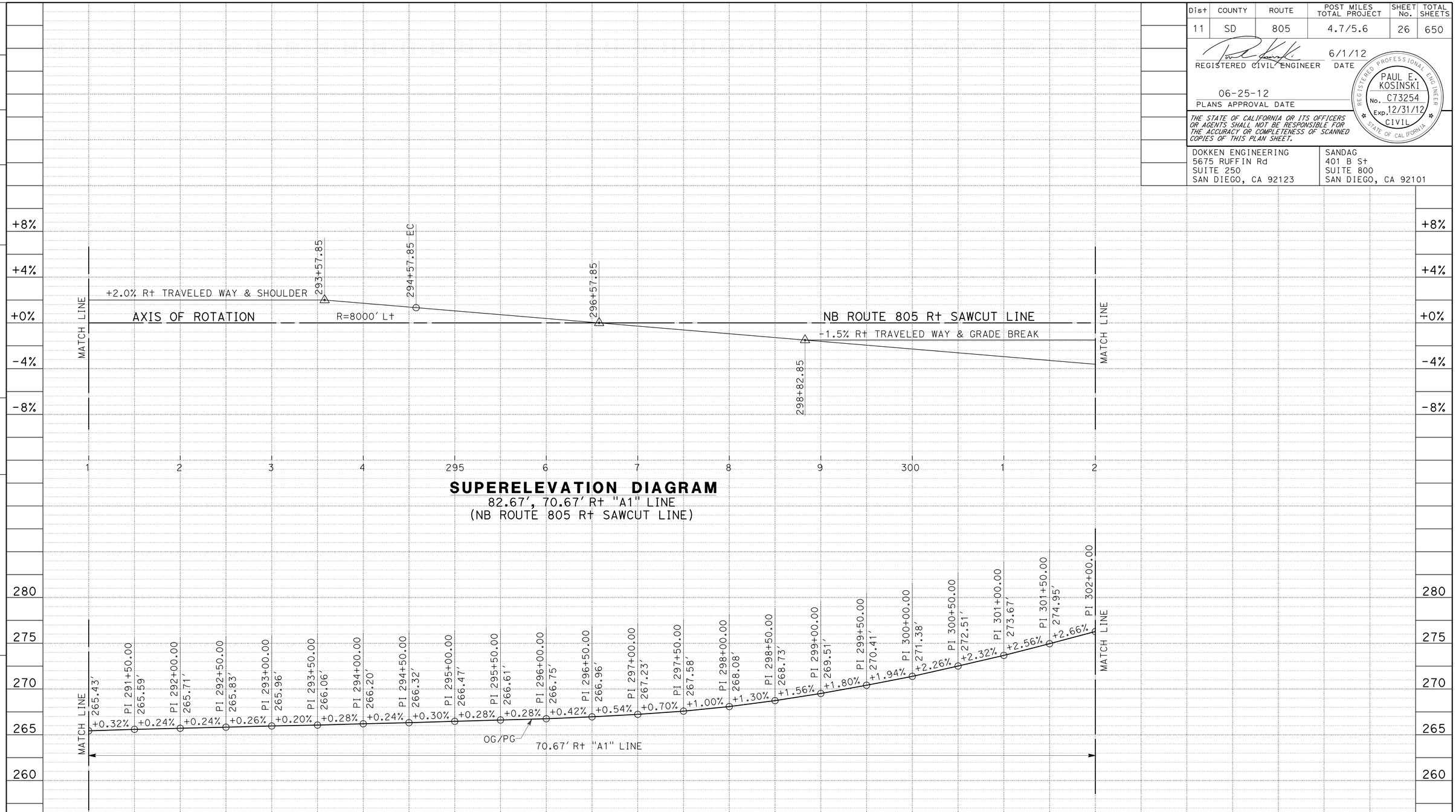

SUPERELEVATION DIAGRAM
82.67', 70.67' Rt "A1" LINE
(NB ROUTE 805 Rt SAWCUT LINE)

PROFILE
82.67', 70.67' Rt "A1" LINE
(NB ROUTE 805 Rt SAWCUT LINE)

STATION	1	2	3	4	295	6	7	8	9	300	1	2	TOTAL
CY Exc	17,844												
CY Emb	4,737												

PROFILE AND SUPERELEVATION DIAGRAM
SCALE: Horiz 1"=50'
Vert 1"=5'

PS-2

REVISED BY | DATE REVISED
MATTHEW P. MAECHLER | DARWIN CRUZ
CALCULATED-DESIGNED BY | CHECKED BY
CONSULTANT FUNCTIONAL SUPERVISOR | GERARD LUMABAS
STATE OF CALIFORNIA - DEPARTMENT OF TRANSPORTATION
Caltrans

LAST REVISION 06-10-12 | DATE PLOTTED => 12-SEP-2012 | TIME PLOTTED => 16:05

Dist	COUNTY	ROUTE	POST MILES TOTAL PROJECT	SHEET No.	TOTAL SHEETS
11	SD	805	4.7/5.6	27	650

REGISTERED CIVIL ENGINEER 6/1/12 DATE

06-25-12
PLANS APPROVAL DATE

REGISTERED PROFESSIONAL ENGINEER PAUL E. KOSINSKI No. C73254 Exp. 12/31/12 CIVIL STATE OF CALIFORNIA

THE STATE OF CALIFORNIA OR ITS OFFICERS OR AGENTS SHALL NOT BE RESPONSIBLE FOR THE ACCURACY OR COMPLETENESS OF SCANNED COPIES OF THIS PLAN SHEET.

DOKKEN ENGINEERING
5675 RUFFIN Rd
SUITE 250
SAN DIEGO, CA 92123

SANDAG
401 B St
SUITE 800
SAN DIEGO, CA 92101

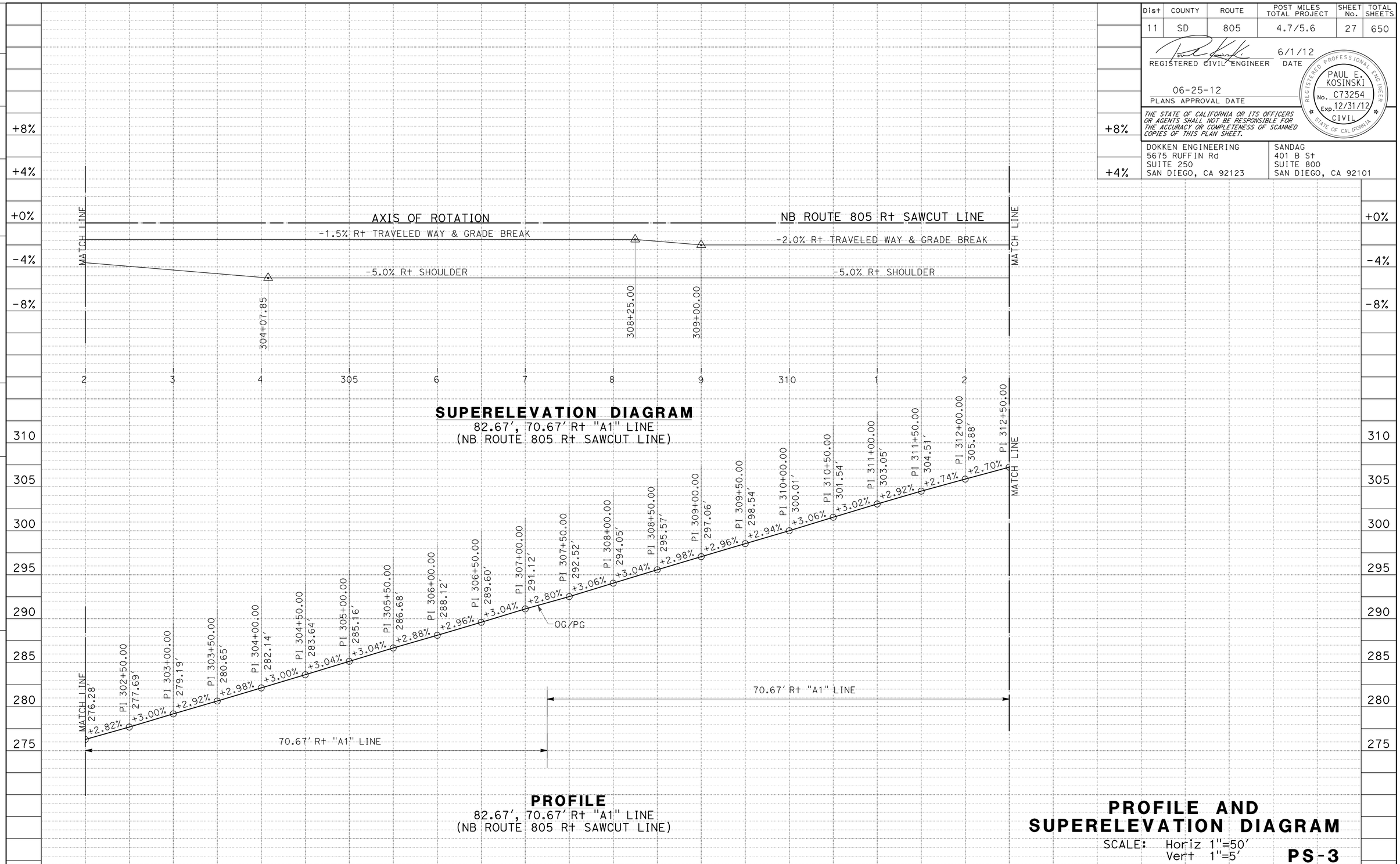

PROFILE AND SUPERELEVATION DIAGRAM

SCALE: Horiz 1"=50'
Vert 1"=5'

PS-3

STATION		2	3	4	305	6	7	8	9	310	1	2	TOTAL
CY	Exc	10,117											
	Emb	34											

STATE OF CALIFORNIA - DEPARTMENT OF TRANSPORTATION

Caltrans

CONSULTANT FUNCTIONAL SUPERVISOR: GERARD LUMABAS

CALCULATED-DESIGNED BY: MATTHEW P. MAECHLER

CHECKED BY: DARWIN CRUZ

REVISED BY

DATE REVISED

LAST REVISION 06-10-12

DATE PLOTTED => 12-SEP-2012
TIME PLOTTED => 16:06

Dist	COUNTY	ROUTE	POST MILES TOTAL PROJECT	SHEET No.	TOTAL SHEETS
11	SD	805	4.7/5.6	28	650

REGISTERED CIVIL ENGINEER 6/1/12 DATE

06-25-12
PLANS APPROVAL DATE

REGISTERED PROFESSIONAL ENGINEER PAUL E. KOSINSKI No. C73254 Exp. 12/31/12 CIVIL STATE OF CALIFORNIA

THE STATE OF CALIFORNIA OR ITS OFFICERS OR AGENTS SHALL NOT BE RESPONSIBLE FOR THE ACCURACY OR COMPLETENESS OF SCANNED COPIES OF THIS PLAN SHEET.

DOKKEN ENGINEERING
5675 RUFFIN Rd
SUITE 250
SAN DIEGO, CA 92123

SANDAG
401 B St
SUITE 800
SAN DIEGO, CA 92101

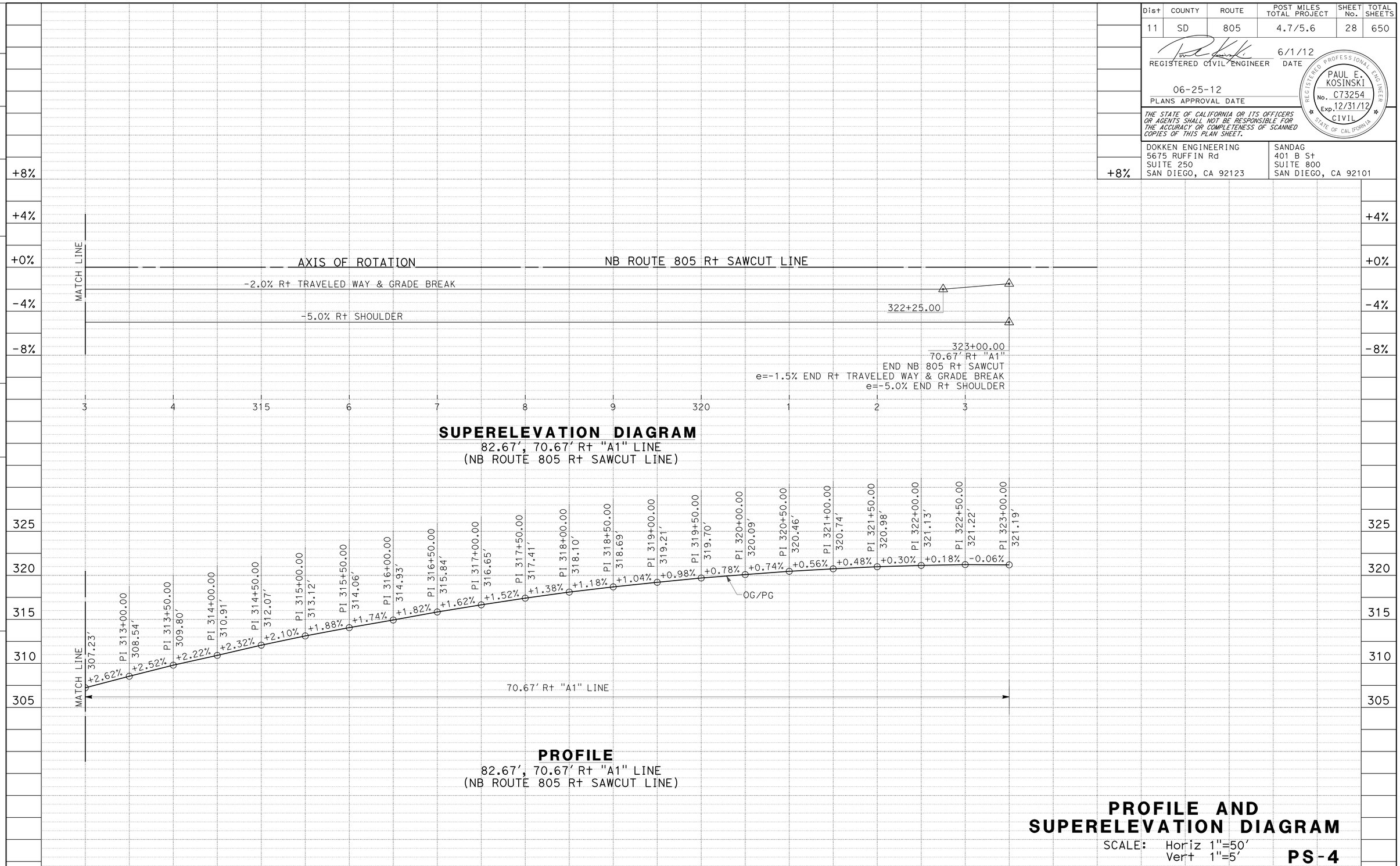

STATION		3	4	315	6	7	8	9	320	1	2	3	TOTAL
CY	Exc	2,578											
	Emb	1,173											

PROFILE AND SUPERELEVATION DIAGRAM

SCALE: Horiz 1"=50'
Vert 1"=5'

PS-4

REVISED BY | DATE REVISED
MATTHEW P. MAECHLER | DARWIN CRUZ
CALCULATED-DESIGNED BY | CHECKED BY
CONSULTANT FUNCTIONAL SUPERVISOR: GERARD LUMABAS

STATE OF CALIFORNIA - DEPARTMENT OF TRANSPORTATION
Caltrans

LAST REVISION 06-10-12 | DATE PLOTTED => 12-SEP-2012 | TIME PLOTTED => 16:06

Dist	COUNTY	ROUTE	POST MILES TOTAL PROJECT	SHEET No.	TOTAL SHEETS
11	SD	805	4.7/5.6	29	650

REGISTERED CIVIL ENGINEER 6/1/12 DATE

PAUL E. KOSINSKI No. C73254 Exp. 12/31/12 CIVIL — REGISTERED PROFESSIONAL ENGINEER — STATE OF CALIFORNIA

06-25-12
PLANS APPROVAL DATE

THE STATE OF CALIFORNIA OR ITS OFFICERS OR AGENTS SHALL NOT BE RESPONSIBLE FOR THE ACCURACY OR COMPLETENESS OF SCANNED COPIES OF THIS PLAN SHEET.

DOKKEN ENGINEERING
5675 RUFFIN Rd
SUITE 250
SAN DIEGO, CA 92123

SANDAG
401 B St
SUITE 800
SAN DIEGO, CA 92101

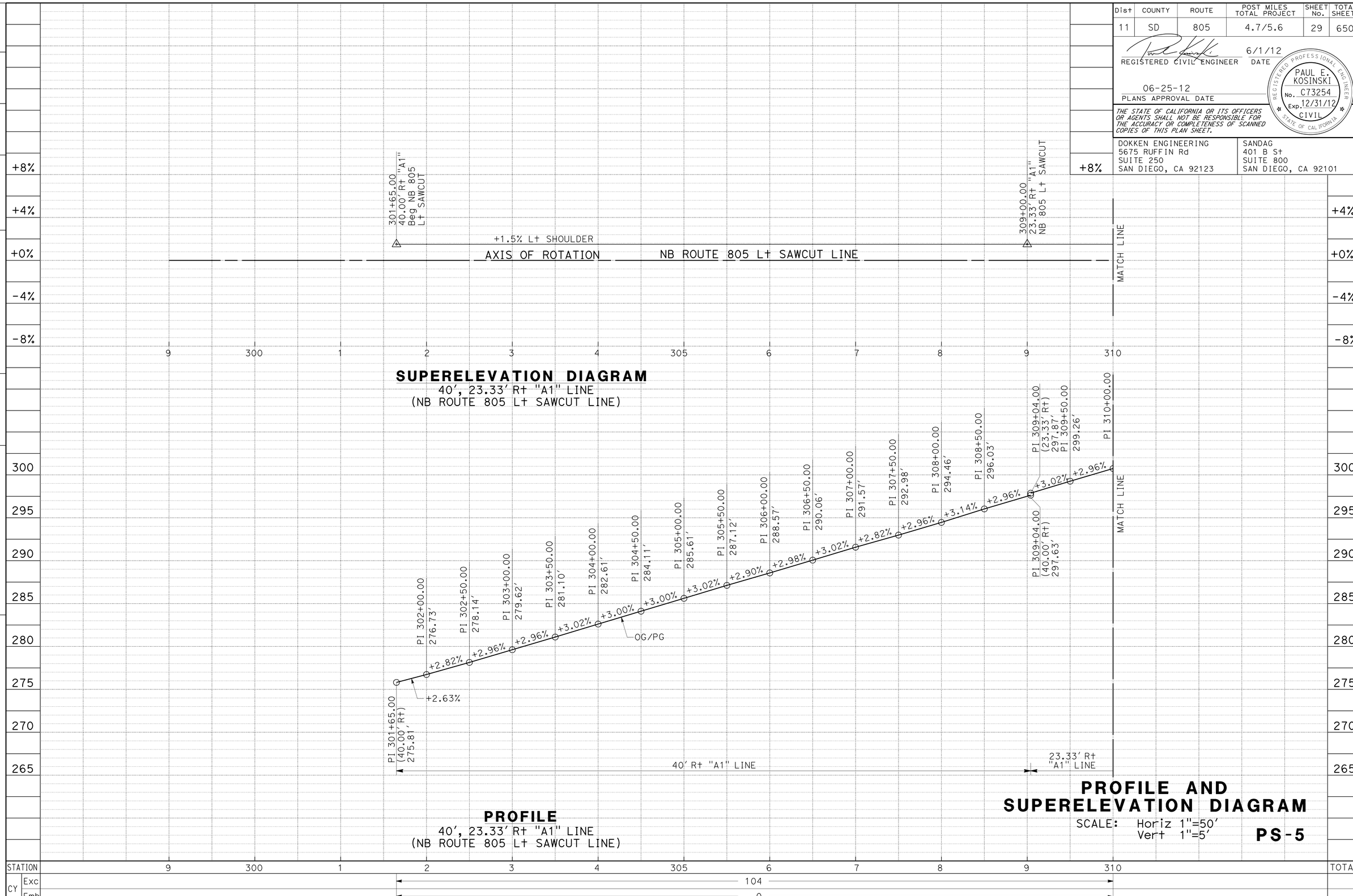

STATE OF CALIFORNIA - DEPARTMENT OF TRANSPORTATION
Caltrans

CONSULTANT FUNCTIONAL SUPERVISOR: GERARD LUMABAS
CALCULATED-DESIGNED BY: MATTHEW P. MAECHLER
CHECKED BY: DARWIN CRUZ
REVISED BY / DATE REVISED

LAST REVISION 06-10-12
DATE PLOTTED => 12-SEP-2012
TIME PLOTTED => 16:06

Dist	COUNTY	ROUTE	POST MILES TOTAL PROJECT	SHEET No.	TOTAL SHEETS
11	SD	805	4.7/5.6	30	650

REGISTERED CIVIL ENGINEER 6/1/12 DATE

06-25-12
PLANS APPROVAL DATE

REGISTERED PROFESSIONAL ENGINEER
PAUL E. KOSINSKI
No. C73254
Exp. 12/31/12
CIVIL
STATE OF CALIFORNIA

THE STATE OF CALIFORNIA OR ITS OFFICERS OR AGENTS SHALL NOT BE RESPONSIBLE FOR THE ACCURACY OR COMPLETENESS OF SCANNED COPIES OF THIS PLAN SHEET.

DOKKEN ENGINEERING
5675 RUFFIN Rd
SUITE 250
SAN DIEGO, CA 92123

SANDAG
401 B St
SUITE 800
SAN DIEGO, CA 92101

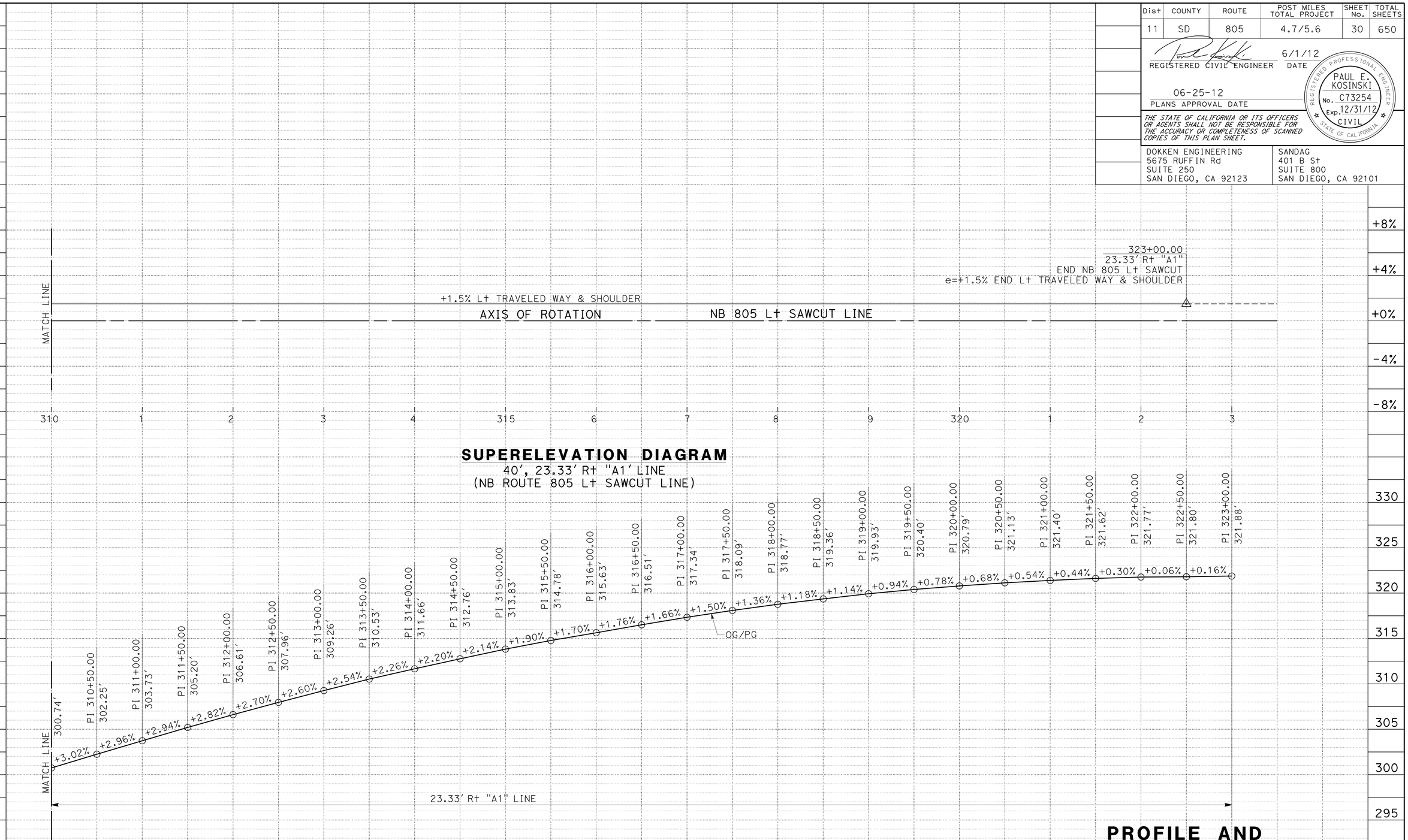

PROFILE AND SUPERELEVATION DIAGRAM

SCALE: Horiz 1"=50'
Vert 1"=5'

PS-6

STATE OF CALIFORNIA - DEPARTMENT OF TRANSPORTATION

Caltrans

CONSULTANT FUNCTIONAL SUPERVISOR: GERARD LUMABAS

CALCULATED-DESIGNED BY: MATTHEW P. MAECHLER

CHECKED BY: DARWIN CRUZ

REVISED BY

DATE REVISED

LAST REVISION 06-10-12

DATE PLOTTED => 12-SEP-2012
TIME PLOTTED => 16:06

Dist	COUNTY	ROUTE	POST MILES TOTAL PROJECT	SHEET No.	TOTAL SHEETS
11	SD	805	4.7/5.6	31	650

REGISTERED CIVIL ENGINEER 6/1/12 DATE

06-25-12
PLANS APPROVAL DATE

REGISTERED PROFESSIONAL ENGINEER PAUL E. KOSINSKI No. C73254 Exp. 12/31/12 CIVIL STATE OF CALIFORNIA

THE STATE OF CALIFORNIA OR ITS OFFICERS OR AGENTS SHALL NOT BE RESPONSIBLE FOR THE ACCURACY OR COMPLETENESS OF SCANNED COPIES OF THIS PLAN SHEET.

DOKKEN ENGINEERING
5675 RUFFIN Rd
SUITE 250
SAN DIEGO, CA 92123

SANDAG
401 B St
SUITE 800
SAN DIEGO, CA 92101

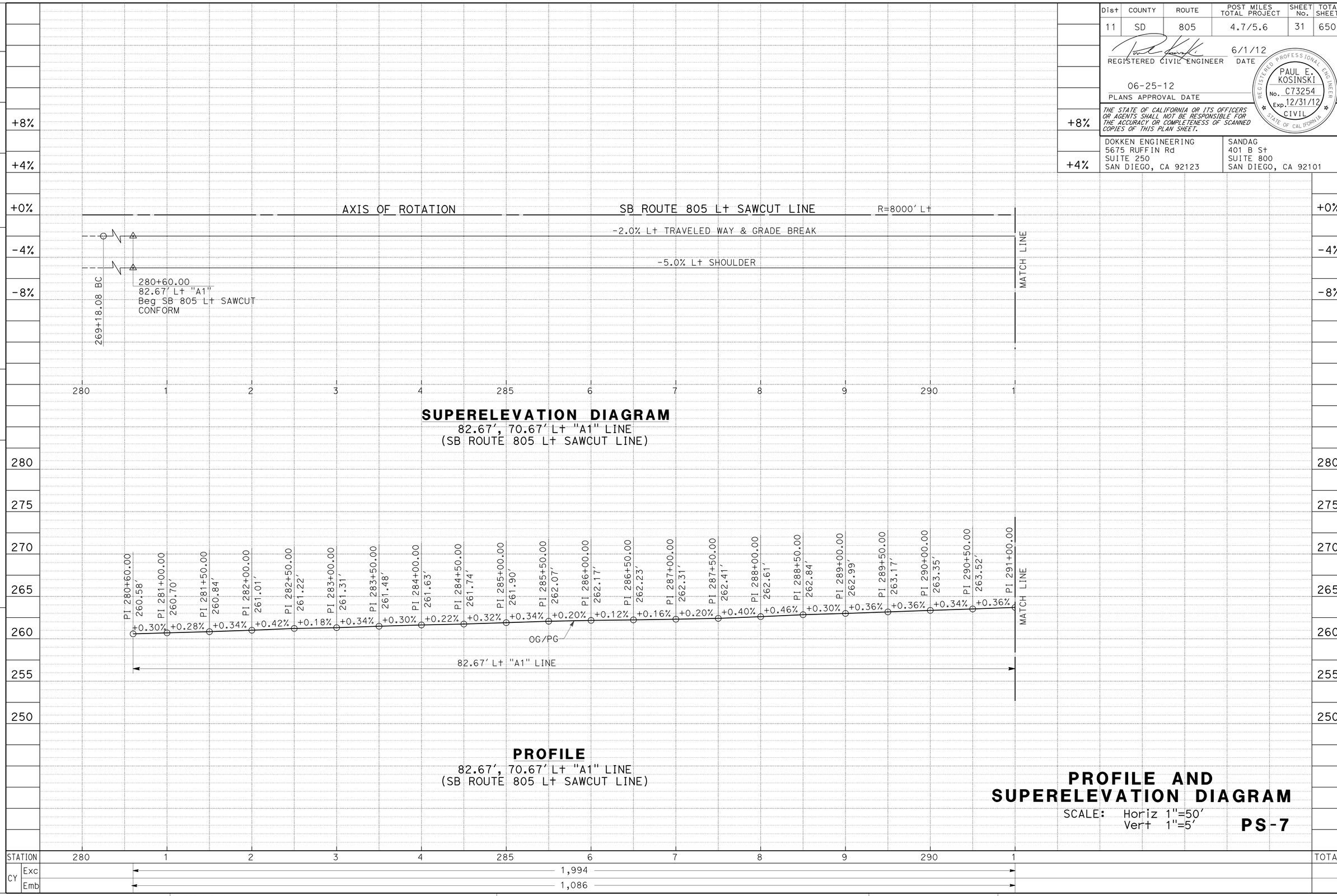

STATION	280	1	2	3	4	285	6	7	8	9	290	1	TOTAL
CY Exc	1,994												
CY Emb	1,086												

PROFILE AND SUPERELEVATION DIAGRAM

SCALE: Horiz 1"=50'
Vert 1"=5'

PS-7

REVISED BY | DATE REVISED
MATTHEW P. MAECHLER | DARWIN CRUZ
CALCULATED-DESIGNED BY | CHECKED BY
CONSULTANT FUNCTIONAL SUPERVISOR | GERARD LUMABAS

STATE OF CALIFORNIA - DEPARTMENT OF TRANSPORTATION
Caltrans

LAST REVISION 06-10-12 | DATE PLOTTED => 12-SEP-2012 | TIME PLOTTED => 16:06

Dist	COUNTY	ROUTE	POST MILES TOTAL PROJECT	SHEET No.	TOTAL SHEETS
11	SD	805	4.7/5.6	32	650

REGISTERED CIVIL ENGINEER 6/1/12 DATE

06-25-12
PLANS APPROVAL DATE

REGISTERED PROFESSIONAL ENGINEER
PAUL E. KOSINSKI
No. C73254
Exp. 12/31/12
CIVIL
STATE OF CALIFORNIA

THE STATE OF CALIFORNIA OR ITS OFFICERS OR AGENTS SHALL NOT BE RESPONSIBLE FOR THE ACCURACY OR COMPLETENESS OF SCANNED COPIES OF THIS PLAN SHEET.

DOKKEN ENGINEERING
5675 RUFFIN Rd
SUITE 250
SAN DIEGO, CA 92123

SANDAG
401 B St
SUITE 800
SAN DIEGO, CA 92101

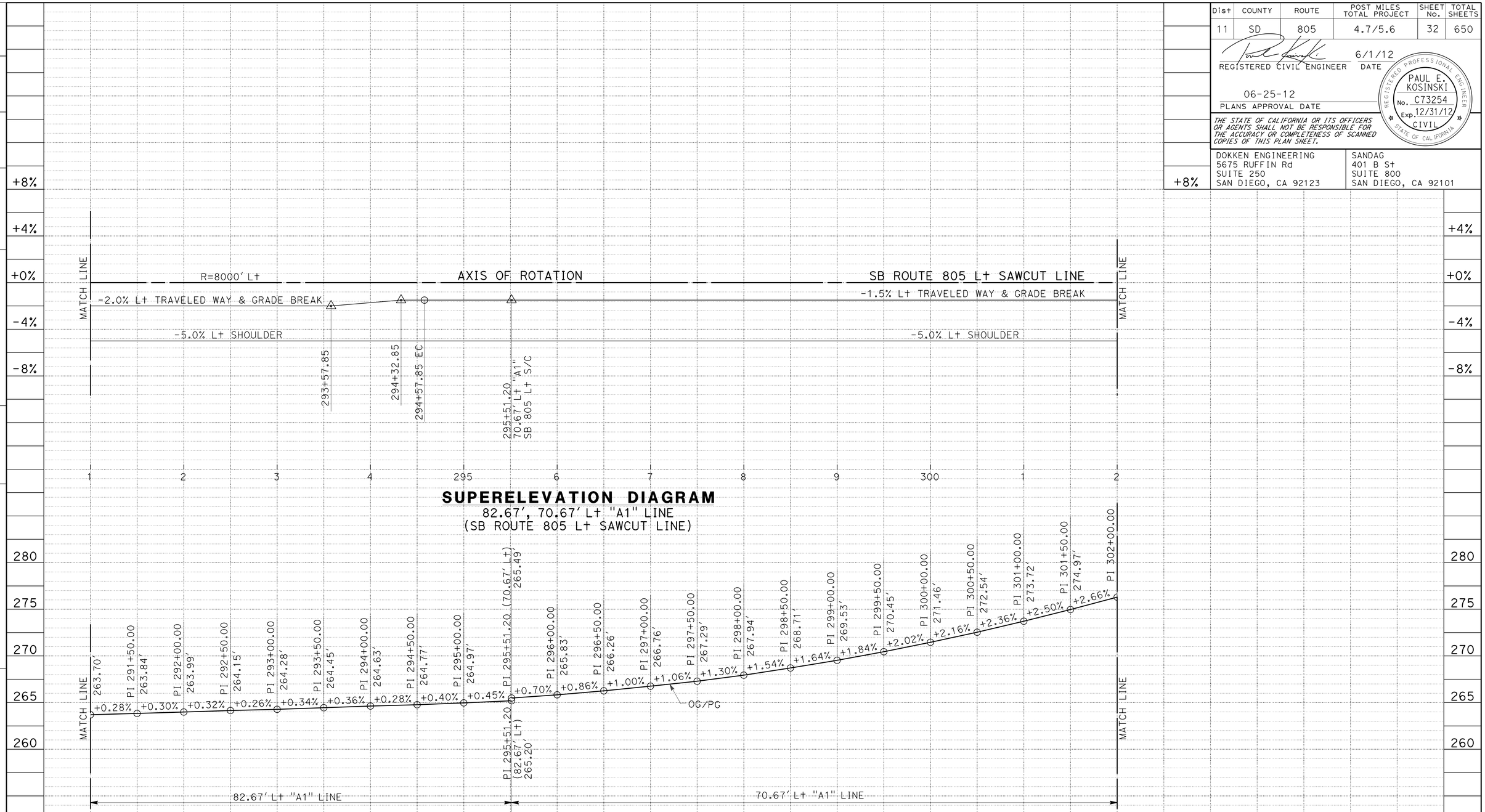

STATION		1	2	3	4	295	6	7	8	9	300	1	2	TOTAL
CY	Exc	14,033												
	Emb	3,556												

PROFILE AND SUPERELEVATION DIAGRAM

SCALE: Horiz 1"=50'
Vert 1"=5'

PS-8

REVISED BY | DATE REVISED
MATTHEW P. MAECHLER | DARWIN CRUZ
CALCULATED-DESIGNED BY | CHECKED BY
CONSULTANT FUNCTIONAL SUPERVISOR
GERARD LUMABAS

STATE OF CALIFORNIA - DEPARTMENT OF TRANSPORTATION
Caltrans

LAST REVISION 06-10-12
DATE PLOTTED => 12-SEP-2012
TIME PLOTTED => 16:06

Dist	COUNTY	ROUTE	POST MILES TOTAL PROJECT	SHEET No.	TOTAL SHEETS
11	SD	805	4.7/5.6	33	650

REGISTERED CIVIL ENGINEER 6/1/12 DATE

06-25-12
PLANS APPROVAL DATE

REGISTERED PROFESSIONAL ENGINEER
PAUL E. KOSINSKI
No. C73254
Exp. 12/31/12
CIVIL
STATE OF CALIFORNIA

THE STATE OF CALIFORNIA OR ITS OFFICERS OR AGENTS SHALL NOT BE RESPONSIBLE FOR THE ACCURACY OR COMPLETENESS OF SCANNED COPIES OF THIS PLAN SHEET.

DOKKEN ENGINEERING
5675 RUFFIN Rd
SUITE 250
SAN DIEGO, CA 92123

SANDAG
401 B St
SUITE 800
SAN DIEGO, CA 92101

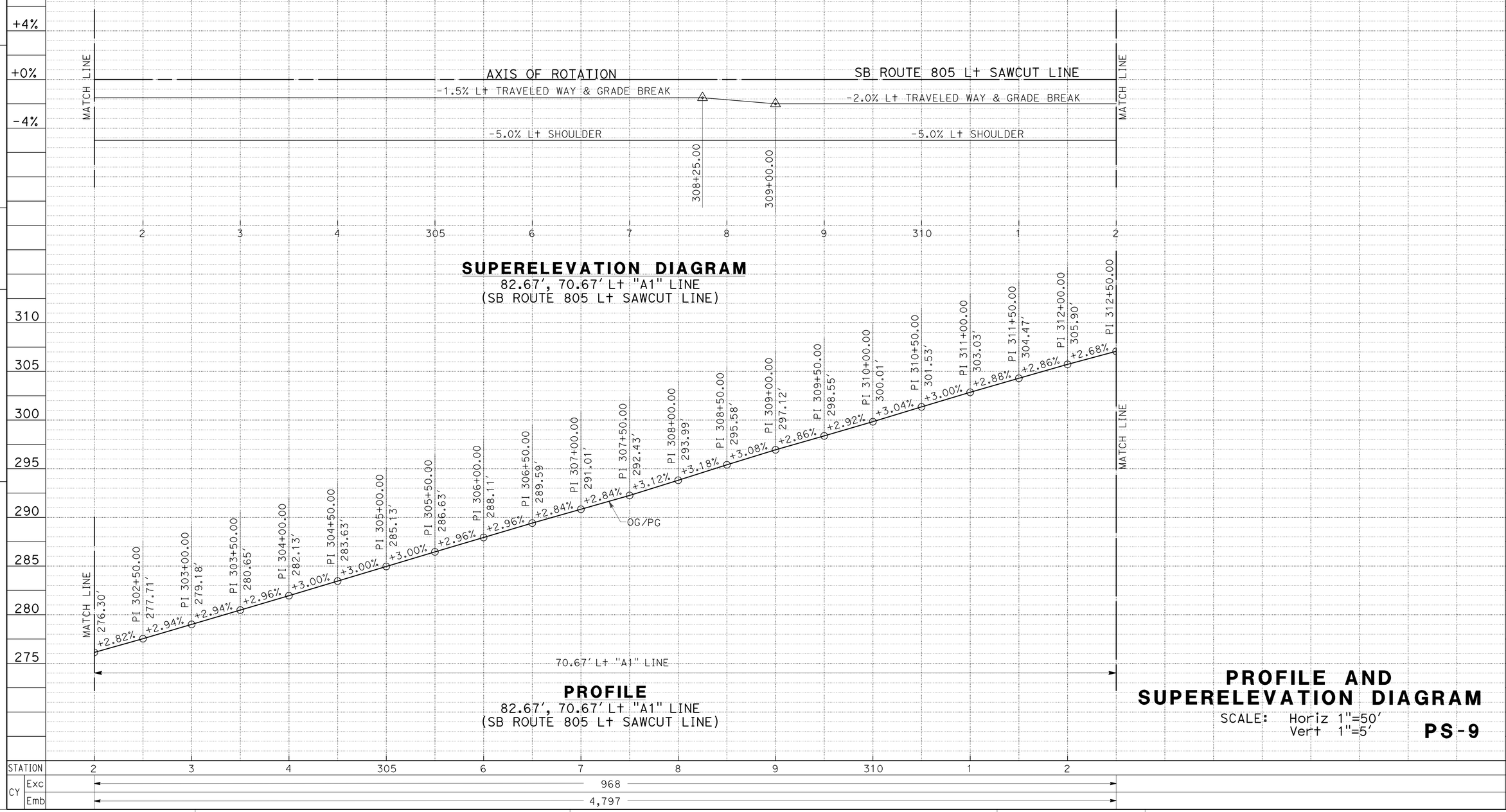

PROFILE AND SUPERELEVATION DIAGRAM

SCALE: Horiz 1"=50'
Vert 1"=5'

PS-9

STATE OF CALIFORNIA - DEPARTMENT OF TRANSPORTATION
Caltrans

CONSULTANT FUNCTIONAL SUPERVISOR: GERARD LUMABAS
CALCULATED-DESIGNED BY: MATTHEW P. MAECHLER
CHECKED BY: DARWIN CRUZ
REVISED BY
DATE REVISED

LAST REVISION DATE PLOTTED => 12-SEP-2012
TIME PLOTTED => 16:06
06-10-12

Dist	COUNTY	ROUTE	POST MILES TOTAL PROJECT	SHEET No.	TOTAL SHEETS
11	SD	805	4.7/5.6	34	650

REGISTERED CIVIL ENGINEER 6/1/12 DATE

06-25-12
PLANS APPROVAL DATE

REGISTERED PROFESSIONAL ENGINEER
PAUL E. KOSINSKI
No. C73254
Exp. 12/31/12
CIVIL
STATE OF CALIFORNIA

THE STATE OF CALIFORNIA OR ITS OFFICERS OR AGENTS SHALL NOT BE RESPONSIBLE FOR THE ACCURACY OR COMPLETENESS OF SCANNED COPIES OF THIS PLAN SHEET.

DOKKEN ENGINEERING
5675 RUFFIN Rd
SUITE 250
SAN DIEGO, CA 92123

SANDAG
401 B St
SUITE 800
SAN DIEGO, CA 92101

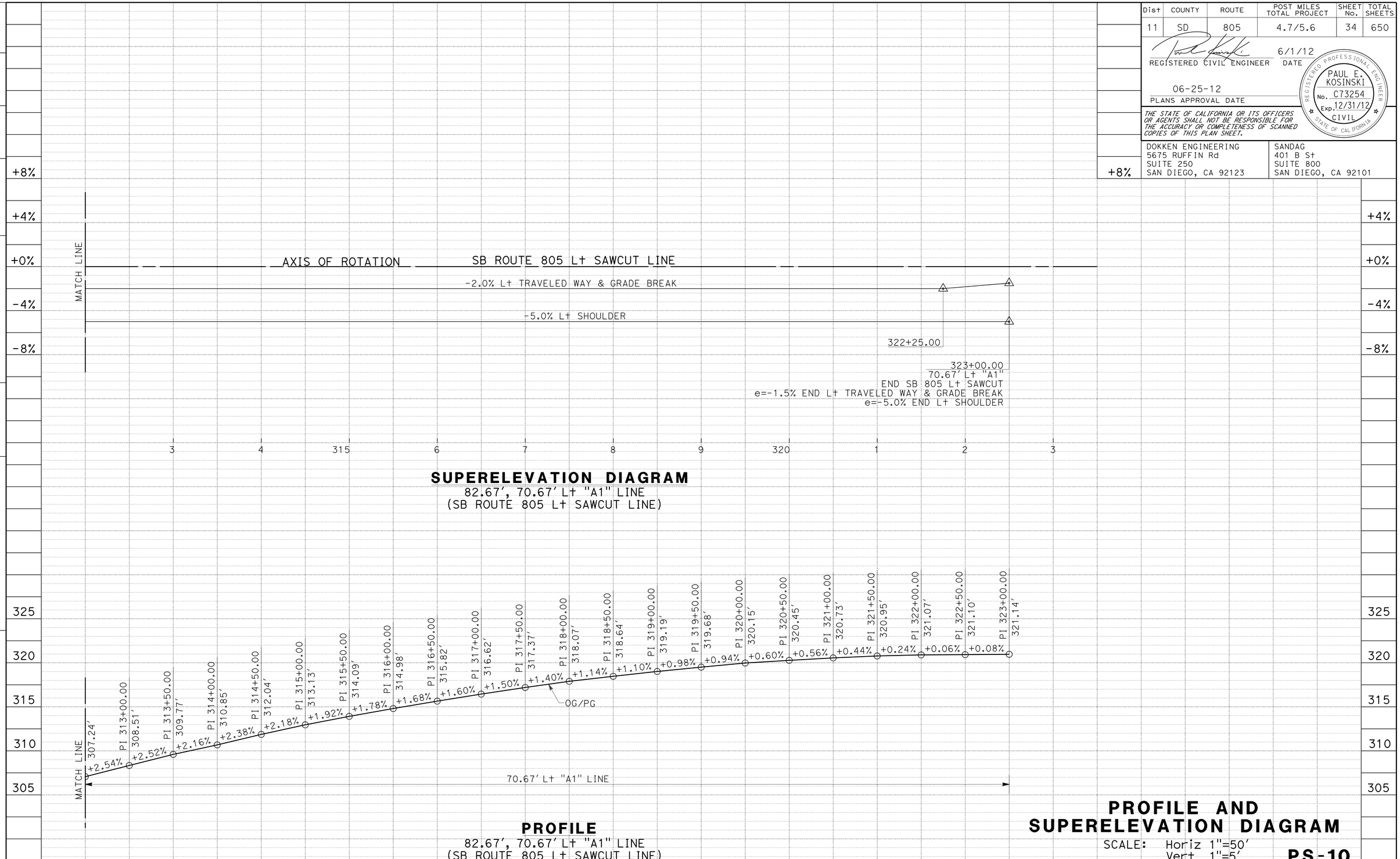

PROFILE AND SUPERELEVATION DIAGRAM

SCALE: Horiz 1"=50'
Vert 1"=5'

PS-10

STATION	3	4	315	6	7	8	9	320	1	2	3	TOTAL
CY Exc	1,047											
CY Emb	4,536											

STATE OF CALIFORNIA - DEPARTMENT OF TRANSPORTATION
Caltrans

CONSULTANT FUNCTIONAL SUPERVISOR: GERARD LUMABAS
CALCULATED-DESIGNED BY: MATTHEW P. MAECHLER
CHECKED BY: DARWIN CRUZ
REVISED BY
DATE REVISED

LAST REVISION 06-10-12
DATE PLOTTED => 12-SEP-2012
TIME PLOTTED => 16:06

Dist	COUNTY	ROUTE	POST MILES TOTAL PROJECT	SHEET No.	TOTAL SHEETS
11	SD	805	4.7/5.6	35	650

REGISTERED CIVIL ENGINEER 6/1/12 DATE

06-25-12
PLANS APPROVAL DATE

REGISTERED PROFESSIONAL ENGINEER
PAUL E. KOSINSKI
No. C73254
Exp. 12/31/12
CIVIL
STATE OF CALIFORNIA

THE STATE OF CALIFORNIA OR ITS OFFICERS OR AGENTS SHALL NOT BE RESPONSIBLE FOR THE ACCURACY OR COMPLETENESS OF SCANNED COPIES OF THIS PLAN SHEET.

DOKKEN ENGINEERING
5675 RUFFIN Rd
SUITE 250
SAN DIEGO, CA 92123

SANDAG
401 B St
SUITE 800
SAN DIEGO, CA 92101

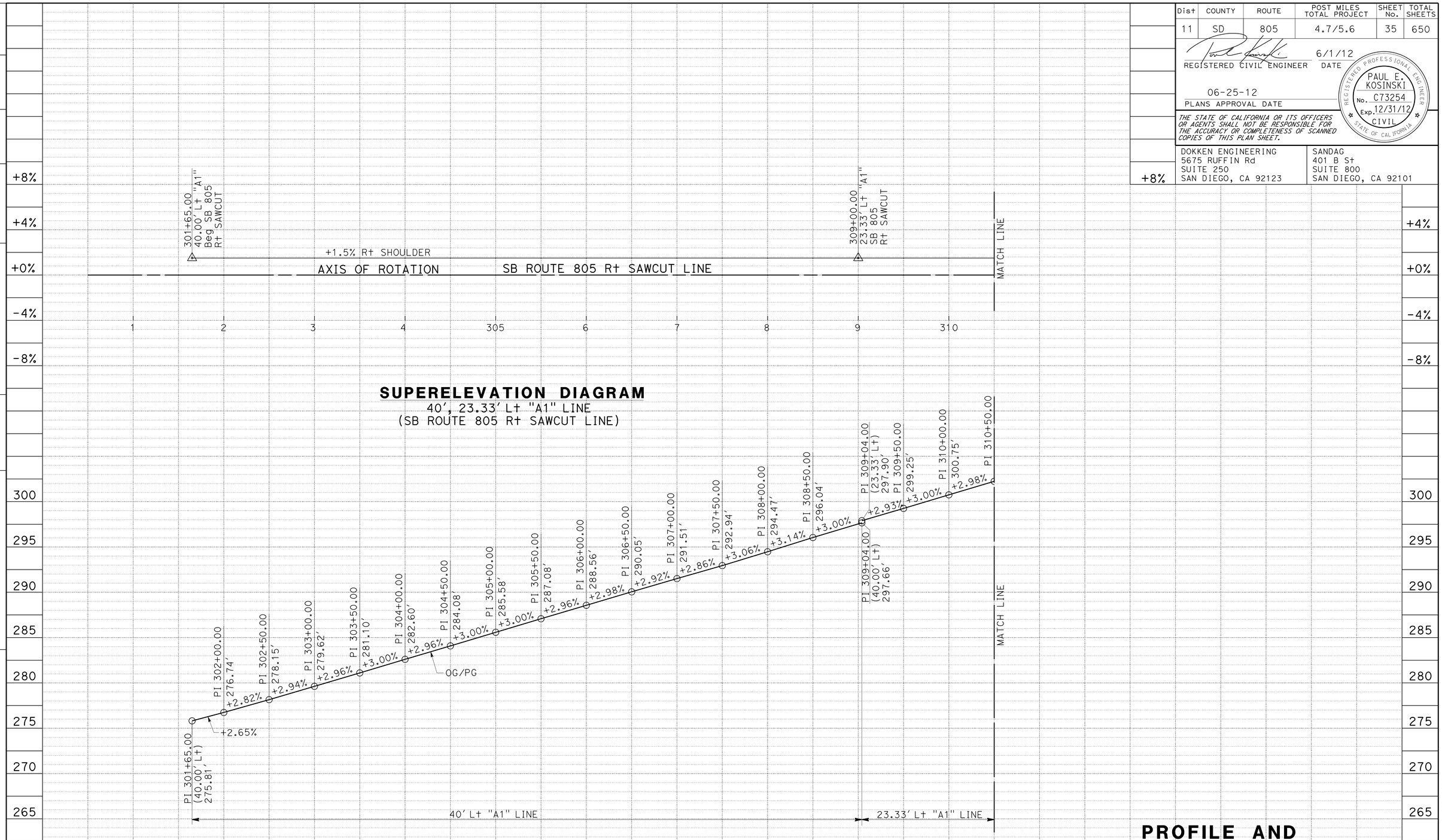

PROFILE AND SUPERELEVATION DIAGRAM

SCALE: Horiz 1"=50'
Vert 1"=5'

PS-11

STATION	1	2	3	4	305	6	7	8	9	310	TOTAL
CY Exc					104						
CY Emb					0						

STATE OF CALIFORNIA - DEPARTMENT OF TRANSPORTATION
Caltrans

CONSULTANT FUNCTIONAL SUPERVISOR: GERARD LUMABAS
CALCULATED-DESIGNED BY: MATTHEW P. MAECHLER
CHECKED BY: DARWIN CRUZ
REVISED BY / DATE REVISED

LAST REVISION DATE PLOTTED => 12-SEP-2012
06-10-12 TIME PLOTTED => 16:06

Dist	COUNTY	ROUTE	POST MILES TOTAL PROJECT	SHEET No.	TOTAL SHEETS
11	SD	805	4.7/5.6	36	650

REGISTERED CIVIL ENGINEER 6/1/12 DATE

06-25-12
PLANS APPROVAL DATE

REGISTERED PROFESSIONAL ENGINEER
PAUL E. KOSINSKI
No. C73254
Exp. 12/31/12
CIVIL
STATE OF CALIFORNIA

THE STATE OF CALIFORNIA OR ITS OFFICERS OR AGENTS SHALL NOT BE RESPONSIBLE FOR THE ACCURACY OR COMPLETENESS OF SCANNED COPIES OF THIS PLAN SHEET.

DOKKEN ENGINEERING
5675 RUFFIN Rd
SUITE 250
SAN DIEGO, CA 92123

SANDAG
401 B St
SUITE 800
SAN DIEGO, CA 92101

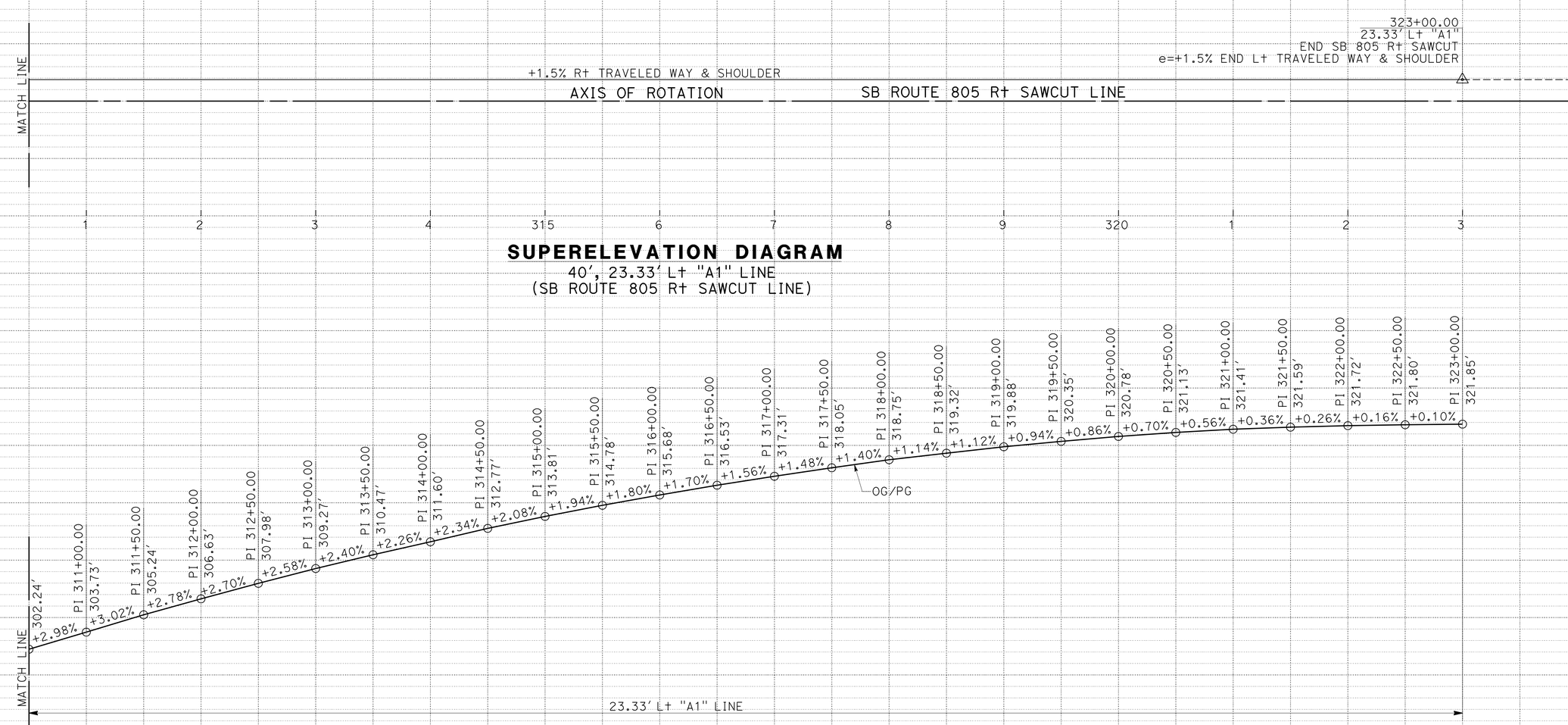

SUPERELEVATION DIAGRAM
40', 23.33' L† "A1" LINE
(SB ROUTE 805 R† SAWCUT LINE)

PROFILE
40', 23.33' L† "A1" LINE
(SB ROUTE 805 R† SAWCUT LINE)

PROFILE AND SUPERELEVATION DIAGRAM
SCALE: Horiz 1"=50'
Vert 1"=5'

PS-12

STATION	1	2	3	4	315	6	7	8	9	320	1	2	3	TOTAL
CY Exc	1,339													
CY Emb	0													

STATE OF CALIFORNIA - DEPARTMENT OF TRANSPORTATION
Caltrans

CONSULTANT FUNCTIONAL SUPERVISOR: GERARD LUMABAS
CALCULATED-DESIGNED BY: MATTHEW P. MAECHLER
CHECKED BY: DARWIN CRUZ
REVISED BY / DATE REVISED

LAST REVISION 06-10-12
DATE PLOTTED => 12-SEP-2012
TIME PLOTTED => 16:06

Dist	COUNTY	ROUTE	POST MILES TOTAL PROJECT	SHEET No.	TOTAL SHEETS
11	SD	805	4.7/5.6	37	650

REGISTERED CIVIL ENGINEER 6/1/12 DATE

PAUL E. KOSINSKI No. C73254 Exp. 12/31/12 CIVIL — REGISTERED PROFESSIONAL ENGINEER — STATE OF CALIFORNIA

06-25-12
PLANS APPROVAL DATE

THE STATE OF CALIFORNIA OR ITS OFFICERS OR AGENTS SHALL NOT BE RESPONSIBLE FOR THE ACCURACY OR COMPLETENESS OF SCANNED COPIES OF THIS PLAN SHEET.

DOKKEN ENGINEERING
5675 RUFFIN Rd
SUITE 250
SAN DIEGO, CA 92123

SANDAG
401 B St
SUITE 800
SAN DIEGO, CA 92101

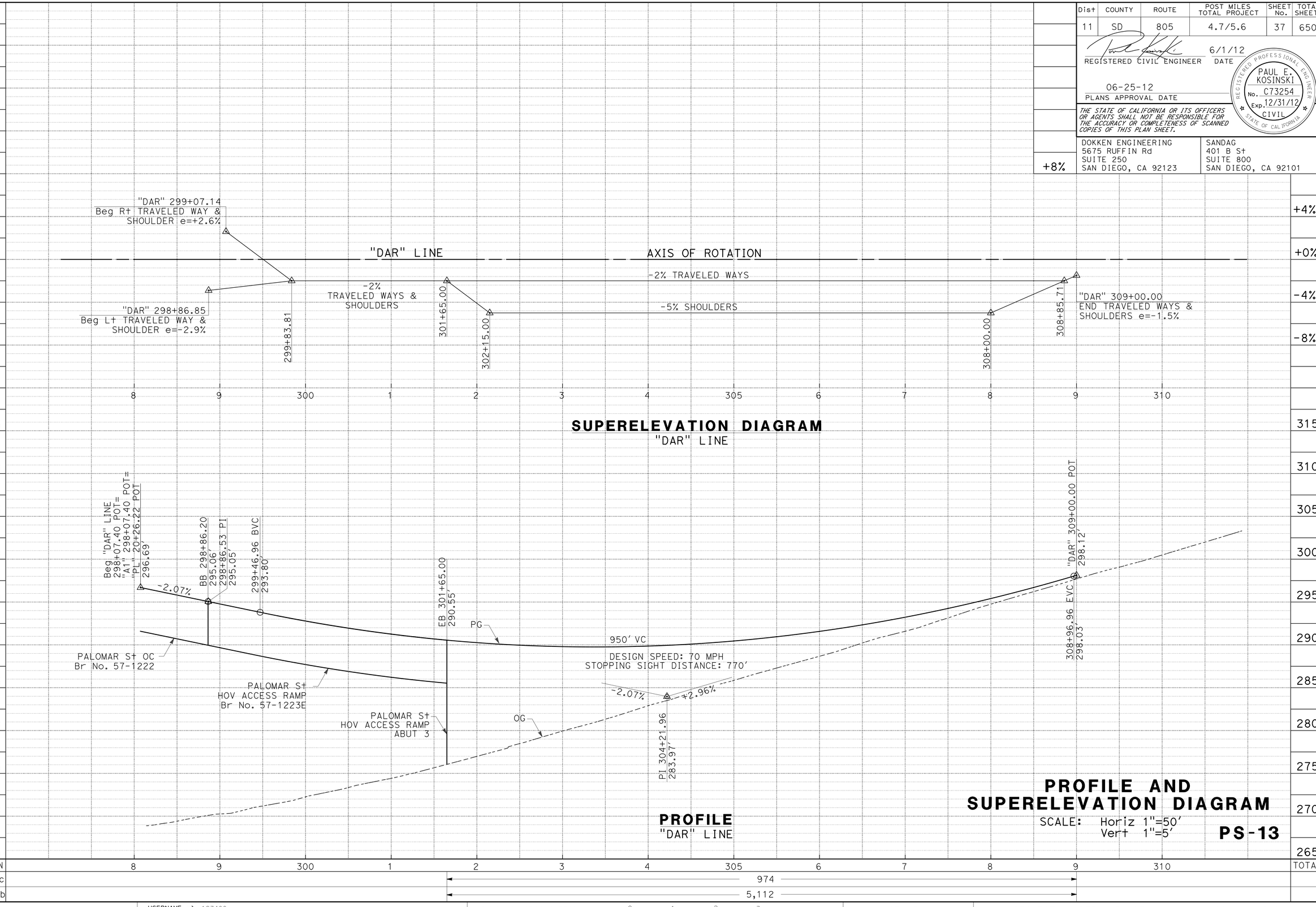

REVISED BY	DATE REVISED
MATTHEW P. MAECHLER	DARWIN CRUZ

CALCULATED-DESIGNED BY — CHECKED BY

CONSULTANT FUNCTIONAL SUPERVISOR: GERARD LUMABAS

STATE OF CALIFORNIA - DEPARTMENT OF TRANSPORTATION

Caltrans

LAST REVISION 06-10-12 DATE PLOTTED => 12-SEP-2012 TIME PLOTTED => 16:06

Dist	COUNTY	ROUTE	POST MILES TOTAL PROJECT	SHEET No.	TOTAL SHEETS
11	SD	805	4.7/5.6	38	650

REGISTERED CIVIL ENGINEER 6/1/12 DATE

06-25-12
PLANS APPROVAL DATE

REGISTERED PROFESSIONAL ENGINEER PAUL E. KOSINSKI No. C73254 Exp. 12/31/12 CIVIL STATE OF CALIFORNIA

THE STATE OF CALIFORNIA OR ITS OFFICERS OR AGENTS SHALL NOT BE RESPONSIBLE FOR THE ACCURACY OR COMPLETENESS OF SCANNED COPIES OF THIS PLAN SHEET.

DOKKEN ENGINEERING
5675 RUFFIN Rd
SUITE 250
SAN DIEGO, CA 92123

SANDAG
401 B St
SUITE 800
SAN DIEGO, CA 92101

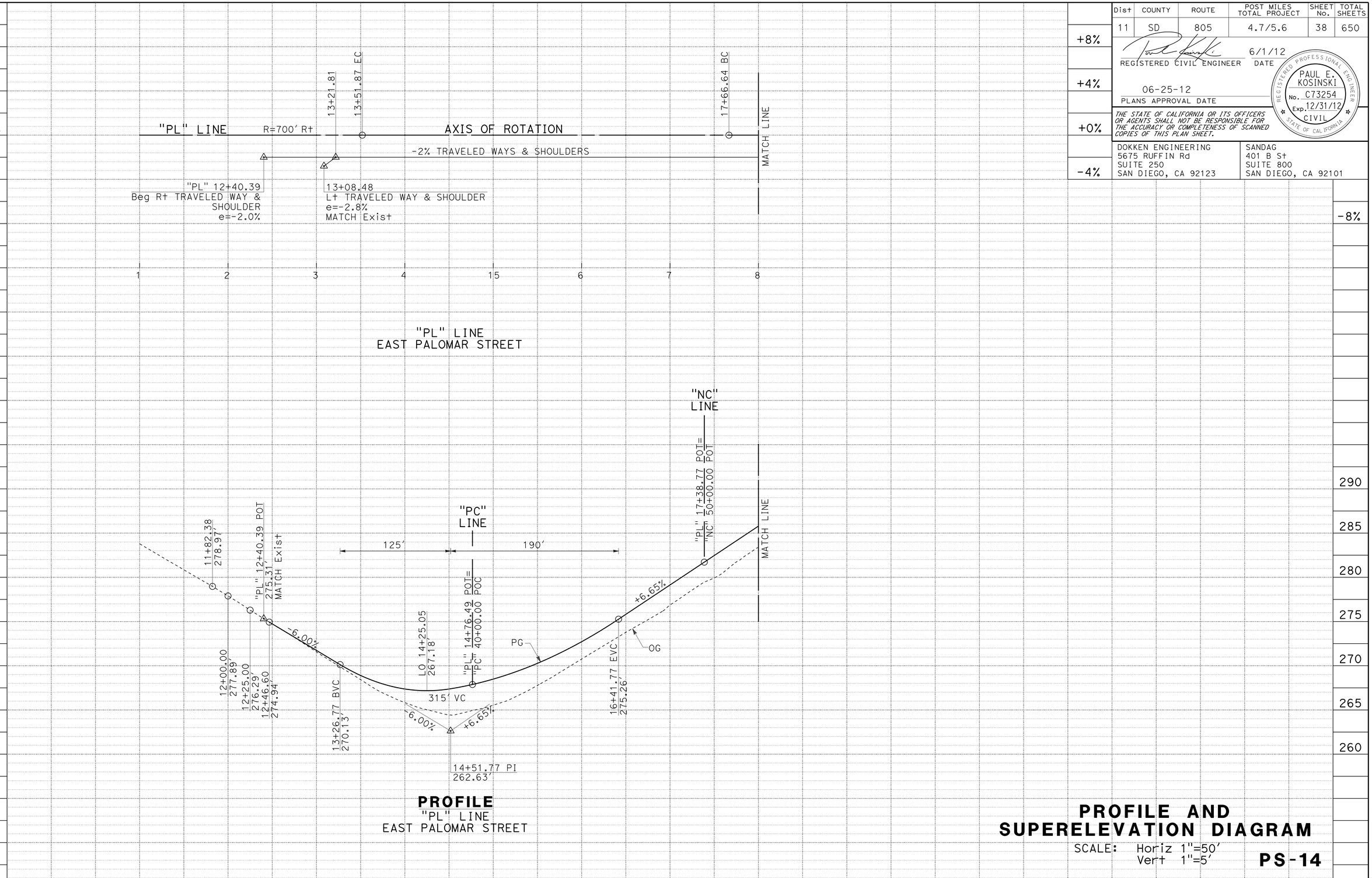

PROFILE
"PL" LINE
EAST PALOMAR STREET

STATION		1	2	3	4	15	6	7	8	TOTAL
CY	Exc			574						
	Emb			9,415						

PROFILE AND SUPERELEVATION DIAGRAM

SCALE: Horiz 1"=50'
Vert 1"=5'

PS-14

STATE OF CALIFORNIA - DEPARTMENT OF TRANSPORTATION
Caltrans

CONSULTANT FUNCTIONAL SUPERVISOR: GERARD LUMABAS
CALCULATED-DESIGNED BY: MATTHEW P. MAECHLER
CHECKED BY: DARWIN CRUZ
REVISED BY / DATE REVISED

LAST REVISION 06-10-12
DATE PLOTTED => 12-SEP-2012
TIME PLOTTED => 16:06

Dist	COUNTY	ROUTE	POST MILES TOTAL PROJECT	SHEET No.	TOTAL SHEETS
11	SD	805	4.7/5.6	39	650

REGISTERED CIVIL ENGINEER 6/1/12 DATE

06-25-12
PLANS APPROVAL DATE

REGISTERED PROFESSIONAL ENGINEER PAUL E. KOSINSKI No. C73254 Exp. 12/31/12 CIVIL STATE OF CALIFORNIA

THE STATE OF CALIFORNIA OR ITS OFFICERS OR AGENTS SHALL NOT BE RESPONSIBLE FOR THE ACCURACY OR COMPLETENESS OF SCANNED COPIES OF THIS PLAN SHEET.

DOKKEN ENGINEERING
5675 RUFFIN Rd
SUITE 250
SAN DIEGO, CA 92123

SANDAG
401 B St
SUITE 800
SAN DIEGO, CA 92101

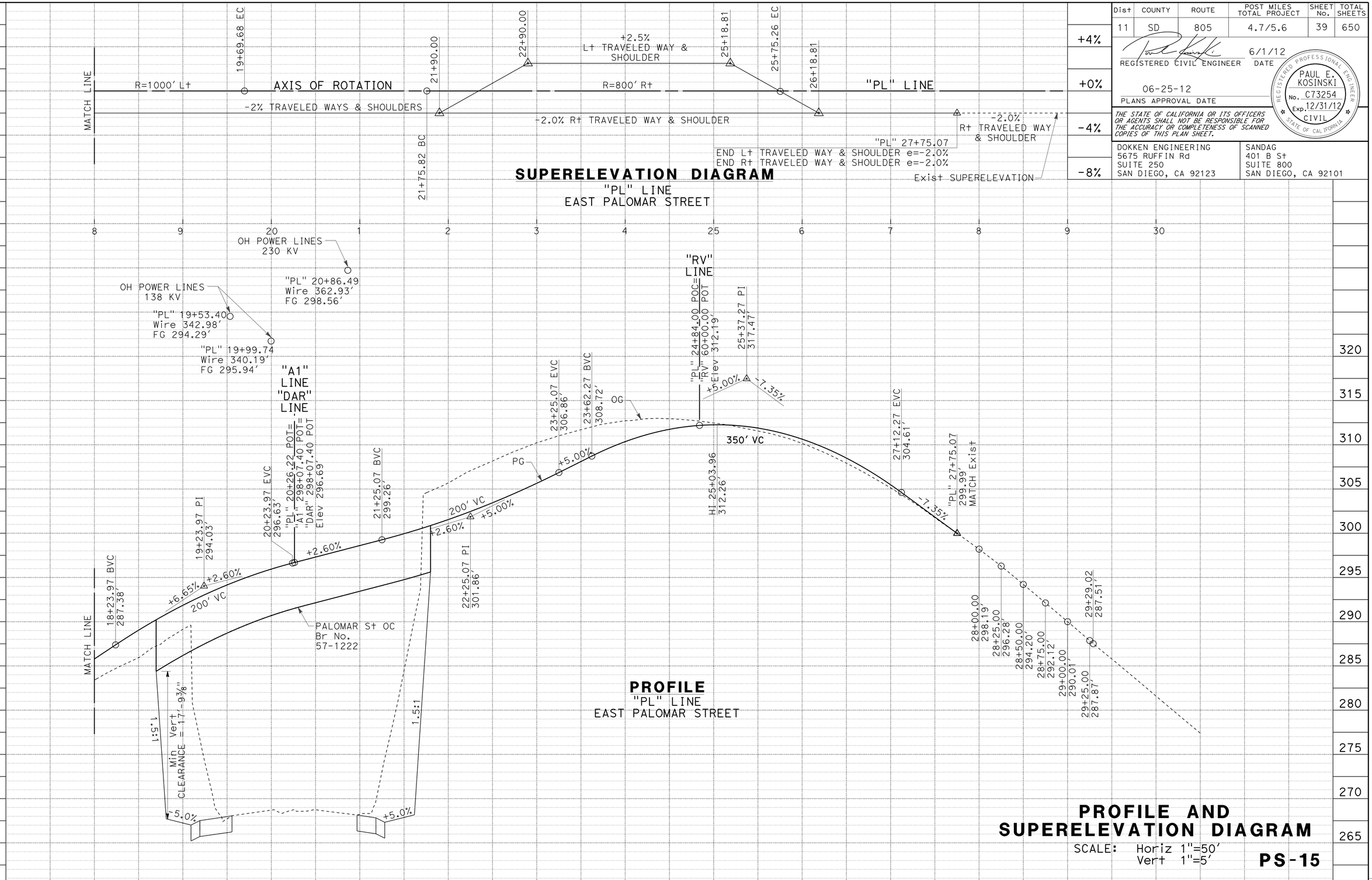

STATE OF CALIFORNIA - DEPARTMENT OF TRANSPORTATION

Caltrans

CONSULTANT FUNCTIONAL SUPERVISOR: GERARD LUMABAS

CALCULATED-DESIGNED BY: MATTHEW P. MAECHLER

CHECKED BY: DARWIN CRUZ

REVISED BY

DATE REVISED

LAST REVISION 06-10-12

DATE PLOTTED => 12-SEP-2012
TIME PLOTTED => 16:06

Dist	COUNTY	ROUTE	POST MILES TOTAL PROJECT	SHEET No.	TOTAL SHEETS
11	SD	805	4.7/5.6	40	650

REGISTERED CIVIL ENGINEER 6/1/12 DATE

06-25-12
PLANS APPROVAL DATE

REGISTERED PROFESSIONAL ENGINEER PAUL E. KOSINSKI No. C73254 Exp. 12/31/12 CIVIL STATE OF CALIFORNIA

THE STATE OF CALIFORNIA OR ITS OFFICERS OR AGENTS SHALL NOT BE RESPONSIBLE FOR THE ACCURACY OR COMPLETENESS OF SCANNED COPIES OF THIS PLAN SHEET.

DOKKEN ENGINEERING
5675 RUFFIN Rd
SUITE 250
SAN DIEGO, CA 92123

SANDAG
401 B St
SUITE 800
SAN DIEGO, CA 92101

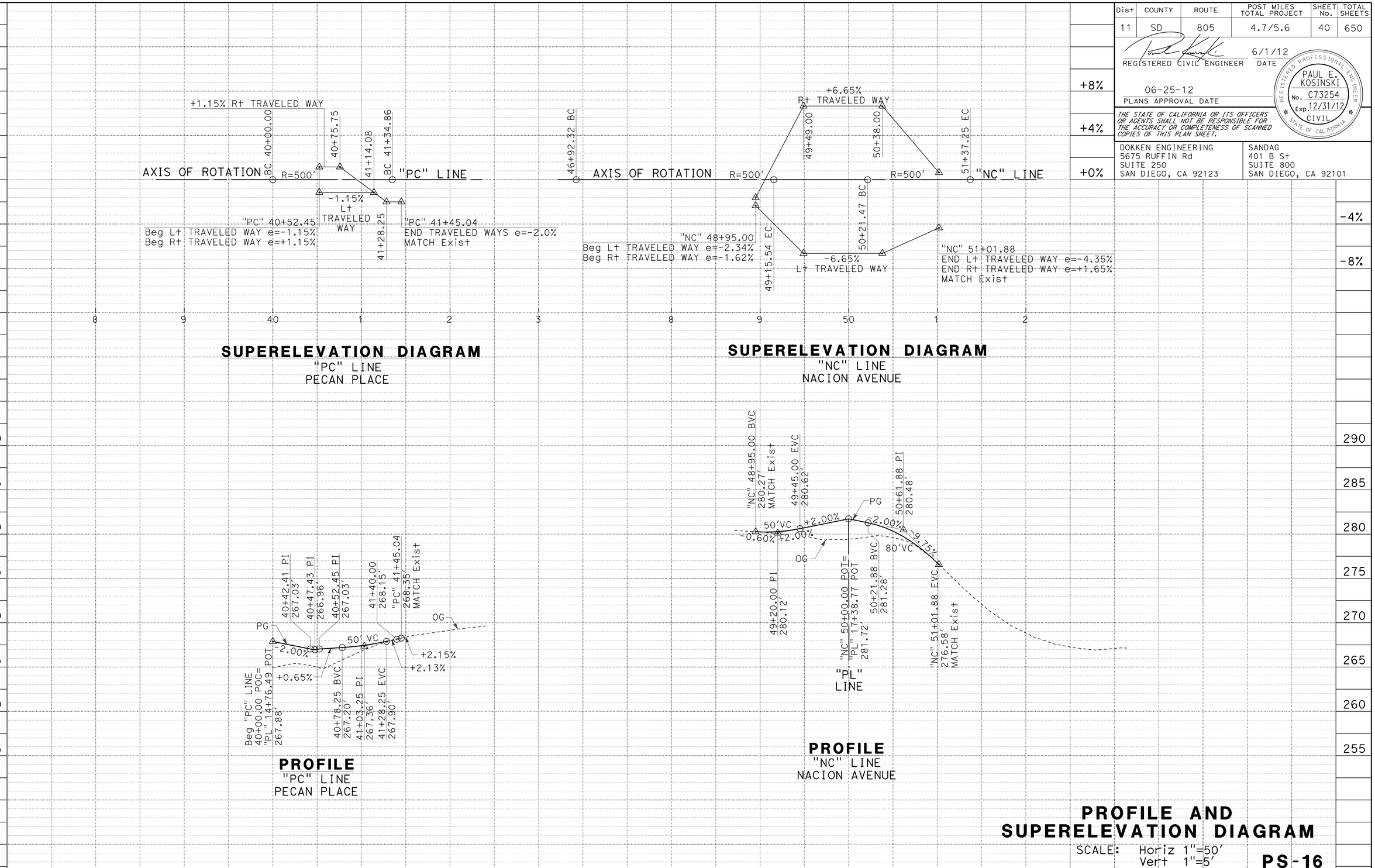

PROFILE AND SUPERELEVATION DIAGRAM

SCALE: Horiz 1"=50'
Vert 1"=5'

PS-16

STATE OF CALIFORNIA - DEPARTMENT OF TRANSPORTATION

Caltrans

CONSULTANT FUNCTIONAL SUPERVISOR: GERARD LUMABAS

CALCULATED-DESIGNED BY: MATTHEW P. MAECHLER

CHECKED BY: DARWIN CRUZ

REVISED BY / DATE REVISED

LAST REVISION 06-10-12

DATE PLOTTED => 12-SEP-2012
TIME PLOTTED => 16:06

Dist	COUNTY	ROUTE	POST MILES TOTAL PROJECT	SHEET No.	TOTAL SHEETS
11	SD	805	4.7/5.6	41	650

REGISTERED CIVIL ENGINEER 6/1/12 DATE

06-25-12
PLANS APPROVAL DATE

REGISTERED PROFESSIONAL ENGINEER PAUL E. KOSINSKI No. C73254 Exp. 12/31/12 CIVIL STATE OF CALIFORNIA

THE STATE OF CALIFORNIA OR ITS OFFICERS OR AGENTS SHALL NOT BE RESPONSIBLE FOR THE ACCURACY OR COMPLETENESS OF SCANNED COPIES OF THIS PLAN SHEET.

DOKKEN ENGINEERING
5675 RUFFIN Rd
SUITE 250
SAN DIEGO, CA 92123

SANDAG
401 B St
SUITE 800
SAN DIEGO, CA 92101

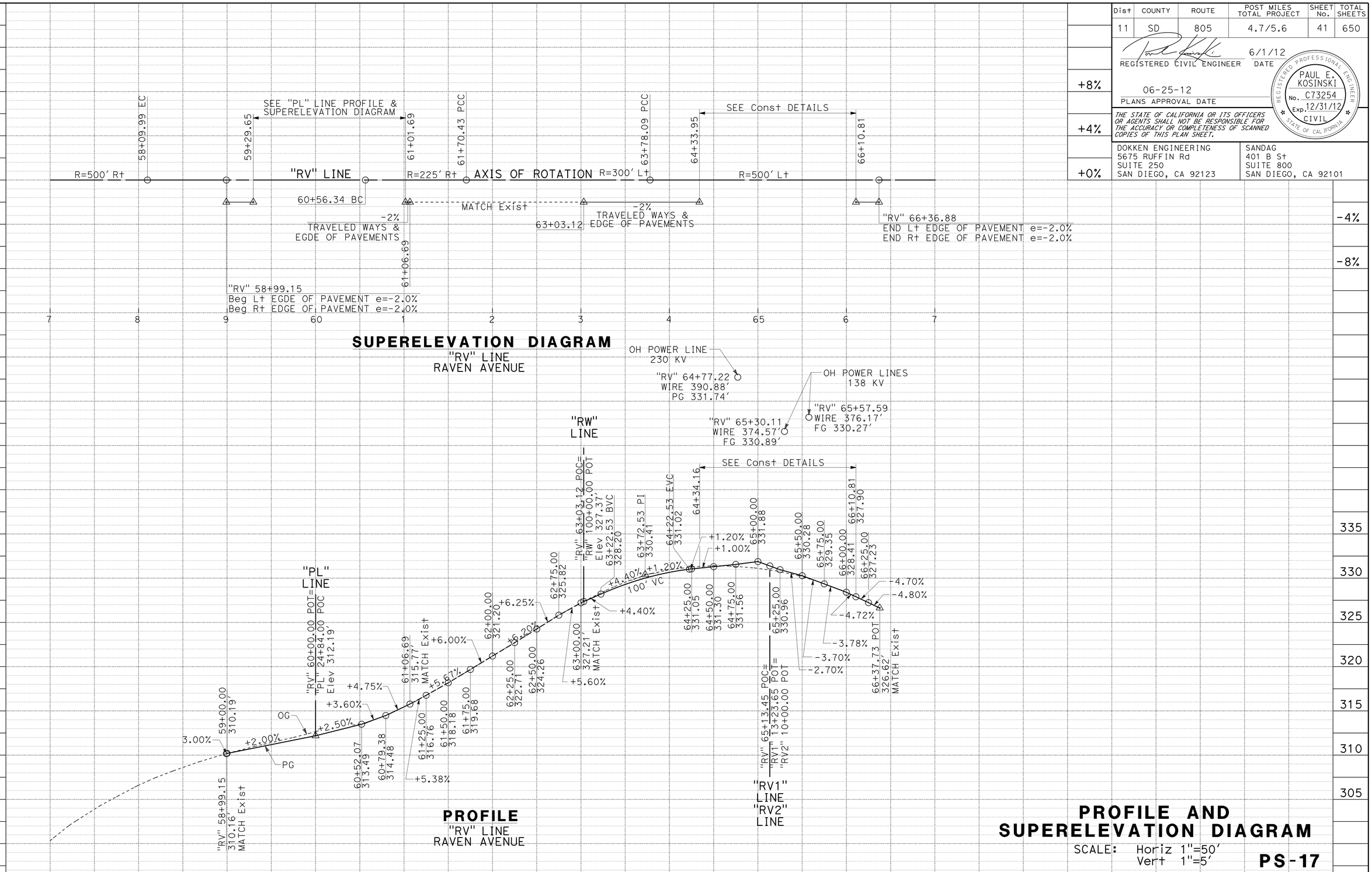

PROFILE AND SUPERELEVATION DIAGRAM

SCALE: Horiz 1"=50'
Vert 1"=5'

PS-17

STATE OF CALIFORNIA - DEPARTMENT OF TRANSPORTATION

Caltrans

CONSULTANT FUNCTIONAL SUPERVISOR: GERARD LUMABAS

CALCULATED-DESIGNED BY: MATTHEW P. MAECHLER

CHECKED BY: DARWIN CRUZ

REVISED BY

DATE REVISED

LAST REVISION 06-10-12

DATE PLOTTED => 12-SEP-2012
TIME PLOTTED => 16:06

Dist	COUNTY	ROUTE	POST MILES TOTAL PROJECT	SHEET No.	TOTAL SHEETS
11	SD	805	4.7/5.6	42	650

REGISTERED CIVIL ENGINEER 6/1/12 DATE

06-25-12
PLANS APPROVAL DATE

REGISTERED PROFESSIONAL ENGINEER
PAUL E. KOSINSKI
No. C73254
Exp. 12/31/12
CIVIL
STATE OF CALIFORNIA

THE STATE OF CALIFORNIA OR ITS OFFICERS OR AGENTS SHALL NOT BE RESPONSIBLE FOR THE ACCURACY OR COMPLETENESS OF SCANNED COPIES OF THIS PLAN SHEET.

DOKKEN ENGINEERING
5675 RUFFIN Rd
SUITE 250
SAN DIEGO, CA 92123

SANDAG
401 B St
SUITE 800
SAN DIEGO, CA 92101

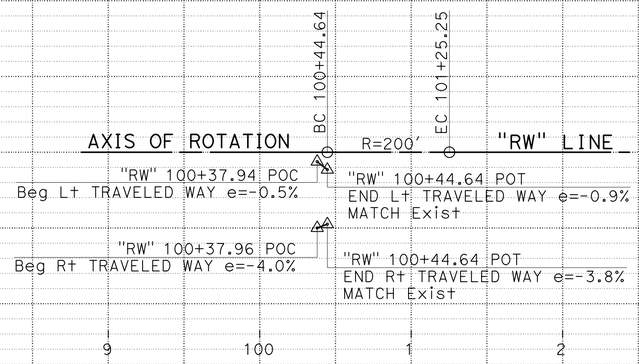

SUPERELEVATION DIAGRAM
"RW" LINE
REDWING ROAD

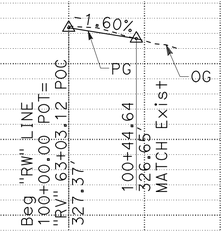

PROFILE
"RW" LINE
REDWING ROAD

PROFILE AND SUPERELEVATION DIAGRAM

SCALE: Horiz 1"=50'
Vert 1"=5'

PS-18

STATION	8	9	100	1	2	3	TOTAL
CY Exc			45				
CY Emb			4				

STATE OF CALIFORNIA - DEPARTMENT OF TRANSPORTATION
Caltrans

CONSULTANT FUNCTIONAL SUPERVISOR: GERARD LUMABAS
CALCULATED-DESIGNED BY: MATTHEW P. MAECHLER
CHECKED BY: DARWIN CRUZ
REVISED BY
DATE REVISED

LAST REVISION 06-10-12
DATE PLOTTED => 12-SEP-2012
TIME PLOTTED => 16:06

Dist	COUNTY	ROUTE	POST MILES TOTAL PROJECT	SHEET No.	TOTAL SHEETS
11	SD	805	4.7/5.6	43	650

REGISTERED CIVIL ENGINEER 6/1/12 DATE

06-25-12
PLANS APPROVAL DATE

REGISTERED PROFESSIONAL ENGINEER PAUL E. KOSINSKI No. C73254 Exp. 12/31/12 CIVIL STATE OF CALIFORNIA

THE STATE OF CALIFORNIA OR ITS OFFICERS OR AGENTS SHALL NOT BE RESPONSIBLE FOR THE ACCURACY OR COMPLETENESS OF SCANNED COPIES OF THIS PLAN SHEET.

DOKKEN ENGINEERING
5675 RUFFIN Rd
SUITE 250
SAN DIEGO, CA 92123

SANDAG
401 B St
SUITE 800
SAN DIEGO, CA 92101

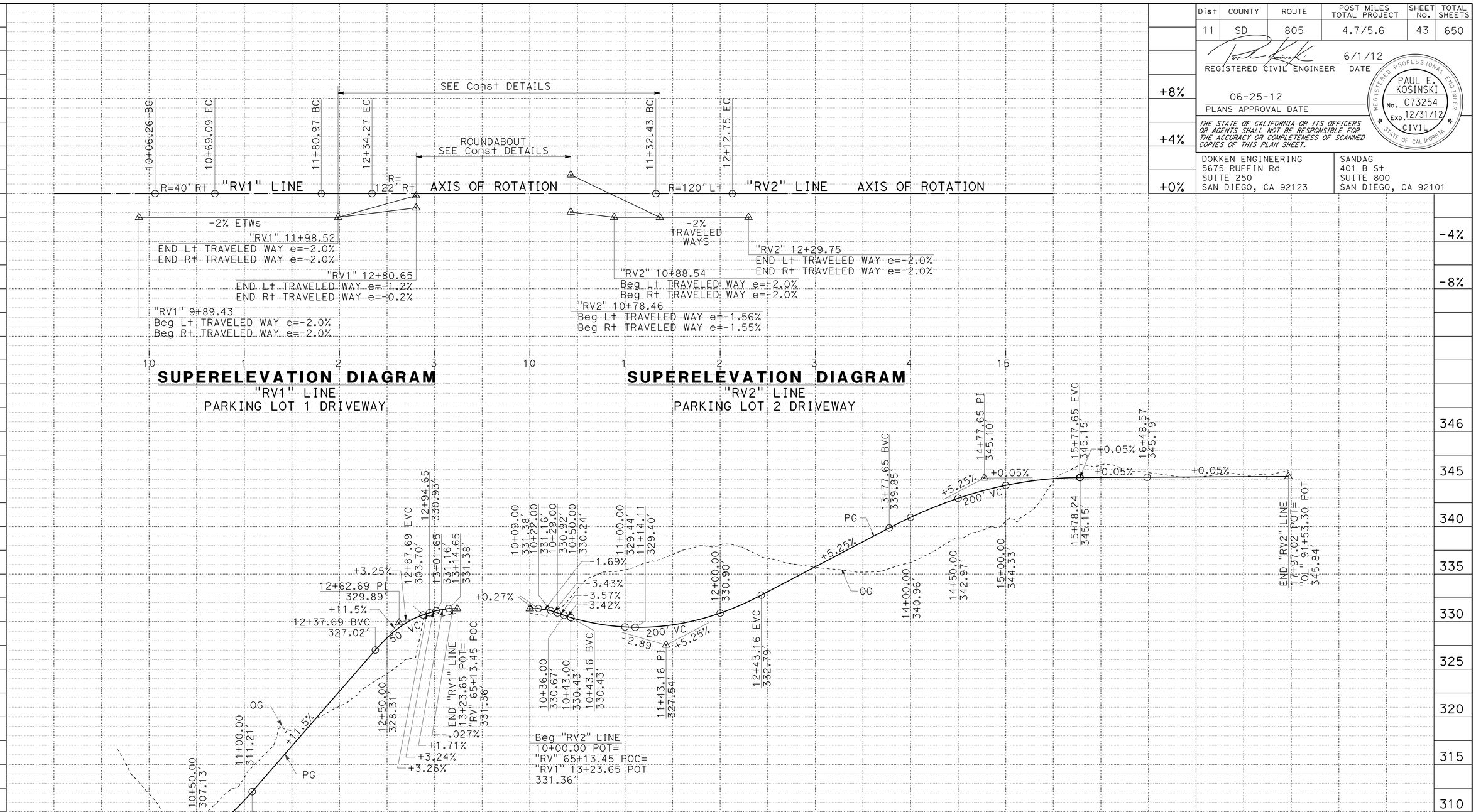

STATION		10	1	2	3	10	1	2	3	4	15	6	7	8	TOTAL
CY	Exc	1,099				5,827									
	Emb	243				1,831									

STATE OF CALIFORNIA - DEPARTMENT OF TRANSPORTATION

Caltrans

CONSULTANT FUNCTIONAL SUPERVISOR: GERARD LUMABAS

CALCULATED-DESIGNED BY: MATTHEW P. MAECHLER

CHECKED BY: DARWIN CRUZ

REVISED BY / DATE REVISED

LAST REVISION 06-10-12

DATE PLOTTED => 12-SEP-2012
TIME PLOTTED => 16:06

Dist	COUNTY	ROUTE	POST MILES TOTAL PROJECT	SHEET No.	TOTAL SHEETS
11	SD	805	4.7/5.6	44	650

REGISTERED CIVIL ENGINEER 6/1/12 DATE

06-25-12
PLANS APPROVAL DATE

REGISTERED PROFESSIONAL ENGINEER PAUL E. KOSINSKI No. C73254 Exp. 12/31/12 CIVIL STATE OF CALIFORNIA

THE STATE OF CALIFORNIA OR ITS OFFICERS OR AGENTS SHALL NOT BE RESPONSIBLE FOR THE ACCURACY OR COMPLETENESS OF SCANNED COPIES OF THIS PLAN SHEET.

DOKKEN ENGINEERING
5675 RUFFIN Rd
SUITE 250
SAN DIEGO, CA 92123

SANDAG
401 B St
SUITE 800
SAN DIEGO, CA 92101

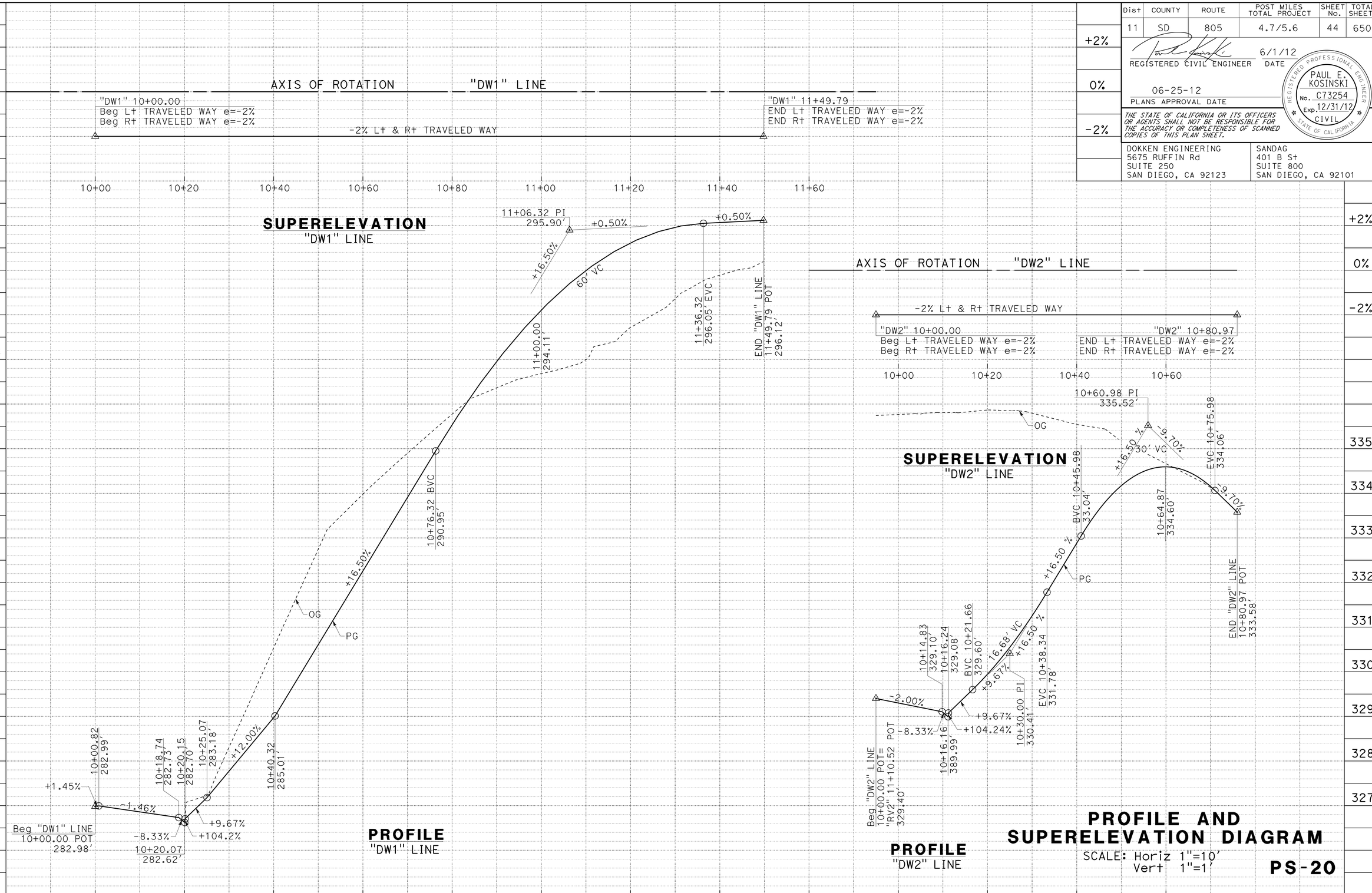

REVISED BY | DATE REVISED
MATTHEW P. MAECHLER | DARWIN CRUZ
CALCULATED-DESIGNED BY | CHECKED BY
CONSULTANT FUNCTIONAL SUPERVISOR
GERARD LUMABAS

STATE OF CALIFORNIA - DEPARTMENT OF TRANSPORTATION
Caltrans

LAST REVISION OG-10-12
DATE PLOTTED => 12-SEP-2012
TIME PLOTTED => 16:06

Dist	COUNTY	ROUTE	POST MILES TOTAL PROJECT	SHEET No.	TOTAL SHEETS
11	SD	805	4.7/5.6	45	650

REGISTERED CIVIL ENGINEER 06-01-12 DATE

06-25-12
PLANS APPROVAL DATE

REGISTERED PROFESSIONAL ENGINEER PAUL E. KOSINSKI No. C73254 Exp. 12-31-12 CIVIL STATE OF CALIFORNIA

THE STATE OF CALIFORNIA OR ITS OFFICERS OR AGENTS SHALL NOT BE RESPONSIBLE FOR THE ACCURACY OR COMPLETENESS OF SCANNED COPIES OF THIS PLAN SHEET.

DOKKEN ENGINEERING
5675 RUFFIN Rd
SUITE 250
SAN DIEGO, CA 92123

SANDAG
401 B St
SUITE 800
SAN DIEGO, CA 92101

NOTES:

1. FOR ACCURATE RIGHT OF WAY, CONTACT RIGHT OF WAY ENGINEERING AT THE DISTRICT OFFICE.
2. HORIZONTAL DATUM: NAD83 (Hpgn)
   VERTICAL DATUM: NGVD29
3. FOR DRIVEWAY PROFILES SEE SHEET PS-1.

CURVE DATA

No.	R	Δ	T	L
1	850.00′	04°59′58"	37.11′	74.17′
2	30.00′	13°43′26"	3.61′	7.19′
3	30.00′	08°33′10"	2.24′	4.48′
4	30.00′	97°08′21"	33.99′	50.86′
5	30.00′	84°31′55"	27.27′	44.26′
6	10.00′	180°00′00"	N/A	31.42′
7	50.00′	17°29′12"	7.69′	15.26′
8	50.00′	17°29′12"	7.69′	15.26′
9	30.00′	96°02′03"	33.34′	50.28′
10	1000.00′	05°15′34"	45.93′	91.79′
11	80.00′	21°57′13"	15.52′	30.65′
12	80.00′	20°02′31"	14.14′	27.98′
13	1057.86′	02°21′10"	21.72′	43.44′
14	28.00′	94°52′56"	30.49′	46.37′
15	30.00′	82°57′09"	26.52′	43.43′
16	100.00′	20°02′31"	17.67′	34.98′

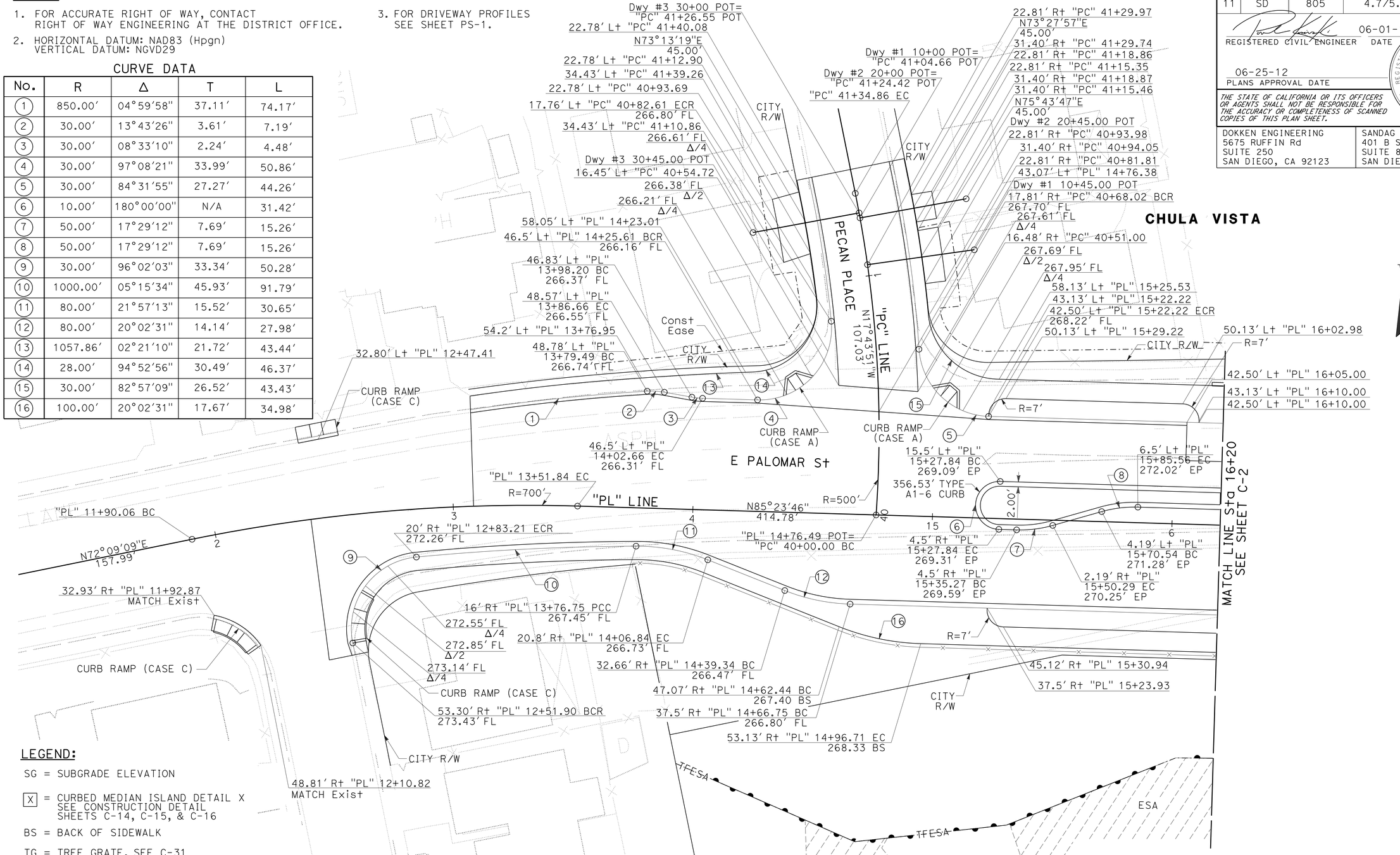

LEGEND:

SG = SUBGRADE ELEVATION

[X] = CURBED MEDIAN ISLAND DETAIL X SEE CONSTRUCTION DETAIL SHEETS C-14, C-15, & C-16

BS = BACK OF SIDEWALK

TG = TREE GRATE, SEE C-31

CURB RETURNS AND SPOT ELEVATIONS

CONSTRUCTION DETAILS

SCALE: 1" = 20′

C-1

STATE OF CALIFORNIA - DEPARTMENT OF TRANSPORTATION
Caltrans

CONSULTANT FUNCTIONAL SUPERVISOR: GERARD LUMABAS
CALCULATED-DESIGNED BY: MATTHEW P. MAECHLER
CHECKED BY: DARWIN CRUZ
REVISED BY / DATE REVISED

LAST REVISION 06-15-12 | DATE PLOTTED => 12-SEP-2012 | TIME PLOTTED => 16:06

Dist	COUNTY	ROUTE	POST MILES TOTAL PROJECT	SHEET No.	TOTAL SHEETS
11	SD	805	4.7/5.6	46	650

REGISTERED CIVIL ENGINEER 06-01-12 DATE

PAUL E. KOSINSKI No. C73254 Exp. 12-31-12 CIVIL STATE OF CALIFORNIA REGISTERED PROFESSIONAL ENGINEER

06-25-12
PLANS APPROVAL DATE

THE STATE OF CALIFORNIA OR ITS OFFICERS OR AGENTS SHALL NOT BE RESPONSIBLE FOR THE ACCURACY OR COMPLETENESS OF SCANNED COPIES OF THIS PLAN SHEET.

DOKKEN ENGINEERING
5675 RUFFIN Rd
SUITE 250
SAN DIEGO, CA 92123

SANDAG
401 B St
SUITE 800
SAN DIEGO, CA 92101

NOTE:

1. FOR ACCURATE RIGHT OF WAY, CONTACT RIGHT OF WAY ENGINEERING AT THE DISTRICT OFFICE.

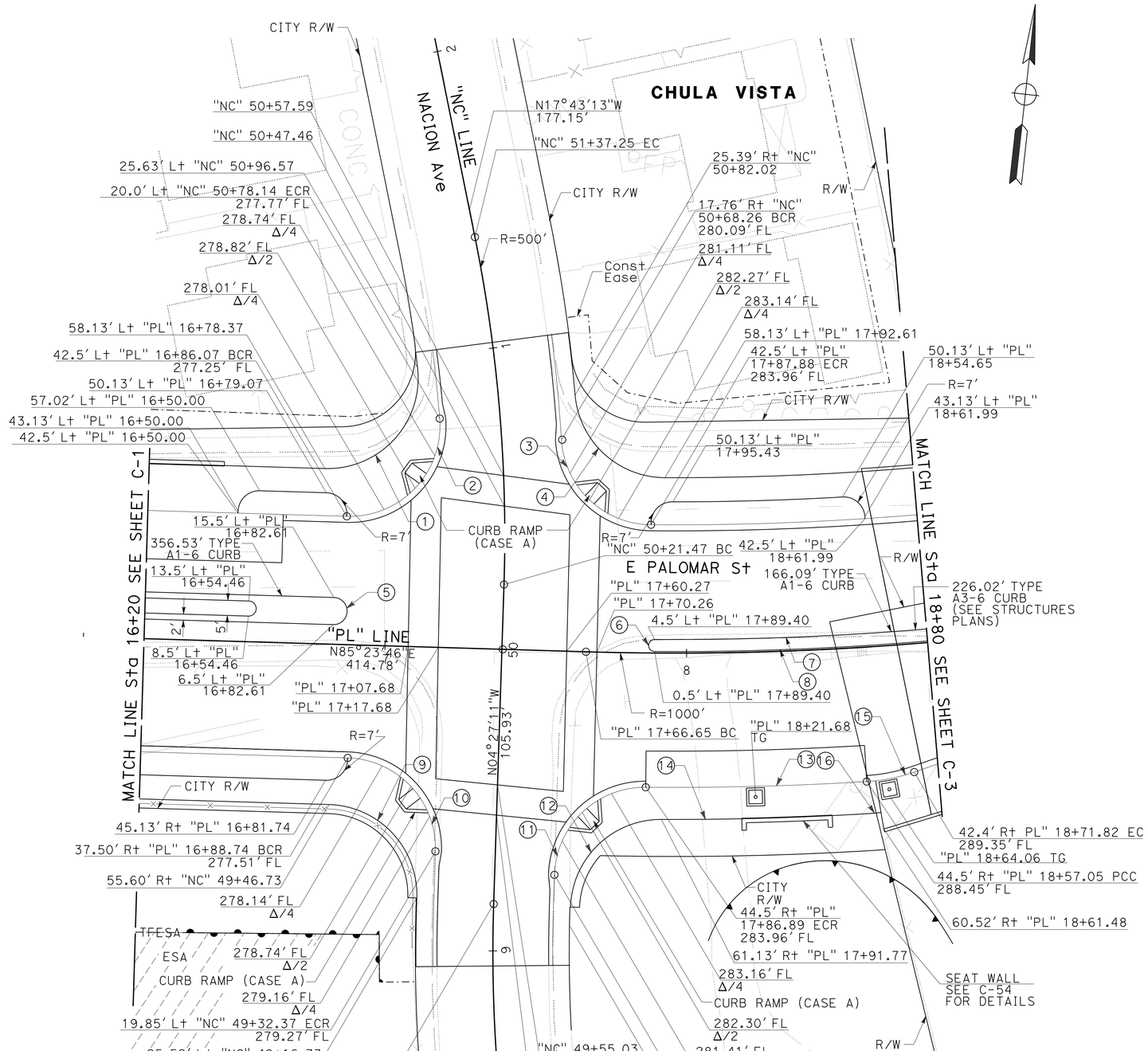

CURB RETURNS AND SPOT ELEVATIONS

CURVE DATA

No.	R	Δ	T	L
1	30.00'	98°27'20"	34.79'	51.55'
2	30.00'	96°20'35"	33.52'	50.45'
3	30.00'	86°00'17"	27.98'	45.03'
4	30.00'	84°41'57"	27.35'	44.35'
5	4.50'	180°00'00"	---	14.14'
6	2.00'	180°00'02"	---	6.28'
7	995.50'	07°07'25"	61.97'	123.77'
8	999.50'	10°19'46"	9034'	180.19'
9	30.00'	90°09'02"	30.08'	47.20'
10	30.00'	90°09'02"	30.08'	47.20'
11	30.00'	88°41'23"	29.32'	46.44'
12	30.00'	89°12'21"	29.59'	46.71'
13	1044.50'	04°01'13"	36.66'	73.29'
14	1055.12'	03°39'56"	33.96'	67.89'
15	59.00'	15°37'57"	8.10'	16.10'
16	69.62'	13°32'01"	3.56'	7.09'

CONSTRUCTION DETAILS

SCALE: 1" = 20'

C-2

STATE OF CALIFORNIA - DEPARTMENT OF TRANSPORTATION
Caltrans

CONSULTANT FUNCTIONAL SUPERVISOR: GERARD LUMABAS
CALCULATED-DESIGNED BY: MATTHEW P. MAECHLER
CHECKED BY: DARWIN CRUZ
REVISED BY / DATE REVISED

LAST REVISION 06-15-12
DATE PLOTTED => 12-SEP-2012
TIME PLOTTED => 16:06

Dist	COUNTY	ROUTE	POST MILES TOTAL PROJECT	SHEET No.	TOTAL SHEETS
11	SD	805	4.7/5.6	47	650

REGISTERED CIVIL ENGINEER 06-01-12 DATE

PAUL E. KOSINSKI No. C73254 Exp. 12-31-12 CIVIL — REGISTERED PROFESSIONAL ENGINEER — STATE OF CALIFORNIA

06-25-12
PLANS APPROVAL DATE

THE STATE OF CALIFORNIA OR ITS OFFICERS OR AGENTS SHALL NOT BE RESPONSIBLE FOR THE ACCURACY OR COMPLETENESS OF SCANNED COPIES OF THIS PLAN SHEET.

DOKKEN ENGINEERING
5675 RUFFIN Rd
SUITE 250
SAN DIEGO, CA 92123

SANDAG
401 B St
SUITE 800
SAN DIEGO, CA 92101

NOTE:

1. FOR ACCURATE RIGHT OF WAY, CONTACT RIGHT OF WAY ENGINEERING AT THE DISTRICT OFFICE.

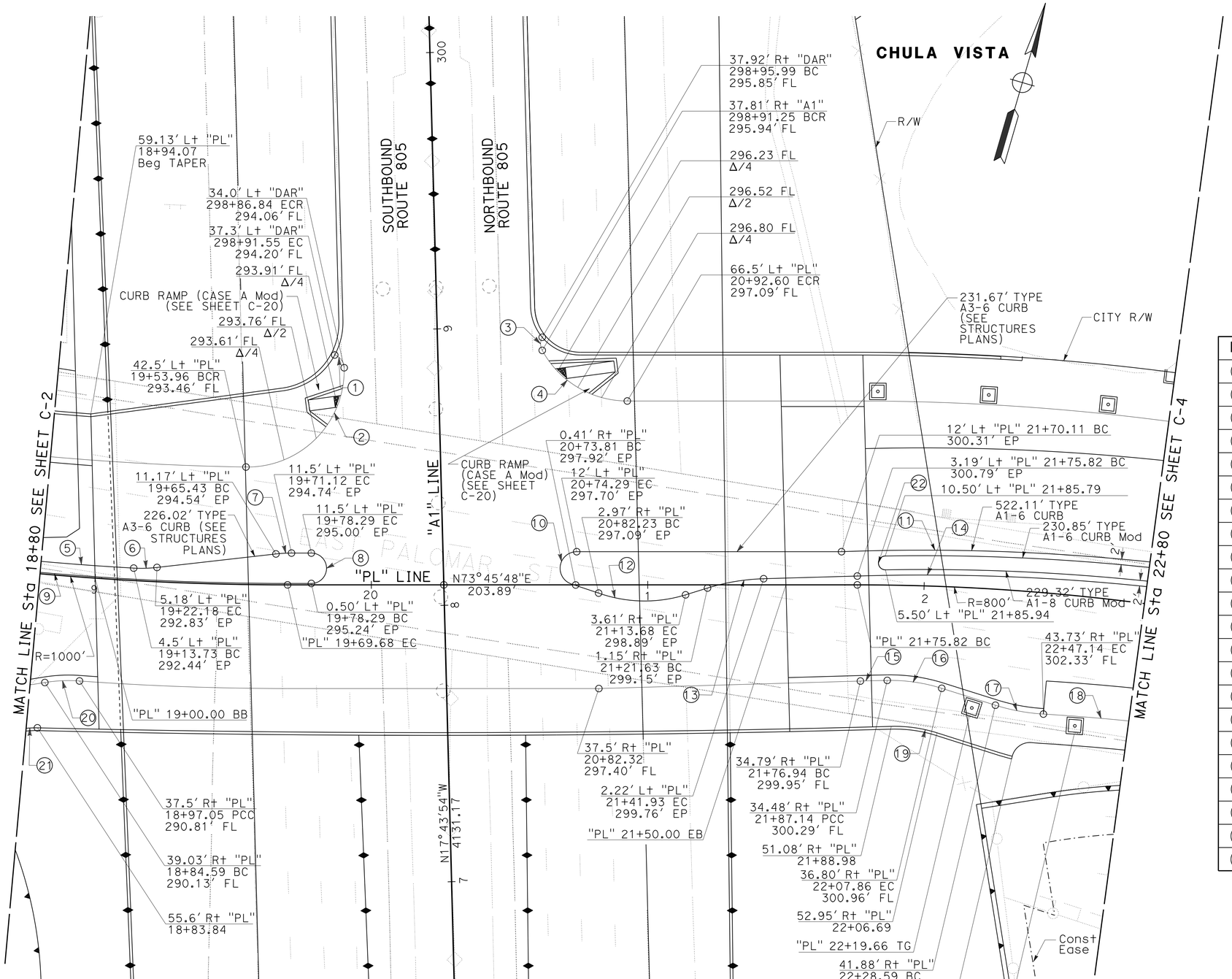

CURB RETURNS AND SPOT ELEVATIONS

CURVE DATA

No.	R	Δ	T	L
1	5.00'	70°02'07"	3.50'	6.11'
2	35.00'	92°23'45"	36.49'	56.44'
3	5.00'	56°36'28"	2.69'	4.94'
4	35.00'	61°30'26"	20.83'	37.57'
5	995.50'	07°07'25"	61.97'	123.77'
6	50.00'	09°40'43"	4.23'	8.45'
7	50.00'	06°28'22"	2.83'	5.65'
8	5.50'	180°00'00"	---	17.28'
9	999.50'	10°19'46"	90.34'	180.19'
10	6.00'	161°29'30"	36.82'	16.91'
11	789.00'	08°58'45"	61.95'	123.65'
12	50.00'	35°42'21"	16.10'	31.16'
13	76.00'	15°33'35"	10.38'	20.64'
14	780.00'	08°34'34"	58.49'	116.75'
15	742.00'	00°44'59"	4.86'	9.71'
16	62.00'	18°30'04"	10.10'	20.02'
17	72.00'	14°05'09"	8.90'	17.70'
18	731.00'	03°21'51"	21.47'	42.92'
19	50.00'	19°11'29"	8.45'	16.75'
20	54.00'	13°20'26"	6.32'	12.57'
21	30.00'	08°23'05"	2.20'	4.39'
22	2.50'	180°00'00"	---	7.85'

CONSTRUCTION DETAILS

SCALE: 1" = 20'

C-3

STATE OF CALIFORNIA - DEPARTMENT OF TRANSPORTATION
Caltrans

CONSULTANT FUNCTIONAL SUPERVISOR: GERARD LUMABAS
CALCULATED-DESIGNED BY: MATTHEW P. MAECHLER
CHECKED BY: DARWIN CRUZ
REVISED BY
DATE REVISED

LAST REVISION 06-15-12
DATE PLOTTED => 12-SEP-2012
TIME PLOTTED => 16:06

Dist	COUNTY	ROUTE	POST MILES TOTAL PROJECT	SHEET No.	TOTAL SHEETS
11	SD	805	4.7/5.6	48	650

REGISTERED CIVIL ENGINEER 06-01-12 DATE

06-25-12
PLANS APPROVAL DATE

REGISTERED PROFESSIONAL ENGINEER PAUL E. KOSINSKI No. C73254 Exp. 12-31-12 CIVIL STATE OF CALIFORNIA

THE STATE OF CALIFORNIA OR ITS OFFICERS OR AGENTS SHALL NOT BE RESPONSIBLE FOR THE ACCURACY OR COMPLETENESS OF SCANNED COPIES OF THIS PLAN SHEET.

DOKKEN ENGINEERING
5675 RUFFIN Rd
SUITE 250
SAN DIEGO, CA 92123

SANDAG
401 B St
SUITE 800
SAN DIEGO, CA 92101

NOTE:

1. FOR ACCURATE RIGHT OF WAY, CONTACT RIGHT OF WAY ENGINEERING AT THE DISTRICT OFFICE.

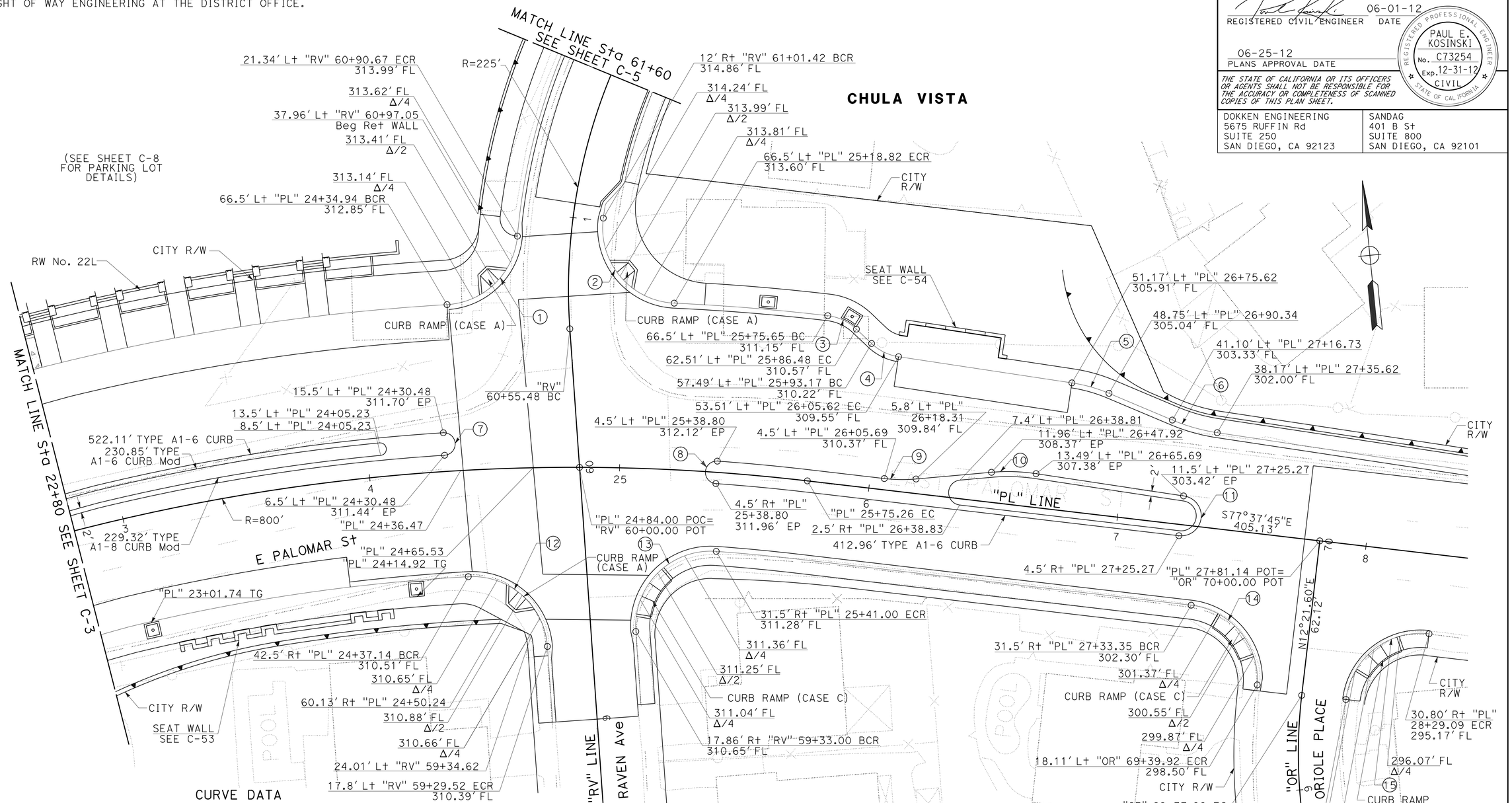

CURVE DATA

No.	R	Δ	T	L	No.	R	Δ	T	L
1	30.00'	81°39'39"	25.92'	42.76'	9	62.00'	11°44'55"	6.38'	12.71'
2	30.00'	95°04'06"	32.78'	49.78'	10	75.00'	13°39'27"	8.98'	17.88'
3	20.00'	36°49'31"	6.66'	12.85'	11	8.00'	180°00'00"	---	25.13'
4	20.00'	34°56'42"	6.30'	12.20'	12	30.00'	89°13'07"	29.59'	46.71'
5	62.00'	14°16'09"	7.76'	15.44'	13	30.00'	98°13'10"	34.64'	51.43'
6	75.00'	14°16'09"	9.39'	18.68'	14	30.00'	87°16'59"	28.61'	45.70'
7	4.50'	179°21'38"	806.51'	14.09'	15	30.00'	89°44'29"	29.86'	46.99'
8	4.50'	179°21'06"	795.51'	14.09'					

CURB RETURNS AND SPOT ELEVATIONS

CONSTRUCTION DETAILS

SCALE: 1" = 20'

C-4

STATE OF CALIFORNIA - DEPARTMENT OF TRANSPORTATION

Caltrans

CONSULTANT FUNCTIONAL SUPERVISOR: GERARD LUMABAS

CALCULATED-DESIGNED BY: MATTHEW P. MAECHLER

CHECKED BY: DARWIN CRUZ

REVISED BY / DATE REVISED

LAST REVISION 06-15-12

DATE PLOTTED => 12-SEP-2012
TIME PLOTTED => 16:06

Dist	COUNTY	ROUTE	POST MILES TOTAL PROJECT	SHEET No.	TOTAL SHEETS
11	SD	805	4.7/5.6	49	650

REGISTERED CIVIL ENGINEER 06-01-12 DATE

06-25-12
PLANS APPROVAL DATE

REGISTERED PROFESSIONAL ENGINEER PAUL E. KOSINSKI No. C73254 Exp. 12-31-12 CIVIL STATE OF CALIFORNIA

THE STATE OF CALIFORNIA OR ITS OFFICERS OR AGENTS SHALL NOT BE RESPONSIBLE FOR THE ACCURACY OR COMPLETENESS OF SCANNED COPIES OF THIS PLAN SHEET.

DOKKEN ENGINEERING
5675 RUFFIN Rd
SUITE 250
SAN DIEGO, CA 92123

SANDAG
401 B St
SUITE 800
SAN DIEGO, CA 92101

NOTE:

1. FOR ACCURATE RIGHT OF WAY, CONTACT RIGHT OF WAY ENGINEERING AT THE DISTRICT OFFICE.

CURVE DATA

No.	R	Δ	T	L
1	30.00′	81°54′37"	26.04′	42.89′
2	30.00′	52°35′55"	14.83′	27.52′
3	30.00′	81°58′42"	26.07′	42.92′
4	30.00′	71°48′36"	21.72′	37.60′

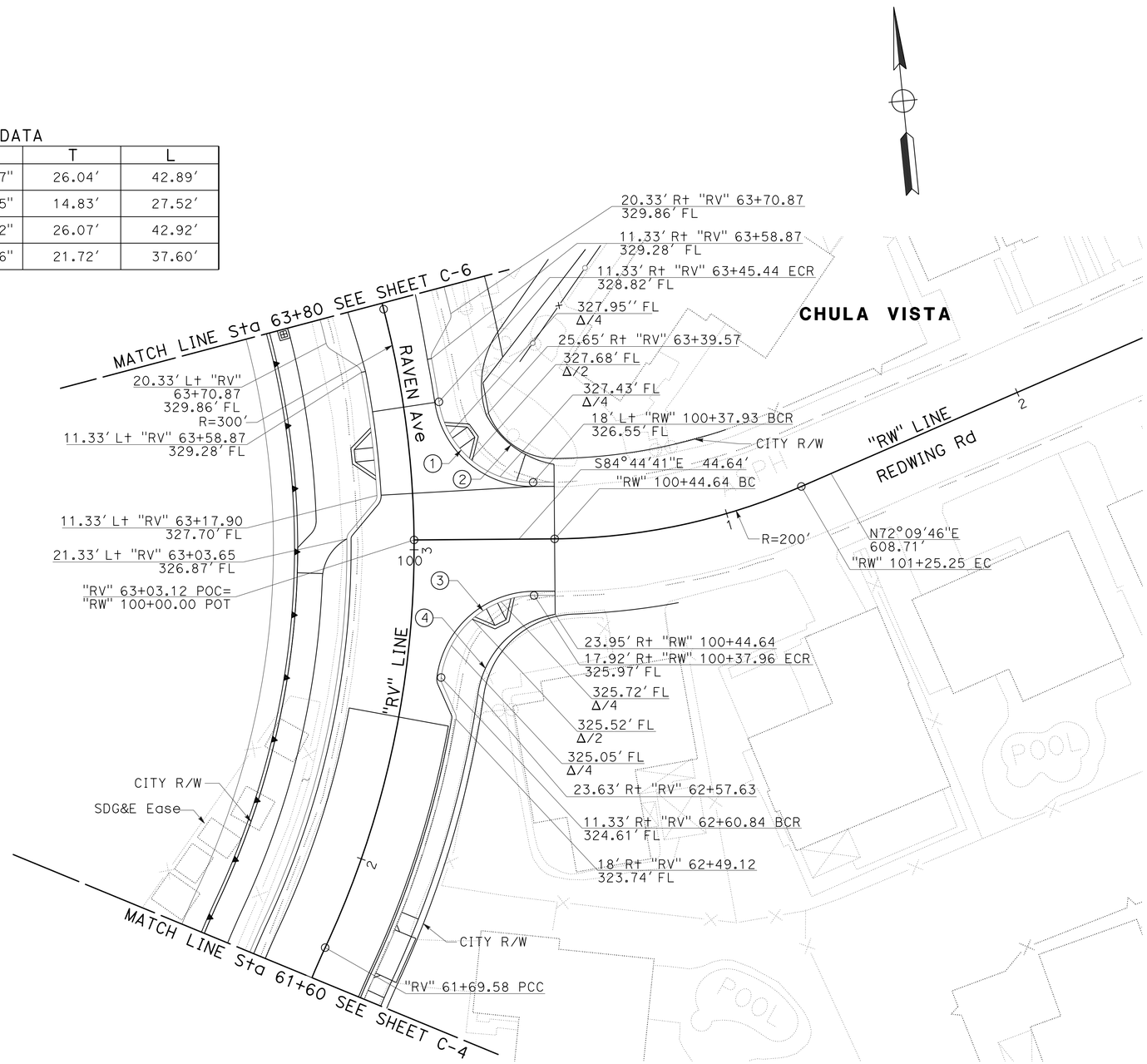

CURB RETURNS AND SPOT ELEVATIONS

CONSTRUCTION DETAILS

SCALE: 1" = 20′

C-5

STATE OF CALIFORNIA - DEPARTMENT OF TRANSPORTATION
Caltrans

CONSULTANT FUNCTIONAL SUPERVISOR: GERARD LUMABAS

CALCULATED-DESIGNED BY: MATTHEW P. MAECHLER
CHECKED BY: DARWIN CRUZ

REVISED BY
DATE REVISED

LAST REVISION 06-18-12
DATE PLOTTED => 12-SEP-2012
TIME PLOTTED => 16:06

Dist	COUNTY	ROUTE	POST MILES TOTAL PROJECT	SHEET No.	TOTAL SHEETS
11	SD	805	4.7/5.6	50	650

REGISTERED CIVIL ENGINEER 06-01-12 DATE

06-25-12
PLANS APPROVAL DATE

REGISTERED PROFESSIONAL ENGINEER PAUL E. KOSINSKI No. C73254 Exp. 12-31-12 CIVIL STATE OF CALIFORNIA

THE STATE OF CALIFORNIA OR ITS OFFICERS OR AGENTS SHALL NOT BE RESPONSIBLE FOR THE ACCURACY OR COMPLETENESS OF SCANNED COPIES OF THIS PLAN SHEET.

DOKKEN ENGINEERING
5675 RUFFIN Rd
SUITE 250
SAN DIEGO, CA 92123

SANDAG
401 B St
SUITE 800
SAN DIEGO, CA 92101

NOTES:

1. FOR ACCURATE RIGHT OF WAY, CONTACT RIGHT OF WAY ENGINEERING AT THE DISTRICT OFFICE.
2. [X] = SEE "CURB MEDIAN ISLAN DETAILS" ON SHEET C-14.

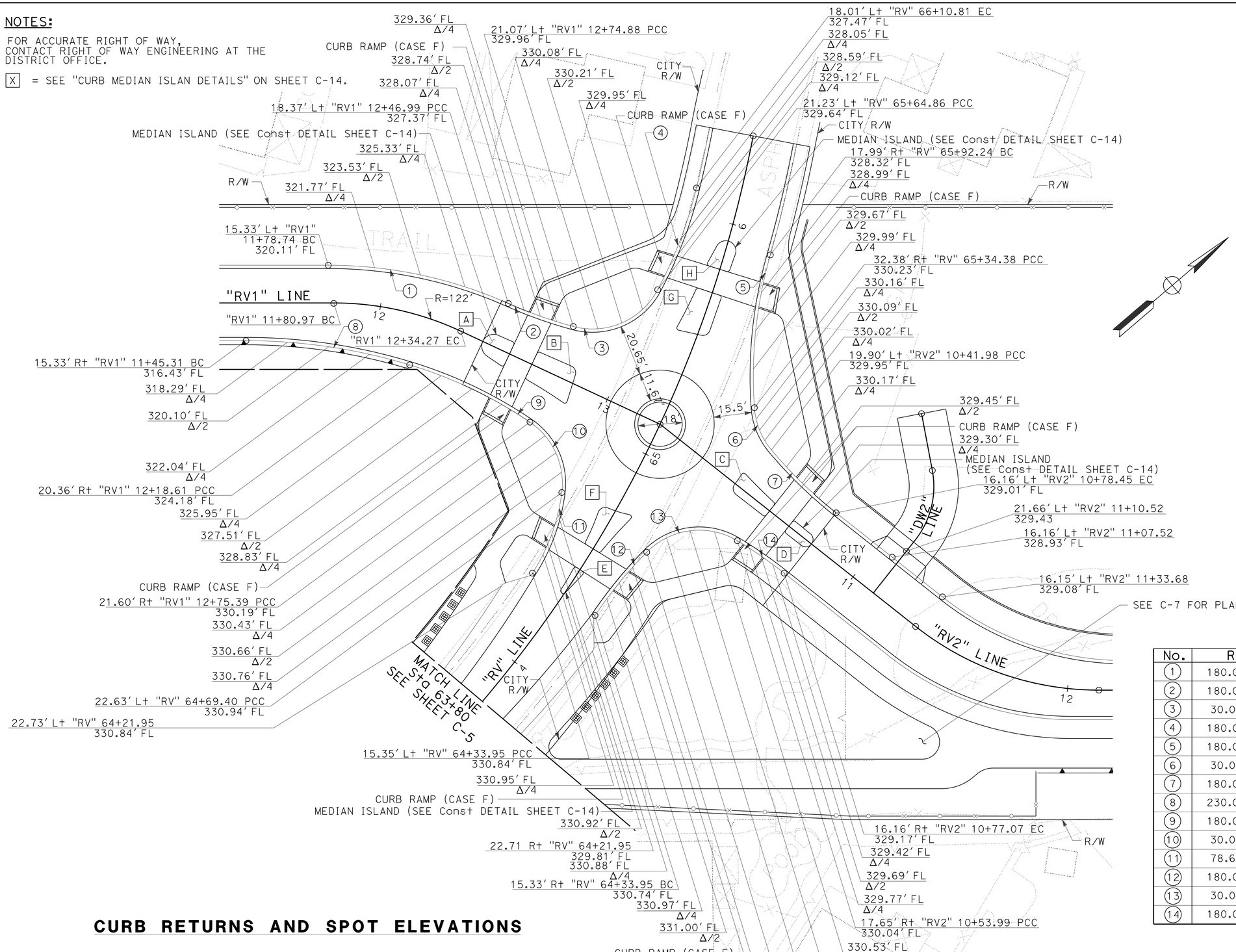

CURB RETURNS AND SPOT ELEVATIONS

CURVE DATA

No.	R	Δ	T	L
1	180.00'	23°58'32"	38.22'	75.32'
2	180.00'	08°55'47"	14.06'	28.05'
3	30.00'	77°06'32"	23.91'	40.37'
4	180.00'	14°07'24"	22.30'	44.37'
5	180.00'	19°58'05"	31.69'	62.73'
6	30.00'	35°56'01"	9.73'	18.81'
7	180.00'	11°41'37"	18.43'	36.74'
8	230.00'	16°48'39"	33.99'	67.48'
9	180.00'	17°17'46"	27.38'	54.34'
10	30.00'	63°05'51"	18.42'	33.04'
11	78.67'	25°36'08"	17.87'	35.15'
12	180.00'	10°34'57"	16.67'	33.25'
13	30.00'	76°24'30"	23.61'	40.01'
14	180.00'	07°22'08"	11.59'	23.15'

CONSTRUCTION DETAILS

SCALE: 1" = 20'

C-6

STATE OF CALIFORNIA - DEPARTMENT OF TRANSPORTATION
Caltrans
CONSULTANT FUNCTIONAL SUPERVISOR: GERARD LUMABAS
CALCULATED-DESIGNED BY: MATTHEW P. MAECHLER
CHECKED BY: DARWIN CRUZ
REVISED BY
DATE REVISED

LAST REVISION 06-18-12
DATE PLOTTED => 12-SEP-2012
TIME PLOTTED => 16:06

Dist	COUNTY	ROUTE	POST MILES TOTAL PROJECT	SHEET No.	TOTAL SHEETS
11	SD	805	4.7/5.6	51	650

REGISTERED CIVIL ENGINEER 06-01-12 DATE

PLANS APPROVAL DATE 06-25-12

REGISTERED PROFESSIONAL ENGINEER PAUL E. KOSINSKI No. C73254 Exp. 12-31-12 CIVIL STATE OF CALIFORNIA

THE STATE OF CALIFORNIA OR ITS OFFICERS OR AGENTS SHALL NOT BE RESPONSIBLE FOR THE ACCURACY OR COMPLETENESS OF SCANNED COPIES OF THIS PLAN SHEET.

DOKKEN ENGINEERING
5675 RUFFIN Rd
SUITE 250
SAN DIEGO, CA 92123

SANDAG
401 B St
SUITE 800
SAN DIEGO, CA 92101

NOTE:

FOR ACCURATE RIGHT OF WAY, CONTACT RIGHT OF WAY ENGINEERING AT THE DISTRICT OFFICE.

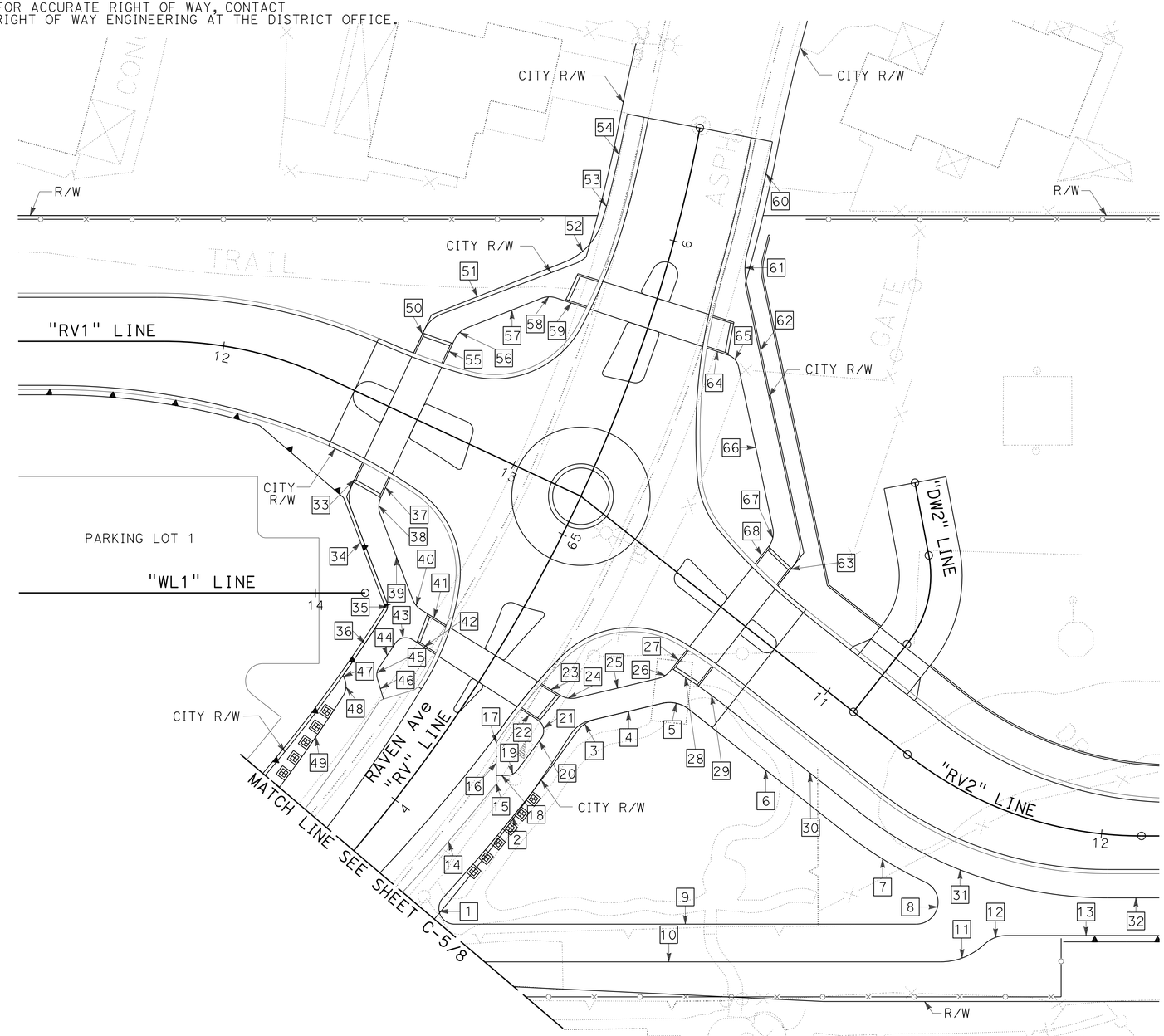

PLANTING AREA CURVE DATA

CURVE DATA (PLANTING AREA)

No.	R	Δ	L
1	5.00′	132°31′41"	11.57′
2	530.95′	07°19′27"	67.87′
3	10.00′	41°23′29"	7.22′
4	-	N27°06′31"E	21.88′
5	10.00′	51°45′05"	9.03′
6	-	S78°51′36"W	62.37′
7	135.67′	13°06′23"	31.03′
8	7.00′	154°45′36"	18.91′
9	-	N40°30′49"E	146.79′
10	-	N40°30′49"E	172.84′
11	20.00′	40°00′00"	13.96′
12	10.00′	40°00′00"	6.98′
13	-	N40°30′49"E	172.84′
14	520.33′	05°03′26"	45.93′
15	3.00′	39°03′28"	2.05′
16	-	S50°07′38"E	10.83′
17	3.00′	34°37′39"	1.81′
18	-	N39°52′22"E	3.41′
19	4.00′	51°51′13"	3.62′
20	522.95′	01°24′29"	12.85′
21	4.00′	93°23′30"	6.52′
22	-	S73°13′11"W	6.52′
23	-	N72°04′25"E	6.93′
24	7.00′	44°57′54"	5.49′
25	-	N27°06′31"E	26.68′
26	7.00′	38°14′55"	4.67′
27	-	N11°08′24"W	8.52′
28	173.00′	03°19′32"	10.04′
29	172.33′	03°26′02"	10.33′
30	-	S78°51′36"W	54.27′
31	127.67′	38°20′47"	85.45′
32	-	S40°30′49"W	57.88′
33	-	S24°27′10"E	12.07′
34	-	N70°22′10"W	36.09′

CURVE DATA (PLANTING AREA) Cont

No.	R	Δ	L
35	3.00′	53°12′13"	2.79′
36	463.04′	03°03′06"	24.66′
37	-	S24°27′10"E	6.86′
38	7.00′	45°55′00"	5.61′
39	-	N70°22′10"W	28.86′
40	7.00′	37°33′25"	4.59′
41	-	S72°04′25"W	9.23′
42	-	S73°13′11"W	8.64′
43	4.00′	89°31′03"	6.25′
44	471.04′	01°07′56"	9.31′
45	4.00′	50°48′13"	3.55′
46	-	N65°58′09"W	6.88′
47	-	N75°12′10"W	0.84′
48	6.00′	58°26′14"	6.12′
49	469.91′	04°31′10"	37.07′
50	-	S24°27′10"E	13.37′
51	-	S18°51′55"W	45.71′
52	20.00′	51°05′44"	17.84′
53	174.50′	03°26′33"	10.48′
54	476.50′	02°59′15"	24.85′
55	-	S24°27′10"E	8.56′
56	7.00′	43°19′05"	5.29′
57	-	S18°51′55"W	25.53′
58	7.00′	40°01′42"	4.89′
59	-	S58°53′37"W	10.07′
60	523.50′	03°58′57"	36.39′
61	20.00′	26°48′10"	9.36′
62	-	N61°28′51"W	87.91′
63	-	N11°08′24"W	13.34′
64	-	S58°53′37"W	7.13′
65	5.00′	59°37′32"	5.20′
66	-	N61°28′51"W	52.56′
67	7.00′	50°20′27"	6.15′
68	-	N11°08′24"W	7.01′

CONSTRUCTION DETAILS

SCALE: 1" = 20′

C-7

STATE OF CALIFORNIA - DEPARTMENT OF TRANSPORTATION

Caltrans

CONSULTANT FUNCTIONAL SUPERVISOR: GERARD LUMABAS

CALCULATED-DESIGNED BY: MATTHEW P. MAECHLER

CHECKED BY: DARWIN CRUZ

REVISED BY / DATE REVISED

LAST REVISION 06-18-12

DATE PLOTTED => 12-SEP-2012
TIME PLOTTED => 16:07

Dist	COUNTY	ROUTE	POST MILES TOTAL PROJECT	SHEET No.	TOTAL SHEETS
11	SD	805	4.7/5.6	52	650

REGISTERED CIVIL ENGINEER 06-01-12 DATE

PAUL E. KOSINSKI No. C73254 Exp. 12-31-12 CIVIL STATE OF CALIFORNIA REGISTERED PROFESSIONAL ENGINEER

06-25-12
PLANS APPROVAL DATE

THE STATE OF CALIFORNIA OR ITS OFFICERS OR AGENTS SHALL NOT BE RESPONSIBLE FOR THE ACCURACY OR COMPLETENESS OF SCANNED COPIES OF THIS PLAN SHEET.

DOKKEN ENGINEERING
5675 RUFFIN Rd
SUITE 250
SAN DIEGO, CA 92123

SANDAG
401 B St
SUITE 800
SAN DIEGO, CA 92101

NOTES:

1. FOR ACCURATE RIGHT OF WAY, CONTACT RIGHT OF WAY ENGINEERING AT THE DISTRICT OFFICE.
2. FOR SECTION C-C SEE SHEET C-17.
3. FOR SPOT ELEVATIONS SEE SHEET C-11.
4. [X] = SEE "CURB MEDIAN ISLAND DETAILS" ON SHEETS C-15 AND C-16.

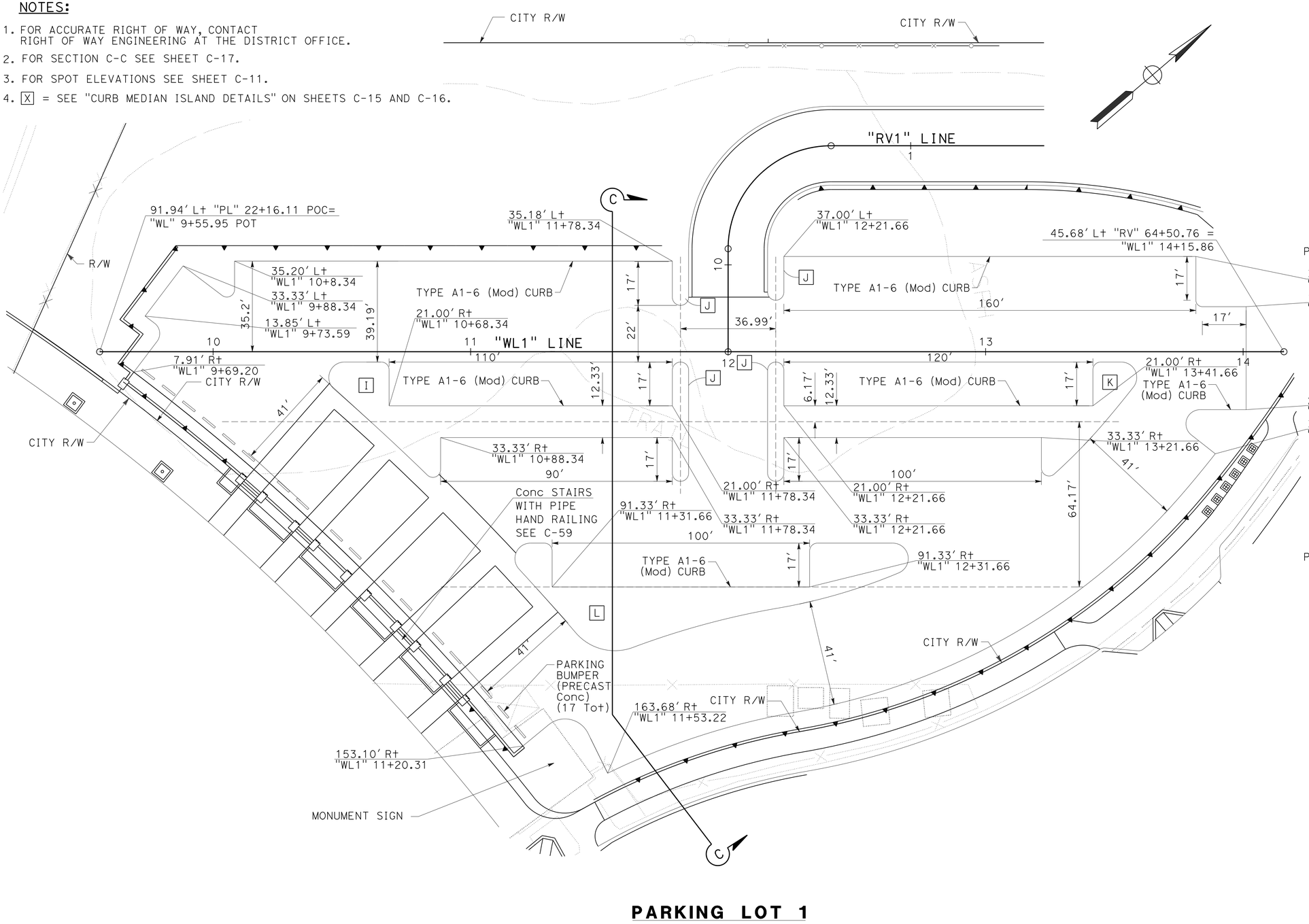

PARKING STALL DETAIL
NO SCALE

PARKING LOT 1

CONSTRUCTION DETAILS

SCALE: 1" = 20'

C-8

STATE OF CALIFORNIA - DEPARTMENT OF TRANSPORTATION
Caltrans

CONSULTANT FUNCTIONAL SUPERVISOR: GERARD LUMABAS
CALCULATED-DESIGNED BY: MATTHEW P. MAECHLER
CHECKED BY: DARWIN CRUZ
REVISED BY
DATE REVISED

LAST REVISION 06-18-12
DATE PLOTTED => 12-SEP-2012
TIME PLOTTED => 16:07

Dist	COUNTY	ROUTE	POST MILES TOTAL PROJECT	SHEET No.	TOTAL SHEETS
11	SD	805	4.7/5.6	53	650

REGISTERED CIVIL ENGINEER 06-01-12 DATE

06-25-12
PLANS APPROVAL DATE

REGISTERED PROFESSIONAL ENGINEER PAUL E. KOSINSKI No. C73254 Exp. 12-31-12 CIVIL STATE OF CALIFORNIA

THE STATE OF CALIFORNIA OR ITS OFFICERS OR AGENTS SHALL NOT BE RESPONSIBLE FOR THE ACCURACY OR COMPLETENESS OF SCANNED COPIES OF THIS PLAN SHEET.

DOKKEN ENGINEERING
5675 RUFFIN Rd
SUITE 250
SAN DIEGO, CA 92123

SANDAG
401 B St
SUITE 800
SAN DIEGO, CA 92101

NOTES:

1. FOR ACCURATE RIGHT OF WAY, RIGHT OF WAY ENGINEERING AT THE DISTRICT OFFICE.
2. FOR SECTION A-A AND B-B SEE SHEET C-17.
3. FOR SPOT ELEVATIONS SEE SHEET C-12.
4. FOR "PARKING SPACE DETAIL" SEE SHEET C-8.
5. [X] = SEE "CURB MEDIAN ISLAND DETAILS" ON SHEETS C-15 AND C-16.

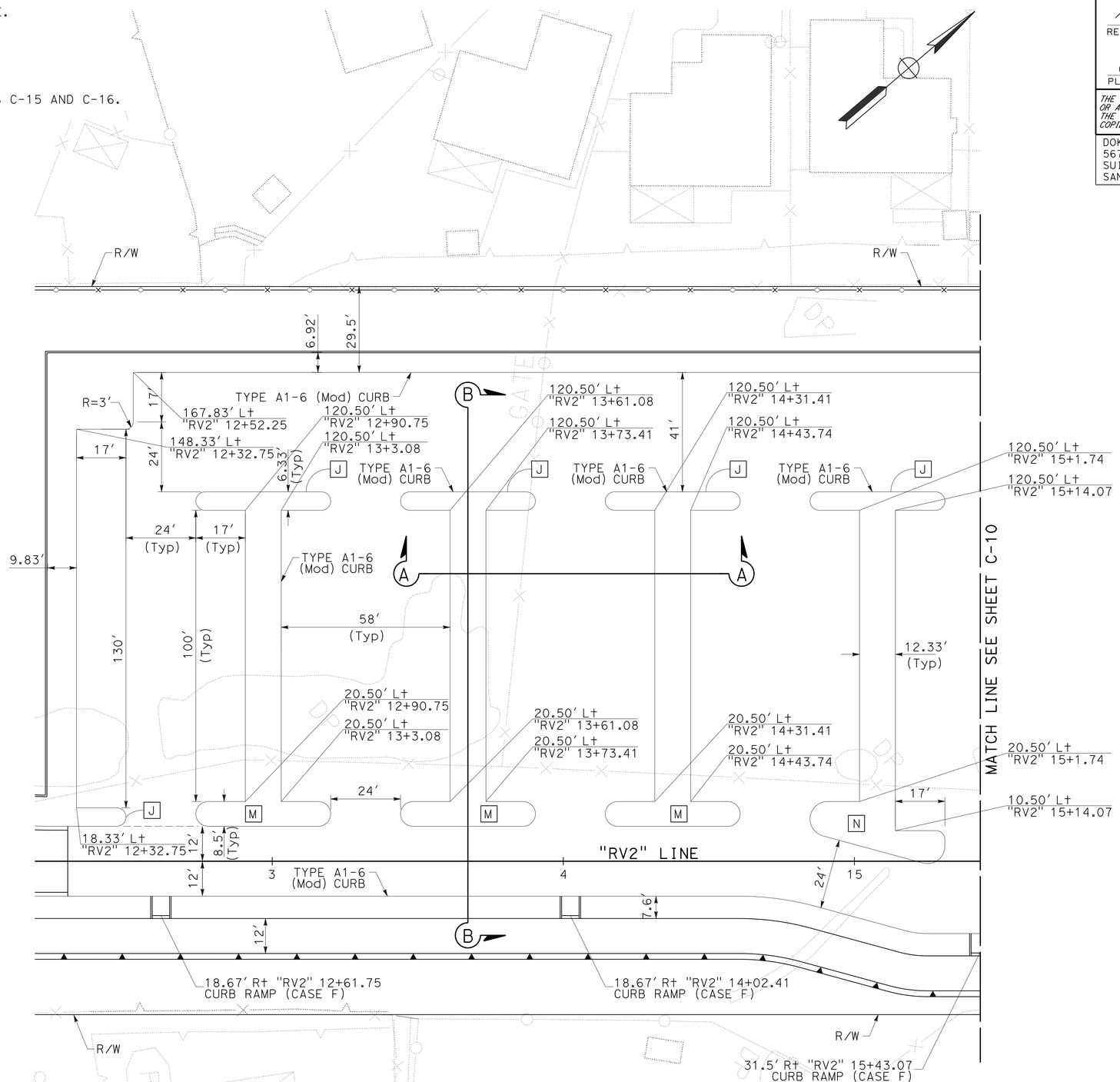

PARKING LOT 2

CONSTRUCTION DETAILS

SCALE: 1" = 20'

C-9

STATE OF CALIFORNIA - DEPARTMENT OF TRANSPORTATION
Caltrans

CONSULTANT FUNCTIONAL SUPERVISOR: GERARD LUMABAS
CALCULATED-DESIGNED BY: MATTHEW P. MAECHLER
CHECKED BY: DARWIN CRUZ
REVISED BY
DATE REVISED

LAST REVISION 6-7-12
DATE PLOTTED => 12-SEP-2012
TIME PLOTTED => 16:07

Dist	COUNTY	ROUTE	POST MILES TOTAL PROJECT	SHEET No.	TOTAL SHEETS
11	SD	805	4.7/5.6	54	650

REGISTERED CIVIL ENGINEER 06-01-12 DATE

06-25-12
PLANS APPROVAL DATE

REGISTERED PROFESSIONAL ENGINEER PAUL E. KOSINSKI No. C73254 Exp. 12-31-12 CIVIL STATE OF CALIFORNIA

THE STATE OF CALIFORNIA OR ITS OFFICERS OR AGENTS SHALL NOT BE RESPONSIBLE FOR THE ACCURACY OR COMPLETENESS OF SCANNED COPIES OF THIS PLAN SHEET.

DOKKEN ENGINEERING
5675 RUFFIN Rd
SUITE 250
SAN DIEGO, CA 92123

SANDAG
401 B St
SUITE 800
SAN DIEGO, CA 92101

NOTES:

1. FOR ACCURATE RIGHT OF WAY, CONTACT RIGHT OF WAY ENGINEERING AT THE DISTRICT OFFICE.
2. FOR SPOT ELEVATIONS SEE SHEET C-13.
3. FOR SECTION A-A AND B-B SEE SHEET C-17.
4. FOR "PARKING SPACE DETAIL" SEE SHEET C-8.
5. [X] = SEE "CURB MEDIAN ISLAND DETAILS" ON SHEETS C-15 AND C-16.

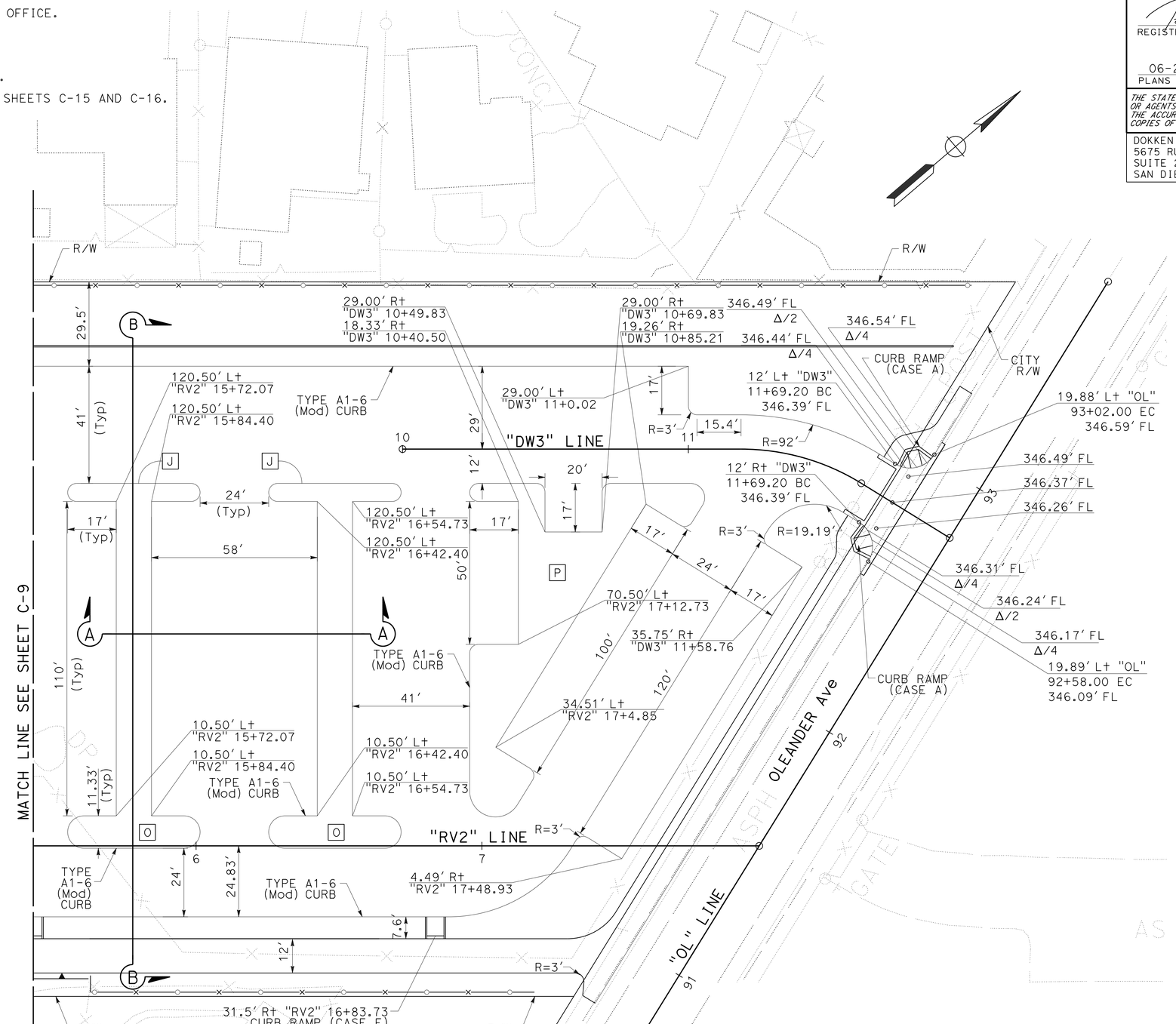

PARKING LOT 2

CONSTRUCTION DETAILS

SCALE: 1" = 20'

C-10

STATE OF CALIFORNIA - DEPARTMENT OF TRANSPORTATION
Caltrans

CONSULTANT FUNCTIONAL SUPERVISOR: GERARD LUMABAS
CALCULATED-DESIGNED BY: MATTHEW P. MAECHLER
CHECKED BY: DARWIN CRUZ
REVISED BY
DATE REVISED

LAST REVISION 06-18-12
DATE PLOTTED => 12-SEP-2012
TIME PLOTTED => 16:07

Dist	COUNTY	ROUTE	POST MILES TOTAL PROJECT	SHEET No.	TOTAL SHEETS
11	SD	805	4.7/5.6	55	650

REGISTERED CIVIL ENGINEER 06-01-12 DATE

06-25-12
PLANS APPROVAL DATE

REGISTERED PROFESSIONAL ENGINEER
PAUL E. KOSINSKI
No. C73254
Exp. 12-31-12
CIVIL
STATE OF CALIFORNIA

THE STATE OF CALIFORNIA OR ITS OFFICERS OR AGENTS SHALL NOT BE RESPONSIBLE FOR THE ACCURACY OR COMPLETENESS OF SCANNED COPIES OF THIS PLAN SHEET.

DOKKEN ENGINEERING
5675 RUFFIN Rd
SUITE 250
SAN DIEGO, CA 92123

SANDAG
401 B St
SUITE 800
SAN DIEGO, CA 92101

NOTES:

1. FOR ACCURATE RIGHT OF WAY, CONTACT RIGHT OF WAY ENGINEERING AT THE DISTRICT OFFICE.
2. SEE SHEET C-17 FOR ADDITIONAL SUBGRADE INFORMATION.

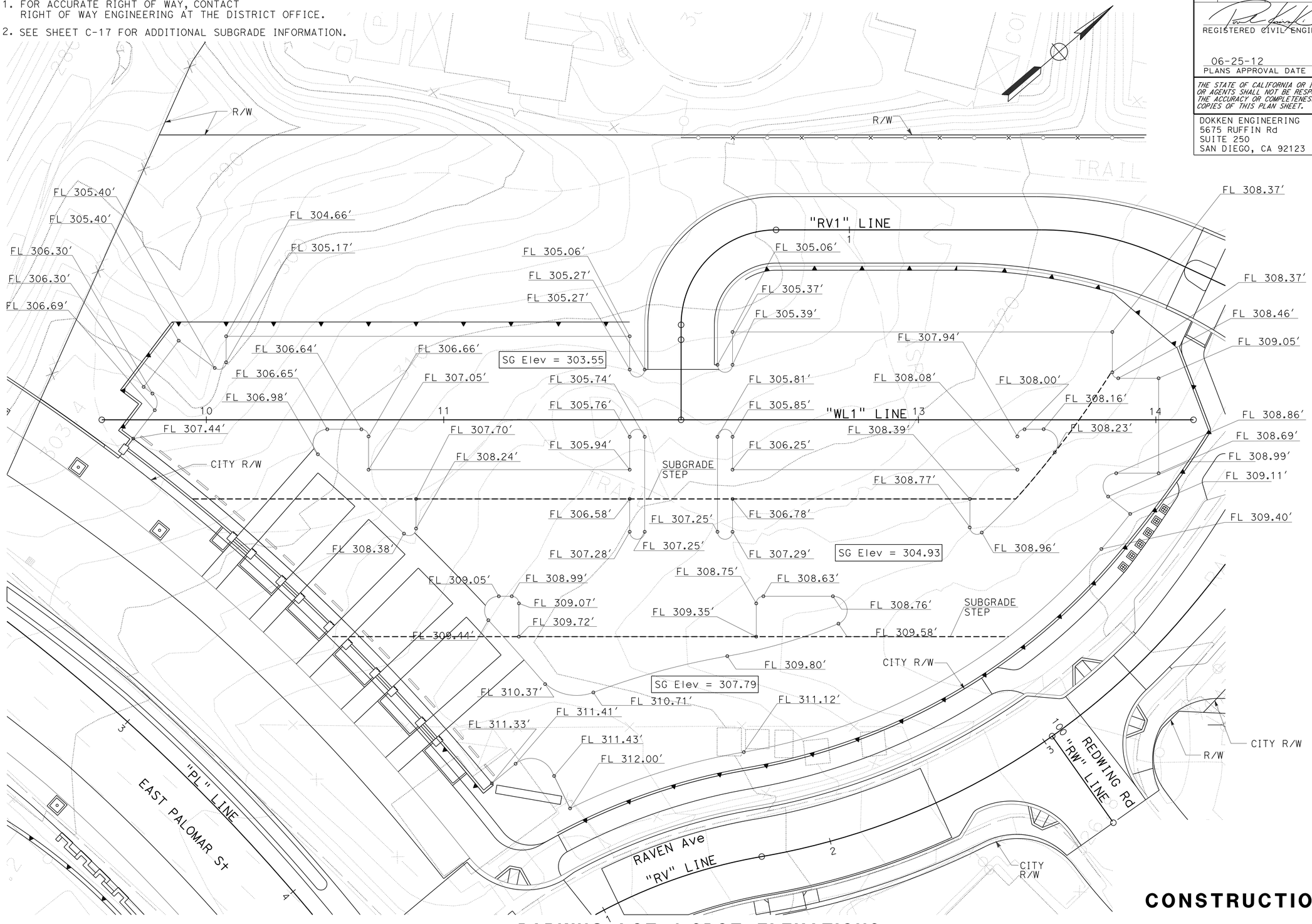

PARKING LOT 1 SPOT ELEVATIONS

CONSTRUCTION DETAILS

SCALE: 1" = 20'

C-11

STATE OF CALIFORNIA - DEPARTMENT OF TRANSPORTATION

Caltrans

CONSULTANT FUNCTIONAL SUPERVISOR: GERARD LUMABAS

CALCULATED-DESIGNED BY: MATTHEW P. MAECHLER

CHECKED BY: DARWIN CRUZ

REVISED BY

DATE REVISED

LAST REVISION DATE PLOTTED => 12-SEP-2012
TIME PLOTTED => 16:07
06-18-12

Dist	COUNTY	ROUTE	POST MILES TOTAL PROJECT	SHEET No.	TOTAL SHEETS
11	SD	805	4.7/5.6	56	650

REGISTERED CIVIL ENGINEER 06-01-12 DATE

PAUL E. KOSINSKI No. C73254 Exp. 12-31-12 CIVIL — REGISTERED PROFESSIONAL ENGINEER — STATE OF CALIFORNIA

06-25-12
PLANS APPROVAL DATE

THE STATE OF CALIFORNIA OR ITS OFFICERS OR AGENTS SHALL NOT BE RESPONSIBLE FOR THE ACCURACY OR COMPLETENESS OF SCANNED COPIES OF THIS PLAN SHEET.

DOKKEN ENGINEERING
5675 RUFFIN Rd
SUITE 250
SAN DIEGO, CA 92123

SANDAG
401 B St
SUITE 800
SAN DIEGO, CA 92101

NOTES:

1. FOR ACCURATE RIGHT OF WAY, CONTACT RIGHT OF WAY ENGINEERING AT THE DISTRICT OFFICE.
2. SEE SHEET C-17 FOR ADDITIONAL SUBGRADE INFORMATION.

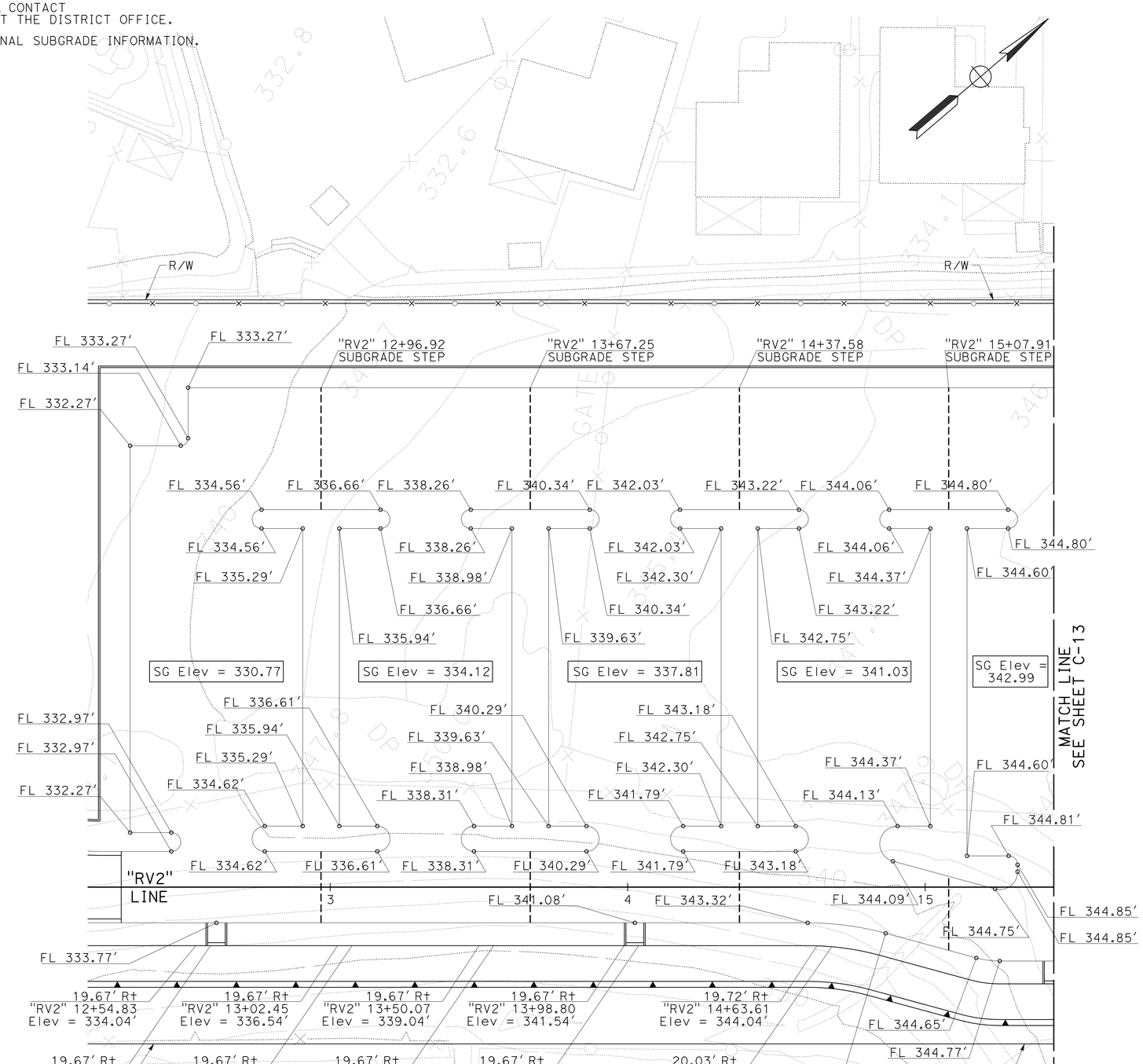

PARKING LOT 2 SPOT ELEVATIONS

CONSTRUCTION DETAILS

SCALE: 1" = 20′

C-12

STATE OF CALIFORNIA - DEPARTMENT OF TRANSPORTATION
Caltrans

CONSULTANT FUNCTIONAL SUPERVISOR: GERARD LUMABAS
CALCULATED-DESIGNED BY: MATTHEW P. MAECHLER
CHECKED BY: DARWIN CRUZ
REVISED BY
DATE REVISED

LAST REVISION 06-18-12
DATE PLOTTED => 17-SEP-2012
TIME PLOTTED => 16:27

Dist	COUNTY	ROUTE	POST MILES TOTAL PROJECT	SHEET No.	TOTAL SHEETS
11	SD	805	4.7/5.6	57	650

REGISTERED CIVIL ENGINEER 06-01-12 DATE

06-25-12
PLANS APPROVAL DATE

REGISTERED PROFESSIONAL ENGINEER PAUL E. KOSINSKI No. C73254 Exp. 12-31-12 CIVIL STATE OF CALIFORNIA

THE STATE OF CALIFORNIA OR ITS OFFICERS OR AGENTS SHALL NOT BE RESPONSIBLE FOR THE ACCURACY OR COMPLETENESS OF SCANNED COPIES OF THIS PLAN SHEET.

DOKKEN ENGINEERING
5675 RUFFIN Rd
SUITE 250
SAN DIEGO, CA 92123

SANDAG
401 B St
SUITE 800
SAN DIEGO, CA 92101

NOTES:

1. FOR ACCURATE RIGHT OF WAY, CONTACT RIGHT OF WAY ENGINEERING AT THE DISTRICT OFFICE.
2. SEE SHEET C-17 FOR ADDITIONAL SUBGRADE INFORMATION.

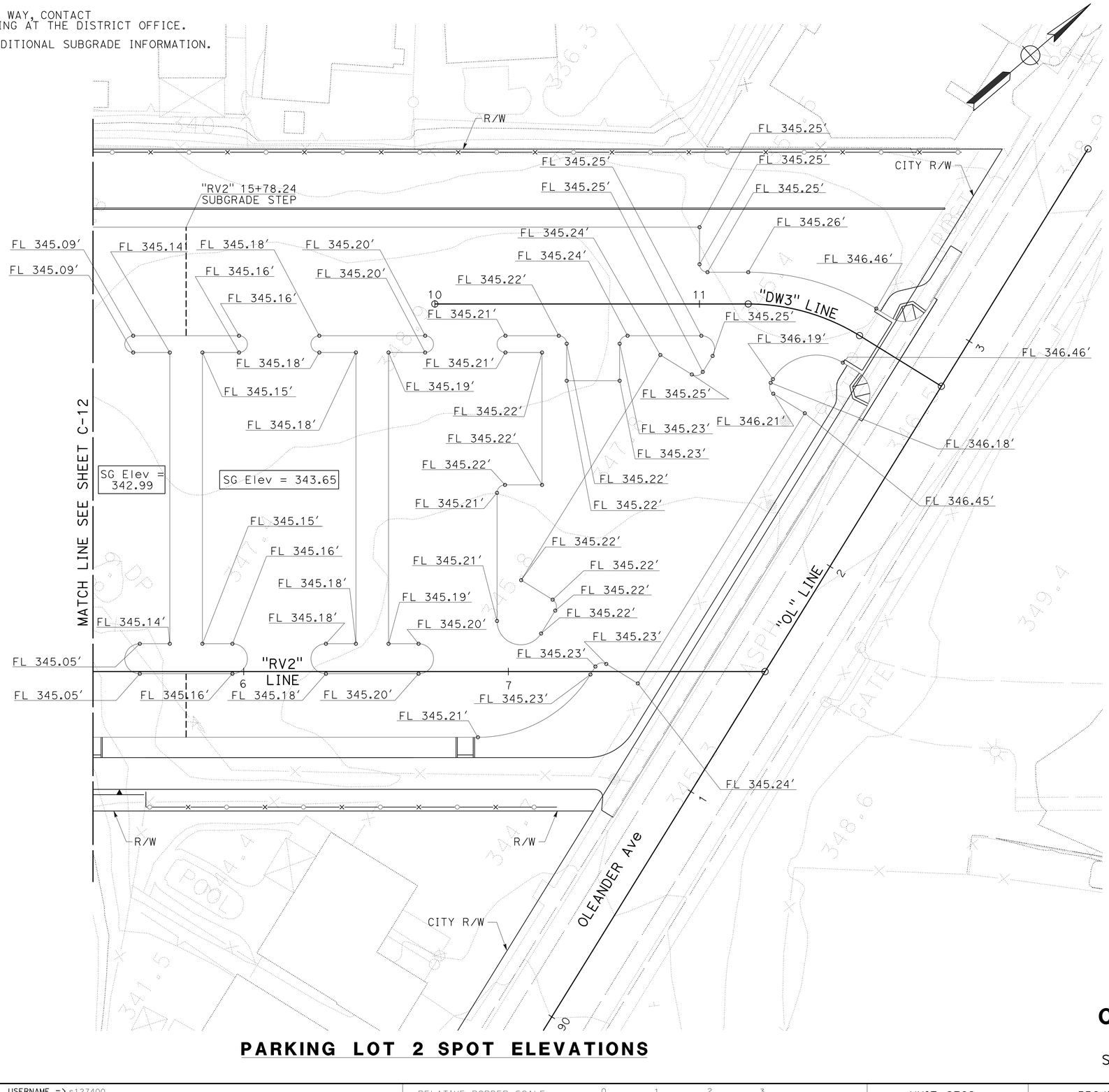

PARKING LOT 2 SPOT ELEVATIONS

CONSTRUCTION DETAILS

SCALE: 1" = 20′

C-13

STATE OF CALIFORNIA - DEPARTMENT OF TRANSPORTATION
Caltrans

CONSULTANT FUNCTIONAL SUPERVISOR: GERARD LUMABAS
CALCULATED-DESIGNED BY: MATTHEW P. MAECHLER
CHECKED BY: DARWIN CRUZ
REVISED BY
DATE REVISED

LAST REVISION 06-18-12
DATE PLOTTED => 12-SEP-2012
TIME PLOTTED => 16:07

Dist	COUNTY	ROUTE	POST MILES TOTAL PROJECT	SHEET No.	TOTAL SHEETS
11	SD	805	4.7/5.6	58	650

REGISTERED CIVIL ENGINEER 06-01-12 DATE

06-25-12
PLANS APPROVAL DATE

REGISTERED PROFESSIONAL ENGINEER
PAUL E. KOSINSKI
No. C73254
Exp. 12-31-12
CIVIL
STATE OF CALIFORNIA

THE STATE OF CALIFORNIA OR ITS OFFICERS OR AGENTS SHALL NOT BE RESPONSIBLE FOR THE ACCURACY OR COMPLETENESS OF SCANNED COPIES OF THIS PLAN SHEET.

DOKKEN ENGINEERING
5675 RUFFIN Rd
SUITE 250
SAN DIEGO, CA 92123

SANDAG
401 B St
SUITE 800
SAN DIEGO, CA 92101

NOTE:

1. SEE LEGEND ON C-31 FOR TEXTURE DETAILS.

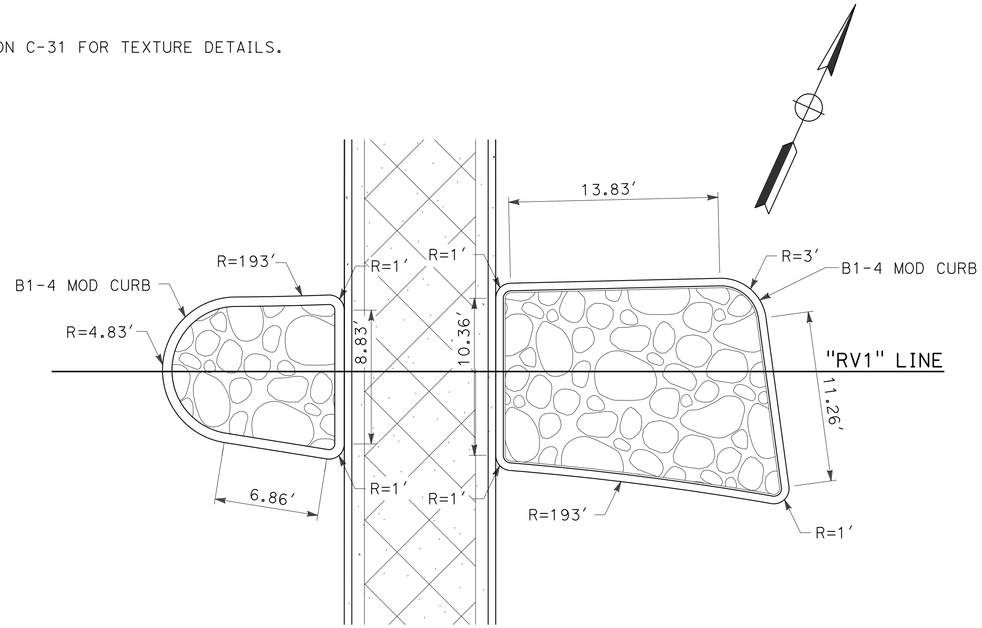

CURBED MEDIAN ISLAND
DETAIL A & B

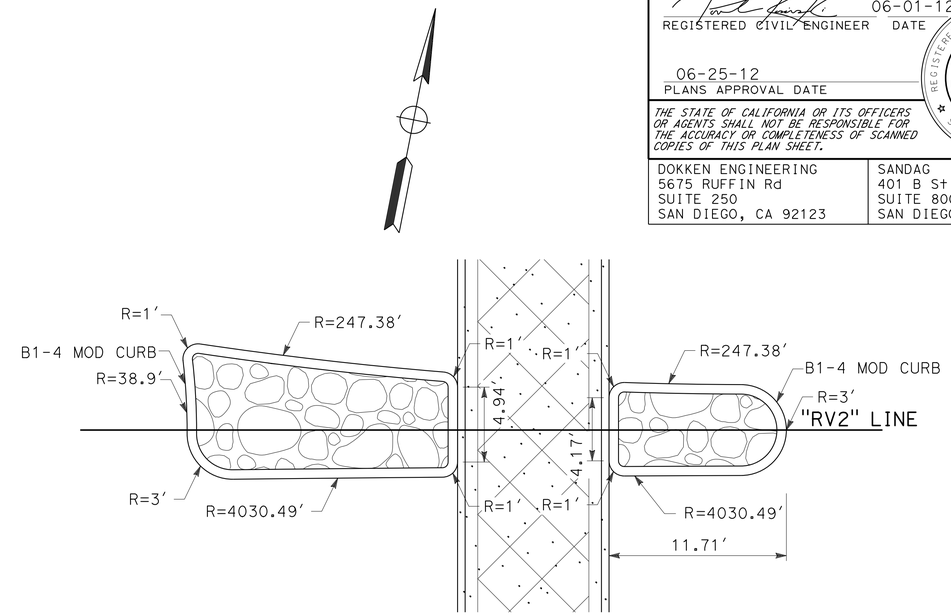

CURBED MEDIAN ISLAND
DETAIL C & D

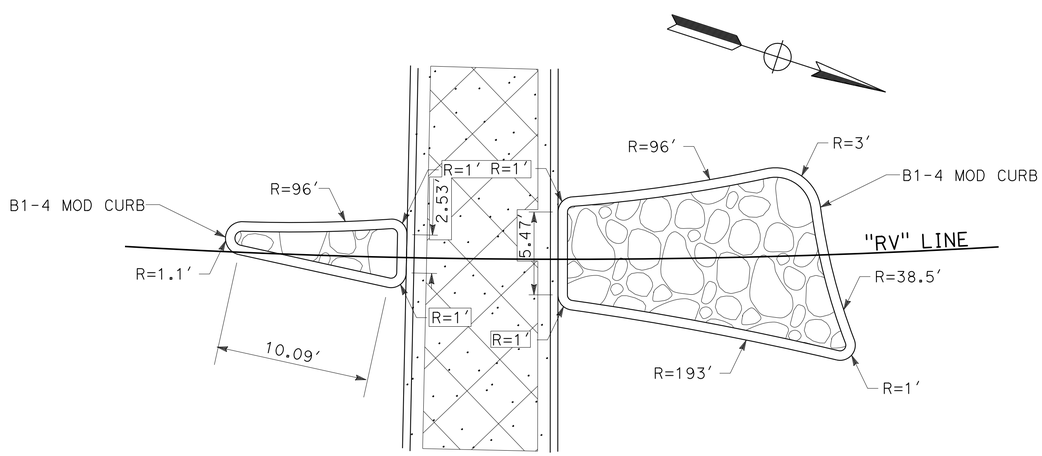

CURBED MEDIAN ISLAND
DETAIL E & F

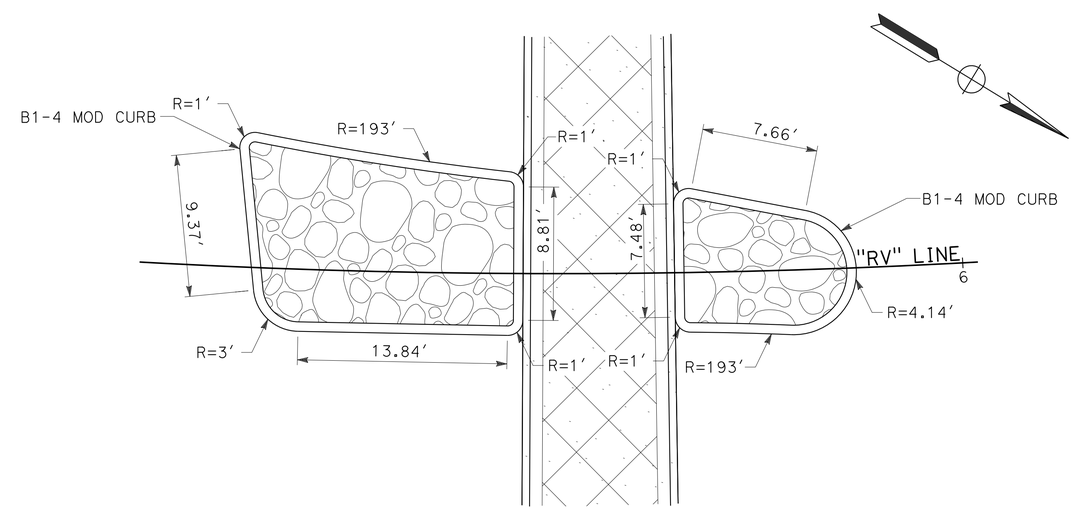

CURBED MEDIAN ISLAND
DETAIL G & H

CURBED MEDIAN ISLAND DETAILS

CONSTRUCTION DETAILS

SCALE: 1" = 5′

C-14

STATE OF CALIFORNIA - DEPARTMENT OF TRANSPORTATION
Caltrans

CONSULTANT FUNCTIONAL SUPERVISOR: GERARD LUMABAS
CALCULATED-DESIGNED BY: MATTHEW P. MAECHLER
CHECKED BY: DARWIN CRUZ
REVISED BY
DATE REVISED

LAST REVISION 06-18-12
DATE PLOTTED => 12-SEP-2012
TIME PLOTTED => 16:07

Dist	COUNTY	ROUTE	POST MILES TOTAL PROJECT	SHEET No.	TOTAL SHEETS
11	SD	805	4.7/5.6	59	650

REGISTERED CIVIL ENGINEER 06-01-12 DATE

PAUL E. KOSINSKI No. C73254 Exp. 12-31-12 CIVIL — REGISTERED PROFESSIONAL ENGINEER — STATE OF CALIFORNIA

06-25-12
PLANS APPROVAL DATE

THE STATE OF CALIFORNIA OR ITS OFFICERS OR AGENTS SHALL NOT BE RESPONSIBLE FOR THE ACCURACY OR COMPLETENESS OF SCANNED COPIES OF THIS PLAN SHEET.

DOKKEN ENGINEERING
5675 RUFFIN Rd
SUITE 250
SAN DIEGO, CA 92123

SANDAG
401 B St
SUITE 800
SAN DIEGO, CA 92101

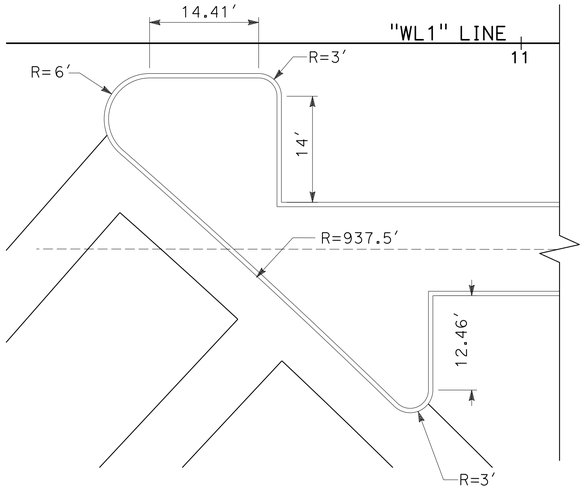

CURBED ISLAND DETAIL I

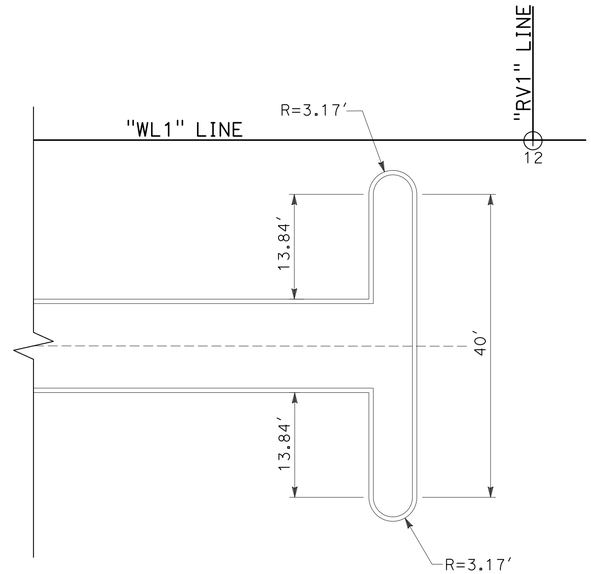

CURBED ISLAND DETAIL J

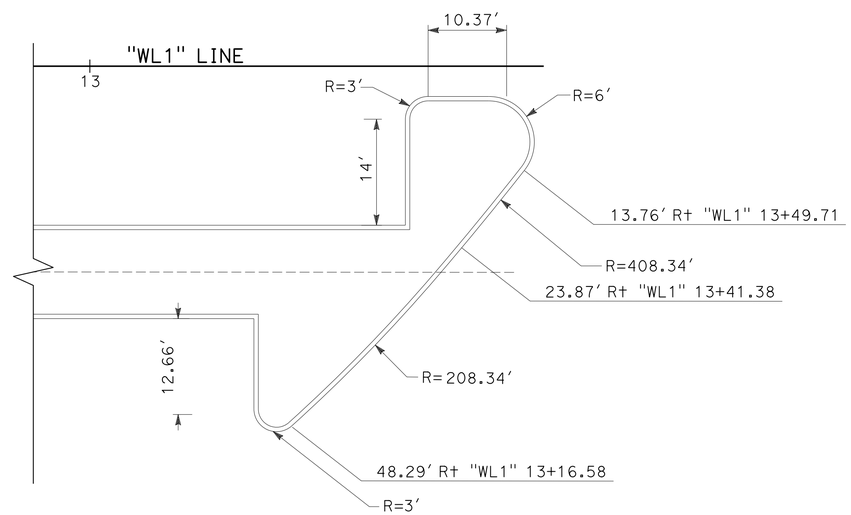

CURBED ISLAND DETAIL K

CURBED MEDIAN ISLAND DETAILS

CONSTRUCTION DETAILS

SCALE: 1" = 20'

C-15

STATE OF CALIFORNIA - DEPARTMENT OF TRANSPORTATION
Caltrans

CONSULTANT FUNCTIONAL SUPERVISOR: GERARD LUMABAS
CALCULATED-DESIGNED BY: MATTHEW P. MAECHLER
CHECKED BY: DARWIN CRUZ
REVISED BY
DATE REVISED

LAST REVISION 06-18-12
DATE PLOTTED => 12-SEP-2012
TIME PLOTTED => 16:07

Dist	COUNTY	ROUTE	POST MILES TOTAL PROJECT	SHEET No.	TOTAL SHEETS
11	SD	805	4.7/5.6	60	650

REGISTERED CIVIL ENGINEER 06-01-12 DATE

06-25-12
PLANS APPROVAL DATE

REGISTERED PROFESSIONAL ENGINEER
PAUL E. KOSINSKI
No. C73254
Exp. 12-31-12
CIVIL
STATE OF CALIFORNIA

THE STATE OF CALIFORNIA OR ITS OFFICERS OR AGENTS SHALL NOT BE RESPONSIBLE FOR THE ACCURACY OR COMPLETENESS OF SCANNED COPIES OF THIS PLAN SHEET.

DOKKEN ENGINEERING
5675 RUFFIN Rd
SUITE 250
SAN DIEGO, CA 92123

SANDAG
401 B St
SUITE 800
SAN DIEGO, CA 92101

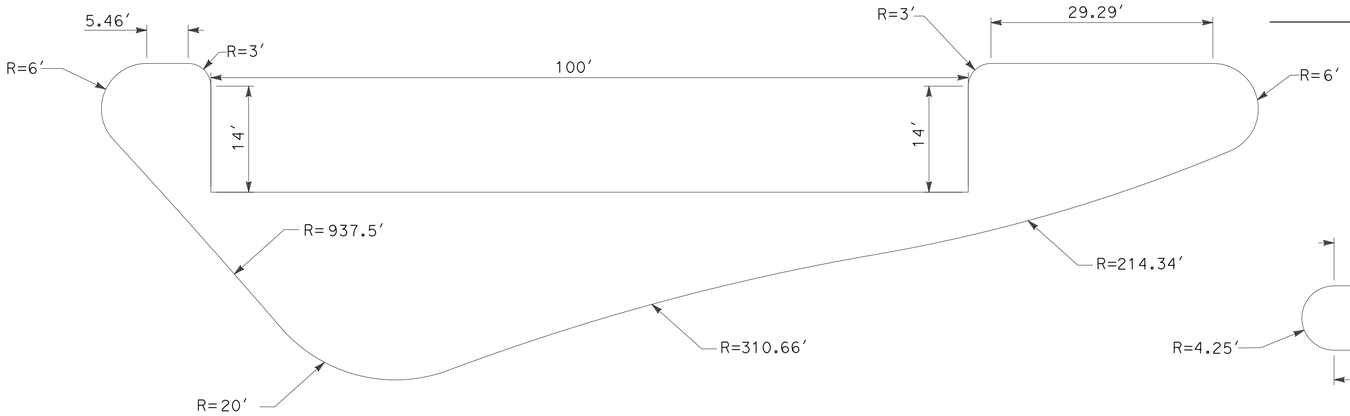

CURBED ISLAND DETAIL L

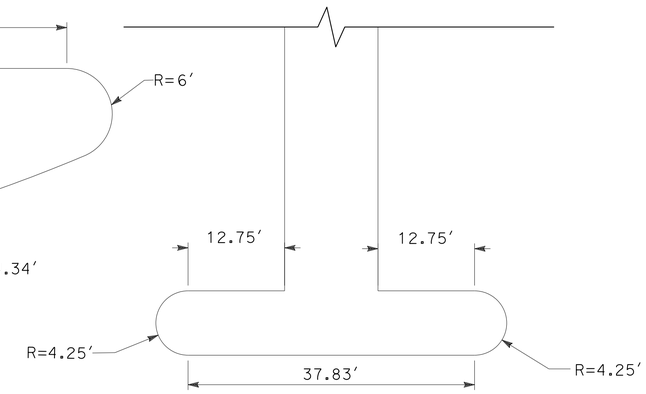

CURBED ISLAND DETAIL M

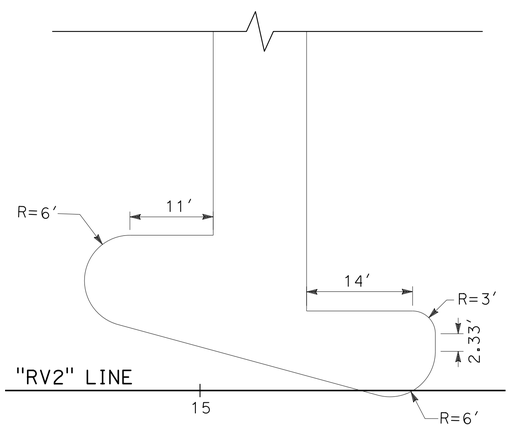

CURBED ISLAND DETAIL N

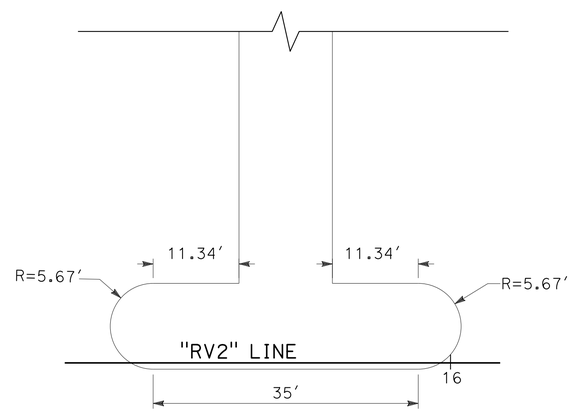

CURBED ISLAND DETAIL O

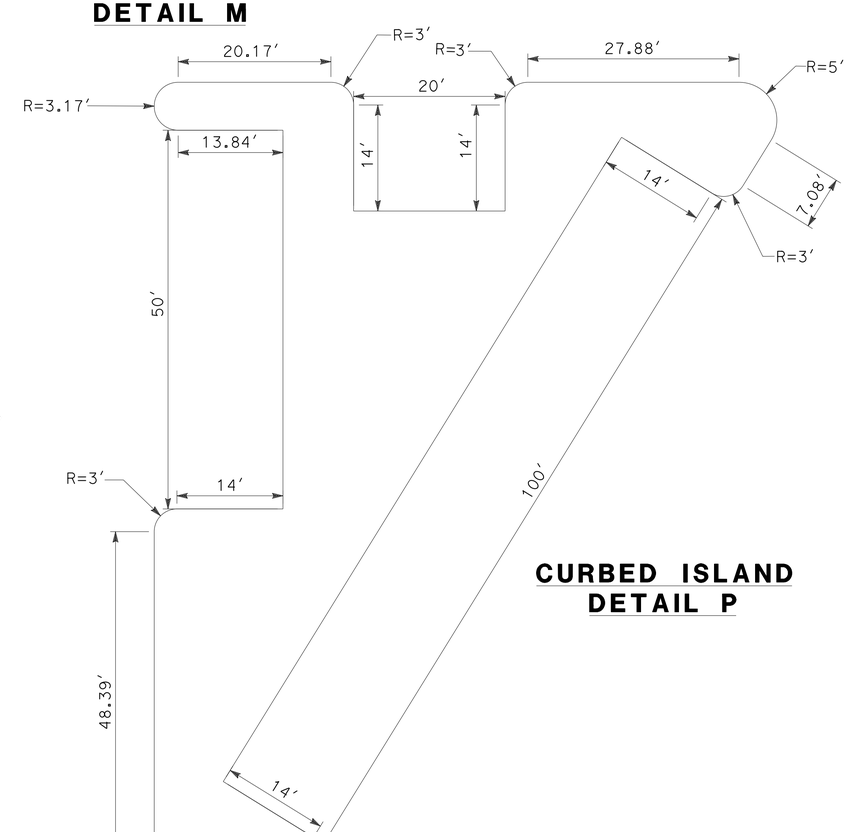

CURBED ISLAND DETAIL P

CURBED MEDIAN ISLAND DETAILS

CONSTRUCTION DETAILS

SCALE: 1" = 10′

C-16

STATE OF CALIFORNIA - DEPARTMENT OF TRANSPORTATION
Caltrans

CONSULTANT FUNCTIONAL SUPERVISOR: GERARD LUMABAS
CALCULATED-DESIGNED BY: MATTHEW P. MAECHLER
CHECKED BY: DARWIN CRUZ
REVISED BY
DATE REVISED

LAST REVISION 06-18-12
DATE PLOTTED => 12-SEP-2012
TIME PLOTTED => 16:07

Dist	COUNTY	ROUTE	POST MILES TOTAL PROJECT	SHEET No.	TOTAL SHEETS
11	SD	805	4.7/5.6	61	650

REGISTERED CIVIL ENGINEER 05-24-12 DATE

06-25-12
PLANS APPROVAL DATE

REGISTERED PROFESSIONAL ENGINEER KATHRYN WALKER No. C77900 Exp. 06-30-13 CIVIL STATE OF CALIFORNIA

THE STATE OF CALIFORNIA OR ITS OFFICERS OR AGENTS SHALL NOT BE RESPONSIBLE FOR THE ACCURACY OR COMPLETENESS OF SCANNED COPIES OF THIS PLAN SHEET.

DOKKEN ENGINEERING
5675 RUFFIN Rd
SUITE 250
SAN DIEGO, CA 92123

SANDAG
401 B St
SUITE 800
SAN DIEGO, CA 92101

NOTES:

1. FOR PLAN VIEW OF SECTION AREAS, SEE SHEET C-9.
2. FOR IRRIGATION CROSSOVER LOCATIONS, SEE IRRIGATION PLANS.
3. FOR LIMITS OF PERVIOUS CONCRETE, SEE C-31 TO C-46.

LEGEND:

- PERVIOUS CONCRETE
- CLASS 4 AGGREGATE BASE
- ROCK MULCH (SEE PLANTING PLANS)
- FILTER FABRIC

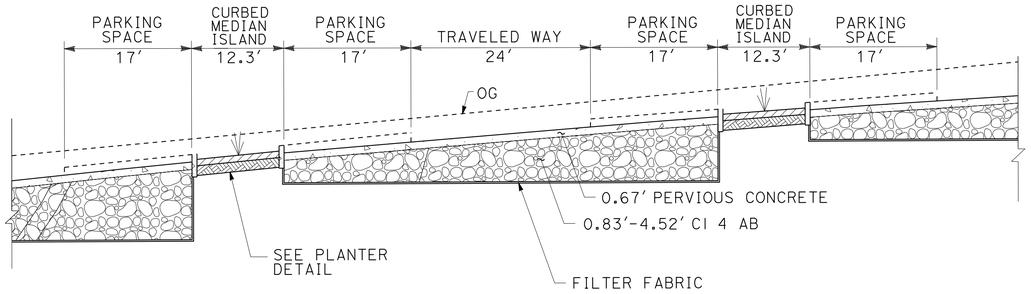

SECTION A-A (SEE SHEET C-9 FOR LOCATION)
NO SCALE

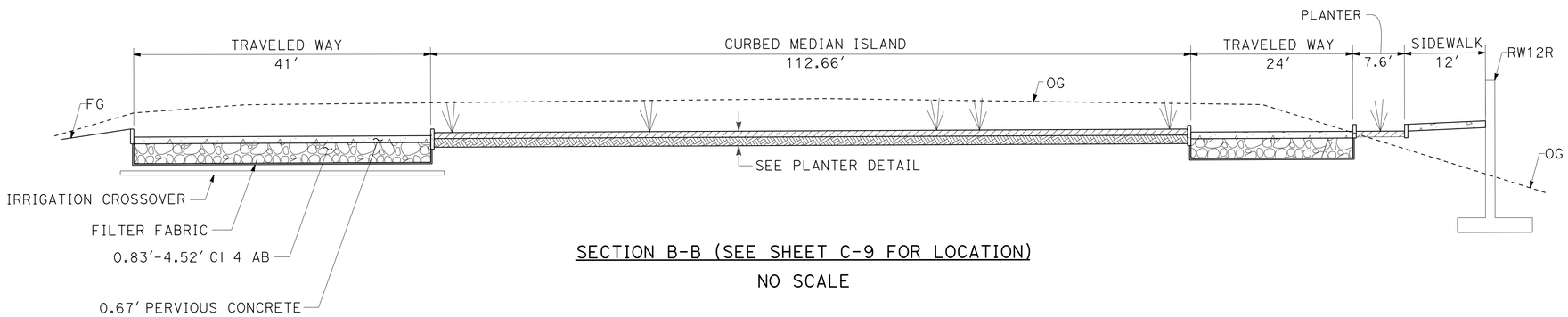

SECTION B-B (SEE SHEET C-9 FOR LOCATION)
NO SCALE

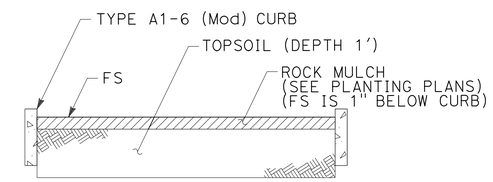

PLANTER DETAIL
NO SCALE

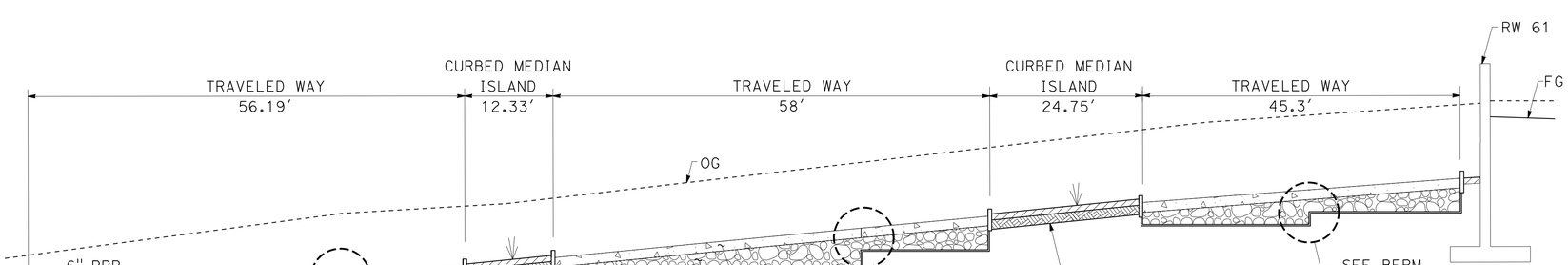

SECTION C-C (SEE SHEET C-8 FOR LOCATION)
NO SCALE

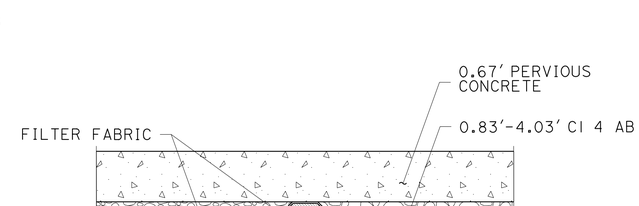

LOCATE BERMS AT EACH STEP-DOWN NOT CONTAINED BY CURBED MEDIAN

BERM DETAIL
NO SCALE

SECTION VIEWS
PARKING LOT 1 AND PARKING LOT 2

CONSTRUCTION DETAILS

SCALE AS SHOWN

C-17

STATE OF CALIFORNIA - DEPARTMENT OF TRANSPORTATION
Caltrans
CONSULTANT FUNCTIONAL SUPERVISOR: GERARD LUMABAS
CALCULATED-DESIGNED BY: KATHRYN WALKER
CHECKED BY: PAUL KOSINSKI
REVISED BY
DATE REVISED

LAST REVISION 06-18-12
DATE PLOTTED => 12-SEP-2012
TIME PLOTTED => 16:07

Dist	COUNTY	ROUTE	POST MILES TOTAL PROJECT	SHEET No.	TOTAL SHEETS
11	SD	805	4.7/5.6	62	650

REGISTERED CIVIL ENGINEER 06-01-12 DATE

PLANS APPROVAL DATE 06-25-12

REGISTERED PROFESSIONAL ENGINEER PAUL E. KOSINSKI No. C73254 Exp. 12-31-12 CIVIL STATE OF CALIFORNIA

THE STATE OF CALIFORNIA OR ITS OFFICERS OR AGENTS SHALL NOT BE RESPONSIBLE FOR THE ACCURACY OR COMPLETENESS OF SCANNED COPIES OF THIS PLAN SHEET.

DOKKEN ENGINEERING
5675 RUFFIN Rd
SUITE 250
SAN DIEGO, CA 92123

SANDAG
401 B St
SUITE 800
SAN DIEGO, CA 92101

NOTE:

1. FOR ACCURATE RIGHT OF WAY AND ACCESS DATA, CONTACT RIGHT OF WAY ENGINEERING AT THE DISTRICT OFFICE.

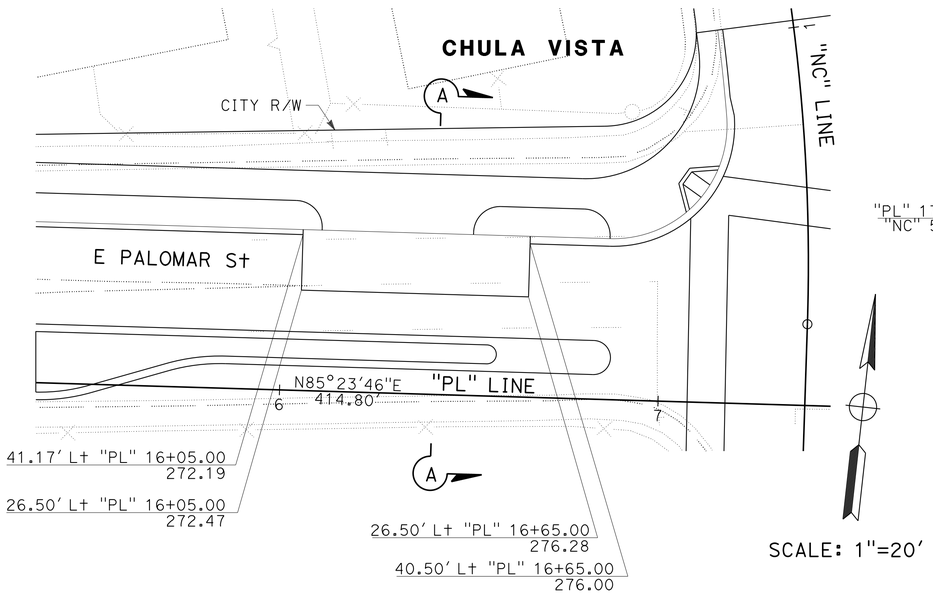

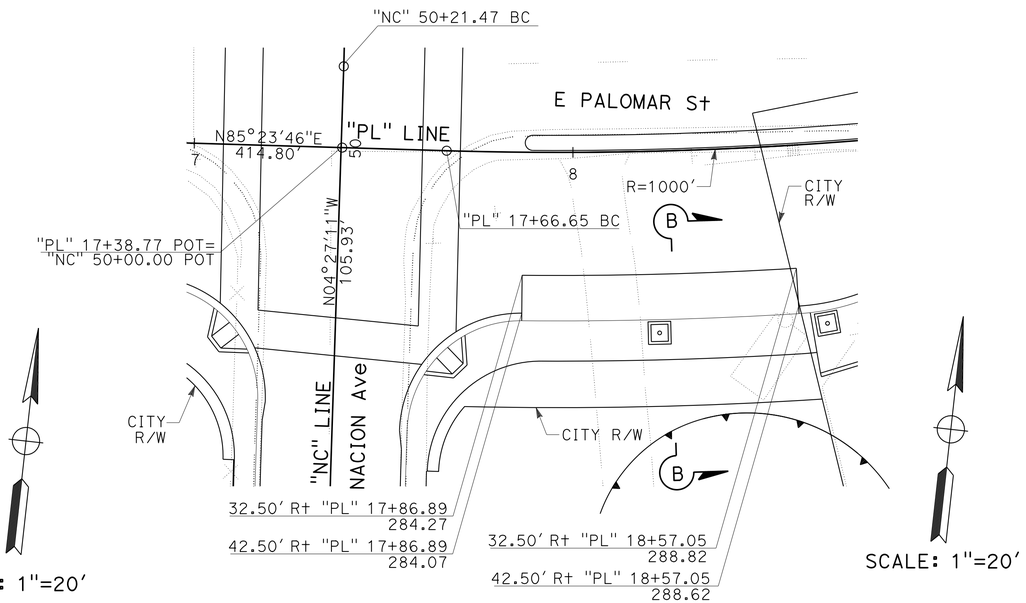

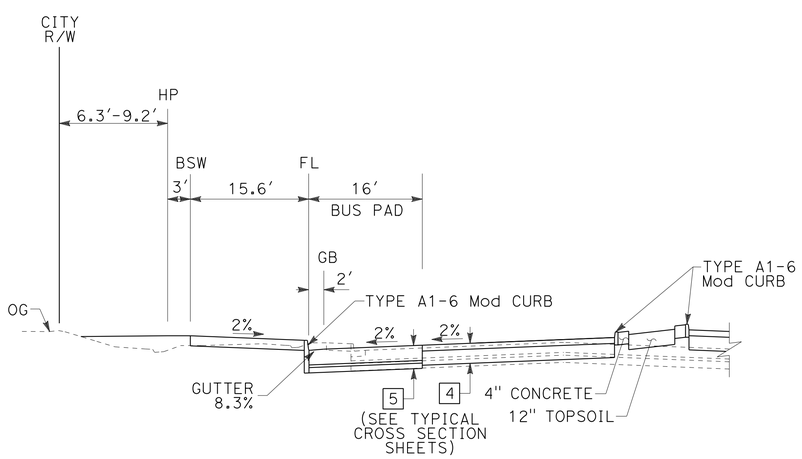

SECTION A-A
NO SCALE

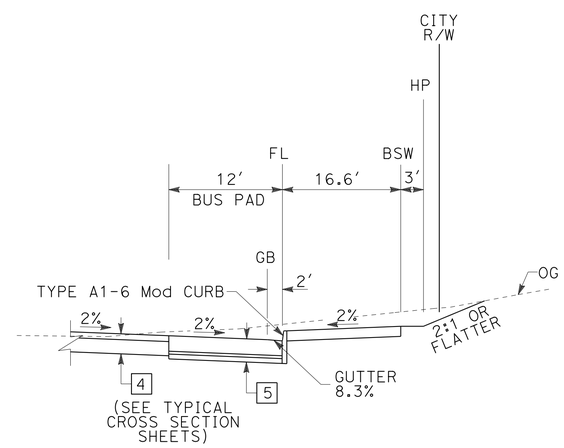

SECTION B-B
NO SCALE

CONCRETE BUS STOP PADS

CONSTRUCTION DETAILS

SCALE AS SHOWN

C-18

REVISED BY | DATE REVISED

MATTHEW P. MAECHLER | DARWIN CRUZ

CALCULATED-DESIGNED BY | CHECKED BY

CONSULTANT FUNCTIONAL SUPERVISOR: GERARD LUMABAS

STATE OF CALIFORNIA - DEPARTMENT OF TRANSPORTATION

Caltrans

LAST REVISION 06-18-12 | DATE PLOTTED => 12-SEP-2012 | TIME PLOTTED => 16:07

Dist	COUNTY	ROUTE	POST MILES TOTAL PROJECT	SHEET No.	TOTAL SHEETS
11	SD	805	4.7/5.6	63	650

REGISTERED CIVIL ENGINEER 06-01-12 DATE

06-25-12
PLANS APPROVAL DATE

REGISTERED PROFESSIONAL ENGINEER PAUL E. KOSINSKI No. C73254 Exp 12-31-12 CIVIL STATE OF CALIFORNIA

THE STATE OF CALIFORNIA OR ITS OFFICERS OR AGENTS SHALL NOT BE RESPONSIBLE FOR THE ACCURACY OR COMPLETENESS OF SCANNED COPIES OF THIS PLAN SHEET.

DOKKEN ENGINEERING
5675 RUFFIN Rd
SUITE 250
SAN DIEGO, CA 92123

SANDAG
401 B St
SUITE 800
SAN DIEGO, CA 92101

NOTE:

1. FOR ACCURATE RIGHT OF WAY AND ACCESS DATA, CONTACT RIGHT OF WAY ENGINEERING AT THE DISTRICT OFFICE.

CURVE DATA

No.	R	Δ	T	L
1	826.00′	8°19′26"	60.11′	120.00′

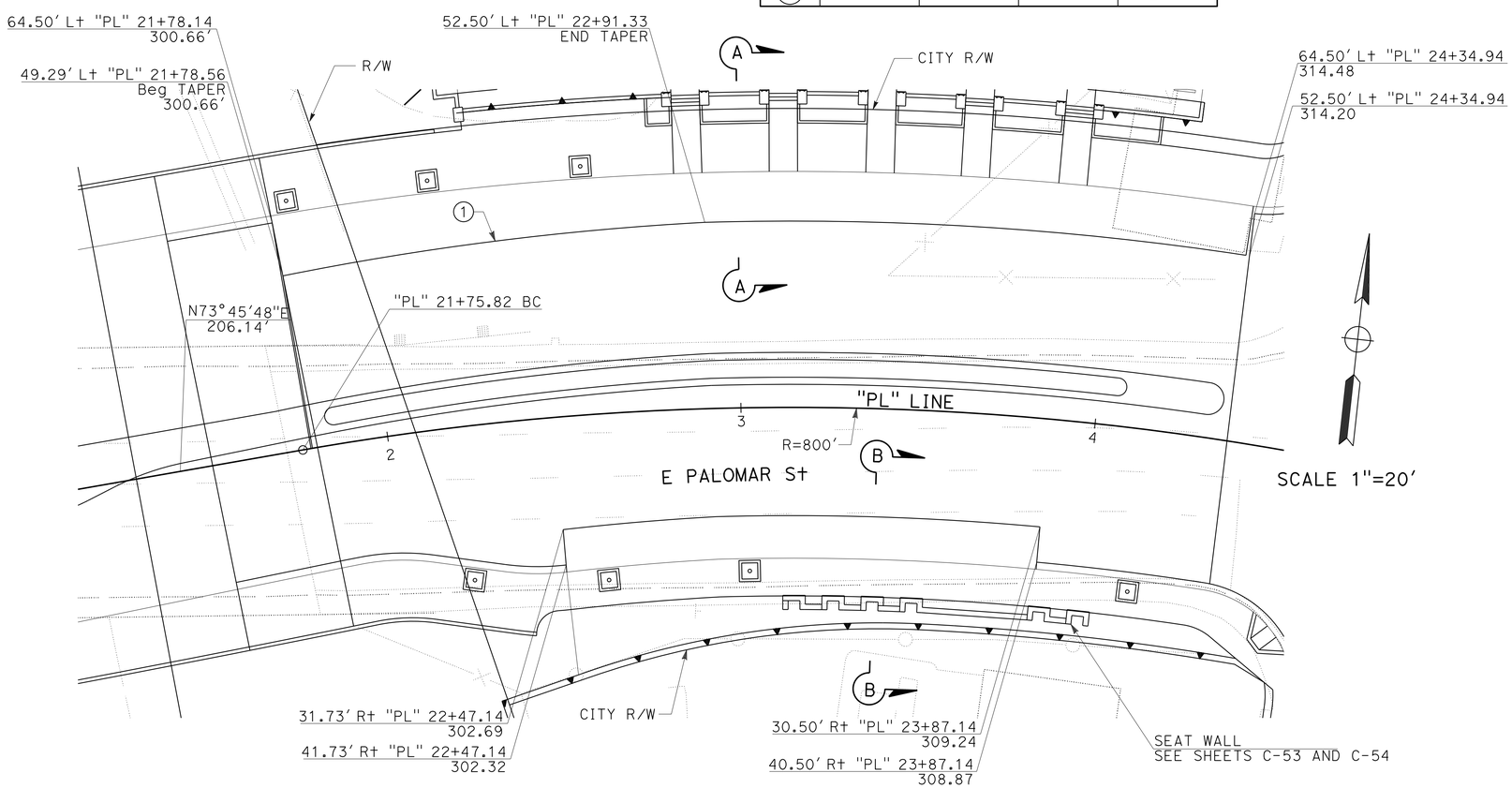

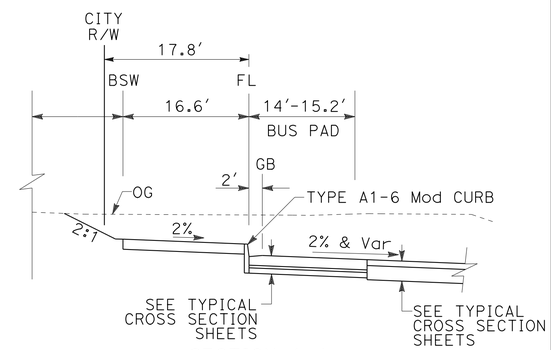

SECTION A-A
NO SCALE

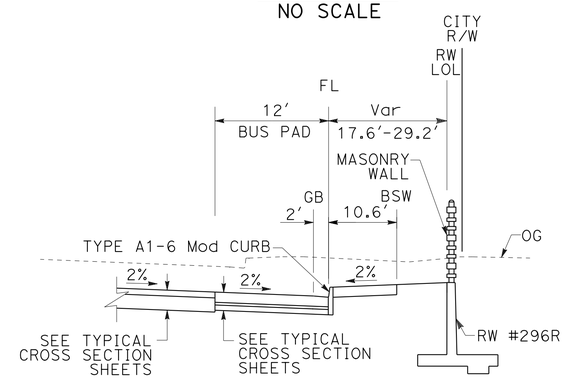

SECTION B-B
NO SCALE

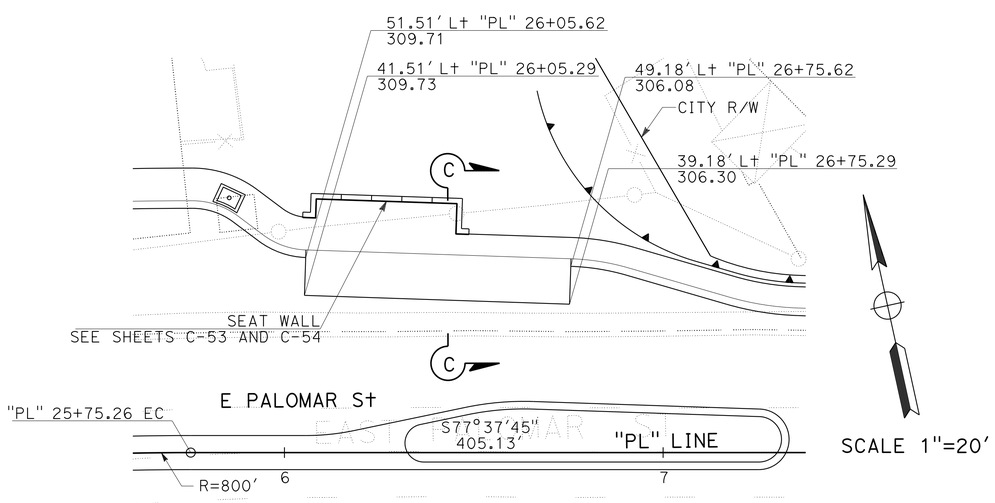

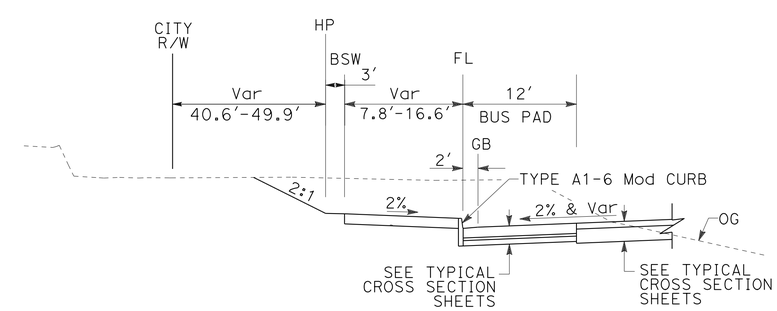

SECTION C-C
NO SCALE

CONCRETE BUS STOP PADS

CONSTRUCTION DETAILS

SCALE AS SHOWN

C-19

STATE OF CALIFORNIA - DEPARTMENT OF TRANSPORTATION
Caltrans

CONSULTANT FUNCTIONAL SUPERVISOR: GERARD LUMABAS
CALCULATED-DESIGNED BY: MATTHEW P. MAECHLER
CHECKED BY: DARWIN CRUZ
REVISED BY
DATE REVISED

LAST REVISION 06-18-12
DATE PLOTTED => 12-SEP-2012
TIME PLOTTED => 16:07

Dist	COUNTY	ROUTE	POST MILES TOTAL PROJECT	SHEET No.	TOTAL SHEETS
11	SD	805	4.7/5.6	64	650

REGISTERED CIVIL ENGINEER 06-01-12 DATE

06-25-12
PLANS APPROVAL DATE

REGISTERED PROFESSIONAL ENGINEER
PAUL E. KOSINSKI
No. C73254
Exp. 12-31-12
CIVIL
STATE OF CALIFORNIA

THE STATE OF CALIFORNIA OR ITS OFFICERS OR AGENTS SHALL NOT BE RESPONSIBLE FOR THE ACCURACY OR COMPLETENESS OF SCANNED COPIES OF THIS PLAN SHEET.

DOKKEN ENGINEERING
5675 RUFFIN Rd
SUITE 250
SAN DIEGO, CA 92123

SANDAG
401 B St
SUITE 800
SAN DIEGO, CA 92101

NOTE:

1. FOR ACCURATE RIGHT OF WAY AND ACCESS DATA, CONTACT RIGHT OF WAY ENGINEERING AT THE DISTRICT OFFICE.

CURB RAMP DETAILS

CONSTRUCTION DETAILS

SCALE: 1" = 5'

C-20

STATE OF CALIFORNIA - DEPARTMENT OF TRANSPORTATION
Caltrans

CONSULTANT FUNCTIONAL SUPERVISOR: GERARD LUMABAS
CALCULATED-DESIGNED BY: MATTHEW P. MAECHLER
CHECKED BY: DARWIN CRUZ
REVISED BY
DATE REVISED

LAST REVISION 06-18-12
DATE PLOTTED => 12-SEP-2012
TIME PLOTTED => 16:07

Dist	COUNTY	ROUTE	POST MILES TOTAL PROJECT	SHEET No.	TOTAL SHEETS
11	SD	805	4.7/5.6	65	650

REGISTERED CIVIL ENGINEER 06-01-12 DATE

PAUL E. KOSINSKI No. C73254 Exp. 12-31-12 CIVIL — REGISTERED PROFESSIONAL ENGINEER — STATE OF CALIFORNIA

06-25-12
PLANS APPROVAL DATE

THE STATE OF CALIFORNIA OR ITS OFFICERS OR AGENTS SHALL NOT BE RESPONSIBLE FOR THE ACCURACY OR COMPLETENESS OF SCANNED COPIES OF THIS PLAN SHEET.

DOKKEN ENGINEERING
5675 RUFFIN Rd
SUITE 250
SAN DIEGO, CA 92123

SANDAG
401 B St
SUITE 800
SAN DIEGO, CA 92101

NOTE:

1. FOR ACCURATE RIGHT OF WAY AND ACCESS DATA, CONTACT RIGHT OF WAY ENGINEERING AT THE DISTRICT OFFICE.

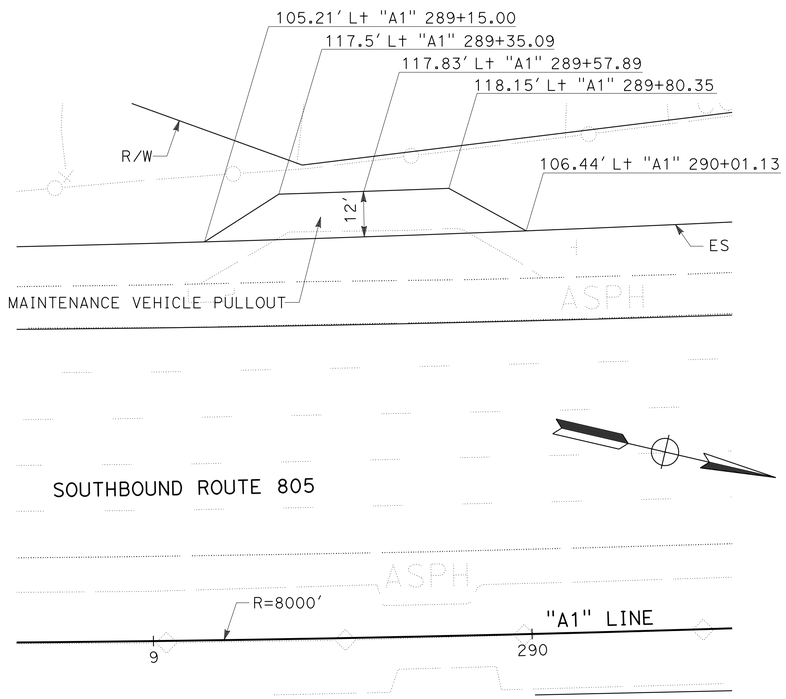

PLAN
SCALE: 1" = 20′

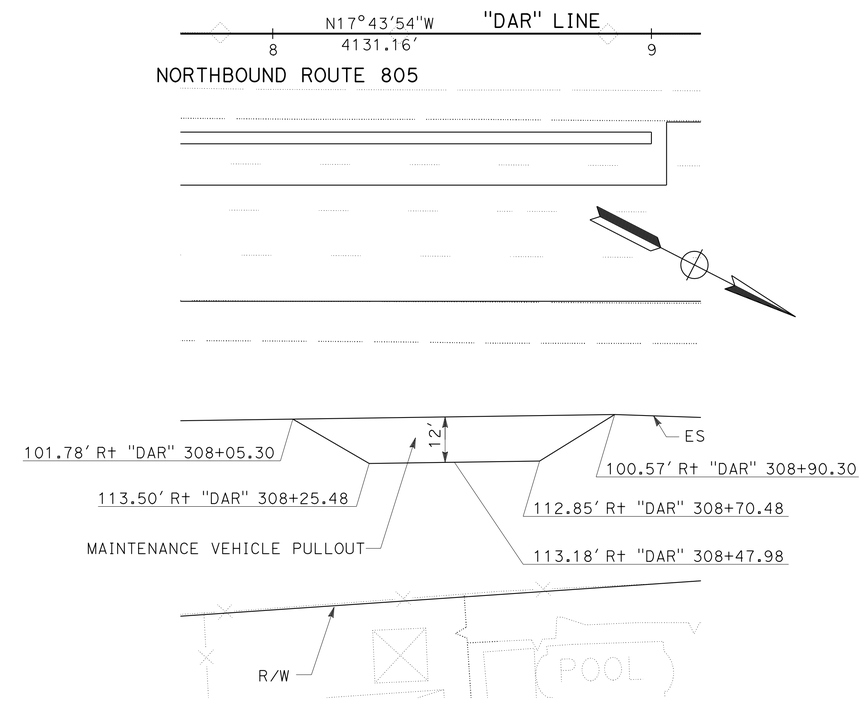

PLAN
SCALE: 1" = 20′

MAINTENANCE VEHICLE PULLOUT DETAILS

CONSTRUCTION DETAILS

SCALE AS SHOWN

C-21

STATE OF CALIFORNIA - DEPARTMENT OF TRANSPORTATION
Caltrans

CONSULTANT FUNCTIONAL SUPERVISOR: GERARD LUMABAS
CALCULATED-DESIGNED BY: MATTHEW P. MAECHLER
CHECKED BY: DARWIN CRUZ
REVISED BY
DATE REVISED

LAST REVISION 06-18-12
DATE PLOTTED => 12-SEP-2012
TIME PLOTTED => 16:07

Dist	COUNTY	ROUTE	POST MILES TOTAL PROJECT	SHEET No.	TOTAL SHEETS
11	SD	805	4.7/5.6	66	650

REGISTERED CIVIL ENGINEER 06-01-12 DATE

06-25-12
PLANS APPROVAL DATE

REGISTERED PROFESSIONAL ENGINEER PAUL E. KOSINSKI No. C73254 Exp. 12-31-12 CIVIL STATE OF CALIFORNIA

THE STATE OF CALIFORNIA OR ITS OFFICERS OR AGENTS SHALL NOT BE RESPONSIBLE FOR THE ACCURACY OR COMPLETENESS OF SCANNED COPIES OF THIS PLAN SHEET.

DOKKEN ENGINEERING
5675 RUFFIN Rd
SUITE 250
SAN DIEGO, CA 92123

SANDAG
401 B St
SUITE 800
SAN DIEGO, CA 92101

NOTE:

1. FOR ACCURATE RIGHT OF WAY AND ACCESS DATA, CONTACT RIGHT OF WAY ENGINEERING AT THE DISTRICT OFFICE.

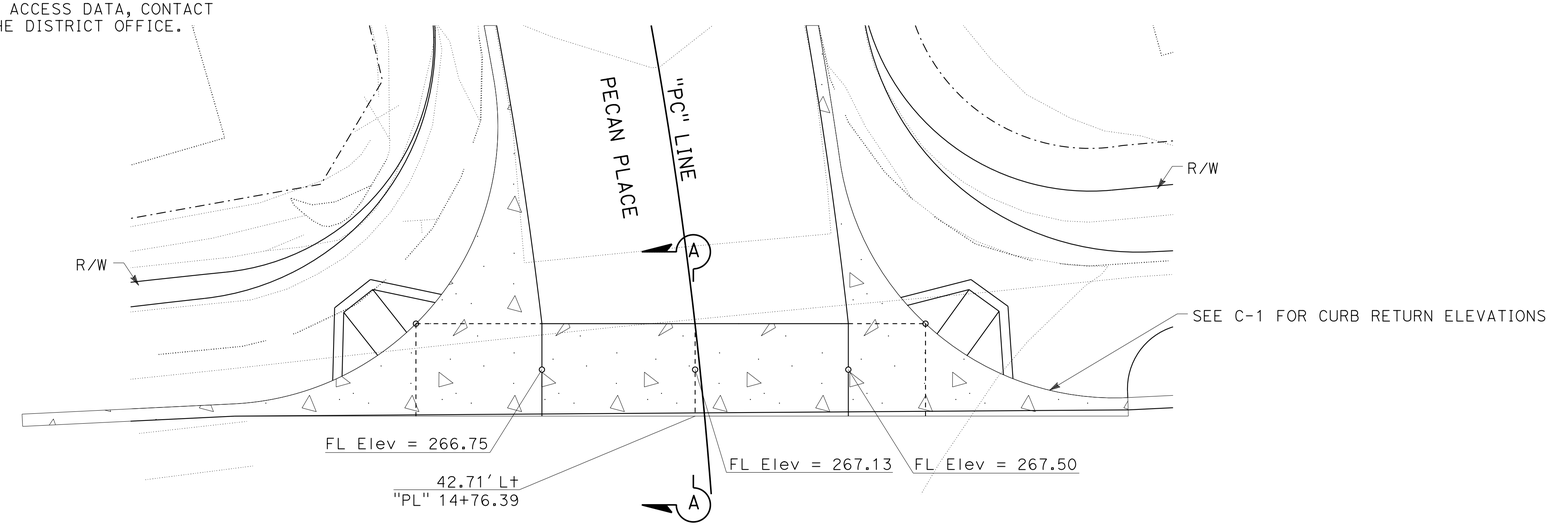

PLAN

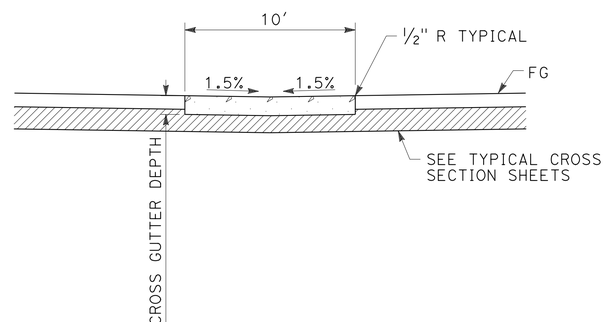

SECTION A-A
"PL" 14+76.39

CROSS GUTTER

NOTES:

1. ---------- = WEAKENED PLANE JOINTS.
2. RETURN SEGMENTS TO BE 7" THICK.
3. CURB BETWEEN THE PCR's SHALL BE CONSIDERED AS PART OF THE CROSS GUTTER
4. SEE C-1 FOR ELEVATIONS OF CURB RETURN.

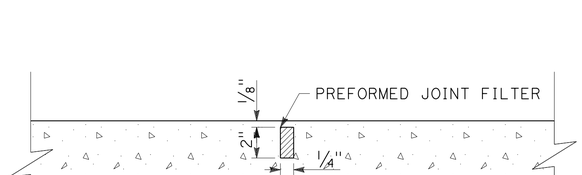

WEAKENED PLANE JOINT GUTTER & PAVEMENT

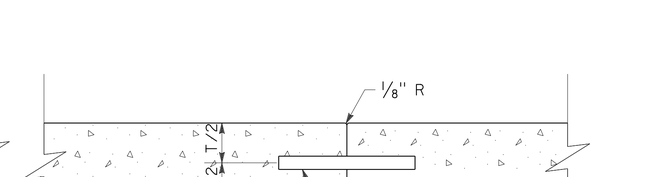

CONTACT JOINT

CONSTRUCTION DETAILS

NO SCALE

C-22

STATE OF CALIFORNIA - DEPARTMENT OF TRANSPORTATION
Caltrans

CONSULTANT FUNCTIONAL SUPERVISOR: GERARD LUMABAS
CALCULATED-DESIGNED BY: MATTHEW P. MAECHLER
CHECKED BY: DARWIN CRUZ
REVISED BY
DATE REVISED

LAST REVISION 06-18-12
DATE PLOTTED => 12-SEP-2012
TIME PLOTTED => 16:07

Dist	COUNTY	ROUTE	POST MILES TOTAL PROJECT	SHEET No.	TOTAL SHEETS
11	SD	805	4.7/5.6	67	650

REGISTERED CIVIL ENGINEER 06-01-12 DATE

06-25-12
PLANS APPROVAL DATE

REGISTERED PROFESSIONAL ENGINEER PAUL E. KOSINSKI No. C73254 Exp. 12-31-12 CIVIL STATE OF CALIFORNIA

THE STATE OF CALIFORNIA OR ITS OFFICERS OR AGENTS SHALL NOT BE RESPONSIBLE FOR THE ACCURACY OR COMPLETENESS OF SCANNED COPIES OF THIS PLAN SHEET.

DOKKEN ENGINEERING
5675 RUFFIN Rd
SUITE 250
SAN DIEGO, CA 92123

SANDAG
401 B St
SUITE 800
SAN DIEGO, CA 92101

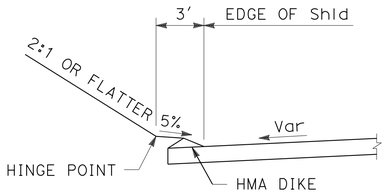

CUT, LOW SIDE

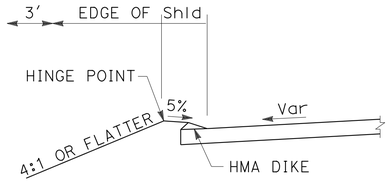

FILL, LOW SIDE

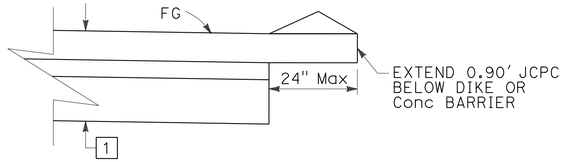

PAVEMENT EXTENSION UNDER DIKE OR Conc BARRIER

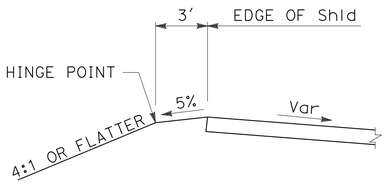

FILL, HIGH SIDE

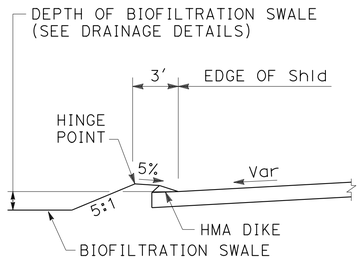

LOW SIDE WITH BIOFILTRATION

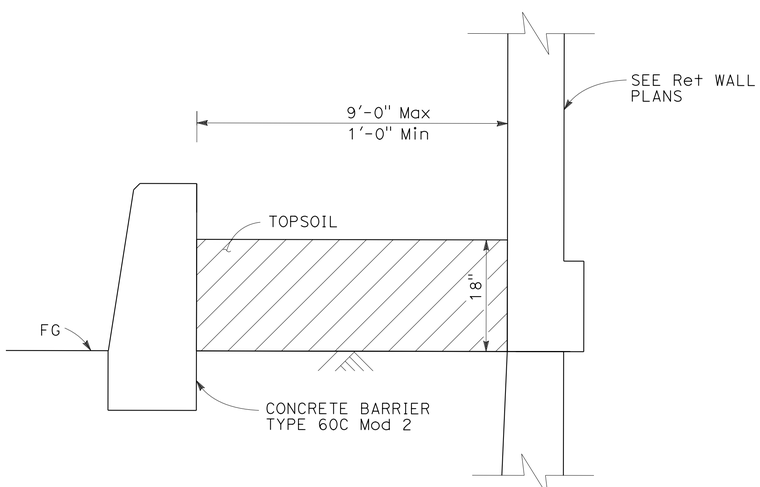

PLANTING POCKET BETWEEN CONCRETE BARRIER (TYPE 60C Mod 2) AND Ret WALL

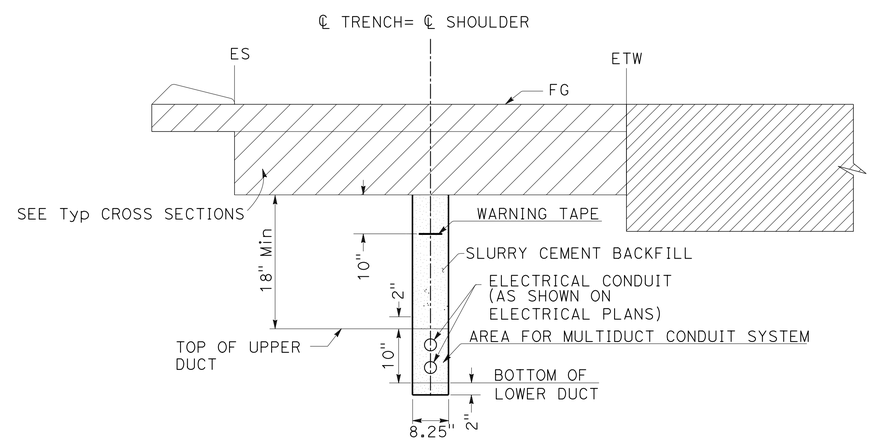

TRENCH IN SHOULDER FOR MULTIDUCT CONDUIT SYSTEM (MDCS)

CONSTRUCTION DETAILS

NO SCALE

C-23

STATE OF CALIFORNIA - DEPARTMENT OF TRANSPORTATION
Caltrans

CONSULTANT FUNCTIONAL SUPERVISOR: GERARD LUMABAS
CALCULATED-DESIGNED BY: MATTHEW P. MAECHLER
CHECKED BY: DARWIN CRUZ
REVISED BY / DATE REVISED

LAST REVISION 06-18-12
DATE PLOTTED => 12-SEP-2012
TIME PLOTTED => 16:07

Dist	COUNTY	ROUTE	POST MILES TOTAL PROJECT	SHEET No.	TOTAL SHEETS
11	SD	805	4.7/5.6	68	650

REGISTERED CIVIL ENGINEER 06-01-12 DATE

PAUL E. KOSINSKI No. C73254 Exp. 12-31-12 CIVIL STATE OF CALIFORNIA REGISTERED PROFESSIONAL ENGINEER

06-25-12
PLANS APPROVAL DATE

THE STATE OF CALIFORNIA OR ITS OFFICERS OR AGENTS SHALL NOT BE RESPONSIBLE FOR THE ACCURACY OR COMPLETENESS OF SCANNED COPIES OF THIS PLAN SHEET.

DOKKEN ENGINEERING
5675 RUFFIN Rd
SUITE 250
SAN DIEGO, CA 92123

SANDAG
401 B St
SUITE 800
SAN DIEGO, CA 92101

NOTE:

1. FOR ACCURATE RIGHT OF WAY AND ACCESS DATA, CONTACT RIGHT OF WAY ENGINEERING AT THE DISTRICT OFFICE.

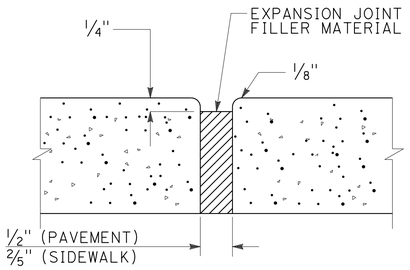

EXPANSION JOINT

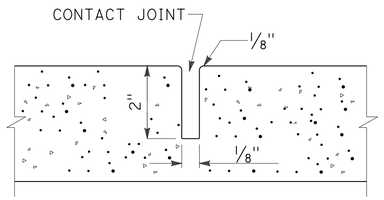

WEAKEND PLANE JOINT

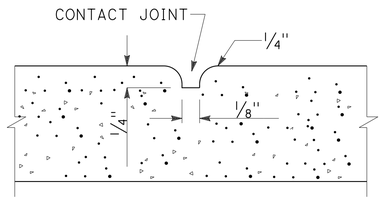

GROOVE JOINT

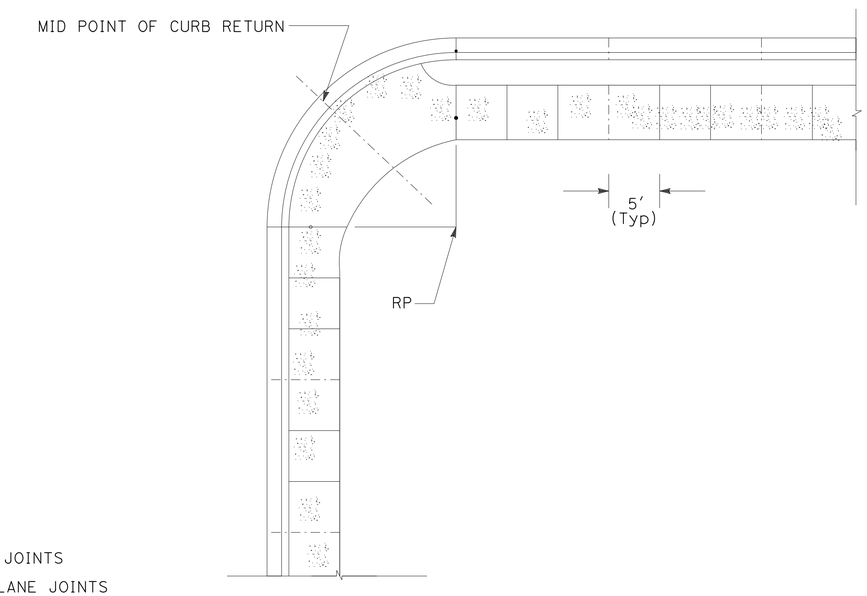

LEGEND

- EXPANSION JOINTS
- WEAKEND PLANE JOINTS
- 1/4" GROOVES

SIDEWALK JOINT LOCATIONS
NO SCALE

NOTES:

1. EXPANSION JOINTS AT CURB RETURNS, ADJACENT TO STRUCTURES AND AT 45' INTERVALS.
2. WEAKEND PLANE JOINTS AT MID POINT OF CURB RETURN, WHEN REQUIRED, AND AT 15' INTERVALS FROM PCR's.
3. 1/4" GROOVES WITH 1/4" RADIUS EDGES AT 5' INTERVALS.

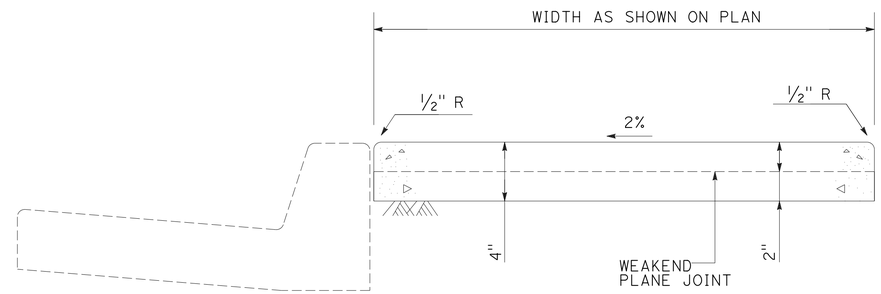

CONTIGUOUS SIDEWALK - TYPICAL SECTION

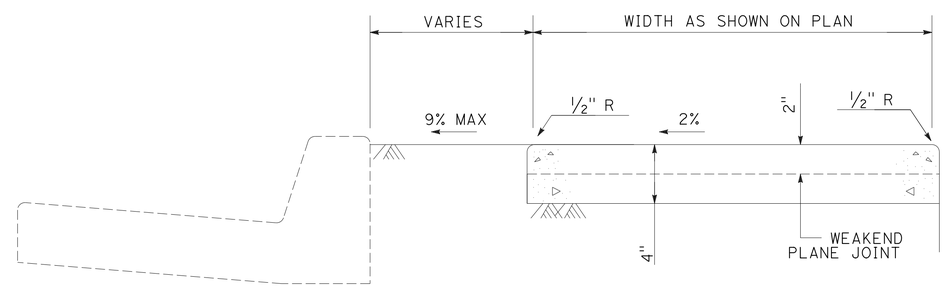

NON-CONTIGUOUS SIDEWALK - TYPICAL SECTION
EXCLUDES CURB RETURNS

CONSTRUCTION DETAILS

NO SCALE

C-24

STATE OF CALIFORNIA - DEPARTMENT OF TRANSPORTATION
Caltrans

CONSULTANT FUNCTIONAL SUPERVISOR: GERARD LUMABAS
CALCULATED-DESIGNED BY: MATTHEW P. MAECHLER
CHECKED BY: DARWIN CRUZ
REVISED BY / DATE REVISED

LAST REVISION 06-18-12 | DATE PLOTTED => 12-SEP-2012 | TIME PLOTTED => 16:07

Dist	COUNTY	ROUTE	POST MILES TOTAL PROJECT	SHEET No.	TOTAL SHEETS
11	SD	805	4.7/5.6	69	650

REGISTERED CIVIL ENGINEER 06-01-12 DATE

06-25-12
PLANS APPROVAL DATE

REGISTERED PROFESSIONAL ENGINEER PAUL E. KOSINSKI No. C73254 Exp. 12-31-12 CIVIL STATE OF CALIFORNIA

THE STATE OF CALIFORNIA OR ITS OFFICERS OR AGENTS SHALL NOT BE RESPONSIBLE FOR THE ACCURACY OR COMPLETENESS OF SCANNED COPIES OF THIS PLAN SHEET.

DOKKEN ENGINEERING
5675 RUFFIN Rd
SUITE 250
SAN DIEGO, CA 92123

SANDAG
401 B St
SUITE 800
SAN DIEGO, CA 92101

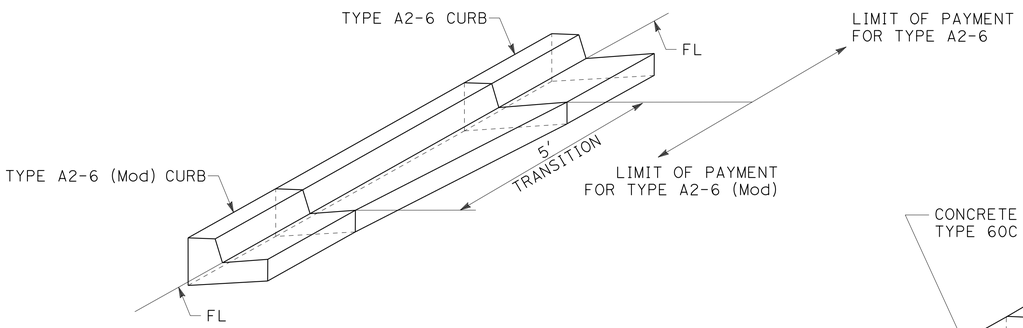

CONCRETE CURB TRANSITION

TYPE A2-6 (Mod) TO TYPE A2-6 CURB

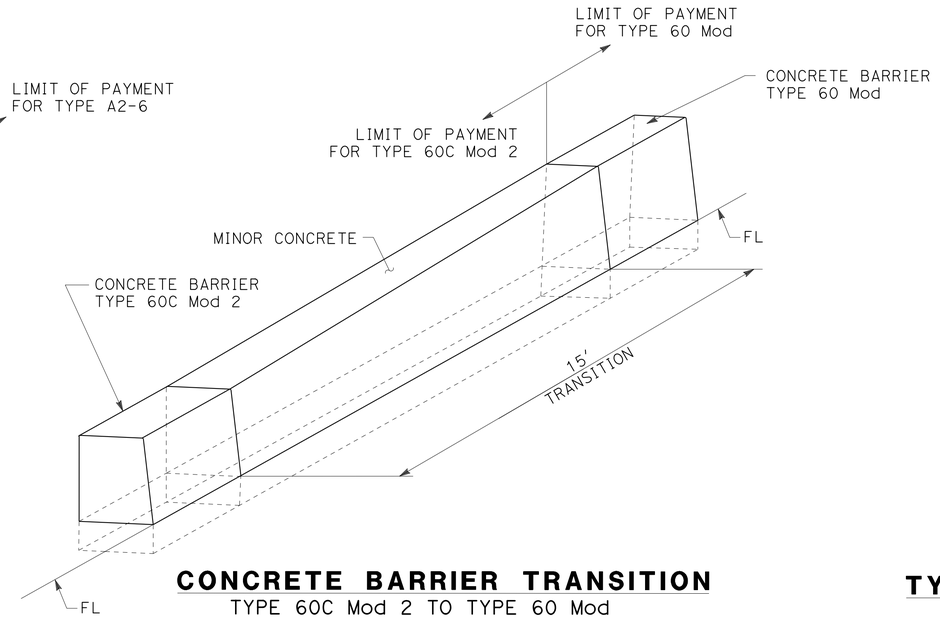

CONCRETE BARRIER TRANSITION

TYPE 60C Mod 2 TO TYPE 60 Mod

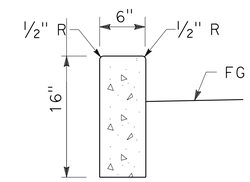

TYPE A1-8 (Mod) CURB

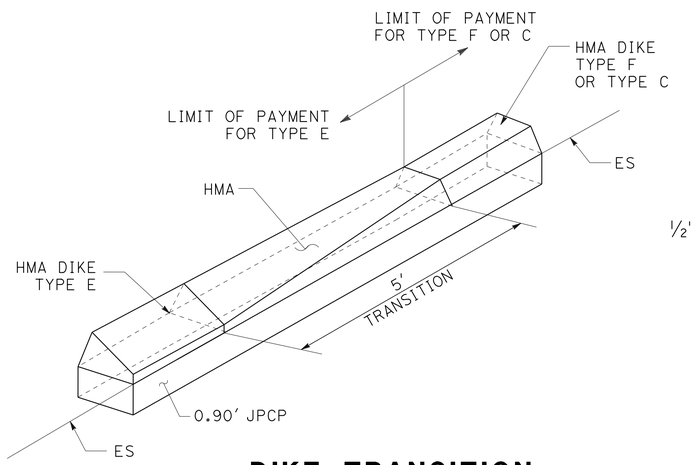

DIKE TRANSITION

TYPE E TO TYPE F OR TYPE C

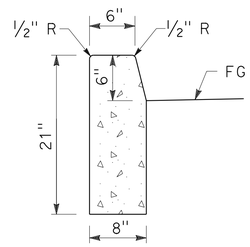

TYPE A1-6 (Mod) CURB

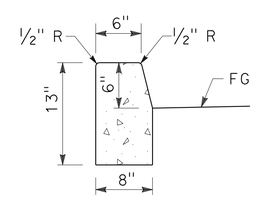

TYPE A1-6 (Mod)2 CURB

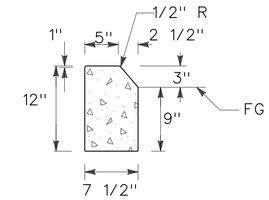

TYPE B1-4 (Mod) CURB

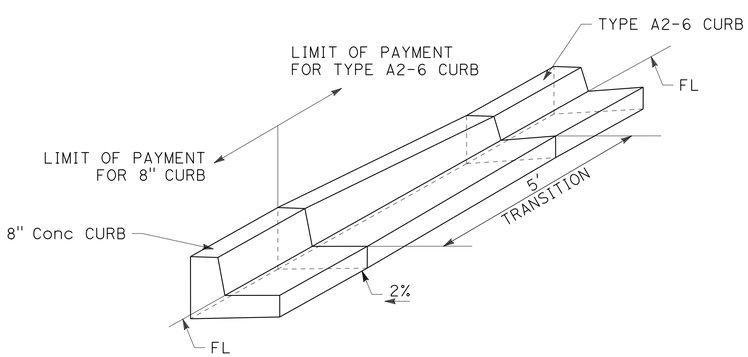

BRIDGE APPROACH SLAB TO Conc CURB TRANSITION

8" CURB TO TYPE A2-6 CURB

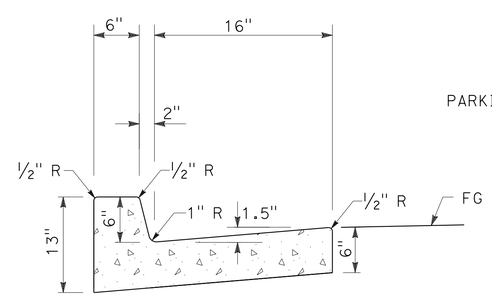

TYPE A2-6 (Mod) CURB

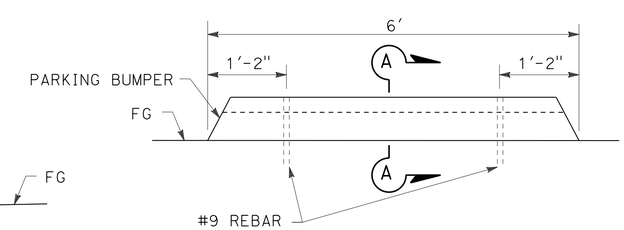

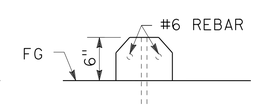

SECTION A-A

PARKING BUMPER (PRECAST Conc) DETAIL

CONSTRUCTION DETAILS

NO SCALE

C-25

STATE OF CALIFORNIA - DEPARTMENT OF TRANSPORTATION
Caltrans

CONSULTANT FUNCTIONAL SUPERVISOR: GERARD LUMABAS
CALCULATED-DESIGNED BY: MATTHEW P. MAECHLER
CHECKED BY: DARWIN CRUZ
REVISED BY / DATE REVISED

LAST REVISION 06-18-12
DATE PLOTTED => 12-SEP-2012
TIME PLOTTED => 16:07

Dist	COUNTY	ROUTE	POST MILES TOTAL PROJECT	SHEET No.	TOTAL SHEETS
11	SD	805	4.7/5.6	70	650

REGISTERED CIVIL ENGINEER 06-01-12 DATE

06-25-12
PLANS APPROVAL DATE

REGISTERED PROFESSIONAL ENGINEER PAUL E. KOSINSKI No. C73254 Exp. 12-31-12 CIVIL STATE OF CALIFORNIA

THE STATE OF CALIFORNIA OR ITS OFFICERS OR AGENTS SHALL NOT BE RESPONSIBLE FOR THE ACCURACY OR COMPLETENESS OF SCANNED COPIES OF THIS PLAN SHEET.

DOKKEN ENGINEERING
5675 RUFFIN Rd
SUITE 250
SAN DIEGO, CA 92123

SANDAG
401 B St
SUITE 800
SAN DIEGO, CA 92101

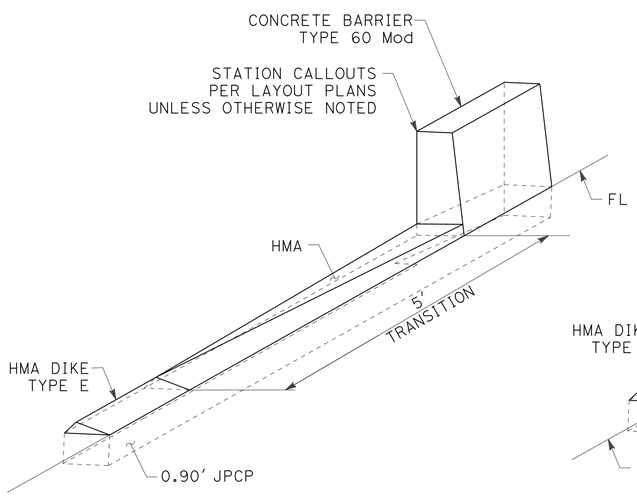

HMA DIKE TO BARRIER TRANSITION

HMA DIKE (TYPE E) TO
CONCRETE BARRIER (TYPE 60 Mod)

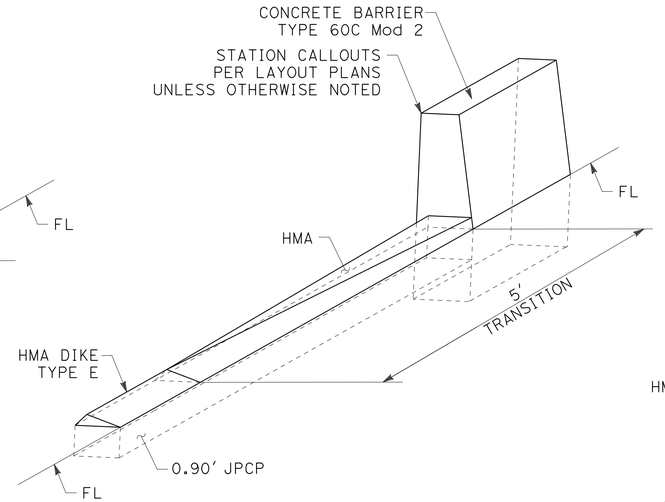

HMA DIKE TO BARRIER TRANSITION

HMA DIKE (TYPE E) TO
CONCRETE BARRIER (TYPE 60C Mod 2)

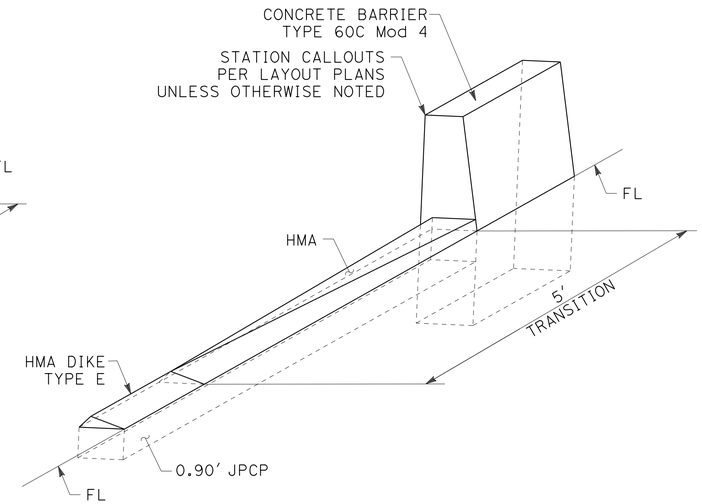

HMA DIKE TO BARRIER TRANSITION

HMA DIKE (TYPE E) TO
CONCRETE BARRIER (TYPE 60C Mod 4)

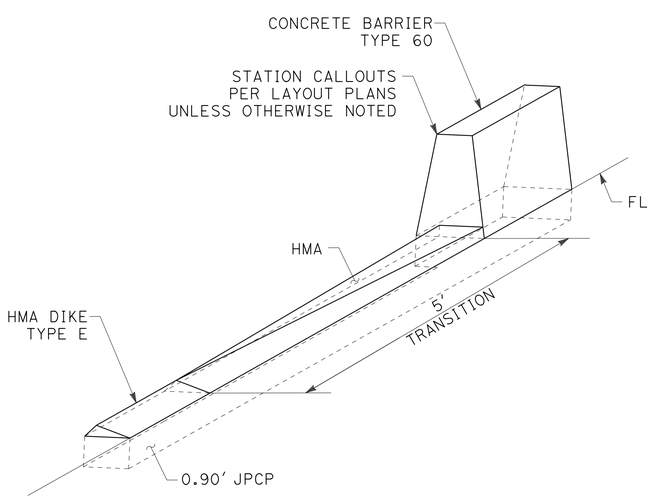

HMA DIKE TO BARRIER TRANSITION

HMA DIKE TYPE E TO CONCRETE BARRIER TYPE 60

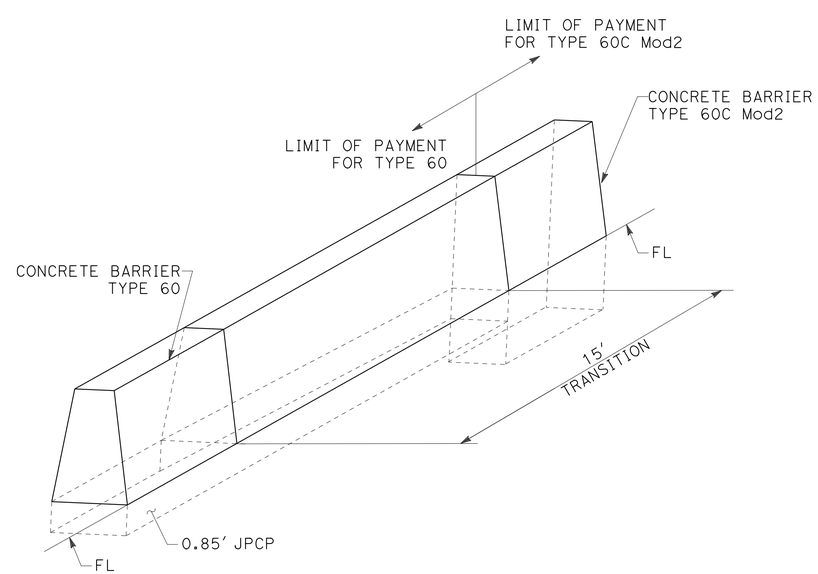

CONCRETE BARRIER TRANSITION

TYPE 60 TO TYPE 60C Mod 2

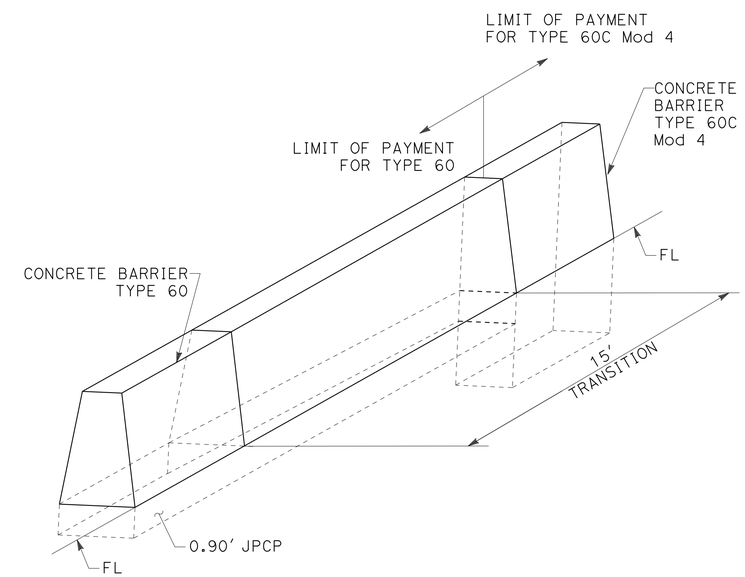

CONCRETE BARRIER TRANSITION

TYPE 60 TO TYPE 60C Mod 4

CONSTRUCTION DETAILS

NO SCALE

C-26

STATE OF CALIFORNIA - DEPARTMENT OF TRANSPORTATION
Caltrans

CONSULTANT FUNCTIONAL SUPERVISOR: GERARD LUMABAS
CALCULATED-DESIGNED BY: MATTHEW P. MAECHLER
CHECKED BY: DARWIN CRUZ
REVISED BY
DATE REVISED

LAST REVISION 06-18-12
DATE PLOTTED => 17-SEP-2012
TIME PLOTTED => 16:29

Dist	COUNTY	ROUTE	POST MILES TOTAL PROJECT	SHEET No.	TOTAL SHEETS
11	SD	805	4.7/5.6	71	650

REGISTERED CIVIL ENGINEER 06-01-12 DATE

06-25-12
PLANS APPROVAL DATE

REGISTERED PROFESSIONAL ENGINEER PAUL E. KOSINSKI No. C73254 Exp. 12-31-12 CIVIL STATE OF CALIFORNIA

THE STATE OF CALIFORNIA OR ITS OFFICERS OR AGENTS SHALL NOT BE RESPONSIBLE FOR THE ACCURACY OR COMPLETENESS OF SCANNED COPIES OF THIS PLAN SHEET.

DOKKEN ENGINEERING
5675 RUFFIN Rd
SUITE 250
SAN DIEGO, CA 92123

SANDAG
401 B St
SUITE 800
SAN DIEGO, CA 92101

NOTE:

NO CONSTRUCTION JOINTS ALLOWED WITHIN LIMITS OF SECTION A-A AND B-B

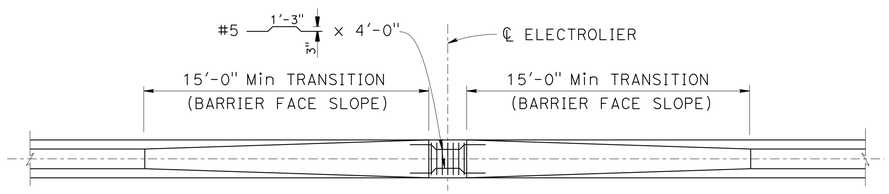

NOTE: ELECTROLIER AND BASE PLATE NOT SHOWN

PLAN
SCALE: 1/4" = 1'

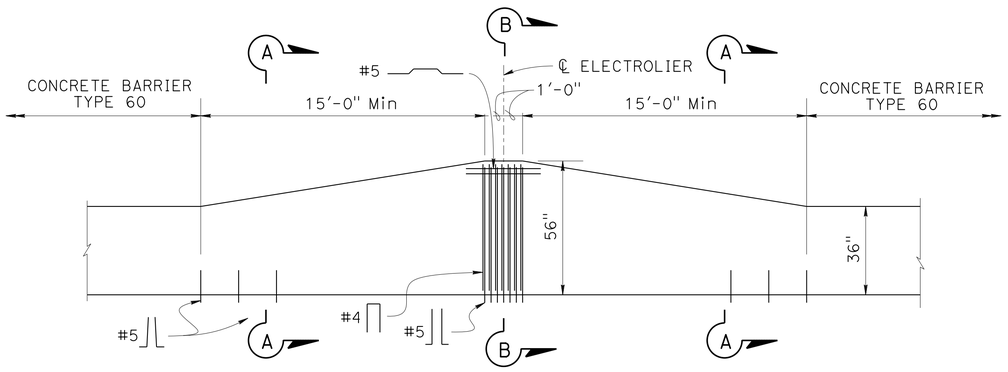

ELEVATION
SCALE: 1/4" = 1'

A76D

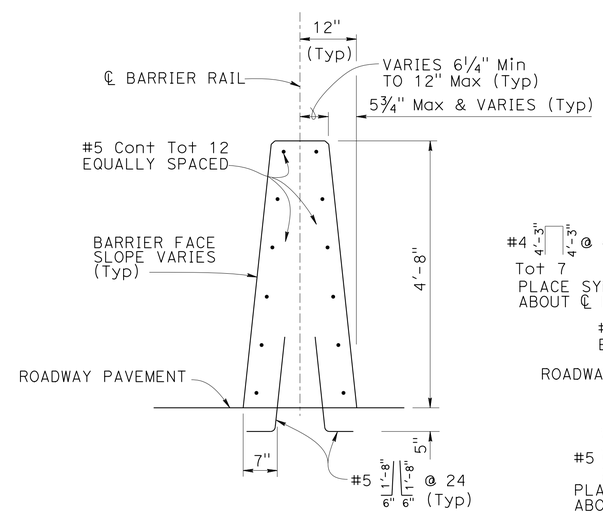

SECTION A-A
SCALE: 3/4" = 1'

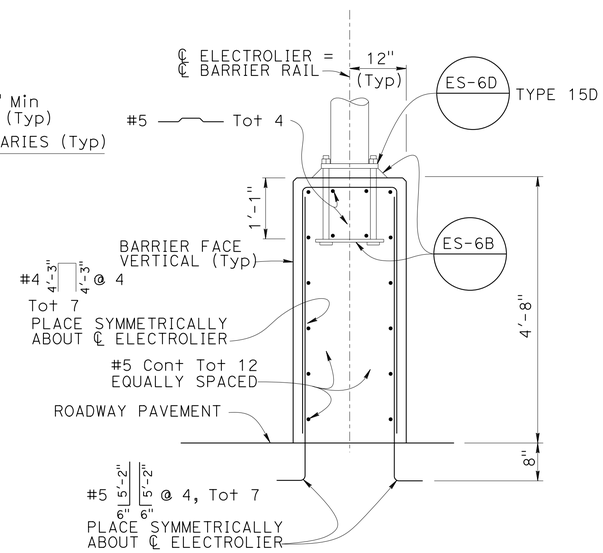

SECTION B-B
SCALE: 3/4" = 1'

ELECTROLIER/CONCRETE BARRIER TYPE 60GA (Mod) DETAILS

CONSTRUCTION DETAILS

SCALE AS SHOWN

C-27

STATE OF CALIFORNIA - DEPARTMENT OF TRANSPORTATION
Caltrans

CONSULTANT FUNCTIONAL SUPERVISOR: GERARD LUMABAS
CALCULATED-DESIGNED BY: MATTHEW P. MAECHLER
CHECKED BY: DARWIN CRUZ
REVISED BY
DATE REVISED

LAST REVISION 06-18-12
DATE PLOTTED => 12-SEP-2012
TIME PLOTTED => 16:07

Dist	COUNTY	ROUTE	POST MILES TOTAL PROJECT	SHEET No.	TOTAL SHEETS
11	SD	805	4.7/5.6	72	650

REGISTERED CIVIL ENGINEER 06-01-12 DATE

PAUL E. KOSINSKI No. C73254 Exp. 12-31-12 CIVIL STATE OF CALIFORNIA REGISTERED PROFESSIONAL ENGINEER

06-25-12
PLANS APPROVAL DATE

THE STATE OF CALIFORNIA OR ITS OFFICERS OR AGENTS SHALL NOT BE RESPONSIBLE FOR THE ACCURACY OR COMPLETENESS OF SCANNED COPIES OF THIS PLAN SHEET.

DOKKEN ENGINEERING
5675 RUFFIN Rd
SUITE 250
SAN DIEGO, CA 92123

SANDAG
401 B St
SUITE 800
SAN DIEGO, CA 92101

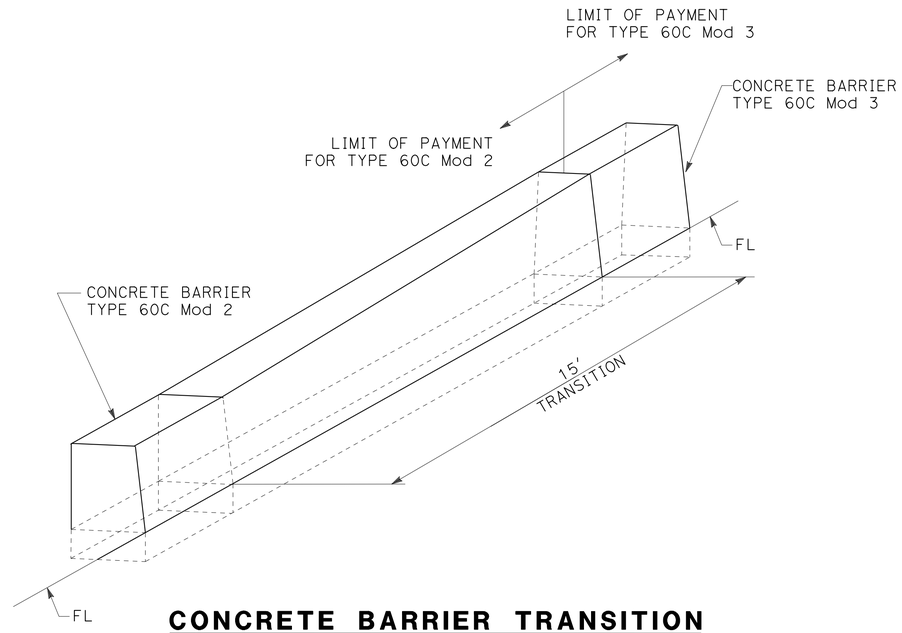

CONCRETE BARRIER TRANSITION
TYPE 60C Mod 2 TO TYPE 60C Mod 3

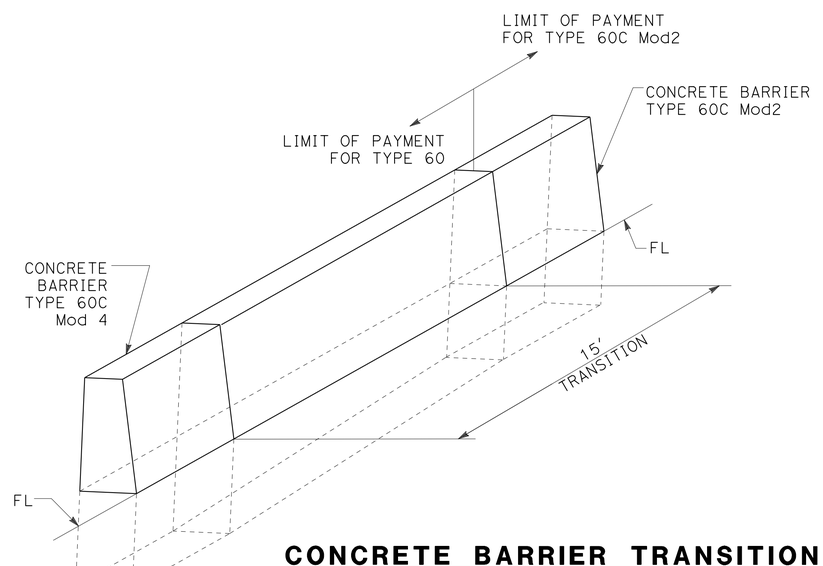

CONCRETE BARRIER TRANSITION
TYPE 60C Mod 4 TO TYPE 60C Mod 2

CONSTRUCTION DETAILS

NO SCALE

C-28

STATE OF CALIFORNIA - DEPARTMENT OF TRANSPORTATION
Caltrans

CONSULTANT FUNCTIONAL SUPERVISOR: GERARD LUMABAS
CALCULATED-DESIGNED BY: MATTHEW P. MAECHLER
CHECKED BY: DARWIN CRUZ
REVISED BY
DATE REVISED

LAST REVISION 06-18-12
DATE PLOTTED => 12-SEP-2012
TIME PLOTTED => 16:07

Dist	COUNTY	ROUTE	POST MILES TOTAL PROJECT	SHEET No.	TOTAL SHEETS
11	SD	805	4.7/5.6	73	650

REGISTERED CIVIL ENGINEER 06-01-12 DATE

PLANS APPROVAL DATE 06-25-12

REGISTERED PROFESSIONAL ENGINEER PAUL E. KOSINSKI No. C73254 Exp. 12-31-12 CIVIL STATE OF CALIFORNIA

THE STATE OF CALIFORNIA OR ITS OFFICERS OR AGENTS SHALL NOT BE RESPONSIBLE FOR THE ACCURACY OR COMPLETENESS OF SCANNED COPIES OF THIS PLAN SHEET.

DOKKEN ENGINEERING
5675 RUFFIN Rd
SUITE 250
SAN DIEGO, CA 92123

SANDAG
401 B St
SUITE 800
SAN DIEGO, CA 92101

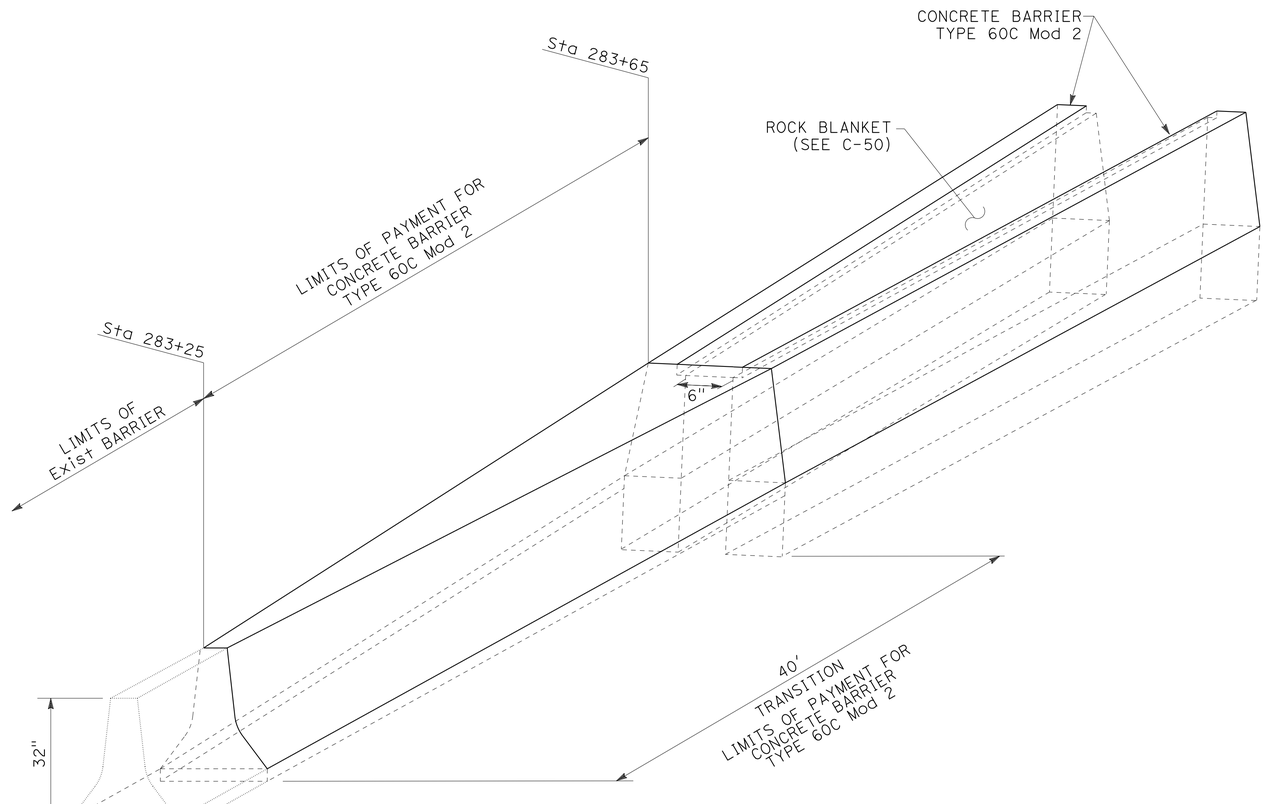

CONCRETE BARRIER TRANSITION

TYPE 50 TO TYPE 60C Mod 2
Sta "A1" 283+25.00 TO 283+65.00

CONSTRUCTION DETAILS

NO SCALE

C-29

REVISED BY	DATE REVISED

CALCULATED-DESIGNED BY: MATTHEW P. MAECHLER
CHECKED BY: DARWIN CRUZ
CONSULTANT FUNCTIONAL SUPERVISOR: GERARD LUMABAS

STATE OF CALIFORNIA - DEPARTMENT OF TRANSPORTATION
Caltrans

LAST REVISION 06-18-12 | DATE PLOTTED => 12-SEP-2012 | TIME PLOTTED => 16:07

Dist	COUNTY	ROUTE	POST MILES TOTAL PROJECT	SHEET No.	TOTAL SHEETS
11	SD	805	4.7/5.6	74	650

REGISTERED CIVIL ENGINEER 06-01-12 DATE

06-25-12
PLANS APPROVAL DATE

REGISTERED PROFESSIONAL ENGINEER PAUL E. KOSINSKI No. C73254 Exp. 12-31-12 CIVIL STATE OF CALIFORNIA

THE STATE OF CALIFORNIA OR ITS OFFICERS OR AGENTS SHALL NOT BE RESPONSIBLE FOR THE ACCURACY OR COMPLETENESS OF SCANNED COPIES OF THIS PLAN SHEET.

DOKKEN ENGINEERING
5675 RUFFIN Rd
SUITE 250
SAN DIEGO, CA 92123

SANDAG
401 B St
SUITE 800
SAN DIEGO, CA 92101

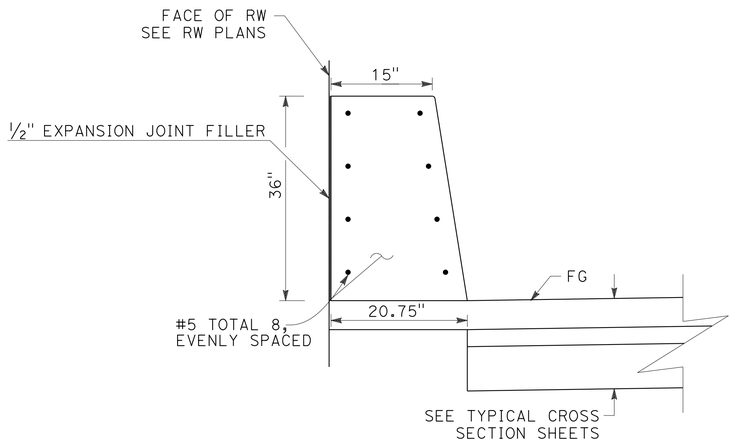

FOR DETAILS NOT SHOWN SEE Std PLAN A76A

CONCRETE BARRIER (TYPE 60 Mod)

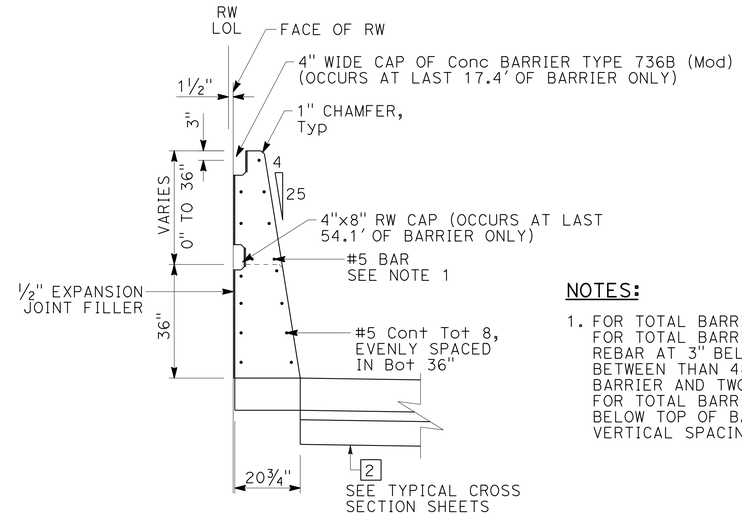

FOR DETAILS NOT SHOWN SEE Std PLAN A76A

CONCRETE BARRIER (TYPE 60 Mod 2)

NOTES:

1. FOR TOTAL BARRIER HEIGHT LESS THAN 40", NO REBAR REQUIRED. FOR TOTAL BARRIER HEIGHT BETWEEN 40" AND 48", USE TWO REBAR AT 3" BELOW TOP OF BARRIER. FOR TOTAL BARRIER HEIGHT BETWEEN THAN 48" & 62", USE TWO REBAR AT 3" BELOW TOP OF BARRIER AND TWO REBAR AT EVERY 10" INCREMENT VERTICAL SPACING. FOR TOTAL BARRIER HEIGHT GREATER THAN 62", USE ONE REBAR AT 3" BELOW TOP OF BARRIER AND TWO REBAR AT EVERY 10" INCREMENT VERTICAL SPACING.

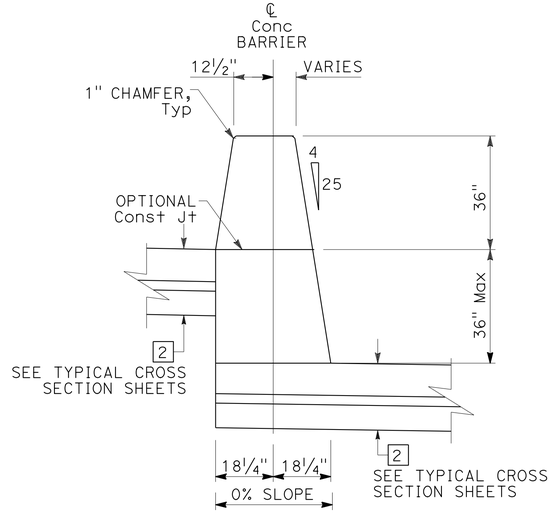

FOR REINFORCEMENT SEE Std PLAN A76A

CONCRETE BARRIER (TYPE 60C Mod)

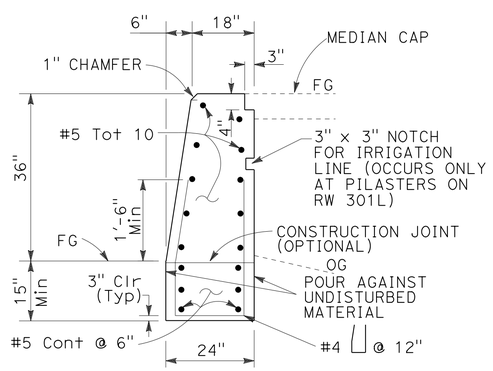

CONCRETE BARRIER (TYPE 60C Mod 2)

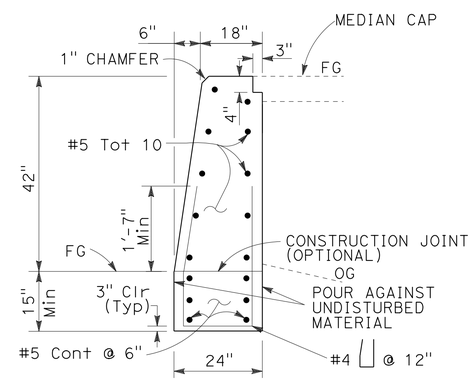

CONCRETE BARRIER (TYPE 60C Mod 3)

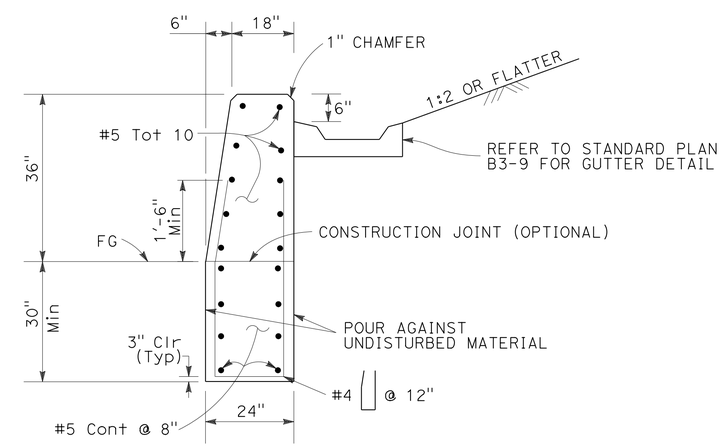

CONCRETE BARRIER (TYPE 60C Mod 4)

CONSTRUCTION DETAILS

NO SCALE

C-30

STATE OF CALIFORNIA - DEPARTMENT OF TRANSPORTATION
Caltrans

CONSULTANT FUNCTIONAL SUPERVISOR: GERARD LUMABAS
CALCULATED-DESIGNED BY: MATTHEW P. MAECHLER
CHECKED BY: DARWIN CRUZ
REVISED BY
DATE REVISED

LAST REVISION 06-18-12
DATE PLOTTED => 12-SEP-2012
TIME PLOTTED => 16:07

Dist	COUNTY	ROUTE	POST MILES TOTAL PROJECT	SHEET No.	TOTAL SHEETS
11	SD	805	4.7/5.6	75	650

REGISTERED CIVIL ENGINEER 06-01-12 DATE

06-25-12
PLANS APPROVAL DATE

REGISTERED PROFESSIONAL ENGINEER PAUL E. KOSINSKI No. C73254 Exp. 12-31-12 CIVIL STATE OF CALIFORNIA

THE STATE OF CALIFORNIA OR ITS OFFICERS OR AGENTS SHALL NOT BE RESPONSIBLE FOR THE ACCURACY OR COMPLETENESS OF SCANNED COPIES OF THIS PLAN SHEET.

DOKKEN ENGINEERING
5675 RUFFIN Rd
SUITE 250
SAN DIEGO, CA 92123

SANDAG
401 B St
SUITE 800
SAN DIEGO, CA 92101

NOTES (FOR SHEETS C-31 TO C-46):

1. FOR ACCURATE RIGHT OF WAY AND ACCESS DATA, CONTACT RIGHT OF WAY ENGINEERING AT THE DISTRICT OFFICE.
2. FOR IRRIGATION SLEEVES UNDER PAVING SEE IRRIGATION PLANS.
3. LOCATE EXPANSION JOINTS AS SHOWN ON PLANS AND AT CURB RETURNS, ADJACENT TO STRUCTURES AND AT 40' Max INTERVALS FOR MINOR Conc PAVING AND Conc BANDS.
4. EXPANSION JOINTS AND COLD JOINTS TO FOLLOW THE ALIGNMENT AND DIRECTION OF THE SAWCUT OR SCORE JOINTS SHOWN ON PLANS.

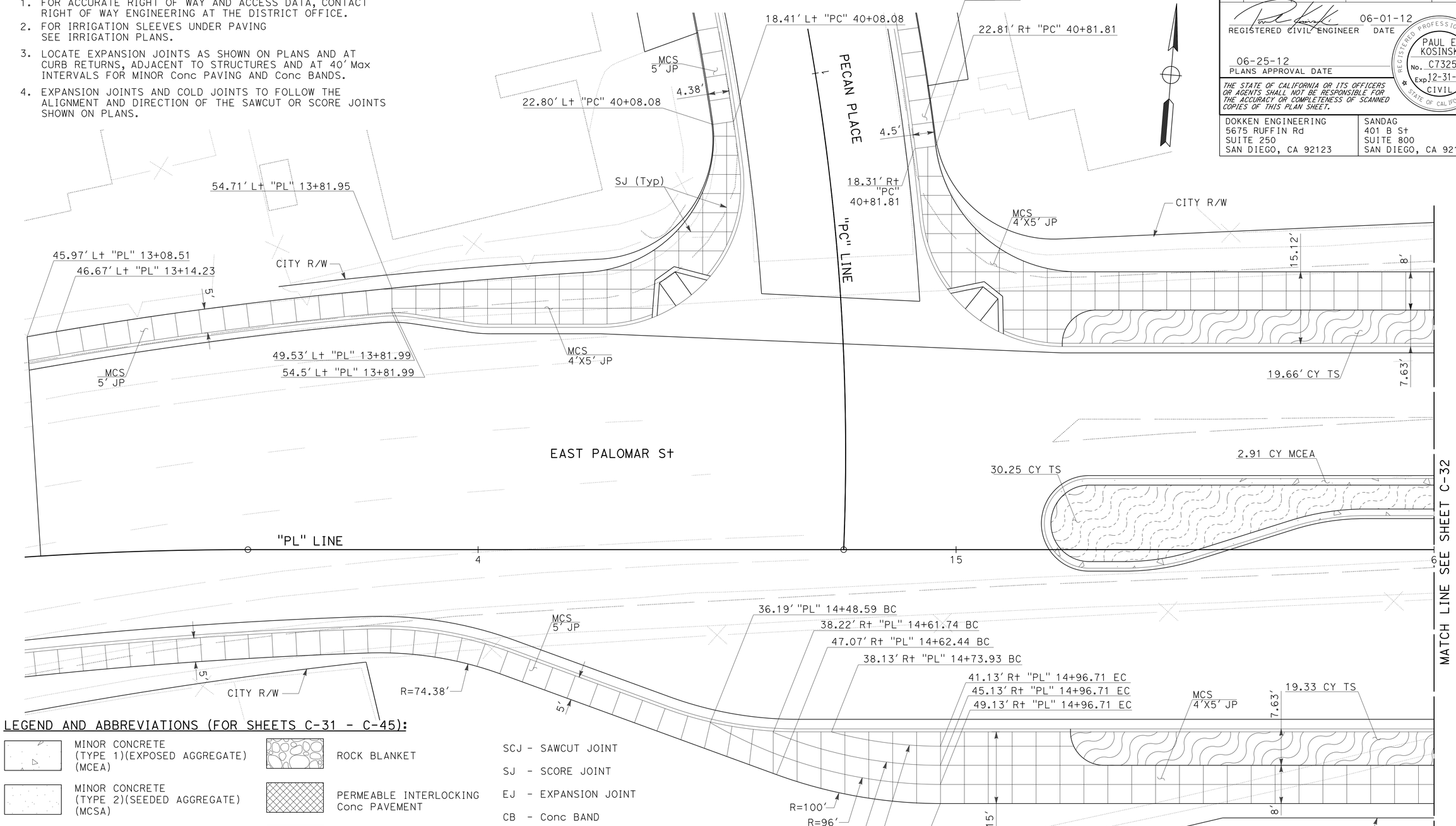

LEGEND AND ABBREVIATIONS (FOR SHEETS C-31 - C-45):

- MINOR CONCRETE (TYPE 1)(EXPOSED AGGREGATE) (MCEA)
- MINOR CONCRETE (TYPE 2)(SEEDED AGGREGATE) (MCSA)
- MINOR CONCRETE (TYPE 3)(COLORED) (MCC)
- MINOR CONCRETE (SIDEWALK) (MCS)
- DETECTABLE WARNING SURFACE (DWS)
- Conc BAND
- ROCK BLANKET
- PERMEABLE INTERLOCKING Conc PAVEMENT
- IMPORTED TOPSOIL
- PERVIOUS CONCRETE (SEE SHEET C-17)
- STEEL BENCH
- SAWCUT OR SCORE JOINT
- EXPANSION JOINT

SCJ - SAWCUT JOINT
SJ - SCORE JOINT
EJ - EXPANSION JOINT
CB - Conc BAND
JP - JOINT PATTERN
TG - TREE GRATE
TS - IMPORTED TOPSOIL

- TREE GRATE AND FRAME
- PRECAST Conc PLANTER

HARDSCAPE, SITE FURNISHINGS, AND TOPSOIL LOCATIONS

CONSTRUCTION DETAILS

SCALE: 1" = 10'

C-31

STATE OF CALIFORNIA - DEPARTMENT OF TRANSPORTATION

CONSULTANT FUNCTIONAL SUPERVISOR: GERARD LUMABAS

CALCULATED-DESIGNED BY: MATTHEW P. MAECHLER

CHECKED BY: DARWIN CRUZ

REVISED BY / DATE REVISED

LAST REVISION 06-21-12 | DATE PLOTTED => 12-SEP-2012 | TIME PLOTTED => 16:08

Dist	COUNTY	ROUTE	POST MILES TOTAL PROJECT	SHEET No.	TOTAL SHEETS
11	SD	805	4.7/5.6	76	650

REGISTERED CIVIL ENGINEER 06-01-12 DATE

06-25-12
PLANS APPROVAL DATE

REGISTERED PROFESSIONAL ENGINEER PAUL E. KOSINSKI No. C73254 Exp. 12-31-12 CIVIL STATE OF CALIFORNIA

THE STATE OF CALIFORNIA OR ITS OFFICERS OR AGENTS SHALL NOT BE RESPONSIBLE FOR THE ACCURACY OR COMPLETENESS OF SCANNED COPIES OF THIS PLAN SHEET.

DOKKEN ENGINEERING
5675 RUFFIN Rd
SUITE 250
SAN DIEGO, CA 92123

SANDAG
401 B St
SUITE 800
SAN DIEGO, CA 92101

NOTES:

1. FOR ACCURATE RIGHT OF WAY AND ACCESS DATA, CONTACT RIGHT OF WAY ENGINEERING AT THE DISTRICT OFFICE.
2. FOR "BRIDGE ARCHITECTURAL TREATMENT DETAILS" SEE SHEET C-56.

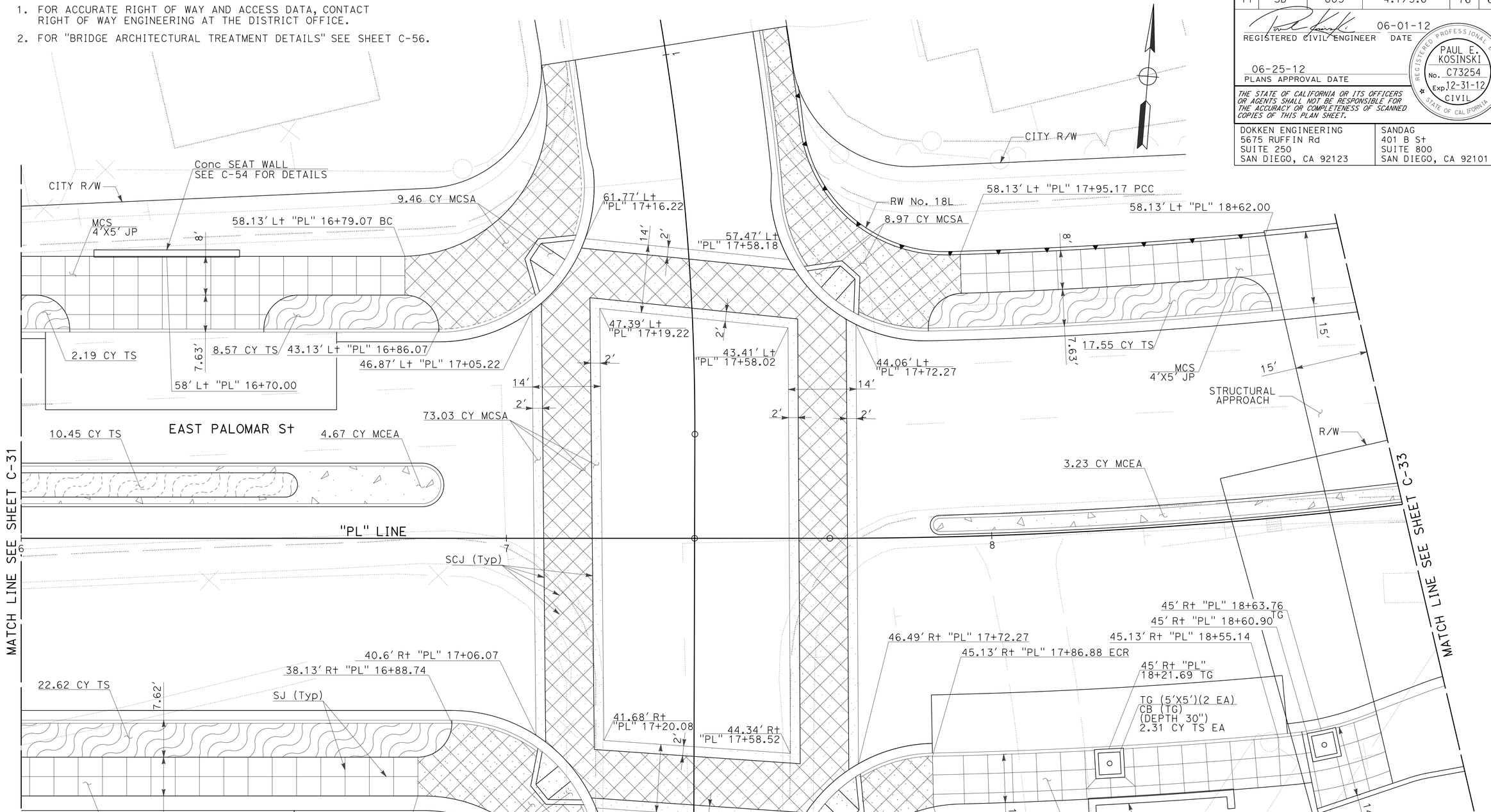

HARDSCAPE, SITE FURNISHINGS, AND TOPSOIL LOCATIONS

CONSTRUCTION DETAILS

SCALE: 1" = 10'

C-32

STATE OF CALIFORNIA - DEPARTMENT OF TRANSPORTATION
Caltrans

CONSULTANT FUNCTIONAL SUPERVISOR: GERARD LUMABAS
CALCULATED-DESIGNED BY: MATTHEW P. MAECHLER
CHECKED BY: DARWIN CRUZ
REVISED BY
DATE REVISED

LAST REVISION 06-18-12
DATE PLOTTED => 12-SEP-2012
TIME PLOTTED => 16:08

Dist	COUNTY	ROUTE	POST MILES TOTAL PROJECT	SHEET No.	TOTAL SHEETS
11	SD	805	4.7/5.6	77	650

REGISTERED CIVIL ENGINEER 06-01-12 DATE

PAUL E. KOSINSKI No. C73254 Exp. 12-31-12 CIVIL — REGISTERED PROFESSIONAL ENGINEER — STATE OF CALIFORNIA

06-25-12
PLANS APPROVAL DATE

THE STATE OF CALIFORNIA OR ITS OFFICERS OR AGENTS SHALL NOT BE RESPONSIBLE FOR THE ACCURACY OR COMPLETENESS OF SCANNED COPIES OF THIS PLAN SHEET.

DOKKEN ENGINEERING
5675 RUFFIN Rd
SUITE 250
SAN DIEGO, CA 92123

SANDAG
401 B St
SUITE 800
SAN DIEGO, CA 92101

NOTES:

1. FOR ACCURATE RIGHT OF WAY AND ACCESS DATA, CONTACT RIGHT OF WAY ENGINEERING AT THE DISTRICT OFFICE.
2. FOR "BRIDGE ARCHITECTURAL TREATMENT DETAILS" SEE SHEET C-56.

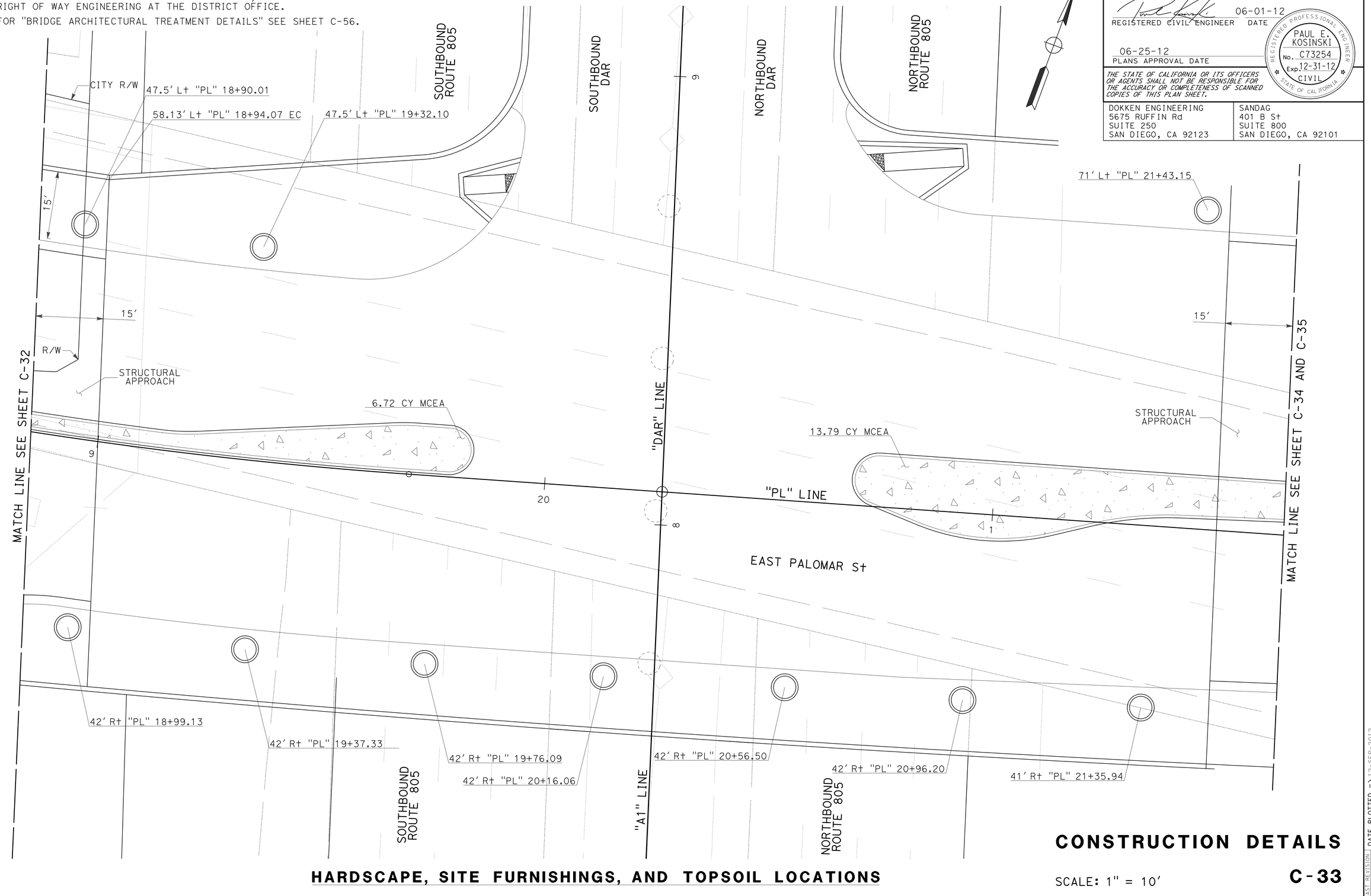

HARDSCAPE, SITE FURNISHINGS, AND TOPSOIL LOCATIONS

CONSTRUCTION DETAILS

SCALE: 1" = 10'

C-33

STATE OF CALIFORNIA - DEPARTMENT OF TRANSPORTATION

Caltrans

CONSULTANT FUNCTIONAL SUPERVISOR: GERARD LUMABAS

CALCULATED-DESIGNED BY: MATTHEW P. MAECHLER

CHECKED BY: DARWIN CRUZ

REVISED BY

DATE REVISED

LAST REVISION 06-18-12 | DATE PLOTTED => 12-SEP-2012 | TIME PLOTTED => 16:08

Dist	COUNTY	ROUTE	POST MILES TOTAL PROJECT	SHEET No.	TOTAL SHEETS
11	SD	805	4.7/5.6	78	650

REGISTERED CIVIL ENGINEER 06-01-12 DATE

PLANS APPROVAL DATE 06-25-12

REGISTERED PROFESSIONAL ENGINEER PAUL E. KOSINSKI No. C73254 Exp. 12-31-12 CIVIL STATE OF CALIFORNIA

THE STATE OF CALIFORNIA OR ITS OFFICERS OR AGENTS SHALL NOT BE RESPONSIBLE FOR THE ACCURACY OR COMPLETENESS OF SCANNED COPIES OF THIS PLAN SHEET.

DOKKEN ENGINEERING
5675 RUFFIN Rd
SUITE 250
SAN DIEGO, CA 92123

SANDAG
401 B St
SUITE 800
SAN DIEGO, CA 92101

NOTES:

1. FOR ACCURATE RIGHT OF WAY AND ACCESS DATA, CONTACT RIGHT OF WAY ENGINEERING AT THE DISTRICT OFFICE.
2. FOR "BRIDGE ARCHITECTURAL TREATMENT DETAILS" SEE SHEET C-56.
3. DETECTABLE WARNING SURFACE (DWS) TO BE PLACED ON TOP OF MINOR CONCRETE (TYPE 3) (COLOR).

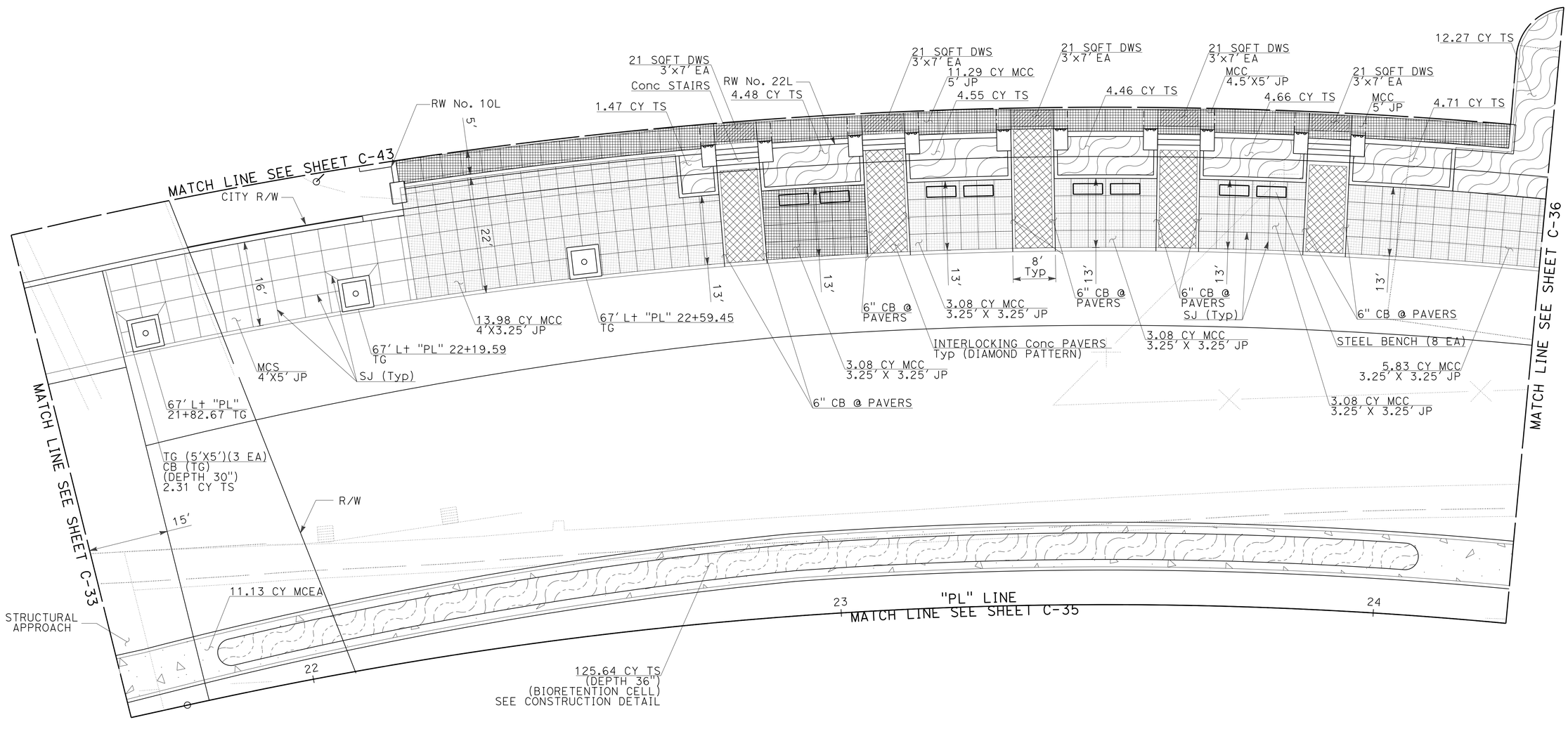

HARDSCAPE, SITE FURNISHINGS, AND TOPSOIL LOCATIONS

CONSTRUCTION DETAILS

SCALE: 1" = 10'

C-34

STATE OF CALIFORNIA - DEPARTMENT OF TRANSPORTATION
Caltrans

CONSULTANT FUNCTIONAL SUPERVISOR: GERARD LUMABAS

CALCULATED-DESIGNED BY: MATTHEW P. MAECHLER
CHECKED BY: DARWIN CRUZ

REVISED BY
DATE REVISED

LAST REVISION 6-7-12
DATE PLOTTED => 12-SEP-2012
TIME PLOTTED => 16:08

Dist	COUNTY	ROUTE	POST MILES TOTAL PROJECT	SHEET No.	TOTAL SHEETS
11	SD	805	4.7/5.6	79	650

REGISTERED CIVIL ENGINEER 06-01-12 DATE

PAUL E. KOSINSKI No. C73254 Exp. 12-31-12 CIVIL STATE OF CALIFORNIA REGISTERED PROFESSIONAL ENGINEER

06-25-12
PLANS APPROVAL DATE

THE STATE OF CALIFORNIA OR ITS OFFICERS OR AGENTS SHALL NOT BE RESPONSIBLE FOR THE ACCURACY OR COMPLETENESS OF SCANNED COPIES OF THIS PLAN SHEET.

DOKKEN ENGINEERING
5675 RUFFIN Rd
SUITE 250
SAN DIEGO, CA 92123

SANDAG
401 B St
SUITE 800
SAN DIEGO, CA 92101

NOTES:

1. FOR ACCURATE RIGHT OF WAY AND ACCESS DATA, CONTACT RIGHT OF WAY ENGINEERING AT THE DISTRICT OFFICE.
2. FOR "BRIDGE ARCHITECTURAL TREATMENT DETAILS" SEE SHEET C-56.

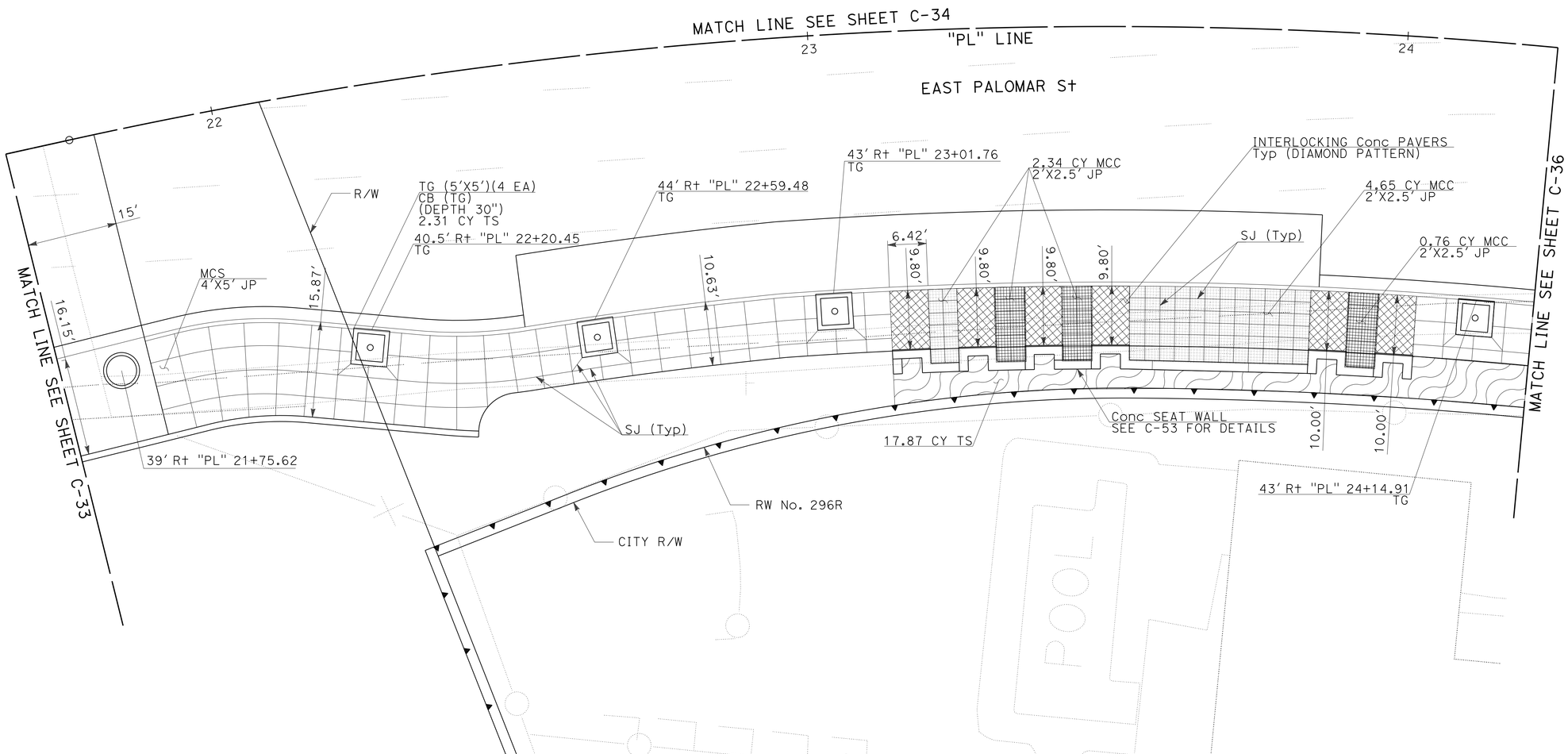

HARDSCAPE, SITE FURNISHINGS, AND TOPSOIL LOCATIONS

CONSTRUCTION DETAILS

SCALE: 1" = 10'

C-35

STATE OF CALIFORNIA - DEPARTMENT OF TRANSPORTATION
Caltrans

CONSULTANT FUNCTIONAL SUPERVISOR: GERARD LUMABAS

CALCULATED-DESIGNED BY: MATTHEW P. MAECHLER
CHECKED BY: DARWIN CRUZ

REVISED BY
DATE REVISED

LAST REVISION DATE PLOTTED => 12-SEP-2012
06-18-12 TIME PLOTTED => 16:08

Dist	COUNTY	ROUTE	POST MILES TOTAL PROJECT	SHEET No.	TOTAL SHEETS
11	SD	805	4.7/5.6	80	650

REGISTERED CIVIL ENGINEER 06-01-12 DATE

06-25-12
PLANS APPROVAL DATE

REGISTERED PROFESSIONAL ENGINEER PAUL E. KOSINSKI No. C73254 Exp. 12-31-12 CIVIL STATE OF CALIFORNIA

THE STATE OF CALIFORNIA OR ITS OFFICERS OR AGENTS SHALL NOT BE RESPONSIBLE FOR THE ACCURACY OR COMPLETENESS OF SCANNED COPIES OF THIS PLAN SHEET.

DOKKEN ENGINEERING
5675 RUFFIN Rd
SUITE 250
SAN DIEGO, CA 92123

SANDAG
401 B St
SUITE 800
SAN DIEGO, CA 92101

NOTE:

1. FOR ACCURATE RIGHT OF WAY AND ACCESS DATA, CONTACT RIGHT OF WAY ENGINEERING AT THE DISTRICT OFFICE.

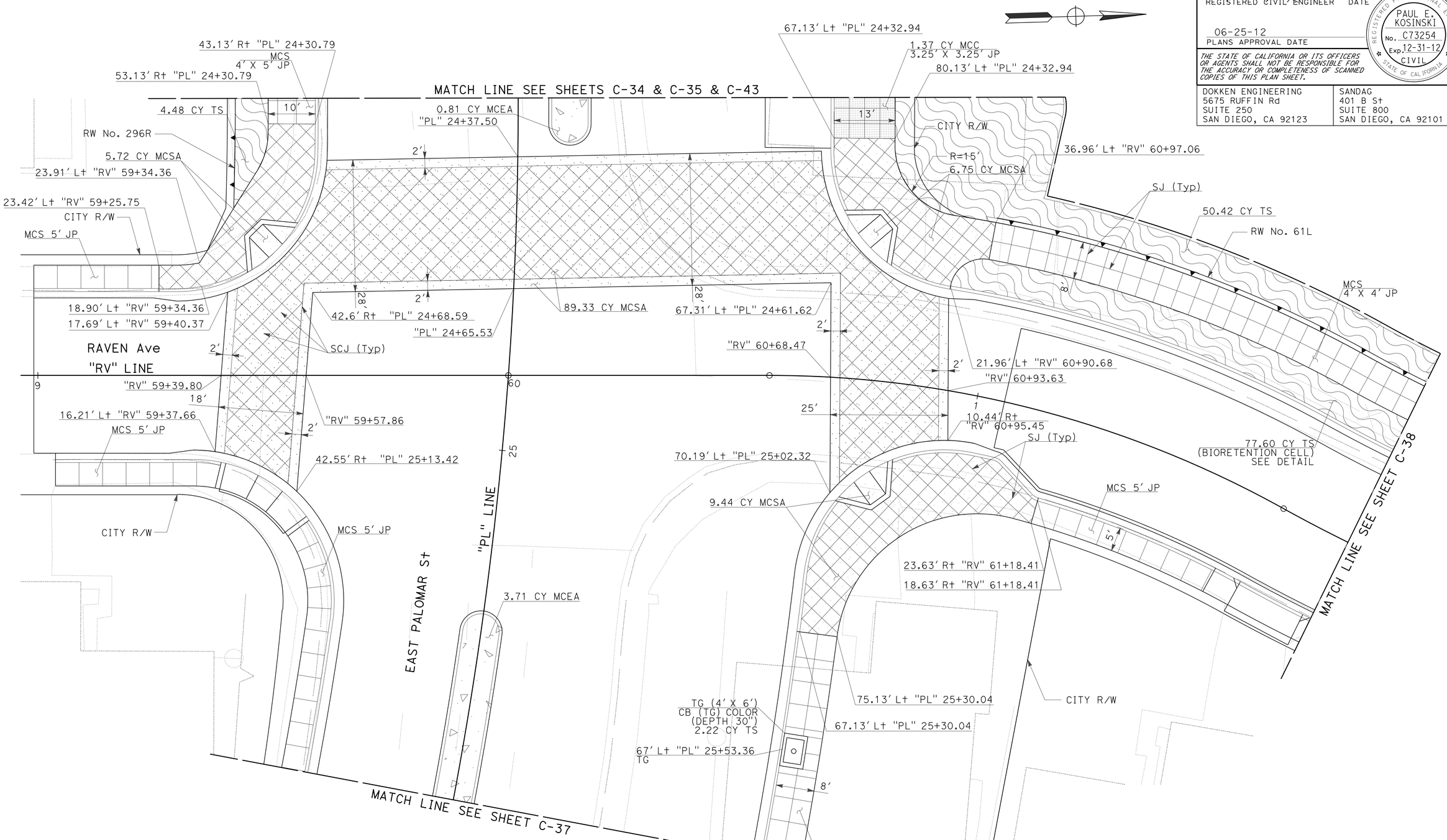

HARDSCAPE, SITE FURNISHINGS, AND TOPSOIL LOCATIONS

CONSTRUCTION DETAILS

SCALE: 1" = 10'

C-36

STATE OF CALIFORNIA - DEPARTMENT OF TRANSPORTATION
Caltrans

CONSULTANT FUNCTIONAL SUPERVISOR: GERARD LUMABAS
CALCULATED-DESIGNED BY: MATTHEW P. MAECHLER
CHECKED BY: DARWIN CRUZ
REVISED BY
DATE REVISED

LAST REVISION 06-18-12
DATE PLOTTED => 12-SEP-2012
TIME PLOTTED => 16:08

Dist	COUNTY	ROUTE	POST MILES TOTAL PROJECT	SHEET No.	TOTAL SHEETS
11	SD	805	4.7/5.6	81	650

REGISTERED CIVIL ENGINEER 06-01-12 DATE

06-25-12
PLANS APPROVAL DATE

REGISTERED PROFESSIONAL ENGINEER PAUL E. KOSINSKI No. C73254 Exp. 12-31-12 CIVIL STATE OF CALIFORNIA

THE STATE OF CALIFORNIA OR ITS OFFICERS OR AGENTS SHALL NOT BE RESPONSIBLE FOR THE ACCURACY OR COMPLETENESS OF SCANNED COPIES OF THIS PLAN SHEET.

DOKKEN ENGINEERING
5675 RUFFIN Rd
SUITE 250
SAN DIEGO, CA 92123

SANDAG
401 B St
SUITE 800
SAN DIEGO, CA 92101

NOTE:

1. FOR ACCURATE RIGHT OF WAY AND ACCESS DATA, CONTACT RIGHT OF WAY ENGINEERING AT THE DISTRICT OFFICE.

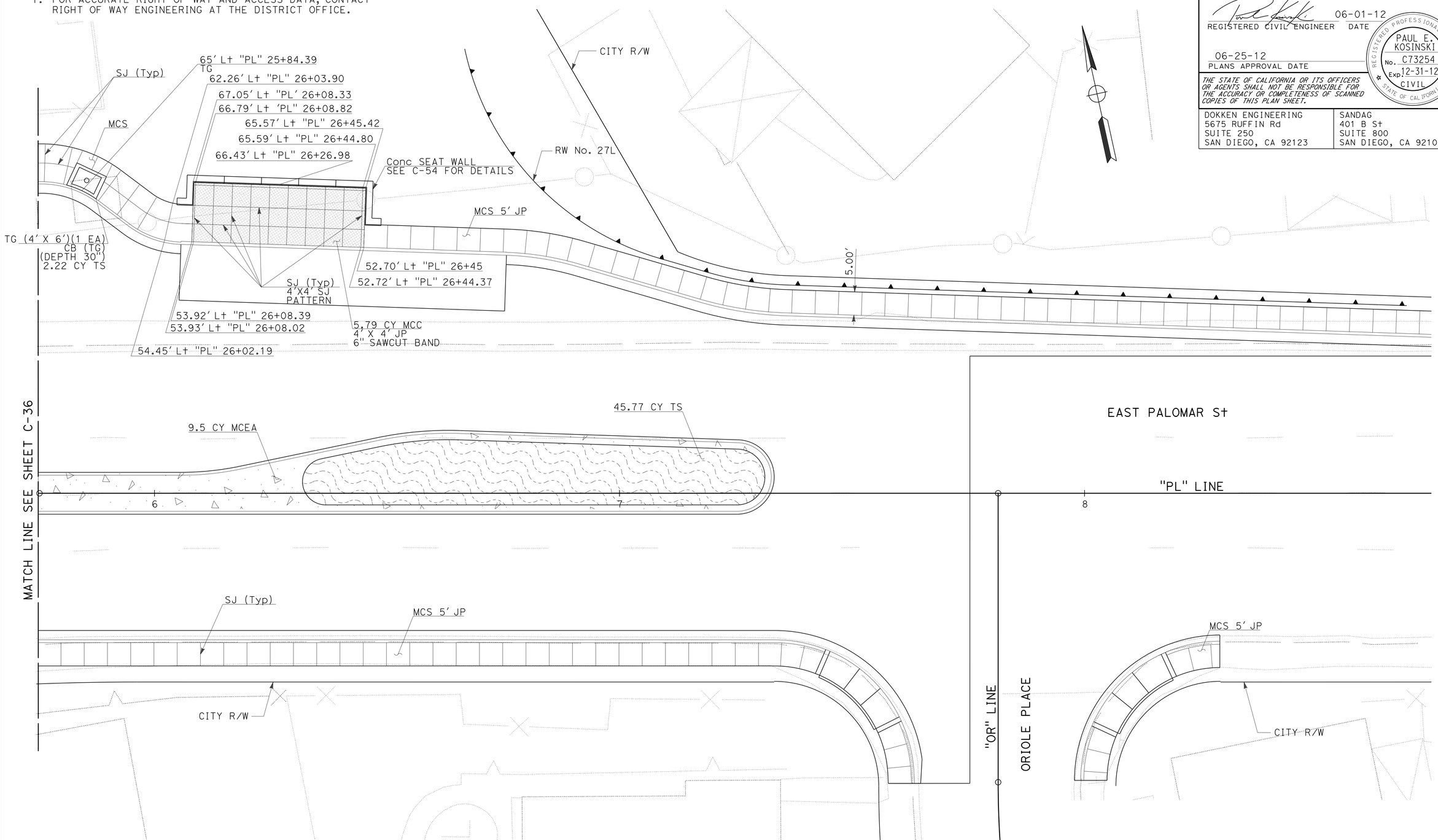

HARDSCAPE, SITE FURNISHINGS, AND TOPSOIL LOCATIONS

CONSTRUCTION DETAILS

SCALE: 1" = 10'

C-37

STATE OF CALIFORNIA - DEPARTMENT OF TRANSPORTATION
Caltrans

CONSULTANT FUNCTIONAL SUPERVISOR: GERARD LUMABAS
CALCULATED-DESIGNED BY: MATTHEW P. MAECHLER
CHECKED BY: DARWIN CRUZ
REVISED BY
DATE REVISED

LAST REVISION 06-18-12
DATE PLOTTED => 12-SEP-2012
TIME PLOTTED => 16:08

Dist	COUNTY	ROUTE	POST MILES TOTAL PROJECT	SHEET No.	TOTAL SHEETS
11	SD	805	4.7/5.6	82	650

REGISTERED CIVIL ENGINEER 06-01-12 DATE

PAUL E. KOSINSKI No. C73254 Exp. 12-31-12 CIVIL — REGISTERED PROFESSIONAL ENGINEER — STATE OF CALIFORNIA

06-25-12
PLANS APPROVAL DATE

THE STATE OF CALIFORNIA OR ITS OFFICERS OR AGENTS SHALL NOT BE RESPONSIBLE FOR THE ACCURACY OR COMPLETENESS OF SCANNED COPIES OF THIS PLAN SHEET.

DOKKEN ENGINEERING
5675 RUFFIN Rd
SUITE 250
SAN DIEGO, CA 92123

SANDAG
401 B St
SUITE 800
SAN DIEGO, CA 92101

NOTE:

1. FOR ACCURATE RIGHT OF WAY AND ACCESS DATA, CONTACT RIGHT OF WAY ENGINEERING AT THE DISTRICT OFFICE.

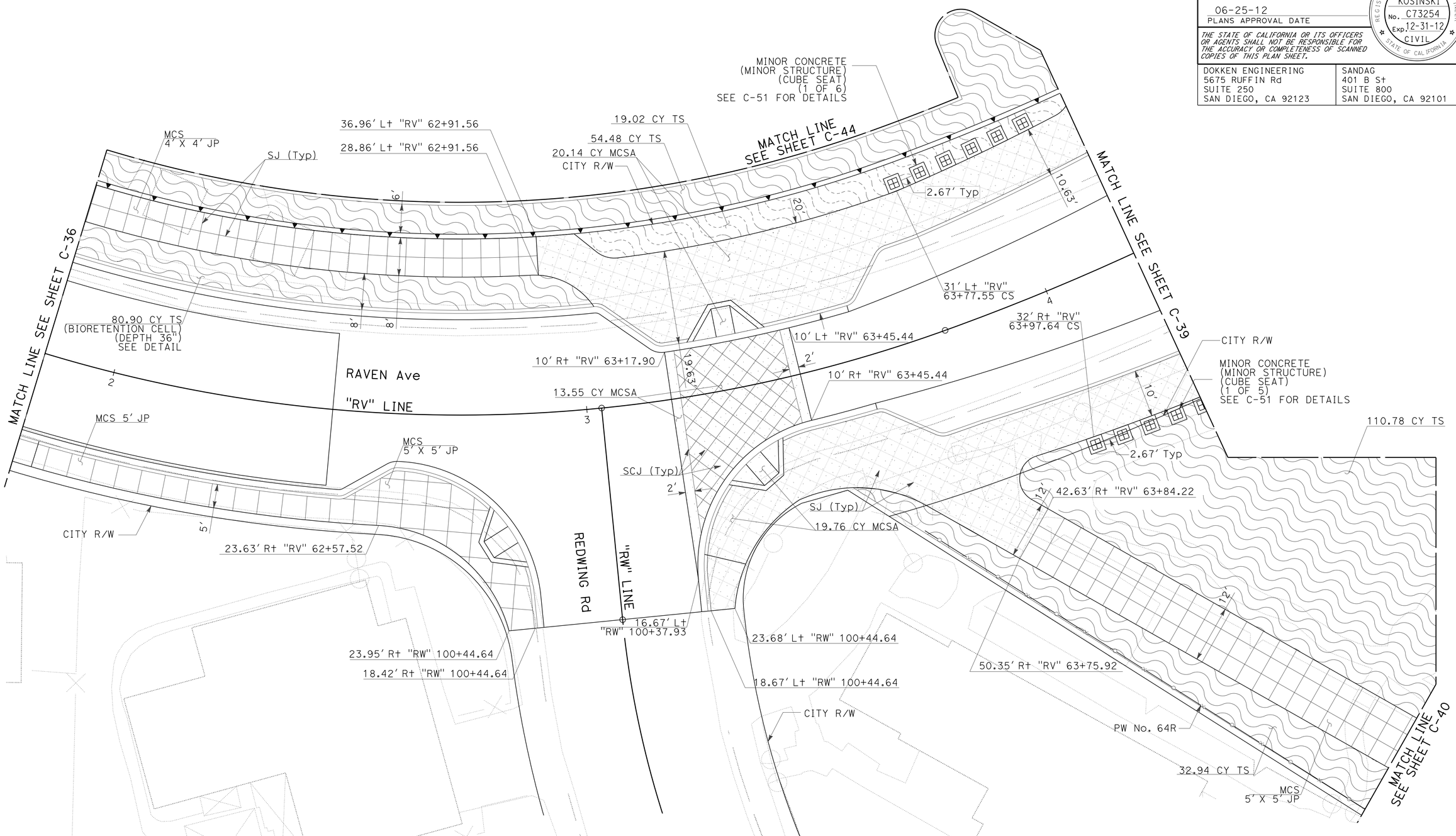

HARDSCAPE, SITE FURNISHINGS, AND TOPSOIL LOCATIONS

CONSTRUCTION DETAILS

SCALE: 1" = 10'

C-38

STATE OF CALIFORNIA - DEPARTMENT OF TRANSPORTATION

Caltrans

CONSULTANT FUNCTIONAL SUPERVISOR: GERARD LUMABAS

CALCULATED-DESIGNED BY: MATTHEW P. MAECHLER

CHECKED BY: DARWIN CRUZ

REVISED BY

DATE REVISED

LAST REVISION 06-18-12

DATE PLOTTED => 12-SEP-2012
TIME PLOTTED => 16:08

Dist	COUNTY	ROUTE	POST MILES TOTAL PROJECT	SHEET No.	TOTAL SHEETS
11	SD	805	4.7/5.6	83	650

REGISTERED CIVIL ENGINEER 06-01-12 DATE

06-25-12
PLANS APPROVAL DATE

REGISTERED PROFESSIONAL ENGINEER PAUL E. KOSINSKI No. C73254 Exp. 12-31-12 CIVIL STATE OF CALIFORNIA

THE STATE OF CALIFORNIA OR ITS OFFICERS OR AGENTS SHALL NOT BE RESPONSIBLE FOR THE ACCURACY OR COMPLETENESS OF SCANNED COPIES OF THIS PLAN SHEET.

DOKKEN ENGINEERING
5675 RUFFIN Rd
SUITE 250
SAN DIEGO, CA 92123

SANDAG
401 B St
SUITE 800
SAN DIEGO, CA 92101

NOTE:

1. FOR ACCURATE RIGHT OF WAY AND ACCESS DATA, CONTACT RIGHT OF WAY ENGINEERING AT THE DISTRICT OFFICE.

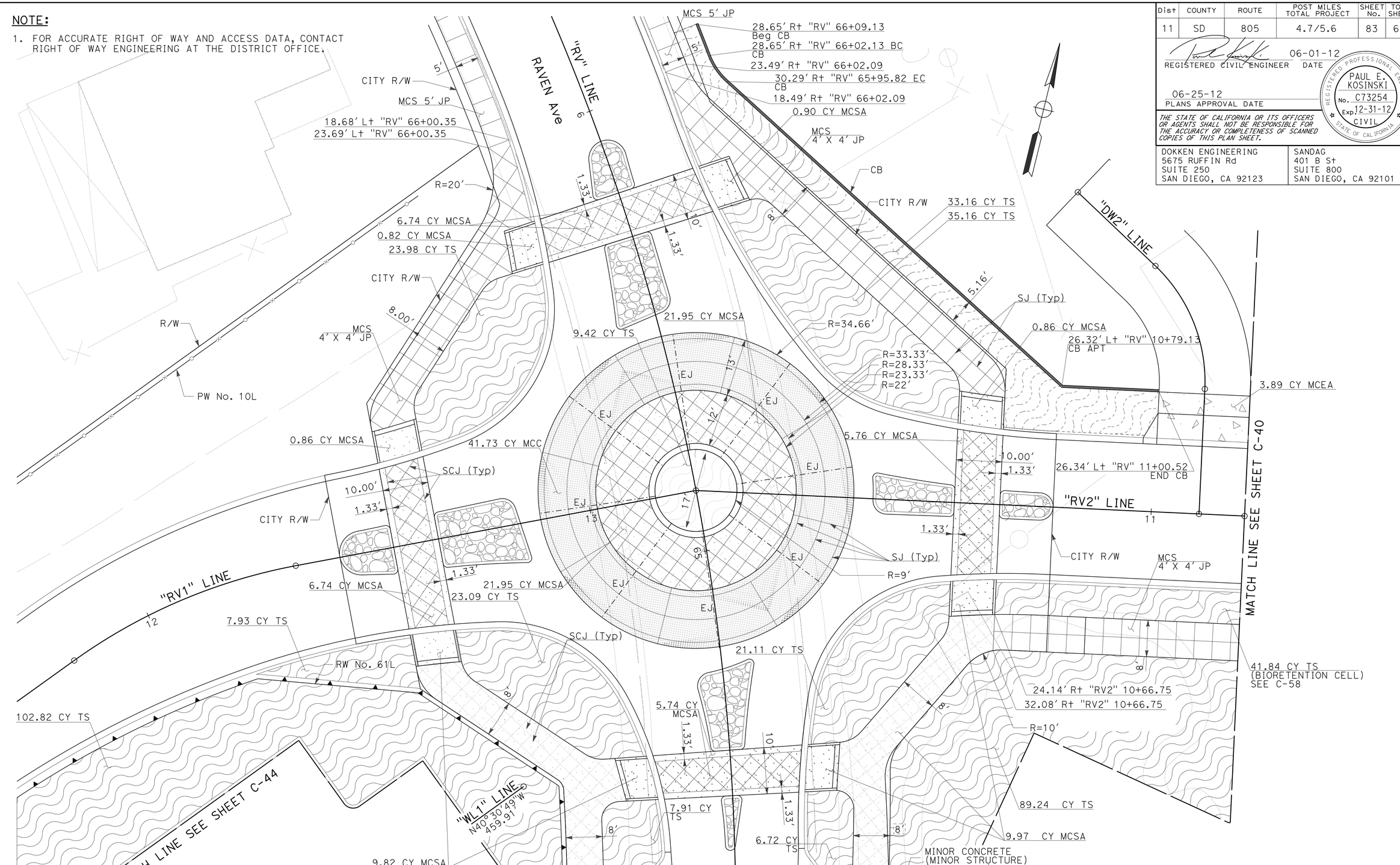

HARDSCAPE, SITE FURNISHINGS, AND TOPSOIL LOCATIONS

CONSTRUCTION DETAILS

SCALE: 1" = 10'

C-39

STATE OF CALIFORNIA - DEPARTMENT OF TRANSPORTATION
Caltrans

CONSULTANT FUNCTIONAL SUPERVISOR: GERARD LUMABAS
CALCULATED-DESIGNED BY: MATTHEW P. MAECHLER
CHECKED BY: DARWIN CRUZ
REVISED BY
DATE REVISED

LAST REVISION 06-18-12
DATE PLOTTED => 12-SEP-2012
TIME PLOTTED => 6:08

Dist	COUNTY	ROUTE	POST MILES TOTAL PROJECT	SHEET No.	TOTAL SHEETS
11	SD	805	4.7/5.6	84	650

REGISTERED CIVIL ENGINEER 06-01-12 DATE

PAUL E. KOSINSKI No. C73254 Exp. 12-31-12 CIVIL STATE OF CALIFORNIA REGISTERED PROFESSIONAL ENGINEER

06-25-12
PLANS APPROVAL DATE

THE STATE OF CALIFORNIA OR ITS OFFICERS OR AGENTS SHALL NOT BE RESPONSIBLE FOR THE ACCURACY OR COMPLETENESS OF SCANNED COPIES OF THIS PLAN SHEET.

DOKKEN ENGINEERING
5675 RUFFIN Rd
SUITE 250
SAN DIEGO, CA 92123

SANDAG
401 B St
SUITE 800
SAN DIEGO, CA 92101

NOTE:

1. FOR ACCURATE RIGHT OF WAY AND ACCESS DATA, CONTACT RIGHT OF WAY ENGINEERING AT THE DISTRICT OFFICE.

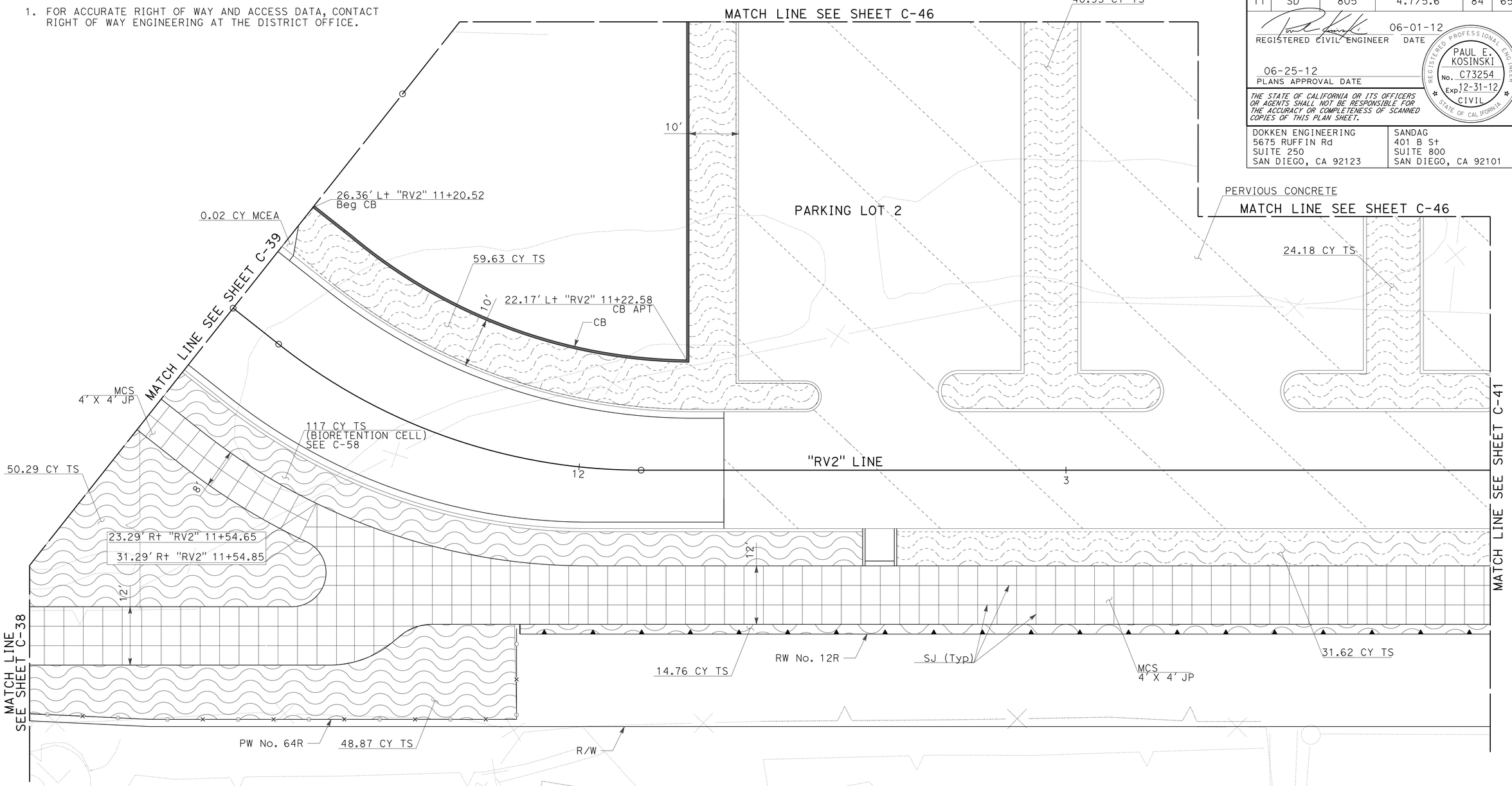

HARDSCAPE, SITE FURNISHINGS, AND TOPSOIL LOCATIONS

CONSTRUCTION DETAILS

SCALE: 1" = 10'

C-40

STATE OF CALIFORNIA - DEPARTMENT OF TRANSPORTATION
Caltrans

CONSULTANT FUNCTIONAL SUPERVISOR: GERARD LUMABAS
CALCULATED-DESIGNED BY: MATTHEW P. MAECHLER
CHECKED BY: DARWIN CRUZ
REVISED BY
DATE REVISED

LAST REVISION 06-18-12
DATE PLOTTED => 12-SEP-2012
TIME PLOTTED => 16:08

Dist	COUNTY	ROUTE	POST MILES TOTAL PROJECT	SHEET No.	TOTAL SHEETS
11	SD	805	4.7/5.6	85	650

REGISTERED CIVIL ENGINEER 06-01-12 DATE

06-25-12
PLANS APPROVAL DATE

REGISTERED PROFESSIONAL ENGINEER
PAUL E. KOSINSKI
No. C73254
Exp. 12-31-12
CIVIL
STATE OF CALIFORNIA

THE STATE OF CALIFORNIA OR ITS OFFICERS OR AGENTS SHALL NOT BE RESPONSIBLE FOR THE ACCURACY OR COMPLETENESS OF SCANNED COPIES OF THIS PLAN SHEET.

DOKKEN ENGINEERING
5675 RUFFIN Rd
SUITE 250
SAN DIEGO, CA 92123

SANDAG
401 B St
SUITE 800
SAN DIEGO, CA 92101

NOTE:

1. FOR ACCURATE RIGHT OF WAY AND ACCESS DATA, CONTACT RIGHT OF WAY ENGINEERING AT THE DISTRICT OFFICE.

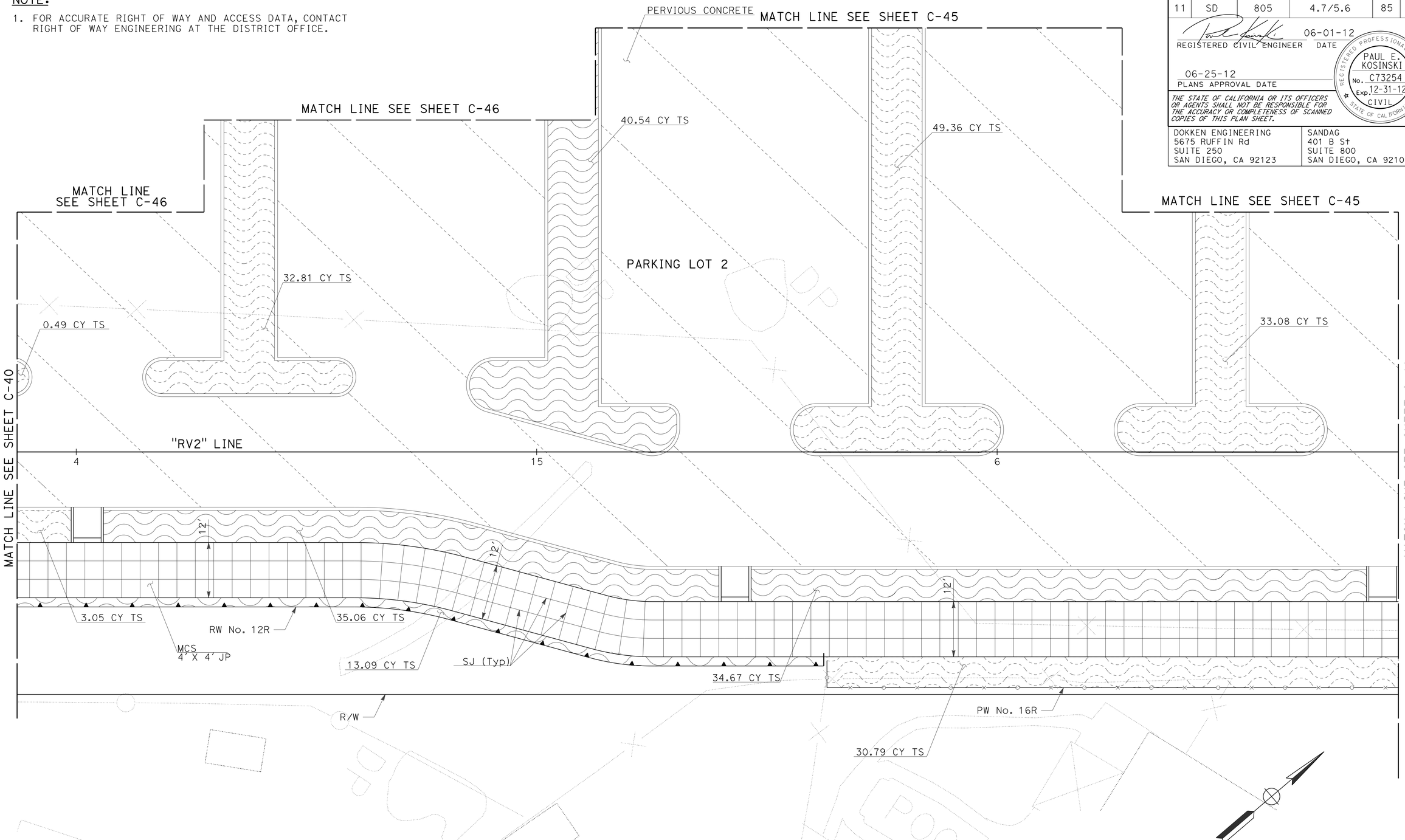

HARDSCAPE, SITE FURNISHINGS, AND TOPSOIL LOCATIONS

CONSTRUCTION DETAILS

SCALE: 1" = 10'

C-41

REVISED BY | DATE REVISED
MATTHEW P. MAECHLER | DARWIN CRUZ
CALCULATED-DESIGNED BY | CHECKED BY
CONSULTANT FUNCTIONAL SUPERVISOR
GERARD LUMABAS

STATE OF CALIFORNIA - DEPARTMENT OF TRANSPORTATION
Caltrans

LAST REVISION 06-18-12 | DATE PLOTTED => 12-SEP-2012 | TIME PLOTTED => 16:08

Dist	COUNTY	ROUTE	POST MILES TOTAL PROJECT	SHEET No.	TOTAL SHEETS
11	SD	805	4.7/5.6	86	650

REGISTERED CIVIL ENGINEER 06-01-12 DATE

PLANS APPROVAL DATE 06-25-12

REGISTERED PROFESSIONAL ENGINEER PAUL E. KOSINSKI No. C73254 Exp. 12-31-12 CIVIL STATE OF CALIFORNIA

THE STATE OF CALIFORNIA OR ITS OFFICERS OR AGENTS SHALL NOT BE RESPONSIBLE FOR THE ACCURACY OR COMPLETENESS OF SCANNED COPIES OF THIS PLAN SHEET.

DOKKEN ENGINEERING
5675 RUFFIN Rd
SUITE 250
SAN DIEGO, CA 92123

SANDAG
401 B St
SUITE 800
SAN DIEGO, CA 92101

NOTE:

1. FOR ACCURATE RIGHT OF WAY AND ACCESS DATA, CONTACT RIGHT OF WAY ENGINEERING AT THE DISTRICT OFFICE.

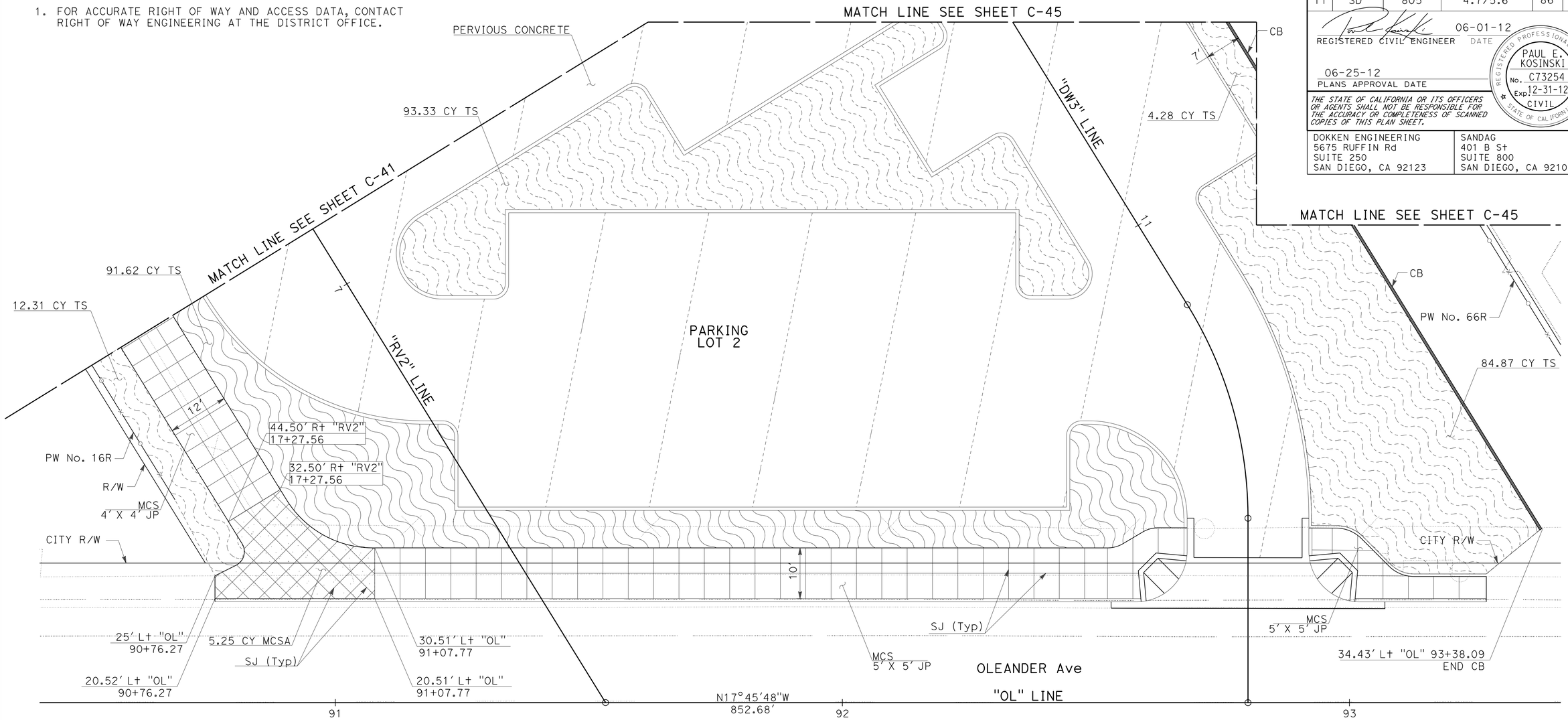

HARDSCAPE, SITE FURNISHINGS, AND TOPSOIL LOCATIONS

CONSTRUCTION DETAILS

SCALE: 1" = 10'

C-42

STATE OF CALIFORNIA - DEPARTMENT OF TRANSPORTATION

Caltrans

CONSULTANT FUNCTIONAL SUPERVISOR: GERARD LUMABAS

CALCULATED-DESIGNED BY: MATTHEW P. MAECHLER

CHECKED BY: DARWIN CRUZ

REVISED BY

DATE REVISED

LAST REVISION DATE PLOTTED => 12-SEP-2012 TIME PLOTTED => 16:08

06-18-12

Dist	COUNTY	ROUTE	POST MILES TOTAL PROJECT	SHEET No.	TOTAL SHEETS
11	SD	805	4.7/5.6	87	650

REGISTERED CIVIL ENGINEER 06-01-12 DATE

PLANS APPROVAL DATE 06-25-12

REGISTERED PROFESSIONAL ENGINEER PAUL E. KOSINSKI No. C73254 Exp. 12-31-12 CIVIL STATE OF CALIFORNIA

THE STATE OF CALIFORNIA OR ITS OFFICERS OR AGENTS SHALL NOT BE RESPONSIBLE FOR THE ACCURACY OR COMPLETENESS OF SCANNED COPIES OF THIS PLAN SHEET.

DOKKEN ENGINEERING
5675 RUFFIN Rd
SUITE 250
SAN DIEGO, CA 92123

SANDAG
401 B St
SUITE 800
SAN DIEGO, CA 92101

NOTE:

1. FOR SECTION A-A SEE Const DETAIL SHEET (C-47)

HARDSCAPE, SITE FURNISHINGS, AND TOPSOIL LOCATIONS

CONSTRUCTION DETAILS

SCALE: 1" = 10'

C-43

STATE OF CALIFORNIA - DEPARTMENT OF TRANSPORTATION

Caltrans

CONSULTANT FUNCTIONAL SUPERVISOR: GERARD LUMABAS

CALCULATED-DESIGNED BY: MATTHEW P. MAECHLER

CHECKED BY: DARWIN CRUZ

REVISED BY

DATE REVISED

LAST REVISION 06-18-12

DATE PLOTTED => 12-SEP-2012

TIME PLOTTED => 16:08

Dist	COUNTY	ROUTE	POST MILES TOTAL PROJECT	SHEET No.	TOTAL SHEETS
11	SD	805	4.7/5.6	88	650

REGISTERED CIVIL ENGINEER 06-01-12 DATE

PAUL E. KOSINSKI No. C73254 Exp. 12-31-12 CIVIL STATE OF CALIFORNIA REGISTERED PROFESSIONAL ENGINEER

06-25-12
PLANS APPROVAL DATE

THE STATE OF CALIFORNIA OR ITS OFFICERS OR AGENTS SHALL NOT BE RESPONSIBLE FOR THE ACCURACY OR COMPLETENESS OF SCANNED COPIES OF THIS PLAN SHEET.

DOKKEN ENGINEERING
5675 RUFFIN Rd
SUITE 250
SAN DIEGO, CA 92123

SANDAG
401 B St
SUITE 800
SAN DIEGO, CA 92101

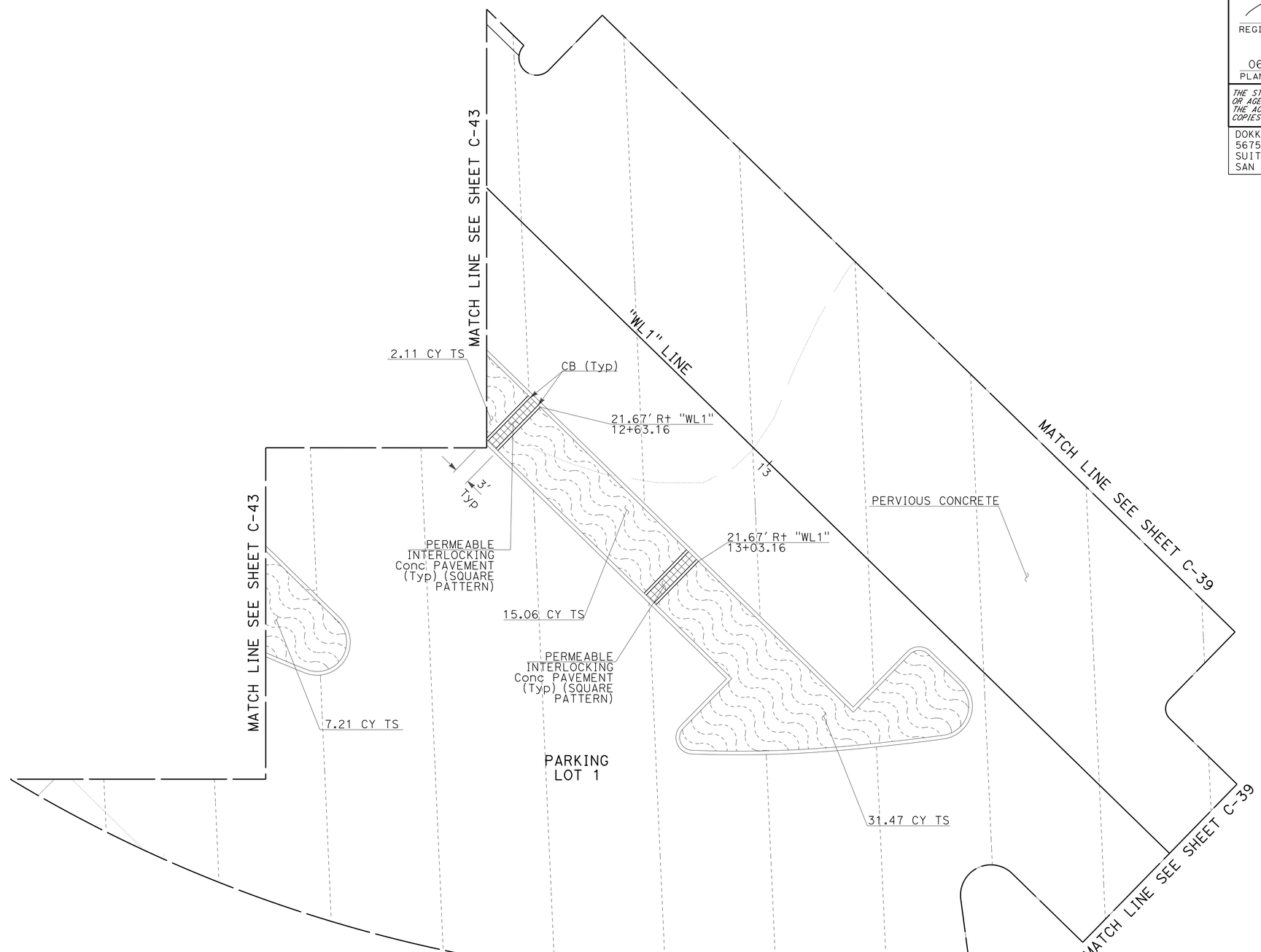

HARDSCAPE, SITE FURNISHINGS, AND TOPSOIL LOCATIONS

CONSTRUCTION DETAILS

SCALE: 1" = 10'

C-44

STATE OF CALIFORNIA - DEPARTMENT OF TRANSPORTATION
Caltrans

CONSULTANT FUNCTIONAL SUPERVISOR: GERARD LUMABAS
CALCULATED-DESIGNED BY: MATTHEW P. MAECHLER
CHECKED BY: DARWIN CRUZ
REVISED BY
DATE REVISED

LAST REVISION 06-18-12
DATE PLOTTED => 12-SEP-2012
TIME PLOTTED => 16:08

Dist	COUNTY	ROUTE	POST MILES TOTAL PROJECT	SHEET No.	TOTAL SHEETS
11	SD	805	4.7/5.6	89	650

REGISTERED CIVIL ENGINEER 06-01-12 DATE

PAUL E. KOSINSKI No. C73254 Exp. 12-31-12 CIVIL — REGISTERED PROFESSIONAL ENGINEER — STATE OF CALIFORNIA

06-25-12
PLANS APPROVAL DATE

THE STATE OF CALIFORNIA OR ITS OFFICERS OR AGENTS SHALL NOT BE RESPONSIBLE FOR THE ACCURACY OR COMPLETENESS OF SCANNED COPIES OF THIS PLAN SHEET.

DOKKEN ENGINEERING
5675 RUFFIN Rd
SUITE 250
SAN DIEGO, CA 92123

SANDAG
401 B St
SUITE 800
SAN DIEGO, CA 92101

NOTE:

1. FOR ACCURATE RIGHT OF WAY AND ACCESS DATA, CONTACT RIGHT OF WAY ENGINEERING AT THE DISTRICT OFFICE.

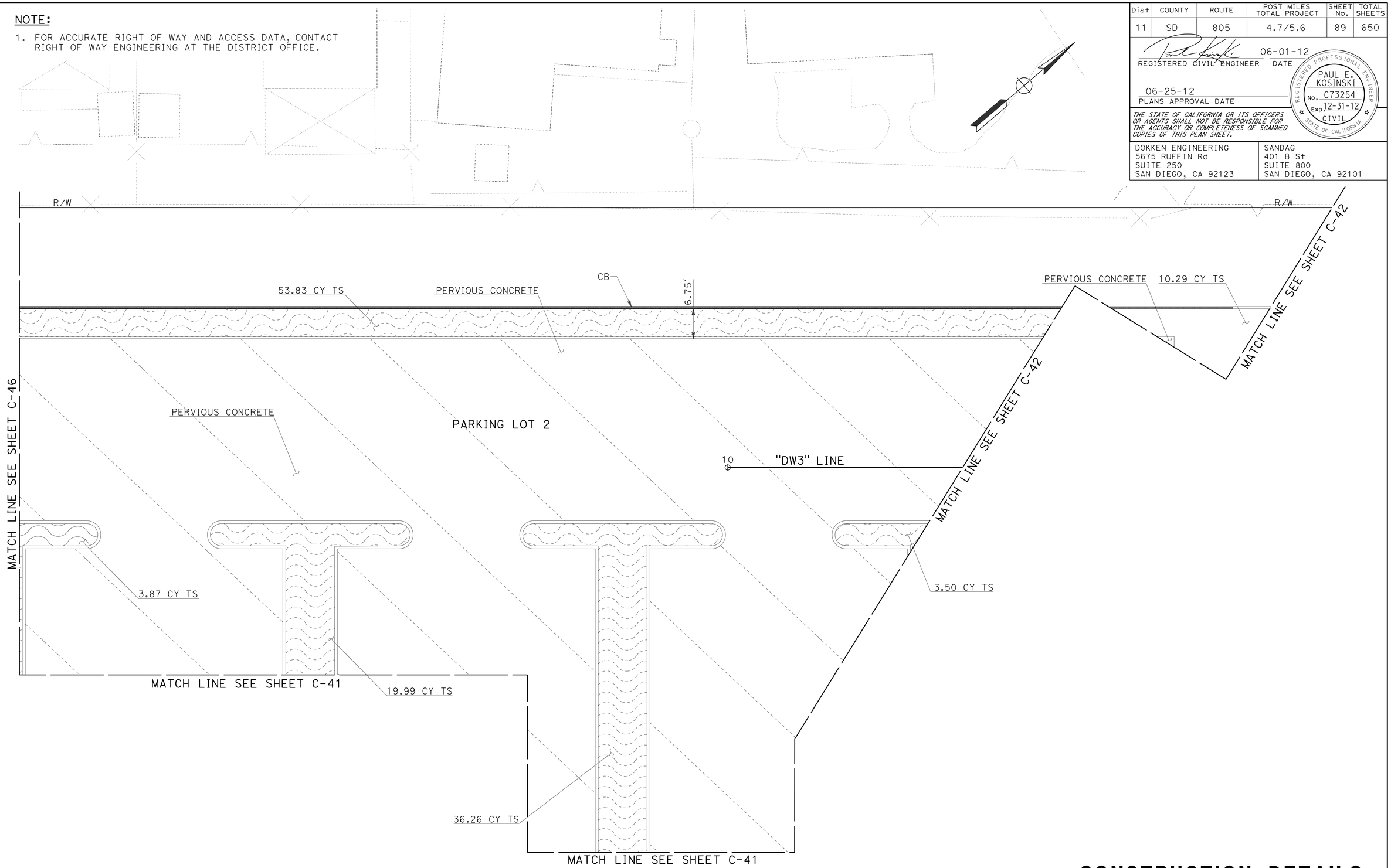

HARDSCAPE, SITE FURNISHINGS, AND TOPSOIL LOCATIONS

CONSTRUCTION DETAILS

SCALE: 1" = 10'

C-45

STATE OF CALIFORNIA - DEPARTMENT OF TRANSPORTATION

Caltrans

CONSULTANT FUNCTIONAL SUPERVISOR: GERARD LUMABAS

CALCULATED-DESIGNED BY: MATTHEW P. MAECHLER

CHECKED BY: DARWIN CRUZ

REVISED BY

DATE REVISED

LAST REVISION 06-18-12

DATE PLOTTED => 12-SEP-2012
TIME PLOTTED => 16:08

Dist	COUNTY	ROUTE	POST MILES TOTAL PROJECT	SHEET No.	TOTAL SHEETS
11	SD	805	4.7/5.6	90	650

REGISTERED CIVIL ENGINEER 06-01-12 DATE

06-25-12
PLANS APPROVAL DATE

REGISTERED PROFESSIONAL ENGINEER
PAUL E. KOSINSKI
No. C73254
Exp. 12-31-12
CIVIL
STATE OF CALIFORNIA

THE STATE OF CALIFORNIA OR ITS OFFICERS OR AGENTS SHALL NOT BE RESPONSIBLE FOR THE ACCURACY OR COMPLETENESS OF SCANNED COPIES OF THIS PLAN SHEET.

DOKKEN ENGINEERING
5675 RUFFIN Rd
SUITE 250
SAN DIEGO, CA 92123

SANDAG
401 B St
SUITE 800
SAN DIEGO, CA 92101

NOTE:

1. FOR ACCURATE RIGHT OF WAY AND ACCESS DATA, CONTACT RIGHT OF WAY ENGINEERING AT THE DISTRICT OFFICE.

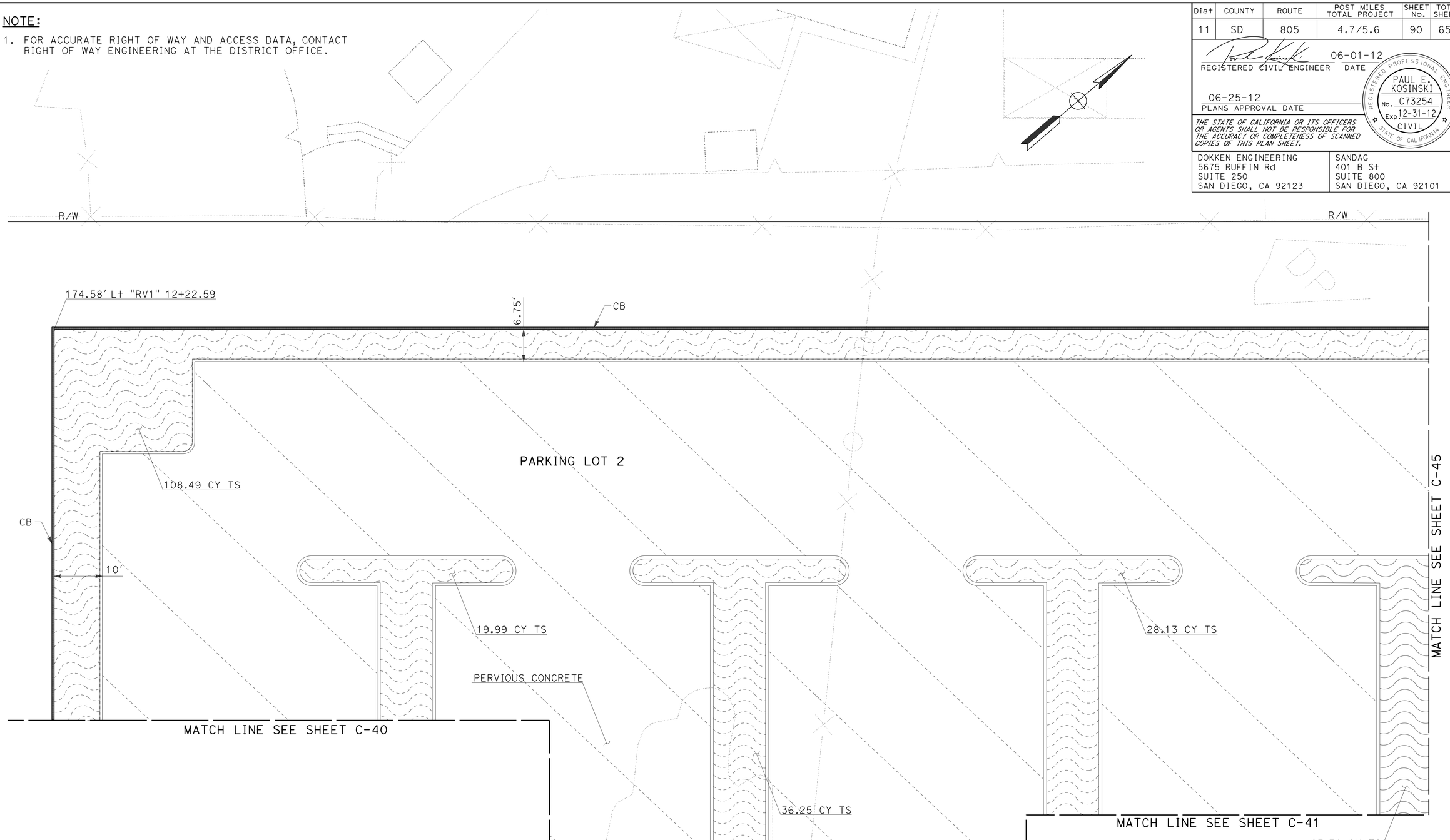

HARDSCAPE, SITE FURNISHINGS, AND TOPSOIL LOCATIONS

CONSTRUCTION DETAILS

SCALE: 1" = 10'

C-46

STATE OF CALIFORNIA - DEPARTMENT OF TRANSPORTATION
Caltrans

CONSULTANT FUNCTIONAL SUPERVISOR: GERARD LUMABAS
CALCULATED-DESIGNED BY: MATTHEW P. MAECHLER
CHECKED BY: DARWIN CRUZ
REVISED BY
DATE REVISED

LAST REVISION 06-18-12
DATE PLOTTED => 12-SEP-2012
TIME PLOTTED => 16:08

Dist	COUNTY	ROUTE	POST MILES TOTAL PROJECT	SHEET No.	TOTAL SHEETS
11	SD	805	4.7/5.6	91	650

REGISTERED CIVIL ENGINEER 06-01-12 DATE

06-25-12
PLANS APPROVAL DATE

REGISTERED PROFESSIONAL ENGINEER PAUL E. KOSINSKI No. C73254 Exp. 12-31-12 CIVIL STATE OF CALIFORNIA

THE STATE OF CALIFORNIA OR ITS OFFICERS OR AGENTS SHALL NOT BE RESPONSIBLE FOR THE ACCURACY OR COMPLETENESS OF SCANNED COPIES OF THIS PLAN SHEET.

DOKKEN ENGINEERING
5675 RUFFIN Rd
SUITE 250
SAN DIEGO, CA 92123

SANDAG
401 B St
SUITE 800
SAN DIEGO, CA 92101

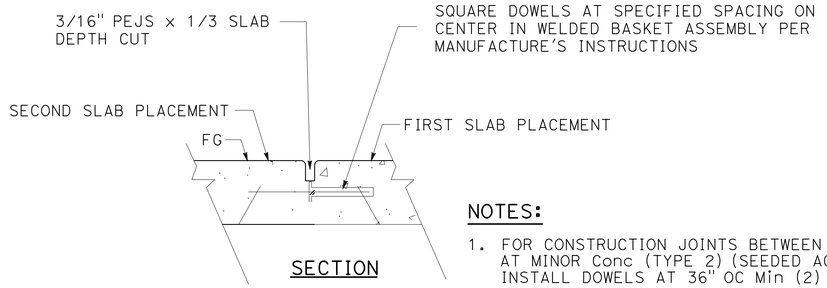

SECTION

NOTES:

1. FOR CONSTRUCTION JOINTS BETWEEN POURS AT MINOR Conc (TYPE 2) (SEEDED AGGREGATE) INSTALL DOWELS AT 36" OC Min (2) PER JOINT.
2. PEJS = PENICK EXPANSION JOINT SYSTEM

EXPANSION JOINT WITH BASKET DOWEL PLATE SYSTEM

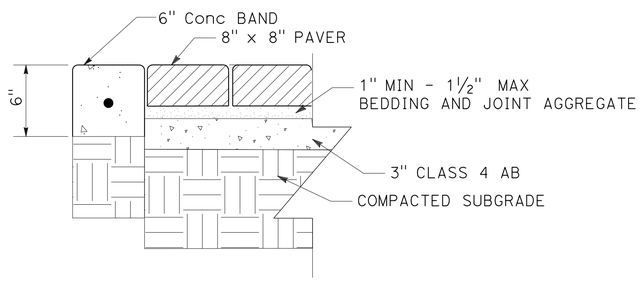

SECTION

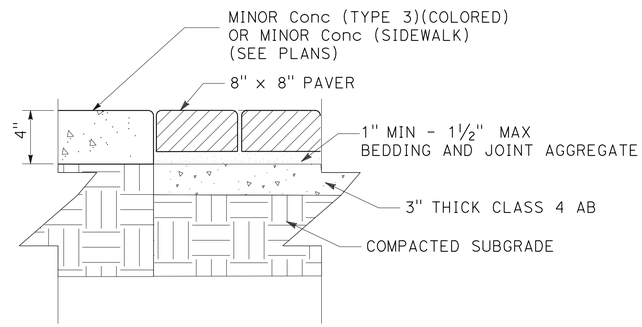

SECTION

PERMEABLE INTERLOCKING CONCRETE PAVEMENT (EAST PALOMAR St)(HARDSCAPE AT SIDEWALK)

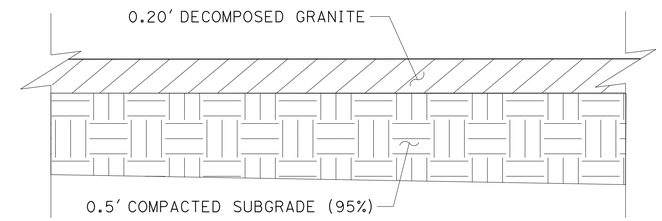

SECTION

DECOMPOSED GRANITE (Misc AREA)

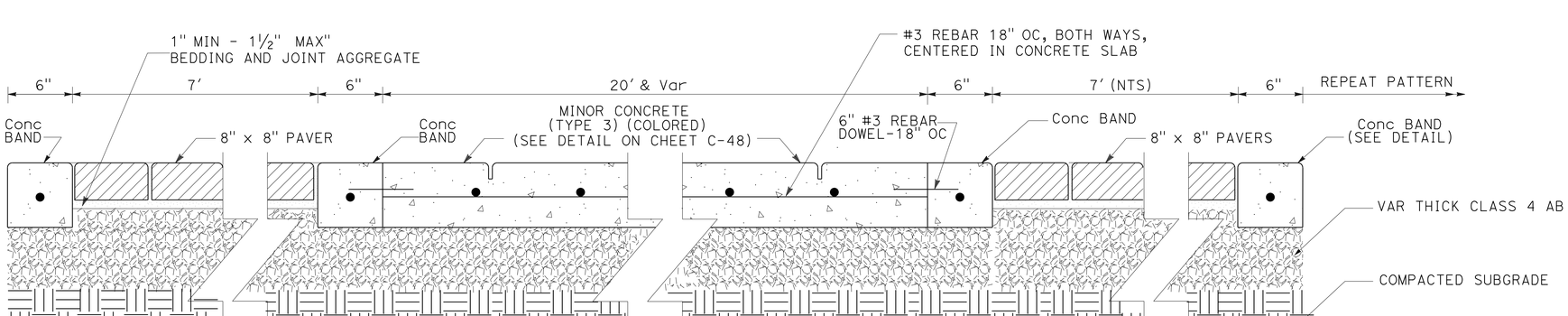

SECTION 'A-A' (PARKING LOT)

SEE SHEET C-43 FOR DETAILS.

NOTE:

PAVERS AND BEDDING AND JOINT MATERIAL AT PARKING LOT TO BE PERMEABLE CONCRETE INTERLOCKING PAVEMENT.

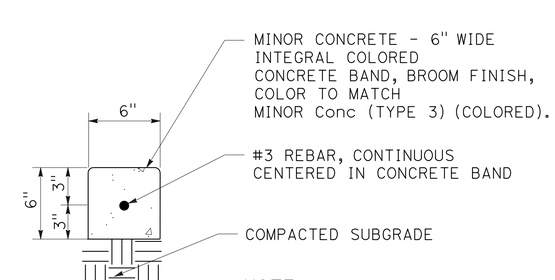

SECTION

NOTE:

FOR Conc BAND AT PAVERS SEE PERMEABLE Conc INTERLOCKING PAVEMENT DETAILS AND SECTION 'A-A' (PARKING LOT 1).

Conc BAND

CONSTRUCTION DETAILS

NO SCALE

C-47

REVISED BY | DATE REVISED
MATTHEW P. MAECHLER | DARWIN CRUZ
CALCULATED-DESIGNED BY | CHECKED BY
CONSULTANT FUNCTIONAL SUPERVISOR
GERARD LUMABAS

STATE OF CALIFORNIA - DEPARTMENT OF TRANSPORTATION
Caltrans

LAST REVISION 06-18-12 | DATE PLOTTED => 12-SEP-2012 | TIME PLOTTED => 16:08

Dist	COUNTY	ROUTE	POST MILES TOTAL PROJECT	SHEET No.	TOTAL SHEETS
11	SD	805	4.7/5.6	92	650

REGISTERED CIVIL ENGINEER 06-01-12 DATE

06-25-12
PLANS APPROVAL DATE

REGISTERED PROFESSIONAL ENGINEER PAUL E. KOSINSKI No. C73254 Exp. 12-31-12 CIVIL STATE OF CALIFORNIA

THE STATE OF CALIFORNIA OR ITS OFFICERS OR AGENTS SHALL NOT BE RESPONSIBLE FOR THE ACCURACY OR COMPLETENESS OF SCANNED COPIES OF THIS PLAN SHEET.

DOKKEN ENGINEERING
5675 RUFFIN Rd
SUITE 250
SAN DIEGO, CA 92123

SANDAG
401 B St
SUITE 800
SAN DIEGO, CA 92101

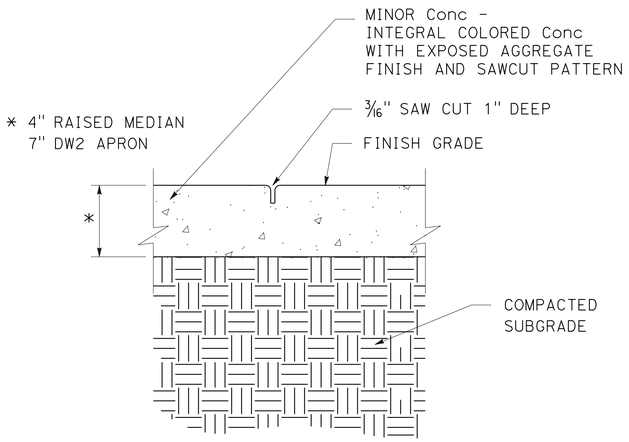

SECTION

RAISED MEDIAN AND APRON

MINOR CONCRETE
(TYPE 1) (EXPOSED AGGREGATE)
(DRIVEWAY APRON AT "DW2" LINE)

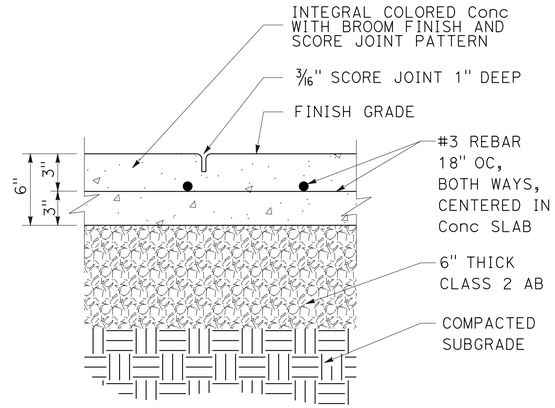

SECTION

TRAVEL WAY (ROUND ABOUT)

NOTES:

1. INSTALL SCORE JOINT PATTERN AS INDICATED ON PLANS.
2. FOR MINOR Conc (TYPE 3) (COLORED) AT PARKING LOT 1 HARDSCAPE SEE DETAIL SHEET C-47

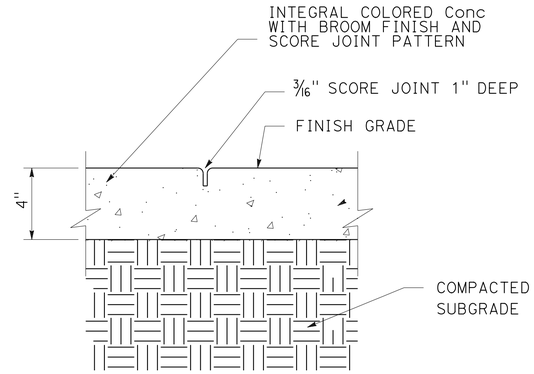

SECTION

SIDEWALK & CURB RAMPS

NOTE:

INSTALL SCORE JOINT PATTERN AS INDICATED ON PLANS.

MINOR CONCRETE (TYPE 3) (COLORED)

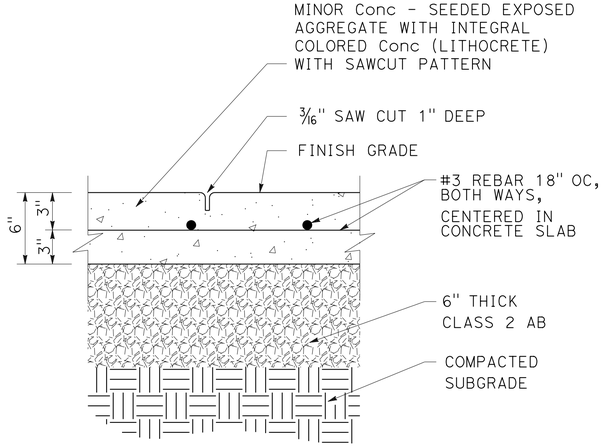

SECTION

TRAVEL WAY (CROSSWALKS AND ROUNDABOUT)

NOTE:

INSTALL SAWCUTS TO FORM BORDER AND
36" X 36" SQUARE CUT PATTERN AT
45 DEGREES AS INDICATED ON PLANS.

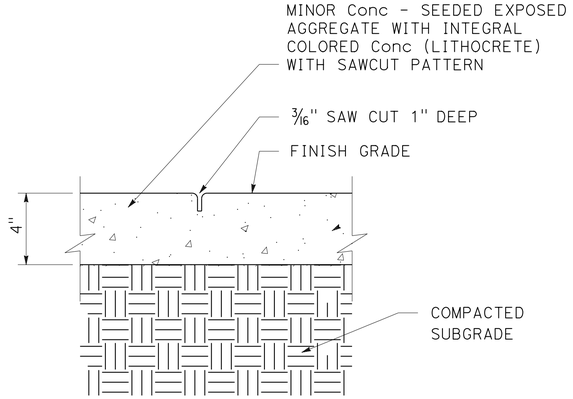

SECTION

SIDEWALK & CURB RAMPS

NOTE:

NSTALL SAWCUTS TO FORM
36" X 36" SQUARE CUT PATTERN AT
45 DEGREES AS INDICATED ON PLANS.

MINOR CONCRETE
(TYPE 2) (SEEDED AGGREGATE)

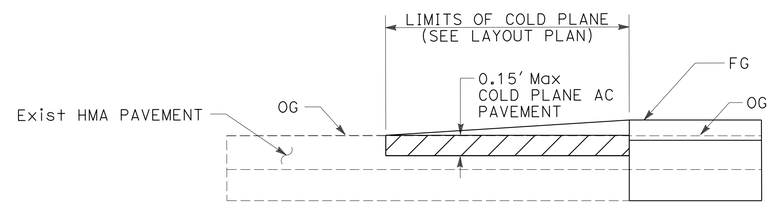

SECTION

COLD PLANE ASPHALT CONCRETE PAVEMENT (0.15' Max)
(CONFORM TO EXISTING)

CONSTRUCTION DETAILS

NO SCALE

C-48

STATE OF CALIFORNIA - DEPARTMENT OF TRANSPORTATION
Caltrans

CONSULTANT FUNCTIONAL SUPERVISOR: GERARD LUMABAS
CALCULATED-DESIGNED BY: MATTHEW P. MAECHLER
CHECKED BY: DARWIN CRUZ
REVISED BY
DATE REVISED

LAST REVISION 06-18-12
DATE PLOTTED => 12-SEP-2012
TIME PLOTTED => 16:08

Dist	COUNTY	ROUTE	POST MILES TOTAL PROJECT	SHEET No.	TOTAL SHEETS
11	SD	805	4.7/5.6	93	650

REGISTERED CIVIL ENGINEER 06-01-12 DATE

06-25-12
PLANS APPROVAL DATE

REGISTERED PROFESSIONAL ENGINEER PAUL E. KOSINSKI No. C73254 Exp. 12-31-12 CIVIL STATE OF CALIFORNIA

THE STATE OF CALIFORNIA OR ITS OFFICERS OR AGENTS SHALL NOT BE RESPONSIBLE FOR THE ACCURACY OR COMPLETENESS OF SCANNED COPIES OF THIS PLAN SHEET.

DOKKEN ENGINEERING
5675 RUFFIN Rd
SUITE 250
SAN DIEGO, CA 92123

SANDAG
401 B St
SUITE 800
SAN DIEGO, CA 92101

NOTES:

1. FOR LOCATION AND SIZE OF THE TREE GRATES SEE HARDSCAPE, SITE FURNISHINGS AND TOPSOIL LOCATIONS.
2. SUPPORTS SHALL BE EMBEDDED IN THE SURFACE. PLEASE FOLLOW THE MANUFACTURERS GUIDELINES PRIOR TO EMBEDDING. DO NOT LOCATE ONE SUPPORT SECTION AT A TIME. THIS MAY RESULT IN INCORRECT PLACEMENT.
3. TUBE ENDS SHOULD BE ALIGNED AND BUTTED TOGETHER.
4. IF GRADE IS SLOPING: IT WILL BE DIFFICULT TO LEVEL A LONG RUN OF SEATS WITHOUT HAVING ONE END TOO HIGH AND THE OTHER END TOO LOW FOR COMFORTABLE SEATING. IN THIS CASE, A JUDGEMENT NEEDS TO BE MADE ON SLOPE OF TUBE FOR RETAINING OPTIMUM SEATING HEIGHT REQUIREMENTS. FOR MOST COMFORTABLE SEATING HEIGHT, THE DISTANCE FROM GRADE TO BOTTOM OF HORIZONTAL TUBE SECTION SHOULD BE BETWEEN 12¾" AND 14¾".

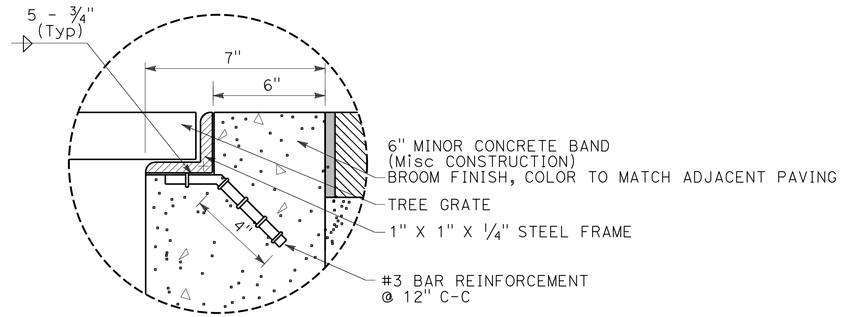

DETAIL A

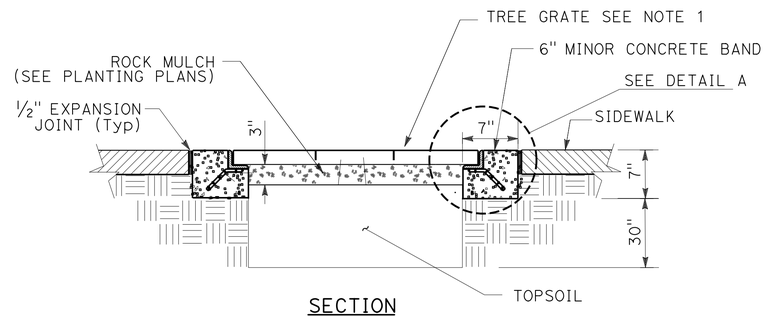

SECTION

CONCRETE BAND AT TREE GRATE

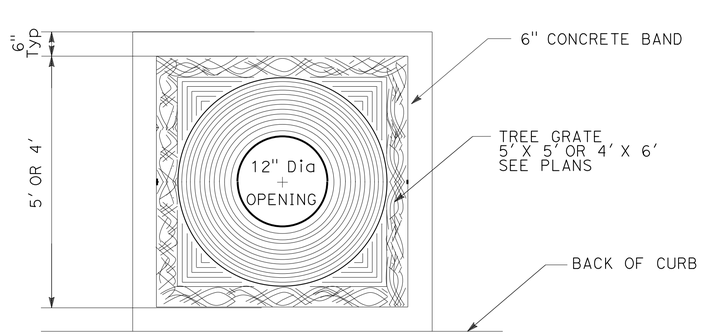

PLAN VIEW

TREE GRATE & FRAME

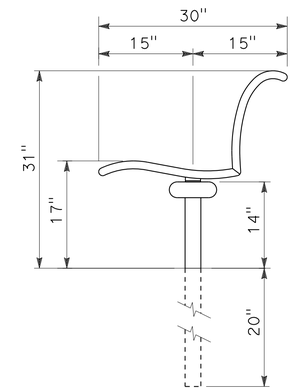

SECTION A-A

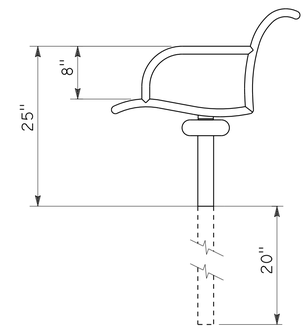

SECTION B-B

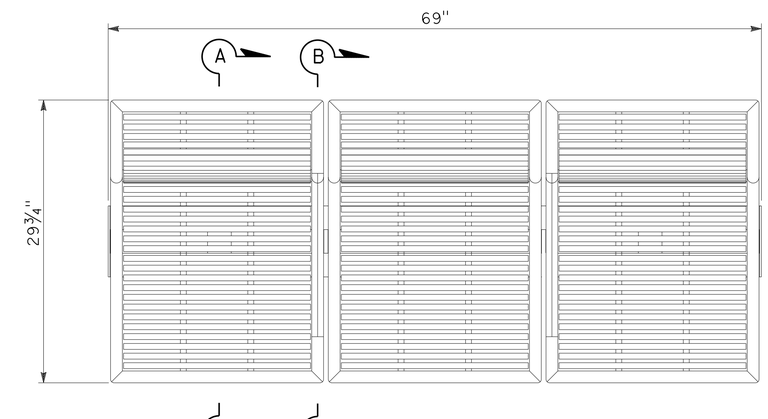

PLAN VIEW
STRAIGHT THREE-UNIT GROUP

BENCH

CONSTRUCTION DETAILS

NO SCALE

C-49

STATE OF CALIFORNIA - DEPARTMENT OF TRANSPORTATION
Caltrans

CONSULTANT FUNCTIONAL SUPERVISOR: GERARD LUMABAS
CALCULATED-DESIGNED BY: MATTHEW P. MAECHLER
CHECKED BY: DARWIN CRUZ
REVISED BY / DATE REVISED

LAST REVISION 06-18-12 | DATE PLOTTED => 12-SEP-2012 | TIME PLOTTED => 16:08

Dist	COUNTY	ROUTE	POST MILES TOTAL PROJECT	SHEET No.	TOTAL SHEETS
11	SD	805	4.7/5.6	94	650

REGISTERED CIVIL ENGINEER 06-01-12 DATE

06-25-12
PLANS APPROVAL DATE

REGISTERED PROFESSIONAL ENGINEER PAUL E. KOSINSKI No. C73254 Exp. 12-31-12 CIVIL STATE OF CALIFORNIA

THE STATE OF CALIFORNIA OR ITS OFFICERS OR AGENTS SHALL NOT BE RESPONSIBLE FOR THE ACCURACY OR COMPLETENESS OF SCANNED COPIES OF THIS PLAN SHEET.

DOKKEN ENGINEERING
5675 RUFFIN Rd
SUITE 250
SAN DIEGO, CA 92123

SANDAG
401 B St
SUITE 800
SAN DIEGO, CA 92101

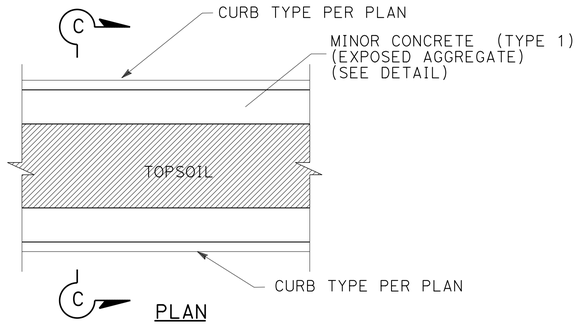

IMPORTED TOPSOIL
(Typ MEDIAN DETAIL)

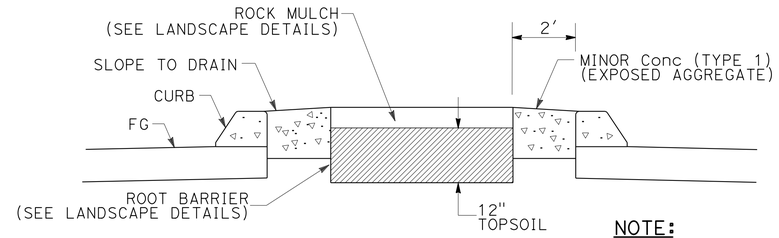

SECTION C-C

NOTE:
FOR TOPSOIL AT BIORETENTION CELLS
SEE Const DETAIL SHEET C-58

IMPORTED TOPSOIL
(Typ MEDIAN DETAIL)

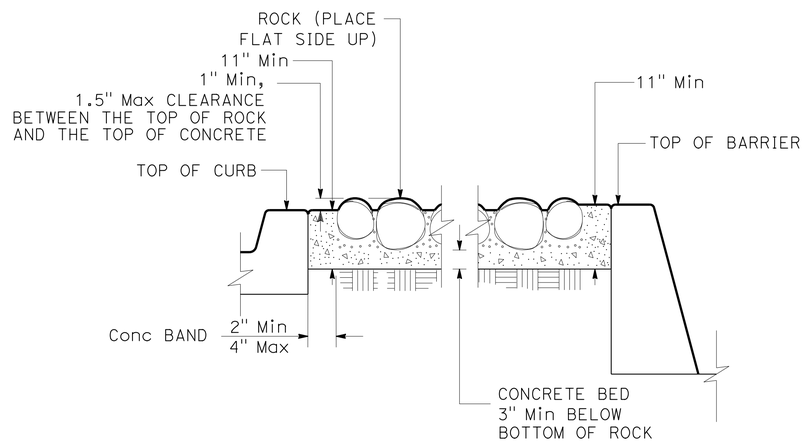

SECTION A-A

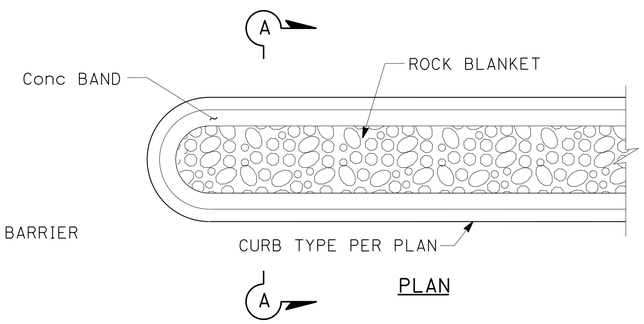

ROCK BLANKET

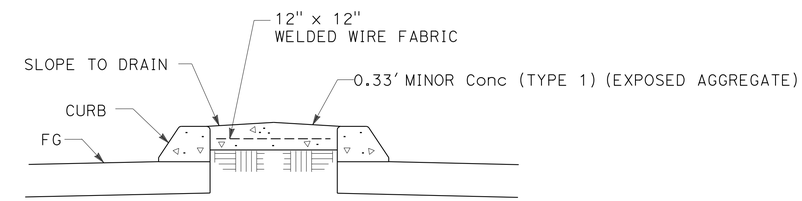

SECTION B-B

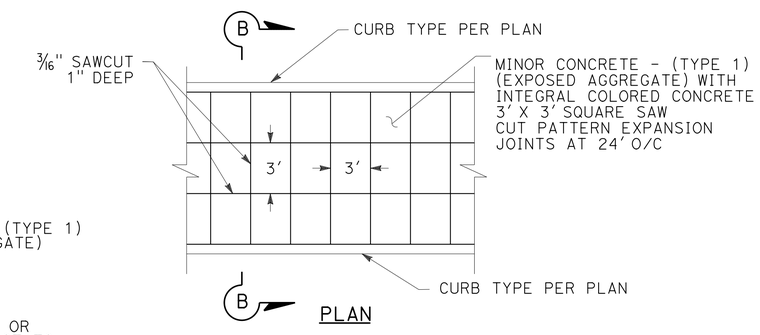

MINOR CONCRETE (TYPE 1) (EXPOSED AGGREGATE) MEDIAN DETAIL

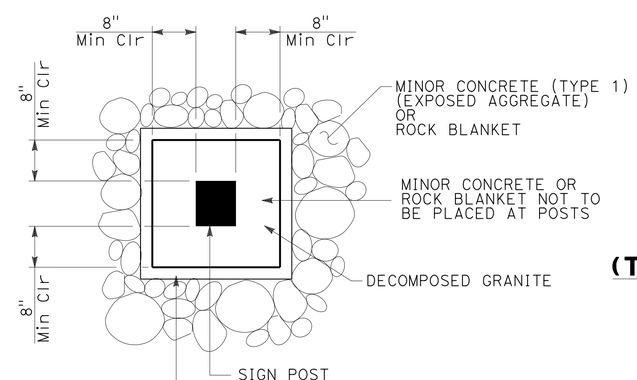

RAISED MEDIAN DETAIL AT SIGN POST

NOTES:

1. LAYOUT OF ROCK BLANKET AREAS SHALL AS BE SHOWN ON PLANS AND SHALL BE APPROVED BY THE ENGINEER PRIOR TO PLACING THE MATERIAL.
2. FOR SIGN INSTALLATION DETAILS NOT SHOWN SEE STANDARD PLANS RS1 AND RS2.
3. CONCRETE BAND SHALL MATCH THE SURFACE ELEVATION OF THE TOP OF CURB.

CONSTRUCTION DETAILS

NO SCALE

C-50

STATE OF CALIFORNIA - DEPARTMENT OF TRANSPORTATION
Caltrans
CONSULTANT FUNCTIONAL SUPERVISOR: GERARD LUMABAS
CALCULATED-DESIGNED BY: MATTHEW P. MAECHLER
CHECKED BY: DARWIN CRUZ
REVISED BY
DATE REVISED

LAST REVISION 06-21-12
DATE PLOTTED => 12-SEP-2012
TIME PLOTTED => 16:08

Dist	COUNTY	ROUTE	POST MILES TOTAL PROJECT	SHEET No.	TOTAL SHEETS
11	SD	805	4.7/5.6	95	650

REGISTERED CIVIL ENGINEER 06-01-12 DATE

PLANS APPROVAL DATE 06-25-12

REGISTERED PROFESSIONAL ENGINEER PAUL E. KOSINSKI No. C73254 Exp. 12-31-12 CIVIL STATE OF CALIFORNIA

THE STATE OF CALIFORNIA OR ITS OFFICERS OR AGENTS SHALL NOT BE RESPONSIBLE FOR THE ACCURACY OR COMPLETENESS OF SCANNED COPIES OF THIS PLAN SHEET.

DOKKEN ENGINEERING
5675 RUFFIN Rd
SUITE 250
SAN DIEGO, CA 92123

SANDAG
401 B St
SUITE 800
SAN DIEGO, CA 92101

NOTES:

1. ALL EXPOSED CAST IN PLACE CONCRETE SURFACES TO HAVE A SMOOTH FINISH.

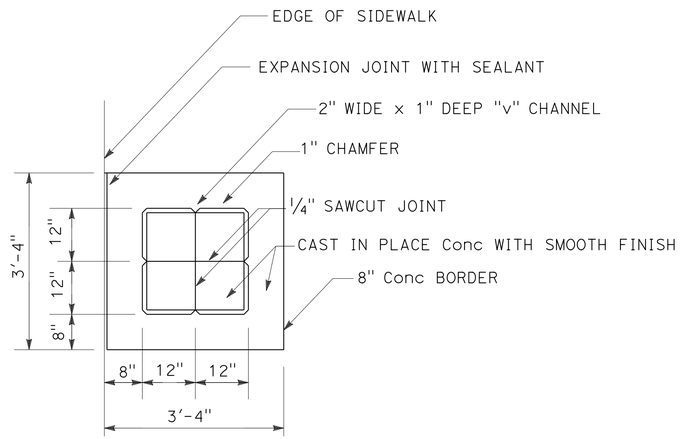

PLAN VIEW

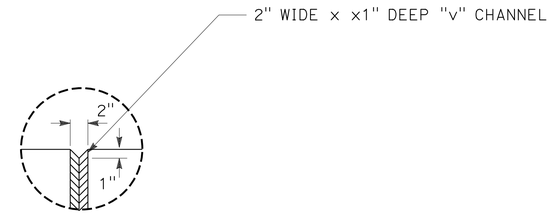

DETAIL

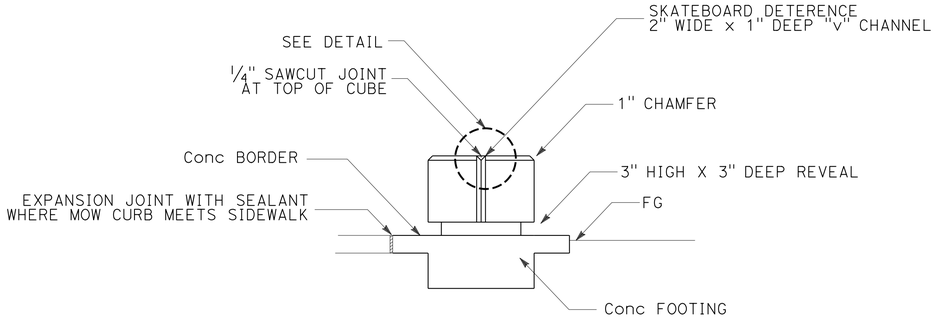

ELEVATION

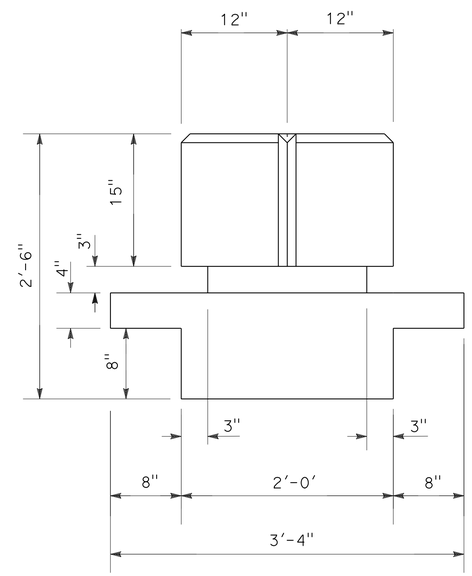

ELEVATION

CUBE SEAT

CONSTRUCTION DETAILS

NO SCALE

C-51

STATE OF CALIFORNIA - DEPARTMENT OF TRANSPORTATION

Caltrans

CONSULTANT FUNCTIONAL SUPERVISOR: GERARD LUMABAS

CALCULATED-DESIGNED BY: MATTHEW P. MAECHLER

CHECKED BY: DARWIN CRUZ

REVISED BY

DATE REVISED

LAST REVISION 06-18-12

DATE PLOTTED => 12-SEP-2012

TIME PLOTTED => 16:08

Dist	COUNTY	ROUTE	POST MILES TOTAL PROJECT	SHEET No.	TOTAL SHEETS
11	SD	805	4.7/5.6	96	650

REGISTERED CIVIL ENGINEER 06-01-12 DATE

06-25-12
PLANS APPROVAL DATE

REGISTERED PROFESSIONAL ENGINEER
PAUL E. KOSINSKI
No. C73254
Exp. 12-31-12
CIVIL
STATE OF CALIFORNIA

THE STATE OF CALIFORNIA OR ITS OFFICERS OR AGENTS SHALL NOT BE RESPONSIBLE FOR THE ACCURACY OR COMPLETENESS OF SCANNED COPIES OF THIS PLAN SHEET.

DOKKEN ENGINEERING
5675 RUFFIN Rd
SUITE 250
SAN DIEGO, CA 92123

SANDAG
401 B St
SUITE 800
SAN DIEGO, CA 92101

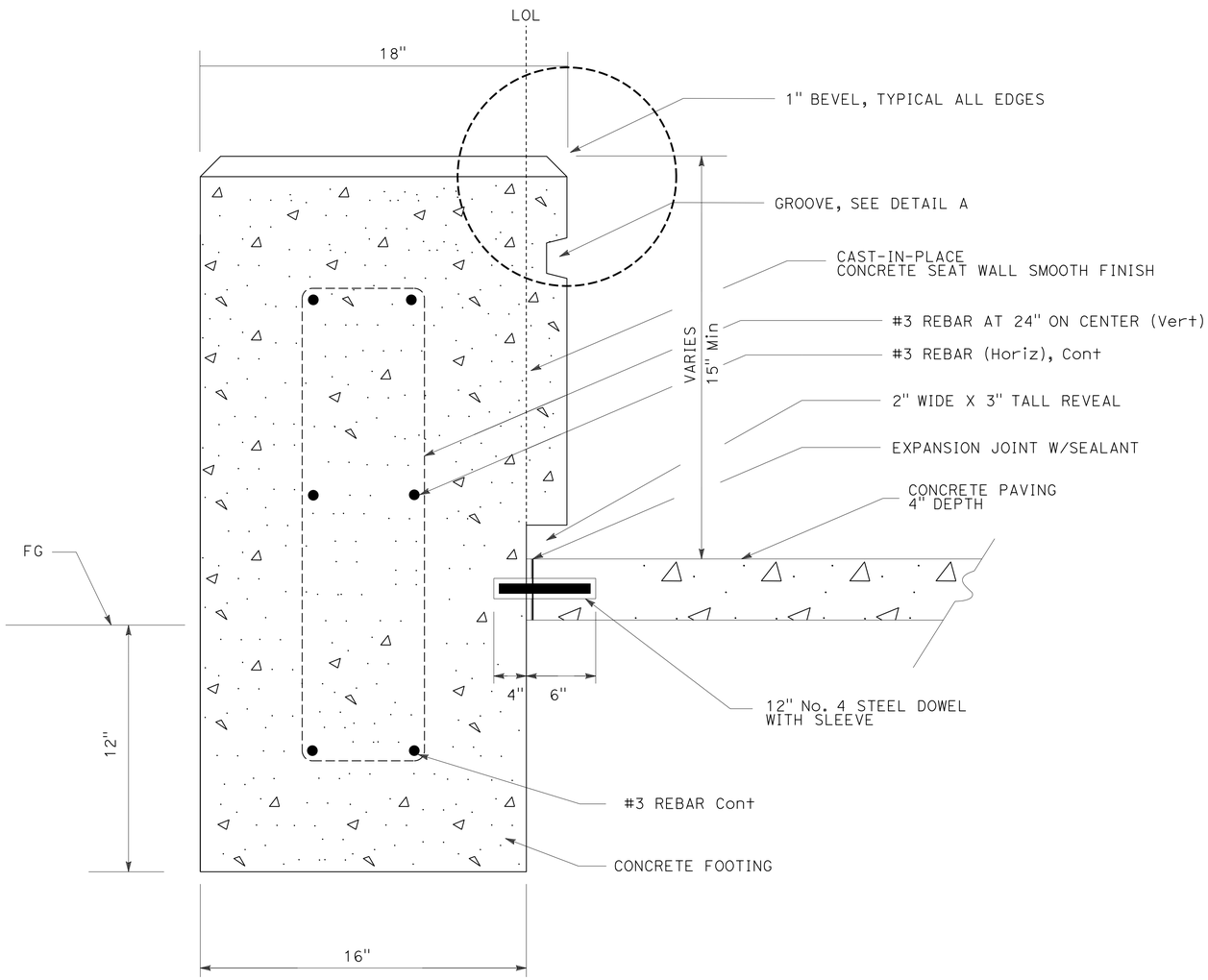

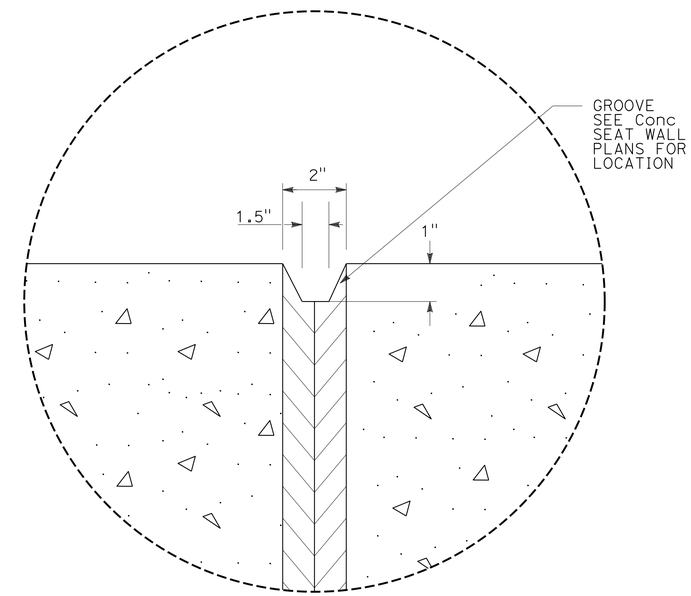

DETAIL A

NOTES:

1. SEE SHEETS C-53 AND C-54 FOR ADDITIONAL INFORMATION.
2. PROVIDE KEYED EXPANSION JOINTS W/SEALANT THROUGH WALL AT MAXIMUM INTERVAL OF 80'.
3. INSTALL 12" LONG #4 STEEL REBAR DOWELS (SIMILAR TO DETAIL A) AT ALL EXPANSION JOINTS 12" ON CENTER.

CONCRETE SEAT WALL

CONSTRUCTION DETAILS

NO SCALE

C-52

STATE OF CALIFORNIA - DEPARTMENT OF TRANSPORTATION
Caltrans

CONSULTANT FUNCTIONAL SUPERVISOR: GERARD LUMABAS
CALCULATED-DESIGNED BY: MATTHEW P. MAECHLER
CHECKED BY: DARWIN CRUZ
REVISED BY
DATE REVISED

LAST REVISION 06-18-12
DATE PLOTTED => 12-SEP-2012
TIME PLOTTED => 16:08

Dist	COUNTY	ROUTE	POST MILES TOTAL PROJECT	SHEET No.	TOTAL SHEETS
11	SD	805	4.7/5.6	97	650

REGISTERED CIVIL ENGINEER 06-01-12 DATE

06-25-12
PLANS APPROVAL DATE

REGISTERED PROFESSIONAL ENGINEER
PAUL E. KOSINSKI
No. C73254
Exp. 12-31-12
CIVIL
STATE OF CALIFORNIA

THE STATE OF CALIFORNIA OR ITS OFFICERS OR AGENTS SHALL NOT BE RESPONSIBLE FOR THE ACCURACY OR COMPLETENESS OF SCANNED COPIES OF THIS PLAN SHEET.

DOKKEN ENGINEERING
5675 RUFFIN Rd
SUITE 250
SAN DIEGO, CA 92123

SANDAG
401 B St
SUITE 800
SAN DIEGO, CA 92101

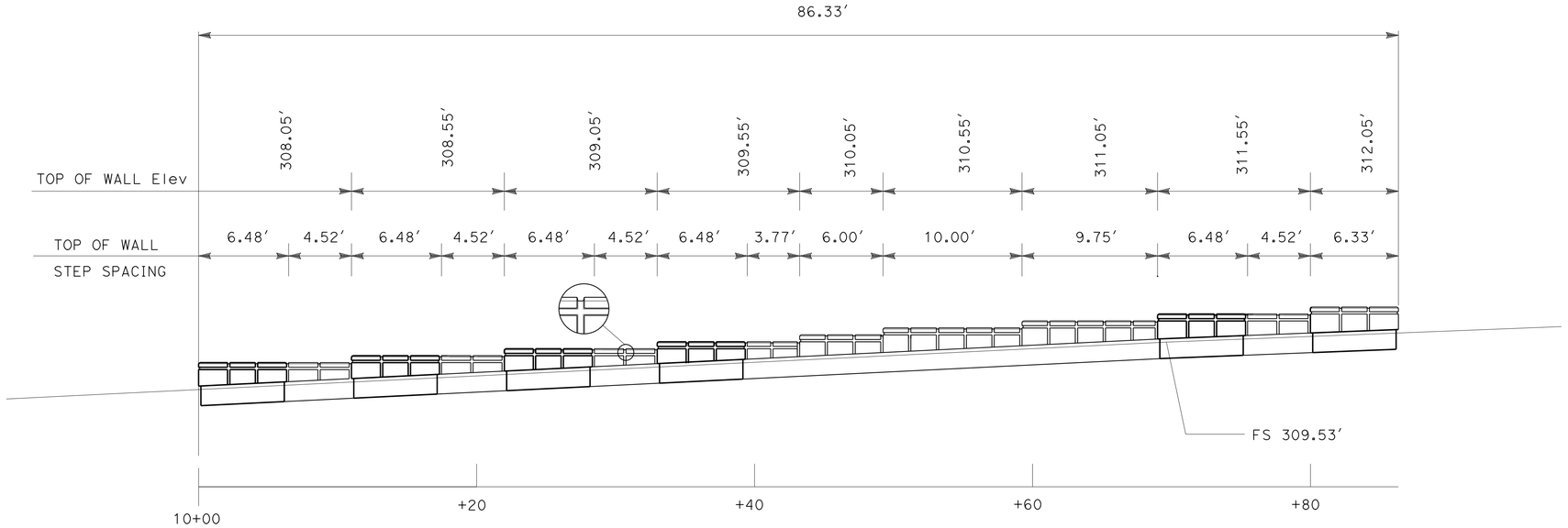

MIRRORED ELEVATION FROM PALOMAR
(REVERSE ELEVATION FROM PLAN)

SCALE: 1" = 5′

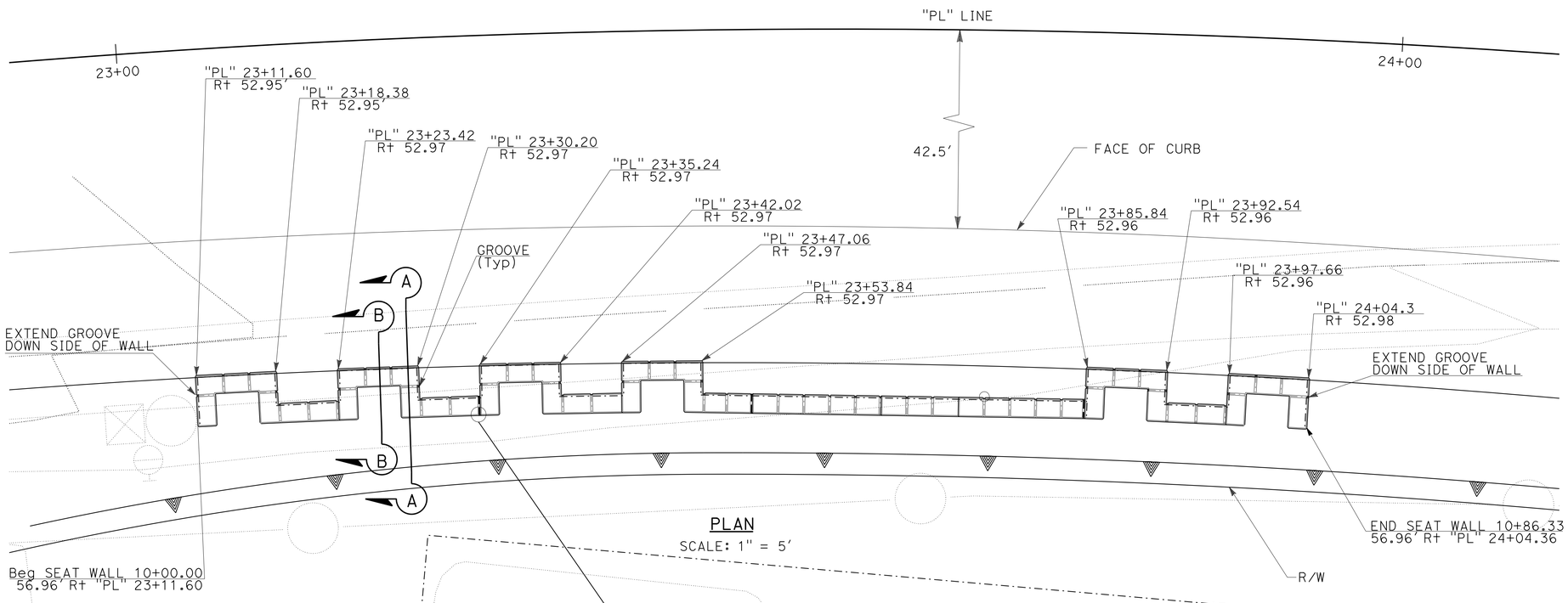

PLAN

SCALE: 1" = 5′

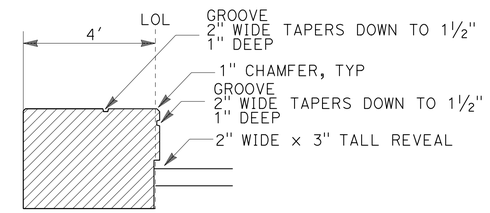

SECTION A-A

NOTES:

1. FOR CONCRETE SEAT WALL DETAILS NOT SHOWN, SEE SHEET C-52.
2. FOR SECTION B-B, SEE SHEET C-52.

CONCRETE SEAT WALL (WEST OF RAVEN Ave)

CONSTRUCTION DETAILS

SCALE AS SHOWN

C-53

STATE OF CALIFORNIA - DEPARTMENT OF TRANSPORTATION
Caltrans

CONSULTANT FUNCTIONAL SUPERVISOR: GERARD LUMABAS
CALCULATED-DESIGNED BY: MATTHEW P. MAECHLER
CHECKED BY: DARWIN CRUZ
REVISED BY
DATE REVISED

LAST REVISION 06-18-12
DATE PLOTTED => 12-SEP-2012
TIME PLOTTED => 16:08

Dist	COUNTY	ROUTE	POST MILES TOTAL PROJECT	SHEET No.	TOTAL SHEETS
11	SD	805	4.7/5.6	98	650

REGISTERED CIVIL ENGINEER 06-01-12 DATE

06-25-12
PLANS APPROVAL DATE

REGISTERED PROFESSIONAL ENGINEER PAUL E. KOSINSKI No. C73254 Exp. 12-31-12 CIVIL STATE OF CALIFORNIA

THE STATE OF CALIFORNIA OR ITS OFFICERS OR AGENTS SHALL NOT BE RESPONSIBLE FOR THE ACCURACY OR COMPLETENESS OF SCANNED COPIES OF THIS PLAN SHEET.

DOKKEN ENGINEERING
5675 RUFFIN Rd
SUITE 250
SAN DIEGO, CA 92123

SANDAG
401 B St
SUITE 800
SAN DIEGO, CA 92101

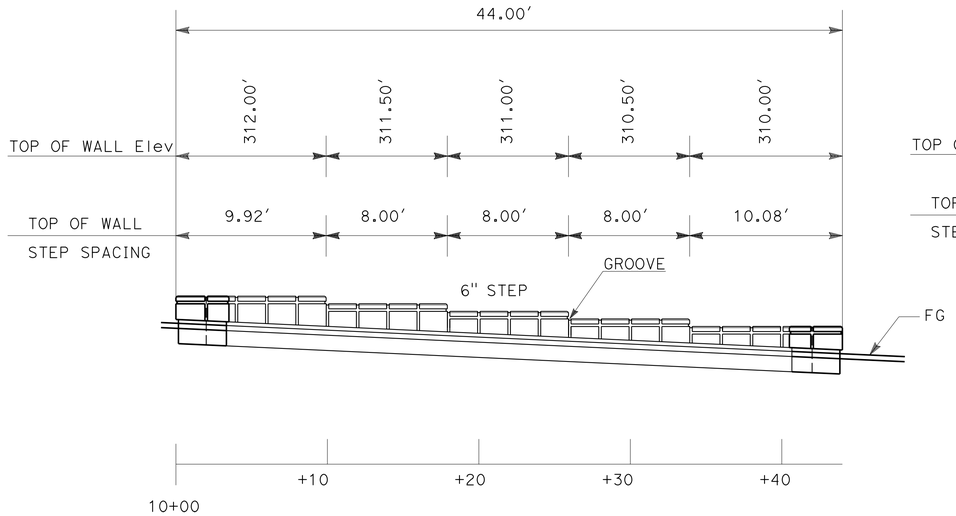

ELEVATION
SCALE: 1" = 5'

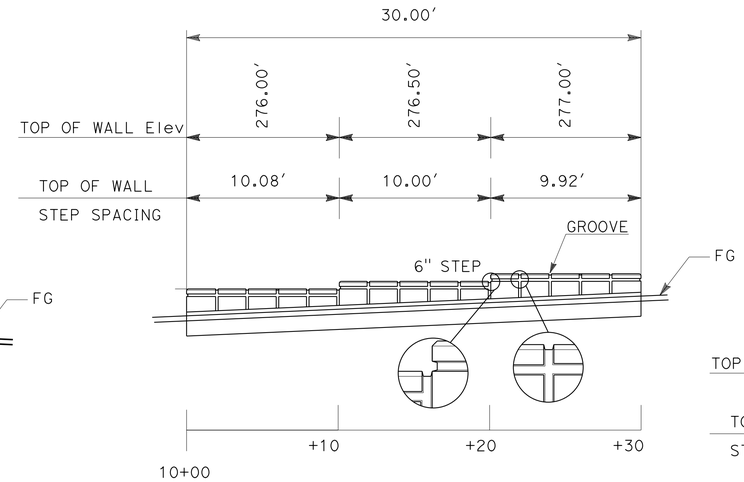

ELEVATION
SCALE: 1" = 5'

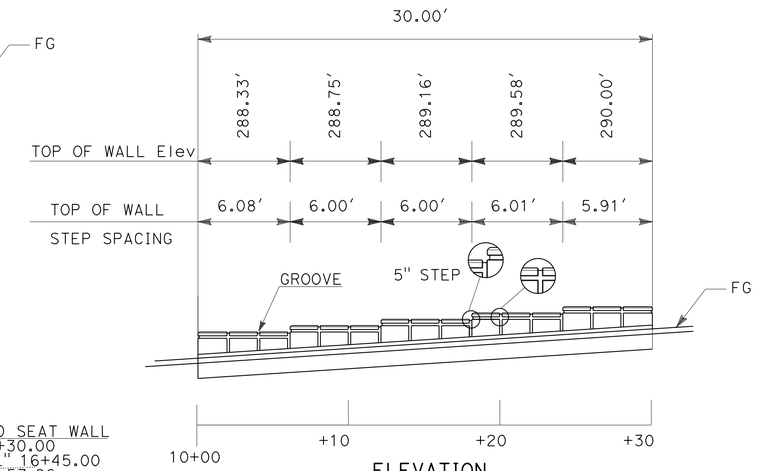

ELEVATION
SCALE: 1" = 5'

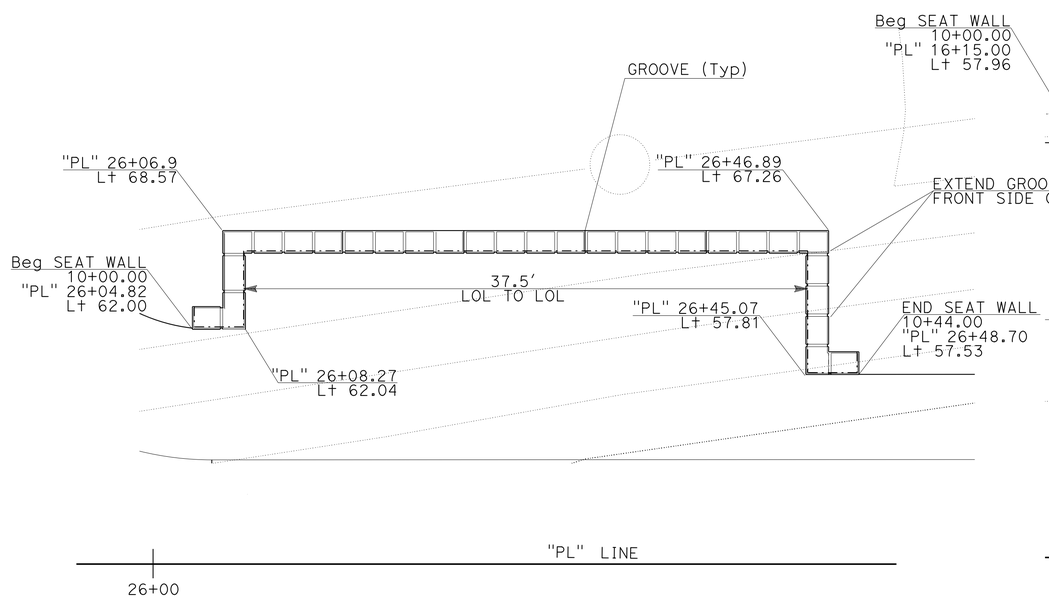

PLAN

CONCRETE SEAT WALL (EAST OF RAVEN Ave)

NO SCALE

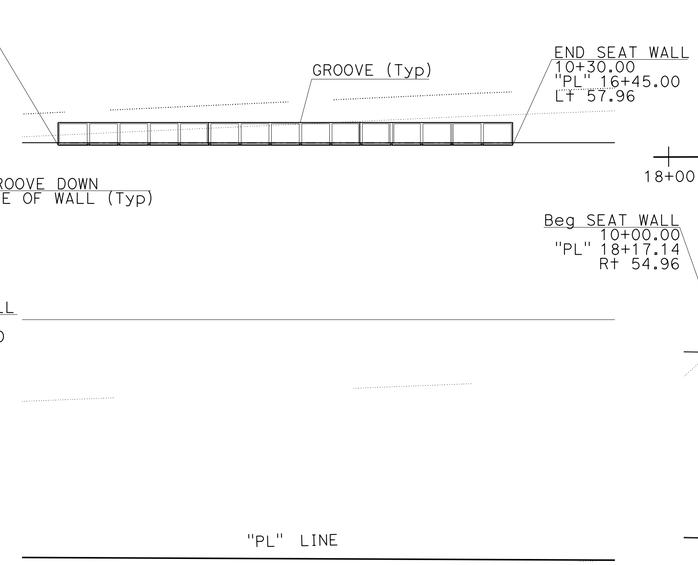

PLAN

CONCRETE SEAT WALL (WEST OF NACION Ave)

NO SCALE

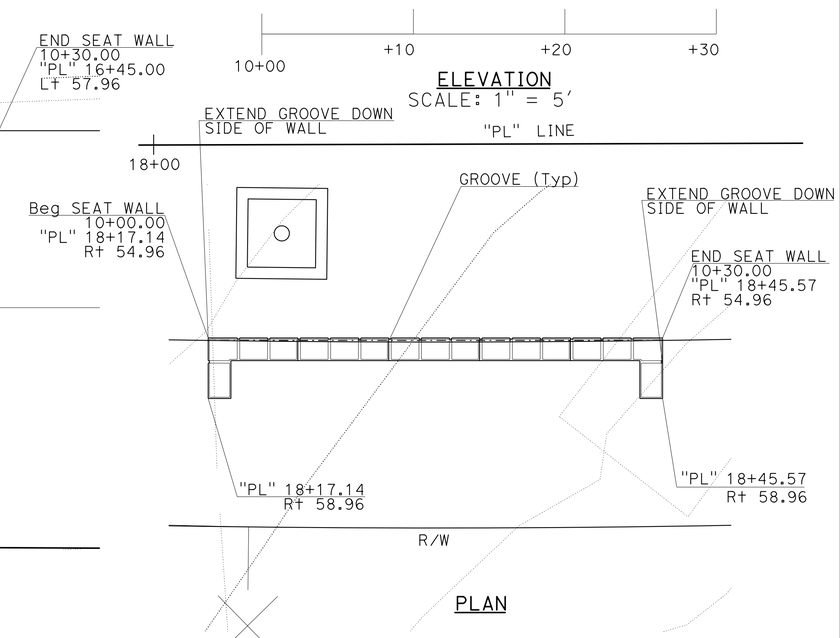

PLAN

CONCRETE SEAT WALL (EAST OF NACION Ave)

NO SCALE

CONCRETE SEAT WALLS

CONSTRUCTION DETAILS

SCALE AS SHOWN

C-54

STATE OF CALIFORNIA - DEPARTMENT OF TRANSPORTATION
Caltrans

CONSULTANT FUNCTIONAL SUPERVISOR: GERARD LUMABAS
MATTHEW P. MAECHLER
DARWIN CRUZ
CALCULATED-DESIGNED BY
CHECKED BY
REVISED BY
DATE REVISED

LAST REVISION 06-18-12 | DATE PLOTTED => 12-SEP-2012 | TIME PLOTTED => 16:08

Dist	COUNTY	ROUTE	POST MILES TOTAL PROJECT	SHEET No.	TOTAL SHEETS
11	SD	805	4.7/5.6	99	650

REGISTERED CIVIL ENGINEER 06-01-12 DATE

PAUL E. KOSINSKI No. C73254 Exp. 12-31-12 CIVIL STATE OF CALIFORNIA REGISTERED PROFESSIONAL ENGINEER

06-25-12
PLANS APPROVAL DATE

THE STATE OF CALIFORNIA OR ITS OFFICERS OR AGENTS SHALL NOT BE RESPONSIBLE FOR THE ACCURACY OR COMPLETENESS OF SCANNED COPIES OF THIS PLAN SHEET.

DOKKEN ENGINEERING
5675 RUFFIN Rd
SUITE 250
SAN DIEGO, CA 92123

SANDAG
401 B St
SUITE 800
SAN DIEGO, CA 92101

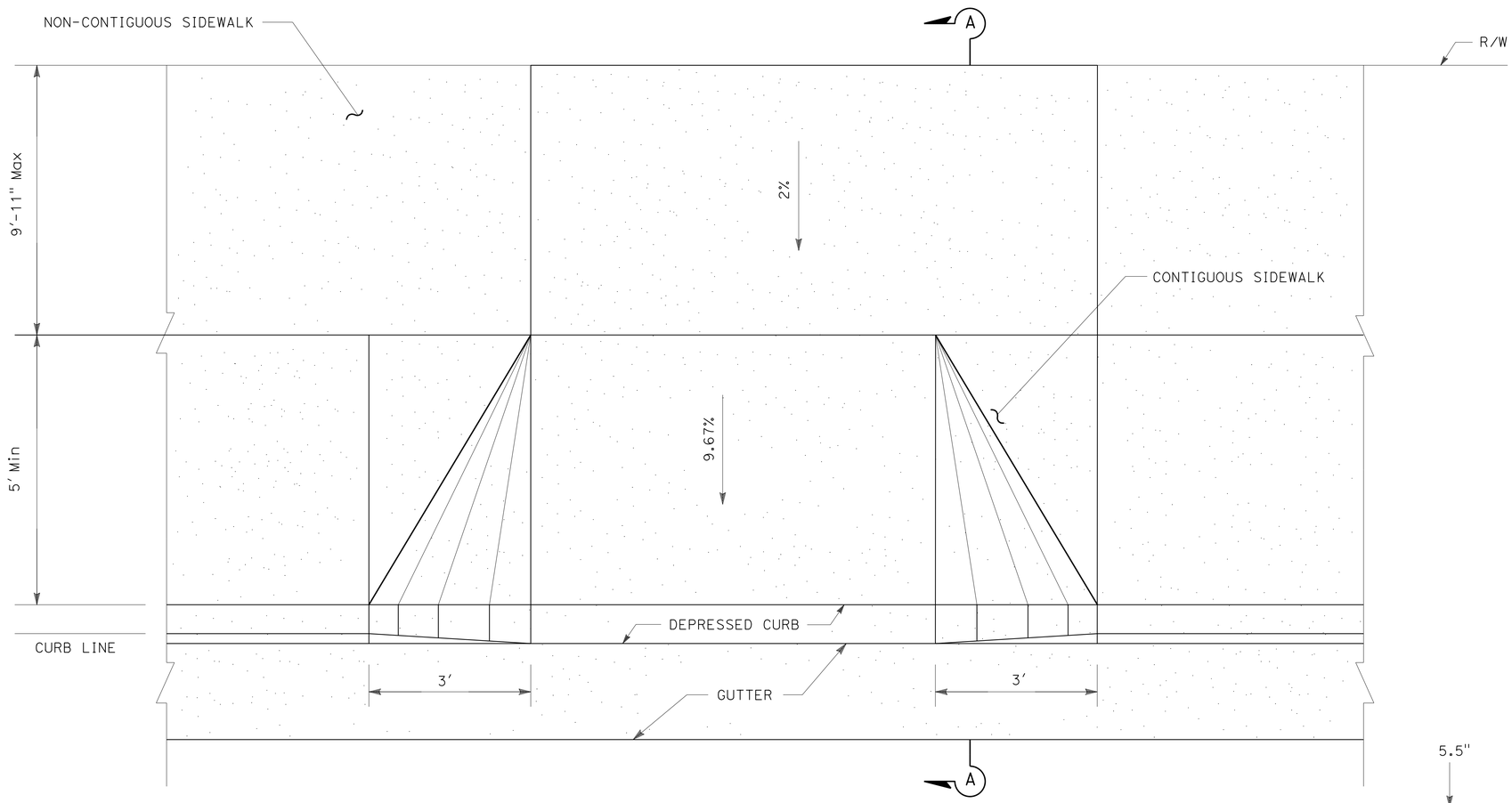

PLAN

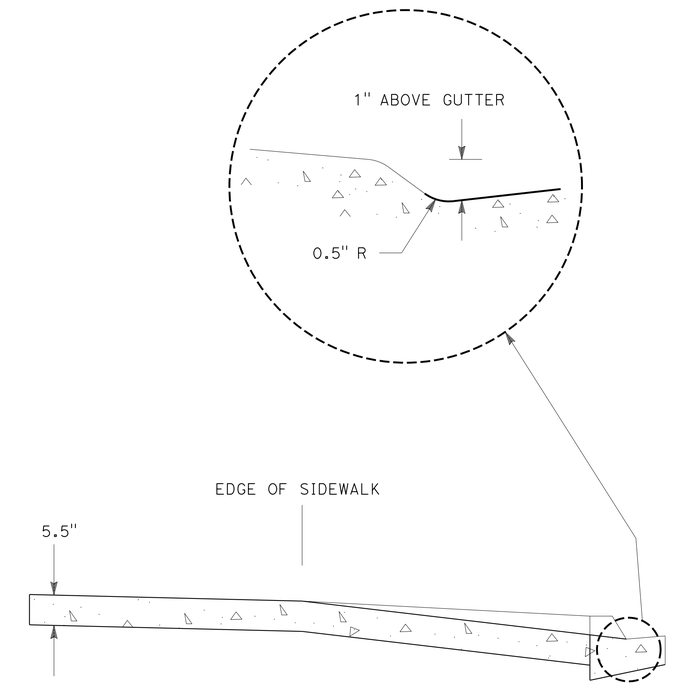

SECTION A-A

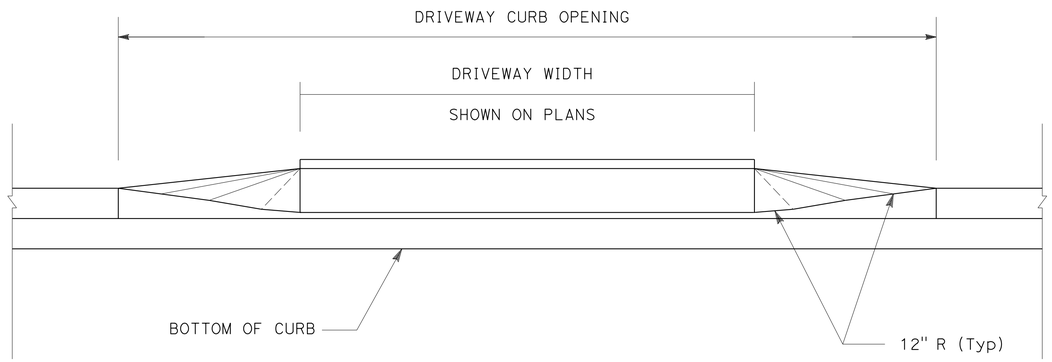

ELEVATION

DRIVEWAY

CONSTRUCTION DETAILS

NO SCALE

C-55

STATE OF CALIFORNIA - DEPARTMENT OF TRANSPORTATION

Caltrans

CONSULTANT FUNCTIONAL SUPERVISOR: GERARD LUMABAS

CALCULATED-DESIGNED BY: MATTHEW P. MAECHLER

CHECKED BY: DARWIN CRUZ

REVISED BY

DATE REVISED

LAST REVISION 06-19-12

DATE PLOTTED => 12-SEP-2012
TIME PLOTTED => 16:09

Dist	COUNTY	ROUTE	POST MILES TOTAL PROJECT	SHEET No.	TOTAL SHEETS
11	SD	805	4.7/5.6	100	650

REGISTERED CIVIL ENGINEER 06-01-12 DATE

06-25-12
PLANS APPROVAL DATE

REGISTERED PROFESSIONAL ENGINEER PAUL E. KOSINSKI No. C73254 Exp. 12-31-12 CIVIL STATE OF CALIFORNIA

THE STATE OF CALIFORNIA OR ITS OFFICERS OR AGENTS SHALL NOT BE RESPONSIBLE FOR THE ACCURACY OR COMPLETENESS OF SCANNED COPIES OF THIS PLAN SHEET.

DOKKEN ENGINEERING
5675 RUFFIN Rd
SUITE 250
SAN DIEGO, CA 92123

SANDAG
401 B St
SUITE 800
SAN DIEGO, CA 92101

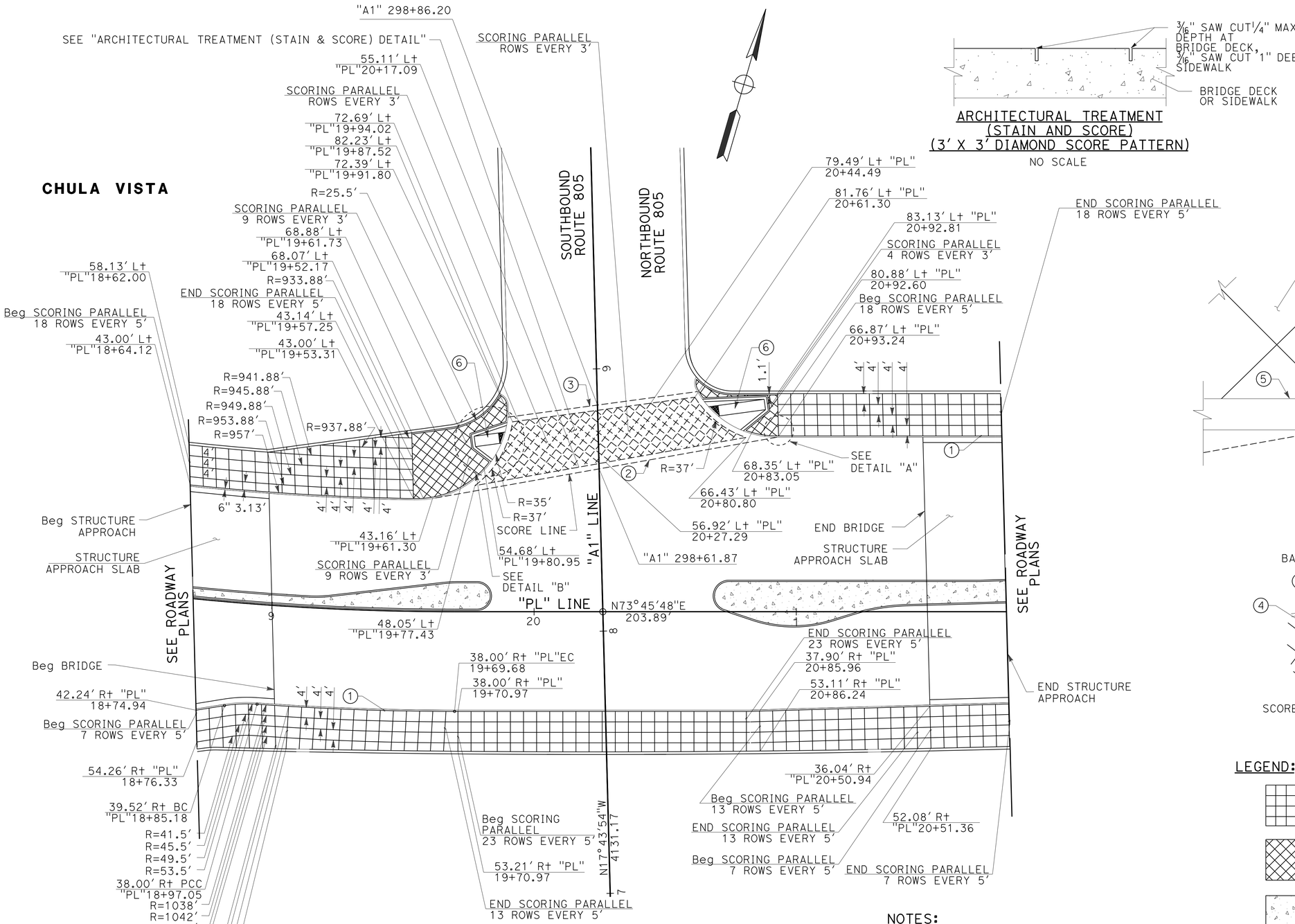

BRIDGE ARCHITECTURAL TREATMENT DETAILS

ARCHITECTURAL TREATMENT
(STAIN AND SCORE)
(3' X 3' DIAMOND SCORE PATTERN)
NO SCALE

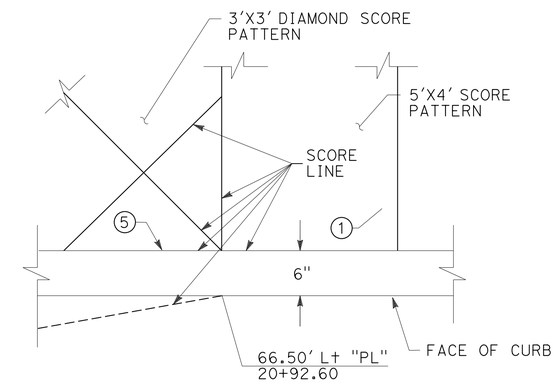

DETAIL "A"
NO SCALE

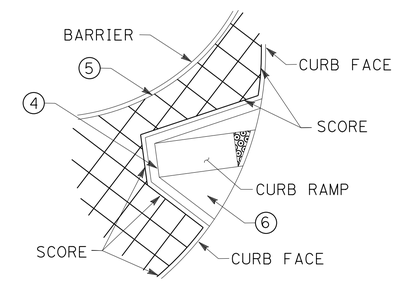

DETAIL "B"
NO SCALE

LEGEND:

- Conc BARRIER TYPE 26 (Mod) (5' X 4' SQUARE SCORE PATTERN)
- Conc BARRIER TYPE 26 (Mod) (MEDIUM SANDBLAST AND STAIN) (3' X 3' DIAMOND SAWCUT PATTERN)
- MINOR CONCRETE (TYPE 1)(EXPOSED AGGREGATE) (SAWCUT JOINT PATTERN TO MATCH ROADWAY MEDIAN)
- ARCHITECTURAL TREATMENT (MEDIUM SANDBLAST AND STAIN) (3' X 3' DIAMOND SAWCUT PATTERN)

NOTES:

1. SCORE LINES TO BE PLACED 6" BEHIND FACE OF CURB AND REPEAT EVERY 4' TO BACK OF SIDEWALK FOR Conc BARRIER TYPE 26 (Mod).
2. LIMITS OF STAIN.
3. LIMITS OF STAIN AND EDGE OF DECK JOINT.
4. SEE C-3 FOR CURB RAMP DETAILS.
5. SCORE LINES TO BE PLACED 6" OFF FACE OF BARRIER AND FACE OF CURB FOR Conc BARRIER TYPE 26 (Mod 2).
6. STAIN CURB RAMP.

CONSTRUCTION DETAILS

SCALE 1" = 20'

C-56

REVISED BY | DATE REVISED
MATTHEW P. MAECHLER | DARWIN CRUZ
CALCULATED-DESIGNED BY | CHECKED BY
CONSULTANT FUNCTIONAL SUPERVISOR | GERARD LUMABAS

STATE OF CALIFORNIA - DEPARTMENT OF TRANSPORTATION
Caltrans

LAST REVISION 06-19-12 | DATE PLOTTED => 12-SEP-2012 | TIME PLOTTED => 16:09