Dist	COUNTY	ROUTE	POST MILES TOTAL PROJECT	SHEET No.	TOTAL SHEETS
11	SD	15	M15.0/M16.4	301	610

REGISTERED CIVIL ENGINEER 01-03-11 DATE

10-24-11
PLANS APPROVAL DATE

REGISTERED PROFESSIONAL ENGINEER NICHOLAS A. HAIGH No. 71673 Exp. 12-31-11 CIVIL STATE OF CALIFORNIA

THE STATE OF CALIFORNIA OR ITS OFFICERS OR AGENTS SHALL NOT BE RESPONSIBLE FOR THE ACCURACY OR COMPLETENESS OF SCANNED COPIES OF THIS PLAN SHEET.

AECOM
7807 CONVOY COURT, SUITE 200
SAN DIEGO, CA 92111

ABBREVIATIONS:

TOF - TOP OF FOOTING
TRW - TOP OF RETAINING WALL
CML&TC - CEMENT MORTAR LINED AND TAPE COATED
WSP - WELDED STEEL PIPE

NOTES:

1. ADJUST TOP OF WALL TO MATCH APPROACH SLAB. SEE STRUCTURE PLANS.
2. EXISTING 1" PE GAS PIPE TO BE CUT AND CAPPED BY OTHERS. REMOVE AS REQUIRED TO CONSTRUCT RETAINING WALL.

RETAINING WALL "24R" QUANTITIES

LOCATION	DESCRIPTION	QUANTITIES
24+43.57 TO 25+68.95 "HD"	STRUCTURAL CONCRETE, Ret WALL	121 CY
	BAR REINFORCING STEEL (Ret WALL)	10,373 LB
	STRUCTURE EXCAVATION (Ret WALL)	202 CY
	STRUCTURE BACKFILL (Ret WALL)	270 CY
	PERVIOUS BACKFILL MATERIAL (Ret WALL)	39 CY
	OVAL TEXTURE	1,020 SF
	CONCRETE BARRIER (TYPE 736A Mod 1)	126 LF
	ARCHITECTURAL SURFACE (BARRIER A)	377 SF

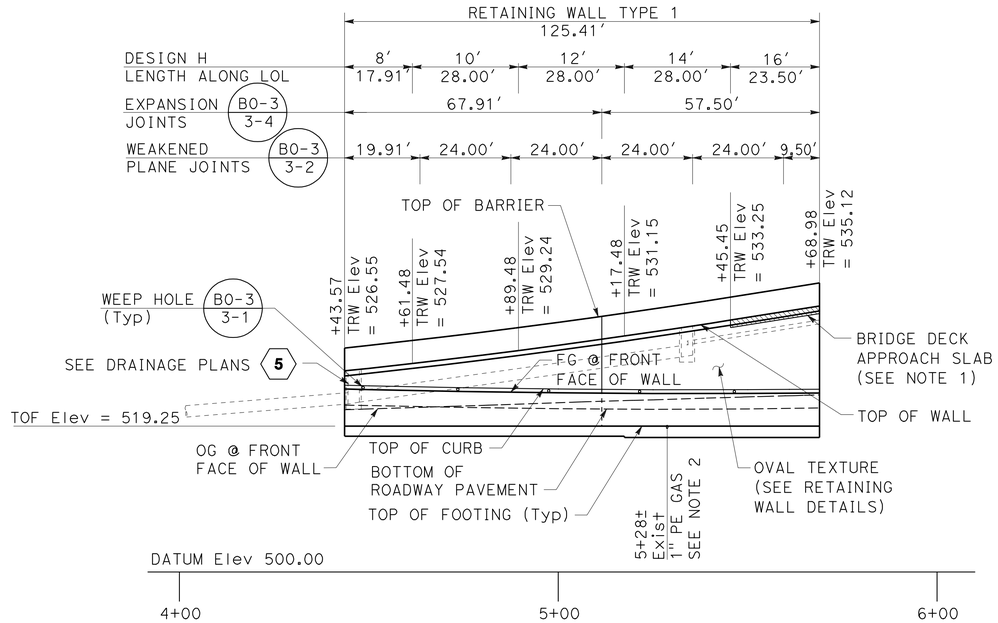

ELEVATION

SCALE: Horiz 1" = 20'
Vert 1" = 10'

CURVE DATA

No.	R	Δ	T	L
1	997.15'	0°31'11"	4.52'	9.04'

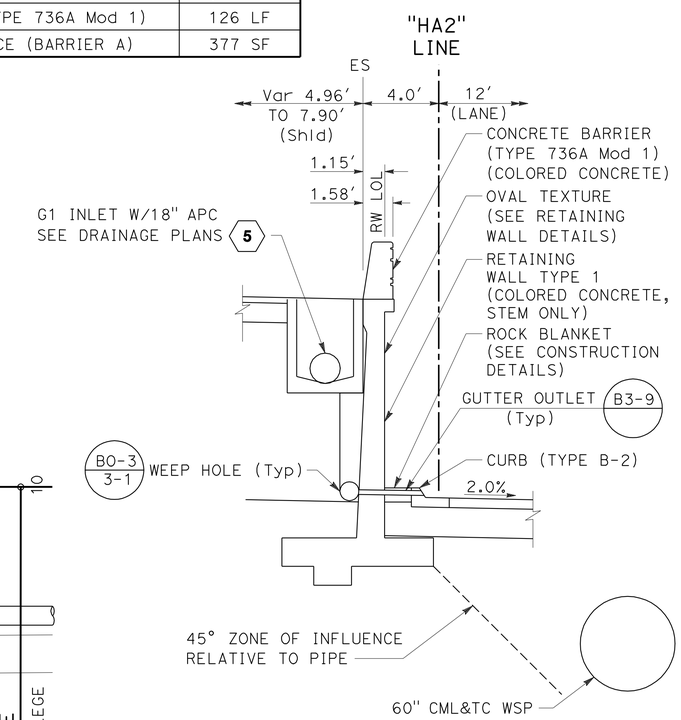

TYPICAL SECTION

NO SCALE

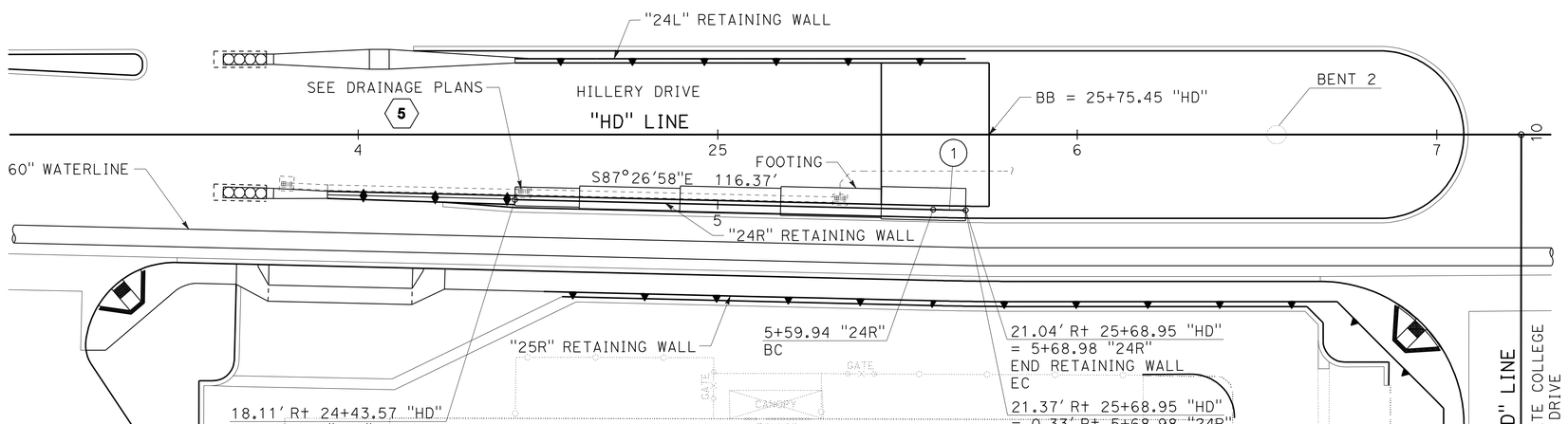

FOOTING LAYOUT

SCALE: 1" = 20'

THIS PLAN ACCURATE FOR RETAINING WALL WORK ONLY

RETAINING WALL PLAN
WALL No. "24R"

SCALE AS SHOWN

R-15

REVISED BY | DATE REVISED
NICHOLAS HAIGH | MICHAEL CRULL
CALCULATED-DESIGNED BY | CHECKED BY
CONSULTANT FUNCTIONAL SUPERVISOR | RICHARD LEJA
STATE OF CALIFORNIA - DEPARTMENT OF TRANSPORTATION
Caltrans

LAST REVISION 02-04-11 | DATE PLOTTED => 27-OCT-2011 | TIME PLOTTED => 10:31

Dist	COUNTY	ROUTE	POST MILES TOTAL PROJECT	SHEET No.	TOTAL SHEETS
11	SD	15	M15.0/M16.4	302	610

REGISTERED CIVIL ENGINEER 01-03-11 DATE

10-24-11
PLANS APPROVAL DATE

REGISTERED PROFESSIONAL ENGINEER NICHOLAS A. HAIGH No. 71673 Exp. 12-31-11 CIVIL STATE OF CALIFORNIA

THE STATE OF CALIFORNIA OR ITS OFFICERS OR AGENTS SHALL NOT BE RESPONSIBLE FOR THE ACCURACY OR COMPLETENESS OF SCANNED COPIES OF THIS PLAN SHEET.

AECOM
7807 CONVOY COURT, SUITE 200
SAN DIEGO, CA 92111

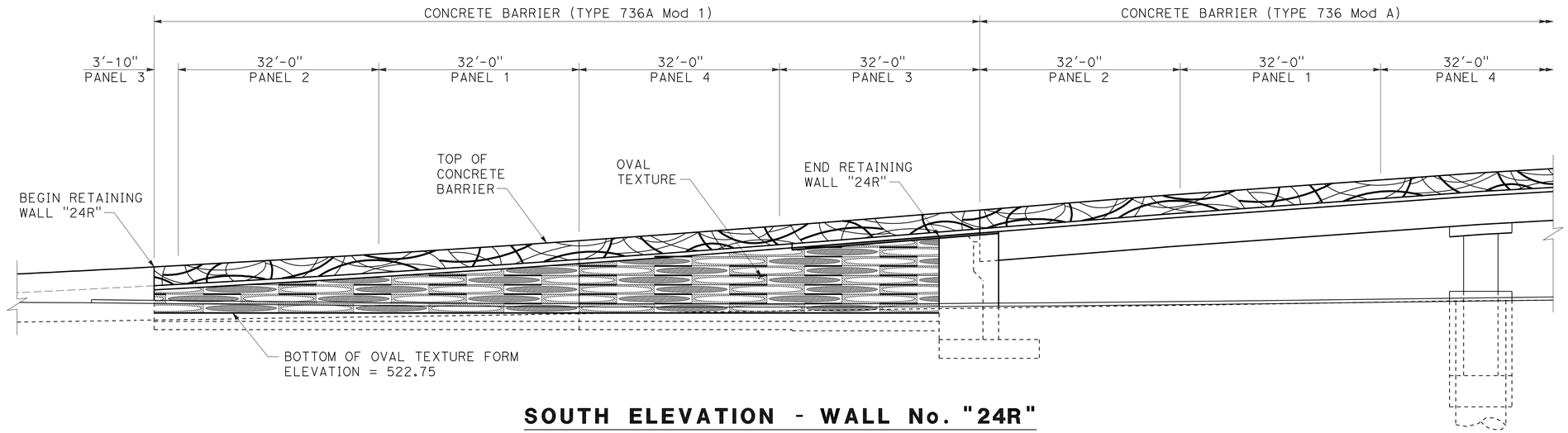

SOUTH ELEVATION - WALL No. "24R"

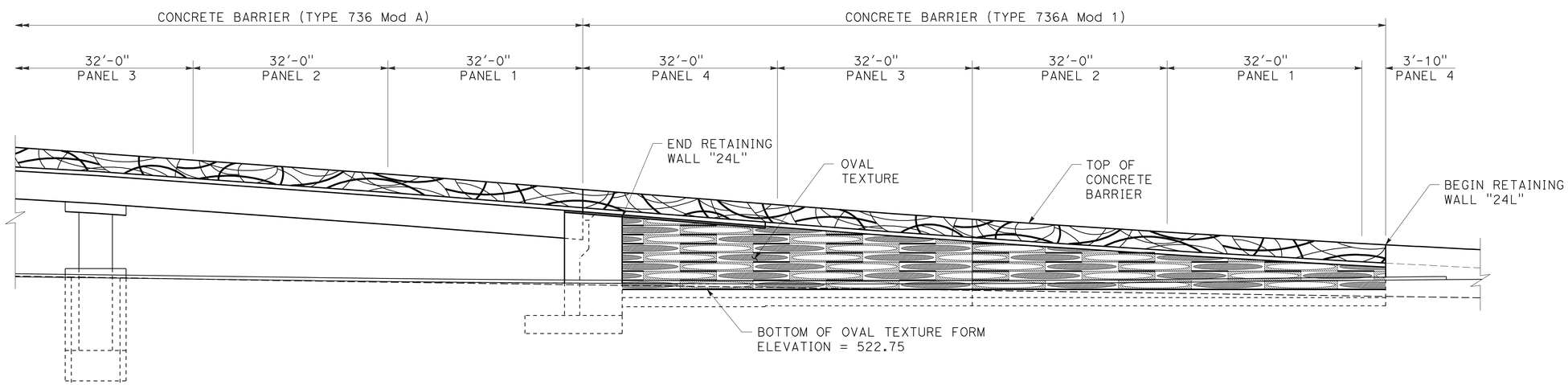

NORTH ELEVATION - WALL No. "24L"

RETAINING WALL DETAILS
WALLS No. "24L" AND "24R"

SCALE: 1" = 10'

R-16

REVISED BY | DATE REVISED
NICHOLAS HAIGH | MICHAEL CRULL
CALCULATED-DESIGNED BY | CHECKED BY
CONSULTANT FUNCTIONAL SUPERVISOR: RICHARD LEJA

STATE OF CALIFORNIA - DEPARTMENT OF TRANSPORTATION
Caltrans

LAST REVISION 02-04-11 | DATE PLOTTED => 27-OCT-2011 | TIME PLOTTED => 10:31

Dist	COUNTY	ROUTE	POST MILES TOTAL PROJECT	SHEET No.	TOTAL SHEETS
11	SD	15	M15.0/M16.4	303	610

REGISTERED CIVIL ENGINEER 01-03-11 DATE

10-24-11
PLANS APPROVAL DATE

REGISTERED PROFESSIONAL ENGINEER NICHOLAS A. HAIGH No. 71673 Exp. 12-31-11 CIVIL STATE OF CALIFORNIA

THE STATE OF CALIFORNIA OR ITS OFFICERS OR AGENTS SHALL NOT BE RESPONSIBLE FOR THE ACCURACY OR COMPLETENESS OF SCANNED COPIES OF THIS PLAN SHEET.

AECOM
7807 CONVOY COURT, SUITE 200
SAN DIEGO, CA 92111

NOTES:

1. 4 CUSTOM PANELS TOTAL, PATTERN REPEATS 128' ON CENTER.
2. PROVIDE WALL JOINTS AS NOTED ON THE ELEVATIONS.
3. INTEGRALLY COLORED CONCRETE.
4. FORM FINISH SHALL BE CLASS I.

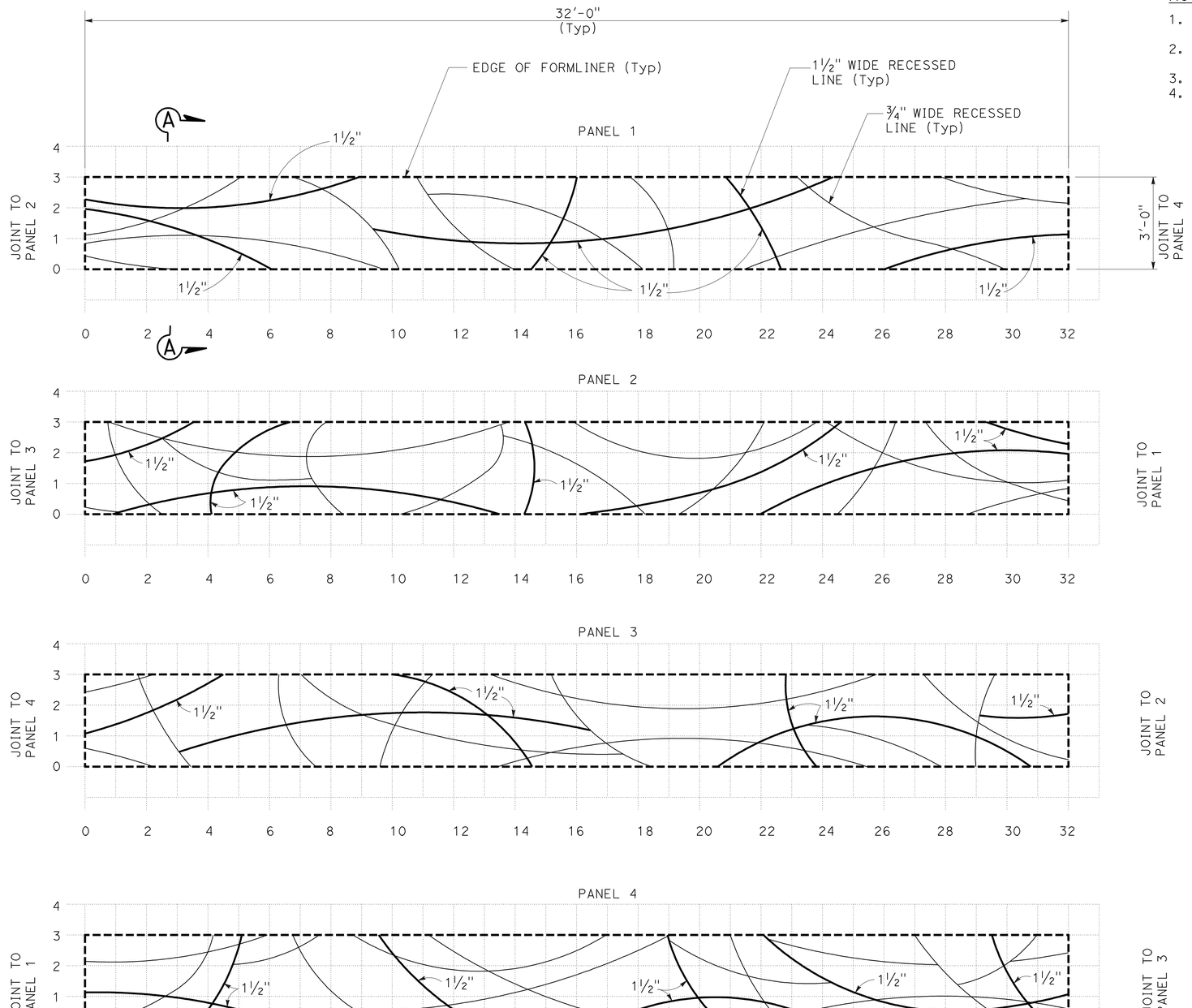

ELEVATION CONCRETE BARRIER (TYPE 736A Mod 1)

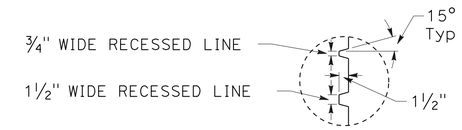

DETAIL A

NO SCALE

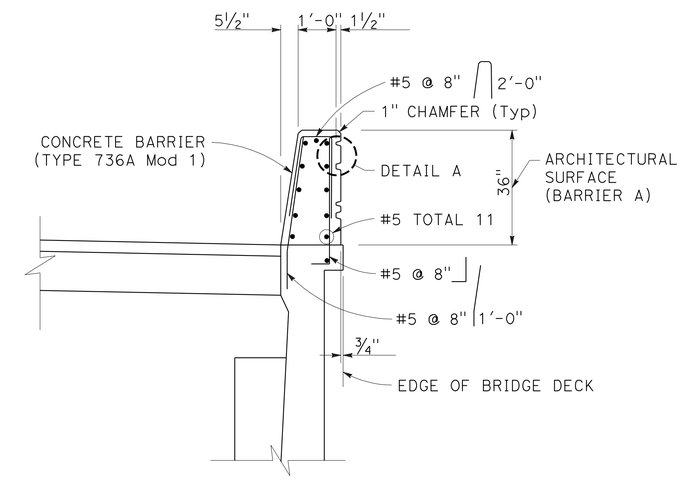

SECTION A-A

NO SCALE

RETAINING WALL DETAILS
WALLS No. "24L" AND "24R"

SCALE: ½" = 1'-0"

R-17

STATE OF CALIFORNIA - DEPARTMENT OF TRANSPORTATION
Caltrans

CONSULTANT FUNCTIONAL SUPERVISOR: RICHARD LEJA
CALCULATED-DESIGNED BY: NICHOLAS HAIGH
CHECKED BY: MICHAEL CRULL
REVISED BY / DATE REVISED

LAST REVISION 02-07-94 DATE PLOTTED => 27-OCT-2011 TIME PLOTTED => 10:31

Dist	COUNTY	ROUTE	POST MILES TOTAL PROJECT	SHEET No.	TOTAL SHEETS
11	SD	15	M15.0/M16.4	304	610

REGISTERED CIVIL ENGINEER 01-03-11 DATE

10-24-11
PLANS APPROVAL DATE

REGISTERED PROFESSIONAL ENGINEER NICHOLAS A. HAIGH No. 71673 Exp. 12-31-11 CIVIL STATE OF CALIFORNIA

THE STATE OF CALIFORNIA OR ITS OFFICERS OR AGENTS SHALL NOT BE RESPONSIBLE FOR THE ACCURACY OR COMPLETENESS OF SCANNED COPIES OF THIS PLAN SHEET.

AECOM
7807 CONVOY COURT, SUITE 200
SAN DIEGO, CA 92111

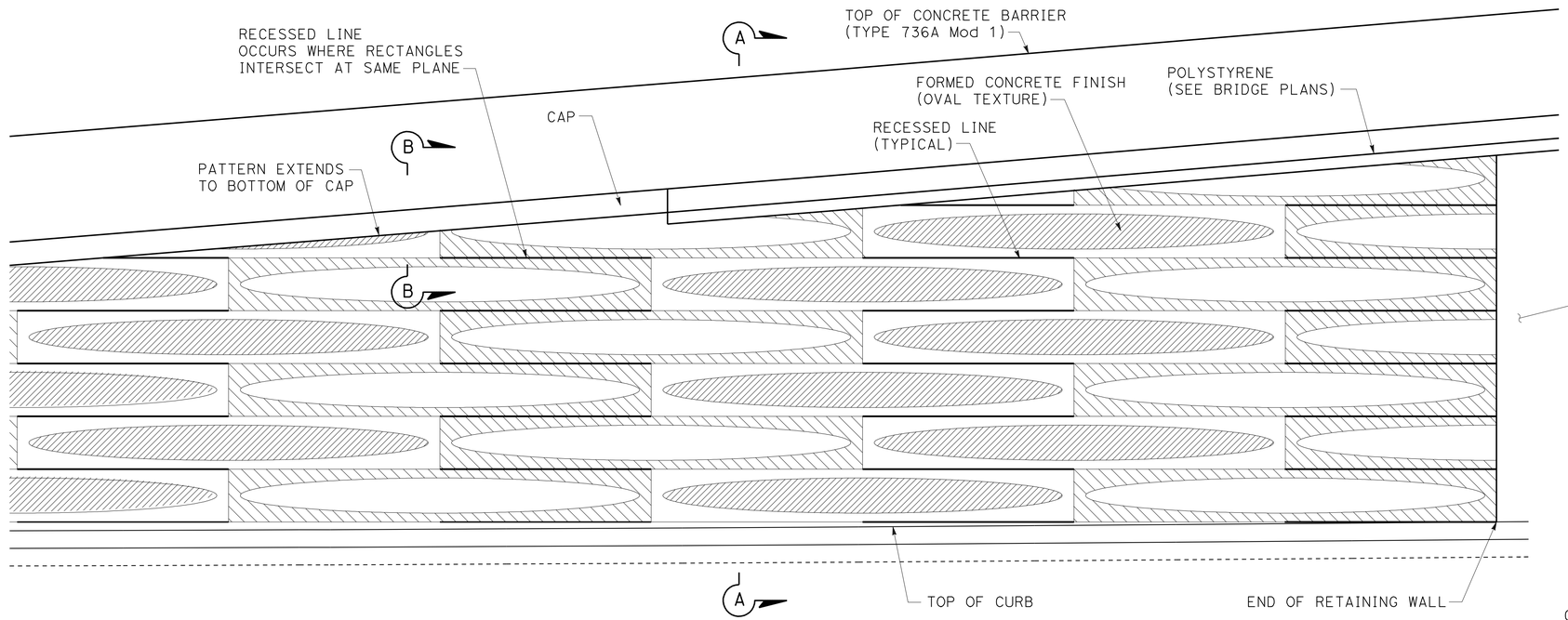

TYPICAL ELEVATION (RETAINING WALL WITH OVAL TEXTURE)

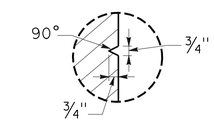

RECESSED LINE SECTION

NO SCALE

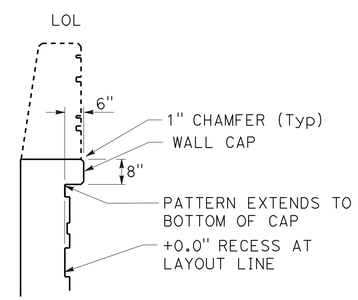

SECTION B-B

NO SCALE

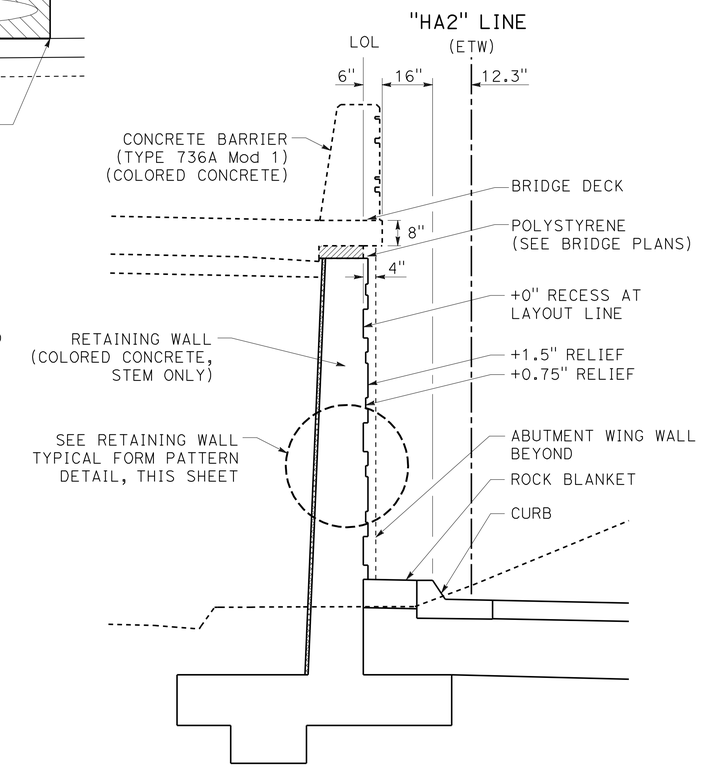

SECTION A-A

NO SCALE

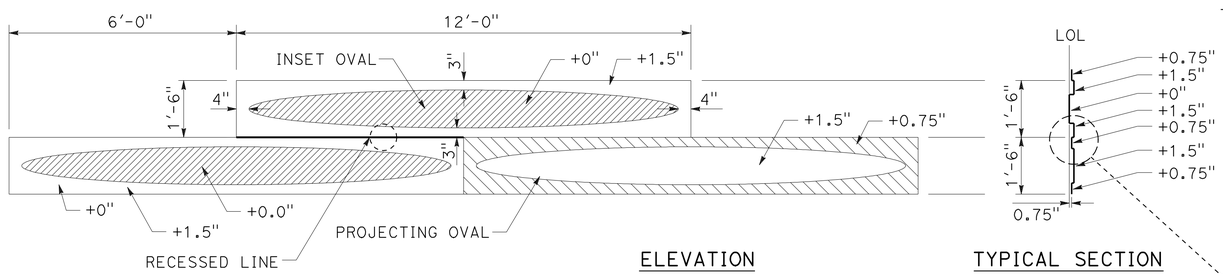

RETAINING WALL TYPICAL FORM PATTERN DETAIL

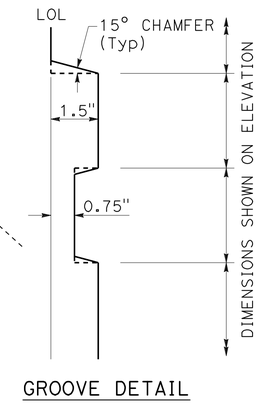

GROOVE DETAIL

NO SCALE

NOTE:
CHAMFER TO BE SET TO MAINTAIN A FULL-SIZE PROJECTING OVAL AT +1.5" RELIEF AS SHOWN ON FORM PATTERN ELEVATION

RETAINING WALL DETAILS
WALLS No. "24L" AND "24R"

SCALE: 1/4" = 1'-0"

R-18

REVISED BY | DATE REVISED
NICHOLAS HAIGH | MICHAEL CRULL
CALCULATED-DESIGNED BY | CHECKED BY
CONSULTANT FUNCTIONAL SUPERVISOR: RICHARD LEJA
STATE OF CALIFORNIA - DEPARTMENT OF TRANSPORTATION
Caltrans®
LAST REVISION 02-07-11 | DATE PLOTTED => 27-OCT-2011 | TIME PLOTTED => 10:31

Dist	COUNTY	ROUTE	POST MILES TOTAL PROJECT	SHEET No.	TOTAL SHEETS
11	SD	15	M15.0/M16.4	305	610

REGISTERED CIVIL ENGINEER 01-03-11 DATE

10-24-11
PLANS APPROVAL DATE

REGISTERED PROFESSIONAL ENGINEER NICHOLAS A. HAIGH No. 71673 Exp. 12-31-11 CIVIL STATE OF CALIFORNIA

THE STATE OF CALIFORNIA OR ITS OFFICERS OR AGENTS SHALL NOT BE RESPONSIBLE FOR THE ACCURACY OR COMPLETENESS OF SCANNED COPIES OF THIS PLAN SHEET.

AECOM
7807 CONVOY COURT, SUITE 200
SAN DIEGO, CA 92111

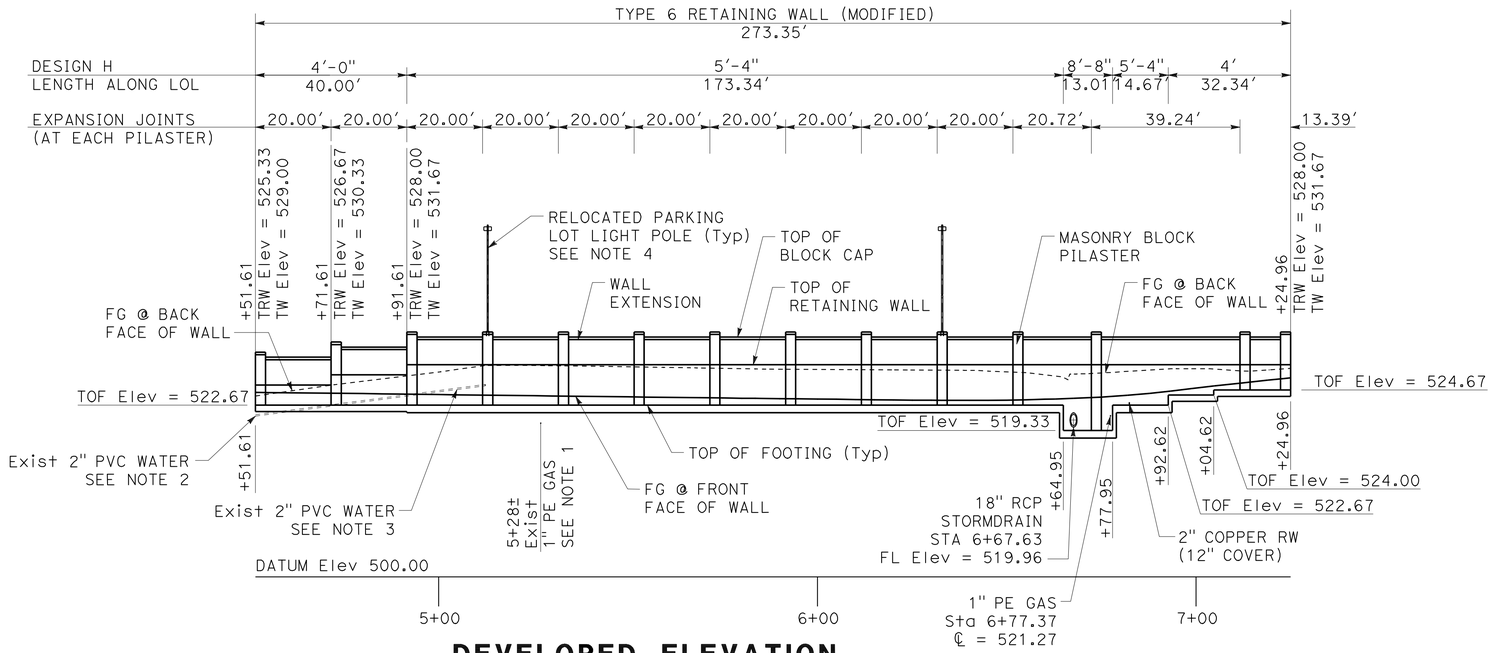

DEVELOPED ELEVATION

SCALE: Horiz 1" = 20'
Vert 1" = 10'

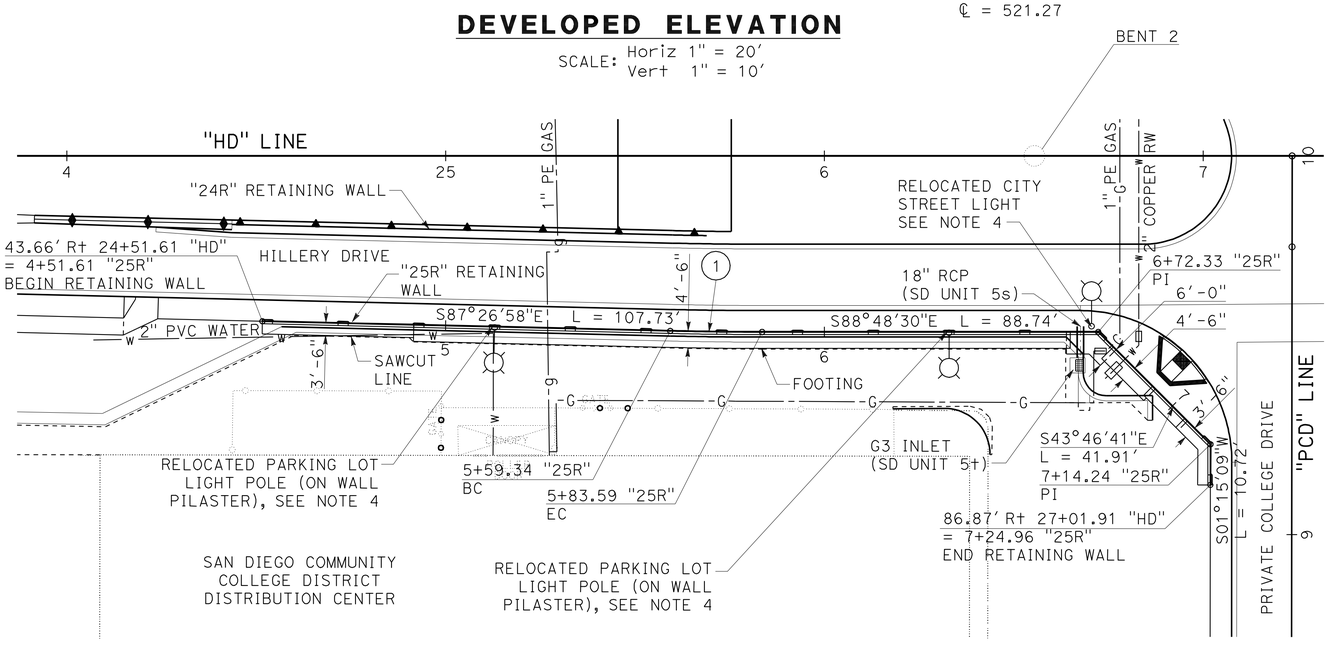

FOOTING LAYOUT

SCALE: 1" = 20'

THIS PLAN ACCURATE FOR RETAINING WALL WORK ONLY

LEGEND:

TOF - TOP OF FOOTING
TRW - TOP OF RETAINING WALL
TW - TOP OF WALL EXTENSION

NOTES:

1. EXISTING 1" PE GAS PIPE TO BE CUT AND CAPPED BY OTHERS. REMOVE AS REQUIRED TO CONSTRUCT RETAINING WALL.
2. EXISTING 2" PVC WATER SERVICE TO DISTRIBUTION CENTER TO BE VERTICALLY RELOCATED. SEE UTILITY PLANS.
3. EXISTING 2" PVC WATER SERVICE TO DISTRIBUTION CENTER TO BE PROTECTED AND MAINTAINED IN SERVICE AT ALL TIMES.
4. FOR DETAILS OF RELOCATED LIGHT POLES, SEE LIGHTING AND SIGN ILLUMINATION PLANS.

RETAINING WALL "25R" QUANTITIES

LOCATION	DESCRIPTION	QUANTITIES
24+51.61 TO 27+01.91 "HD"	STRUCTURAL CONCRETE, Rt WALL	54 CY
	TYPE 6 RETAINING WALL (MODIFIED)	2,290 SF
	BAR REINFORCING STEEL (Rt WALL)	11,646 LB
	STRUCTURE EXCAVATION (Rt WALL)	410 CY
	STRUCTURE BACKFILL (Rt WALL)	249 CY

CURVE DATA

No.	R	Δ	T	L
1	1022.50'	1°21'32"	12.13'	24.25'

RETAINING WALL PLAN
WALL No. "25R"

SCALE AS SHOWN

R-19

REVISED BY | DATE REVISED
NICHOLAS HAIGH | MICHAEL CRULL
CALCULATED-DESIGNED BY | CHECKED BY
CONSULTANT FUNCTIONAL SUPERVISOR: RICHARD LEJA
STATE OF CALIFORNIA - DEPARTMENT OF TRANSPORTATION
Caltrans

LAST REVISION 02-07-11 | DATE PLOTTED => 27-OCT-2011 | TIME PLOTTED => 10:32

Dist	COUNTY	ROUTE	POST MILES TOTAL PROJECT	SHEET No.	TOTAL SHEETS
11	SD	15	M15.0/M16.4	306	610

REGISTERED CIVIL ENGINEER 01-03-11 DATE

10-24-11
PLANS APPROVAL DATE

REGISTERED PROFESSIONAL ENGINEER NICHOLAS A. HAIGH No. 71673 Exp. 12-31-11 CIVIL STATE OF CALIFORNIA

THE STATE OF CALIFORNIA OR ITS OFFICERS OR AGENTS SHALL NOT BE RESPONSIBLE FOR THE ACCURACY OR COMPLETENESS OF SCANNED COPIES OF THIS PLAN SHEET.

AECOM
7807 CONVOY COURT, SUITE 200
SAN DIEGO, CA 92111

NOTES:

1. EXISTING 2" PVC WATER SERVICE TO DISTRIBUTION CENTER TO BE VERTICALLY RELOCATED. SEE UTILITY PLANS.
2. EXISTING 2" PVC WATER SERVICE TO DISTRIBUTION CENTER TO BE PROTECTED AND MAINTAINED IN SERVICE AT ALL TIMES.
3. TEMPORARY EARTH RETAINING SYSTEM MAY BE REQUIRED.
4. MAINTAIN TRUCK ACCESS TO DISTRIBUTION CENTER AT ALL TIMES.
5. FOR DETAILS OF PILASTERS SEE RETAINING WALL DETAILS.
6. FOR PAVEMENT REPAIRS AT DISTRIBUTION CENTER, SEE CONSTRUCTION DETAILS.

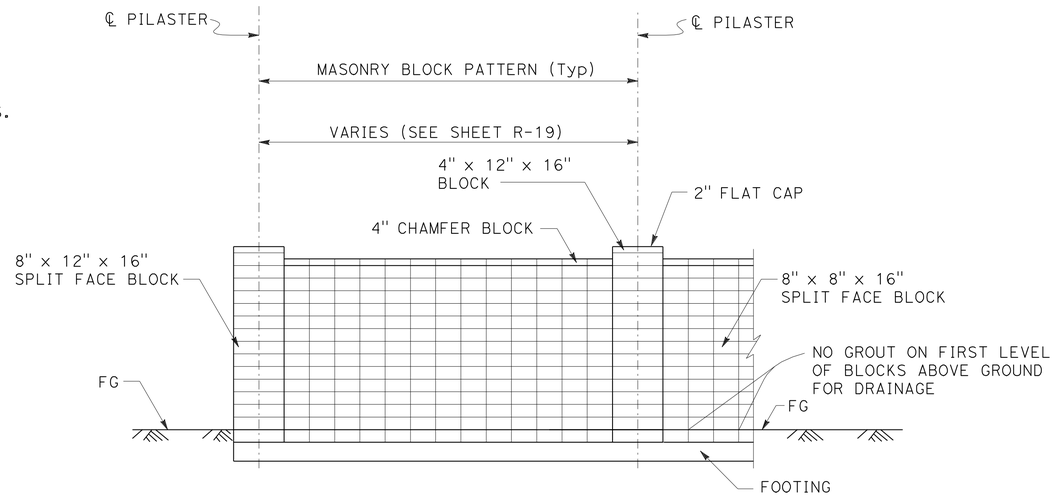

TYPE 6 RETAINING WALL (MODIFIED)

ELEVATION

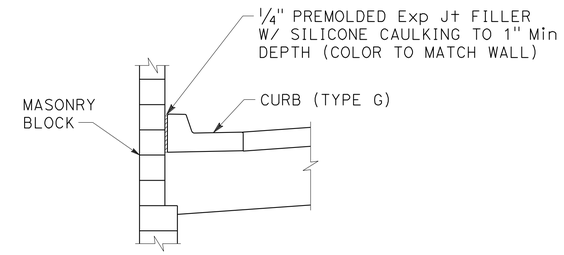

EXPANSION JOINT FOR CURB AT WALL

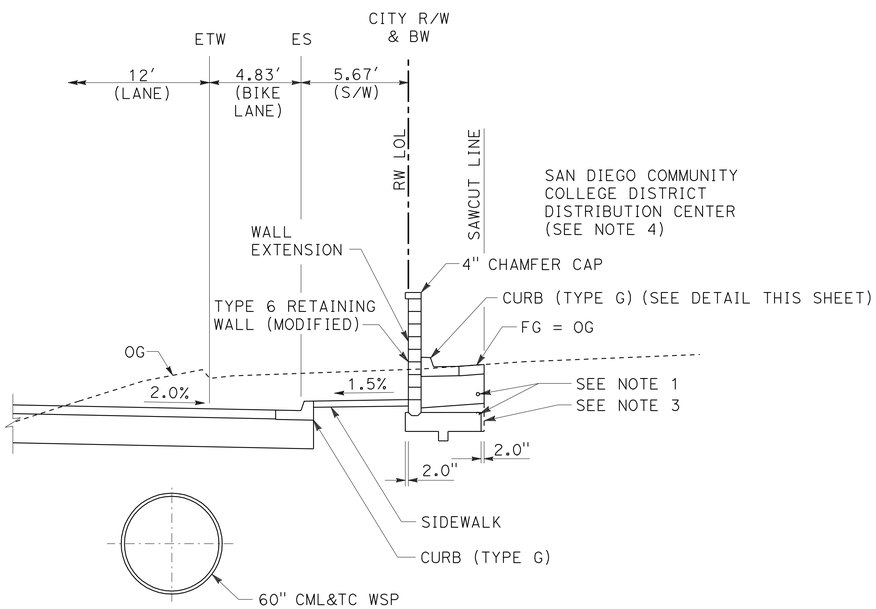

TYPICAL SECTION

Sta 4+51.61 TO Sta 6+64.95
Sta 6+77.95 TO Sta 7+24.96

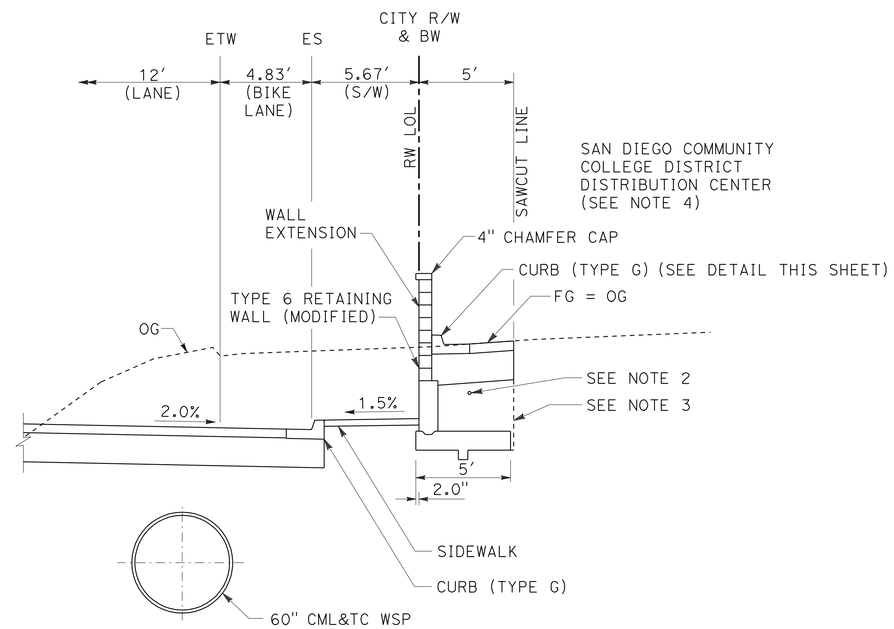

TYPICAL SECTION

Sta 6+64.95 TO Sta 6+77.95

RETAINING WALL DETAILS
WALL No. "25R"

NO SCALE

R-20

REVISED BY	DATE REVISED
NICHOLAS HAIGH	MICHAEL CRULL

CALCULATED-DESIGNED BY / CHECKED BY

CONSULTANT FUNCTIONAL SUPERVISOR: RICHARD LEJA

STATE OF CALIFORNIA - DEPARTMENT OF TRANSPORTATION

Caltrans

LAST REVISION 02-07-11 | DATE PLOTTED => 27-OCT-2011 | TIME PLOTTED => 10:32

Dist	COUNTY	ROUTE	POST MILES TOTAL PROJECT	SHEET No.	TOTAL SHEETS
11	SD	15	M15.0/M16.4	307	610

REGISTERED CIVIL ENGINEER 01-03-11 DATE

PLANS APPROVAL DATE 10-24-11

REGISTERED PROFESSIONAL ENGINEER KEITH GAZAWAY No. 58952 Exp. 6-30-11 CIVIL STATE OF CALIFORNIA

THE STATE OF CALIFORNIA OR ITS OFFICERS OR AGENTS SHALL NOT BE RESPONSIBLE FOR THE ACCURACY OR COMPLETENESS OF SCANNED COPIES OF THIS PLAN SHEET.

AECOM
7807 CONVOY COURT, SUITE 200
SAN DIEGO, CA 92111

SIMON WONG ENGINEERING, INC.
9968 HIBERT STREET, SUITE 202
SAN DIEGO, CA 92131

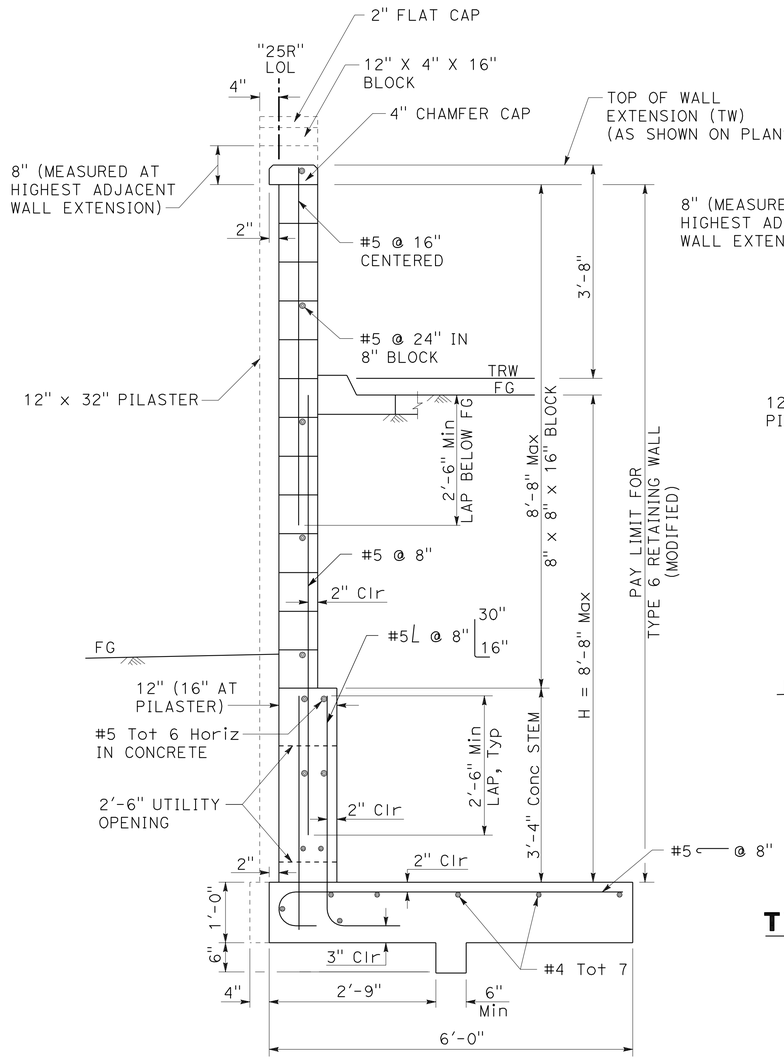

TYPE 6 RETAINING WALL (MODIFIED)

DESIGN H = 8'-8"

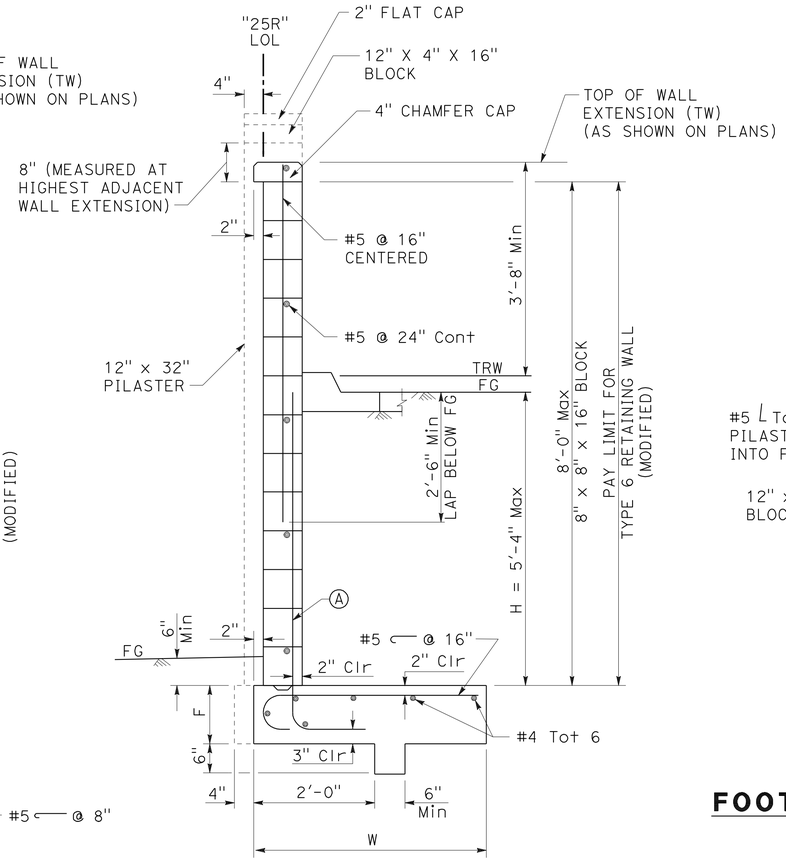

TYPE 6 RETAINING WALL (MODIFIED)

DESIGN H	5'-4"	4'-0"
W	4'-6"	3'-6"
F	1'-0"	10"
Ⓐ	#5 @ 8"	#5 @ 16"

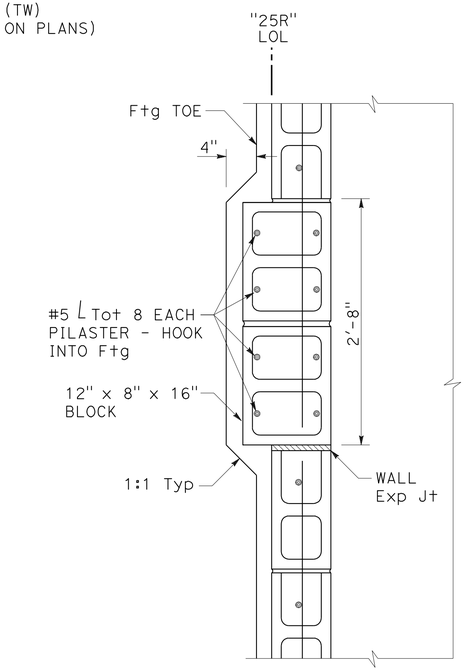

FOOTING PLAN AT PILASTER

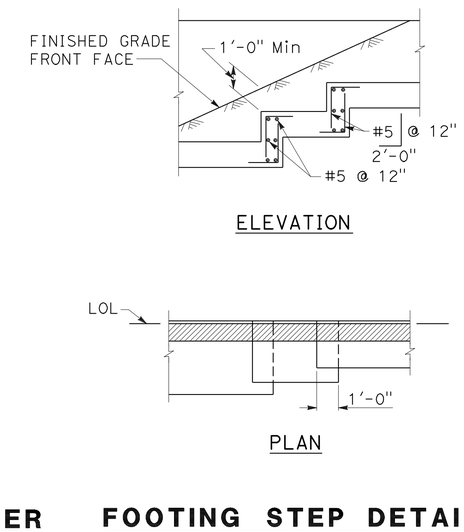

FOOTING STEP DETAIL

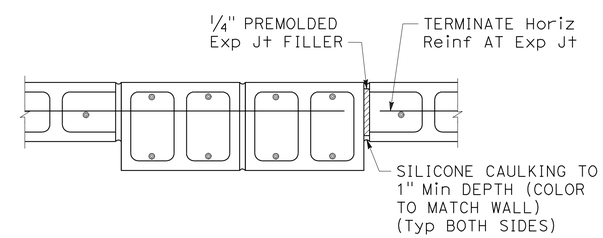

EXPANSION JOINT DETAIL

DESIGN DATA

MASONRY: f_m = 500 psi f'_m = 1,500 psi f_s = 24,000 psi n = 20

REINFORCED CONCRETE: f_c = 1,450 psi f'_c = 3,600 psi f_s = 24,000 psi n = 10

EARTH = 120 lb/ft^3 LEVEL + 240 psf SURCHARGE

MINIMUM ALLOWABLE SOIL BEARING CAPACITY OF FOUNDATION MATERIAL = 3.0 ksf (H ≧ 8'-8")
2.5 ksf (H < 5'-4")

NOTES:

1. ALL PILASTERS SHALL BE PLUMB.
2. OMIT MORTAR FROM VERTICAL JOINT IN FIRST COURSE ABOVE FINISHED GRADE AT 32" CENTERS FOR WEEP HOLES.
3. FILL ALL CELLS WITH GROUT.
4. ALL MASONRY BLOCK TO BE OPEN-ENDED, COLORED, AND SPLIT-FACE.
5. ALL BLOCKS SHALL BE LAID IN STACKED BOND.
6. PLACE EXPANSION JOINTS AT PILASTERS WHERE SPECIFIED.
7. IN ADDITION TO THE CONTINUOUS HORIZONTAL REINFORCING STEEL SHOWN ON THE PLANS, PROVIDE LADDER TYPE, GALVANIZED JOINT REINFORCEMENT CONSISTING OF A MINIMUM OF TWO 9-GAUGE WIRES CONTINUOUS AT 2'-0" MAXIMUM VERTICAL SPACING. LOCATE LADDER TYPE REINFORCEMENT IN JOINTS THAT ARE AT THE APPROXIMATE MIDPOINT BETWEEN CONTINUOUS HORIZONTAL REINFORCING STEEL.

RETAINING WALL DETAILS
WALL No. "25R"

NO SCALE

R-21

REVISED BY	DATE REVISED
KEITH GAZAWAY	ELIZABETH SCHROTH-NICHOLS
CALCULATED-DESIGNED BY	CHECKED BY
JAMES FROST	

CONSULTANT FUNCTIONAL SUPERVISOR

STATE OF CALIFORNIA - DEPARTMENT OF TRANSPORTATION

Caltrans

LAST REVISION 02-07-11 | DATE PLOTTED => 27-OCT-2011 | TIME PLOTTED => 10:32

Dist	COUNTY	ROUTE	POST MILES TOTAL PROJECT	SHEET No.	TOTAL SHEETS
11	SD	15	M15.0/M16.4	308	610

REGISTERED CIVIL ENGINEER DATE 01-03-11

PLANS APPROVAL DATE 10-24-11

REGISTERED PROFESSIONAL ENGINEER KEITH GAZAWAY No. 58952 Exp. 6-30-11 CIVIL STATE OF CALIFORNIA

THE STATE OF CALIFORNIA OR ITS OFFICERS OR AGENTS SHALL NOT BE RESPONSIBLE FOR THE ACCURACY OR COMPLETENESS OF SCANNED COPIES OF THIS PLAN SHEET.

AECOM
7807 CONVOY COURT, SUITE 200
SAN DIEGO, CA 92111

SIMON WONG ENGINEERING, INC.
9968 HIBERT STREET, SUITE 202
SAN DIEGO, CA 92131

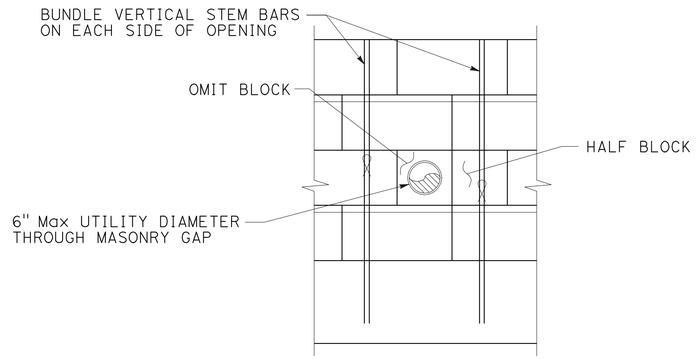

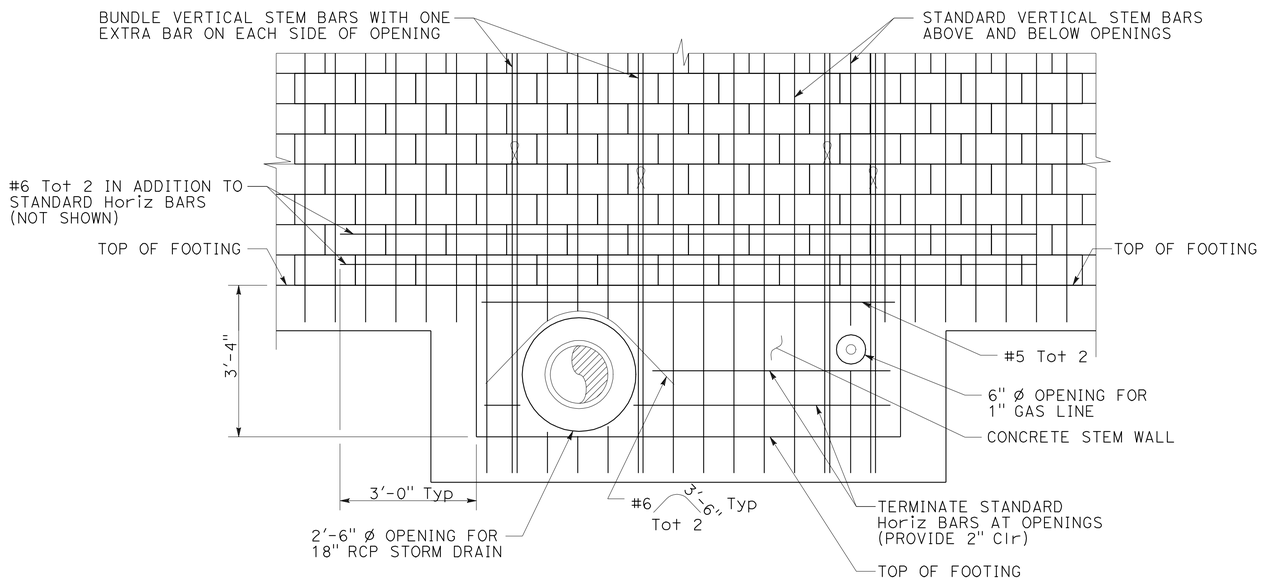

UTILITY OPENING DETAIL IN TYPE 6 RETAINING WALL (MODIFIED)

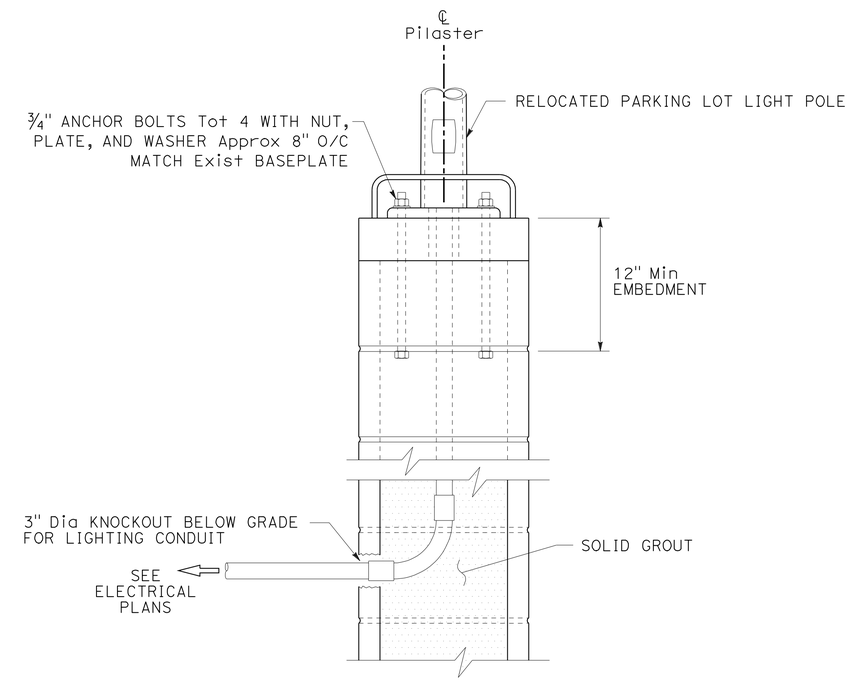

LIGHT MOUNTING DETAIL FOR 12" x 32" PILASTER

RETAINING WALL DETAILS
UTILITY DETAILS

NO SCALE

R-22

REVISED BY | DATE REVISED

KEITH GAZAWAY | ELIZABETH SCHROTH-NICHOLS

CALCULATED-DESIGNED BY | CHECKED BY

CONSULTANT FUNCTIONAL SUPERVISOR: JAMES FROST

STATE OF CALIFORNIA - DEPARTMENT OF TRANSPORTATION

Caltrans

LAST REVISION 02-07-11 | DATE PLOTTED => 27-OCT-2011 | TIME PLOTTED => 10:32

Dist	COUNTY	ROUTE	POST MILES TOTAL PROJECT	SHEET No.	TOTAL SHEETS
11	SD	15	M15.0/M16.4	309	610

REGISTERED CIVIL ENGINEER 01-03-11 DATE

10-24-11
PLANS APPROVAL DATE

REGISTERED PROFESSIONAL ENGINEER KEITH GAZAWAY No. 58952 Exp. 6-30-11 CIVIL STATE OF CALIFORNIA

THE STATE OF CALIFORNIA OR ITS OFFICERS OR AGENTS SHALL NOT BE RESPONSIBLE FOR THE ACCURACY OR COMPLETENESS OF SCANNED COPIES OF THIS PLAN SHEET.

AECOM
7807 CONVOY COURT, SUITE 200
SAN DIEGO, CA 92111

SIMON WONG ENGINEERING, INC.
9968 HIBERT STREET, SUITE 202
SAN DIEGO, CA 92131

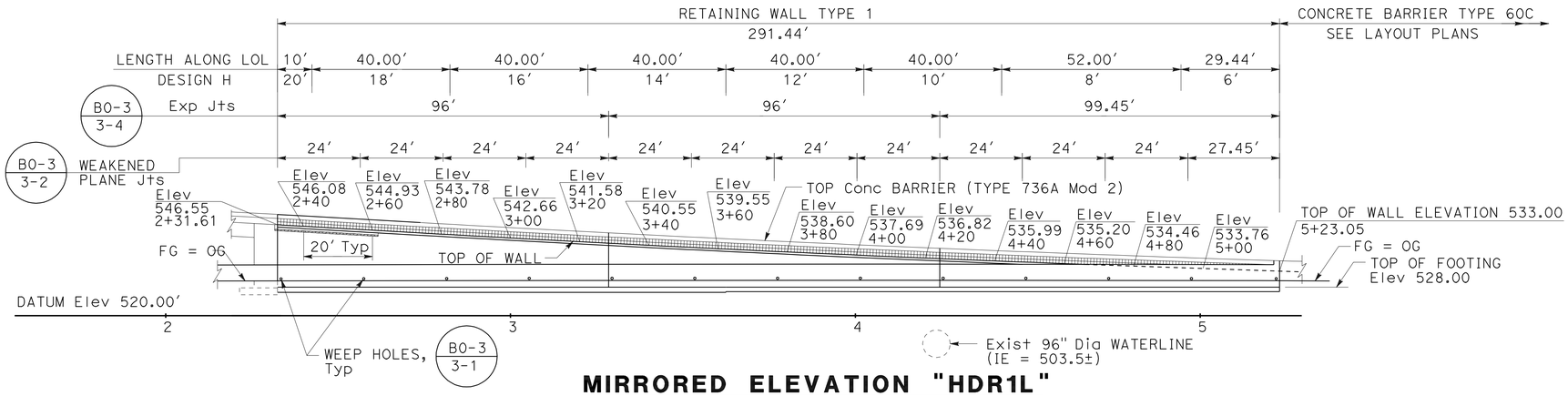

MIRRORED ELEVATION "HDR1L"

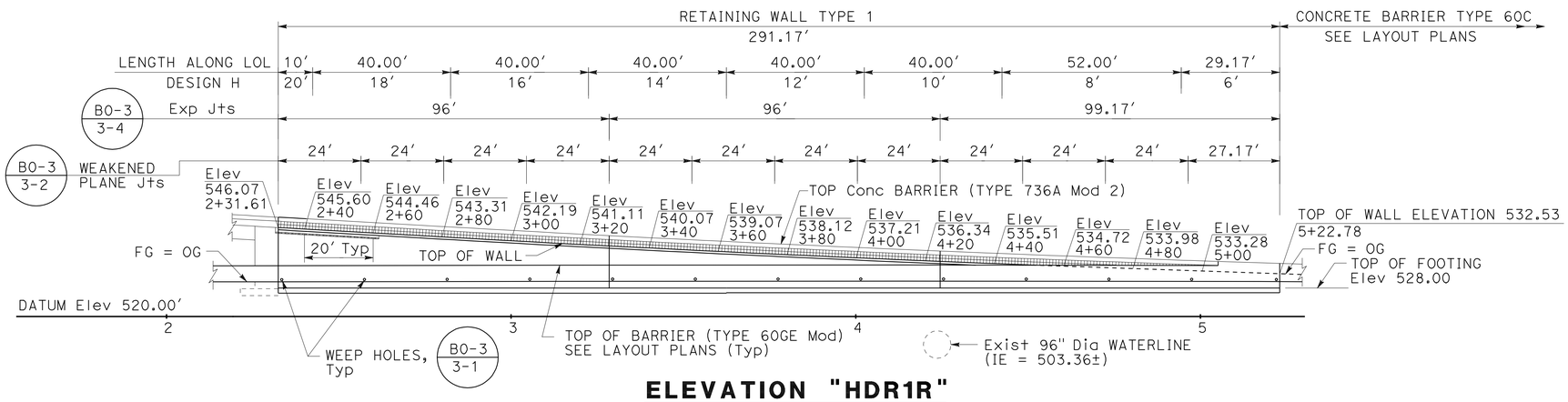

ELEVATION "HDR1R"

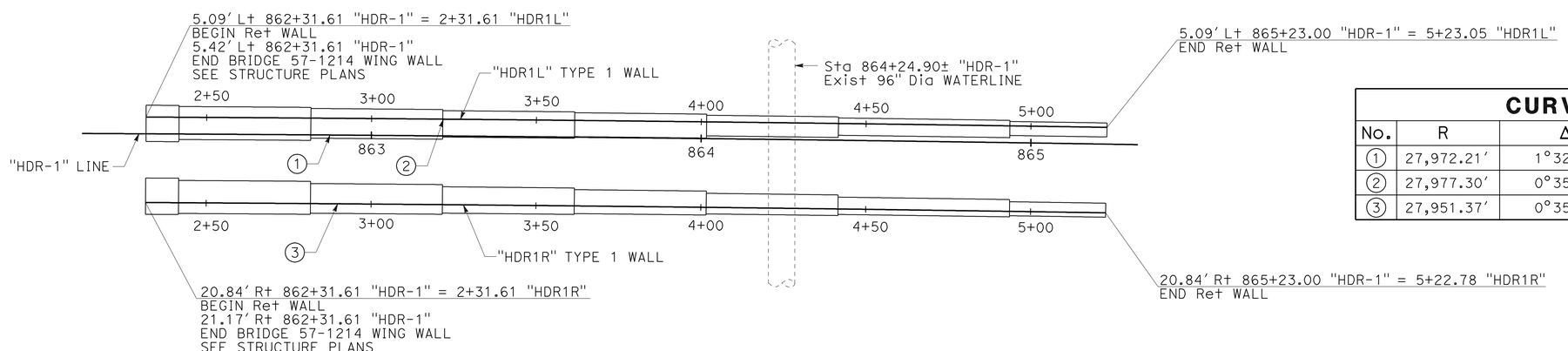

FOOTING LAYOUT

RETAINING WALL "HDR1L" AND "HDR1R" QUANTITIES

LOCATION	DESCRIPTION	QUANTITIES
862+31.61 TO 865+23.00 "HDR-1"	STRUCTURAL CONCRETE, Ret WALL	516 CY
	BAR REINFORCING STEEL (Ret WALL)	54,859 LB
	STRUCTURE EXCAVATION (Ret WALL)	723 CY
	STRUCTURE BACKFILL (Ret WALL)	1,114 CY
	PERVIOUS BACKFILL MATERIAL (Ret WALL)	171 CY
	ARCHITECTURAL SURFACE (BARRIER)	1,068 SQFT
	SWIRLED PLASTER TEXTURE	1,946 SQFT
	CONCRETE BARRIER (TYPE 736A Mod 2)	583 LF

NOTES:

1. FOR ACCURATE RIGHT OF WAY DATA, SEE RIGHT OF WAY RECORD MAPS AT DISTRICT OFFICE.
2. SEE SHEET R-27 FOR TYPICAL SECTIONS.
3. FOR ARCHITECTURAL TREATMENTS, SEE RETAINING WALL DETAILS.
4. SEE DRAINAGE PLANS FOR ADDITIONAL INFORMATION.

CURVE DATA

No.	R	Δ	T	L
1	27,972.21'	1°32'44"	377.24'	754.43'
2	27,977.30'	0°35'49"	145.72'	291.44'
3	27,951.37'	0°35'49"	145.59'	291.17'

THIS PLAN ACCURATE FOR RETAINING WALL WORK ONLY.

RETAINING WALL PLAN
"HDR1L" AND "HDR1R" WALLS

SCALE: 1" = 20'

R-23

REVISED BY | DATE REVISED
LISE MUCO | KEITH GAZAWAY
CALCULATED-DESIGNED BY | CHECKED BY
CONSULTANT FUNCTIONAL SUPERVISOR | JAMES FROST
STATE OF CALIFORNIA - DEPARTMENT OF TRANSPORTATION
Caltrans

LAST REVISION 02-11-11 | DATE PLOTTED => 27-OCT-2011 | TIME PLOTTED => 10:32

Dist	COUNTY	ROUTE	POST MILES TOTAL PROJECT	SHEET No.	TOTAL SHEETS
11	SD	15	M15.0/M16.4	310	610

REGISTERED CIVIL ENGINEER 01-03-11 DATE

10-24-11
PLANS APPROVAL DATE

REGISTERED PROFESSIONAL ENGINEER KEITH GAZAWAY No. 58952 Exp. 6-30-11 CIVIL STATE OF CALIFORNIA

THE STATE OF CALIFORNIA OR ITS OFFICERS OR AGENTS SHALL NOT BE RESPONSIBLE FOR THE ACCURACY OR COMPLETENESS OF SCANNED COPIES OF THIS PLAN SHEET.

AECOM
7807 CONVOY COURT, SUITE 200
SAN DIEGO, CA 92111

SIMON WONG ENGINEERING, INC.
9968 HIBERT STREET, SUITE 202
SAN DIEGO, CA 92131

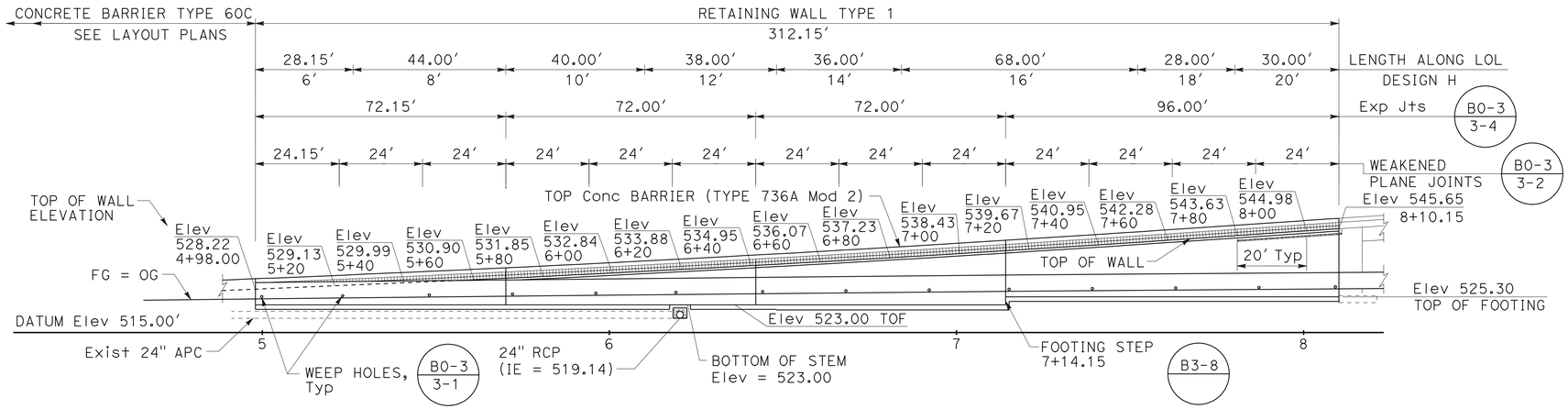

MIRRORED ELEVATION "HDR2L"

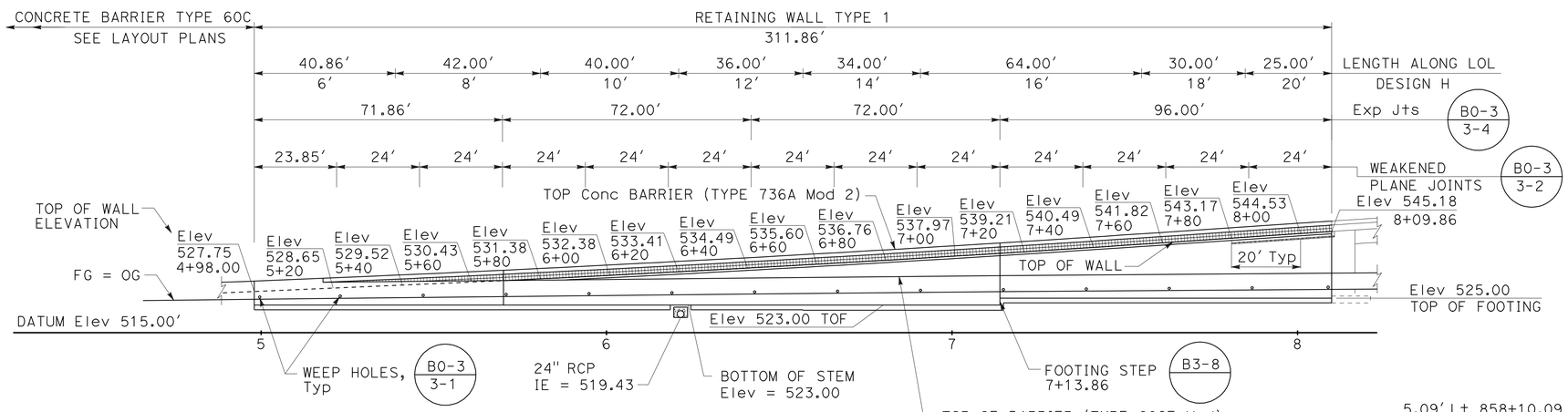

ELEVATION "HDR2R"

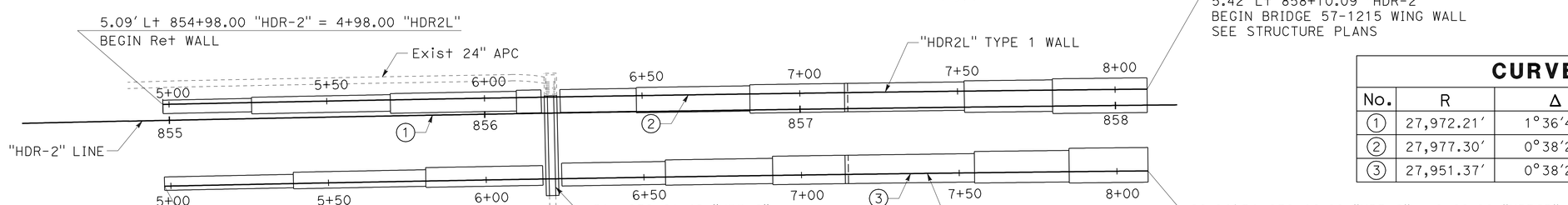

FOOTING LAYOUT

RETAINING WALL "HDR2L" AND "HDR2R" QUANTITIES

LOCATION	DESCRIPTION	QUANTITIES
854+98.00 TO 858+10.09 "HDR-2"	STRUCTURAL CONCRETE, Ret WALL	641 CY
	BAR REINFORCING STEEL (Ret WALL)	77,175 LB
	STRUCTURE EXCAVATION (Ret WALL)	847 CY
	STRUCTURE BACKFILL (Ret WALL)	1,499 CY
	PERVIOUS BACKFILL MATERIAL (Ret WALL)	215 CY
	ARCHITECTURAL SURFACE (BARRIER)	1,144 SQFT
	SWIRLED PLASTER TEXTURE	2,326 SQFT
	CONCRETE BARRIER (TYPE 736A Mod 2)	624 LF

NOTES:

1. FOR ACCURATE RIGHT OF WAY DATA, SEE RIGHT OF WAY RECORD MAPS AT DISTRICT OFFICE.
2. SEE SHEET R-27 FOR TYPICAL SECTIONS.
3. FOR ARCHITECTURAL TREATMENTS, SEE RETAINING WALL DETAILS.
4. SEE DRAINAGE PLANS FOR ADDITIONAL INFORMATION.

CURVE DATA

No.	R	Δ	T	L
1	27,972.21'	1°36'45"	393.59'	787.13'
2	27,977.30'	0°38'21"	156.08'	312.15'
3	27,951.37'	0°38'21"	155.93'	311.86'

THIS PLAN ACCURATE FOR RETAINING WALL WORK ONLY.

RETAINING WALL PLAN
"HDR2L" AND "HDR2R" WALLS

SCALE: 1" = 20'

R-24

REVISED BY | DATE REVISED
LISE MUCO | KEITH GAZAWAY
CALCULATED-DESIGNED BY | CHECKED BY
CONSULTANT FUNCTIONAL SUPERVISOR | JAMES FROST
STATE OF CALIFORNIA - DEPARTMENT OF TRANSPORTATION
Caltrans

LAST REVISION 02-07-11 | DATE PLOTTED => 27-OCT-2011 | TIME PLOTTED => 10:32

Dist	COUNTY	ROUTE	POST MILES TOTAL PROJECT	SHEET No.	TOTAL SHEETS
11	SD	15	M15.0/M16.4	311	610

REGISTERED CIVIL ENGINEER 01-03-11 DATE

10-24-11
PLANS APPROVAL DATE

REGISTERED PROFESSIONAL ENGINEER KEITH GAZAWAY No. 58952 Exp. 6-30-11 CIVIL STATE OF CALIFORNIA

THE STATE OF CALIFORNIA OR ITS OFFICERS OR AGENTS SHALL NOT BE RESPONSIBLE FOR THE ACCURACY OR COMPLETENESS OF SCANNED COPIES OF THIS PLAN SHEET.

AECOM
7807 CONVOY COURT, SUITE 200
SAN DIEGO, CA 92111

SIMON WONG ENGINEERING, INC.
9968 HIBERT STREET, SUITE 202
SAN DIEGO, CA 92131

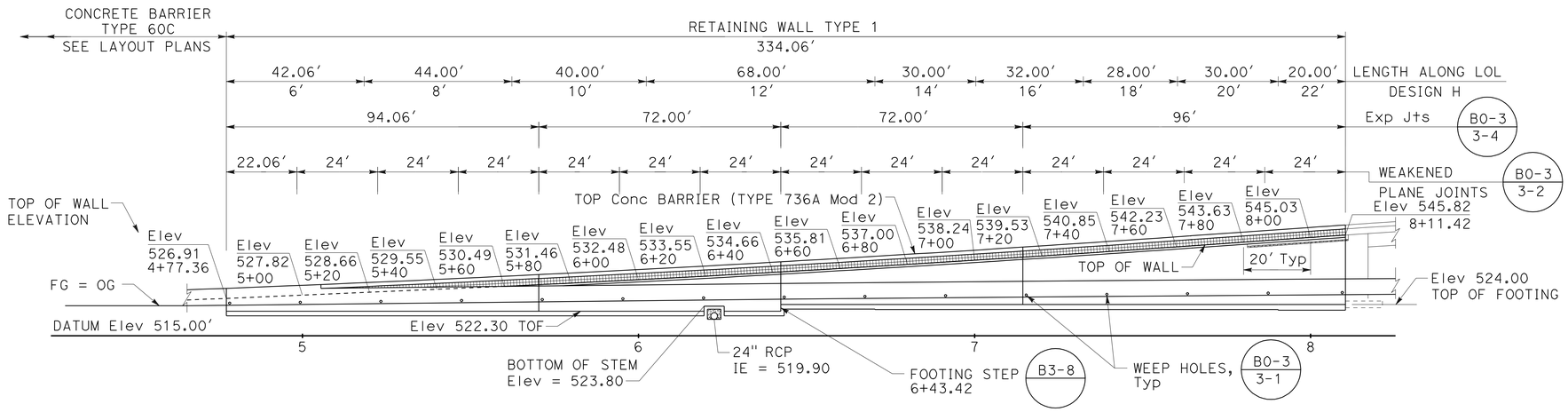

MIRRORED ELEVATION "HDR3L"

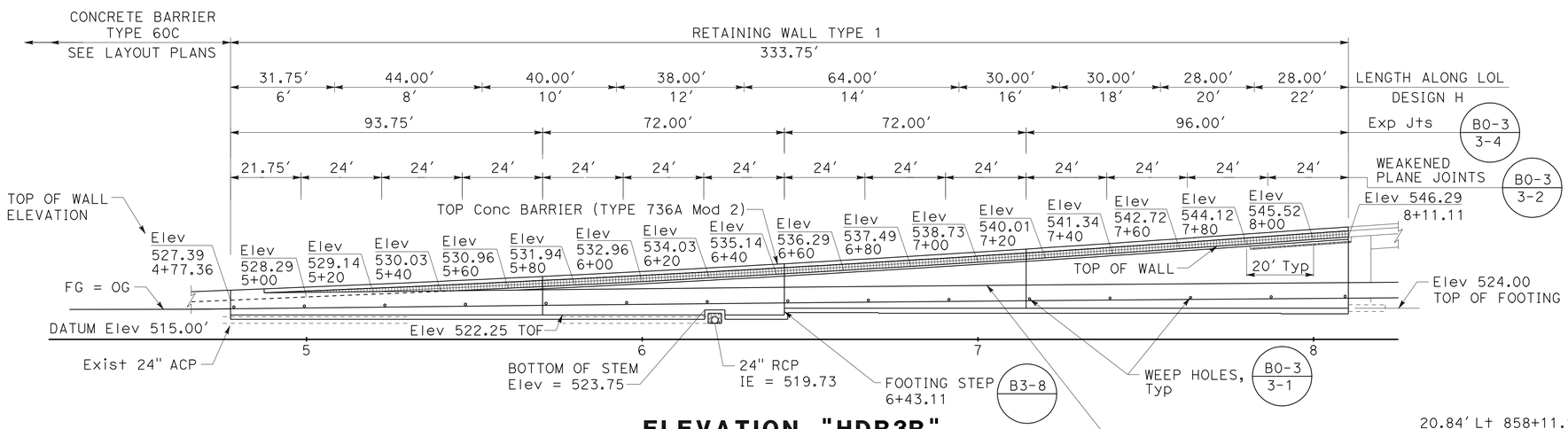

ELEVATION "HDR3R"

RETAINING WALL "HDR3L" AND "HDR3R" QUANTITIES

LOCATION	DESCRIPTION	QUANTITIES
854+77.36 TO 858+11.17 "HDR-3"	STRUCTURAL CONCRETE, Rt WALL	701 CY
	BAR REINFORCING STEEL (Rt WALL)	91,970 LB
	STRUCTURE EXCAVATION (Rt WALL)	916 CY
	STRUCTURE BACKFILL (Rt WALL)	1,685 CY
	PERVIOUS BACKFILL MATERIAL (Rt WALL)	230 CY
	ARCHITECTURAL SURFACE (BARRIER)	1,225 SQFT
	SWIRLED PLASTER TEXTURE	2,646 SQFT
	CONCRETE BARRIER (TYPE 736A Mod 2)	668 LF

NOTES:

1. FOR ACCURATE RIGHT OF WAY DATA, SEE RIGHT OF WAY RECORD MAPS AT DISTRICT OFFICE.
2. SEE SHEET R-27 FOR TYPICAL SECTIONS.
3. FOR ARCHITECTURAL TREATMENTS, SEE RETAINING WALL DETAILS.
4. SEE DRAINAGE PLANS FOR ADDITIONAL INFORMATION.

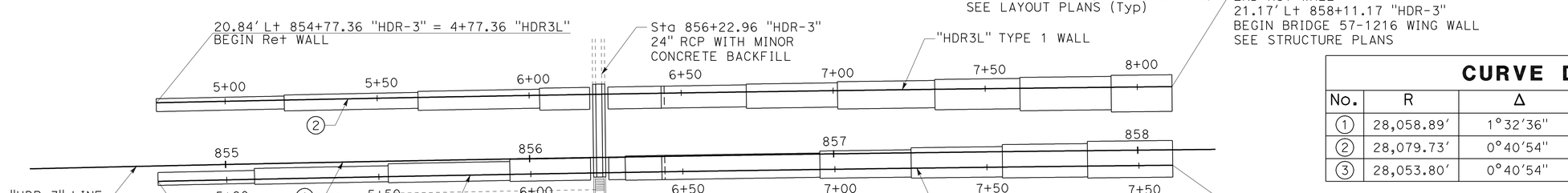

FOOTING LAYOUT

CURVE DATA

No.	R	Δ	T	L
1	28,058.89'	1°32'36"	377.92'	755.80'
2	28,079.73'	0°40'54"	167.03'	334.06'
3	28,053.80'	0°40'54"	166.87'	333.75'

THIS PLAN ACCURATE FOR RETAINING WALL WORK ONLY.

RETAINING WALL PLAN "HDR3L" AND "HDR3R" WALLS

SCALE: 1" = 20'

R-25

REVISED BY | DATE REVISED
LISE MUCO | KEITH GAZAWAY
CALCULATED-DESIGNED BY | CHECKED BY
CONSULTANT FUNCTIONAL SUPERVISOR | JAMES FROST
STATE OF CALIFORNIA - DEPARTMENT OF TRANSPORTATION
Caltrans

LAST REVISION 02-07-11 | DATE PLOTTED => 27-OCT-2011 | TIME PLOTTED => 10:32

Dist	COUNTY	ROUTE	POST MILES TOTAL PROJECT	SHEET No.	TOTAL SHEETS
11	SD	15	M15.0/M16.4	312	610

REGISTERED CIVIL ENGINEER 01-03-11 DATE

10-24-11
PLANS APPROVAL DATE

REGISTERED PROFESSIONAL ENGINEER KEITH GAZAWAY No. 58952 Exp. 6-30-11 CIVIL STATE OF CALIFORNIA

THE STATE OF CALIFORNIA OR ITS OFFICERS OR AGENTS SHALL NOT BE RESPONSIBLE FOR THE ACCURACY OR COMPLETENESS OF SCANNED COPIES OF THIS PLAN SHEET.

AECOM
7807 CONVOY COURT, SUITE 200
SAN DIEGO, CA 92111

SIMON WONG ENGINEERING, INC.
9968 HIBERT STREET, SUITE 202
SAN DIEGO, CA 92131

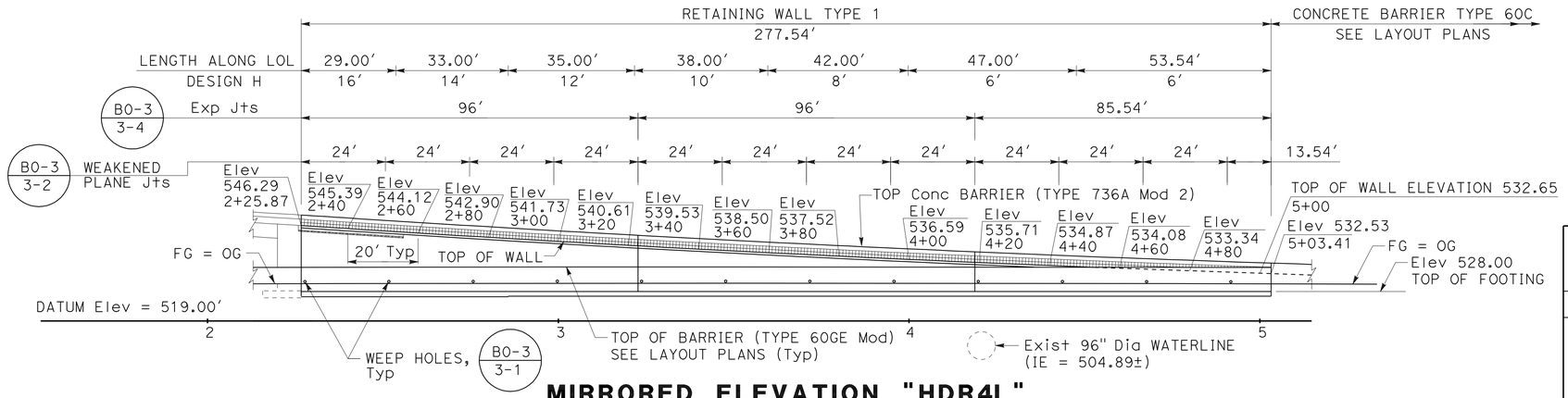

MIRRORED ELEVATION "HDR4L"

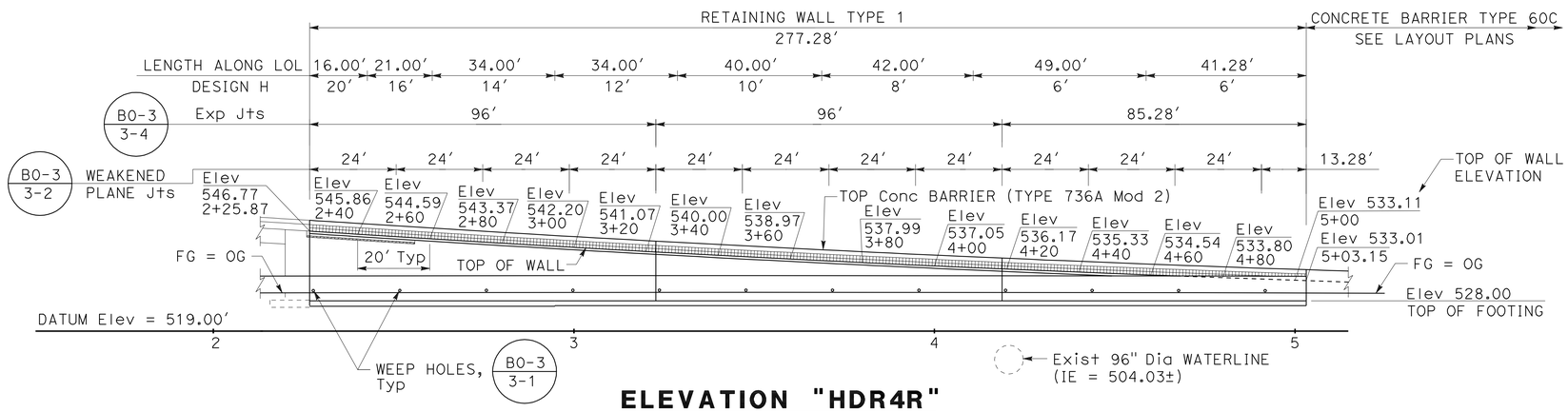

ELEVATION "HDR4L"

RETAINING WALL "HDR4L" AND "HDR4R" QUANTITIES

LOCATION	DESCRIPTION	QUANTITIES
862+25.87 TO 865+03.20 "HDR-4"	STRUCTURAL CONCRETE, Rt WALL	502 CY
	BAR REINFORCING STEEL (Rt WALL)	53,206 LB
	STRUCTURE EXCAVATION (Rt WALL)	698 CY
	STRUCTURE BACKFILL (Rt WALL)	1,089 CY
	PERVIOUS BACKFILL MATERIAL (Rt WALL)	164 CY
	ARCHITECTURAL SURFACE (BARRIER)	1,017 SQFT
	SWIRLED PLASTER TEXTURE	2,134 SQFT
	CONCRETE BARRIER (TYPE 736A Mod 2)	555 LF

NOTES:

1. FOR ACCURATE RIGHT OF WAY DATA, SEE RIGHT OF WAY RECORD MAPS AT DISTRICT OFFICE.
2. SEE SHEET R-27 FOR TYPICAL SECTIONS.
3. FOR ARCHITECTURAL TREATMENTS, SEE RETAINING WALL DETAILS.
4. SEE DRAINAGE PLANS FOR ADDITIONAL INFORMATION.

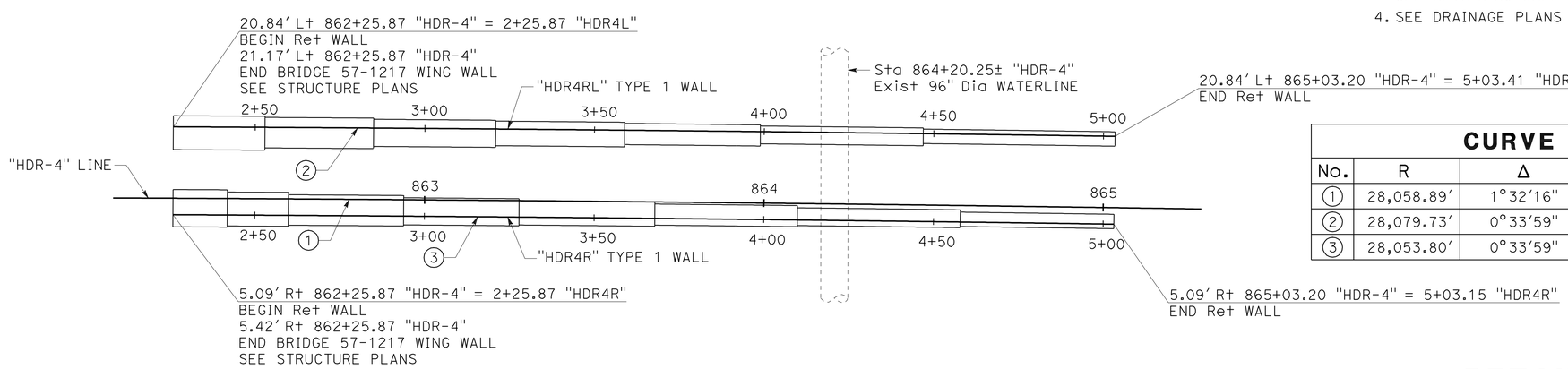

FOOTING LAYOUT

CURVE DATA

No.	R	Δ	T	L
1	28,058.89'	1°32'16"	376.51'	752.97'
2	28,079.73'	0°33'59"	138.77'	277.54'
3	28,053.80'	0°33'59"	138.64'	277.28'

THIS PLAN ACCURATE FOR RETAINING WALL WORK ONLY.

RETAINING WALL PLAN
"HDR4L" AND "HDR4R" WALLS

SCALE: 1" = 20'

R-26

STATE OF CALIFORNIA - DEPARTMENT OF TRANSPORTATION
Caltrans

CONSULTANT FUNCTIONAL SUPERVISOR: JAMES FROST
CALCULATED-DESIGNED BY: LISE MUCO
CHECKED BY: KEITH GAZAWAY
REVISED BY / DATE REVISED

LAST REVISION 02-07-11 | DATE PLOTTED => 27-OCT-2011 | TIME PLOTTED => 10:33

Dist	COUNTY	ROUTE	POST MILES TOTAL PROJECT	SHEET No.	TOTAL SHEETS
11	SD	15	M15.0/M16.4	313	610

REGISTERED CIVIL ENGINEER 01-03-11 DATE

10-24-11
PLANS APPROVAL DATE

REGISTERED PROFESSIONAL ENGINEER KEITH GAZAWAY No. 58952 Exp. 6-30-11 CIVIL STATE OF CALIFORNIA

THE STATE OF CALIFORNIA OR ITS OFFICERS OR AGENTS SHALL NOT BE RESPONSIBLE FOR THE ACCURACY OR COMPLETENESS OF SCANNED COPIES OF THIS PLAN SHEET.

AECOM
7807 CONVOY COURT, SUITE 200
SAN DIEGO, CA 92111

SIMON WONG ENGINEERING, INC.
9968 HIBERT STREET, SUITE 202
SAN DIEGO, CA 92131

NOTES:

1. SEE CONSTRUCTION DETAILS FOR CONCRETE BARRIER (TYPE 60GE Mod).
2. SEE RETAINING WALL DETAILS FOR CONCRETE BARRIER (TYPE 736A Mod 2).

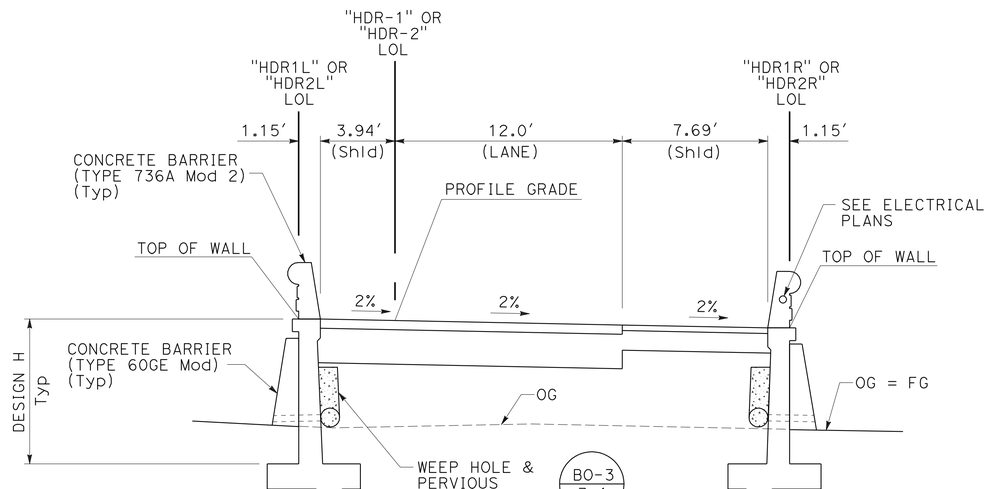

TYPICAL SECTION "HDR-1" AND "HDR-2"

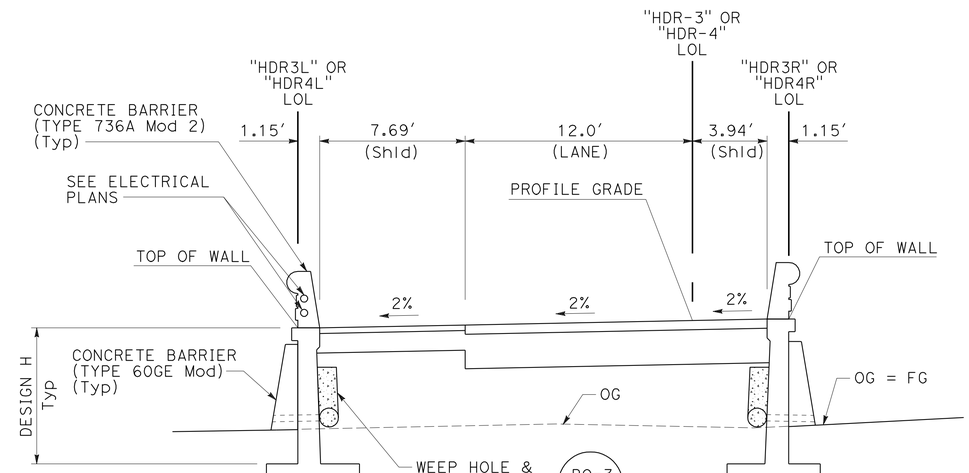

TYPICAL SECTION "HDR-3" AND "HDR-4"

RETAINING WALL TYPICAL SECTION

SCALE: 1" = 4′

R-27

REVISED BY | DATE REVISED
LISE MUCO | KEITH GAZAWAY
CALCULATED-DESIGNED BY | CHECKED BY
CONSULTANT FUNCTIONAL SUPERVISOR | JAMES FROST
STATE OF CALIFORNIA - DEPARTMENT OF TRANSPORTATION
Caltrans

LAST REVISION 02-07-11 | DATE PLOTTED => 27-OCT-2011 | TIME PLOTTED => 10:33

Dist	COUNTY	ROUTE	POST MILES TOTAL PROJECT	SHEET No.	TOTAL SHEETS
11	SD	15	M15.0/M16.4	314	610

REGISTERED CIVIL ENGINEER 01-03-11 DATE

10-24-11
PLANS APPROVAL DATE

REGISTERED PROFESSIONAL ENGINEER NICHOLAS A. HAIGH No. 71673 Exp. 12-31-11 CIVIL STATE OF CALIFORNIA

THE STATE OF CALIFORNIA OR ITS OFFICERS OR AGENTS SHALL NOT BE RESPONSIBLE FOR THE ACCURACY OR COMPLETENESS OF SCANNED COPIES OF THIS PLAN SHEET.

AECOM
7807 CONVOY COURT, SUITE 200
SAN DIEGO, CA 92111

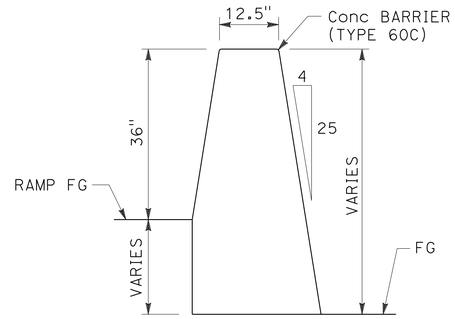

SECTION A-A

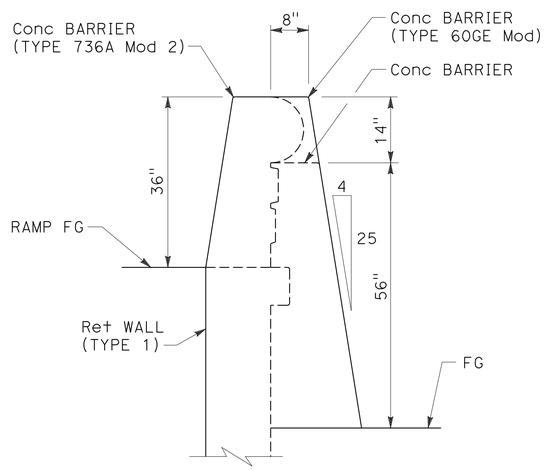

SECTION B-B

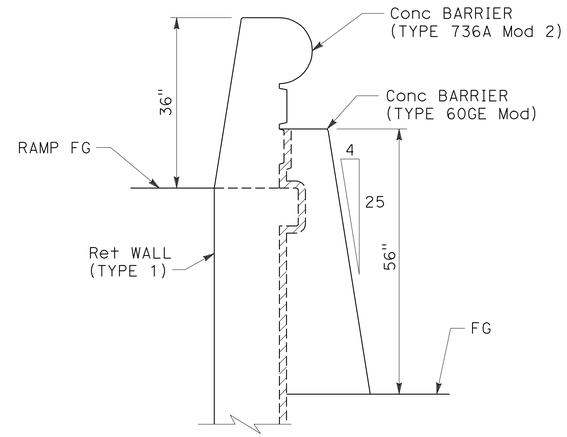

SECTION C-C

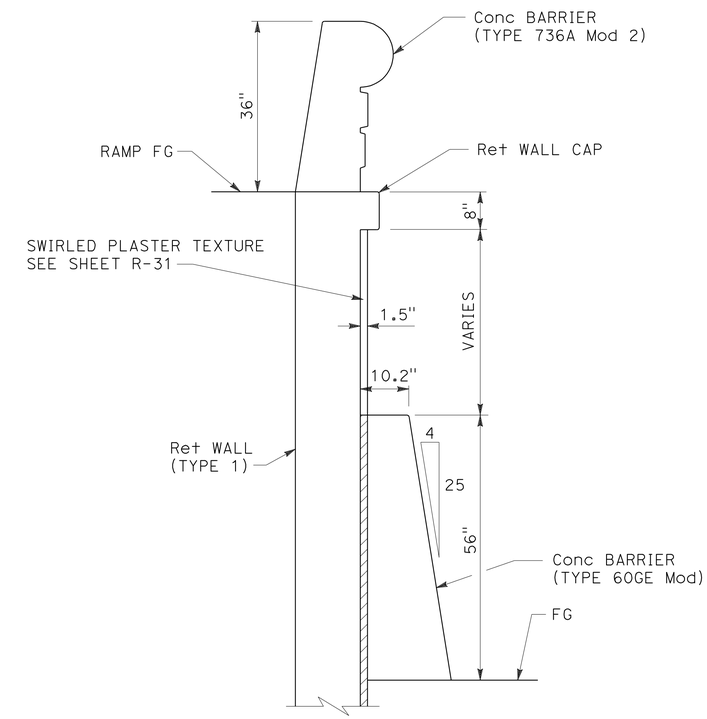

SECTION D-D

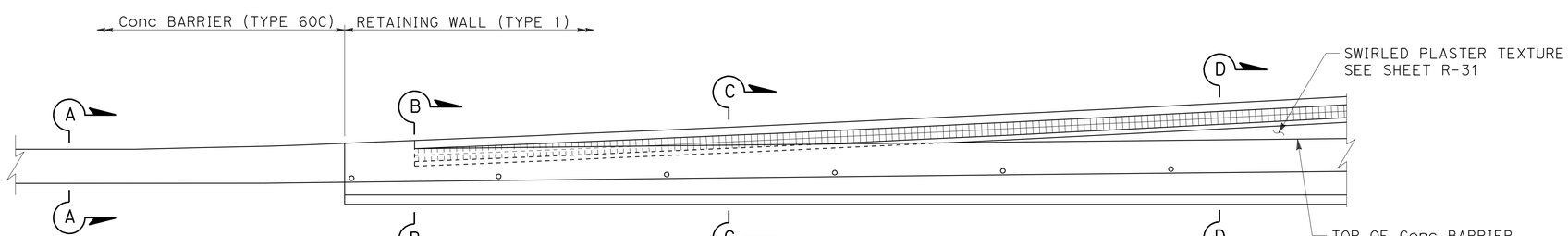

ELEVATION

CONCRETE BARRIER TRANSITION

"HDR-1" THROUGH "HDR-4"

RETAINING WALL DETAILS

"HDR1" THRU "HDR4" WALLS

NO SCALE

R-28

REVISED BY	DATE REVISED
NICHOLAS HAIGH	MICHAEL CRULL
CALCULATED-DESIGNED BY	CHECKED BY
CONSULTANT FUNCTIONAL SUPERVISOR	RICHARD LEJA

STATE OF CALIFORNIA - DEPARTMENT OF TRANSPORTATION

Caltrans

LAST REVISION 02-07-11 | DATE PLOTTED => 27-OCT-2011 | TIME PLOTTED => 10:33

Dist	COUNTY	ROUTE	POST MILES TOTAL PROJECT	SHEET No.	TOTAL SHEETS
11	SD	15	M15.0/M16.4	315	610

REGISTERED CIVIL ENGINEER 01-03-11 DATE

10-24-11
PLANS APPROVAL DATE

REGISTERED PROFESSIONAL ENGINEER KEITH GAZAWAY No. 58952 Exp. 6-30-11 CIVIL STATE OF CALIFORNIA

THE STATE OF CALIFORNIA OR ITS OFFICERS OR AGENTS SHALL NOT BE RESPONSIBLE FOR THE ACCURACY OR COMPLETENESS OF SCANNED COPIES OF THIS PLAN SHEET.

AECOM
7807 CONVOY COURT, SUITE 200
SAN DIEGO, CA 92111

SIMON WONG ENGINEERING, INC.
9968 HIBERT STREET, SUITE 202
SAN DIEGO, CA 92131

NOTES:

1. FOR REINFORCEMENT AND DIMENSIONS "B", "C", AND "W" SEE CALTRANS STANDARD PLAN B3-1.
2. TRUNCATE STANDARD VERTICAL STEM BARS 2" FROM BOTTOM OF WALL STEM.
3. DECREASE SPACING OF ⓑ, ⓒ, AND ⓓ BARS BY 25% WITHIN REGION OF WIDENED FOOTING. (PLACE BARS @ 6" AND 9" INSTEAD OF STANDARD 8" AND 12" RESPECTIVELY).

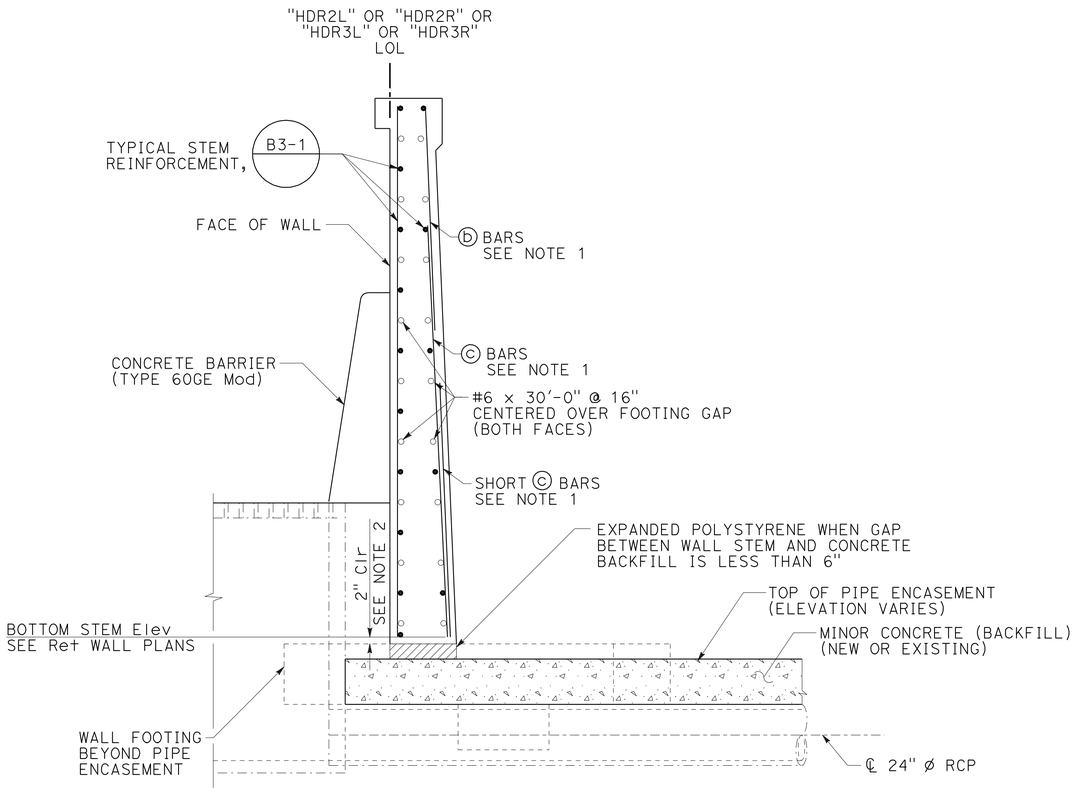

SECTION A-A

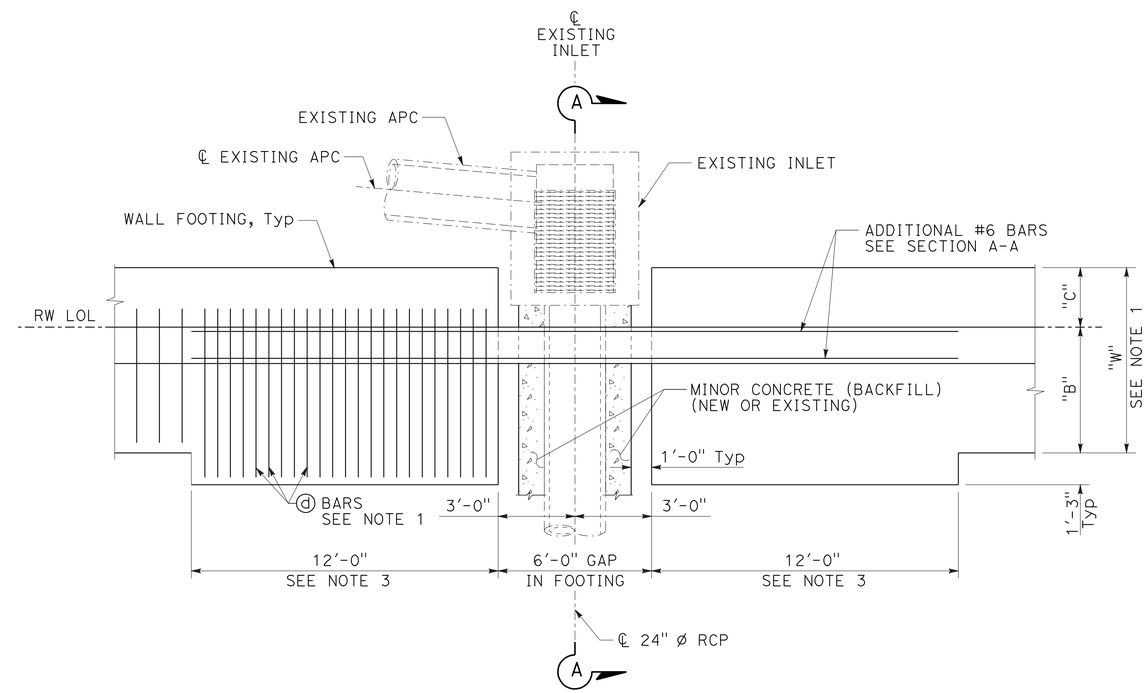

PLAN

RETAINING WALL UTILITY CROSSING LAYOUT

RETAINING WALL DETAILS

NO SCALE

R-29

STATE OF CALIFORNIA - DEPARTMENT OF TRANSPORTATION

Caltrans

CONSULTANT FUNCTIONAL SUPERVISOR: JAMES FROST

CALCULATED-DESIGNED BY: KEITH GAZAWAY

CHECKED BY: ELIZABETH SCHROTH-NICHOLS

REVISED BY

DATE REVISED

LAST REVISION 02-07-11

DATE PLOTTED => 27-OCT-2011
TIME PLOTTED => 10:33

Dist	COUNTY	ROUTE	POST MILES TOTAL PROJECT	SHEET No.	TOTAL SHEETS
11	SD	15	M15.0/M16.4	316	610

REGISTERED CIVIL ENGINEER 01-03-11 DATE

10-24-11
PLANS APPROVAL DATE

REGISTERED PROFESSIONAL ENGINEER NICHOLAS A. HAIGH No. 71673 Exp. 12-31-11 CIVIL STATE OF CALIFORNIA

THE STATE OF CALIFORNIA OR ITS OFFICERS OR AGENTS SHALL NOT BE RESPONSIBLE FOR THE ACCURACY OR COMPLETENESS OF SCANNED COPIES OF THIS PLAN SHEET.

AECOM
7807 CONVOY COURT, SUITE 200
SAN DIEGO, CA 92111

NOTES:

1. ALTERNATE "SECTION A-A" AND "SECTION B-B" ALONG THE FULL LENGTH OF BARRIER RAIL.
2. FOR OTHER DETAILS OF BARRIER RAIL NOT SHOWN OR NOTED, SEE STANDARD PLAN B11-56.

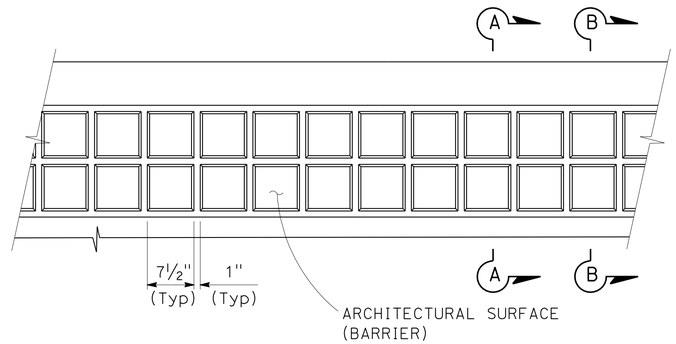

ELEVATION

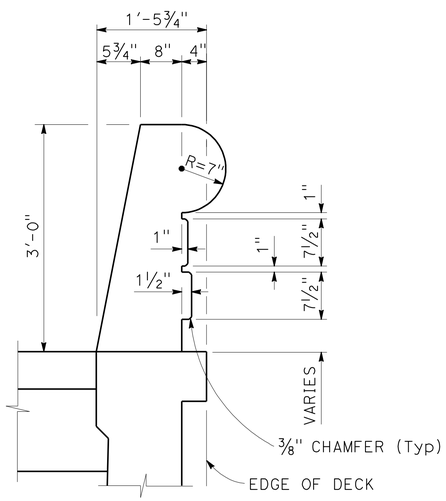

SECTION A-A

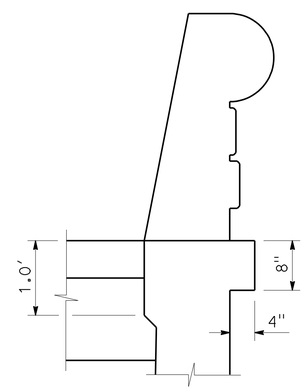

SECTION B-B

NOTE:

FOR DIMENSIONS NOT SHOWN, SEE SECTION A-A.

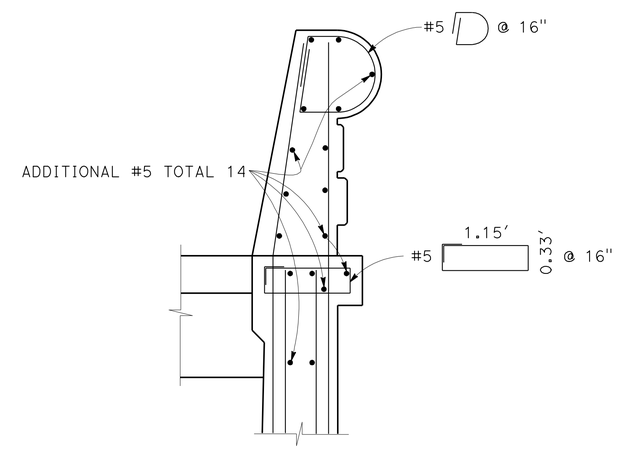

PART SECTION

CONCRETE BARRIER (TYPE 736A Mod 2)

RETAINING WALL DETAILS
"HDR1" THRU "HDR4" WALLS

SCALE: 1" = 1'-0"

R-30

NICHOLAS HAIGH — MICHAEL CRULL — RICHARD LEJA — REVISED BY — DATE REVISED — CALCULATED-DESIGNED BY — CHECKED BY — CONSULTANT FUNCTIONAL SUPERVISOR

STATE OF CALIFORNIA - DEPARTMENT OF TRANSPORTATION — Caltrans

LAST REVISION 02-07-11 — DATE PLOTTED => 27-OCT-2011 — TIME PLOTTED => 10:33

Dist	COUNTY	ROUTE	POST MILES TOTAL PROJECT	SHEET No.	TOTAL SHEETS
11	SD	15	M15.0/M16.4	317	610

REGISTERED CIVIL ENGINEER 01-03-11 DATE

PLANS APPROVAL DATE 10-24-11

REGISTERED PROFESSIONAL ENGINEER NICHOLAS A. HAIGH No. 71673 Exp. 12-31-11 CIVIL STATE OF CALIFORNIA

THE STATE OF CALIFORNIA OR ITS OFFICERS OR AGENTS SHALL NOT BE RESPONSIBLE FOR THE ACCURACY OR COMPLETENESS OF SCANNED COPIES OF THIS PLAN SHEET.

AECOM
7807 CONVOY COURT, SUITE 200
SAN DIEGO, CA 92111

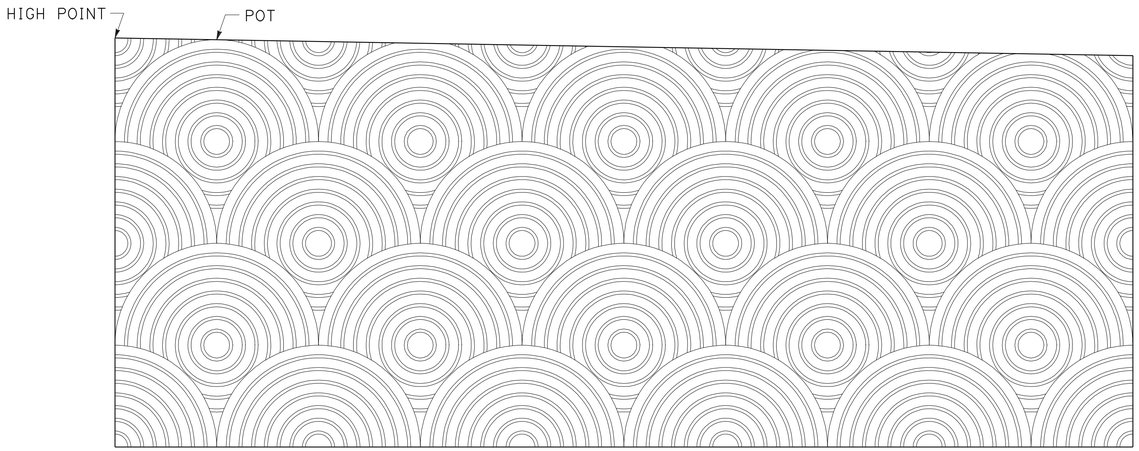

TYPICAL ELEVATION - SWIRLED PLASTER TEXTURE

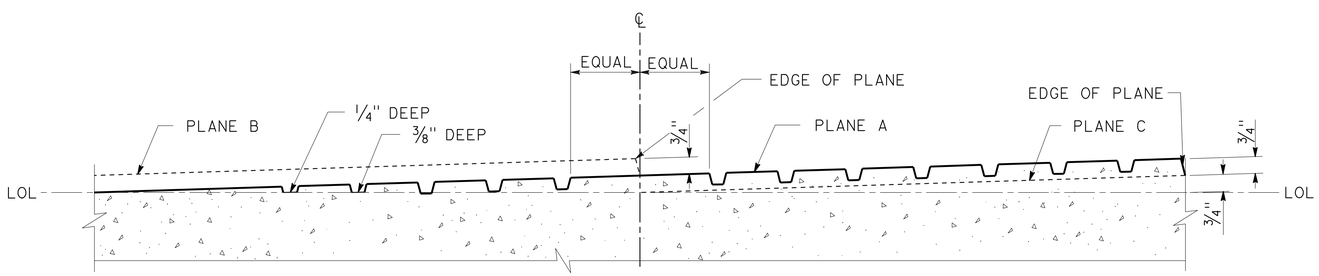

SECTION A-A

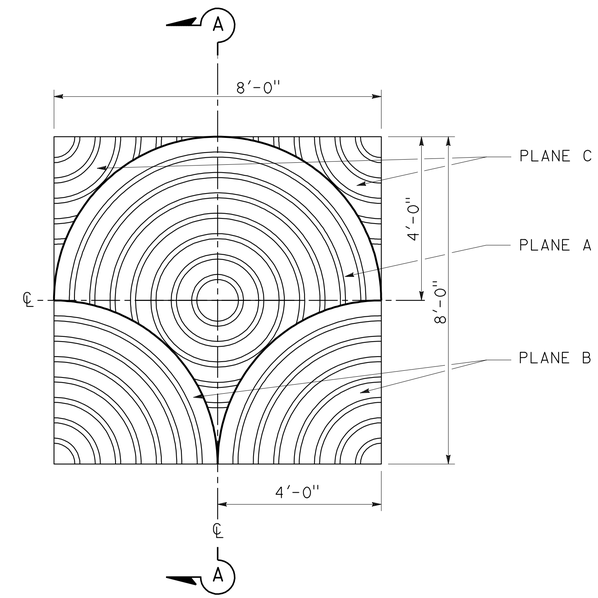

ELEVATION DETAIL - SWIRLED PLASTER TEXTURE

TYPICAL PATTERN UNIT

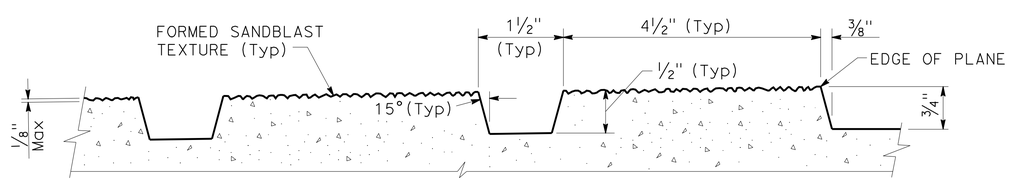

GROOVE DETAIL

RETAINING WALL DETAILS

NO SCALE

R-31

REVISED BY	DATE REVISED
NICHOLAS HAIGH	
MICHAEL CRULL	

CALCULATED-DESIGNED BY / CHECKED BY

CONSULTANT FUNCTIONAL SUPERVISOR: RICHARD LEJA

STATE OF CALIFORNIA - DEPARTMENT OF TRANSPORTATION

Caltrans

60099859 27-OCT-2011 10:33 s109858 $FILE$

LAST REVISION 02-07-11 | DATE PLOTTED => 27-OCT-2011 | TIME PLOTTED => 10:33

Dist	COUNTY	ROUTE	POST MILES TOTAL PROJECT	SHEET No.	TOTAL SHEETS
11	SD	15	M15.0/M16.4	318	610

REGISTERED LANDSCAPE ARCHITECT

10-24-11
PLANS APPROVAL DATE

LICENSED LANDSCAPE ARCHITECT VICKI ESTRADA NOTEBOOM STATE OF CALIFORNIA
Signature 04-30-12 Renewal Date
01-11-11 Date

THE STATE OF CALIFORNIA OR ITS OFFICERS OR AGENTS SHALL NOT BE RESPONSIBLE FOR THE ACCURACY OR COMPLETENESS OF SCANNED COPIES OF THIS PLAN SHEET.

Estrada Land Planning
755 Broadway Circle
Suite 300
San Diego, CA 92101

APPLICABLE WHEN CIRCLED:

1 - QUANTITIES SHOW ARE "PER PLANT" UNLESS SHOWN AS SQFT OR SQYD APPLICATION RATES.
2 - SUFFICIENT TO RECEIVE ROOT BALL.
3 - DOES NOT APPLY TO MULCH AREAS.
4 - AS SHOWN ON PLANS.
5 - UNLESS OTHERWISE SHOWN ON PLANS.
6 - SEE STANDARD DETAIL.
7 - SEE SPECIAL PROVISIONS.
8 - SEE STANDARD SPECIFICATION
9 - RANDOMLY MIXED WITHIN AREA SPECIFIED.
10 - SUBSTITUTE BASIN MULCH WITH MULCH (GRAVEL) AT TREE GRATE LOCATIONS.
11 - ROOT BARRIER REQUIRED.

ABBREVIATIONS:

Amend - AMENDMENT
B&B — BALLED AND BURLAPPED
Dia — DIAMETER
CF — CUBIC FEET
EA — EACH
Ft — FOOT/FEET
In — INCH
LB — POUND
Max — MAXIMUM
Min — MINIMUM
NCN — NO COMMON NAME
CY — CUBIC YARDS
No. — NUMBER
Oz — OUNCE
Pkt — PACKET (S)
PLT ESTB - PLANT ESTABLISHMENT
Pvmt — PAVEMENT
R/W — RIGHT OF WAY
SF — STATE-FURNISHED
SQFT — SQUARE FEET
SQYD — SQUARE YARD
TCE — TEMPARARY CONSTRUCTION EASEMENT
TRVD — TRAVELED
Typ — TYPICAL

PLANT LIST AND PLANTING SPECIFICATIONS

PLANT GROUP	PLANT No.	SYMBOL	BOTANICAL NAME	COMMON NAME	SIZE	Qty EACH	HOLE SIZE (INCH) Dia	HOLE SIZE (INCH) DEPTH	BASIN TYPE	IRON SULFATE 1	SOIL AMEND 1	COMMERCIAL FERTILIZER 1 PLANTING	COMMERCIAL FERTILIZER 1 PLT ESTB	BASIN MULCH	STAKING	PLANTING LIMITS MINIMUM DISTANCE (Ft) FROM TRVD WAY	PVMT	FENCE	WALL	PAVED DITCH	EARTH DITCH	ON CENTER (Ft)	REMARKS
A	1		AGAPANTHUS AFRICANUS	LILY-OF-THE-NILE	No. 1	273	2	2	II	0.25 LBS	0.20 CF	2 Pkt	4.0 Oz	0.5 CF	-	-	3	3	3	6	6	4	SHRUB
	2		DIETES BICOLOR	DIETES	No. 1	364	2	2	II	0.25 LBS	0.20 CF	2 Pkt	4.0 Oz	0.5 CF	-	-	6	6	6	6	8	4	SHRUB
	3		LIRIOPE GIGANTEA	GIANT BLUE LILY TURF	No. 1	151	2	2	II	0.25 LBS	0.20 CF	2 Pkt	4.0 Oz	0.5 CF	-	-	6	6	6	6	8	4	SHRUB
B	4		AGAVE ATTENUATA	FOXTAIL AGAVE	No. 5	11	2	2	II	0.25 LBS	0.50 CF	3 Pkt	4.0 Oz	1.0 CF	-	-	8	8	8	8	8	4	SHRUB
	5		BOUGAINVILLEA SPP. 'OOH LA LA'	BOUGAINVILLEA	No. 5	19	2	2	II	0.25 LBS	0.50 CF	3 Pkt	4.0 Oz	1.0 CF	-	-	8	8	8	10	10	4	SHRUB
	6		CARISSA M. 'TUTTLE'	NATAL PLUM	No. 5	20	2	2	II	0.25 LBS	0.50 CF	3 Pkt	4.0 Oz	1.0 CF	-	-	8	8	8	8	10	4	SHRUB
	7		RHAPHIOLEPIS INDICA 'BALLERINA'	INDIA HAWTHORN	No. 5	297	2	2	II	0.25 LBS	0.50 CF	3 Pkt	4.0 Oz	1.0 CF	-	-	8	10	10	8	10	4	SHRUB
	8		PITTOSPORUM TOBIRA 'WHEELER'S DRAFT'	WHEELER'S DRAFT TOBIRA	No. 5	87	2	2	II	0.25 LBS	0.50 CF	3 Pkt	4.0 Oz	1.0 CF	-	-	15	10	6	6	8	4	SHRUB
	9		ROSMARINUS OFFICINALIS 'PROSTRATUS'	TRAILING ROSEMARY	No. 5	89	2	2	II	0.25 LBS	0.50 CF	3 Pkt	4.0 Oz	1.0 CF	-	-	10	6	6	8	8	4	SHRUB
	10		PHORMIUM TENAX	NEW ZEALAND FLAX	No. 5	37	2	2	II	0.25 LBS	0.50 CF	3 Pkt	4.0 Oz	1.0 CF	-	-	10	10	10	10	12	4	SHRUB
	11		STRELITZIA REGINAE	BIRD OF PARADISE	No. 5	95	2	2	II	0.25 LBS	0.50 CF	3 Pkt	4.0 Oz	1.0 CF	-	-	8	6	6	6	8	4	SHRUB
F	12		GAZANIA 'MITSUWA YELLOW'	TRAILING GAZANIA	FLATS	6,041	2	2	-	2.0 LBS/ 1000 SQFT	5.0 CY/ 1000 SQFT	-	-	-	-	-	-	-	-	-	-	1.0	GROUNDCOVER
	13		HEDERA HELIX	ENGLISH IVY	FLATS	7,022	2	2	-	2.0 LBS/ 1000 SQFT	5.0 CY/ 1000 SQFT	-	-	-	-	-	-	-	-	-	-	1.0	GROUNDCOVER
U	14		DISTICUS BUCCINATORIA	BLOOD-RED TRUMPET VINE	No. 15	9	2	2	II	0.25 LBS	1.0 CF	10 Pkt	6.0 Oz	1.5 CF	6	-	-	-	-	8	10	8	VINE
	15		FICUS PUMILA	CREEPING FIG	No. 15	10	2	2	II	0.25 LBS	1.0 CF	10 Pkt	6.0 Oz	1.5 CF	6	-	-	-	-	10	12	3	VINE
	16		PARTHENOCISSUS TRICUSPIDATA	BOSTON IVY	No. 15	16	2	2	II	0.25 LBS	1.0 CF	10 Pkt	6.0 Oz	1.5 CF	6	-	-	-	-	4	15	10	VINE

NOTE:

INSTALL 3" MULCH IN ALL PLANTING AREAS

LEGEND:

EXISTING PLANTING TO REMAIN (SYMBOL DIAMETER VARIES)

EXISTING PLANTING TO BE REMOVED

ESA — ENVIRONMENTALLY SENSITIVE AREA

EXISTING TREES TO REMAIN (SYMBOL DIAMETER VARIES)

EXISTING TREES TO BE REMOVED (SYMBOL DIAMETER VARIES)

NO SCALE

PLANT LIST
PL-1

REVISED BY | DATE REVISED
KEVIN NGUYEN | DAVID PRECIADO
CALCULATED-DESIGNED BY | CHECKED BY
CONSULTANT FUNCTIONAL SUPERVISOR: RICHARD LEJA
STATE OF CALIFORNIA - DEPARTMENT OF TRANSPORTATION
Caltrans
FILES: 60098959 28-OCT-2011 05:38 s12614

LAST REVISION 02-07-11 | DATE PLOTTED => 28-OCT-2011 | TIME PLOTTED => 05:38

Dist	COUNTY	ROUTE	POST MILES TOTAL PROJECT	SHEET No.	TOTAL SHEETS
11	SD	15	M15.0/M16.4	319	610

REGISTERED LANDSCAPE ARCHITECT

10-24-11
PLANS APPROVAL DATE

LICENSED LANDSCAPE ARCHITECT — VICKI ESTRADA NOTESS — Registered Date 04-30-12 — Renewal Date 01-11-11 — STATE OF CALIFORNIA

THE STATE OF CALIFORNIA OR ITS OFFICERS OR AGENTS SHALL NOT BE RESPONSIBLE FOR THE ACCURACY OR COMPLETENESS OF SCANNED COPIES OF THIS PLAN SHEET.

Estrada Land Planning
755 Broadway Circle
Suite 300
San Diego, CA 92101

APPLICABLE WHEN CIRCLED:

1 - QUANTITIES SHOW ARE "PER PLANT" UNLESS SHOWN AS SQFT OR SQYD APPLICATION RATES.
2 - SUFFICIENT TO RECEIVE ROOT BALL.
3 - DOES NOT APPLY TO MULCH AREAS.
4 - AS SHOWN ON PLANS.
5 - UNLESS OTHERWISE SHOWN ON PLANS.
6 - SEE STANDARD DETAIL.
7 - SEE SPECIAL PROVISIONS.
8 - SEE STANDARD SPECIFICATION
9 - RANDOMLY MIXED WITHIN AREA SPECIFIED.
10 - SUBSTITUTE BASIN MULCH WITH MULCH (GRAVEL) AT TREE GRATE LOCATIONS.
11 - ROOT BARRIER REQUIRED.

PLANT LIST AND PLANTING SPECIFICATIONS (CONTINUED)

PLANT GROUP	PLANT No.	SYMBOL	BOTANICAL NAME	COMMON NAME	SIZE	Qty EACH	HOLE SIZE (INCH) Dia	HOLE SIZE (INCH) DEPTH	BASIN TYPE	IRON SULFATE 1	SOIL AMEND 1	COMMERCIAL FERTILIZER 1 PLANTING	COMMERCIAL FERTILIZER 1 PLT ESTB	BASIN MULCH	STAKING	PLANTING LIMITS MINIMUM DISTANCE (Ft) FROM TRVD WAY	PVMT	FENCE	WALL	PAVED DITCH	EARTH DITCH	ON CENTER (Ft)	REMARKS
K	16	▲	CUPANIOPSIS ANACARDIOIDES	CARROT WOOD	24" BOX	7	2	2	II	0.5 LBS	2.0 CF	20 Pkt	8.0 Oz	2.0 CF	6	30	-	15	15	15	17	4	TREE 11
	17		KOEREUTERIA BIPINNATA	CHINESE FLAME TREE	24" BOX	7	2	2	II	0.5 LBS	2.0 CF	20 Pkt	8.0 Oz	2.0 CF	6	30	-	10	10	10	12	4	TREE 11
	18	●	LOPHOSTEMON CONFERTUS	BRISBANE BOX	24" BOX	25	2	2	II	0.5 LBS	2.0 CF	20 Pkt	8.0 Oz	2.0 CF	6	-	-	-	-	-	-	4	TREE 10 11
	19		PRUNUS CERASIFERA 'KRAUTER VESUVIUS'	PURPLE LEAF PLUM	24" BOX	10	2	2	II	0.5 LBS	2.0 CF	20 Pkt	8.0 Oz	2.0 CF	6	30	-	15	15	15	17	4	TREE BRANCHING AT 7'-0'' Ht 10 11
	20		PODOCARPUS GRACILIOR	FERN PINE	24" BOX	23	2	2	II	0.5 LBS	2.0 CF	20 Pkt	8.0 Oz	2.0 CF	6	-	-	-	-	-	-	4	TREE 10 11
	21		QUERCUS AGRIFOLIA	COAST LIVE OAK	36" BOX	3	2	2	II	0.5 LBS	2.0 CF	20 Pkt	8.0 Oz	2.0 CF	6	-	-	-	-	-	-	4	TREE 10 11
	22		PLATANUS X ACERIFOLIA 'BLOODGOOD'	LONDON PLANE TREE	36" BOX	3	2	2	II	0.5 LBS	2.0 CF	20 Pkt	8.0 Oz	2.0 CF	6	-	-	-	-	-	-	4	TREE 11

NOTE:

INSTALL 3" MULCH IN ALL PLANTING AREAS

NO SCALE

PLANT LIST
PL-2

REVISED BY | DATE REVISED
KEVIN NGUYEN | DAVID PRECIADO
CALCULATED-DESIGNED BY | CHECKED BY
CONSULTANT FUNCTIONAL SUPERVISOR: RICHARD LEJA

STATE OF CALIFORNIA - DEPARTMENT OF TRANSPORTATION
Caltrans

LAST REVISION 02-07-11 | DATE PLOTTED => 27-OCT-2011 | TIME PLOTTED => 09:11

Dist	COUNTY	ROUTE	POST MILES TOTAL PROJECT	SHEET No.	TOTAL SHEETS
11	SD	15	M15.0/M16.4	320	610

REGISTERED LANDSCAPE ARCHITECT

10-24-11
PLANS APPROVAL DATE

LICENSED LANDSCAPE ARCHITECT
VICKI ESTRADA NOTRES
Signature
04-30-12
Renewal Date
01-11-11
Date
STATE OF CALIFORNIA

THE STATE OF CALIFORNIA OR ITS OFFICERS OR AGENTS SHALL NOT BE RESPONSIBLE FOR THE ACCURACY OR COMPLETENESS OF SCANNED COPIES OF THIS PLAN SHEET.

Estrada Land Planning
755 Broadway Circle
Suite 300
San Diego, CA 92101

NOTE:

1. FOR ACCURATE RIGHT OF WAY AND ACCESS DATA, CONTACT RIGHT OF WAY ENGINEERING AT THE DISTRICT OFFICE.

TREE REMOVAL (N)	
SHEET	EACH
PR-1	30

(N) NOT A SEPARATE PAY ITEM, FOR INFORMATION ONLY.

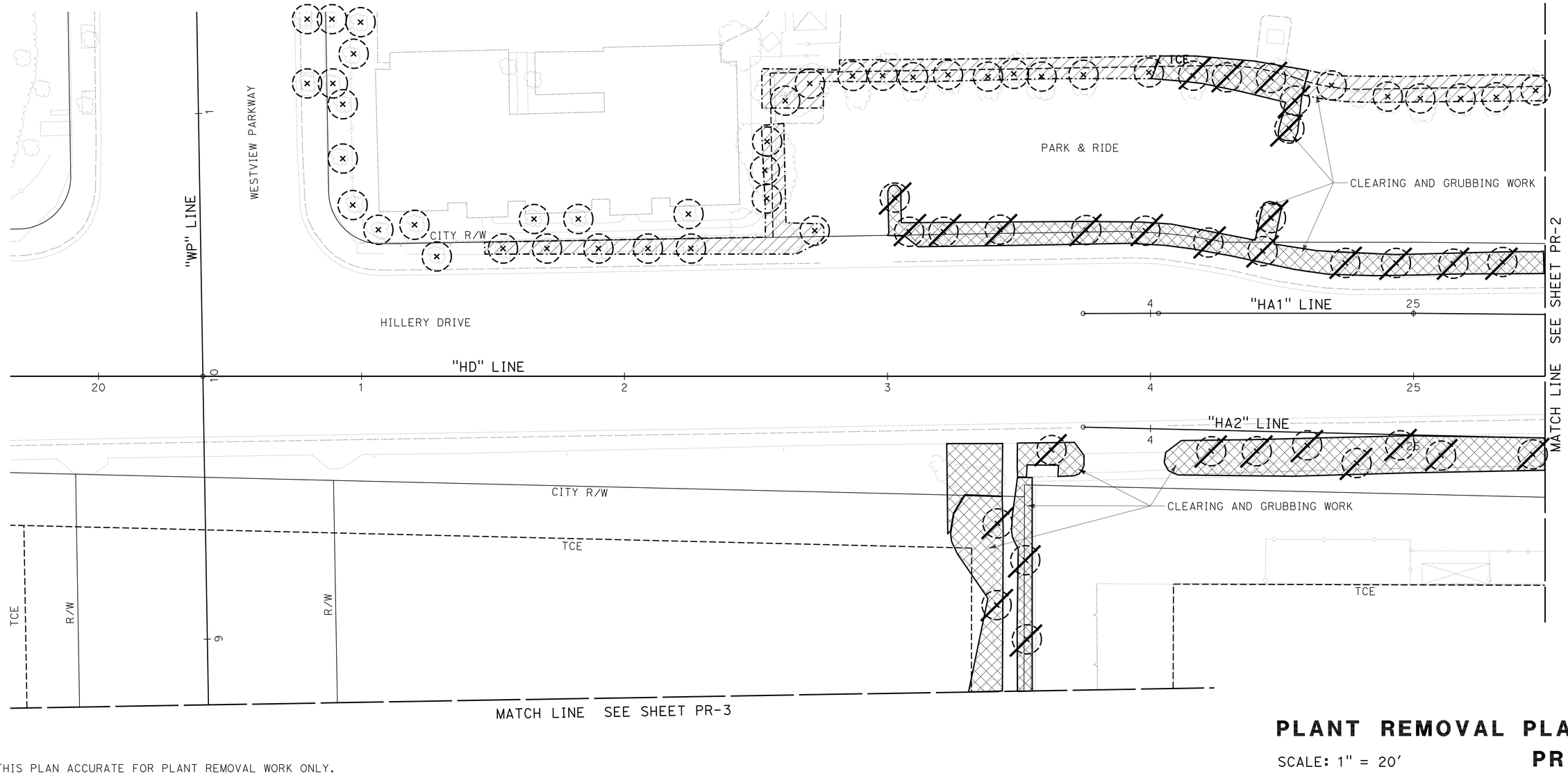

THIS PLAN ACCURATE FOR PLANT REMOVAL WORK ONLY.

PLANT REMOVAL PLAN

SCALE: 1" = 20'

PR-1

REVISED BY | DATE REVISED
KEVIN NGUYEN | DAVID PRECIADO
CALCULATED-DESIGNED BY | CHECKED BY
CONSULTANT FUNCTIONAL SUPERVISOR
RICHARD LEJA

STATE OF CALIFORNIA - DEPARTMENT OF TRANSPORTATION
Caltrans

LAST REVISION 02-07-11 | DATE PLOTTED => 27-OCT-2011 | TIME PLOTTED => 09:11

Dist	COUNTY	ROUTE	POST MILES TOTAL PROJECT	SHEET No.	TOTAL SHEETS
11	SD	15	M15.0/M16.4	321	610

REGISTERED LANDSCAPE ARCHITECT

10-24-11
PLANS APPROVAL DATE

LICENSED LANDSCAPE ARCHITECT
VICKI ESTRADA NOTEBOOM
Signature
04-30-12
Renewal Date
01-11-11
Date
STATE OF CALIFORNIA

THE STATE OF CALIFORNIA OR ITS OFFICERS OR AGENTS SHALL NOT BE RESPONSIBLE FOR THE ACCURACY OR COMPLETENESS OF SCANNED COPIES OF THIS PLAN SHEET.

Estrada Land Planning
755 Broadway Circle
Suite 300
San Diego, CA 92101

NOTE:

1. FOR ACCURATE RIGHT OF WAY AND ACCESS DATA, CONTACT RIGHT OF WAY ENGINEERING AT THE DISTRICT OFFICE.

TREE REMOVAL (N)	
SHEET	EACH
PR-2	40

(N) NOT A SEPARATE PAY ITEM, FOR INFORMATION ONLY.

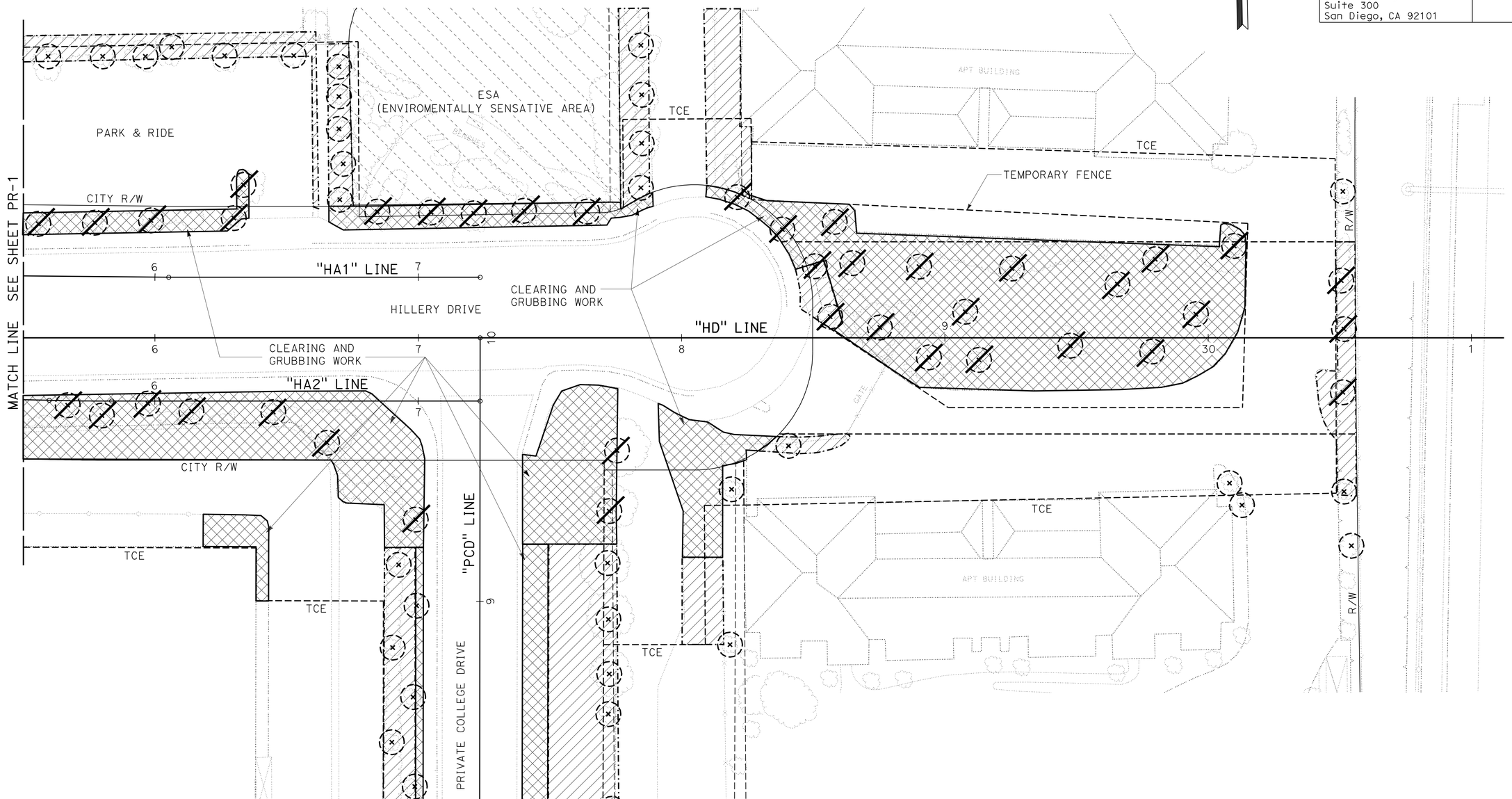

THIS PLAN ACCURATE FOR PLANT REMOVAL WORK ONLY.

PLANT REMOVAL PLAN

SCALE: 1" = 20'

PR-2

STATE OF CALIFORNIA - DEPARTMENT OF TRANSPORTATION
Caltrans

CONSULTANT FUNCTIONAL SUPERVISOR: RICHARD LEJA
CALCULATED-DESIGNED BY: KEVIN NGUYEN
CHECKED BY: DAVID PRECIADO
REVISED BY
DATE REVISED

LAST REVISION 02-08-11
DATE PLOTTED => 27-OCT-2011
TIME PLOTTED => 09:11

Dist	COUNTY	ROUTE	POST MILES TOTAL PROJECT	SHEET No.	TOTAL SHEETS
11	SD	15	M15.0/M16.4	322	610

REGISTERED LANDSCAPE ARCHITECT

10-24-11
PLANS APPROVAL DATE

LICENSED LANDSCAPE ARCHITECT VICKI ESTRADA NOTRIES STATE OF CALIFORNIA
Registered
04-30-12
Renewal Date
01-11-11
Date

THE STATE OF CALIFORNIA OR ITS OFFICERS OR AGENTS SHALL NOT BE RESPONSIBLE FOR THE ACCURACY OR COMPLETENESS OF SCANNED COPIES OF THIS PLAN SHEET.

Estrada Land Planning
755 Broadway Circle
Suite 300
San Diego, CA 92101

NOTE:

1. FOR ACCURATE RIGHT OF WAY AND ACCESS DATA, CONTACT RIGHT OF WAY ENGINEERING AT THE DISTRICT OFFICE.

TREE REMOVAL (N)

SHEET	EACH
PR-3	16

(N) NOT A SEPARATE PAY ITEM, FOR INFORMATION ONLY.

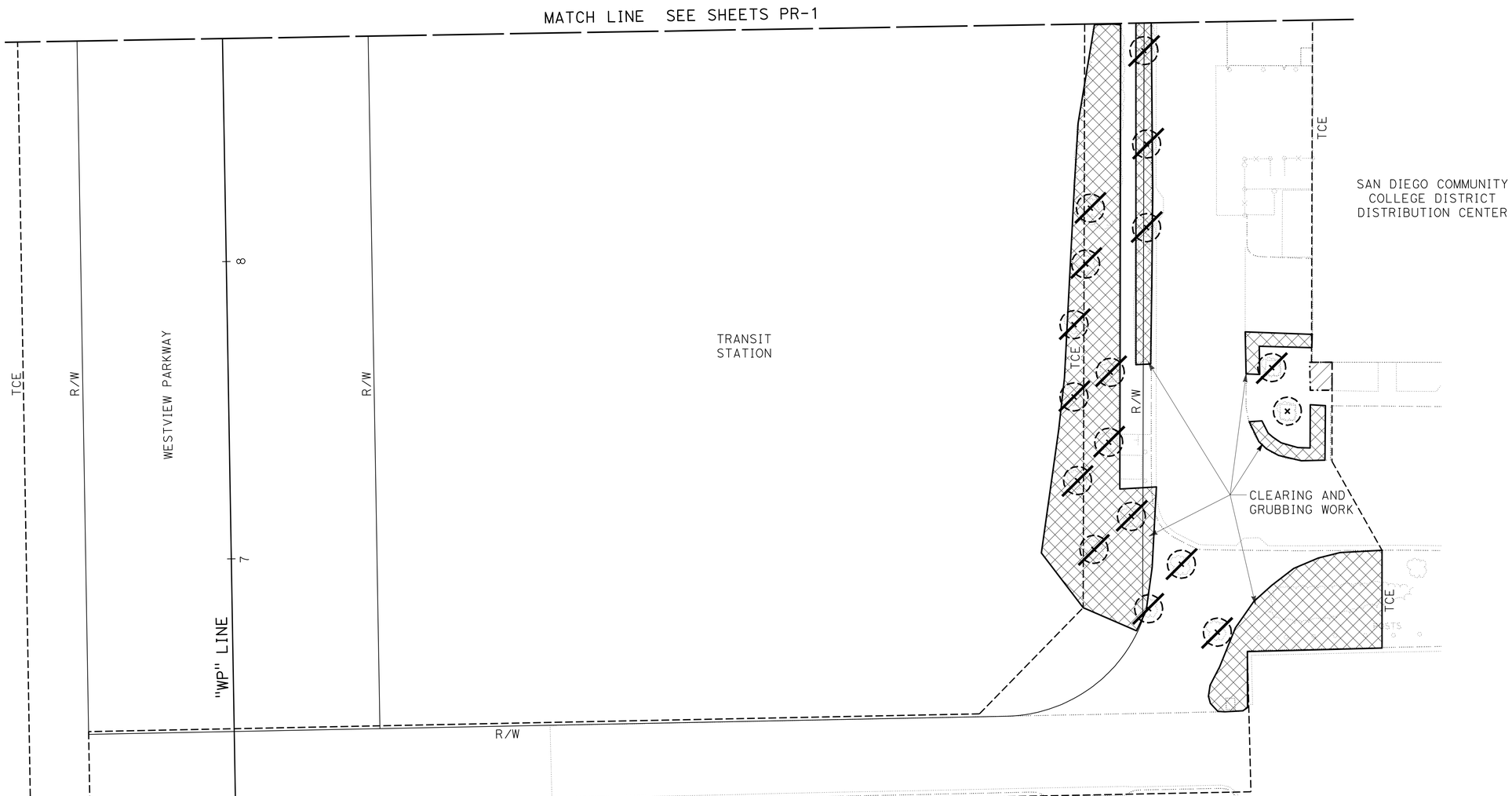

THIS PLAN ACCURATE FOR PLANT REMOVAL WORK ONLY.

PLANT REMOVAL PLAN

SCALE: 1" = 20'

PR-3

REVISED BY | DATE REVISED
KEVIN NGUYEN | DAVID PRECIADO
CALCULATED-DESIGNED BY | CHECKED BY
CONSULTANT FUNCTIONAL SUPERVISOR
RICHARD LEJA

STATE OF CALIFORNIA - DEPARTMENT OF TRANSPORTATION
Caltrans

LAST REVISION 02-08-11 | DATE PLOTTED => 27-OCT-2011 | TIME PLOTTED => 09:12

Dist	COUNTY	ROUTE	POST MILES TOTAL PROJECT	SHEET No.	TOTAL SHEETS
11	SD	15	M15.0/M16.4	323	610

REGISTERED LANDSCAPE ARCHITECT

10-24-11
PLANS APPROVAL DATE

LICENSED LANDSCAPE ARCHITECT — VICKI ESTRADA NOTRED — Registration Number 04-30-12 — Renewal Date 01-1-11 — Date — STATE OF CALIFORNIA

THE STATE OF CALIFORNIA OR ITS OFFICERS OR AGENTS SHALL NOT BE RESPONSIBLE FOR THE ACCURACY OR COMPLETENESS OF SCANNED COPIES OF THIS PLAN SHEET.

Estrada Land Planning
755 Broadway Circle
Suite 300
San Diego, CA 92101

NOTES:

1. FOR ACCURATE RIGHT OF WAY AND ACCESS DATA, CONTACT RIGHT OF WAY ENGINEERING AT THE DISTRICT OFFICE.
2. INSTALL 3" MULCH IN ALL PLANTING AREAS.

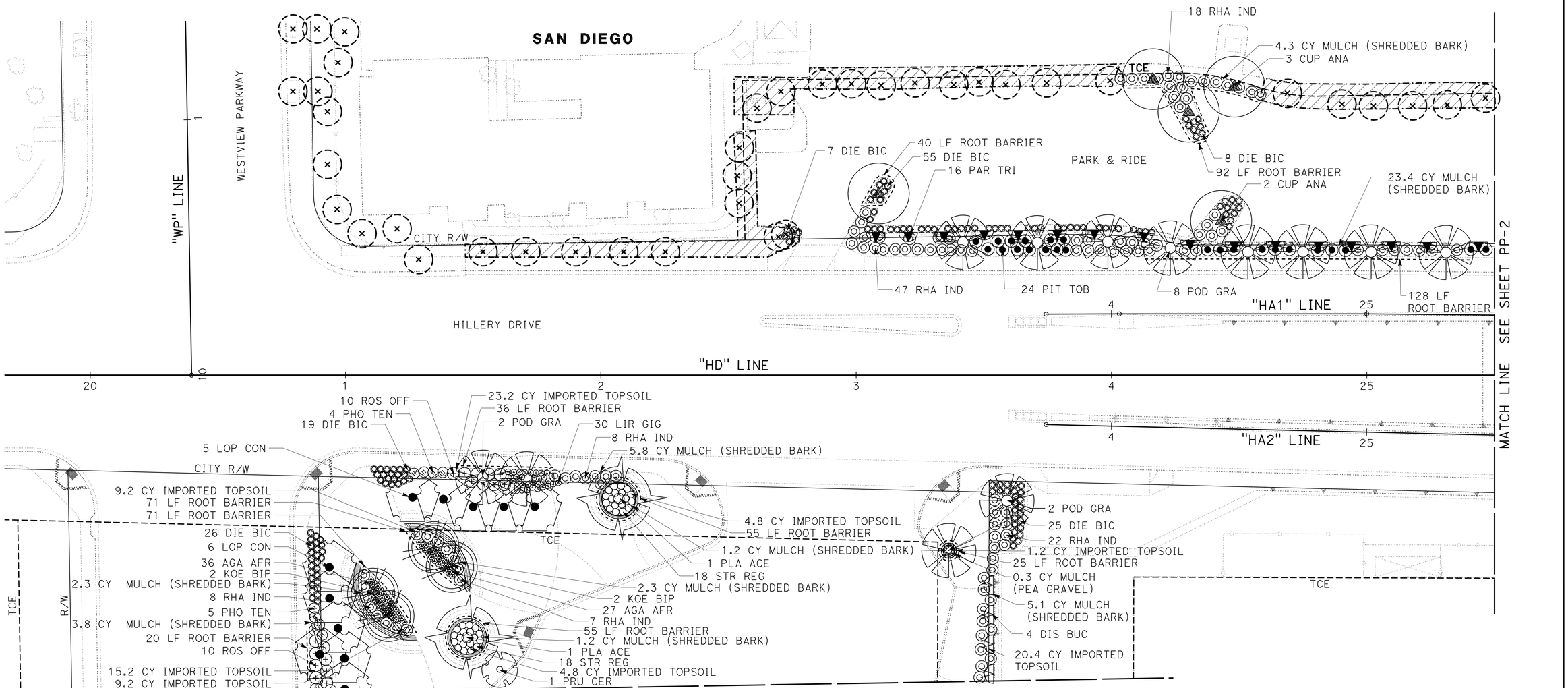

THIS PLAN ACCURATE FOR PLANTING WORK ONLY.

PLANTING PLAN

SCALE: 1" = 20'

PP-1

REVISED BY | DATE REVISED
KEVIN NGUYEN | DAVID PRECIADO
CALCULATED-DESIGNED BY | CHECKED BY
CONSULTANT FUNCTIONAL SUPERVISOR
RICHARD LEJA

STATE OF CALIFORNIA - DEPARTMENT OF TRANSPORTATION
Caltrans

LAST REVISION 02-08-11 | DATE PLOTTED => 27-OCT-2011 | TIME PLOTTED => 09:12

Dist	COUNTY	ROUTE	POST MILES TOTAL PROJECT	SHEET No.	TOTAL SHEETS
11	SD	15	M15.0/M16.4	324	610

REGISTERED LANDSCAPE ARCHITECT

10-24-11
PLANS APPROVAL DATE

LICENSED LANDSCAPE ARCHITECT
VICKI ESTRADA NOTEBOOM
Signature
04-30-12
Renewal Date
01-11-11
Date
STATE OF CALIFORNIA

THE STATE OF CALIFORNIA OR ITS OFFICERS OR AGENTS SHALL NOT BE RESPONSIBLE FOR THE ACCURACY OR COMPLETENESS OF SCANNED COPIES OF THIS PLAN SHEET.

Estrada Land Planning
755 Broadway Circle
Suite 300
San Diego, CA 92101

NOTES:

1. FOR ACCURATE RIGHT OF WAY AND ACCESS DATA, CONTACT RIGHT OF WAY ENGINEERING AT THE DISTRICT OFFICE.
2. INSTALL 3" MULCH TO ALL PLANTING AREAS.

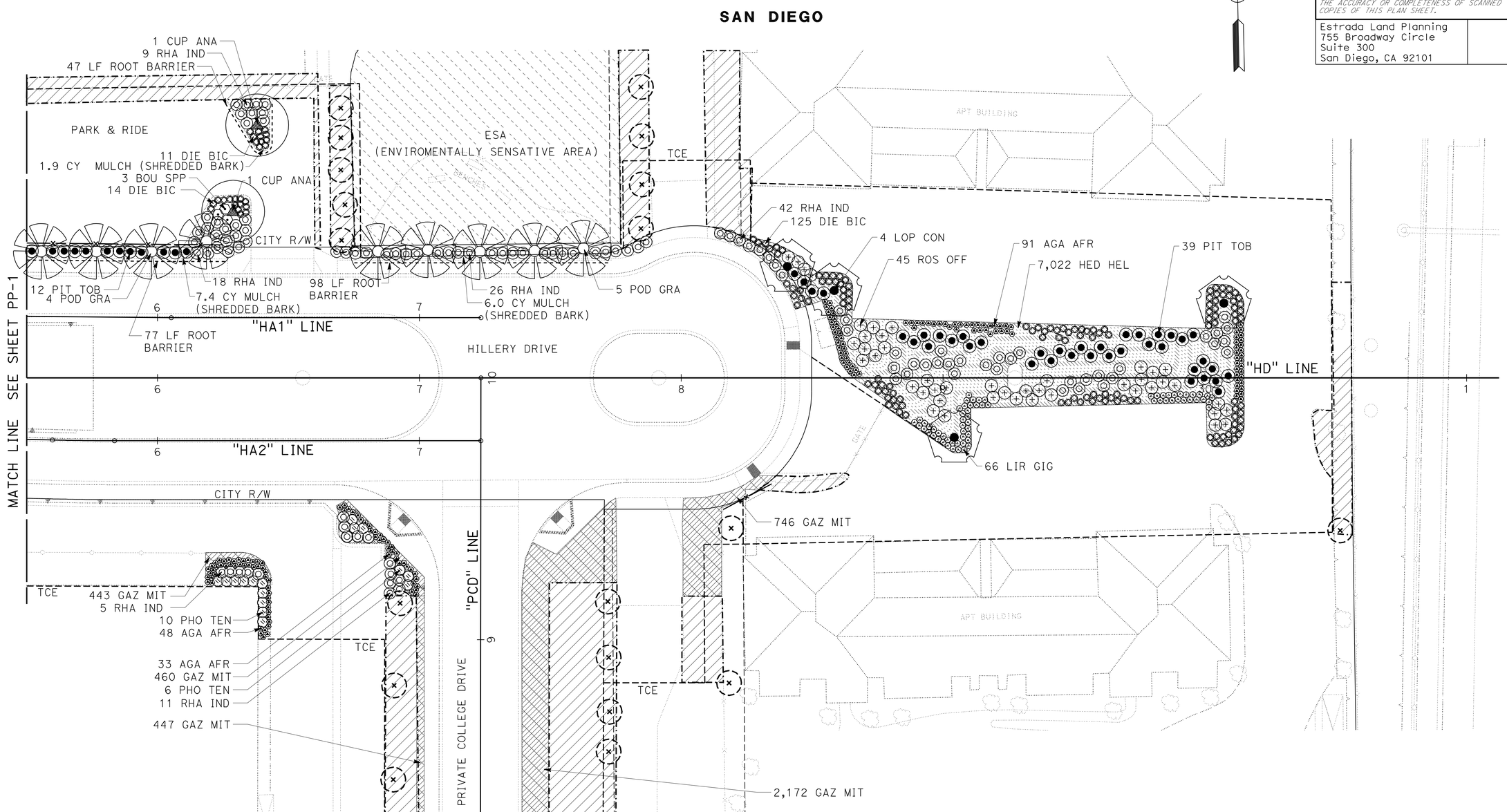

THIS PLAN ACCURATE FOR PLANTING WORK ONLY.

PLANTING PLAN

SCALE: 1" = 20'

PP-2

REVISED BY | DATE REVISED
KEVIN NGUYEN | DAVID PRECIADO
CALCULATED-DESIGNED BY | CHECKED BY
CONSULTANT FUNCTIONAL SUPERVISOR
RICHARD LEJA

STATE OF CALIFORNIA - DEPARTMENT OF TRANSPORTATION
Caltrans

LAST REVISION 02-08-11 | DATE PLOTTED => 27-OCT-2011 | TIME PLOTTED => 09:12

Dist	COUNTY	ROUTE	POST MILES TOTAL PROJECT	SHEET No.	TOTAL SHEETS
11	SD	15	M15.0/M16.4	325	610

REGISTERED LANDSCAPE ARCHITECT

10-24-11
PLANS APPROVAL DATE

LICENSED LANDSCAPE ARCHITECT VICKI ESTRADA NOTESTINE STATE OF CALIFORNIA
Signature 04-30-12
Renewal Date
01-11-11
Date

THE STATE OF CALIFORNIA OR ITS OFFICERS OR AGENTS SHALL NOT BE RESPONSIBLE FOR THE ACCURACY OR COMPLETENESS OF SCANNED COPIES OF THIS PLAN SHEET.

Estrada Land Planning
755 Broadway Circle
Suite 300
San Diego, CA 92101

NOTES:

1. FOR ACCURATE RIGHT OF WAY AND ACCESS DATA, CONTACT RIGHT OF WAY ENGINEERING AT THE DISTRICT OFFICE.
2. INSTALL 3" MULCH TO ALL PLANTING AREAS

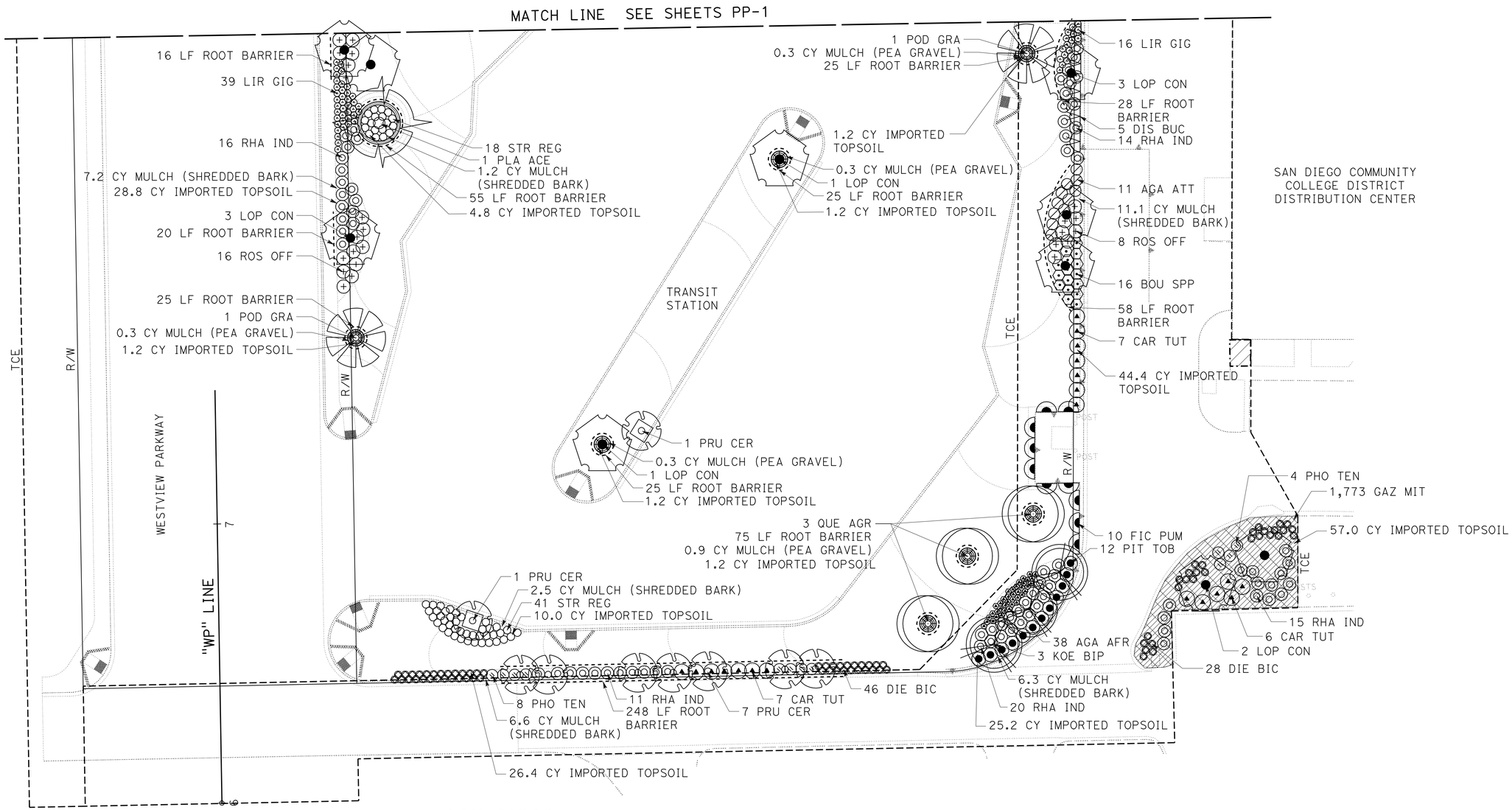

THIS PLAN ACCURATE FOR PLANTING WORK ONLY.

PLANTING PLAN

SCALE: 1" = 20'

PP-3

REVISED BY | DATE REVISED
KEVIN NGUYEN | DAVID PRECIADO
CALCULATED-DESIGNED BY | CHECKED BY
CONSULTANT FUNCTIONAL SUPERVISOR
RICHARD LEJA

STATE OF CALIFORNIA - DEPARTMENT OF TRANSPORTATION
Caltrans

LAST REVISION 02-08-11 | DATE PLOTTED => 27-OCT-2011 | TIME PLOTTED => 09:12

Dist	COUNTY	ROUTE	POST MILES TOTAL PROJECT	SHEET No.	TOTAL SHEETS
11	SD	15	M15.0/M16.4	326	610

REGISTERED LANDSCAPE ARCHITECT

10-24-11
PLANS APPROVAL DATE

LICENSED LANDSCAPE ARCHITECT
VICKI ESTRADA NOTESS
Date Signed 04-30-12
Renewal Date 01-11-11
Date
STATE OF CALIFORNIA

THE STATE OF CALIFORNIA OR ITS OFFICERS OR AGENTS SHALL NOT BE RESPONSIBLE FOR THE ACCURACY OR COMPLETENESS OF SCANNED COPIES OF THIS PLAN SHEET.

Estrada Land Planning
755 Broadway Circle
Suite 300
San Diego, CA 92101

NOTES:

1. FOR ACCURATE RIGHT OF WAY AND ACCESS DATA, CONTACT RIGHT OF WAY ENGINEERING AT THE DISTRICT OFFICE.
2. IRRIGATION SYSTEM USING RECYCLED WATER.

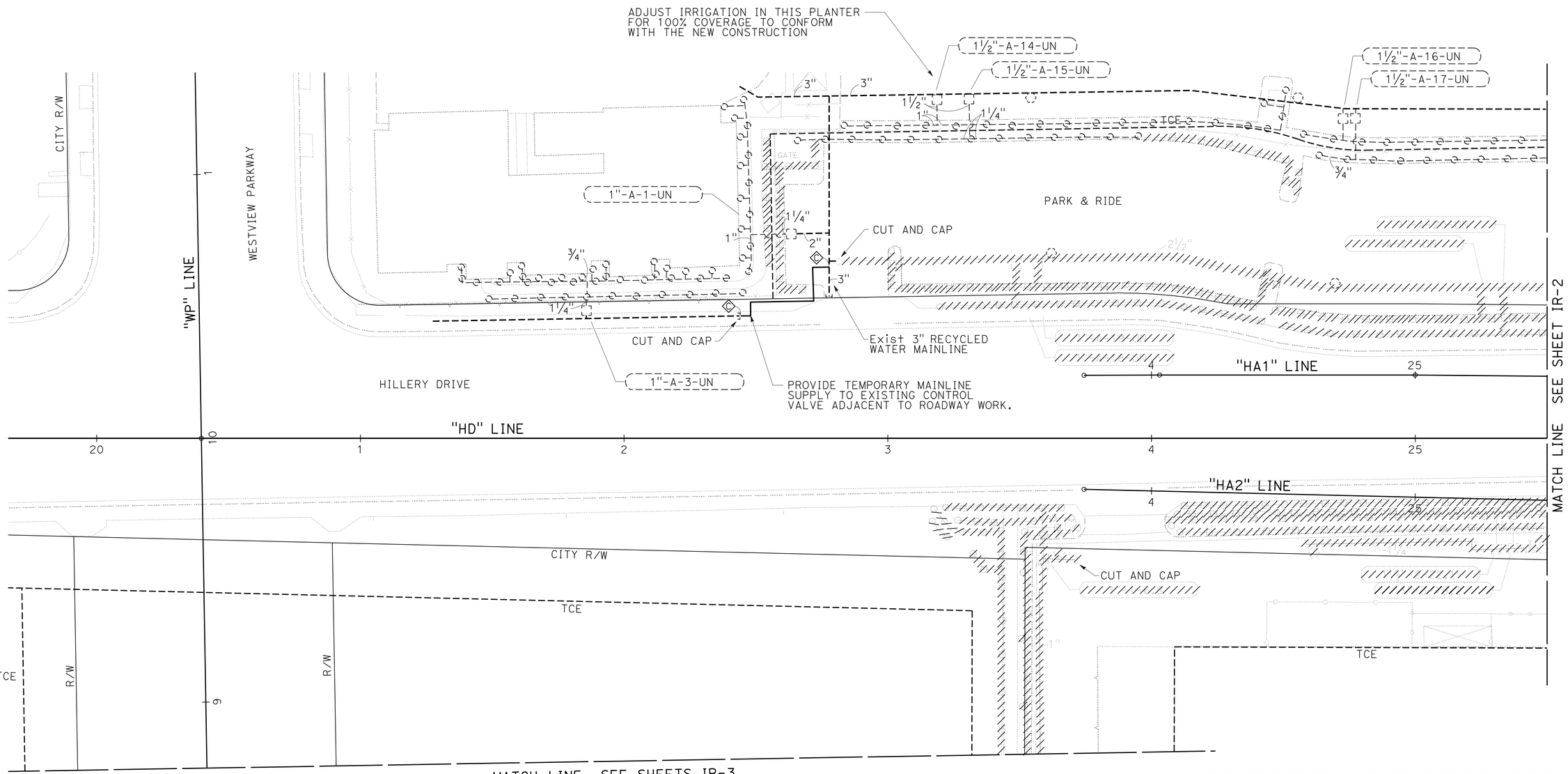

THIS PLAN ACCURATE FOR IRRIGATION REMOVAL WORK ONLY.

IRRIGATION REMOVAL PLAN

SCALE: 1" = 20'

IR-1

STATE OF CALIFORNIA - DEPARTMENT OF TRANSPORTATION
Caltrans

CONSULTANT FUNCTIONAL SUPERVISOR: RICHARD LEJA
CALCULATED-DESIGNED BY: KEVIN NGUYEN
CHECKED BY: DAVID PRECIADO
REVISED BY
DATE REVISED

LAST REVISION 08-12-11
DATE PLOTTED => 27-OCT-2011
TIME PLOTTED => 09:12

Dist	COUNTY	ROUTE	POST MILES TOTAL PROJECT	SHEET No.	TOTAL SHEETS
11	SD	15	M15.0/M16.4	327	610

REGISTERED LANDSCAPE ARCHITECT

10-24-11
PLANS APPROVAL DATE

LICENSED LANDSCAPE ARCHITECT VICKI ESTRADA NOTESS 04-30-12 Renewal Date 01-11-11 Date STATE OF CALIFORNIA

THE STATE OF CALIFORNIA OR ITS OFFICERS OR AGENTS SHALL NOT BE RESPONSIBLE FOR THE ACCURACY OR COMPLETENESS OF SCANNED COPIES OF THIS PLAN SHEET.

Estrada Land Planning
755 Broadway Circle
Suite 300
San Diego, CA 92101

NOTES:

1. FOR ACCURATE RIGHT OF WAY AND ACCESS DATA, CONTACT RIGHT OF WAY ENGINEERING AT THE DISTRICT OFFICE.
2. IRRIGATION SYSTEM USING RECYCLED WATER.

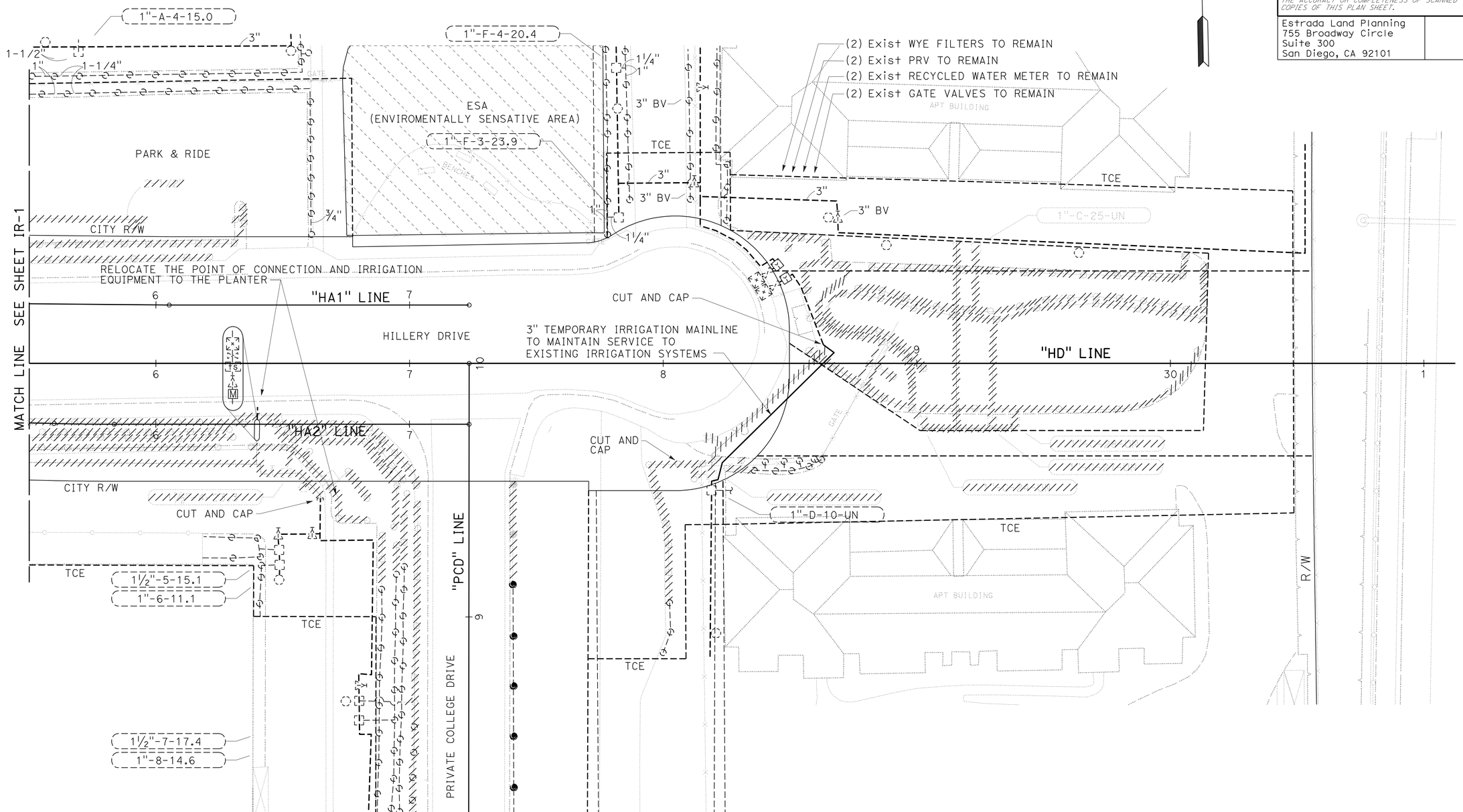

THIS PLAN ACCURATE FOR IRRIGATION REMOVAL WORK ONLY.

IRRIGATION REMOVAL PLAN

SCALE: 1" = 20'

IR-2

REVISED BY	DATE REVISED
KEVIN NGUYEN	DAVID PRECIADO

CALCULATED-DESIGNED BY | CHECKED BY

CONSULTANT FUNCTIONAL SUPERVISOR: RICHARD LEJA

STATE OF CALIFORNIA - DEPARTMENT OF TRANSPORTATION

Caltrans

60099859 27-OCT-2011 09:2 s117606 $FILE$

LAST REVISION 08-12-11 | DATE PLOTTED => 27-OCT-2011 | TIME PLOTTED => 09:12

Dist	COUNTY	ROUTE	POST MILES TOTAL PROJECT	SHEET No.	TOTAL SHEETS
11	SD	15	M15.0/M16.4	328	610

REGISTERED LANDSCAPE ARCHITECT

10-24-11
PLANS APPROVAL DATE

LICENSED LANDSCAPE ARCHITECT
VICKI ESTRADA NOTEBOOM
Signature
04-30-12
Renewal Date
01-11-11
Date
STATE OF CALIFORNIA

THE STATE OF CALIFORNIA OR ITS OFFICERS OR AGENTS SHALL NOT BE RESPONSIBLE FOR THE ACCURACY OR COMPLETENESS OF SCANNED COPIES OF THIS PLAN SHEET.

Estrada Land Planning
755 Broadway Circle
Suite 300
San Diego, CA 92101

NOTES:

1. FOR ACCURATE RIGHT OF WAY AND ACCESS DATA, CONTACT RIGHT OF WAY ENGINEERING AT THE DISTRICT OFFICE.
2. IRRIGATION SYSTEM USING RECYCLED WATER.

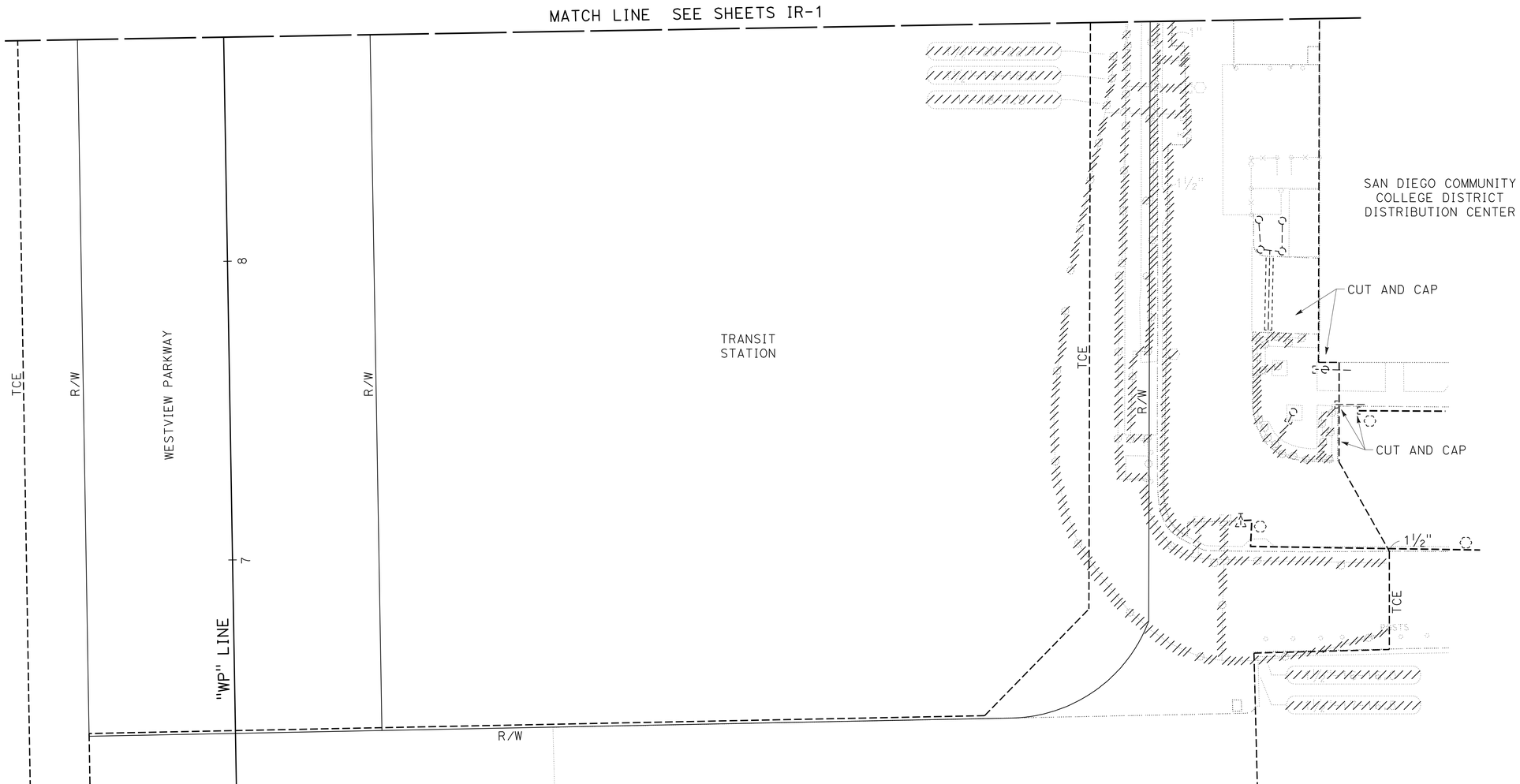

THIS PLAN ACCURATE FOR IRRIGATION REMOVAL WORK ONLY.

IRRIGATION REMOVAL PLAN

SCALE: 1" = 20'

IR-3

STATE OF CALIFORNIA - DEPARTMENT OF TRANSPORTATION
Caltrans

CONSULTANT FUNCTIONAL SUPERVISOR: RICHARD LEJA
CALCULATED-DESIGNED BY: KEVIN NGUYEN
CHECKED BY: DAVID PRECIADO
REVISED BY
DATE REVISED

LAST REVISION 08-12-11
DATE PLOTTED => 27-OCT-2011
TIME PLOTTED => 09:57

Dist	COUNTY	ROUTE	POST MILES TOTAL PROJECT	SHEET No.	TOTAL SHEETS
11	SD	15	M15.0/M16.4	329	610

REGISTERED LANDSCAPE ARCHITECT

10-24-11
PLANS APPROVAL DATE

LICENSED LANDSCAPE ARCHITECT
VICKI ESTRADA NOTESS
Signature
04-30-12
Renewal Date
01-11-11
Date
STATE OF CALIFORNIA

THE STATE OF CALIFORNIA OR ITS OFFICERS OR AGENTS SHALL NOT BE RESPONSIBLE FOR THE ACCURACY OR COMPLETENESS OF SCANNED COPIES OF THIS PLAN SHEET.

Estrada Land Planning
755 Broadway Circle
Suite 300
San Diego, CA 92101

NOTES:

1. FOR ACCURATE RIGHT OF WAY AND ACCESS DATA, CONTACT RIGHT OF WAY ENGINEERING AT THE DISTRICT OFFICE.
2. IRRIGATION SYSTEM USING RECYCLED WATER.

LEGEND:

RWS - RECYCLED WATER WARNING SIGN

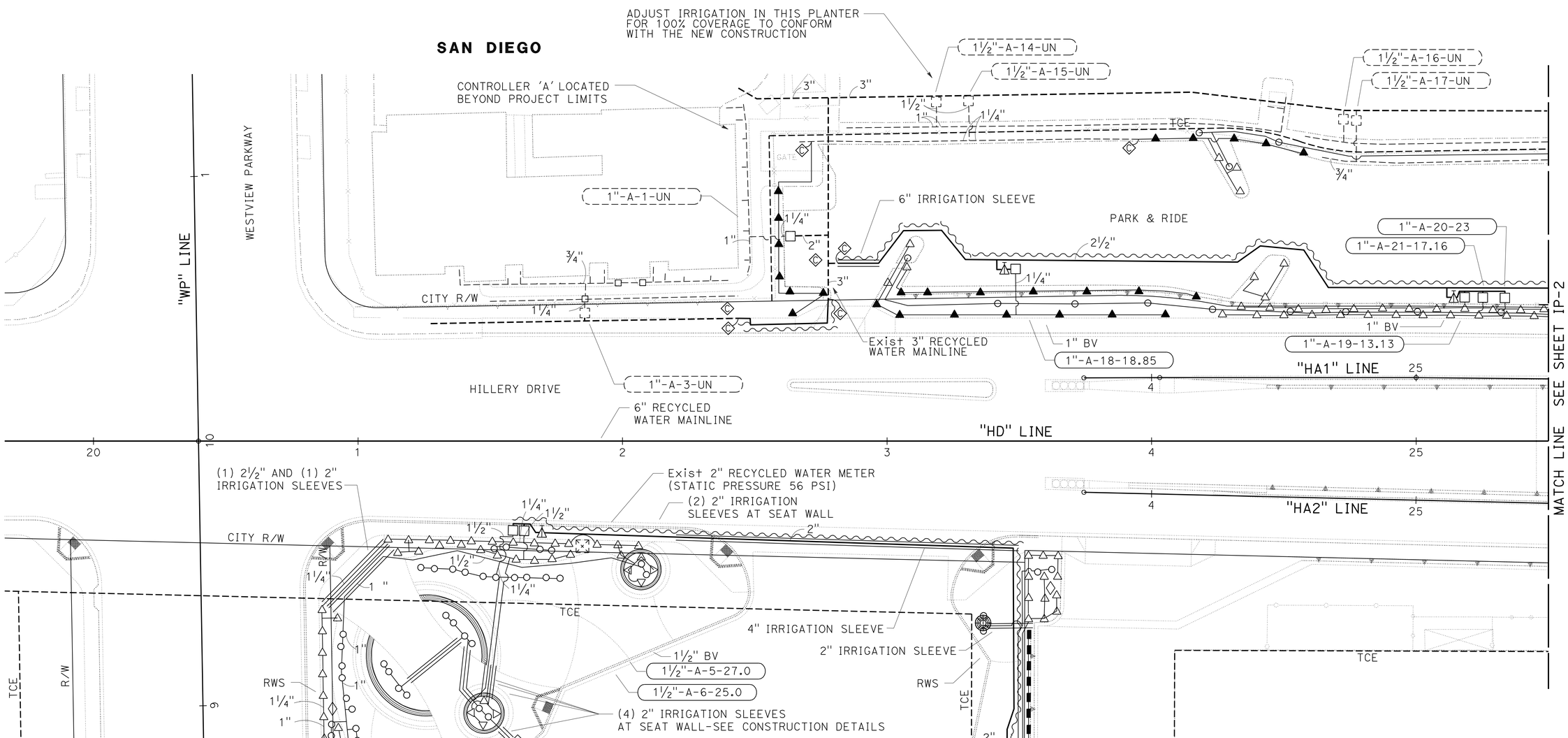

THIS PLAN ACCURATE FOR IRRIGATION WORK ONLY.

IRRIGATION PLAN

SCALE: 1" = 20'

IP-1

REVISED BY	DATE REVISED
KEVIN NGUYEN	DAVID PRECIADO

CALCULATED-DESIGNED BY: RICHARD LEJA
CHECKED BY:
CONSULTANT FUNCTIONAL SUPERVISOR

STATE OF CALIFORNIA - DEPARTMENT OF TRANSPORTATION
Caltrans

LAST REVISION 02-08-11
DATE PLOTTED => 28-OCT-2011
TIME PLOTTED => 05:55

Dist	COUNTY	ROUTE	POST MILES TOTAL PROJECT	SHEET No.	TOTAL SHEETS
11	SD	15	M15.0/M16.4	330	610

REGISTERED LANDSCAPE ARCHITECT

10-24-11
PLANS APPROVAL DATE

LICENSED LANDSCAPE ARCHITECT
VICKI ESTRADA NOTESS
Signature
Expiration Date 04-30-12
Generation Date 01-11-11
Date
STATE OF CALIFORNIA

THE STATE OF CALIFORNIA OR ITS OFFICERS OR AGENTS SHALL NOT BE RESPONSIBLE FOR THE ACCURACY OR COMPLETENESS OF SCANNED COPIES OF THIS PLAN SHEET.

Estrada Land Planning
755 Broadway Circle
Suite 300
San Diego, CA 92101

NOTES:

1. FOR ACCURATE RIGHT OF WAY AND ACCESS DATA, CONTACT RIGHT OF WAY ENGINEERING AT THE DISTRICT OFFICE.
2. IRRIGATION SYSTEM USING RECYCLED WATER.

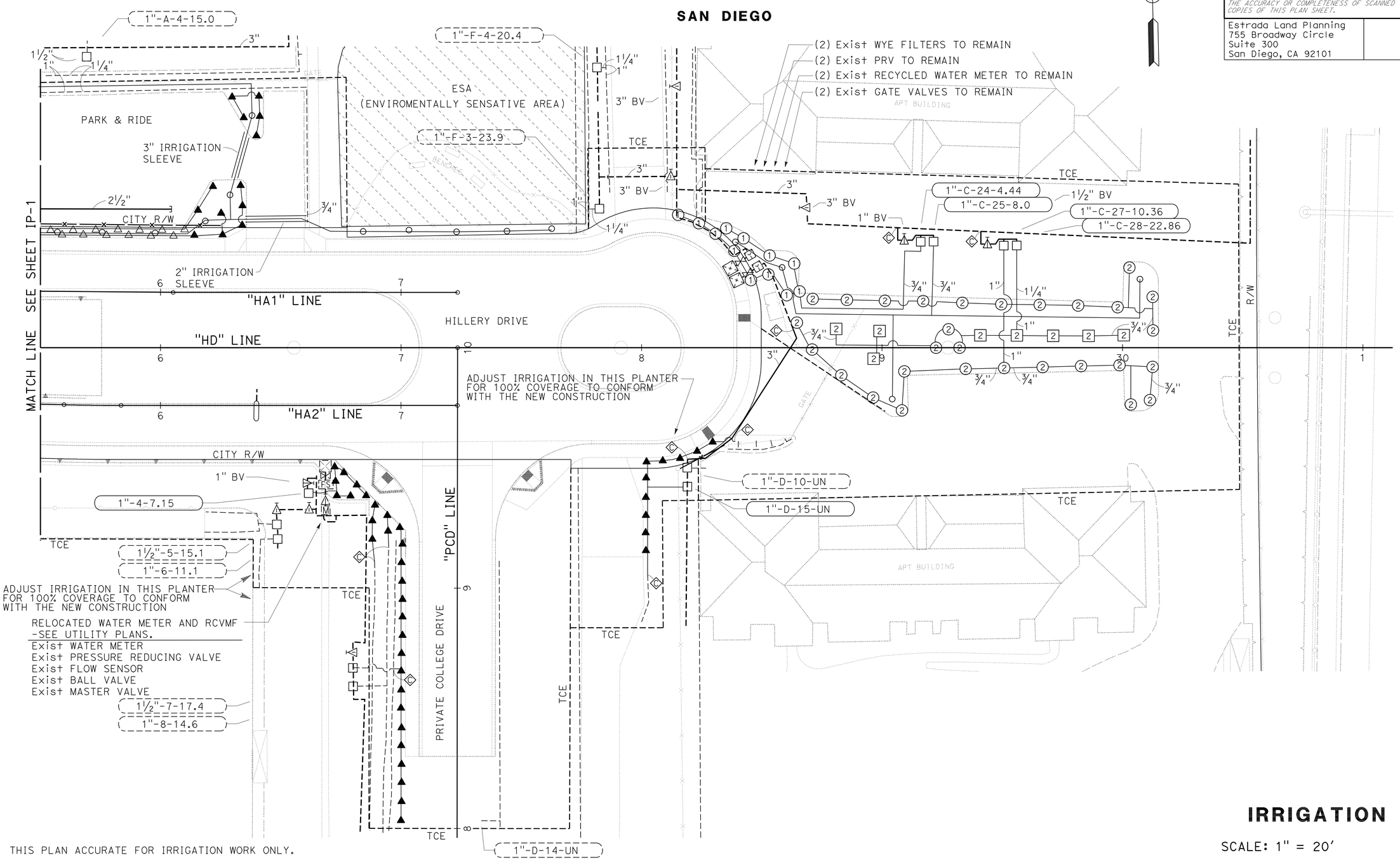

THIS PLAN ACCURATE FOR IRRIGATION WORK ONLY.

IRRIGATION PLAN

SCALE: 1" = 20'

IP-2

REVISED BY	DATE REVISED
KEVIN NGUYEN	DAVID PRECIADO

CALCULATED-DESIGNED BY | CHECKED BY

CONSULTANT FUNCTIONAL SUPERVISOR: RICHARD LEJA

STATE OF CALIFORNIA - DEPARTMENT OF TRANSPORTATION

Caltrans

LAST REVISION 02-08-11 | DATE PLOTTED => 27-OCT-2011 | TIME PLOTTED => 09:57

Dist	COUNTY	ROUTE	POST MILES TOTAL PROJECT	SHEET No.	TOTAL SHEETS
11	SD	15	M15.0/M16.4	331	610

REGISTERED LANDSCAPE ARCHITECT

10-24-11
PLANS APPROVAL DATE

LICENSED LANDSCAPE ARCHITECT
VICKI ESTRADA NOTESS
04-30-12
Renewal Date
01-11-11
Date
STATE OF CALIFORNIA

THE STATE OF CALIFORNIA OR ITS OFFICERS OR AGENTS SHALL NOT BE RESPONSIBLE FOR THE ACCURACY OR COMPLETENESS OF SCANNED COPIES OF THIS PLAN SHEET.

Estrada Land Planning
755 Broadway Circle
Suite 300
San Diego, CA 92101

NOTES:

1. FOR ACCURATE RIGHT OF WAY AND ACCESS DATA, CONTACT RIGHT OF WAY ENGINEERING AT THE DISTRICT OFFICE.
2. IRRIGATION SYSTEM USING RECYCLED WATER.

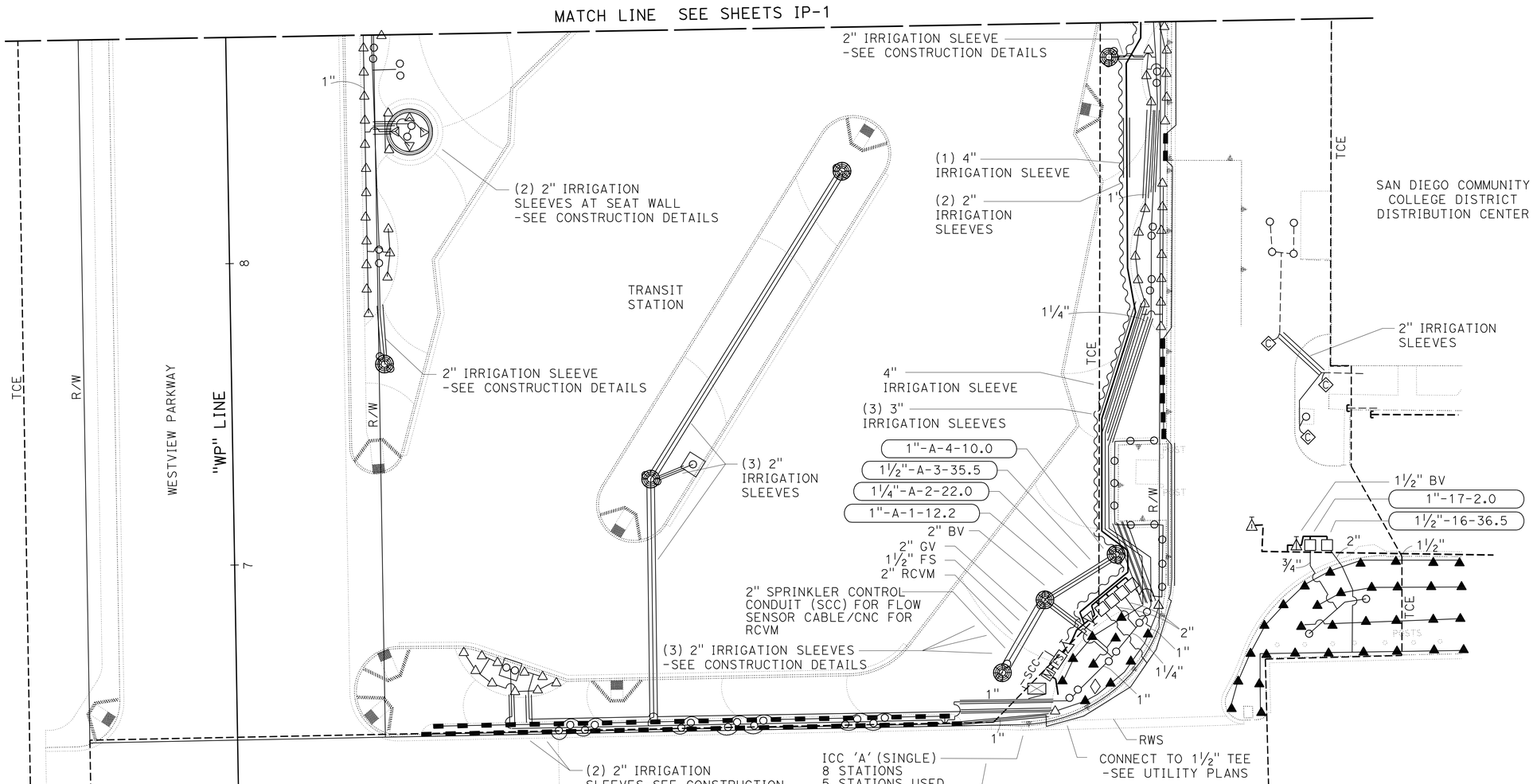

THIS PLAN ACCURATE FOR IRRIGATION WORK ONLY.

IRRIGATION PLAN

SCALE: 1" = 20'

IP-3

REVISED BY	DATE REVISED
KEVIN NGUYEN	DAVID PRECIADO

CALCULATED-DESIGNED BY
CHECKED BY

CONSULTANT FUNCTIONAL SUPERVISOR
RICHARD LEJA

STATE OF CALIFORNIA - DEPARTMENT OF TRANSPORTATION
Caltrans

LAST REVISION 02-08-11
DATE PLOTTED => 27-OCT-2011
TIME PLOTTED => 09:57

Dist	COUNTY	ROUTE	POST MILES TOTAL PROJECT	SHEET No.	TOTAL SHEETS
11	SD	15	M15.0/M16.4	332	610

REGISTERED LANDSCAPE ARCHITECT

10-24-11
PLANS APPROVAL DATE

LICENSED LANDSCAPE ARCHITECT VICKI ESTRADA NOTRES Registered Landscape Architect 04-30-12 Renewal Date 01-11-11 Date STATE OF CALIFORNIA

THE STATE OF CALIFORNIA OR ITS OFFICERS OR AGENTS SHALL NOT BE RESPONSIBLE FOR THE ACCURACY OR COMPLETENESS OF SCANNED COPIES OF THIS PLAN SHEET.

Estrada Land Planning
755 Broadway Circle
Suite 300
San Diego, CA 92101

SPRINKLER SCHEDULE

SYMBOL	TYPE	DESCRIPTION	SPRAY PATTERN	OPERATING PRESSURE (PSI)	PRESSURE COMPENSATING	PLUS / MINUS 5% ② DISCHARGE: GALLONS PER SECOND (GPS)	GALLONS PER MINUTE (GPM)	GALLONS PER HOUR (GPH)	RADIUS (Ft)	WIDTH x LENGTH (Ft)	MATERIAL	NOZZLE SIZE (INCH)	INLET CONNECTION (NPT) (DN IN INCHES)(INCH)	POSITIVE-LOCKING ADJ ARC STOP	BACKSPLASH PREVENTER	DIFFUSER PIN	DISTANCE CONTROL FLAP	ADJ DISCHARGE	RISER: TYPE	RISER MATERIAL: PLASTIC	GALVANIZED	RISER: SIZE (IPS) (INCH)	HEIGHT (INCH)	FLOW SHUTOFF DEVICE	SWING JOINT (TYPE)	RISER SUPPORT	SPRINKLER PROTECTOR (TYPE)	REMARKS
①	A-1	GEAR DRIVEN	P	40	-	-	.37	-	14	-	PL	-	¾	-	-	X	-	-	I	X	-	¾	-	-	1	-	-	③⑦⑩ 12" POP-UP
[2]	A-2	GEAR DRIVEN	F	40	-	-	1.47	-	19	-	PL	-	¾	-	-	X	-	-	I	X	-	¾	-	-	1	-	-	③⑩ 12" POP-UP
②	A-2	GEAR DRIVEN	P	40	-	-	.74	-	19	-	PL	-	¾	-	-	X	-	-	I	X	-	¾	-	-	1	-	-	③⑦⑩ 12" POP-UP
△	B-1	SHRUB SPRAY	F	30	-	-	1.05	-	8	-	PL	-	½	-	-	X	-	X	I	X	-	½	-	-	1	-	-	⑧⑨⑩ 12" POP-UP
△	B-1	SHRUB SPRAY	H	30	-	-	.52	-	8	-	PL	-	½	-	-	X	-	X	I	X	-	½	-	-	1	-	-	⑧⑨⑩ 12" POP-UP
△	B-1	SHRUB SPRAY	Q	30	-	-	.26	-	8	-	PL	-	½	-	-	X	-	X	I	X	-	½	-	-	1	-	-	⑧⑨⑩ 12" POP-UP
▲	B-1	SHRUB SPRAY	F	30	-	-	2.6	-	12	-	PL	-	½	-	-	X	-	X	I	X	-	½	-	-	1	-	-	⑧⑨⑩ 12" POP-UP
▲	B-1	SHRUB SPRAY	H	30	-	-	1.3	-	12	-	PL	-	½	-	-	X	-	X	I	X	-	½	-	-	1	-	-	⑧⑨⑩ 12" POP-UP
▲	B-1	SHRUB SPRAY	Q	30	-	-	.65	-	12	-	PL	-	½	-	-	X	-	X	I	X	-	½	-	-	1	-	-	⑧⑨⑩ 12" POP-UP
▬	B-7	SHRUB SPRAY	F	30	-	-	.40	-	8x4	-	PL	-	½	-	-	X	-	X	I	X	-	½	-	-	1	-	-	⑧⑨⑩
▬	B-7	SHRUB SPRAY	H	30	-	-	.20	-	8x4	-	PL	-	½	-	-	X	-	X	I	X	-	½	-	-	1	-	-	⑧⑨⑩
▬	B-7	SHRUB SPRAY	Q	30	-	-	.12	-	8x4	-	PL	-	½	-	-	X	-	X	I	X	-	½	-	-	1	-	-	⑧⑨⑩
○	C-2 Mod	MODIFIED FLOOD BUBBLER	-	30	X	-	0.5	-	-	-	PL	-	½	-	-	-	-	-	III	X	-	½	-	-	1	-	-	④⑨⑩ 2 BUBBLERS PER TREE, 1 BUBBLER PER VINE

NOTE: X IN BOX DENOTES REQUIREMENT

APPLICABLE WHEN CIRCLED BELOW:

1 - SEE SPECIAL PROVISIONS.
② - IF A PRESSURE COMPENSATING DEVICE IS SPECIFIED, THE DISCHARGE AND RADII SHOWN REFLECT ITS USE.
③ - SHALL HAVE AN INTERNAL OR EXTERNAL CHECK VALVE.
④ - NON-ADJUSTABLE DISCHARGE RATE.
5 - REQUIRED ADJACENT TO SHOULDERS, CURBS, SIDEWALKS, AND DIKES.
6 - UNLESS OTHERWISE SHOWN ON PLANS.
⑦ - ADJUSTABLE ARC.
⑧ - MATCHED PRECIPITATION RATE NOZZLES.
⑨ - REFER TO PIPE SIZING CHARTS.
⑩ - OR EQUAL PRODUCT, FOR USE ON IRRIGATION SYSTEMS WITHIN PRIVATE PROPERTY.

ABBREVIATIONS:

Adj — ADJUSTABLE
B/B — BRASS/BRONZE
B/B/PL — BRASS/BRONZE/PLASTIC
B/PL — BRASS/PLASTIC
CST — CENTER STRIP
DN — DIAMETER NOMINAL
EST — END STRIP
Ft — FEET
F — FULL CIRCLE
F/P — FULL/PART CIRCLE
GPH — GALLONS PER HOUR
GPM — GALLONS PER MINUTE
GPS — GALLONS PER SECOND
H — HALF CIRCLE
IPS — IRON PIPE SIZE
NPT — NATIONAL PIPE THREAD
P — PART CIRCLE
PL — PLASTIC
PSI — POUNDS PER SQUARE INCH
Q — QUARTER CIRCLE
SST — SIDE STRIP
T — THIRD CIRCLE
TQ — THREE QUARTER CIRCLE
TT — TWO THIRDS CIRCLE

LEGEND:

X-XX-XX
- IRRIGATION CONTROLLER
- CONTROL VALVE STATION
- GALLONS PER MINUTE (GPM)

X-XX-UN
- IRRIGATION CONTROLLER
- CONTROL VALVE STATION
- GALLONS PER MINUTE (GPM)
- UNKNOWN

EXISTING VALVE CODE

XX-X-XX-XX
- RCV SIZE
- MASTER IRRIGATION CONTROLLER
- CONTROL VALVE STATION
- GALLONS PER MINUTE (GPM)

XX-X-XX-UN
- RCV SIZE
- MASTER IRRIGATION CONTROLLER
- CONTROL VALVE STATION
- GALLONS PER MINUTE (GPM)
- UNKNOWN

PROPOSED VALVE CODE

X-XX — EXISTING IRRIGATION VALVE TO REMAIN/MODIFIED
~~X-XX~~ — EXISTING IRRIGATION VALVE TO BE REMOVED
— EXISTING IRRIGATION TO BE REMOVED
◊ — RECYCLED WATER WARNING SIGN (POST MOUNTED) (RWS)

NOTES:

1. ALL LATERAL PIPE NOT LABELED SHALL BE 1", OR AS SHOWN ON PIPE SIZING CHARTS.
2. ALL MAINLINE PIPE WHICH HAS A CHANGE IN DIRECTION SHALL HAVE (2) 45° COUPLINGS.
3. PULL ONE ADDITIONAL CNC WIRE FROM EACH SPLICE LOCATION TO THE LAST VALVE BOX AT EACH VALVE MANIFOLD AT THE END OF REPLACEMENT MAINLINE.
4. ALL SPRINKLER HEADS SHALL BE FITTED WITH PURPLE CAPS COMPATIBLE FOR USE WITH RECYCLED WATER.
5. ALL IRRIGATION EQUIPMENT SHALL BE PURPLE IN COLOR AND/OR LABELED AS PER SAN DIEGO COUNTY DEPARTMENT OF HEALTH REQUIREMENTS. NO PONDING, RUNOFF, OR OVERSPRAY IS PERMITTED.

LANDSCAPE DETAILS

NO SCALE

LD-1

REVISED BY | DATE REVISED
KEVIN NGUYEN | DAVID PRECIADO
CALCULATED-DESIGNED BY | CHECKED BY
CONSULTANT FUNCTIONAL SUPERVISOR | RICHARD LEJA

STATE OF CALIFORNIA - DEPARTMENT OF TRANSPORTATION
Caltrans

LAST REVISION 02-08-11 | DATE PLOTTED => 27-OCT-2011 | TIME PLOTTED => 09:58

Dist	COUNTY	ROUTE	POST MILES TOTAL PROJECT	SHEET No.	TOTAL SHEETS
11	SD	15	M15.0/M16.4	333	610

REGISTERED LANDSCAPE ARCHITECT

10-24-11
PLANS APPROVAL DATE

LICENSED LANDSCAPE ARCHITECT VICKI ESTRADA NOTRIS 04-30-12 Renewal Date 01-11-11 Date STATE OF CALIFORNIA

THE STATE OF CALIFORNIA OR ITS OFFICERS OR AGENTS SHALL NOT BE RESPONSIBLE FOR THE ACCURACY OR COMPLETENESS OF SCANNED COPIES OF THIS PLAN SHEET.

Estrada Land Planning
755 Broadway Circle
Suite 300
San Diego, CA 92101

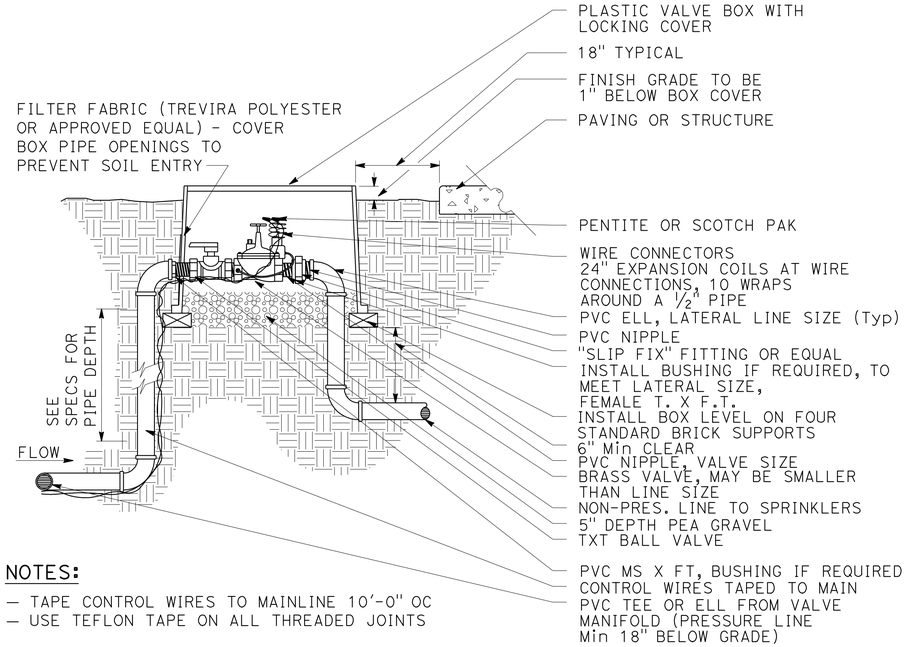

NOTES:

- TAPE CONTROL WIRES TO MAINLINE 10'-0" OC
- USE TEFLON TAPE ON ALL THREADED JOINTS

REMOTE CONTROL VALVE (PRIVATE)

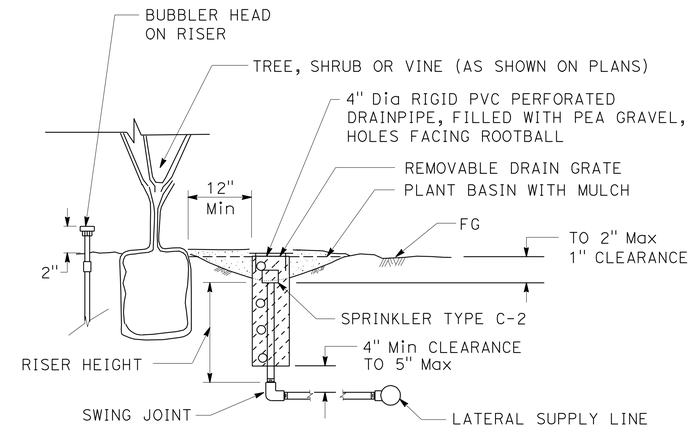

NOTES:

INSTALL SPRINKLER TYPE C-2 Mod ON UP-HILL SIDE OF PLANT WHEN ON SLOPE.

SECTION

TYPE C-2 (Mod) SPRINKLER INSTALLATION

MULCH (SHREDDED BARK) QUANTITY SUMMARY

SHEET NUMBER	CY (N)	CF (N)	CY (N)
PP-1	48.3	-	48.3
PP-2	15.3	-	15.3
PP-3	34.9	-	34.9
BASIN MULCH (1)	-	275	10.2
		TOTAL	108.7

(N) FOR INFORMATION ONLY,
NOT A SEPARATE BID ITEM.
(1) INCLUDED IN AREA CY QUANTITIES

THRUST BLOCK DETAIL

INSTALLATION	TYPE FITTING	INSTALLATION	TYPE FITTING
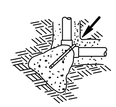	90° ELL	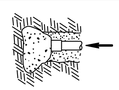	DEAD END
	BEND 45° 22.5° 11.25°		GATE VALVE
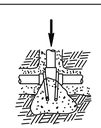	TEE	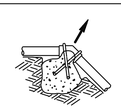	VERTICAL BEND (TYPE I) 45° 22.5° 11.25°
		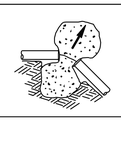	OR VERTICAL BEND (TYPE II) 45° 22.5° 11.25°

NOTES:
Min 1 CF PCC FOR PIPE 1½" AND SMALLER.
Min 2 CF PCC FOR PIPE 2" AND LARGER.
USE #10 REINFORCING BAR WHEN REQUIRED (Ω).

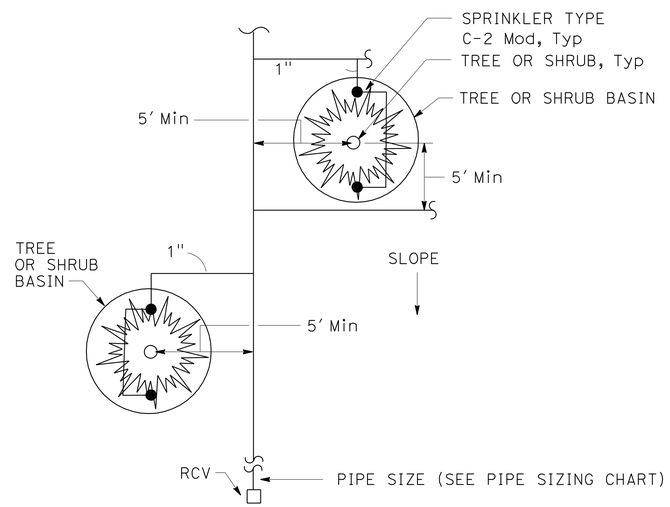

TYPE C-2 (Mod) SPRINKLER INSTALLATION

MULCH (GRAVEL) QUANTITY SUMMARY - BASIN MULCH

SHEET NUMBER	SQFT (N)	CF (N)	CY (N)
PP-1	-	-	0.3
PP-2	-	-	0.0
PP-3	-	-	2.1
		TOTAL	2.4

(N) FOR INFORMATION ONLY,
NOT A SEPARATE BID ITEM.

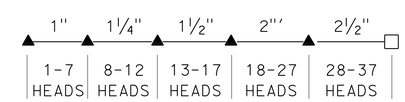

PIPE SIZING CHART
TYPE B-1 AND B-7 SHRUB SPRAY HEADS (HALF)

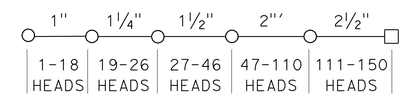

PIPE SIZING CHART
TYPE C-2 Mod FLOOD BUBBLERS

LANDSCAPE DETAILS

NO SCALE

LD-2

REVISED BY | DATE REVISED
KEVIN NGUYEN | DAVID PRECIADO
CALCULATED-DESIGNED BY | CHECKED BY
CONSULTANT FUNCTIONAL SUPERVISOR: RICHARD LEJA

STATE OF CALIFORNIA - DEPARTMENT OF TRANSPORTATION
Caltrans

LAST REVISION 08-12-11 | DATE PLOTTED => 27-OCT-2011 | TIME PLOTTED => 09:58

Dist	COUNTY	ROUTE	POST MILES TOTAL PROJECT	SHEET No.	TOTAL SHEETS
11	SD	15	M15.0/M16.4	334	610

REGISTERED LANDSCAPE ARCHITECT

10-24-11
PLANS APPROVAL DATE

LICENSED LANDSCAPE ARCHITECT
VICKI ESTRADA NO. 5055
Signature
04-30-12
Renewal Date
01-11-11
Date
STATE OF CALIFORNIA

THE STATE OF CALIFORNIA OR ITS OFFICERS OR AGENTS SHALL NOT BE RESPONSIBLE FOR THE ACCURACY OR COMPLETENESS OF SCANNED COPIES OF THIS PLAN SHEET.

Estrada Land Planning
755 Broadway Circle
Suite 300
San Diego, CA 92101

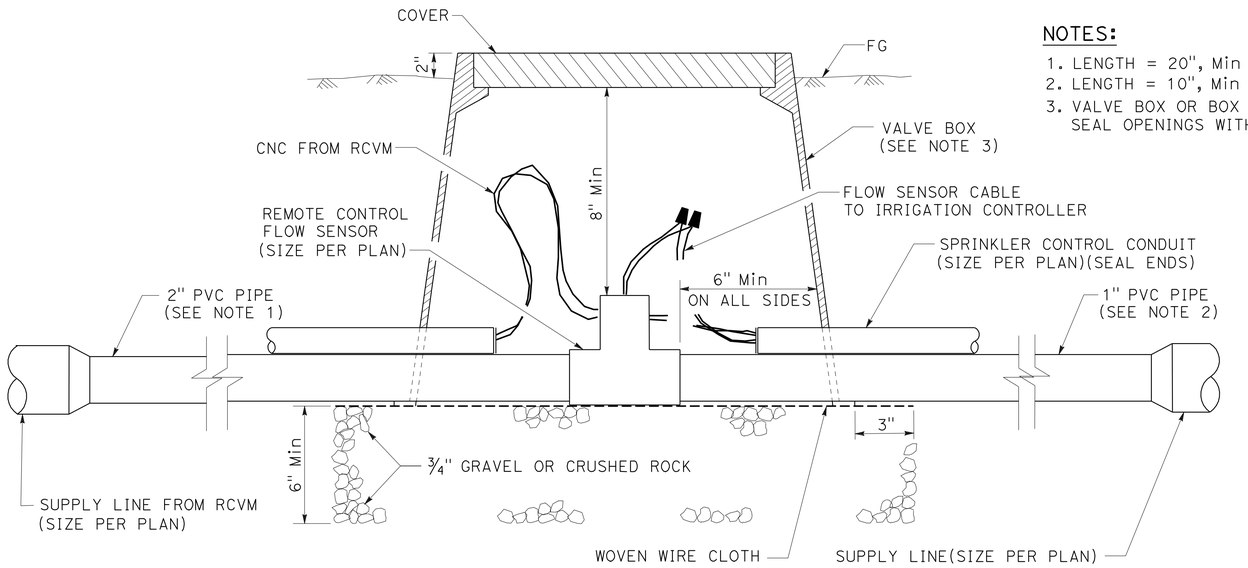

NOTES:

1. LENGTH = 20", Min FROM FITTING TO FLOW SENSOR.
2. LENGTH = 10", Min FROM FLOW SENSOR TO FITTING.
3. VALVE BOX OR BOX EXTENSION WITH 2 SIDE OPENINGS. SEAL OPENINGS WITH No. 30 ASPHALT-SATURATED FELT.

FLOW SENSOR

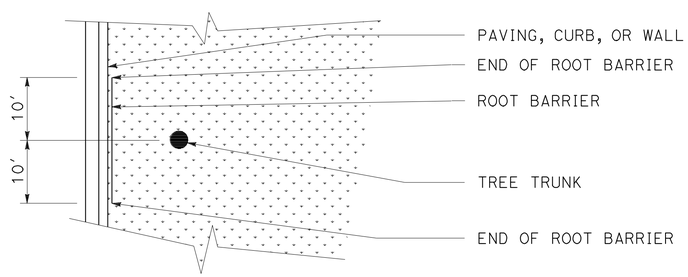

PLAN VIEW

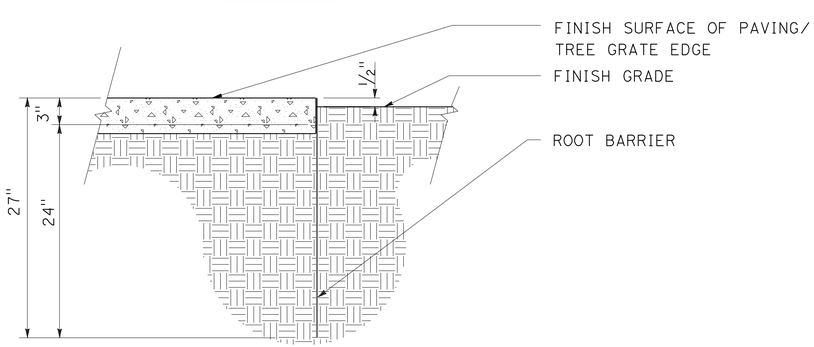

SECTION VIEW

ROOT BARRIER

LANDSCAPE DETAILS

NO SCALE

LD-3

REVISED BY | DATE REVISED
KEVIN NGUYEN | DAVID PRECIADO
CALCULATED-DESIGNED BY | CHECKED BY
CONSULTANT FUNCTIONAL SUPERVISOR
RICHARD LEJA

STATE OF CALIFORNIA - DEPARTMENT OF TRANSPORTATION
Caltrans

LAST REVISION 02-08-11 | DATE PLOTTED => 27-OCT-2011 | TIME PLOTTED => 09:58

Dist	COUNTY	ROUTE	POST MILES TOTAL PROJECT	SHEET No.	TOTAL SHEETS
11	SD	15	M15.0/M16.4	335	610

REGISTERED LANDSCAPE ARCHITECT

10-24-11
PLANS APPROVAL DATE

LICENSED LANDSCAPE ARCHITECT
VICKI ESTRADA NO. 5653
Signature
04-30-12
Renewal Date
01-11-11
Date
STATE OF CALIFORNIA

THE STATE OF CALIFORNIA OR ITS OFFICERS OR AGENTS SHALL NOT BE RESPONSIBLE FOR THE ACCURACY OR COMPLETENESS OF SCANNED COPIES OF THIS PLAN SHEET.

Estrada Land Planning
755 Broadway Circle
Suite 300
San Diego, CA 92101

RECYCLED WATER WARNING SIGN (N)

SHEET	POST MOUNTED EA (N)	FENCE MOUNTED EA (N)
IP-1	2	0
IP-2	-	0
IP-3	1	0
TOTAL	3	0

(N)-NOT A SEPARATE PAY ITEM,
FOR INFORMATION ONLY.

ROOT BARRIER

SHEET	ROOT BARRIER LF (N)
PP-1	593
PP-2	263
PP-3	600
TOTAL	1,456

(N) FOR INFORMATION ONLY,
NOT A SEPARATE BID ITEM.

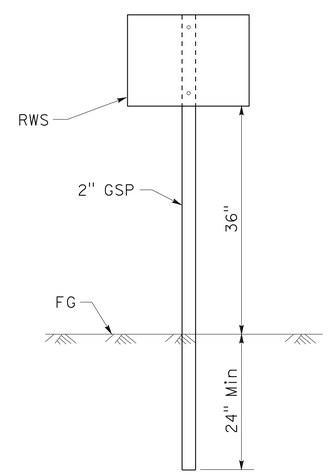

NOTE:
ATTACH RWS TO POST WITH 1/4" Dia THEFT PROOF BOLTS.

RECYCLED WATER WARNING SIGN (RWS) (POST MOUNTED)

LANDSCAPE DETAILS

NO SCALE

LD-4

REVISED BY | DATE REVISED
KEVIN NGUYEN | DAVID PRECIADO
CALCULATED-DESIGNED BY | CHECKED BY
CONSULTANT FUNCTIONAL SUPERVISOR
RICHARD LEJA

STATE OF CALIFORNIA - DEPARTMENT OF TRANSPORTATION
Caltrans

60099959 27-OCT-2011 09:58 $FILE$

LAST REVISION 02-08-11 | DATE PLOTTED => 27-OCT-2011 | TIME PLOTTED => 09:58

Dist	COUNTY	ROUTE	POST MILES TOTAL PROJECT	SHEET No.	TOTAL SHEETS
11	SD	15	M15.0/M16.4	336	610

REGISTERED ELECTRICAL ENGINEER — DATE 01-03-11

PLANS APPROVAL DATE 10-24-11

REGISTERED PROFESSIONAL ENGINEER — PARSEKH L. TOPJIAN — No. E12845 — Exp. 09-30-12 — ELECTRICAL — STATE OF CALIFORNIA

THE STATE OF CALIFORNIA OR ITS OFFICERS OR AGENTS SHALL NOT BE RESPONSIBLE FOR THE ACCURACY OR COMPLETENESS OF SCANNED COPIES OF THIS PLAN SHEET.

AECOM
7807 CONVOY COURT, SUITE 200
SAN DIEGO, CA 92111

CONDUIT NOTES: (TSO)

1. 2"C, 2#8 (SIGN)
2. 2"C, 2#6 (LTG), 2#8 (SIGN)
3. 2"C, 2#6 (LTG)

NOTES: (TSO)

1. CONNECT BRIDGE MOUNTED SIGN LIGHTING CONDUIT TO EXISTING CONDUIT
2. FOR ACCURATE RIGHT OF WAY AND ACCESS DATA, CONTACT RIGHT OF WAY ENGINEERING AT THE DISTRICT OFFICE.

LEGEND:

- N C — EXISTING CONDUIT, NO CHANGE
- FO — FIBER OPTIC CABLE
- ESA — ENVIRONMENTALLY SENSITIVE AREA
- 3" Dia 7'-0" HIGH LIGHTING POLE WITH 1 LUMINARE ON TOP
- 3" Dia 11'-0" HIGH LIGHTING POLE WITH 2 LUMINARES ON TOP
- 25' HIGH LIGHTING POLE WITH 1 LUMINARE ON TOP

ABBREVIATIONS:

COMM	FIBER OPTIC COMMUNICATION SYSTEM
EX	EXISTING
FOXXX	FIBER OPTIC CABLE XXX DENOTES NUMBER OF SINGLEMODE FIBERS
SDG&E	SAN DIEGO GAS AND ELECTRIC
TSO	THIS SHEET ONLY

ILLUMINATED SIGNS AND APPURTENANCES

SIGN No.	Sta "SD-15M"	QUANTITY OF 85 W ISL	VOLTAGE	LOAD	REMARKS
1	825+50	1	240	87 W	SC1A SIGN CONTROL
2	845+50	1	240	87 W	SC1A SIGN CONTROL

SEE STANDARD PLANS ES-15C AND RSP ES-15D

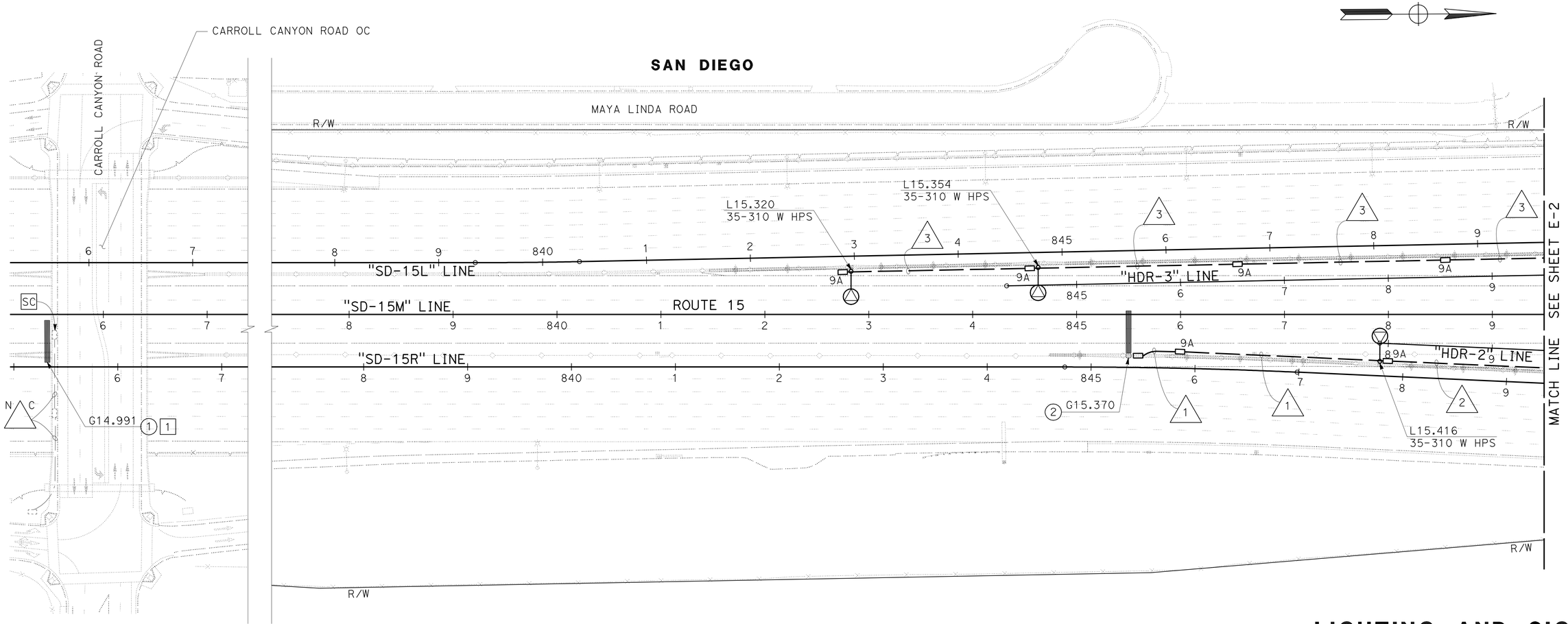

THIS PLAN IS ACCURATE FOR ELECTRICAL WORK ONLY.

LIGHTING AND SIGN ILLUMINATION

SCALE: 1" = 50'

E-1

STATE OF CALIFORNIA - DEPARTMENT OF TRANSPORTATION — Caltrans

CONSULTANT FUNCTIONAL SUPERVISOR: RICHARD LEJA

CALCULATED-DESIGNED BY: PARSEKH TOPJIAN — CHECKED BY: MICHAEL CRULL — REVISED BY — DATE REVISED

LAST REVISION 02-08-11 — DATE PLOTTED => 27-OCT-2011 — TIME PLOTTED => 09:58

Dist	COUNTY	ROUTE	POST MILES TOTAL PROJECT	SHEET No.	TOTAL SHEETS
11	SD	15	M15.0/M16.4	337	610

REGISTERED ELECTRICAL ENGINEER — DATE 01-03-11

PLANS APPROVAL DATE 10-24-11

REGISTERED PROFESSIONAL ENGINEER — PARSEKH L. TOPJIAN — No. E12845 — Exp. 09-30-12 — ELECTRICAL — STATE OF CALIFORNIA

THE STATE OF CALIFORNIA OR ITS OFFICERS OR AGENTS SHALL NOT BE RESPONSIBLE FOR THE ACCURACY OR COMPLETENESS OF SCANNED COPIES OF THIS PLAN SHEET.

AECOM
7807 CONVOY COURT, SUITE 200
SAN DIEGO, CA 92111

NOTE:

FOR ACCURATE RIGHT OF WAY AND ACCESS DATA, CONTACT RIGHT OF WAY ENGINEERING AT THE DISTRICT OFFICE.

CONDUIT NOTES: (TSO)

1. 2"C, 2#6 (LTG), 2#8 (SIGN)
2. 2"C, 2#6 (LTG)
3. 2"C, 4#6 (LTG), 2#8 (SIGN), 4 DLC
4. 2"C, 4#6 (LTG), 2#8 (SIGN), 4 DLC
5. 2"C, FO144 (COMM)
6. 2"C, 2#6 (LTG), 2#8 (SIGN), 1 DLC
7. 2"C, 2#6 (LTG), 1 DLC
8. 2"C, 2#6 (LTG), 2#8 (SIGN), 2 DLC
9. 2"C, 4#6 (LTG), 2#8 (SIGN), 3 DLC

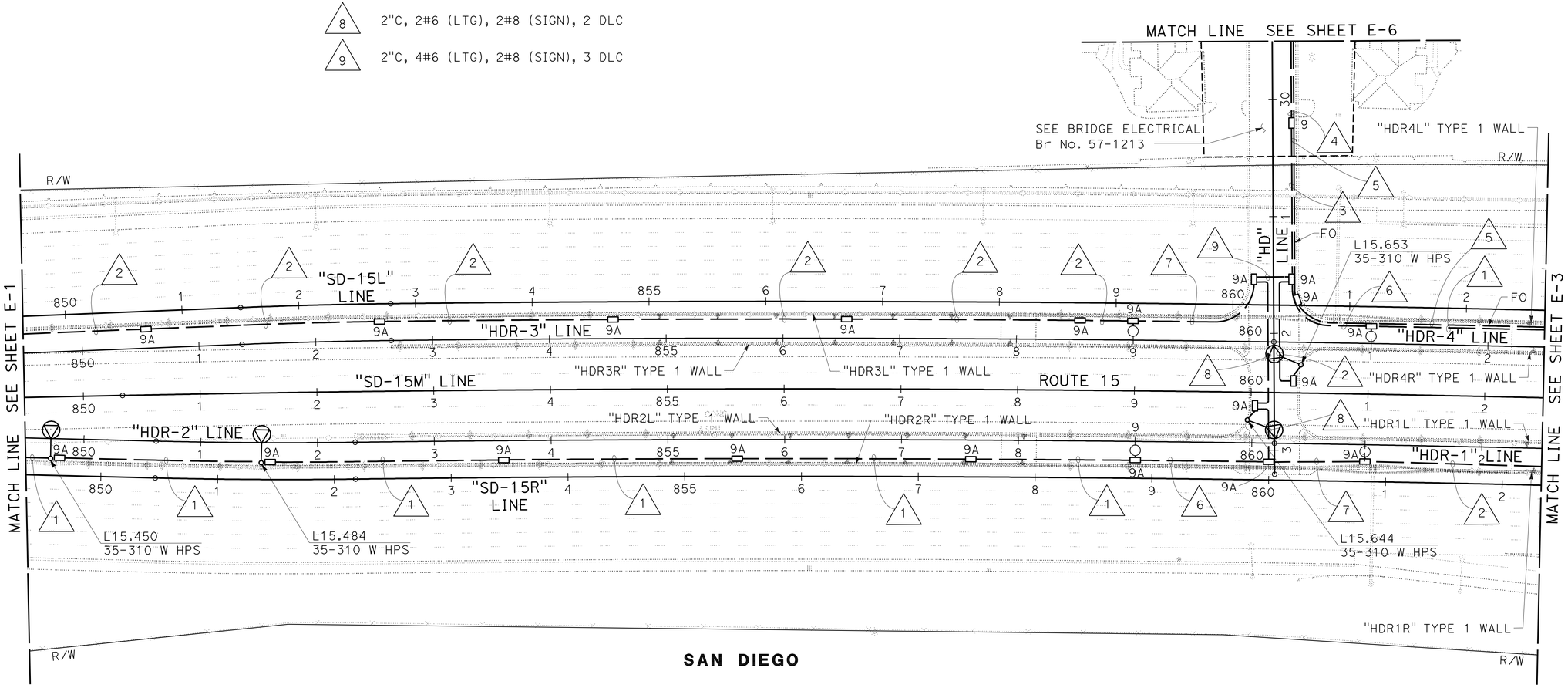

THIS PLAN IS ACCURATE FOR ELECTRICAL WORK ONLY.

LIGHTING AND SIGN ILLUMINATION
FIBER OPTIC COMMUNICATION SYSTEM

SCALE: 1" = 50'

E-2

REVISED BY | DATE REVISED

PARSEKH TOPJIAN | MICHAEL CRULL

CALCULATED-DESIGNED BY | CHECKED BY

CONSULTANT FUNCTIONAL SUPERVISOR: RICHARD LEJA

STATE OF CALIFORNIA - DEPARTMENT OF TRANSPORTATION

Caltrans

LAST REVISION 02-08-11 | DATE PLOTTED => 27-OCT-2011 | TIME PLOTTED => 09:58

Dist	COUNTY	ROUTE	POST MILES TOTAL PROJECT	SHEET No.	TOTAL SHEETS
11	SD	15	M15.0/M16.4	338	610

REGISTERED ELECTRICAL ENGINEER — DATE 01-03-11

PLANS APPROVAL DATE 10-24-11

REGISTERED PROFESSIONAL ENGINEER — PARSEKH L. TOPJIAN No. E12845 Exp. 09-30-12 ELECTRICAL — STATE OF CALIFORNIA

THE STATE OF CALIFORNIA OR ITS OFFICERS OR AGENTS SHALL NOT BE RESPONSIBLE FOR THE ACCURACY OR COMPLETENESS OF SCANNED COPIES OF THIS PLAN SHEET.

AECOM
7807 CONVOY COURT, SUITE 200
SAN DIEGO, CA 92111

NOTE:

FOR ACCURATE RIGHT OF WAY AND ACCESS DATA, CONTACT RIGHT OF WAY ENGINEERING AT THE DISTRICT OFFICE.

CONDUIT NOTES: (TSO)

1. 2"C, 2#6 (LTG)
2. 2"C, 2#8 (SIGN)
3. 2"C, 2#6 (LTG), 2#8 (SIGN)
4. 2"C, FO144 (COMM)
5. EX 2"C mt, ADD 1 FO144

ILLUMINATED SIGNS AND APPURTENANCES

SIGN No.	Sta "SD-15M"	QUANTITY OF 85 W ISL	VOLTAGE	LOAD	REMARKS
3	872+08	1	240	87 W	SC1A SIGN CONTROL

SEE STANDARD PLANS ES-15C AND RSP ES-15D

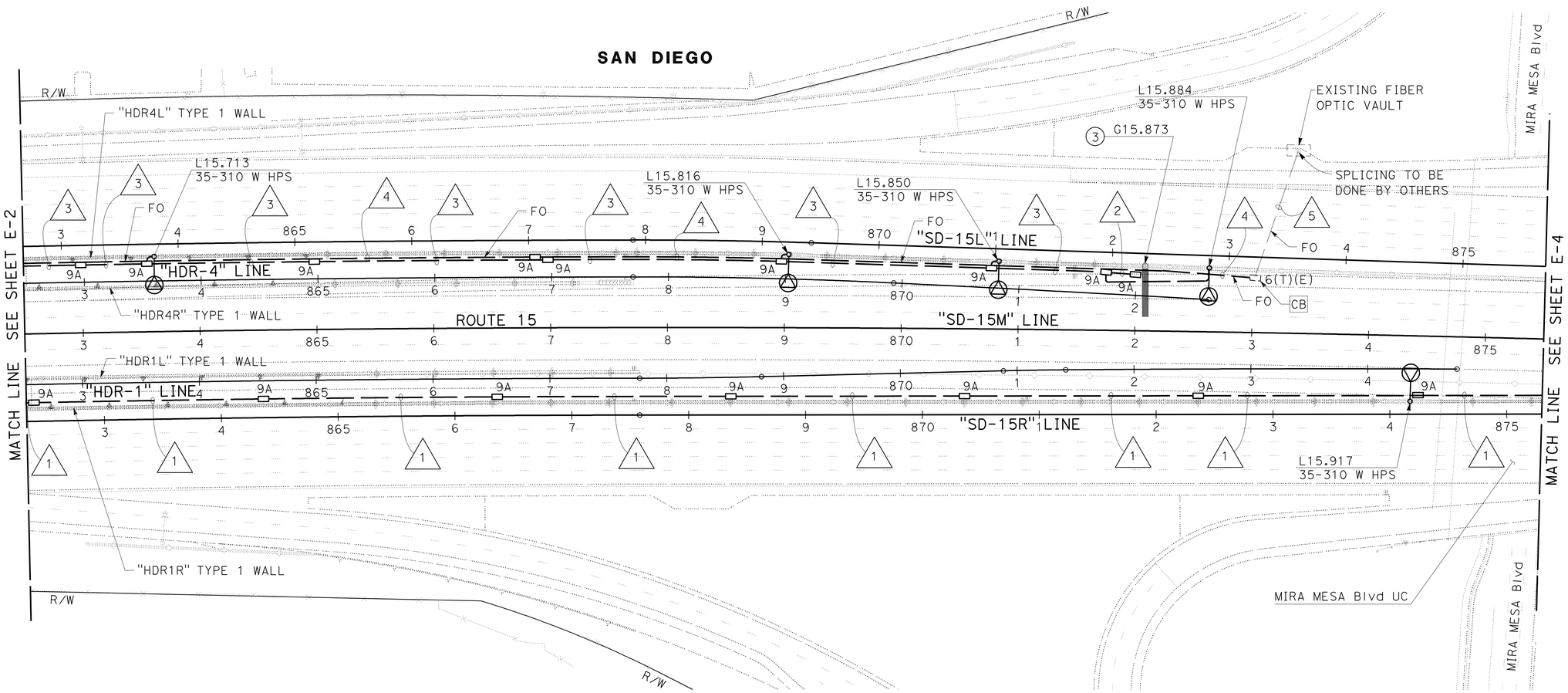

THIS PLAN IS ACCURATE FOR ELECTRICAL WORK ONLY.

LIGHTING AND SIGN ILLUMINATION FIBER OPTIC COMMUNICATION SYSTEM

SCALE: 1" = 50'

E-3

PARSEKH TOPJIAN — MICHAEL CRULL — RICHARD LEJA — REVISED BY — DATE REVISED — CALCULATED-DESIGNED BY — CHECKED BY — CONSULTANT FUNCTIONAL SUPERVISOR

STATE OF CALIFORNIA - DEPARTMENT OF TRANSPORTATION — Caltrans

LAST REVISION 02-08-11 — DATE PLOTTED => 27-OCT-2011 — TIME PLOTTED => 09:58

Dist	COUNTY	ROUTE	POST MILES TOTAL PROJECT	SHEET No.	TOTAL SHEETS
11	SD	15	M15.0/M16.4	339	610

REGISTERED ELECTRICAL ENGINEER — 01-03-11 DATE

10-24-11
PLANS APPROVAL DATE

REGISTERED PROFESSIONAL ENGINEER — PARSEKH L. TOPJIAN No. E12845 Exp. 09-30-12 ELECTRICAL — STATE OF CALIFORNIA

THE STATE OF CALIFORNIA OR ITS OFFICERS OR AGENTS SHALL NOT BE RESPONSIBLE FOR THE ACCURACY OR COMPLETENESS OF SCANNED COPIES OF THIS PLAN SHEET.

AECOM
7807 CONVOY COURT, SUITE 200
SAN DIEGO, CA 92111

CONDUIT NOTES: (TSO)

1. 2"C, 2#6 (LTG)
2. EXISTING 2"C, 2#6 (ltg)

NOTES: (TSO)

1. CONNECT OVERHEAD SIGN LIGHTING TO EXISTING CIRCUIT
2. FOR ACCURATE RIGHT OF WAY AND ACCESS DATA, CONTACT RIGHT OF WAY ENGINEERING AT THE DISTRICT OFFICE.

ILLUMINATED SIGNS AND APPURTENANCES

SIGN No.	Sta "SD-15M"	QUANTITY OF 85 W ISL	VOLTAGE	LOAD	REMARKS
4	881+77	1	240	87 W	SC1A SIGN CONTROL
5	899+40	1	240	87 W	SC1A SIGN CONTROL

SEE STANDARD PLANS ES-15C AND RSP ES-15D

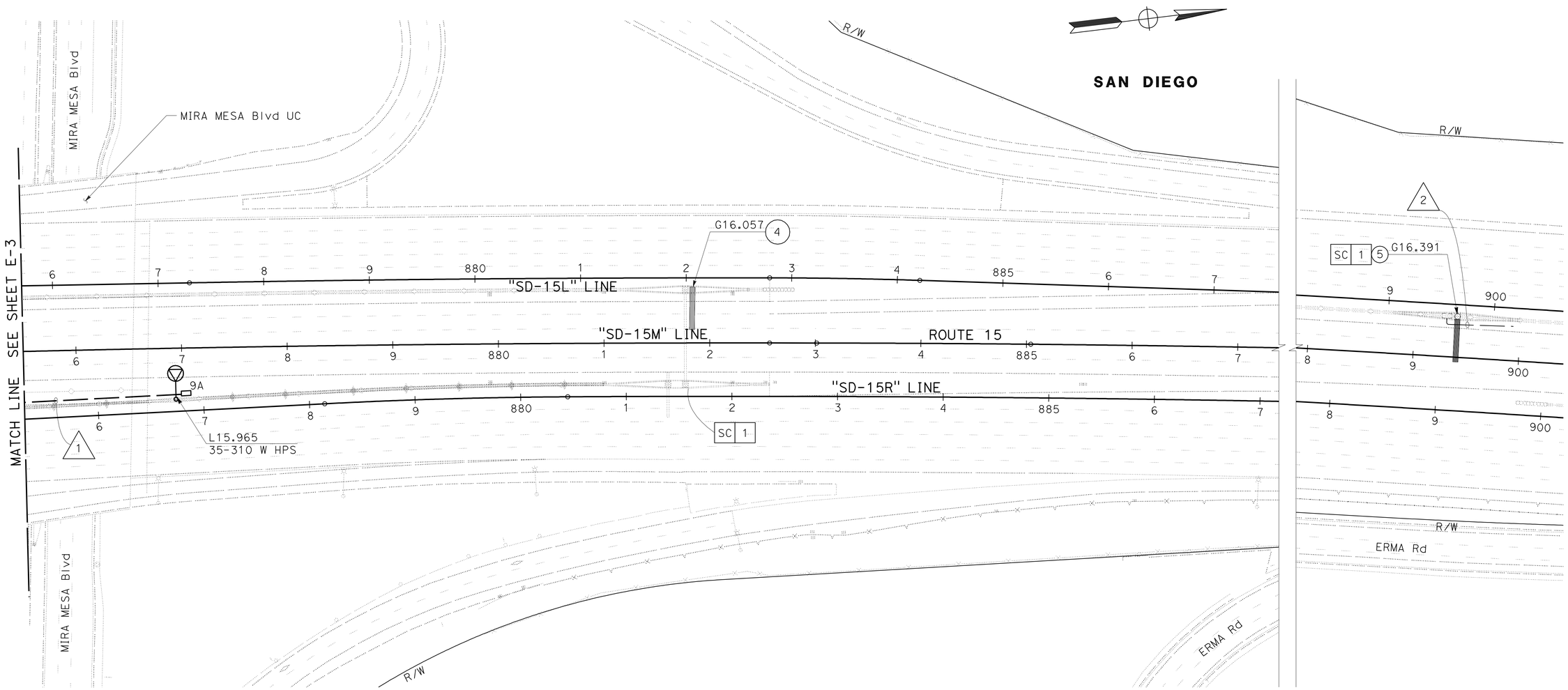

THIS PLAN IS ACCURATE FOR ELECTRICAL WORK ONLY.

LIGHTING AND SIGN ILLUMINATION

SCALE: 1" = 50′

E-4

PARSEKH TOPJIAN — CALCULATED-DESIGNED BY
MICHAEL CRULL — CHECKED BY
RICHARD LEJA — CONSULTANT FUNCTIONAL SUPERVISOR
REVISED BY — DATE REVISED

STATE OF CALIFORNIA - DEPARTMENT OF TRANSPORTATION
Caltrans

LAST REVISION 02-10-11 — DATE PLOTTED => 27-OCT-2011 — TIME PLOTTED => 09:58

Dist	COUNTY	ROUTE	POST MILES TOTAL PROJECT	SHEET No.	TOTAL SHEETS
11	SD	15	M15.0/M16.4	340	610

REGISTERED ELECTRICAL ENGINEER — DATE 01-03-11

PLANS APPROVAL DATE 10-24-11

REGISTERED PROFESSIONAL ENGINEER — PARSEKH L. TOPJIAN No. E12845 Exp. 09-30-12 ELECTRICAL — STATE OF CALIFORNIA

THE STATE OF CALIFORNIA OR ITS OFFICERS OR AGENTS SHALL NOT BE RESPONSIBLE FOR THE ACCURACY OR COMPLETENESS OF SCANNED COPIES OF THIS PLAN SHEET.

AECOM
7807 CONVOY COURT, SUITE 200
SAN DIEGO, CA 92111

CONDUIT NOTES: (TSO)

- 1 — 2"C, 2#8 (SIGN), 6#14 (PEU)
- 2 — 2"C, 2#8 (LTG CITY STREET)
- 3 — 2"C, (MT) (POWER)
- 4 — 3"C, (MT) (COMM)
- 5 — 2"C, 2#1/0, 1#1/0 G (FASTRAK), 2"C, 3#1/0, 1#1/0 G (WAN)
- 6 — 3"C, (MT) (COMM)
- 7 — 2"C, FO144 (COMM)
- 8 — 2"C, (MT) (SPARE)
- 9 — 2"C, (MT) (COMM)
- 10 — 3"C, (MT) (PRIMARY POWER) PER SDG&E
- 11 — 3"C, (MT) (SECONDARY POWER) PER SDG&E

NOTES: (TSO)

1. RL STREET LIGHT. PROVIDE NEW FOUNDATION PER DETAIL SHEET E-6.
2. EXISTING CONDUIT AND CIRCUIT FROM LTG PULL BOX AT WESTVIEW PARKWAY INTERSECTION. APPROXIMATE LENGTH OF CONDUIT TO BE REUSED = 150'.
3. EXISTING CONDUIT AND CIRCUIT.
4. SDG&E TRANSFORMER (TRANSIT STATION)
5. TYPE 334 CABINETS FOR WAN & FASTRAK EQUIPMENT BY OTHERS. PROVIDE FOUNDATIONS PER STANDARD PLAN ES-3C.
6. TYPE III-BF SERVICE EQUIPMENT ENCLOSURE #2. SEE WIRING DIAGRAM ON SHEET E-12.
7. DUAL PHOTOELECTRIC UNIT.
8. FOR ACCURATE RIGHT OF WAY AND ACCESS DATA, CONTACT RIGHT OF WAY ENGINEERING AT THE DISTRICT OFFICE.

ILLUMINATED SIGNS AND APPURTENANCES

SIGN No.	Sta	QUANTITY OF 85 W ISL	VOLTAGE	LOAD	REMARKS
6	24+06	1	240	85 W	SC1A SIGN CONTROL

SEE STANDARD PLANS ES-15C AND RSP ES-15D

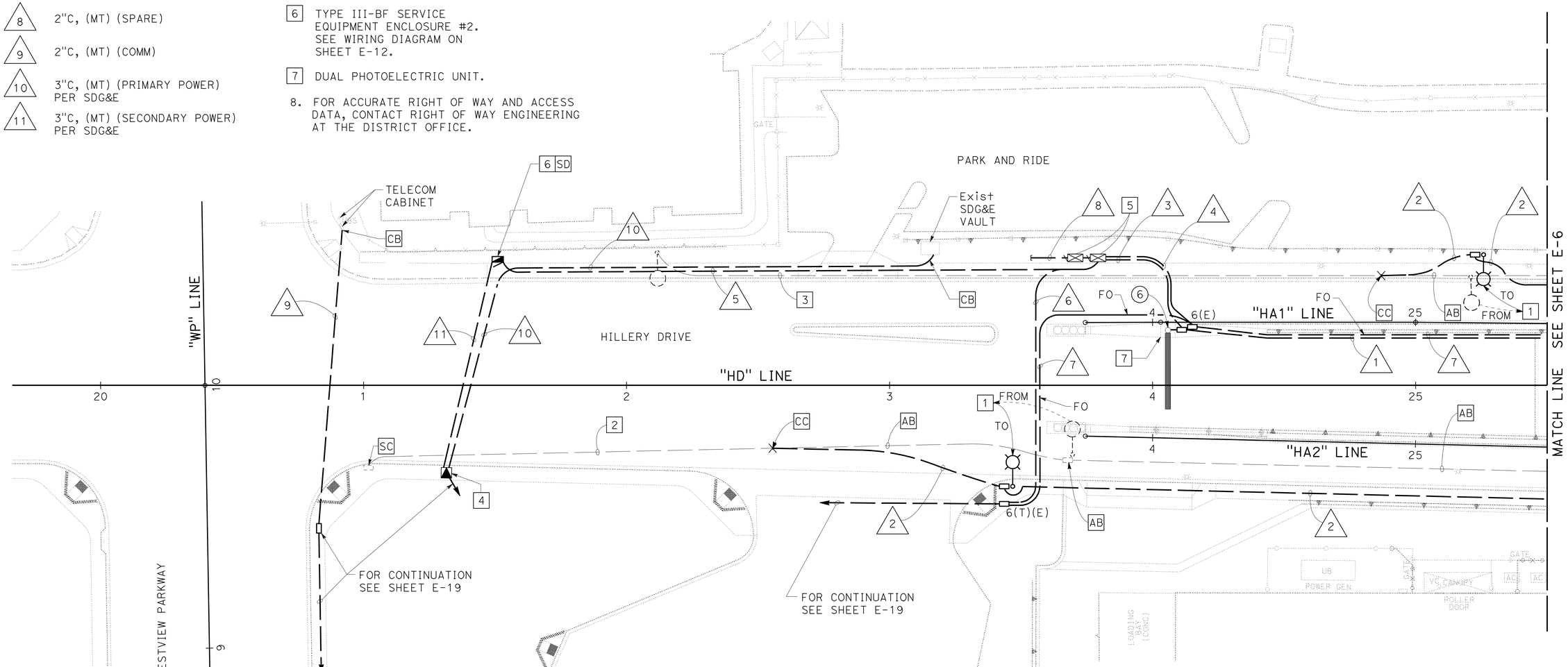

LIGHTING AND SIGN ILLUMINATION
FIBER OPTIC COMMUNICATION SYSTEM
LIGHTING (CITY STREET)

SCALE: 1" = 20'

E-5

THIS PLAN IS ACCURATE FOR ELECTRICAL WORK ONLY.

REVISED BY	DATE REVISED
PARSEKH TOPJIAN	MICHAEL CRULL

CALCULATED-DESIGNED BY — CHECKED BY

CONSULTANT FUNCTIONAL SUPERVISOR: RICHARD LEJA

STATE OF CALIFORNIA - DEPARTMENT OF TRANSPORTATION — Caltrans

LAST REVISION 02-10-11 — DATE PLOTTED => 27-OCT-2011 — TIME PLOTTED => 09:47

Dist	COUNTY	ROUTE	POST MILES TOTAL PROJECT	SHEET No.	TOTAL SHEETS
11	SD	15	M15.0/M16.4	341	610

REGISTERED ELECTRICAL ENGINEER — DATE 01-03-11

PLANS APPROVAL DATE 10-24-11

REGISTERED PROFESSIONAL ENGINEER PARSEKH L. TOPJIAN No. E12845 Exp. 09-30-12 ELECTRICAL STATE OF CALIFORNIA

THE STATE OF CALIFORNIA OR ITS OFFICERS OR AGENTS SHALL NOT BE RESPONSIBLE FOR THE ACCURACY OR COMPLETENESS OF SCANNED COPIES OF THIS PLAN SHEET.

AECOM
7807 CONVOY COURT, SUITE 200
SAN DIEGO, CA 92111

CONDUIT NOTES: (TSO)

- 1 — 3"C, MT
- 2 — 2"C, 4#6 (LTG), 2#8 (SIGN), 6#14 (PEU)
- 3 — 2"C, 2#8 (SIGN), 6#14 (PEU)
- 4 — 2"C, 2#8 (LTG CITY STREET)
- 5 — 2"C, FO144 (COMM)
- 6 — 2"C, 4#6 (LTG), 2#8 (SIGN), 4 DLC
- 7 — 2"C, 4#6 (LTG), 2#8 (SIGN), 6#14 (PEU), 4 DLC
- 8 — 1"C, 2#10 (COUNT STATION)
  2"C, 4 DLC

NOTES: (TSO)

1. TYPE III-BF SERVICE EQUIPMENT ENCLOSURE #1. SEE WIRING DIAGRAM ON SHEET E-12.
2. SDG&E MANHOLE
3. RL STREET LIGHT. PROVIDE NEW FOUNDATION PER SHEET E-25.
4. TYPE G CABINET WITH FOUNDATION
5. FOR ACCURATE RIGHT OF WAY AND ACCESS DATA, CONTACT RIGHT OF WAY ENGINEERING AT THE DISTRICT OFFICE.

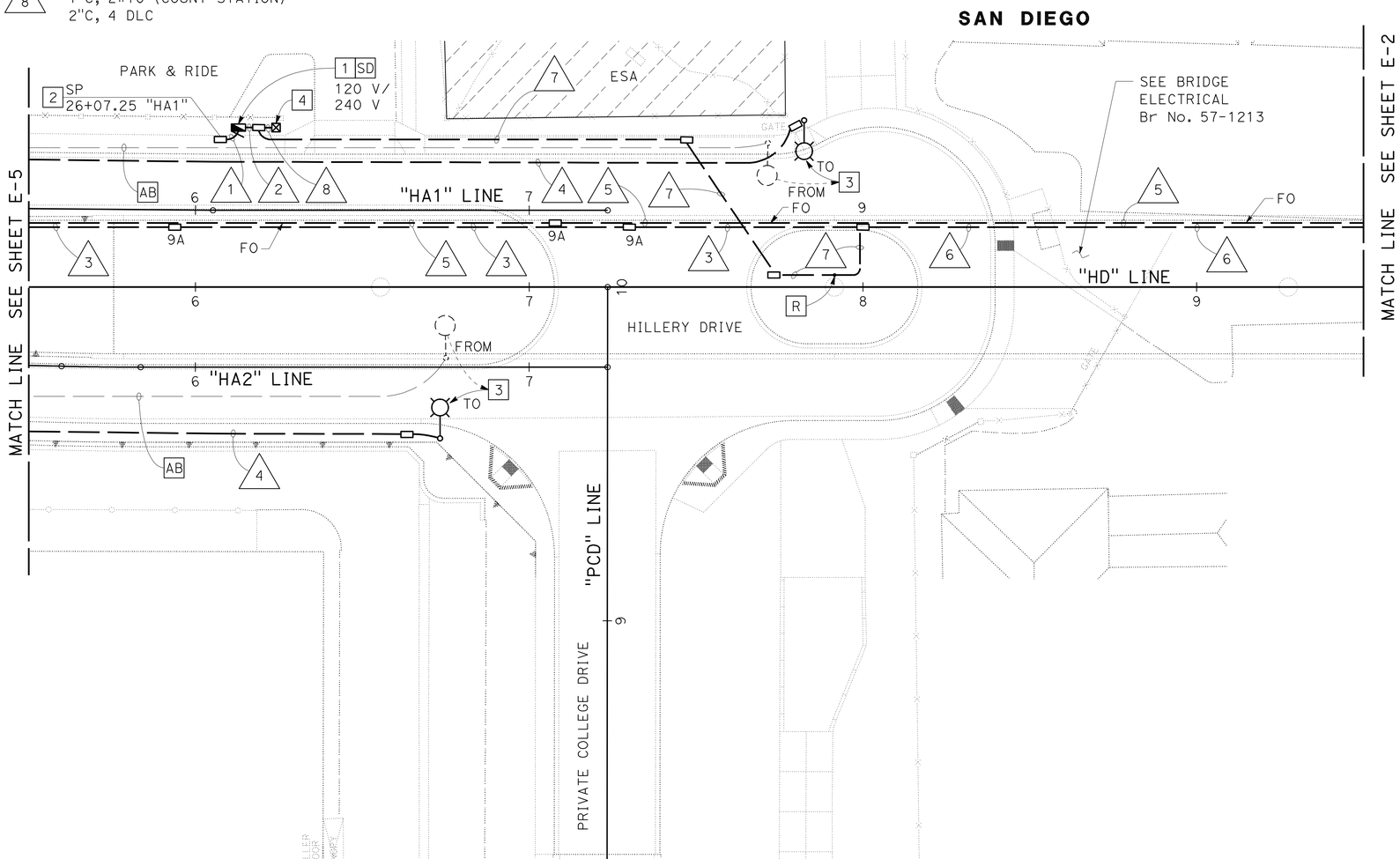

THIS PLAN IS ACCURATE FOR ELECTRICAL WORK ONLY.

SCALE: 1" = 20'

LIGHTING AND SIGN ILLUMINATION
FIBER OPTIC COMMUNICATION SYSTEM
LIGHTING (CITY STREET)

E-6

PARSEKH TOPJIAN — REVISED BY
MICHAEL CRULL — DATE REVISED
CALCULATED-DESIGNED BY
CHECKED BY
RICHARD LEJA — CONSULTANT FUNCTIONAL SUPERVISOR

STATE OF CALIFORNIA - DEPARTMENT OF TRANSPORTATION
Caltrans

LAST REVISION 10-10-11 — DATE PLOTTED => 27-OCT-2011 — TIME PLOTTED => 09:47

Dist	COUNTY	ROUTE	POST MILES TOTAL PROJECT	SHEET No.	TOTAL SHEETS
11	SD	15	M15.0/M16.4	342	610

REGISTERED ELECTRICAL ENGINEER — DATE 01-03-11

PLANS APPROVAL DATE 10-24-11

REGISTERED PROFESSIONAL ENGINEER — PARSEKH L. TOPJIAN — No. E12845 — Exp. 09-30-12 — ELECTRICAL — STATE OF CALIFORNIA

THE STATE OF CALIFORNIA OR ITS OFFICERS OR AGENTS SHALL NOT BE RESPONSIBLE FOR THE ACCURACY OR COMPLETENESS OF SCANNED COPIES OF THIS PLAN SHEET.

AECOM
7807 CONVOY COURT, SUITE 200
SAN DIEGO, CA 92111

CONDUIT NOTES:

△1 1"C, 2#8 (LTG PARK AND RIDE)

△2 Exist 1"C, 2#8 (ltg PARK AND RIDE)

NOTES (TSO):

[1] RELOCATE 3" Dia x 11'-0" HIGH LIGHTING POLE WITH 2 LUMINAIRES ON TOP. MAINTAIN ORIENTATION OF Exist LUMINAIRES. PROVIDE NEW FOUNDATION PER DETAIL ON SHEET E-25.

2. FOR ACCURATE RIGHT OF WAY AND ACCESS DATA, CONTACT RIGHT OF WAY ENGINEERING AT THE DISTRICT OFFICE.

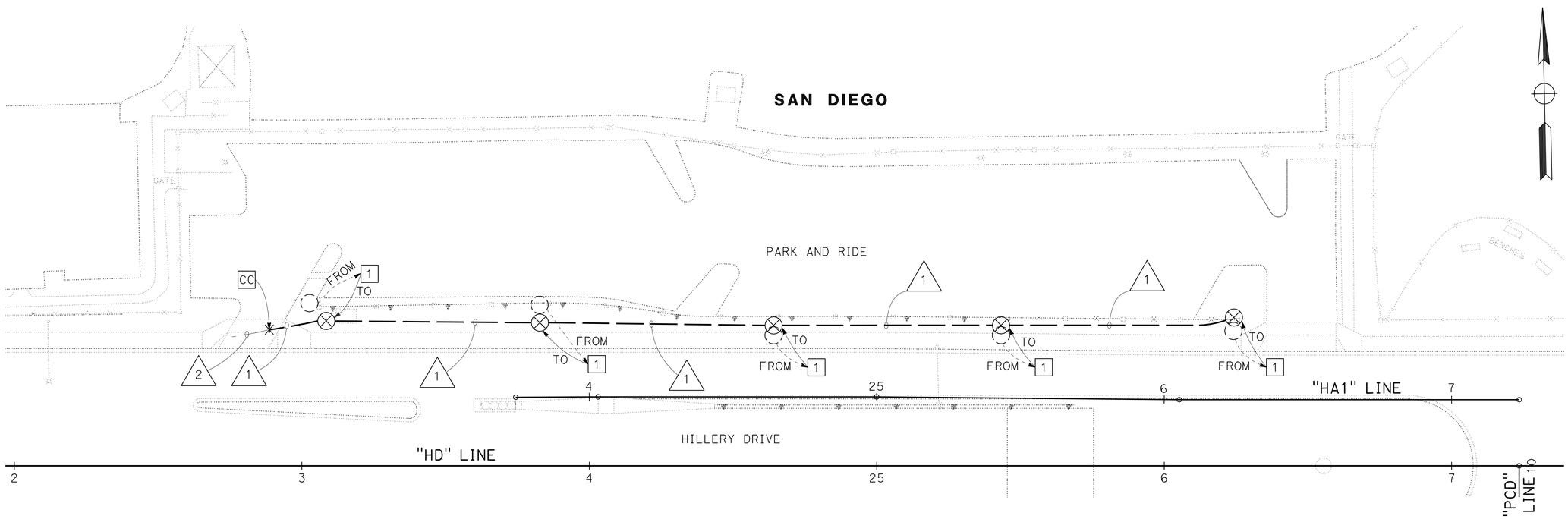

THIS PLAN IS ACCURATE FOR ELECTRICAL WORK ONLY.

LIGHTING (PARK AND RIDE)

SCALE: 1" = 20'

E-7

REVISED BY	DATE REVISED
PARSEKH TOPJIAN	MICHAEL CRULL

CALCULATED-DESIGNED BY — CHECKED BY

CONSULTANT FUNCTIONAL SUPERVISOR: RICHARD LEJA

STATE OF CALIFORNIA - DEPARTMENT OF TRANSPORTATION — Caltrans

LAST REVISION 10-10-11 — DATE PLOTTED => 28-OCT-2011 — TIME PLOTTED => 06:04

Dist	COUNTY	ROUTE	POST MILES TOTAL PROJECT	SHEET No.	TOTAL SHEETS
11	SD	15	M15.0/M16.4	343	610

REGISTERED ELECTRICAL ENGINEER — DATE 01-03-11

PLANS APPROVAL DATE 10-24-11

REGISTERED PROFESSIONAL ENGINEER — PARSEKH L. TOPJIAN No. E12845 Exp. 09-30-12 ELECTRICAL — STATE OF CALIFORNIA

THE STATE OF CALIFORNIA OR ITS OFFICERS OR AGENTS SHALL NOT BE RESPONSIBLE FOR THE ACCURACY OR COMPLETENESS OF SCANNED COPIES OF THIS PLAN SHEET.

AECOM
7807 CONVOY COURT, SUITE 200
SAN DIEGO, CA 92111

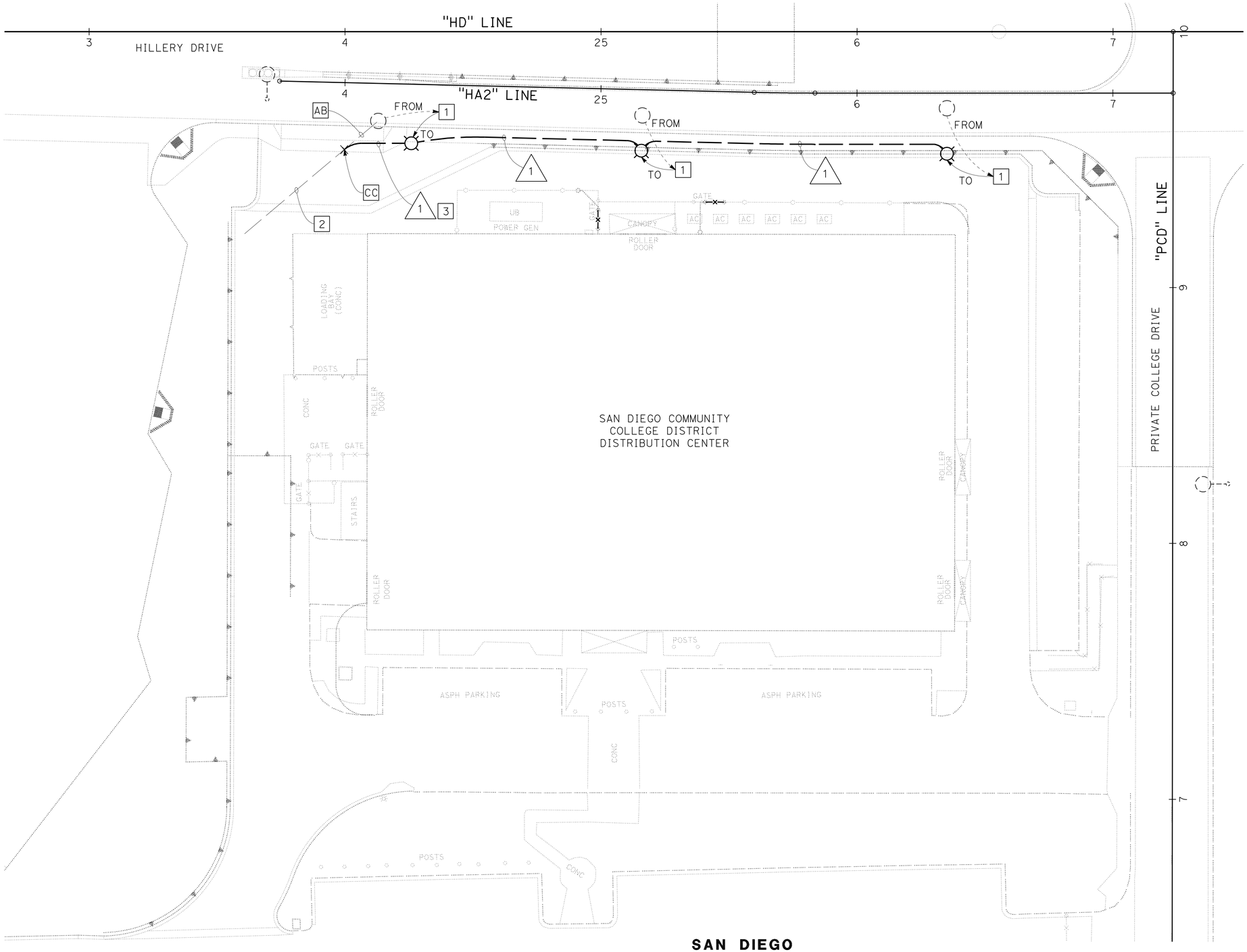

THIS PLAN IS ACCURATE FOR ELECTRICAL WORK ONLY.

CONDUIT NOTES: (TSO)

1 — 1"C, 2#8 (LTG STREET)

NOTES: (TSO)

1. RELOCATE EXISTING 25' HIGH LIGHTING POLE WITH 1 LUMINAIRE ON TOP. MOUNT ON PERIMETER WALL PER RETAINING WALL PLANS. BOND POLE TO REINFORCING STEEL BARS WITH #6 GROUND WIRE.
2. EXISTING 1"C, 2#8 CONCRETE ENCASED.
3. ENCASE IN CONCRETE WHERE RUNNING UNDER PAVEMENT.
4. FOR ACCURATE RIGHT OF WAY AND ACCESS DATA, CONTACT RIGHT OF WAY ENGINEERING AT THE DISTRICT OFFICE.

LIGHTING (STREET)

SCALE: 1" = 20'

E-8

REVISED BY	DATE REVISED
PARSEKH TOPJIAN	MICHAEL CRULL

CALCULATED-DESIGNED BY / CHECKED BY

CONSULTANT FUNCTIONAL SUPERVISOR: RICHARD LEJA

STATE OF CALIFORNIA - DEPARTMENT OF TRANSPORTATION — Caltrans

60099859 27-OCT-2011 09:47 #FILE# s123631

LAST REVISION 02-10-11 — DATE PLOTTED => 27-OCT-2011 TIME PLOTTED => 09:47

Dist	COUNTY	ROUTE	POST MILES TOTAL PROJECT	SHEET No.	TOTAL SHEETS
11	SD	15	M15.0/M16.4	344	610

REGISTERED ELECTRICAL ENGINEER — DATE 01-03-11

PLANS APPROVAL DATE 10-24-11

REGISTERED PROFESSIONAL ENGINEER — PARSEKH L. TOPJIAN No. E12845 Exp. 09-30-12 ELECTRICAL — STATE OF CALIFORNIA

THE STATE OF CALIFORNIA OR ITS OFFICERS OR AGENTS SHALL NOT BE RESPONSIBLE FOR THE ACCURACY OR COMPLETENESS OF SCANNED COPIES OF THIS PLAN SHEET.

AECOM
7807 CONVOY COURT, SUITE 200
SAN DIEGO, CA 92111

NOTES: (TSO)

1. RELOCATE 3" Dia x 7'-0" HIGH LIGHTING POLE WITH 1 LUMINAIRE ON TOP. PROVIDE NEW FOUNDATION PER DETAIL ON SHEET E-25.

2. Exist AREA LIGHT CONDUIT AND CONDUCTORS.

3. FOR ACCURATE RIGHT OF WAY AND ACCESS DATA, CONTACT RIGHT OF WAY ENGINEERING AT THE DISTRICT OFFICE.

SAN DIEGO

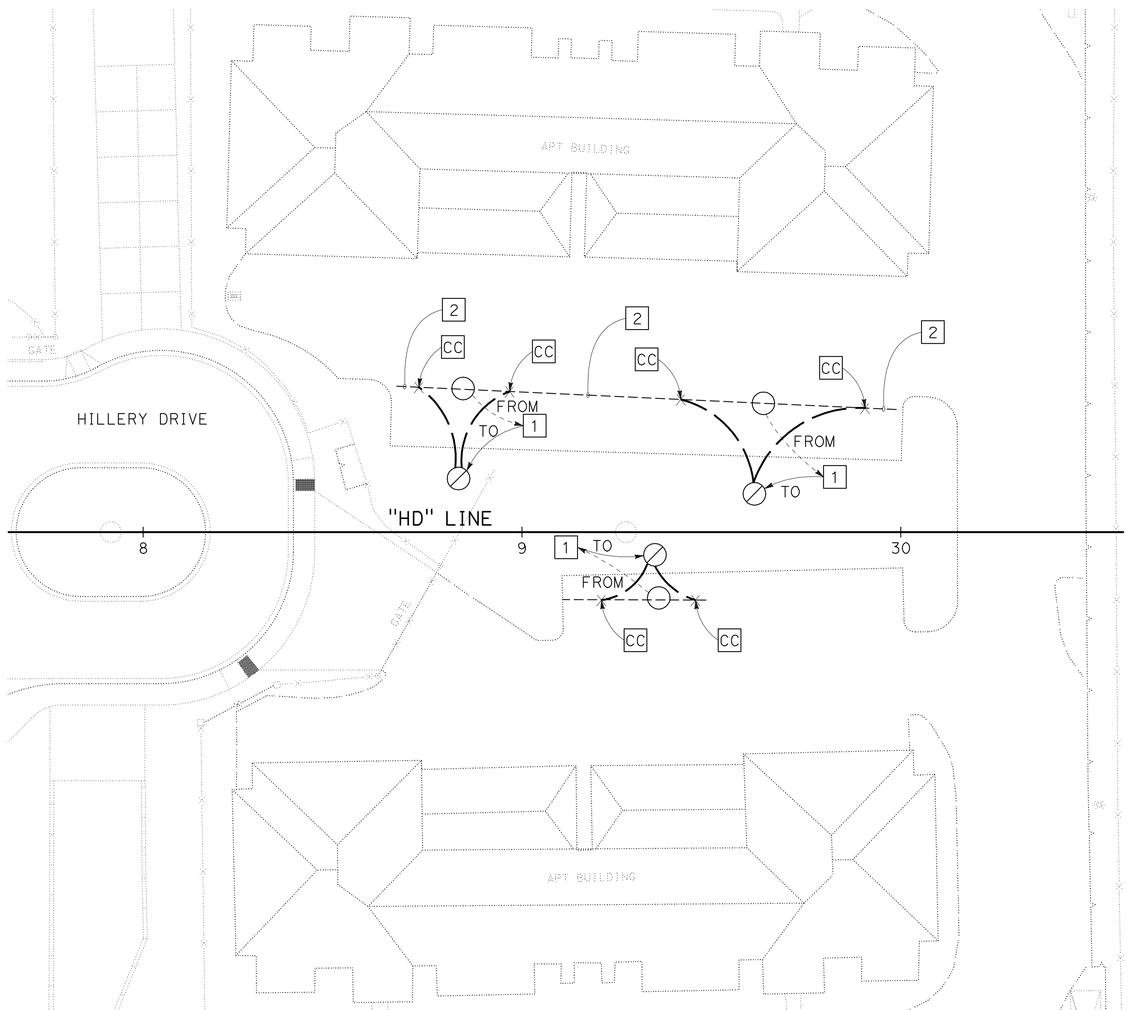

APARTMENT LIGHTING

THIS PLAN IS ACCURATE FOR ELECTRICAL WORK ONLY.

LIGHTING (AREA)

SCALE: 1" = 20'

E-9

REVISED BY | DATE REVISED

PARSEKH TOPJIAN | MICHAEL CRULL

CALCULATED-DESIGNED BY | CHECKED BY

CONSULTANT FUNCTIONAL SUPERVISOR: RICHARD LEJA

STATE OF CALIFORNIA - DEPARTMENT OF TRANSPORTATION

Caltrans

LAST REVISION 10-10-11 | DATE PLOTTED => 27-OCT-2011 | TIME PLOTTED => 09:47

Dist	COUNTY	ROUTE	POST MILES TOTAL PROJECT	SHEET No.	TOTAL SHEETS
11	SD	15	M15.0/M16.4	345	610

REGISTERED CIVIL ENGINEER 01-03-11 DATE

10-24-11
PLANS APPROVAL DATE

REGISTERED PROFESSIONAL ENGINEER NICHOLAS A. HAIGH No. 71673 Exp. 12-31-11 CIVIL STATE OF CALIFORNIA

THE STATE OF CALIFORNIA OR ITS OFFICERS OR AGENTS SHALL NOT BE RESPONSIBLE FOR THE ACCURACY OR COMPLETENESS OF SCANNED COPIES OF THIS PLAN SHEET.

AECOM
7807 CONVOY COURT, SUITE 200
SAN DIEGO, CA 92111

NOTES:

1. RC CONTROLLER. EXISTING CABINET TO REMAIN IN PLACE FOR NEW CONTROLLER (SEE E-11).
2. MAINTAIN EXISTING SERVICE CABINET AND WIRING TO NEW CONTROLLER ASSEMBLY.
3. RC EXISTING POLE, SMA, LMA, SNS, LUMINAIRE, 2 PED HEADS, 2 VEHICLE HEADS AND PPB ASSEMBLY. REMOVE FOUNDATION.
4. RC EXISTING POLE, LMA, LUMINAIRE, 2 PED HEADS, 1 VEHICLE HEAD AND PPB ASSEMBLY. REMOVE FOUNDATION COMPLETE.
5. RC EXISTING POLE, SMA, LMA, SNS, LUMINAIRE, 1 PED HEAD, 3 VEHICLE HEADS AND PPB ASSEMBLY. REMOVE FOUNDATION COMPLETE.
6. RC EXISTING POLE, SMA, LMA, SNS, LUMINAIRE, 1 PED HEAD, 2 VEHICLE HEADS AND PPB ASSEMBLY. REMOVE FOUNDATION COMPLETE.
7. MAINTAIN EXISTING CONDUITS AND CONDUCTORS.
8. ABANDON EXISTING DETECTOR LOOPS.
9. FOR ACCURATE RIGHT OF WAY AND ACCESS DATA, CONTACT RIGHT OF WAY ENGINEERING AT THE DISTRICT OFFICE.

EXISTING PHASE DIAGRAM

NOT USED	→	NOT USED	↑ ↓
ø1	ø2	ø3	ø4
↱	←	NOT USED	NOT USED
ø5	ø6	ø7	ø8

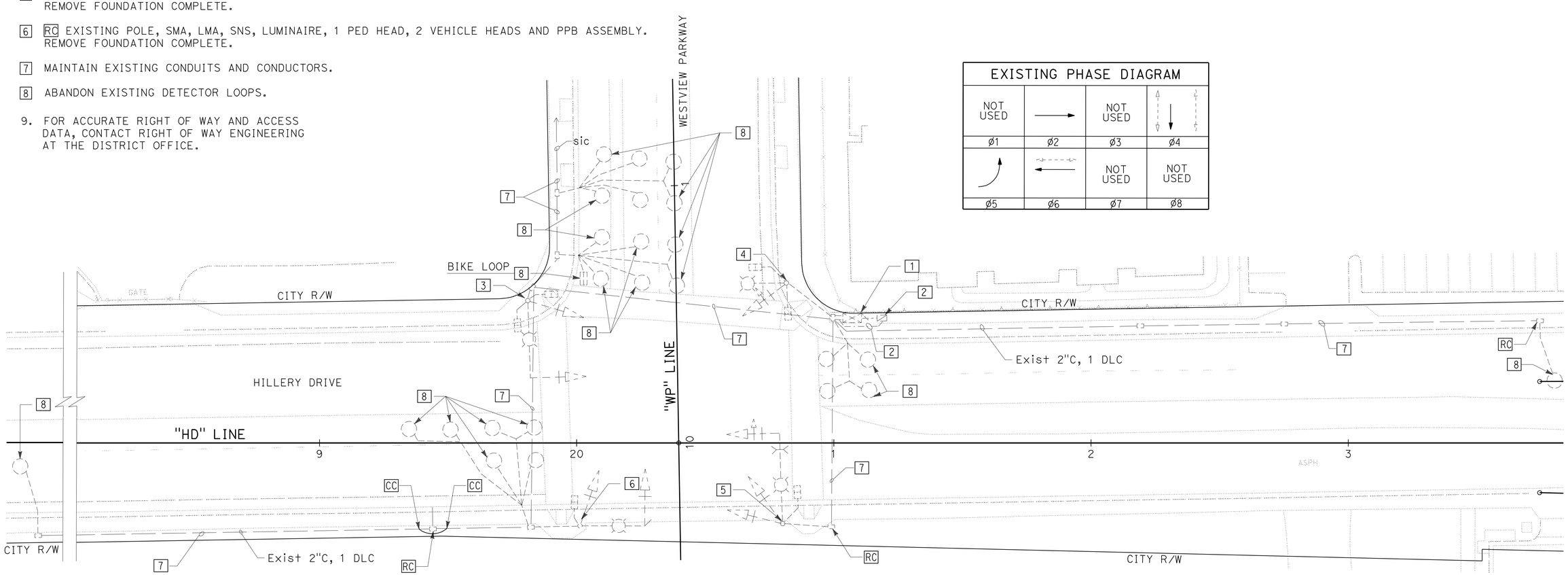

THIS PLAN IS ACCURATE FOR ELECTRICAL WORK ONLY.

SIGNAL AND LIGHTING (CITY)

(EXISTING AND REMOVE)

SCALE: 1" = 20'

E-10

REVISED BY | DATE REVISED
NICHOLAS HAIGH | MICHAEL CRULL
CALCULATED-DESIGNED BY | CHECKED BY
CONSULTANT FUNCTIONAL SUPERVISOR | RICHARD LEJA

STATE OF CALIFORNIA - DEPARTMENT OF TRANSPORTATION
Caltrans

LAST REVISION 09-22-11 | DATE PLOTTED => 27-OCT-2011 | TIME PLOTTED => 10:28

Dist	COUNTY	ROUTE	POST MILES TOTAL PROJECT	SHEET No.	TOTAL SHEETS
11	SD	15	M15.0/M16.4	346	610

REGISTERED CIVIL ENGINEER 01-03-11 DATE

10-24-11
PLANS APPROVAL DATE

REGISTERED PROFESSIONAL ENGINEER NICHOLAS A. HAIGH No. 71673 Exp. 12-31-11 CIVIL STATE OF CALIFORNIA

THE STATE OF CALIFORNIA OR ITS OFFICERS OR AGENTS SHALL NOT BE RESPONSIBLE FOR THE ACCURACY OR COMPLETENESS OF SCANNED COPIES OF THIS PLAN SHEET.

AECOM
7807 CONVOY COURT, SUITE 200
SAN DIEGO, CA 92111

NOTES:

1. INSTALL NEW CONTROLLER INTO EXISTING CABINET. CONTROLLER SHALL INCLUDE ALL ACCESSORIES TO ENSURE THE OPERATION PER PROPOSED PHASE DIAGRAM.
2. ALL FRONT LOOPS SHALL BE MODIFIED TYPE E MOD LOOP PER DETAIL HEREON.
3. SNS TO BE FURNISHED AND INSTALLED BY CITY OF SAN DIEGO.
4. ADJUST PULL BOX TO GRADE.
5. SEE SIGN PLANS - DETAIL "U", ES-7N REQUIRED.
6. MOUNT EMERGENCY VEHICLE PRE-EMPTION EQUIPMENT ON SIGNAL MAST ARM.
7. SEE SIGN PLANS - MODIFIED SIGN MOUNTING DETAIL ON SHEET SD-18.
8. INSTALL 6' LONG TYPE "Q" BIKE LOOP. EDGES OF LOOP SHALL BE 12" FROM EDGE OF GUTTER AND BICYCLE LANE LINE, 44' BACK FROM LIMIT LINE.
9. INSTALL HANDHOLE ON BARRIER LINE FOR LEFT TURN LOOP SAWCUTS AND ASSOCIATED 2"C.
10. INSTALL No. 5 PULL BOX, AND SPLICE LEFT TURN LOOP CONDUCTORS TO LOOP LEADIN. PULL LOOP LEADIN TO CONTROLLER CABINET.

LEGEND:

- - - - - - EXISTING CONDUIT (REPLACE WITH NEW CONDUIT)
——— NEW CONDUIT

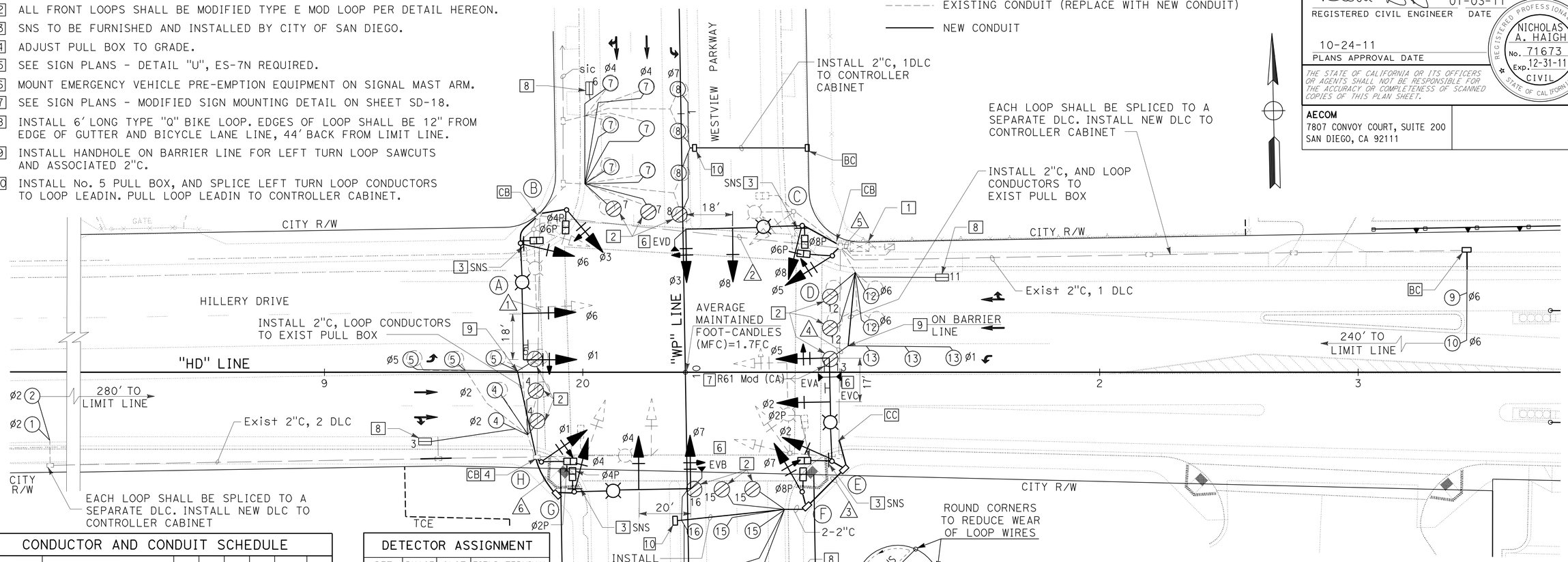

NOTES:
- LOOP DIAMETER = 6' Typ
- DEPTH OF CUIT = 3-1/8" Min

MODIFIED TYPE "E" LIMITLINE /CROSSWALK LOOP DETECTOR SAW CUT & WINDING DETAIL

CONDUCTOR AND CONDUIT SCHEDULE

AWG OR CABLE	POLE OR CIRCUIT	1	2	3	4	5	6
3(N) CONDUCTOR	POLE A	-/-	1/1	-/-	-/-	1/1	-
	POLE B	-/-	1/1	-/-	-/-	1/1	-
	POLE C	-/-	-/-	-/-	-/-	1/1	-
	POLE D	-/-	-/-	-/-	-/-	1/1	-
	POLE E	-/-	-/-	-/-	1/1	1/1	-
	POLE F	-/-	-/-	1/1	1/1	1/1	-
12(N) CONDUCTOR	POLE G	1/1	1/1	-/-	-/-	1/1	1/1
	POLE H	1/1	1/1	-/-	-/-	1/1	-
TOTAL CABLES-(3/12)		2/2	4/4	1/1	2/2	8/8	1/1
#14	PEU						
#10	LIGHTING (240 V)	2	2	-	2	-	2
#6	SERVICE (120 V)					2	-
	SIGNAL INTERCONECT	-	1	-	-	1	-
TYPE B DLC	Ø1 LOOP DLC	-	-	-	-	1	-
	Ø2 LOOP DLC	4	4	-	-	4	-
	Ø3 LOOP DLC	-	-	1	1	1	-
	Ø4 LOOP DLC	-	2	-	-	2	-
	Ø5 LOOP DLC	1	1	-	-	1	-
	Ø6 LOOP DLC	-	-	-	-	4	-
	Ø7 LOOP DLC	-	1	-	-	1	-
	Ø8 LOOP DLC	-	-	2	2	2	-
EMERGENCY VEHICLE DLC		1	1	-	2	4	1
TOTAL CONDUCTORS/CABLES		12	20	5	11	37	3
CONDUIT SIZE		EX (3")	EX (3")	(N) 3"	EX (3")	EX (2-3")	3"

NOTE:

1. INSTALL ALL NEW CONDUCTORS.
2. ALL PULL BOXES WITH SIGNAL CABLE SHALL BE No. 6. ALL OTHER PULL BOXES SHALL BE No. 5.
3. LOOP WIRE SHALL BE TYPE 1.

THIS PLAN IS ACCURATE FOR ELECTRICAL WORK ONLY.

DETECTOR ASSIGNMENT

DET	PHASE	SLOT	FIELD TERMINAL
1	2	I2U	T2-5 & 6
2	2	I2L	T2-7 & 8
3	2	I3U	T2-9 & 10
4	2	I3L	T2-11 & 12
5	5	J1U	T3-1 & 2
6	4	I6U	T4-9 & 10
7	4	I6L	T4-11 & 12
8	7	J5U	T5-5 & 6
9	6	J2U	T3-5 & 6
10	6	J3U	T3-9 & 10
11	6	J4L	T5-3 & 4
12	6	J4U	T5-1 & 2
13	1	I1U	T2-1 & 2
14	8	J6L	T5-11 & 12
15	8	J6U	T5-9 & 10
16	3	I5U	T4-5 & 6
PPB	2	I12U	T8-4 & COM 6
PPB	4	I12L	T8-5 & COM 6
PPB	6	I13U	T8-7 & COM 9
PPB	8	I13L	T8-8 & COM 9
EVA	2	J12U	T9-4 & COM 6
EVB	4	J13U	T9-7 & COM 9
EVC	6	J12L	T9-5 & COM 6
EVD	3	J13L	T9-8 & COM 9
FLASH	-	I14U	T8-10 & COM 12

FOR ACCURATE RIGHT OF WAY AND ACCESS DATA, CONTACT RIGHT OF WAY ENGINEERING AT THE DISTRICT OFFICE.

PROPOSED PHASE DIAGRAM

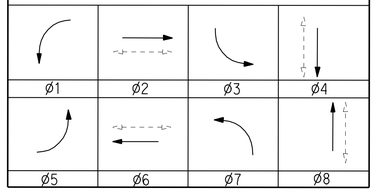

POLE AND EQUIPMENT SCHEDULE

No.	STANDARD Type	STANDARD SMA	STANDARD LMA	VEH SIG MTG Mast Arm	VEH SIG MTG Pole	PED SIGNAL MTG	PPB Ø	PPB ARROW	INDUCTION LUMINARIE (COBRA HEAD)	POLE LOCATION A	POLE LOCATION B
A	26-4-100	45'	15'	MAS/MAS	SV-1-T	SP-1-T	4	←	165 W	5'	3'
B	1-A	-	-	-	TV-1-T	SP-1-T	6	→	-	10'	3'
C	26-4-100	45'	15'	MAS/MAS	SV-1-T	SP-1-T	6	←	165 W	8'	3'
D	1-A	-	-	-	TV-1-T	SP-1-T	8	→	-	8'	3'
E	26-4-100	40'*	15'	MAS/MAS	SV-1-T	SP-1-T	8	←	165 W	8'	3'
F	1-A	-	-	-	TV-1-T	SP-1-T	2	→	-	9'	3'
G	26-4-100	45'	15'	MAS/MAS	SV-1-T	SP-1-T	2	←	165 W	8'	3'
H	1-A	-	-	-	TV-1-T	SP-1-T	4	→	-	9'	3'

ALL EQUIPMENT IS NEW
* Min OD AT BASE PLATE = 10 1/4" PER Std PLAN RSP ES-7F

SIGNAL AND LIGHTING (CITY)

SCALE: 1" = 20'

E-11

REVISED BY | DATE REVISED
NICHOLAS HAIGH | MICHAEL CRULL
CALCULATED-DESIGNED BY | CHECKED BY
RICHARD LEJA
CONSULTANT FUNCTIONAL SUPERVISOR
STATE OF CALIFORNIA - DEPARTMENT OF TRANSPORTATION
Caltrans
60009859 28-OCT-2011 15:03 s2f64 #FILE#

LAST REVISION 09-22-11 | DATE PLOTTED => 28-OCT-2011 | TIME PLOTTED => 13:03

Dist	COUNTY	ROUTE	POST MILES TOTAL PROJECT	SHEET No.	TOTAL SHEETS
11	SD	15	M15.0/M16.4	347	610

REGISTERED ELECTRICAL ENGINEER — DATE 01-03-11

PLANS APPROVAL DATE 10-24-11

REGISTERED PROFESSIONAL ENGINEER — PARSEKH L. TOPJIAN — No. E12845 — Exp. 09-30-12 — ELECTRICAL — STATE OF CALIFORNIA

THE STATE OF CALIFORNIA OR ITS OFFICERS OR AGENTS SHALL NOT BE RESPONSIBLE FOR THE ACCURACY OR COMPLETENESS OF SCANNED COPIES OF THIS PLAN SHEET.

AECOM
7807 CONVOY COURT, SUITE 200
SAN DIEGO, CA 92111

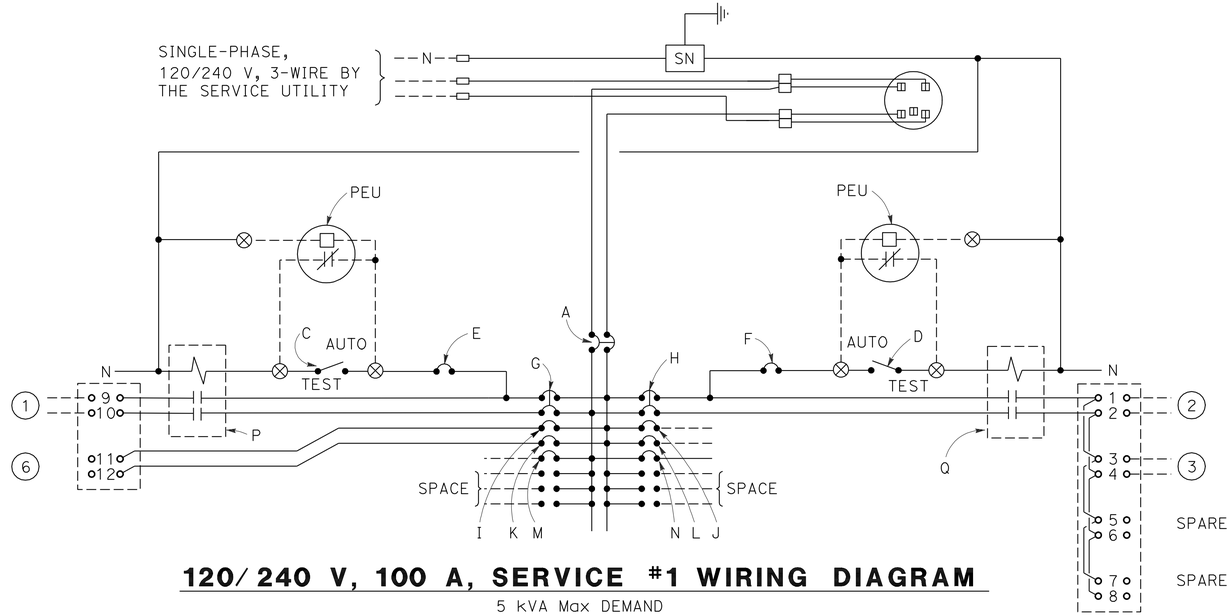

120/240 V, 100 A, SERVICE #1 WIRING DIAGRAM

5 kVA Max DEMAND

TYPE III-BF SERVICE EQUIPMENT ENCLOSURE. SEE RSP ES-2C AND RSP ES-2E

SERVICE (120/240 V) EQUIPMENT LEGEND

ITEM No.	COMPONENT	NAME PLATE DESCRIPTION
A	100 A, 240 V, 2P, CB	MAIN BREAKER
C	15 A, 1P, TEST SWITCH	SIGN ILLUMINATION TEST SWITCH
D	15 A, 1P, TEST SWITCH	LIGHTING TEST SWITCH
E	15 A, 120 V, 1P, CB	SIGN ILLUMINATION CONTROL
F	15 A, 120 V, 1P, CB	LIGHTING CONTROL
G	40 A, 240 V, 2P, CB	SIGN ILLUMINATION
H	40 A, 240 V, 2P, CB	LIGHTING
I	15 A, 120 V, 1P, CB	COUNT STATION
J	15 A, 120 V, 1P, CB	SPARE
K	20 A, 120 V, 1P, CB	SPARE
L	20 A, 120 V, 1P, CB	SPARE
M	15 A, 120 V, 1P, CB	SPARE
N	15 A, 120 V, 1P, CB	SPARE
P	40 A, 2PNO CONTACTOR	SIGN ILLUMINATION
Q	40 A, 2PNO CONTACTOR	LIGHTING
AA	200 A, 240 V, 2P, CB	MAIN BREAKER
BB	100 A, 240 V, 2P, CB	FASTRAK
CC	100 A, 240 V, 2P, CB	WAN
DD	20 A, 120 V, 1P, CB	SPARE
EE	20 A, 120 V, 1P, CB	SPARE
FF	20 A, 120 V, 1P, CB	SPARE
GG	20 A, 120 V, 1P, CB	SPARE
HH	20 A, 120 V, 1P, CB	SPARE
II	20 A, 120 V, 1P, CB	SPARE

1. 240 V SIGN
2. 240 V LIGHTING HDR-1, HDR-2
3. 240 V LIGHTING HDR-3, HDR-4
4. 120/240 V FasTrak
5. 120/240 V WAN
6. DLC COUNT STATION

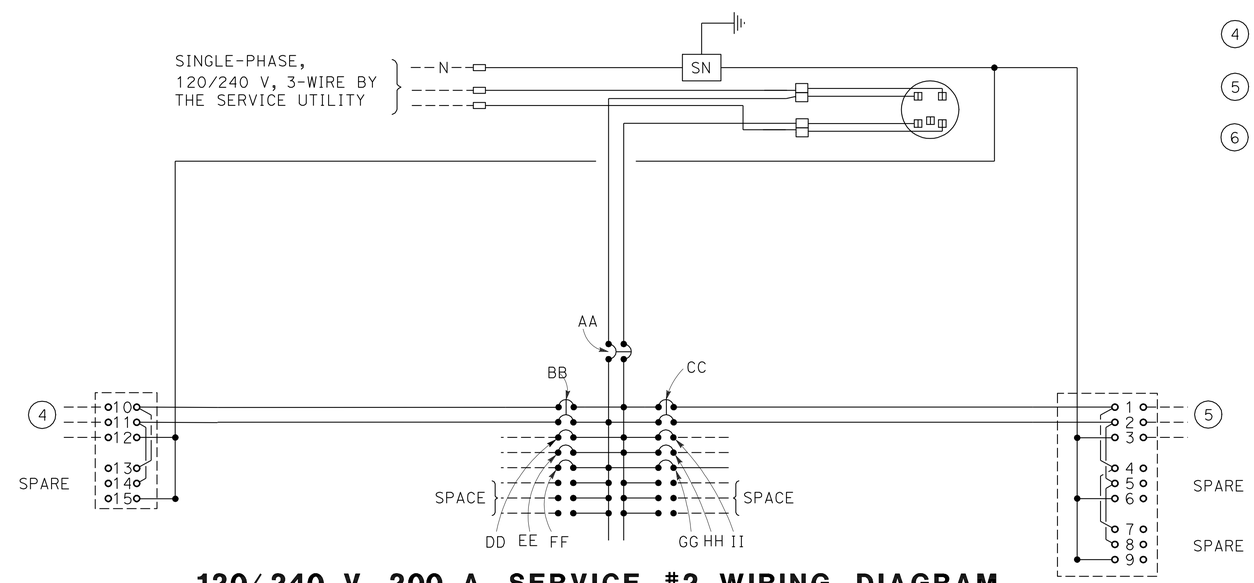

120/240 V, 200 A, SERVICE #2 WIRING DIAGRAM

20 kVA Max DEMAND

TYPE III-BF SERVICE EQUIPMENT ENCLOSURE. SEE RSP ES-2C AND RSP ES-2E

LIGHTING AND SIGN ILLUMINATION (ELECTRICAL DETAILS)

NO SCALE

E-12

REVISED BY | DATE REVISED

PARSEKH TOPJIAN | MICHAEL CRULL

CALCULATED-DESIGNED BY | CHECKED BY

CONSULTANT FUNCTIONAL SUPERVISOR: RICHARD LEJA

STATE OF CALIFORNIA - DEPARTMENT OF TRANSPORTATION

Caltrans

LAST REVISION 02-10-11 | DATE PLOTTED => 27-OCT-2011 | TIME PLOTTED => 10:28

Dist	COUNTY	ROUTE	POST MILES TOTAL PROJECT	SHEET No.	TOTAL SHEETS
11	SD	15	M15.0/M16.4	348	610

REGISTERED ELECTRICAL ENGINEER — DATE 01-03-11

PLANS APPROVAL DATE 10-24-11

REGISTERED PROFESSIONAL ENGINEER — PARSEKH L. TOPJIAN No. E12845 Exp. 09-30-12 ELECTRICAL — STATE OF CALIFORNIA

THE STATE OF CALIFORNIA OR ITS OFFICERS OR AGENTS SHALL NOT BE RESPONSIBLE FOR THE ACCURACY OR COMPLETENESS OF SCANNED COPIES OF THIS PLAN SHEET.

AECOM
7807 CONVOY COURT, SUITE 200
SAN DIEGO, CA 92111

NOTE:

FOR ACCURATE RIGHT OF WAY AND ACCESS DATA, CONTACT RIGHT OF WAY ENGINEERING AT THE DISTRICT OFFICE.

CONDUIT NOTES: (TSO)

1. 2"C, LIGHTING AND SIGN ILLUMINATION, AND LOOP DETECTOR
2. 2"C, SIGN ILLUMINATION
3. 2"C, FO144 (COMM)

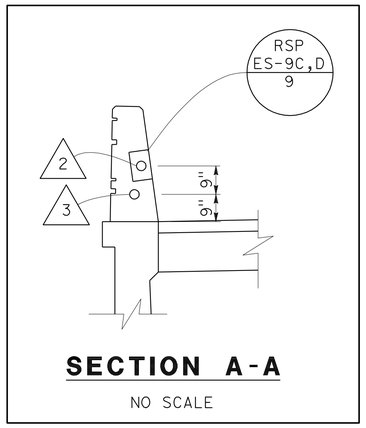

SECTION A-A
NO SCALE

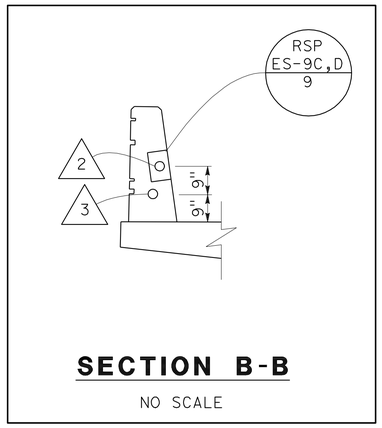

SECTION B-B
NO SCALE

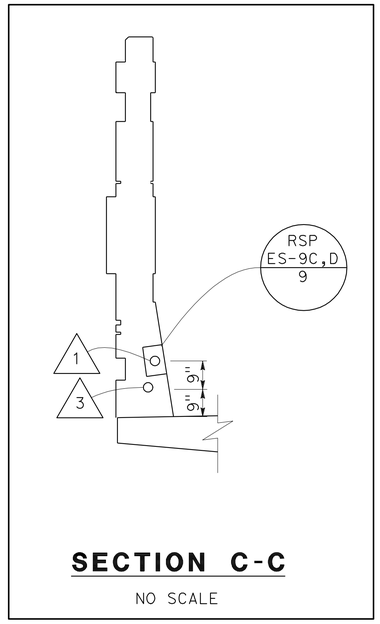

SECTION C-C
NO SCALE

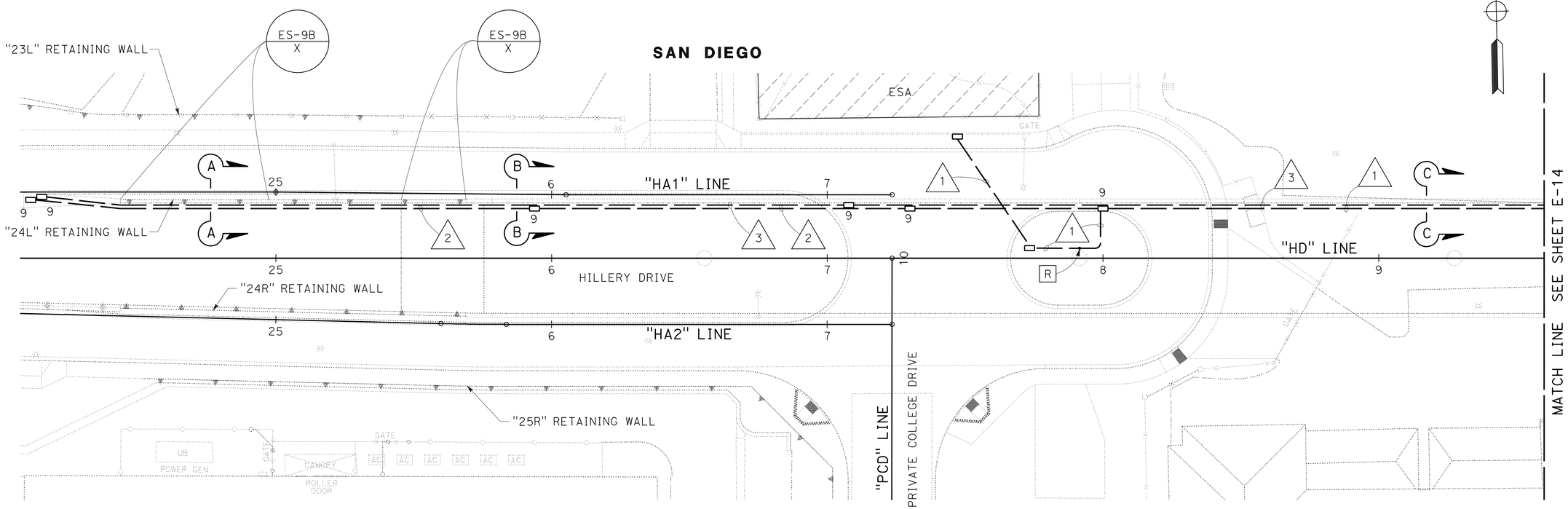

LIGHTING AND SIGN ILLUMINATION
FIBER OPTIC COMMUNICATION SYSTEM

(BRIDGE ELECTRICAL DETAILS)

BRIDGE No. 57-1213
HILLERY DIRECT ACCESS RAMPS
HILLERY DRIVE OC

SCALE: 1" = 20'

E-13

THIS PLAN IS ACCURATE FOR ELECTRICAL WORK ONLY.

REVISED BY | DATE REVISED
PARSEKH TOPJIAN | MICHAEL CRULL
CALCULATED-DESIGNED BY | CHECKED BY
CONSULTANT FUNCTIONAL SUPERVISOR: RICHARD LEJA
STATE OF CALIFORNIA - DEPARTMENT OF TRANSPORTATION
Caltrans

LAST REVISION 02-10-11 | DATE PLOTTED => 28-OCT-2011 | TIME PLOTTED => 06:08

Dist	COUNTY	ROUTE	POST MILES TOTAL PROJECT	SHEET No.	TOTAL SHEETS
11	SD	15	M15.0/M16.4	349	610

REGISTERED ELECTRICAL ENGINEER — DATE 01-03-11

PLANS APPROVAL DATE 10-24-11

REGISTERED PROFESSIONAL ENGINEER — PARSEKH L. TOPJIAN No. E12845 Exp. 09-30-12 ELECTRICAL — STATE OF CALIFORNIA

THE STATE OF CALIFORNIA OR ITS OFFICERS OR AGENTS SHALL NOT BE RESPONSIBLE FOR THE ACCURACY OR COMPLETENESS OF SCANNED COPIES OF THIS PLAN SHEET.

AECOM
7807 CONVOY COURT, SUITE 200
SAN DIEGO, CA 92111

NOTE:

FOR ACCURATE RIGHT OF WAY AND ACCESS DATA, CONTACT RIGHT OF WAY ENGINEERING AT THE DISTRICT OFFICE.

CONDUIT NOTES: (TSO)

1. 2"C, LIGHTING AND SIGN ILLUMINATION
2. 2"C, LIGHTING AND SIGN ILLUMINATION AND LOOP DETECTOR
3. 2"C, LIGHTING
4. 2"C, LIGHTING AND LOOP DETECTOR
5. 2"C, FO144 (COMM)

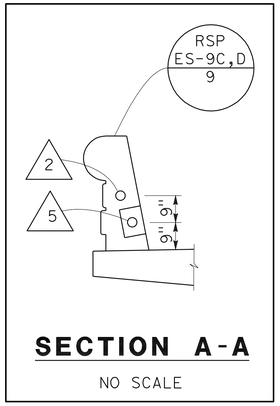

SECTION A-A
NO SCALE

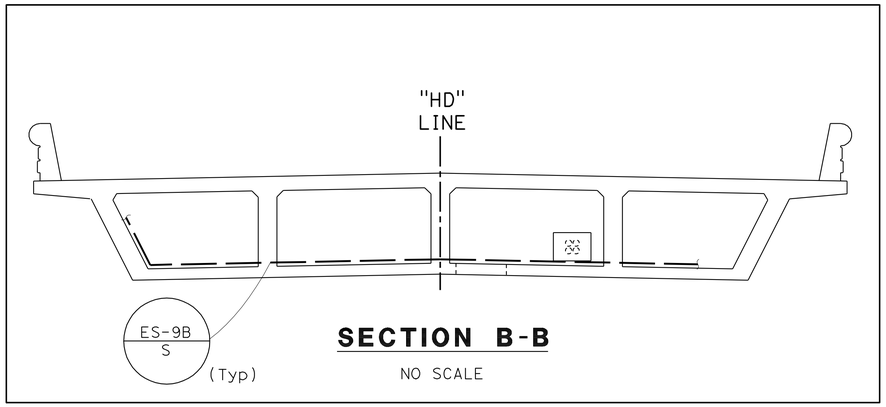

SECTION B-B
NO SCALE

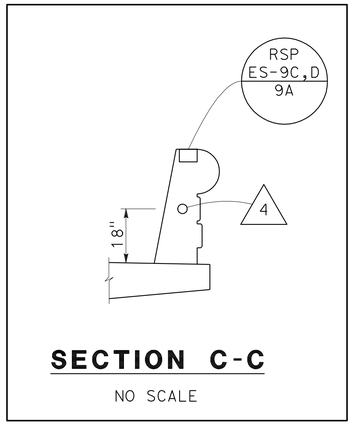

SECTION C-C
NO SCALE

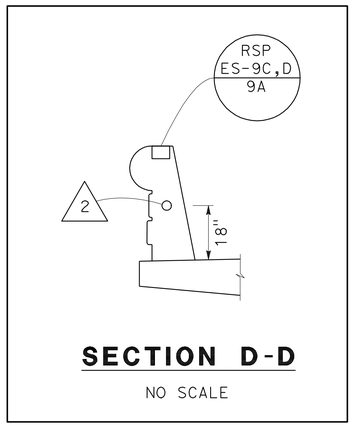

SECTION D-D
NO SCALE

SAN DIEGO

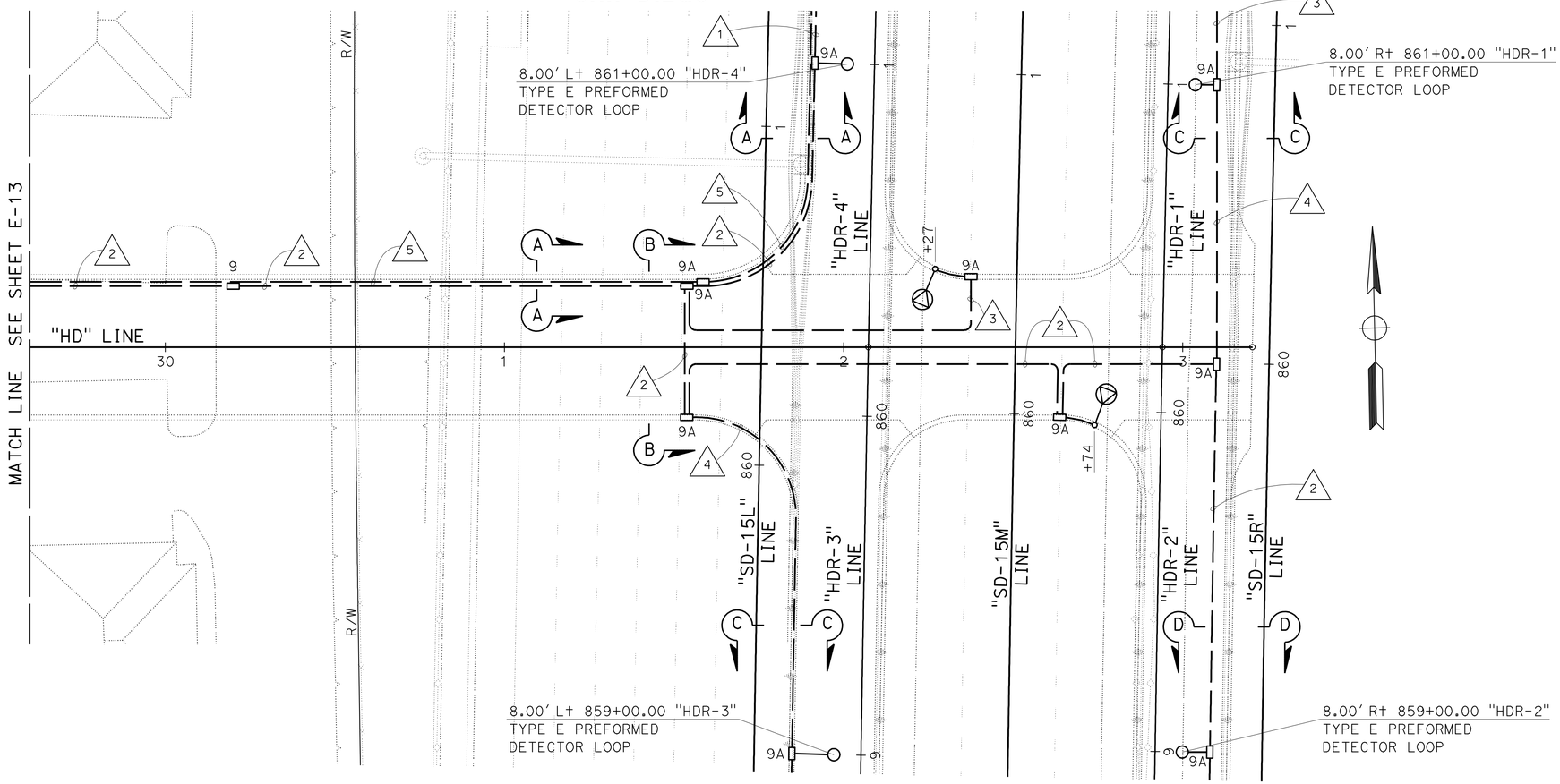

THIS PLAN IS ACCURATE FOR ELECTRICAL WORK ONLY.

BRIDGE No. 57-1213
HILLERY DIRECT ACCESS RAMPS
HILLERY DRIVE OC

LIGHTING AND SIGN ILLUMINATION
FIBER OPTIC COMMUNICATION SYSTEM

(BRIDGE ELECTRICAL DETAILS)

SCALE: 1" = 20'

E-14

STATE OF CALIFORNIA - DEPARTMENT OF TRANSPORTATION — Caltrans

CONSULTANT FUNCTIONAL SUPERVISOR: RICHARD LEJA
CALCULATED-DESIGNED BY: PARSEKH TOPJIAN
CHECKED BY: MICHAEL CRULL
REVISED BY / DATE REVISED

LAST REVISION 02-10-11 — DATE PLOTTED => 28-OCT-2011 — TIME PLOTTED => 06:09

Dist	COUNTY	ROUTE	POST MILES TOTAL PROJECT	SHEET No.	TOTAL SHEETS
11	SD	15	M15.0/M16.4	350	610

REGISTERED ELECTRICAL ENGINEER — DATE 01-03-11

10-24-11
PLANS APPROVAL DATE

REGISTERED PROFESSIONAL ENGINEER — PARSEKH L. TOPJIAN — No. E12845 — Exp. 09-30-12 — ELECTRICAL — STATE OF CALIFORNIA

THE STATE OF CALIFORNIA OR ITS OFFICERS OR AGENTS SHALL NOT BE RESPONSIBLE FOR THE ACCURACY OR COMPLETENESS OF SCANNED COPIES OF THIS PLAN SHEET.

AECOM
7807 CONVOY COURT, SUITE 200
SAN DIEGO, CA 92111

NOTES:

1. TOTAL 4 CONDUIT EXPANSION FITTINGS
2. TOTAL 1 COMBINATION EXPANSION-DEFLECTION FITTING
3. TOTAL 5 CONDUIT EXPANSION FITTINGS
4. TOTAL 1 COMBINATION EXPANSION-DEFLECTION FITTING

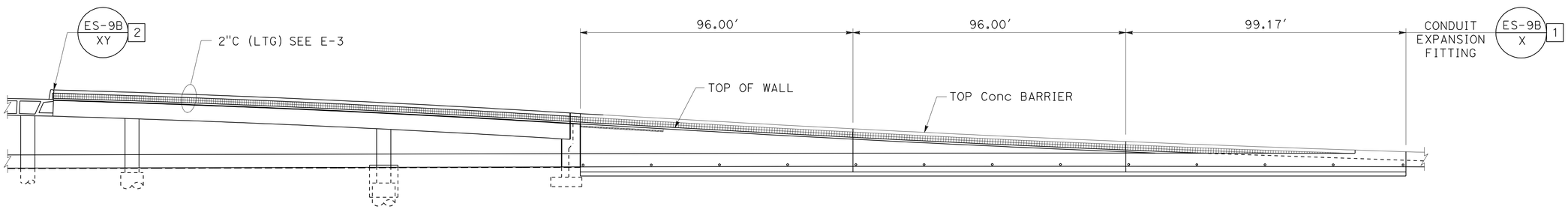

BRIDGE No. 57-1214
HILLERY DIRECT ACCESS RAMPS
NORTHBOUND ON-RAMP

ELEVATION "HDR1R"

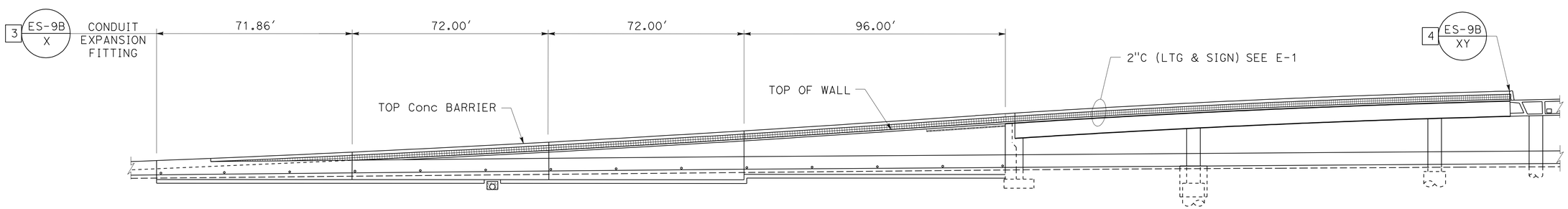

BRIDGE No. 57-1215
HILLERY DIRECT ACCESS RAMPS
NORTHBOUND OFF-RAMP

ELEVATION "HDR2R"

LIGHTING AND SIGN ILLUMINATION FIBER OPTIC COMMUNICATION SYSTEM

(BRIDGE AND RETAINING WALL ELECTRICAL DETAILS)

SCALE: 1" = 20′

E-15

THIS PLAN IS ACCURATE FOR ELECTRICAL WORK ONLY.

REVISED BY | DATE REVISED
PARSEKH TOPJIAN | MICHAEL CRULL
CALCULATED-DESIGNED BY | CHECKED BY
CONSULTANT FUNCTIONAL SUPERVISOR: RICHARD LEJA
STATE OF CALIFORNIA - DEPARTMENT OF TRANSPORTATION
Caltrans
LAST REVISION 02-10-11 | DATE PLOTTED => 28-OCT-2011 | TIME PLOTTED => 08:15

Dist	COUNTY	ROUTE	POST MILES TOTAL PROJECT	SHEET No.	TOTAL SHEETS
11	SD	15	M15.0/M16.4	351	610

REGISTERED ELECTRICAL ENGINEER — DATE 01-03-11

PLANS APPROVAL DATE 10-24-11

REGISTERED PROFESSIONAL ENGINEER — PARSEKH L. TOPJIAN — No. E12845 — Exp. 09-30-12 — ELECTRICAL — STATE OF CALIFORNIA

THE STATE OF CALIFORNIA OR ITS OFFICERS OR AGENTS SHALL NOT BE RESPONSIBLE FOR THE ACCURACY OR COMPLETENESS OF SCANNED COPIES OF THIS PLAN SHEET.

AECOM
7807 CONVOY COURT, SUITE 200
SAN DIEGO, CA 92111

NOTES:

1. TOTAL 5 CONDUIT EXPANSION FITTINGS
2. TOTAL 1 COMBINATION EXPANSION-DEFLECTION FITTING
3. TOTAL 8 CONDUIT EXPANSION FITTINGS
4. TOTAL 2 COMBINATION EXPANSION-DEFLECTION FITTING

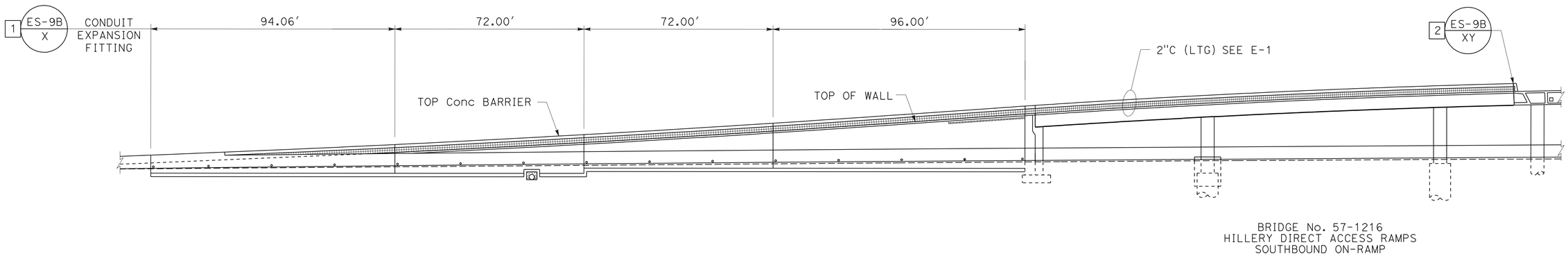

ELEVATION "HDR3R"

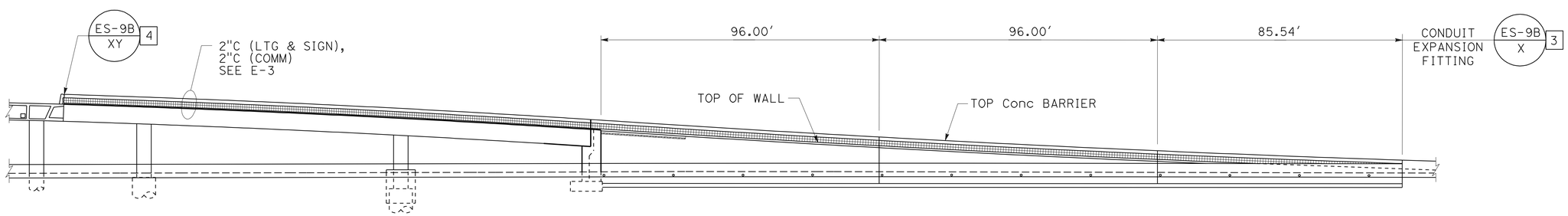

ELEVATION "HDR4R"

THIS PLAN IS ACCURATE FOR ELECTRICAL WORK ONLY.

LIGHTING AND SIGN ILLUMINATION FIBER OPTIC COMMUNICATION SYSTEM

(BRIDGE AND RETAINING WALL ELECTRICAL DETAILS)

SCALE: 1" = 20′

E-16

REVISED BY | DATE REVISED
PARSEKH TOPJIAN | MICHAEL CRULL
CALCULATED-DESIGNED BY | CHECKED BY
CONSULTANT FUNCTIONAL SUPERVISOR: RICHARD LEJA

STATE OF CALIFORNIA - DEPARTMENT OF TRANSPORTATION — Caltrans

LAST REVISION 02-10-11 | DATE PLOTTED => 28-OCT-2011 | TIME PLOTTED => 06:15

Dist	COUNTY	ROUTE	POST MILES TOTAL PROJECT	SHEET No.	TOTAL SHEETS
11	SD	15	M15.0/M16.4	352	610

REGISTERED ELECTRICAL ENGINEER — DATE: 01-07-11

10-24-11
PLANS APPROVAL DATE

REGISTERED PROFESSIONAL ENGINEER — ABEY MATHEWS — No. E18650 — Exp. 12-31-12 — ELECTRICAL — STATE OF CALIFORNIA

THE STATE OF CALIFORNIA OR ITS OFFICERS OR AGENTS SHALL NOT BE RESPONSIBLE FOR THE ACCURACY OR COMPLETENESS OF SCANNED COPIES OF THIS PLAN SHEET.

CH2M HILL
402 W. BROADWAY,
SUITE 1450
SAN DIEGO, CA 92101

LEGEND:

- NEXT BUS SIGN
- BIKE LOCKER
- PAY PHONE
- VENDING MACHINE
- SHELTER
- BENCH
- VENDOR PAD
- MAP CASE
- TRASH RECEPTACLE
- COMMUNICATION CABINET
- ENTRY MONUMENT
- TICKET VENDING MACHINE
- IRRIGATION CONTROLLER (INSTALLATION OF Irr CABINET IS DONE BY LANDSCAPE CONTRACTOR)
- GROUNDING ELECTRODE
- GROUND TEST WELL
- --GD —— GROUNDING CONDUCTOR
- CONVENIENCE RECEPTACLE - DUPLEX UNLESS SPECIFIED OTHERWISE; MOUNTED AT LEAST 18" ABOVE FINISHED GRADE OR ON POLE PER MANUFACTURER'S REQUIREMENTS.
- JUNCTION BOX

ABBREVIATIONS:

CCVS	CLOSED CIRCUIT VIDEO SYSTEM
STN	STATION
RECEPT	RECEPTACLE
MTS	METROPOLITAN TRANSIT SYSTEM
WP	WEATHER PROOF

LIGHTING FIXTURE SCHEDULE

SYMBOL	LABEL	DESCRIPTION	SIZE	FIXURE AND POLE FINISH	LAMPS Qty/W/TYPE/COLOR	VOLTAGE	INPUT WATTS	NOTES
	A1	2 HEAD FIXTURE AT 180 DEGREES	25' POLE	BLACK ANODIZED	1-250 W, MH/4K ED-17	240	540	PROVIDE INTEGRAL DUPLEX RECEPTACLE ON POLE. SEE E-18 FOR QUANTITY.
	A2	1 HEAD FIXTURE	25' POLE	BLACK ANODIZED	1-250 W, MH/4K ED-17	240	270	
	A3	UPLIGHT	-	DIE-CAST BRASS	1-100 W ED-17	240	129	

LIGHTING (TRANSIT STATION)

NO SCALE

E-17

STATE OF CALIFORNIA - DEPARTMENT OF TRANSPORTATION
Caltrans

CONSULTANT FUNCTIONAL SUPERVISOR: HANY HAROUN
CALCULATED-DESIGNED BY: ABEY MATHEWS
CHECKED BY: FU SUN
REVISED BY
DATE REVISED

LAST REVISION 02-09-11
DATE PLOTTED => 28-OCT-2011
TIME PLOTTED => 13:03

Dist	COUNTY	ROUTE	POST MILES TOTAL PROJECT	SHEET No.	TOTAL SHEETS
11	SD	15	M15.0/M16.4	353	610

REGISTERED ELECTRICAL ENGINEER — 01-03-11 DATE

10-24-11
PLANS APPROVAL DATE

REGISTERED PROFESSIONAL ENGINEER — ABEY MATHEWS — No. E18650 — Exp. 12-31-12 — ELECTRICAL — STATE OF CALIFORNIA

THE STATE OF CALIFORNIA OR ITS OFFICERS OR AGENTS SHALL NOT BE RESPONSIBLE FOR THE ACCURACY OR COMPLETENESS OF SCANNED COPIES OF THIS PLAN SHEET.

CH2M HILL
402 W. BROADWAY,
SUITE 1450
SAN DIEGO, CA 92101

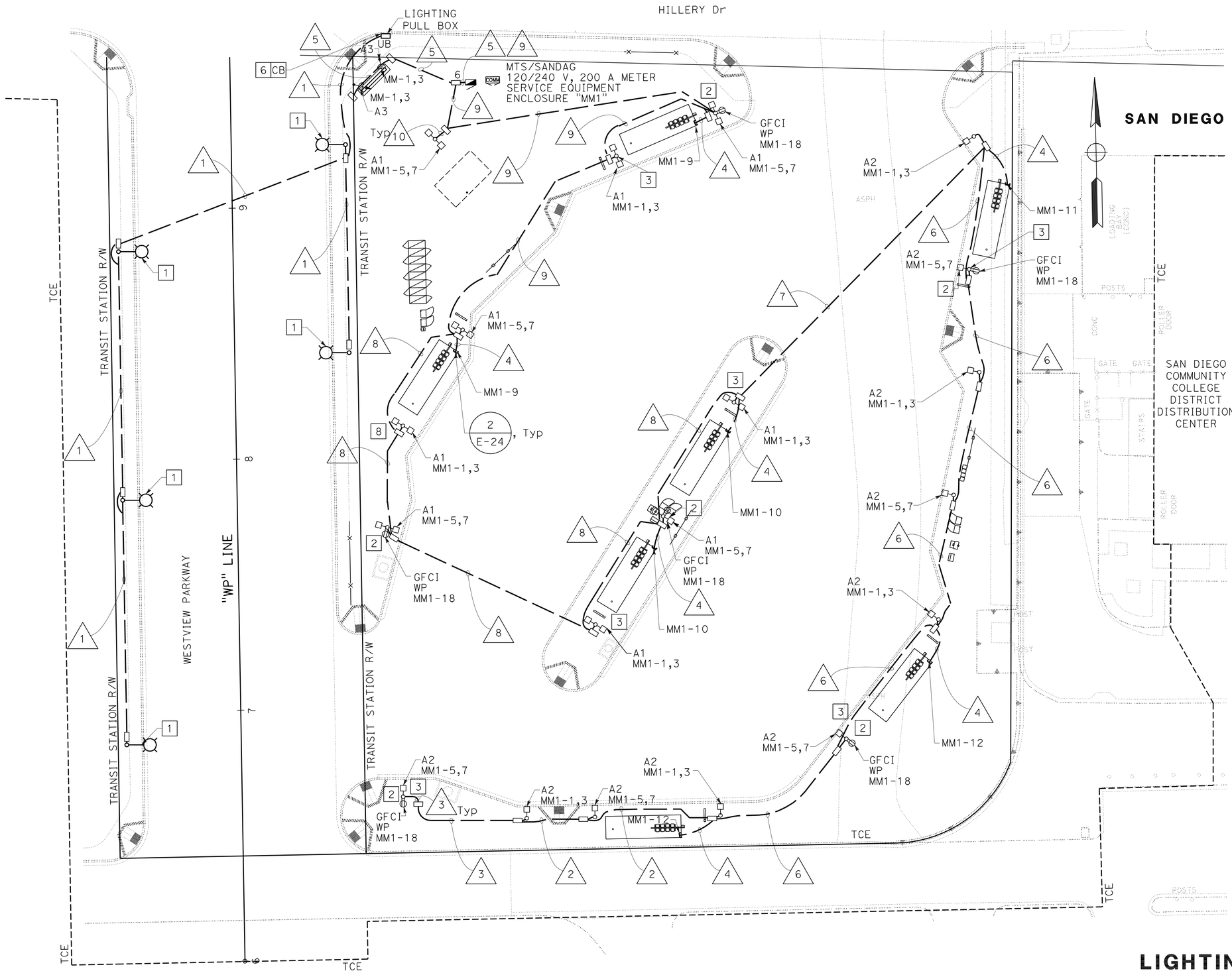

THIS PLAN IS ACCURATE FOR ELECTRICAL WORK ONLY.

NOTES:

1. TYPE 15 - LMA 8′ - 180 W LPS FACE OF LIGHT POLE SHALL BE 6′-0" FROM EDGE OF STREET CURB.
2. LIGHT POLE FIXTURE SHALL HAVE INTEGRAL DUPLEX GFCI RECEPTACLE (WEATHER PROOF). RECEPTACLE COVER SHALL BE LOCKABLE.
3. LIGHTING FIXTURE POLE WITH CCVS CAMERA. SEE E-22 FOR MORE DETAILS.
4. SEE E-17 FOR LEGEND AND LIGHTING FIXTURE SCHEDULE.
5. SEE E-22 FOR DETAILS ON STATION LIGHTING INSTALLATION.
6. SC INTO EXISTING STREET LIGHTING CIRCUIT. SEE E-5.
7. SEE E-19 FOR UTILITY CONNECTION AND CONTINUITY OF CIRCUITS.
8. LIGHTING FIXTURE POLE WITH TWO FIXTURES AND ONE CCVS CAMERAS. SEE E-22 FOR MORE DETAILS.
9. FOR ACCURATE RIGHT OF WAY AND ACCESS DATA, CONTACT RIGHT OF WAY ENGINEERING AT DISTRICT OFFICE.

CONDUIT NOTES:

1. 2"C, 2#8, 1#8G (LTG CITY STREET)
2. 2"C, 6#1, 1#1G (STN LTG & RECEPT)
3. 2"C, 4#1, 1#1G,(STN LTG & RECEPT)
4. 2"C, 2#1, 1#1G (SHELTER LTG & RECEPT)
5. 2"C, 2#8, 1#8G (STN LTG)
6. 3"C, 8#1, 1#1G,(STN LTG & RECEPT)
7. 3"C, 10#1, 1#1G,(STN LTG & RECEPT)
8. 3"C, 12#1, 1#1G,(STN LTG & RECEPT)
9. 2-3"C, 14#1, 1#1G,(STN LTG & RECEPT)
10. 2"C, 2#1, 1#1G,(STN LTG)

LIGHTING (TRANSIT STATION)

SCALE: 1" = 20′

E-18

STATE OF CALIFORNIA - DEPARTMENT OF TRANSPORTATION — Caltrans

CONSULTANT FUNCTIONAL SUPERVISOR: HANY HAROUN
CALCULATED-DESIGNED BY: ABEY MATHEWS
CHECKED BY: FU SUN
REVISED BY
DATE REVISED

LAST REVISION 02-09-11 | DATE PLOTTED => 31-OCT-2011 | TIME PLOTTED => 08:50

Dist	COUNTY	ROUTE	POST MILES TOTAL PROJECT	SHEET No.	TOTAL SHEETS
11	SD	15	M15.0/M16.4	354	610

REGISTERED ELECTRICAL ENGINEER — 01-07-11 DATE

10-24-11
PLANS APPROVAL DATE

REGISTERED PROFESSIONAL ENGINEER ABEY MATHEWS No. E18650 Exp. 12-31-12 ELECTRICAL STATE OF CALIFORNIA

THE STATE OF CALIFORNIA OR ITS OFFICERS OR AGENTS SHALL NOT BE RESPONSIBLE FOR THE ACCURACY OR COMPLETENESS OF SCANNED COPIES OF THIS PLAN SHEET.

CH2M HILL
402 W. BROADWAY,
SUITE 1450
SAN DIEGO, CA 92101

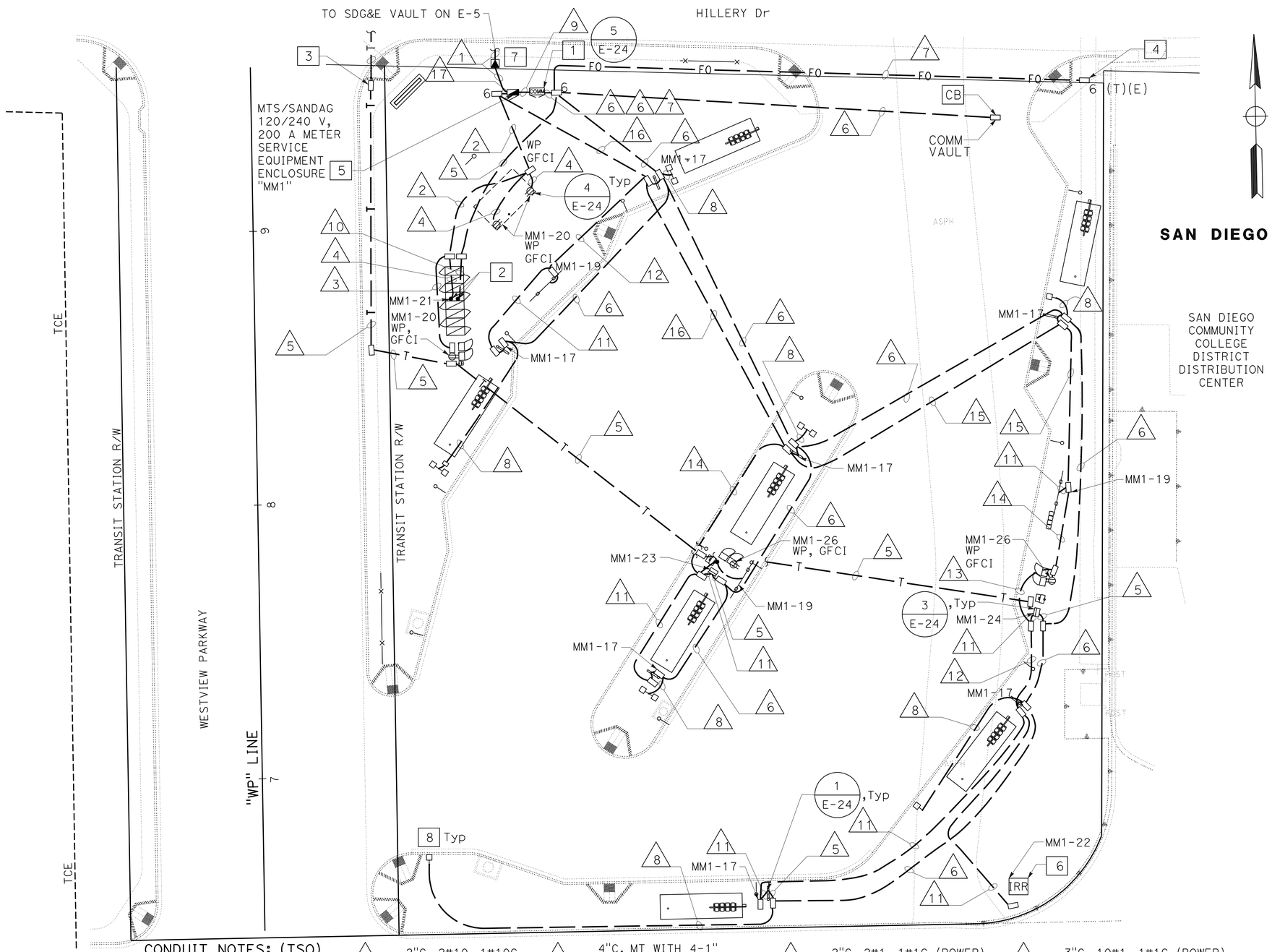

NOTES:

1. COMMUNICATION CABINET ENCLOSURE (STATE-FURNISHED) WITH INTEGRAL 120-VOLT AIR CONDITIONING UNIT (SIZED TO MAINTAIN 85 DEGREES FAHRENHEIT INSIDE THE PANEL) PER SANDAG REQUIREMENTS. SIMILAR TO APX CATALOG #APXDD-727236. INSTALL FOUNDATION AND ANCHOR BOLTS TO SECURE COMMUNICATION CABINET. THE CONTRACTOR SHALL SUBMIT CALCULATIONS COMPLETED BY A CA LICENSED CIVIL ENGINEER TO SANDAG/CALTRANS FOR REVIEW AND APPROVAL PRIOR TO INSTALLATION. SEE E-22 FOR MINIMUM REQUIREMENTS ON CONCRETE EQUIPMENT PAD. COMMUNICATION CABINET IS FED FROM CIRCUITS MM1-2,4,6.
2. LOCATION OF CONDUIT STUB-OUT AT BIKE LOCKER SHALL BE APPROVED BY THE ENGINEER. CONDUIT STUB-OUT HEIGHT SHALL BE 2" ABOVE SLAB, Max.
3. FOR CONTINUITY, SEE E-5. AT&T POINT OF CONNECTION FOR PAY PHONE SERVICES.
4. FOR CONTINUITY, SEE E-5. POINT OF CONNECTION FOR FIBER OPTIC CABLE.
5. SEE E-21 FOR SERVICE WIRING DIAGRAM.
6. IRRIGATION CONTROLLER IS INSTALLED BY LANDSCAPE. PROVIDE AND TERMINATE POWER WIRING AT THE CONTROLLERS.
7. PROVIDE AND INSTALL EQUIPMENT PER SDG&E SERVICE STANDARDS. SEE E-23.
8. INSTALL CCVS.
9. FOR ACCURATE RIGHT OF WAY AND ACCESS DATA, CONTACT RIGHT OF WAY ENGINEERING AT DISTRICT OFFICE.

CONDUIT NOTES: (TSO)

1	3"C, MT (POWER); PER SDG&E	3	2"C, 2#10, 1#10G (POWER)	7	4"C, MT WITH 4-1" INNERDUCT (FIBER)	11	2"C, 2#1, 1#1G (POWER)	15	3"C, 10#1, 1#1G (POWER)
2	2"C, 4#10, 1#10G (POWER)	4	1"C, 2#10, 1#10G (POWER)	8	2"C, MT (CCVS)	12	2"C, 4#1, 1#1G (POWER)	16	3"C, 12#1, 1#1G (POWER)
		5	2"C, MT (COMM)	9	2"C, 6#10, 1#10G (POWER)	13	2"C, 6#1, 1#1G (POWER)	17	2-3"C, 4#10, 1#10G, 12#1, 1#1G (POWER)
		6	3"C, MT (COMM)	10	1"C, MT (COMM)	14	3"C, 8#1, 1#1G (POWER)		

THIS PLAN IS ACCURATE FOR ELECTRICAL WORK ONLY.

POWER AND COMMUNICATION

SCALE: 1" = 20'

E-19

STATE OF CALIFORNIA - DEPARTMENT OF TRANSPORTATION — Caltrans

CONSULTANT FUNCTIONAL SUPERVISOR: HANY HAROUN
CALCULATED-DESIGNED BY: ABEY MATHEWS
CHECKED BY: FU SUN
REVISED BY
DATE REVISED

LAST REVISION 02-09-11
DATE PLOTTED => 28-OCT-2011
TIME PLOTTED => 13:03

Dist	COUNTY	ROUTE	POST MILES TOTAL PROJECT	SHEET No.	TOTAL SHEETS
11	SD	15	M15.0/M16.4	355	610

REGISTERED ELECTRICAL ENGINEER — DATE: 01-07-11

10-24-11
PLANS APPROVAL DATE

REGISTERED PROFESSIONAL ENGINEER — ABEY MATHEWS — No. E18650 — Exp. 12-31-12 — ELECTRICAL — STATE OF CALIFORNIA

THE STATE OF CALIFORNIA OR ITS OFFICERS OR AGENTS SHALL NOT BE RESPONSIBLE FOR THE ACCURACY OR COMPLETENESS OF SCANNED COPIES OF THIS PLAN SHEET.

CH2M HILL
402 W. BROADWAY,
SUITE 1450
SAN DIEGO, CA 92101

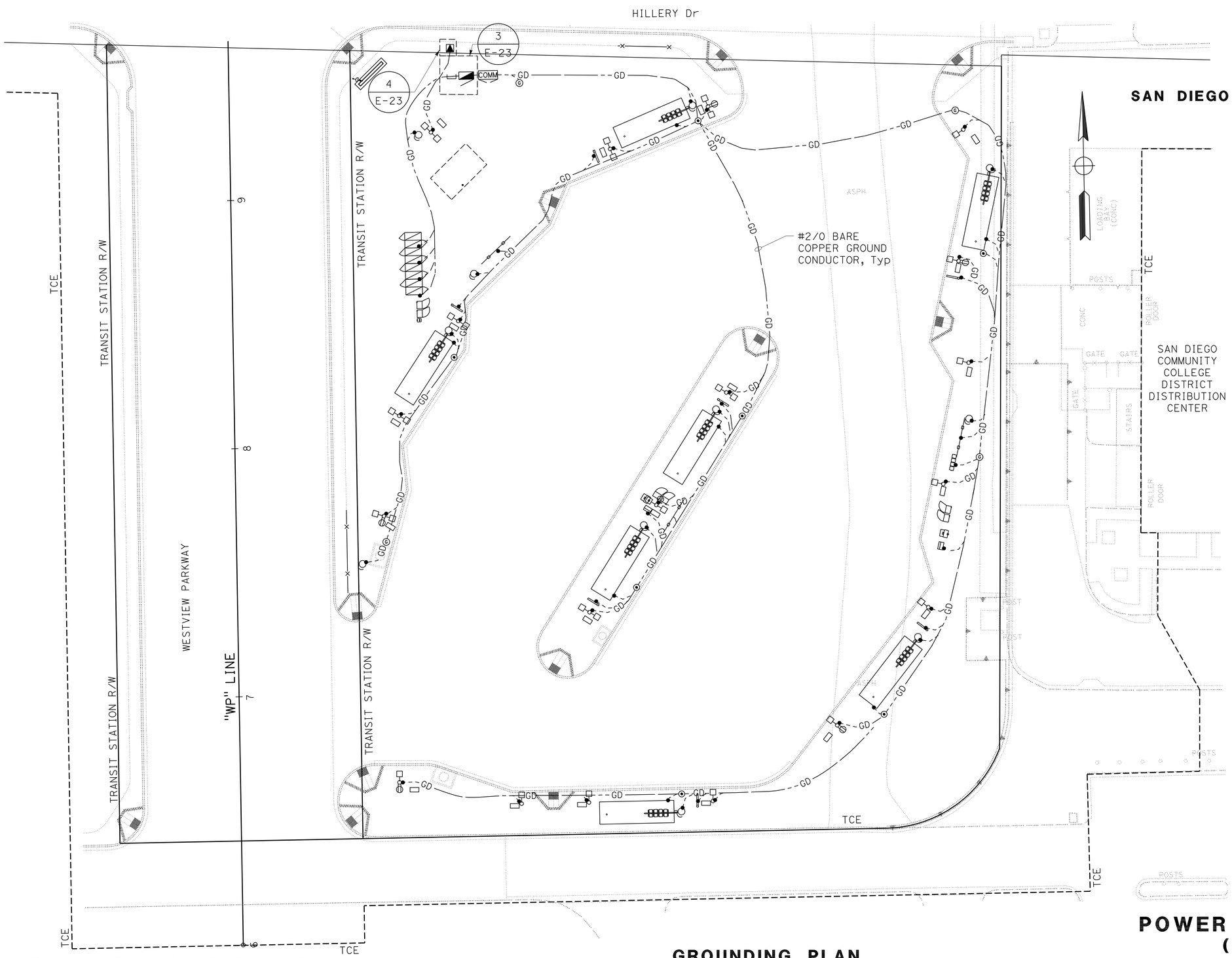

NOTES:

1. GROUNDING CONDUCTOR SHALL BE #2/0 BARE COPPER UNLESS OTHERWISE NOTED.
2. LOCATION OF GROUND TEST WELLS AND GROUNDING ELECTRODES SHALL BE APPROVED BY THE ENGINEER. THE CONTRACTOR SHALL COORDINATE ALL GROUNDING PIGTAIL LOCATIONS WITH THE FINAL LOCATION OF EQUIPMENT TO BE INSTALLED. SEE E-23 FOR DETAILS.
3. ALL CONDUCTIVE SURFACES SHALL BE BONDED BY #6 AWG INSULATED COPPER CONDUCTOR.
4. GROUNDING PIGTAIL LENGTHS ABOVE FINISHED GRADE SHALL BE MINIMIZED TO EXTENT POSSIBLE TO PREVENT TRIPPING HAZARD.
5. ALL GROUNDING PIGTAILS SHALL BE COILED AND PROTECTED UNTIL FINAL BONDING TO THE DESIGNATED EQUIPMENT IS COMPLETE.
6. ALL LOOSE PIGTAIL LENGTHS SHALL BE SECURED AND ATTACHED BY STRAPS OR OTHER MEANS AT INTERVALS NOT TO EXCEED 12 INCHES ON CENTER.
7. BOND METAL UNDERGROUND WATER PIPES PER NEC 250.50.
8. FOR ACCURATE RIGHT OF WAY AND ACCESS DATA, CONTACT RIGHT OF WAY ENGINEERING AT DISTRICT OFFICE.

THIS PLAN IS ACCURATE FOR ELECTRICAL WORK ONLY.

GROUNDING PLAN

POWER AND COMMUNICATION (ELECTRICAL DETAILS)

SCALE: 1" = 20'

E-20

STATE OF CALIFORNIA - DEPARTMENT OF TRANSPORTATION — Caltrans

CONSULTANT FUNCTIONAL SUPERVISOR: HANY HAROUN

CALCULATED-DESIGNED BY: ABEY MATHEWS — CHECKED BY: FU SUN

REVISED BY — DATE REVISED

LAST REVISION — DATE PLOTTED => 28-OCT-2011 — TIME PLOTTED => 13:03 — 02-09-11

Dist	COUNTY	ROUTE	POST MILES TOTAL PROJECT	SHEET No.	TOTAL SHEETS
11	SD	15	M15.0/M16.4	356	610

REGISTERED ELECTRICAL ENGINEER — DATE: 01-07-11

10-24-11
PLANS APPROVAL DATE

REGISTERED PROFESSIONAL ENGINEER — ABEY MATHEWS — No. E18650 — Exp. 12-31-12 — ELECTRICAL — STATE OF CALIFORNIA

THE STATE OF CALIFORNIA OR ITS OFFICERS OR AGENTS SHALL NOT BE RESPONSIBLE FOR THE ACCURACY OR COMPLETENESS OF SCANNED COPIES OF THIS PLAN SHEET.

CH2M HILL
402 W. BROADWAY,
SUITE 1450
SAN DIEGO, CA 92101

SERVICE (120/240 V) EQUIPMENT LEGEND

ITEM No.	COMPONENT	NAME PLATE DESCRIPTION
A	200 A, 240 V, 2P, CB	MAIN BREAKER
D	15 A, 1P, TEST SWITCH	LIGHTING TEST SWITCH
E	20 A, 120 V, 1P, CB	COMMUNICATION CABINET
F	20 A, 120 V, 1P, CB	LIGHTING CONTROL UNIT
H	30 A, 240 V, 2P, CB	STATION LIGHTING
I	20 A, 120 V, 1P, CB	SPARE
J	20 A, 120 V, 1P, CB	SHELTER LIGHTING AND RECEPTACLE
K	20 A, 120 V, 1P, CB	SITE POWER (RECEPTACLE)
L	20 A, 120 V, 1P, CB	NEXT BUS SIGN
M	20 A, 120 V, 1P, CB	MAP CASE
N	20 A, 120 V, 1P, CB	VENDER PAD RECEPTACLE
P	20 A, 120 V, 1P, CB	BIKE LOCKER
Q	30 A, 240 V, 2PNO CONTACTOR	STATION LIGHTING CONTACTOR
R	20 A, 120 V, 1P, CB	IRRIGATION CONTROLLER
S	20 A, 120 V, 1P, CB	TICKET VENDING MACHINE
T	20 A, 120 V, 1P, CB	VENDING MACHINES

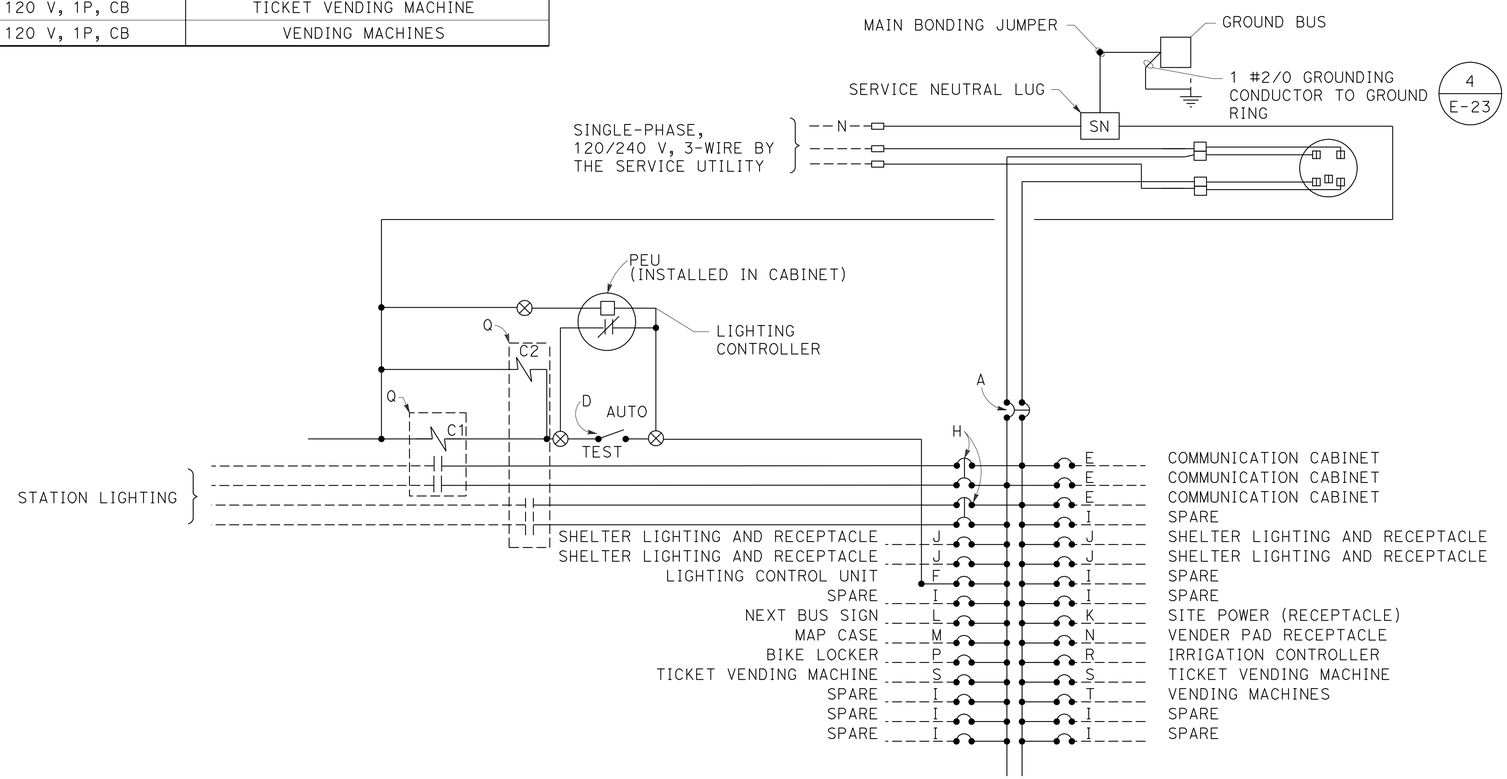

NOTE:

1: EQUIPMENT SHALL BE RATED FOR AVAILABLE FAULT CURRENT (UTILITY'S CONTRIBUTION) OF 42,000 A

120/240 V SERVICE WIRING DIAGRAM - "MM1"

25 kVA Max DEMAND

TYPE III-C SERVICE EQUIPMENT ENCLOSURE. ONE 200 A METER. SEE RSP ES-2C AND RSP ES-2F

POWER AND COMMUNICATION (ELECTRICAL DETAILS)

NO SCALE

E-21

STATE OF CALIFORNIA - DEPARTMENT OF TRANSPORTATION — Caltrans

CONSULTANT FUNCTIONAL SUPERVISOR: HANY HAROUN

CALCULATED-DESIGNED BY: ABEY MATHEWS — CHECKED BY: FU SUN

REVISED BY — DATE REVISED

LAST REVISION 02-09-11 — DATE PLOTTED => 31-OCT-2011 — TIME PLOTTED => 09:34

Dist	COUNTY	ROUTE	POST MILES TOTAL PROJECT	SHEET No.	TOTAL SHEETS
11	SD	15	M15.0/M16.4	357	610

REGISTERED CIVIL ENGINEER 01-10-11 DATE

10-24-11
PLANS APPROVAL DATE

REGISTERED PROFESSIONAL ENGINEER FU SUN No. 64991 Exp. 06-30-11 CIVIL STATE OF CALIFORNIA

THE STATE OF CALIFORNIA OR ITS OFFICERS OR AGENTS SHALL NOT BE RESPONSIBLE FOR THE ACCURACY OR COMPLETENESS OF SCANNED COPIES OF THIS PLAN SHEET.

CH2M HILL
402 W. BROADWAY,
SUITE 1450
SAN DIEGO, CA 92101

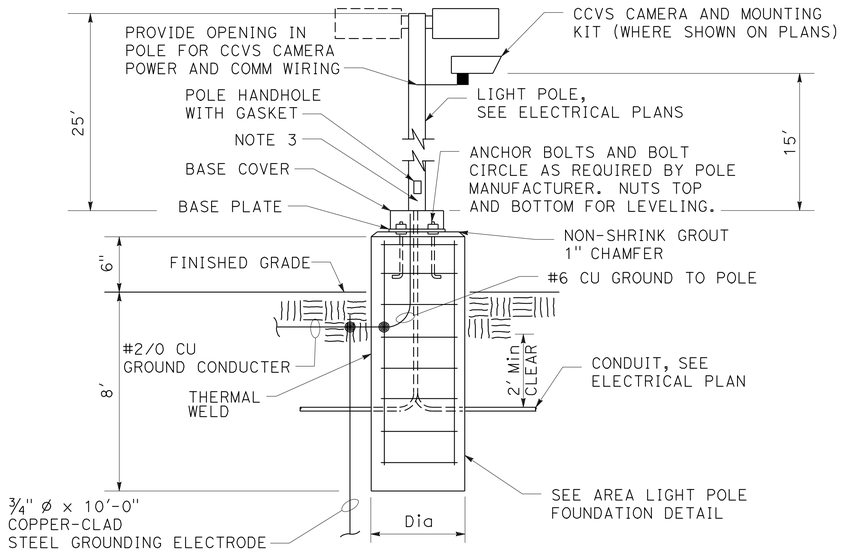

NOTES:

1. USE STAINLESS STEEL NUTS AND LOCKWASHERS.
2. FOR PROPER ORIENTATION OF POLE, COORDINATE WITH SITE PLANS.
3. PROVIDE LOCKABLE WEATHER PROOF DUPLEX RECEPTACLE WHERE SHOWN ON PLANS.

AREA LIGHT POLE AND FIXTURE - TYPES A1 & A2 (1 -)

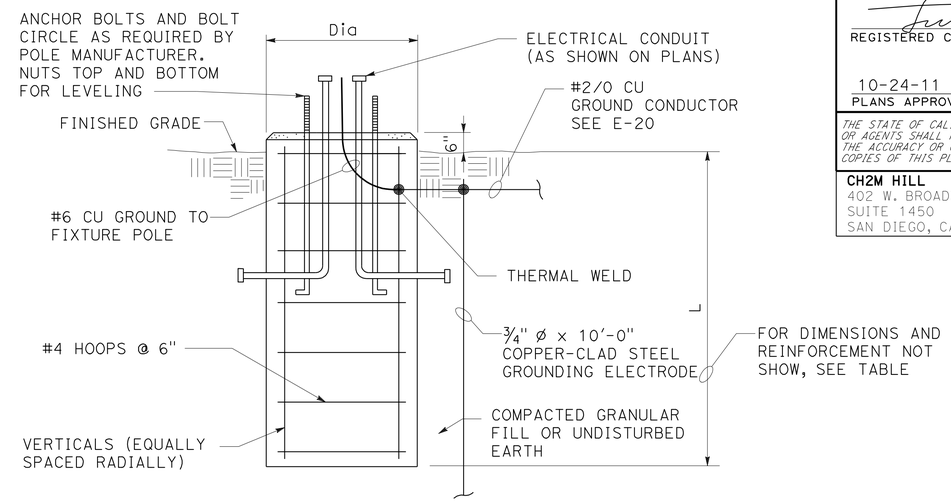

MAX POLE HEIGHT	DIAMETER	L	VERTICALS
25'	2'-0"	8'-0"	8#7

NOTES:

1. USE STAINLESS STEEL NUTS AND LOCKWASHERS.
2. INSTALL TWO CONDUITS (MINIMUM) PER POLE.
3. INSTALL CENTERLINE OF POLE 5'-0" BEHIND THE FACE OF THE CURB.
4. CONDUITS SHALL BE STUBBED UP TO WITHIN 6" OF THE POLE HANDHOLE.

AREA LIGHT POLE FOUNDATION (2 -)

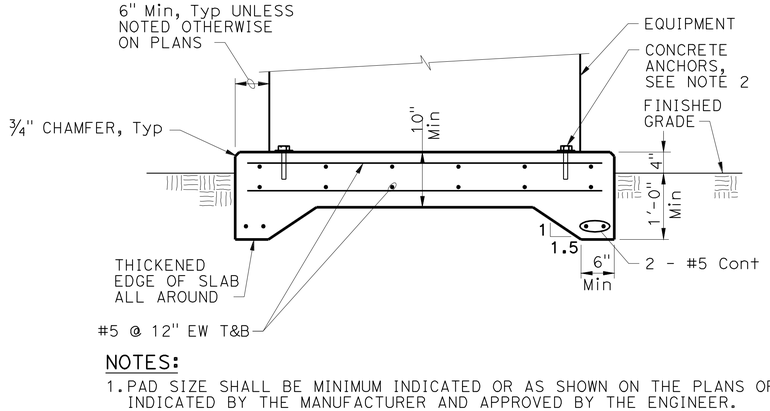

NOTES:

1. PAD SIZE SHALL BE MINIMUM INDICATED OR AS SHOWN ON THE PLANS OR AS INDICATED BY THE MANUFACTURER AND APPROVED BY THE ENGINEER.
2. THE SIZE, NUMBER, TYPE, LOCATION, AND THREAD PROJECTION OF THE ANCHOR BOLTS SHALL BE DETERMINED BY THE EQUIPMENT MANUFACTURER AND AS APPROVED BY THE ENGINEER. ANCHOR BOLTS SHALL BE HELD IN POSITION WITH A TEMPLATE OR OTHER ACCEPTABLE MEANS, MATCHING THE BASE PLATE, WHILE PAD IS BEING PLACED.
3. EQUIPMENT BASES SHALL BE INSTALLED LEVEL.

CONCRETE EQUIPMENT PAD (3 -)

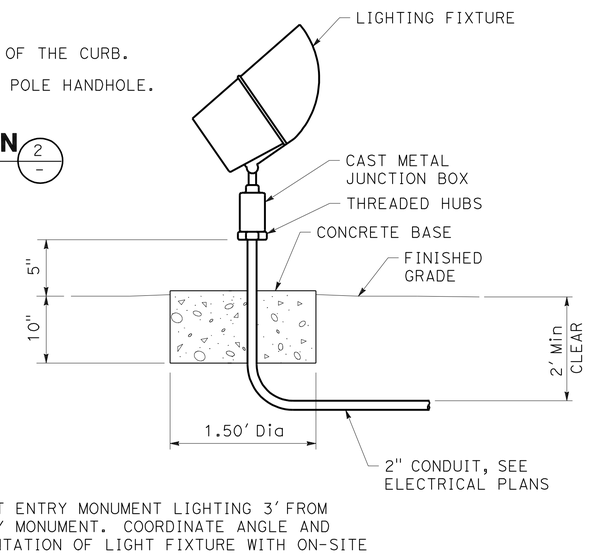

NOTES:

1. MOUNT ENTRY MONUMENT LIGHTING 3' FROM ENTRY MONUMENT. COORDINATE ANGLE AND ORIENTATION OF LIGHT FIXTURE WITH ON-SITE SANDAG REPRESENTATIVE.
2. INSTALL PER MANUFACTURER'S REQUIREMENTS.

ENTRY MONUMENT - TYPE A3 LIGHTING (4 -)

LIGHTING (TRANSIT STATION)
(ELECTRICAL DETAILS)

NO SCALE

E-22

STATE OF CALIFORNIA - DEPARTMENT OF TRANSPORTATION
Caltrans

CONSULTANT FUNCTIONAL SUPERVISOR: HANY HAROUN
CALCULATED-DESIGNED BY: ABEY MATHEWS
CHECKED BY: FU SUN
REVISED BY
DATE REVISED

LAST REVISION 02-09-11
DATE PLOTTED => 28-OCT-2011
TIME PLOTTED => 06:26

Dist	COUNTY	ROUTE	POST MILES TOTAL PROJECT	SHEET No.	TOTAL SHEETS
11	SD	15	M15.0/M16.4	358	610

REGISTERED ELECTRICAL ENGINEER — DATE 01-07-11

10-24-11
PLANS APPROVAL DATE

REGISTERED PROFESSIONAL ENGINEER — ABEY MATHEWS — No. E18650 — Exp. 12-31-12 — ELECTRICAL — STATE OF CALIFORNIA

THE STATE OF CALIFORNIA OR ITS OFFICERS OR AGENTS SHALL NOT BE RESPONSIBLE FOR THE ACCURACY OR COMPLETENESS OF SCANNED COPIES OF THIS PLAN SHEET.

CH2M HILL
402 W. BROADWAY,
SUITE 1450
SAN DIEGO, CA 92101

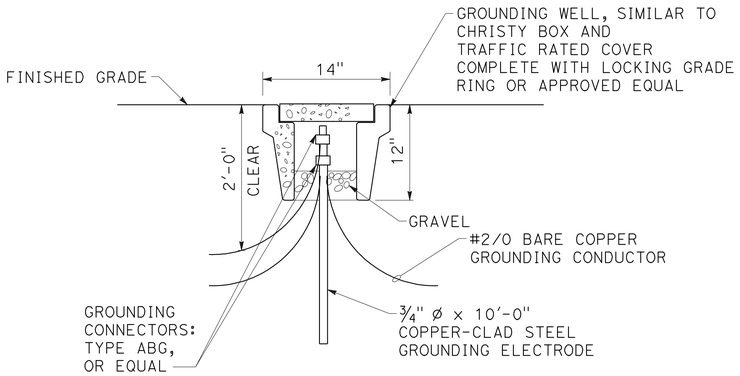

NOTES:

1. MARK "GROUNDING ELECTRODE" ON TRAFFIC COVER.
2. PLACE 6" OF CRUSHED ROCK IN BOTTOM OF EACH WELL.

GROUND TEST WELL (1/-)

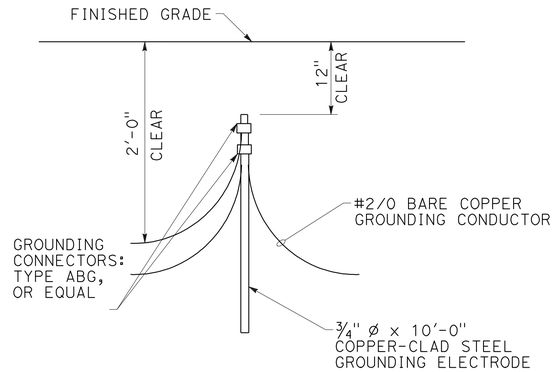

NOTES:

1. INSTALL FULL LENGTH WITH CONDUCTOR CONNECTION AT UPPER END.
2. INSTALL WITH CONNECTION POINT BELOW FINISHED GRADE.

GROUNDING ELECTRODE (2/-)

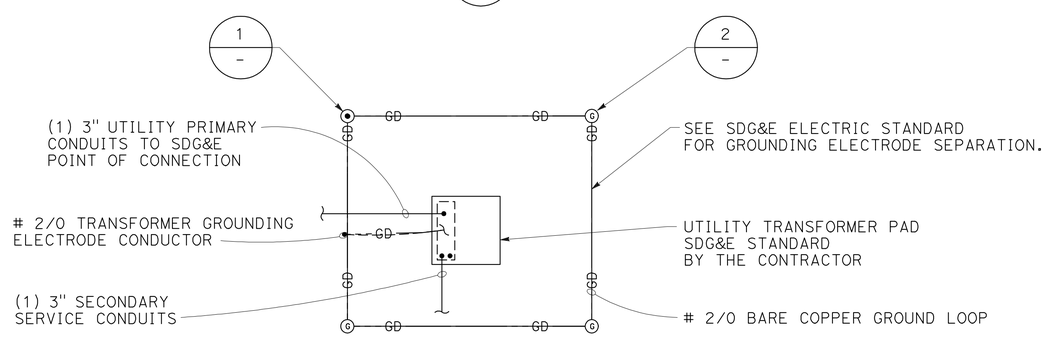

NOTES:

1. COORDINATE SERVICE AND LOCATION OF UTILITY STRUCTURES WITH SDG&E AND SANDAG.
2. PROVIDE GROUNDING AT METER PEDESTAL AND AT TRANSFORMER PAD PER NEC AND SDG&E.
3. ENCASE ANY GROUND WIRE NOT COVERED BY FINISHED CONCRETE SURFACE.

SDG&E UTILITY TRANSFORMER PAD DETAIL (3/-)

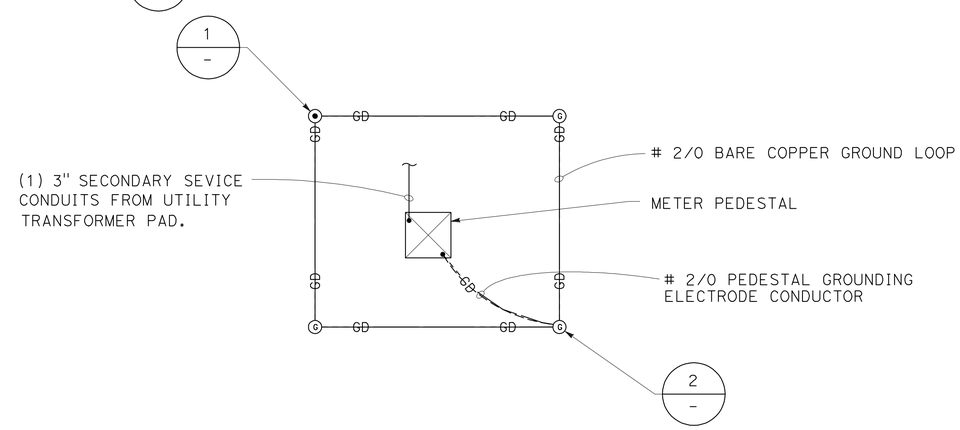

NOTES:

1. COORDINATE SERVICE AND LOCATION OF UTILITY STRUCTURES WITH SDG&E AND SANDAG.
2. PROVIDE GROUNDING AT METER PEDESTAL AND AT TRANSFORMER PAD PER NEC AND SDG&E.
3. ENCASE ANY GROUND WIRE NOT COVERED BY FINISHED CONCRETE SURFACE.

MTS / SANDAG METER PEDESTAL "MM1" DETAIL (4/-)

POWER AND COMMUNICATION (ELECTRICAL DETAILS)

NO SCALE

E-23

STATE OF CALIFORNIA - DEPARTMENT OF TRANSPORTATION — Caltrans

CONSULTANT FUNCTIONAL SUPERVISOR: HANY HAROUN

CALCULATED-DESIGNED BY: ABEY MATHEWS — CHECKED BY: FU SUN — REVISED BY — DATE REVISED

LAST REVISION 02-09-11 — DATE PLOTTED => 27-OCT-2011 — TIME PLOTTED => 11:29

Dist	COUNTY	ROUTE	POST MILES TOTAL PROJECT	SHEET No.	TOTAL SHEETS
11	SD	15	M15.0/M16.4	359	610

REGISTERED ELECTRICAL ENGINEER — DATE: 01-07-11

PLANS APPROVAL DATE: 10-24-11

REGISTERED PROFESSIONAL ENGINEER — ABEY MATHEWS No. E18650 Exp. 12-31-12 ELECTRICAL — STATE OF CALIFORNIA

THE STATE OF CALIFORNIA OR ITS OFFICERS OR AGENTS SHALL NOT BE RESPONSIBLE FOR THE ACCURACY OR COMPLETENESS OF SCANNED COPIES OF THIS PLAN SHEET.

CH2M HILL
402 W. BROADWAY,
SUITE 1450
SAN DIEGO, CA 92101

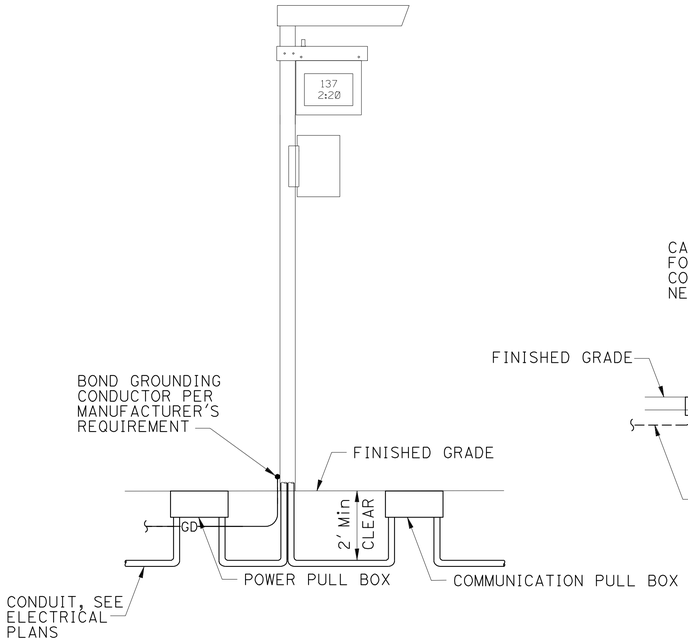

NEXT BUS SIGN DETAIL 1/-

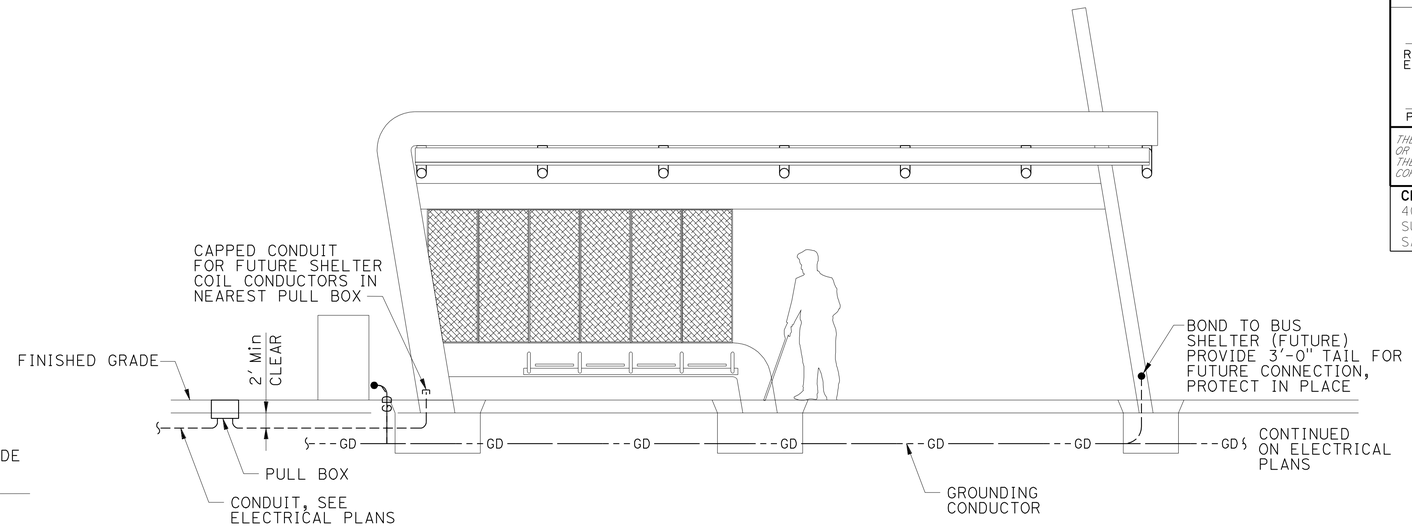

TYPICAL SHELTER DETAIL 2/-

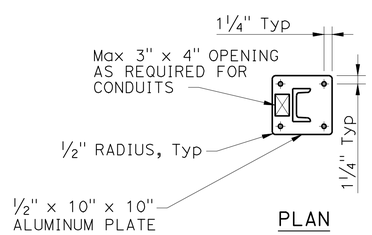

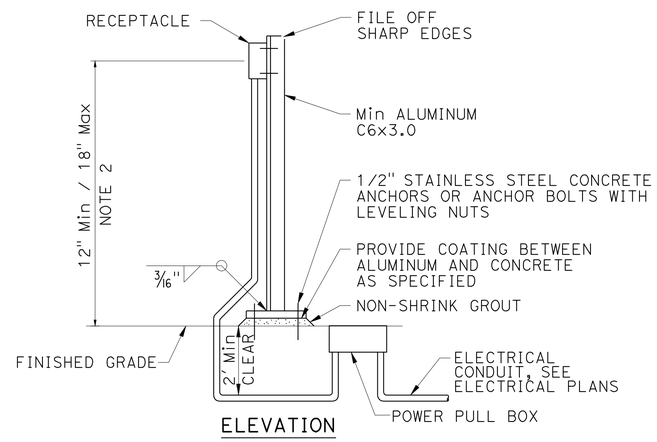

PEDESTAL MOUNTED RECEPTACLE 4/-

NOTES:

1. ALL MOUNTING HARDWARE SHALL BE STAINLESS STEEL. USE WASHERS AND SPLIT-LOCK WASHERS UNDER ALL NUTS AND BOLTS.
2. COORDINATE HEIGHT REQUIREMENTS AND LOCATION WITH SANDAG/MTS ONSITE REPRESENTATIVE PRIOR TO INSTALLING.

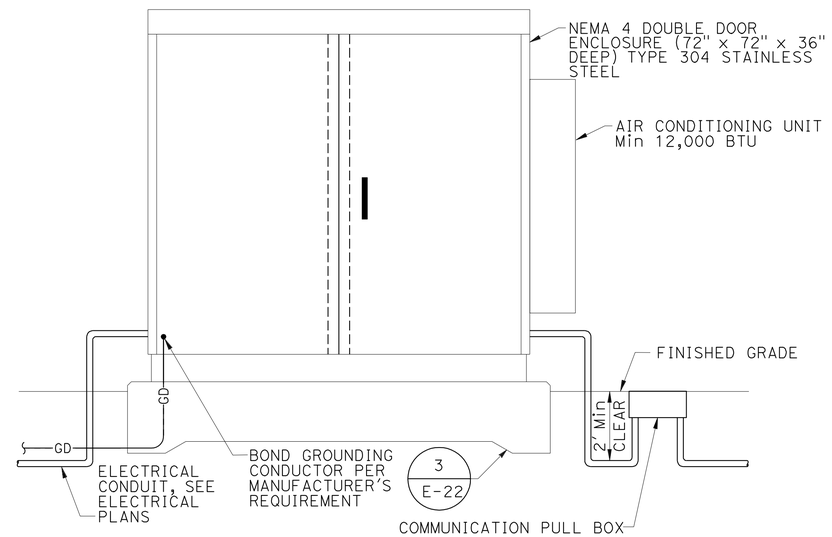

COMMUNICATION CABINET DETAIL 5/-

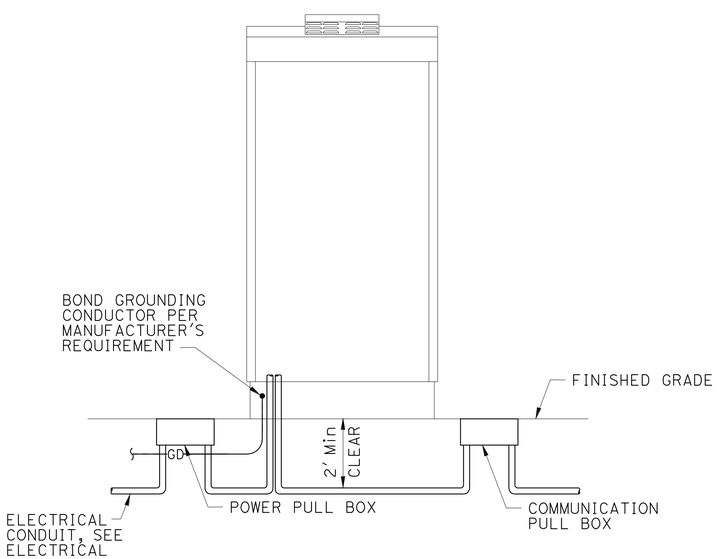

TICKET VENDING MACHINE DETAIL 3/-

POWER AND COMMUNICATION (ELECTRICAL DETAILS)

NO SCALE

E-24

STATE OF CALIFORNIA - DEPARTMENT OF TRANSPORTATION — Caltrans

CONSULTANT FUNCTIONAL SUPERVISOR: HANY HAROUN

CALCULATED-DESIGNED BY: ABEY MATHEWS — REVISED BY

CHECKED BY: FU SUN — DATE REVISED

LAST REVISION — DATE PLOTTED => 27-OCT-2011 TIME PLOTTED => 11:29 — 02-09-11

Dist	COUNTY	ROUTE	POST MILES TOTAL PROJECT	SHEET No.	TOTAL SHEETS
11	SD	15	M15.0/M16.4	360	610

REGISTERED CIVIL ENGINEER — DATE 01-03-11

10-24-11
PLANS APPROVAL DATE

REGISTERED PROFESSIONAL ENGINEER — ROBERT E. HAWTHORNE — No. 40075 — Exp. 03/31/12 — CIVIL — STATE OF CALIFORNIA

THE STATE OF CALIFORNIA OR ITS OFFICERS OR AGENTS SHALL NOT BE RESPONSIBLE FOR THE ACCURACY OR COMPLETENESS OF SCANNED COPIES OF THIS PLAN SHEET.

AECOM
7807 CONVOY COURT, SUITE 200
SAN DIEGO, CA 92111

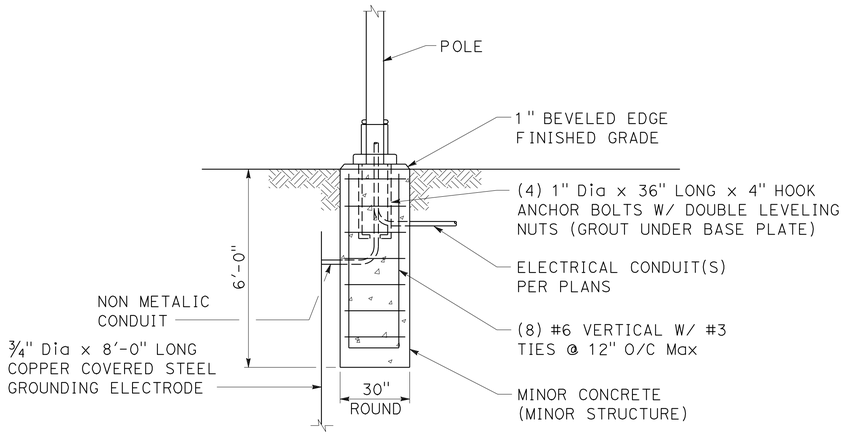

STREET LIGHT FOUNDATION DETAIL

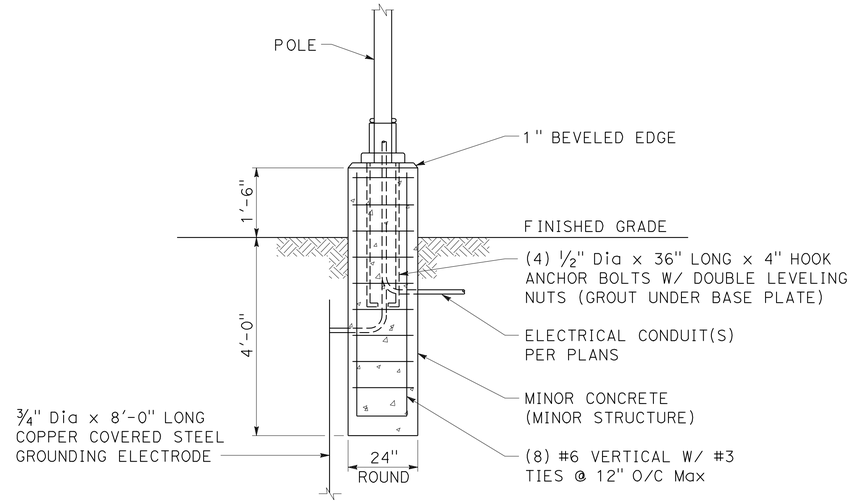

PARK AND RIDE LOT LIGHT FOUNDATION DETAIL

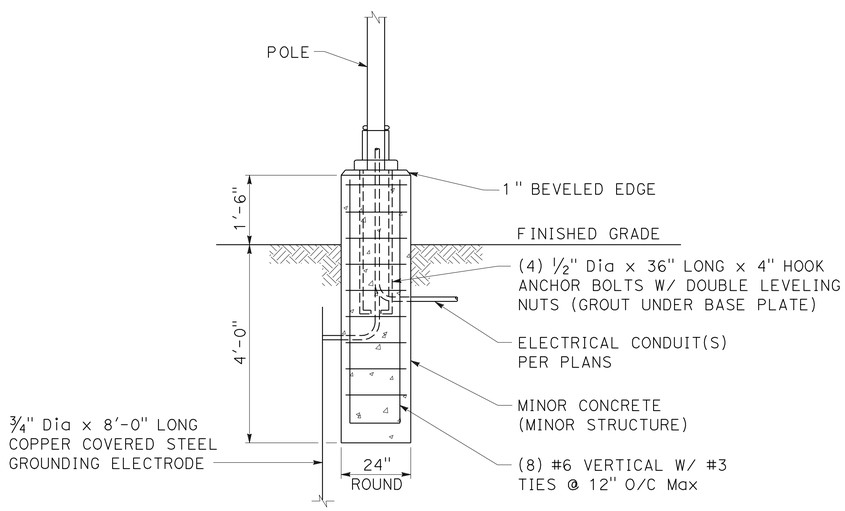

AREA LIGHT FOUNDATION DETAIL

LIGHTING (CITY STREET, PARK AND RIDE, AREA)
(FOUNDATION DETAILS)

NO SCALE

E-25

REVISED BY | DATE REVISED
CALCULATED-DESIGNED BY | CHECKED BY
CONSULTANT FUNCTIONAL SUPERVISOR: Michael Crull

STATE OF CALIFORNIA - DEPARTMENT OF TRANSPORTATION
Caltrans

LAST REVISION 10-14-11 | DATE PLOTTED => 28-OCT-2011 | TIME PLOTTED => 13:04

DIST	COUNTY	ROUTE	POST MILES TOTAL PROJECT	SHEET NO.	TOTAL SHEETS
11	SD	15	M15.0/M16.4	361	610

REGISTERED CIVIL ENGINEER

June 6, 2008
PLANS APPROVAL DATE

REGISTERED PROFESSIONAL ENGINEER
Donald E. Howe
No. C46402
Exp. 3-31-09
CIVIL
STATE OF CALIFORNIA

The State of California or its officers or agents shall not be responsible for the accuracy or completeness of electronic copies of this plan sheet.

To accompany plans dated 10-24-11

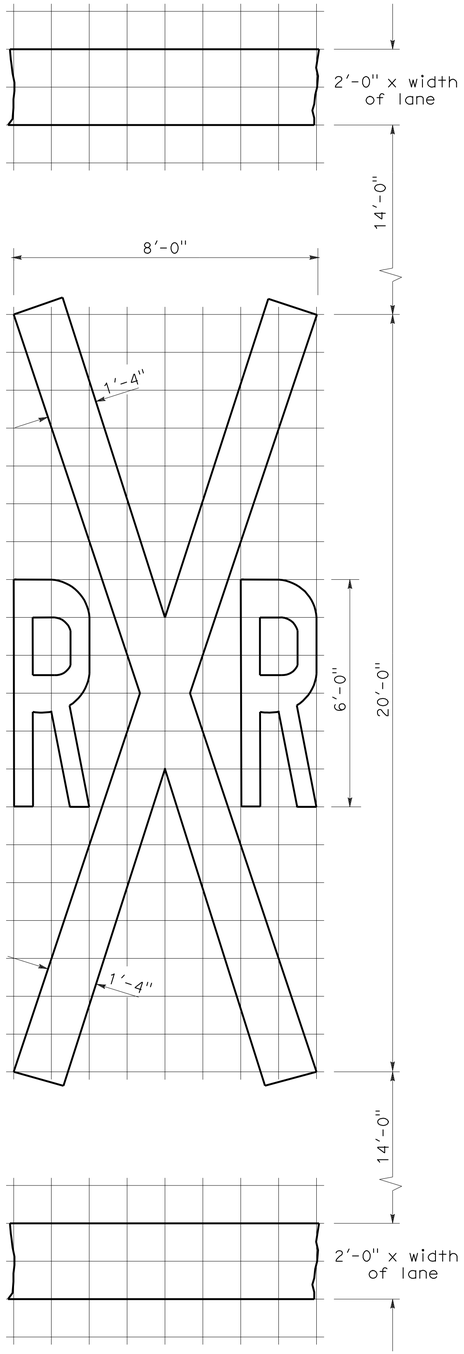

RAILROAD CROSSING SYMBOL

✳70 sq ft DOES NOT INCLUDE THE 2'-0" x VARIABLE WIDTH TRANSVERSE LINES.

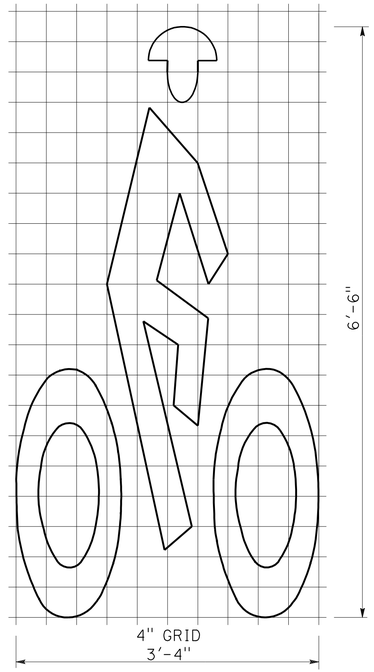

BIKE LANE SYMBOL

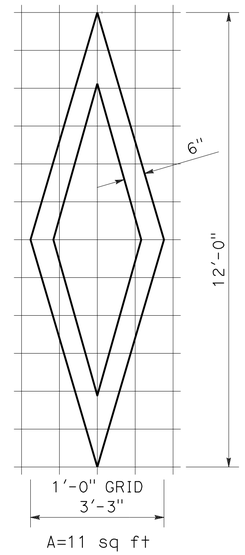

DIAMOND SYMBOL

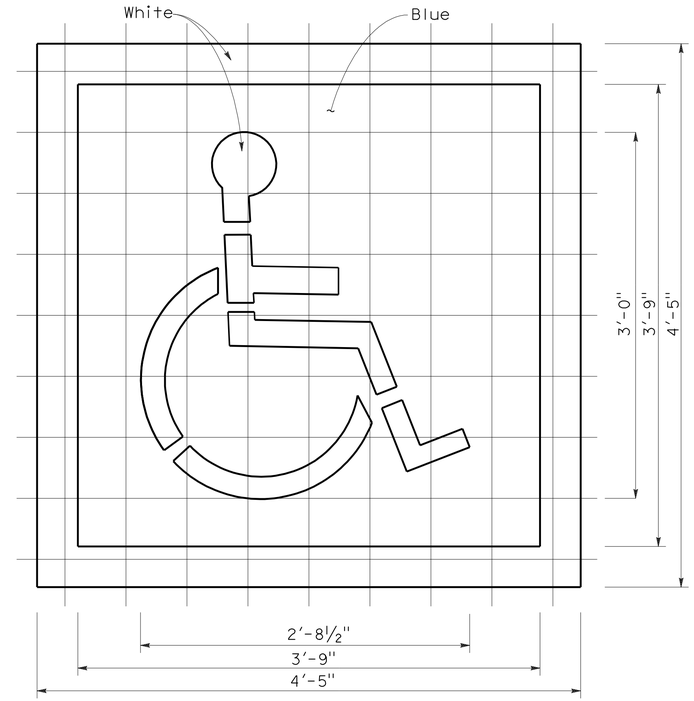

INTERNATIONAL SYMBOL OF ACCESSIBILITY MARKING

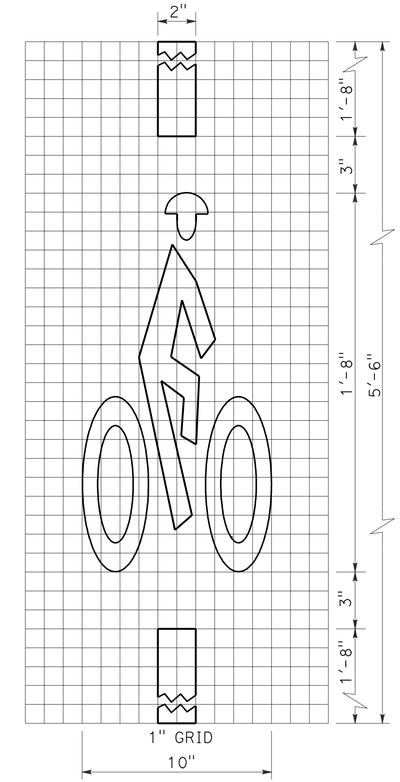

BICYCLE LOOP DETECTOR SYMBOL

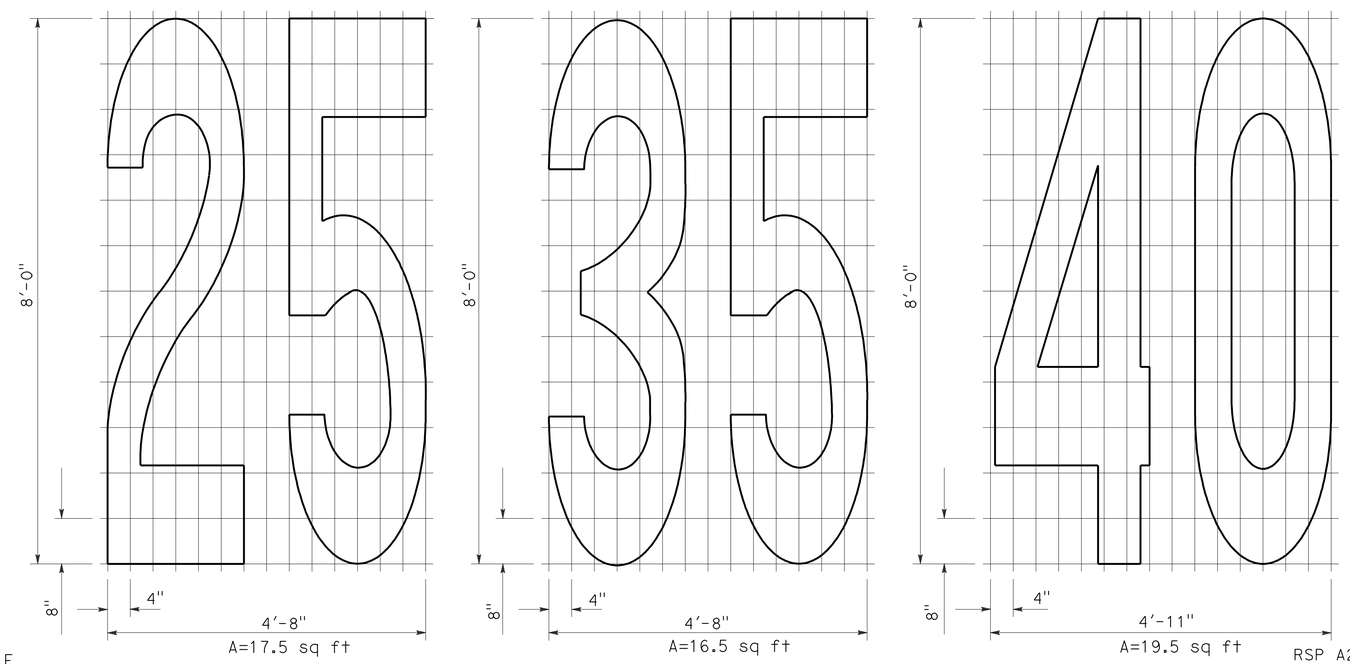

NUMERALS

NOTE:

1. Minor variations in dimensions may be accepted by the Engineer.

STATE OF CALIFORNIA
DEPARTMENT OF TRANSPORTATION

PAVEMENT MARKINGS SYMBOLS AND NUMERALS

NO SCALE

RSP A24C DATED JUNE 6, 2008 SUPERSEDES STANDARD PLAN A24C DATED MAY 1, 2006 - PAGE 11 OF THE STANDARD PLANS BOOK DATED MAY 2006.

REVISED STANDARD PLAN RSP A24C

2006 REVISED STANDARD PLAN RSP A24C

5-27-08

DIST	COUNTY	ROUTE	POST MILES TOTAL PROJECT	SHEET NO.	TOTAL SHEETS
11	SD	15	M15.0/M16.4	362	610

REGISTERED CIVIL ENGINEER

November 17, 2006
PLANS APPROVAL DATE

REGISTERED PROFESSIONAL ENGINEER Dallas Forester No. C37765 Exp. 12-31-06 CIVIL STATE OF CALIFORNIA

The State of California or its officers or agents shall not be responsible for the accuracy or completeness of electronic copies of this plan sheet.

To accompany plans dated 10-24-11

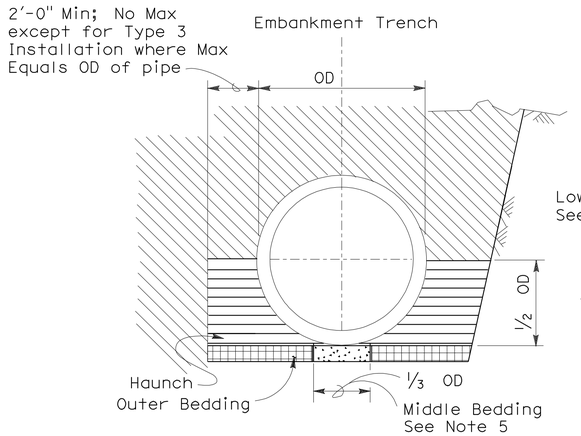

BACKFILL

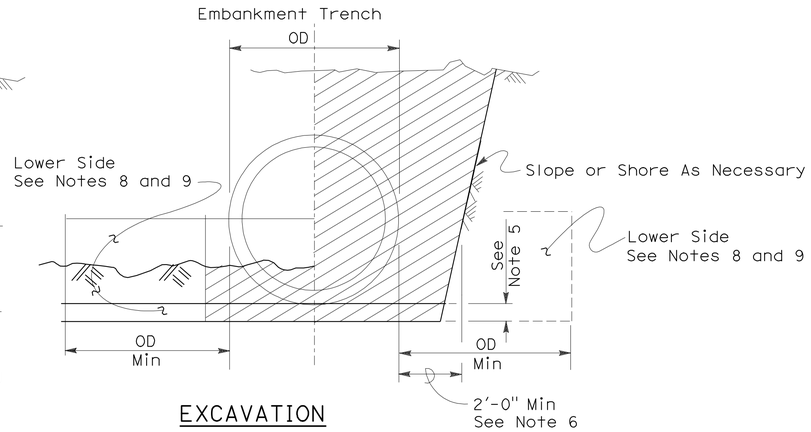

EXCAVATION

Roadway Embankment

Structure Backfill (Culvert) See Note 6

Structure Backfill (Culvert) See Note 6

Loose Backfill

Excavation Structure (Culvert)

TYPE 1 INSTALLATION:

The haunch and outer bedding shall be compacted to a minimum 90 percent relative compaction. In addition, the minimum sand equivalent in these areas shall be 30 and the maximum percentage passing the 75 μm sieve size shall be 12.

TYPE 2 INSTALLATION:

The haunch and outer bedding shall be compacted to a minimum 90 percent relative compaction. In addition, the minimum sand equivalent in these areas shall be 25.

TYPE 3 INSTALLATION:

The haunch and outer bedding shall be compacted to a minimum 85 percent relative compaction. 90 percent relative compaction will be required where the fill over the pipe is less than 4'-0" or 1/2 OD.

NOTES:

1. Unless otherwise shown on the plans or specified in the special provision, the Contractor shall have the option of selecting the class of RCP and the type of installation to be used, provided the height of cover does not exceed the value shown for the RCP selected.
   Example: 24" RCP culvert with maximum cover of 19'-0" the options are:
   a) Class III or stronger with Installation Type 1.
   b) Class III Special or stronger with Installation Type 2.
   c) Class IV Special or stronger with Installation Type 3.
   Cover is defined as the maximum vertical distance from top of the pipe to finished grade within the length of any given culvert.
2. The class of RCP and Installation Type selected shall be the same throughout the length of any given culvert.
3. The "length of any culvert" is defined as the culvert between:
   a) Successive drainage structure (inlets, junction boxes, headwalls, etc.).
   b) A drainage structure and the inlet or outlet end of the culvert.
   c) The inlet and outlet end of the culvert when there are no intervening drainage structures.
4. Oval and arch shaped RCP shall not be used.
5. 1/25 OD Min, not less than 3".
6. Slurry cement backfill may be substituted for backfill in the outer bedding and haunch areas. If slurry is used the outer and middle beddings shall be omitted. Prior to installation the soil under the middle 1/3 of the outside diameter of the pipe shall be softened by scarifying or other means to a minimum depth of 1/25 OD, but not less than 3". Where slurry cement backfill is used clear distance to trench wall may be reduced as set forth in Section 19-3.062 of the Standard Specifications.
7. Backfill shall be placed full width of excavation except where dimensions are shown for backfill width or thickness. Dimensions shown are minimums.
8. Lower side shall be suitable material as determined by the Engineer. Otherwise it shall be considered unsuitable as set forth in Section 19-2.02 of the Standard Specifications. See Note 9.
9. Where the pipe is placed in a trench, if the trench walls are sloped at 5 vertical to 1 horizontal or steeper for at least 90 percent of the trench height or up to not less than 12" from the grading plane, the firmness of the soil in the lower side need not be considered.
10. Non-reinforced precast concrete pipe sizes 3'-0" or smaller may be placed under installation Types 1, 2 or 3.

INSTALLATION TYPE 1

MINIMUM CLASS AND D-LOAD	COVER	
	108" Dia AND SMALLER	OVER 108" Dia
Class II 1000D	14.9'	12.9'
Class III 1350D	15.0' - 20.9'	13.0' - 18.9'
Class III Special 1700D	21.0' - 26.9'	19.0' - 24.9'
Class IV 2000D	27.0' - 31.9'	25.0' - 29.9'
Class IV Special 2500D	32.0' - 40.9'	30.0' - 38.9'
Class V 3000D	41.0' - 49.9'	39.0' - 46.9'
Class V Special 3600D	50.0' - 59.0'	47.0' - 58.0'

INSTALLATION TYPE 2

MINIMUM CLASS AND D-LOAD	COVER
Class II 1000D	9.9'
Class III 1350D	10.0'- 14.9'
Class III Special 1700D	15.0' - 19.9'
Class IV 2000D	20.0' - 24.9'
Class IV Special 2500D	25.0' - 31.9'
Class V 3000D	32.0' - 38.9'
Class V Special 3600D	39.0' - 47.0'

INSTALLATION TYPE 3

MINIMUM CLASS AND D-LOAD	COVER	
	48" Dia AND SMALLER	OVER 48" Dia
Class II 1000D	7.9'	5.9'
Class III 1350D	8.0' - 10.9'	6.0' - 8.9'
Class III Special 1700D	11.0' - 14.9'	9.0' - 12.9'
Class IV 2000D	15.0' - 17.9'	13.0' - 15.9'
Class IV Special 2500D	18.0' - 21.9'	16.0' - 19.9'
Class V 3000D	22.0' - 26.9'	20.0' - 24.9'
Class V Special 3600D	30.0' - 33.0'	25.0' - 31.0'

STATE OF CALIFORNIA
DEPARTMENT OF TRANSPORTATION

EXCAVATION AND BACKFILL CONCRETE PIPE CULVERTS

NO SCALE

RSP A62DA DATED NOVEMBER 17, 2006 SUPERSEDES STANDARD PLAN A62DA DATED MAY 1, 2006 - PAGE 20 OF THE STANDARD PLANS BOOK DATED MAY 2006.

REVISED STANDARD PLAN RSP A62DA

2006 REVISED STANDARD PLAN RSP A62DA

10-26-06

DIST	COUNTY	ROUTE	POST MILES TOTAL PROJECT	SHEET NO.	TOTAL SHEETS
11	SD	15	M15.0/M16.4	363	610

Randell D. Hiatt
REGISTERED CIVIL ENGINEER

June 6, 2008
PLANS APPROVAL DATE

REGISTERED PROFESSIONAL ENGINEER
Randell D. Hiatt
No. C50200
Exp. 6-30-09
CIVIL
STATE OF CALIFORNIA

The State of California or its officers or agents shall not be responsible for the accuracy or completeness of electronic copies of this plan sheet.

To accompany plans dated 10-24-11

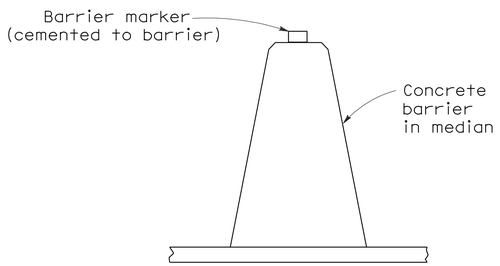

CONCRETE BARRIER TYPE 60 DELINEATION

See Notes 7 and 8

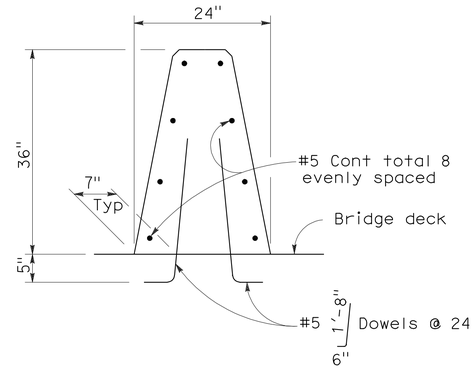

CONCRETE BARRIER TYPE 60A

Details similar to Type 60 except as noted.

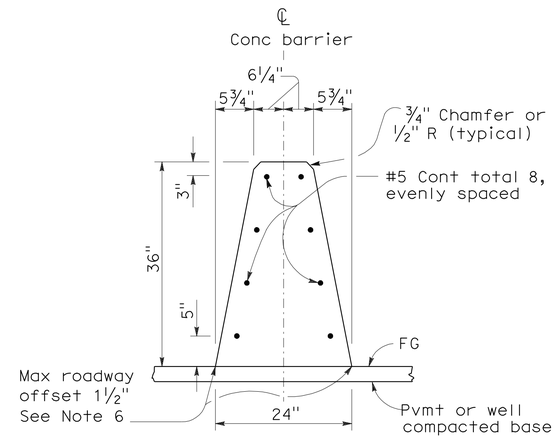

CONCRETE BARRIER TYPE 60

NOTES:

1. See Standard Plan A76B for details of Concrete Barrier Type 60 end anchors, connection to structures and transitions to Concrete Barrier Type 50 and Concrete Barrier Type 60S.
2. See Standard Plan A76C for Concrete Barrier Type 60 transitions at bridge column and sign pedestals.
3. Where glare screen is required on Concrete Barrier Type 60, use Concrete Barrier Type 60G.
4. Where the concrete barrier is added to the face of existing concrete structure, match existing weep holes.
5. Expansion joints in concrete barrier shall be located at all deck, pavement and principal wall joints. Expansion joint filler material shall be the same size as joint or ½" minimum.
6. Where roadway offset is greater than 1½", see Concrete Barrier Type 60C.
7. Barrier delineation to be used when required by the Special Provisions.
8. Spacing of barrier markers to match spacing of raised pavement markers on the adjacent median edgeline pavement delineation.
9. Reinforcing stirrup not required for roadway offsets less than 1'-0".
10. For roadway surfaces offset greater than 1½" to 3", no rebars required. For roadway surfaces offset greater than 3" to 8" use two #4 rebars at 3" above the lower roadway surface. For roadway surfaces offset greater than 8" to 12", use two #4 rebars at 3" above the lower roadway surface and two #4 rebars at 8" above the lower roadway surface. For roadway surfaces offset greater than 12" to 36", use two #4 rebars at 3" above the lower roadway surface and two #4 rebars at every 8" increment vertical spacing above the first two #4 rebars.

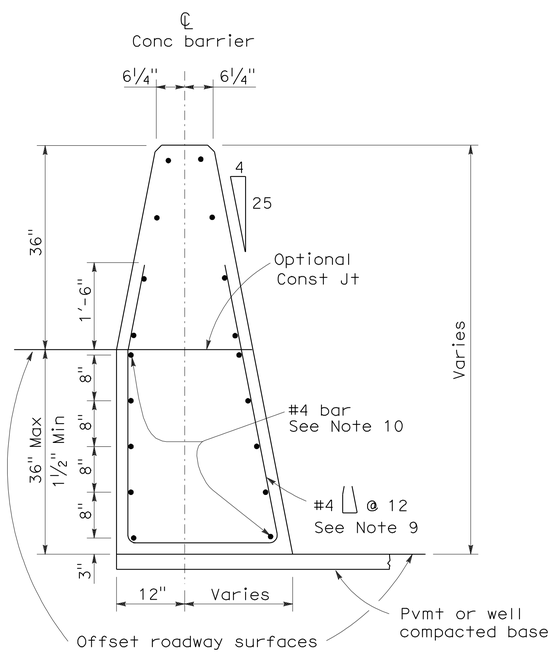

CONCRETE BARRIER TYPE 60C

Details similar to Type 60 except as noted.
Concrete barrier end anchor when necessary.
36" roadway surfaces offset shown.

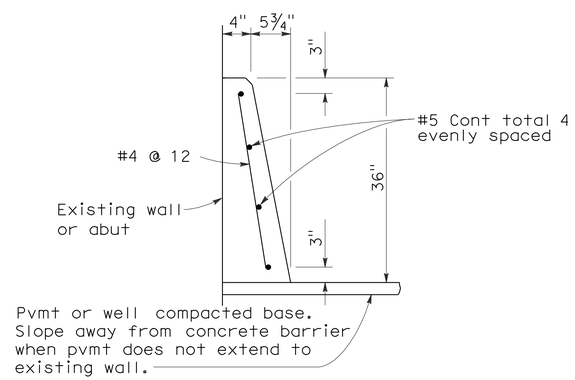

CONCRETE BARRIER TYPE 60D

STATE OF CALIFORNIA
DEPARTMENT OF TRANSPORTATION

CONCRETE BARRIER TYPE 60

NO SCALE

RSP A76A DATED JUNE 6, 2008 SUPERSEDES STANDARD PLAN A76A
DATED MAY 1, 2006 - PAGE 29 OF THE STANDARD PLANS BOOK DATED MAY 2006.

REVISED STANDARD PLAN RSP A76A

2006 REVISED STANDARD PLAN RSP A76A

5-21-08

Dist	COUNTY	ROUTE	POST MILES TOTAL PROJECT	SHEET No.	TOTAL SHEETS
11	SD	15	M15.0/M16.4	364	610

Randell D. Hiatt
REGISTERED CIVIL ENGINEER

May 20, 2011
PLANS APPROVAL DATE

REGISTERED PROFESSIONAL ENGINEER
Randell D. Hiatt
No. C50200
Exp. 6-30-11
CIVIL
STATE OF CALIFORNIA

The State of California or its officers or agents shall not be responsible for the accuracy or completeness of electronic copies of this plan sheet.

To accompany plans dated 10-24-11

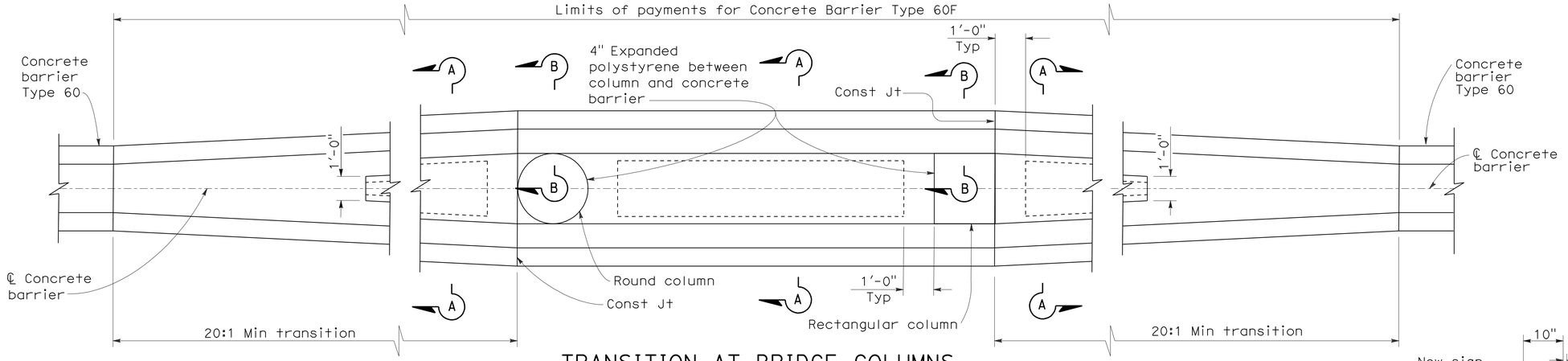

TRANSITION AT BRIDGE COLUMNS

CONCRETE BARRIER TYPE 60F
SEE NOTE 7

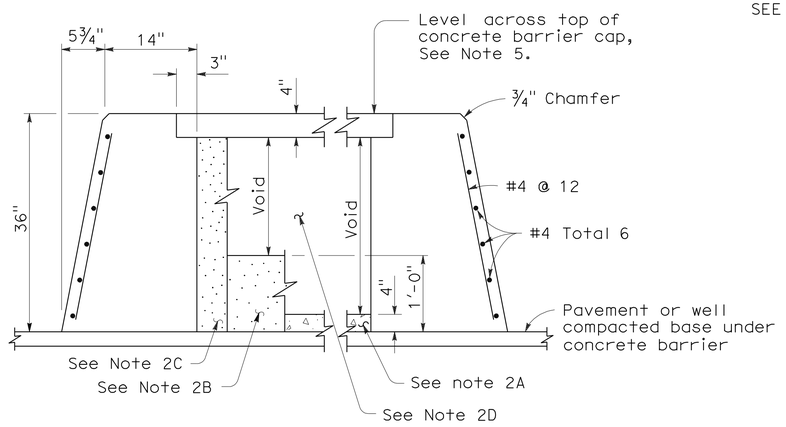

SECTION A-A

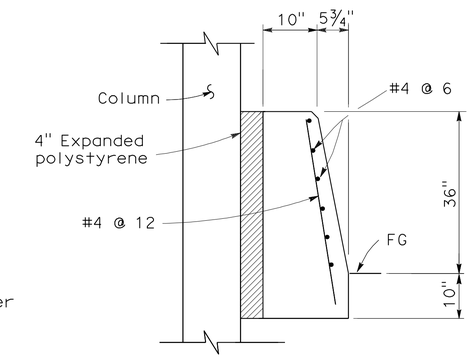

SECTION B-B

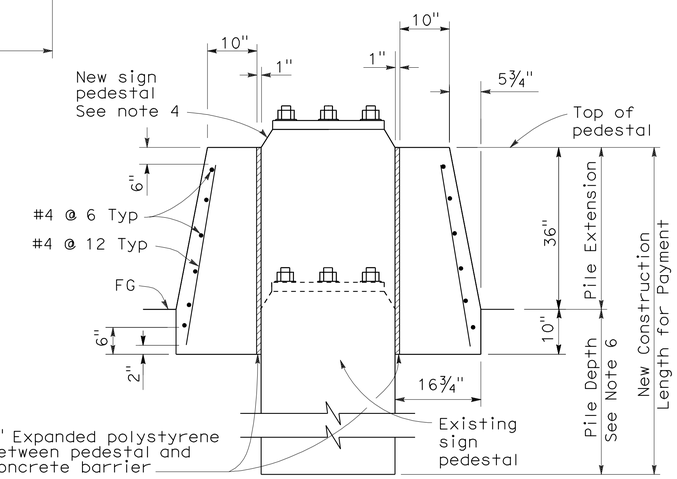

SECTION C-C

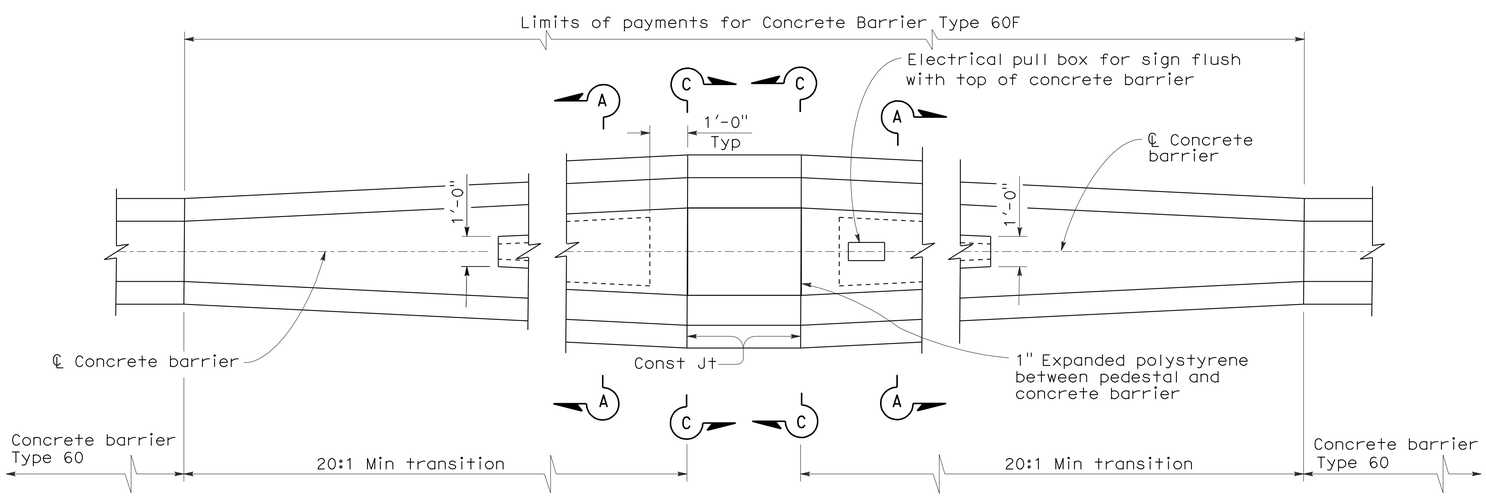

TRANSITION AT SIGN PEDESTAL

CONCRETE BARRIER TYPE 60F
SEE NOTE 7

NOTES:

1. See Revised Standard Plan RSP A76A for Concrete Barrier Type 60.
2. Contractor options for fill between concrete barrier walls:
   A. Place 4" PCC at base between concrete barrier walls.
   B. Place 1'-0" of granular material at base between walls.
   C. Place granular material from base to bottom of 4" cap.
   D. Monolithic concrete with foam blockouts is not permitted.
3. Reinforcing steel shall extend continuous through construction joints.
4. See "Overhead Sign" plans for sign pedestal elevations on new construction.
5. Adjust height of concrete barrier wall on low side of offset or superelevated roadways to provide level grade across top of concrete barrier cap.
6. See Overhead Signs Standard Plan Pile Foundation Tables.
7. All locations with limited shoulder width available for barrier, see Revised Standard Plan RSP A76F for use of Concrete Barrier Type 60GE.

STATE OF CALIFORNIA
DEPARTMENT OF TRANSPORTATION

CONCRETE BARRIER TYPE 60F

NO SCALE

RSP A76C DATED MAY 20, 2011 SUPERSEDES STANDARD PLAN A76C
DATED MAY 1, 2006 - PAGE 31 OF THE STANDARD PLANS BOOK DATED MAY 2006.

REVISED STANDARD PLAN RSP A76C

2006 REVISED STANDARD PLAN RSP A76C

4-6-11

Dist	COUNTY	ROUTE	POST MILES TOTAL PROJECT	SHEET No.	TOTAL SHEETS
11	SD	15	M15.0/M16.4	365	610

Randell D. Hiatt
REGISTERED CIVIL ENGINEER

May 20, 2011
PLANS APPROVAL DATE

REGISTERED PROFESSIONAL ENGINEER Randell D. Hiatt No. C50200 Exp. 6-30-11 CIVIL STATE OF CALIFORNIA

The State of California or its officers or agents shall not be responsible for the accuracy or completeness of electronic copies of this plan sheet.

To accompany plans dated 10-24-11

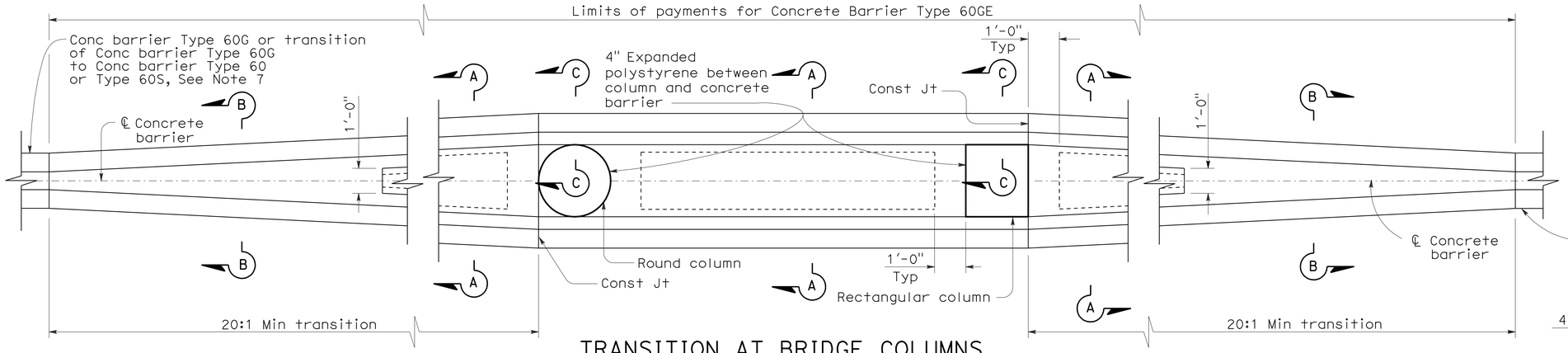

TRANSITION AT BRIDGE COLUMNS

CONCRETE BARRIER TYPE 60GE

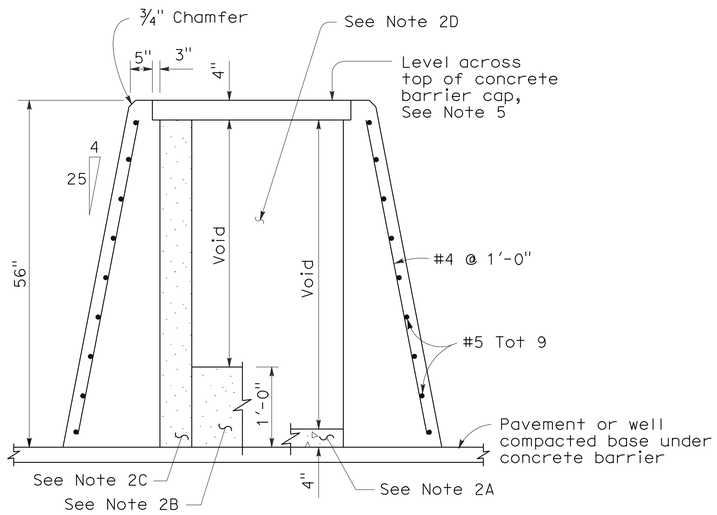

SECTION A-A

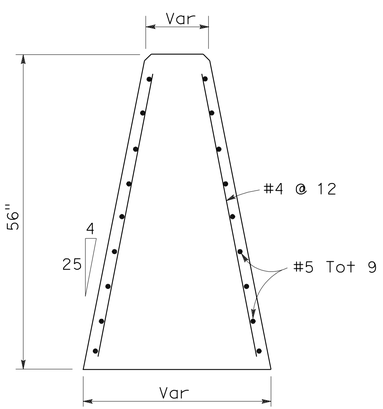

SECTION B-B

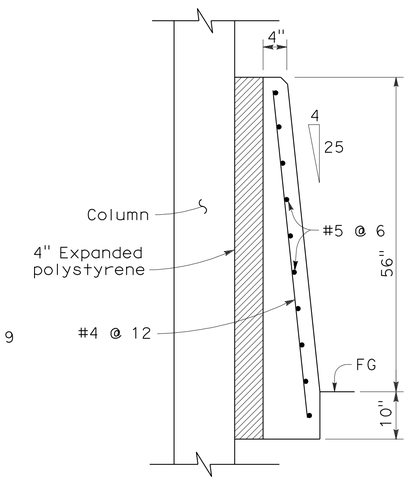

SECTION C-C

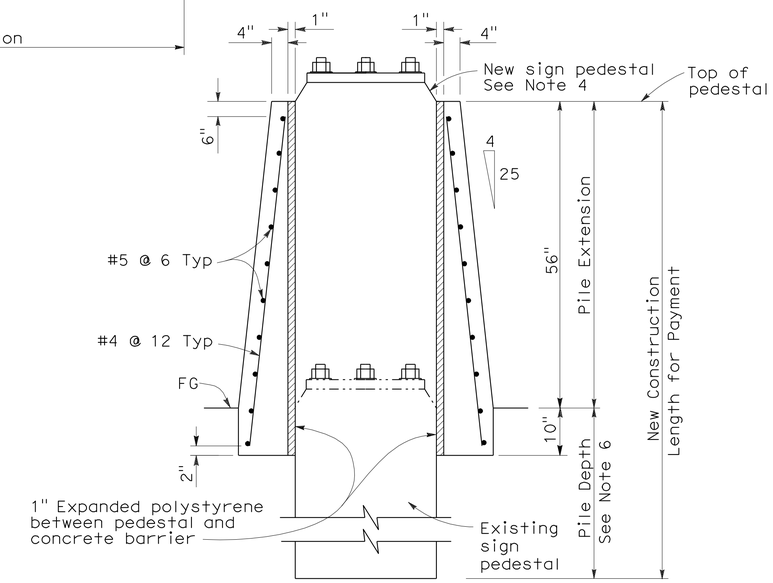

SECTION D-D

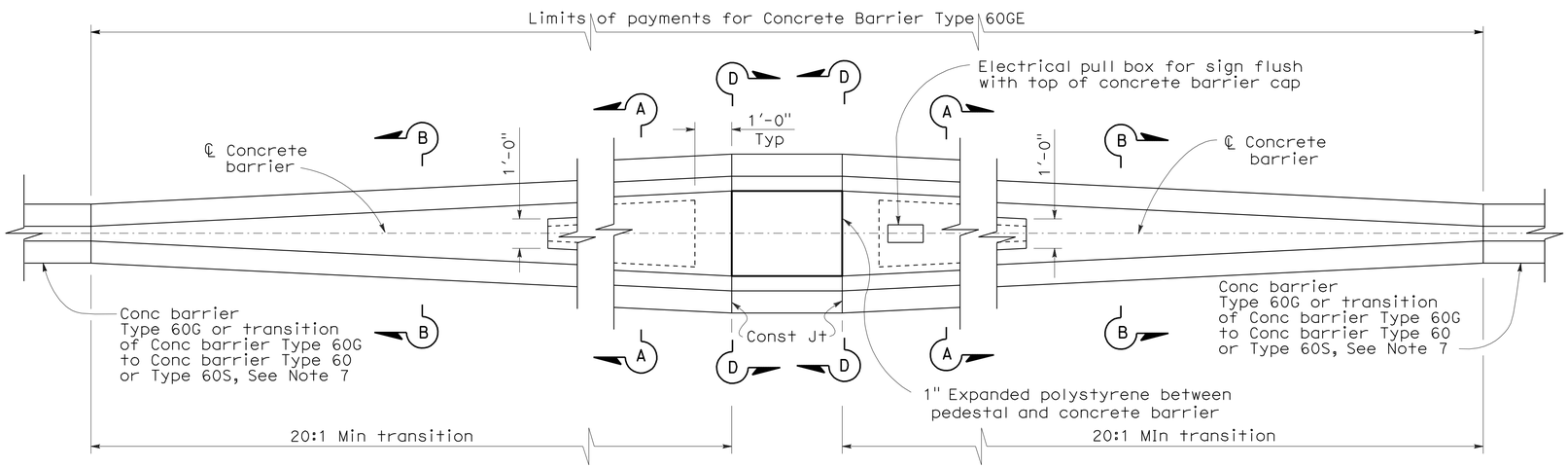

TRANSITION AT SIGN PEDESTAL

CONCRETE BARRIER TYPE 60GE

NOTES:

1. See Standard Plan A76D for Concrete Barrier Type 60G.
2. Contractor options for fill between concrete barrier walls:
   A. Place 4" PCC at base between concrete barrier walls.
   B. Place 1'-0" of granular material at base between walls.
   C. Place granular material from base to bottom of 4" cap.
   D. Monolithic concrete with foam blockouts is not permitted.
3. Reinforcing steel shall extend continuous through construction joints.
4. See "Overhead Sign" plans for sign pedestal elevations on new construction.
5. Adjust height of concrete barrier wall on low side of offset or superelevated roadways to provide level grade across top of concrete barrier cap.
6. See Overhead Signs Standard Plan Pile Foundation Tables.
7. See Revised Standard Plan A76E for concrete barrier transitions.

STATE OF CALIFORNIA
DEPARTMENT OF TRANSPORTATION

CONCRETE BARRIER TYPE 60GE

NO SCALE

RSP A76F DATED MAY 20, 2011 SUPERSEDES STANDARD PLAN A76F
DATED MAY 1, 2006 - PAGE 34 OF THE STANDARD PLANS BOOK DATED MAY 2006.

REVISED STANDARD PLAN RSP A76F

2006 REVISED STANDARD PLAN RSP A76F

4-6-11

Dist	COUNTY	ROUTE	POST MILES TOTAL PROJECT	SHEET No.	TOTAL SHEETS
11	SD	15	M15.0/M16.4	366	610

Randell D. Hiatt
REGISTERED CIVIL ENGINEER

May 20, 2011
PLANS APPROVAL DATE

REGISTERED PROFESSIONAL ENGINEER
Randell D. Hiatt
No. C50200
Exp. 6-30-11
CIVIL
STATE OF CALIFORNIA

The State of California or its officers or agents shall not be responsible for the accuracy or completeness of electronic copies of this plan sheet.

To accompany plans dated 10-24-11

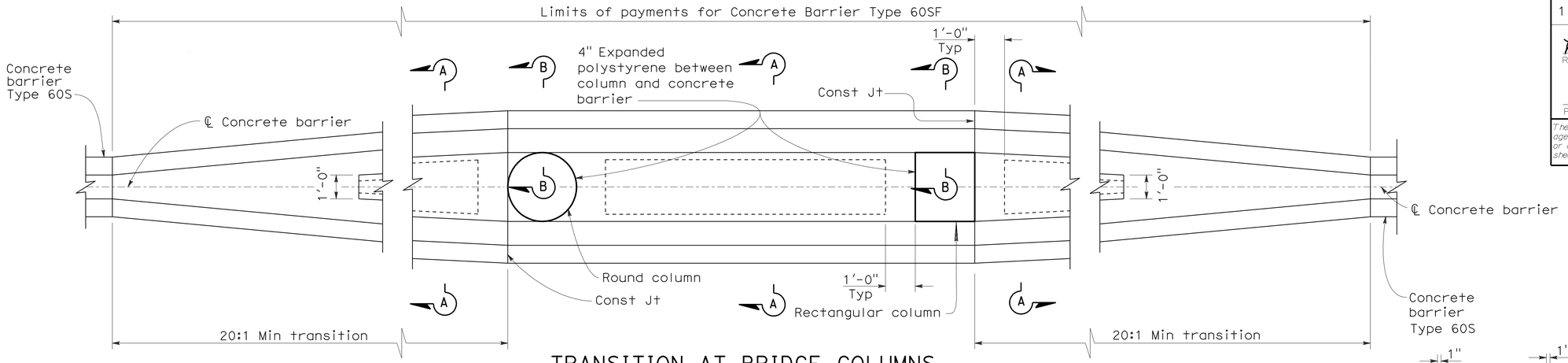

TRANSITION AT BRIDGE COLUMNS

CONCRETE BARRIER TYPE 60SF
SEE NOTE 7

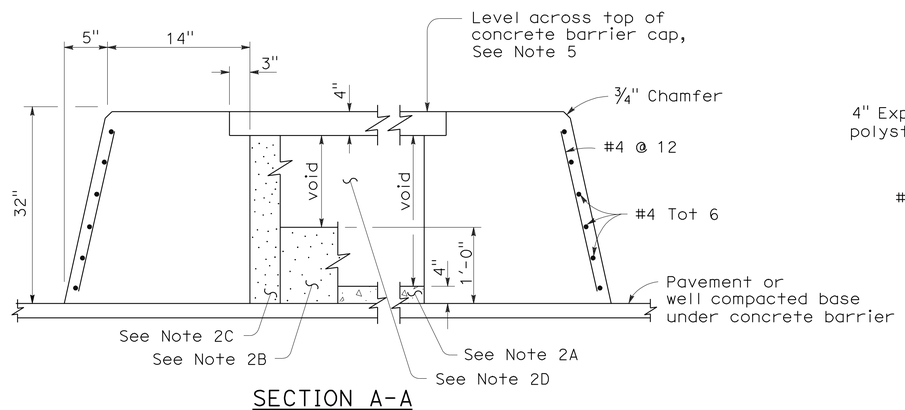

SECTION A-A

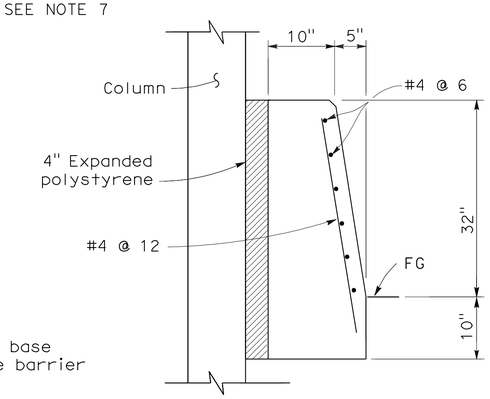

SECTION B-B

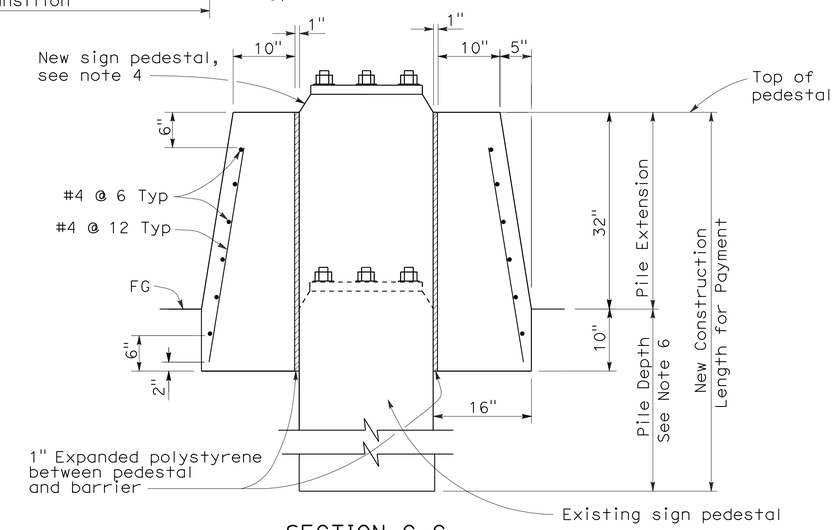

SECTION C-C

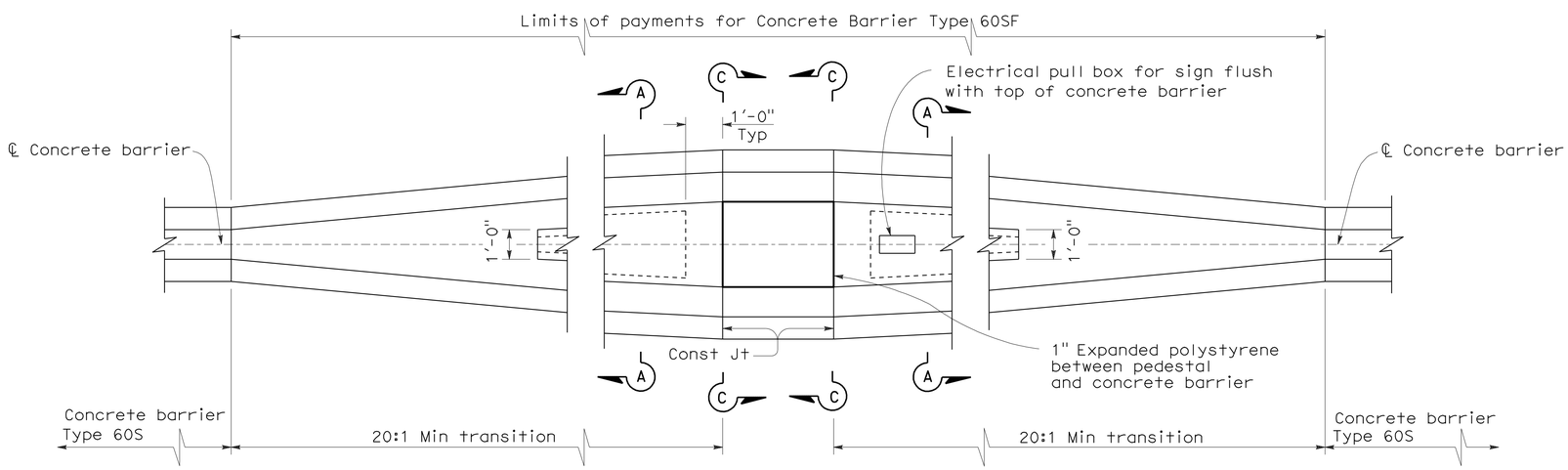

TRANSITION AT SIGN PEDESTAL

CONCRETE BARRIER TYPE 60SF
SEE NOTE 7

NOTES:

1. See Standard Plan A76G for Concrete Barrier Type 60S.
2. Contractor options for fill between concrete barrier walls:
   A. Place 4" PCC at base between concrete barrier walls.
   B. Place 1'-0" of granular material at base between walls.
   C. Place granular material from base to bottom of 4" cap.
   D. Monolithic concrete with foam blockouts is not permitted.
3. Reinforcing steel shall extend continuous through construction joints.
4. See "Overhead Sign" plans for sign pedestal elevations on new construction.
5. Adjust height of concrete barrier wall on low side of offset or superelevated roadways to provide level grade across top of concrete barrier cap.
6. See Overhead Signs Standard Plan Pile Foundation Tables.
7. All locations with limited shoulder width available for barrier, see Revised Standard Plan RSP A76F for use of Concrette Barrier Type 60GE.

STATE OF CALIFORNIA
DEPARTMENT OF TRANSPORTATION

CONCRETE BARRIER TYPE 60SF

NO SCALE

RSP A76I DATED MAY 20, 2011 SUPERSEDES STANDARD PLAN A76I
DATED MAY 1, 2006 - PAGE 37 OF THE STANDARD PLANS BOOK DATED MAY 2006.

REVISED STANDARD PLAN RSP A76I

2006 REVISED STANDARD PLAN RSP A76I

4-6-11

DIST	COUNTY	ROUTE	POST MILES TOTAL PROJECT	SHEET NO.	TOTAL SHEETS
11	SD	15	M15.0/M16.4	367	610

Randell D. Hiatt
REGISTERED CIVIL ENGINEER

June 6, 2008
PLANS APPROVAL DATE

REGISTERED PROFESSIONAL ENGINEER
Randell D. Hiatt
No. C50200
Exp. 6-30-09
CIVIL
STATE OF CALIFORNIA

The State of California or its officers or agents shall not be responsible for the accuracy or completeness of electronic copies of this plan sheet.

To accompany plans dated 10-24-11

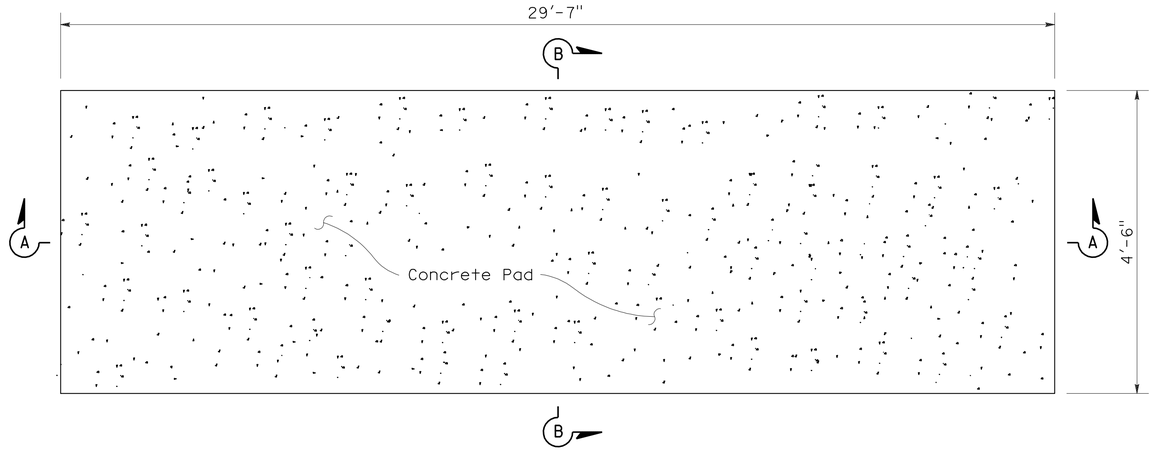

PLAN VIEW

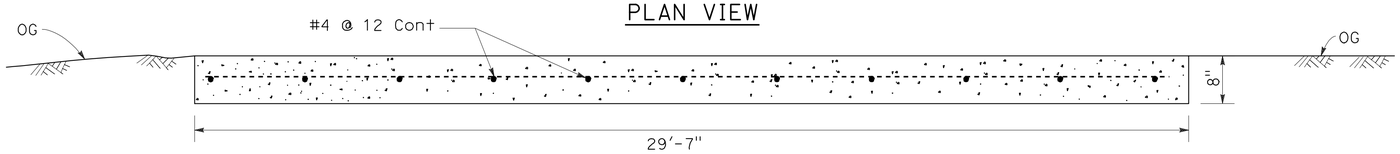

SECTION A-A

CONCRETE ANCHOR SLAB

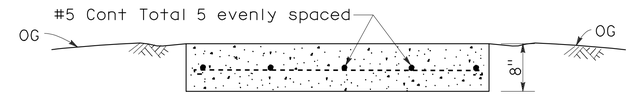

SECTION B-B

NOTES:

1. For additional details of this crash cushion, refer to manufacturer's installation instructions.
2. For details of the REACT Crash Cushion with self contained backup support (no concrete backup block), see Standard Plan A82D1.
3. The base track frame with cylinders attached comes from the manufacturer as a completely pre-assembled unit.
4. Place the crash cushion unit on the cured concrete anchor slab and use the base track frame of the crash cushion as a template for drilling anchor bolt holes. Drill holes in slab and attach crash cushion with wedge anchor bolts supplied by the manufacturer.
5. Attach last cylinder to concrete backup block with manufacturer supplied fastener in such manner as recommended by the manufacturer.
6. Attach the manufacturer supplied side cable anchor plates to the cured concrete backup block with the manufacturer supplied bolts in such manner as recommended by the manufacturer.
7. Place manufacturer supplied cover over cylinders and attach cover to cylinders with manufacturer supplied fasteners.

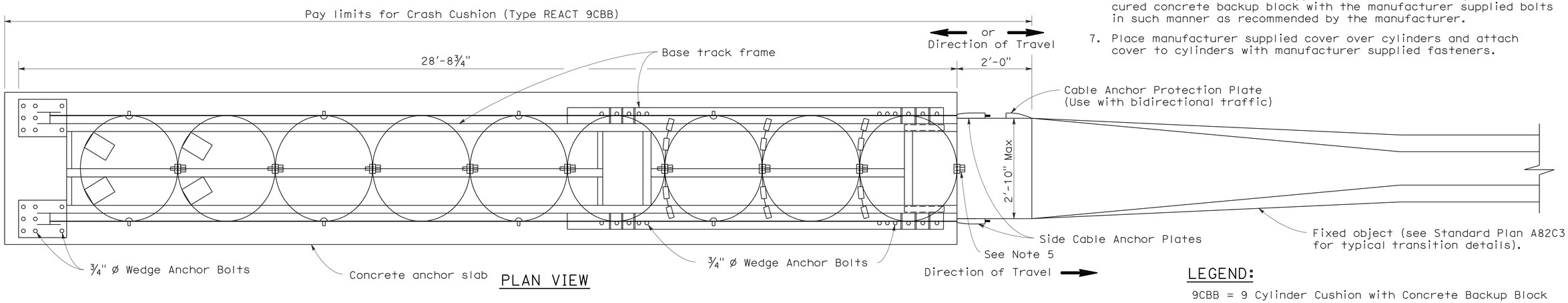

PLAN VIEW

LEGEND:

9CBB = 9 Cylinder Cushion with Concrete Backup Block

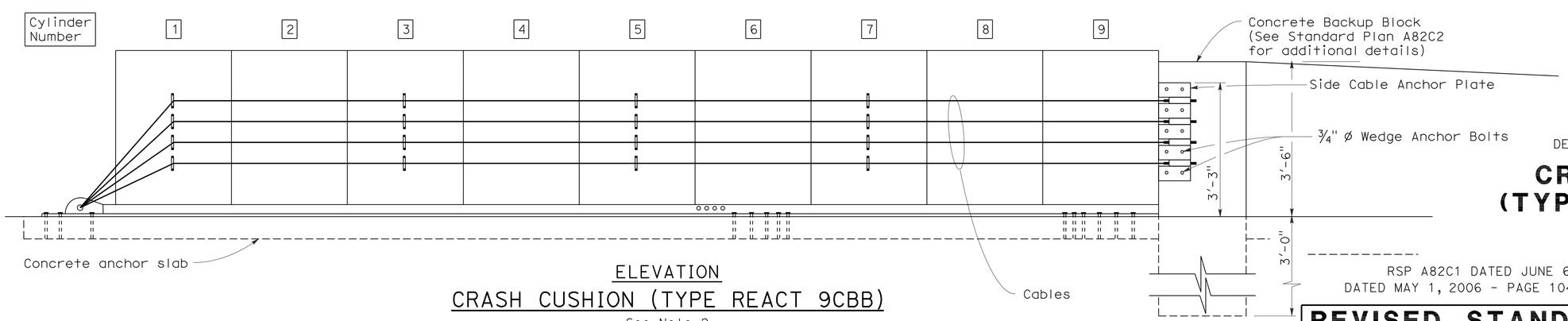

ELEVATION

CRASH CUSHION (TYPE REACT 9CBB)

See Note 2

STATE OF CALIFORNIA
DEPARTMENT OF TRANSPORTATION

CRASH CUSHION (TYPE REACT 9CBB)

NO SCALE

RSP A82C1 DATED JUNE 6, 2008 SUPERSEDES STANDARD PLAN A82C1
DATED MAY 1, 2006 - PAGE 104 OF THE STANDARD PLANS BOOK DATED MAY 2006.

REVISED STANDARD PLAN RSP A82C1

2006 REVISED STANDARD PLAN RSP A82C1

4-21-06

DIST	COUNTY	ROUTE	POST MILES TOTAL PROJECT	SHEET NO.	TOTAL SHEETS
11	SD	15	M15.0/M16.4	368	610

REGISTERED CIVIL ENGINEER

June 5, 2009
PLANS APPROVAL DATE

REGISTERED PROFESSIONAL ENGINEER Glenn DeCou No. C34547 Exp. 9-30-09 CIVIL STATE OF CALIFORNIA

The State of California or its officers or agents shall not be responsible for the accuracy or completeness of electronic copies of this plan sheet.

To accompany plans dated 10-24-11

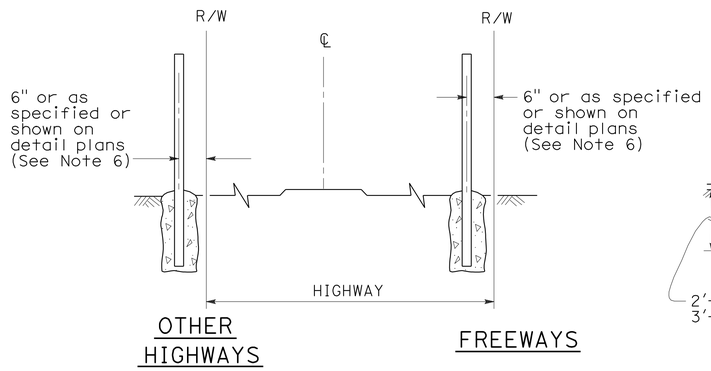

FENCE LOCATION

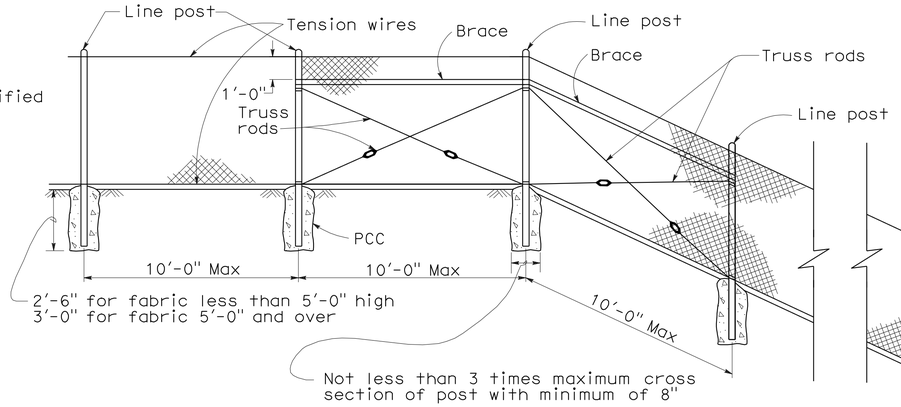

CHAIN LINK FENCE ON SHARP BREAK IN GRADE

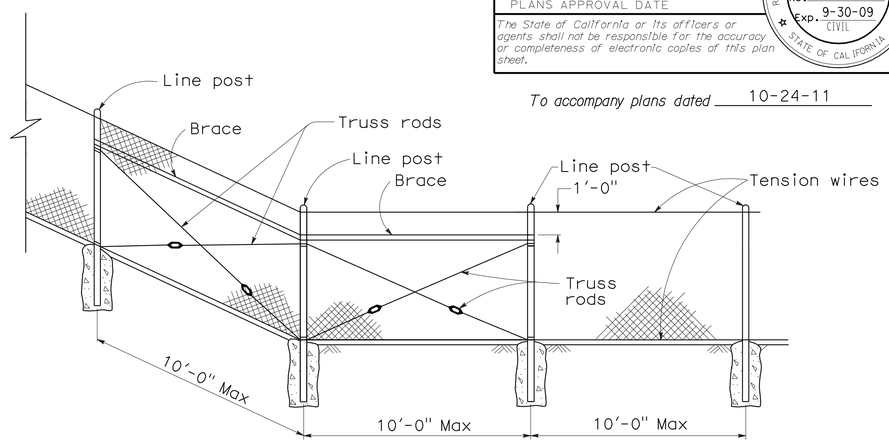

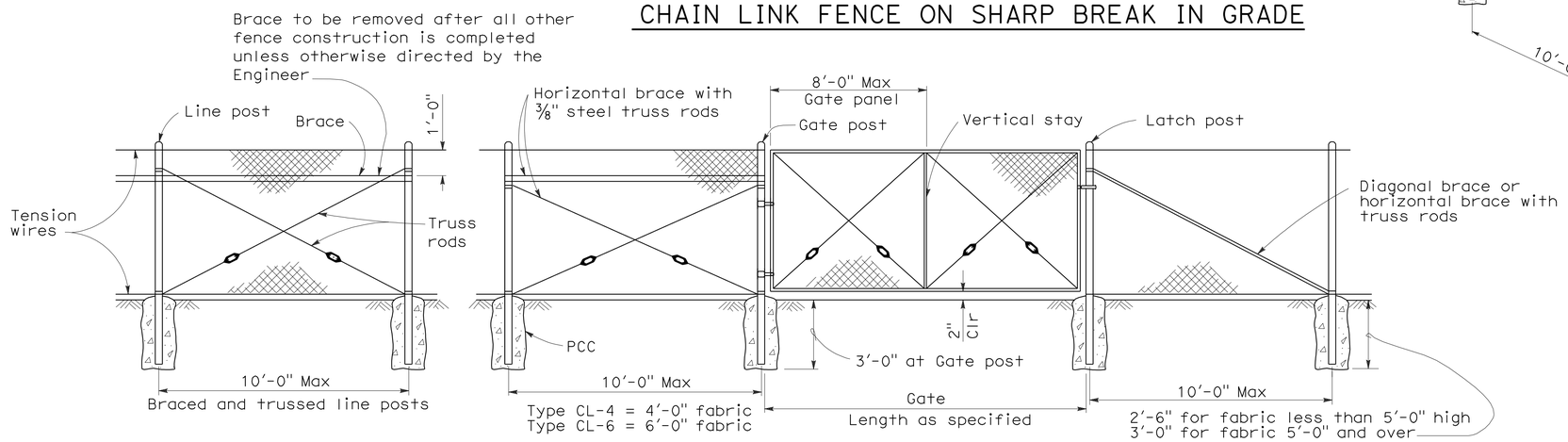

CHAIN LINK GATE INSTALLATION

GATE POST			
FENCE HEIGHT	GATE WIDTHS	NOMINAL ID	WEIGHT PER FOOT
6'-0" and Less	Up thru 6'-0"	2½"	4.95 LB
	Over 6'-0" thru 12'-0"	4"	10.79 LB
	Over 12'-0" thru 18'-0"	5"	14.62 LB
	Over 18'-0" to 24'-0" Max	6"	18.97 LB
Over 6'-0"	Up thru 6'-0"	3"	7.58 LB
	Over 6'-0" thru 12'-0"	5"	14.62 LB
	Over 12'-0" thru 18'-0"	6"	18.97 LB
	Over 18'-0" to 24'-0" Max	8"	28.55 LB

Above post dimensions and weights are minimums. Larger sizes may be used on approval of the Engineer.

NOTES:

1. The below table shows examples of post and brace sections which may comply with the Specifications.
2. Sections shown in the tables must also comply with the strength requirements and other provisions of the Specifications.
3. Other sections which comply with the strength requirements and other provisions of the Specifications may be used on approval of the Engineer.
4. Options exercised shall be uniform on any one project.
5. Dimensions shown are nominal.
6. Offset to be 2'-0" at monument locations, measured at right angles to R/W lines. Taper to achieve offset to be at least 20'-0" long.

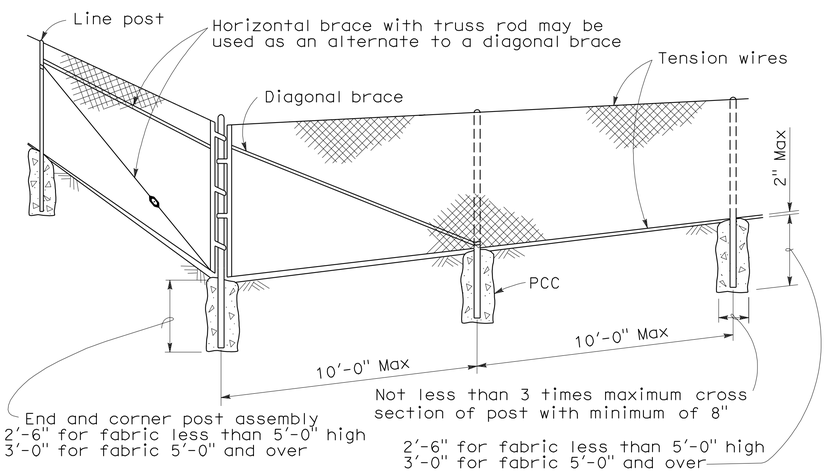

CORNER POST

TYPICAL MEMBER DIMENSIONS (See Notes)											
FENCE HEIGHT	LINE POSTS			END, LATCH & CORNER POSTS			BRACES				
	ROUND ID	H	ROLL FORMED	ROUND ID	ROLL FORMED		ROUND ID	H	ROLL FORMED		
6' & less	1½"	1⅞" × 1⅝"	1⅞" × 1⅝"	2"	3½" × 3½"	2" × 1¾"	1¼"	1½" × 1 5/16"	1⅝" × 1¼"	1¾" × 1¼"	
Over 6'	2"	2¼" × 2"	2" × 1¾"	2½"	3½" × 3½"	2½" × 2½"	1¼"	1½" × 1 5/16"	1⅝" × 1¼"	1¾" × 1¼"	

STATE OF CALIFORNIA
DEPARTMENT OF TRANSPORTATION

CHAIN LINK FENCE

NO SCALE

RSP A85 DATED JUNE 5, 2009 SUPERSEDES STANDARD PLAN A85
DATED MAY 1, 2006 - PAGE 111 OF THE STANDARD PLANS BOOK DATED MAY 2006.

REVISED STANDARD PLAN RSP A85

2006 REVISED STANDARD PLAN RSP A85

5-7-09

DIST	COUNTY	ROUTE	POST MILES TOTAL PROJECT	SHEET NO.	TOTAL SHEETS
11	SD	15	M15.0/M16.4	369	610

REGISTERED CIVIL ENGINEER

June 5, 2009
PLANS APPROVAL DATE

REGISTERED PROFESSIONAL ENGINEER Glenn DeCou No. C34547 Exp. 9-30-09 CIVIL STATE OF CALIFORNIA

The State of California or its officers or agents shall not be responsible for the accuracy or completeness of electronic copies of this plan sheet.

To accompany plans dated 10-24-11

NOTES:

1. H is 2'-6" for fabric less than 5'-0" high.
   H is 3'-0" for fabric 5'-0" and over.
2. T is not less than 3 times maximum cross section of post with minimum of 8".
3. Arms with barbed wire to be used where shown on plans.
4. See Revised Standard Plan RSP A85 for Chain Link Fencing dimensions.
5. Reinforcing must comply with ASTM A 706.
6. See Detail A on New Standard Plan NSP A86B for connection at headwall.

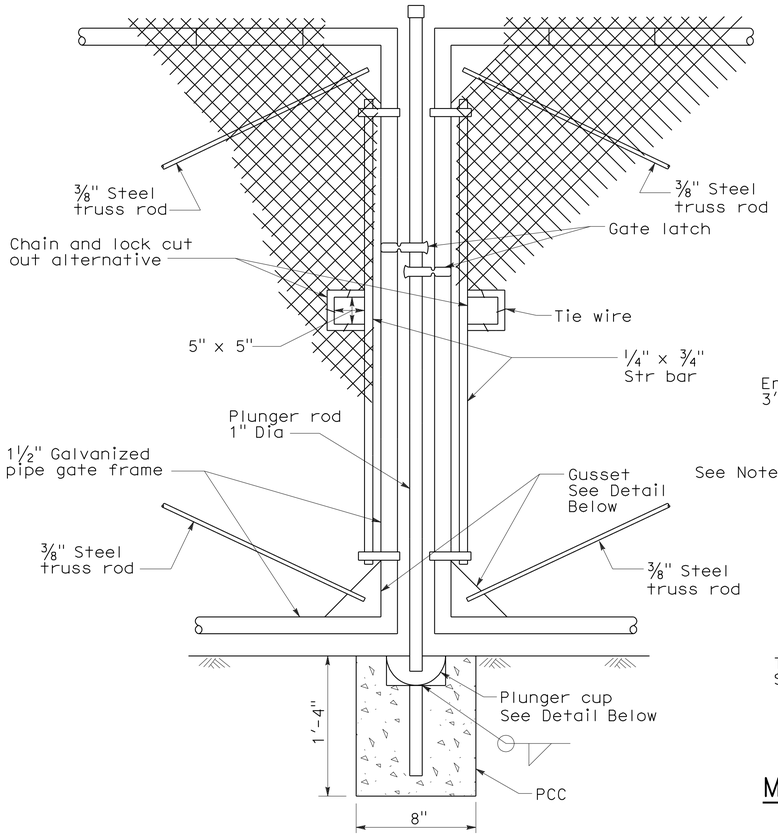

TYPICAL DOUBLE GATE REMOVABLE CENTER POST

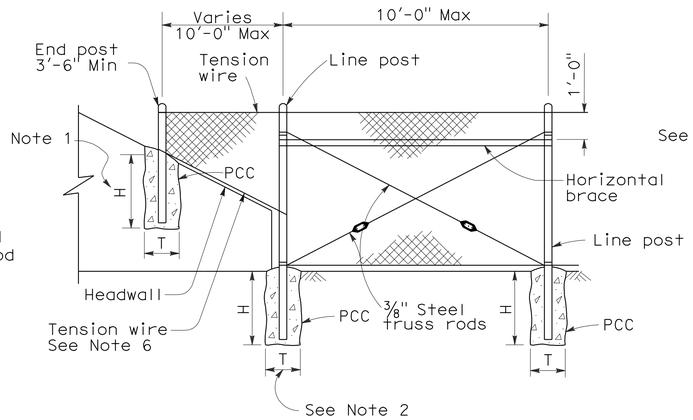

METHOD OF TYING FENCE TO HEADWALL

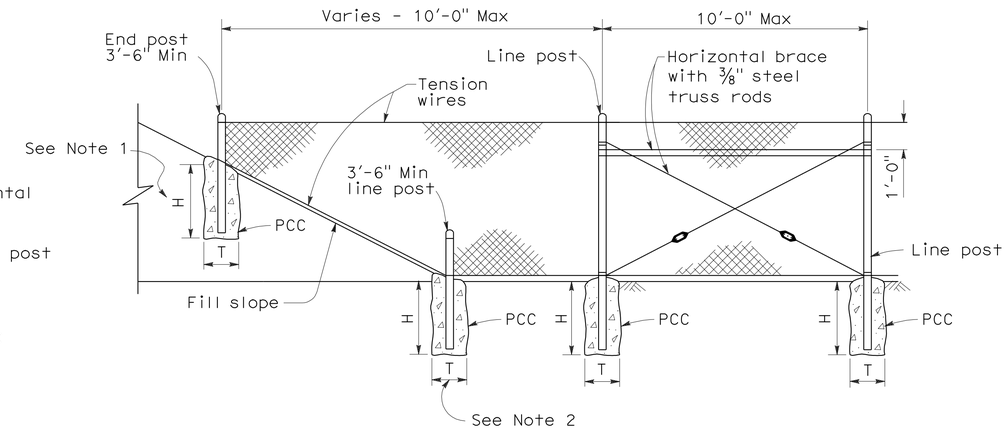

METHOD OF ERECTING FENCE FOR FILL SLOPE

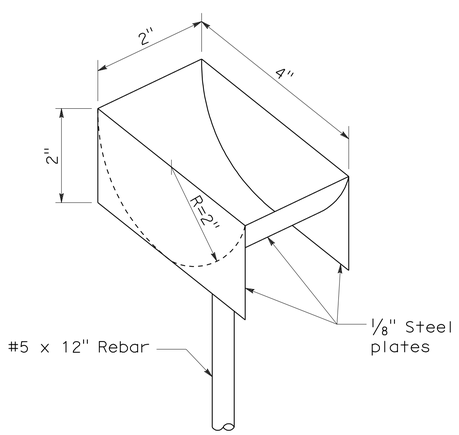

PLUNGER CUP DETAIL

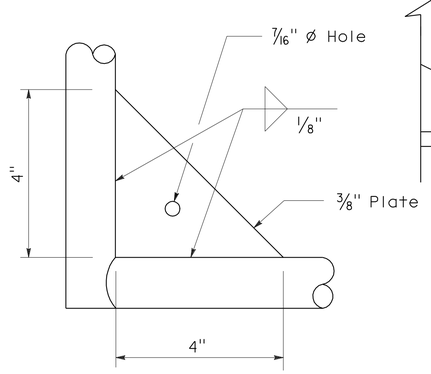

GUSSET DETAIL

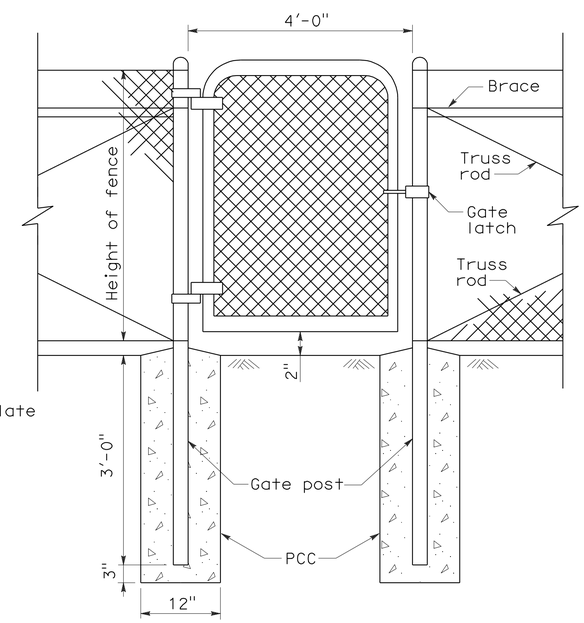

WALK GATE

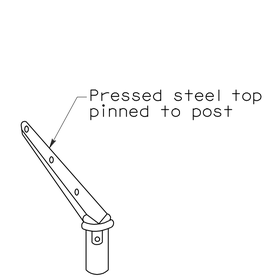

POST TOP END

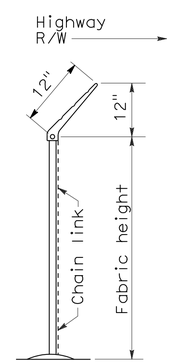

END ELEVATION

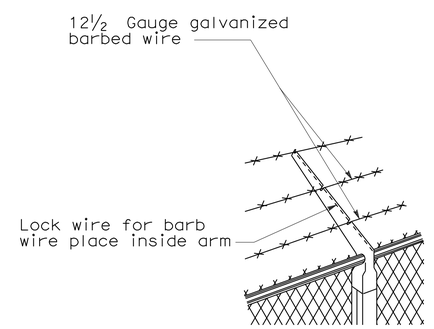

LINE POST TOP
Vertical arms when desired

BARBED WIRE POST TOP
See Note 3

STATE OF CALIFORNIA
DEPARTMENT OF TRANSPORTATION

CHAIN LINK FENCE DETAILS

NO SCALE

NSP A85A DATED JUNE 5, 2009 SUPPLEMENTS THE STANDARD PLANS BOOK DATED MAY 2006.

NEW STANDARD PLAN NSP A85A

2006 NEW STANDARD PLAN NSP A85A

5-7-09

DIST	COUNTY	ROUTE	POST MILES TOTAL PROJECT	SHEET NO.	TOTAL SHEETS
11	SD	15	M15.0/M16.4	370	610

REGISTERED CIVIL ENGINEER

November 17, 2006
PLANS APPROVAL DATE

REGISTERED PROFESSIONAL ENGINEER Michael Janzen No. 44788 Exp. 03-31-08 CIVIL STATE OF CALIFORNIA

The State of California or its officers or agents shall not be responsible for the accuracy or completeness of electronic copies of this plan sheet.

To accompany plans dated 10-24-11

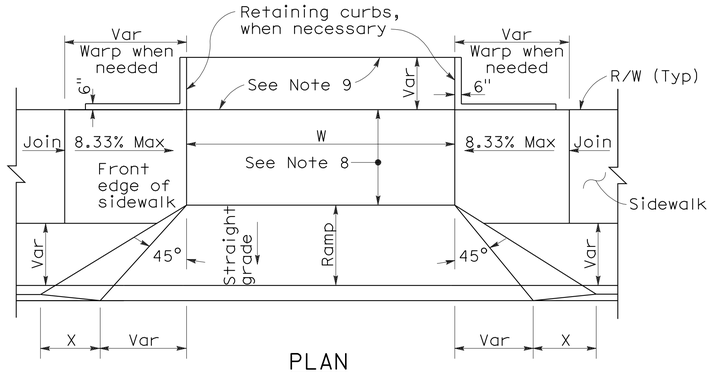

PLAN

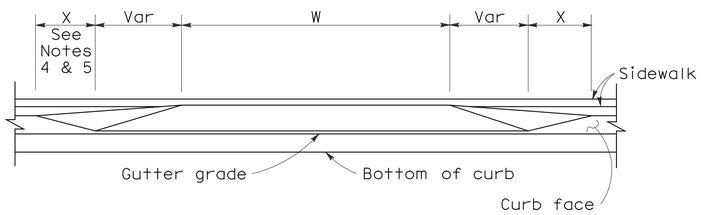

ELEVATION

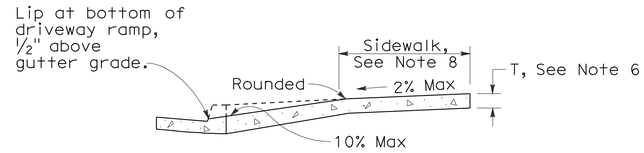

CASE A

Typical driveway, sidewalk not depressed

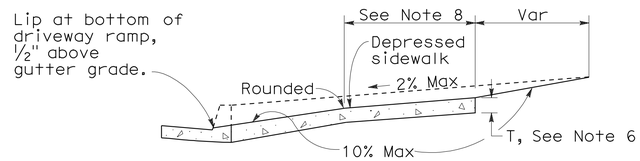

CASE B

Driveway with depressed sidewalk

SECTIONS

DRIVEWAYS

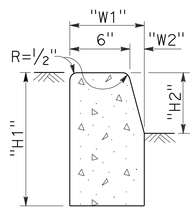

TYPE A1 CURBS

See Table A

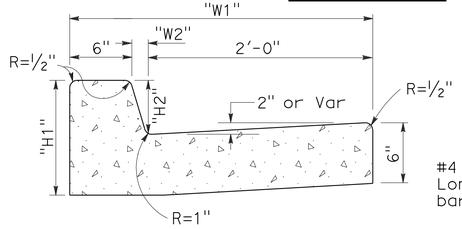

TYPE A2 CURBS

See Table A

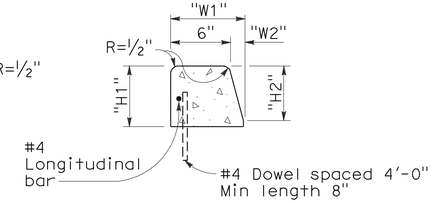

TYPE A3 CURBS

Superimposed on existing pavement
See Table A

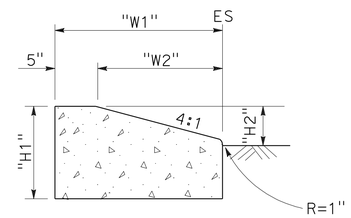

TYPE D CURBS

See Table A

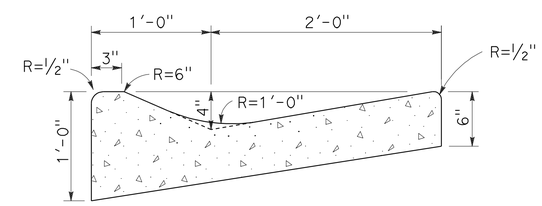

TYPE E CURB

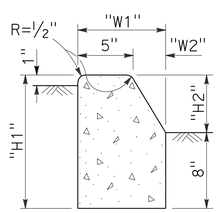

TYPE B1 CURBS

See Table A

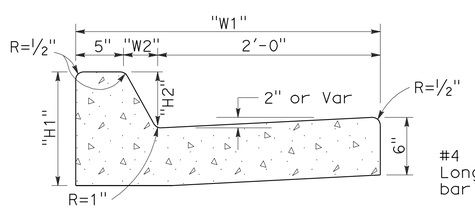

TYPE B2 CURBS

See Table A

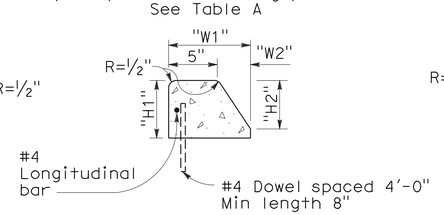

TYPE B3 CURBS

Superimposed on existing pavement
See Table A

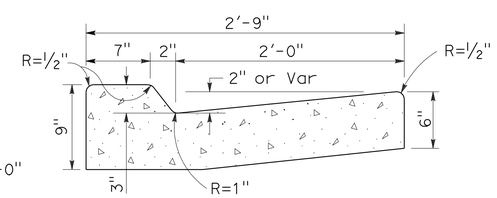

TYPE B4 CURBS

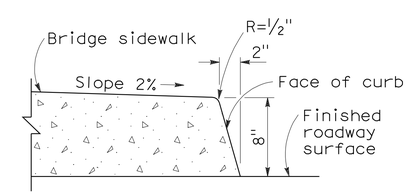

TYPE H CURB

On Bridges

CURBS

CURB QUANTITIES

TYPE	CUBIC YARDS PER LINEAR FOOT
A1-6	0.02585
A1-8	0.03084
A2-6	0.05903
A2-8	0.06379
A3-6	0.01036
A3-8	0.01435
B1-4	0.02185
B1-6	0.02930
B2-4	0.05515
B2-6	0.06171
B3-4	0.00641
B3-6	0.01074
B4	0.05709
D-4	0.04083
D-6	0.06804
E	0.06661

TABLE A

CURB TYPE	DIMENSIONS "H1"	"H2"	"W1"	"W2"
A1-6	1'-2"	6"	7½"	1½"
A1-8	1'-4"	8"	8"	2"
A2-6	1'-0"	6"	2'-7½"	1½"
A2-8	1'-2"	8"	2'-8"	2"
A3-6	6"	5"	7¼"	1¼"
A3-8	8"	7"	7¾"	1¾"
B1-4	1'-0"	4"	7½"	2½"
B1-6	1'-2"	6"	9"	4"
B2-4	10"	4"	2'-7½"	2½"
B2-6	1'-0"	6"	2'-9"	4"
B3-4	4"	3"	7"	2"
B3-6	6"	5"	8½"	3½"
D-4	10"	4"	1'-6"	1'-1"
D-6	1'-0"	6"	2'-2"	1'-8"

NOTES:

1. Case A driveway section typically applies.
2. Use Case B driveway section when ramp slopes would exceed 10% in Case A.
3. Use Case B driveway section when sidewalk cross slope would exceed 2% in Case A.
4. X=3'-0" except for curb heights over 10" where 4:1 slopes shall be used on curb slope.
5. X is a variable when sidewalk is located where wheelchairs may traverse the surface. Slopes shall not exceed 8.33%.
6. Sidewalk and ramp thickness "T" at driveway shall be 4" for residental and 6" for commercial.
7. Difference in slope of the driveway ramp and the slope of a line between the gutter and a point on the roadway 5'-0" from gutter line shall not exceed 15%. Reduce driveway ramp slope, not gutter slope, where required.
8. Minimum width of clear passageway for sidewalk shall be 4'-0".
9. Retaining curbs and acquisition of construction easement may be necessary for narrow sidewalks or curb heights in excess of 6".
10. Across the pedestrian route at curb ramp locations, the gutter pan slope shall not exceed 1" of depth for each 2'-0" of width.

STATE OF CALIFORNIA
DEPARTMENT OF TRANSPORTATION

CURBS AND DRIVEWAYS

NO SCALE

RSP A87A DATED NOVEMBER 17, 2006 SUPERSEDES STANDARD PLAN A87A DATED MAY 1, 2006 - PAGE 113 OF THE STANDARD PLANS BOOK DATED MAY 2006.

REVISED STANDARD PLAN RSP A87A

2006 REVISED STANDARD PLAN RSP A87A

10-25-06

DIST	COUNTY	ROUTE	POST MILES TOTAL PROJECT	SHEET NO.	TOTAL SHEETS
11	SD	15	M15.0/M16.4	371	610

REGISTERED CIVIL ENGINEER

September 1, 2006
PLANS APPROVAL DATE

REGISTERED PROFESSIONAL ENGINEER
Hector David Cordova
No. C41957
Exp. 3-31-08
CIVIL
STATE OF CALIFORNIA

The State of California or its officers or agents shall not be responsible for the accuracy or completeness of electronic copies of this plan sheet.

To accompany plans dated 10-24-11

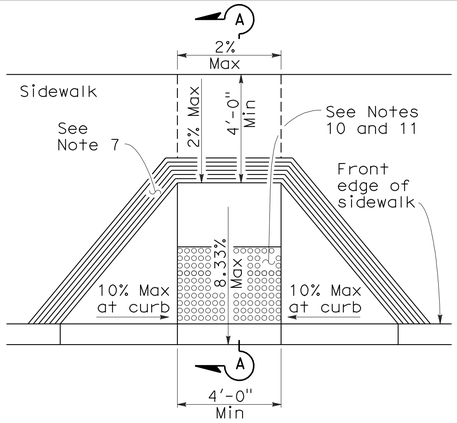

CASE A

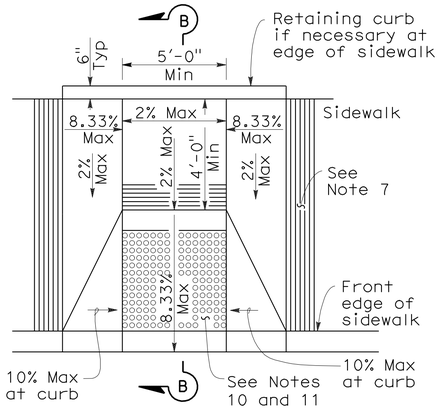

CASE B

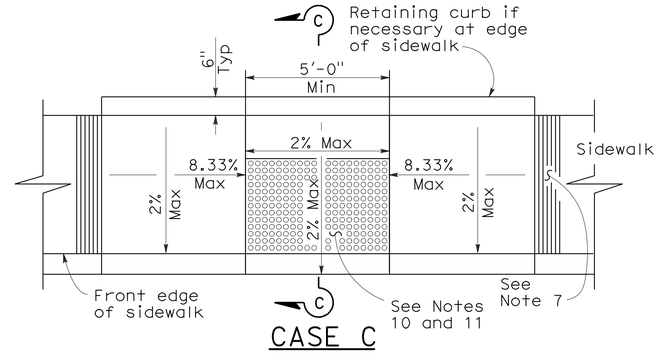

CASE C

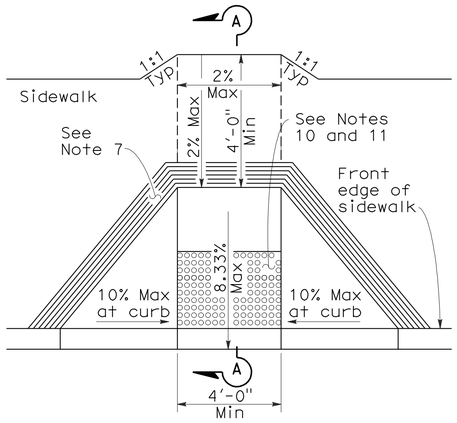

CASE D

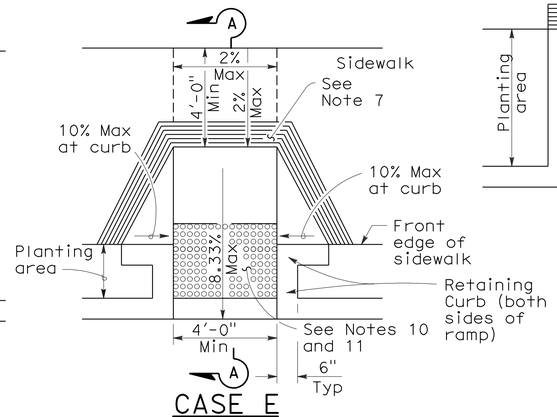

CASE E

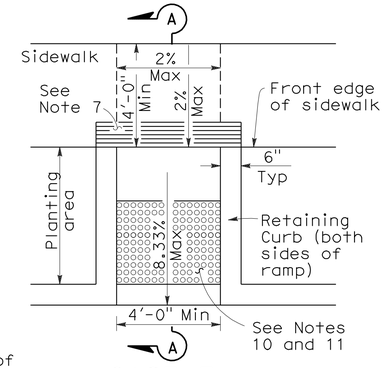

CASE F

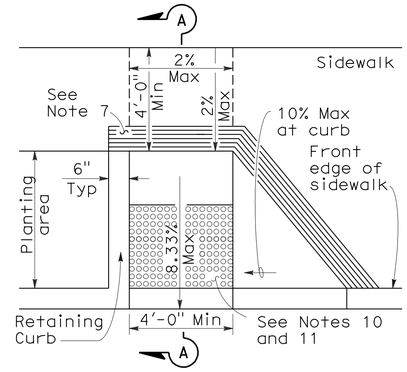

CASE G
See Note 4

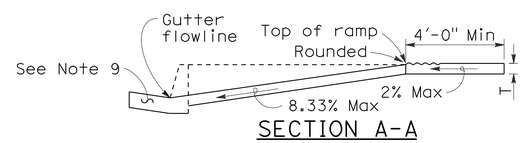

SECTION A-A

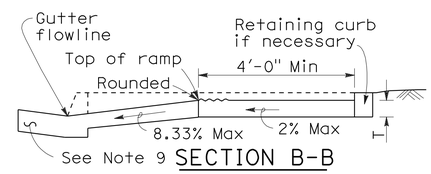

SECTION B-B
Depress entire sidewalk as required

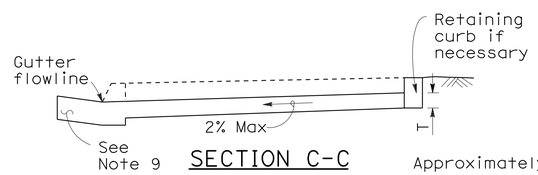

SECTION C-C

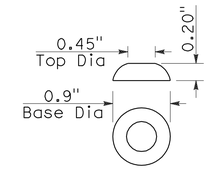

RAISED TRUNCATED DOME

NOTES:

1. As site conditions dictate, Case A through Case G curb ramps may be used for corner installations similar to those shown in Detail A and Detail B. The case of curb ramps used in Detail A do not have to be the same. Case A through Case G curb ramps also may be used at mid block locations, as site conditions dictate.
2. If distance from curb to back of sidewalk is too short to accommodate ramp and 4'-0" platform (landing) as shown in Case A, the sidewalk may be depressed longitudinally as in Case B, or C or may be widened as in Case D.
3. When ramp is located in center of curb return, crosswalk configuration must be similar to that shown for Detail B.
4. As site conditions dictate, the retaining curb side and the flared side of the Case G ramp shall be constructed in reversed position.
5. If located on a curve, the sides of the ramp need not be parallel, but the minimum width of the ramp shall be 4'-0".
6. Side slope of ramp flares vary uniformly from a maximum of 10% at curb to conform with longitudinal sidewalk slope adjacent to top of the ramp, except in Case C and Case F.
7. The curb ramp shall be outlined, as shown, with a 1'-0" wide border with 1/4" grooves approximately 3/4" on center. See grooving detail.
8. Transitions from ramps and landing to walks, gutters or streets shall be flush and free of abrupt changes.
9. Maximum slopes of adjoining gutters, the road surface immediately adjacent to the curb ramp or accessible route shall not exceed 5 percent within 4'-0" of the top and bottom of the curb ramp.
10. Curb ramps shall have a detectable warning surface that extends the full width and 3'-0" depth of the ramp. Detectable Warning Surfaces shall conform to the details on this plan and the requirements in the Special Provisions.
11. The edge of the detectable warning surface nearest the street shall be between 6" and 8" from the gutter flowline.
12. Sidewalk and ramp thickness, "T", shall be 3 1/2" minimum.
13. Utility pull boxes, manholes, vaults and all other utility facilities within the boundaries of the curb ramp will be relocated or adjusted to grade by the owner prior to, or in conjunction with, curb ramp construction.
14. For retrofit conditions, removal and replacement of curb apron will be at the Contractor's option, unless otherwise shown on project plans.

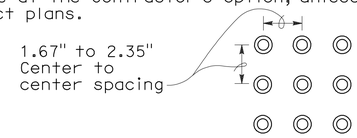

RAISED TRUNCATED DOME PATTERN (IN-LINE)

DETECTABLE WARNING SURFACE
See Note 10

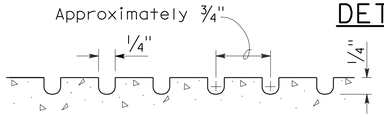

GROOVING DETAIL

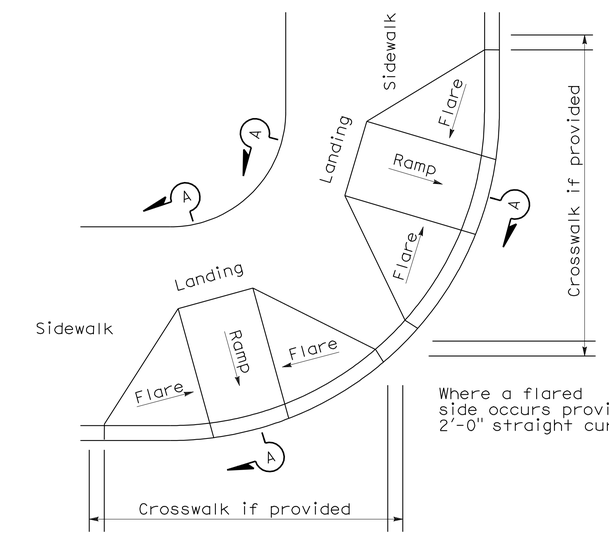

DETAIL A
TYPICAL TWO-RAMP CORNER INSTALLATION
See Note 1

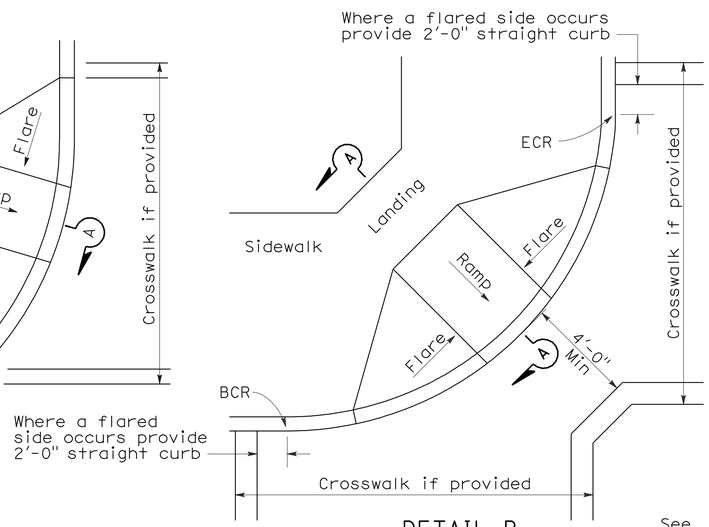

DETAIL B
TYPICAL ONE-RAMP CORNER INSTALLATION
See Notes 1 and 3

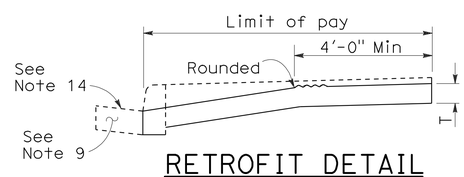

RETROFIT DETAIL
Existing curb and sidewalk

STATE OF CALIFORNIA
DEPARTMENT OF TRANSPORTATION

CURB RAMP DETAILS

NO SCALE

RSP A88A DATED SEPTEMBER 1, 2006 SUPERSEDES STANDARD PLAN A88A DATED MAY 1, 2006 - PAGE 115 OF THE STANDARD PLANS BOOK DATED MAY 2006.

REVISED STANDARD PLAN RSP A88A

2006 REVISED STANDARD PLAN RSP A88A

8-3-06

DIST	COUNTY	ROUTE	POST MILES TOTAL PROJECT	SHEET NO.	TOTAL SHEETS
11	SD	15	M15.0/M16.4	372	610

H. David Cordova
REGISTERED CIVIL ENGINEER

June 6, 2008
PLANS APPROVAL DATE

REGISTERED PROFESSIONAL ENGINEER
Hector David Cordova
No. C41957
Exp. 3-31-10
CIVIL
STATE OF CALIFORNIA

The State of California or its officers or agents shall not be responsible for the accuracy or completeness of electronic copies of this plan sheet.

To accompany plans dated 10-24-11

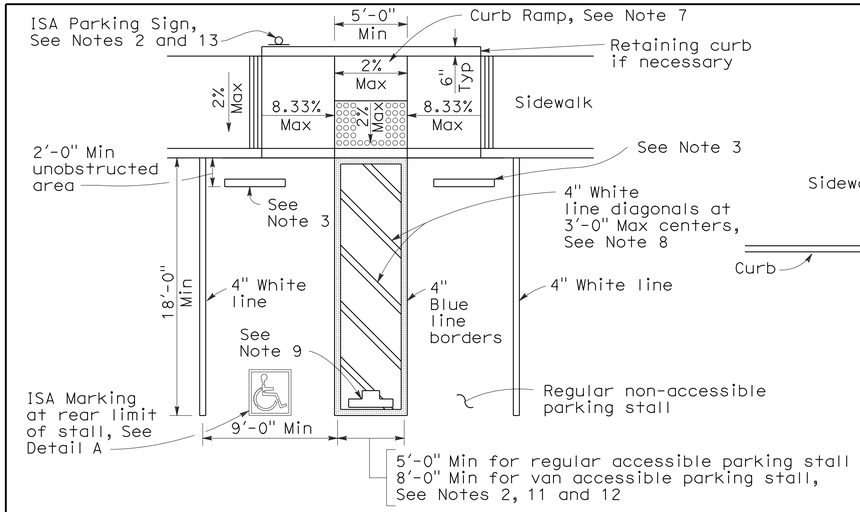

SINGLE PARKING STALL

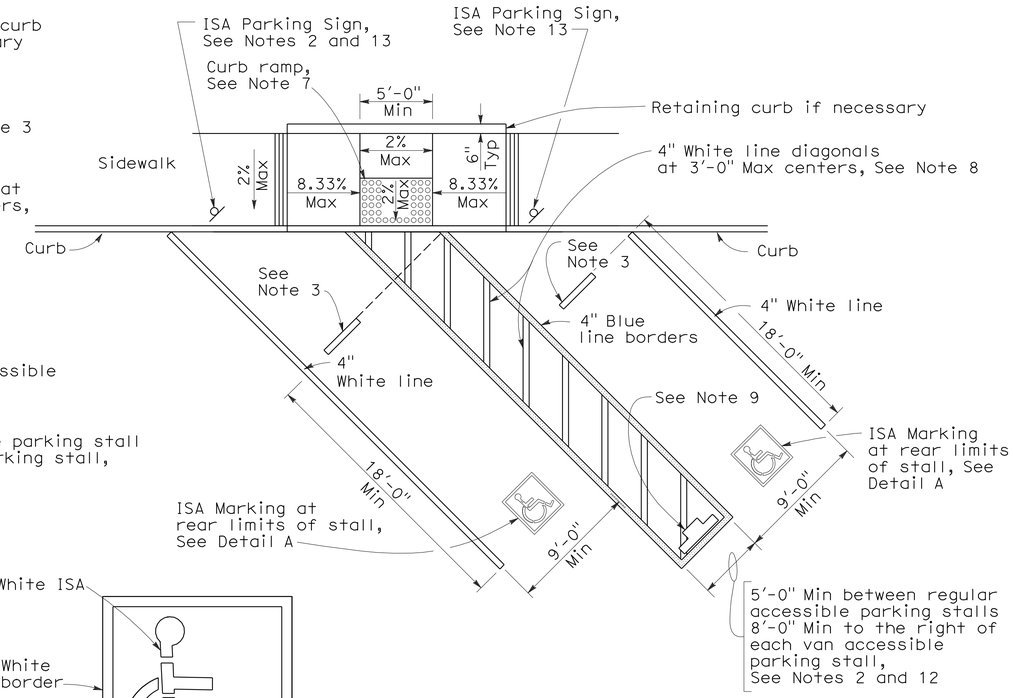

DIAGONAL DOUBLE PARKING STALLS

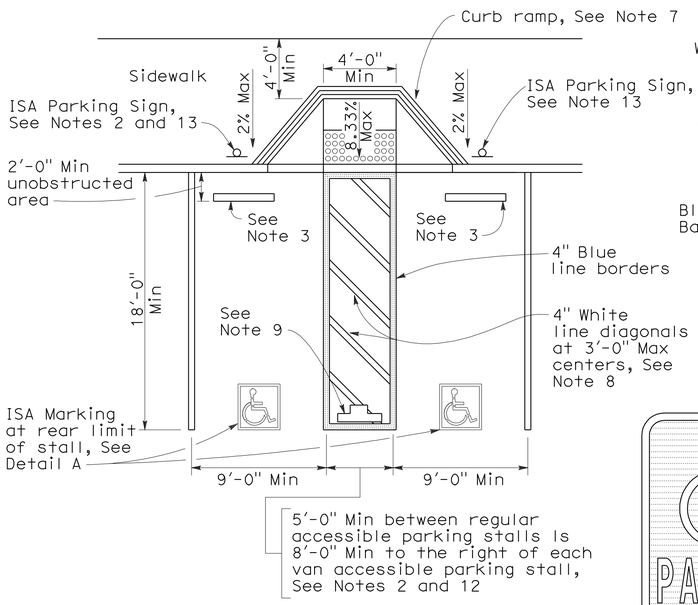

DOUBLE PARKING STALL

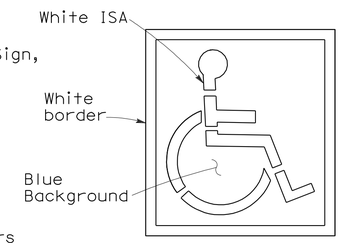

ISA MARKING
See Revised Std Plan RSP A24C

DETAIL A

TABLE A

Total Number of Parking Spaces or Stalls	Minimum Number of Disabled Accessible Parking Spaces or Stalls
1-25	1
26-50	2
51-75	3
76-100	4
101-150	5
151-200	6
201-300	7
301-400	8
401-500	9
501-1000	2 percent of total
Greater than 1001	20 plus 1 for each 100 or fraction thereof over 1001

SIGN R99 (CA)

PLAQUE R99B (CA)

SIGN R99 (CA) with PLAQUE R99B (CA)
See Note 6

SIGN R99C (CA)
See Note 6

SIGN R100B (CA)
See Note 10

SIGN R7-8b
See Notes 2 and 6

OFF-STREET PARKING SIGNS
(Parking lot or garage)
See Note 6

ISA = International Symbol of Accessibility

NOTES:

1. Accessible parking spaces serving a particular building shall be located on the shortest accessible route of travel from adjacent parking to an accessible entrance. In parking facilities that do not serve a particular building, accessible parking shall be located on the shortest accessible route of travel to an accessible pedestrian entrance of the parking facility.
2. One in every eight accessible off-street parking stalls, but not less than one, shall be served by an accessible aisle of 8'-0" minimum width and shall be signed van accessible. The R7-8b sign shall be mounted below the R99B (CA) plaque or the R99C (CA) sign.
3. In each parking stall, a curb or bumper shall be provided and located to prevent encroachment of vehicles over the required width of walkways. Parking stalls shall be so located that persons with disabilities are not compelled to wheel or walk behind parked cars other than their own.
4. Surface slopes of accessible off-street parking stalls shall be the minimum possible and shall not exceed 2 percent in any direction.
5. Table A shall be used to determine the required number of accessible parking stalls in each parking lot or garage.
6. Where Plaque R99B (CA), Sign R99C (CA) or Sign R7-8b are installed, the bottom of the sign or plaque panel shall be a minimum of 7'-0" above the surrounding surface.
7. Curb ramps shall conform to the details shown on Revised Standard Plan RSP A88A.
8. Blue paint, instead of white may be used for marking accessibility aisles in areas where snow may cause white markings to not be visible.
9. The words "NO PARKING", shall be painted in white letters no less than 1'-0" high and located so that it is visible to traffic enforcement officials. See Revised Standard Plan RSP A90B for details of the "NO PARKING" pavement marking.
10. A R100B (CA) sign shall be posted in a conspicuous place at each entrance to off-street parking facilities or immediately adjacent to and visible from each stall. The sign shall include the address where the towed vehicle may be reclaimed and the telephone number of the local traffic law enforcement agency.
11. Where a single (non-van) accessible parking space is provided, the loading and unloading access aisle shall be on the passenger side of the vehicle as the vehicle is going forward into the parking space.
12. Where a van accessible parking space is provided, the loading and unloading access aisle shall be 8'-0" wide minimum, and shall be on the passenger side of the vehicle as the vehicle is going forward into the parking space.
13. Accessible Parking Only Sign shall be Sign R99C (CA) or Sign R99 (CA) with Plaque R99B (CA).

STATE OF CALIFORNIA
DEPARTMENT OF TRANSPORTATION

ACCESSIBLE PARKING OFF-STREET

NO SCALE

RSP A90A DATED JUNE 6, 2008 SUPERSEDES STANDARD PLAN A90A
DATED MAY 1, 2006 - PAGE 117 OF THE STANDARD PLANS BOOK DATED MAY 2006.

REVISED STANDARD PLAN RSP A90A

2006 REVISED STANDARD PLAN RSP A90A

6-3-08

DIST	COUNTY	ROUTE	POST MILES TOTAL PROJECT	SHEET NO.	TOTAL SHEETS
11	SD	15	M15.0/M16.4	373	610

William K. Farnbach
REGISTERED CIVIL ENGINEER

May 15, 2009
PLANS APPROVAL DATE

REGISTERED PROFESSIONAL ENGINEER William K. Farnbach No. C49042 Exp. 9-30-10 CIVIL STATE OF CALIFORNIA

The State of California or its officers or agents shall not be responsible for the accuracy or completeness of electronic copies of this plan sheet.

To accompany plans dated 10-24-11

2006 REVISED STANDARD PLAN RSP P1

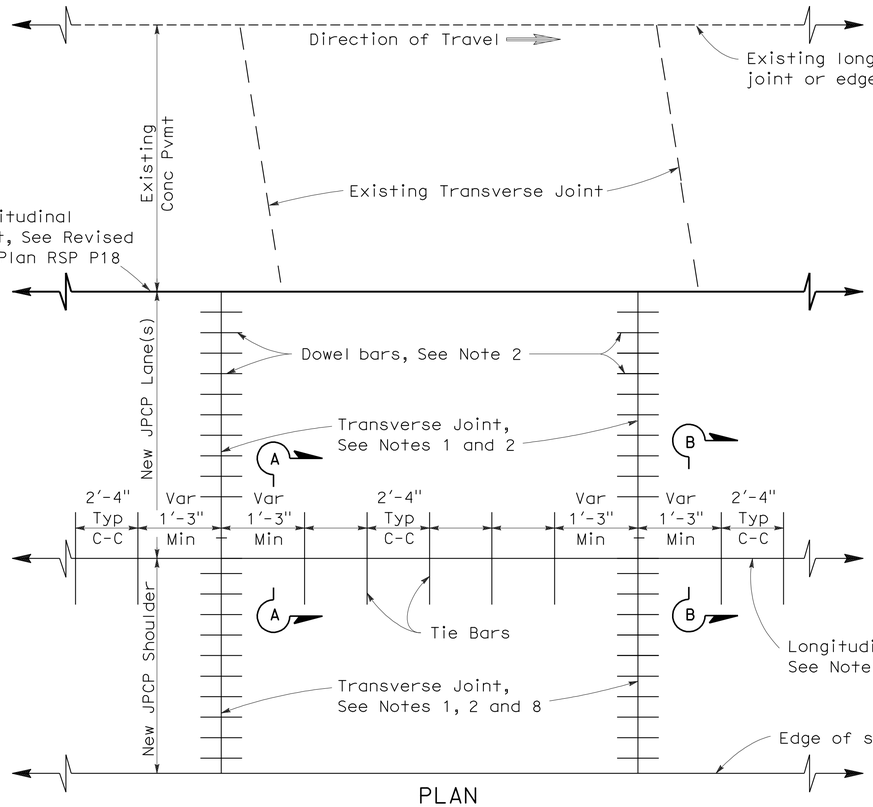

PLAN

LANE/SHOULDER ADDITION OR RECONSTRUCTION

See Notes 6 and 7

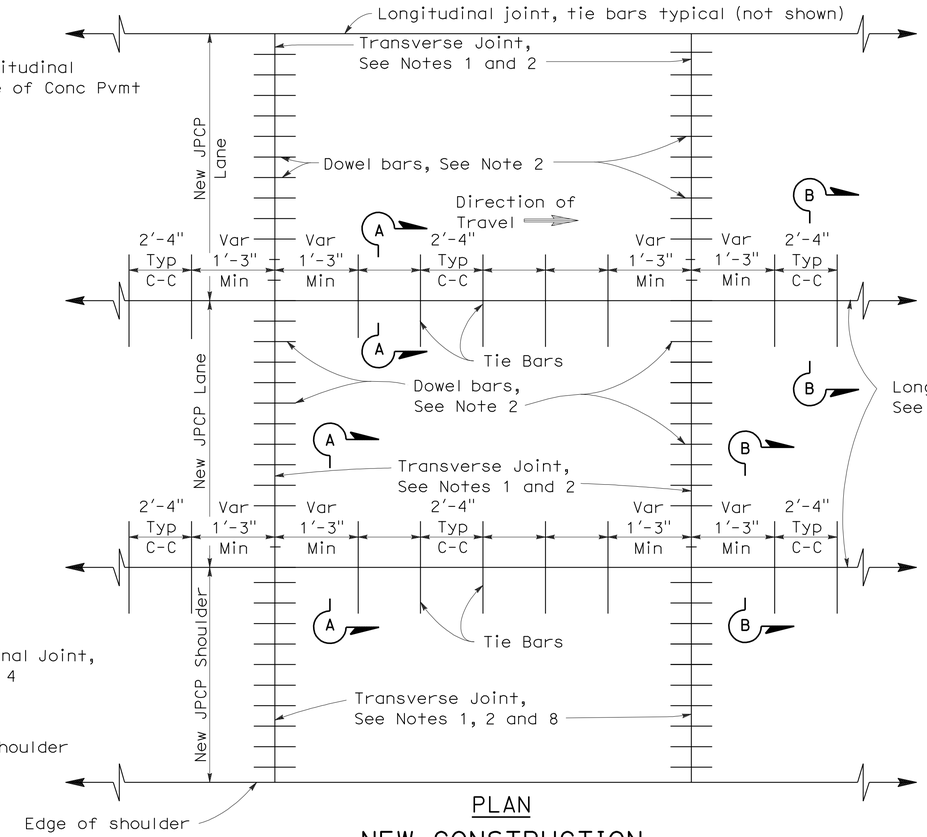

PLAN

NEW CONSTRUCTION

See Notes 6 and 7

NOTES:

1. Transverse joints shall be constructed at right angles to the longitudinal pavement joints in new jointed plain concrete pavement and spaced at successive repeated intervals of 12', 15', 13' and 14'.
2. For transverse joint and dowel bar details not shown, See Revised Standard Plan RSP P10.
3. Construct longitudinal contraction joints as shown in Section A-A when more than one lane or shoulder widths are placed at one time. If constructing one lane at a time, use longitudinal construction joint, as shown in Section B-B.
4. For additional longitudinal joint details, see Revised Standard Plan RSP P18.
5. If fresh concrete is placed adjacent to existing concrete, the top corner of the new hardened concrete does not need to be rounded to the 1/4" radius as shown.
6. Joint spacing patterns do not apply to intersections.
7. Details can also apply to inside widening.
8. Dowel bars may be omitted from shoulders when the shoulder cross slope is not the same as the adjacent traffic lane.

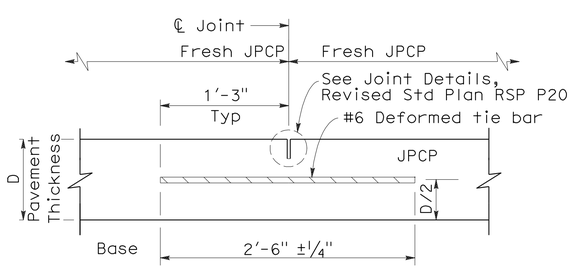

SECTION A-A

LONGITUDINAL CONTRACTION JOINT

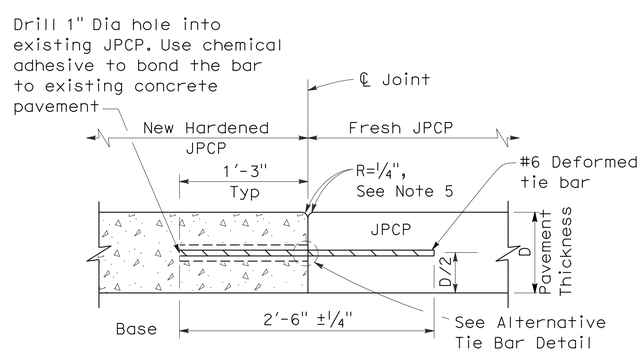

SECTION B-B

LONGITUDINAL CONSTRUCTION JOINT

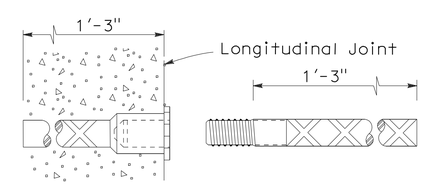

ALTERNATIVE TIE BAR SPLICE DETAIL

(Splice Coupler)

TIE BAR DETAILS

STATE OF CALIFORNIA
DEPARTMENT OF TRANSPORTATION

JOINTED PLAIN CONCRETE PAVEMENT

NO SCALE

RSP P1 DATED MAY 15, 2009 SUPERSEDES STANDARD PLAN P1
DATED MAY 1, 2006 - PAGE 119 OF THE STANDARD PLANS BOOK DATED MAY 2006.

REVISED STANDARD PLAN RSP P1

5-8-09

DIST	COUNTY	ROUTE	POST MILES TOTAL PROJECT	SHEET NO.	TOTAL SHEETS
11	SD	15	M15.0/M16.4	374	610

William K. Farnbach
REGISTERED CIVIL ENGINEER

June 5, 2009
PLANS APPROVAL DATE

REGISTERED PROFESSIONAL ENGINEER
William K. Farnbach
No. C49042
Exp. 9-30-10
CIVIL
STATE OF CALIFORNIA

The State of California or its officers or agents shall not be responsible for the accuracy or completeness of electronic copies of this plan sheet.

To accompany plans dated 10-24-11

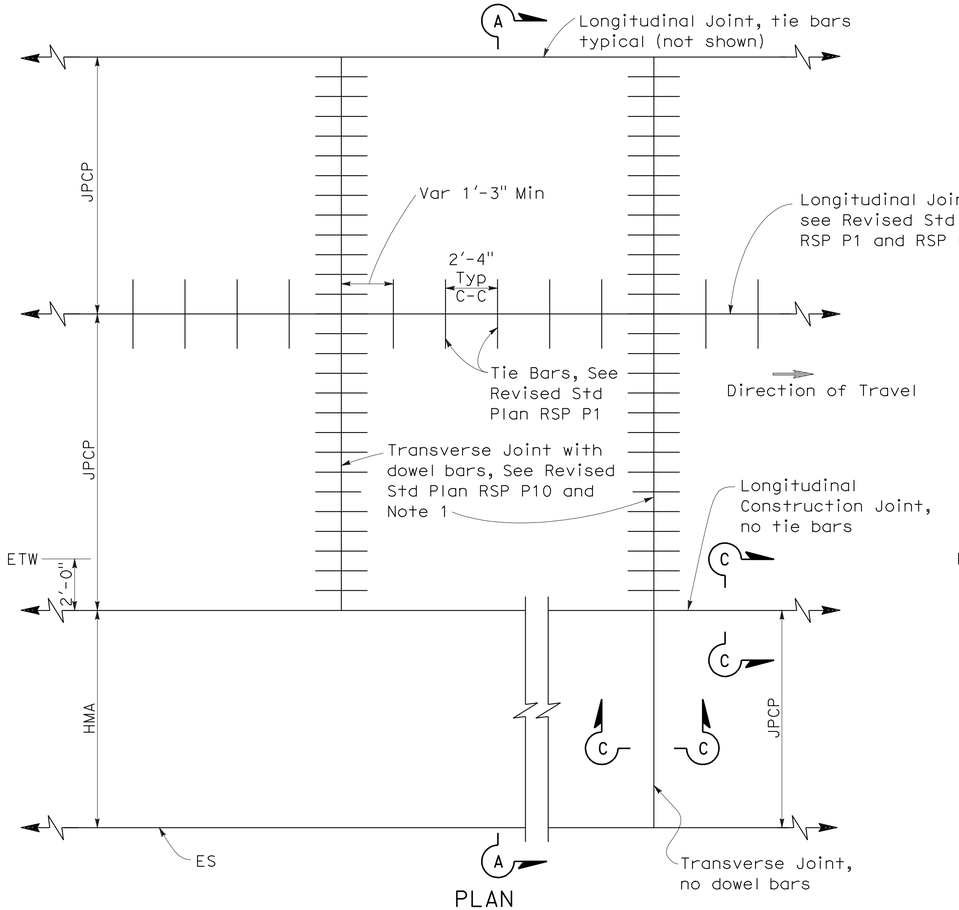

PLAN

NEW CONSTRUCTION

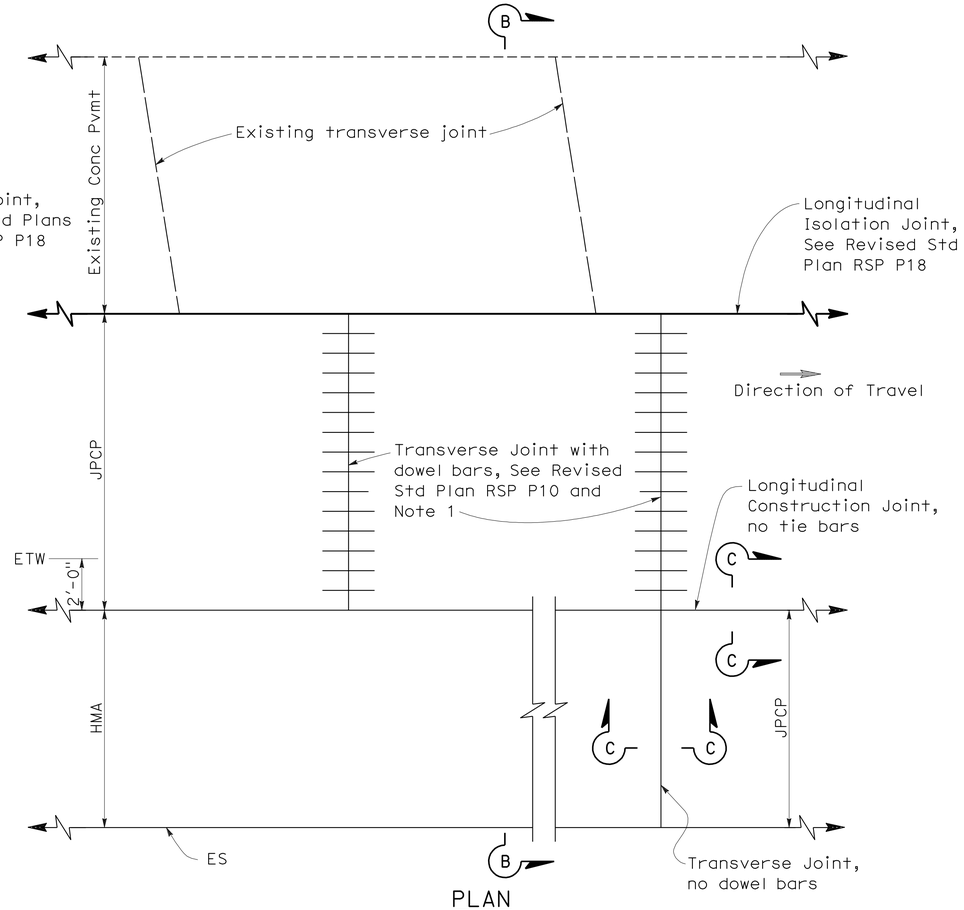

PLAN

LANE/SHOULDER ADDITION OR RECONSTRUCTION

NOTES:

1. Transverse joints shall be constructed at right angles to the longitudinal pavement joints in new Jointed Plain Concrete Pavement and spaced at successive repeated intervals of 12', 15', 13' and 14'.
2. For locations of rumble strips, see project plans. For rumble strip details not shown, see Standard Plans A40A and A40B.
3. Joint spacing patterns do not apply to intersections.

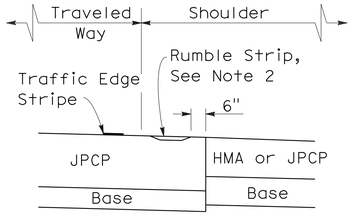

DETAIL "A"

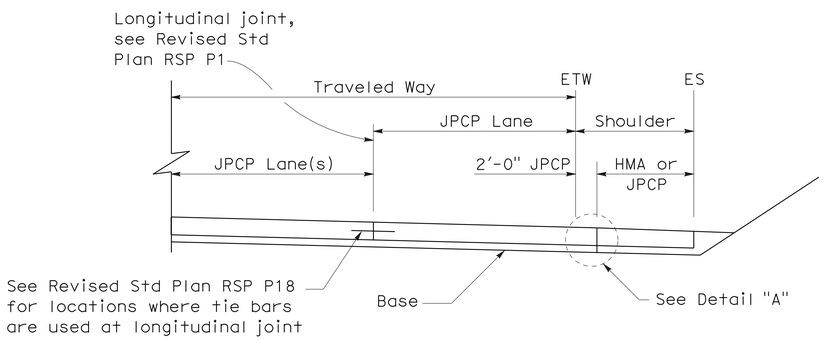

SECTION A-A

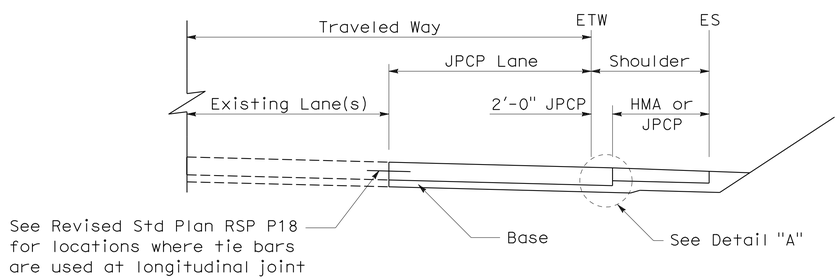

SECTION B-B

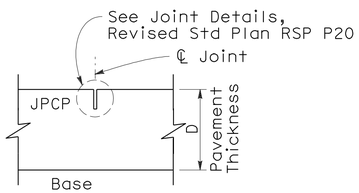

SECTION C-C

TRANSVERSE/LONGITUDINAL JOINT

(no dowel bars/tie bars)

STATE OF CALIFORNIA
DEPARTMENT OF TRANSPORTATION

JOINTED PLAIN CONCRETE PAVEMENT-WIDENED SLAB DETAILS

NO SCALE

RSP P2 DATED JUNE 5, 2009 SUPERCEDES STANDARD PLAN P2
DATED MAY 1, 2006 - PAGE 120 OF THE STANDARD PLANS BOOK DATED MAY 2006.

REVISED STANDARD PLAN RSP P2

2006 REVISED STANDARD PLAN RSP P2

5-19-09

DIST	COUNTY	ROUTE	POST MILES TOTAL PROJECT	SHEET NO.	TOTAL SHEETS
11	SD	15	M15.0/M16.4	375	610

William K. Farnbach
REGISTERED CIVIL ENGINEER

May 15, 2009
PLANS APPROVAL DATE

REGISTERED PROFESSIONAL ENGINEER
William K. Farnbach
No. C49042
Exp. 9-30-10
CIVIL
STATE OF CALIFORNIA

The State of California or its officers or agents shall not be responsible for the accuracy or completeness of electronic copies of this plan sheet.

To accompany plans dated 10-24-11

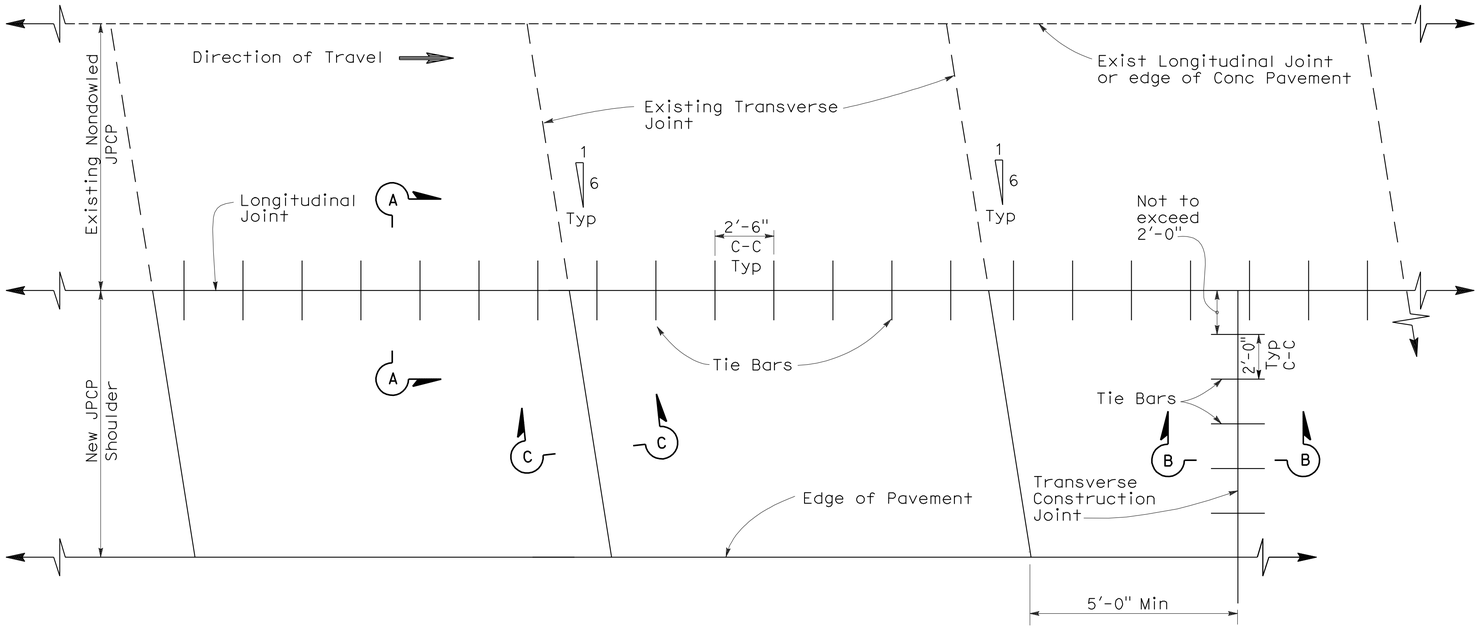

PLAN

NOTES:

1. New transverse contraction joints shall match the skewed offset and spacing of the adjacent existing contraction joints, as shown.
2. Transverse construction joints, with tie bars spaced as shown, shall be installed at the end of paving operations. Transverse construction joints shall be placed at least 5'-0" from any contraction joint.
3. This Standard Plan only applicable for constructing a nondoweled Jointed Plain Concrete Pavement shoulder next to existing nondoweled Jointed Plain Concrete Pavement lane.
4. If fresh concrete is placed adjacent to existing concrete, the top corner of the new hardened concrete does not need to be rounded to the 1/4" radius as shown.

TABLE A

Tie Bar Spacing		
Slab Length	Total Tie Bars per Slab	Clearance Tie Bar to Transverse Joint
9'-0"	3	1'-3"
9'-6"	3	1'-4 1/2"
12'-0"	5	1'-4"
13'-0"	5	1'-10"
14'-0"	5	2'-3 3/4"
15'-0"	6	1'-8"

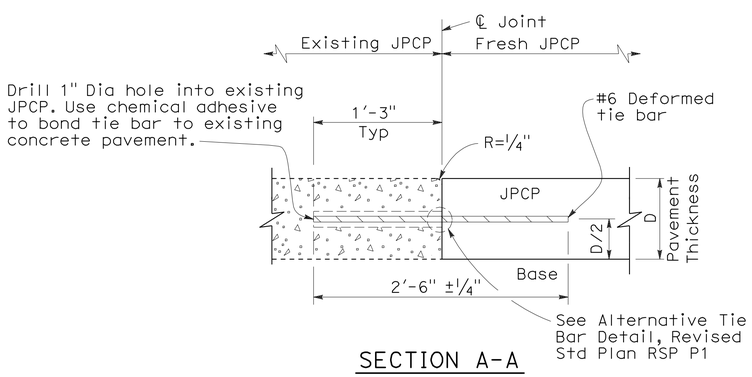

SECTION A-A

LONGITUDINAL JOINT
(Between fresh and hardened concrete)

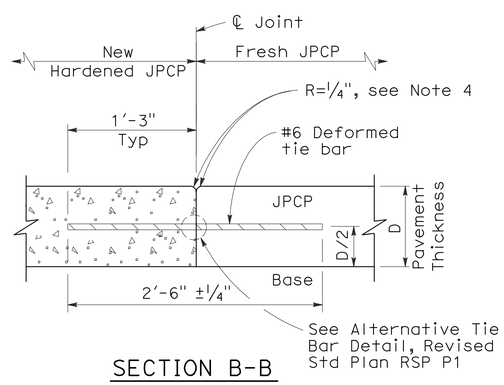

SECTION B-B

TRANSVERSE CONSTRUCTION JOINT

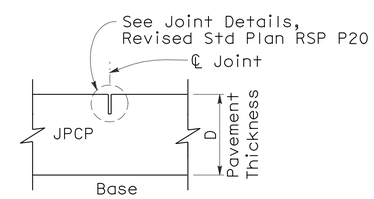

SECTION C-C

TRANSVERSE CONTRACTION JOINT

STATE OF CALIFORNIA
DEPARTMENT OF TRANSPORTATION

JOINTED PLAIN CONCRETE PAVEMENT-NONDOWELED SHOULDER ADDITION/RECONSTRUCTION

NO SCALE

RSP P3 DATED MAY 15, 2009 SUPERSEDES RSP P3 DATED NOVEMBER 17, 2006 AND STANDARD PLAN P3 DATED MAY 1, 2006 - PAGE 121 OF THE STANDARD PLANS BOOK DATED MAY 2006.

REVISED STANDARD PLAN RSP P3

2006 REVISED STANDARD PLAN RSP P3

5-8-09

DIST	COUNTY	ROUTE	POST MILES TOTAL PROJECT	SHEET NO.	TOTAL SHEETS
11	SD	15	M15.0/M16.4	376	610

REGISTERED CIVIL ENGINEER

May 15, 2009
PLANS APPROVAL DATE

REGISTERED PROFESSIONAL ENGINEER William K. Farnbach No. C49042 Exp. 9-30-10 CIVIL STATE OF CALIFORNIA

The State of California or its officers or agents shall not be responsible for the accuracy or completeness of electronic copies of this plan sheet.

To accompany plans dated 10-24-11

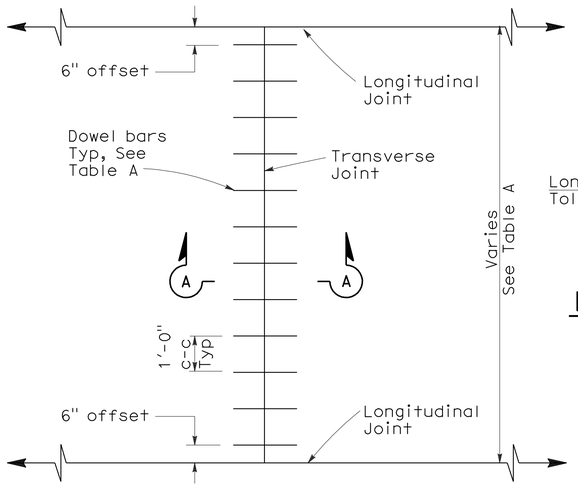

TRANSVERSE JOINT DOWEL BAR LAYOUT

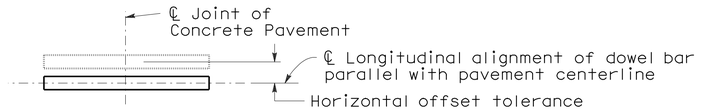

PLAN

HORIZONTAL OFFSET TOLERANCE

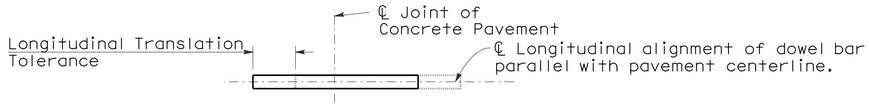

PLAN

LONGITUDINAL TRANSLATION TOLERANCE

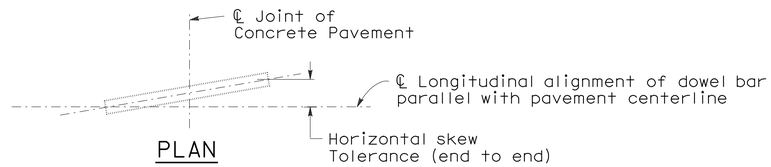

PLAN

HORIZONTAL SKEW TOLERANCE

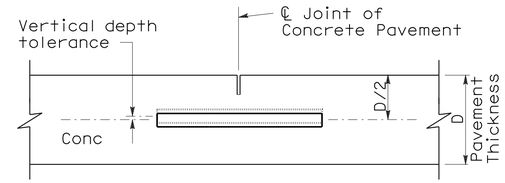

ELEVATION

VERTICAL DEPTH TOLERANCE

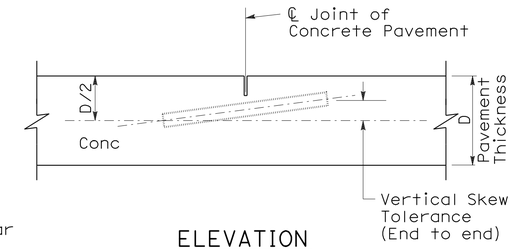

ELEVATION

VERTICAL SKEW TOLERANCE

NOTES:

1. See Revised Standard Plan RSP P1 for typical dowel bar placement and locations.
2. 1½" Dia smooth dowel bars are to be used with a pavement thickness, D, equal to or greater than 0.70 feet. For pavement thickness, D, less than 0.70 feet, use 1¼" Dia smooth dowel bars.
3. For widths not shown, see Project Plans.
4. If fresh concrete pavement is placed adjacent to existing concrete pavement, the top corner of the existing concrete pavement does not need to be rounded to the ¼" radius, as shown.

TABLE A (See Note 3)

Dowel Bar Transverse Spacing Table	
Width between Longitudinal Joints	Number of Dowels between Longitudinal Joints
14'-0"	14
13'-0"	13
12'-0"	12
11'-0"	11
10'-0"	10
8'-0"	8
5'-0"	5
4'-0"	4

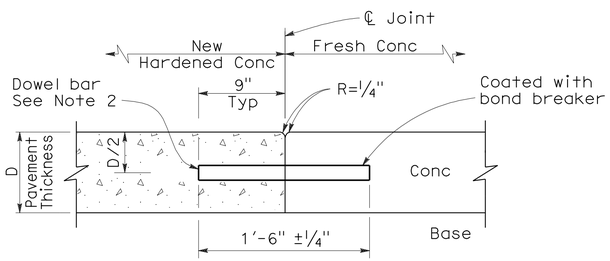

SECTION A-A

TRANSVERSE CONSTRUCTION JOINT DETAIL

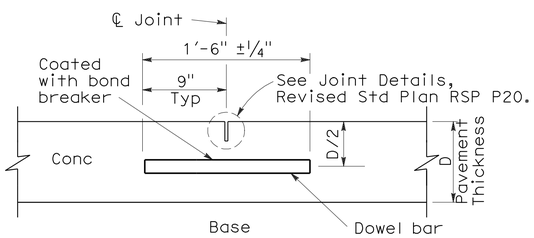

TRANSVERSE CONTRACTION JOINT

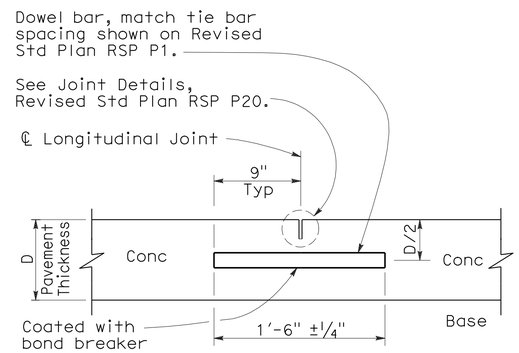

LONGITUDINAL CONTRACTION JOINT WITH DOWEL BARS

(See Revised Std Plan RSP P18)

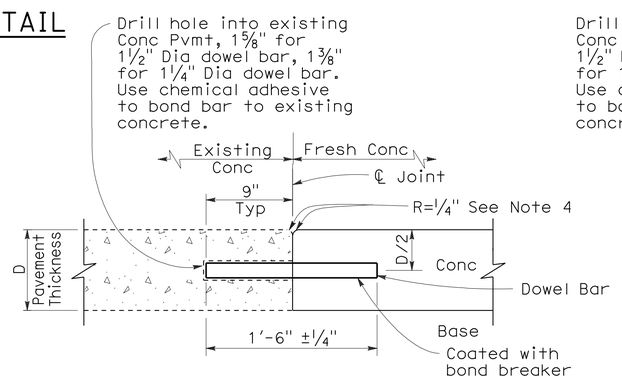

TRANSVERSE CONSTRUCTION JOINT FOR EXISTING CONCRETE PAVEMENT

(Drill and bond locations)

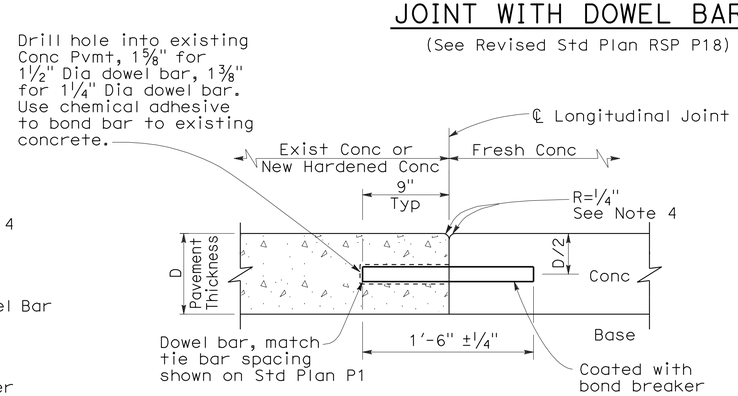

LONGITUDINAL CONSTRUCTION JOINT WITH DOWEL BARS

(See Revised Std Plan RSP P18)

STATE OF CALIFORNIA
DEPARTMENT OF TRANSPORTATION

CONCRETE PAVEMENT-DOWEL BAR DETAILS

NO SCALE

RSP P10 DATED MAY 15, 2009 SUPERSEDES STANDARD PLAN P10 DATED MAY 1, 2006 - PAGE 124 OF THE STANDARD PLANS BOOK DATED MAY 2006.

REVISED STANDARD PLAN RSP P10

2006 REVISED STANDARD PLAN RSP P10

5-8-09

DIST	COUNTY	ROUTE	POST MILES TOTAL PROJECT	SHEET NO.	TOTAL SHEETS
11	SD	15	M15.0/M16.4	377	610

William K. Farnbach
REGISTERED CIVIL ENGINEER

May 15, 2009
PLANS APPROVAL DATE

REGISTERED PROFESSIONAL ENGINEER
William K. Farnbach
No. C49042
Exp. 9-30-10
CIVIL
STATE OF CALIFORNIA

The State of California or its officers or agents shall not be responsible for the accuracy or completeness of electronic copies of this plan sheet.

To accompany plans dated 10-24-11

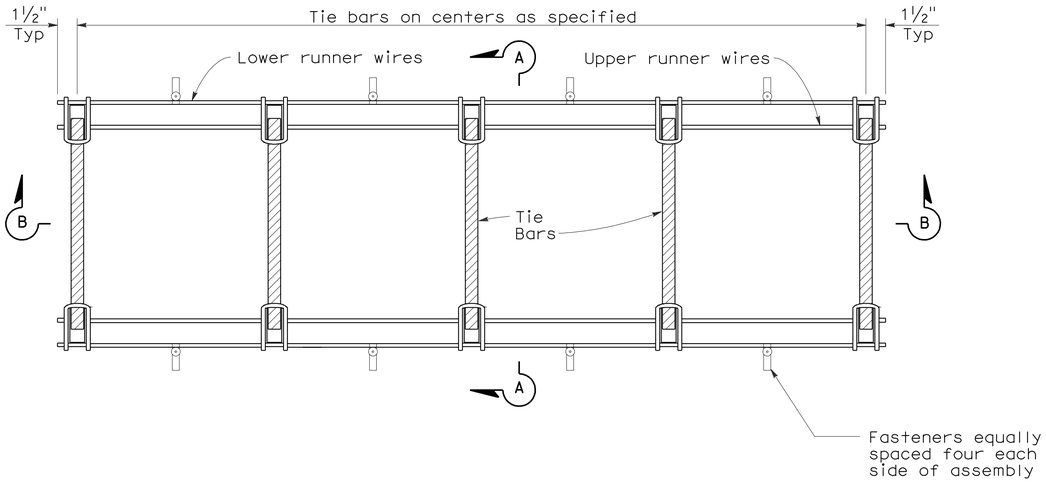

PLAN

TIE BAR BASKET

(TIE BARS AT LONGITUDINAL JOINT)
See Note 1

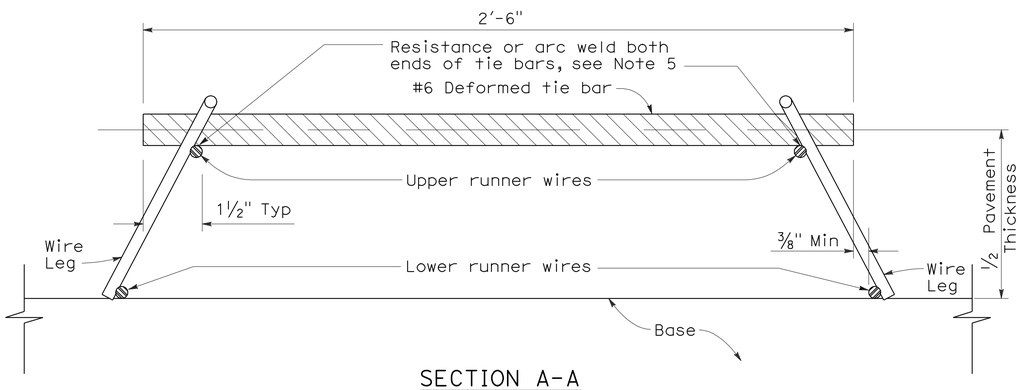

SECTION A-A

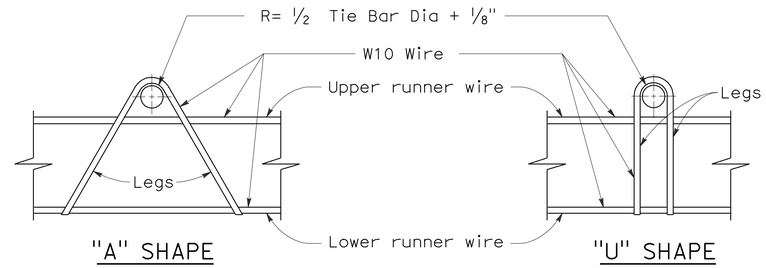

ASSEMBLY FRAME DETAILS

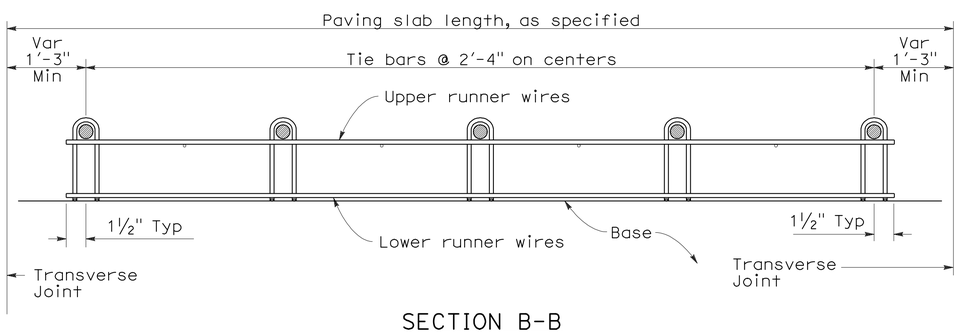

SECTION B-B
See Note 1

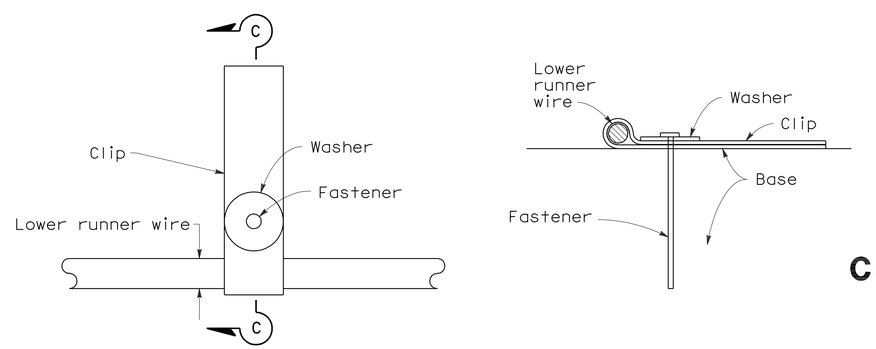

PLAN

SECTION C-C

FASTENER DETAIL

NOTES:

1. "U" frame shape assembly shown. "U" frame shape or "A" frame shape are acceptable.
2. Wire sizes shown are minimum required.
3. All wire intersections are to be resistance welded.
4. Not for use on nondoweled skewed jointed plain concrete pavement.
5. Weld may be at top or bottom of tie bar.

STATE OF CALIFORNIA
DEPARTMENT OF TRANSPORTATION

CONCRETE PAVEMENT-TIE BAR BASKET DETAILS

NO SCALE

RSP P17 DATED MAY 15, 2009 SUPERSEDES RSP P17 DATED NOVEMBER 17, 2006 AND STANDARD PLAN P17 DATED MAY 1, 2006 - PAGE 126 OF THE STANDARD PLANS BOOK DATED MAY 2006.

REVISED STANDARD PLAN RSP P17

2006 REVISED STANDARD PLAN RSP P17

5-8-09

DIST	COUNTY	ROUTE	POST MILES TOTAL PROJECT	SHEET NO.	TOTAL SHEETS
11	SD	15	M15.0/M16.4	378	610

REGISTERED CIVIL ENGINEER

June 5, 2009
PLANS APPROVAL DATE

REGISTERED PROFESSIONAL ENGINEER — William K. Farnbach — No. C49042 — Exp. 9-30-10 — CIVIL — STATE OF CALIFORNIA

The State of California or its officers or agents shall not be responsible for the accuracy or completeness of electronic copies of this plan sheet.

To accompany plans dated 10-24-11

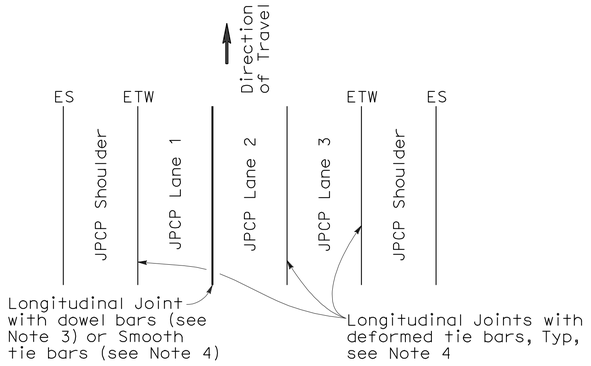

3 LANES WITH TIED CONCRETE SHOULDERS
PLAN

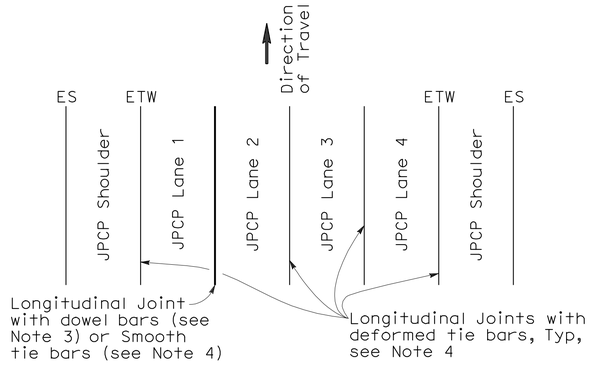

4 LANES WITH TIED CONCRETE SHOULDERS
PLAN

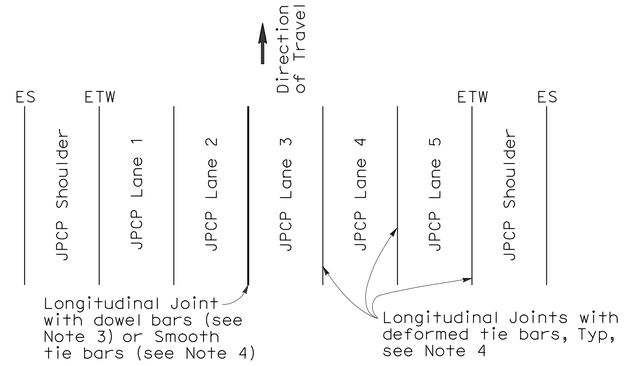

5 LANES WITH TIED CONCRETE SHOULDERS
PLAN

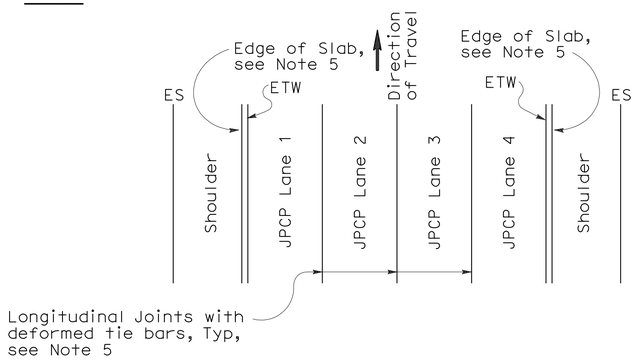

4 LANES OR LESS WITH WIDENED SLAB
PLAN

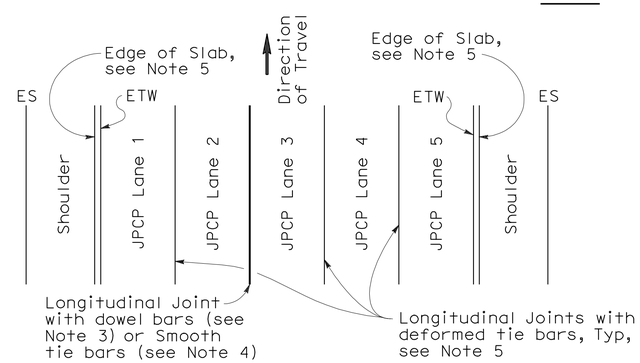

5 LANES WITH WIDENED SLAB
PLAN

NEW CONSTRUCTION

Location of Longitudinal Joints
(For JPCP)

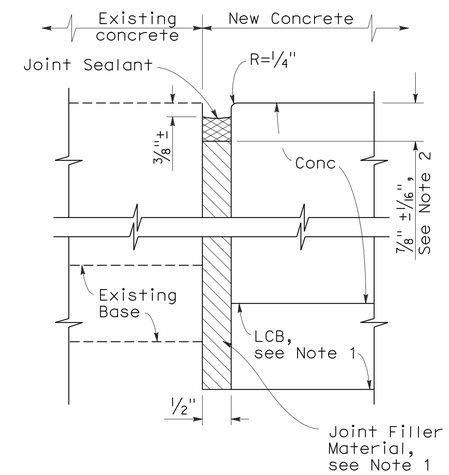

DETAIL A

ISOLATION JOINT

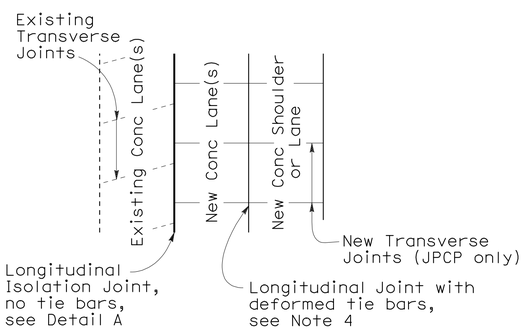

CASE 1
PLAN

Transverse Joints do not align between new and existing

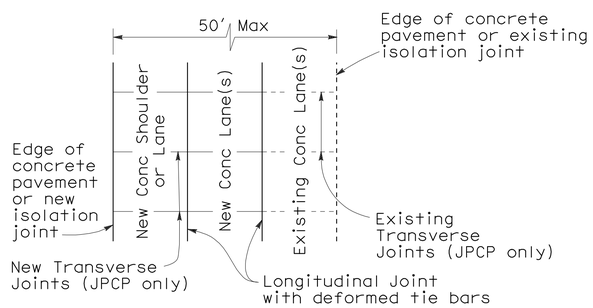

CASE 2
PLAN

Transverse Joints align between new and existing

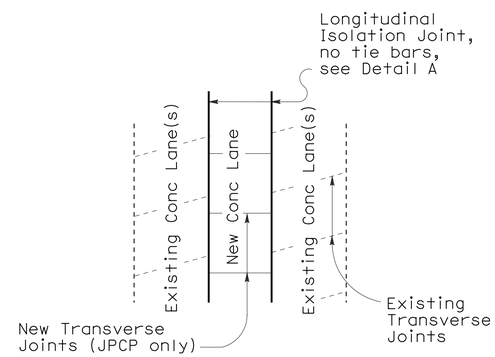

CASE 3 (INTERIOR LANE REPLACEMENT)
PLAN

Transverse Joints do not align between new and existing

LANE/SHOULDER ADDITION OR RECONSTRUCTION

(For JPCP and CRCP)

NOTES:

1. Where Lean Concrete Base is not used as base material, the joint filler material used for the longitudinal isolation joint shall only extend to the bottom of the new concrete slab. See Detail A.
2. Use 5/8" ±1/16" dimension for silicone sealant.
3. See Revised Standard Plan RSP P10 for longitudinal joint with dowel bars.
4. See Revised Standard Plan RSP P1.
5. See Revised Standard Plan RSP P2.

STATE OF CALIFORNIA
DEPARTMENT OF TRANSPORTATION

CONCRETE PAVEMENT-LANE SCHEMATICS AND ISOLATION JOINT DETAIL

NO SCALE

RSP P18 DATED JUNE 5, 2009 SUPERSEDES RSP P18 DATED MAY 15, 2009, RSP P18 DATED NOVEMBER 17, 2006 AND STANDARD PLAN P18 DATED MAY 1, 2006 - PAGE 127 OF THE STANDARD PLANS BOOK DATED MAY 2006.

REVISED STANDARD PLAN RSP P18

2006 REVISED STANDARD PLAN RSP P18

5-14-09

NOTE:

1. Tie bars, dowel bars, and reinforcement are not shown in joint seal details, see Revised Standard Plans RSP P1, RSP P3, RSP P10, RSP P35, RSP P45, or RSP P46 as applicable.

DIST	COUNTY	ROUTE	POST MILES TOTAL PROJECT	SHEET NO.	TOTAL SHEETS
11	SD	15	M15.0/M16.4	379	610

William K. Farnbach
REGISTERED CIVIL ENGINEER

May 15, 2009
PLANS APPROVAL DATE

REGISTERED PROFESSIONAL ENGINEER
William K. Farnbach
No. C49042
Exp. 9-30-10
CIVIL
STATE OF CALIFORNIA

The State of California or its officers or agents shall not be responsible for the accuracy or completeness of electronic copies of this plan sheet.

To accompany plans dated 10-24-11

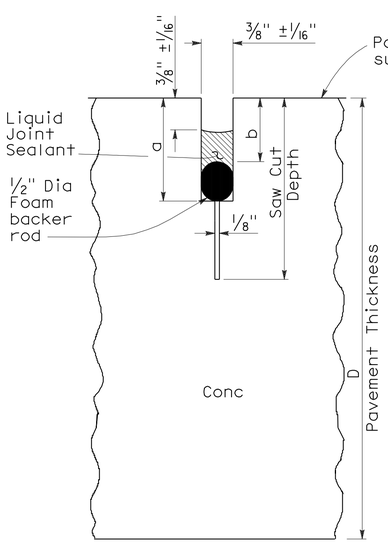

LIQUID SEALANT

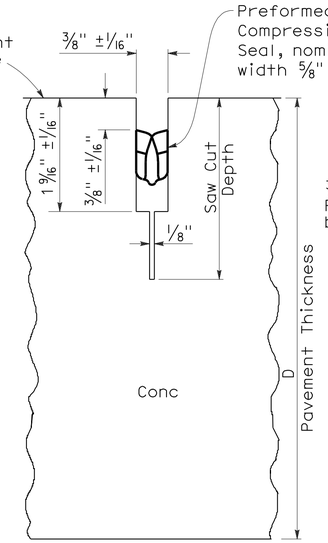

COMPRESSION SEAL

TYPE A1

Transverse Contraction Joints

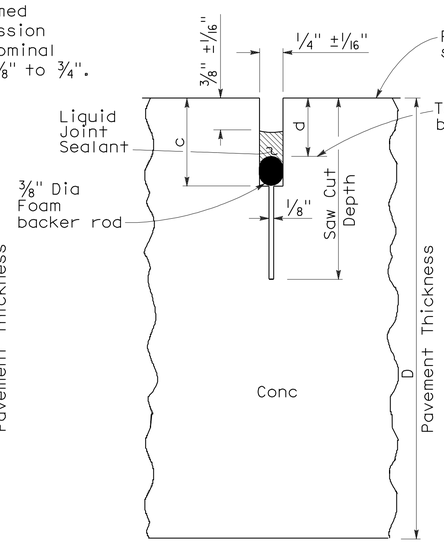

LIQUID SEALANT

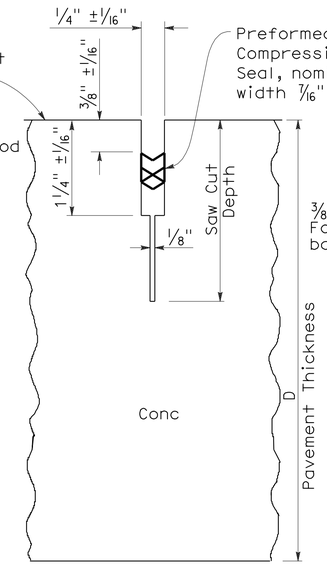

COMPRESSION SEAL

TYPE A2

Longitudinal Contraction Joints

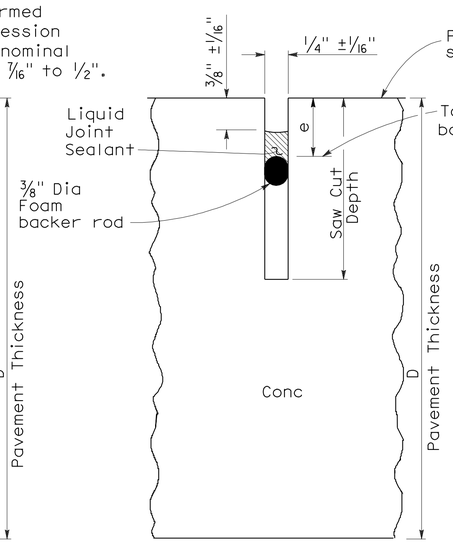

LIQUID SEALANT

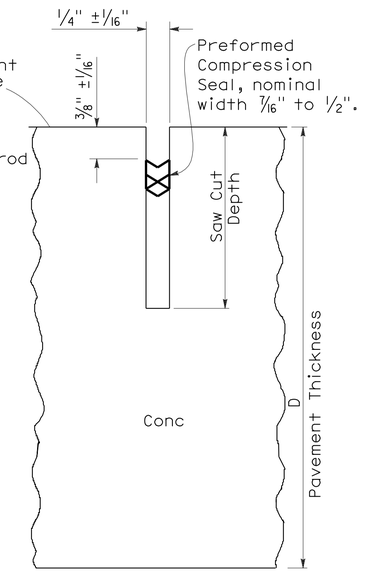

COMPRESSION SEAL

TYPE B

Longitudinal or Transverse Contraction Joint

LIQUID SEALANT RESERVOIR DEPTH

LIQUID SEALANT MATERIAL	3/8" Joint Width Type A1		1/4" Joint Width Type A2		1/4" Joint Width Type B
	DIMENSION		DIMENSION		DIMENSION
	a	b	c	d	e
SILCONE	1" ±1/16"	5/8" ±1/16"	15/16" ±1/16"	9/16" ±1/16"	9/16" ±1/16"
ASPHALT RUBBER	1 3/16" ±1/16"	3/4" ±1/16"	1 1/16" ±1/16"	11/16" ±1/16"	11/16" ±1/16"

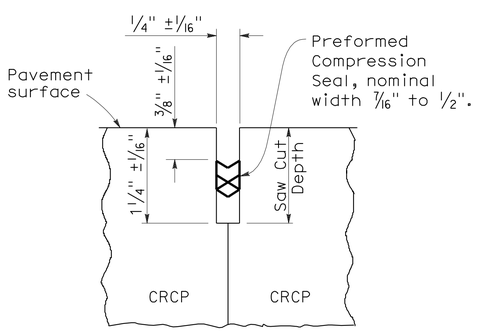

COMPRESSION SEAL

TYPE C

Transverse and Longitudinal Construction Joints (For CRCP)

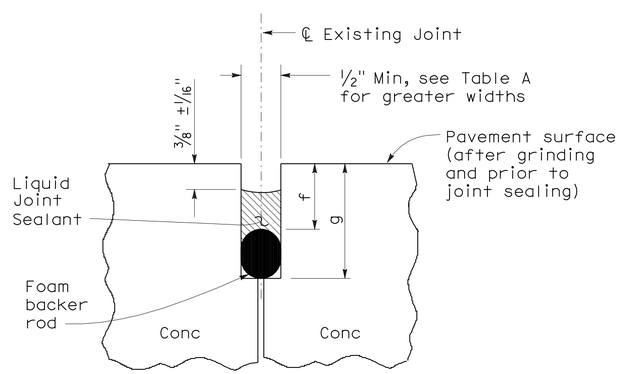

LIQUID SEALANT

TYPE R

Retrofit Transverse and Longitudinal Joints

TABLE A (TYPE R JOINT)

Sawn Joint Width	Backer Rod Diameter ± 1/16"	DIMENSION "f"	DIMENSION "g"
1"	1 5/16"	7/8"	2 1/4"
7/8"	1 3/16"	13/16"	2"
3/4"	1"	3/4"	1 3/4"
5/8"	7/8"	11/16"	1 1/2"
1/2"	11/16"	5/8"	1 1/4"

STATE OF CALIFORNIA
DEPARTMENT OF TRANSPORTATION

CONCRETE PAVEMENT-JOINT DETAILS

NO SCALE

RSP P20 DATED MAY 15, 2009 SUPERSEDES STANDARD PLAN P20
DATED MAY 1, 2006 - PAGE 128 OF THE STANDARD PLANS BOOK DATED MAY 2006.

REVISED STANDARD PLAN RSP P20

2006 REVISED STANDARD PLAN RSP P20

5-8-09

DIST	COUNTY	ROUTE	POST MILES TOTAL PROJECT	SHEET NO.	TOTAL SHEETS
11	SD	15	M15.0/M16.4	380	610

Robert B Schott
LICENSED LANDSCAPE ARCHITECT

April 3, 2009
PLANS APPROVAL DATE

The State of California or its officers or agents shall not be responsible for the accuracy or completeness of electronic copies of this plan sheet.

LICENSED LANDSCAPE ARCHITECT — Robert B. Schott — 3025 — Signature — 11-30-10 Renewal Date — 2-25-09 Date — STATE OF CALIFORNIA

To accompany plans dated 10-24-11

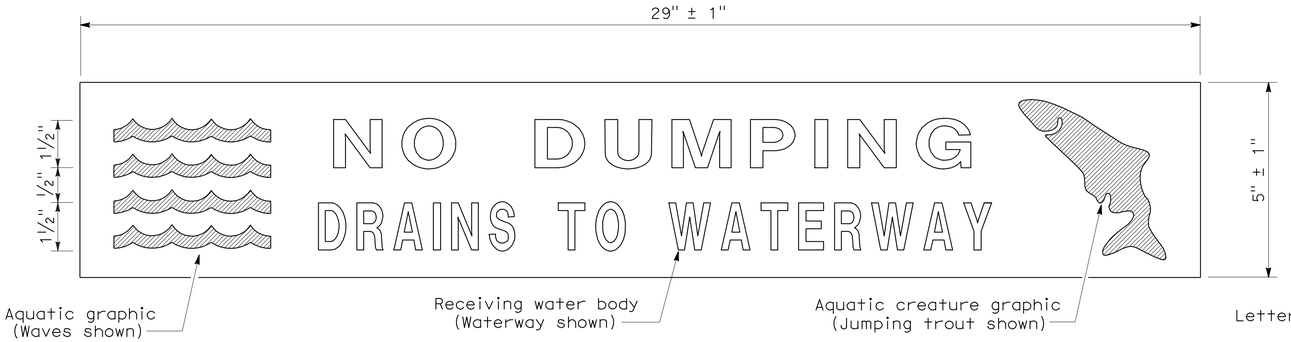

PLAN
DRAINAGE INLET MARKER
(PREFABRICATED THERMOPLASTIC)

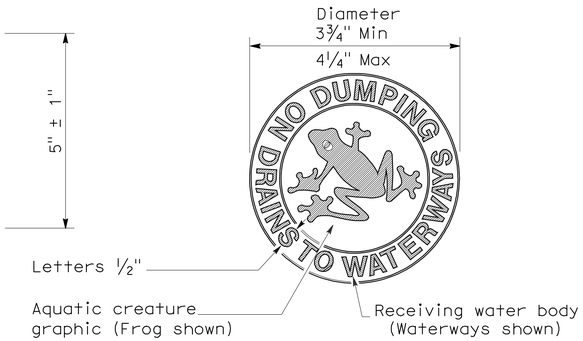

PLAN
DRAINAGE INLET MARKER
(MEDALLION)

PLAN
DRAINAGE INLET MARKER
(STAMPED CONCRETE IMPRINT)

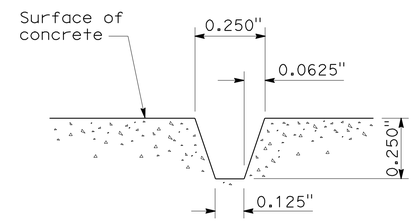

SECTION A-A
STAMPED CONCRETE
IMPRINT DETAIL

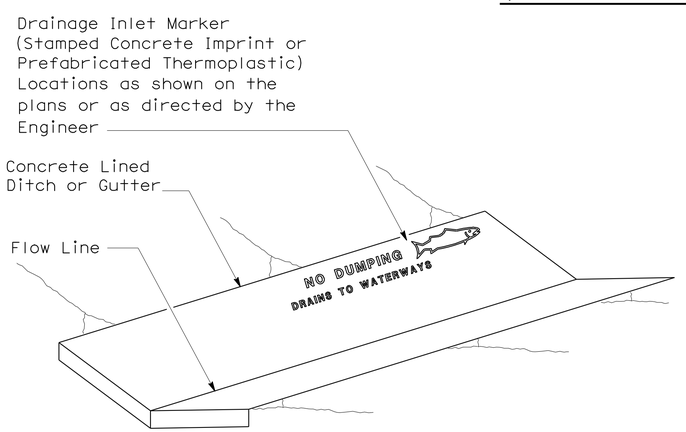

PERSPECTIVE
DRAINAGE INLET MARKER ON
CONCRETE LINED DITCH

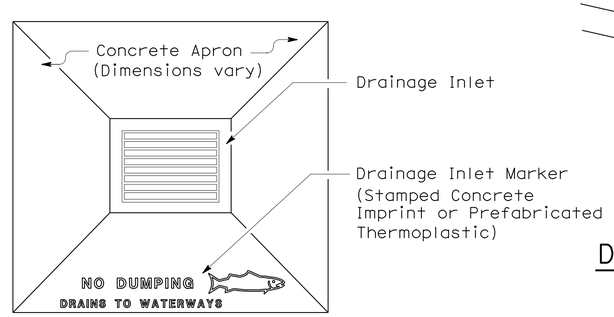

PLAN
DRAINAGE INLET MARKER ON
DRAINAGE INLET APRON

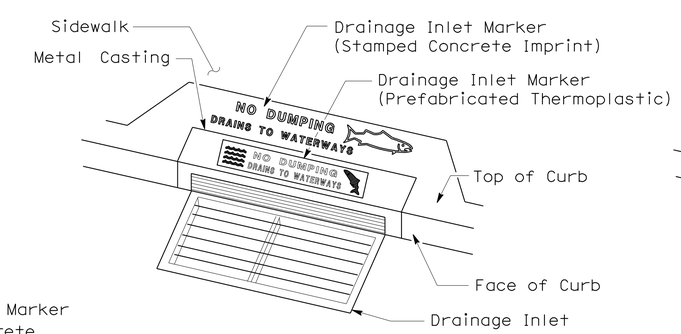

PERSPECTIVE
DRAINAGE INLET MARKER ON
DRAINAGE INLET

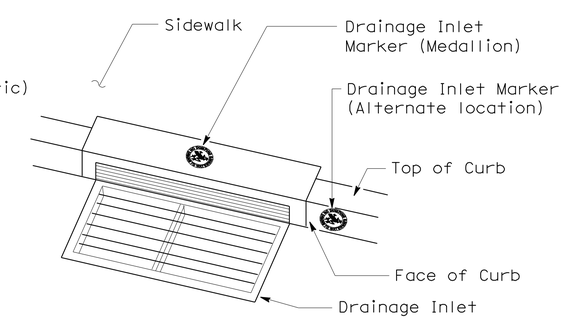

PERSPECTIVE
DRAINAGE INLET MARKER (MEDALLION)
ON DRAINAGE INLET

STATE OF CALIFORNIA
DEPARTMENT OF TRANSPORTATION

DRAINAGE INLET MARKERS

NO SCALE

NSP D71 DATED APRIL 3, 2009 SUPPLEMENTS
THE STANDARD PLANS BOOK DATED MAY 2006.

NEW STANDARD PLAN NSP D71

2006 NEW STANDARD PLAN NSP D71

DIST	COUNTY	ROUTE	POST MILES TOTAL PROJECT	SHEET NO.	TOTAL SHEETS
11	SD	15	M15.0/M16.4	381	610

REGISTERED CIVIL ENGINEER

June 6, 2008
PLANS APPROVAL DATE

Raymond Don Tsztoo No. C37332 Exp. 6-30-08 CIVIL — REGISTERED PROFESSIONAL ENGINEER — STATE OF CALIFORNIA

The State of California or its officers or agents shall not be responsible for the accuracy or completeness of electronic copies of this plan sheet.

To accompany plans dated 10-24-11

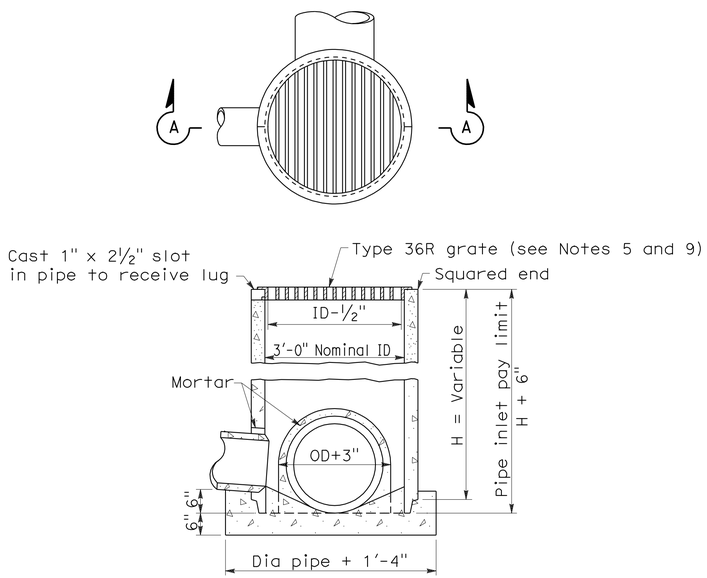

SECTION A-A

TYPE GCP

CONCRETE PIPE INLET WITH GRATE

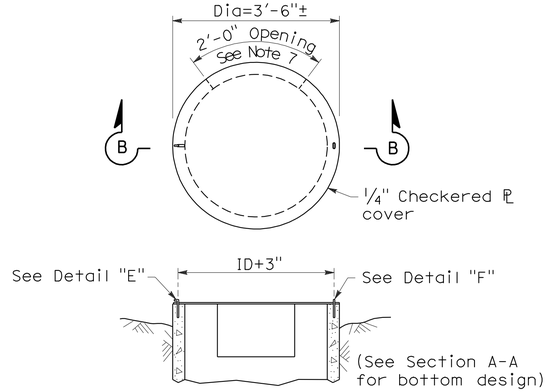

SECTION B-B

TYPE OCP or OCPI

CONCRETE PIPE INLET WITH STEEL COVER
(See Note 6)

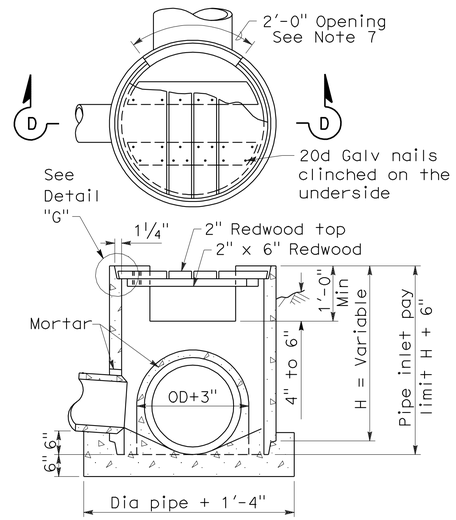

SECTION D-D

TYPE OCP or OCPI

CONCRETE PIPE INLET WITH REDWOOD COVER
(See Notes 6 and 10)

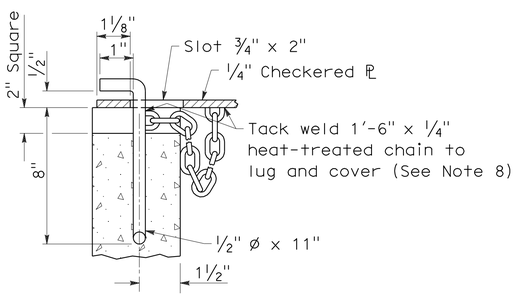

DETAIL "E"

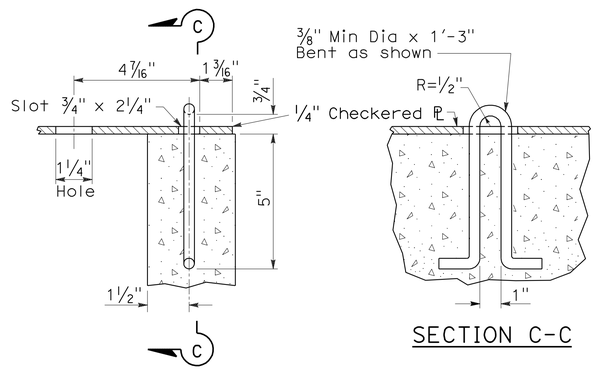

DETAIL "F"

SECTION C-C

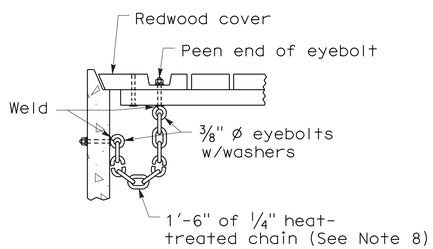

DETAIL "G"

NOTES:

1. For details of steel pipe inlets, see Standard Plan D75A.
2. For details of ladder and steps and when ladder or steps are required, see Standard Plan D75C.
3. Inlet pipes shall not protrude into basin.
4. Except for inlets used for junction boxes, basin floors shall have minimum slope of 4:1 from all directions toward outlet pipe, and a wood trowel finish.
5. See Revised Standard Plan RSP D77A and Standard Plan D77B for Grate and Frame Details and Weights of Miscellaneous Iron and Steel.
6. Designation of Type OCPI pipe inlets on plans indicates trash racks are to be furnished and installed on all side openings. See Standard Plan D75C for Trash Rack details.
7. More than one side opening may be required. Location and number as ordered by the Engineer. Opening may be cast in pipe.
8. Chain to be provided when specified.
9. Place pipe so bars of grate will be parallel with main surface flow.
10. Redwood covers shall only be placed at locations designated on the plans.

STATE OF CALIFORNIA
DEPARTMENT OF TRANSPORTATION

CONCRETE PIPE INLETS

NO SCALE

RSP D75B DATED JUNE 6, 2008 SUPERSEDES STANDARD PLAN D75B
DATED MAY 1, 2006 - PAGE 153 OF THE STANDARD PLANS BOOK DATED MAY 2006.

REVISED STANDARD PLAN RSP D75B

2006 REVISED STANDARD PLAN RSP D75B

DIST	COUNTY	ROUTE	POST MILES TOTAL PROJECT	SHEET NO.	TOTAL SHEETS
11	SD	15	M15.0/M16.4	382	610

Raymond Don Tsztoo
REGISTERED CIVIL ENGINEER

January 18, 2008
PLANS APPROVAL DATE

REGISTERED PROFESSIONAL ENGINEER
Raymond Don Tsztoo
No. C37332
Exp. 6-30-08
CIVIL
STATE OF CALIFORNIA

The State of California or its officers or agents shall not be responsible for the accuracy or completeness of electronic copies of this plan sheet.

To accompany plans dated 10-24-11

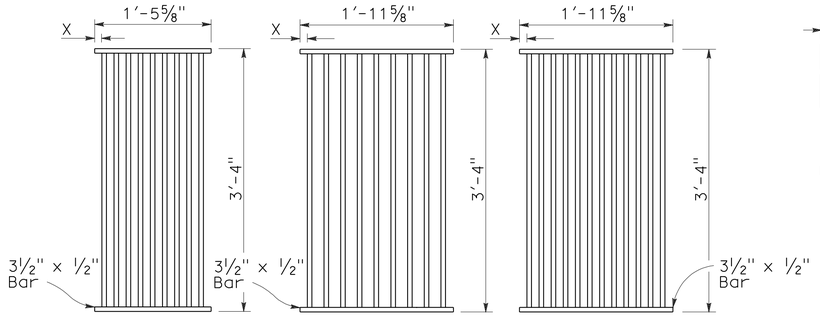

TYPE 18-9

1⅜" Clear spacing. Use within the roadbed on highways where bicycles and pedestrians are excluded.

TYPE 24-9

2" Clear spacing. Use in locations off the roadbed on all types of highways.

TYPE 24-12

1⅜" Clear spacing. Use within the roadbed on highways where bicycles and pedestrians are excluded.

RECTANGULAR GRATE DETAILS

(See table below)

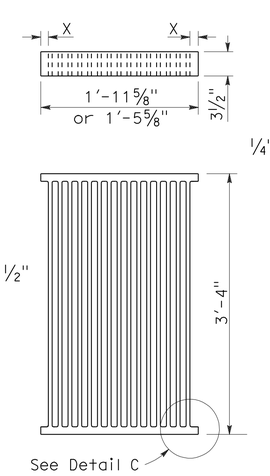

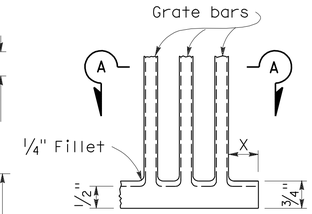

DETAIL C

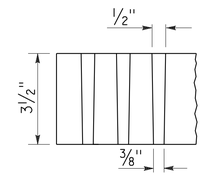

SECTION A-A

ALTERNATIVE CAST NODULAR IRON GRATE OR CAST STEEL GRATE

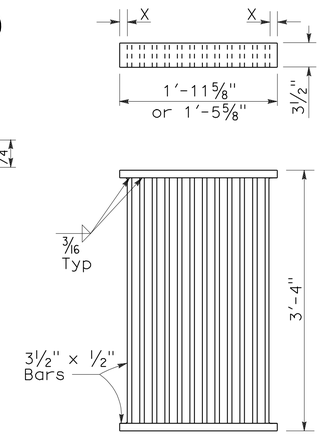

ALTERNATIVE WELDED GRATE

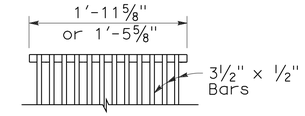

CAST END BLOCK

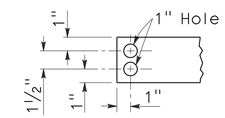

END OF BAR

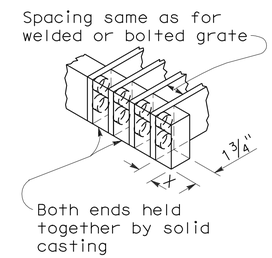

ALTERNATIVE CAST NODULAR IRON OR CAST STEEL END BLOCK GRATE

NOTES:

1. Grate type numbers refer to approximate width of grate in inches and number of bars, respectively.
2. Contractor has the option of using cast nodular iron, cast steel, welded, bolted, or cast end block grate.
3. See Special Provisions for requirements pertaining to galvanizing or asphalt dipping of grates and frames.
4. Rounded top of bars optional on all grates.
5. Pipe inlets with a grate shall be placed so that bars parallel direction of principle surface flow.
6. Full penetration butt welds may be substituted for the fillet welds on all anchors.
7. Standard square, hexagon, round or equivalent headed anchors may be substituted for the right angle hooks on the anchors shown on this plan.
8. Grate and frame weights are based on welded grates (weights of face angles, steps, protection bars, etc. are not included).

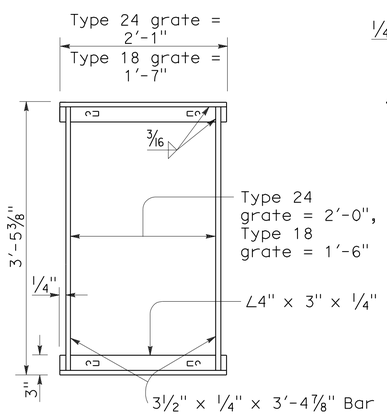

TYPICAL FRAME

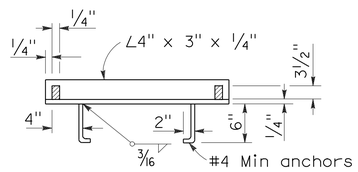

CROSS SECTION

(Thru frame)

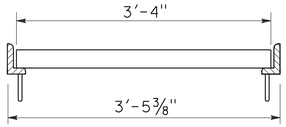

LONGITUDINAL SECTION

(Thru frame and grate)

RECTANGULAR FRAME DETAILS

(For all rectangular grates)

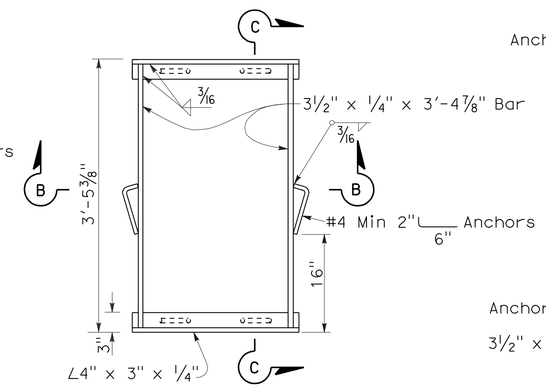

TYPICAL FRAME

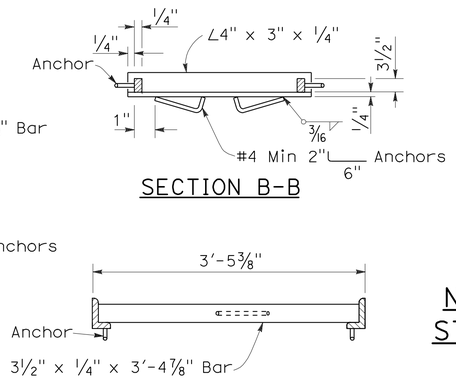

SECTION B-B

SECTION C-C

ALTERNATIVE ANCHOR FOR RECTANGULAR FRAME

(For details not shown, See Rectangular Frame Details)

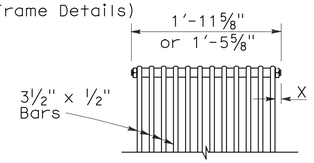

BOLTED END BLOCK

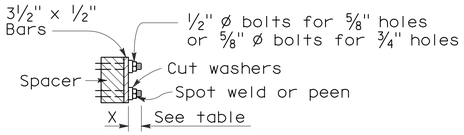

BOLTING DETAIL

ALTERNATIVE BOLTED GRATE

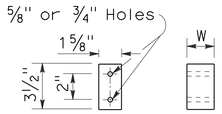

BAR SPACER

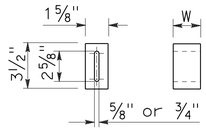

ALTERNATIVE SPACER

W = 1⅜" or 2"

GRATE BAR SPACING TABLE

TYPE	No. OF BARS	CLEAR BAR SPACING	X
18-9	9	1⅜"	1 1/16"
24-9	9	2"	1 9/16"
24-12	12	1⅜"	1¼"

INLET TYPE	COVER TYPE	WEIGHT LB
OS	PLATE	174
OL-7	PLATE	170
OL-10	PLATE	170
OL-14	PLATE	170
OL-21	PLATE	170
OCP	PLATE	112
OCPI	PLATE	112
OCPI	REDWOOD	42
OMP	PLATE	177
OMPI	PLATE	177

INLET TYPE	GRATE TYPE	No. OF GRATES	WEIGHT LB
GDO	24-12	2	634
GOL-7	24-12	1	326
GOL-10	24-12	1	326
GO,G1,G2,G3,G4 (TYPE 24)	24-9	1	263
	24-12	1	326
G4 (TYPE 18),G5,G6	18-9	1	249
GT1	18-9	2	498
GT2	18-9	2	498
GT3	24-12	2	652
GT4	24-12	2	652
TRASH RACK			22

BASIS FOR MISC IRON & STEEL FINAL PAY WEIGHTS FOR DRAINAGE INLETS

(See General Notes, No 8)

STATE OF CALIFORNIA
DEPARTMENT OF TRANSPORTATION

GRATE DETAILS

NO SCALE

RSP D77A DATED JANUARY 18, 2008 SUPERSEDES STANDARD PLAN D77A DATED MAY 1, 2006 - PAGE 155 OF THE STANDARD PLANS BOOK DATED MAY 2006.

REVISED STANDARD PLAN RSP D77A

2006 REVISED STANDARD PLAN RSP D77A

12-14-07

DIST	COUNTY	ROUTE	POST MILES TOTAL PROJECT	SHEET NO.	TOTAL SHEETS
11	SD	15	M15.0/M16.4	383	610

Raymond Don Tsztoo
REGISTERED CIVIL ENGINEER

June 6, 2008
PLANS APPROVAL DATE

REGISTERED PROFESSIONAL ENGINEER
Raymond Don Tsztoo
No. C37332
Exp. 6-30-08
CIVIL
STATE OF CALIFORNIA

The State of California or its officers or agents shall not be responsible for the accuracy or completeness of electronic copies of this plan sheet.

To accompany plans dated 10-24-11

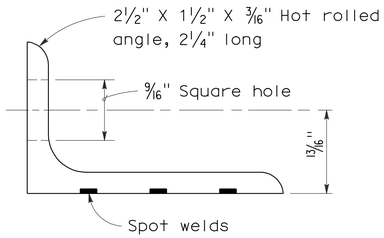

ANGLE

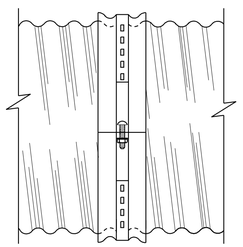

SIDE VIEW
ANGLE

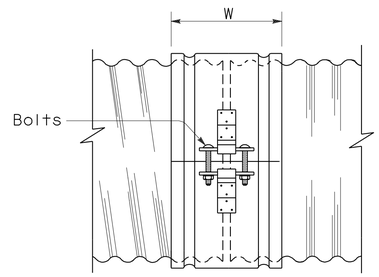

SIDE VIEW
SINGLE BAR AND STRAP

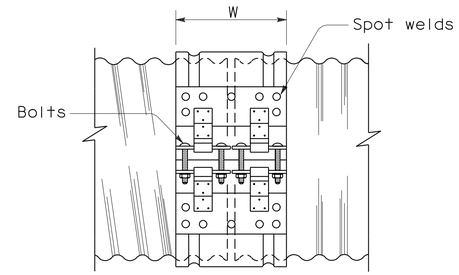

SIDE VIEW
DOUBLE BAR AND STRAP

NOTES:

1. All ferrous metal coupling band connection hardware shall be galvanized or electroplated in accordance with the Standard Specifications.
2. Dimensions and thicknesses shown are minimum.
3. Spot welds shall develop minimum required strength of strap.
4. Fillet welds of equivalent strength may be substituted for spot welds or rivets.
5. Dimension depends upon whether end condition is lips up or lips down.

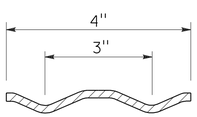

SECTION

H-4 HUGGER BAND

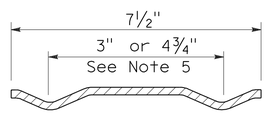

SECTION

H-7 HUGGER BAND

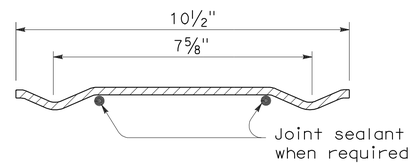

SECTION

H-10 HUGGER BAND

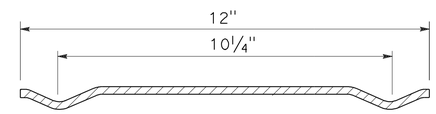

SECTION

H-12 HUGGER BAND

HUGGER COUPLING BANDS

STATE OF CALIFORNIA
DEPARTMENT OF TRANSPORTATION

CORRUGATED METAL PIPE COUPLING DETAILS No. 4 HUGGER COUPLING BANDS

NO SCALE

RSP D97D DATED JUNE 6, 2008 SUPERSEDES STANDARD PLAN D97D
DATED MAY 1, 2006 - PAGE 186 OF THE STANDARD PLANS BOOK DATED MAY 2006.

REVISED STANDARD PLAN RSP D97D

2006 REVISED STANDARD PLAN RSP D97D

3-24-08

DIST	COUNTY	ROUTE	POST MILES TOTAL PROJECT	SHEET NO.	TOTAL SHEETS
11	SD	15	M15.0/M16.4	384	610

Raymond Don Tsztoo
REGISTERED CIVIL ENGINEER

June 6, 2008
PLANS APPROVAL DATE

REGISTERED PROFESSIONAL ENGINEER Raymond Don Tsztoo No. C37332 Exp. 6-30-08 CIVIL STATE OF CALIFORNIA

The State of California or its officers or agents shall not be responsible for the accuracy or completeness of electronic copies of this plan sheet.

ANNULAR AND HELICAL PROFILE

COUPLING TYPE	PIPE CORRUGATION	PIPE SIZE	W OR A	PIPE WALL THICKNESS CSP	PIPE WALL THICKNESS CAP	BAND THICKNESS CSP	BAND THICKNESS CAP	BAR AND STRAP (CSP ONLY) STRAP THICKNESS	BOLTS Dia	BAR Dia	BAR YIELD STRENGTH	ANGLE DIMENSIONS CSP	ANGLE DIMENSIONS CAP	BOLTS (No.- Dia) CSP	BOLTS (No.- Dia) CAP	RIVETS ANGLE TO BAND CSP	RIVETS ANGLE TO BAND CAP	SPOT WELDS ANGLE TO BAND CSP
TWO PIECE INTEGRAL FLANGE	1½′ × ¼"	6"-10"	7"	0.052"-0.079"	0.048"-0.060"	0.052"	0.060"							2-⅜"	2-⅜"			
		12"-18"	7"	0.052"-0.079"		0.064"								2-½"				
	2⅔" × ½"	12"-24"	7"	0.052"-0.079"	0.060"-0.105"	0.064"	0.060"							2-½"	2-½"			
UNIVERSAL	2⅔" × ½"	THROUGH 36"	12"	0.052"-0.138"	0.060"-0.135"	0.052"	0.060"					2" × 2" × 3/16"	2" × 2" × 3/16"	3-½"	3-½"	3-⅜"	3-⅜"	3-½"
		42"-60"	12"	0.052"-0.168"	0.075"-0.164"	0.052"	0.060"					2" × 2" × 3/16"	2" × 2" × 3/16"	3-½"	3-½"	3-⅜"	3-⅜"	5-½"
		THROUGH 72"	12"	0.052"-0.168"	0.164"	0.052"	0.105"	0.079"	½"	⅞"	32 ksi	2" × 2" × 3/16"	2" × 2" × 3/16"	3-½"	3-½"	3-⅜"	3-⅜"	5-½"
		78"-84"	16¼"	0.168"		0.079"		DOUBLE 0.079"	½"	⅞"	32 ksi							
ANNULAR	2⅔" × ½"	THROUGH 36"	7"	0.064"-0.138"	0.060"-0.135"	0.052"	0.060"	0.079"	½"	⅞"	32 ksi	2" × 2" × 3/16"	2" × 2" × 3/16"	2-½"	2-½"	3-⅜"	3-⅜"	3-½"
		42"-72"	12"	0.064"-0.168"	0.075"-0.164"	0.052"	0.105"	0.079"	½"	⅞"	32 ksi	2" × 2" × 3/16"	2" × 2" × 3/16"	3-½"	3-½"	3-⅜"	3-⅜"	5-½"
		78"-84"	12"	0.168"		0.079"		0.109"	½"	⅞"	45 ksi	2" × 2" × 3/16"		3-½"		3-⅜"		5-½"
	3" × 1"	48"-90"	14"	0.064"-0.109"		0.052"		0.079"	½"	⅞"	32 ksi	2" × 2" × 3/16"		3-½"		3-⅜"		5-½"
		96"-120"	14"	0.079"-0.109"		0.052"		0.109"	½"	⅞"	45 ksi	2" × 2" × 3/16"		3-½"		4-⅜"		
		42"-108"	14"		0.060"-0.135"		0.060"						2" × 2" × 3/16"		3-½"		3-⅜"	
HELICAL	2⅔" × ½"	THROUGH 36"	12"	0.052"-0.138"	0.060"-0.135"	0.052"	0.060"	0.079"	½"	⅞"	32 ksi	2" × 2" × 3/16"	2" × 2" × 3/16"	3-½"	3-½"	3-⅜"	3-⅜"	3-½"
		42"-72"	12"	0.052"-0.168"	0.075"-0.164"	0.052"	0.060"	0.079"	½"	⅞"	32 ksi	2" × 2" × 3/16"	2" × 2" × 3/16"	3-½"	3-½"	3-⅜"	3-⅜"	5-½"
		78"-84"	12"	0.168"		0.079"		0.109"	½"	⅞"	45 ksi	2" × 2" × 3/16"		3-½"		3-⅜"		5-½"
	3" × 1"	48"-90"	14"	0.064"-0.109"		0.052"		0.079"	½"	⅞"	32 ksi	2" × 2" × 3/16"		3-½"		3-⅜"		5-½"
		96"-120"	14"	0.079"-0.109"		0.052"		0.109"	½"	⅞"	45 ksi	2" × 2" × 3/16"		3-½"		4-⅜"		
		42"-108"	14"		0.060"-0.135"		0.060"						2" × 2" × 3/16"		3-½"		3-⅜"	
HUGGER	2⅔" × ½" REROLLED END	12"-54"	4"	0.052"-0.109"		0.052"						2½" × 1½" × 3/16"	2½" × 1½" × 3/16"	1-½"				3-½"
		60"-66"	4"	0.109"		0.064"						2½" × 1½" × 3/16"	2½" × 1½" × 3/16"	1-½"				3-½"
		36"-48"	4"	0.138"		0.064"						2½" × 1½" × 3/16"	2½" × 1½" × 3/16"	1-½"				3-½"
		THROUGH 72"	10½"	0.052"-0.168"		0.052"		0.079"	½"	⅞"	32 ksi							
		78"-84"	10½"	0.168"		0.079"		0.109"	½"	⅞"	45 ksi							
	3" × 1" REROLLED END	48"-90"	10½"	0.064"-0.109"		0.052"		0.079"	½"	⅞"	32 ksi							
		96"-120"	10½"	0.079"-0.109"		0.052"		0.109"	½"	⅞"	45 ksi							
	5" × 1" REROLLED END	48"-66"	7½"	0.064"-0.109"		0.064"		0.079"	½"	⅞"	32 ksi	2½" × 1½" × 3/16"	2½" × 1½" × 3/16"	1-½"				3-½"
		72"-90"	7½"	0.064"-0.079"		0.064"		0.079"	½"	⅞"	32 ksi	2½" × 1½" × 3/16"	2½" × 1½" × 3/16"	1-½"				3-½"
		48"-90"	7½"	0.064"-0.138"		0.064"		0.079"	½"	⅞"	32 ksi							
		48"-120"	12" SEE	0.064"-0.109"		0.064"		0.079"	½"	⅞"	32 ksi							
		48"-84"	12" NOTE	0.138"		0.064"		0.079"	½"	⅞"	32 ksi							
		90"-120"	12" 11	0.138"		0.064"		DOUBLE 0.079"	½"	⅞"	32 ksi							

SPIRAL RIB PROFILE

COUPLING TYPE	PIPE CORRUGATION	PIPE SIZE	W	PIPE WALL THICKNESS SSRP	PIPE WALL THICKNESS ASRP	BAND THICKNESS SSRP	BAND THICKNESS ASRP	BAR AND STRAP (SSRP ONLY) STRAP THICKNESS	BOLTS Dia	BAR Dia	BAR YIELD STRENGTH	ANGLE DIMENSIONS SSRP	ANGLE DIMENSIONS ASRP	BOLTS (No.- Dia) SSRP	BOLTS (No.- Dia) ASRP	RIVETS ANGLE TO BAND SSRP	RIVETS ANGLE TO BAND ASRP	SPOT WELDS ANGLE TO BAND SSRP
ANNULAR	2⅔" × ½" * REROLLED END	24"-36"	12"	0.064"-0.109"	0.060"-0.105"	0.052"	0.060"	0.079"	½"	⅞"	32 ksi	2" × 2" × 3/16"	2" × 2" × 3/16"	3-½"	3-½"	3-⅜"	3-⅜"	5-½"
		42"-60"	12"	0.064"-0.109"	0.075"-0.105"	0.052"	0.105"	0.079"	½"	⅞"	32 ksi	2" × 2" × 3/16"	2" × 2" × 3/16"	3-½"	3-½"	3-⅜"	3-⅜"	5-½"
		66"-72"	12"	0.064"-0.109"		0.052"		0.079"	½"	⅞"	32 ksi	2" × 2" × 3/16"	2" × 2" × 3/16"	3-½"	3-½"	3-⅜"	3-⅜"	5-½"
		78"-114"	12"	0.079"-0.109"		0.079"		0.109"	½"	⅞"	45 ksi	2" × 2" × 3/16"	2" × 2" × 3/16"	3-½"	3-½"	3-⅜"	3-⅜"	5-½"
HUGGER	2⅔" × ½" * REROLLED END	24"-72"	10½"	0.064"-0.109"		0.052"		0.079"	½"	⅞"	32 ksi							
		78"-84"	10½"	0.109"		0.079"		0.109"	½"	⅞"	45 ksi							

* See Note 14.

14. All profiles of Spiral Rib Pipe (¾" × ¾" ribs at 7½" pitch and ¾" × 1" ribs at 11½" pitch in both steel and aluminum and ¾" × 1" ribs at 8½" pitch in steel only) shall be manufactured with rerolled ends. Corrugation profile of the rerolled ends shall be 2⅔" × ½" annual corrugations with a minimum of two full corrugations at each end.

NOTES:

To accompany plans dated 10-24-11

1. All ferrous metal coupling band connection hardware shall be galvanized or electro-plated in accordance with the Standard Specifications.
2. For helically corrugated coupling bands, the connection angles may be oriented parallel to the pipe axis, provided connecting holes are slotted lengthwise sufficiently to allow adjustment for the helix angle.
3. Tension strap may be connected to band with either spot welds or fillet welds that develop minimum required strength of strap.
4. Use 1¼" gage line dimension on attached angle leg for rivets and spot welds.
5. Band thickness shall not be less than:
   a. 3 standard thicknesses lighter than the thickness of the pipe for Corrugated Steel Pipe.
   b. 2 standard thicknesses lighter than the thickness of the pipe and in no case lighter than 0.060" for Corrugated Aluminum Pipe.
6. Dimensions, thicknesses and strengths shown are minimum.
7. For pipe arches use same width band as for round pipe of equal periphery.
8. Fillet welds of equivalent strenght may be substituted for spot welds or rivets.
9. Spot welds shall develop minimum required strength of strap.
10. Pipe with rerolled ends having at least two 2⅔" × ½" annular corrugations at each end with or without an upturned flange may be connected with any of the annular coupling bands shown for pipe of the same diameter and wall thickness and having 2⅔" × ½" corrugations.
11. In the case of H-12 huggerbands, two piece bands are required for diameters through 96" and three piece bands are required for diameters 102" through 120".
12. Two piece bands are required for pipes greater than 42" diameter.
13. The 2¼" × 2" × 0.109" thick galvanized die-formed angle connector may be used in lieu of the 2" × 2" × 3/16" angle connector for standard joints only on pipes through 72" diameter.

STATE OF CALIFORNIA
DEPARTMENT OF TRANSPORTATION

CORRUGATED METAL PIPE COUPLING DETAILS No. 5 STANDARD JOINT

NO SCALE

RSP D97E DATED JUNE 6, 2008 SUPERSEDES STANDARD PLAN D97E
DATED MAY 1, 2006 - PAGE 187 OF THE STANDARD PLANS BOOK DATED MAY 2006.

REVISED STANDARD PLAN RSP D97E

2006 REVISED STANDARD PLAN RSP D97E

4-2-08

DIST	COUNTY	ROUTE	POST MILES TOTAL PROJECT	SHEET NO.	TOTAL SHEETS
11	SD	15	M15.0/M16.4	385	610

Raymond Don Tsztoo
REGISTERED CIVIL ENGINEER

June 6, 2008
PLANS APPROVAL DATE

REGISTERED PROFESSIONAL ENGINEER Raymond Don Tsztoo No. C37332 Exp. 6-30-08 CIVIL STATE OF CALIFORNIA

The State of California or its officers or agents shall not be responsible for the accuracy or completeness of electronic copies of this plan sheet.

To accompany plans dated 10-24-11

ANNULAR AND HELICAL PROFILE

COUPLING TYPE	PIPE CORRUGATION	PIPE SIZE	W OR A	PIPE WALL THICKNESS CSP	PIPE WALL THICKNESS CAP	BAND THICKNESS CSP	BAND THICKNESS CAP	BAR AND STRAP (CSP ONLY) STRAP THICKNESS	BOLTS Dia	BAR Dia	BAR YIELD STRENGTH	ANGLE DIMENSIONS CSP	ANGLE DIMENSIONS CAP	BOLTS (No. - Dia) CSP	BOLTS (No. - Dia) CAP	RIVETS ANGLE TO BAND CSP	RIVETS ANGLE TO BAND CAP	SPOT WELDS ANGLE TO BAND CSP
TWO PIECE INTEGRAL FLANGE	1½" × ¼"	6"-10"	7"	0.064"-0.079"	0.060"	0.064"	0.060"							2-⅜"	2-⅜"			
	2⅔" × ½"	12"-24"	12"		0.060"-0.105"		0.060"								3-½"			
UNIVERSAL	2⅔" × ½"	THROUGH 36"	12"	0.064"-0.138"	0.060"-0.135"	0.064"	0.060"	0.079"	½"	⅞"	32 ksi	2" × 2" × 3/16"	2" × 2" × 3/16"	3-½"	3-½"	3-⅜"	3-⅜"	5-½"
		42"-60"	16¼"	0.064"-0.168"	0.060"-0.164"	0.064"	0.060"	DOUBLE 0.079"	½"	⅞"	32 ksi	2" × 2" × ¼"	2" × 2" × ¼"	4-½"	4-½"	5-⅜"	5-⅜"	
ANNULAR	2⅔" × ½"	THROUGH 36"	12"	0.064"-0.138"	0.060"-0.135"	0.064"	0.060"					2" × 2" × 3/16"	2" × 2" × 3/16"	3-½"	3-½"	3-⅜"	3-⅜"	5-½"
		42"-60"	12"	0.064"-0.079"		0.064"						2" × 2" × 3/16"		3-½"		3-⅜"		5-½"
		42"-60"	12"	0.109"-0.168"	0.135"-0.164"	0.064"	0.075"					2" × 2" × ¼"	2" × 2" × ¼"	3-½"	3-½"	5-⅜"	5-⅜"	
		66"-72"	24"		0.164"		0.105"						2" × 2" × ¼"		5-½"		5-½"	
		66"-84"	24"	0.109"-0.168"		0.064"						2" × 2" × ¼"		5-½"		7-⅜"		
		42"-54"	12"		0.060"-0.105"		0.060"						2" × 2" × 3/16"		3-½"		3-⅜"	
	3" × 1"	48"-60"	14"	0.064"-0.079"		0.064"						2" × 2" × 3/16"		3-½"		3-⅜"		5-½"
		48"-60"	14"	0.109"		0.064"						2" × 2" × 3/16"		3-½"		5-⅜"		
		66"-120"	25"	0.064"-0.109"		0.064"						2" × 2" × 3/16"		5-½"		9-⅜"		
		42"-60"	14"		0.060"-0.105"		0.060"						2" × 2" × 3/16"		3-½"		5-⅜"	
		42"-60"	14"		0.135"		0.075"						2" × 2" × ¼"		3-½"		5-⅜"	
		66"-96"	25"		0.060"-0.135"		0.060"						2" × 2" × ¼"		5-½"		7-⅜"	
		96"-108"	25"		0.135"		0.075"						2" × 2" × ¼"		5-½"		7-⅜"	
HELICAL	2⅔" × ½"	THROUGH 36"	12"	0.064"-0.138"	0.060"-0.135"	0.064"	0.060"					2" × 2" × 3/16"	2" × 2" × 3/16"	3-½"	3-½"	3-⅜"	3-⅜"	5-½"
		42"-54"	12"		0.060"-0.105"		0.060"						2" × 2" × 3/16"		3-½"		3-⅜"	
		42"-60"	12"	0.064"-0.079"		0.064"						2" × 2" × 3/16"		3-½"		3-⅜"		5-½"
		42"-60"	12"	0.109"-0.168"	0.135"-0.164"	0.064"	0.075"					2" × 2" × ¼"	2" × 2" × ¼"	3-½"	3-½"	5-⅜"	5-⅜"	
		66'-84"	24"	0.109"-0.168"		0.064"						2" × 2" × ¼"		5-½"		7-⅜"		
		66"-72"	24"		0.164"		0.105"						2" × 2" × ¼"		5-½"		5-⅜"	
	3" × 1"	48"-60"	14"	0.064"-0.079"		0.064"						2" × 2" × 3/16"		3-½"		3-⅜"		5-½"
		48"-60"	14"	0.109"		0.064"						2" × 2" × 3/16"		3-½"		5-⅜"		
		66"-120"	25"	0.064"-0.109"		0.064"						2" × 2" × 3/16"		5-½"		9-⅜"		
		42"-60"	14"		0.060"-0.105"		0.060"						2" × 2" × 3/16"		3-½"		5-⅜"	
		42"-60"	14"		0.135"		0.075"						2" × 2" × ¼"		3-½"		5-⅜"	
		66"-96"	25"		0.060"-0.135"		0.060"						2" × 2" × ¼"		5-½"		7-⅜"	
		96"-108"	25"		0.135"		0.075"						2" × 2" × ¼"		5-½"		7-⅜"	
HUGGER	2⅔" × ½" REROLLED END	THROUGH 48"	10½"	0.109"		0.064"		0.079"	½"	⅞"	32 ksi							
		54"- 66"	10½"	0.109"		0.064"		DOUBLE 0.079"	½"	⅞"	32 ksi							
		THROUGH 54"	10½"	0.064"-0.079"		0.064"		0.079"	½"	⅞"	32 ksi							
		THROUGH 60"	10½"	0.138"		0.079"		DOUBLE 0.079"	½"	⅞"	32 ksi							
		66"-72"	10½"	0.138"		0.109"		DOUBLE 0.079"	½"	⅞"	32 ksi							
		THROUGH 72"	10½"	0.168"		0.109"		DOUBLE 0.109"	½"	⅞"	45 ksi							
	3" × 1" REROLLED END	48"-84"	10½"	0.109"		0.079"		DOUBLE 0.079"	½"	⅞"	32 ksi							
		48"-90"	10½"	0.064"-0.079"		0.064"		DOUBLE 0.079"	½"	⅞"	32 ksi							
		96"-102"	10½"	0.079"		0.079"		DOUBLE 0.079"	½"	⅞"	32 ksi							
		90"-120"	10½"	0.109"		0.109"		DOUBLE 0.109"	½"	⅞"	45 ksi							

SPIRAL RIB PROFILE

COUPLING TYPE	PIPE CORRUGATION	PIPE SIZE	W	PIPE WALL THICKNESS SSRP	PIPE WALL THICKNESS ASRP	BAND THICKNESS SSRP	BAND THICKNESS ASRP	BAR AND STRAP (SSRP ONLY) STRAP THICKNESS	BOLTS Dia	BAR Dia	BAR YIELD STRENGTH	ANGLE DIMENSIONS SSRP	ANGLE DIMENSIONS ASRP	BOLTS (No.- Dia) SSRP	BOLTS (No.- Dia) ASRP	RIVETS ANGLE TO BAND SSRP	RIVETS ANGLE TO BAND ASRP	SPOT WELDS ANGLE TO BAND SSRP
ANNULAR	2⅔" × ½" * REROLLED END	24"-36"	12"	0.064"-0.109"	0.060"-0.105"	0.064"	0.060"	0.079"	½"	⅞"	32 ksi	2" × 2" × 3/16"	2" × 2" × 3/16"	3-½"	3-½"	3-⅜"	3-⅜"	5-½"
		42"-60"	12"	0.064"-0.079"	0.075"-0.105"	0.064"	0.075"	0.079"	½"	⅞"	32 ksi	2" × 2" × 3/16"	2" × 2" × 3/16"	3-½"	3-½"	3-⅜"	3-⅜"	5-½"
		42"-60"	12"	0.109"		0.064"		0.079"	½"	⅞"	32 ksi	2" × 2" × ¼"		3-½"		5-⅜"		
		66"-84"	24"	0.109"		0.064"		0.079"	½"	⅞"	32 ksi	2" × 2" × ¼"		5-½"		7-⅜"		
HUGGER	2⅔" × ½" * REROLLED END	24"-54"	10½"	0.064"-0.079"		0.064"		0.079"	½"	⅞"	32 ksi							
		24"-48"	10½"	0.109"		0.064"		0.079"	½"	⅞"	32 ksi							
		54"-66"	10½"	0.109"		0.064"		Double 0.079"	½"	⅞"	32 ksi							

* See Note 13.

NOTES:

1. All ferrous metal coupling band connection hardware shall be galvanized or electro-plated in accordance with the Standard Specifications.
2. For helically corrugated coupling bands, the connection angles may be oriented parallel to the pipe axis, provided connecting holes are slotted lengthwise sufficiently to allow adjustment for the helix angle.
3. Tension strap may be connected to band with either spot welds or fillet welds that develop minimum required strength of strap.
4. Use 1¼" gage line dimension on attached angle leg for rivets and spot welds.
5. Band thickness shall not be less than:
   a. 3 standard thicknesses lighter than the thickness of the pipe for Corrugated Steel Pipe.
   b. 2 standard thicknesses lighter than the thickness of the pipe and in no case lighter than 0.060" for Corrugated Aluminum Pipe.
6. Dimensions, thicknesses and strengths shown are minimum.
7. For pipe arches use same width band as for round pipe of equal periphery.
8. Fillet welds of equivalent strength may be substituted for spot welds or rivets.
9. Spot welds shall develop minimum required strength of strap.
10. Pipe with rerolled ends having at least two 2⅔" × ½" annular corrugations at each end with or without an upturned flange may be connected with any of the annular coupling bands shown for pipe of the same diameter and wall thickness and having 2⅔" × ½" corrugations.
11. In the case of H-12 huggerbands, two piece bands are required for diameters through 96" and three piece bands are required for diameters 102" through 120".
12. Two piece bands are required for pipes greater than 42" diameter.
13. All profiles of Spiral Rib Pipe (¾" × ¾" ribs at 7½" pitch and ¾" × 1" ribs at 11½" pitch in both steel and aluminum and ¾" × 1" ribs at 8½" pitch in steel only) shall be manufactured with rerolled ends. Corrugation profile of the rerolled ends shall be 2⅔" × ½" annual corrugations with a minimum of two full corrugations at each end.

STATE OF CALIFORNIA
DEPARTMENT OF TRANSPORTATION

CORRUGATED METAL PIPE COUPLING DETAILS No. 6 POSITIVE JOINT

NO SCALE

RSP D97F DATED JUNE 6, 2008 SUPERSEDES STANDARD PLAN D97F
DATED MAY 1, 2006 - PAGE 188 OF THE STANDARD PLANS BOOK DATED MAY 2006.

REVISED STANDARD PLAN RSP D97F

2006 REVISED STANDARD PLAN RSP D97F

4-2-08

DIST	COUNTY	ROUTE	POST MILES TOTAL PROJECT	SHEET NO.	TOTAL SHEETS
11	SD	15	M15.0/M16.4	386	610

Raymond Don Tsztoo
REGISTERED CIVIL ENGINEER

March 7, 2008
PLANS APPROVAL DATE

REGISTERED PROFESSIONAL ENGINEER
Raymond Don Tsztoo
No. C37332
Exp. 6-30-08
CIVIL
STATE OF CALIFORNIA

The State of California or its officers or agents shall not be responsible for the accuracy or completeness of electronic copies of this plan sheet.

To accompany plans dated 10-24-11

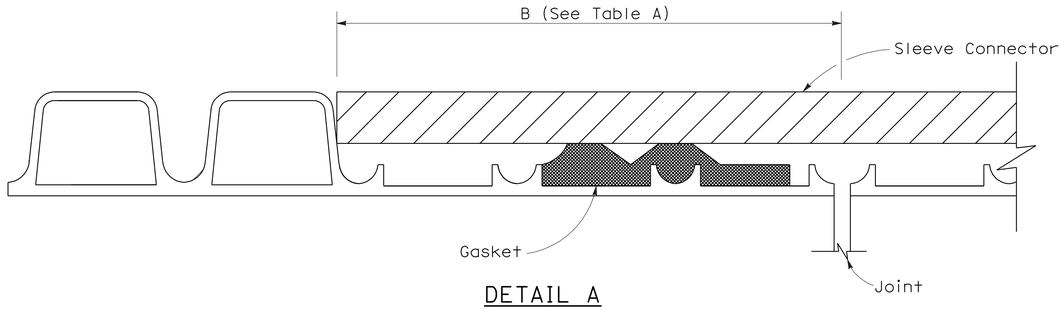

DETAIL A

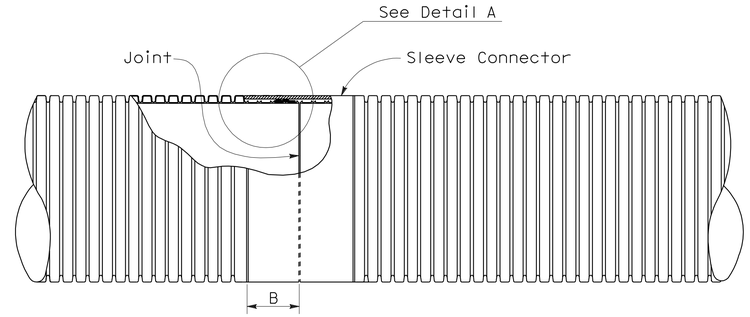

PLAN VIEW
Liner Insert
See Note 4

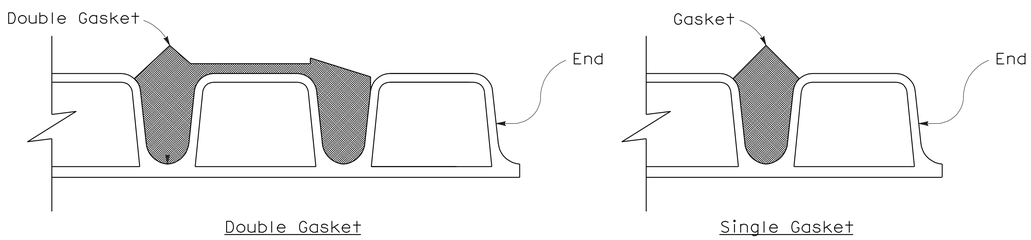

DETAIL B

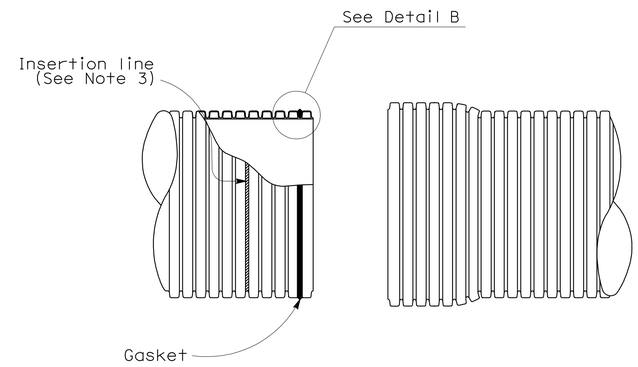

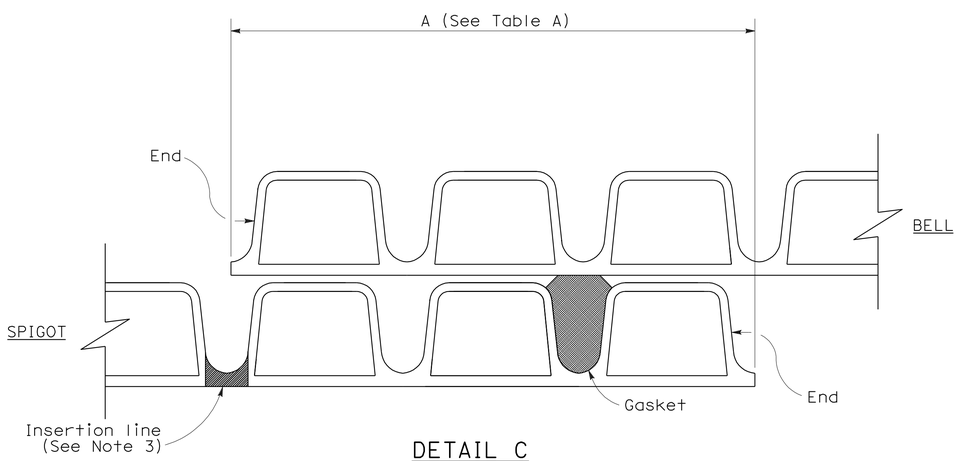

DETAIL C
(Single gasket shown)

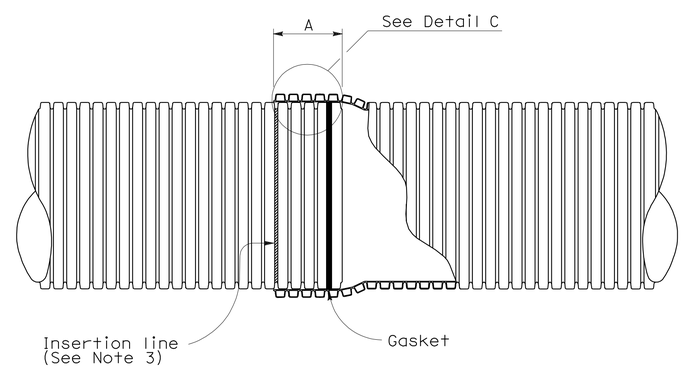

BELL AND SPIGOT JOINT

NOTES:

1. For pipe sections installed on straight alignment, the pipe sections shall be joined to achieve maxium joint overlap at all points on the periphery as indicated in Table A where the plans call for positive or watertight joints. Maxium joint overlap is recommended where the plans call for standard joints, but in no case shall the joint overlap be less than 3½".
2. For pipe sections installed on curved alignment, the maxium angle of deflection from straight alignment at any joint shall not exceed two degrees. Where the plans call for watertightness, field testing for compliance is required. Where plans call for positive joints, the pipe sections shall be joined to achieve Table A Dimensions on one side of the joint. Joints classified as standard shall have no less than 3½" joint overlap at any point on the periphery.
3. Factory applied insertion line limit shall be placed on spigot.
4. Liner insert to be used inside of existing pipe.

TABLE A

JOINT OVERLAP DIMENSIONS		
PIPE Dia (NOMINAL)	A	B
12"	5¾"	4¼"
15"	6¾"	5⅝"
18"	6¾"	5⅝"
21"	8½"	5⅝"
24"	8½"	6⅛"
30"	8½"	7⅛"
36"	8½"	8⅛"

STATE OF CALIFORNIA
DEPARTMENT OF TRANSPORTATION

CORRUGATED POLYVINYL CHLORIDE PIPE WITH SMOOTH INTERIOR STANDARD AND POSITIVE JOINTS

NO SCALE

NSP D97I DATED MARCH 7, 2008 SUPPLEMENTS THE STANDARD PLANS BOOK DATED MAY 2006.

NEW STANDARD PLAN NSP D97I

2006 NEW STANDARD PLAN NSP D97I

2-13-08

DIST	COUNTY	ROUTE	POST MILES TOTAL PROJECT	SHEET NO.	TOTAL SHEETS
11	SD	15	M15.0/M16.4	387	610

Gregory A. Balzer
LICENSED LANDSCAPE ARCHITECT

June 5, 2009
PLANS APPROVAL DATE

LICENSED LANDSCAPE ARCHITECT
Gregory A. Balzer 2516
10-24-11 (Renewal Date)
2-28-11 (Renewal Date)
5-14-09 Date
STATE OF CALIFORNIA

The State of California or its officers or agents shall not be responsible for the accuracy or completeness of electronic copies of this plan sheet.

To accompany plans dated 10-24-11

A

AB	aggregate base
ABS	acrylonitrile-butadiene-styrene
AC	asphalt concrete
Adj	adjacent/adjustable
AIC	auxiliary irrigation controller
Alt	alternative
AMEND	amendment
ARV	air release valve
AUTO	automatic
AUX	auxiliary
AVB	atmospheric vacuum breaker

B

B&B	balled and burlapped
B/B	brass/bronze
B/B/PL	brass/bronze/plastic
B/PL	brass/plastic
BFM	bonded fiber matrix
Bit Ctd	bituminous coated
BP	booster pump
BPA	backflow preventer assembly
BPAE	backflow preventer assembly in enclosure
BPE	backflow preventer enclosure
BV	ball valve

C

CAP	corrugated aluminum pipe
CARV	combination air release valve
CCA	cam coupler assembly
CEC	controller enclosure cabinet
CHDPE	corrugated high density polyethylene
CL	chain link
CNC	control and neutral conductors
Conc	concrete
Cond	conduit
CSP	corrugated steel pipe
CST	center strip
CV	check valve

D

Dia	diameter
DIP	ductile iron pipe
DN	diameter nominal

E

EA	each
Elect	electric/electrical
Elev	elevation
ENCL	enclosure
EP	edge of pavement
ES	edge of shoulder
EST	end strip
ESTB	establishment
ETW	edge of traveled way

F

F	full circle
F/P	full/part circle
FAU	filter assembly unit
FCV	flow control valve
FERT	fertilizer
FG	finished grade
FIPT	female iron pipe thread
FIS	fertilizer injector system
FL	flow line
FM	flow monitor
FS	flow sensor
Ft	foot/feet
FV	flush valve

G

GAL	Gallon(s)
Galv	galvanized
GARV	garden valve
GPH	gallons per hour
GPM	gallons per minute
GSP	galvanized steel pipe
GV	gate valve

H

H	half circle
HB	hose bib
HDPE	high density polyethylene
HP	horsepower/hinge point
HPL	high pressure line
Hwy	highway

I

IC	irrigation controller
ICC	irrigation controller(s) in controller enclosure cabinet
ID	inside diameter
In	inches
IFS	irrigation filtration system
IPS	iron pipe size
IPT	iron pipe thread
Irr	irrigation

L

L	length
LF	linear foot

M

Max	maximum
MBGR	metal beam guard railing
MCV	manual control valve
MIC	master irrigation controller
Min	minimum
MIPT	male iron pipe thread
Misc	miscellaneous
Mtl	material
MVP	maintenance vehicle pullout

N

NCN	no common name
NL	nozzle line
No.	number
NPT	national pipe thread

O

O/C	on center
OD	outside diameter
Oz	ounce

P

P	part circle
PB	pull box
PCC	portland cement concrete
PE	polyethylene
Pkt	packet
PL	plastic
PLT	plant/planting
PLT ESTB	plant establishment
PM	post mile
PR	pressure rated
PRLV	pressure relief valve
PSFM	polymer stabilized fiber matrix
PSI	pounds per square inch
PRV	pressure reducing valve
PVC	polyvinyl chloride
Pvmt	pavement

Q

Q	quarter circle
QCV	quick coupling valve

R

R	radius
RCP	reinforced concrete pipe
RCV	remote control valve
RCVM	remote control valve (master)
RCVMF	remote control valve (master) w/ flow meter
RCW	recycled/reclaimed water
RECP	rolled erosion control product
REQ	required
R/W	right of way

S

S	slip
SCC	sprinkler control conduit
SCH	schedule
SF	state-furnished
Shld	shoulder
SQFT	square foot/feet
SQYD	square yard(s)
SST	side strip
Sta	station
Std	standard
SW	sidewalk/sound wall

T

T	third circle/thread
TLS	truck loading standpipe
TQ	three quarter circle
TRM	turf reinforcement mat
TRVD	traveled
TT	two third circle
Typ	typical

U

UG	underground

V

VAU	valve assembly unit

W

W	width
W/	with
WM	water meter
WS	wye strainer
WSP	welded steel pipe
WWM	welded wire mesh

NOTE:

FOR ADDITIONAL ABBREVIATIONS, SEE STANDARD PLANS A10A AND A10B.

STATE OF CALIFORNIA
DEPARTMENT OF TRANSPORTATION

PLANTING AND IRRIGATION ABBREVIATIONS

NO SCALE

RSP H1 DATED JUNE 5, 2009 SUPERSEDES STANDARD PLAN H1 DATED MAY 1, 2006 - PAGE 201 OF THE STANDARD PLANS BOOK DATED MAY 2006.

REVISED STANDARD PLAN RSP H1

2006 REVISED STANDARD PLAN RSP H1

DIST	COUNTY	ROUTE	POST MILES TOTAL PROJECT	SHEET NO.	TOTAL SHEETS
11	SD	15	M15.0/M16.4	388	610

LICENSED LANDSCAPE ARCHITECT

June 5, 2009
PLANS APPROVAL DATE

The State of California or its officers or agents shall not be responsible for the accuracy or completeness of electronic copies of this plan sheet.

Gregory A. Balzer 2516 — 10-31-11 renewal date — 2-28-11 renewal date — 5-14-09 date — STATE OF CALIFORNIA

To accompany plans dated 10-24-11

EXISTING	PROPOSED	ITEM DESCRIPTION
		WATER METER (WM)
		BACKFLOW PREVENTER ASSEMBLY (BPA)
		BACKFLOW PREVENTER ASSEMBLY IN ENCLOSURE (BPAE)
		BACKFLOW PREVENTER ENCLOSURE (BPE)
		BOOSTER PUMP (BP)
		TRUCK LOADING STANDPIPE (TLS)
FS	FS	FLOW SENSOR (FS)
X	X	MASTER IRRIGATION CONTROLLER (MIC)
		AUXILIARY IRRIGATION CONTROLLER (AIC)
		IRRIGATION CONTROLLER (IC)/ IRRIGATION CONTROLLER (IC) (BATTERY) IRRIGATION CONTROLLER (IC) (SOLAR)
		IRRIGATION CONTROLLER(S) IN CONTROLLER ENCLOSURE CABINET (ICC)
		CONTROL AND NEUTRAL CONDUCTORS (CNC)
SCC	SCC	SPRINKLER CONTROL CONDUIT (SCC)
		IRRIGATION CROSSOVER
		EXTEND IRRIGATION CROSSOVER
		IRRIGATION SLEEVE
dip	DIP	DUCTILE IRON PIPE (SUPPLY LINE) (MAIN) (DIP)
		GALVANIZED STEEL PIPE (SUPPLY LINE) (MAIN) (GSP)
		GALVANIZED STEEL PIPE (SUPPLY LINE) (LATERAL) (GSP)
		PLASTIC PIPE (PR 200) (SUPPLY LINE) (MAIN)
		PLASTIC PIPE (PR 200) (SUPPLY LINE) (LATERAL)
		PLASTIC PIPE (IRRIGATION LINE)
		REMOTE CONTROL VALVE (RCV) REMOTE CONTROL VALVE (MASTER) (RCVM) REMOTE CONTROL VALVE (MASTER) W/FLOW METER (RCVMF)
		MANUAL CONTROL VALVE (MCV)
		VALVE ASSEMBLY UNIT (VAU)
		WYE STRAINER (WS)
		FILTER ASSEMBLY UNIT (FAU)
		GATE VALVE (GV)
		BALL VALVE (BV)

EXISTING	PROPOSED	ITEM DESCRIPTION
		QUICK COUPLING VALVE (QCV)
		CAM COUPLER ASSEMBLY (CCA)
		PRESSURE REDUCING VALVE (PRV)
		PRESSURE RELIEF VALVE (PRLV)
		FLOW CONTROL VALVE (FCV)
		COMBINATION AIR RELEASE VALVE (CARV)
		CHECK VALVE (CV)
		FLUSH VALVE (FV)
		NOZZLE LINE W/TURNING UNION
		IRRIGATION SYSTEM
		IRRIGATION SYSTEM TO BE REMOVED
		CHAIN LINK GATE
		QUICK COUPLING VALVE W/SPRINKLER PROTECTOR
3	3	SPRINKLER W/SPRINKLER PROTECTOR
	C	CONNECT TO EXISTING SYSTEM
		CAP
		CAP EXISTING

VALVE CODE

RCV SIZE
IRRIGATION CONTROLLER
CONTROLLER STATION
VALVE IN PARALLEL (IF APPLICABLE)
GPM
QUANTITY OF SPRINKLERS (WHEN SHOWN)

* 2½"-A-2b-40 -60

MCV SIZE
VALVE NUMBER
GPM
QUANTITY OF TYPE SPRINKLERS (WHEN SHOWN)

* 2"-3-30 -50

* VALVE CODES FOR EXISTING VALVES ARE SHOWN IN A DASHED ENCLOSURE.

STATE OF CALIFORNIA
DEPARTMENT OF TRANSPORTATION

PLANTING AND IRRIGATION SYMBOLS

NO SCALE

RSP H2 DATED JUNE 5, 2009 SUPERSEDES RSP H2 DATED MARCH 7, 2008 AND STANDARD PLAN H2 DATED MAY 1, 2006 - PAGE 202 OF THE STANDARD PLANS BOOK DATED MAY 2006.

REVISED STANDARD PLAN RSP H2

2006 REVISED STANDARD PLAN RSP H2

DIST	COUNTY	ROUTE	POST MILES TOTAL PROJECT	SHEET NO.	TOTAL SHEETS
11	SD	15	M15.0/M16.4	389	610

LICENSED LANDSCAPE ARCHITECT

June 5, 2009
PLANS APPROVAL DATE

The State of California or its officers or agents shall not be responsible for the accuracy or completeness of electronic copies of this plan sheet.

LICENSED LANDSCAPE ARCHITECT — Gregory A. Balzer — 2576 — 10-28-11 (Renewal Date) — 5-14-09 (Date) — STATE OF CALIFORNIA

To accompany plans dated 10-24-11

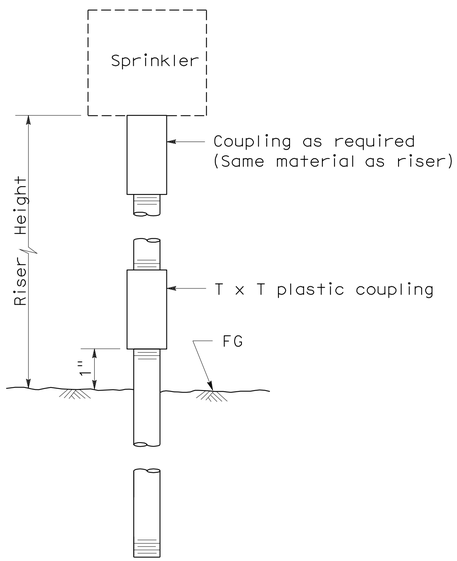

ELEVATION
RISER TYPE I

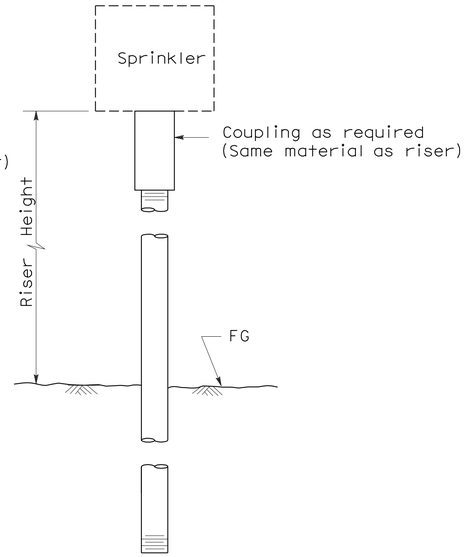

ELEVATION
RISER TYPE II

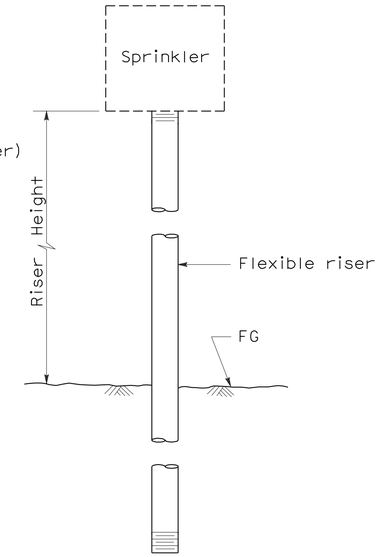

ELEVATION
RISER TYPE III

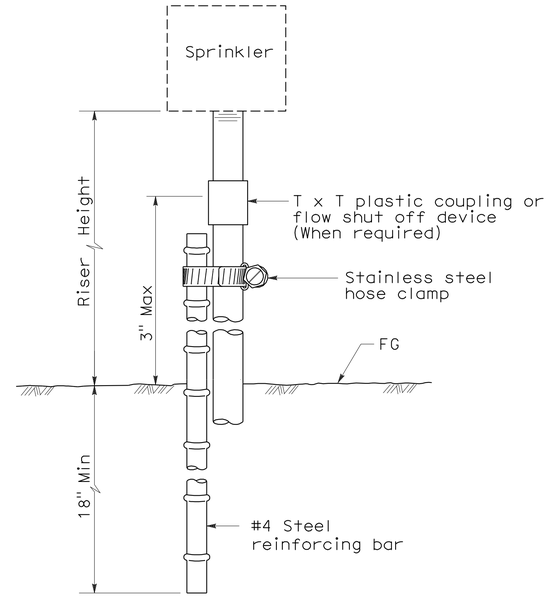

ELEVATION
RISER TYPE IV

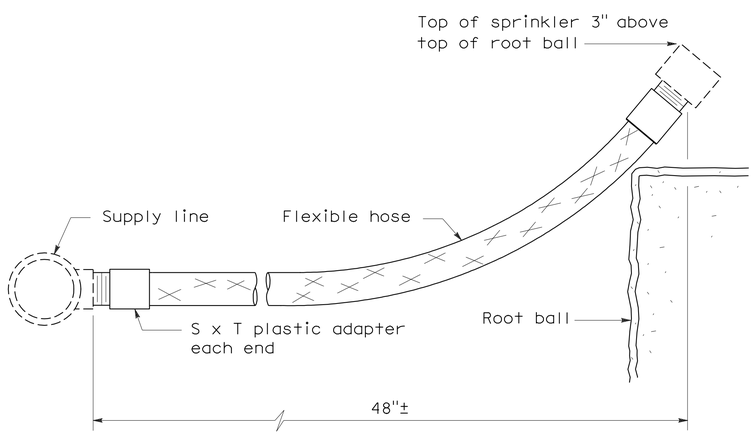

ELEVATION
RISER TYPE V

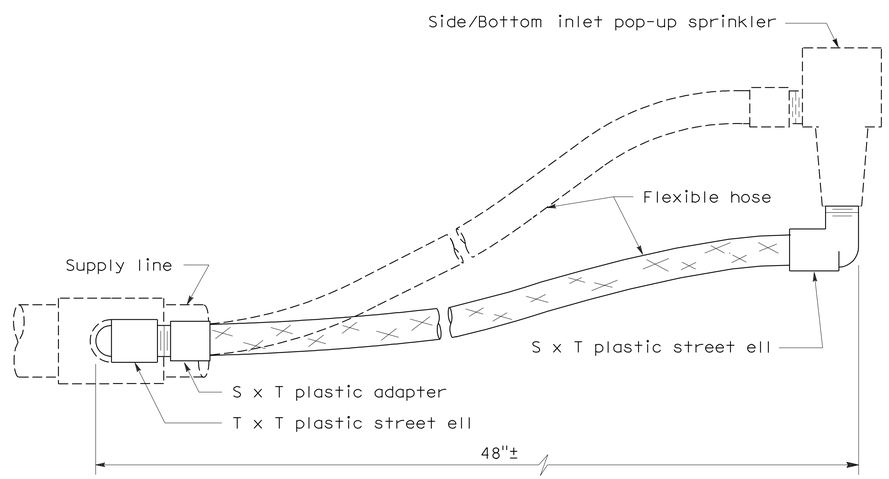

ELEVATION
RISER TYPE VI

STATE OF CALIFORNIA
DEPARTMENT OF TRANSPORTATION

PLANTING AND IRRIGATION DETAILS

NO SCALE

RSP H5 DATED JUNE 5, 2009 SUPERSEDES STANDARD PLAN H5
DATED MAY 1, 2006 - PAGE 205 OF THE STANDARD PLANS BOOK DATED MAY 2006.

REVISED STANDARD PLAN RSP H5

2006 REVISED STANDARD PLAN RSP H5

DIST	COUNTY	ROUTE	POST MILES TOTAL PROJECT	SHEET NO.	TOTAL SHEETS
11	SD	15	M15.0/M16.4	390	610

LICENSED LANDSCAPE ARCHITECT

June 5, 2009
PLANS APPROVAL DATE

The State of California or its officers or agents shall not be responsible for the accuracy or completeness of electronic copies of this plan sheet.

LICENSED LANDSCAPE ARCHITECT Gregory A. Balzer 2576 STATE OF CALIFORNIA
10-24-11 Renewal Date
2-28-11 Renewal Date
5-14-09 Date

To accompany plans dated 10-24-11

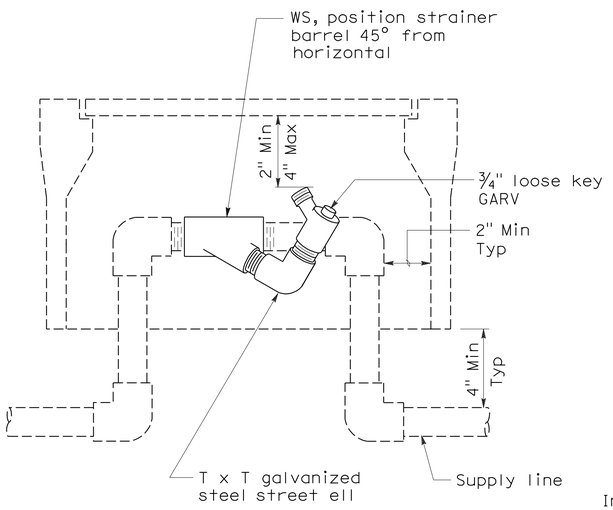

ELEVATION
WYE STRAINER

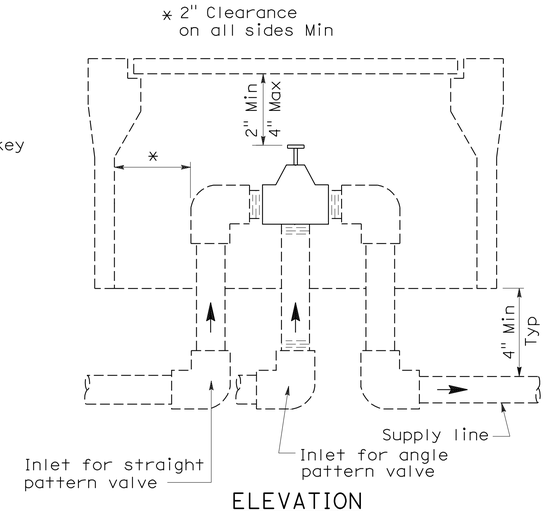

ELEVATION
VALVE

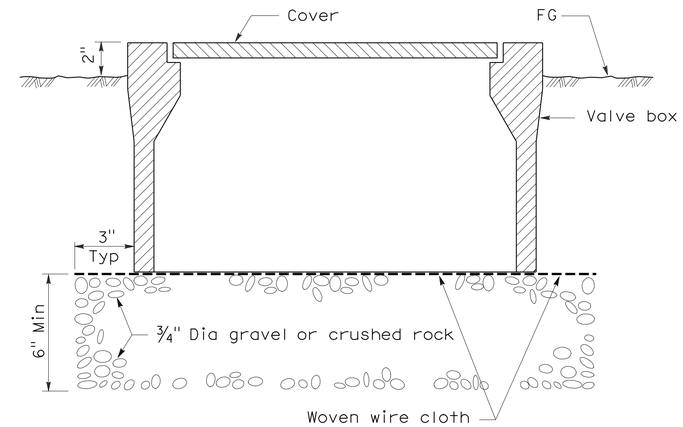

SECTION
VALVE BOX

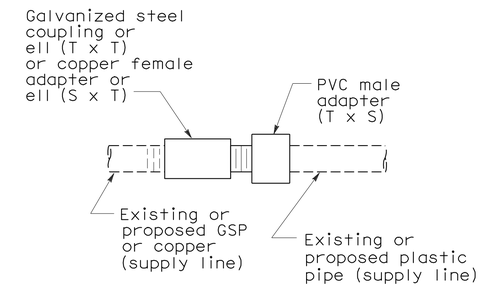

PLAN
GALVANIZED OR COPPER PIPE CONNECTION TO PLASTIC PIPE

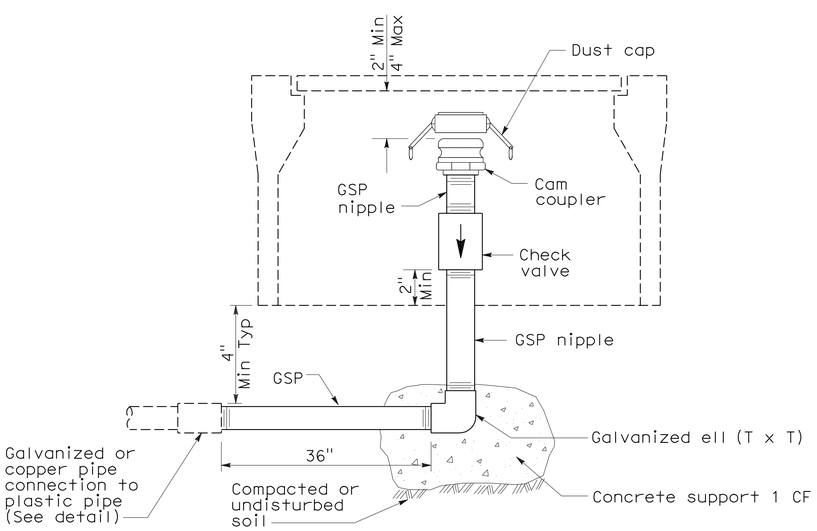

ELEVATION
CAM COUPLER ASSEMBLY

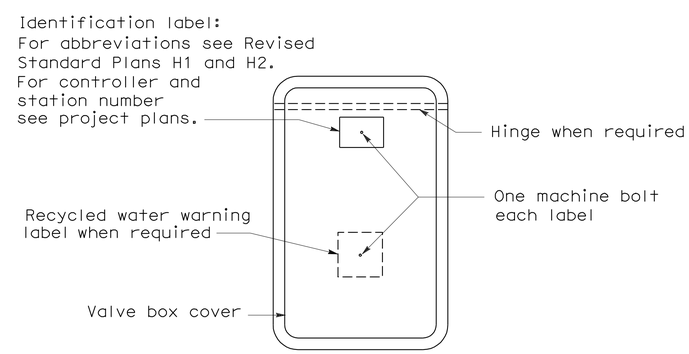

PLAN

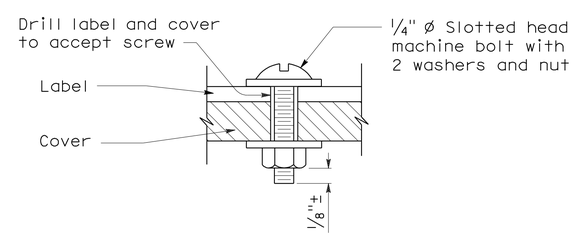

SECTION
VALVE BOX IDENTIFICATION

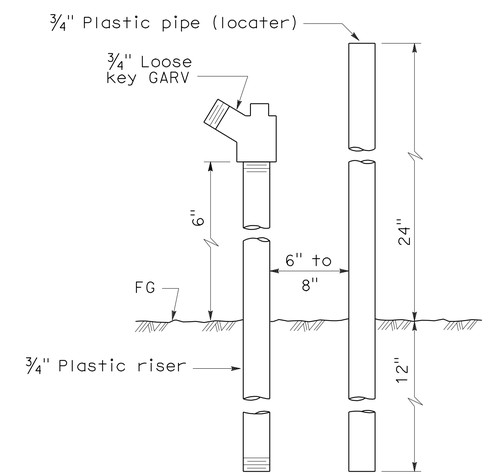

ELEVATION
FLUSH VALVE

STATE OF CALIFORNIA
DEPARTMENT OF TRANSPORTATION

PLANTING AND IRRIGATION DETAILS

NO SCALE

RSP H7 DATED JUNE 5, 2009 SUPERSEDES STANDARD PLAN H7
DATED MAY 1, 2006 - PAGE 207 OF THE STANDARD PLANS BOOK DATED MAY 2006.

REVISED STANDARD PLAN RSP H7

2006 REVISED STANDARD PLAN RSP H7

5-28-09

DIST	COUNTY	ROUTE	POST MILES TOTAL PROJECT	SHEET NO.	TOTAL SHEETS
11	SD	15	M15.0/M16.4	391	610

LICENSED LANDSCAPE ARCHITECT

April 3, 2009
PLANS APPROVAL DATE

The State of California or its officers or agents shall not be responsible for the accuracy or completeness of electronic copies of this plan sheet.

LICENSED LANDSCAPE ARCHITECT — Gregory A. Balzer 3878 — Registered Professional — 02-28-11 Renewal Date — 03-04-09 Date — STATE OF CALIFORNIA

To accompany plans dated 10-24-11

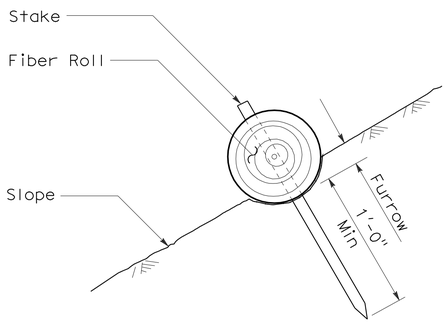

SECTION

FIBER ROLL (TYPE 1)

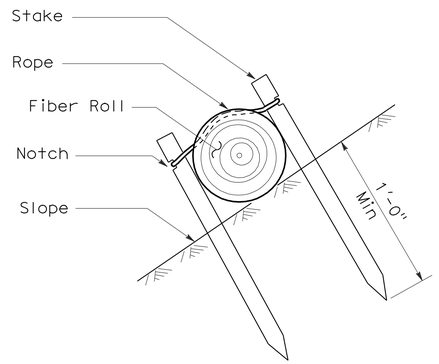

SECTION

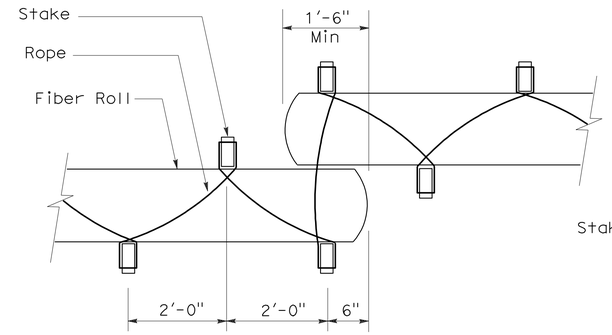

PLAN

FIBER ROLL (TYPE 2)

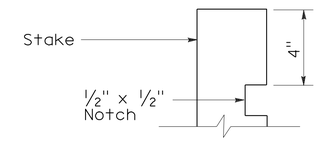

ELEVATION

STAKE NOTCH DETAIL

NOTES:

1. Fiber roll spacing varies depending upon slope inclination.
2. Installations shown in the perspectives are for slope inclination of 10:1 and steeper.

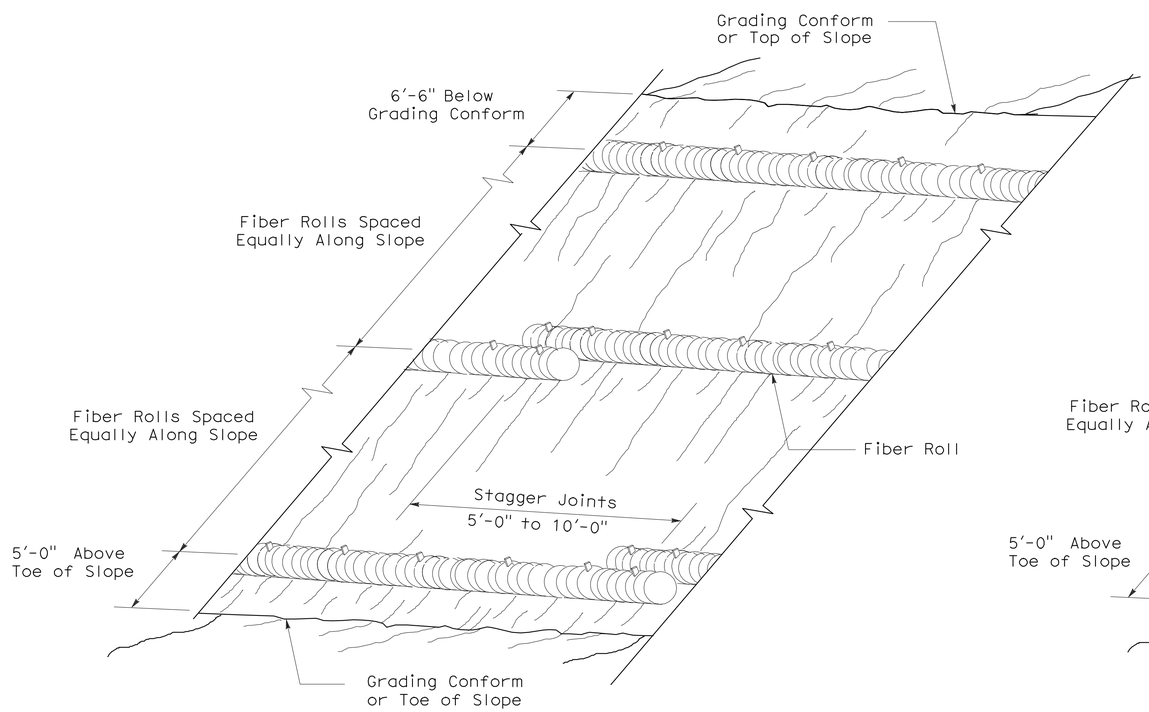

PERSPECTIVE

FIBER ROLL (TYPE 1)

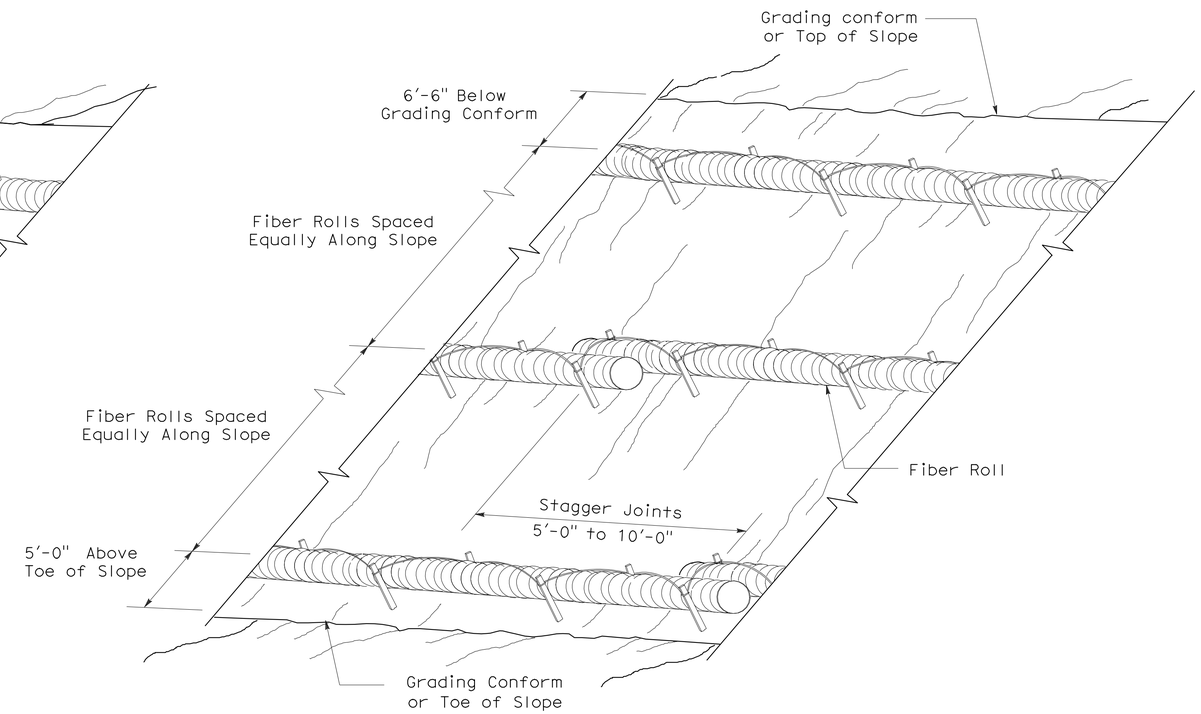

PERSPECTIVE

FIBER ROLL (TYPE 2)

STATE OF CALIFORNIA
DEPARTMENT OF TRANSPORTATION

EROSION CONTROL DETAILS (FIBER ROLL)

NO SCALE

RNSP H51 DATED APRIL 3, 2009 SUPERSEDES NSP H51 DATED DECEMBER 1, 2006 THAT SUPPLEMENTS THE STANDARD PLANS BOOK DATED MAY 2006.

REVISED NEW STANDARD PLAN RNSP H51

2006 REVISED NEW STANDARD PLAN RNSP H51

DIST	COUNTY	ROUTE	POST MILES TOTAL PROJECT	SHEET NO.	TOTAL SHEETS
11	SD	15	M15.0/M16.4	392	610

Randell D. Hiatt
REGISTERED CIVIL ENGINEER

June 6, 2008
PLANS APPROVAL DATE

REGISTERED PROFESSIONAL ENGINEER
Randell D. Hiatt
No. C50200
Exp. 6-30-09
CIVIL
STATE OF CALIFORNIA

The State of California or its officers or agents shall not be responsible for the accuracy or completeness of electronic copies of this plan sheet.

To accompany plans dated 10-24-11

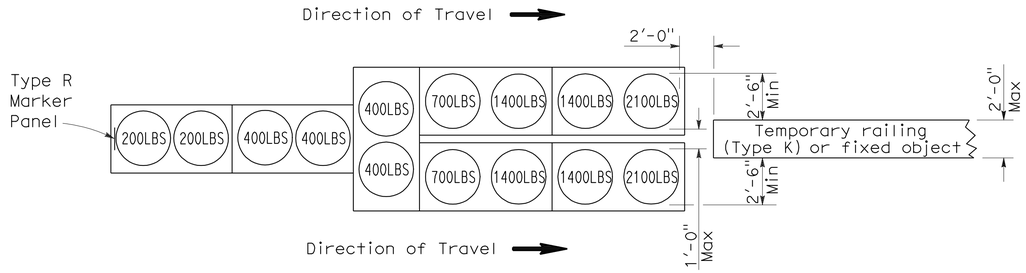

ARRAY 'TU14'

Approach speed 45 mph or more

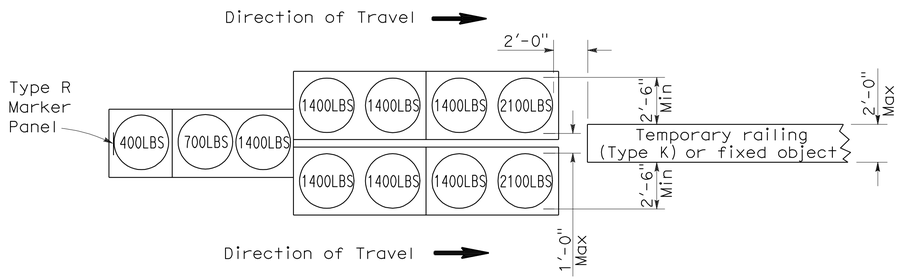

ARRAY 'TU11'

Approach speed less than 45 mph

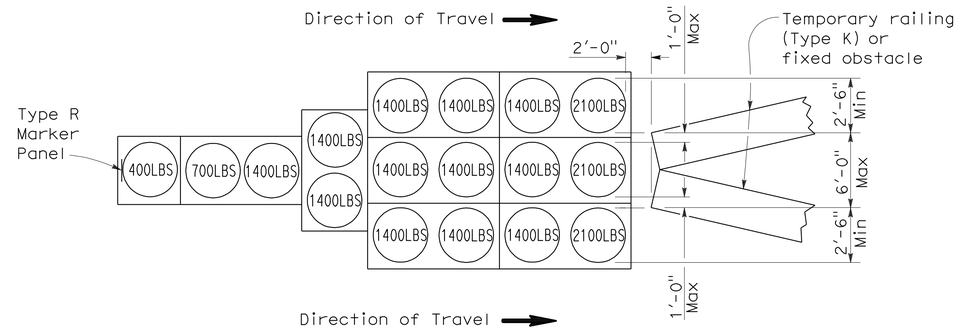

ARRAY 'TU17'

Approach speed less than 45 mph

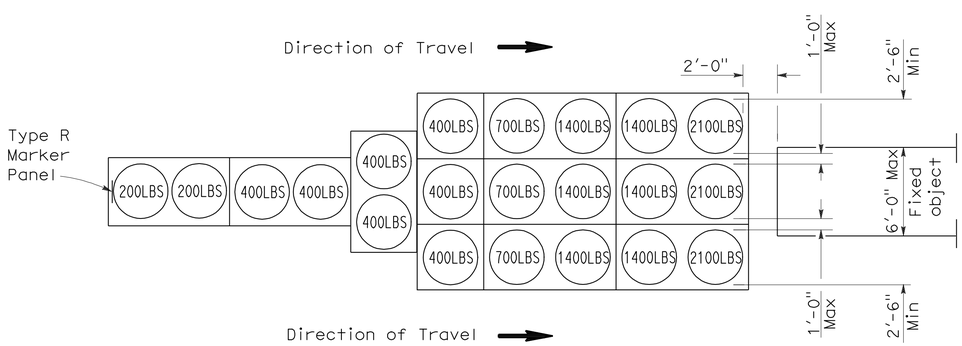

ARRAY 'TU21'

Approach speed 45 mph or more

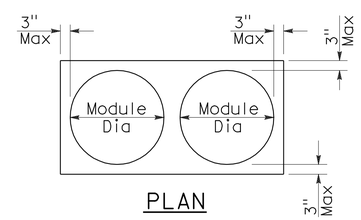

PLAN

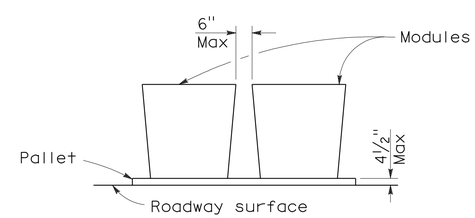

ELEVATION

CRASH CUSHION PALLET DETAIL

See Note 7

NOTES:

1. (XXX) Indicates sand filled module location and weight of sand in pounds for each module. Module spacing is based on the greater diameter of the module.
2. All sand weights are nominal.
3. Temporary crash cushion arrays shall not encroach on the traveled way.
4. Place the top of Type R marker panel 1" below the module lid.
5. Refer to Standard Plan A73B for marker details.
6. Approach speeds indicated conform to NCHRP 350 Report criteria.
7. Use of pallets is optional.

STATE OF CALIFORNIA
DEPARTMENT OF TRANSPORTATION

TEMPORARY CRASH CUSHION, SAND FILLED (UNIDIRECTIONAL)

NO SCALE

RSP T1A DATED JUNE 6, 2008 SUPERSEDES STANDARD PLAN T1A
DATED MAY 1, 2006 - PAGE 211 OF THE STANDARD PLANS BOOK DATED MAY 2006.

REVISED STANDARD PLAN RSP T1A

2006 REVISED STANDARD PLAN RSP T1A

5-15-08

DIST	COUNTY	ROUTE	POST MILES TOTAL PROJECT	SHEET NO.	TOTAL SHEETS
11	SD	15	M15.0/M16.4	393	610

Randell D. Hiatt
REGISTERED CIVIL ENGINEER

June 6, 2008
PLANS APPROVAL DATE

REGISTERED PROFESSIONAL ENGINEER
Randell D. Hiatt
No. C50200
Exp. 6-30-09
CIVIL
STATE OF CALIFORNIA

The State of California or its officers or agents shall not be responsible for the accuracy or completeness of electronic copies of this plan sheet.

To accompany plans dated 10-24-11

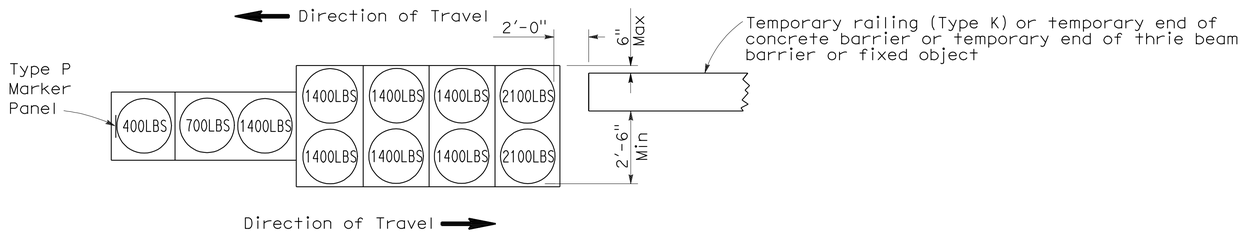

ARRAY 'TB11'

Approach speed less than 45 mph

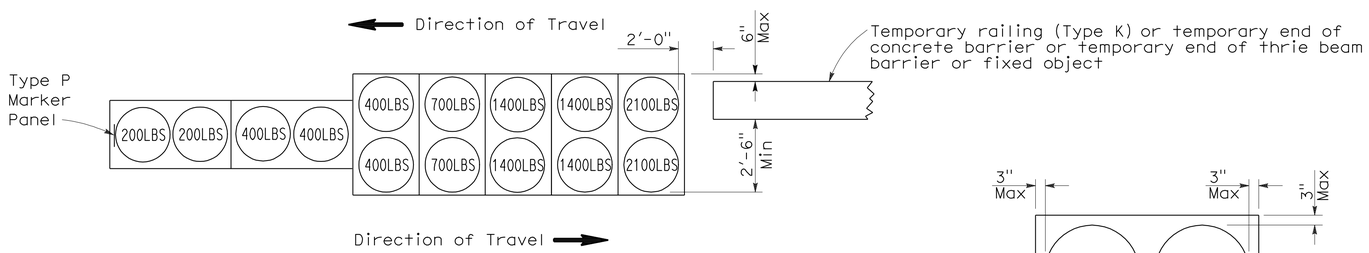

ARRAY 'TB14'

Approach speed 45 mph or more

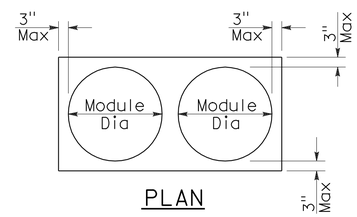

PLAN

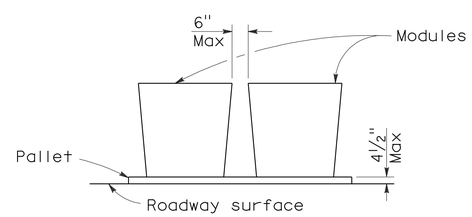

ELEVATION

CRASH CUSHION PALLET DETAIL

See Note 7

NOTES:

1. (XXX) Indicates sand filled module location and weight of sand in pounds for each module. Module spacing is based on the greater diameter of the module.
2. All sand weights are nominal.
3. Temporary crash cushion arrays shall not encroach on the traveled way.
4. Place the Type P marker panel so that the bottom of the panel rests upon the pallet.
5. Refer to Standard Plan A73B for marker details.
6. Approach speeds indicated conform to NCHRP 350 Report criteria.
7. Use of pallets is optional.

STATE OF CALIFORNIA
DEPARTMENT OF TRANSPORTATION

TEMPORARY CRASH CUSHION, SAND FILLED (BIDIRECTIONAL)

NO SCALE

RSP T1B DATED JUNE 6, 2008 SUPERSEDES STANDARD PLAN T1B
DATED MAY 1, 2006 - PAGE 212 OF THE STANDARD PLANS BOOK DATED MAY 2006.

REVISED STANDARD PLAN RSP T1B

2006 REVISED STANDARD PLAN RSP T1B

5-15-08

DIST	COUNTY	ROUTE	POST MILES TOTAL PROJECT	SHEET NO.	TOTAL SHEETS
11	SD	15	M15.0/M16.4	394	610

Randell D. Hiatt
REGISTERED CIVIL ENGINEER

June 6, 2008
PLANS APPROVAL DATE

REGISTERED PROFESSIONAL ENGINEER
Randell D. Hiatt
No. C50200
Exp. 6-30-09
CIVIL
STATE OF CALIFORNIA

The State of California or its officers or agents shall not be responsible for the accuracy or completeness of electronic copies of this plan sheet.

To accompany plans dated 10-24-11

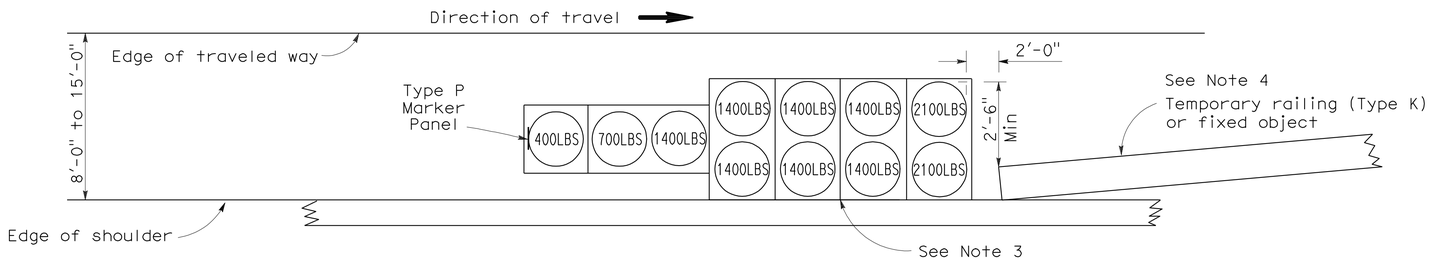

ARRAY 'TS11'

Approach speed less than 45 mph
See Note 9

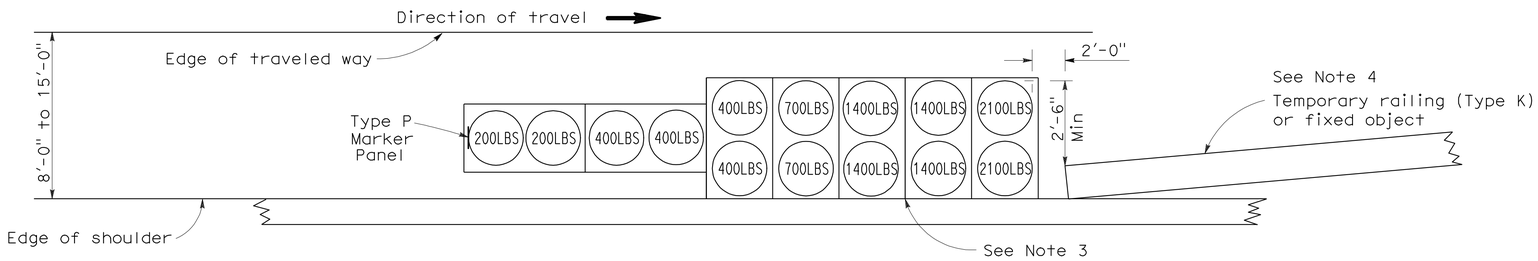

ARRAY 'TS14'

Approach speed 45 mph or more
See Note 9

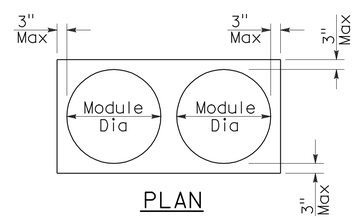

PLAN

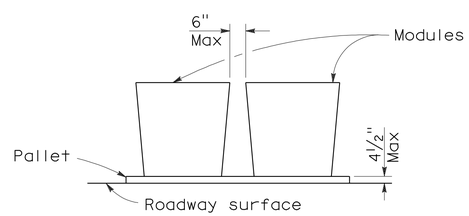

ELEVATION

CRASH CUSHION PALLET DETAIL

See Note 11

NOTES:

1. (XXX) Indicates sand filled module location and weight of sand in pounds for each module. Module spacing is based on the greater diameter of the module.
2. All sand weights are nominal.
3. The temporary crash cushion arrays shown on this plan shall be used only in locations where there will be traffic on one side of the temporary crash cushion array.
4. If the fixed object or approach end of the temporary railing is less than 15'-0" from the edge of traveled way, a temporary crash cushion is required in a construction or work zone.
5. Temporary crash cushion arrays shall not encroach on the traveled way.
6. Arrays for median shoulders shall conform to details shown on this plan for outside shoulders.
7. Place the Type P marker panel so that the bottom of the panel rests upon the pallet and faces traffic.
8. Refer to Standard Plan A73B for marker details.
9. For shoulder widths less than 8'-0", appropriate approved crash cushion protection, other than sand filled modules, shall be provided at fixed objects and at approach ends of temporary railing. The specific type of crash cushion shall be as shown on the project plans or as specified in the Special Provisions, or if not shown on the project plans or specified in the Special Provisions, shall be as approved by the Engineer.
10. Approach speeds indicated conform to NCHRP 350 Report criteria.
11. Use of pallets is optional.

STATE OF CALIFORNIA
DEPARTMENT OF TRANSPORTATION

TEMPORARY CRASH CUSHION, SAND FILLED (SHOULDER INSTALLATIONS)

NO SCALE

RSP T2 DATED JUNE 6, 2008 SUPERSEDES STANDARD PLAN T2
DATED MAY 1, 2006 - PAGE 213 OF THE STANDARD PLANS BOOK DATED MAY 2006.

REVISED STANDARD PLAN RSP T2

2006 REVISED STANDARD PLAN RSP T2

Dist	COUNTY	ROUTE	POST MILES TOTAL PROJECT	SHEET No.	TOTAL SHEETS
11	SD	15	M15.0/M16.4	395	610

Randell D. Hiatt
REGISTERED CIVIL ENGINEER

May 20, 2011
PLANS APPROVAL DATE

REGISTERED PROFESSIONAL ENGINEER
Randell D. Hiatt
No. C50200
Exp. 6-30-11
CIVIL
STATE OF CALIFORNIA

The State of California or its officers or agents shall not be responsible for the accuracy or completeness of electronic copies of this plan sheet.

To accompany plans dated 10-24-11

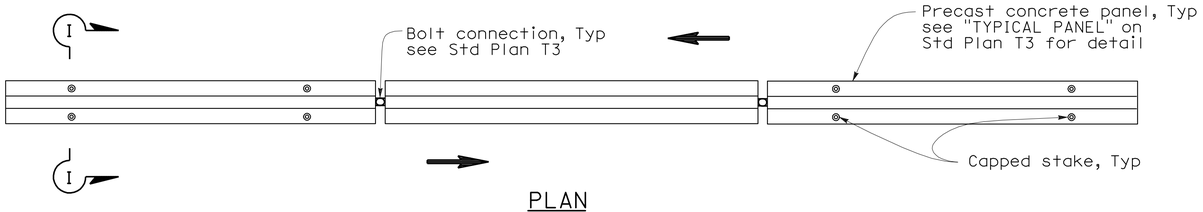

PLAN

RAILING STAKING CONFIGURATION FOR TWO-WAY TRAFFIC

See Note 1

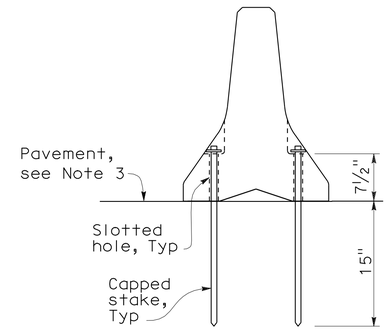

SECTION I-I

NOTES:

1. Where Type K Temporary Railing is placed as a temporary or long term barrier in two-way traffic on highways with less than 24" from the edge of traveled way, use four capped stakes per every other panel with end panels staked.
2. Where Type K Temporary Railing is placed 3" to 24" from the edge of an excavation on highways, use two capped stakes per panel along the traffic side.
3. Staked Type K Temporary Railing must be supported by at least 4" thick concrete, hot mix asphalt or existing asphalt concrete pavement.
4. The minimum yield strength for the washer must be 60,000 psi.
5. Direction of adjacent traffic indicated by ⟹.

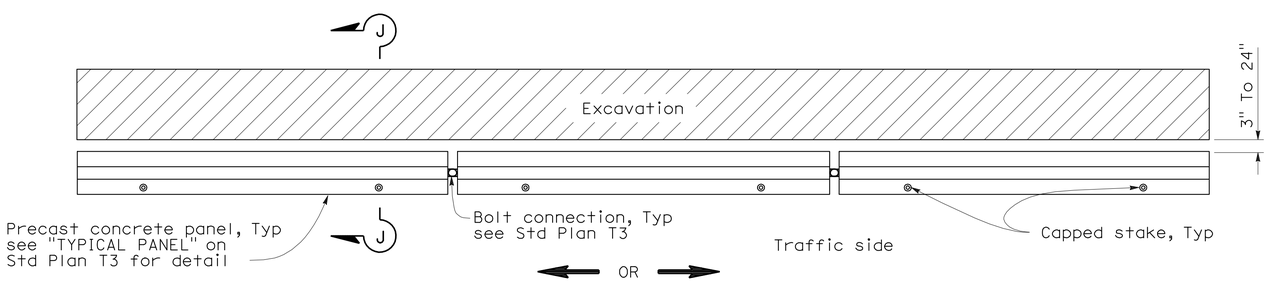

PLAN

RAILING STAKING CONFIGURATION ADJACENT TO AN EXCAVATION

See Note 2

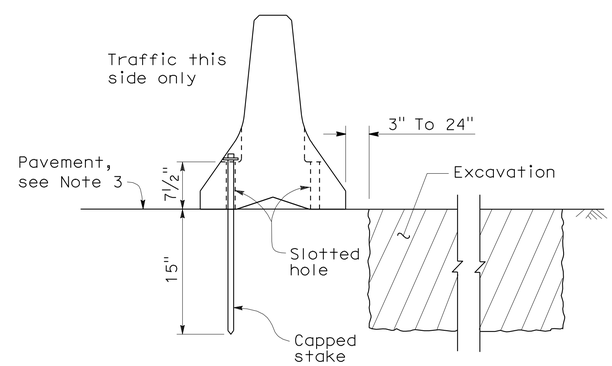

SECTION J-J

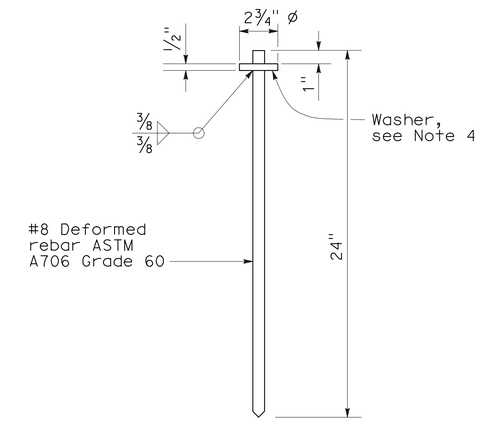

CAPPED STAKE DETAIL

STATE OF CALIFORNIA
DEPARTMENT OF TRANSPORTATION

TEMPORARY RAILING (TYPE K)

NO SCALE

NSP T3A DATED MAY 20, 2011 SUPPLEMENTS
THE STANDARD PLANS BOOK DATED MAY 2006.

NEW STANDARD PLAN NSP T3A

2006 NEW STANDARD PLAN NSP T3A

DIST	COUNTY	ROUTE	POST MILES TOTAL PROJECT	SHEET NO.	TOTAL SHEETS
11	SD	15	M15.0/M16.4	396	610

LICENSED LANDSCAPE ARCHITECT

April 3, 2009
PLANS APPROVAL DATE

LICENSED LANDSCAPE ARCHITECT — Robert B. Schott 3025 — Signature — 11-30-10 Renewal Date — 2-25-09 Date — STATE OF CALIFORNIA

The State of California or its officers or agents shall not be responsible for the accuracy or completeness of electronic copies of this plan sheet.

To accompany plans dated 10-24-11

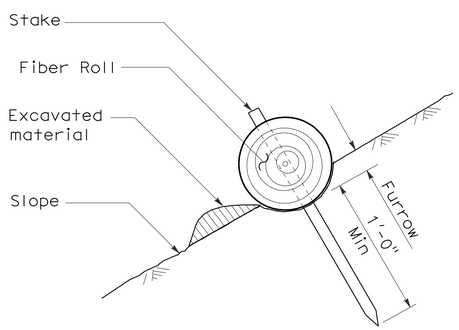

SECTION

TEMPORARY FIBER ROLL (TYPE 1)

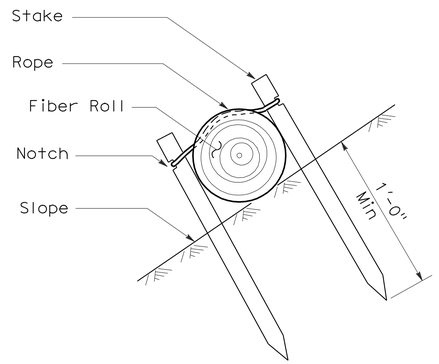

SECTION

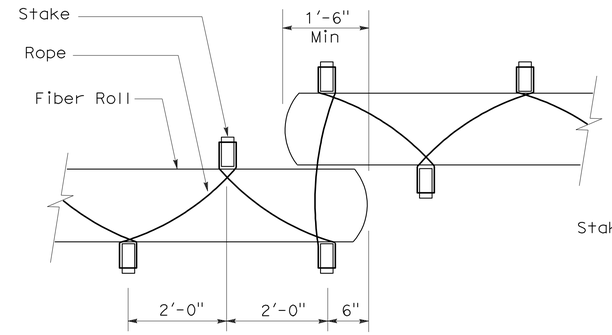

PLAN

TEMPORARY FIBER ROLL (TYPE 2)

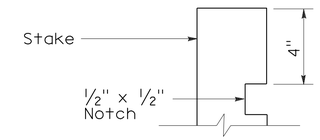

ELEVATION

STAKE NOTCH DETAIL

NOTES:

1. Temporary fiber roll spacing varies depending upon slope inclination.
2. Installations shown in the perspectives are for slope inclination of 10:1 and steeper.

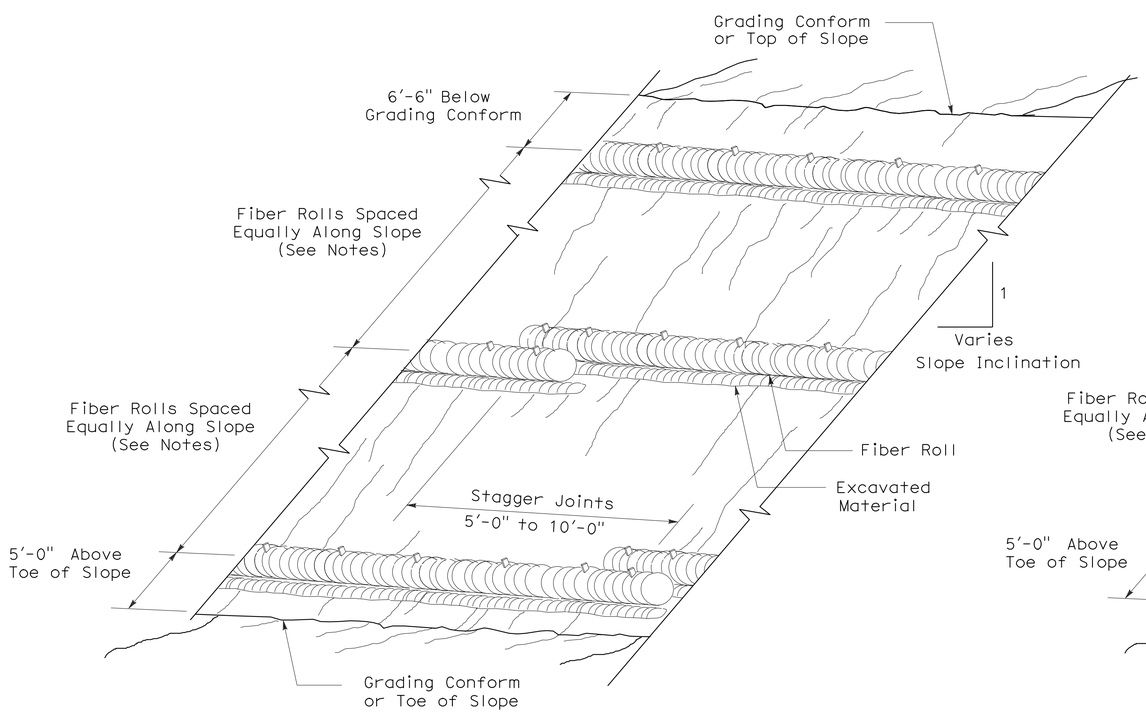

PERSPECTIVE

TEMPORARY FIBER ROLL (TYPE 1)

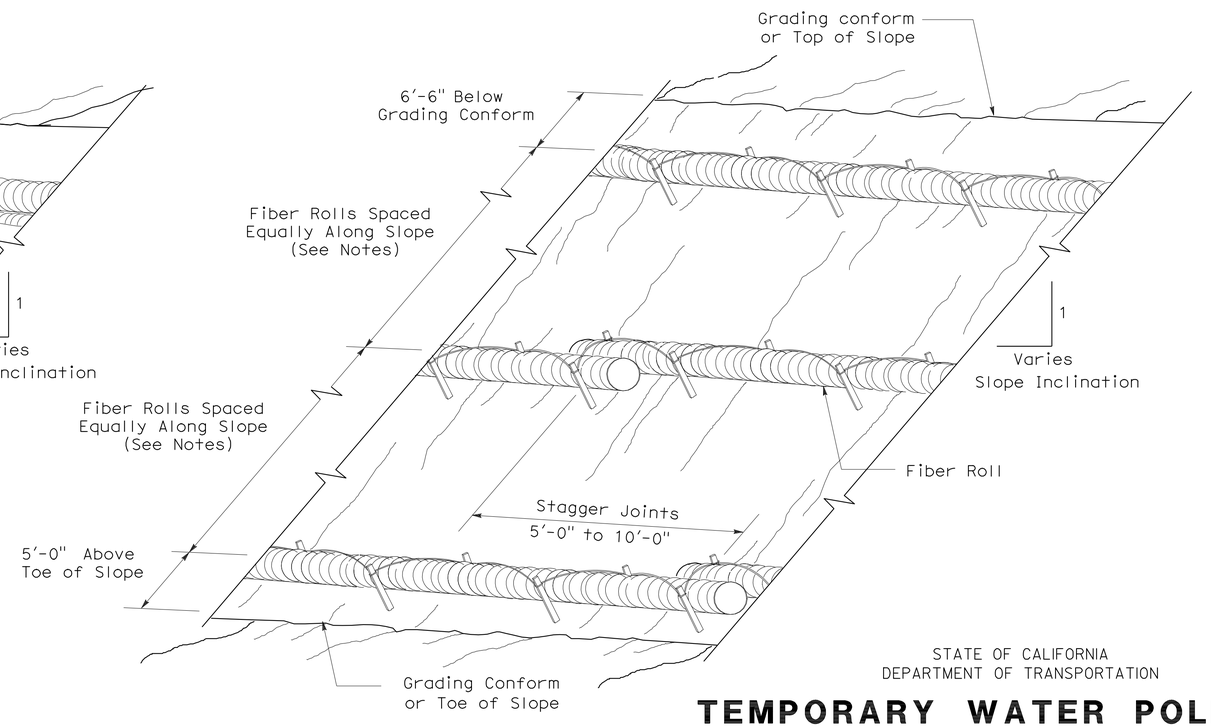

PERSPECTIVE

TEMPORARY FIBER ROLL (TYPE 2)

STATE OF CALIFORNIA
DEPARTMENT OF TRANSPORTATION

TEMPORARY WATER POLLUTION CONTROL DETAILS (TEMPORARY FIBER ROLL)

NO SCALE

RSP T56 DATED APRIL 3, 2009 SUPERSEDES STANDARD PLAN T56
DATED MAY 1, 2006 - PAGE 232 OF THE STANDARD PLANS BOOK DATED MAY 2006.

REVISED STANDARD PLAN RSP T56

2006 REVISED STANDARD PLAN RSP T56

2-23-09

DIST	COUNTY	ROUTE	POST MILES TOTAL PROJECT	SHEET NO.	TOTAL SHEETS
11	SD	15	M15.0/M16.4	397	610

LICENSED LANDSCAPE ARCHITECT

August 15, 2008
PLANS APPROVAL DATE

LICENSED LANDSCAPE ARCHITECT Robert B. Schott 3625 Signature 11-04-08 Renewal Date 08-11-08 Date STATE OF CALIFORNIA

The State of California or its officers or agents shall not be responsible for the accuracy or completeness of electronic copies of this plan sheet.

To accompany plans dated 10-24-11

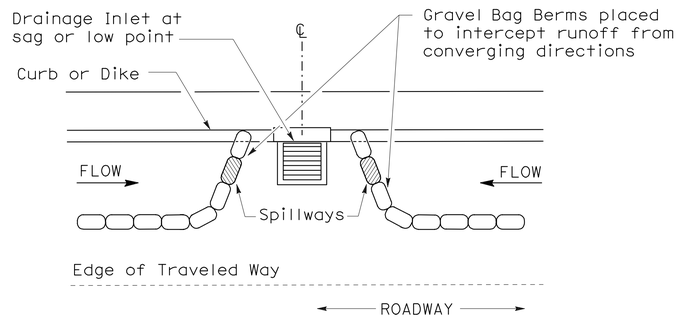

PLAN

CONFIGURATION FOR SAG POINT INLET (GRAVEL BAG BERM)

GRAVEL BAG BERM (TYPE 3A) SPACING TABLE

SLOPE OF ROADWAY (PERCENT)	1 to 3.9	4 to 5.9	6 to 7.9	8 to 10	10+
INTERVAL BETWEEN BERM	100′	75′	50′	25′	12′

For slope of less than 1%, install barriers only if erosion/sediment is prevalent

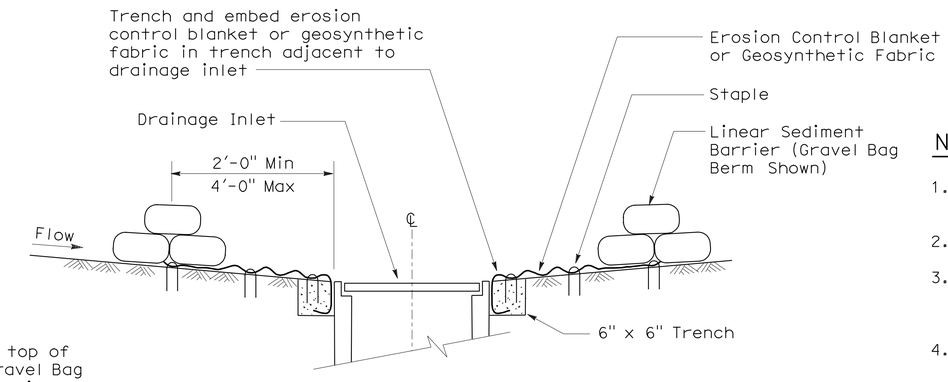

SECTION A-A

NOTES:

1. Place safety cones adjacent to drainage inlet protection.
2. Dimensions may vary to fit field conditions.
3. Install a minimum of 3 gravel bag berms upstream of each drainage inlet to be protected.
4. Position erosion control blanket or geosynthetic fabric at edge of concrete apron and secure in trench.
5. Erosion control blanket or geosynthetic fabric is not required if the area adjacent to the drainage inlet is vegetated or paved.

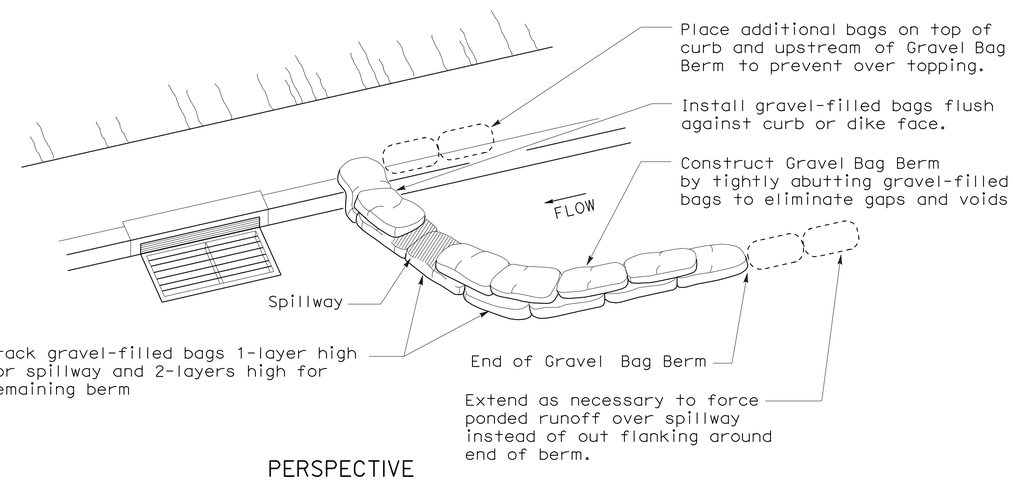

PERSPECTIVE

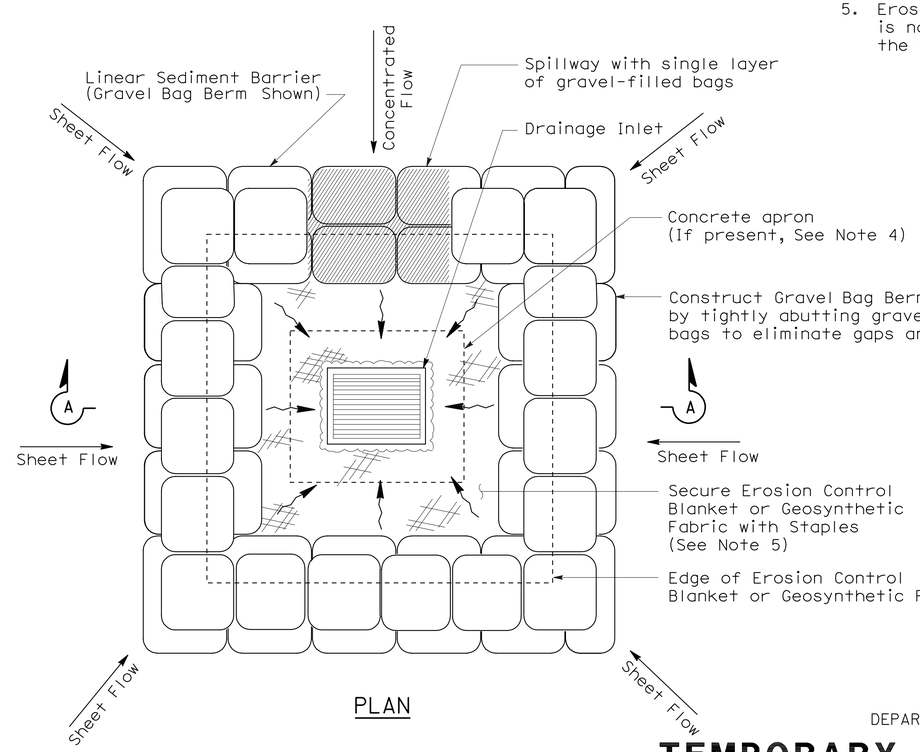

PLAN

TEMPORARY DRAINAGE INLET PROTECTION (TYPE 3B)

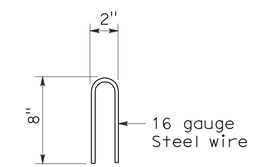

STAPLE DETAIL

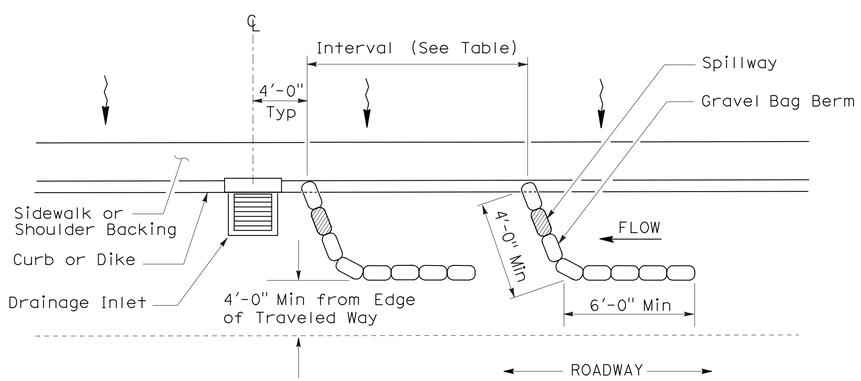

PLAN

TEMPORARY DRAINAGE INLET PROTECTION (TYPE 3A) (GRAVEL BAG BERM)

STATE OF CALIFORNIA
DEPARTMENT OF TRANSPORTATION

TEMPORARY WATER POLLUTION CONTROL DETAILS (TEMPORARY DRAINAGE INLET PROTECTION)

NO SCALE

NSP T62 DATED AUGUST 15, 2008 SUPPLEMENTS THE STANDARD PLANS BOOK DATED MAY 2006.

NEW STANDARD PLAN NSP T62

2006 NEW STANDARD PLAN NSP T62

7-11-08

DIST	COUNTY	ROUTE	POST MILES TOTAL PROJECT	SHEET NO.	TOTAL SHEETS
11	SD	15	M15.0/M16.4	398	610

LICENSED LANDSCAPE ARCHITECT

August 15, 2008
PLANS APPROVAL DATE

LICENSED LANDSCAPE ARCHITECT
Robert B. Schott 3625
Signature
11-04-08
Renewal Date
08-11-08
Date
STATE OF CALIFORNIA

The State of California or its officers or agents shall not be responsible for the accuracy or completeness of electronic copies of this plan sheet.

To accompany plans dated 10-24-11

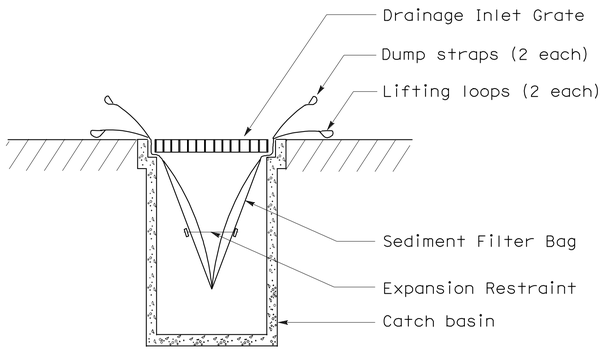

SECTION B-B

SEDIMENT FILTER BAG DETAIL

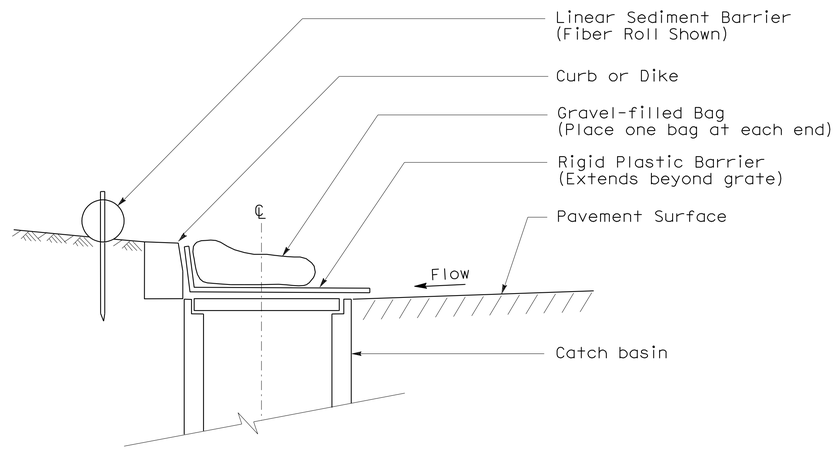

SECTION

TEMPORARY DRAINAGE INLET PROTECTION (TYPE 6A) (CATCH BASIN WITH GRATE)

NOTES:

1. See Standard Plan T51 for Temporary Silt Fence.
2. Dimensions may vary to fit field conditions.

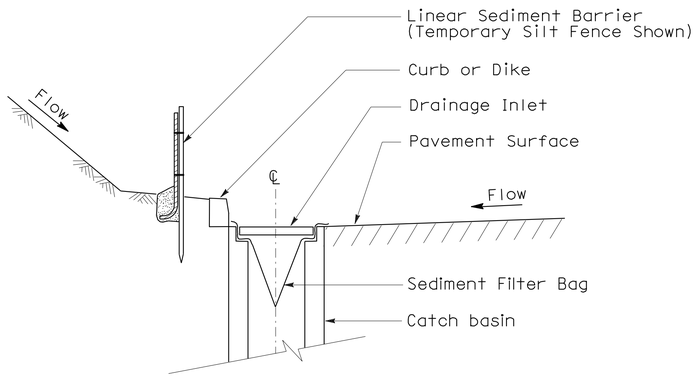

SECTION A-A

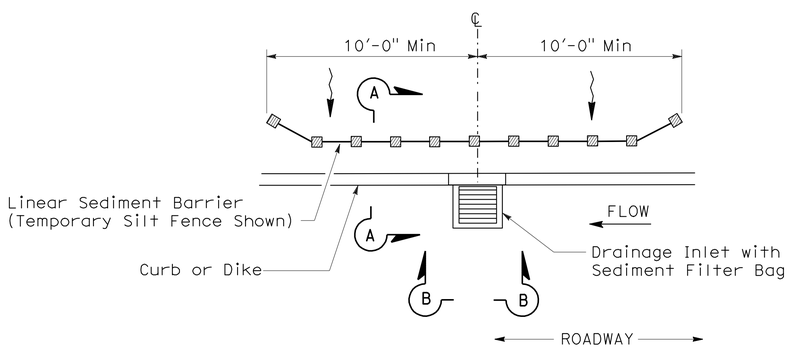

PLAN

TEMPORARY DRAINAGE INLET PROTECTION (TYPE 5) (SEDIMENT FILTER BAG)

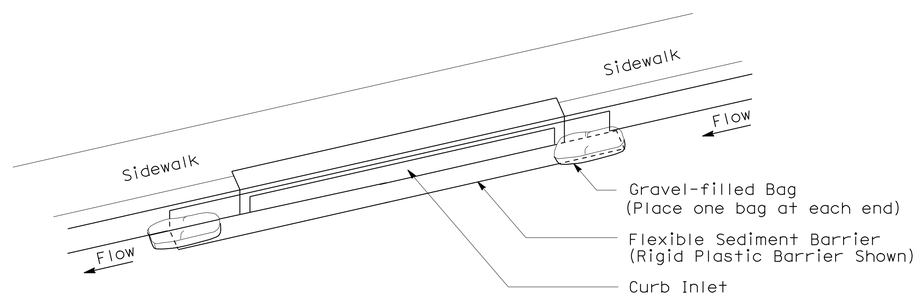

PERSPECTIVE

TEMPORARY DRAINAGE INLET PROTECTION (TYPE 6B) (CURB INLET WITHOUT GRATE)

STATE OF CALIFORNIA
DEPARTMENT OF TRANSPORTATION

TEMPORARY WATER POLLUTION CONTROL DETAILS (TEMPORARY DRAINAGE INLET PROTECTION)

NO SCALE

NSP T64 DATED AUGUST 15, 2008 SUPPLEMENTS
THE STANDARD PLANS BOOK DATED MAY 2006.

NEW STANDARD PLAN NSP T64

2006 NEW STANDARD PLAN NSP T64

7-11-08

DIST	COUNTY	ROUTE	POST MILES TOTAL PROJECT	SHEET NO.	TOTAL SHEETS
11	SD	15	M15.0/M16.4	399	610

REGISTERED CIVIL ENGINEER

October 5, 2007
PLANS APPROVAL DATE

REGISTERED PROFESSIONAL ENGINEER Efthymios Delis No. C51434 Exp. 6-30-08 CIVIL STATE OF CALIFORNIA

The State of California or its officers or agents shall not be responsible for the accuracy or completeness of electronic copies of this plan sheet.

To accompany plans dated 10-24-11

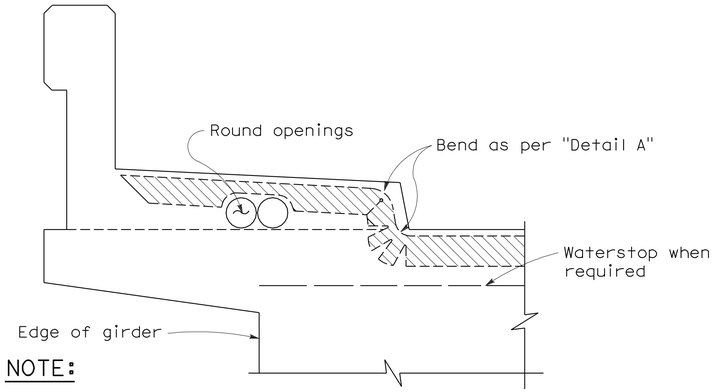

NOTE:

Type "B" seal shown. Type "A" seals to comform to the general path of seal shown, cuts for bending not required. Bend Type "A" seals 3" up into curb or barrier rail on only the low end of the seal.

CONCRETE BARRIER AND SIDEWALK

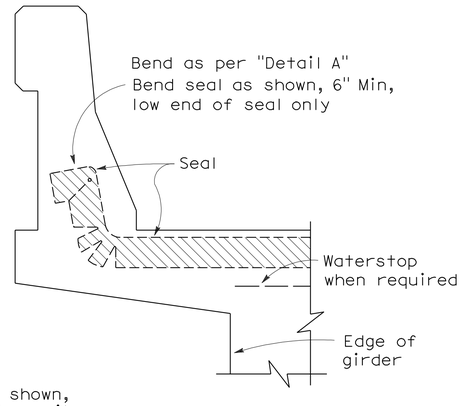

CONCRETE BARRIER

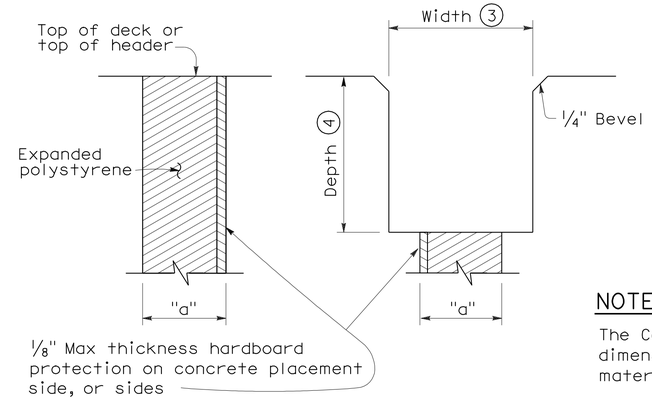

FORMING DETAIL SAWCUT DETAIL

NOTE:

The Contractor shall verify all controlling field dimensions before ordering or fabricatiing any material.

JOINT SEALS DETAILS

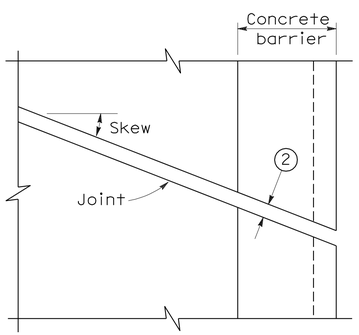

PLAN OF JOINT (SKEW ≤ 20°)

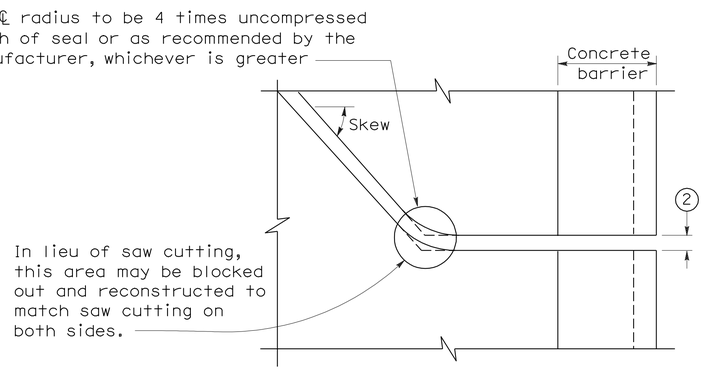

PLAN OF JOINT (SKEW > 20°)

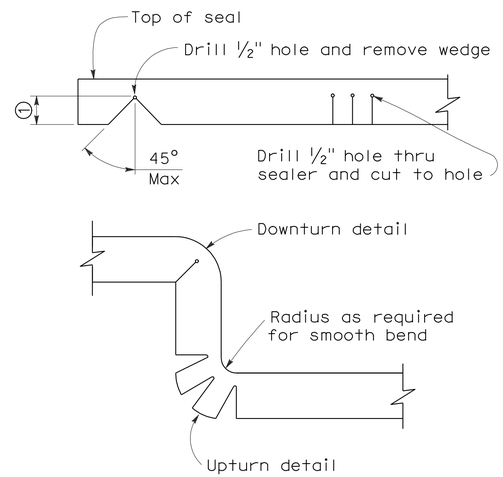

DETAIL A

NOTES:

1. Make smooth cuts from the bottom of seal to 1½" clear of top leaving at least one complete cell between the top of the cut and top of the seal. When necessary cut back of seal to clear conduit and round openings.
2. Opening in barrier to match width of sawn deck joint.
3. Sawcut groove widths shall be as ordered by the Engineer.
4. Depth of sawcut: Type A - Depth to be 2" minimum.
   Type B - Depth to be equal to or greater than the depth of seal measured along the contact surface, when compressed to minimum width position (W_2) plus dimensions shown.
5. MR (movement rating) as shown on other plan sheets.
6. Other depths must be approved by the Engineer.

DIMENSIONS "a" OF JOINT REQUIRED

Movement Rating (MR) (5)	Bridge Type	"a" Dimension Deck Concrete Placed		
		Winter	Fall-Spring	Summer
2"	All except CIP/PS	1½"	1¼"	¾"
	CIP/PS	1¼"	1"	½"
1½"	All except CIP/PS	1¼"	1"	½"
	CIP/PS	1"	¾"	½"
1"	All except CIP/PS	1"	¾"	½"
	CIP/PS	¾"	½"	½"
½"	All except CIP/PS	¾"	¾"	½"
	CIP/PS	½"	½"	½"

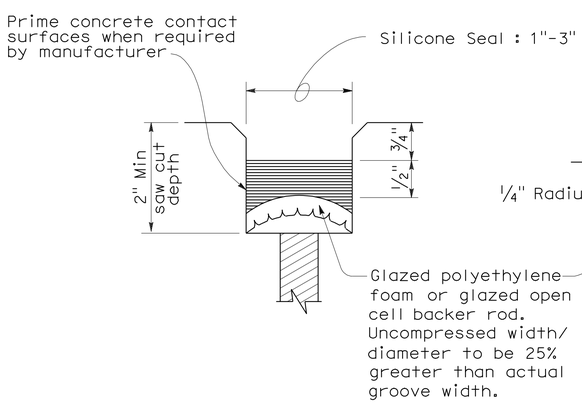

TYPE A SEAL

Movement rating : Silicone = 1" Max

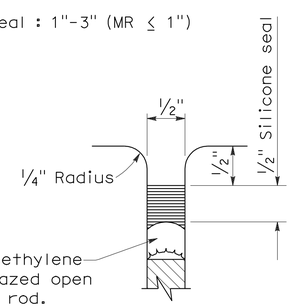

TYPE AL SEAL

Longitudinal joints only

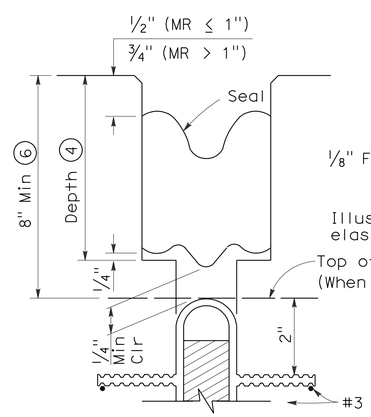

TYPE B JOINT SEAL
IN MINIMUM WIDTH POSITION (W_2)

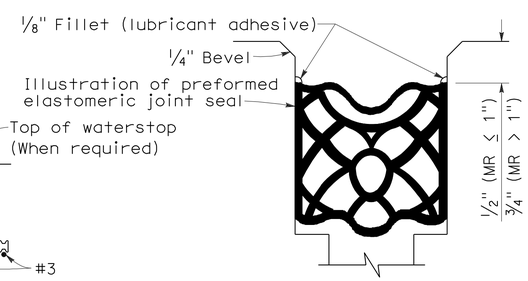

TYPE B SEAL

Movement Rating ≤ 2"

STATE OF CALIFORNIA
DEPARTMENT OF TRANSPORTATION

JOINT SEALS (MAXIMUM MOVEMENT RATING = 2")

NO SCALE

RSP B6-21 DATED OCTOBER 5, 2007 SUPERSEDES STANDARD PLAN B6-21 DATED MAY 1, 2006 - PAGE 258 OF THE STANDARD PLANS BOOK DATED MAY 2006.

REVISED STANDARD PLAN RSP B6-21

2006 REVISED STANDARD PLAN RSP B6-21

5-8-07

DIST	COUNTY	ROUTE	POST MILES TOTAL PROJECT	SHEET NO.	TOTAL SHEETS
11	SD	15	M15.0/M16.4	400	610

REGISTERED ELECTRICAL ENGINEER

October 5, 2007
PLANS APPROVAL DATE

REGISTERED PROFESSIONAL ENGINEER
Jeffery G. McRae
No. E14512
Exp. 6-30-08
ELECTRICAL
STATE OF CALIFORNIA

The State of California or its officers or agents shall not be responsible for the accuracy or completeness of electronic copies of this plan sheet.

To accompany plans dated 10-24-11

ELECTROLIERS

STANDARD TYPES
15, 15D
15 STRUCTURE
21, 21D STRUCTURE
30
31
32
35
36-20A

High mast light pole

Double Arm lighting standard

Existing electrolier

Electrolier foundation (Future installation)

NOTES:

1. Luminaires shall be 310 W HPS when installed on Type 21, 21D, 30, 31, 32, 35 and 36-20A Standards, unless otherwise specified. Luminaires shall be 200 W HPS when installed on other type standards or poles, unless otherwise specified.
2. Luminaires shall be the cutoff type, ANSI Type Ⅲ medium cutoff lighting distribution, unless otherwise specified.
3. Variations noted adjacent to symbol on project plans.

Electrolier (see project notes or project plans)

Luminaire on wood pole

STANDARD NOTES:

- AB — Abandon. If applied to conduit, remove conductors.
- BC — Install pull box in existing conduit run.
- BP — Pedestrian barricade, type as indicated on plan.
- CB — Install conduit into existing pull box.
- CC — Connect new and existing conduit. Remove existing conductors and install conductors as indicated.
- CF — Conduit to remain for future use. Remove conductors. Install pull wire or rope.
- DH — Detector handhole.
- FA — Foundation to be abandoned.
- IS — Install sign on signal mast arm.
- NS — No slip base on standard.
- PEC — Photoelectric control.
- PEU — Photoelectric unit.
- RC — Equipment or material to be removed and become the property of the Contractor.
- RE — Remove electrolier, fuses and ballast. Tape ends of conductors.
- RL — Relocate equipment.
- RR — Remove and reuse equipment.
- RS — Remove and salvage equipment.
- SC — Splice new to existing conductors.
- SD — Service disconnect.
- SF — Standard to remain for future use. Remove luminaire, pole conductors, fuses and ballast.
- TSP — Telephone service point.

ABBREVIATIONS AND EQUIPMENT DESIGNATIONS

PROPOSED	EXISTING	
BBS	bbs	Battery backup system
BC	bc	Bolt circle
C	C	Conduit
CCTV	cctv	Closed circuit television
CKT	ckt	Circuit
CMS	cms	Changeable message sign
DLC	dlc	Loop detector lead-in cable
EMS	ems	Extinguishable message sign
EVC	evc	Emergency vehicle cable
EVD	evd	Emergency vehicle detector
FB	fb	Flashing beacon
FBCA	fbca	Flashing beacon control assembly
FBS	fbs	Flashing beacon with slip base
FO	fo	Fiber optic
G	G	Ground (Equipment Grounding Conductor)
GFCI	GFCI	Ground fault circuit interrupt
HAR	har	Highway advisory radio
HEX	hex	Hexagonal
HPS	hps	High pressure sodium
IISNS	iisns	Internally illuminated street name sign
ISL	isl	Induction sign lighting
LED	led	Light emitting diode
LMA	lma	Luminaire mast arm
LPS	lps	Low pressure sodium
LTG	ltg	Lighting
LUM	lum	Luminaire
MAT	mat	Mast arm mounting vehicle signal faces, top attachment
MAS	mas	Mast arm mounting vehicle signal faces, side attachment
MAS-4A	mas-4A	Mast arm mounting vehicle signal faces, side attachment - 4 signal section
MAS-4B	mas-4B	
MAS-4C	mas-4C	
MAS-5A	mas-5A	Mast arm mounting vehicle signal faces, side attachment - 5 signal section
MAS-5B	mas-5B	
MC	mc	Mercury contactor
M/M	m/m	Multiple to multiple transformer
MT	mt	Conduit with pull wire or rope only
MTG	mtg	Mounting
	mv	Mercury vapor lighting fixture
N	N	Neutral (Grounded Conductor)
NC	NC	Normally closed
NO	NO	Normally open
PB	pb	Pull box
PEC	pec	Photoelectric control (Type Ⅰ, Ⅱ, Ⅲ, Ⅳ or Ⅴ as shown)
PED	ped	Pedestrian
PEU	peu	Photoelectric unit
PPB	ppb	Pedestrian push button
RL		Relocated equipment
RM	rm	Ramp metering
SB	sb	Slip base
SIC	sic	Signal interconnect cable
SIG	sig	Signal
SMA	sma	Signal mast arm
SNS	sns	Street name sign
SP	sp	Service point
TDC	tdc	Telephone demarcation cabinet
TMS	tms	Traffic monitoring station
TOS	tos	Traffic Operations System
VEH	veh	Vehicle
XFMR	xfmr	Transformer
COMM	comm	Communication
RWIS	rwis	Roadway weather information system

SOFFIT AND WALL MOUNTED LUMINAIRES

Pendant, 70 W HPS unless otherwise specified.

Flush, 70 W HPS unless otherwise specified.

Wall surface, 70 W HPS unless otherwise specified.

Existing soffit or wall luminaire to remain unmodified.

Existing soffit or wall luminaire to be modified as specified.

NOTE:

Arrow indicates "street side" of luminaire.

STATE OF CALIFORNIA
DEPARTMENT OF TRANSPORTATION

ELECTRICAL SYSTEMS (SYMBOLS AND ABBREVIATIONS)

NO SCALE

RSP ES-1A DATED OCTOBER 5, 2007 SUPERSEDES STANDARD PLAN ES-1A DATED MAY 1, 2006 - PAGE 400 OF THE STANDARD PLANS BOOK DATED MAY 2006.

REVISED STANDARD PLAN RSP ES-1A

2006 REVISED STANDARD PLAN RSP ES-1A