Dist	COUNTY	ROUTE	POST MILES TOTAL PROJECT	SHEET No.	TOTAL SHEETS
11	SD	15	M26.2/M27.8	14	73

Stephen P. Warren
LICENSED LANDSCAPE ARCHITECT

12-13-10
PLANS APPROVAL DATE

LICENSED LANDSCAPE ARCHITECT
STEPHEN P. WARREN No. 3462
Signature
10-31-12
Renewal Date
11-30-10
Date
STATE OF CALIFORNIA

THE STATE OF CALIFORNIA OR ITS OFFICERS OR AGENTS SHALL NOT BE RESPONSIBLE FOR THE ACCURACY OR COMPLETENESS OF SCANNED COPIES OF THIS PLAN SHEET.

3

ABBREVIATIONS:

Amend — AMENDMENT
B&B — BALLED AND BURLAPPED
Dia — DIAMETER
EA — EACH
Oz — OUNCE
Lb — POUND
SQFT — SQUARE FOOT
YD — YARD
SQYD — SQUARE YARD
CY — CUBIC YARD
Max — MAXIMUM
Min — MINIMUM
No. — NUMBER
Pkt — PACKET(S)
PLT ESTB — PLANT ESTABLISHMENT
Pvmt — PAVEMENT
R/W — RIGHT OF WAY
TAB — TABLET(S)
TRVD — TRAVELED
BTH — BROWN TRUNK HEIGHT
" — INCH
' — FOOT
DG — DECOMPOSED GRANITE

PLANT LIST AND PLANTING SPECIFICATIONS

PLANT GROUP	PLANT No.	SYMBOL	BOTANICAL NAME	COMMON NAME	SIZE	QUANTITY EACH	HOLE SIZE (INCH) Dia	HOLE SIZE (INCH) DEPTH	BASIN TYPE	IRON SULFATE ①	SOIL AMEND (CY) ①	COMMERCIAL FERTILIZER ① PLANTING	COMMERCIAL FERTILIZER ① PLT ESTB	BASIN MULCH (CY)	STAKING	PLANTING LIMITS MINIMUM DISTANCE (Ft) FROM TRVD WAY	PVMT	FENCE	WALL	PAVED DITCH	EARTH DITCH	ON CENTER (Ft)	REMARKS
A	1		CISTUS LADANIFER	CRIMSON-SPOT ROCK ROSE	No. 1	1,938	②	②	I	4 Oz	-	1 Pkt	8 Oz	0.06	-	-	4	3	3	3	4	3.5	SHRUB ⑥
	2		ERIOGONIUM FASCULATUM	CALIFORNIA BUCKWEAT	No. 1	2,495	②	②	I	4 Oz	-	1 Pkt	8 Oz	0.06	-	-	4	3	3	3	4	④	SHRUB
	3		RHUS INTEGRIFOLIA	LEMONADE BERRY	No. 1	668	②	②	I	4 Oz	-	1 Pkt	8 Oz	0.06	-	-	4	3	3	3	4	④	SHRUB
	4		SALVIA GREGGII	RED AUTUMN SAGE	No. 1	1,189	②	②	I	4 Oz	-	1 Pkt	8 Oz	0.06	-	-	4	3	3	3	4	3.5	SHRUB ⑥
	5		PARTHENOCISSUS TRICUSPIDATA	BOSTON IVY	No. 1	151	②	②	I	4 Oz	-	1 Pkt	8 Oz	0.06	⑤	-	4	3	3	3	4	④	VINE
B	6		CUPRESSUS FORBESII	TECATE CYPRESS	No. 5	50	②	②	I	4 Oz	-	2 Pkt	8 Oz	0.06	-	-	4	3	3	3	4	④	SHRUB
F	7		BACCHARRIS PILULARIS 'PIGEON POINT'	DWARF COYOTE BRUSH	IN FLATS	41,588	②	②	-	10 lb/ 1,000 SQFT	-	8 lb/ 1,000 SQFT	4 lb/ 1,000 SQFT	-	-	-	8	6	6	6	8	1.5	GROUNDCOVER
G	8		SENECIO MANDRALISCAE	BLUE CHALK STICKS	ROOTED CUTTINGS	388,000	②	②	-	10 lb/ 1,000 SQFT	-	8 lb/ 1,000 SQFT	4 lb/ 1,000 SQFT	-	-	-	8	3	3	3	3	0.5	GROUNDCOVER
H	9		CARPOBROTUS EDULIS	HOTTENTOT FIG	CUTTINGS	16,000	②	②	-	10 lb/ 1,000 SQFT	-	8 lb/ 1,000 SQFT	4 lb/ 1,000 SQFT	-	-	-	8	3	3	3	3	1	GROUNDCOVER
L	10		ERIOGONIUM FASCULATUM 'DANA POINT'	DANA POINT BUCKWEAT	POTS	8,412	②	②	I	4 Oz	-	1 Pkt	8 Oz	0.06	-	-	4	3	3	3	4	1.5	SHRUB ⑥ ⑦
U	11		EUCALYPTUS CITRIODORA	LEMON-SCENTED GUM	No. 15	60	②	②	I	8 Oz	-	5 Pkt	16 Oz	0.20	⑤	40	24	5	5	3	3	④	TREE
	12		PINUS TORREYANA	TORREY PINE	No. 15	26	②	②	I	8 Oz	-	5 Pkt	16 Oz	0.20	⑤	30	24	5	5	3	3	④	TREE
	13		QUERCUS AGRIFOLIA	COASTAL LIVE OAK	No. 15	161	②	②	I	8 Oz	-	5 Pkt	16 Oz	0.20	⑤	40	24	5	5	3	3	④	TREE
	14		SCHINUS MOLLE	CALIFORNIA PEPPER	No. 15	45	②	②	I	8 Oz	-	5 Pkt	16 Oz	0.20	⑤	30	24	5	5	3	3	④	TREE

NOTE:

UNDERLINED PORTIONS OF BOTANICAL NAME INDICATE ABBREVIATIONS USED ON PLANTING PLANS.

APPLICABLE WHEN CIRCLE:

① - QUANTITIES SHOWN ARE "PER PLANT" UNLESS SHOWN AS SQFT OR SQYD. APPLICATION RATES.
② - SUFFICIENT TO RECEIVE ROOT BALL.
3 - MULCH
④ - AS SHOWN ON PLANS.
⑤ - PER STANDARD PLAN H4.
⑥ - RANDOMLY PLANT IN AREA SHOWN IN GROUPS OF ODD NUMBERS. EXAMPLE: 3'S, 5'S, 7'S, 9'S, 11'S ETC.
⑦ - 3½"-4" SQUARE OR ROUND POTS

LEGEND:

ROCK MULCH (TYPE 1)
ROCK MULCH (TYPE 2)
MULCH (3" DEEP)
EXISTING PLANTS TO REMAIN
EXISTING BIO SWALE
EROSION CONTROL (POLYMER STABILIZED FIBER MATRIX)
ESA — ENVIRONMENTALLY SENSITIVE AREA

3 REVISED PER ADDENDUM No. 3 DATED MAY 17, 2011

PLANT LIST
PL-1

REVISED BY | DATE REVISED
STEPHEN WARREN | RUDY MEDINA
CALCULATED-DESIGNED BY | CHECKED BY
SENIOR LANDSCAPE ARCHITECT | STEPHEN ALVAREZ
STATE OF CALIFORNIA - DEPARTMENT OF TRANSPORTATION
Caltrans® LANDSCAPE ARCHITECTURE

LAST REVISION 05-04-11 | DATE PLOTTED => 13-MAY-2011 | TIME PLOTTED => 13:33

Dist	COUNTY	ROUTE	POST MILES TOTAL PROJECT	SHEET No.	TOTAL SHEETS
11	SD	15	M26.2/M27.8	15	73

Stephen P. Warren
LICENSED LANDSCAPE ARCHITECT

12-13-10
PLANS APPROVAL DATE

LICENSED LANDSCAPE ARCHITECT
STEPHEN P. WARREN No. 3462
Signature 10-31-12
Renewal Date
11-30-10
Date
STATE OF CALIFORNIA

THE STATE OF CALIFORNIA OR ITS OFFICERS OR AGENTS SHALL NOT BE RESPONSIBLE FOR THE ACCURACY OR COMPLETENESS OF SCANNED COPIES OF THIS PLAN SHEET.

NOTE:

FOR ACCURATE RIGHT OF WAY DATA, CONTACT RIGHT OF WAY ENGINEERING AT THE DISTRICT OFFICE.

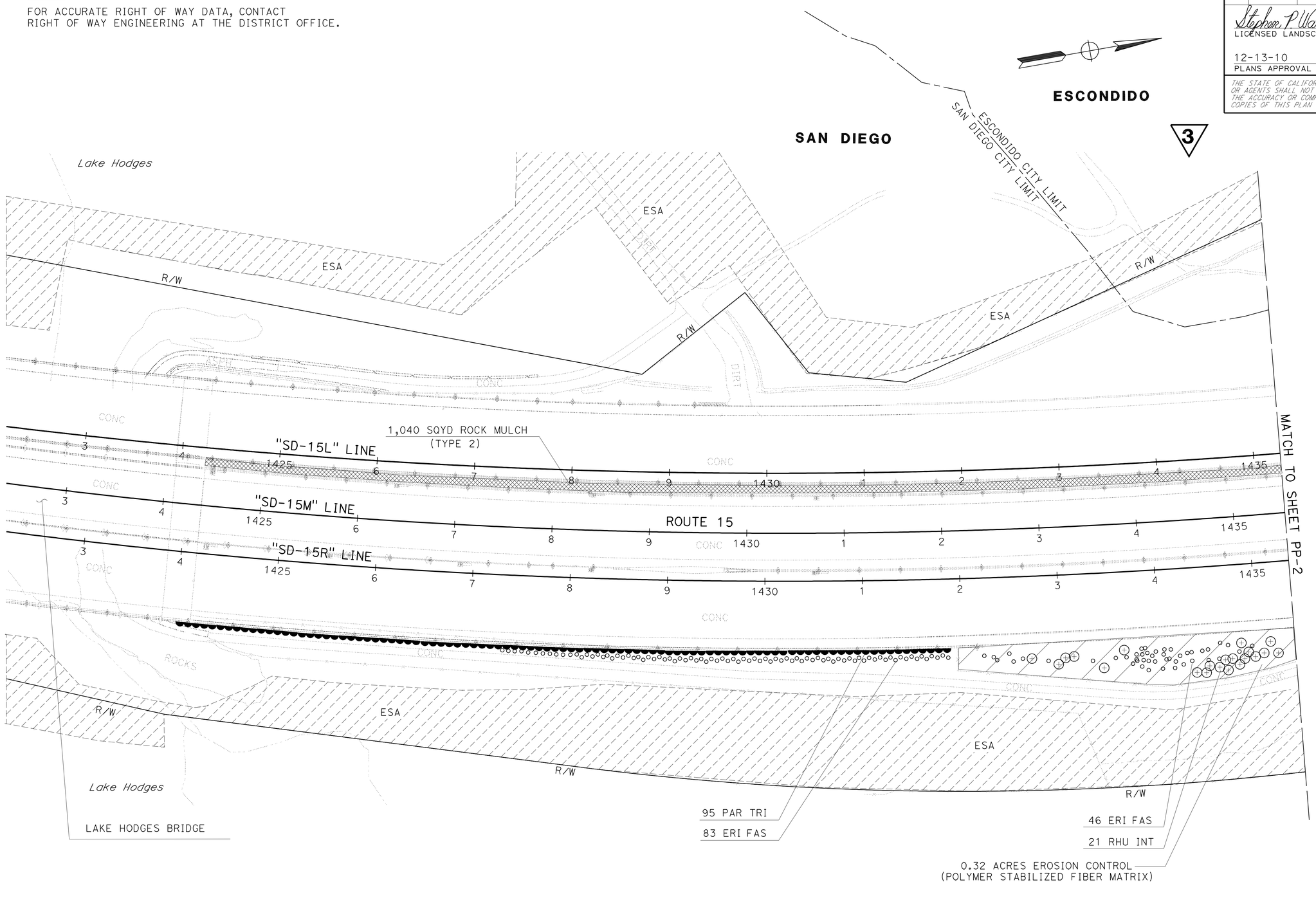

3 REVISED PER ADDENDUM No. 3 DATED MAY 17, 2011

THIS PLAN ACCURATE FOR PLANTING WORK ONLY.

SCALE: 1" = 50'

PLANTING PLAN
PP-1

STATE OF CALIFORNIA - DEPARTMENT OF TRANSPORTATION
Caltrans® LANDSCAPE ARCHITECTURE

SENIOR LANDSCAPE ARCHITECT: STEPHEN ALVAREZ
STEPHEN WARREN
RUDY MEDINA
CALCULATED-DESIGNED BY
CHECKED BY
REVISED BY
DATE REVISED

LAST REVISION 05-04-11
DATE PLOTTED => 13-MAY-2011
TIME PLOTTED => 13:33

Dist	COUNTY	ROUTE	POST MILES TOTAL PROJECT	SHEET No.	TOTAL SHEETS
11	SD	15	M26.2/M27.8	16	73

Stephen P. Warren
LICENSED LANDSCAPE ARCHITECT

12-13-10
PLANS APPROVAL DATE

LICENSED LANDSCAPE ARCHITECT
STEPHEN P. WARREN No. 3462
Stephen P. Warren
Signature
10-31-12
Expiration Date
11-30-10
Date
STATE OF CALIFORNIA

THE STATE OF CALIFORNIA OR ITS OFFICERS OR AGENTS SHALL NOT BE RESPONSIBLE FOR THE ACCURACY OR COMPLETENESS OF SCANNED COPIES OF THIS PLAN SHEET.

NOTE:

FOR ACCURATE RIGHT OF WAY DATA, CONTACT RIGHT OF WAY ENGINEERING AT THE DISTRICT OFFICE.

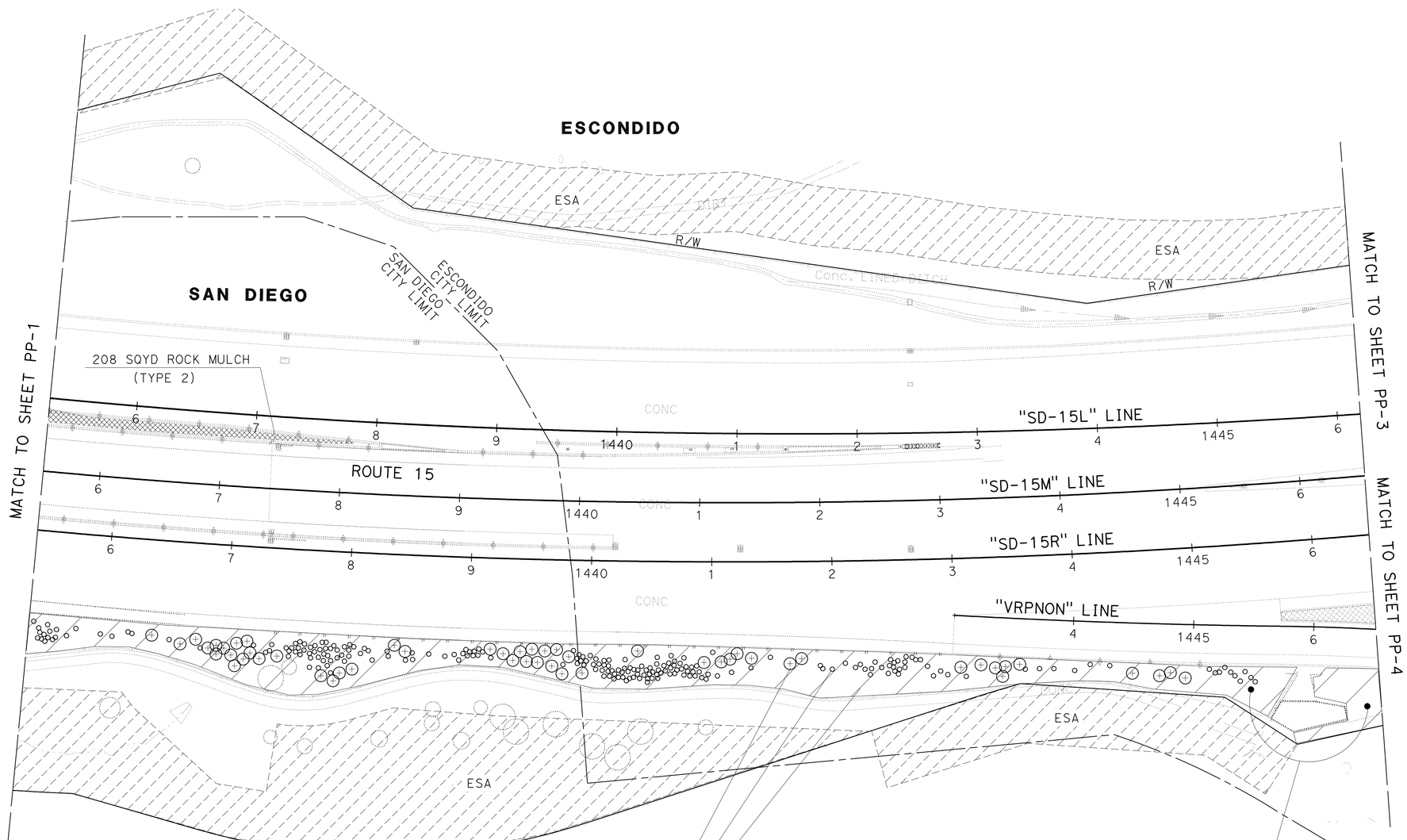

3 REVISED PER ADDENDUM No. 3 DATED MAY 17, 2011

THIS PLAN ACCURATE FOR PLANTING WORK ONLY.

SCALE: 1" = 50'

PLANTING PLAN PP-2

STATE OF CALIFORNIA - DEPARTMENT OF TRANSPORTATION
Caltrans® LANDSCAPE ARCHITECTURE

SENIOR LANDSCAPE ARCHITECT: STEPHEN ALVAREZ
CALCULATED-DESIGNED BY: STEPHEN WARREN
CHECKED BY: RUDY MEDINA
REVISED BY
DATE REVISED

LAST REVISION 05-10-11
DATE PLOTTED => 13-MAY-2011
TIME PLOTTED => 13:33

Dist	COUNTY	ROUTE	POST MILES TOTAL PROJECT	SHEET No.	TOTAL SHEETS
11	SD	15	M26.2/M27.8	17	73

Stephen P. Warren
LICENSED LANDSCAPE ARCHITECT

12-13-10
PLANS APPROVAL DATE

LICENSED LANDSCAPE ARCHITECT
STEPHEN P. WARREN No. 3462
Signature
10-31-12
Renewal Date
11-30-10
Date
STATE OF CALIFORNIA

THE STATE OF CALIFORNIA OR ITS OFFICERS OR AGENTS SHALL NOT BE RESPONSIBLE FOR THE ACCURACY OR COMPLETENESS OF SCANNED COPIES OF THIS PLAN SHEET.

NOTE:

FOR ACCURATE RIGHT OF WAY DATA, CONTACT
RIGHT OF WAY ENGINEERING AT THE DISTRICT OFFICE.

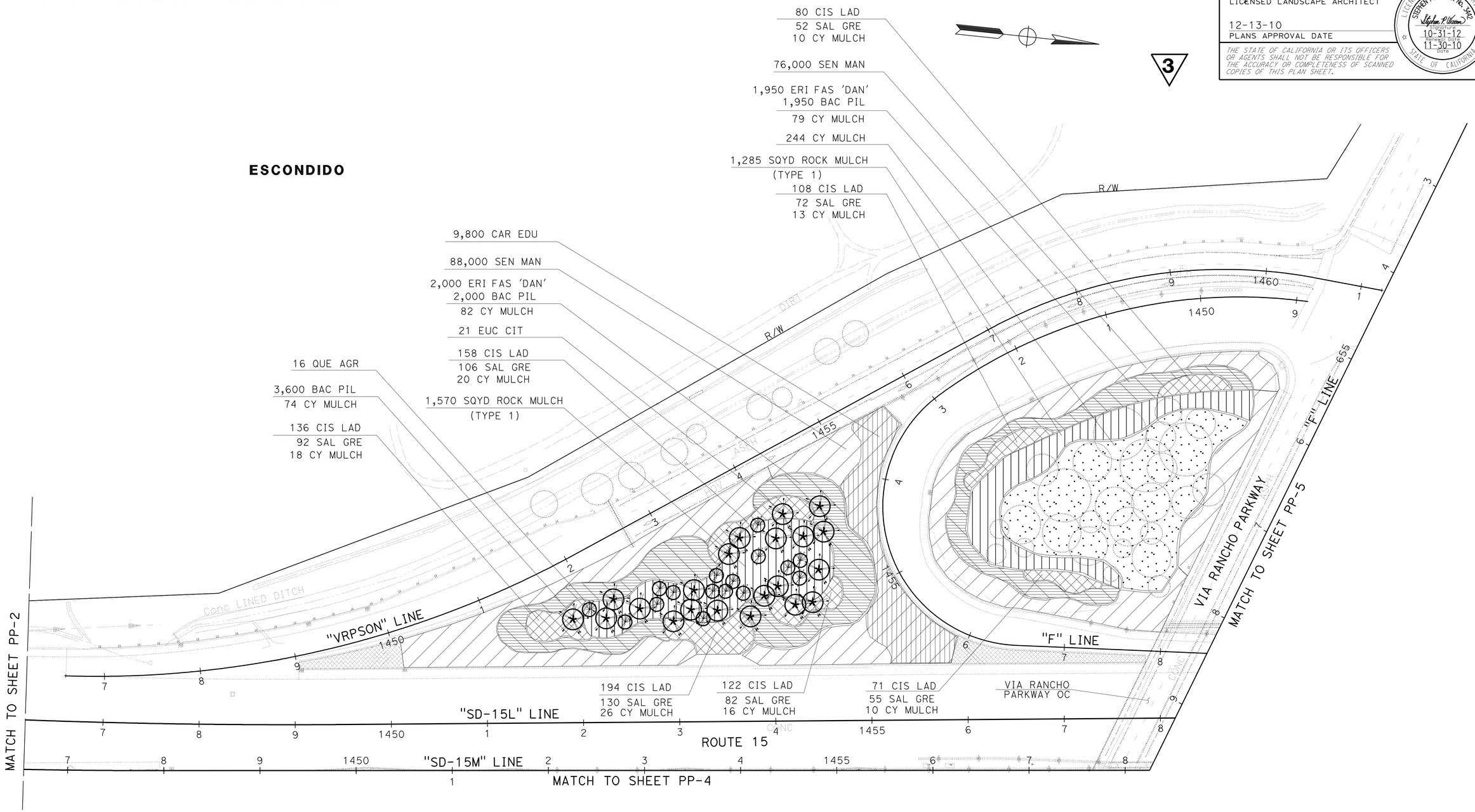

3 REVISED PER ADDENDUM No. 3 DATED MAY 17, 2011

THIS PLAN ACCURATE FOR PLANTING WORK ONLY.

SCALE: 1" = 50'

PLANTING PLAN
PP-3

STATE OF CALIFORNIA - DEPARTMENT OF TRANSPORTATION
Caltrans® LANDSCAPE ARCHITECTURE

SENIOR LANDSCAPE ARCHITECT: STEPHEN ALVAREZ
CALCULATED-DESIGNED BY: STEPHEN WARREN
CHECKED BY: RUDY MEDINA
REVISED BY
DATE REVISED

LAST REVISION 05-04-11
DATE PLOTTED => 13-MAY-2011
TIME PLOTTED => 13:34

Dist	COUNTY	ROUTE	POST MILES TOTAL PROJECT	SHEET No.	TOTAL SHEETS
11	SD	15	M26.2/M27.8	18	73

Stephen P. Warren
LICENSED LANDSCAPE ARCHITECT

12-13-10
PLANS APPROVAL DATE

LICENSED LANDSCAPE ARCHITECT
STEPHEN P. WARREN No. 3462
Stephen P. Warren
Signature
10-31-12
Expiration Date
11-30-10
Date
STATE OF CALIFORNIA

THE STATE OF CALIFORNIA OR ITS OFFICERS OR AGENTS SHALL NOT BE RESPONSIBLE FOR THE ACCURACY OR COMPLETENESS OF SCANNED COPIES OF THIS PLAN SHEET.

NOTE:

FOR ACCURATE RIGHT OF WAY DATA, CONTACT RIGHT OF WAY ENGINEERING AT THE DISTRICT OFFICE.

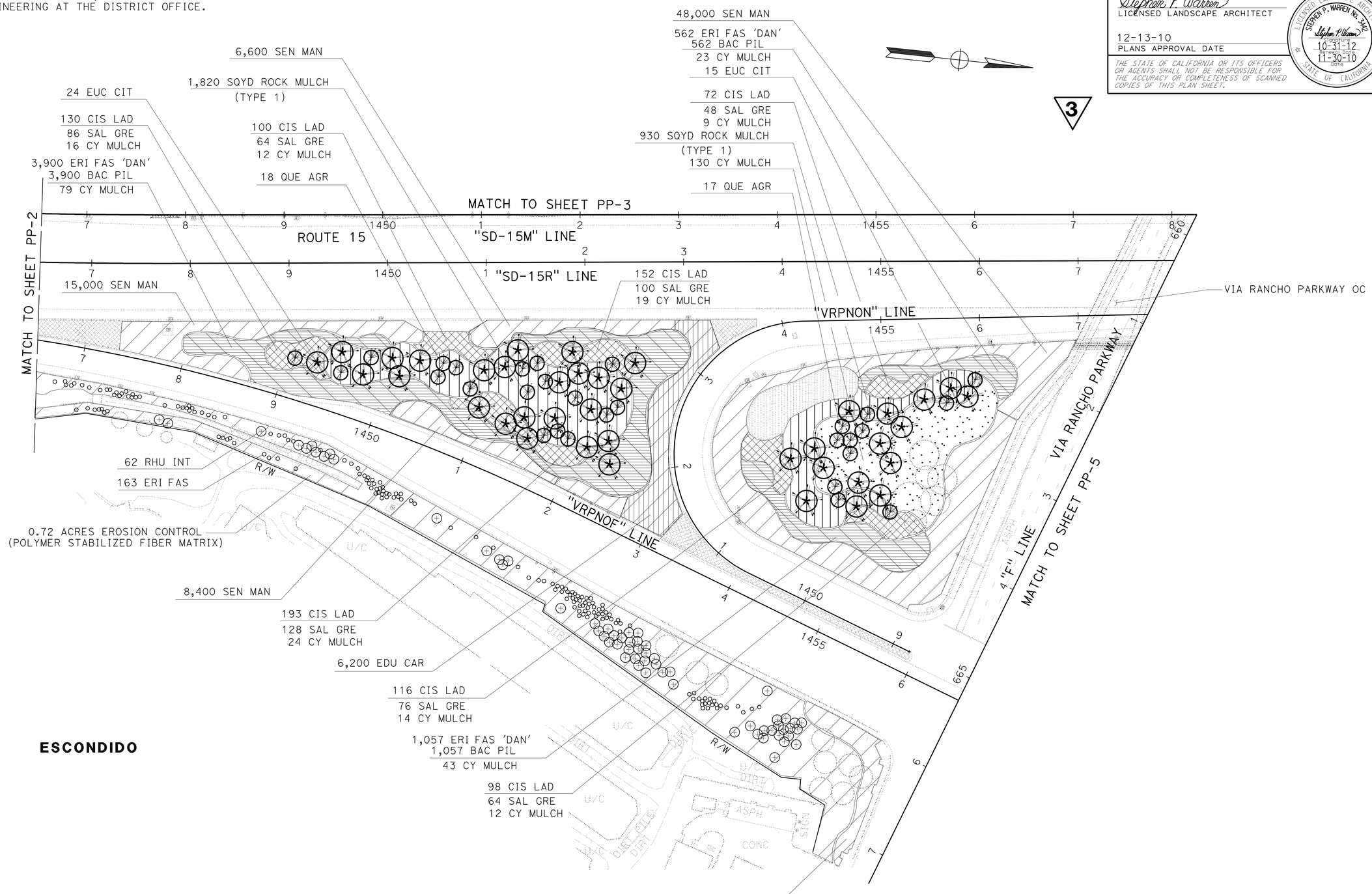

THIS PLAN ACCURATE FOR PLANTING WORK ONLY.

3 REVISED PER ADDENDUM No. 3 DATED MAY 17, 2011

PLANTING PLAN

SCALE: 1" = 50' **PP-4**

STATE OF CALIFORNIA - DEPARTMENT OF TRANSPORTATION
Caltrans® LANDSCAPE ARCHITECTURE

SENIOR LANDSCAPE ARCHITECT: STEPHEN ALVAREZ
CALCULATED-DESIGNED BY: STEPHEN WARREN
CHECKED BY: RUDY MEDINA
REVISED BY
DATE REVISED

LAST REVISION 05-04-11
DATE PLOTTED => 13-MAY-2011
TIME PLOTTED => 13:34

Dist	COUNTY	ROUTE	POST MILES TOTAL PROJECT	SHEET No.	TOTAL SHEETS
11	SD	15	M26.2/M27.8	45	73

Stephen P. Warren
LICENSED LANDSCAPE ARCHITECT

12-13-10
PLANS APPROVAL DATE

LICENSED LANDSCAPE ARCHITECT
STEPHEN P. WARREN No. 3462
Stephen P. Warren
Expiration Date 10-31-12
Renewal Date 11-30-10
Date
STATE OF CALIFORNIA

THE STATE OF CALIFORNIA OR ITS OFFICERS OR AGENTS SHALL NOT BE RESPONSIBLE FOR THE ACCURACY OR COMPLETENESS OF SCANNED COPIES OF THIS PLAN SHEET.

3

THRUST BLOCK DETAIL

INSTALLATION	TYPE FITTING	INSTALLATION	TYPE FITTING
	90° ELL	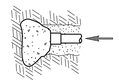	DEAD END
	BEND 45° 22.5° 11.25°		GATE VALVE
		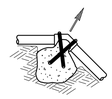	VERTICAL BEND (TYPE I) 45° 22.5° 11.25°
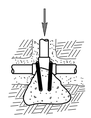	TEE	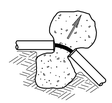	OR VERTICAL BEND (TYPE II) 45° 22.5° 11.25°

NOTES:

Min 1 CF PCC FOR 1½" PIPE SIZE AND SMALLER.
Min 2 CF PCC FOR 2" PIPE SIZE.
Min 3 CF PCC FOR 3" AND 4" PIPE SIZE.
USE #3 REINFORCING BAR WHERE SHOWN.

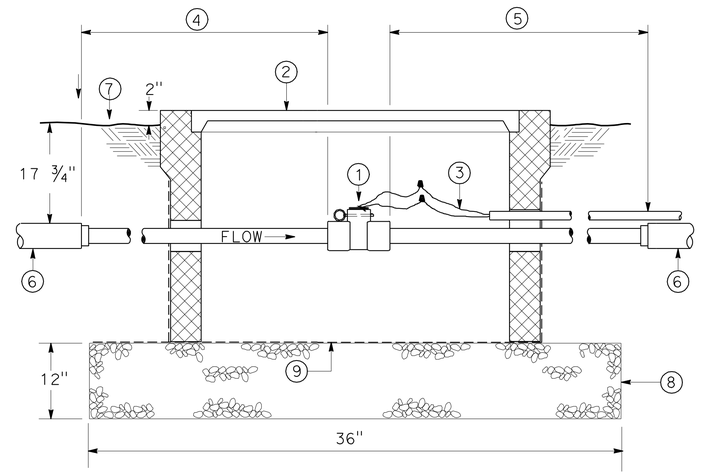

1 - FLOW SENSOR
2 - RECTANGULAR VALVE BOX (SIZE AS REQUIRED)
3 - SHIELDED FLOW SENSOR CABLE INSTALL IN 1" ELECTRICAL CONDUIT WITH RCVM CONTROL WIRES
4 - 2" SCH 40 PVC PIPE - LENGTH = 10 X Dia OF SUPPLY LINE
5 - 2" SCH 40 PVC PIPE - LENGTH = 5 X Dia OF SUPPLY LINE
6 - SCH 40 PVC SUPPLY LINE (SIZE PER PLANS)
7 - FINISH GRADE
8 - 3/4" GRAVEL OR CRUSHED ROCK
9 - 1/2" MESH 18 GAUGE GALVANIZED WIRE FABRIC (COVER VALVE BOX BOTTOM AND ALL CUT-OUTS)

FLOW SENSOR

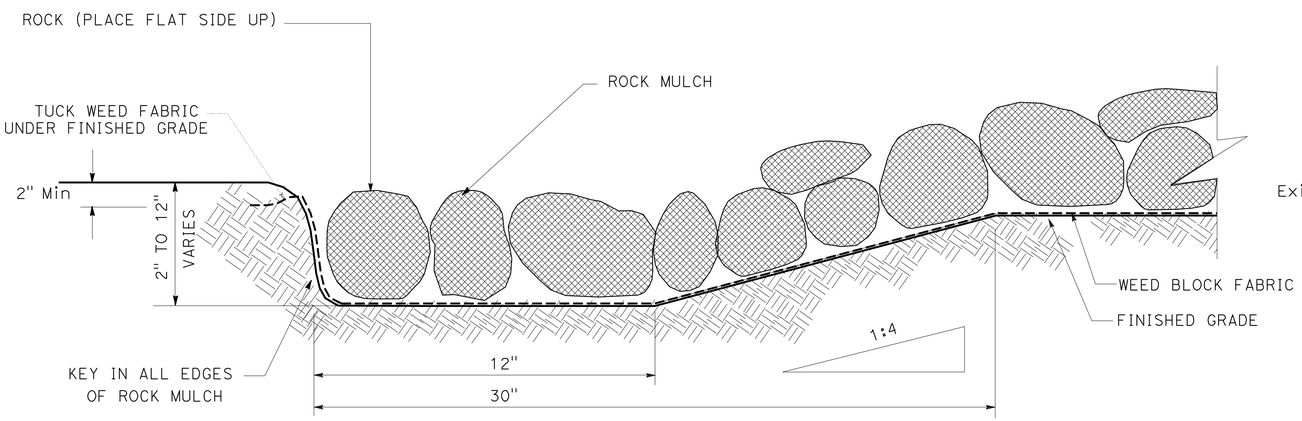

ROCK MULCH (TYPE 1)

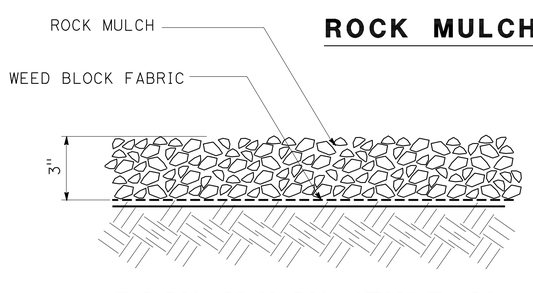

ROCK MULCH (TYPE 2)

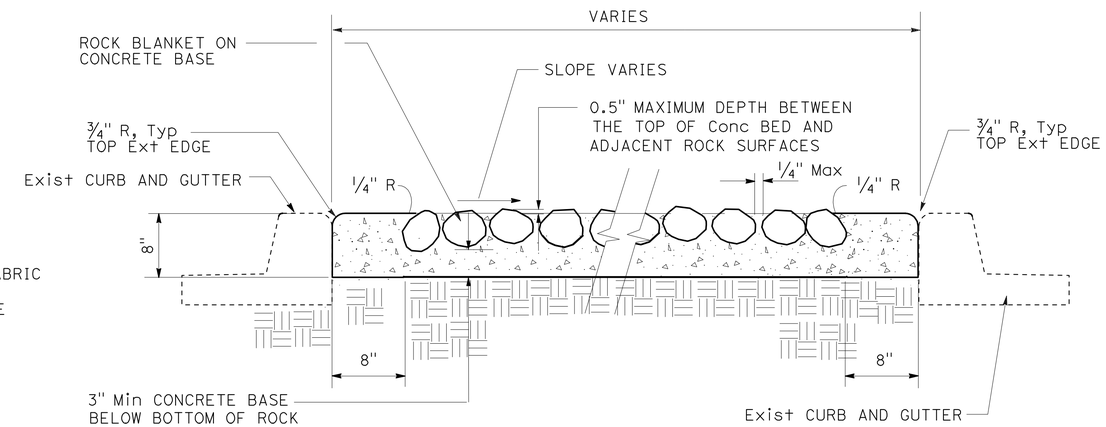

ROCK BLANKET

3 REVISED PER ADDENDUM No. 3 DATED MAY 17, 2011

LANDSCAPE DETAILS

NO SCALE

LD-4

STATE OF CALIFORNIA - DEPARTMENT OF TRANSPORTATION
Caltrans® LANDSCAPE ARCHITECTURE
SENIOR LANDSCAPE ARCHITECT: STEPHEN ALVAREZ
CALCULATED-DESIGNED BY: STEPHEN WARREN
CHECKED BY: RUDY MEDINA
REVISED BY
DATE REVISED

LAST REVISION 05-10-11
DATE PLOTTED => 13-MAY-2011
TIME PLOTTED => 13:34

Dist	COUNTY	ROUTE	POST MILES TOTAL PROJECT	SHEET No.	TOTAL SHEETS
11	SD	15	M26.2/M27.8	47	73

Stephen P. Warren
LICENSED LANDSCAPE ARCHITECT

12-13-10
PLANS APPROVAL DATE

LICENSED LANDSCAPE ARCHITECT
STEPHEN P. WARREN No. 3462
Stephen P. Warren
Signature
10-31-12
Renewal Date
11-30-10
Date
STATE OF CALIFORNIA

THE STATE OF CALIFORNIA OR ITS OFFICERS OR AGENTS SHALL NOT BE RESPONSIBLE FOR THE ACCURACY OR COMPLETENESS OF SCANNED COPIES OF THIS PLAN SHEET.

3

NOTES:

1. GV, FITTINGS, AND PIPE SHALL BE SAME SIZE AS SUPPLY LINE SHOWN ON PLANS.
2. ALL METAL IN CONTACT WITH SOIL AND PCC SHALL BE POLYETHYLENE WRAPPED USING 2" WIDE PLASTIC BACKED ADHESIVE TAPE 4 Mil THICK WITH ½" OVERLAP.
3. ASSEMBLY MATERIAL PIPING TO BE COPPER OR BRASS
4. JOINTS SHALL BE THREADED

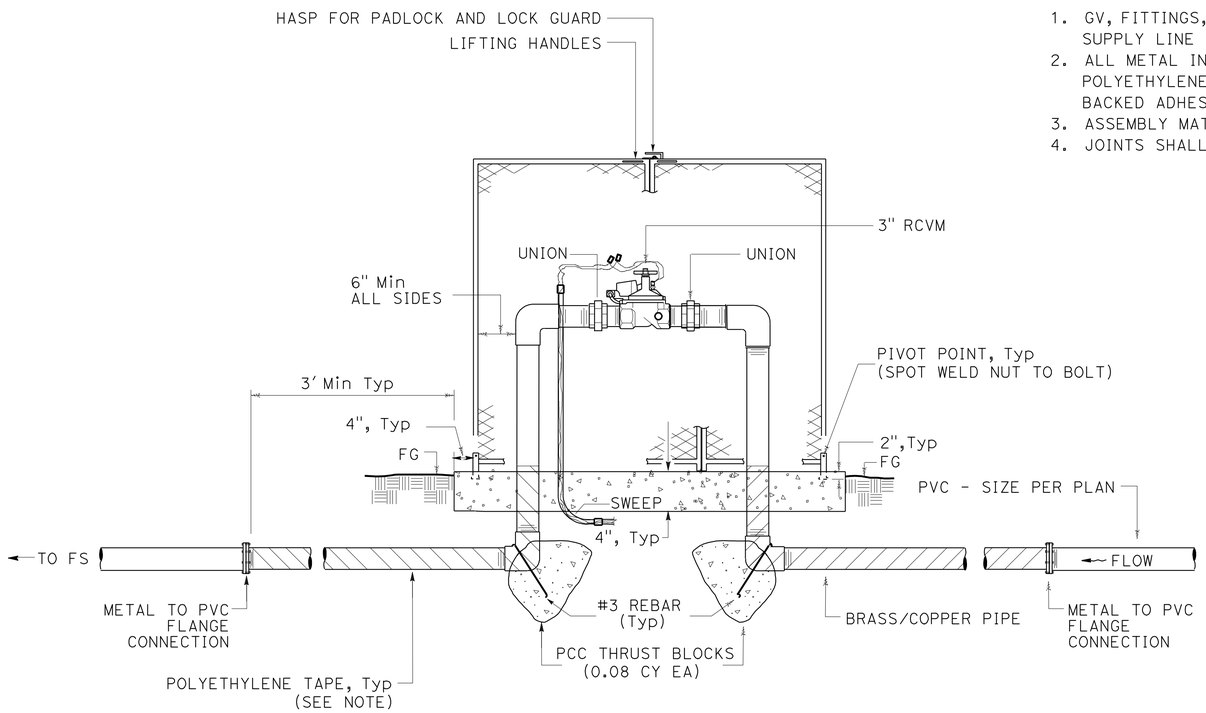

3" MASTER VALVE ASSEMBLY WITH ENCLOSURE (MVA)

EROSION CONTROL COMPONENTS (POLYMER STABILIZED FIBER MATRIX)

AREA		TACKIFIER GALLON (N)	WOOD FIBER LB (N)	CELLULOSE FIBER LB (N)	PURE LIVE SEED LB (N)
SQFT (N)	ACRE				
631,615	14.5	145	17,400	11,600	464

(N) - NOT A SEPARATE PAY ITEM, FOR INFORMATION ONLY.

ROCK MULCH (TYPE 1)

SHEET	SQYD
PP-3	2,855
PP-4	2,750
TOTAL	5,605

MULCH

SHEET	CY
PP-3	592
PP-4	381
PLANT BASIN	953
TOTAL	1,926

ROCK BLANKET

SHEET	SQYD
PP-9	634
TOTAL	634

ROCK MULCH (TYPE 2)

SHEET	SQYD
PP-1	1,040
PP-2	208
TOTAL	1,248

EROSION CONTROL SUMMARY OF QUANTITIES

SHEET NUMBER	EROSION CONTROL (POLYMER STABILIZED FIBER MATRIX) ACRES
PP-1	0.32
PP-2	0.82
PP-4	0.72
PP-6	1.79
PP-7	2.50
PP-8	4.27
PP-9	2.36
PP-10	1.73
TOTAL	14.51

3 REVISED PER ADDENDUM No. 3 DATED MAY 17, 2011

LANDSCAPE DETAILS (QUANTITIES)

NO SCALE

LD-6

STATE OF CALIFORNIA - DEPARTMENT OF TRANSPORTATION
Caltrans® LANDSCAPE ARCHITECTURE
SENIOR LANDSCAPE ARCHITECT: STEPHEN ALVAREZ
CALCULATED-DESIGNED BY: STEPHEN WARREN
CHECKED BY: RUDY MEDINA
REVISED BY / DATE REVISED

LAST REVISION 05-04-11
DATE PLOTTED => 13-MAY-2011
TIME PLOTTED => 13:34