Dist	COUNTY	ROUTE	KILOMETER POST TOTAL PROJECT	SHEET No.	TOTAL SHEETS
11	SD	5,805	R49.9/R51.7, 42.6/46.5	1	886

ARRAL-805(610)N

STATE OF CALIFORNIA
DEPARTMENT OF TRANSPORTATION

PROJECT PLANS FOR CONSTRUCTION ON
STATE HIGHWAY

IN SAN DIEGO COUNTY
IN SAN DIEGO
ON ROUTE 805 FROM
0.3 KM SOUTH OF SOLEDAD CANYON BRIDGE
AND OVERHEAD TO
0.6 KM NORTH OF ROUTE 5/805 SEPARATION
AND ON ROUTE 5 FROM
0.6 KM NORTH OF ROUTE 5/805 SEPARATION TO
0.5 KM NORTH OF CARMEL MOUNTAIN ROAD UNDERCROSSING

TO BE SUPPLEMENTED BY STANDARD PLANS DATED JULY 2004

INDEX OF PLANS

SHEET No.	DESCRIPTION
1	TITLE AND LOCATION MAP
2-14	TYPICAL CROSS SECTIONS
15	KEY MAP AND LINE INDEX
16-30	LAYOUTS
31-70	PROFILES AND SUPERELEVATION DIAGRAMS
71-95	CONSTRUCTION DETAILS
96-124	TEMPORARY WATER POLLUTION CONTROL PLAN, DETAILS AND QUANTITIES
125-138	EROSION CONTROL PLAN, DETAILS AND QUANTITIES
139-147	CONTOUR GRADING
148-212	DRAINAGE PLANS, PROFILES, DETAILS AND QUANTITIES
213-224	SANITARY SEWER PLANS AND PROFILES, DETAILS AND QUANTITIES
225-258	UTILITY PLANS
259	CONSTRUCTION AREA SIGNS
260-322	STAGE CONSTRUCTION PLANS
323-328	TRAFFIC HANDLING PLANS, DETAILS AND QUANTITIES
329-332	DETOUR PLANS AND QUANTITIES
333-368	PAVEMENT DELINEATION PLANS, DETAILS AND QUANTITIES
369-416	SIGN PLANS, DETAILS AND QUANTITIES
417-424	SUMMARY OF QUANTITIES
425-439	RETAINING WALL PLANS, DETAILS AND QUANTITIES
440-462	HIGHWAY PLANTING
463-515	ELECTRICAL PLANS
516-619	REVISED AND NEW STANDARD PLANS

STRUCTURE PLANS

620-644	MIRA MESA Blvd UC (WIDEN) - Br No. 57-0785
645-661	SORRENTO VALLEY Blvd UC (WIDEN) - Br No. 57-0786
662-673	SOLEDAD CANYON Br AND OH (RECONSTRUCT) - Br No. 57-0787R/L
674-747	CARROLL CANYON ROAD BRIDGE - Br No. 57C0786
748-770	BUSINESS ACCESS ROAD UC - Br No. 57C0787
771-825	CARROLL CANYON (DAR) RETAINING WALLS
826-836	RETAINING WALL 437R
837-846	RETAINING WALL 438L
847-862	RETAINING WALL 438R
863-886	RETAINING WALL 445R

THE STANDARD PLANS LIST APPLICABLE TO THIS CONTRACT IS INCLUDED IN THE NOTICE TO BIDDERS AND SPECIAL PROVISIONS BOOK.

LOCATION MAP

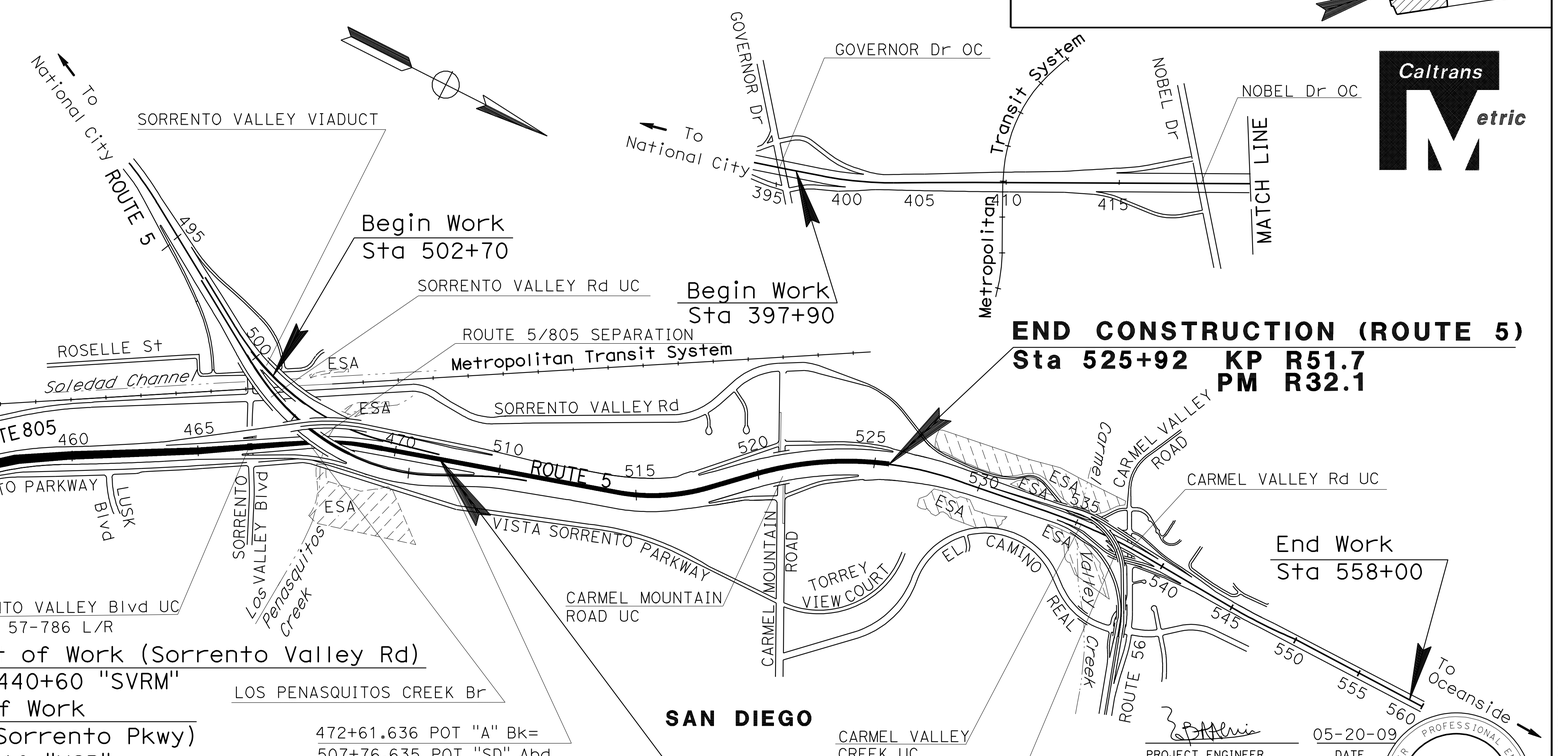

Caltrans Metric

THE CONTRACTOR SHALL POSSESS THE CLASS (OR CLASSES) OF LICENSE AS SPECIFIED IN THE "NOTICE TO BIDDERS."

ESA = ENVIRONMENTALLY SENSITIVE AREA

NO SCALE

05-20-09
PROJECT ENGINEER REGISTERED CIVIL ENGINEER — DATE

REGISTERED PROFESSIONAL ENGINEER SHAHBAZ A ALVI No. 55293 Exp. 12-31-10 CIVIL STATE OF CALIFORNIA

September 27, 2010
PLANS APPROVAL DATE

THE STATE OF CALIFORNIA OR ITS OFFICERS OR AGENTS SHALL NOT BE RESPONSIBLE FOR THE ACCURACY OR COMPLETENESS OF SCANNED COPIES OF THIS PLAN SHEET.

CONTRACT No.	11-2T0404
PROJECT ID	1100000446

PROJECT MANAGER: ARTURO G. JACOBO
DESIGN ENGINEER: MAJID KHARRATI

LAST REVISION 05-26-09 — DATE PLOTTED => 29-SEP-2010 — TIME PLOTTED => 13:38

Dist	COUNTY	ROUTE	KILOMETER POST TOTAL PROJECT	SHEET No.	TOTAL SHEETS
11	SD	5,805	R49.9/R51.7, 42.6/46.5	2	886

REGISTERED CIVIL ENGINEER 05-13-09 DATE

9-27-10
PLANS APPROVAL DATE

REGISTERED PROFESSIONAL ENGINEER SHAHBAZ A ALVI No. C55293 Exp. 12-31-10 CIVIL STATE OF CALIFORNIA

THE STATE OF CALIFORNIA OR ITS OFFICERS OR AGENTS SHALL NOT BE RESPONSIBLE FOR THE ACCURACY OR COMPLETENESS OF ELECTRONIC COPIES OF THIS PLAN SHEET.

Caltrans Metric

NOTES:

1. DIMENSIONS OF THE STRUCTURAL SECTIONS ARE SUBJECT TO THE TOLERANCES SPECIFIED IN THE STANDARD SPECIFICATIONS.
2. SUPERELEVATION AS SHOWN OR AS DIRECTED BY THE ENGINEER.
3. TYPICAL SECTIONS FOR DETOURS ARE SHOWN ON DETOUR SHEETS.
4. FOG SEAL COAT SHALL BE APPLIED TO ALL HMA SURFACES EXCEPT TRAVELED WAYS AND DETOURS.
5. FOR TYPE AND LOCATION OF DIKE, CONCRETE CURBS AND CONCRETE BARRIERS SEE LAYOUT AND QUANTITIES SHEETS.

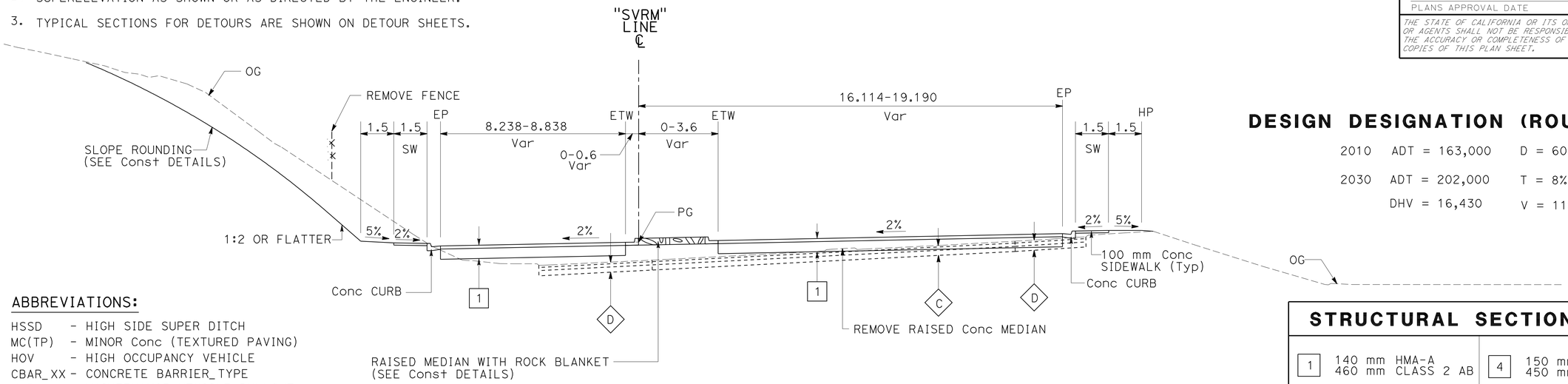

ABBREVIATIONS:

HSSD - HIGH SIDE SUPER DITCH
MC(TP) - MINOR Conc (TEXTURED PAVING)
HOV - HIGH OCCUPANCY VEHICLE
CBAR_XX - CONCRETE BARRIER_TYPE
MVP - MAINTENANCE VEHICLE PULLOUT
HMA-A - HMA (TYPE A)

"SVRM" LINE

Sta 441+43.464 TO 442+49.401

DESIGN DESIGNATION (ROUTE 805)

2010 ADT = 163,000 D = 60%
2030 ADT = 202,000 T = 8%
DHV = 16,430 V = 110 km/h

STRUCTURAL SECTION TYPES

1	140 mm HMA-A 460 mm CLASS 2 AB	4	150 mm HMA-A* 450 mm CLASS 2 AB
2	240 mm JPCP 120 mm HMA-A 165 mm CLASS 2 AB	5	180 mm HMA-A 615 mm CLASS 2 AB
3	300 mm JPCP 150 mm HMA-A 195 mm CLASS 2 AB	6	135 mm HMA-A* 300 mm CLASS 2 AB
7	300 mm RAPID STRENGTH Conc PAVEMENT 300 mm RAPID STRENGTH Conc BASE		
8	150 mm HMA-A	9	45 mm COLD PLANE AC PAVEMENT 45 - 200 mm HMA-A

*HSSD AND MVP - MINOR HMA

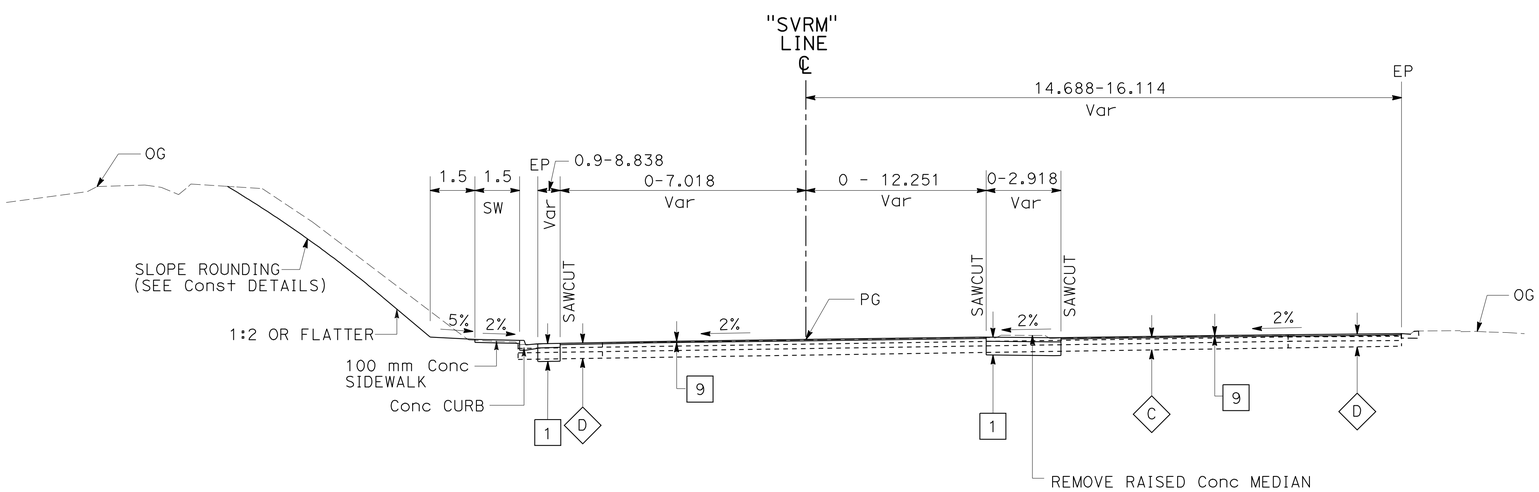

"SVRM" LINE

Sta 440+65 TO 441+43.464

EXISTING STRUCTURAL SECTIONS

A	198 mm PCC 137 mm CTB 152 mm AS	E	91 mm AC 137 mm AB 265 mm - 168 mm AS
B	76 mm AC 137 mm AB 256mm - 116 mm AS	F	213 mm PCC 137 mm CTB 152 mm AS
C	76 mm AC 152 mm CTB 229 mm AS	G	91 mm AC 198 mm CTB 366 mm AS
D	76 mm AC 152 mm CTB Var AS	H	91 mm AC 198 mm CTB 366 mm - Var AS
I	89 mm AC 305 mm CTB		

ALL DIMENSIONS ARE IN METERS UNLESS OTHERWISE SHOWN

TYPICAL CROSS SECTIONS

NO SCALE

X-1

STATE OF CALIFORNIA - DEPARTMENT OF TRANSPORTATION
Caltrans PROJECT DEVELOPMENT

FUNCTIONAL SUPERVISOR MAJID KHARRATI
CALCULATED-DESIGNED BY CASEY LEWIS
CHECKED BY SHAHBAZ A ALVI
REVISED BY
DATE REVISED

LAST REVISION 05-22-09
DATE PLOTTED => 29-SEP-2010
TIME PLOTTED => 13:38

Dist	COUNTY	ROUTE	KILOMETER POST TOTAL PROJECT	SHEET No.	TOTAL SHEETS
11	SD	5,805	R49.9/R51.7, 42.6/46.5	3	886

REGISTERED CIVIL ENGINEER 05-13-09 DATE

9-27-10
PLANS APPROVAL DATE

REGISTERED PROFESSIONAL ENGINEER SHAHBAZ A ALVI No. C55293 Exp. 12-31-10 CIVIL STATE OF CALIFORNIA

THE STATE OF CALIFORNIA OR ITS OFFICERS OR AGENTS SHALL NOT BE RESPONSIBLE FOR THE ACCURACY OR COMPLETENESS OF ELECTRONIC COPIES OF THIS PLAN SHEET.

Caltrans Metric

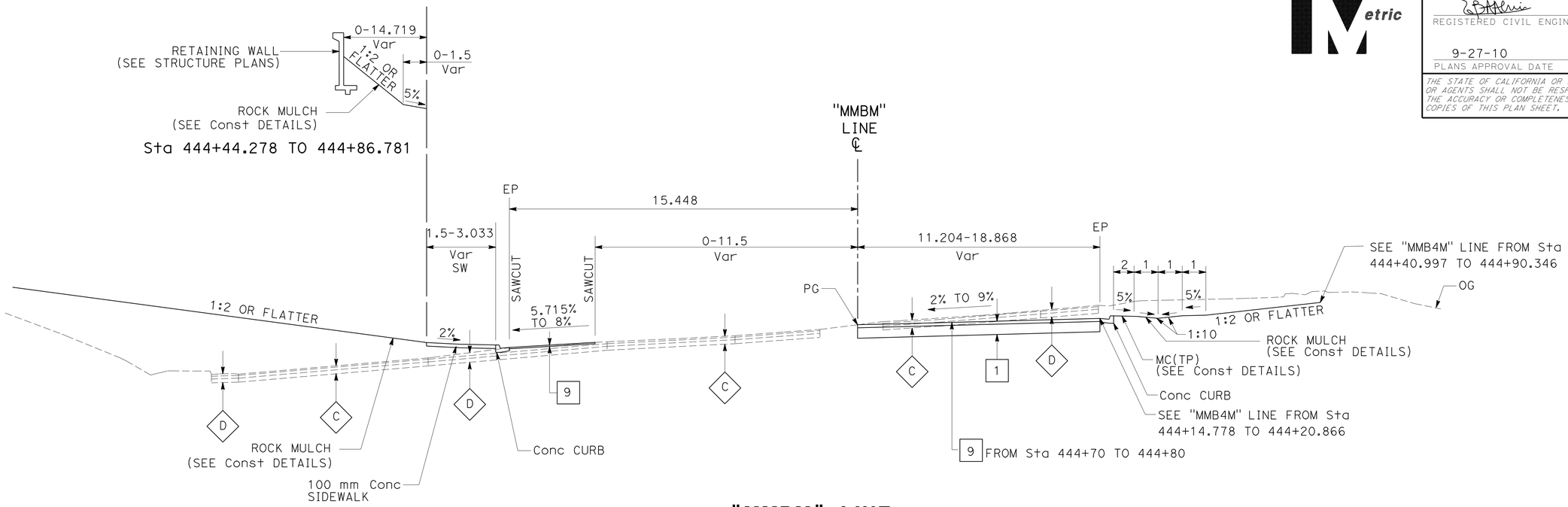

"MMBM" LINE

Sta 444+14.778 TO 445+06.993

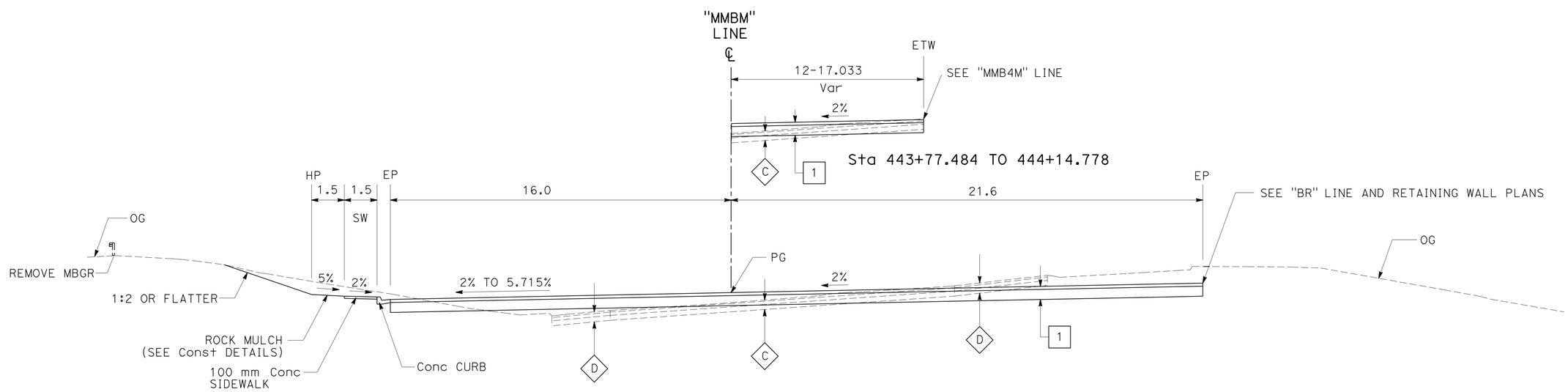

"MMBM" LINE

Sta 442+86.553 TO 444+14.778

ALL DIMENSIONS ARE IN METERS UNLESS OTHERWISE SHOWN

TYPICAL CROSS SECTIONS

NO SCALE

X-2

STATE OF CALIFORNIA - DEPARTMENT OF TRANSPORTATION
Caltrans PROJECT DEVELOPMENT

FUNCTIONAL SUPERVISOR: MAJID KHARRATI
CALCULATED-DESIGNED BY: CASEY LEWIS
CHECKED BY: SHAHBAZ A ALVI
REVISED BY
DATE REVISED

LAST REVISION 05-22-09 | DATE PLOTTED => 29-SEP-2010 | TIME PLOTTED => 13:38

Dist	COUNTY	ROUTE	KILOMETER POST TOTAL PROJECT	SHEET No.	TOTAL SHEETS
11	SD	5,805	R49.9/R51.7, 42.6/46.5	4	886

REGISTERED CIVIL ENGINEER 05-13-09 DATE

9-27-10
PLANS APPROVAL DATE

REGISTERED PROFESSIONAL ENGINEER SHAHBAZ A ALVI No. C55293 Exp. 12-31-10 CIVIL STATE OF CALIFORNIA

THE STATE OF CALIFORNIA OR ITS OFFICERS OR AGENTS SHALL NOT BE RESPONSIBLE FOR THE ACCURACY OR COMPLETENESS OF ELECTRONIC COPIES OF THIS PLAN SHEET.

Caltrans Metric

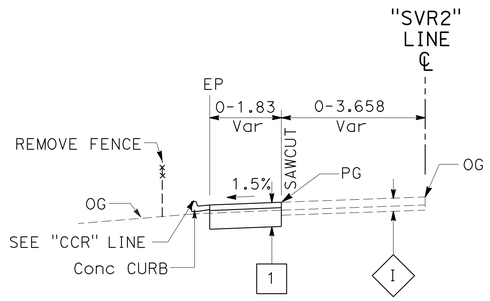

"SVR2" LINE

Sta 9+28.013 TO 11+29.271

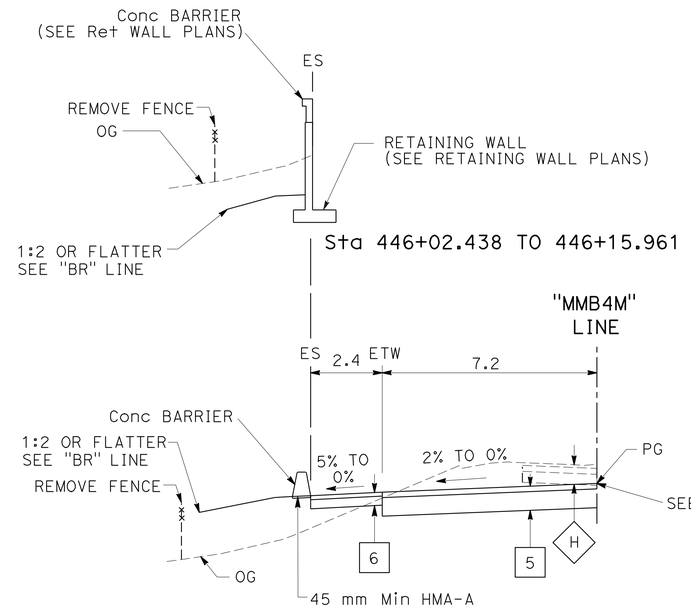

"MMB4M" LINE

Sta 445+68.992 TO 446+15.961

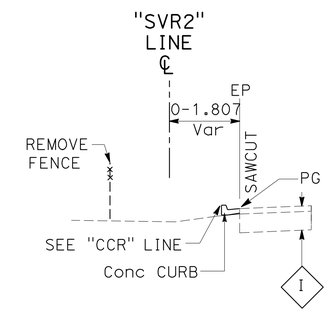

"SVR2" LINE

Sta 9+03.471 TO 9+28.013

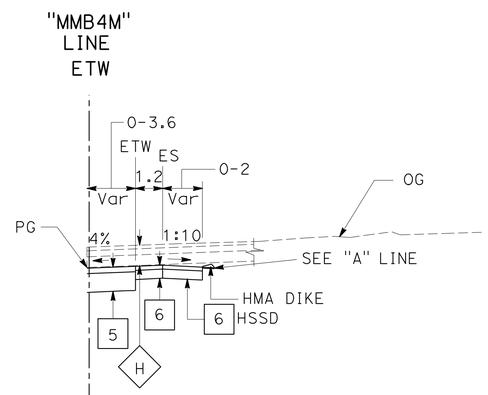

Sta 443+54.394 TO 444+58

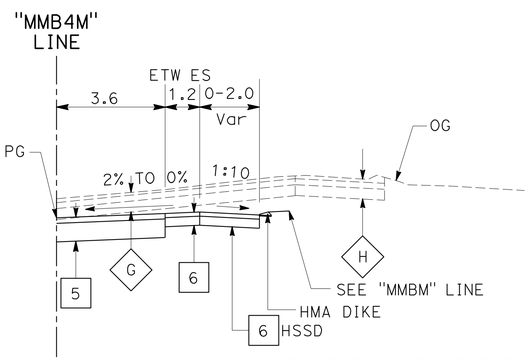

Sta 445+60 TO 445+68.992

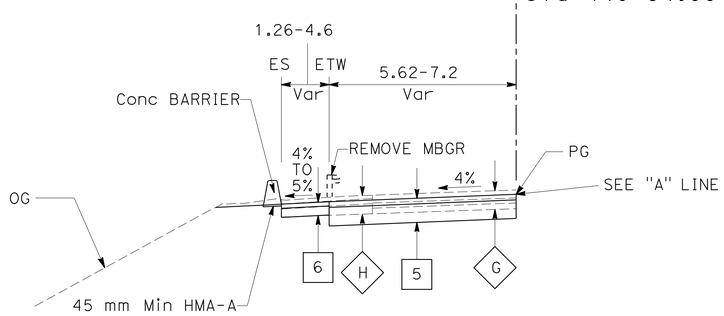

"MMB4M" LINE

Sta 443+02.236 TO 444+58

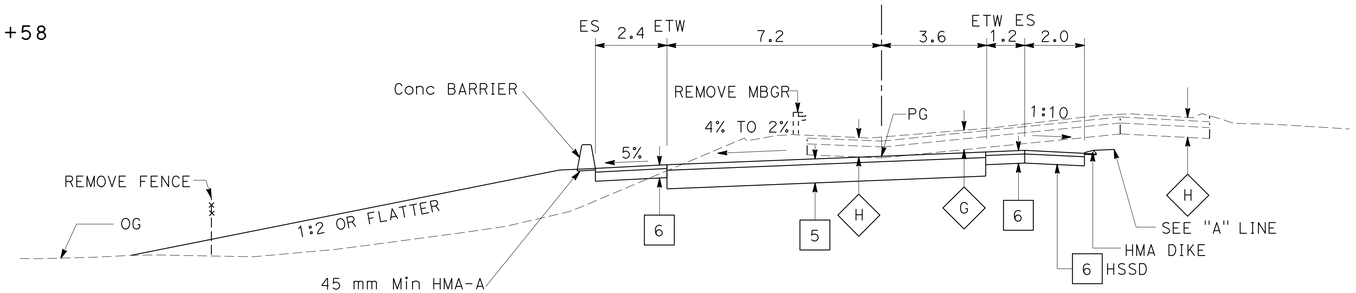

"MMB4M" LINE

Sta 444+58 TO 445+68.992

TYPICAL CROSS SECTIONS

NO SCALE

X-3

ALL DIMENSIONS ARE IN METERS UNLESS OTHERWISE SHOWN

STATE OF CALIFORNIA - DEPARTMENT OF TRANSPORTATION
Caltrans PROJECT DEVELOPMENT

FUNCTIONAL SUPERVISOR: MAJID KHARRATI
CALCULATED-DESIGNED BY: CASEY LEWIS
CHECKED BY: SHAHBAZ A ALVI
REVISED BY / DATE REVISED

LAST REVISION 05-22-09
DATE PLOTTED => 29-SEP-2010
TIME PLOTTED => 13:38

Dist	COUNTY	ROUTE	KILOMETER POST TOTAL PROJECT	SHEET No.	TOTAL SHEETS
11	SD	5,805	R49.9/R51.7, 42.6/46.5	5	886

REGISTERED CIVIL ENGINEER 05-13-09 DATE

9-27-10
PLANS APPROVAL DATE

REGISTERED PROFESSIONAL ENGINEER SHAHBAZ A ALVI No. C55293 Exp. 12-31-10 CIVIL STATE OF CALIFORNIA

THE STATE OF CALIFORNIA OR ITS OFFICERS OR AGENTS SHALL NOT BE RESPONSIBLE FOR THE ACCURACY OR COMPLETENESS OF ELECTRONIC COPIES OF THIS PLAN SHEET.

Caltrans Metric

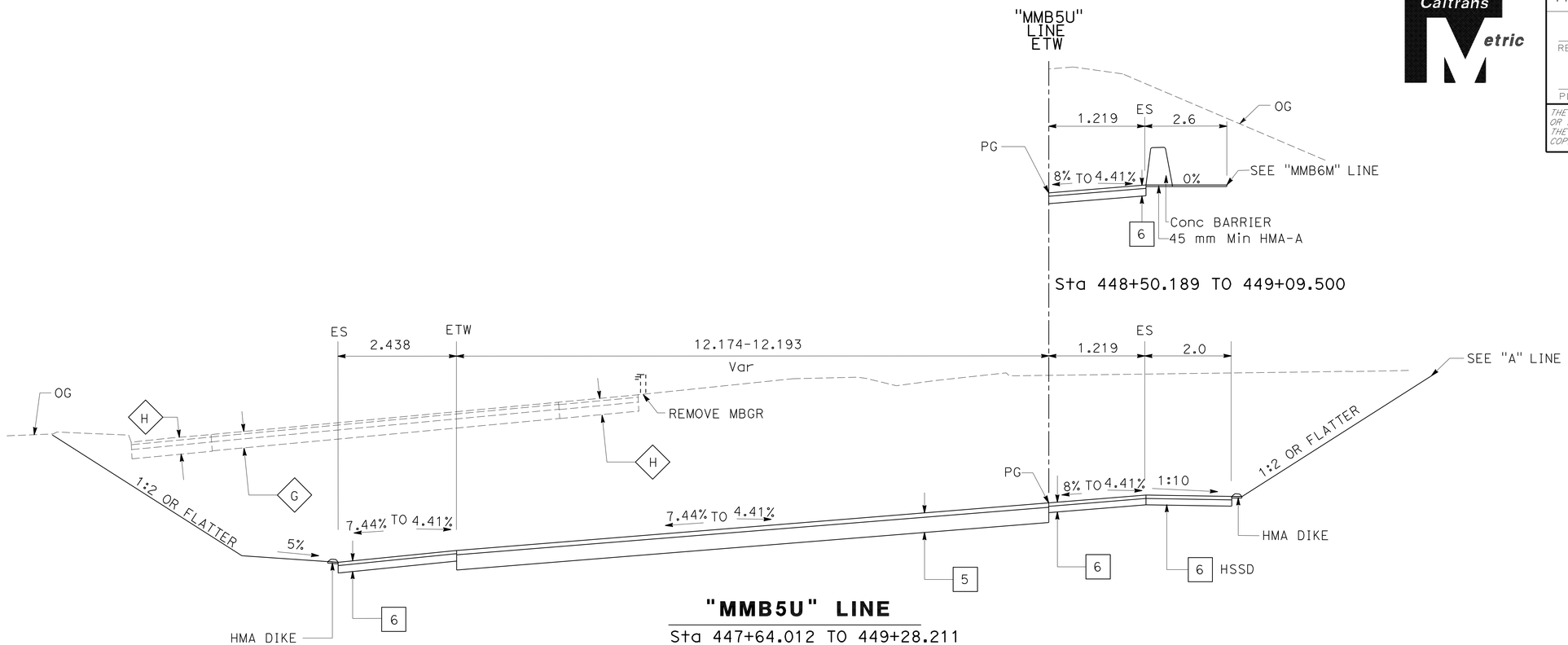

"MMB5U" LINE

Sta 447+64.012 TO 449+28.211

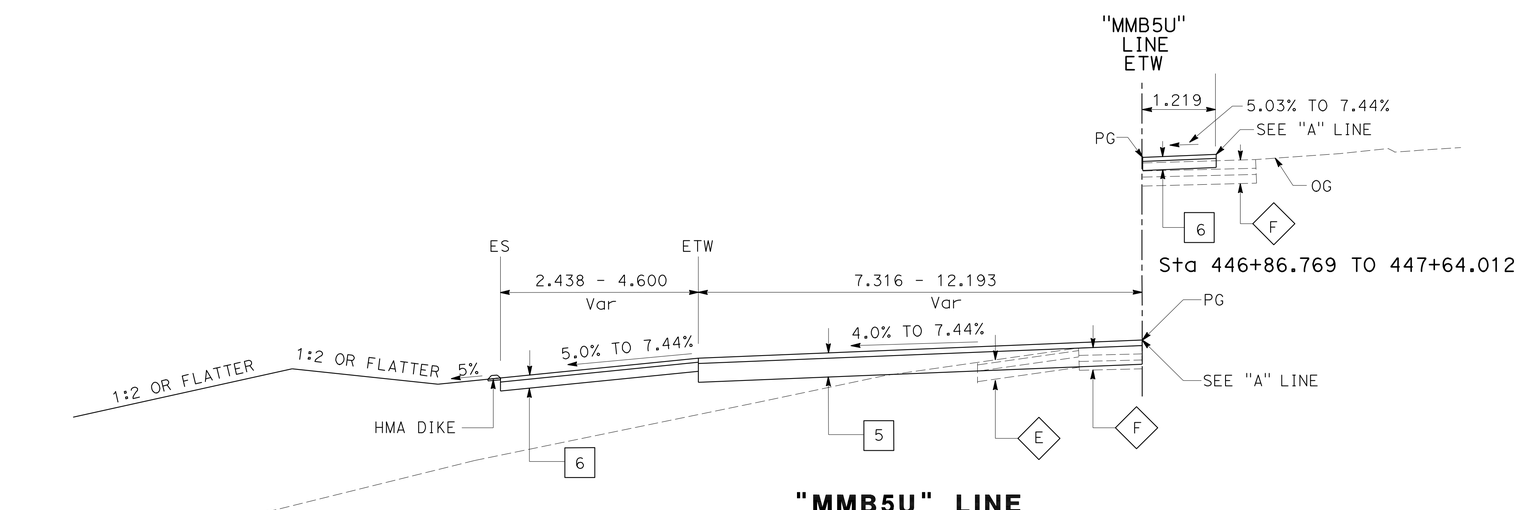

"MMB5U" LINE

Sta 445+85.700 TO 447+64.012

ALL DIMENSIONS ARE IN METERS UNLESS OTHERWISE SHOWN

TYPICAL CROSS SECTIONS

NO SCALE

X-4

REVISED BY	DATE REVISED

CASEY LEWIS — SHAHBAZ A ALVI

CALCULATED-DESIGNED BY — CHECKED BY

FUNCTIONAL SUPERVISOR — MAJID KHARRATI

STATE OF CALIFORNIA - DEPARTMENT OF TRANSPORTATION

Caltrans PROJECT DEVELOPMENT

LAST REVISION 05-22-09 | DATE PLOTTED => 29-SEP-2010 | TIME PLOTTED => 13:39

Dist	COUNTY	ROUTE	KILOMETER POST TOTAL PROJECT	SHEET No.	TOTAL SHEETS
11	SD	5,805	R49.9/R51.7, 42.6/46.5	6	886

REGISTERED CIVIL ENGINEER 05-13-09 DATE

9-27-10
PLANS APPROVAL DATE

REGISTERED PROFESSIONAL ENGINEER SHAHBAZ A ALVI No. C55293 Exp. 12-31-10 CIVIL STATE OF CALIFORNIA

THE STATE OF CALIFORNIA OR ITS OFFICERS OR AGENTS SHALL NOT BE RESPONSIBLE FOR THE ACCURACY OR COMPLETENESS OF ELECTRONIC COPIES OF THIS PLAN SHEET.

Caltrans Metric

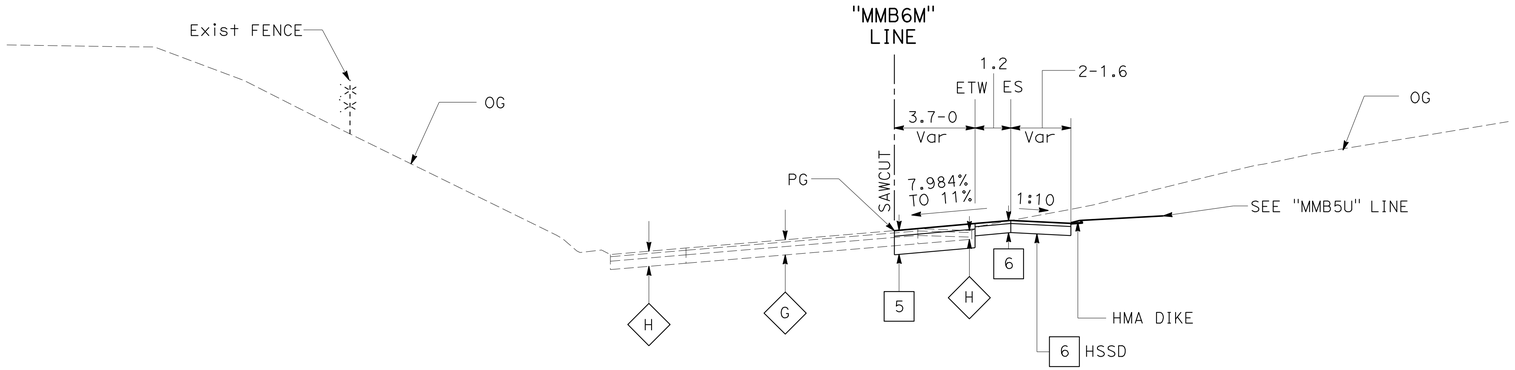

"MMB6M" LINE

Sta 448+20 TO 448+59.407

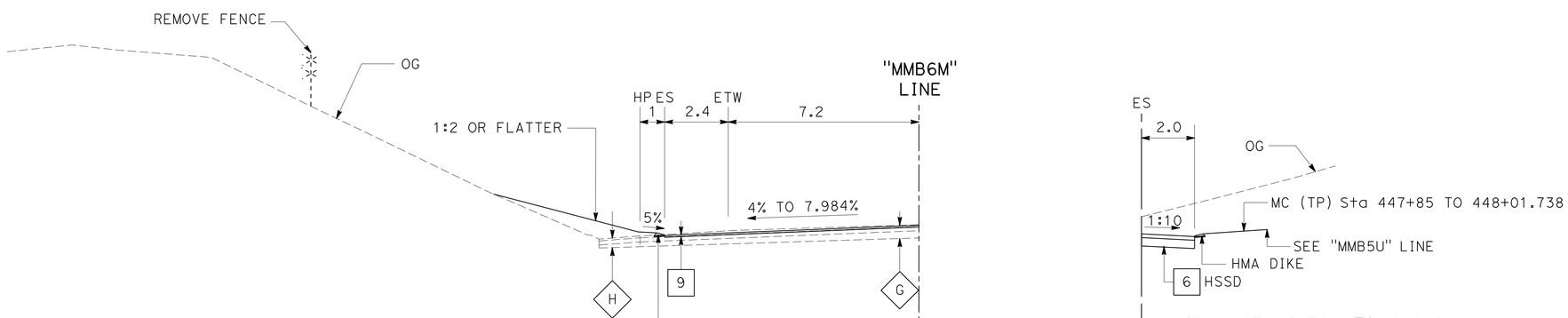

Sta 447+55 TO 448+20

Sta 447+91.300 TO 448+20

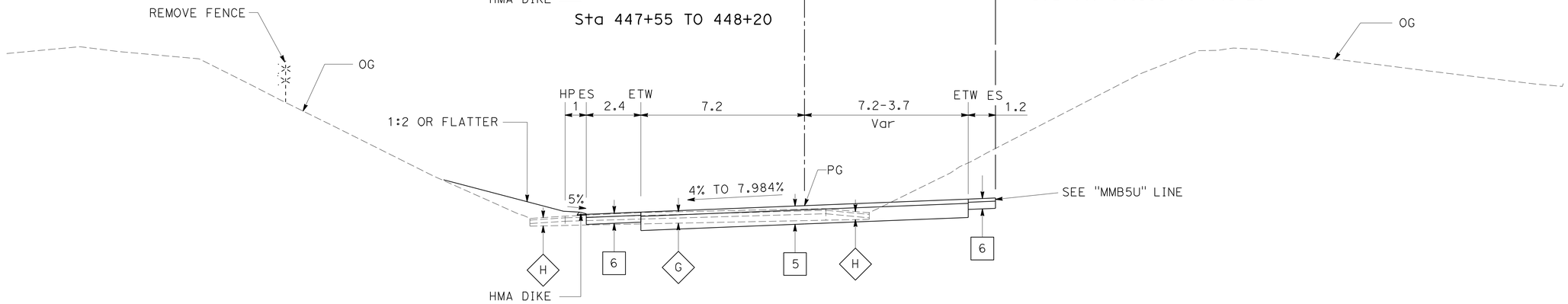

"MMB6M" LINE

Sta 447+35.832 TO 448+20

ALL DIMENSIONS ARE IN METERS UNLESS OTHERWISE SHOWN

TYPICAL CROSS SECTIONS

NO SCALE

X-5

STATE OF CALIFORNIA - DEPARTMENT OF TRANSPORTATION
Caltrans PROJECT DEVELOPMENT

FUNCTIONAL SUPERVISOR: MAJID KHARRATI

CALCULATED-DESIGNED BY: CASEY LEWIS
CHECKED BY: SHAHBAZ A ALVI

REVISED BY | DATE REVISED

LAST REVISION 05-22-09 | DATE PLOTTED => 29-SEP-2010 | TIME PLOTTED => 13:39

Dist	COUNTY	ROUTE	KILOMETER POST TOTAL PROJECT	SHEET No.	TOTAL SHEETS
11	SD	5,805	R49.9/R51.7, 42.6/46.5	7	886

REGISTERED CIVIL ENGINEER 05-13-09 DATE

9-27-10
PLANS APPROVAL DATE

REGISTERED PROFESSIONAL ENGINEER SHAHBAZ A ALVI No. C55293 Exp. 12-31-10 CIVIL STATE OF CALIFORNIA

THE STATE OF CALIFORNIA OR ITS OFFICERS OR AGENTS SHALL NOT BE RESPONSIBLE FOR THE ACCURACY OR COMPLETENESS OF ELECTRONIC COPIES OF THIS PLAN SHEET.

Caltrans Metric

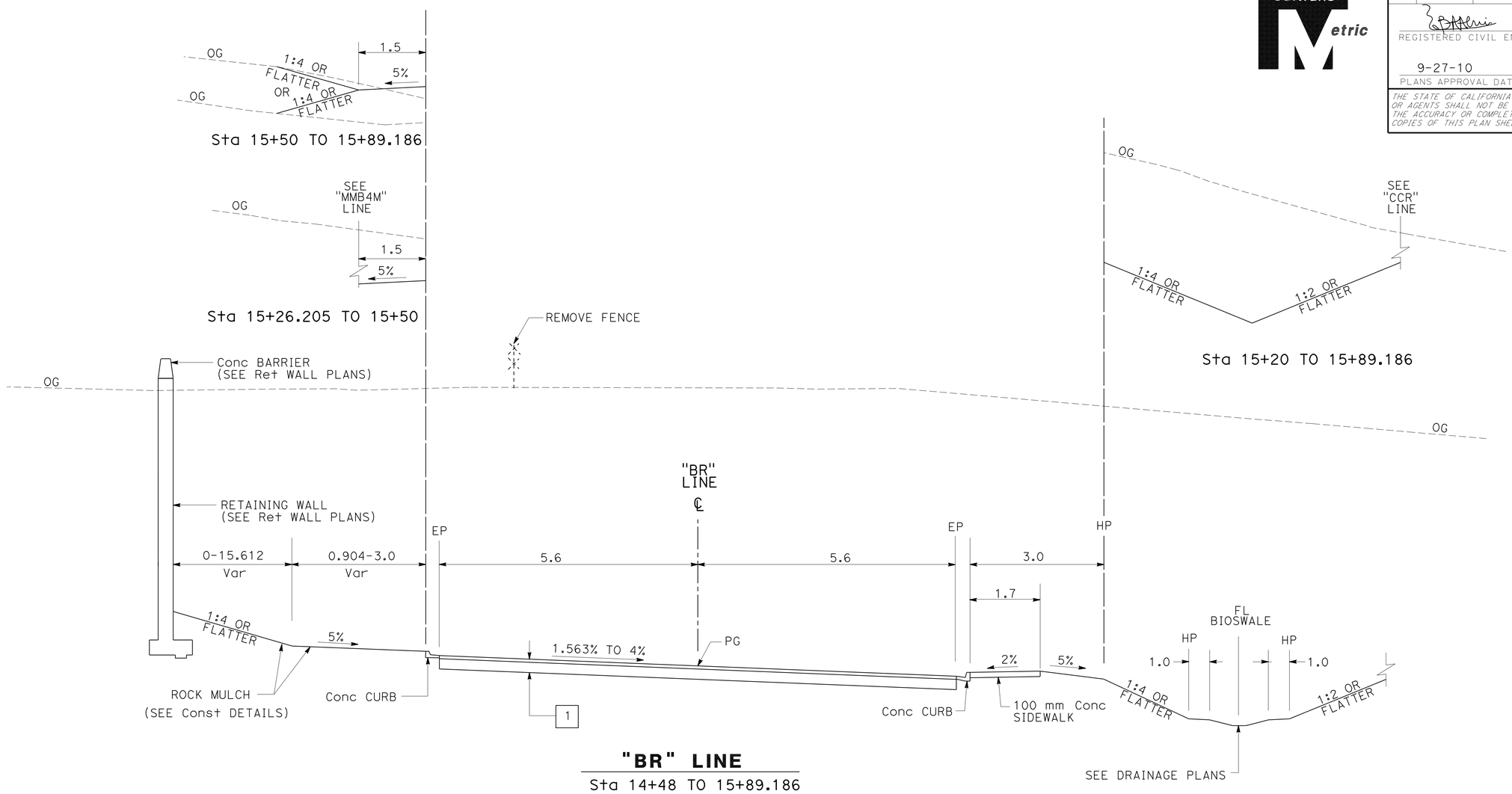

"BR" LINE
Sta 14+48 TO 15+89.186

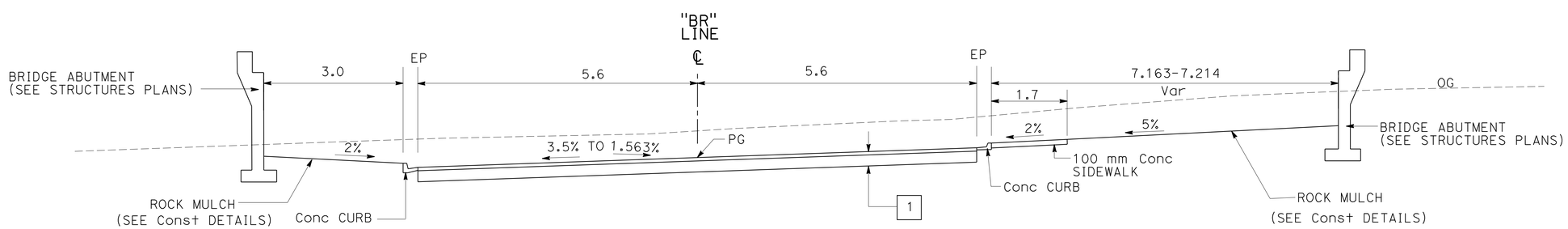

"BR" LINE
Sta 14+20.984 TO 14+48

ALL DIMENSIONS ARE IN METERS UNLESS OTHERWISE SHOWN

TYPICAL CROSS SECTIONS

NO SCALE

X-6

STATE OF CALIFORNIA - DEPARTMENT OF TRANSPORTATION
Caltrans PROJECT DEVELOPMENT

FUNCTIONAL SUPERVISOR: MAJID KHARRATI
CALCULATED-DESIGNED BY: CASEY LEWIS
CHECKED BY: SHAHBAZ A ALVI
REVISED BY / DATE REVISED

LAST REVISION 05-22-09 | DATE PLOTTED => 29-SEP-2010 | TIME PLOTTED => 13:39

Dist	COUNTY	ROUTE	KILOMETER POST TOTAL PROJECT	SHEET No.	TOTAL SHEETS
11	SD	5,805	R49.9/R51.7, 42.6/46.5	8	886

REGISTERED CIVIL ENGINEER 05-13-09 DATE

9-27-10
PLANS APPROVAL DATE

REGISTERED PROFESSIONAL ENGINEER SHAHBAZ A ALVI No. C55293 Exp. 12-31-10 CIVIL STATE OF CALIFORNIA

THE STATE OF CALIFORNIA OR ITS OFFICERS OR AGENTS SHALL NOT BE RESPONSIBLE FOR THE ACCURACY OR COMPLETENESS OF ELECTRONIC COPIES OF THIS PLAN SHEET.

Caltrans Metric

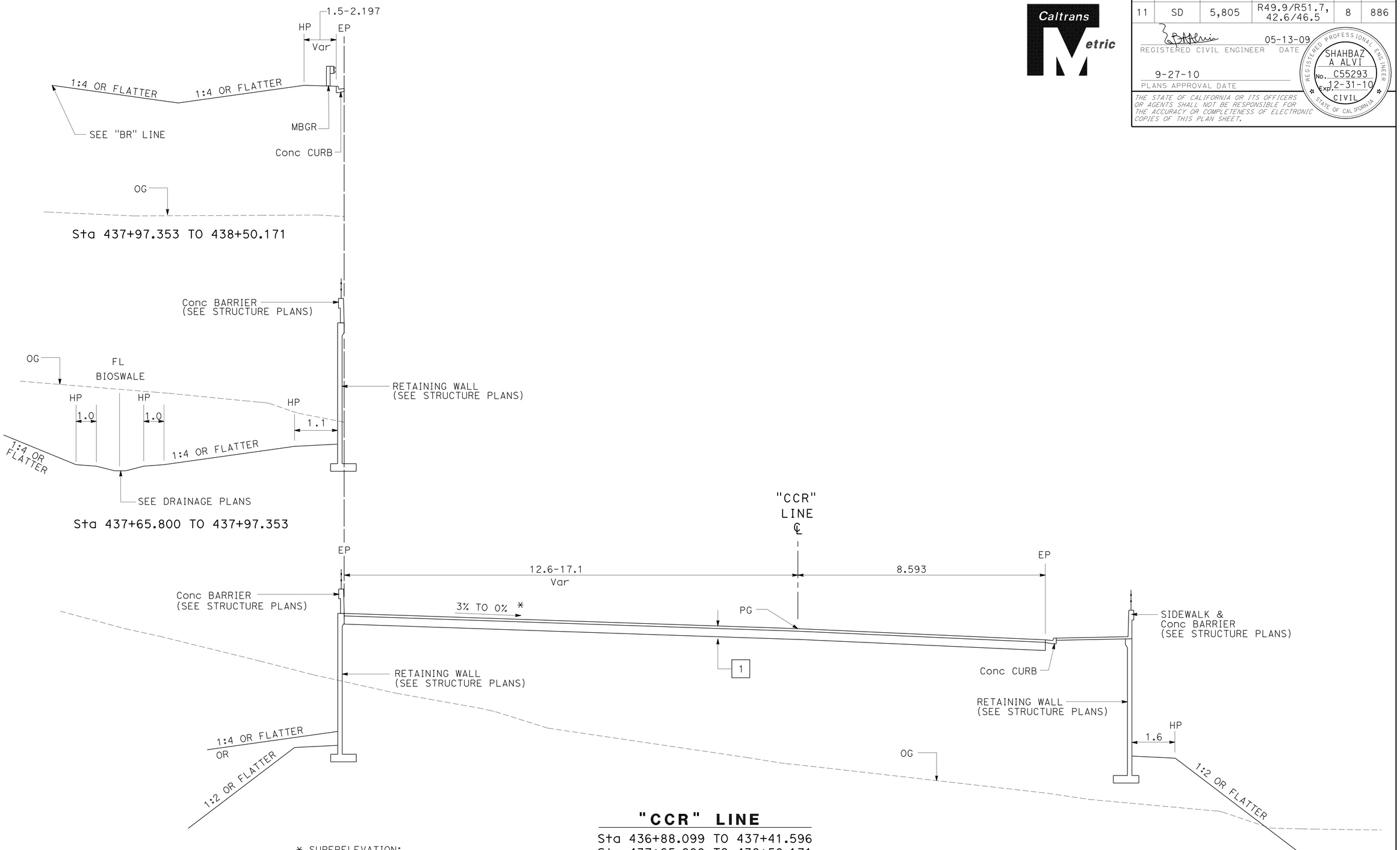

"CCR" LINE

Sta 436+88.099 TO 437+41.596
Sta 437+65.800 TO 438+50.171

* SUPERELEVATION:
0% TO 2%

Sta 438+01.122 TO 438+50.171

ALL DIMENSIONS ARE IN METERS UNLESS OTHERWISE SHOWN

TYPICAL CROSS SECTIONS

NO SCALE

X-7

STATE OF CALIFORNIA - DEPARTMENT OF TRANSPORTATION
Caltrans® PROJECT DEVELOPMENT

FUNCTIONAL SUPERVISOR: MAJID KHARRATI
CALCULATED-DESIGNED BY: CASEY LEWIS
CHECKED BY: SHAHBAZ A ALVI
REVISED BY / DATE REVISED

LAST REVISION 05-22-09
DATE PLOTTED => 23-SEP-2010
TIME PLOTTED => 13:39

Dist	COUNTY	ROUTE	KILOMETER POST TOTAL PROJECT	SHEET No.	TOTAL SHEETS
11	SD	5,805	R49.9/R51.7, 42.6/46.5	9	886

REGISTERED CIVIL ENGINEER 05-13-09 DATE

9-27-10
PLANS APPROVAL DATE

REGISTERED PROFESSIONAL ENGINEER SHAHBAZ A ALVI No. C55293 Exp. 12-31-10 CIVIL STATE OF CALIFORNIA

THE STATE OF CALIFORNIA OR ITS OFFICERS OR AGENTS SHALL NOT BE RESPONSIBLE FOR THE ACCURACY OR COMPLETENESS OF ELECTRONIC COPIES OF THIS PLAN SHEET.

Caltrans Metric

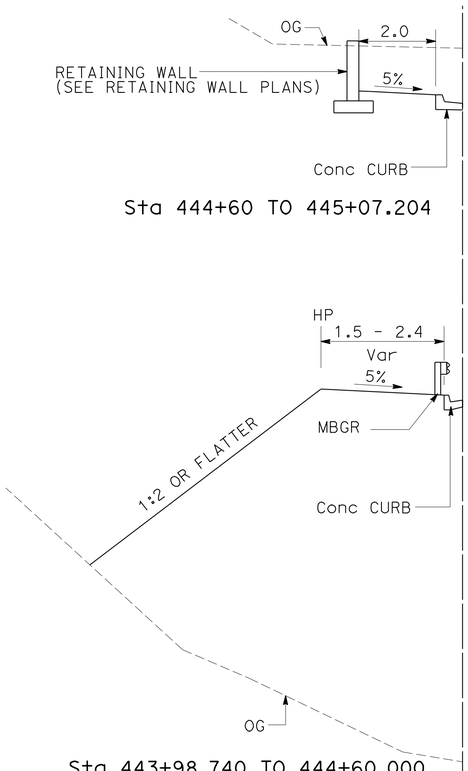

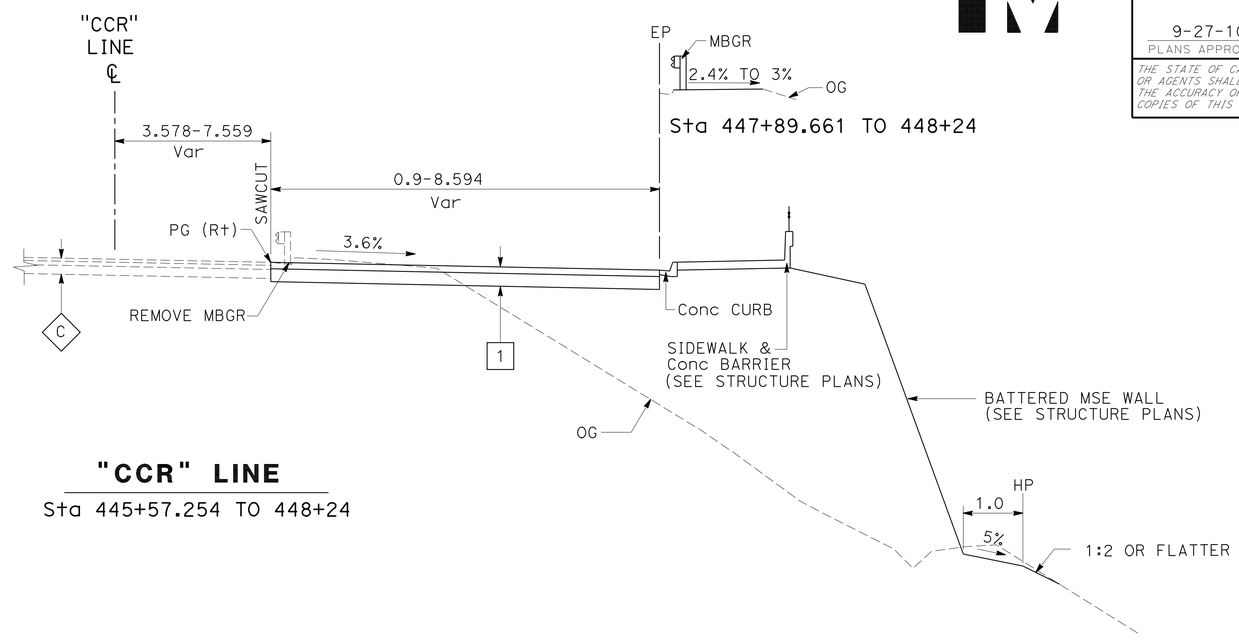

"CCR" LINE

Sta 445+57.254 TO 448+24

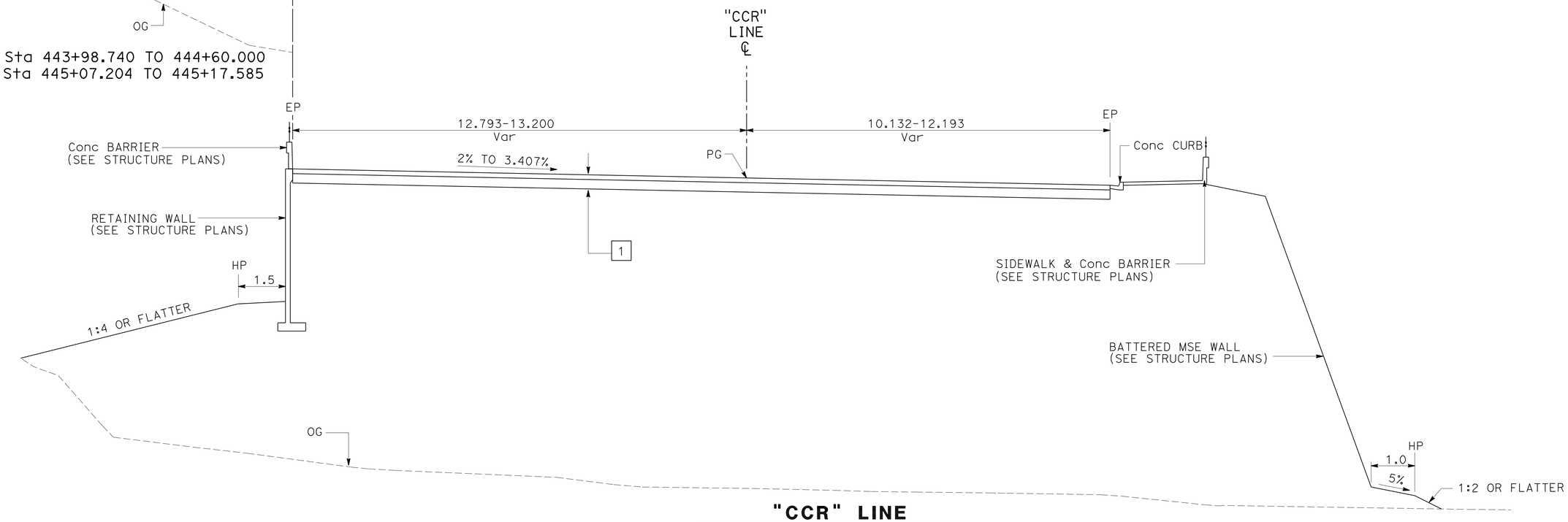

"CCR" LINE

Sta 443+82.600 TO 445+17.585

ALL DIMENSIONS ARE IN METERS UNLESS OTHERWISE SHOWN

TYPICAL CROSS SECTIONS

NO SCALE

X - 8

STATE OF CALIFORNIA - DEPARTMENT OF TRANSPORTATION
Caltrans PROJECT DEVELOPMENT

FUNCTIONAL SUPERVISOR: MAJID KHARRATI
CALCULATED-DESIGNED BY: CASEY LEWIS
CHECKED BY: SHAHBAZ A ALVI
REVISED BY / DATE REVISED

LAST REVISION 05-22-09
DATE PLOTTED => 29-SEP-2010
TIME PLOTTED => 13:39

Dist	COUNTY	ROUTE	KILOMETER POST TOTAL PROJECT	SHEET No.	TOTAL SHEETS
11	SD	5,805	R49.9/R51.7, 42.6/46.5	10	886

REGISTERED CIVIL ENGINEER 05-13-09 DATE

9-27-10
PLANS APPROVAL DATE

REGISTERED PROFESSIONAL ENGINEER SHAHBAZ A ALVI No. C55293 Exp. 12-31-10 CIVIL STATE OF CALIFORNIA

THE STATE OF CALIFORNIA OR ITS OFFICERS OR AGENTS SHALL NOT BE RESPONSIBLE FOR THE ACCURACY OR COMPLETENESS OF ELECTRONIC COPIES OF THIS PLAN SHEET.

Caltrans Metric

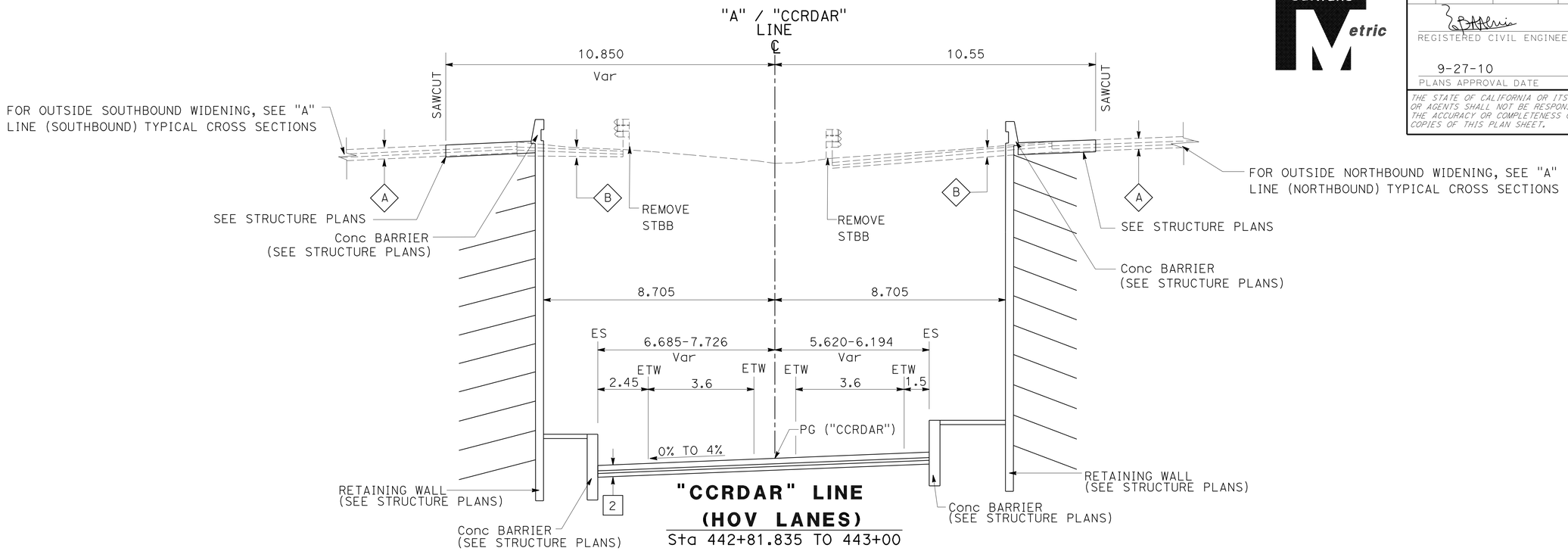

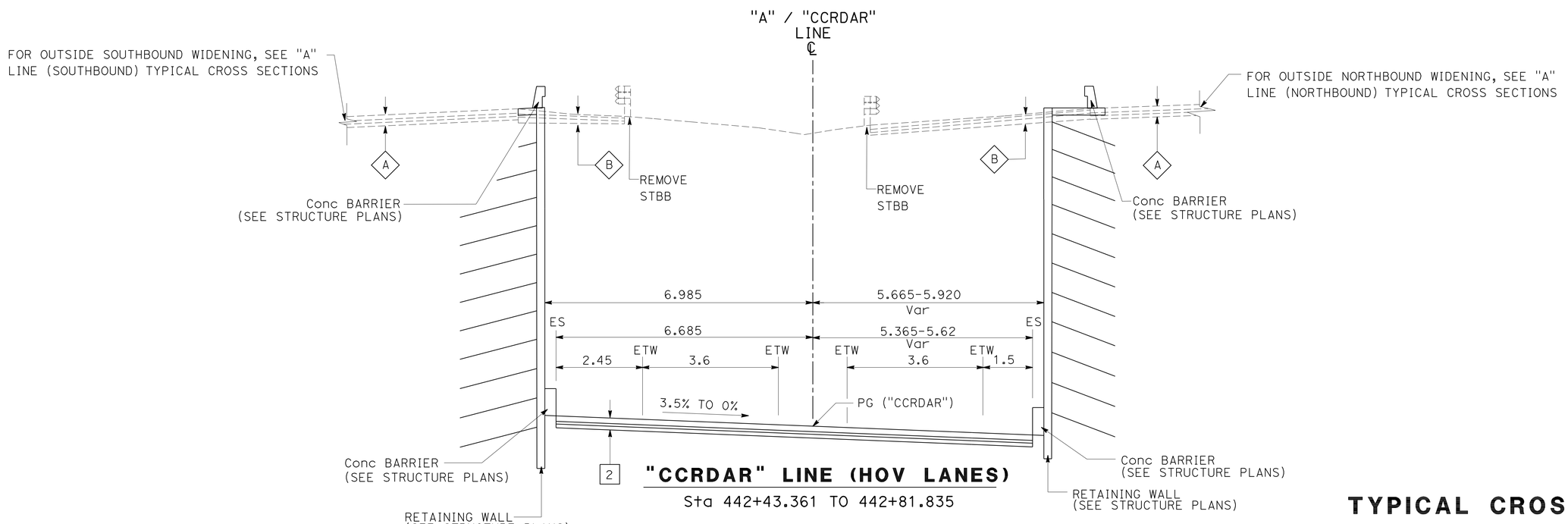

ALL DIMENSIONS ARE IN METERS UNLESS OTHERWISE SHOWN

TYPICAL CROSS SECTIONS

NO SCALE

X-9

STATE OF CALIFORNIA - DEPARTMENT OF TRANSPORTATION
Caltrans PROJECT DEVELOPMENT

FUNCTIONAL SUPERVISOR: MAJID KHARRATI
CALCULATED-DESIGNED BY: CASEY LEWIS
CHECKED BY: SHAHBAZ A ALVI
REVISED BY
DATE REVISED

LAST REVISION 05-22-09
DATE PLOTTED => 29-SEP-2010
TIME PLOTTED => 13:39

Dist	COUNTY	ROUTE	KILOMETER POST TOTAL PROJECT	SHEET No.	TOTAL SHEETS
11	SD	5,805	R49.9/R51.7, 42.6/46.5	11	886

REGISTERED CIVIL ENGINEER 05-13-09 DATE

9-27-10
PLANS APPROVAL DATE

REGISTERED PROFESSIONAL ENGINEER SHAHBAZ A ALVI No. C55293 Exp. 12-31-10 CIVIL STATE OF CALIFORNIA

THE STATE OF CALIFORNIA OR ITS OFFICERS OR AGENTS SHALL NOT BE RESPONSIBLE FOR THE ACCURACY OR COMPLETENESS OF ELECTRONIC COPIES OF THIS PLAN SHEET.

Caltrans Metric

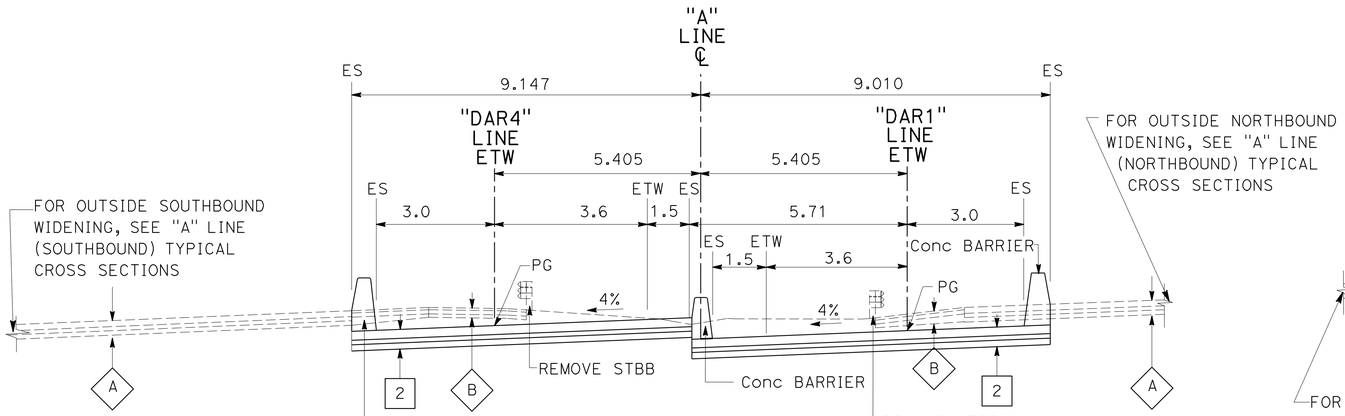

"A" LINE (HOV LANES)
Sta 444+44.007 TO 444+98

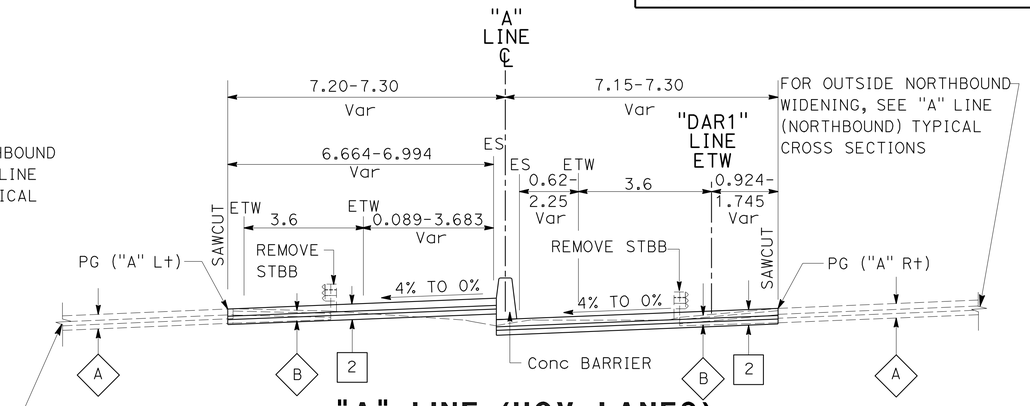

"A" LINE (HOV LANES)
Sta 445+68.862 TO 449+60

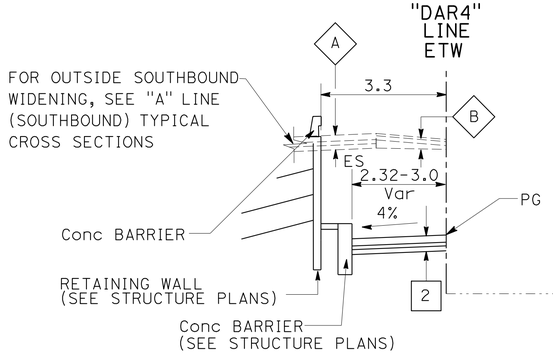

"A" LINE Sta 443+00 TO "A" LINE 443+49.820

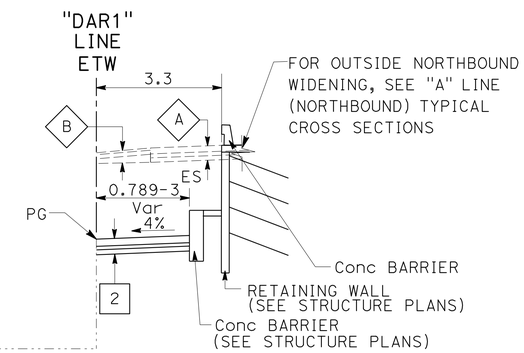

"A" LINE Sta 443+00 TO "A" LINE 443+38

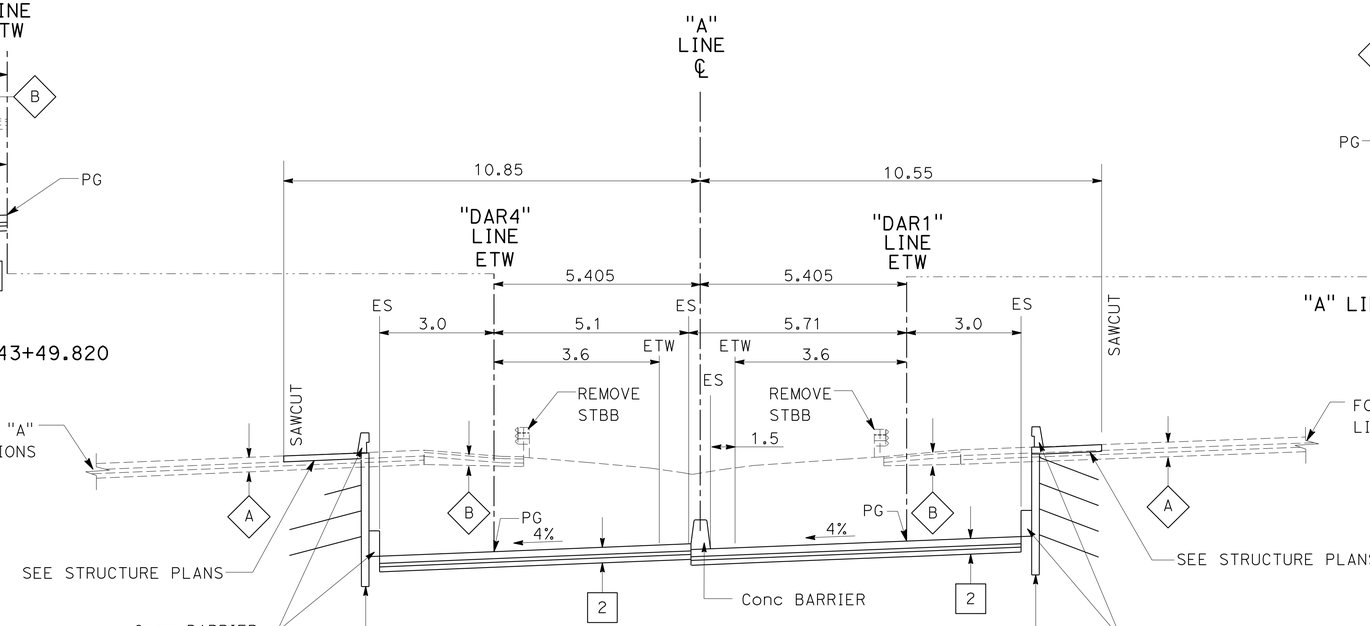

"A" LINE (HOV LANES)
Sta 443+00 TO 444+44.007

ALL DIMENSIONS ARE IN METERS UNLESS OTHERWISE SHOWN

TYPICAL CROSS SECTIONS

NO SCALE

X-10

STATE OF CALIFORNIA - DEPARTMENT OF TRANSPORTATION
Caltrans® PROJECT DEVELOPMENT

FUNCTIONAL SUPERVISOR: MAJID KHARRATI
CALCULATED-DESIGNED BY: CASEY LEWIS
CHECKED BY: SHAHBAZ A ALVI
REVISED BY / DATE REVISED

LAST REVISION 05-22-09
DATE PLOTTED => 29-SEP-2010
TIME PLOTTED => 13:39

Dist	COUNTY	ROUTE	KILOMETER POST TOTAL PROJECT	SHEET No.	TOTAL SHEETS
11	SD	5,805	R49.9/R51.7, 42.6/46.5	12	886

REGISTERED CIVIL ENGINEER 05-13-09 DATE

9-27-10
PLANS APPROVAL DATE

REGISTERED PROFESSIONAL ENGINEER SHAHBAZ A ALVI No. C55293 Exp. 12-31-10 CIVIL STATE OF CALIFORNIA

THE STATE OF CALIFORNIA OR ITS OFFICERS OR AGENTS SHALL NOT BE RESPONSIBLE FOR THE ACCURACY OR COMPLETENESS OF ELECTRONIC COPIES OF THIS PLAN SHEET.

Caltrans Metric

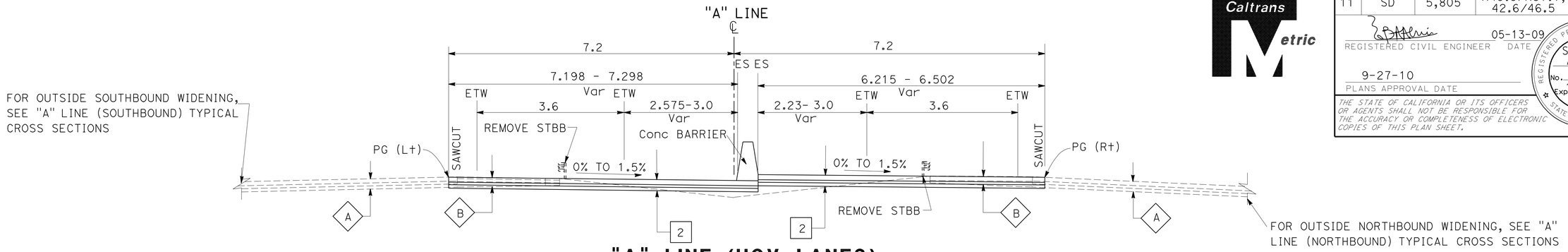

"A" LINE (HOV LANES)

Sta 464+65 TO 464+81.915

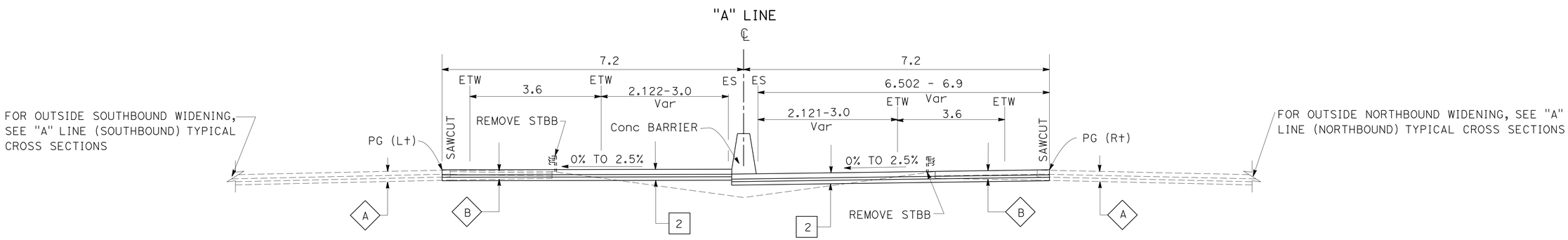

"A" LINE (HOV LANES)

Sta 457+90 TO 464+65

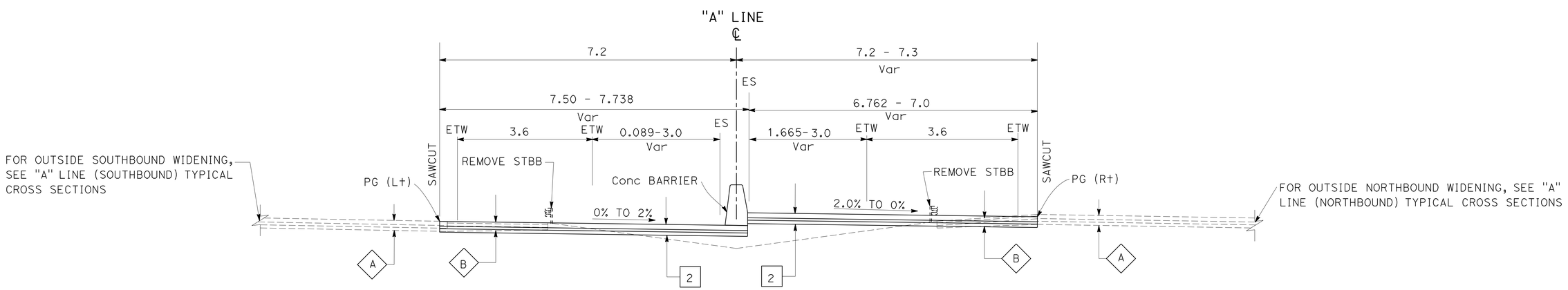

"A" LINE (HOV LANES)

Sta 449+60 TO 457+90

ALL DIMENSIONS ARE IN METERS UNLESS OTHERWISE SHOWN

TYPICAL CROSS SECTIONS

NO SCALE

X-11

REVISED BY	DATE REVISED

CALCULATED-DESIGNED BY: CASEY LEWIS
CHECKED BY: SHAHBAZ A ALVI
FUNCTIONAL SUPERVISOR: MAJID KHARRATI

STATE OF CALIFORNIA - DEPARTMENT OF TRANSPORTATION
Caltrans PROJECT DEVELOPMENT

LAST REVISION 05-22-09 DATE PLOTTED => 29-SEP-2010 TIME PLOTTED => 13:39

Dist	COUNTY	ROUTE	KILOMETER POST TOTAL PROJECT	SHEET No.	TOTAL SHEETS
11	SD	5,805	R49.9/R51.7, 42.6/46.5	13	886

REGISTERED CIVIL ENGINEER 05-13-09 DATE

9-27-10
PLANS APPROVAL DATE

REGISTERED PROFESSIONAL ENGINEER SHAHBAZ A ALVI No. C55293 Exp. 12-31-10 CIVIL STATE OF CALIFORNIA

THE STATE OF CALIFORNIA OR ITS OFFICERS OR AGENTS SHALL NOT BE RESPONSIBLE FOR THE ACCURACY OR COMPLETENESS OF ELECTRONIC COPIES OF THIS PLAN SHEET.

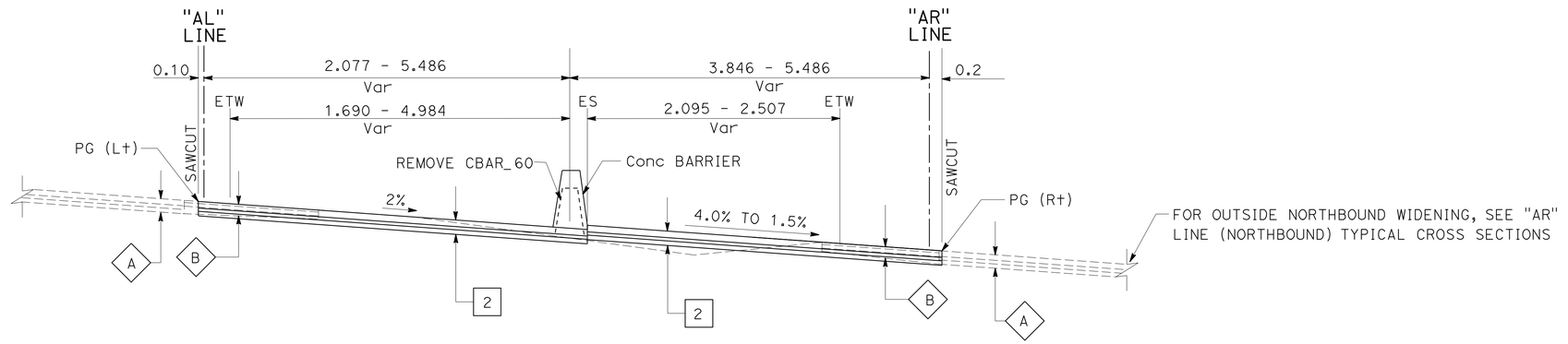

"AL" LINE (HOV LANES)

Sta 468+56.457 TO 470+34.713

"AR" LINE (HOV LANES)

Sta 468+53.500 TO 470+33.068

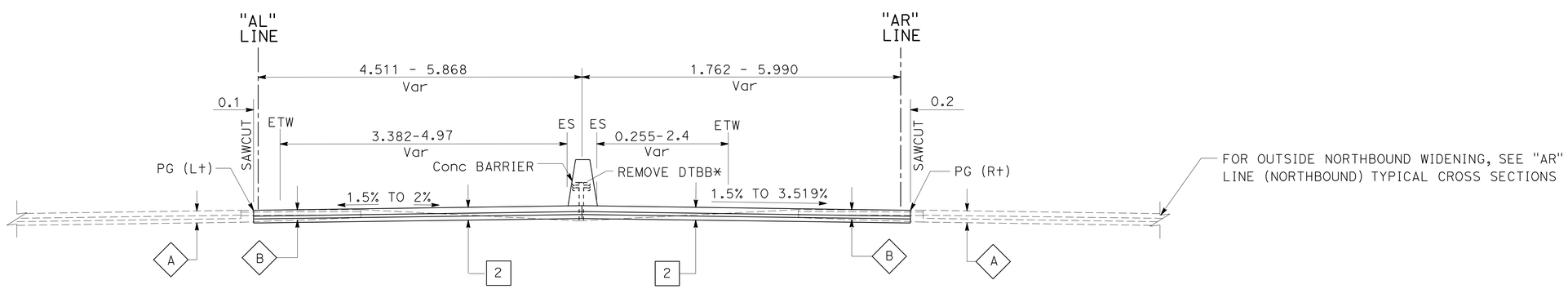

* REMOVE CBAR_60 Sta 467+41.266 TO 467+48.903
REMOVE CBAR_60E Sta 467+48.903 TO 467+31.382

"AL" LINE (HOV LANES)

Sta 465+41.882 TO 467+61.382

"AR" LINE (HOV LANES)

Sta 465+41.724 TO 467+61.417

ALL DIMENSIONS ARE IN METERS UNLESS OTHERWISE SHOWN

TYPICAL CROSS SECTIONS

NO SCALE

X-12

STATE OF CALIFORNIA - DEPARTMENT OF TRANSPORTATION
Caltrans PROJECT DEVELOPMENT

FUNCTIONAL SUPERVISOR: MAJID KHARRATI
CALCULATED-DESIGNED BY: CASEY LEWIS
CHECKED BY: SHAHBAZ A ALVI
REVISED BY / DATE REVISED

LAST REVISION 05-22-09
DATE PLOTTED => 29-SEP-2010
TIME PLOTTED => 13:39

Dist	COUNTY	ROUTE	KILOMETER POST TOTAL PROJECT	SHEET No.	TOTAL SHEETS
11	SD	5,805	R49.9/R51.7, 42.6/46.5	14	886

REGISTERED CIVIL ENGINEER 05-13-09 DATE

9-27-10
PLANS APPROVAL DATE

REGISTERED PROFESSIONAL ENGINEER SHAHBAZ A ALVI No. C55293 Exp. 12-31-10 CIVIL STATE OF CALIFORNIA

THE STATE OF CALIFORNIA OR ITS OFFICERS OR AGENTS SHALL NOT BE RESPONSIBLE FOR THE ACCURACY OR COMPLETENESS OF ELECTRONIC COPIES OF THIS PLAN SHEET.

Caltrans Metric

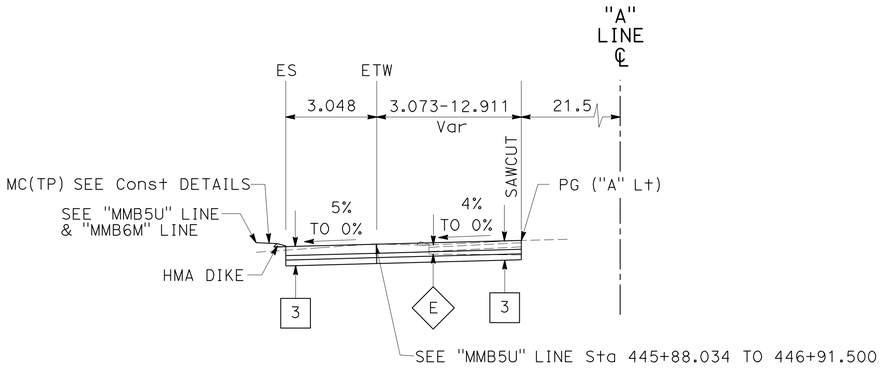

"A" LINE (SOUTHBOUND)

Sta 445+88.034 TO 449+83.509

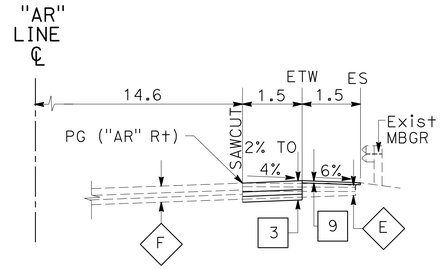

"AR" LINE (NORTHBOUND)

Sta 466+00 TO 467+70.843

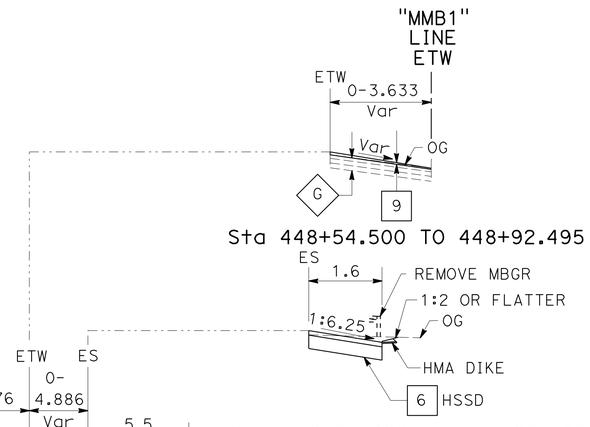

Sta 448+54.500 TO 448+92.495

Sta 446+85.229 TO 447+88.100

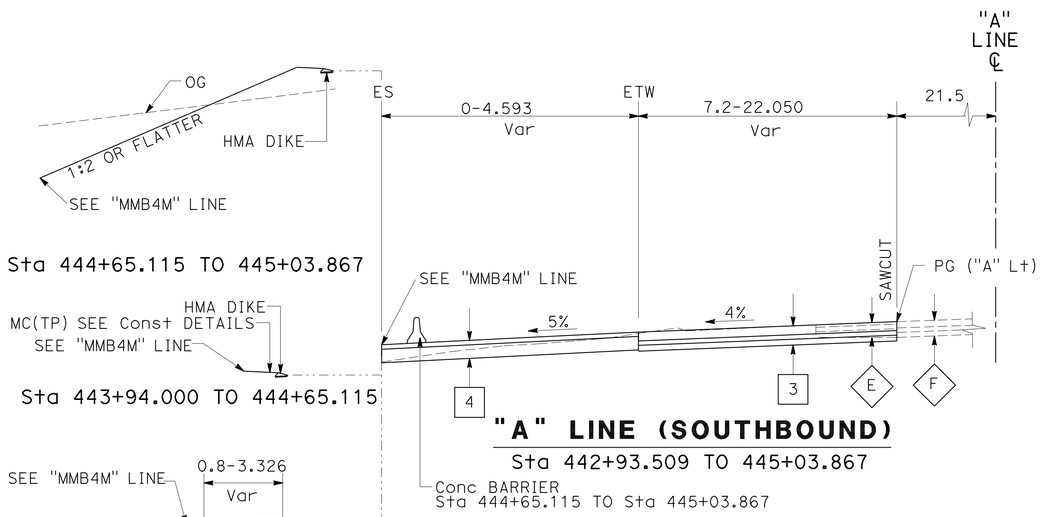

Sta 444+65.115 TO 445+03.867

Sta 443+94.000 TO 444+65.115

"A" LINE (SOUTHBOUND)

Sta 442+93.509 TO 445+03.867

Sta 443+57.183 TO 443+94.000

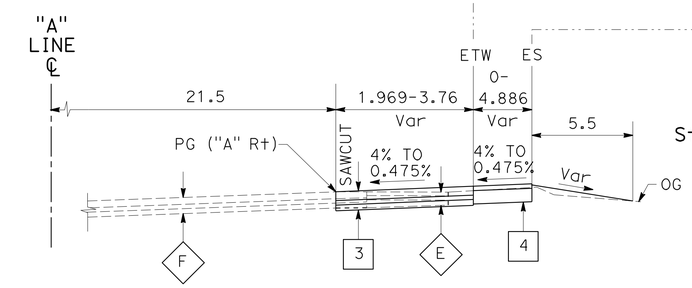

"A" LINE (NORTHBOUND)

Sta 445+56.638 TO 449+43.365

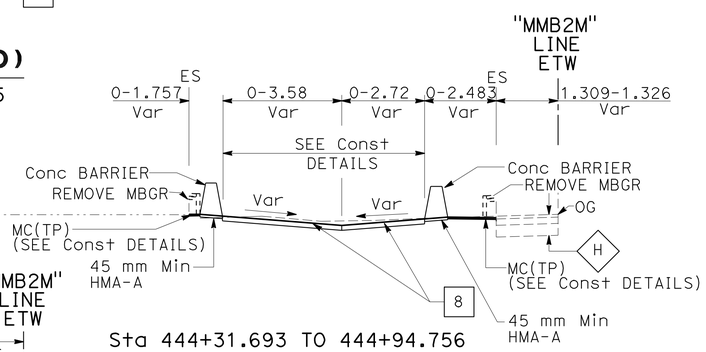

Sta 444+31.693 TO 444+94.756

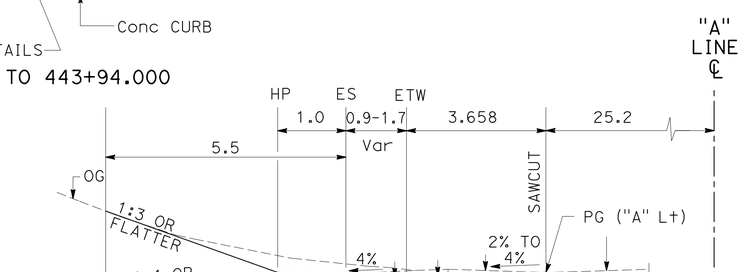

"A" LINE (SOUTHBOUND)

Sta 437+43 TO 440+20

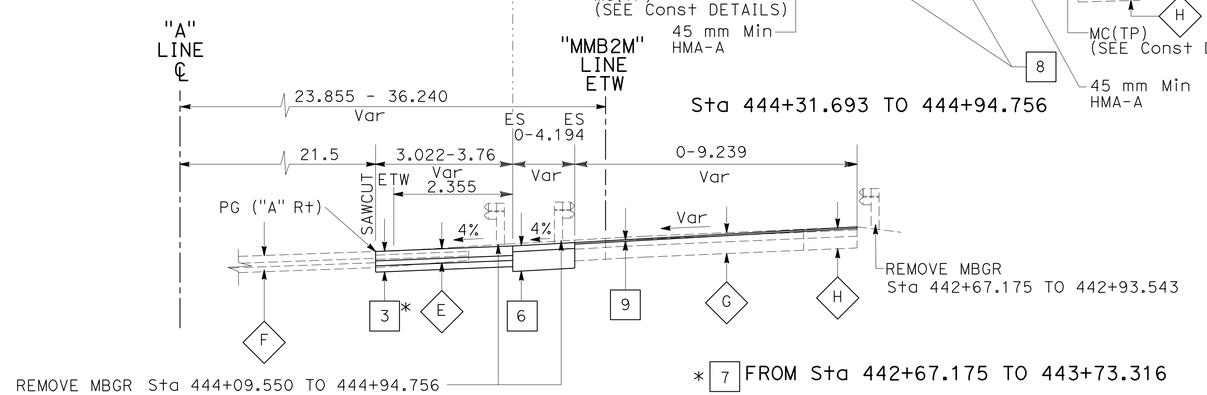

"A" LINE (NORTHBOUND)

Sta 442+67.175 TO 444+94.756

ALL DIMENSIONS ARE IN METERS UNLESS OTHERWISE SHOWN

TYPICAL CROSS SECTIONS

NO SCALE

X-13

STATE OF CALIFORNIA - DEPARTMENT OF TRANSPORTATION
Caltrans PROJECT DEVELOPMENT

FUNCTIONAL SUPERVISOR: MAJID KHARRATI
CALCULATED-DESIGNED BY: CASEY LEWIS
CHECKED BY: SHAHBAZ A ALVI
REVISED BY / DATE REVISED

LAST REVISION 05-22-09 | DATE PLOTTED => 23-SEP-2010 | TIME PLOTTED => 13:39

Dist	COUNTY	ROUTE	POST MILES TOTAL PROJECT	SHEET No.	TOTAL SHEETS
11	SD	5,805	R49.9/R51.7, 42.6/46.5	15	886

REGISTERED CIVIL ENGINEER 05-20-09 DATE

9-27-10
PLANS APPROVAL DATE

REGISTERED PROFESSIONAL ENGINEER
SHAHBAZ A ALVI
No. 55293
Exp. 12-31-10
CIVIL
STATE OF CALIFORNIA

THE STATE OF CALIFORNIA OR ITS OFFICERS OR AGENTS SHALL NOT BE RESPONSIBLE FOR THE ACCURACY OR COMPLETENESS OF SCANNED COPIES OF THIS PLAN SHEET.

Caltrans Metric

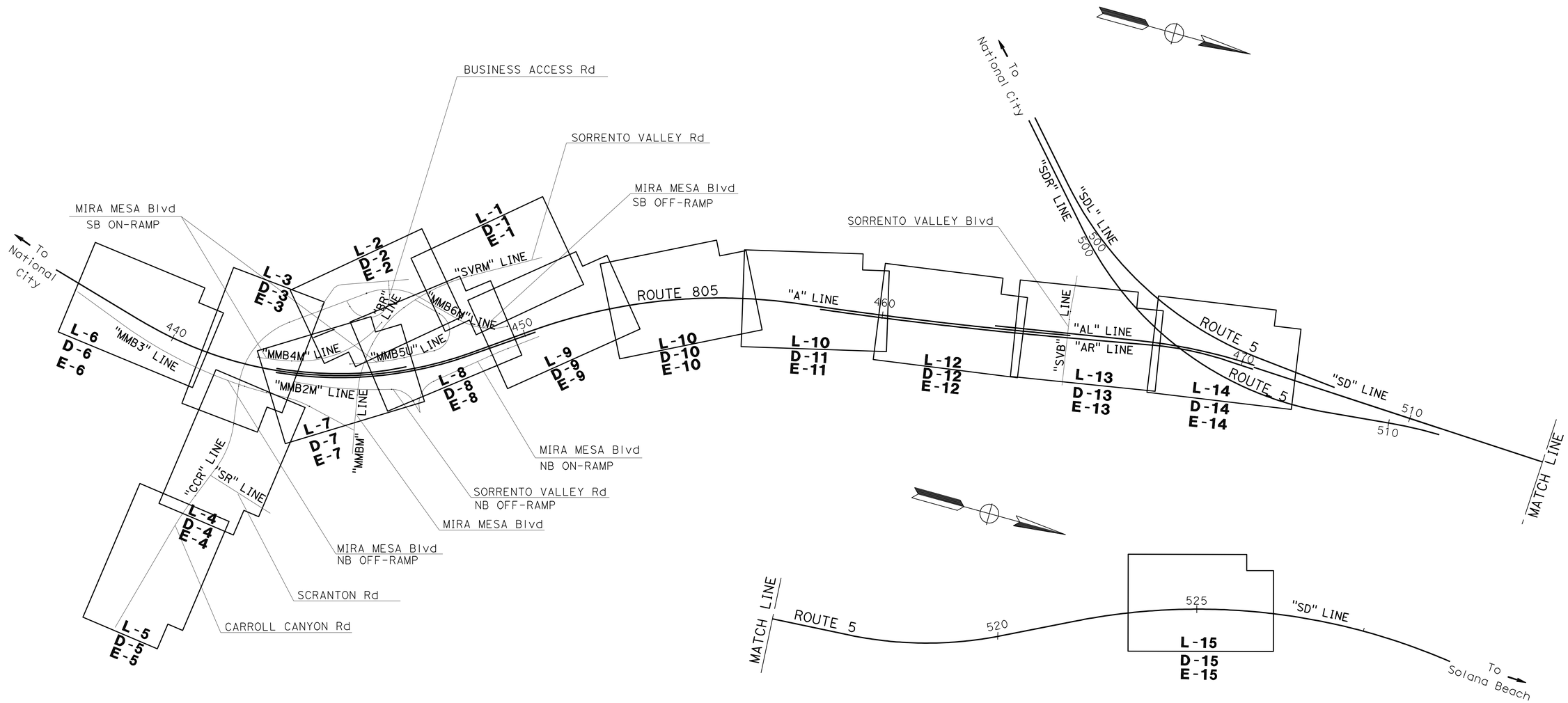

KEY MAP AND LINE INDEX

NO SCALE

K-1

ALL DIMENSIONS ARE IN METERS UNLESS OTHERWISE SHOWN

STATE OF CALIFORNIA - DEPARTMENT OF TRANSPORTATION
Caltrans PROJECT DEVELOPMENT

FUNCTIONAL SUPERVISOR: MAJID KHARRATI

CALCULATED-DESIGNED BY: ALI A ABUDIAB
CHECKED BY: SHAHBAZ A ALVI

REVISED BY
DATE REVISED

LAST REVISION 05-26-09
DATE PLOTTED => 29-SEP-2010
TIME PLOTTED => 13:40

Dist	COUNTY	ROUTE	KILOMETER POST TOTAL PROJECT	SHEET No.	TOTAL SHEETS
11	SD	5,805	R49.9/R51.7, 42.6/46.5	16	886

REGISTERED CIVIL ENGINEER 5-15-09 DATE

9-27-10
PLANS APPROVAL DATE

REGISTERED PROFESSIONAL ENGINEER THANH D BUI No. C 64571 Exp. 6-30-11 CIVIL STATE OF CALIFORNIA

THE STATE OF CALIFORNIA OR ITS OFFICERS OR AGENTS SHALL NOT BE RESPONSIBLE FOR THE ACCURACY OR COMPLETENESS OF ELECTRONIC COPIES OF THIS PLAN SHEET.

Caltrans Metric

NOTE:

1. FOR COMPLETE RIGHT OF WAY AND ACCURATE ACCESS DATA, SEE RIGHT OF WAY RECORD MAPS AT DISTRICT OFFICE.
2. SEE CONSTRUCTION DETAIL SHEETS FOR ADDITIONAL INFORMATION ON CURB RAMPS AND GORE AREAS.

CURVE DATA

No.	R	Δ	T	L
1	540.000	16°31'35"	78.423	155.758

LEGEND:

- CURVE DATA NUMBER
- MBGR (SEE SUMMARY OF QUANTITY SHEETS FOR DETAILS)
- STRUCTURAL SECTION SEE TYPICAL CROSS SECTION SHEETS FOR STRUCTURAL SECTION TYPES
- ROCK MULCH (SEE Const DETAILS)
- ROCK BLANKET (SEE Const DETAILS)
- Temp Const EASEMENT
- MINOR CONCRETE (TEXTURED PAVING) (SEE Const DETAILS)
- REMOVE CONCRETE
- ESA — ENVIRONMENTALLY SENSITIVE AREA
- CITY PERMANENT EASEMENT
- Exist Irr CROSSOVER
- TFESA — Temp FENCE (TYPE ESA)
- AREA FOR CONTRACTOR'S USE (YARD AREA)
- AREA FOR CONTRACTOR'S USE (PLANT SITE)

ABBREVIATIONS:

I/C - IRRIGATION CROSSOVER
AI/C - ABANDON IRRIGATION CROSSOVER
HMAOSD - HMA OVERSIDE DRAIN
ESA - ENVIRONMENTALLY SENSITIVE AREA
HMAD_xx - HMA DIKE_TYPE
CC_xx - CONCRETE CURB_TYPE (SEE Const DETAILS FOR NON-STANDARD CURBS)
CBAR_xx - CONCRETE BARRIER_TYPE
HSSD - HIGH SIDE OF SUPERELEVATION DITCH

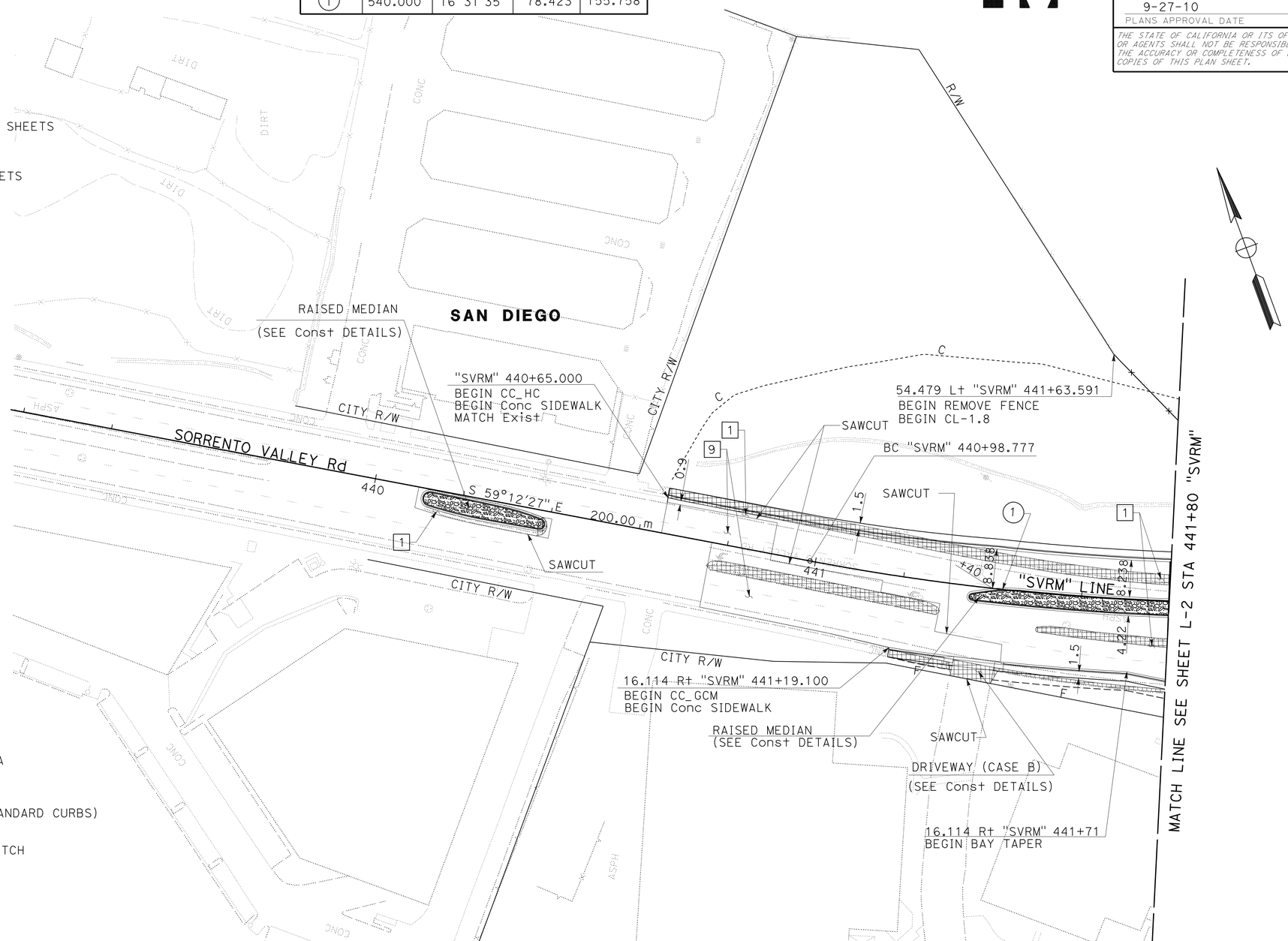

ALL DIMENSIONS ARE IN METERS UNLESS OTHERWISE SHOWN

SCALE 1:500

LAYOUT L-1

STATE OF CALIFORNIA - DEPARTMENT OF TRANSPORTATION
Caltrans PROJECT DEVELOPMENT

FUNCTIONAL SUPERVISOR: MAJID KHARRATI
CALCULATED-DESIGNED BY: SHAHBAZ A. ALVI
CHECKED BY: THANH BUI
REVISED BY / DATE REVISED

LAST REVISION 05-25-09
DATE PLOTTED => 29-SEP-2010
TIME PLOTTED => 13:40

Dist	COUNTY	ROUTE	KILOMETER POST TOTAL PROJECT	SHEET No.	TOTAL SHEETS
11	SD	5,805	R49.9/R51.7, 42.6/46.5	17	886

REGISTERED CIVIL ENGINEER 5-15-09 DATE

9-27-10
PLANS APPROVAL DATE

REGISTERED PROFESSIONAL ENGINEER THANH D BUI No. C 64571 Exp. 6-30-11 CIVIL STATE OF CALIFORNIA

THE STATE OF CALIFORNIA OR ITS OFFICERS OR AGENTS SHALL NOT BE RESPONSIBLE FOR THE ACCURACY OR COMPLETENESS OF ELECTRONIC COPIES OF THIS PLAN SHEET.

Caltrans Metric

NOTE:

1. FOR COMPLETE RIGHT OF WAY AND ACCURATE ACCESS DATA, SEE RIGHT OF WAY RECORD MAPS AT DISTRICT OFFICE.

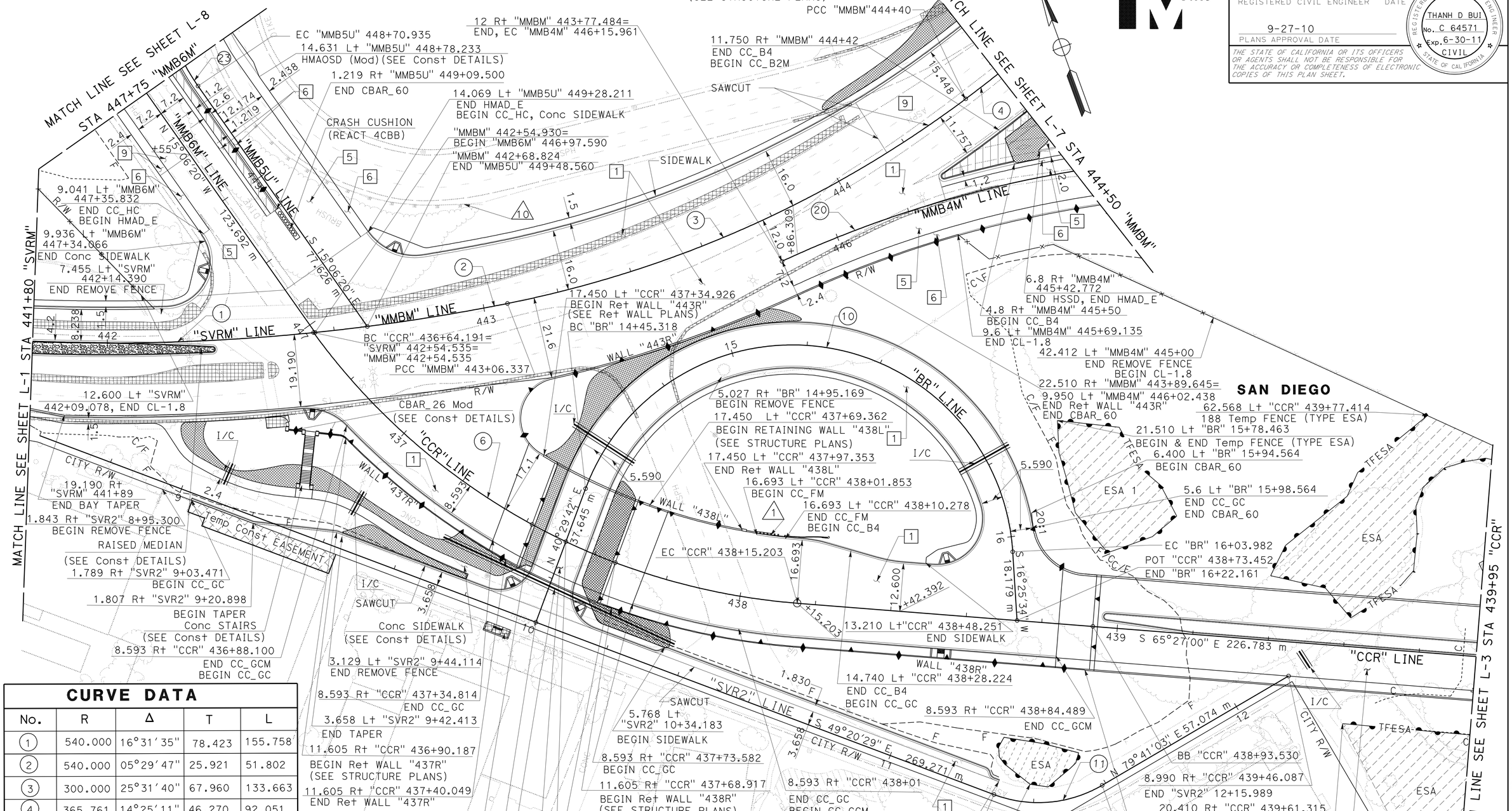

CURVE DATA

No.	R	Δ	T	L
1	540.000	16°31′35″	78.423	155.758
2	540.000	05°29′47″	25.921	51.802
3	300.000	25°31′40″	67.960	133.663
4	365.761	14°25′11″	46.270	92.051
6	175.000	49°26′31″	80.569	151.012
10	58.300	155°55′51″	273.470	158.664
11	33.321	50°58′28″	15.884	29.645
20	300.000	53°25′33″	150.969	279.737
23	55.000	137°15′47″	140.571	131.763

ALL DIMENSIONS ARE IN METERS UNLESS OTHERWISE SHOWN

SCALE 1:500

LAYOUT L-2

REVISED BY	DATE REVISED
THANH BUI	SHAHBAZ A. ALVI
CALCULATED-DESIGNED BY	CHECKED BY
FUNCTIONAL SUPERVISOR	MAJID KHARRATI

STATE OF CALIFORNIA - DEPARTMENT OF TRANSPORTATION
Caltrans PROJECT DEVELOPMENT

LAST REVISION 05-25-09 DATE PLOTTED => 29-SEP-2010 TIME PLOTTED => 13:40

Dist	COUNTY	ROUTE	KILOMETER POST TOTAL PROJECT	SHEET No.	TOTAL SHEETS
11	SD	5,805	R49.9/R51.7, 42.6/46.5	18	886

5-15-09
REGISTERED CIVIL ENGINEER DATE

9-27-10
PLANS APPROVAL DATE

REGISTERED PROFESSIONAL ENGINEER THANH D BUI No. C 64571 Exp. 6-30-11 CIVIL STATE OF CALIFORNIA

THE STATE OF CALIFORNIA OR ITS OFFICERS OR AGENTS SHALL NOT BE RESPONSIBLE FOR THE ACCURACY OR COMPLETENESS OF ELECTRONIC COPIES OF THIS PLAN SHEET.

Caltrans Metric

NOTE:

1. FOR COMPLETE RIGHT OF WAY AND ACCURATE ACCESS DATA, SEE RIGHT OF WAY RECORD MAPS AT DISTRICT OFFICE.

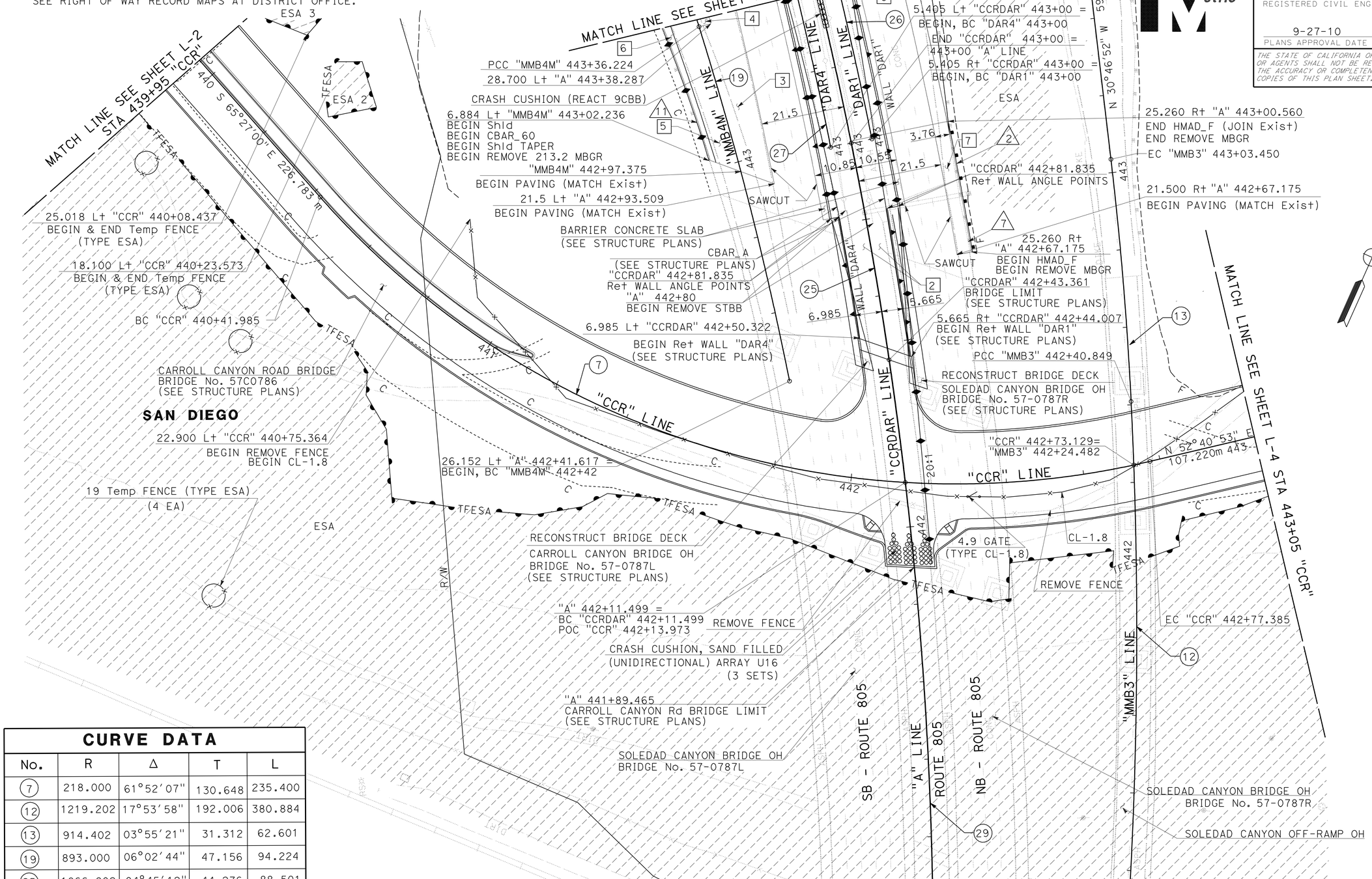

CURVE DATA

No.	R	Δ	T	L
7	218.000	61°52'07"	130.648	235.400
12	1219.202	17°53'58"	192.006	380.884
13	914.402	03°55'21"	31.312	62.601
19	893.000	06°02'44"	47.156	94.224
25	1066.802	04°45'12"	44.276	88.501
26	1072.206	28°53'32"	276.215	540.673
27	1061.397	11°08'58"	103.599	206.544
29	1066.802	51°00'06"	508.858	949.611

ALL DIMENSIONS ARE IN METERS UNLESS OTHERWISE SHOWN

SCALE 1:500

LAYOUT L-3

STATE OF CALIFORNIA - DEPARTMENT OF TRANSPORTATION
Caltrans PROJECT DEVELOPMENT

FUNCTIONAL SUPERVISOR: MAJID KHARRATI
CALCULATED-DESIGNED BY: THANH BUI
CHECKED BY: SHAHBAZ A. ALVI
REVISED BY / DATE REVISED

LAST REVISION 04-14-10
DATE PLOTTED => 29-SEP-2010
TIME PLOTTED => 13:40

NOTE:

1. FOR COMPLETE RIGHT OF WAY AND ACCURATE ACCESS DATA, SEE RIGHT OF WAY RECORD MAPS AT DISTRICT OFFICE.

Dist	COUNTY	ROUTE	KILOMETER POST TOTAL PROJECT	SHEET No.	TOTAL SHEETS
11	SD	5,805	R49.9/R51.7, 42.6/46.5	19	886

REGISTERED CIVIL ENGINEER 5-15-09 DATE

9-27-10
PLANS APPROVAL DATE

REGISTERED PROFESSIONAL ENGINEER THANH D BUI No. C 64571 Exp. 6-30-11 CIVIL STATE OF CALIFORNIA

THE STATE OF CALIFORNIA OR ITS OFFICERS OR AGENTS SHALL NOT BE RESPONSIBLE FOR THE ACCURACY OR COMPLETENESS OF ELECTRONIC COPIES OF THIS PLAN SHEET.

Caltrans Metric

CURVE DATA

No.	R	Δ	T	L
8	260.000	29°19′28″	68.026	133.070
9	1100.000	6°30′30″	62.543	124.951

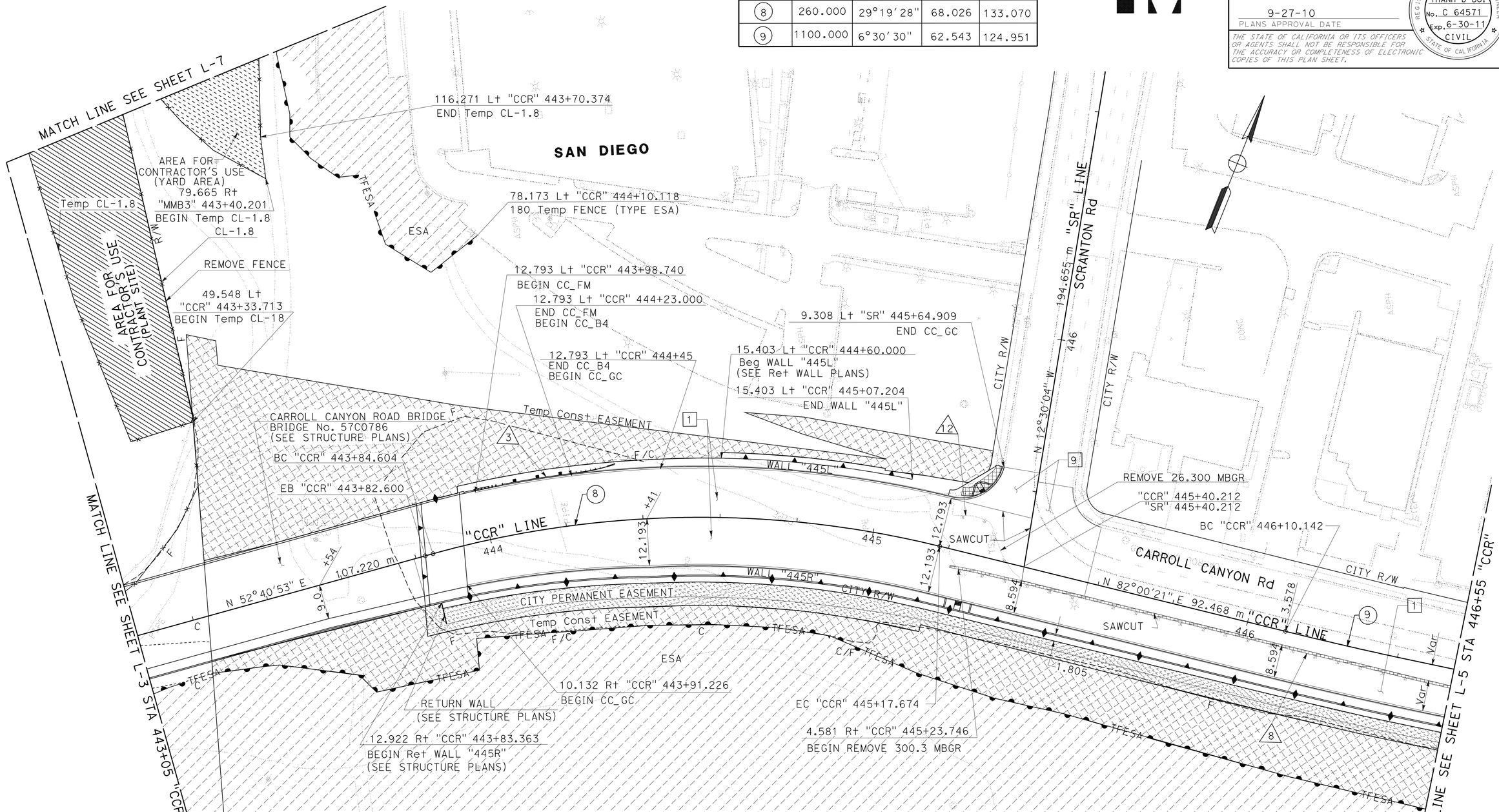

LAYOUT L-4

SCALE 1:500

ALL DIMENSIONS ARE IN METERS UNLESS OTHERWISE SHOWN

STATE OF CALIFORNIA - DEPARTMENT OF TRANSPORTATION
Caltrans PROJECT DEVELOPMENT

FUNCTIONAL SUPERVISOR: MAJID KHARRATI
CALCULATED-DESIGNED BY: THANH BUI
CHECKED BY: SHAHBAZ A. ALVI
REVISED BY / DATE REVISED

LAST REVISION 05-25-09 | DATE PLOTTED => 29-SEP-2010 | TIME PLOTTED => 13:40

NOTE:

1. FOR COMPLETE RIGHT OF WAY AND ACCURATE ACCESS DATA, SEE RIGHT OF WAY RECORD MAPS AT DISTRICT OFFICE.

CURVE DATA				
No.	R	Δ	T	L
9	1100.000	06°30'30"	62.543	124.951

Dist	COUNTY	ROUTE	KILOMETER POST TOTAL PROJECT	SHEET No.	TOTAL SHEETS
11	SD	5,805	R49.9/R51.7, 42.6/46.5	20	886

5-15-09
REGISTERED CIVIL ENGINEER DATE

9-27-10
PLANS APPROVAL DATE

REGISTERED PROFESSIONAL ENGINEER THANH D BUI No. C 64571 Exp. 6-30-11 CIVIL STATE OF CALIFORNIA

THE STATE OF CALIFORNIA OR ITS OFFICERS OR AGENTS SHALL NOT BE RESPONSIBLE FOR THE ACCURACY OR COMPLETENESS OF ELECTRONIC COPIES OF THIS PLAN SHEET.

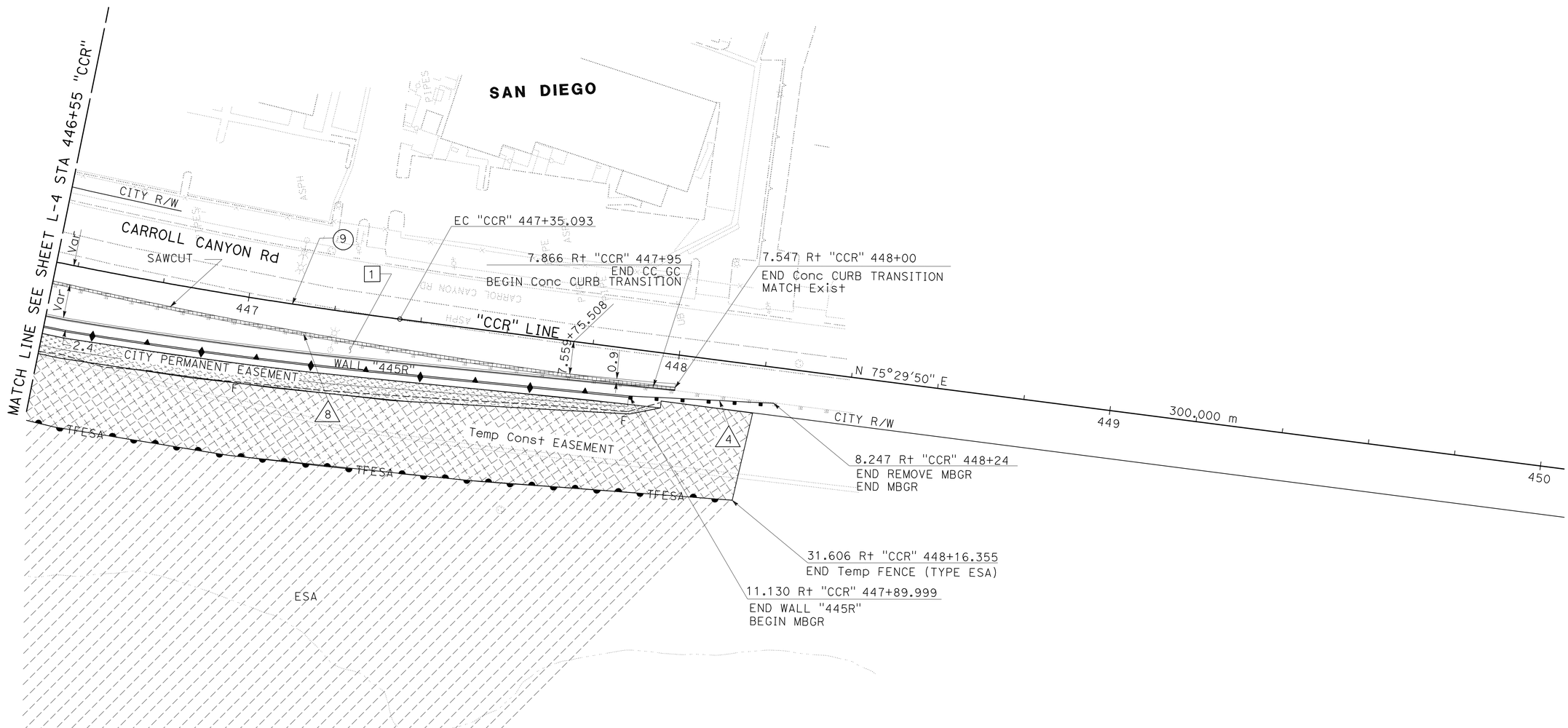

ALL DIMENSIONS ARE IN METERS UNLESS OTHERWISE SHOWN

SCALE 1:500

LAYOUT L-5

STATE OF CALIFORNIA - DEPARTMENT OF TRANSPORTATION
Caltrans PROJECT DEVELOPMENT

FUNCTIONAL SUPERVISOR: MAJID KHARRATI
CALCULATED-DESIGNED BY: THANH BUI
CHECKED BY: SHAHBAZ A. ALVI
REVISED BY / DATE REVISED

LAST REVISION 05-25-09 | DATE PLOTTED => 29-SEP-2010 | TIME PLOTTED => 13:40

BORDER LAST REVISED 3/1/2007 | RELATIVE BORDER SCALE IS IN MILLIMETERS 0 20 40 60 80 | USERNAME => trstrk | DGN FILE => b2t040ea005.dgn | CU 11275 | EA 2T0401

Dist	COUNTY	ROUTE	KILOMETER POST TOTAL PROJECT	SHEET No.	TOTAL SHEETS
11	SD	5,805	R49.9/R51.7, 42.6/46.5	21	886

REGISTERED CIVIL ENGINEER 5-15-09 DATE

9-27-10
PLANS APPROVAL DATE

REGISTERED PROFESSIONAL ENGINEER THANH D BUI No. C 64571 Exp. 6-30-11 CIVIL STATE OF CALIFORNIA

THE STATE OF CALIFORNIA OR ITS OFFICERS OR AGENTS SHALL NOT BE RESPONSIBLE FOR THE ACCURACY OR COMPLETENESS OF ELECTRONIC COPIES OF THIS PLAN SHEET.

Caltrans Metric

NOTE:

1. FOR COMPLETE RIGHT OF WAY AND ACCURATE ACCESS DATA, SEE RIGHT OF WAY RECORD MAPS AT DISTRICT OFFICE.

CURVE DATA

No.	R	Δ	T	L
12	1219.202	17°53'58"	192.006	380.884
29	1066.802	51°00'06"	508.858	949.611

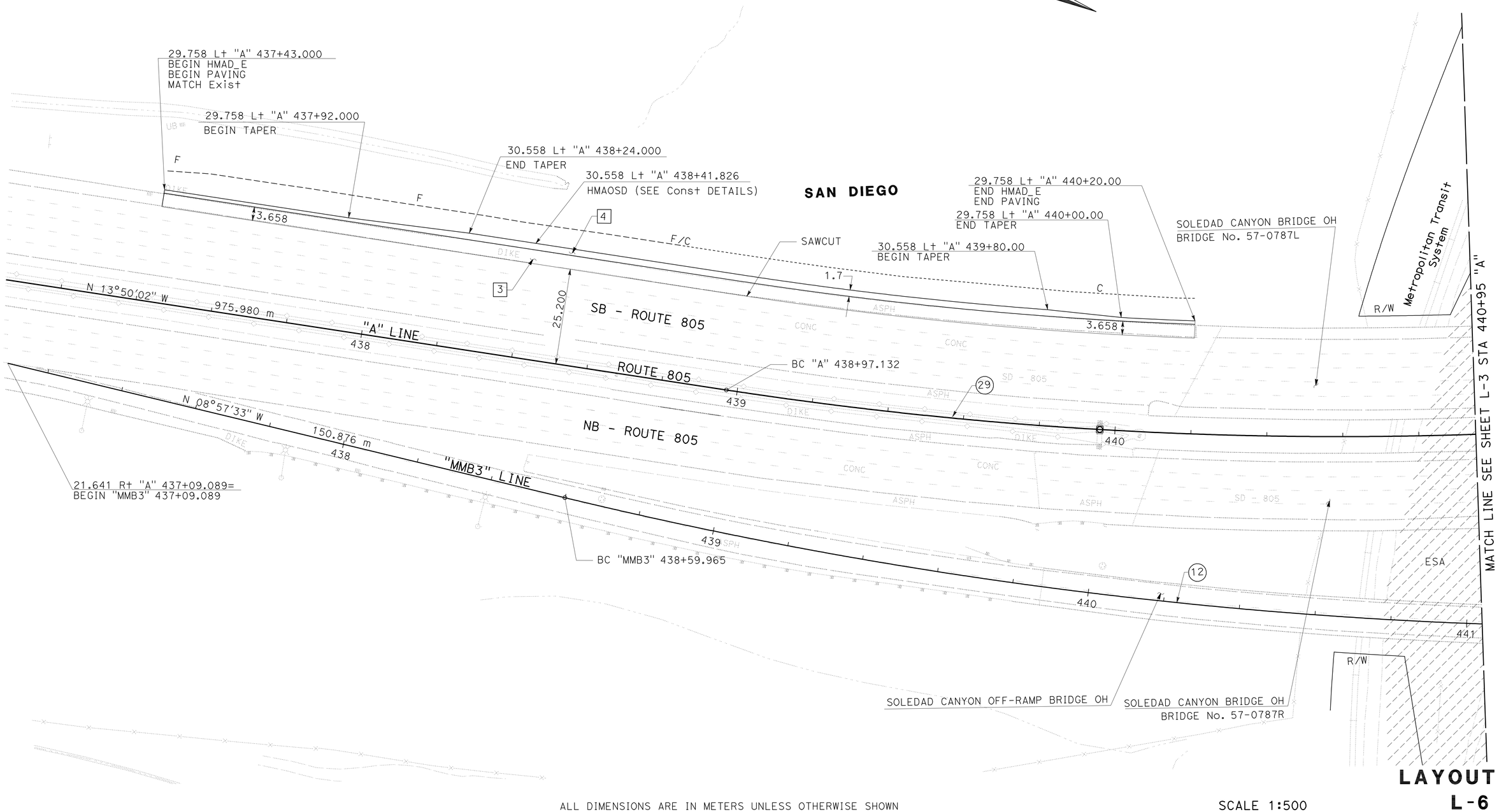

ALL DIMENSIONS ARE IN METERS UNLESS OTHERWISE SHOWN

SCALE 1:500

LAYOUT L-6

STATE OF CALIFORNIA - DEPARTMENT OF TRANSPORTATION
Caltrans PROJECT DEVELOPMENT

FUNCTIONAL SUPERVISOR: MAJID KHARRATI
CALCULATED-DESIGNED BY: THANH BUI
CHECKED BY: SHAHBAZ A. ALVI
REVISED BY / DATE REVISED

LAST REVISION 05-27-09
DATE PLOTTED => 29-SEP-2010
TIME PLOTTED => 13:40

Dist	COUNTY	ROUTE	KILOMETER POST TOTAL PROJECT	SHEET No.	TOTAL SHEETS
11	SD	5,805	R49.9/R51.7, 42.6/46.5	22	886

REGISTERED CIVIL ENGINEER 5-15-09 DATE

9-27-10
PLANS APPROVAL DATE

REGISTERED PROFESSIONAL ENGINEER THANH D BUI No. C 64571 Exp. 6-30-11 CIVIL STATE OF CALIFORNIA

THE STATE OF CALIFORNIA OR ITS OFFICERS OR AGENTS SHALL NOT BE RESPONSIBLE FOR THE ACCURACY OR COMPLETENESS OF ELECTRONIC COPIES OF THIS PLAN SHEET.

Caltrans Metric

NOTE:

1. FOR COMPLETE RIGHT OF WAY AND ACCURATE ACCESS DATA, SEE RIGHT OF WAY RECORD MAPS AT DISTRICT OFFICE.

CURVE DATA

No.	R	Δ	T	L
4	365.761	14°25'11"	46.270	92.051
5	365.761	08°40'49"	27.759	55.413
14	262.129	14°07'50"	32.489	64.647
15	1088.443	12°24'04"	118.255	235.585
20	300.000	53°25'33"	150.969	279.737
21	1280.171	04°06'00"	45.824	91.608
26	1072.206	28°53'32"	276.215	540.673
27	1061.397	11°08'58"	103.599	206.544
28	825.345	10°31'37"	76.034	151.641
29	1066.802	51°00'06"	508.858	949.611

DETAIL NOTES:

NOTE-01: 10.811 Lt "MMB5U" 445+85.700
BEGIN HMAD_F

NOTE-02: "MMB5U" 445+93.300
END HMAD_F
BEGIN HMAD_C

NOTE-03: 18.912 Lt "MMBM" 444+86.781
END Rt WALL "446L"

NOTE-04: 15.448 Lt "MMBM" 445+06.993
END SIDE WALK, END CC_HC
MATCH Exist

NOTE-05: 11.910 Rt "MMBM" 444+80
END CC_B2M
MATCH Exist

NOTE-06: 16.650 Rt "MMBM" 444+87.479
REMOVE 19.500 MBGR

NOTE-07: 39.385 Lt "A" 444+65.115
END HMAD_E
BEGIN Conc BARRIER (TYPE K)
BEGIN HMAD_A

NOTE-08: 43.550 Lt "A" 445+15.779
END Conc BARRIER (TYPE K)
END HMAD_A

NOTE-09: 3.3 Lt "DAR4" 444+44.007
END WALL "DAR4"
END 10.850 SAW CUT
BEGIN CBAR_60C
BEGIN 9.147 SAW CUT

NOTE-10: 8.405 Rt "A" 444+88.544
END CBAR_60C

NOTE-11: BARRIER CONCRETE SLAB
(SEE STRUCTURE PLANS)

NOTE-12: BEGIN "MMB5U" 445+03.820 =
31.793 Lt "A" 445+03.819

NOTE-13: "A" 444+96.362
END CBAR_60C

NOTE-14: "A" 445+68.862
BEGIN CBAR_60C

NOTE-15: 26.855 Rt "A" 445+98.637
END Shld TAPER

NOTE-16: "A" 444+99.459
END REMOVE STBB

NOTE-17: "A" 445+66.294
BEGIN REMOVE STBB

NOTE-18: "A" 444+75.200
BEGIN REMOVE STBB

NOTE-19: 7.300 Lt "A" 445+71.128
BEGIN PAVING

NOTE-20: 7.150 Rt "A" 445+65.434
BEGIN PAVING

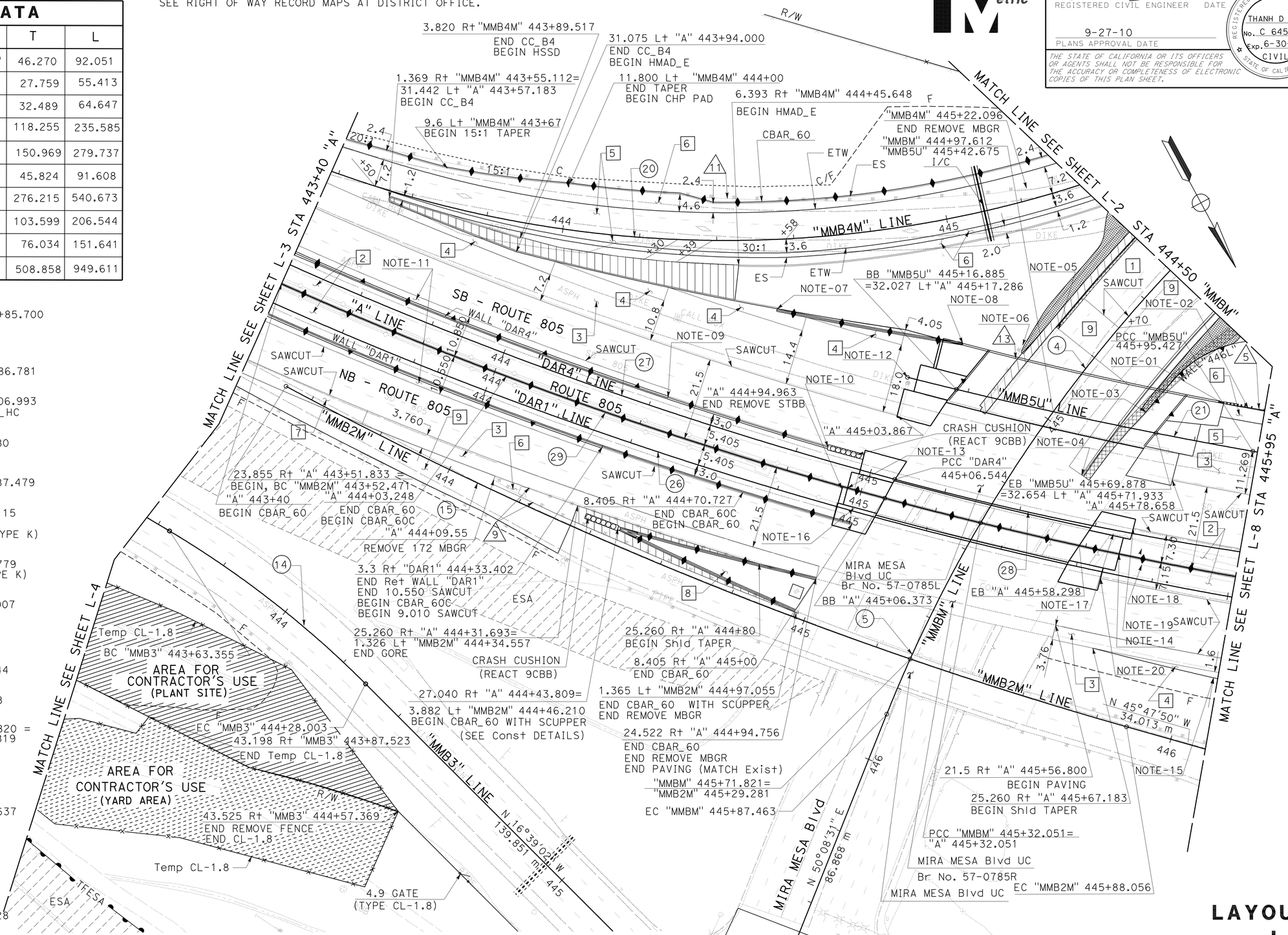

ALL DIMENSIONS ARE IN METERS UNLESS OTHERWISE SHOWN

SCALE 1:500

LAYOUT L-7

REVISED BY	DATE REVISED
THANH BUI	SHAHBAZ A. ALVI

CALCULATED-DESIGNED BY THANH BUI
CHECKED BY SHAHBAZ A. ALVI

FUNCTIONAL SUPERVISOR MAJID KHARRATI

STATE OF CALIFORNIA - DEPARTMENT OF TRANSPORTATION
Caltrans PROJECT DEVELOPMENT

LAST REVISION 05-25-09
DATE PLOTTED => 29-SEP-2010
TIME PLOTTED => 13:41

Dist	COUNTY	ROUTE	KILOMETER POST TOTAL PROJECT	SHEET No.	TOTAL SHEETS
11	SD	5,805	R49.9/R51.7, 42.6/46.5	23	886

REGISTERED CIVIL ENGINEER 5-15-09 DATE

9-27-10
PLANS APPROVAL DATE

REGISTERED PROFESSIONAL ENGINEER SHAHBAZ A ALVI No. C 55293 Exp. 12-31-10 CIVIL STATE OF CALIFORNIA

THE STATE OF CALIFORNIA OR ITS OFFICERS OR AGENTS SHALL NOT BE RESPONSIBLE FOR THE ACCURACY OR COMPLETENESS OF ELECTRONIC COPIES OF THIS PLAN SHEET.

Caltrans Metric

NOTES:

FOR COMPLETE RIGHT OF WAY AND ACCURATE ACCESS DATA, SEE RIGHT OF WAY RECORD MAPS AT DISTRICT OFFICE.

CURVE DATA

No.	R	Δ	T	L
16	68.580	59°39'31"	39.323	71.408
17	68.580	77°02'19"	54.589	92.211
18	914.402	03°11'29"	25.473	50.932
22	537.223	03°15'03"	29.225	58.393
23	55.000	137°15'47"	140.571	131.763
24	182.880	43°31'15"	73.000	138.913
26	1072.206	28°53'32"	276.215	540.673
28	825.345	10°31'37"	76.034	151.641
29	1066.802	51°00'06"	508.858	949.611

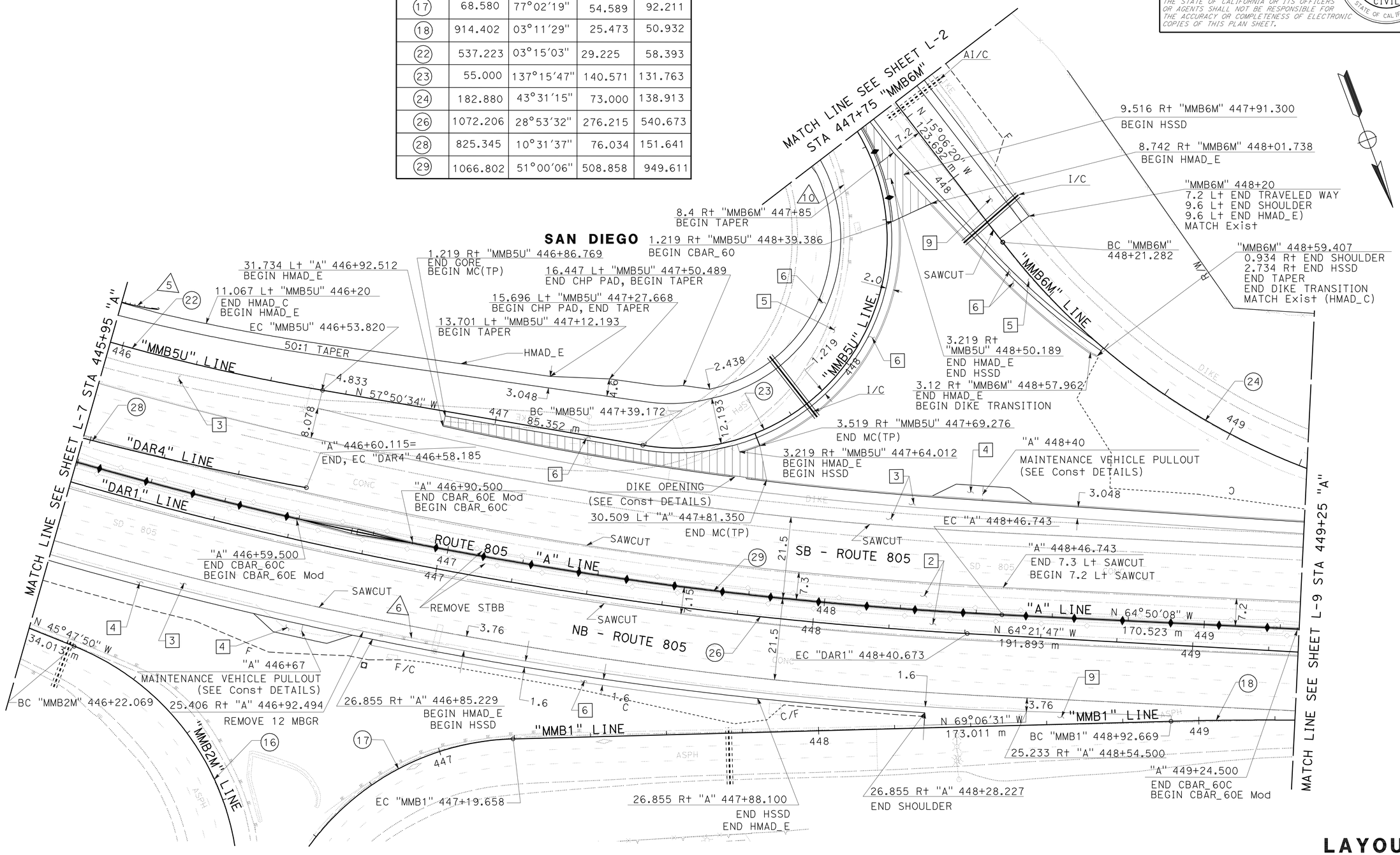

ALL DIMENSIONS ARE IN METERS UNLESS OTHERWISE SHOWN

SCALE 1:500

LAYOUT L-8

STATE OF CALIFORNIA - DEPARTMENT OF TRANSPORTATION
Caltrans PROJECT DEVELOPMENT

FUNCTIONAL SUPERVISOR MAJID KHARRATI
CALCULATED-DESIGNED BY THANH BUI
CHECKED BY SHAHBAZ A. ALVI
REVISED BY
DATE REVISED

LAST REVISION 05-25-09 DATE PLOTTED => 29-SEP-2010 TIME PLOTTED => 13:41

Dist	COUNTY	ROUTE	KILOMETER POST TOTAL PROJECT	SHEET No.	TOTAL SHEETS
11	SD	5,805	R49.9/R51.7, 42.6/46.5	24	886

REGISTERED CIVIL ENGINEER 5-15-09 DATE

9-27-10
PLANS APPROVAL DATE

REGISTERED PROFESSIONAL ENGINEER SHAHBAZ A ALVI No. C 55293 Exp. 12-31-10 CIVIL STATE OF CALIFORNIA

THE STATE OF CALIFORNIA OR ITS OFFICERS OR AGENTS SHALL NOT BE RESPONSIBLE FOR THE ACCURACY OR COMPLETENESS OF ELECTRONIC COPIES OF THIS PLAN SHEET.

Caltrans Metric

NOTES:

FOR COMPLETE RIGHT OF WAY AND ACCURATE ACCESS DATA, SEE RIGHT OF WAY RECORD MAPS AT DISTRICT OFFICE.

CURVE DATA

No.	R	Δ	T	L
18	914.402	03°11'29"	25.473	50.932
24	182.880	43°31'15"	73.000	138.913
30	1524.003	28°08'03"	381.873	748.337

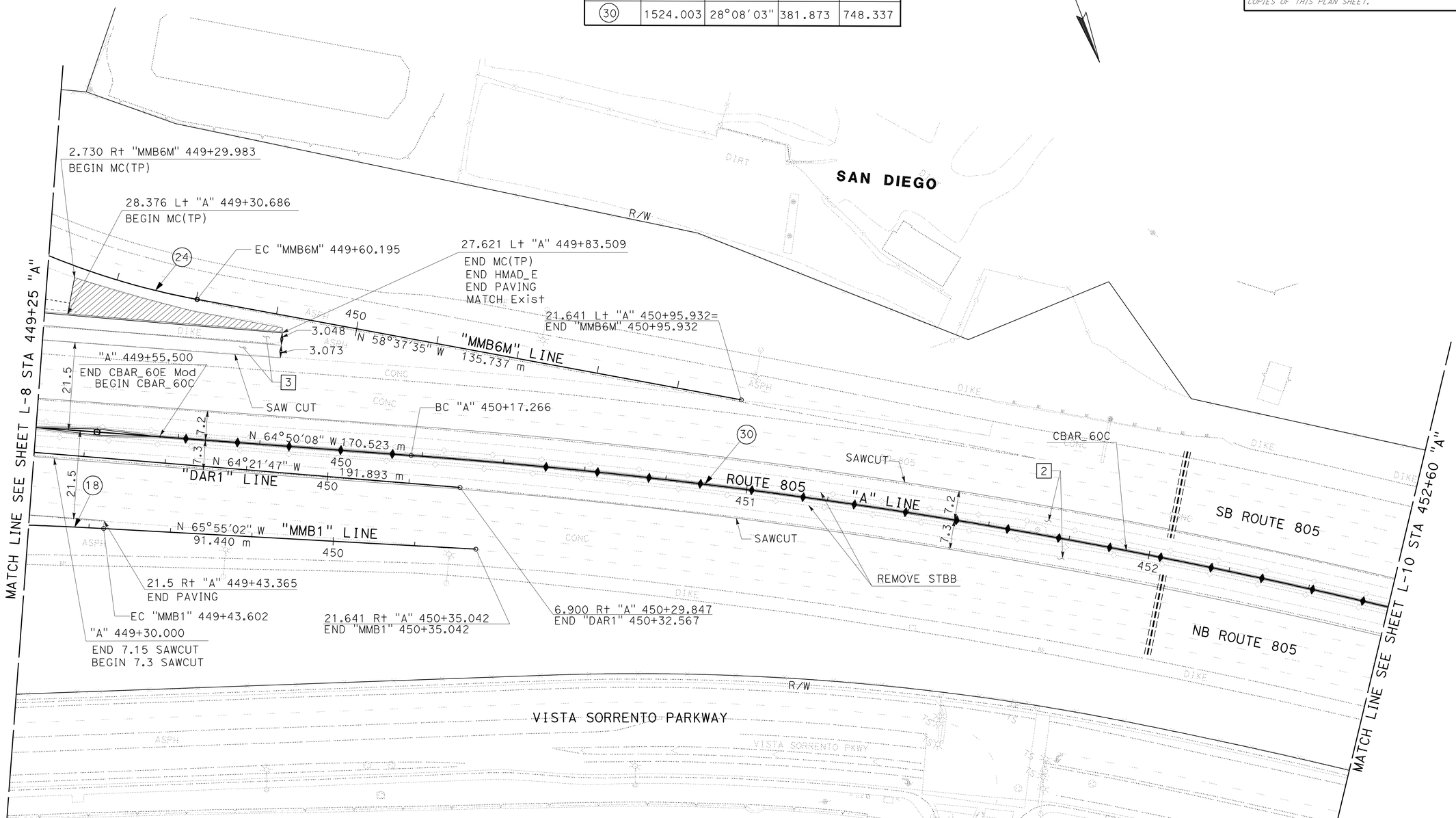

ALL DIMENSIONS ARE IN METERS UNLESS OTHERWISE SHOWN

SCALE 1:500

LAYOUT L-9

REVISED BY	DATE REVISED
THANH BUI	SHAHBAZ A. ALVI

CALCULATED-DESIGNED BY / CHECKED BY

FUNCTIONAL SUPERVISOR: MAJID KHARRATI

STATE OF CALIFORNIA - DEPARTMENT OF TRANSPORTATION
Caltrans PROJECT DEVELOPMENT

LAST REVISION 05-25-09 | DATE PLOTTED => 29-SEP-2010 | TIME PLOTTED => 13:41

Dist	COUNTY	ROUTE	KILOMETER POST TOTAL PROJECT	SHEET No.	TOTAL SHEETS
11	SD	5,805	R49.9/R51.7, 42.6/46.5	25	886

REGISTERED CIVIL ENGINEER 5-15-09 DATE

9-27-10
PLANS APPROVAL DATE

REGISTERED PROFESSIONAL ENGINEER SHAHBAZ A ALVI No. C 55293 Exp. 12-31-10 CIVIL STATE OF CALIFORNIA

THE STATE OF CALIFORNIA OR ITS OFFICERS OR AGENTS SHALL NOT BE RESPONSIBLE FOR THE ACCURACY OR COMPLETENESS OF ELECTRONIC COPIES OF THIS PLAN SHEET.

Caltrans Metric

NOTES:

FOR COMPLETE RIGHT OF WAY AND ACCURATE ACCESS DATA, SEE RIGHT OF WAY RECORD MAPS AT DISTRICT OFFICE.

CURVE DATA

No.	R	Δ	L	T
30	1524.003	28°08'03"	381.873	748.337

SAN DIEGO

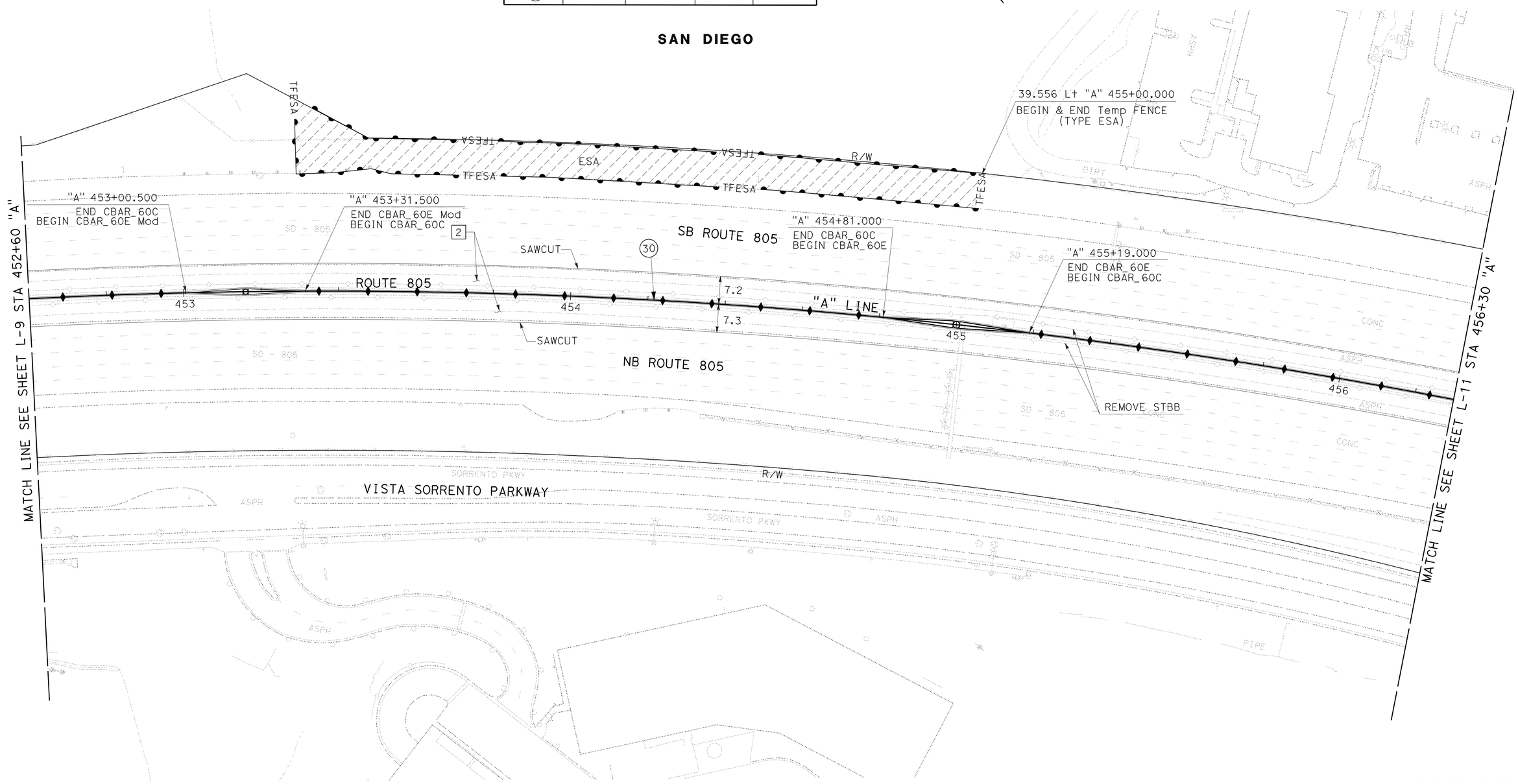

ALL DIMENSIONS ARE IN METERS UNLESS OTHERWISE SHOWN

SCALE 1:500

LAYOUT L-10

STATE OF CALIFORNIA - DEPARTMENT OF TRANSPORTATION
Caltrans PROJECT DEVELOPMENT

FUNCTIONAL SUPERVISOR: MAJID KHARRATI
CALCULATED-DESIGNED BY: SHAHBAZ A. ALVI
CHECKED BY: THANH BUI
REVISED BY / DATE REVISED

LAST REVISION 04-14-10
DATE PLOTTED => 29-SEP-2010
TIME PLOTTED => 13:41

Dist	COUNTY	ROUTE	KILOMETER POST TOTAL PROJECT	SHEET No.	TOTAL SHEETS
11	SD	5,805	R49.9/R51.7, 42.6/46.5	26	886

REGISTERED CIVIL ENGINEER 5-15-09 DATE

9-27-10
PLANS APPROVAL DATE

REGISTERED PROFESSIONAL ENGINEER SHAHBAZ A ALVI No. C 55293 Exp. 12-31-10 CIVIL STATE OF CALIFORNIA

THE STATE OF CALIFORNIA OR ITS OFFICERS OR AGENTS SHALL NOT BE RESPONSIBLE FOR THE ACCURACY OR COMPLETENESS OF ELECTRONIC COPIES OF THIS PLAN SHEET.

Caltrans Metric

NOTES:

FOR COMPLETE RIGHT OF WAY AND ACCURATE ACCESS DATA, SEE RIGHT OF WAY RECORD MAPS AT DISTRICT OFFICE.

CURVE DATA

No.	R	Δ	T	L
30	1524.003	28°08'03"	381.873	748.337
31	12192.024	03°14'42"	345.357	690.530

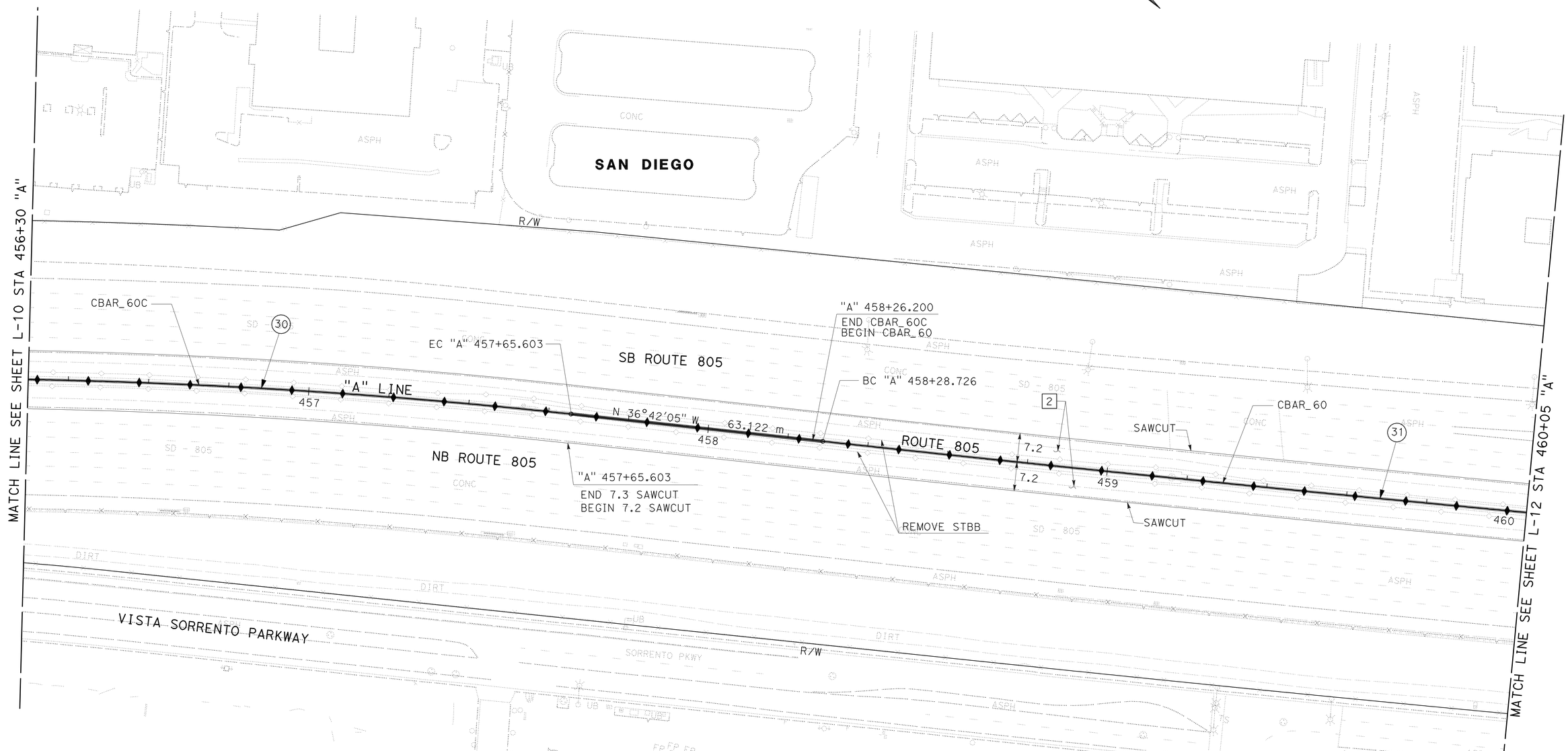

ALL DIMENSIONS ARE IN METERS UNLESS OTHERWISE SHOWN

SCALE 1:500

LAYOUT L-11

STATE OF CALIFORNIA - DEPARTMENT OF TRANSPORTATION
Caltrans PROJECT DEVELOPMENT

FUNCTIONAL SUPERVISOR: MAJID KHARRATI
CALCULATED-DESIGNED BY: THANH BUI
CHECKED BY: SHAHBAZ A. ALVI
REVISED BY / DATE REVISED

LAST REVISION 05-25-09
DATE PLOTTED => 29-SEP-2010
TIME PLOTTED => 13:41

Dist	COUNTY	ROUTE	KILOMETER POST TOTAL PROJECT	SHEET No.	TOTAL SHEETS
11	SD	5,805	R49.9/R51.7, 42.6/46.5	27	886

REGISTERED CIVIL ENGINEER 5-15-09 DATE

9-27-10
PLANS APPROVAL DATE

REGISTERED PROFESSIONAL ENGINEER SHAHBAZ A ALVI No. C 55293 Exp. 12-31-10 CIVIL STATE OF CALIFORNIA

THE STATE OF CALIFORNIA OR ITS OFFICERS OR AGENTS SHALL NOT BE RESPONSIBLE FOR THE ACCURACY OR COMPLETENESS OF ELECTRONIC COPIES OF THIS PLAN SHEET.

Caltrans Metric

NOTES:

FOR COMPLETE RIGHT OF WAY AND ACCURATE ACCESS DATA, SEE RIGHT OF WAY RECORD MAPS AT DISTRICT OFFICE.

CURVE DATA

No.	R	Δ	T	L
31	12192.024	03°14'42"	345.357	690.530

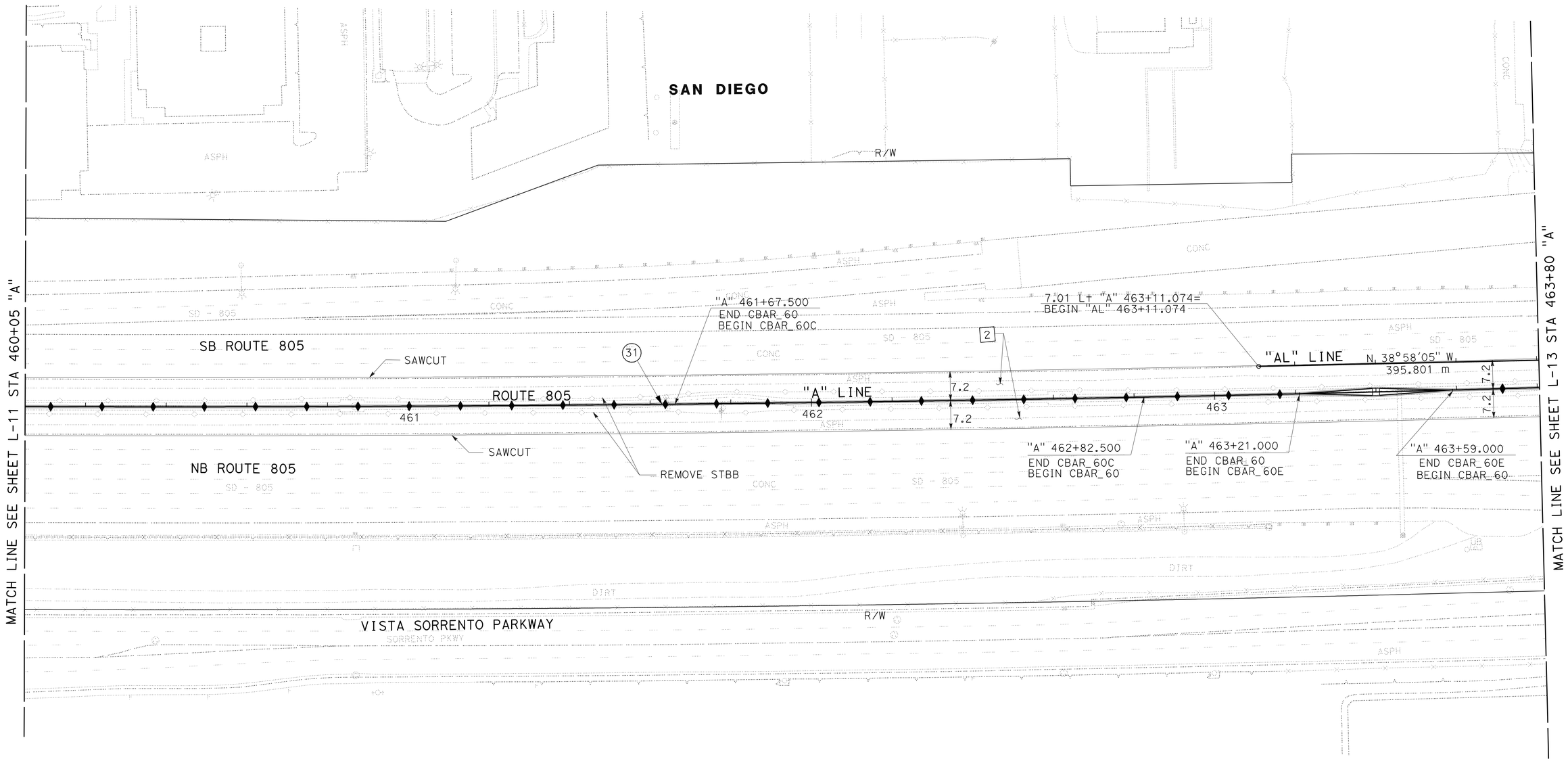

ALL DIMENSIONS ARE IN METERS UNLESS OTHERWISE SHOWN

SCALE 1:500

LAYOUT L-12

REVISED BY	DATE REVISED
THANH BUI	SHAHBAZ A. ALVI

CALCULATED-DESIGNED BY
CHECKED BY

FUNCTIONAL SUPERVISOR
MAJID KHARRATI

STATE OF CALIFORNIA - DEPARTMENT OF TRANSPORTATION
Caltrans PROJECT DEVELOPMENT

LAST REVISION 05-23-09
DATE PLOTTED => 29-SEP-2010
TIME PLOTTED => 13:41

Dist	COUNTY	ROUTE	KILOMETER POST TOTAL PROJECT	SHEET No.	TOTAL SHEETS
11	SD	5,805	R49.9/R51.7, 42.6/46.5	28	886

REGISTERED CIVIL ENGINEER 5-15-09 DATE

9-27-10
PLANS APPROVAL DATE

REGISTERED PROFESSIONAL ENGINEER SHAHBAZ A ALVI No. C 55293 Exp. 12-31-10 CIVIL STATE OF CALIFORNIA

THE STATE OF CALIFORNIA OR ITS OFFICERS OR AGENTS SHALL NOT BE RESPONSIBLE FOR THE ACCURACY OR COMPLETENESS OF ELECTRONIC COPIES OF THIS PLAN SHEET.

Caltrans Metric

NOTES:

FOR COMPLETE RIGHT OF WAY AND ACCURATE ACCESS DATA, SEE RIGHT OF WAY RECORD MAPS AT DISTRICT OFFICE.

CURVE DATA

No.	R	Δ	T	L
31	12192.024	03°14'42"	345.357	690.530
32	304.801	04°19'46"	11.521	23.031
33	914.402	13°13'47"	106.040	211.137
34	1524.003	12°15'05"	163.560	325.873
35	914.402	53°47'42"	463.853	858.533

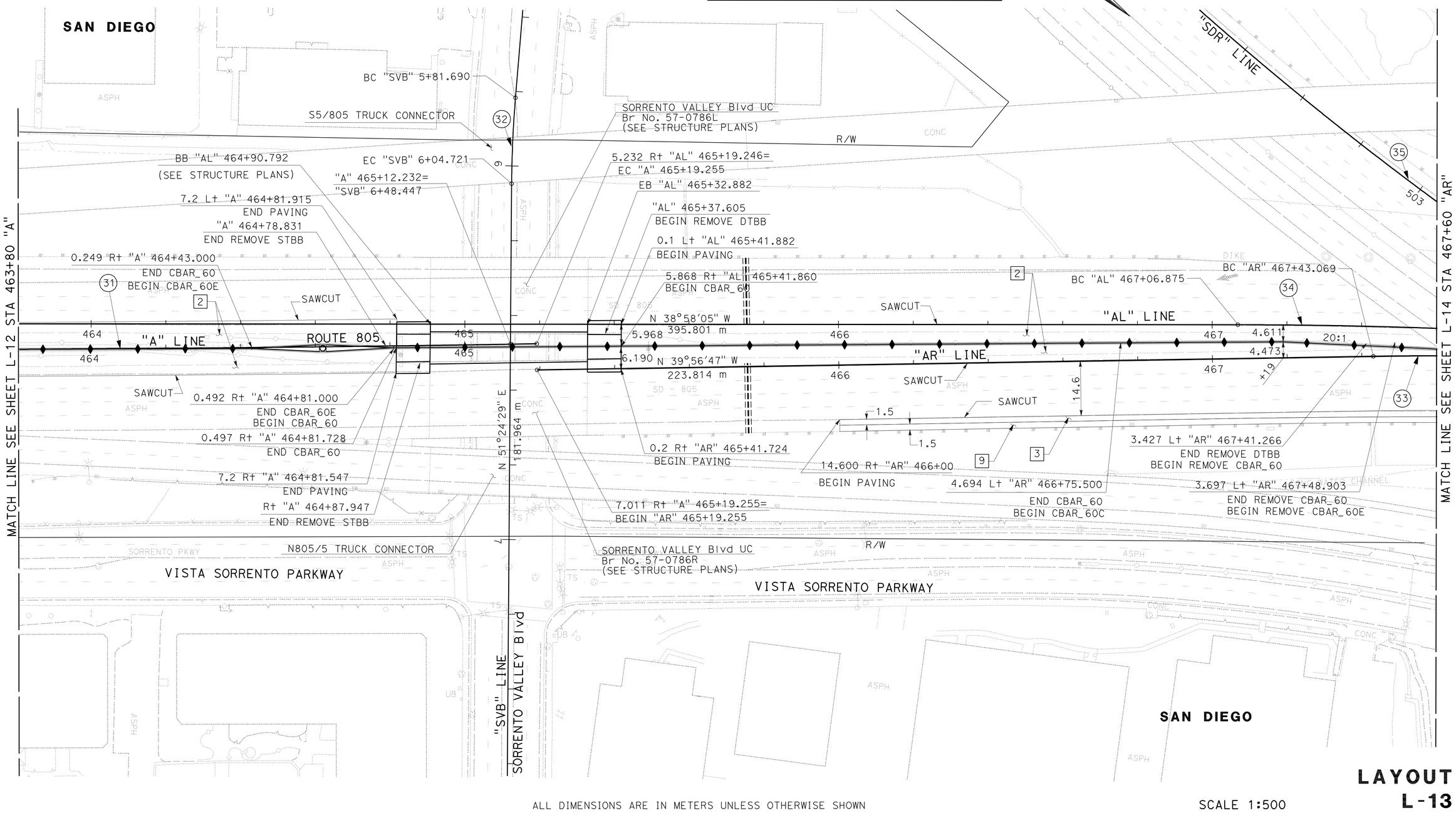

ALL DIMENSIONS ARE IN METERS UNLESS OTHERWISE SHOWN

SCALE 1:500

LAYOUT L-13

REVISED BY	DATE REVISED
THANH BUI	SHAHBAZ A. ALVI

CALCULATED-DESIGNED BY
CHECKED BY

FUNCTIONAL SUPERVISOR
MAJID KHARRATI

STATE OF CALIFORNIA - DEPARTMENT OF TRANSPORTATION
Caltrans PROJECT DEVELOPMENT

LAST REVISION 05-25-09 DATE PLOTTED => 29-SEP-2010 TIME PLOTTED => 13:41

Dist	COUNTY	ROUTE	KILOMETER POST TOTAL PROJECT	SHEET No.	TOTAL SHEETS
11	SD	5,805	R49.9/R51.7, 42.6/46.5	29	886

REGISTERED CIVIL ENGINEER 5-15-09 DATE

9-27-10
PLANS APPROVAL DATE

REGISTERED PROFESSIONAL ENGINEER SHAHBAZ A ALVI No. C 55293 Exp. 12-31-10 CIVIL STATE OF CALIFORNIA

THE STATE OF CALIFORNIA OR ITS OFFICERS OR AGENTS SHALL NOT BE RESPONSIBLE FOR THE ACCURACY OR COMPLETENESS OF ELECTRONIC COPIES OF THIS PLAN SHEET.

Caltrans Metric

NOTES:

FOR COMPLETE RIGHT OF WAY AND ACCURATE ACCESS DATA, SEE RIGHT OF WAY RECORD MAPS AT DISTRICT OFFICE.

CURVE DATA

No.	R	Δ	T	L
33	914.402	13°13′47″	106.040	211.137
34	1524.003	12°15′05″	163.560	325.873
35	914.402	53°47′42″	463.853	858.533
36	975.362	42°24′16″	378.362	721.864

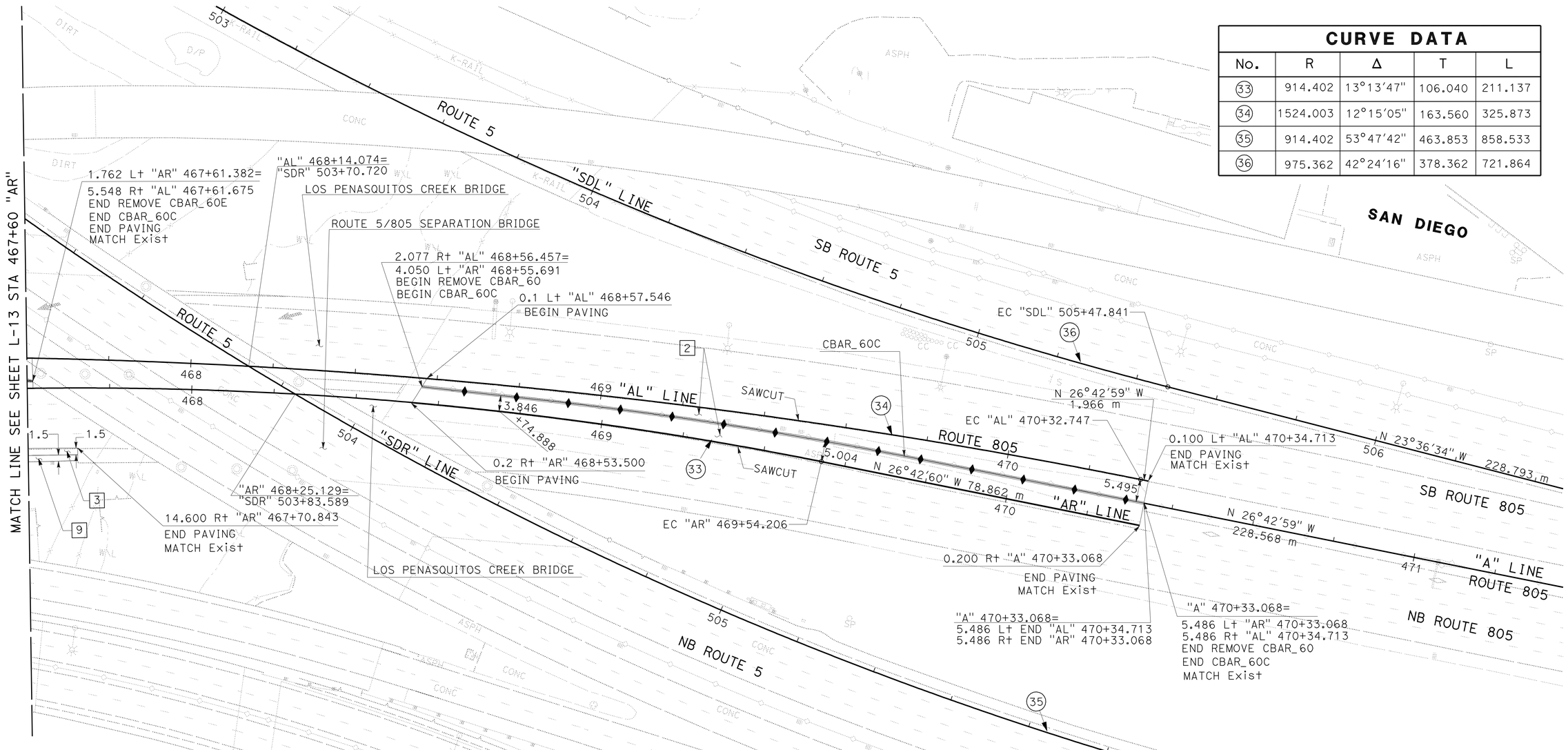

ALL DIMENSIONS ARE IN METERS UNLESS OTHERWISE SHOWN

SCALE 1:500

LAYOUT L-14

STATE OF CALIFORNIA - DEPARTMENT OF TRANSPORTATION
Caltrans PROJECT DEVELOPMENT

FUNCTIONAL SUPERVISOR: MAJID KHARRATI
CALCULATED-DESIGNED BY: THANH BUI
CHECKED BY: SHAHBAZ A. ALVI
REVISED BY / DATE REVISED

LAST REVISION 05-25-09 DATE PLOTTED => 29-SEP-2010 TIME PLOTTED => 13:41

Dist	COUNTY	ROUTE	KILOMETER POST TOTAL PROJECT	SHEET No.	TOTAL SHEETS
11	SD	5,805	R49.9/R51.7, 42.6/46.5	30	886

REGISTERED CIVIL ENGINEER 5-15-09 DATE

9-27-10
PLANS APPROVAL DATE

REGISTERED PROFESSIONAL ENGINEER
SHAHBAZ A ALVI
No. C 55293
Exp. 12-31-10
CIVIL
STATE OF CALIFORNIA

THE STATE OF CALIFORNIA OR ITS OFFICERS OR AGENTS SHALL NOT BE RESPONSIBLE FOR THE ACCURACY OR COMPLETENESS OF ELECTRONIC COPIES OF THIS PLAN SHEET.

Caltrans Metric

NOTES:

FOR COMPLETE RIGHT OF WAY AND ACCURATE ACCESS DATA, SEE RIGHT OF WAY RECORD MAPS AT DISTRICT OFFICE.

CURVE DATA

No.	R	Δ	T	L
37	1524.004	30°17'00"	412.395	805.499

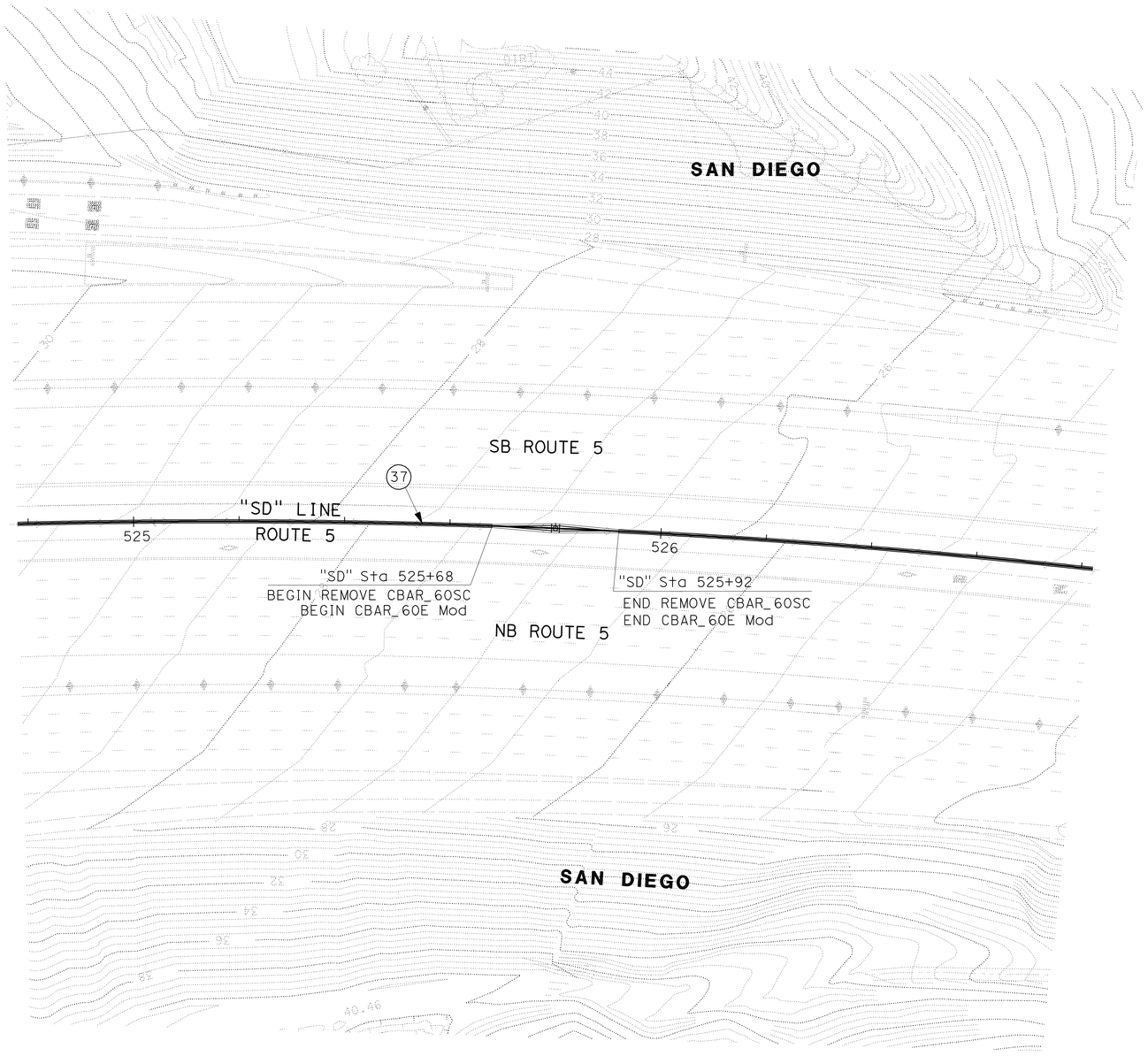

ALL DIMENSIONS ARE IN METERS UNLESS OTHERWISE SHOWN

SCALE 1:500

LAYOUT
L-15

REVISED BY | DATE REVISED

CALCULATED-DESIGNED BY | CHECKED BY

FUNCTIONAL SUPERVISOR

STATE OF CALIFORNIA - DEPARTMENT OF TRANSPORTATION
Caltrans PROJECT DEVELOPMENT

LAST REVISION 05-25-09 | DATE PLOTTED => 29-SEP-2010 | TIME PLOTTED => 13:42

Dist	COUNTY	ROUTE	KILOMETER POST TOTAL PROJECT	SHEET No.	TOTAL SHEETS
11	SD	5,805	R49.9/R51.7, 42.6/46.5	31	886

REGISTERED CIVIL ENGINEER 5-15-09 DATE

9-27-10
PLANS APPROVAL DATE

REGISTERED PROFESSIONAL ENGINEER SHAHBAZ A ALVI No. 55293 Exp. 12-31-10 CIVIL STATE OF CALIFORNIA

THE STATE OF CALIFORNIA OR ITS OFFICERS OR AGENTS SHALL NOT BE RESPONSIBLE FOR THE ACCURACY OR COMPLETENESS OF SCANNED COPIES OF THIS PLAN SHEET.

Caltrans Metric

NOTE:

HORIZONTAL DATUM: NAD83 (Hpgn)
VERTICAL DATUM: NGVD29

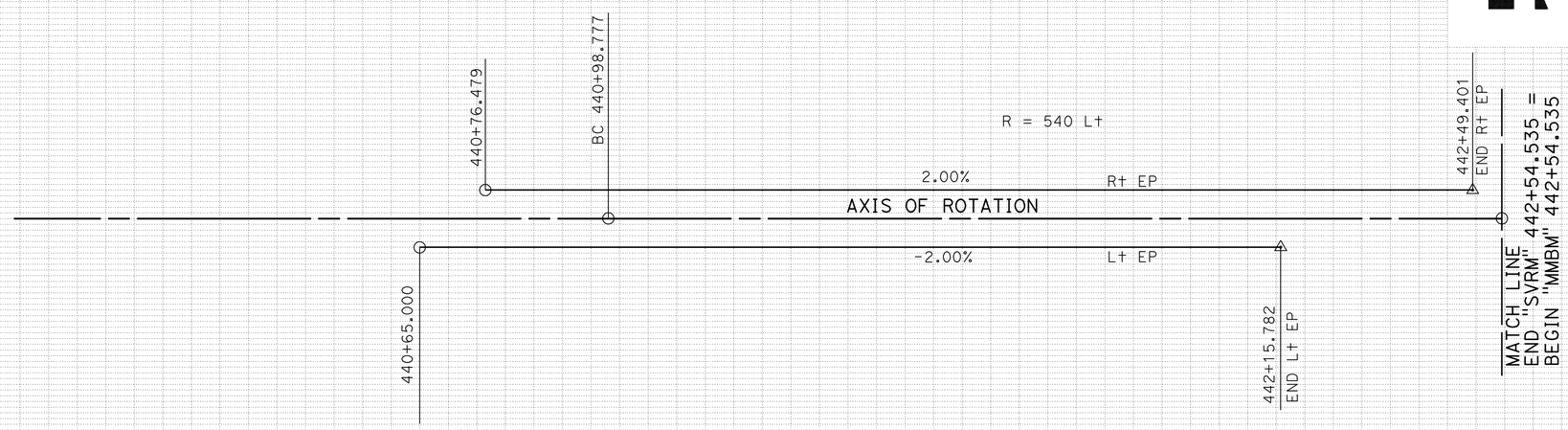

SUPERELEVATION DIAGRAM
"SVRM" LINE

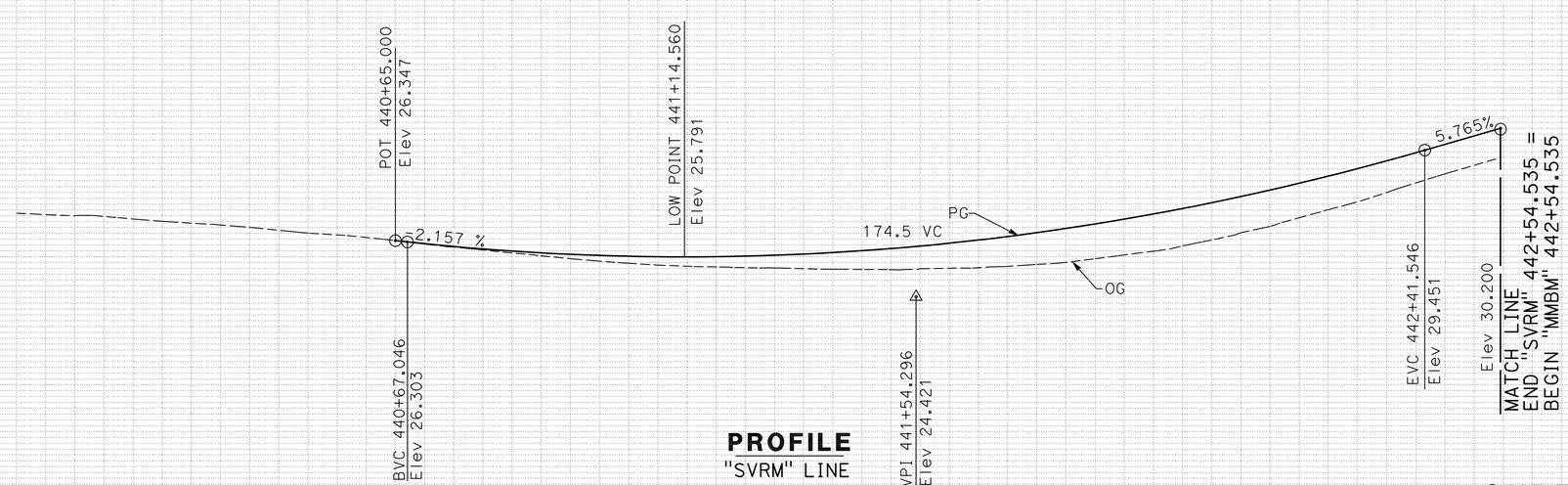

PROFILE
"SVRM" LINE

ALL DIMENSIONS ARE IN METERS UNLESS OTHERWISE SHOWN

PROFILE AND SUPERELEVATION DIAGRAM

SCALE Horiz 1:500
Vert 1:100

PS-1

Station	440+00	+20	+40	+60	+80	441+00	+20	+40	+60	+80	442+00	+20	+40
m^3 Exc									6373				
m^3 Emb									1232				

REVISED BY	DATE REVISED
THANH D BUI	SHAHBAZ A ALVI

CALCULATED-DESIGNED BY / CHECKED BY

FUNCTIONAL SUPERVISOR: MAJID KHARRATI

STATE OF CALIFORNIA - DEPARTMENT OF TRANSPORTATION
Caltrans PROJECT DEVELOPMENT

LAST REVISION 05-25-09 | DATE PLOTTED => 29-SEP-2010 | TIME PLOTTED => 13:42

Dist	COUNTY	ROUTE	KILOMETER POST TOTAL PROJECT	SHEET No.	TOTAL SHEETS
11	SD	5,805	R49.9/R51.7, 42.6/46.5	32	886

REGISTERED CIVIL ENGINEER 5-15-09 DATE

9-27-10
PLANS APPROVAL DATE

REGISTERED PROFESSIONAL ENGINEER SHAHBAZ A ALVI No. 55293 Exp. 12-31-10 CIVIL STATE OF CALIFORNIA

THE STATE OF CALIFORNIA OR ITS OFFICERS OR AGENTS SHALL NOT BE RESPONSIBLE FOR THE ACCURACY OR COMPLETENESS OF SCANNED COPIES OF THIS PLAN SHEET.

Caltrans Metric

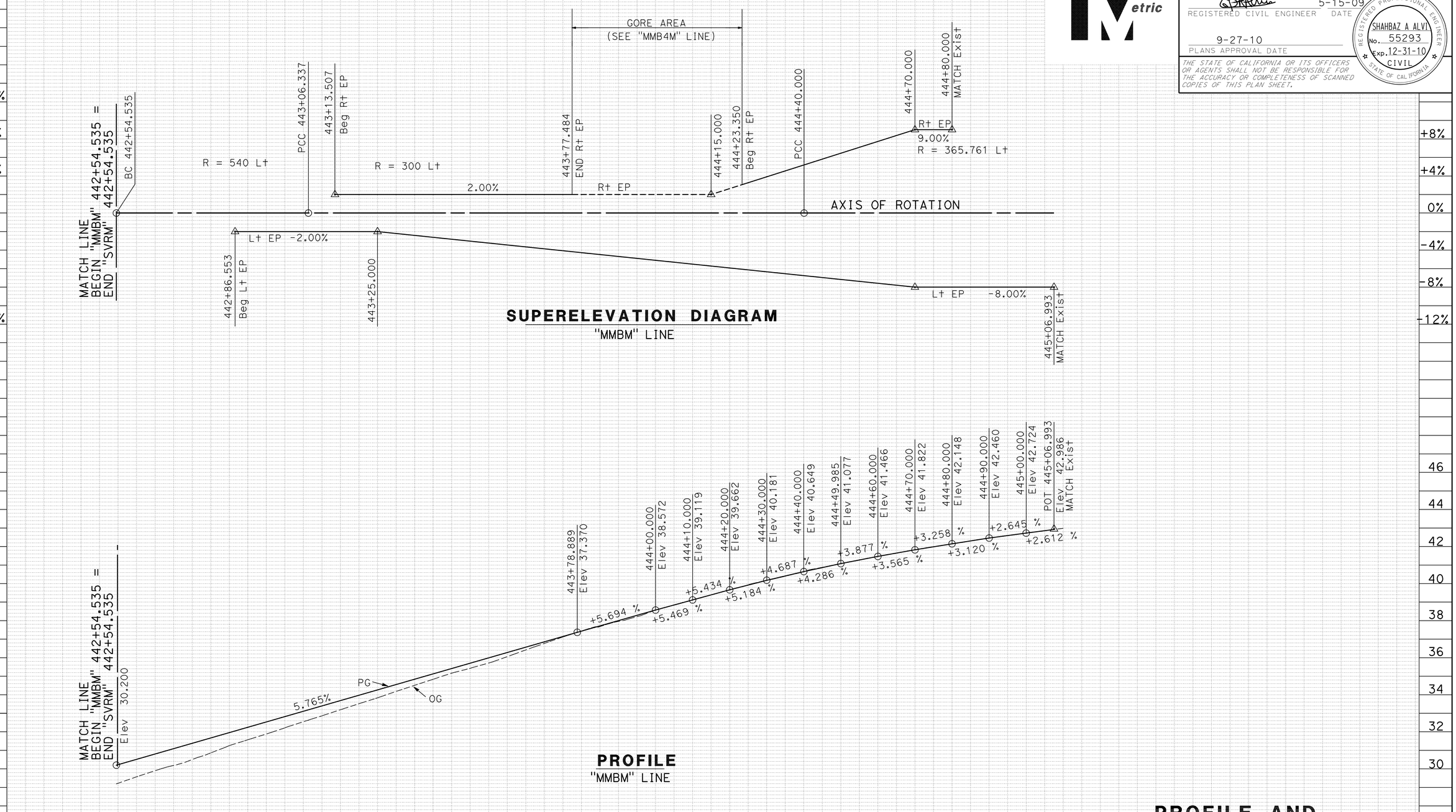

ALL DIMENSIONS ARE IN METERS UNLESS OTHERWISE SHOWN

PROFILE AND SUPERELEVATION DIAGRAM

SCALE Horiz 1:500
Vert 1:100

PS-2

REVISED BY	DATE REVISED
THANH D BUI	SHAHBAZ A ALVI

CALCULATED-DESIGNED BY
CHECKED BY

FUNCTIONAL SUPERVISOR
MAJID KHARRATI

STATE OF CALIFORNIA - DEPARTMENT OF TRANSPORTATION
Caltrans PROJECT DEVELOPMENT

LAST REVISION 05-25-09
DATE PLOTTED => 29-SEP-2010
TIME PLOTTED => 13:42

Dist	COUNTY	ROUTE	KILOMETER POST TOTAL PROJECT	SHEET No.	TOTAL SHEETS
11	SD	5,805	R49.9/R51.7, 42.6/46.5	33	886

REGISTERED CIVIL ENGINEER 5-15-09 DATE

9-27-10
PLANS APPROVAL DATE

REGISTERED PROFESSIONAL ENGINEER
THANH D BUI
No. C 64571
Exp. 6-30-11
CIVIL
STATE OF CALIFORNIA

THE STATE OF CALIFORNIA OR ITS OFFICERS OR AGENTS SHALL NOT BE RESPONSIBLE FOR THE ACCURACY OR COMPLETENESS OF SCANNED COPIES OF THIS PLAN SHEET.

Caltrans Metric

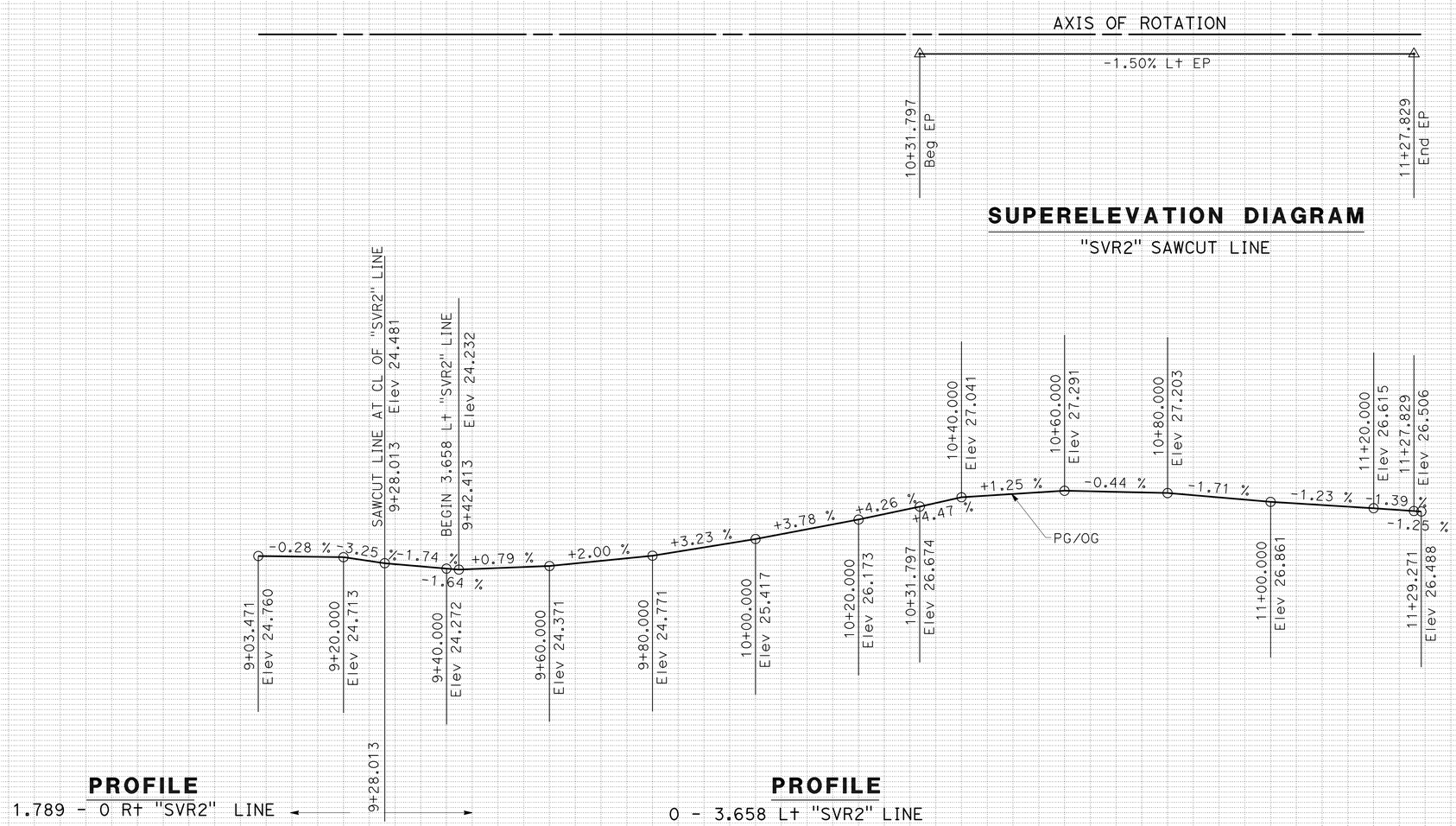

ALL DIMENSIONS ARE IN METERS UNLESS OTHERWISE SHOWN

PROFILE AND SUPERELEVATION DIAGRAM

SCALE Horiz 1:500
Vert 1:100

PS-3

Station	+80	9+00	+20	+40	+60	+80	10+00	+20	+40	+60	+80	11+00	+20	+40
m^3 Exc							123							
m^3 Emb							39							

REVISED BY	THANH D BUI
DATE REVISED	SHAHBAZ A ALVI
CALCULATED-DESIGNED BY	
CHECKED BY	
FUNCTIONAL SUPERVISOR	MAJID KHARRATI

STATE OF CALIFORNIA - DEPARTMENT OF TRANSPORTATION
Caltrans PROJECT DEVELOPMENT

LAST REVISION 05-25-09 DATE PLOTTED => 29-SEP-2010 TIME PLOTTED => 13:42

Dist	COUNTY	ROUTE	KILOMETER POST TOTAL PROJECT	SHEET No.	TOTAL SHEETS
11	SD	5,805	R49.9/R51.7, 42.6/46.5	34	886

REGISTERED CIVIL ENGINEER 5-15-09 DATE

9-27-10
PLANS APPROVAL DATE

REGISTERED PROFESSIONAL ENGINEER SHAHBAZ A ALVI No. 55293 Exp. 12-31-10 CIVIL STATE OF CALIFORNIA

THE STATE OF CALIFORNIA OR ITS OFFICERS OR AGENTS SHALL NOT BE RESPONSIBLE FOR THE ACCURACY OR COMPLETENESS OF SCANNED COPIES OF THIS PLAN SHEET.

Caltrans Metric

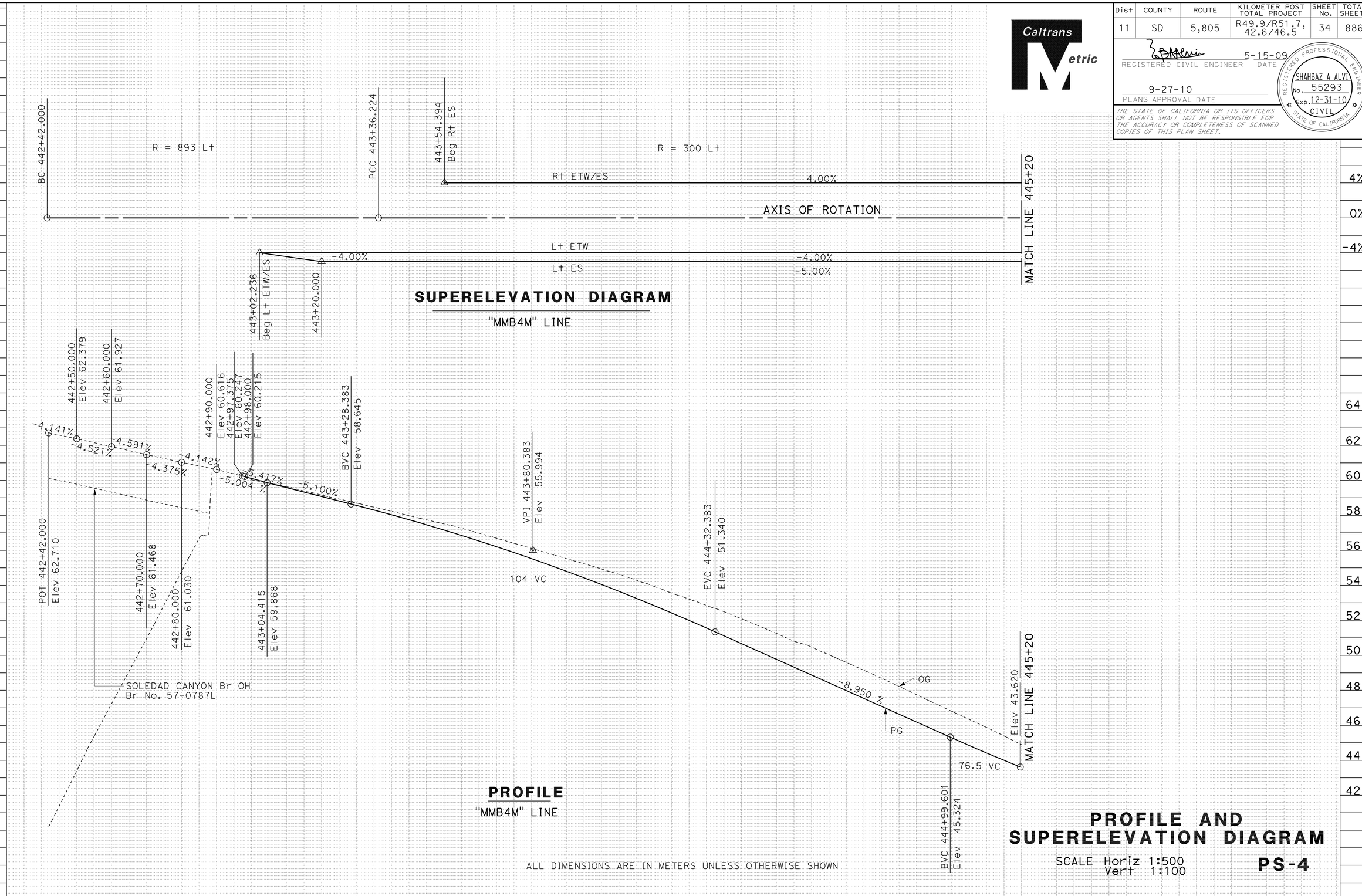

PROFILE AND SUPERELEVATION DIAGRAM

SCALE Horiz 1:500
Vert 1:100

PS-4

REVISED BY	DATE REVISED
THANH D BUI	SHAHBAZ A ALVI

CALCULATED-DESIGNED BY
CHECKED BY

FUNCTIONAL SUPERVISOR
MAJID KHARRATI

STATE OF CALIFORNIA - DEPARTMENT OF TRANSPORTATION
Caltrans PROJECT DEVELOPMENT

LAST REVISION 05-25-09
DATE PLOTTED => 29-SEP-2010
TIME PLOTTED => 13:42

Dist	COUNTY	ROUTE	KILOMETER POST TOTAL PROJECT	SHEET No.	TOTAL SHEETS
11	SD	5,805	R49.9/R51.7, 42.6/46.5	35	886

REGISTERED CIVIL ENGINEER 5-15-09 DATE

9-27-10
PLANS APPROVAL DATE

REGISTERED PROFESSIONAL ENGINEER SHAHBAZ A ALVI No. 55293 Exp. 12-31-10 CIVIL STATE OF CALIFORNIA

THE STATE OF CALIFORNIA OR ITS OFFICERS OR AGENTS SHALL NOT BE RESPONSIBLE FOR THE ACCURACY OR COMPLETENESS OF SCANNED COPIES OF THIS PLAN SHEET.

Caltrans Metric

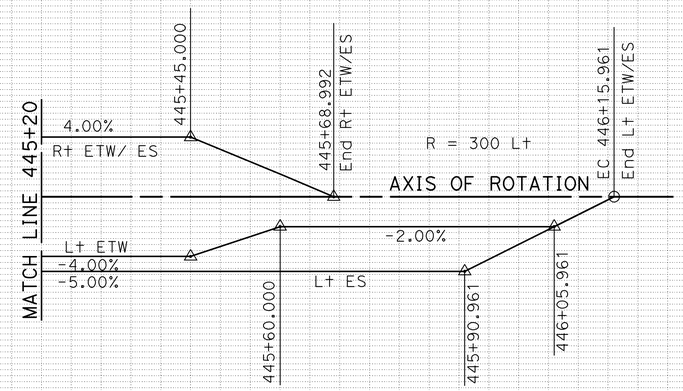

SUPERELEVATION DIAGRAM

"MMB4M" LINE

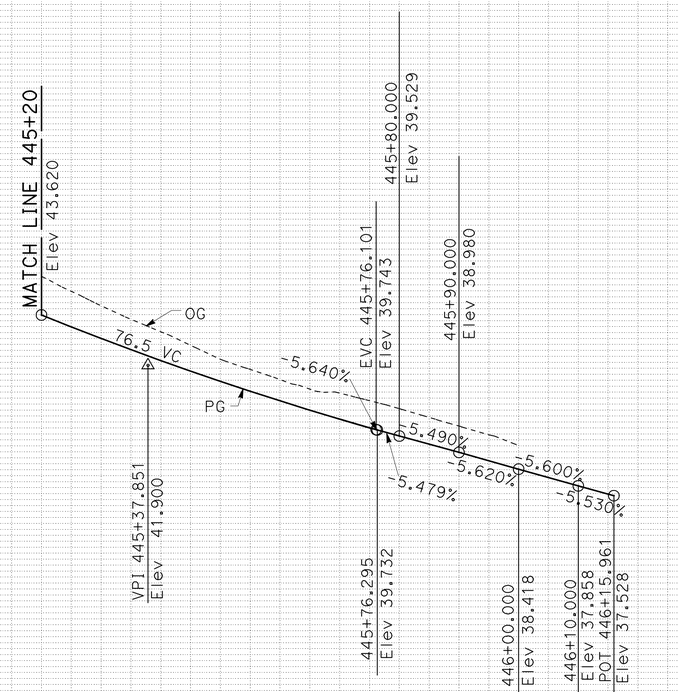

PROFILE

"MMB4M" LINE

ALL DIMENSIONS ARE IN METERS UNLESS OTHERWISE SHOWN

PROFILE AND SUPERELEVATION DIAGRAM

SCALE Horiz 1:500
Vert 1:100

PS-5

Station	445+20	+40	+60	+80	446+00	+20
m^3 Exc			1607			
m^3 Emb			975			

STATE OF CALIFORNIA - DEPARTMENT OF TRANSPORTATION
Caltrans PROJECT DEVELOPMENT

FUNCTIONAL SUPERVISOR: MAJID KHARRATI
CALCULATED-DESIGNED BY: SHAHBAZ A ALVI
CHECKED BY: THANH D BUI
REVISED BY / DATE REVISED

LAST REVISION 05-25-09 DATE PLOTTED => 29-SEP-2010 TIME PLOTTED => 13:42

Dist	COUNTY	ROUTE	KILOMETER POST TOTAL PROJECT	SHEET No.	TOTAL SHEETS
11	SD	5,805	R49.9/R51.7, 42.6/46.5	36	886

REGISTERED CIVIL ENGINEER 5-15-09 DATE

9-27-10
PLANS APPROVAL DATE

REGISTERED PROFESSIONAL ENGINEER SHAHBAZ A ALVI No. 55293 Exp. 12-31-10 CIVIL STATE OF CALIFORNIA

THE STATE OF CALIFORNIA OR ITS OFFICERS OR AGENTS SHALL NOT BE RESPONSIBLE FOR THE ACCURACY OR COMPLETENESS OF SCANNED COPIES OF THIS PLAN SHEET.

Caltrans Metric

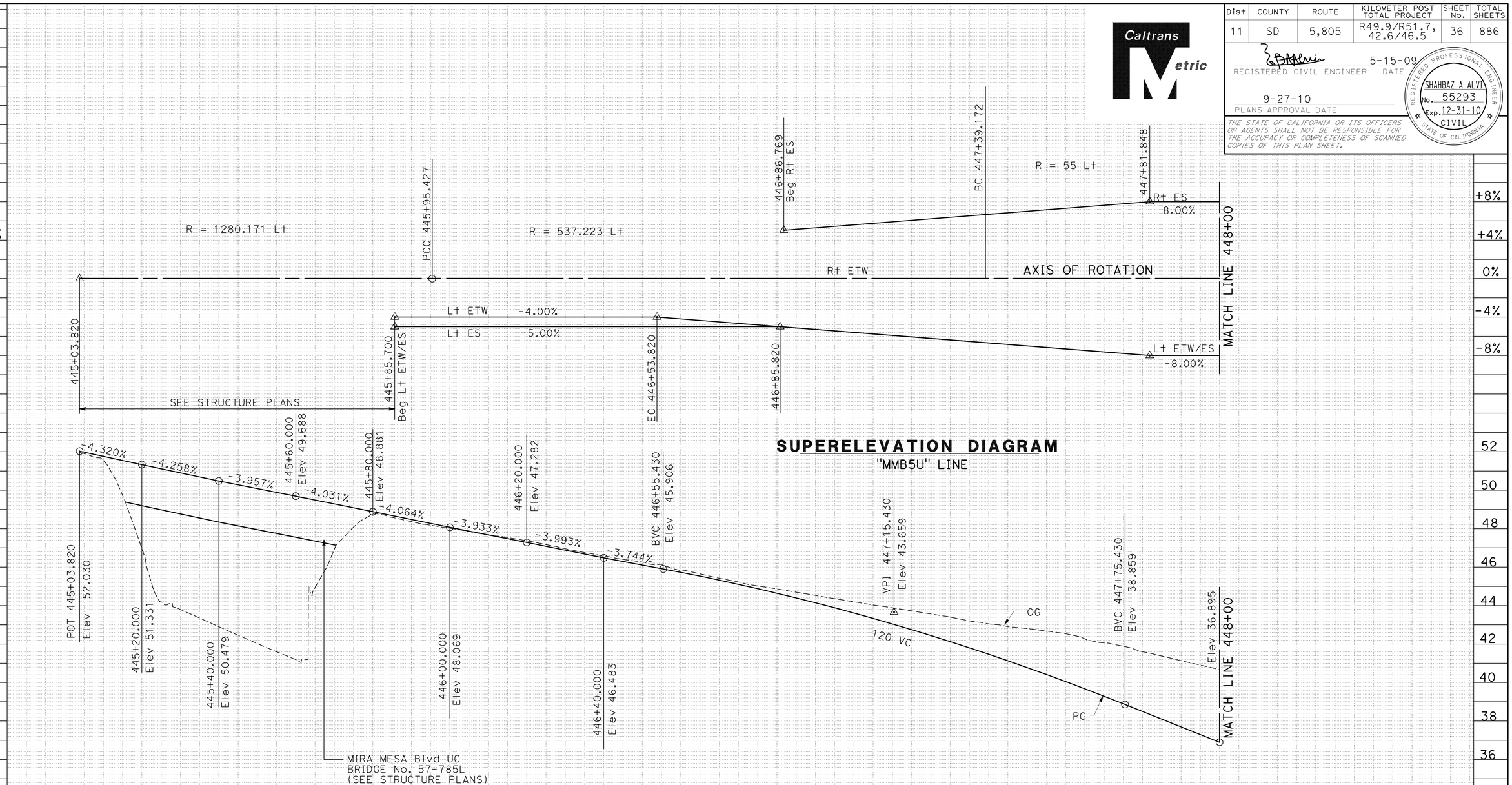

SUPERELEVATION DIAGRAM
"MMB5U" LINE

PROFILE
"MMB5U" LINE

ALL DIMENSIONS ARE IN METERS UNLESS OTHERWISE SHOWN

PROFILE AND SUPERELEVATION DIAGRAM

SCALE Horiz 1:500
Vert 1:100

PS-6

Station	445+00	+20	+40	+60	+80	446+00	+20	+40	+60	+80	447+00	+20	+40	+60	+80
m^3 Exc						9690									
m^3 Emb						11992									

REVISED BY	DATE REVISED
THANH D BUI	SHAHBAZ A ALVI

CALCULATED-DESIGNED BY
CHECKED BY

FUNCTIONAL SUPERVISOR
MAJID KHARRATI

STATE OF CALIFORNIA - DEPARTMENT OF TRANSPORTATION
Caltrans PROJECT DEVELOPMENT

LAST REVISION 05-25-09 DATE PLOTTED => 29-SEP-2010 TIME PLOTTED => 13:42

Dist	COUNTY	ROUTE	KILOMETER POST TOTAL PROJECT	SHEET No.	TOTAL SHEETS
11	SD	5,805	R49.9/R51.7, 42.6/46.5	37	886

REGISTERED CIVIL ENGINEER 5-15-09 DATE

9-27-10
PLANS APPROVAL DATE

REGISTERED PROFESSIONAL ENGINEER SHAHBAZ A ALVI No. 55293 Exp. 12-31-10 CIVIL STATE OF CALIFORNIA

THE STATE OF CALIFORNIA OR ITS OFFICERS OR AGENTS SHALL NOT BE RESPONSIBLE FOR THE ACCURACY OR COMPLETENESS OF SCANNED COPIES OF THIS PLAN SHEET.

Caltrans Metric

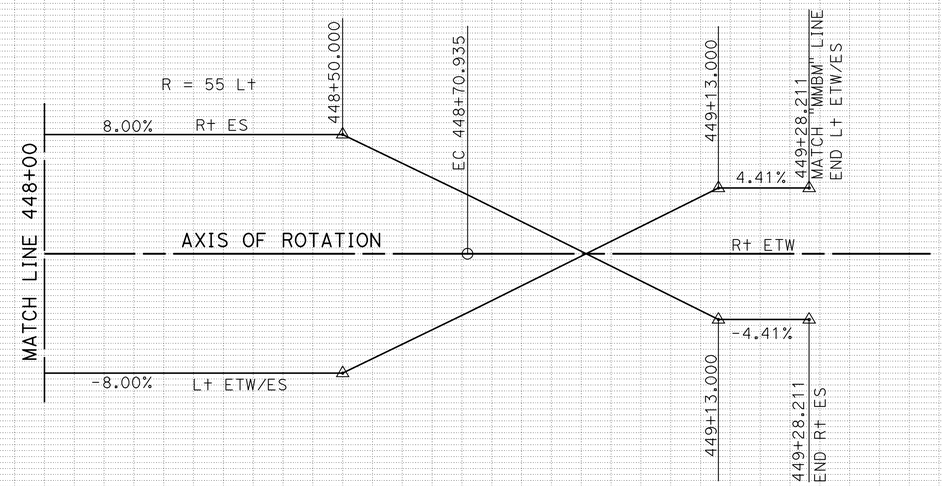

SUPERELEVATION DIAGRAM
"MMB5U" LINE

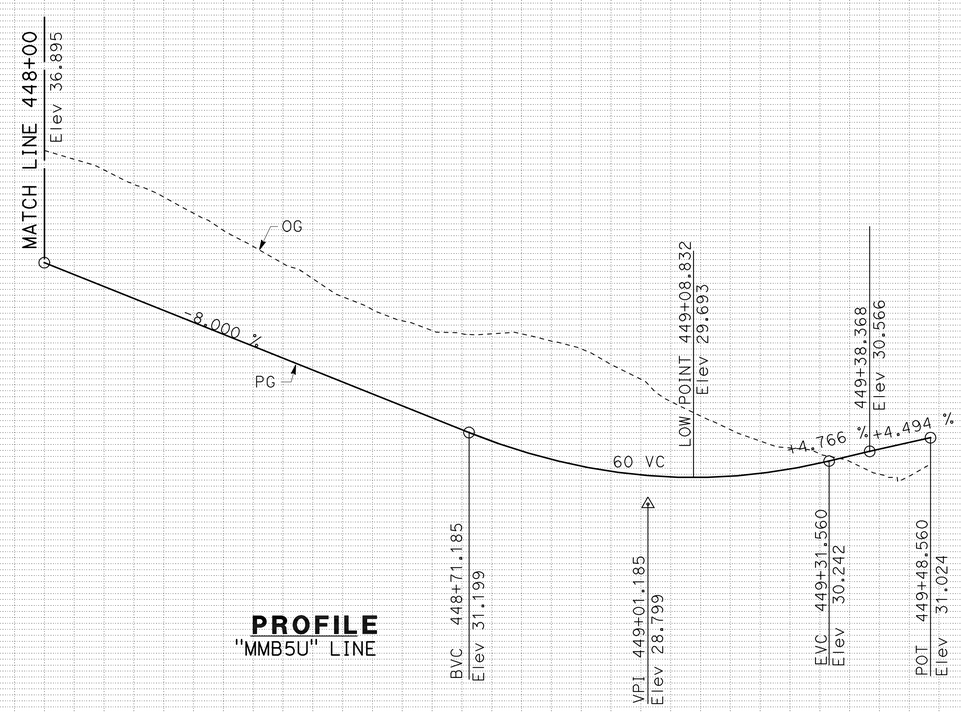

PROFILE
"MMB5U" LINE

ALL DIMENSIONS ARE IN METERS UNLESS OTHERWISE SHOWN

PROFILE AND SUPERELEVATION DIAGRAM

SCALE Horiz 1:500
SCALE Vert 1:100

PS-7

Station	448+00	+20	+40	+60	+80	449+00	+20	+40
m^3 Exc				30456				
m^3 Emb				4				

STATE OF CALIFORNIA - DEPARTMENT OF TRANSPORTATION
Caltrans PROJECT DEVELOPMENT

FUNCTIONAL SUPERVISOR: MAJID KHARRATI
CALCULATED-DESIGNED BY: THANH D BUI
CHECKED BY: SHAHBAZ A ALVI
REVISED BY / DATE REVISED

LAST REVISION 05-25-09
DATE PLOTTED => 29-SEP-2010
TIME PLOTTED => 13:42

Dist	COUNTY	ROUTE	KILOMETER POST TOTAL PROJECT	SHEET No.	TOTAL SHEETS
11	SD	5,805	R49.9/R51.7, 42.6/46.5	38	886

REGISTERED CIVIL ENGINEER 5-15-09 DATE

9-27-10
PLANS APPROVAL DATE

REGISTERED PROFESSIONAL ENGINEER SHAHBAZ A ALVI No. 55293 Exp. 12-31-10 CIVIL STATE OF CALIFORNIA

THE STATE OF CALIFORNIA OR ITS OFFICERS OR AGENTS SHALL NOT BE RESPONSIBLE FOR THE ACCURACY OR COMPLETENESS OF SCANNED COPIES OF THIS PLAN SHEET.

Caltrans Metric

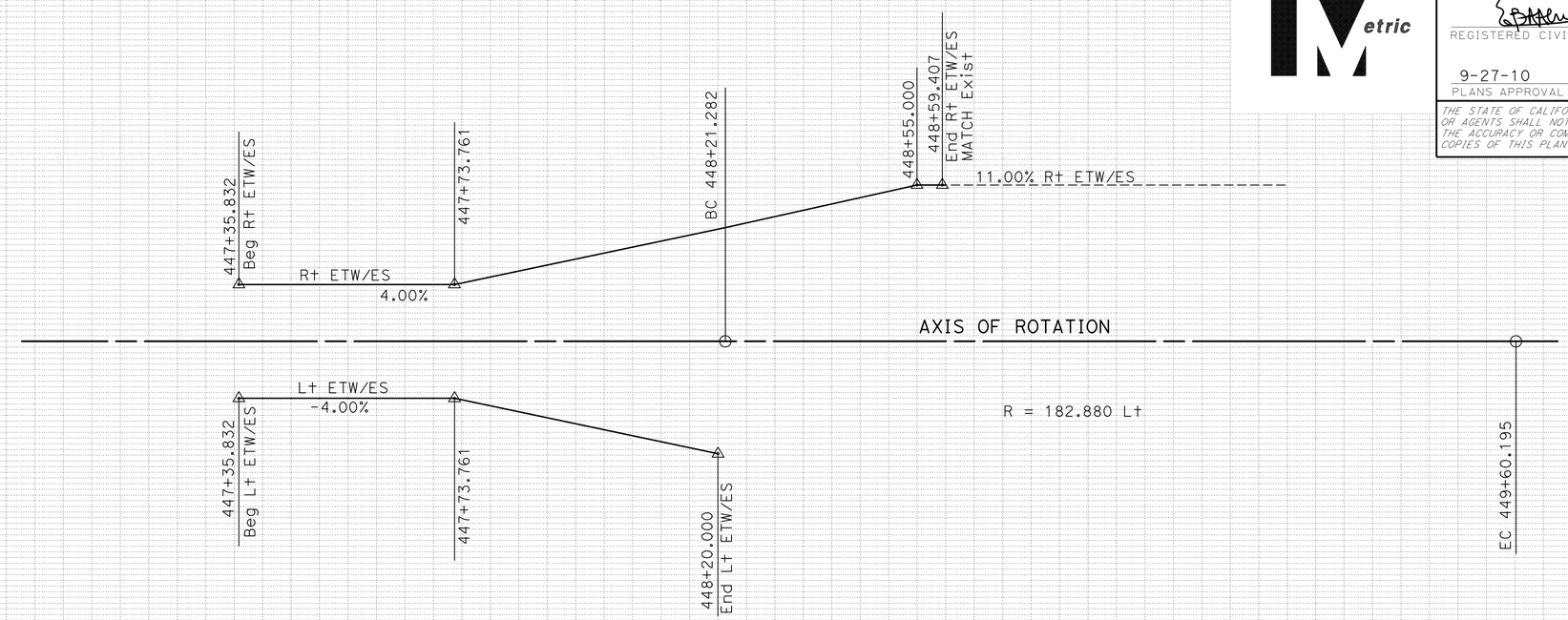

SUPERELEVATION DIAGRAM

"MMB6M" LINE

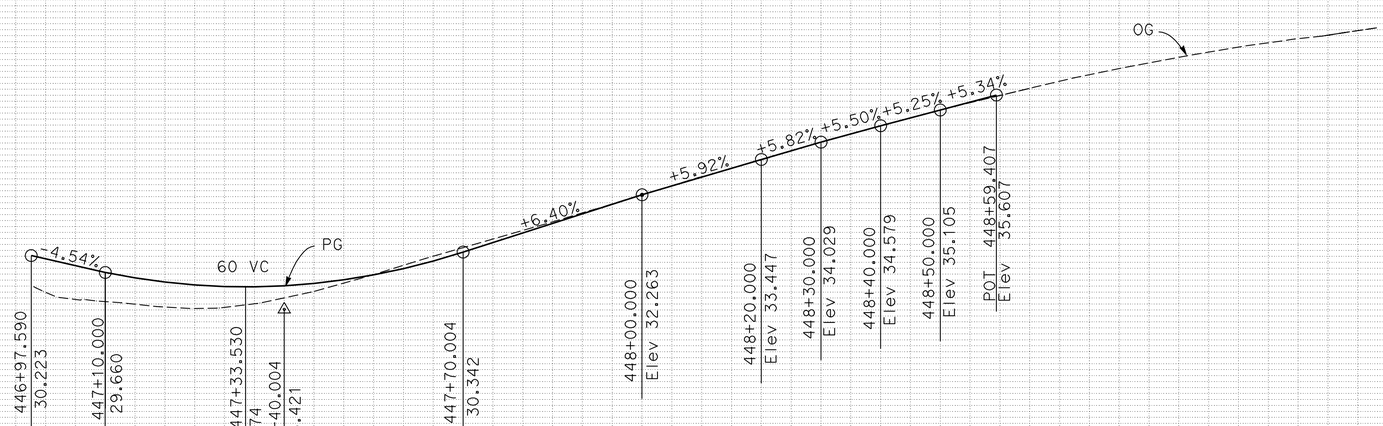

PROFILE

"MMB6M" LINE

ALL DIMENSIONS ARE IN METERS UNLESS OTHERWISE SHOWN

PROFILE AND SUPERELEVATION DIAGRAM

SCALE Horiz 1:500
Vert 1:100

PS-8

Station	447+00	+20	+40	+60	+80	448+00	+20	+40	+60	+80	449+00
m^3 Exc					3967						
m^3 Emb					177						

REVISED BY | DATE REVISED

THANH D BUI | SHAHBAZ A ALVI

CALCULATED-DESIGNED BY | CHECKED BY

FUNCTIONAL SUPERVISOR: MAJID KHARRATI

STATE OF CALIFORNIA - DEPARTMENT OF TRANSPORTATION
Caltrans PROJECT DEVELOPMENT

LAST REVISION 05-25-09 | DATE PLOTTED => 29-SEP-2010 | TIME PLOTTED => 13:42

Dist	COUNTY	ROUTE	KILOMETER POST TOTAL PROJECT	SHEET No.	TOTAL SHEETS
11	SD	5,805	R49.9/R51.7, 42.6/46.5	39	886

Caltrans Metric

5-15-09
REGISTERED CIVIL ENGINEER DATE

9-27-10
PLANS APPROVAL DATE

REGISTERED PROFESSIONAL ENGINEER
THANH D BUI
No. C 64571
Exp. 6-30-11
CIVIL
STATE OF CALIFORNIA

THE STATE OF CALIFORNIA OR ITS OFFICERS OR AGENTS SHALL NOT BE RESPONSIBLE FOR THE ACCURACY OR COMPLETENESS OF SCANNED COPIES OF THIS PLAN SHEET.

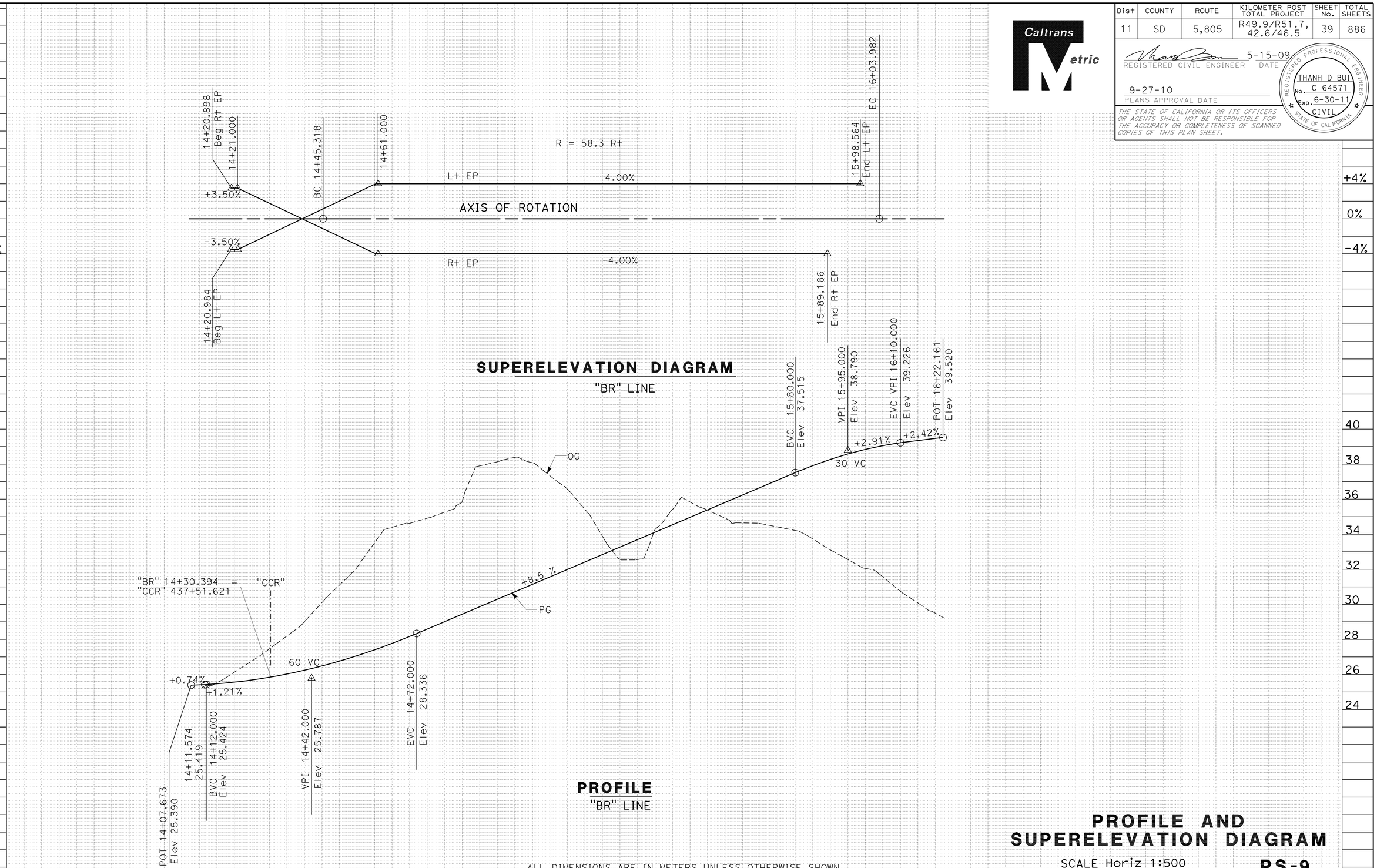

PROFILE AND SUPERELEVATION DIAGRAM

SCALE Horiz 1:500
Vert 1:100

PS-9

STATE OF CALIFORNIA - DEPARTMENT OF TRANSPORTATION
Caltrans PROJECT DEVELOPMENT

FUNCTIONAL SUPERVISOR: MAJID KHARRATI
CALCULATED-DESIGNED BY: THANH D BUI
CHECKED BY: SHAHBAZ A ALVI
REVISED BY / DATE REVISED

LAST REVISION 05-25-09
DATE PLOTTED => 29-SEP-2010
TIME PLOTTED => 13:42

Dist	COUNTY	ROUTE	KILOMETER POST TOTAL PROJECT	SHEET No.	TOTAL SHEETS
11	SD	5,805	R49.9/R51.7, 42.6/46.5	40	886

REGISTERED CIVIL ENGINEER 5-15-09 DATE

9-27-10
PLANS APPROVAL DATE

REGISTERED PROFESSIONAL ENGINEER THANH D BUI No. C 64571 Exp. 6-30-11 CIVIL STATE OF CALIFORNIA

THE STATE OF CALIFORNIA OR ITS OFFICERS OR AGENTS SHALL NOT BE RESPONSIBLE FOR THE ACCURACY OR COMPLETENESS OF SCANNED COPIES OF THIS PLAN SHEET.

Caltrans Metric

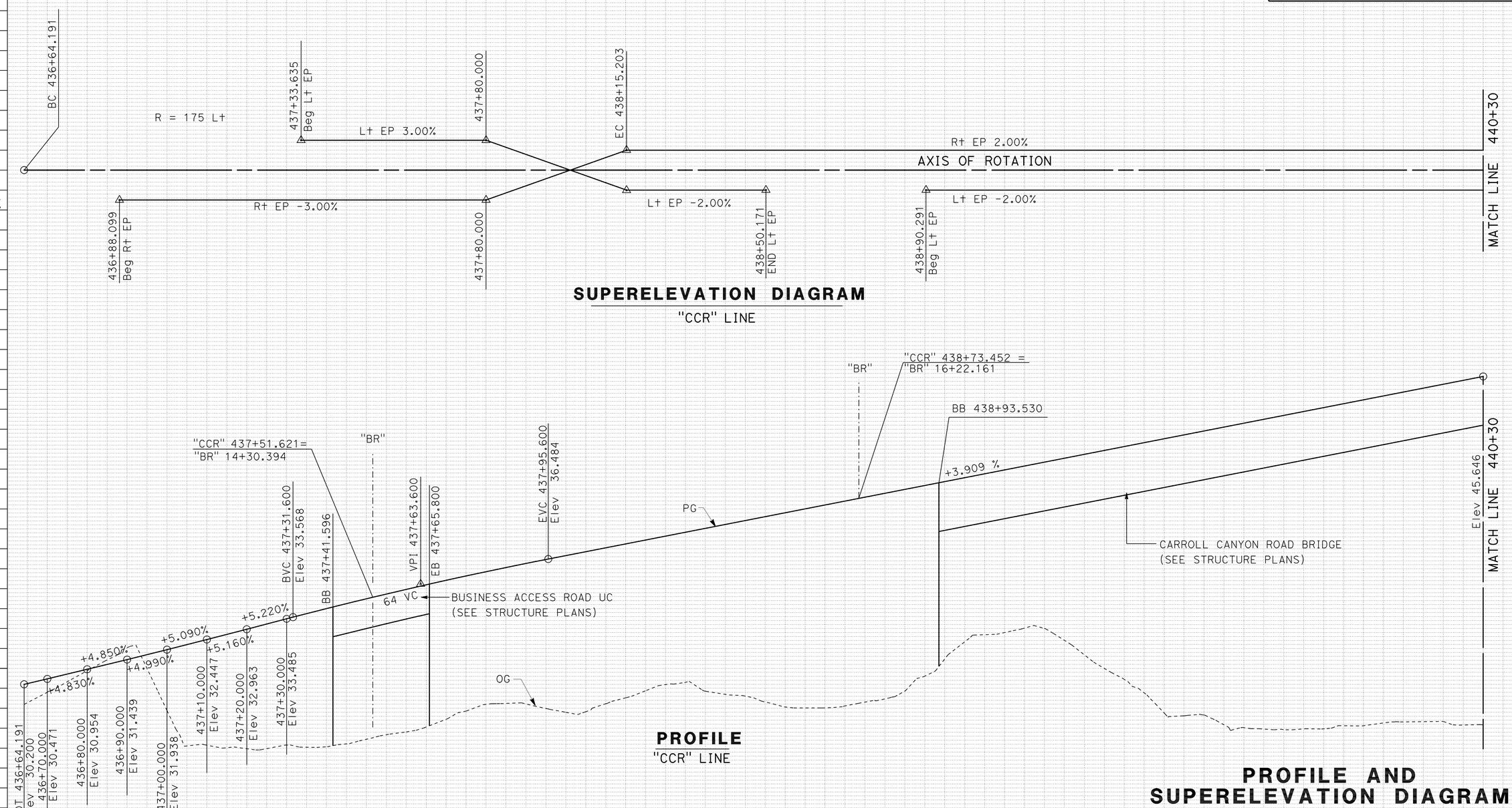

ALL DIMENSIONS ARE IN METERS UNLESS OTHERWISE SHOWN

PROFILE AND SUPERELEVATION DIAGRAM

SCALE Horiz 1:500
Vert 1:100

PS-10

m^3				
Exc	744		1928	
Emb	4621		32124	

REVISED BY	DATE REVISED
THANH D BUI	SHAHBAZ A ALVI

CALCULATED-DESIGNED BY
CHECKED BY

FUNCTIONAL SUPERVISOR
MAJID KHARRATI

STATE OF CALIFORNIA - DEPARTMENT OF TRANSPORTATION
Caltrans PROJECT DEVELOPMENT

LAST REVISION 05-25-09 DATE PLOTTED => 29-SEP-2010 TIME PLOTTED => 13:43

Dist	COUNTY	ROUTE	KILOMETER POST TOTAL PROJECT	SHEET No.	TOTAL SHEETS
11	SD	5,805	R49.9/R51.7, 42.6/46.5	41	886

5-15-09
REGISTERED CIVIL ENGINEER DATE

9-27-10
PLANS APPROVAL DATE

REGISTERED PROFESSIONAL ENGINEER
THANH D BUI
No. C 64571
Exp. 6-30-11
CIVIL
STATE OF CALIFORNIA

THE STATE OF CALIFORNIA OR ITS OFFICERS OR AGENTS SHALL NOT BE RESPONSIBLE FOR THE ACCURACY OR COMPLETENESS OF SCANNED COPIES OF THIS PLAN SHEET.

Caltrans Metric

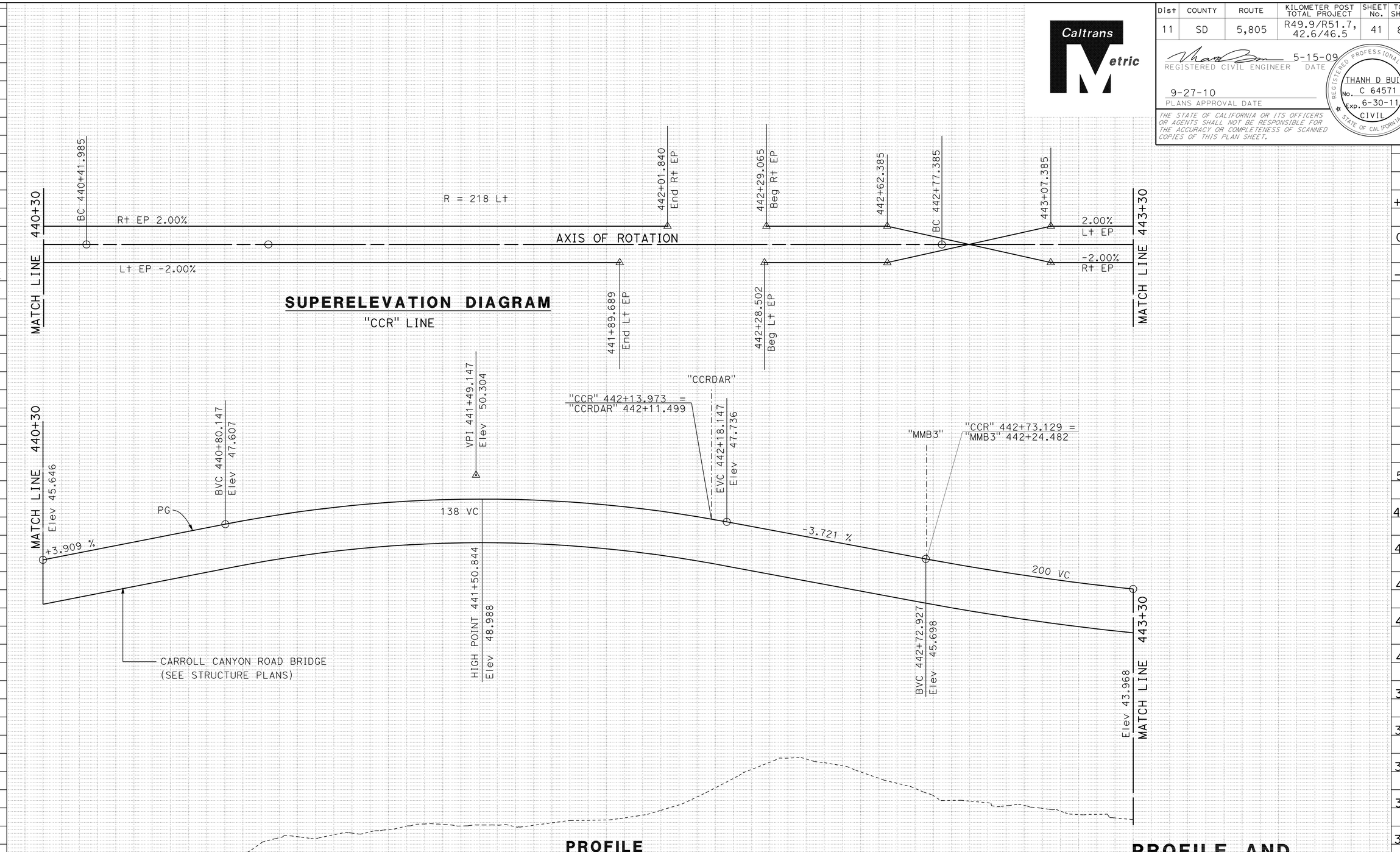

PROFILE
"CCR" LINE

ALL DIMENSIONS ARE IN METERS UNLESS OTHERWISE SHOWN

PROFILE AND SUPERELEVATION DIAGRAM

SCALE Horiz 1:500
Vert 1:100

PS-11

REVISED BY	DATE REVISED
THANH D BUI	SHAHBAZ A ALVI

CALCULATED-DESIGNED BY
CHECKED BY

FUNCTIONAL SUPERVISOR
MAJID KHARRATI

STATE OF CALIFORNIA - DEPARTMENT OF TRANSPORTATION
Caltrans PROJECT DEVELOPMENT

LAST REVISION 05-25-09
DATE PLOTTED => 29-SEP-2010
TIME PLOTTED => 13:43

Dist	COUNTY	ROUTE	KILOMETER POST TOTAL PROJECT	SHEET No.	TOTAL SHEETS
11	SD	5,805	R49.9/R51.7, 42.6/46.5	42	886

Caltrans Metric

5-15-09
REGISTERED CIVIL ENGINEER DATE

9-27-10
PLANS APPROVAL DATE

REGISTERED PROFESSIONAL ENGINEER
THANH D BUI
No. C 64571
Exp. 6-30-11
CIVIL
STATE OF CALIFORNIA

THE STATE OF CALIFORNIA OR ITS OFFICERS OR AGENTS SHALL NOT BE RESPONSIBLE FOR THE ACCURACY OR COMPLETENESS OF SCANNED COPIES OF THIS PLAN SHEET.

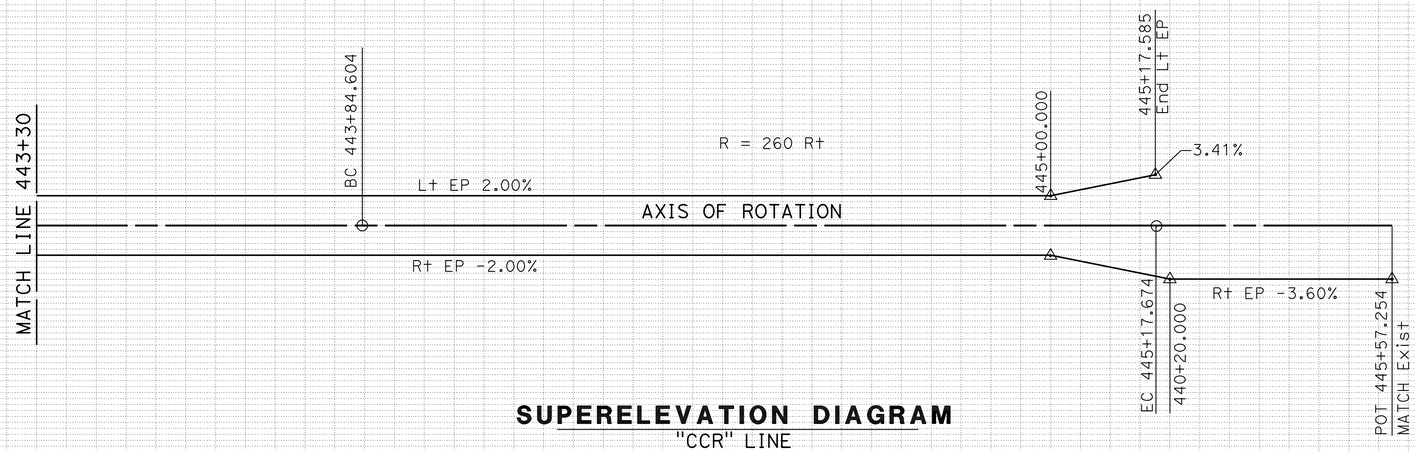

SUPERELEVATION DIAGRAM
"CCR" LINE

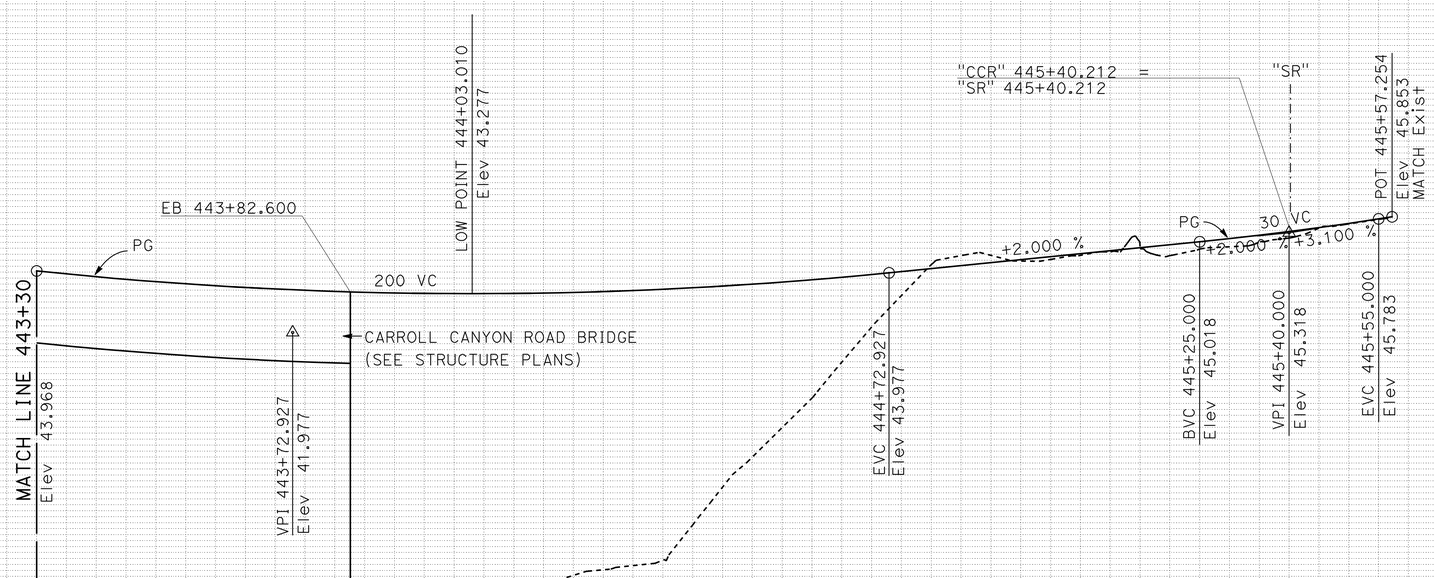

PROFILE
"CCR" LINE

ALL DIMENSIONS ARE IN METERS UNLESS OTHERWISE SHOWN

PROFILE AND SUPERELEVATION DIAGRAM

SCALE Horiz 1:500
Vert 1:100

PS-12

Station	443+00	+20	+40	+60	+80	444+00	+20	+40	+60	+80	445+00	+20	+40	+60
m^3 Exc						985								
m^3 Emb						13833								

STATE OF CALIFORNIA - DEPARTMENT OF TRANSPORTATION
Caltrans PROJECT DEVELOPMENT

FUNCTIONAL SUPERVISOR: MAJID KHARRATI
CALCULATED-DESIGNED BY: THANH D BUI
CHECKED BY: SHAHBAZ A ALVI
REVISED BY / DATE REVISED

LAST REVISION 05-25-09
DATE PLOTTED => 29-SEP-2010
TIME PLOTTED => 13:43

Dist	COUNTY	ROUTE	KILOMETER POST TOTAL PROJECT	SHEET No.	TOTAL SHEETS
11	SD	5,805	R49.9/R51.7, 42.6/46.5	43	886

Caltrans Metric

REGISTERED CIVIL ENGINEER 5-15-09 DATE

9-27-10
PLANS APPROVAL DATE

REGISTERED PROFESSIONAL ENGINEER
THANH D BUI
No. C 64571
Exp. 6-30-11
CIVIL
STATE OF CALIFORNIA

THE STATE OF CALIFORNIA OR ITS OFFICERS OR AGENTS SHALL NOT BE RESPONSIBLE FOR THE ACCURACY OR COMPLETENESS OF SCANNED COPIES OF THIS PLAN SHEET.

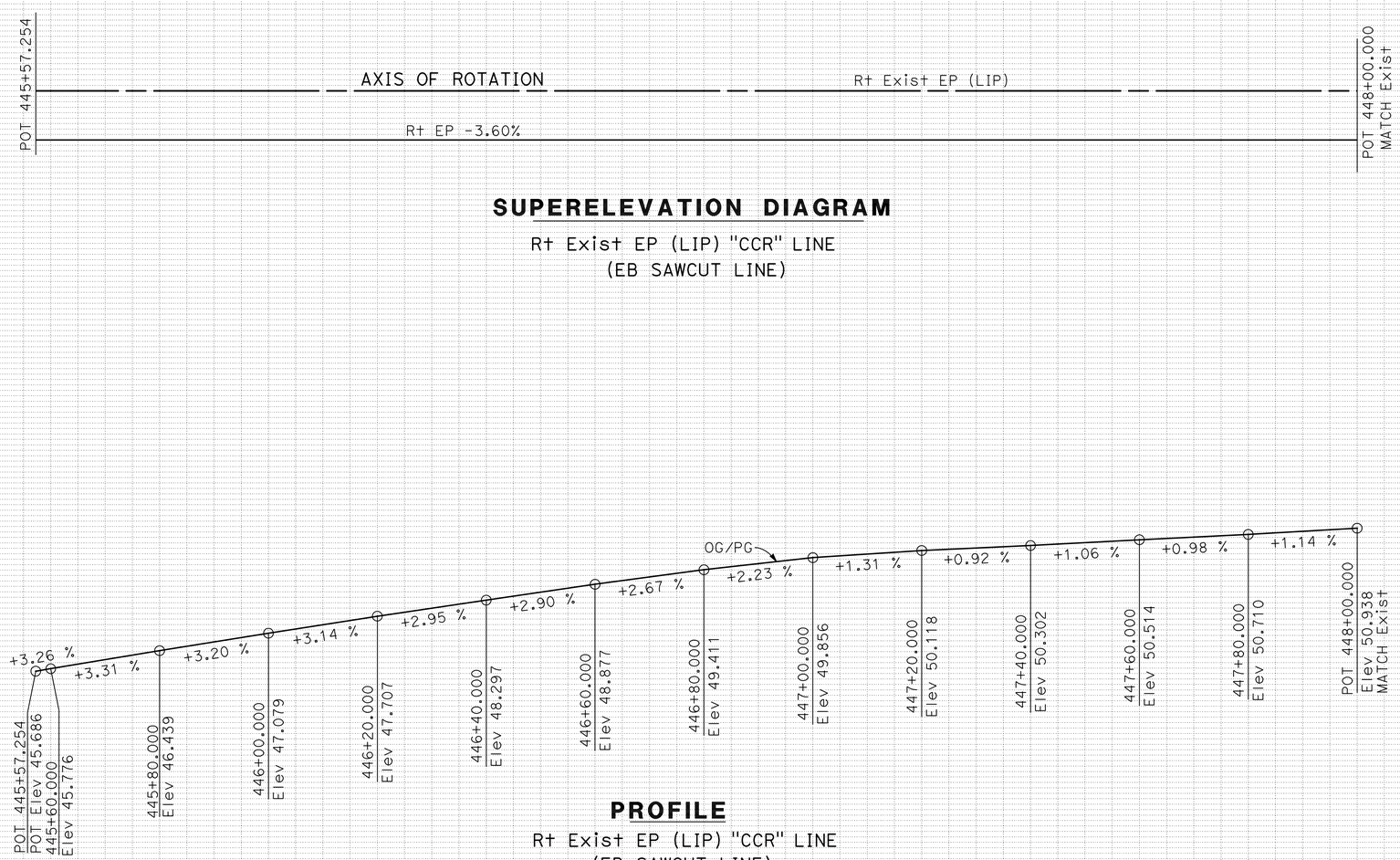

SUPERELEVATION DIAGRAM

Rt Exist EP (LIP) "CCR" LINE
(EB SAWCUT LINE)

PROFILE

Rt Exist EP (LIP) "CCR" LINE
(EB SAWCUT LINE)

ALL DIMENSIONS ARE IN METERS UNLESS OTHERWISE SHOWN

PROFILE AND SUPERELEVATION DIAGRAM

SCALE Horiz 1:500
Vert 1:100

PS-13

Station	+40	+60	+80	446+00	+20	+40	+60	+80	447+00	+20	+40	+60	+80	448+00	+20	+40
m^3 Exc							791									
m^3 Emb							7									

REVISED BY | DATE REVISED

THANH D BUI | SHAHBAZ A ALVI

CALCULATED-DESIGNED BY | CHECKED BY

FUNCTIONAL SUPERVISOR: MAJID KHARRATI

STATE OF CALIFORNIA - DEPARTMENT OF TRANSPORTATION
Caltrans PROJECT DEVELOPMENT

LAST REVISION 05-25-09 | DATE PLOTTED => 29-SEP-2010 | TIME PLOTTED => 13:43

Dist	COUNTY	ROUTE	KILOMETER POST TOTAL PROJECT	SHEET No.	TOTAL SHEETS
11	SD	5,805	R49.9/R51.7, 42.6/46.5	44	886

Caltrans Metric

REGISTERED CIVIL ENGINEER 5-15-09 DATE

9-27-10
PLANS APPROVAL DATE

REGISTERED PROFESSIONAL ENGINEER THANH D BUI No. C 64571 Exp. 6-30-11 CIVIL STATE OF CALIFORNIA

THE STATE OF CALIFORNIA OR ITS OFFICERS OR AGENTS SHALL NOT BE RESPONSIBLE FOR THE ACCURACY OR COMPLETENESS OF SCANNED COPIES OF THIS PLAN SHEET.

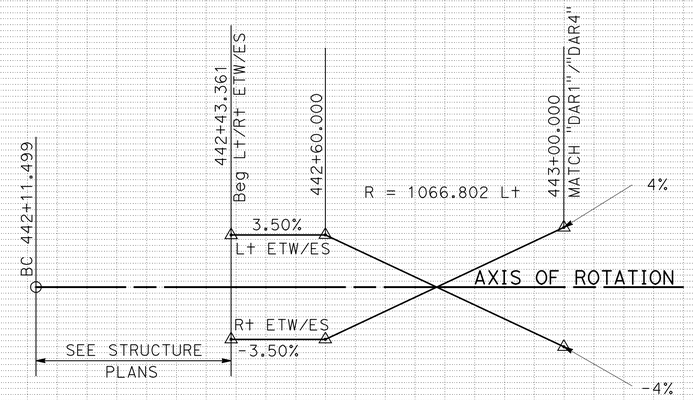

SUPERELEVATION
"CCRDAR" LINE

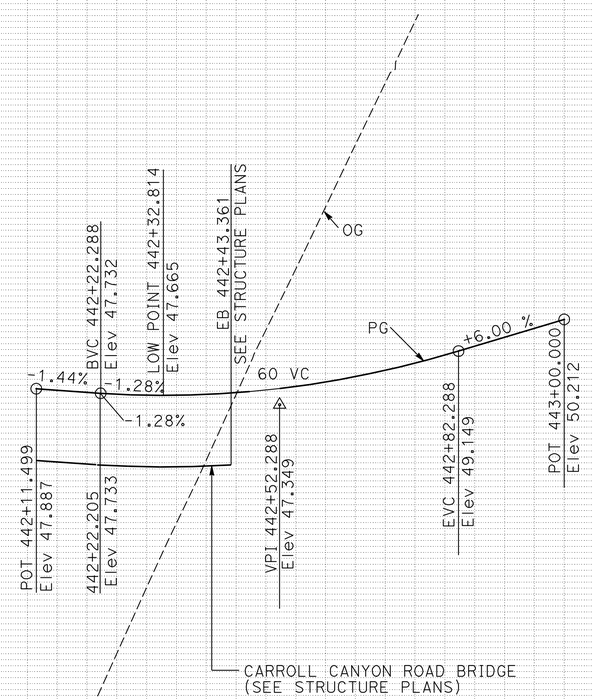

PROFILE
"CCRDAR" LINE

ALL DIMENSIONS ARE IN METERS UNLESS OTHERWISE SHOWN

PROFILE AND SUPERELEVATION DIAGRAM

SCALE Horiz 1:500
Vert 1:100

PS-14

Station	442+00	+20	+40	+60	+80	443+00	+20	+40
m^3 Exc				7060				
m^3 Emb				12				

+4% 0% -4%

52 50 48 46 44

REVISED BY | DATE REVISED
THANH D BUI | SHAHBAZ A ALVI
CALCULATED-DESIGNED BY | CHECKED BY
FUNCTIONAL SUPERVISOR
MAJID KHARRATI

STATE OF CALIFORNIA - DEPARTMENT OF TRANSPORTATION
Caltrans PROJECT DEVELOPMENT

LAST REVISION 05-25-09 DATE PLOTTED => 29-SEP-2010 TIME PLOTTED => 13:43

Dist	COUNTY	ROUTE	KILOMETER POST TOTAL PROJECT	SHEET No.	TOTAL SHEETS
11	SD	5,805	R49.9/R51.7, 42.6/46.5	45	886

Caltrans Metric

5-15-09
REGISTERED CIVIL ENGINEER DATE

9-27-10
PLANS APPROVAL DATE

REGISTERED PROFESSIONAL ENGINEER
THANH D BUI
No. C 64571
Exp. 6-30-11
CIVIL
STATE OF CALIFORNIA

THE STATE OF CALIFORNIA OR ITS OFFICERS OR AGENTS SHALL NOT BE RESPONSIBLE FOR THE ACCURACY OR COMPLETENESS OF SCANNED COPIES OF THIS PLAN SHEET.

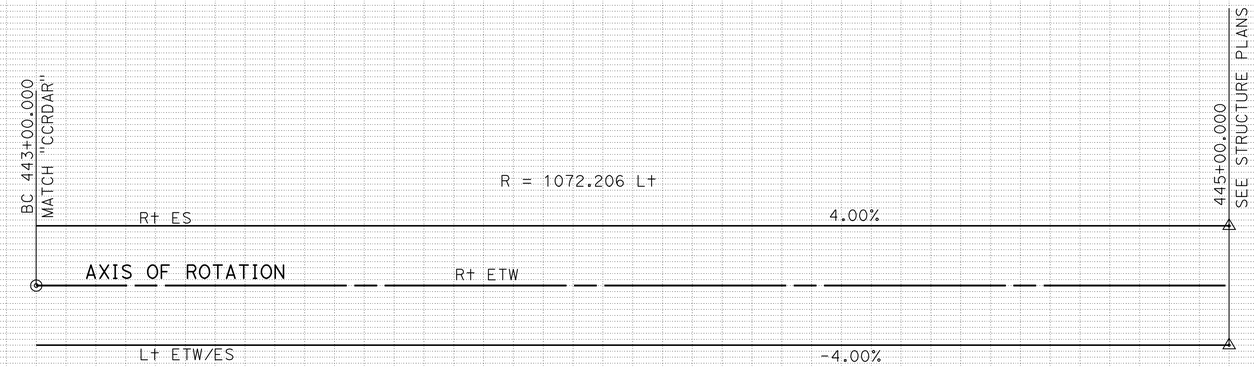

SUPERELEVATION DIAGRAM
"DAR1" LINE

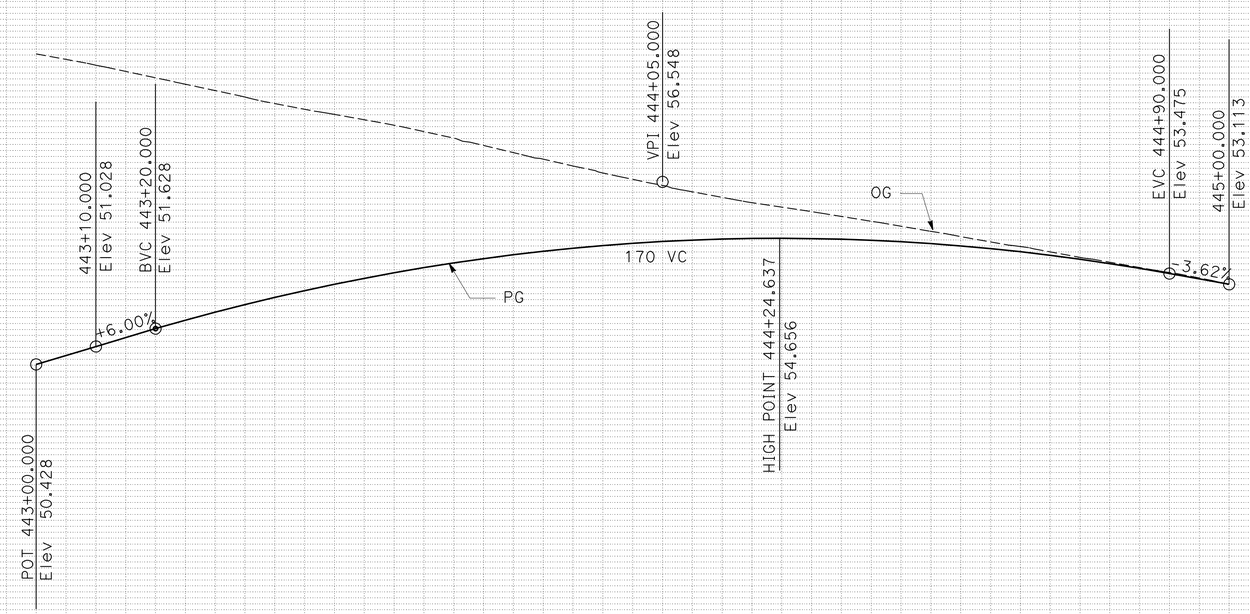

PROFILE
"DAR1" LINE

ALL DIMENSIONS ARE IN METERS UNLESS OTHERWISE SHOWN

PROFILE AND SUPERELEVATION DIAGRAM

SCALE Horiz 1:500
Vert 1:100

PS-15

Station	+60	+80	443+00	+20	+40	+60	+80	444+00	+20	+40	+60	+80	445+00	+20	+40	+60
m^3 Exc								6651								
m^3 Emb								15								

STATE OF CALIFORNIA - DEPARTMENT OF TRANSPORTATION
Caltrans PROJECT DEVELOPMENT

FUNCTIONAL SUPERVISOR: MAJID KHARRATI
CALCULATED-DESIGNED BY: THANH D BUI
CHECKED BY: SHAHBAZ A ALVI
REVISED BY
DATE REVISED

LAST REVISION 05-25-09
DATE PLOTTED => 29-SEP-2010
TIME PLOTTED => 13:43

Dist	COUNTY	ROUTE	KILOMETER POST TOTAL PROJECT	SHEET No.	TOTAL SHEETS
11	SD	5,805	R49.9/R51.7, 42.6/46.5	46	886

Caltrans Metric

5-15-09
REGISTERED CIVIL ENGINEER DATE

9-27-10
PLANS APPROVAL DATE

REGISTERED PROFESSIONAL ENGINEER
THANH D BUI
No. C 64571
Exp. 6-30-11
CIVIL
STATE OF CALIFORNIA

THE STATE OF CALIFORNIA OR ITS OFFICERS OR AGENTS SHALL NOT BE RESPONSIBLE FOR THE ACCURACY OR COMPLETENESS OF SCANNED COPIES OF THIS PLAN SHEET.

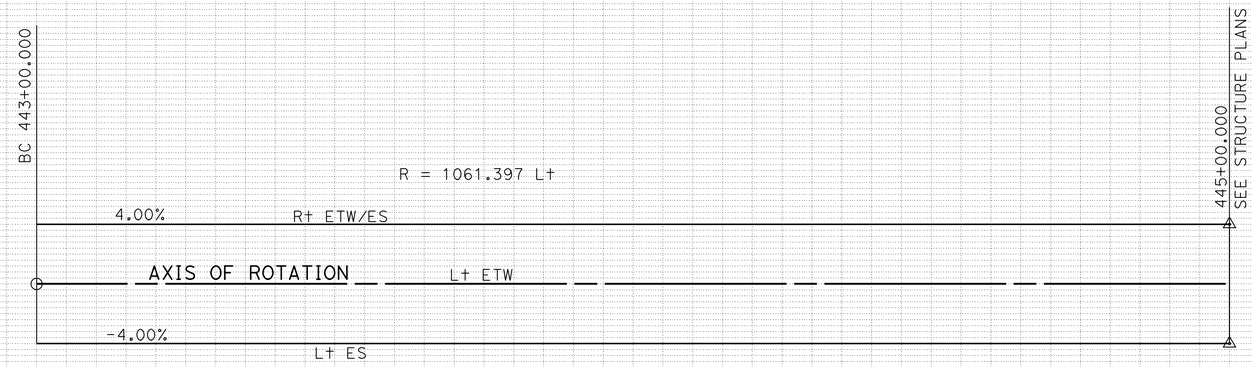

SUPERELEVATION DIAGRAM
"DAR4" LINE

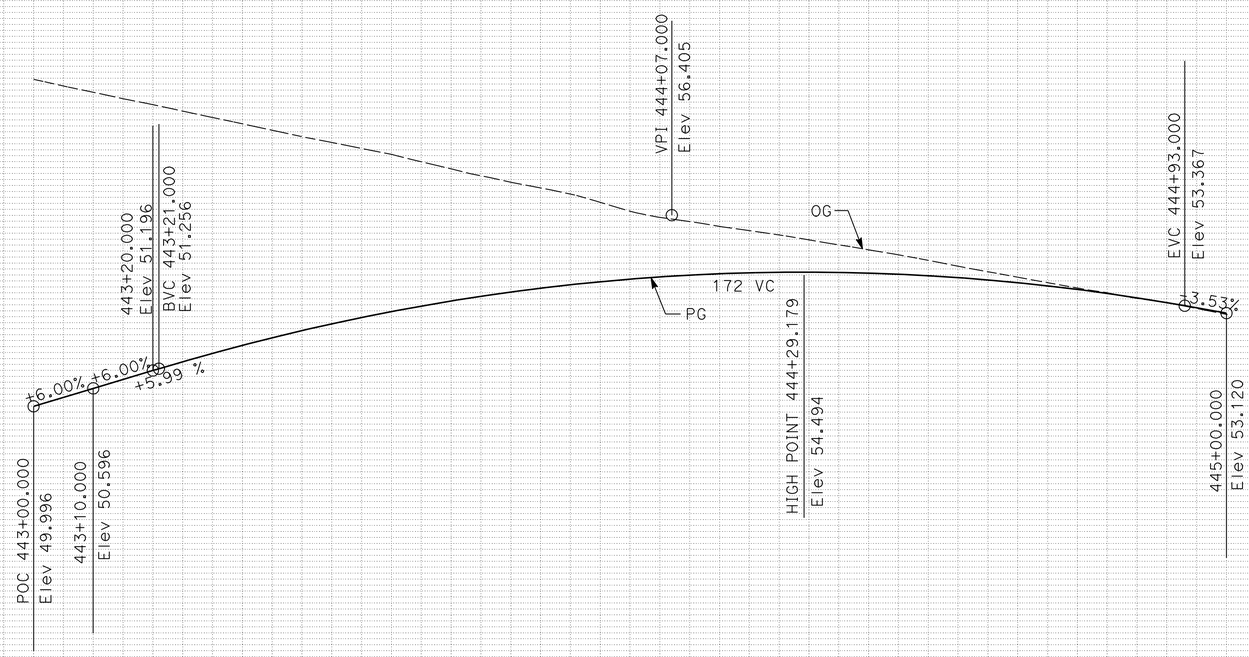

PROFILE
"DAR4" LINE

ALL DIMENSIONS ARE IN METERS UNLESS OTHERWISE SHOWN

PROFILE AND SUPERELEVATION DIAGRAM

SCALE Horiz 1:500
Vert 1:100

PS-16

Station	+80	443+00	+20	+40	+60	+80	444+00	+20	+40	+60	+80	445+00	+20
m^3 Exc							6650						
m^3 Emb							15						

STATE OF CALIFORNIA - DEPARTMENT OF TRANSPORTATION
Caltrans PROJECT DEVELOPMENT

FUNCTIONAL SUPERVISOR: MAJID KHARRATI
CALCULATED-DESIGNED BY: THANH D BUI
CHECKED BY: SHAHBAZ A ALVI
REVISED BY / DATE REVISED

LAST REVISION 05-25-09
DATE PLOTTED => 29-SEP-2010
TIME PLOTTED => 13:43

Dist	COUNTY	ROUTE	KILOMETER POST TOTAL PROJECT	SHEET No.	TOTAL SHEETS
11	SD	5,805	R49.9/R51.7, 42.6/46.5	47	886

REGISTERED CIVIL ENGINEER 5-15-09 DATE

9-27-10
PLANS APPROVAL DATE

REGISTERED PROFESSIONAL ENGINEER SHAHBAZ A ALVI No. 55293 Exp. 12-31-10 CIVIL STATE OF CALIFORNIA

THE STATE OF CALIFORNIA OR ITS OFFICERS OR AGENTS SHALL NOT BE RESPONSIBLE FOR THE ACCURACY OR COMPLETENESS OF SCANNED COPIES OF THIS PLAN SHEET.

Caltrans Metric

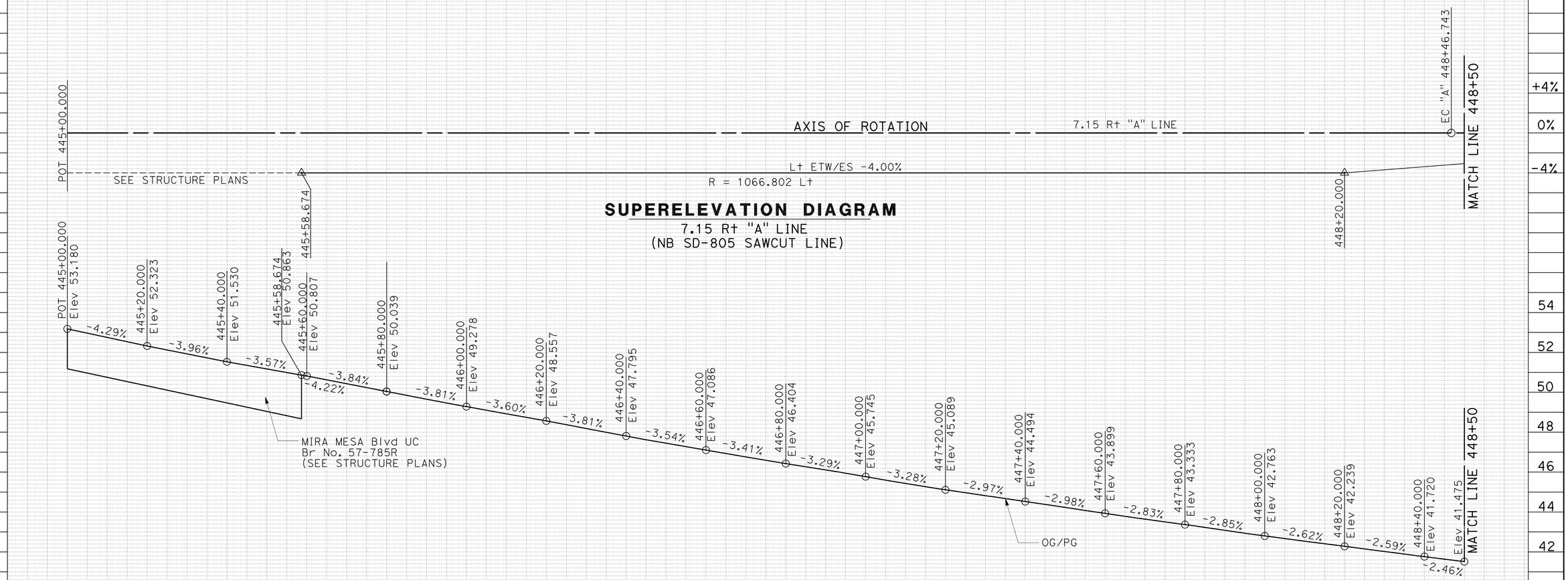

SUPERELEVATION DIAGRAM

7.15 Rt "A" LINE
(NB SD-805 SAWCUT LINE)

PROFILE

7.150 Rt "A" LINE
(NB SD-805 SAWCUT LINE)

ALL DIMENSIONS ARE IN METERS UNLESS OTHERWISE SHOWN

PROFILE AND SUPERELEVATION DIAGRAM

SCALE Horiz 1:500
Vert 1:100

PS-17

Station	445+00	+20	+40	+60	+80	446+00	+20	+40	+60	+80	447+00	+20	+40	+60	+80	448+00	+20	+40
m^3 Exc											665							
m^3 Emb											1							

STATE OF CALIFORNIA - DEPARTMENT OF TRANSPORTATION
Caltrans PROJECT DEVELOPMENT

FUNCTIONAL SUPERVISOR: MAJID KHARRATI
CALCULATED-DESIGNED BY: SHAHBAZ A ALVI
CHECKED BY: THANH D BUI
REVISED BY / DATE REVISED

LAST REVISION 05-25-09
DATE PLOTTED => 29-SEP-2010
TIME PLOTTED => 13:43

Dist	COUNTY	ROUTE	KILOMETER POST TOTAL PROJECT	SHEET No.	TOTAL SHEETS
11	SD	5,805	R49.9/R51.7, 42.6/46.5	48	886

REGISTERED CIVIL ENGINEER 5-15-09 DATE

9-27-10
PLANS APPROVAL DATE

REGISTERED PROFESSIONAL ENGINEER SHAHBAZ A ALVI No. 55293 Exp. 12-31-10 CIVIL STATE OF CALIFORNIA

THE STATE OF CALIFORNIA OR ITS OFFICERS OR AGENTS SHALL NOT BE RESPONSIBLE FOR THE ACCURACY OR COMPLETENESS OF SCANNED COPIES OF THIS PLAN SHEET.

Caltrans Metric

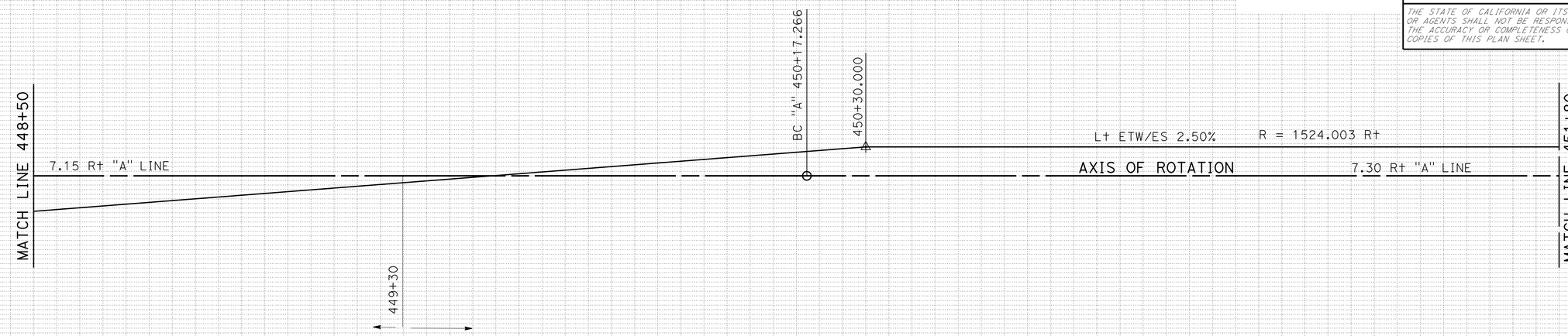

SUPERELEVATION DIAGRAM
7.15 R+ "A" LINE
(NB SD-805 SAWCUT LINE)

SUPERELEVATION DIAGRAM
7.30 R+ "A" LINE
(NB SD-805 SAWCUT LINE)

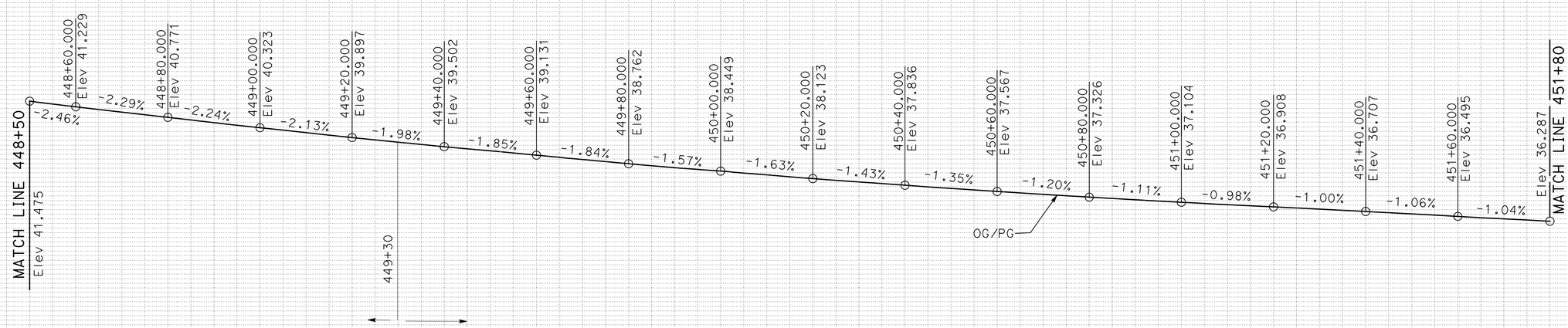

PROFILE
7.15 R+ "A" LINE
(NB SD-805 SAWCUT LINE)

PROFILE
7.30 R+ "A" LINE
(NB SD-805 SAWCUT LINE)

ALL DIMENSIONS ARE IN METERS UNLESS OTHERWISE SHOWN

PROFILE AND SUPERELEVATION DIAGRAM

SCALE Horiz 1:500
Vert 1:100

PS-18

Station		+40	+60	+80	449+00	+20	+40	+60	+80	450+00	+20	+40	+60	+80	451+00	+20	+40	+60	+80
m^3	Exc									763									
	Emb									6									

STATE OF CALIFORNIA - DEPARTMENT OF TRANSPORTATION
Caltrans PROJECT DEVELOPMENT

FUNCTIONAL SUPERVISOR: MAJID KHARRATI
CALCULATED-DESIGNED BY: SHAHBAZ A ALVI
CHECKED BY: THANH D BUI
REVISED BY / DATE REVISED

LAST REVISION 05-25-09 DATE PLOTTED => 29-SEP-2010 TIME PLOTTED => 13:43

Dist	COUNTY	ROUTE	KILOMETER POST TOTAL PROJECT	SHEET No.	TOTAL SHEETS
11	SD	5,805	R49.9/R51.7, 42.6/46.5	49	886

REGISTERED CIVIL ENGINEER 5-15-09 DATE

9-27-10
PLANS APPROVAL DATE

REGISTERED PROFESSIONAL ENGINEER SHAHBAZ A ALVI No. 55293 Exp. 12-31-10 CIVIL STATE OF CALIFORNIA

THE STATE OF CALIFORNIA OR ITS OFFICERS OR AGENTS SHALL NOT BE RESPONSIBLE FOR THE ACCURACY OR COMPLETENESS OF SCANNED COPIES OF THIS PLAN SHEET.

Caltrans Metric

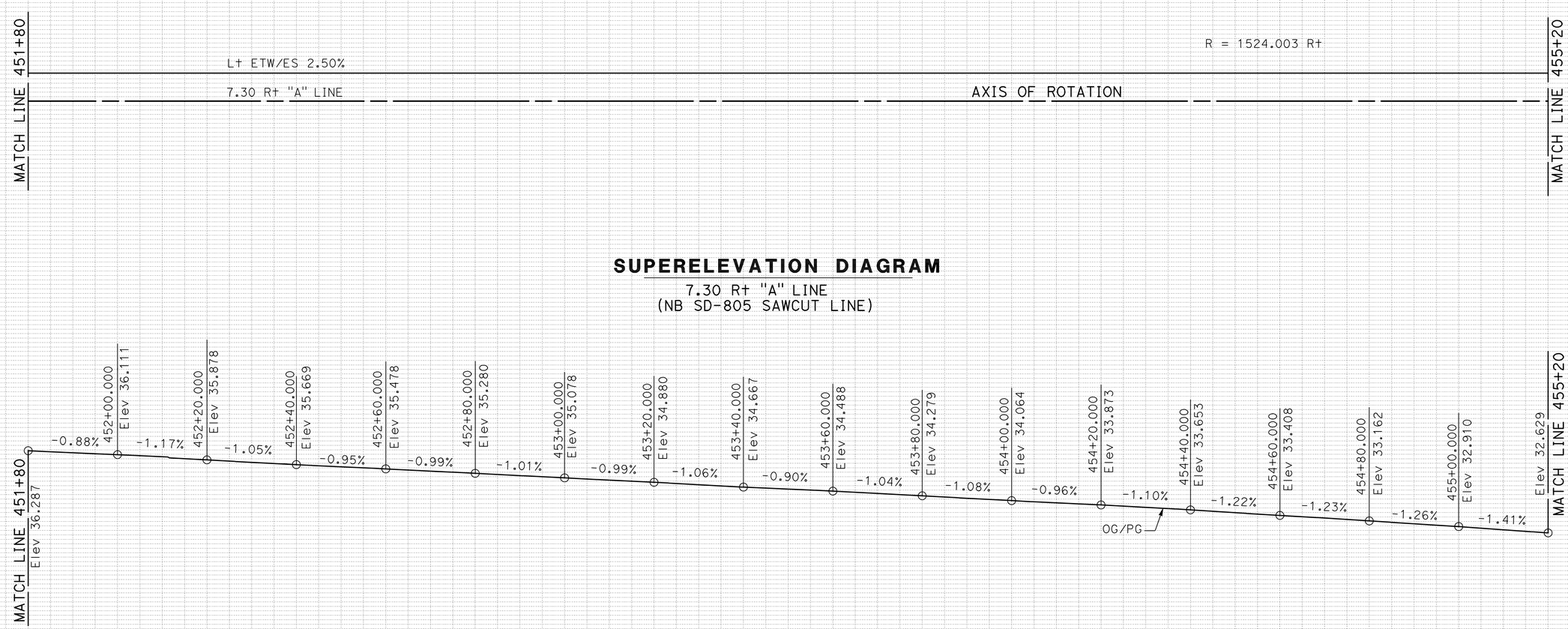

ALL DIMENSIONS ARE IN METERS UNLESS OTHERWISE SHOWN

PROFILE AND SUPERELEVATION DIAGRAM

SCALE Horiz 1:500
Vert 1:100

PS-19

Station	+80	452+00	+20	+40	+60	+80	453+00	+20	+40	+60	+80	454+00	+20	+40	+60	+80	455+00	+20
m^3 Exc	948																	
m^3 Emb	1																	

STATE OF CALIFORNIA - DEPARTMENT OF TRANSPORTATION
Caltrans PROJECT DEVELOPMENT

FUNCTIONAL SUPERVISOR: MAJID KHARRATI
CALCULATED-DESIGNED BY: THANH D BUI
CHECKED BY: SHAHBAZ A ALVI
REVISED BY
DATE REVISED

LAST REVISION 05-25-09
DATE PLOTTED => 29-SEP-2010
TIME PLOTTED => 13:43

Dist	COUNTY	ROUTE	KILOMETER POST TOTAL PROJECT	SHEET No.	TOTAL SHEETS
11	SD	5,805	R49.9/R51.7, 42.6/46.5	50	886

REGISTERED CIVIL ENGINEER 5-15-09 DATE

9-27-10
PLANS APPROVAL DATE

REGISTERED PROFESSIONAL ENGINEER SHAHBAZ A ALVI No. 55293 Exp. 12-31-10 CIVIL STATE OF CALIFORNIA

THE STATE OF CALIFORNIA OR ITS OFFICERS OR AGENTS SHALL NOT BE RESPONSIBLE FOR THE ACCURACY OR COMPLETENESS OF SCANNED COPIES OF THIS PLAN SHEET.

Caltrans Metric

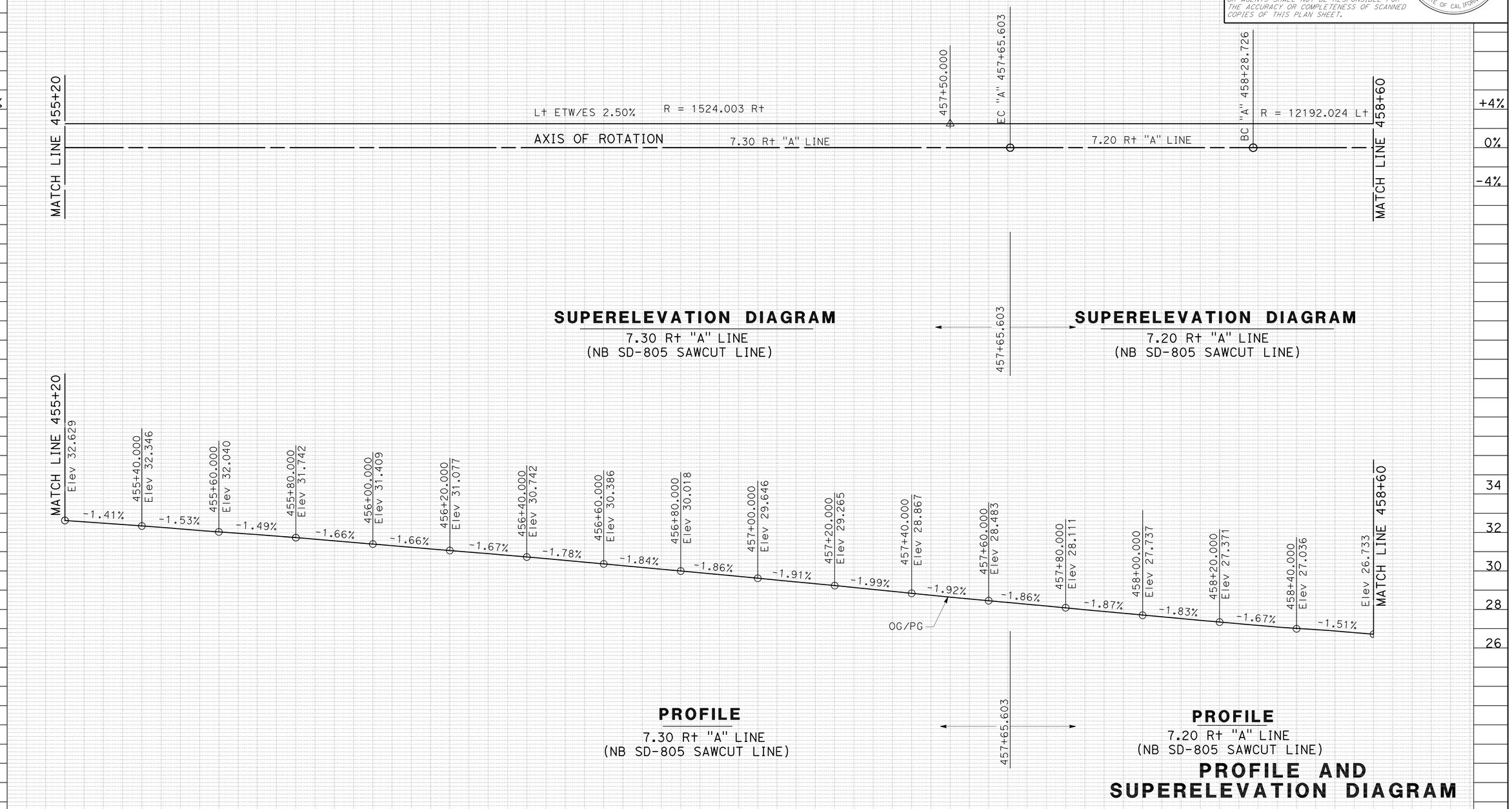

ALL DIMENSIONS ARE IN METERS UNLESS OTHERWISE SHOWN

PROFILE AND SUPERELEVATION DIAGRAM

SCALE Horiz 1:500
Vert 1:100

PS-20

Station		+20	+40	+60	+80	456+00	+20	+40	+60	+80	457+00	+20	+40	+60	+80	458+00	+20	+40	+60
m^3	Exc										1034								
	Emb										0								

REVISED BY | DATE REVISED
THANH D BUI | SHAHBAZ A ALVI
CALCULATED-DESIGNED BY | CHECKED BY
FUNCTIONAL SUPERVISOR
MAJID KHARRATI

STATE OF CALIFORNIA - DEPARTMENT OF TRANSPORTATION
Caltrans PROJECT DEVELOPMENT

LAST REVISION 05-25-09
DATE PLOTTED => 29-SEP-2010
TIME PLOTTED => 13:44

Dist	COUNTY	ROUTE	KILOMETER POST TOTAL PROJECT	SHEET No.	TOTAL SHEETS
11	SD	5,805	R49.9/R51.7, 42.6/46.5	51	886

REGISTERED CIVIL ENGINEER 5-15-09 DATE

9-27-10
PLANS APPROVAL DATE

REGISTERED PROFESSIONAL ENGINEER SHAHBAZ A ALVI No. 55293 Exp. 12-31-10 CIVIL STATE OF CALIFORNIA

THE STATE OF CALIFORNIA OR ITS OFFICERS OR AGENTS SHALL NOT BE RESPONSIBLE FOR THE ACCURACY OR COMPLETENESS OF SCANNED COPIES OF THIS PLAN SHEET.

Caltrans Metric

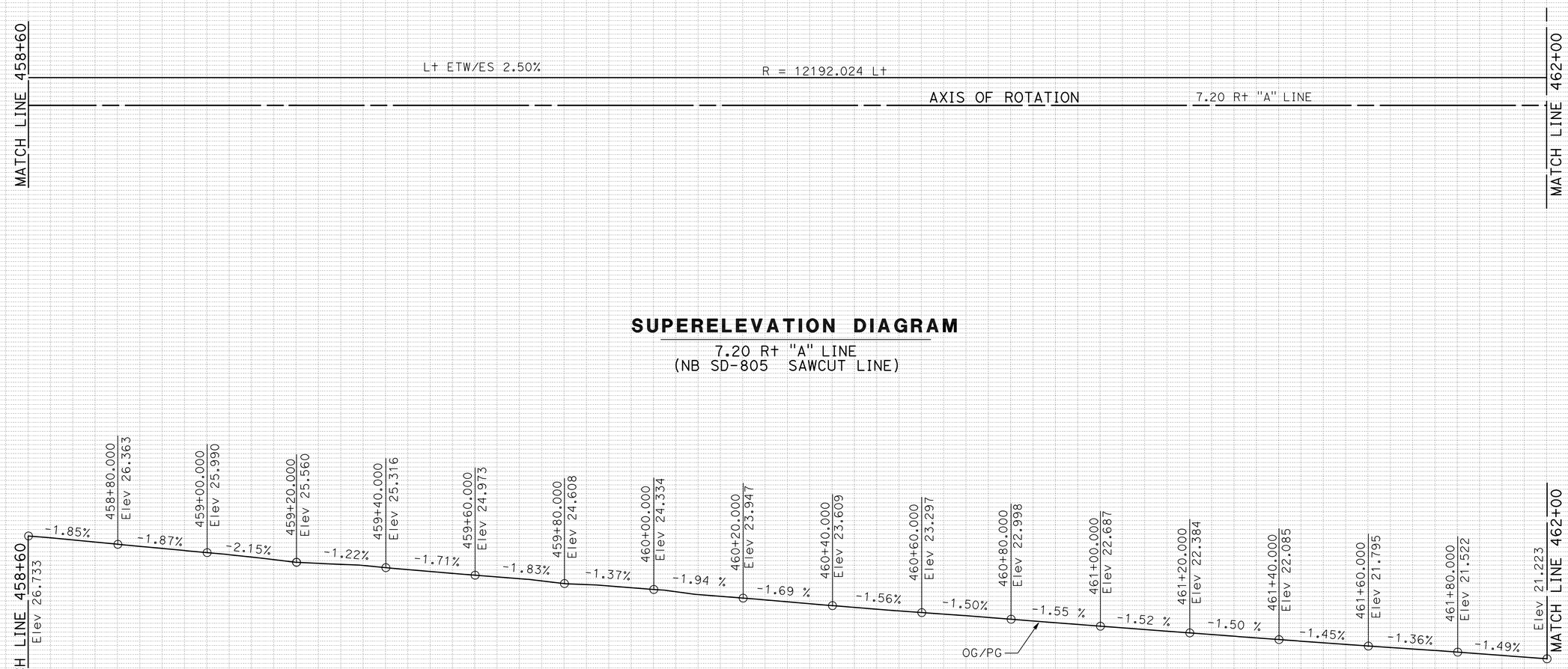

SUPERELEVATION DIAGRAM

7.20 R+ "A" LINE
(NB SD-805 SAWCUT LINE)

PROFILE

7.20 R+ "A" LINE
(NB SD-805 SAWCUT LINE)

ALL DIMENSIONS ARE IN METERS UNLESS OTHERWISE SHOWN

PROFILE AND SUPERELEVATION DIAGRAM

SCALE Horiz 1:500
Vert 1:100

PS-21

Station	+60	+80	459+00	+20	+40	+60	+80	460+00	+20	+40	+60	+80	461+00	+20	+40	+60	+80	462+00
m^3 Exc									1047									
m^3 Emb									0									

REVISED BY | DATE REVISED
THANH D BUI | SHAHBAZ A ALVI
CALCULATED-DESIGNED BY | CHECKED BY
FUNCTIONAL SUPERVISOR: MAJID KHARRATI

STATE OF CALIFORNIA - DEPARTMENT OF TRANSPORTATION
Caltrans PROJECT DEVELOPMENT

LAST REVISION 05-25-09 | DATE PLOTTED => 29-SEP-2010 | TIME PLOTTED => 13:44

Dist	COUNTY	ROUTE	KILOMETER POST TOTAL PROJECT	SHEET No.	TOTAL SHEETS
11	SD	5,805	R49.9/R51.7, 42.6/46.5	52	886

REGISTERED CIVIL ENGINEER 5-15-09 DATE

9-27-10
PLANS APPROVAL DATE

REGISTERED PROFESSIONAL ENGINEER SHAHBAZ A ALVI No. 55293 Exp. 12-31-10 CIVIL STATE OF CALIFORNIA

THE STATE OF CALIFORNIA OR ITS OFFICERS OR AGENTS SHALL NOT BE RESPONSIBLE FOR THE ACCURACY OR COMPLETENESS OF SCANNED COPIES OF THIS PLAN SHEET.

Caltrans Metric

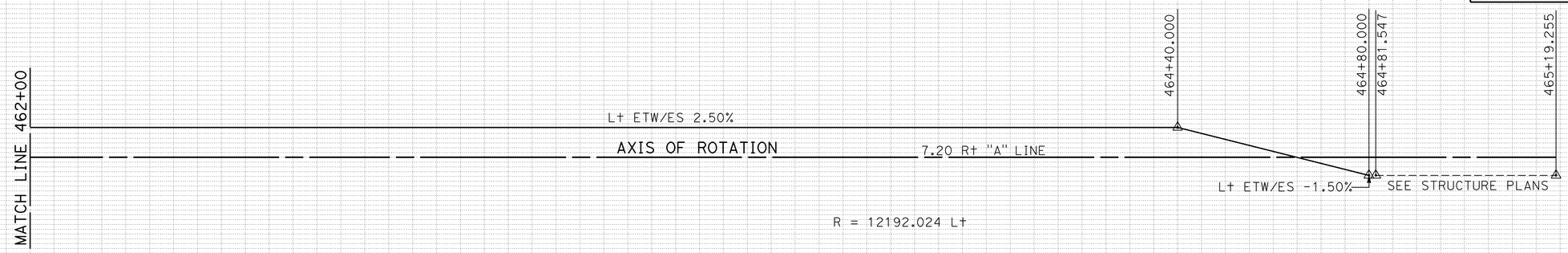

SUPERELEVATION DIAGRAM

7.20 R† "A" LINE
(NB SD-805 SAWCUT LINE)

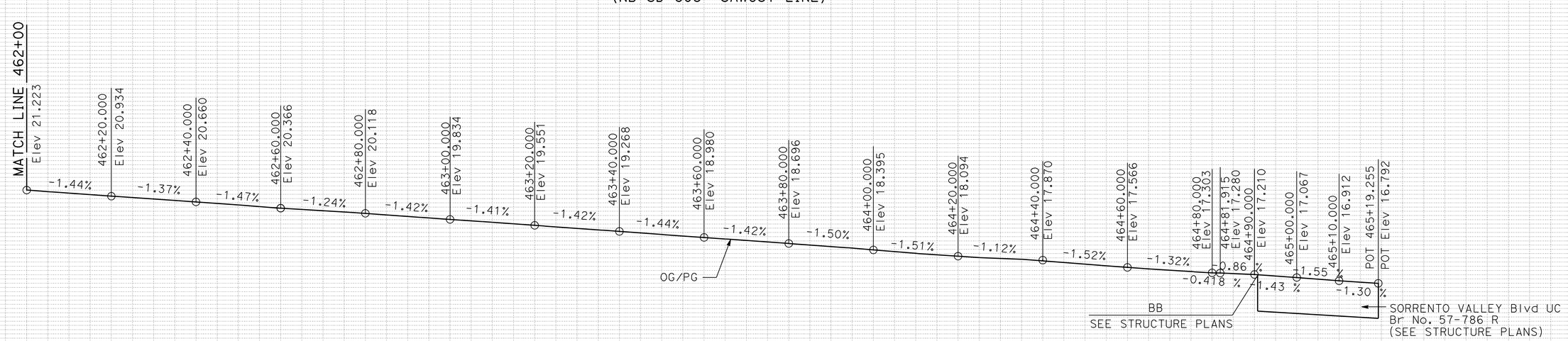

PROFILE

7.20 R† "A" LINE
(NB SD-805 SAWCUT LINE)

ALL DIMENSIONS ARE IN METERS UNLESS OTHERWISE SHOWN

PROFILE AND SUPERELEVATION DIAGRAM

SCALE Horiz 1:500
Vert 1:100

PS-22

Station	462+00	+20	+40	+60	+80	463+00	+20	+40	+60	+80	464+00	+20	+40	+60	+80	465+00	+20
m^3 Exc								902									
m^3 Emb								0									

THANH D BUI — REVISED BY
SHAHBAZ A ALVI — DATE REVISED
CALCULATED-DESIGNED BY
CHECKED BY
FUNCTIONAL SUPERVISOR
MAJID KHARRATI

STATE OF CALIFORNIA - DEPARTMENT OF TRANSPORTATION
Caltrans PROJECT DEVELOPMENT

LAST REVISION 05-25-09
DATE PLOTTED => 29-SEP-2010
TIME PLOTTED => 13:44

Dist	COUNTY	ROUTE	KILOMETER POST TOTAL PROJECT	SHEET No.	TOTAL SHEETS
11	SD	5,805	R49.9/R51.7, 42.6/46.5	53	886

REGISTERED CIVIL ENGINEER 5-15-09 DATE

9-27-10
PLANS APPROVAL DATE

REGISTERED PROFESSIONAL ENGINEER SHAHBAZ A ALVI No. 55293 Exp. 12-31-10 CIVIL STATE OF CALIFORNIA

THE STATE OF CALIFORNIA OR ITS OFFICERS OR AGENTS SHALL NOT BE RESPONSIBLE FOR THE ACCURACY OR COMPLETENESS OF SCANNED COPIES OF THIS PLAN SHEET.

Caltrans Metric

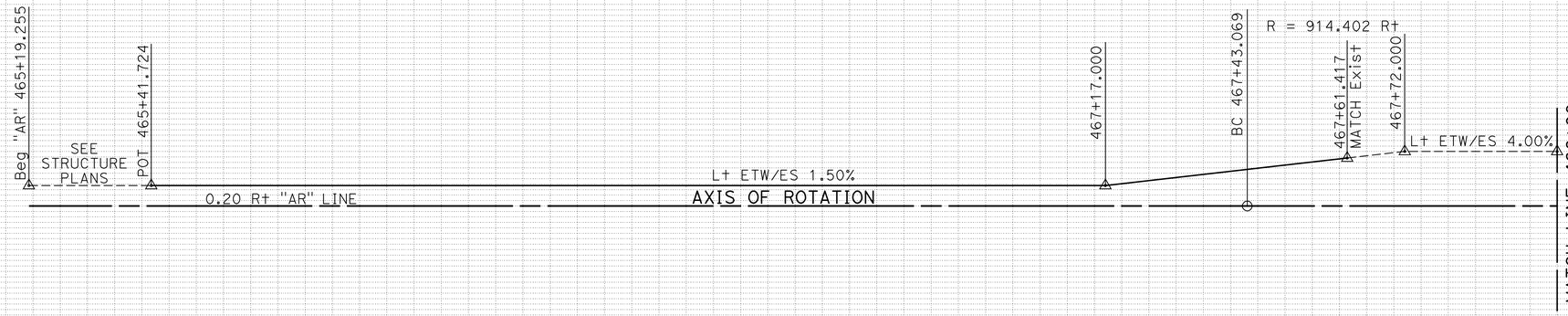

SUPERELEVATION DIAGRAM

0.20 R+ "AR" LINE
(NB SD-805 SAWCUT LINE)

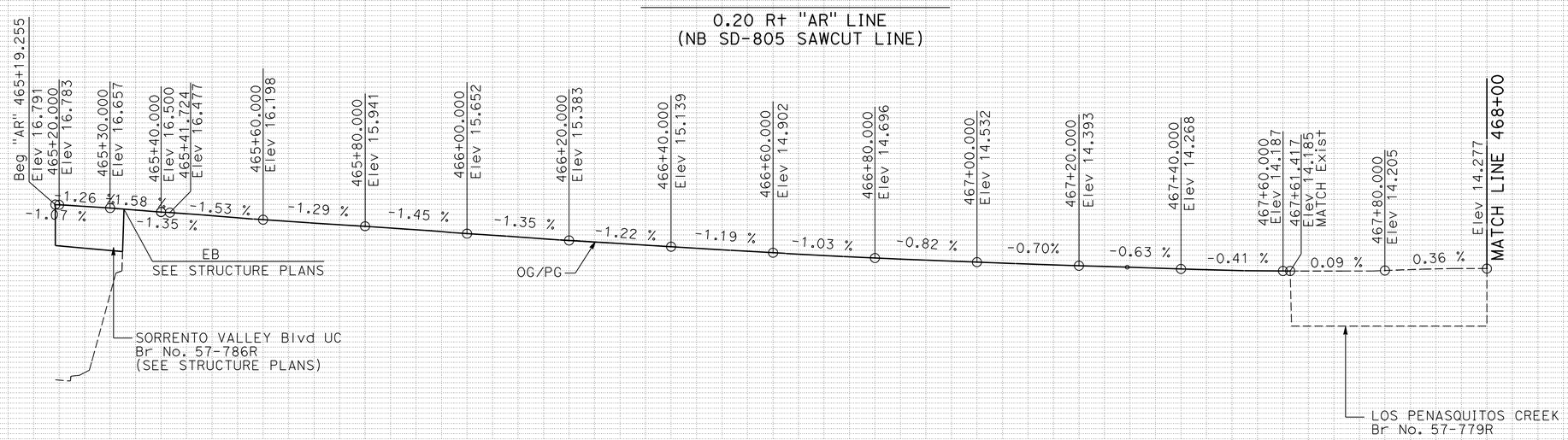

PROFILE

0.20 R+ "AR" LINE
(NB SD-805 SAWCUT LINE)

ALL DIMENSIONS ARE IN METERS UNLESS OTHERWISE SHOWN

PROFILE AND SUPERELEVATION DIAGRAM

SCALE Horiz 1:500
Vert 1:100

PS-23

Station	465+00	+20	+40	+60	+80	466+00	+20	+40	+60	+80	467+00	+20	+40	+60	+80	468+00	+20
m^3 Exc								465									
m^3 Emb								0									

STATE OF CALIFORNIA - DEPARTMENT OF TRANSPORTATION
Caltrans PROJECT DEVELOPMENT

FUNCTIONAL SUPERVISOR: MAJID KHARRATI
CALCULATED-DESIGNED BY: SHAHBAZ A ALVI
CHECKED BY: THANH D BUI
REVISED BY / DATE REVISED

LAST REVISION 05-25-09 DATE PLOTTED => 29-SEP-2010 TIME PLOTTED => 13:44

Dist	COUNTY	ROUTE	KILOMETER POST TOTAL PROJECT	SHEET No.	TOTAL SHEETS
11	SD	5,805	R49.9/R51.7, 42.6/46.5	54	886

REGISTERED CIVIL ENGINEER 5-15-09 DATE

9-27-10
PLANS APPROVAL DATE

REGISTERED PROFESSIONAL ENGINEER SHAHBAZ A ALVI No. 55293 Exp. 12-31-10 CIVIL STATE OF CALIFORNIA

THE STATE OF CALIFORNIA OR ITS OFFICERS OR AGENTS SHALL NOT BE RESPONSIBLE FOR THE ACCURACY OR COMPLETENESS OF SCANNED COPIES OF THIS PLAN SHEET.

Caltrans Metric

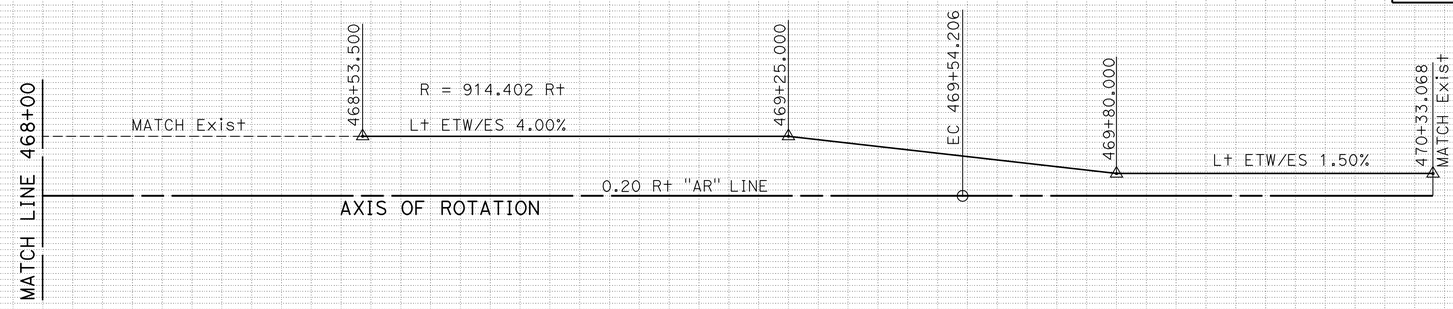

SUPERELEVATION DIAGRAM

0.20 Rt "AR" LINE
(NB SD-805 SAWCUT LINE)

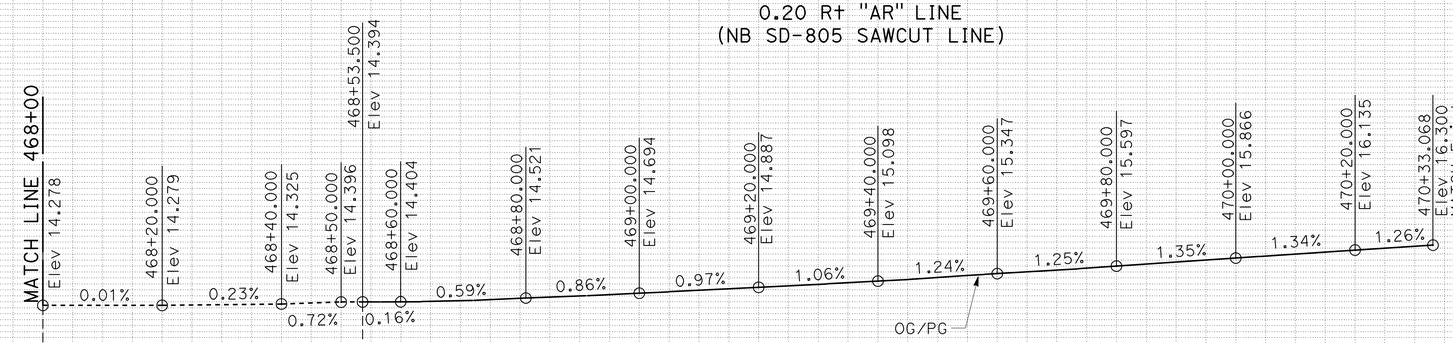

PROFILE

0.20 Rt "AR" LINE
(NB SD-805 SAWCUT LINE)

ALL DIMENSIONS ARE IN METERS UNLESS OTHERWISE SHOWN

PROFILE AND SUPERELEVATION DIAGRAM

SCALE Horiz 1:500
Vert 1:100

PS-24

Station	468+00	+20	+40	+60	+80	469+00	+20	+40	+60	+80	470+00	+20	+40
m^3 Exc								370					
m^3 Emb								0					

STATE OF CALIFORNIA - DEPARTMENT OF TRANSPORTATION
Caltrans PROJECT DEVELOPMENT

FUNCTIONAL SUPERVISOR: MAJID KHARRATI
CALCULATED-DESIGNED BY: SHAHBAZ A ALVI
CHECKED BY: THANH D BUI
REVISED BY / DATE REVISED

LAST REVISION DATE PLOTTED => 29-SEP-2010
05-25-09 TIME PLOTTED => 13:44

Dist	COUNTY	ROUTE	KILOMETER POST TOTAL PROJECT	SHEET No.	TOTAL SHEETS
11	SD	5,805	R49.9/R51.7, 42.6/46.5	55	886

Caltrans Metric

5-15-09
REGISTERED CIVIL ENGINEER DATE

9-27-10
PLANS APPROVAL DATE

REGISTERED PROFESSIONAL ENGINEER
THANH D BUI
No. C 64571
Exp. 6-30-11
CIVIL
STATE OF CALIFORNIA

THE STATE OF CALIFORNIA OR ITS OFFICERS OR AGENTS SHALL NOT BE RESPONSIBLE FOR THE ACCURACY OR COMPLETENESS OF SCANNED COPIES OF THIS PLAN SHEET.

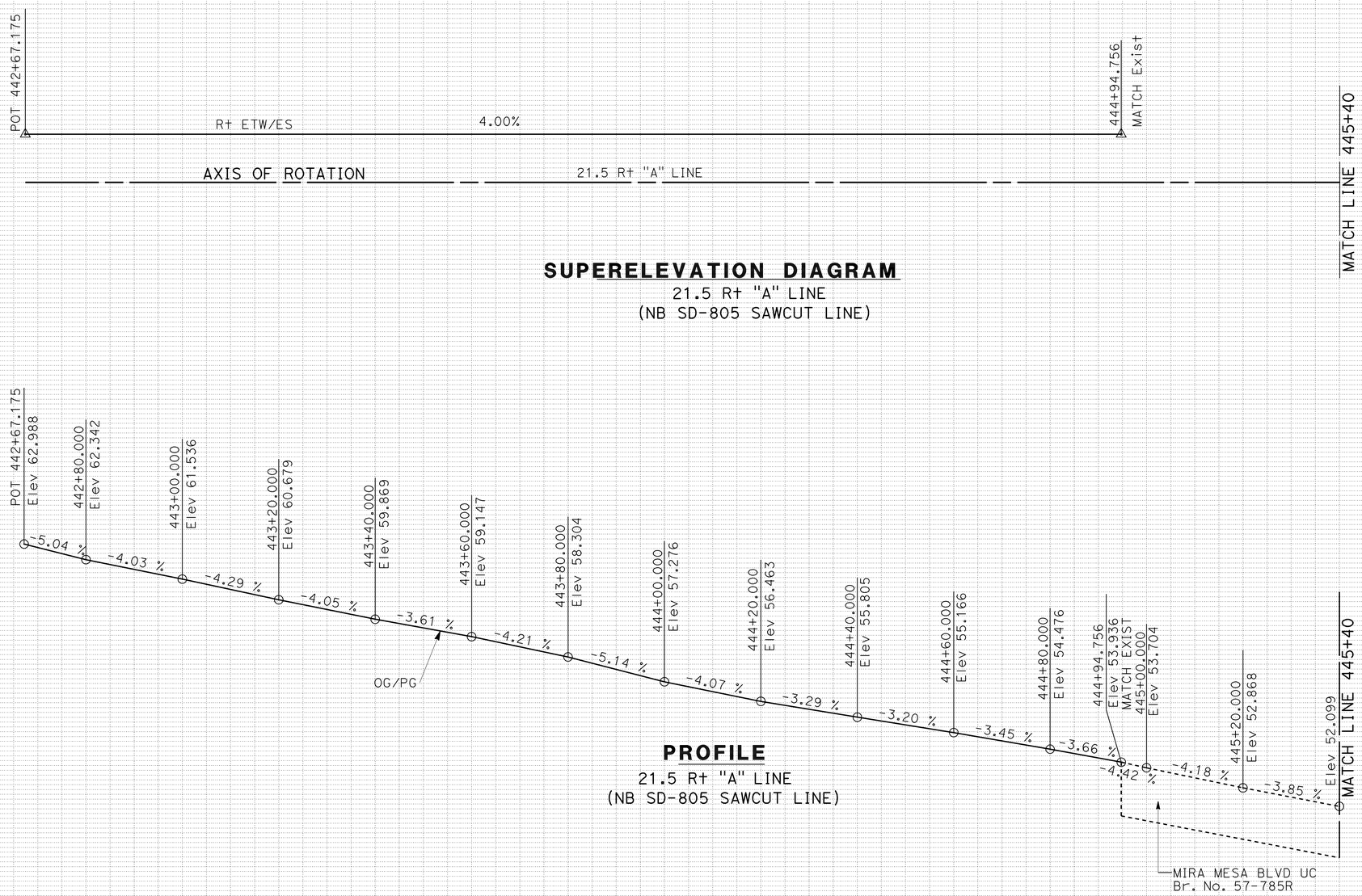

SUPERELEVATION DIAGRAM
21.5 R+ "A" LINE
(NB SD-805 SAWCUT LINE)

PROFILE
21.5 R+ "A" LINE
(NB SD-805 SAWCUT LINE)

ALL DIMENSIONS ARE IN METERS UNLESS OTHERWISE SHOWN

Station	+60	+80	443+00	+20	+40	+60	+80	444+00	+20	+40	+60	+80	445+00	+20	+40
m^3 Exc								627							
m^3 Emb								85							

PROFILE AND SUPERELEVATION DIAGRAM

SCALE Horiz 1:500
Vert 1:100

PS-25

STATE OF CALIFORNIA - DEPARTMENT OF TRANSPORTATION
Caltrans PROJECT DEVELOPMENT

FUNCTIONAL SUPERVISOR: MAJID KHARRATI
CALCULATED-DESIGNED BY: THANH D BUI
CHECKED BY: SHAHBAZ A ALVI
REVISED BY / DATE REVISED

LAST REVISION 05-25-09
DATE PLOTTED => 29-SEP-2010
TIME PLOTTED => 13:44

Dist	COUNTY	ROUTE	KILOMETER POST TOTAL PROJECT	SHEET No.	TOTAL SHEETS
11	SD	5,805	R49.9/R51.7, 42.6/46.5	56	886

REGISTERED CIVIL ENGINEER 5-15-09 DATE

9-27-10
PLANS APPROVAL DATE

REGISTERED PROFESSIONAL ENGINEER
THANH D BUI
No. C 64571
Exp. 6-30-11
CIVIL
STATE OF CALIFORNIA

THE STATE OF CALIFORNIA OR ITS OFFICERS OR AGENTS SHALL NOT BE RESPONSIBLE FOR THE ACCURACY OR COMPLETENESS OF SCANNED COPIES OF THIS PLAN SHEET.

Caltrans Metric

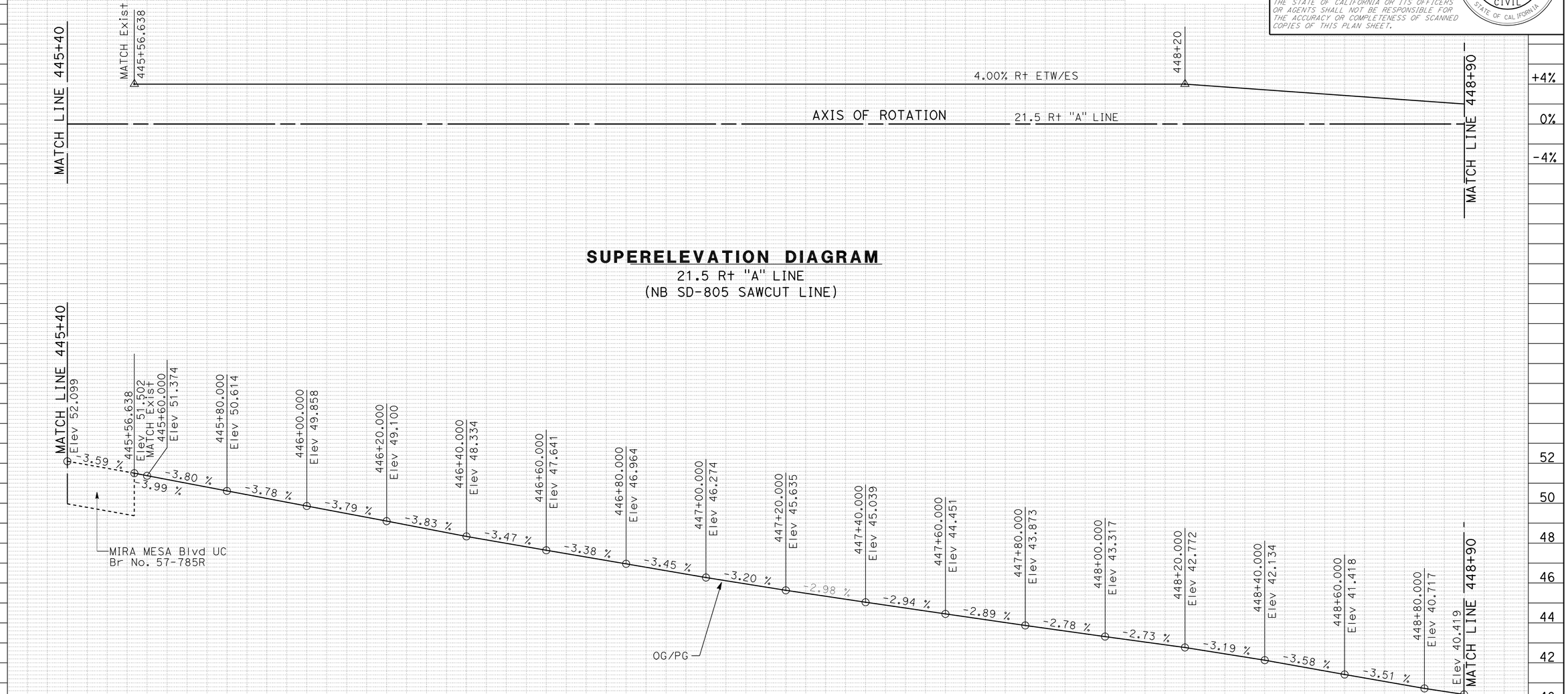

PROFILE AND SUPERELEVATION DIAGRAM

SCALE Horiz 1:500
Vert 1:100

PS-26

STATE OF CALIFORNIA - DEPARTMENT OF TRANSPORTATION
Caltrans PROJECT DEVELOPMENT

FUNCTIONAL SUPERVISOR: MAJID KHARRATI

CALCULATED-DESIGNED BY: THANH D BUI
CHECKED BY: SHAHBAZ A ALVI

REVISED BY | DATE REVISED

LAST REVISION 05-25-09
DATE PLOTTED => 29-SEP-2010
TIME PLOTTED => 13:44

Dist	COUNTY	ROUTE	KILOMETER POST TOTAL PROJECT	SHEET No.	TOTAL SHEETS
11	SD	5,805	R49.9/R51.7, 42.6/46.5	57	886

REGISTERED CIVIL ENGINEER 5-15-09 DATE

9-27-10
PLANS APPROVAL DATE

REGISTERED PROFESSIONAL ENGINEER
THANH D BUI
No. C 64571
Exp. 6-30-11
CIVIL
STATE OF CALIFORNIA

THE STATE OF CALIFORNIA OR ITS OFFICERS OR AGENTS SHALL NOT BE RESPONSIBLE FOR THE ACCURACY OR COMPLETENESS OF SCANNED COPIES OF THIS PLAN SHEET.

Caltrans Metric

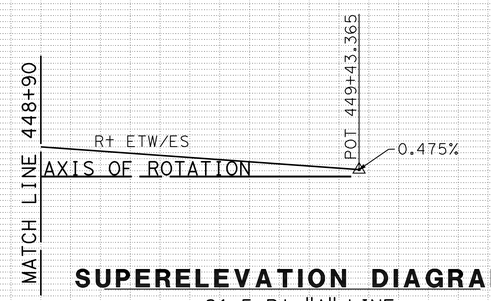

SUPERELEVATION DIAGRAM

21.5 R† "A" LINE
(NB SD-805 SAWCUT LINE)

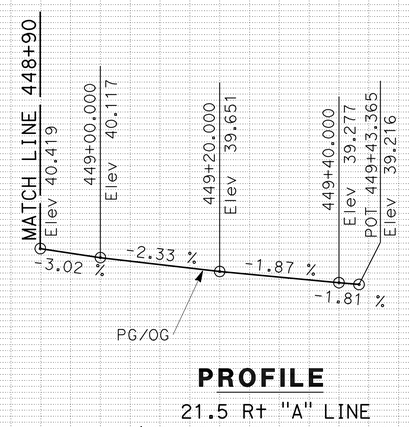

PROFILE

21.5 R† "A" LINE
(NB SD-805 SAWCUT LINE)

ALL DIMENSIONS ARE IN METERS UNLESS OTHERWISE SHOWN

PROFILE AND SUPERELEVATION DIAGRAM

SCALE Horiz 1:500
Vert 1:100

PS-27

Station		449+00	+20	+40	449+60
m^3	Exc		101		
	Emb		4		

+4%
0%
-4%
44
42
40
38

THANH D BUI — REVISED BY
SHAHBAZ A ALVI — DATE REVISED
CALCULATED-DESIGNED BY
CHECKED BY
FUNCTIONAL SUPERVISOR
MAJID KHARRATI

STATE OF CALIFORNIA - DEPARTMENT OF TRANSPORTATION
Caltrans PROJECT DEVELOPMENT

LAST REVISION 05-25-09 DATE PLOTTED => 29-SEP-2010 TIME PLOTTED => 13:44

Dist	COUNTY	ROUTE	KILOMETER POST TOTAL PROJECT	SHEET No.	TOTAL SHEETS
11	SD	5,805	R49.9/R51.7, 42.6/46.5	58	886

Caltrans Metric

5-15-09
REGISTERED CIVIL ENGINEER DATE

9-27-10
PLANS APPROVAL DATE

REGISTERED PROFESSIONAL ENGINEER
THANH D BUI
No. C 64571
Exp. 6-30-11
CIVIL
STATE OF CALIFORNIA

THE STATE OF CALIFORNIA OR ITS OFFICERS OR AGENTS SHALL NOT BE RESPONSIBLE FOR THE ACCURACY OR COMPLETENESS OF SCANNED COPIES OF THIS PLAN SHEET.

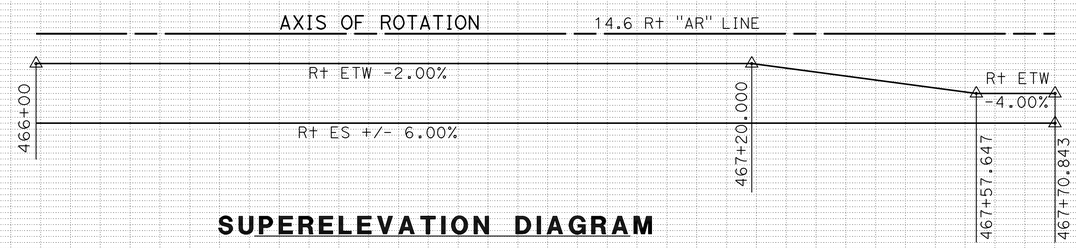

SUPERELEVATION DIAGRAM

14.6 R+ "AR" LINE
(NB SD-805 SAWCUT LINE)

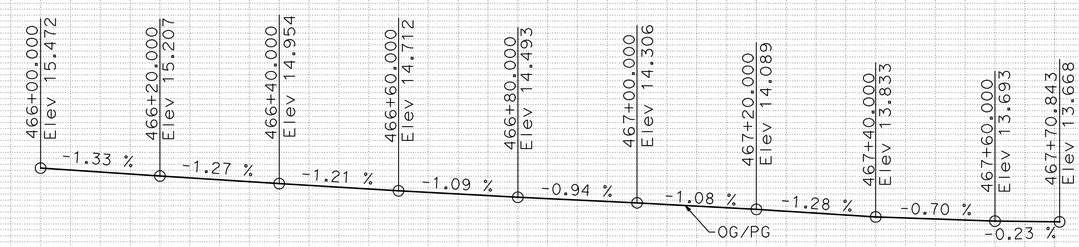

PROFILE

14.6 R+ "AR" LINE
(NB SD-805 SAWCUT LINE)

ALL DIMENSIONS ARE IN METERS UNLESS OTHERWISE SHOWN

PROFILE AND SUPERELEVATION DIAGRAM

SCALE Horiz 1:500
Vert 1:100

PS-28

Station	466+00	+20	+40	+60	+80	467+00	+20	+40	+60	+80
m^3 Exc				151						
m^3 Emb				4						

+4%
+0%
-4%
16
14
12

REVISED BY | DATE REVISED
THANH D BUI | SHAHBAZ A ALVI
CALCULATED-DESIGNED BY | CHECKED BY
FUNCTIONAL SUPERVISOR
MAJID KHARRATI

STATE OF CALIFORNIA - DEPARTMENT OF TRANSPORTATION
Caltrans PROJECT DEVELOPMENT

LAST REVISION 05-25-09
DATE PLOTTED => 29-SEP-2010
TIME PLOTTED => 13:45

Dist	COUNTY	ROUTE	KILOMETER POST TOTAL PROJECT	SHEET No.	TOTAL SHEETS
11	SD	5,805	R49.9/R51.7, 42.6/46.5	59	886

REGISTERED CIVIL ENGINEER 5-15-09 DATE

9-27-10
PLANS APPROVAL DATE

REGISTERED PROFESSIONAL ENGINEER SHAHBAZ A ALVI No. 55293 Exp. 12-31-10 CIVIL STATE OF CALIFORNIA

THE STATE OF CALIFORNIA OR ITS OFFICERS OR AGENTS SHALL NOT BE RESPONSIBLE FOR THE ACCURACY OR COMPLETENESS OF SCANNED COPIES OF THIS PLAN SHEET.

Caltrans Metric

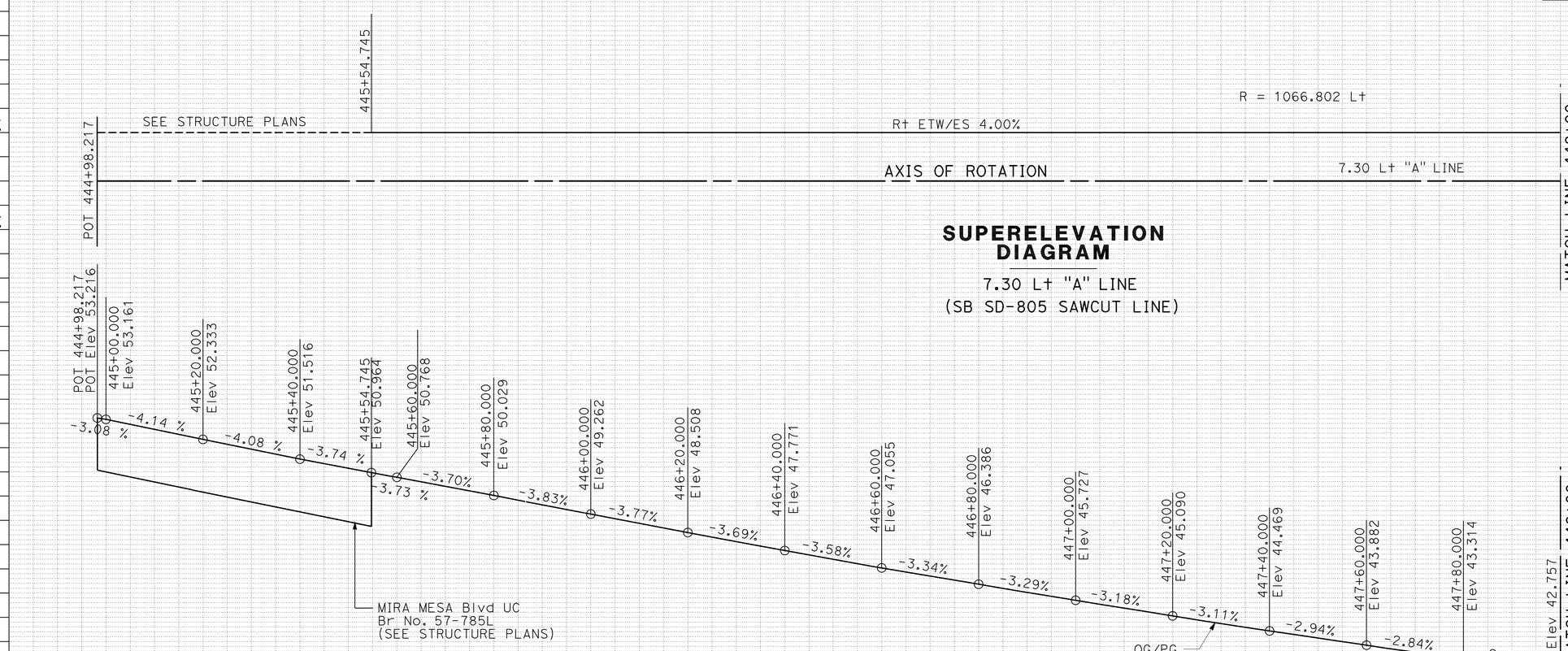

SUPERELEVATION DIAGRAM

7.30 L+ "A" LINE
(SB SD-805 SAWCUT LINE)

PROFILE

7.30 L+ "A" LINE
(SB SD-805 SAWCUT LINE)

ALL DIMENSIONS ARE IN METERS UNLESS OTHERWISE SHOWN

PROFILE AND SUPERELEVATION DIAGRAM

SCALE Horiz 1:500
Vert 1:100

PS- 29

Station	445+00	+20	+40	+60	+80	446+00	+20	+40	+60	+80	447+00	+20	+40	+60	+80	448+00	+20	+40
m^3 Exc											533							
m^3 Emb											1							

STATE OF CALIFORNIA - DEPARTMENT OF TRANSPORTATION
Caltrans PROJECT DEVELOPMENT

FUNCTIONAL SUPERVISOR: MAJID KHARRATI
CALCULATED-DESIGNED BY: THANH D BUI
CHECKED BY: SHAHBAZ A ALVI
REVISED BY
DATE REVISED

LAST REVISION 05-25-09 DATE PLOTTED => 29-SEP-2010 TIME PLOTTED => 13:45

Dist	COUNTY	ROUTE	KILOMETER POST TOTAL PROJECT	SHEET No.	TOTAL SHEETS
11	SD	5,805	R49.9/R51.7, 42.6/46.5	60	886

REGISTERED CIVIL ENGINEER 5-15-09 DATE

9-27-10
PLANS APPROVAL DATE

REGISTERED PROFESSIONAL ENGINEER SHAHBAZ A ALVI No. 55293 Exp. 12-31-10 CIVIL STATE OF CALIFORNIA

THE STATE OF CALIFORNIA OR ITS OFFICERS OR AGENTS SHALL NOT BE RESPONSIBLE FOR THE ACCURACY OR COMPLETENESS OF SCANNED COPIES OF THIS PLAN SHEET.

Caltrans Metric

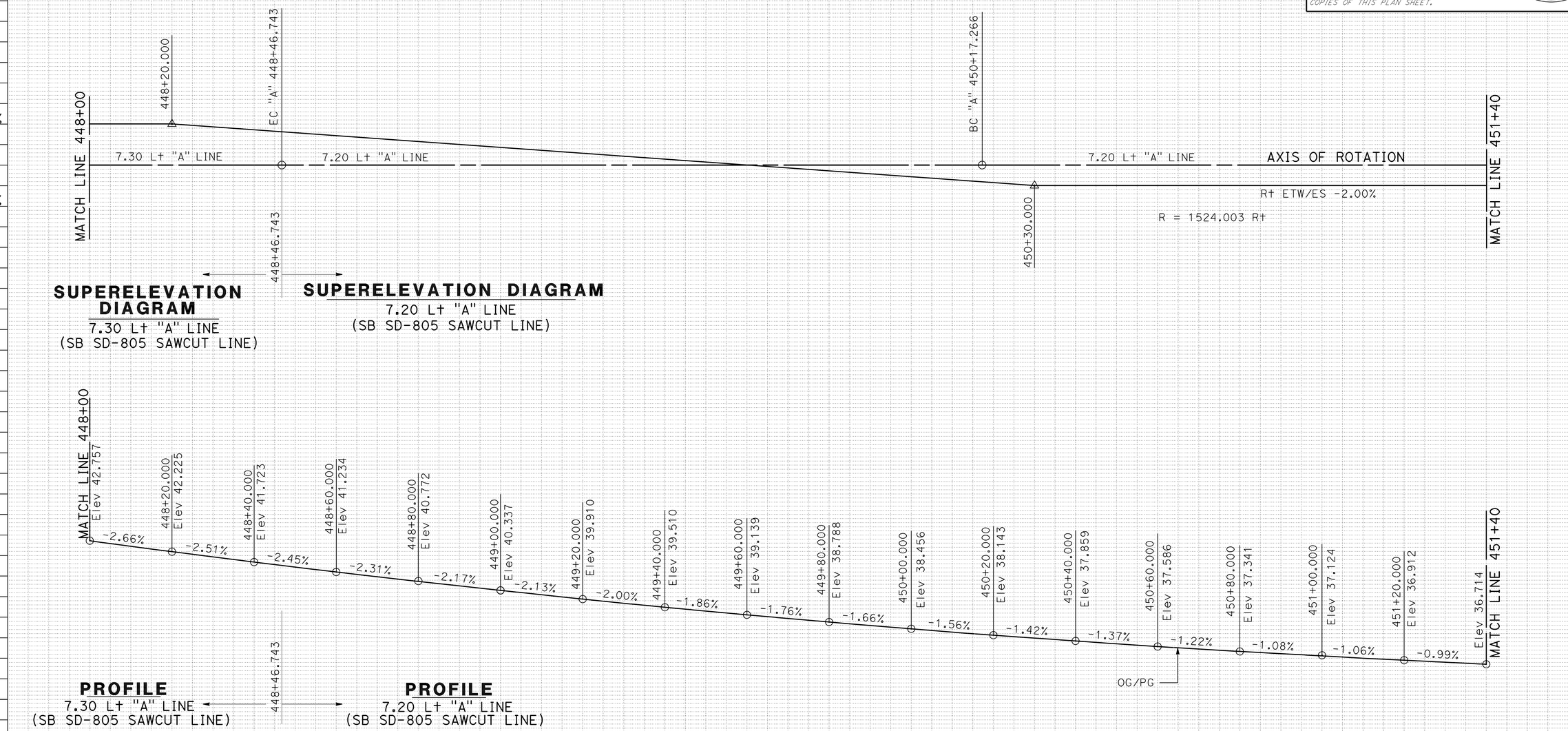

ALL DIMENSIONS ARE IN METERS UNLESS OTHERWISE SHOWN

PROFILE AND SUPERELEVATION DIAGRAM

SCALE Horiz 1:500
Vert 1:100

PS- 30

Station	448+00	+20	+40	+60	+80	449+00	+20	+40	+60	+80	450+00	+20	+40	+60	+80	451+00	+20	+40
m^3 Exc									812									
m^3 Emb									4									

STATE OF CALIFORNIA - DEPARTMENT OF TRANSPORTATION
Caltrans PROJECT DEVELOPMENT

FUNCTIONAL SUPERVISOR: MAJID KHARRATI
CALCULATED-DESIGNED BY: SHAHBAZ A ALVI
CHECKED BY: THANH D BUI
REVISED BY / DATE REVISED

LAST REVISION 05-25-09 DATE PLOTTED => 29-SEP-2010 TIME PLOTTED => 13:45

Dist	COUNTY	ROUTE	KILOMETER POST TOTAL PROJECT	SHEET No.	TOTAL SHEETS
11	SD	5,805	R49.9/R51.7, 42.6/46.5	61	886

REGISTERED CIVIL ENGINEER 5-15-09 DATE

9-27-10
PLANS APPROVAL DATE

REGISTERED PROFESSIONAL ENGINEER SHAHBAZ A ALVI No. 55293 Exp. 12-31-10 CIVIL STATE OF CALIFORNIA

THE STATE OF CALIFORNIA OR ITS OFFICERS OR AGENTS SHALL NOT BE RESPONSIBLE FOR THE ACCURACY OR COMPLETENESS OF SCANNED COPIES OF THIS PLAN SHEET.

Caltrans Metric

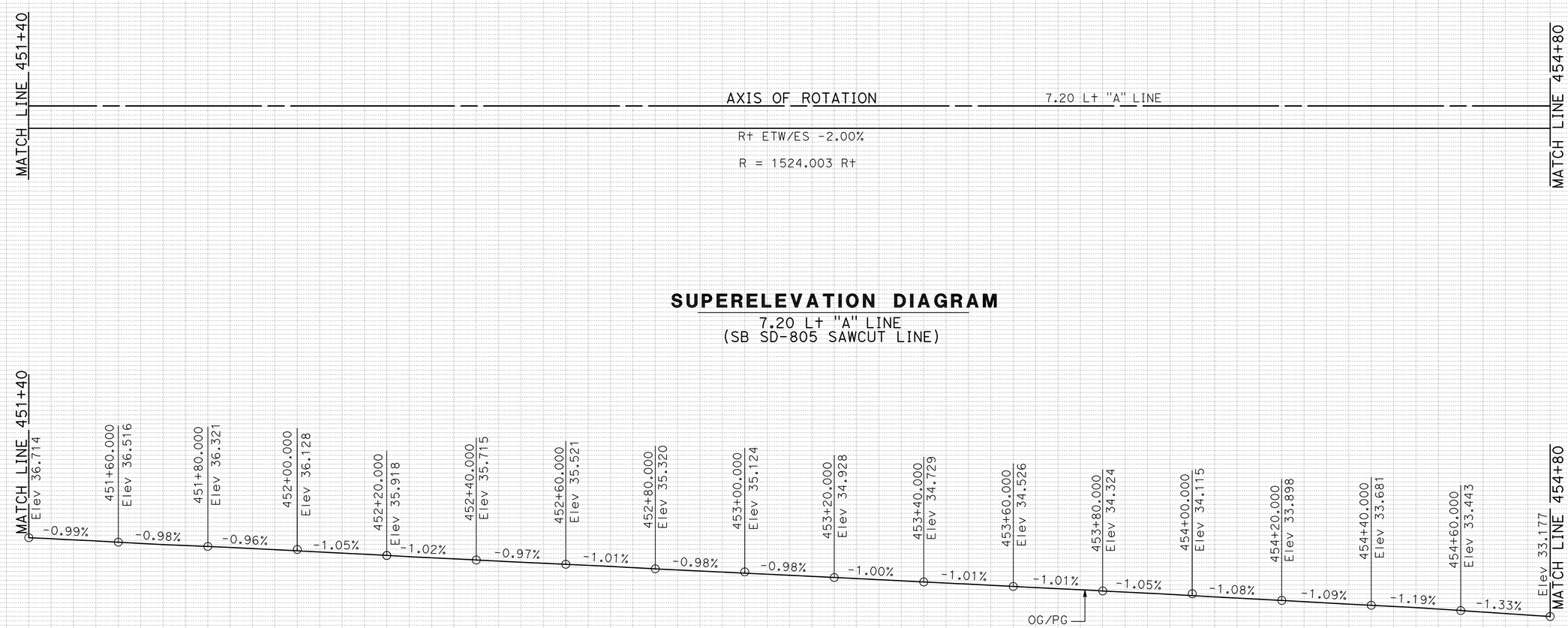

ALL DIMENSIONS ARE IN METERS UNLESS OTHERWISE SHOWN

PROFILE AND SUPERELEVATION DIAGRAM

SCALE Horiz 1:500
Vert 1:100

PS-31

Station	+40	+60	+80	452+00	+20	+40	+60	+80	453+00	+20	+40	+60	+80	454+00	+20	+40	+60	+80
m^3 Exc									922									
m^3 Emb									4									

REVISED BY | DATE REVISED

THANH D BUI | SHAHBAZ A ALVI

CALCULATED-DESIGNED BY | CHECKED BY

FUNCTIONAL SUPERVISOR: MAJID KHARRATI

STATE OF CALIFORNIA - DEPARTMENT OF TRANSPORTATION
Caltrans PROJECT DEVELOPMENT

LAST REVISION 05-25-09 | DATE PLOTTED => 29-SEP-2010 | TIME PLOTTED => 13:45

Dist	COUNTY	ROUTE	KILOMETER POST TOTAL PROJECT	SHEET No.	TOTAL SHEETS
11	SD	5,805	R49.9/R51.7, 42.6/46.5	62	886

REGISTERED CIVIL ENGINEER 5-15-09 DATE

9-27-10
PLANS APPROVAL DATE

REGISTERED PROFESSIONAL ENGINEER SHAHBAZ A ALVI No. 55293 Exp. 12-31-10 CIVIL STATE OF CALIFORNIA

THE STATE OF CALIFORNIA OR ITS OFFICERS OR AGENTS SHALL NOT BE RESPONSIBLE FOR THE ACCURACY OR COMPLETENESS OF SCANNED COPIES OF THIS PLAN SHEET.

Caltrans Metric

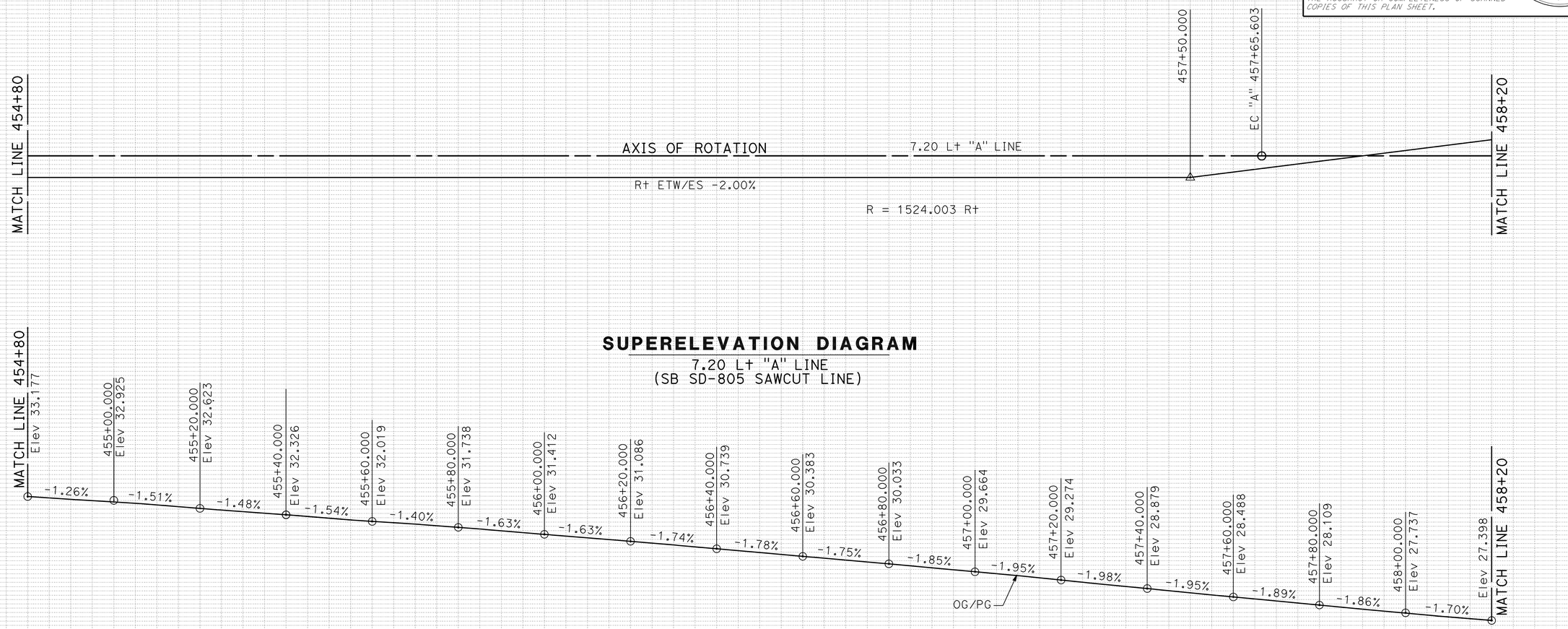

SUPERELEVATION DIAGRAM

7.20 Lt "A" LINE
(SB SD-805 SAWCUT LINE)

PROFILE

7.20 Lt "A" LINE
(SB SD-805 SAWCUT LINE)

ALL DIMENSIONS ARE IN METERS UNLESS OTHERWISE SHOWN

PROFILE AND SUPERELEVATION DIAGRAM

SCALE Horiz 1:500
Vert 1:100

PS-32

Station	+80	455+00	+20	+40	+60	+80	456+00	+20	+40	+60	+80	457+00	+20	+40	+60	+80	458+00	+20
m^3 Exc										1006								
m^3 Emb										1								

FUNCTIONAL SUPERVISOR: MAJID KHARRATI

CALCULATED-DESIGNED BY: THANH D BUI

CHECKED BY: SHAHBAZ A ALVI

REVISED BY / DATE REVISED

STATE OF CALIFORNIA - DEPARTMENT OF TRANSPORTATION
Caltrans PROJECT DEVELOPMENT

LAST REVISION 05-25-09 DATE PLOTTED => 29-SEP-2010 TIME PLOTTED => 13:45

Dist	COUNTY	ROUTE	KILOMETER POST TOTAL PROJECT	SHEET No.	TOTAL SHEETS
11	SD	5,805	R49.9/R51.7, 42.6/46.5	63	886

REGISTERED CIVIL ENGINEER 5-15-09 DATE

9-27-10
PLANS APPROVAL DATE

REGISTERED PROFESSIONAL ENGINEER SHAHBAZ A ALVI No. 55293 Exp. 12-31-10 CIVIL STATE OF CALIFORNIA

THE STATE OF CALIFORNIA OR ITS OFFICERS OR AGENTS SHALL NOT BE RESPONSIBLE FOR THE ACCURACY OR COMPLETENESS OF SCANNED COPIES OF THIS PLAN SHEET.

Caltrans Metric

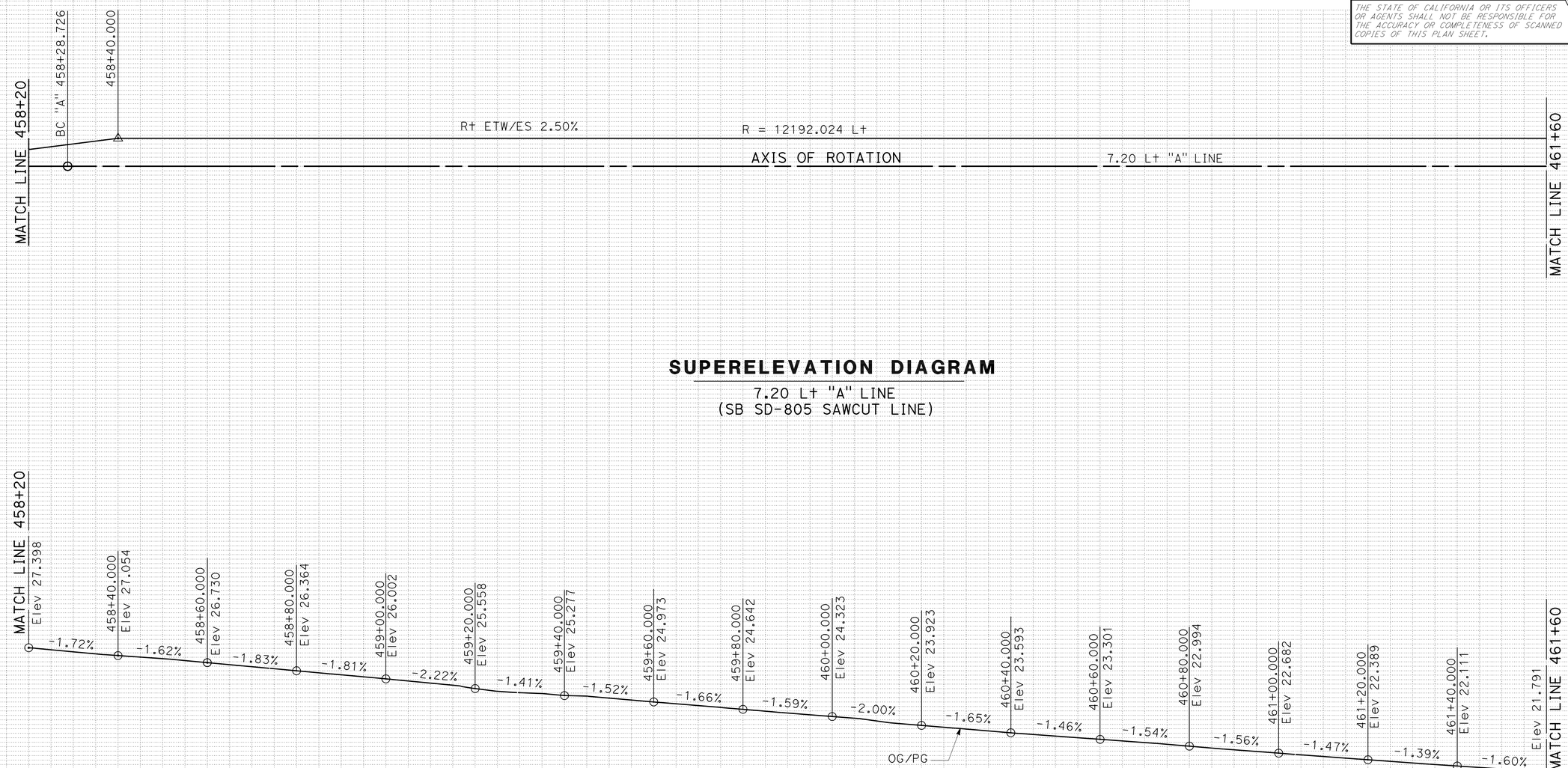

ALL DIMENSIONS ARE IN METERS UNLESS OTHERWISE SHOWN

PROFILE AND SUPERELEVATION DIAGRAM

SCALE Horiz 1:500
Vert 1:100

PS-33

Station	+20	+40	+60	+80	459+00	+20	+40	+60	+80	460+00	+20	+40	+60	+80	461+00	+20	+40	+60
m^3 Exc										1080								
m^3 Emb										0.000								

REVISED BY	DATE REVISED
THANH D BUI	SHAHBAZ A ALVI

CALCULATED-DESIGNED BY
CHECKED BY

FUNCTIONAL SUPERVISOR
MAJID KHARRATI

STATE OF CALIFORNIA - DEPARTMENT OF TRANSPORTATION
Caltrans PROJECT DEVELOPMENT

LAST REVISION 05-25-09
DATE PLOTTED => 29-SEP-2010
TIME PLOTTED => 13:45

Dist	COUNTY	ROUTE	KILOMETER POST TOTAL PROJECT	SHEET No.	TOTAL SHEETS
11	SD	5,805	R49.9/R51.7, 42.6/46.5	64	886

REGISTERED CIVIL ENGINEER 5-15-09 DATE

9-27-10
PLANS APPROVAL DATE

REGISTERED PROFESSIONAL ENGINEER SHAHBAZ A ALVI No. 55293 Exp. 12-31-10 CIVIL STATE OF CALIFORNIA

THE STATE OF CALIFORNIA OR ITS OFFICERS OR AGENTS SHALL NOT BE RESPONSIBLE FOR THE ACCURACY OR COMPLETENESS OF SCANNED COPIES OF THIS PLAN SHEET.

Caltrans Metric

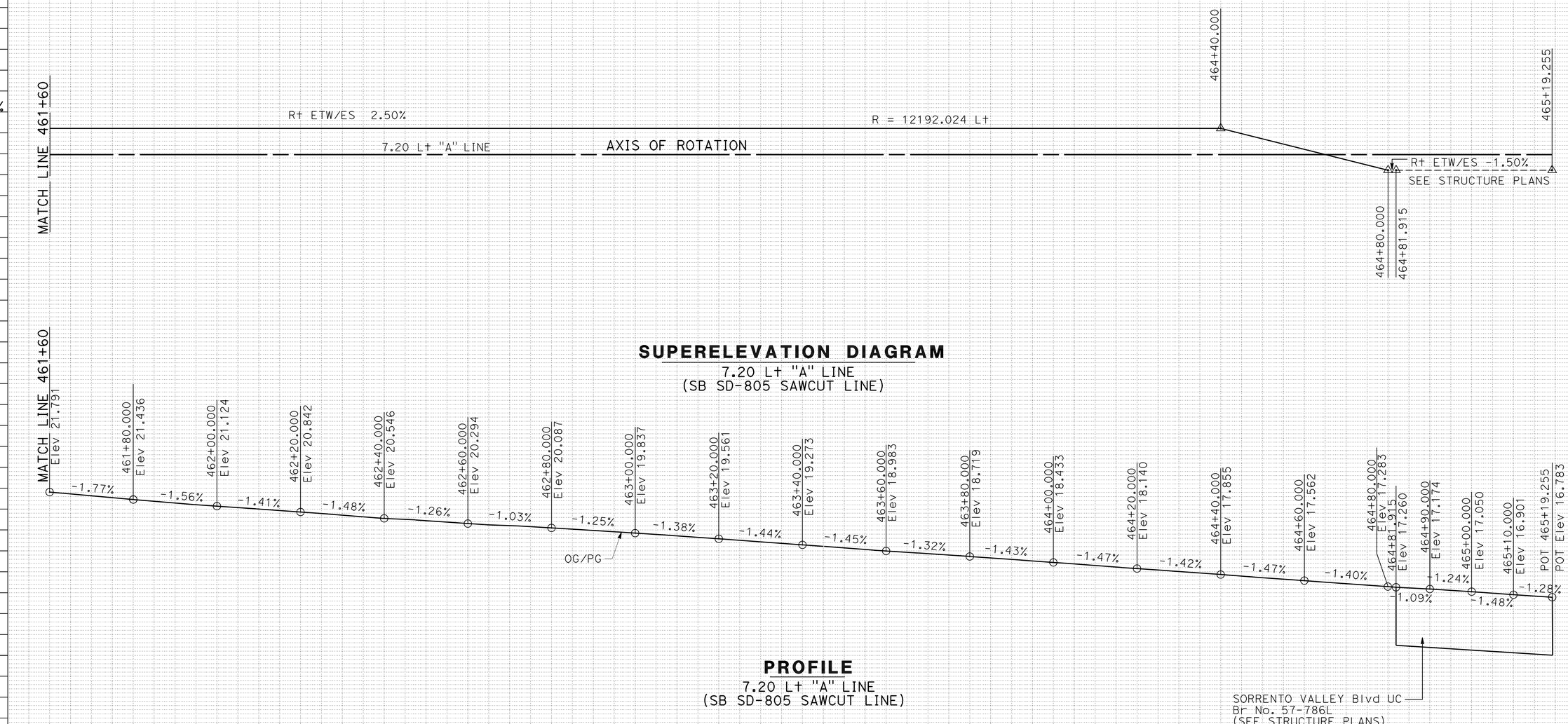

ALL DIMENSIONS ARE IN METERS UNLESS OTHERWISE SHOWN

PROFILE AND SUPERELEVATION DIAGRAM

SCALE Horiz 1:500
Vert 1:100

PS-34

Station	+60	+80	462+00	+20	+40	+60	+80	463+00	+20	+40	+60	+80	464+00	+20	+40	+60	+80	465+00	+20
m^3 Exc									1003										
m^3 Emb									1.649										

STATE OF CALIFORNIA - DEPARTMENT OF TRANSPORTATION
Caltrans PROJECT DEVELOPMENT

FUNCTIONAL SUPERVISOR: MAJID KHARRATI
CALCULATED-DESIGNED BY: SHAHBAZ A ALVI
CHECKED BY: THANH D BUI
REVISED BY / DATE REVISED

LAST REVISION DATE PLOTTED => 29-SEP-2010
05-25-09 TIME PLOTTED => 13:45

Dist	COUNTY	ROUTE	KILOMETER POST TOTAL PROJECT	SHEET No.	TOTAL SHEETS
11	SD	5,805	R49.9/R51.7, 42.6/46.5	65	886

REGISTERED CIVIL ENGINEER 5-15-09 DATE

9-27-10
PLANS APPROVAL DATE

REGISTERED PROFESSIONAL ENGINEER SHAHBAZ A ALVI No. 55293 Exp. 12-31-10 CIVIL STATE OF CALIFORNIA

THE STATE OF CALIFORNIA OR ITS OFFICERS OR AGENTS SHALL NOT BE RESPONSIBLE FOR THE ACCURACY OR COMPLETENESS OF SCANNED COPIES OF THIS PLAN SHEET.

Caltrans Metric

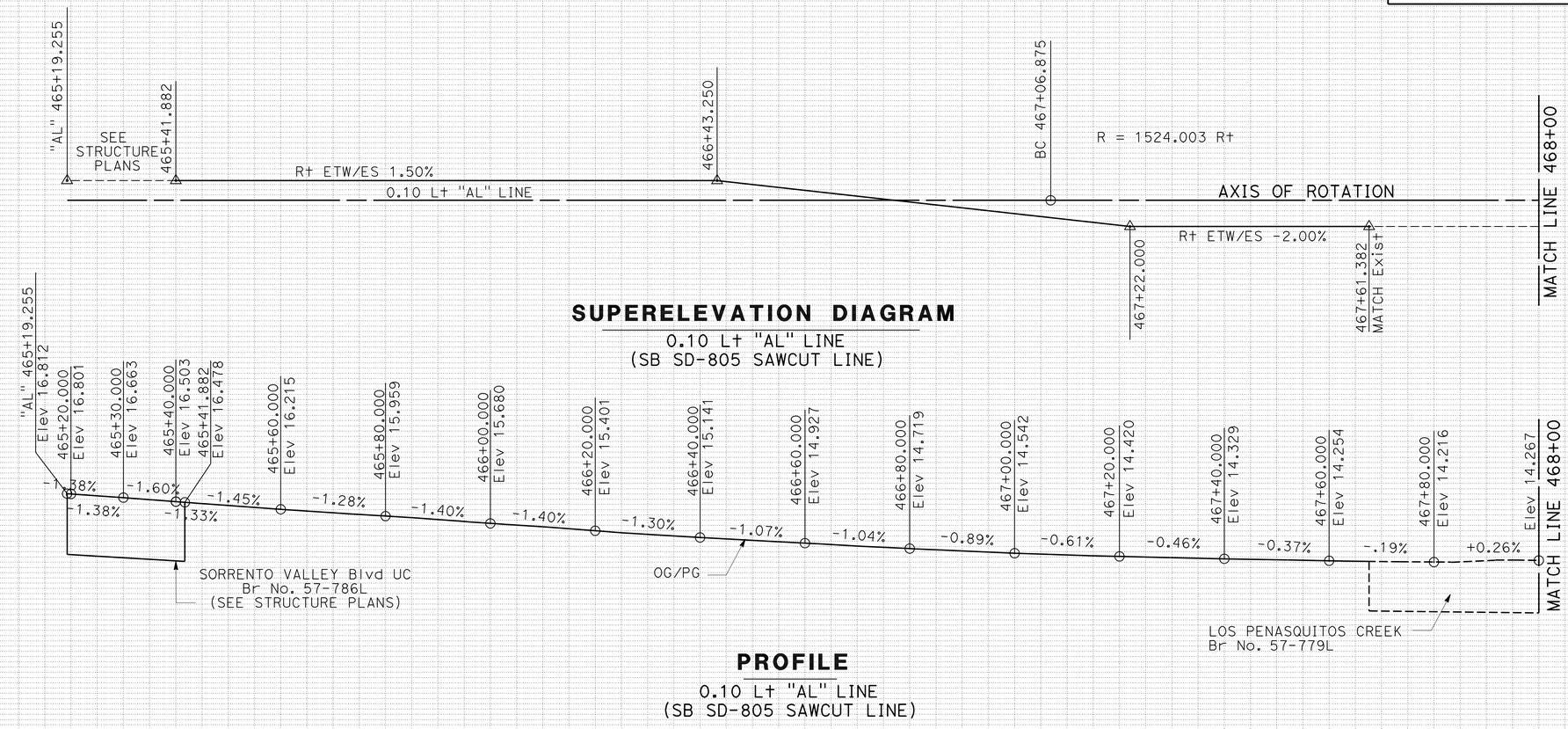

SUPERELEVATION DIAGRAM

0.10 L+ "AL" LINE
(SB SD-805 SAWCUT LINE)

PROFILE

0.10 L+ "AL" LINE
(SB SD-805 SAWCUT LINE)

ALL DIMENSIONS ARE IN METERS UNLESS OTHERWISE SHOWN

PROFILE AND SUPERELEVATION DIAGRAM

SCALE Horiz 1:500
Vert 1:100

PS-35

Station	+20	+40	+60	+80	466+00	+20	+40	+60	+80	467+00	+20	+40	+60	+80	468+00
m^3 Exc							464								
m^3 Emb							0								

REVISED BY | DATE REVISED
THANH D BUI | SHAHBAZ A ALVI
CALCULATED-DESIGNED BY | CHECKED BY
FUNCTIONAL SUPERVISOR
MAJID KHARRATI

STATE OF CALIFORNIA - DEPARTMENT OF TRANSPORTATION
Caltrans PROJECT DEVELOPMENT

LAST REVISION 05-25-09 | DATE PLOTTED => 29-SEP-2010 | TIME PLOTTED => 13:45

Dist	COUNTY	ROUTE	KILOMETER POST TOTAL PROJECT	SHEET No.	TOTAL SHEETS
11	SD	5,805	R49.9/R51.7, 42.6/46.5	66	886

REGISTERED CIVIL ENGINEER 5-15-09 DATE

9-27-10
PLANS APPROVAL DATE

REGISTERED PROFESSIONAL ENGINEER SHAHBAZ A ALVI No. 55293 Exp. 12-31-10 CIVIL STATE OF CALIFORNIA

THE STATE OF CALIFORNIA OR ITS OFFICERS OR AGENTS SHALL NOT BE RESPONSIBLE FOR THE ACCURACY OR COMPLETENESS OF SCANNED COPIES OF THIS PLAN SHEET.

Caltrans Metric

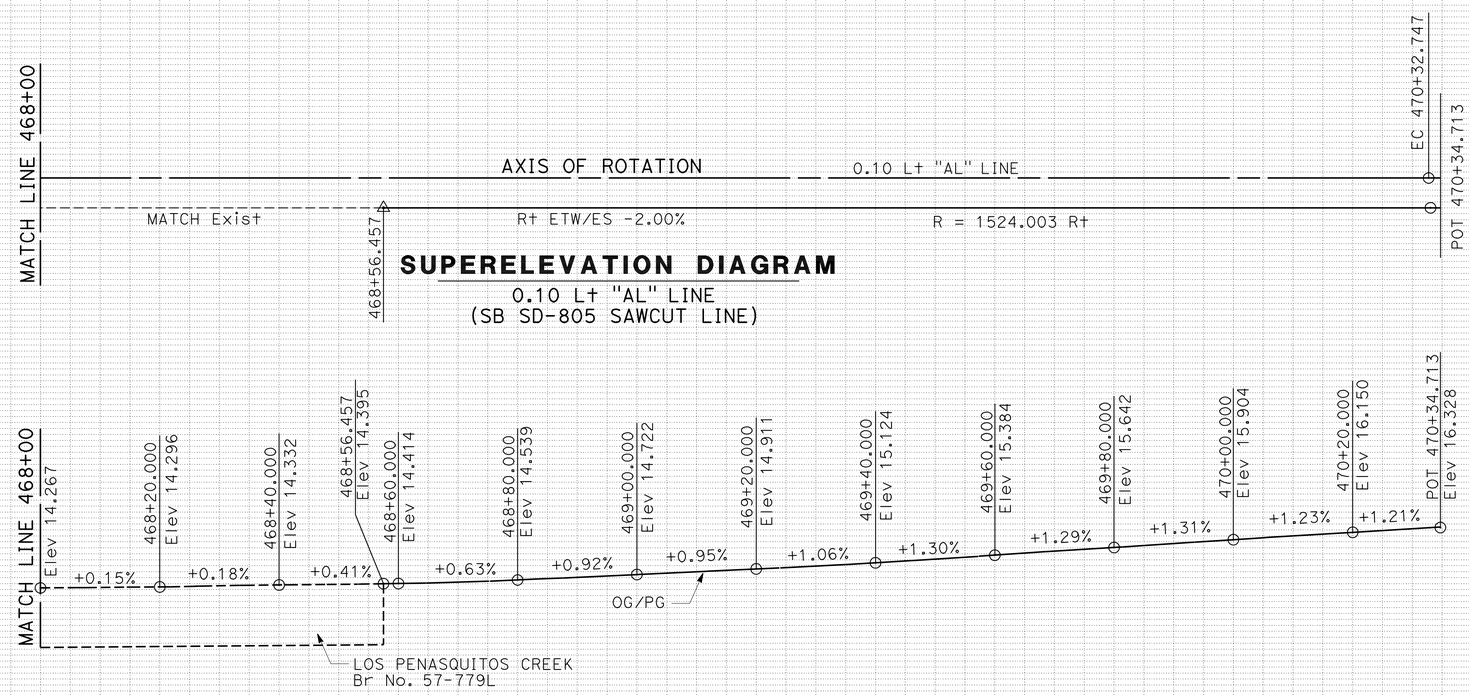

SUPERELEVATION DIAGRAM

0.10 Lt "AL" LINE
(SB SD-805 SAWCUT LINE)

PROFILE

0.10 Lt "AL" LINE
(SB SD-805 SAWCUT LINE)

ALL DIMENSIONS ARE IN METERS UNLESS OTHERWISE SHOWN

PROFILE AND SUPERELEVATION DIAGRAM

SCALE Horiz 1:500
Vert 1:100

PS-36

Station	468+00	+20	+40	+60	+80	469+00	+20	+40	+60	+80	470+00	+20
m^3 Exc								370				
m^3 Emb								0				

STATE OF CALIFORNIA - DEPARTMENT OF TRANSPORTATION
Caltrans PROJECT DEVELOPMENT

FUNCTIONAL SUPERVISOR: MAJID KHARRATI
CALCULATED-DESIGNED BY: THANH D BUI
CHECKED BY: SHAHBAZ A ALVI
REVISED BY / DATE REVISED

LAST REVISION 05-25-09 DATE PLOTTED => 29-SEP-2010 TIME PLOTTED => 13:45

Dist	COUNTY	ROUTE	KILOMETER POST TOTAL PROJECT	SHEET No.	TOTAL SHEETS
11	SD	5,805	R49.9/R51.7, 42.6/46.5	67	886

Caltrans Metric

5-15-09
REGISTERED CIVIL ENGINEER DATE

9-27-10
PLANS APPROVAL DATE

REGISTERED PROFESSIONAL ENGINEER
THANH D BUI
No. C 64571
Exp. 6-30-11
CIVIL
STATE OF CALIFORNIA

THE STATE OF CALIFORNIA OR ITS OFFICERS OR AGENTS SHALL NOT BE RESPONSIBLE FOR THE ACCURACY OR COMPLETENESS OF SCANNED COPIES OF THIS PLAN SHEET.

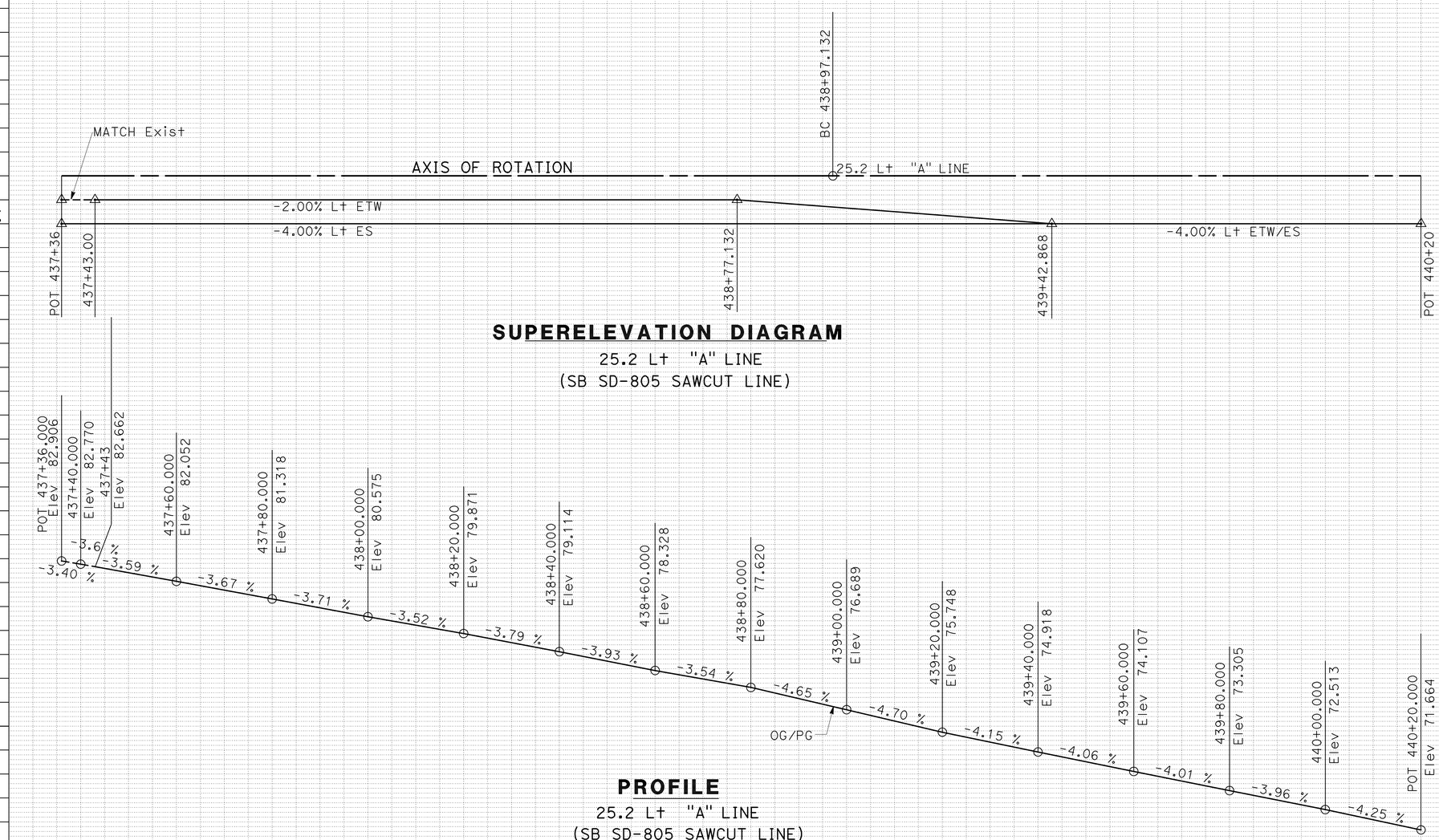

ALL DIMENSIONS ARE IN METERS UNLESS OTHERWISE SHOWN

PROFILE AND SUPERELEVATION DIAGRAM

SCALE Horiz 1:500
Vert 1:100

PS-37

REVISED BY	DATE REVISED
THANH D BUI	SHAHBAZ A ALVI

CALCULATED-DESIGNED BY
CHECKED BY

FUNCTIONAL SUPERVISOR
MAJID KHARRATI

STATE OF CALIFORNIA - DEPARTMENT OF TRANSPORTATION
Caltrans PROJECT DEVELOPMENT

LAST REVISION 05-25-09
DATE PLOTTED => 29-SEP-2010
TIME PLOTTED => 13:46

Dist	COUNTY	ROUTE	KILOMETER POST TOTAL PROJECT	SHEET No.	TOTAL SHEETS
11	SD	5,805	R49.9/R51.7, 42.6/46.5	68	886

REGISTERED CIVIL ENGINEER 5-15-09 DATE

9-27-10
PLANS APPROVAL DATE

REGISTERED PROFESSIONAL ENGINEER
THANH D BUI
No. C 64571
Exp. 6-30-11
CIVIL
STATE OF CALIFORNIA

THE STATE OF CALIFORNIA OR ITS OFFICERS OR AGENTS SHALL NOT BE RESPONSIBLE FOR THE ACCURACY OR COMPLETENESS OF SCANNED COPIES OF THIS PLAN SHEET.

Caltrans Metric

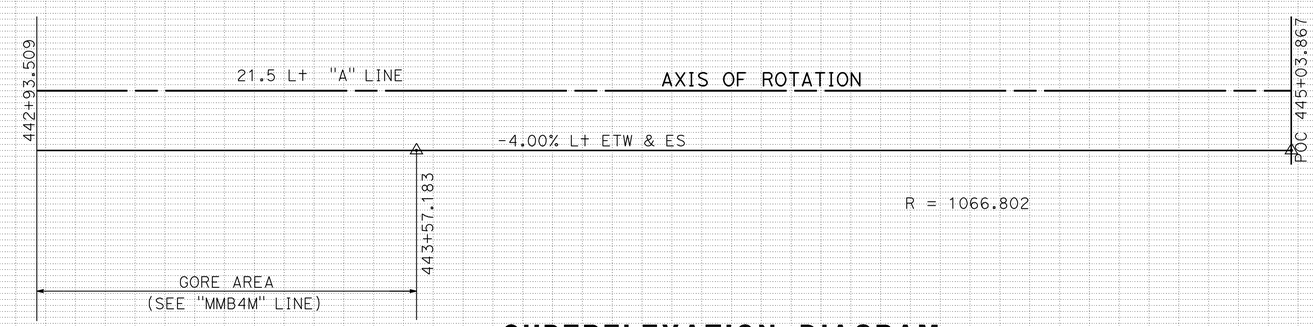

SUPERELEVATION DIAGRAM

21.5 Lt "A" LINE
(SB SD-805 SAWCUT LINE)

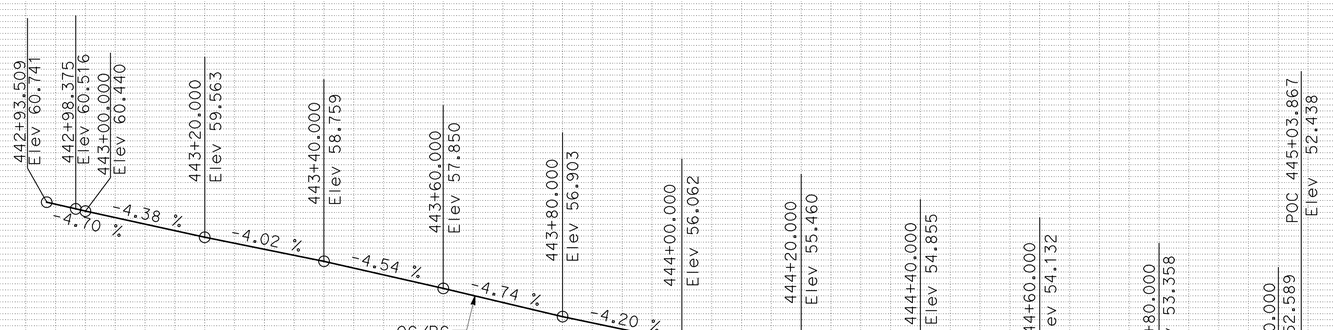

PROFILE

21.5 Lt "A" LINE
(SB SD-805 SAWCUT LINE)

ALL DIMENSIONS ARE IN METERS UNLESS OTHERWISE SHOWN

PROFILE AND SUPERELEVATION DIAGRAM

SCALE Horiz 1:500
Vert 1:100

PS-38

Station	443+00	+20	+40	+60	+80	444+00	+20	+40	+60	+80	445+00
m^3 Exc						1969					
m^3 Emb						1367					

FUNCTIONAL SUPERVISOR: MAJID KHARRATI

CALCULATED-DESIGNED BY: THANH D BUI
CHECKED BY: SHAHBAZ A ALVI

REVISED BY | DATE REVISED

STATE OF CALIFORNIA - DEPARTMENT OF TRANSPORTATION
Caltrans PROJECT DEVELOPMENT

LAST REVISION 05-25-09
DATE PLOTTED => 29-SEP-2010
TIME PLOTTED => 13:46

Dist	COUNTY	ROUTE	KILOMETER POST TOTAL PROJECT	SHEET No.	TOTAL SHEETS
11	SD	5,805	R49.9/R51.7, 42.6/46.5	69	886

Caltrans Metric

5-15-09
REGISTERED CIVIL ENGINEER DATE

9-27-10
PLANS APPROVAL DATE

REGISTERED PROFESSIONAL ENGINEER
THANH D BUI
No. C 64571
Exp. 6-30-11
CIVIL
STATE OF CALIFORNIA

THE STATE OF CALIFORNIA OR ITS OFFICERS OR AGENTS SHALL NOT BE RESPONSIBLE FOR THE ACCURACY OR COMPLETENESS OF SCANNED COPIES OF THIS PLAN SHEET.

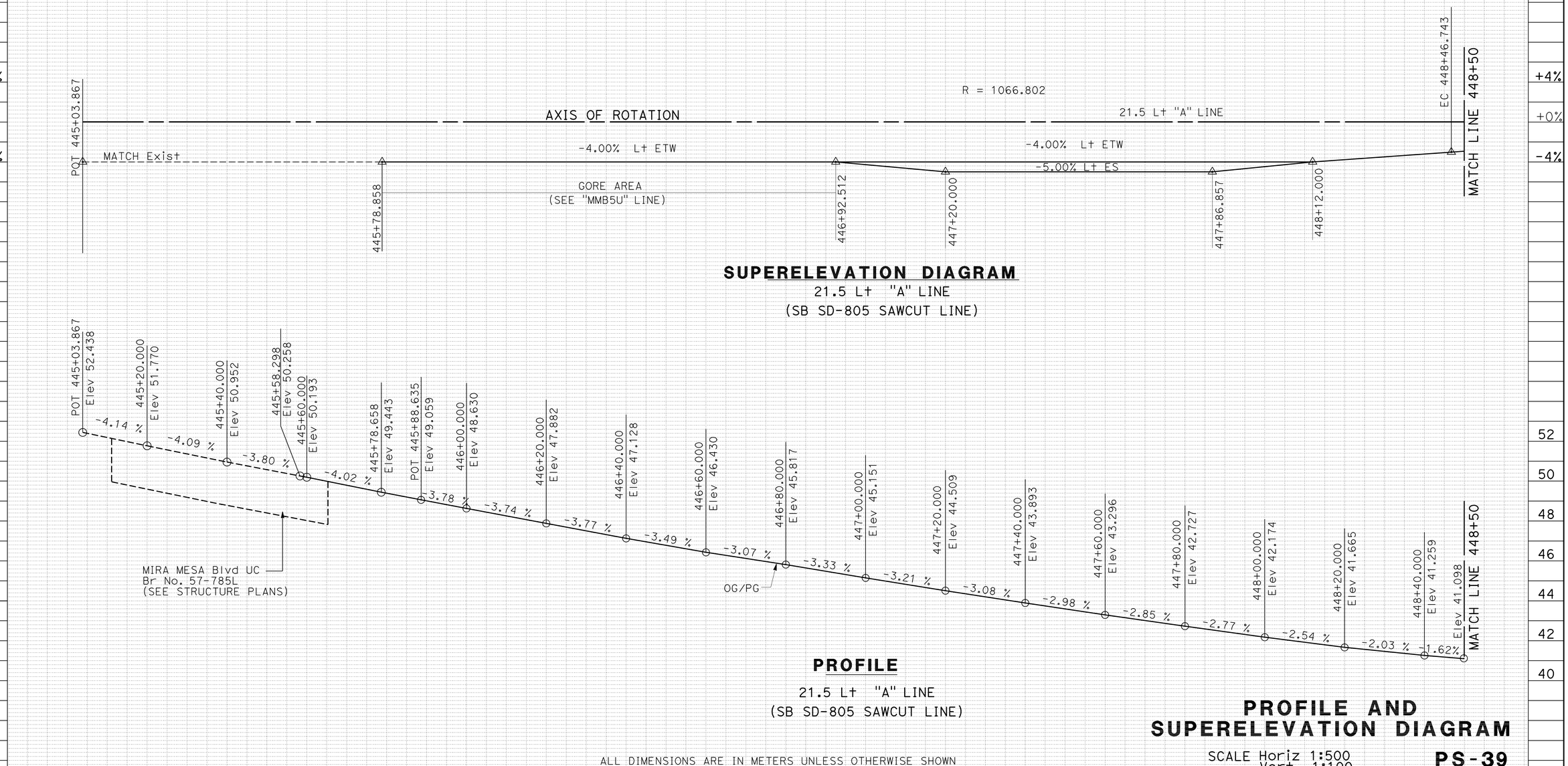

PROFILE AND SUPERELEVATION DIAGRAM

SCALE Horiz 1:500
Vert 1:100

PS-39

STATE OF CALIFORNIA - DEPARTMENT OF TRANSPORTATION
Caltrans PROJECT DEVELOPMENT

FUNCTIONAL SUPERVISOR: MAJID KHARRATI
CALCULATED-DESIGNED BY: THANH D BUI
CHECKED BY: SHAHBAZ A ALVI
REVISED BY
DATE REVISED

LAST REVISION 05-25-09
DATE PLOTTED => 29-SEP-2010
TIME PLOTTED => 13:46

Dist	COUNTY	ROUTE	KILOMETER POST TOTAL PROJECT	SHEET No.	TOTAL SHEETS
11	SD	5,805	R49.9/R51.7, 42.6/46.5	70	886

Caltrans Metric

5-15-09
REGISTERED CIVIL ENGINEER DATE

9-27-10
PLANS APPROVAL DATE

REGISTERED PROFESSIONAL ENGINEER
THANH D BUI
No. C 64571
Exp. 6-30-11
CIVIL
STATE OF CALIFORNIA

THE STATE OF CALIFORNIA OR ITS OFFICERS OR AGENTS SHALL NOT BE RESPONSIBLE FOR THE ACCURACY OR COMPLETENESS OF SCANNED COPIES OF THIS PLAN SHEET.

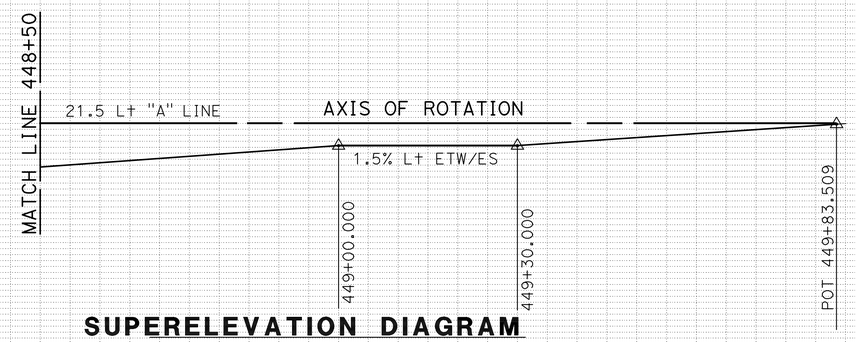

SUPERELEVATION DIAGRAM
21.5 Lt "A" LINE
(SB SD-805 SAWCUT LINE)

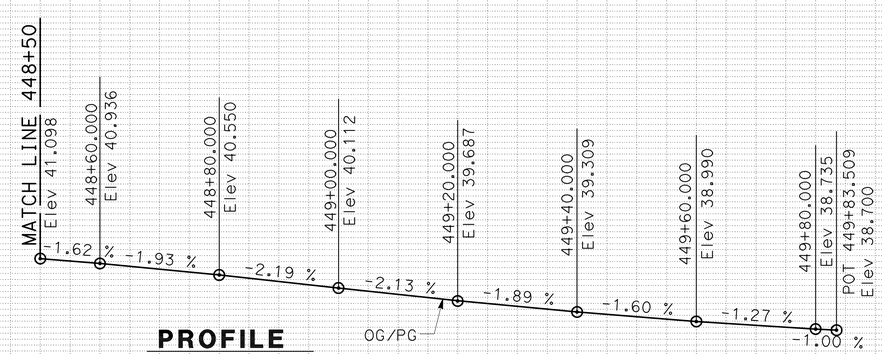

PROFILE
21.5 Lt "A" LINE
(SB SD-805 SAWCUT LINE)

ALL DIMENSIONS ARE IN METERS UNLESS OTHERWISE SHOWN

PROFILE AND SUPERELEVATION DIAGRAM

SCALE Horiz 1:500
Vert 1:100

PS-40

Station		+40	+60	+80	449+00	+20	+40	+60	449+80
m^3 Exc					522				
m^3 Emb					243				

+4% +0% -4%

50 48 46 44 42 40 38

REVISED BY | DATE REVISED
THANH D BUI | SHAHBAZ A ALVI
CALCULATED-DESIGNED BY | CHECKED BY
FUNCTIONAL SUPERVISOR
MAJID KHARRATI

STATE OF CALIFORNIA - DEPARTMENT OF TRANSPORTATION
Caltrans PROJECT DEVELOPMENT

LAST REVISION 05-25-09
DATE PLOTTED => 29-SEP-2010
TIME PLOTTED => 13:46

Dist	COUNTY	ROUTE	KILOMETER POST TOTAL PROJECT	SHEET No.	TOTAL SHEETS
11	SD	5,805	R49.9/R51.7, 42.6/46.5	71	886

REGISTERED CIVIL ENGINEER 05-12-09 DATE

9-27-10
PLANS APPROVAL DATE

REGISTERED PROFESSIONAL ENGINEER SHAHBAZ A ALVI No. 55293 Exp. 12-31-10 CIVIL STATE OF CALIFORNIA

THE STATE OF CALIFORNIA OR ITS OFFICERS OR AGENTS SHALL NOT BE RESPONSIBLE FOR THE ACCURACY OR COMPLETENESS OF ELECTRONIC COPIES OF THIS PLAN SHEET.

Caltrans Metric

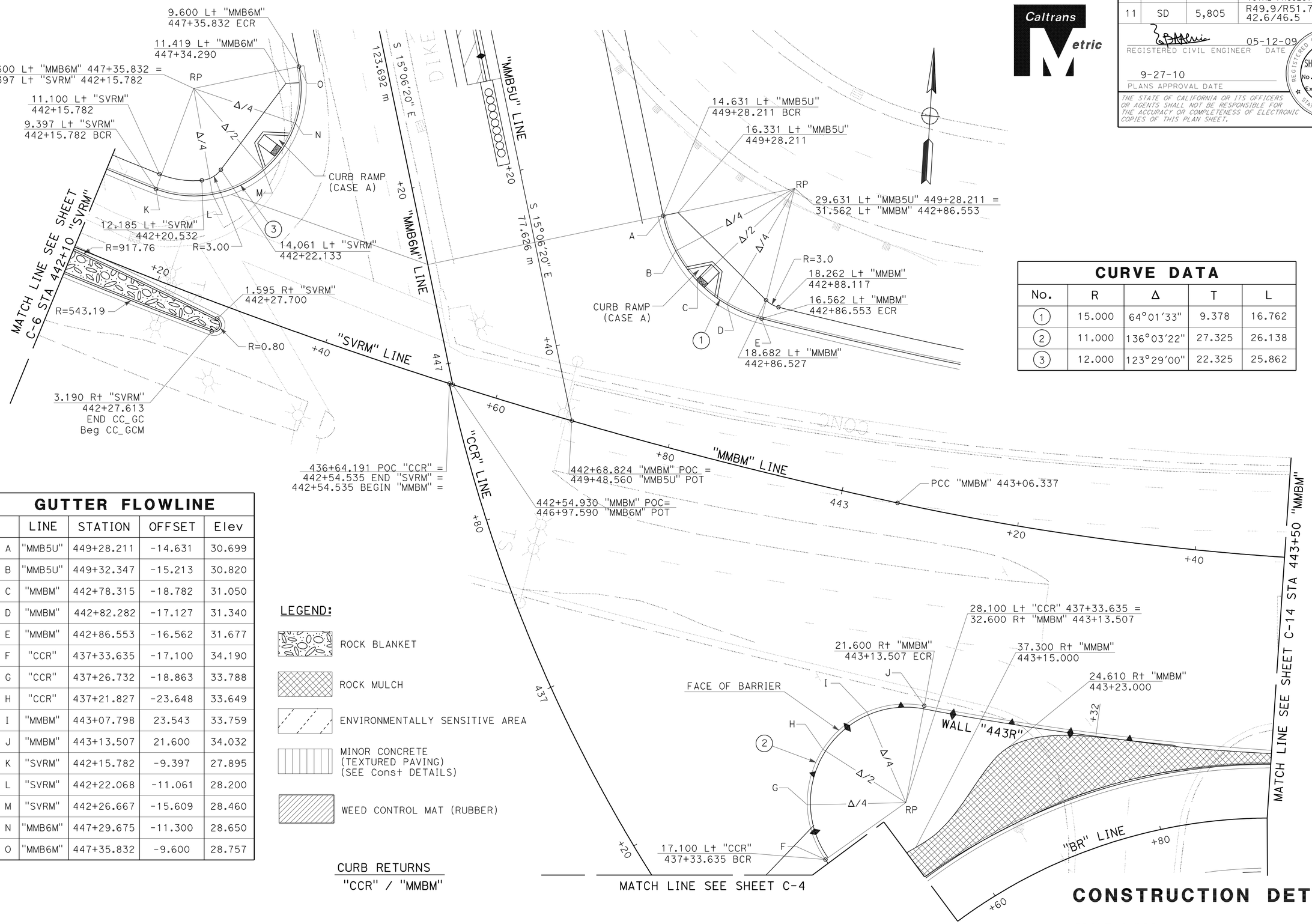

CURVE DATA

No.	R	Δ	T	L
1	15.000	64°01'33"	9.378	16.762
2	11.000	136°03'22"	27.325	26.138
3	12.000	123°29'00"	22.325	25.862

GUTTER FLOWLINE

	LINE	STATION	OFFSET	Elev
A	"MMB5U"	449+28.211	-14.631	30.699
B	"MMB5U"	449+32.347	-15.213	30.820
C	"MMBM"	442+78.315	-18.782	31.050
D	"MMBM"	442+82.282	-17.127	31.340
E	"MMBM"	442+86.553	-16.562	31.677
F	"CCR"	437+33.635	-17.100	34.190
G	"CCR"	437+26.732	-18.863	33.788
H	"CCR"	437+21.827	-23.648	33.649
I	"MMBM"	443+07.798	23.543	33.759
J	"MMBM"	443+13.507	21.600	34.032
K	"SVRM"	442+15.782	-9.397	27.895
L	"SVRM"	442+22.068	-11.061	28.200
M	"SVRM"	442+26.667	-15.609	28.460
N	"MMB6M"	447+29.675	-11.300	28.650
O	"MMB6M"	447+35.832	-9.600	28.757

LEGEND:

- ROCK BLANKET
- ROCK MULCH
- ENVIRONMENTALLY SENSITIVE AREA
- MINOR CONCRETE (TEXTURED PAVING) (SEE Const DETAILS)
- WEED CONTROL MAT (RUBBER)

CURB RETURNS
"CCR" / "MMBM"

ALL DIMENSIONS ARE IN METERS UNLESS OTHERWISE SHOWN

CONSTRUCTION DETAILS

SCALE 1:200

C-1

REVISED BY	DATE REVISED

CALCULATED-DESIGNED BY: CHRISTOPHER SCOTT
CHECKED BY: SHAHBAZ A ALVI
FUNCTIONAL SUPERVISOR: MAJID KHARRATI

STATE OF CALIFORNIA - DEPARTMENT OF TRANSPORTATION
Caltrans PROJECT DEVELOPMENT

LAST REVISION 05-20-09 | DATE PLOTTED => 29-SEP-2010 | TIME PLOTTED => 13:46

Dist	COUNTY	ROUTE	KILOMETER POST TOTAL PROJECT	SHEET No.	TOTAL SHEETS
11	SD	5,805	R49.9/R51.7, 42.6/46.5	72	886

REGISTERED CIVIL ENGINEER 05-12-09 DATE

9-27-10
PLANS APPROVAL DATE

REGISTERED PROFESSIONAL ENGINEER SHAHBAZ A ALVI No. 55293 Exp. 12-31-10 CIVIL STATE OF CALIFORNIA

THE STATE OF CALIFORNIA OR ITS OFFICERS OR AGENTS SHALL NOT BE RESPONSIBLE FOR THE ACCURACY OR COMPLETENESS OF ELECTRONIC COPIES OF THIS PLAN SHEET.

Caltrans Metric

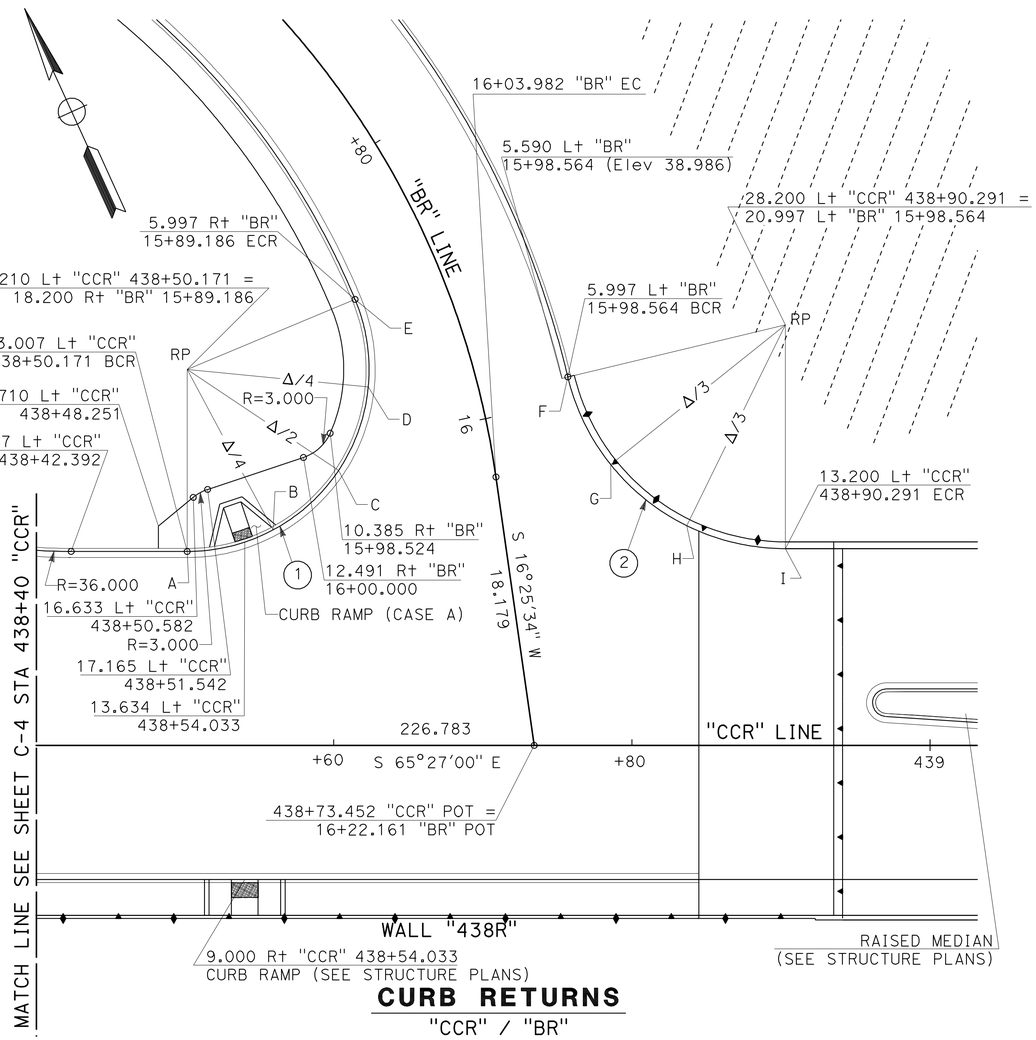

CURB RETURNS
"CCR" / "BR"

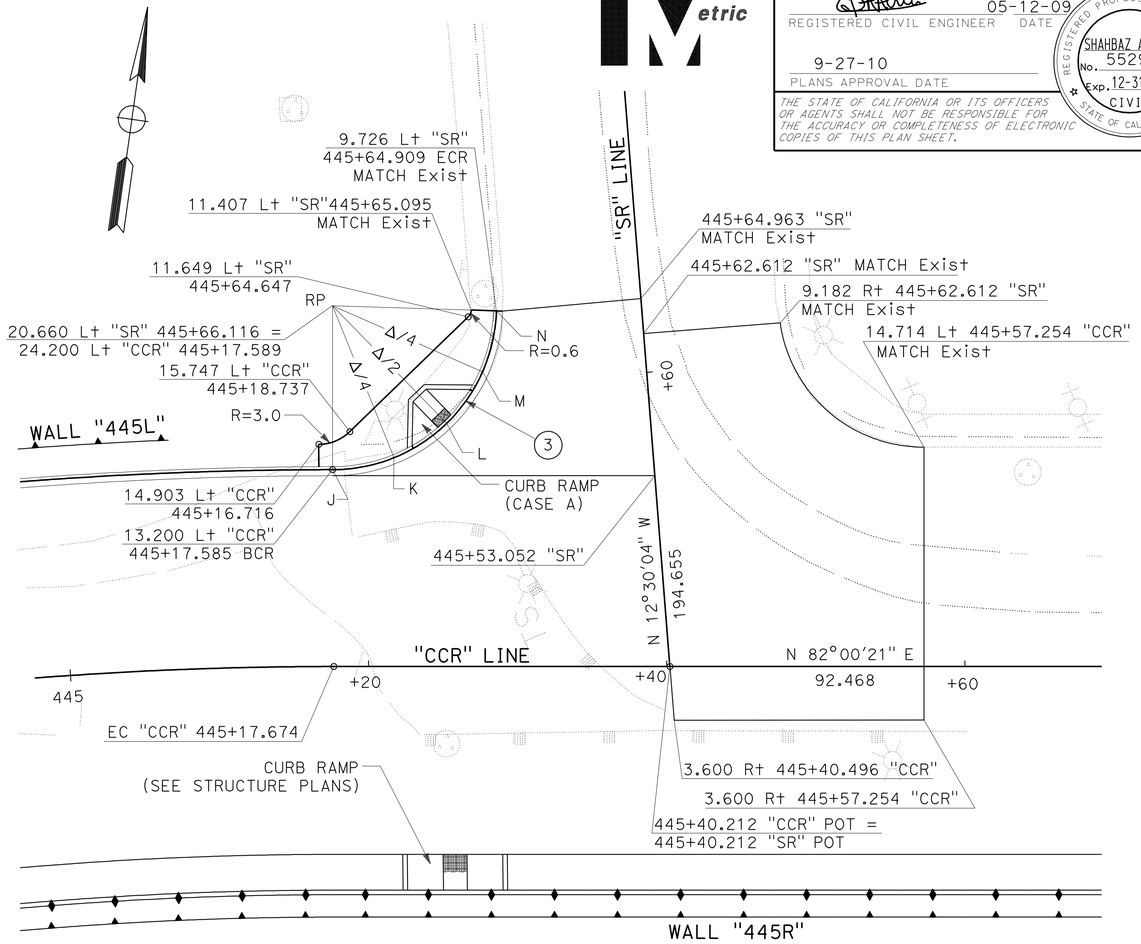

CURB RETURNS
"CCR" / "SR"

GUTTER FLOWLINE

	LINE	STATION	OFFSET	Elev
A	"CCR"	438+50.171	-13.007	38.327
B	"CCR"	438+55.931	-14.452	38.530
C	"BR"	16+01.628	10.347	38.580
D	"BR"	15+95.761	7.117	38.324
E	"BR"	15+89.186	5.997	37.931
F	"BR"	15+98.564	-5.997	39.002
G	"BR"	16+04.314	-7.776	39.330
H	"CCR"	438+83.829	-14.663	39.640
I	"CCR"	438+90.291	-13.200	39.921

CURVE DATA

No.	R	Δ	L	T
1	12.203	112°39'53"	23.996	18.320
2	15.000	76°33'06"	20.041	11.836
3	11.000	93°58'58"	18.043	11.792

GUTTER FLOWLINE

	LINE	STATION	OFFSET	Elev
J	"CCR"	445+17.585	-13.200	45.350
K	"CCR"	445+21.711	-14.004	45.450
L	"SR"	445+57.640	-13.649	45.540
M	"SR"	445+60.892	-10.979	45.660
N	"SR"	445+64.909	-9.726	MATCH

ALL DIMENSIONS ARE IN METERS UNLESS OTHERWISE SHOWN

CONSTRUCTION DETAILS

SCALE 1:200

C-2

STATE OF CALIFORNIA - DEPARTMENT OF TRANSPORTATION
Caltrans PROJECT DEVELOPMENT

FUNCTIONAL SUPERVISOR MAJID KHARRATI
CALCULATED-DESIGNED BY CHRISTOPHER SCOTT
CHECKED BY SHAHBAZ A ALVI
REVISED BY DATE REVISED

LAST REVISION 05-21-09
DATE PLOTTED => 29-SEP-2010
TIME PLOTTED => 13:46

Dist	COUNTY	ROUTE	KILOMETER POST TOTAL PROJECT	SHEET No.	TOTAL SHEETS
11	SD	5,805	R49.9/R51.7, 42.6/46.5	73	886

REGISTERED CIVIL ENGINEER 05-12-09 DATE

9-27-10
PLANS APPROVAL DATE

REGISTERED PROFESSIONAL ENGINEER SHAHBAZ A ALVI No. 55293 Exp. 12-31-10 CIVIL STATE OF CALIFORNIA

THE STATE OF CALIFORNIA OR ITS OFFICERS OR AGENTS SHALL NOT BE RESPONSIBLE FOR THE ACCURACY OR COMPLETENESS OF ELECTRONIC COPIES OF THIS PLAN SHEET.

Caltrans Metric

ELEVATIONS

	LINE	STATION	OFFSET	Elev
A	"SVRM"	449+49.401	19.597	30.326
B	"SVRM"	442+52.616	19.982	30.476
C	"CCR"	436+81.970	10.595	30.652
D	"CCR"	436+84.936	9.405	30.850
E	"CCR"	436+88.099	9.000	31.031
F	"SVRM"	449+49.401	23.700	30.556
G	"SVRM"	442+51.720	23.978	30.691
H	"CCR"	436+83.732	14.238	30.838
I	"CCR"	436+85.850	13.391	30.986

CURVE DATA

No.	R	Δ	L	T
1	15.000	51°21'13"	13.444	7.212
2	12.000	58°56'04"	12.343	6.780
3	50.000	23°06'05"	20.160	10.219
4	28.000	22°05'05"	10.793	5.464
5	75.000	6°03'27"	7.929	3.968
6	90.000	11°11'39"	17.584	8.820

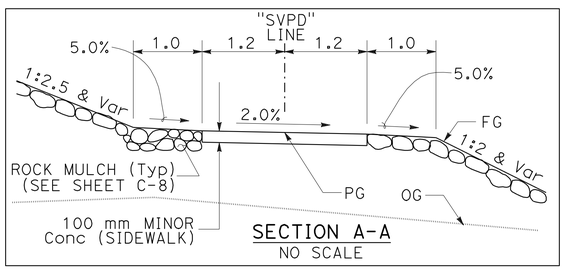

SECTION A-A
NO SCALE

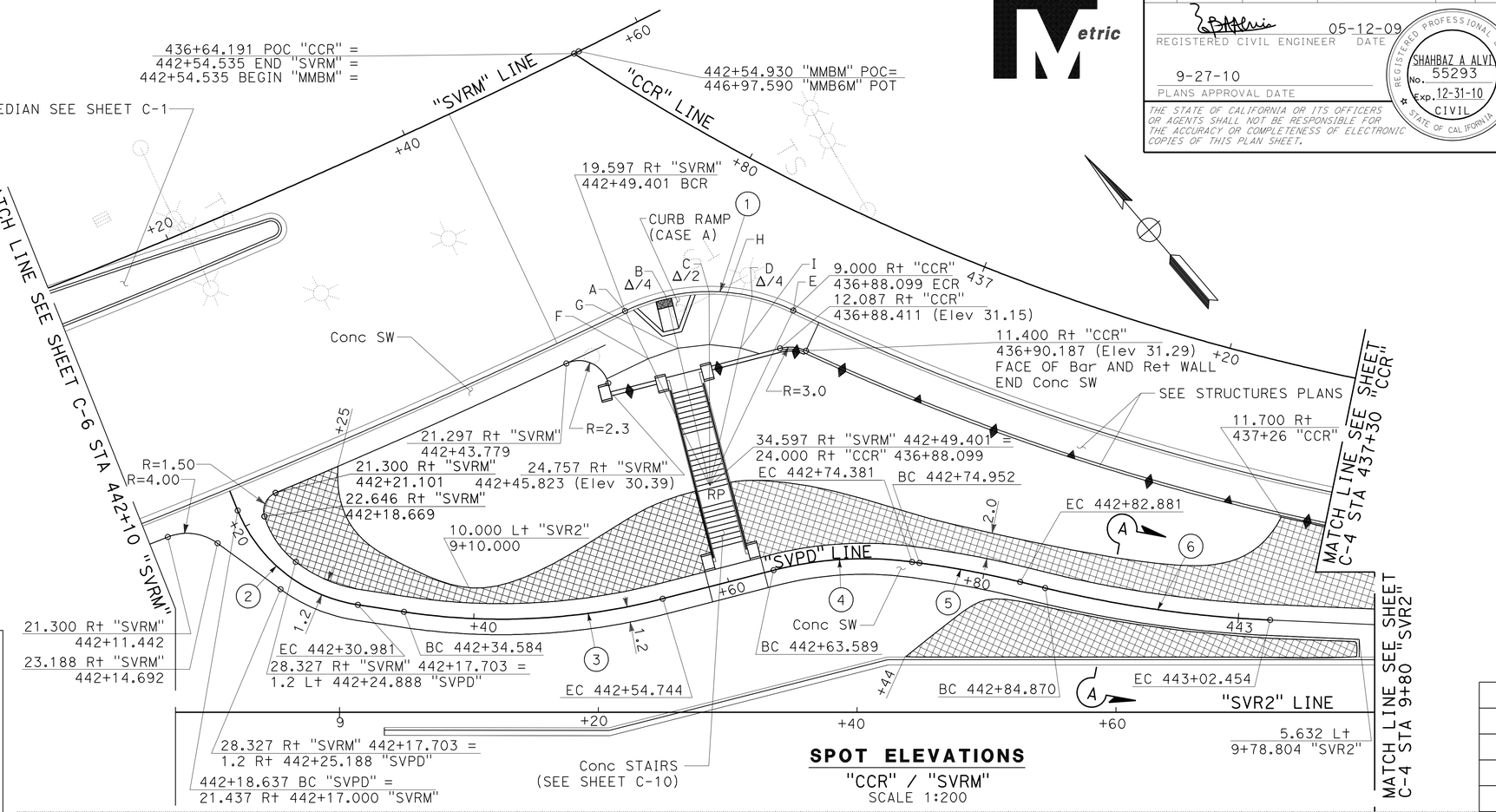

SPOT ELEVATIONS
"CCR" / "SVRM"
SCALE 1:200

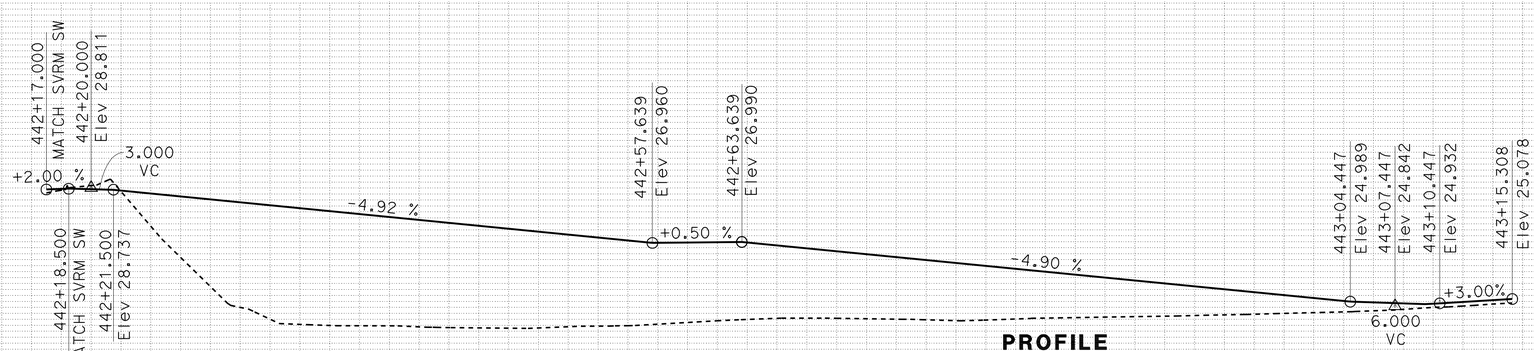

PROFILE
"SVPD" LINE

ALL DIMENSIONS ARE IN METERS UNLESS OTHERWISE SHOWN

CONSTRUCTION DETAILS

SCALE Horiz 1:200
Vert 1:100

C-3

Station						
m^3 Exc / Emb	+20	+40	+60	+80	443+00	+20

STATE OF CALIFORNIA - DEPARTMENT OF TRANSPORTATION
Caltrans PROJECT DEVELOPMENT

FUNCTIONAL SUPERVISOR: MAJID KHARRATI
CALCULATED-DESIGNED BY: SHAHBAZ A ALVI
CHECKED BY: CHRISTOPHER SCOTT
REVISED BY / DATE REVISED

LAST REVISION 05-21-09 DATE PLOTTED => 29-SEP-2010 TIME PLOTTED => 13:46

Dist	COUNTY	ROUTE	KILOMETER POST TOTAL PROJECT	SHEET No.	TOTAL SHEETS
11	SD	5,805	R49.9/R51.7, 42.6/46.5	74	886

REGISTERED CIVIL ENGINEER 05-12-09 DATE

9-27-10
PLANS APPROVAL DATE

REGISTERED PROFESSIONAL ENGINEER SHAHBAZ A ALVI No. 55293 Exp. 12-31-10 CIVIL STATE OF CALIFORNIA

THE STATE OF CALIFORNIA OR ITS OFFICERS OR AGENTS SHALL NOT BE RESPONSIBLE FOR THE ACCURACY OR COMPLETENESS OF ELECTRONIC COPIES OF THIS PLAN SHEET.

Caltrans Metric

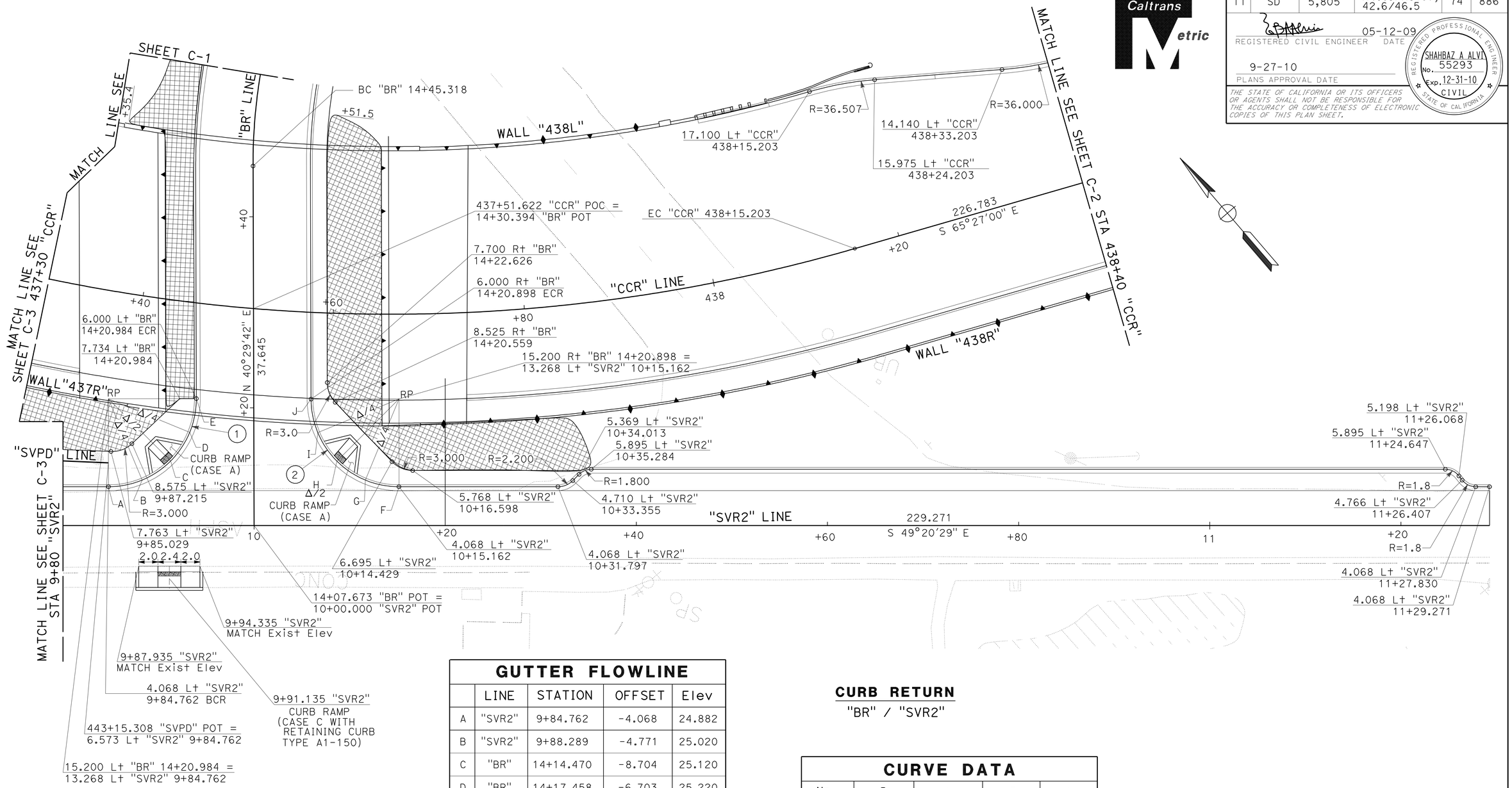

GUTTER FLOWLINE

	LINE	STATION	OFFSET	Elev
A	"SVR2"	9+84.762	-4.068	24.882
B	"SVR2"	9+88.289	-4.771	25.020
C	"BR"	14+14.470	-8.704	25.120
D	"BR"	14+17.458	-6.703	25.220
E	"BR"	14+20.984	-6.000	25.331
F	"SVR2"	10+15.162	-4.068	25.984
G	"SVR2"	10+11.648	-4.766	25.920
H	"BR"	14+14.402	8.685	25.860
I	"BR"	14+17.383	6.698	25.820
J	"BR"	14+20.898	6.000	25.832

CURB RETURN
"BR" / "SVR2"

CURVE DATA

No.	R	Δ	T	L
1	9.200	90°09'47"	9.226	14.477
2	9.200	89°49'11"	9.174	14.425

ALL DIMENSIONS ARE IN METERS UNLESS OTHERWISE SHOWN

CONSTRUCTION DETAILS

SCALE 1:200

C-4

STATE OF CALIFORNIA - DEPARTMENT OF TRANSPORTATION
Caltrans PROJECT DEVELOPMENT

FUNCTIONAL SUPERVISOR: MAJID KHARRATI
CALCULATED-DESIGNED BY: CHRISTOPHER SCOTT
CHECKED BY: SHAHBAZ A ALVI
REVISED BY / DATE REVISED

LAST REVISION 05-20-09 DATE PLOTTED => 23-SEP-2010 TIME PLOTTED => 13:46

Dist	COUNTY	ROUTE	KILOMETER POST TOTAL PROJECT	SHEET No.	TOTAL SHEETS
11	SD	5,805	R49.9/R51.7, 42.6/46.5	75	886

REGISTERED CIVIL ENGINEER 05-12-09 DATE

9-27-10
PLANS APPROVAL DATE

REGISTERED PROFESSIONAL ENGINEER SHAHBAZ A ALVI No. 55293 Exp. 12-31-10 CIVIL STATE OF CALIFORNIA

THE STATE OF CALIFORNIA OR ITS OFFICERS OR AGENTS SHALL NOT BE RESPONSIBLE FOR THE ACCURACY OR COMPLETENESS OF ELECTRONIC COPIES OF THIS PLAN SHEET.

Caltrans Metric

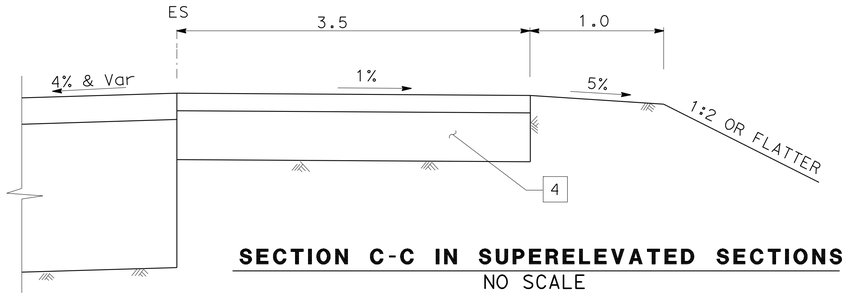

SECTION C-C IN SUPERELEVATED SECTIONS
NO SCALE

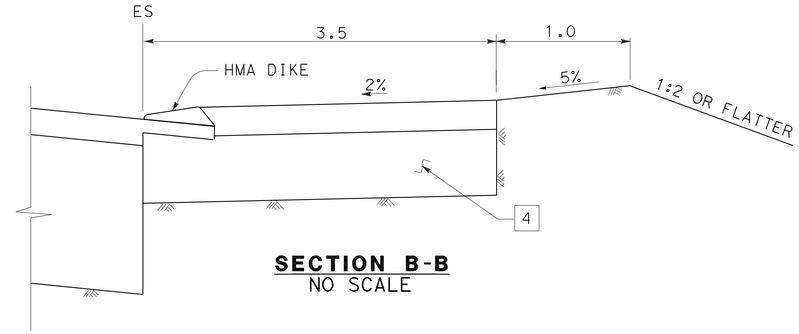

SECTION B-B
NO SCALE

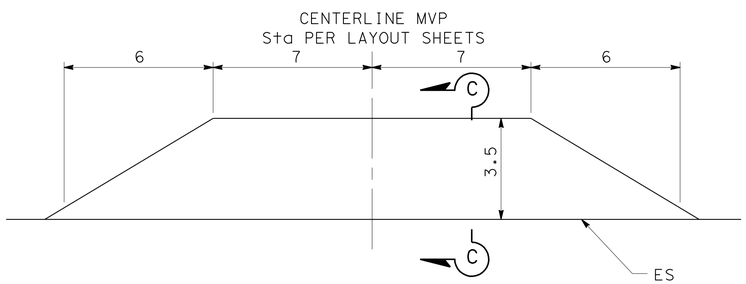

PLAN VIEW
NO SCALE

MAINTENANCE VEHICLE PULLOUT (MVP) DETAIL
(WITHOUT DIKE)

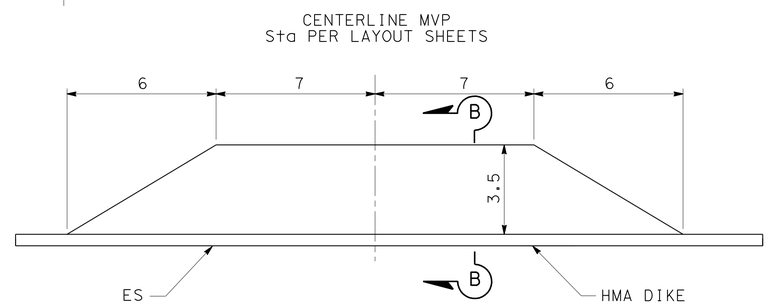

PLAN VIEW
NO SCALE

MAINTENANCE VEHICLE PULLOUT (MVP) DETAIL
(WITH HMA DIKE)

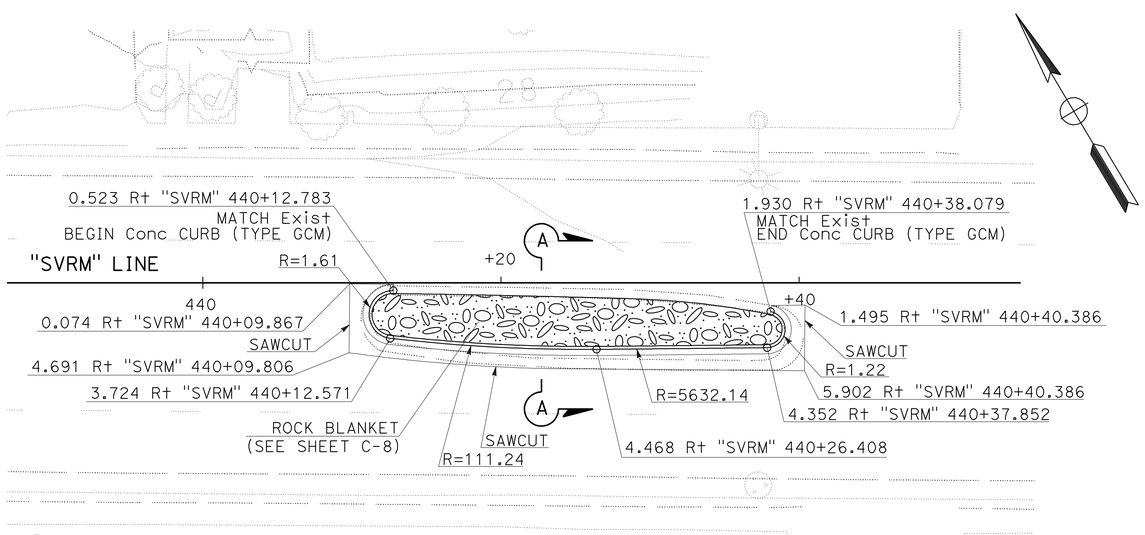

PLAN
SCALE 1:200

RAISED MEDIAN
440+20 "SVRM" LINE

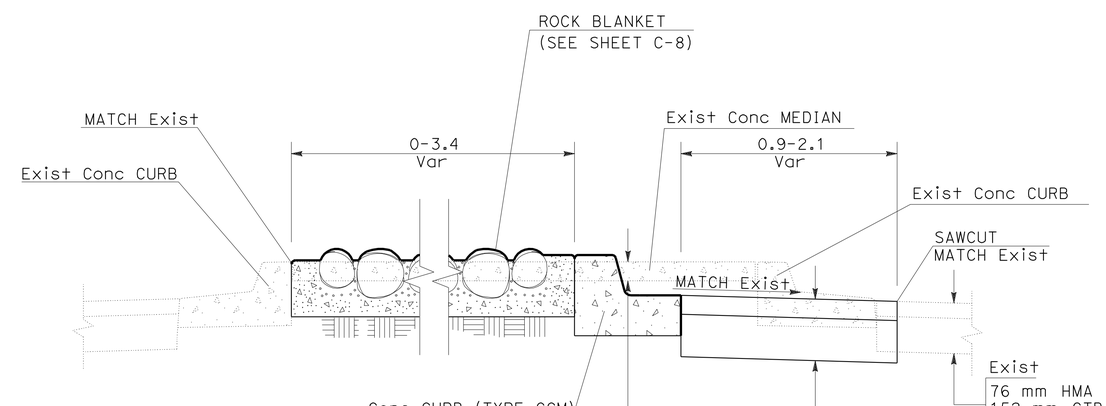

SECTION A-A
NO SCALE

ALL DIMENSIONS ARE IN METERS UNLESS OTHERWISE SHOWN

CONSTRUCTION DETAILS
SCALE AS SHOWN

C-5

STATE OF CALIFORNIA - DEPARTMENT OF TRANSPORTATION
Caltrans PROJECT DEVELOPMENT

FUNCTIONAL SUPERVISOR: MAJID KHARRATI
CALCULATED-DESIGNED BY: CHRISTOPHER SCOTT
CHECKED BY: SHAHBAZ A ALVI
REVISED BY
DATE REVISED

LAST REVISION 05-21-09
DATE PLOTTED => 29-SEP-2010
TIME PLOTTED => 13:47

Dist	COUNTY	ROUTE	KILOMETER POST TOTAL PROJECT	SHEET No.	TOTAL SHEETS
11	SD	5,805	R49.9/R51.7, 42.6/46.5	76	886

REGISTERED CIVIL ENGINEER 05-12-09 DATE

9-27-10
PLANS APPROVAL DATE

REGISTERED PROFESSIONAL ENGINEER SHAHBAZ A ALVI No. 55293 Exp. 12-31-10 CIVIL STATE OF CALIFORNIA

THE STATE OF CALIFORNIA OR ITS OFFICERS OR AGENTS SHALL NOT BE RESPONSIBLE FOR THE ACCURACY OR COMPLETENESS OF ELECTRONIC COPIES OF THIS PLAN SHEET.

Caltrans Metric

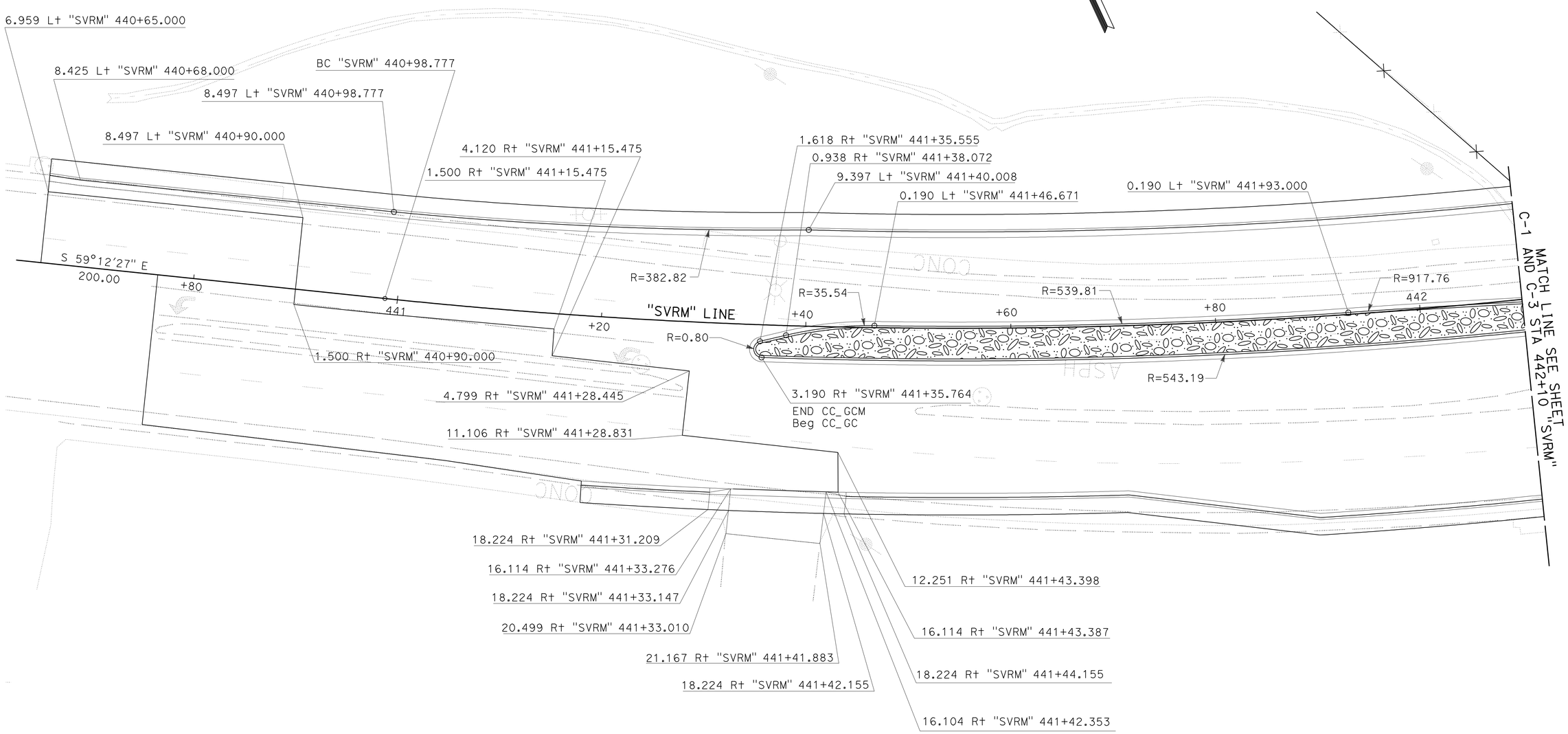

CURB AND PAVING DETAILS

SORRENTO VALLEY ROAD

ALL DIMENSIONS ARE IN METERS UNLESS OTHERWISE SHOWN

CONSTRUCTION DETAILS

SCALE 1:200

C-6

REVISED BY | DATE REVISED

CHRISTOPHER SCOTT | SHAHBAZ A ALVI

CALCULATED-DESIGNED BY | CHECKED BY

FUNCTIONAL SUPERVISOR | MAJID KHARRATI

STATE OF CALIFORNIA - DEPARTMENT OF TRANSPORTATION

Caltrans PROJECT DEVELOPMENT

LAST REVISION 05-21-09 | DATE PLOTTED => 29-SEP-2010 | TIME PLOTTED => 1347

Dist	COUNTY	ROUTE	KILOMETER POST TOTAL PROJECT	SHEET No.	TOTAL SHEETS
11	SD	5,805	R49.9/R51.7, 42.6/46.5	77	886

REGISTERED CIVIL ENGINEER 05-12-09 DATE

9-27-10
PLANS APPROVAL DATE

REGISTERED PROFESSIONAL ENGINEER SHAHBAZ A ALVI No. 55293 Exp. 12-31-10 CIVIL STATE OF CALIFORNIA

THE STATE OF CALIFORNIA OR ITS OFFICERS OR AGENTS SHALL NOT BE RESPONSIBLE FOR THE ACCURACY OR COMPLETENESS OF ELECTRONIC COPIES OF THIS PLAN SHEET.

Caltrans Metric

NOTES:

1. FOR JOINT INFORMATION SEE SHEET C-19
2. CROSS SLOPE TO MATCH SLOPE OF ADJACENT PAVEMENT

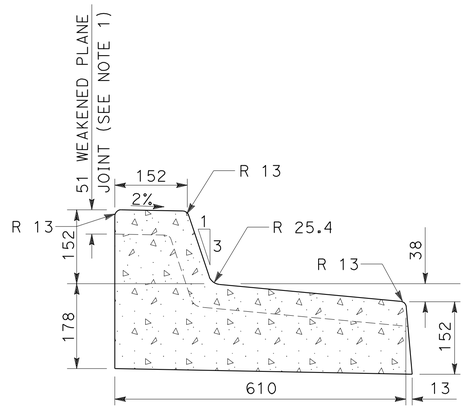

CONCRETE CURB
TYPE GCM

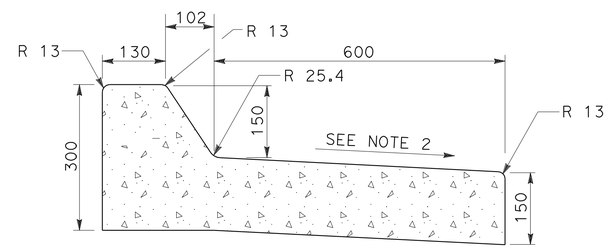

CONCRETE CURB
TYPE B2M

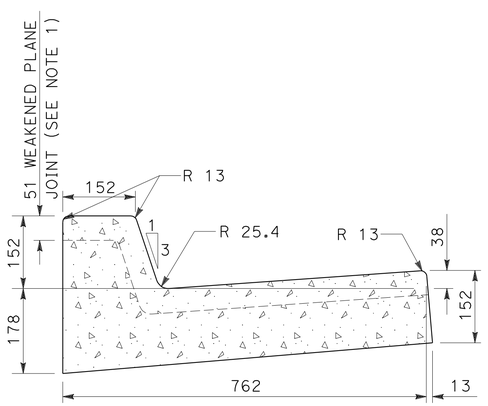

CONCRETE CURB
TYPE HC

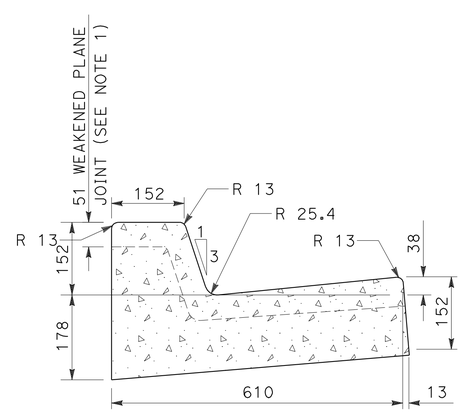

CONCRETE CURB
TYPE GC

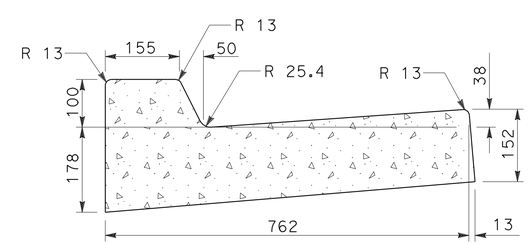

CONCRETE CURB
TYPE FM

ALL DIMENSIONS ARE IN MILLIMETERS UNLESS OTHERWISE SHOWN

CONSTRUCTION DETAILS
NO SCALE

C-7

STATE OF CALIFORNIA - DEPARTMENT OF TRANSPORTATION
Caltrans PROJECT DEVELOPMENT

FUNCTIONAL SUPERVISOR: MAJID KHARRATI
CALCULATED-DESIGNED BY: CHRISTOPHER SCOTT
CHECKED BY: SHAHBAZ A ALVI
REVISED BY / DATE REVISED

LAST REVISION 05-21-09
DATE PLOTTED => 29-SEP-2010
TIME PLOTTED => 13:47

Dist	COUNTY	ROUTE	KILOMETER POST TOTAL PROJECT	SHEET No.	TOTAL SHEETS
11	SD	5,805	R49.9/R51.7, 42.6/46.5	78	886

REGISTERED CIVIL ENGINEER 05-12-09 DATE

9-27-10
PLANS APPROVAL DATE

REGISTERED PROFESSIONAL ENGINEER SHAHBAZ A ALVI No. 55293 Exp. 12-31-10 CIVIL STATE OF CALIFORNIA

THE STATE OF CALIFORNIA OR ITS OFFICERS OR AGENTS SHALL NOT BE RESPONSIBLE FOR THE ACCURACY OR COMPLETENESS OF ELECTRONIC COPIES OF THIS PLAN SHEET.

Caltrans Metric

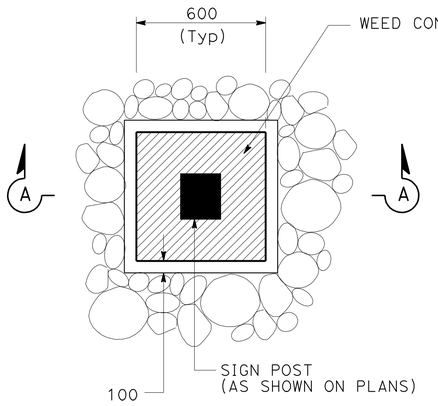

PLAN

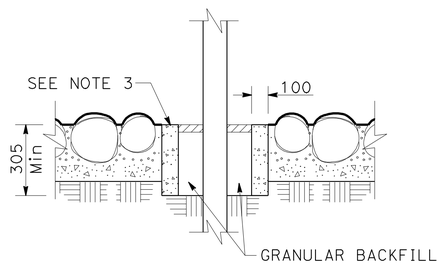

SECTION A-A

ROCK BLANKET AT SIGN POST

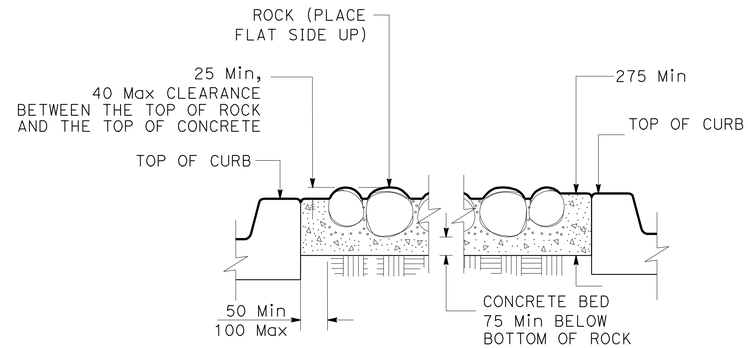

SECTION B-B

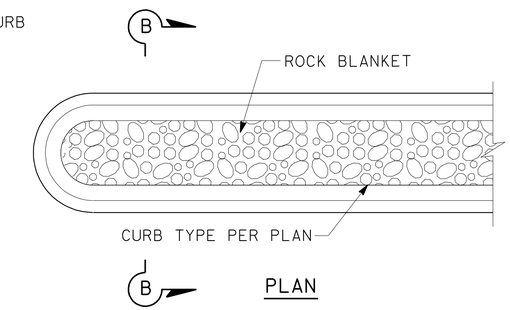

PLAN

ROCK BLANKET

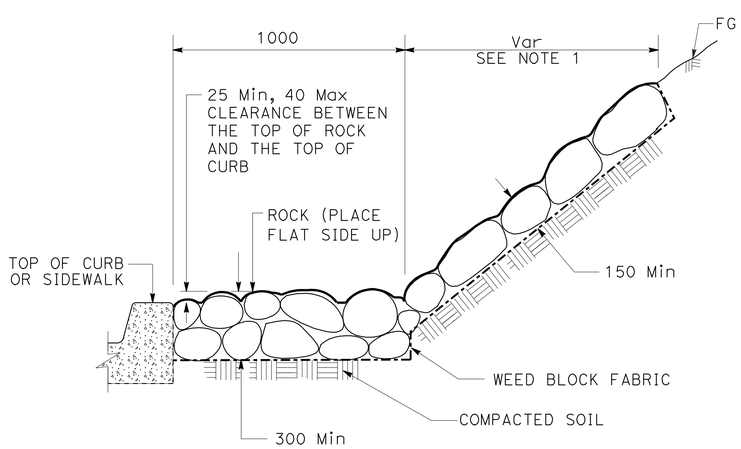

SECTION

ROCK MULCH

NOTES:

1. LAYOUT OF ROCK MULCH AREAS SHALL AS BE SHOWN ON PLANS AND SHALL BE APPROVED BY THE ENGINEER PRIOR TO PLACING THE MATERIAL.
2. FOR SIGN INSTALLATION DETAILS NOT SHOWN SEE STANDARD PLANS RS1 AND RS2.
3. CONCRETE BAND SHALL MATCH THE SURFACE ELEVATION OF THE TOP OF CURB.

ALL DIMENSIONS ARE IN MILLIMETERS UNLESS OTHERWISE SHOWN

CONSTRUCTION DETAILS

NO SCALE

C-8

REVISED BY	DATE REVISED

CHRISTOPHER SCOTT — SHAHBAZ A ALVI

CALCULATED-DESIGNED BY — CHECKED BY

FUNCTIONAL SUPERVISOR: MAJID KHARRATI

STATE OF CALIFORNIA - DEPARTMENT OF TRANSPORTATION
Caltrans PROJECT DEVELOPMENT

LAST REVISION 05-21-09 — DATE PLOTTED => 29-SEP-2010 TIME PLOTTED => 13:47

Dist	COUNTY	ROUTE	KILOMETER POST TOTAL PROJECT	SHEET No.	TOTAL SHEETS
11	SD	5,805	R49.9/R51.7, 42.6/46.5	79	886

REGISTERED CIVIL ENGINEER 05-12-09 DATE

9-27-10
PLANS APPROVAL DATE

REGISTERED PROFESSIONAL ENGINEER SHAHBAZ A ALVI No. 55293 Exp. 12-31-10 CIVIL STATE OF CALIFORNIA

THE STATE OF CALIFORNIA OR ITS OFFICERS OR AGENTS SHALL NOT BE RESPONSIBLE FOR THE ACCURACY OR COMPLETENESS OF ELECTRONIC COPIES OF THIS PLAN SHEET.

Caltrans Metric

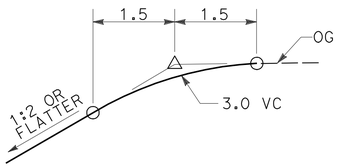

EXCAVATION
"SVRM"
Sta 441+15.475 TO Sta 441+95.000

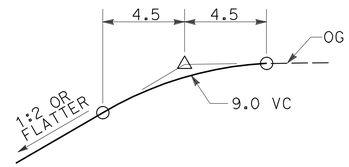

EXCAVATION
"SVRM"
Sta 440+76.479 TO Sta 440+80.000
Sta 441+95.000 TO Sta 442+15.782

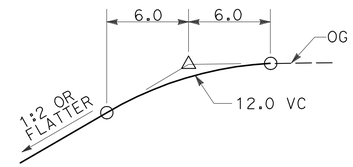

EXCAVATION
"SVRM"
Sta 440+80.000 TO Sta 441+00.000

SLOPE ROUNDING DETAIL

ELEVATION VIEW

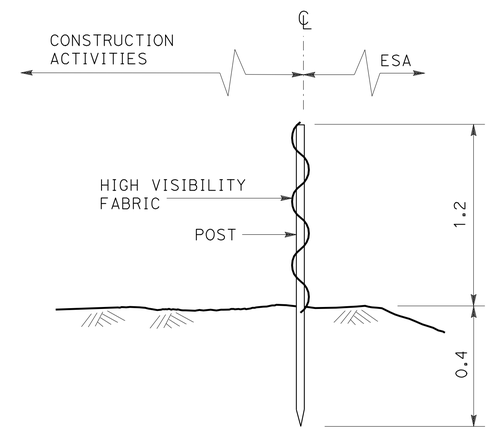

SECTION

TEMPORARY FENCE (TYPE ESA)

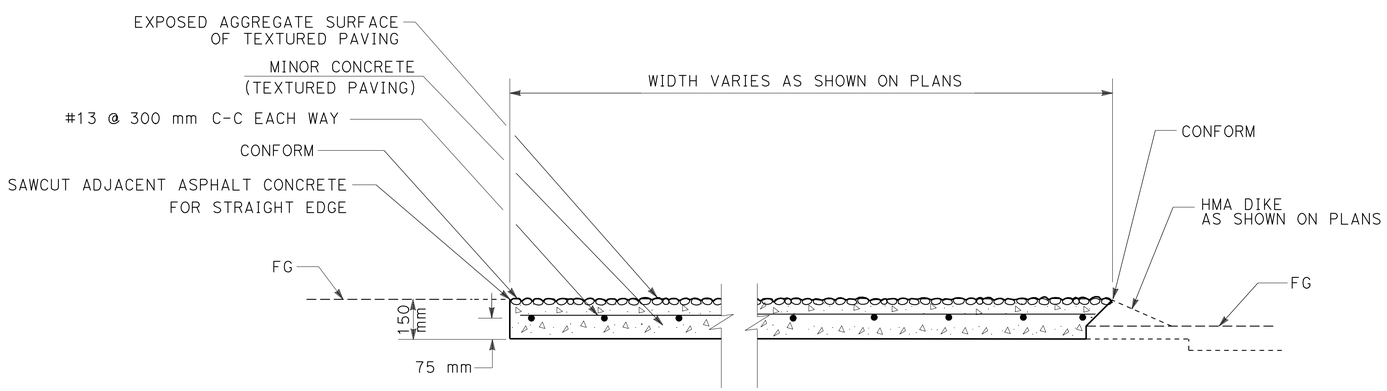

MINOR CONCRETE (TEXTURED PAVING)

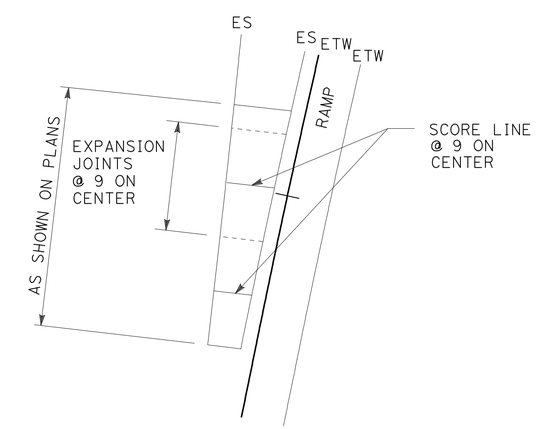

PLAN

ALL DIMENSIONS ARE IN METERS UNLESS OTHERWISE SHOWN

CONSTRUCTION DETAILS

NO SCALE

C-9

STATE OF CALIFORNIA - DEPARTMENT OF TRANSPORTATION
Caltrans PROJECT DEVELOPMENT

FUNCTIONAL SUPERVISOR: MAJID KHARRATI
CALCULATED-DESIGNED BY: CHRISTOPHER SCOTT
CHECKED BY: SHAHBAZ A ALVI
REVISED BY / DATE REVISED

LAST REVISION 05-21-09
DATE PLOTTED => 29-SEP-2010
TIME PLOTTED => 13:47

Dist	COUNTY	ROUTE	KILOMETER POST TOTAL PROJECT	SHEET No.	TOTAL SHEETS
11	SD	5,805	R49.9/R51.7, 42.6/46.5	80	886

REGISTERED CIVIL ENGINEER 05-05-09 DATE

9-27-10
PLANS APPROVAL DATE

REGISTERED PROFESSIONAL ENGINEER CHRISTOPHER SCOTT No. 74026 Exp. 06-30-11 CIVIL STATE OF CALIFORNIA

THE STATE OF CALIFORNIA OR ITS OFFICERS OR AGENTS SHALL NOT BE RESPONSIBLE FOR THE ACCURACY OR COMPLETENESS OF ELECTRONIC COPIES OF THIS PLAN SHEET.

Caltrans Metric

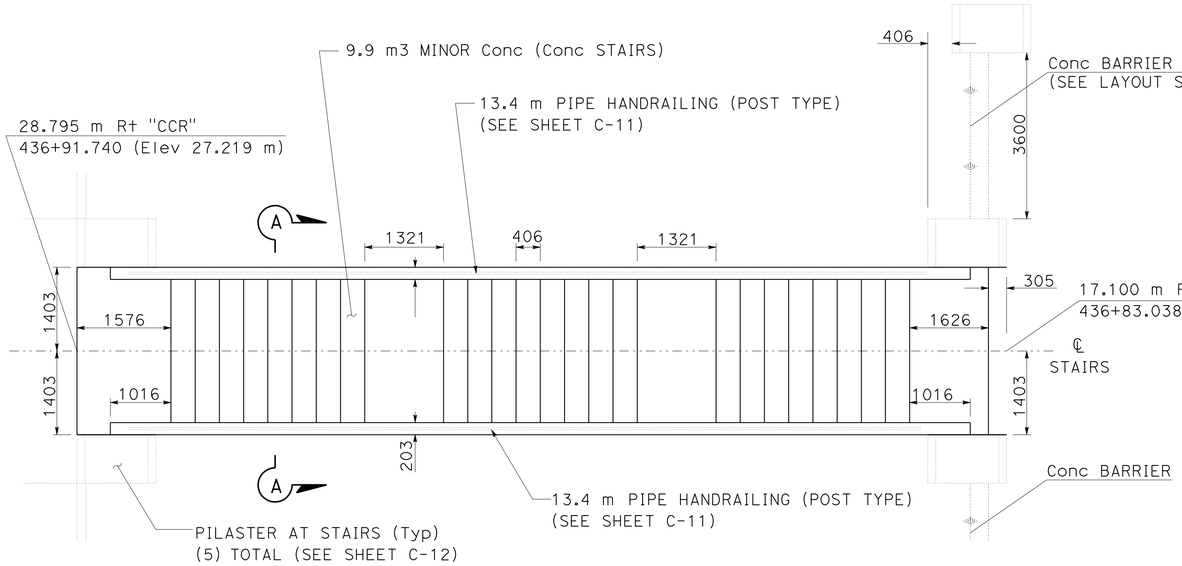

PLAN

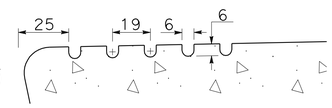

GROOVES DETAIL

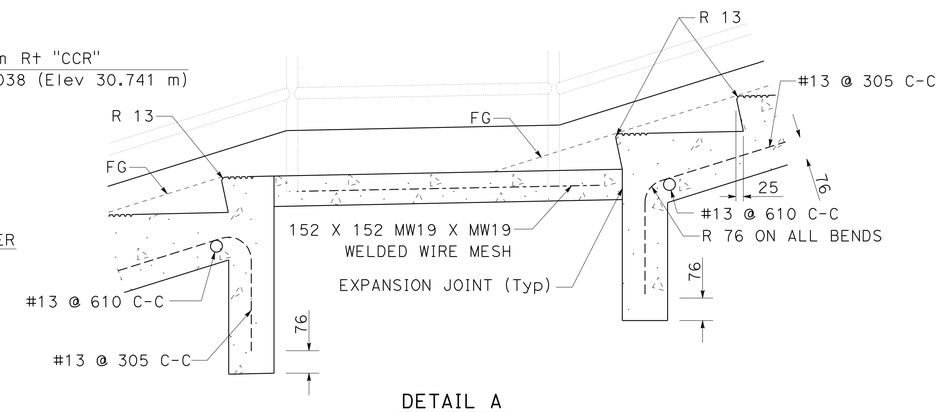

DETAIL A

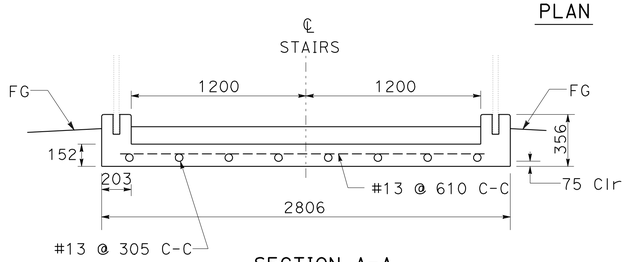

SECTION A-A

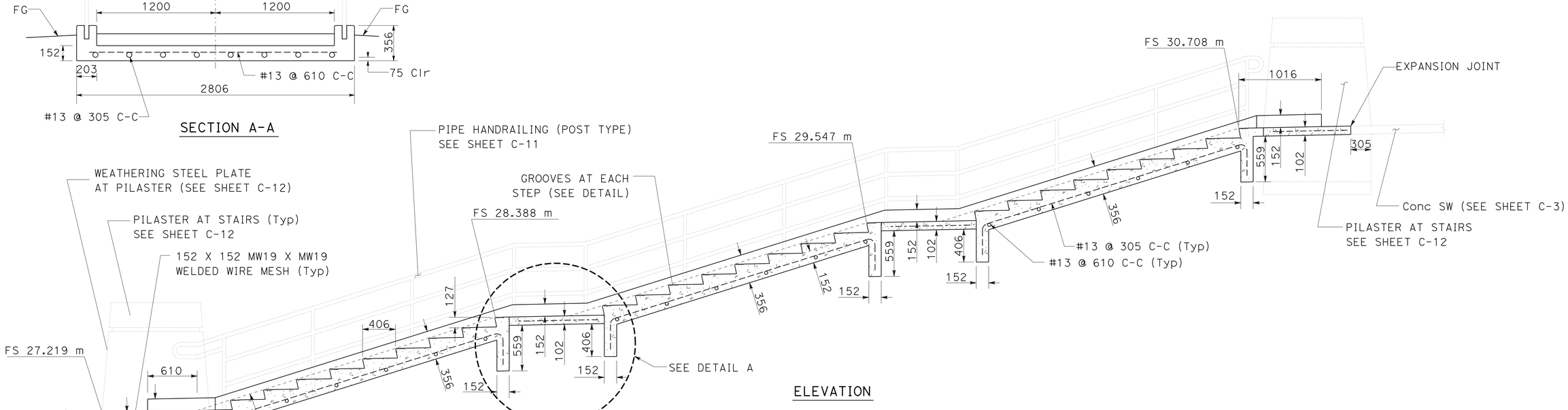

ELEVATION

CONCRETE STAIRS

ALL DIMENSIONS ARE IN MILLIMETERS UNLESS OTHERWISE SHOWN

CONSTRUCTION DETAILS

NO SCALE

C-10

STATE OF CALIFORNIA - DEPARTMENT OF TRANSPORTATION
Caltrans PROJECT DEVELOPMENT

FUNCTIONAL SUPERVISOR: MAJID KHARRATI
CALCULATED-DESIGNED BY: CHRISTOPHER SCOTT
CHECKED BY: SHAHBAZ A ALVI
REVISED BY / DATE REVISED

LAST REVISION 05-21-09 DATE PLOTTED => 29-SEP-2010 TIME PLOTTED => 13:47

Dist	COUNTY	ROUTE	KILOMETER POST TOTAL PROJECT	SHEET No.	TOTAL SHEETS
11	SD	5,805	R49.9/R51.7, 42.6/46.5	81	886

Caltrans Metric

05-05-09
REGISTERED CIVIL ENGINEER DATE

9-27-10
PLANS APPROVAL DATE

REGISTERED PROFESSIONAL ENGINEER CHRISTOPHER SCOTT No. 74026 Exp. 06-30-11 CIVIL STATE OF CALIFORNIA

THE STATE OF CALIFORNIA OR ITS OFFICERS OR AGENTS SHALL NOT BE RESPONSIBLE FOR THE ACCURACY OR COMPLETENESS OF ELECTRONIC COPIES OF THIS PLAN SHEET.

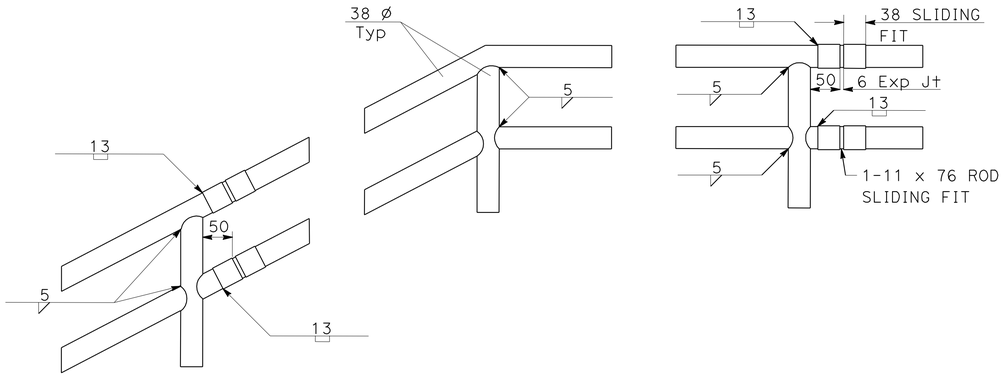

WELDING DETAILS

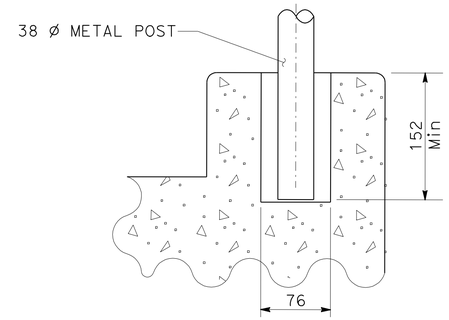

POST MOUNTING DETAIL

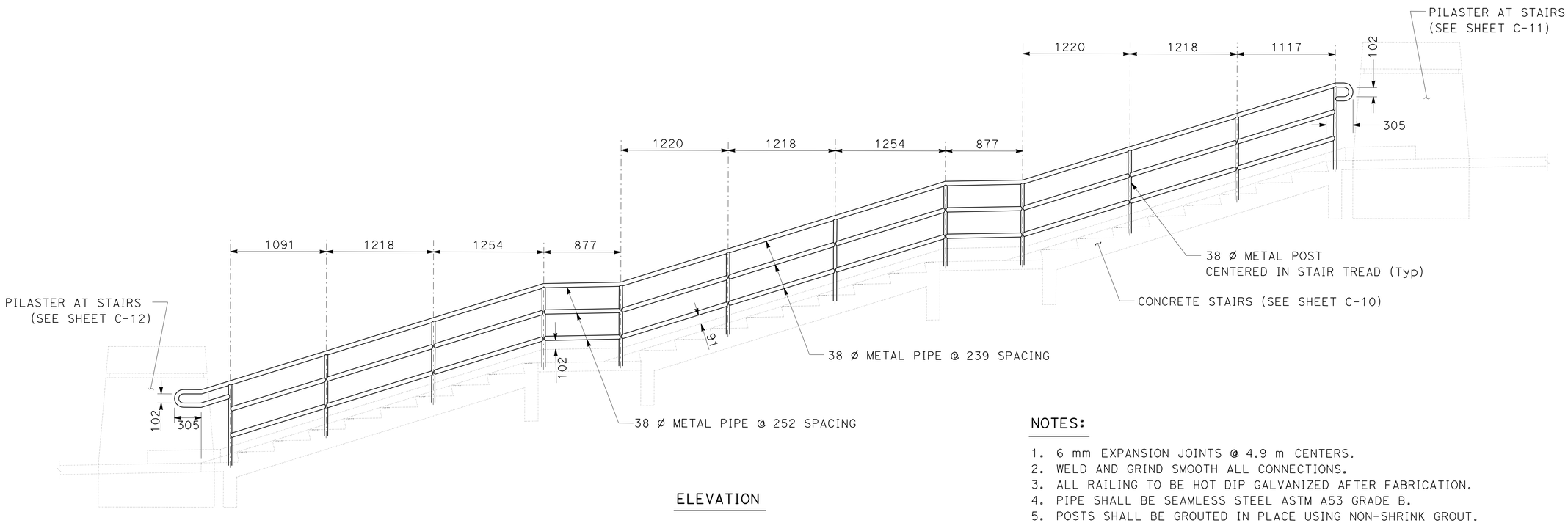

ELEVATION

NOTES:

1. 6 mm EXPANSION JOINTS @ 4.9 m CENTERS.
2. WELD AND GRIND SMOOTH ALL CONNECTIONS.
3. ALL RAILING TO BE HOT DIP GALVANIZED AFTER FABRICATION.
4. PIPE SHALL BE SEAMLESS STEEL ASTM A53 GRADE B.
5. POSTS SHALL BE GROUTED IN PLACE USING NON-SHRINK GROUT.
6. POSTS SHALL BE CENTERED IN CURB.
7. RAILINGS SHALL BE INSTALLED ON BOTH SIDES OF THE Conc STAIRS, (SEE SHEET C-10).

PIPE HANDRAILING

ALL DIMENSIONS ARE IN MILLIMETERS UNLESS OTHERWISE SHOWN

CONSTRUCTION DETAILS

NO SCALE

C-11

STATE OF CALIFORNIA - DEPARTMENT OF TRANSPORTATION
Caltrans PROJECT DEVELOPMENT

FUNCTIONAL SUPERVISOR: MAJID KHARRATI
CALCULATED-DESIGNED BY: CHRISTOPHER SCOTT
CHECKED BY: SHAHBAZ A ALVI
REVISED BY / DATE REVISED

LAST REVISION 05-21-09 | DATE PLOTTED => 29-SEP-2010 | TIME PLOTTED => 13:47

Dist	COUNTY	ROUTE	KILOMETER POST TOTAL PROJECT	SHEET No.	TOTAL SHEETS
11	SD	5,805	R49.9/R51.7, 42.6/46.5	82	886

Caltrans Metric

05-05-09
REGISTERED CIVIL ENGINEER DATE

9-27-10
PLANS APPROVAL DATE

REGISTERED PROFESSIONAL ENGINEER CHRISTOPHER SCOTT No. 74026 Exp. 06-30-11 CIVIL STATE OF CALIFORNIA

THE STATE OF CALIFORNIA OR ITS OFFICERS OR AGENTS SHALL NOT BE RESPONSIBLE FOR THE ACCURACY OR COMPLETENESS OF ELECTRONIC COPIES OF THIS PLAN SHEET.

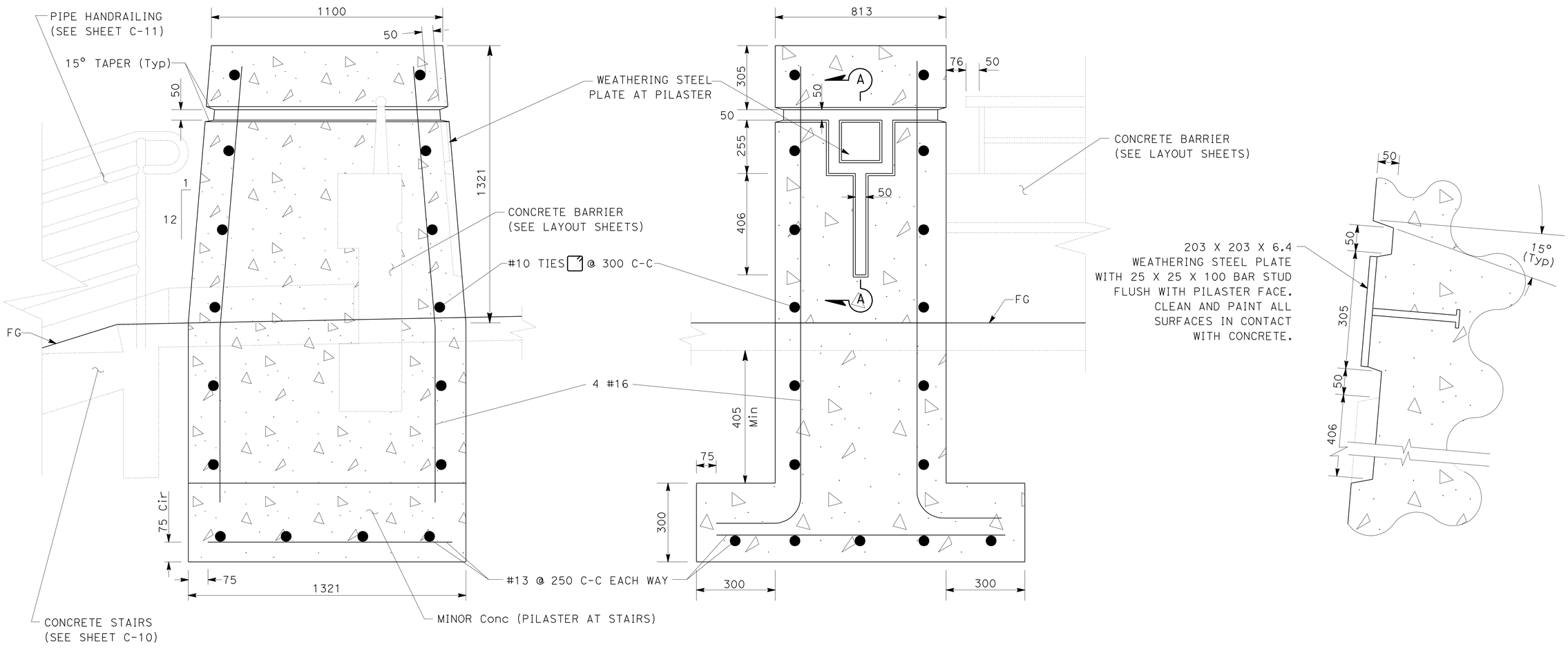

PILASTER AT STAIRS

ALL DIMENSIONS ARE IN MILLIMETERS UNLESS OTHERWISE SHOWN

CONSTRUCTION DETAILS

NO SCALE

C-12

STATE OF CALIFORNIA - DEPARTMENT OF TRANSPORTATION
Caltrans PROJECT DEVELOPMENT

FUNCTIONAL SUPERVISOR: MAJID KHARRATI
CALCULATED-DESIGNED BY: CHRISTOPHER SCOTT
CHECKED BY: SHAHBAZ A ALVI
REVISED BY / DATE REVISED

LAST REVISION 05-21-09
DATE PLOTTED => 29-SEP-2010
TIME PLOTTED => 13:47

Dist	COUNTY	ROUTE	KILOMETER POST TOTAL PROJECT	SHEET No.	TOTAL SHEETS
11	SD	5,805	R49.9/R51.7, 42.6/46.5	83	886

REGISTERED CIVIL ENGINEER 05-12-09 DATE

9-27-10
PLANS APPROVAL DATE

REGISTERED PROFESSIONAL ENGINEER SHAHBAZ A ALVI No. 55293 Exp. 12-31-10 CIVIL STATE OF CALIFORNIA

THE STATE OF CALIFORNIA OR ITS OFFICERS OR AGENTS SHALL NOT BE RESPONSIBLE FOR THE ACCURACY OR COMPLETENESS OF ELECTRONIC COPIES OF THIS PLAN SHEET.

Caltrans Metric

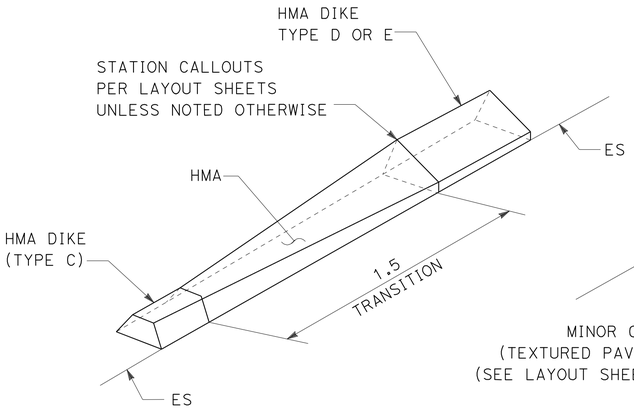

DIKE TRANSITION

TYPE D OR E TO TYPE C

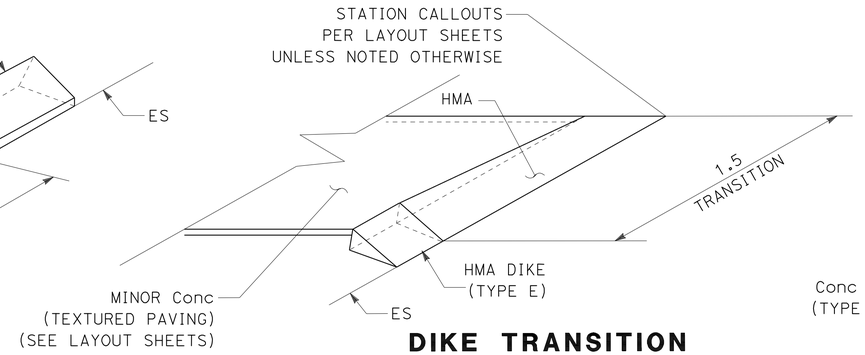

DIKE TRANSITION

END HMA DIKE (TYPE E)
AT MINOR Conc (TEXTURED PAVING)

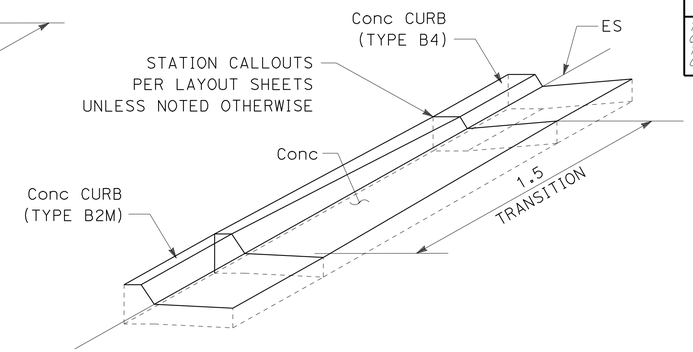

Conc CURB TRANSITION

TYPE B2M TO TYPE B4

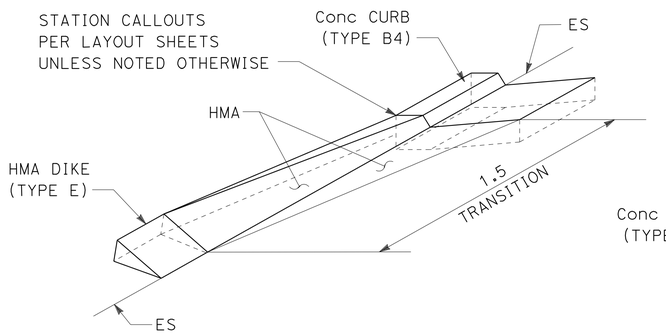

DIKE TRANSITION

(TYPE E) TO Conc CURB (TYPE B4)

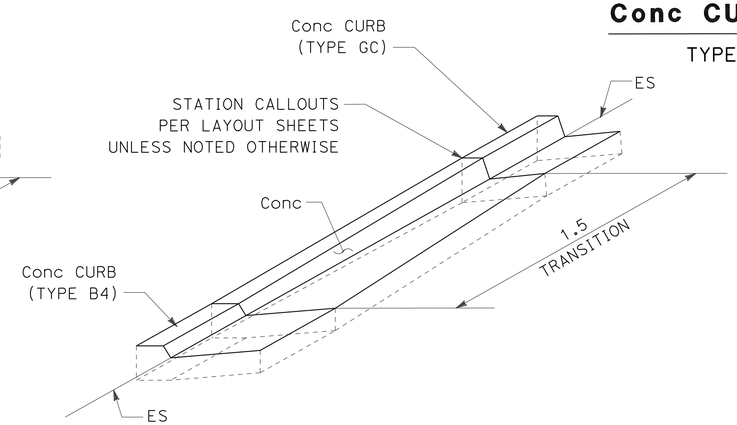

Conc CURB TRANSITION

TYPE B4 TO TYPE GC

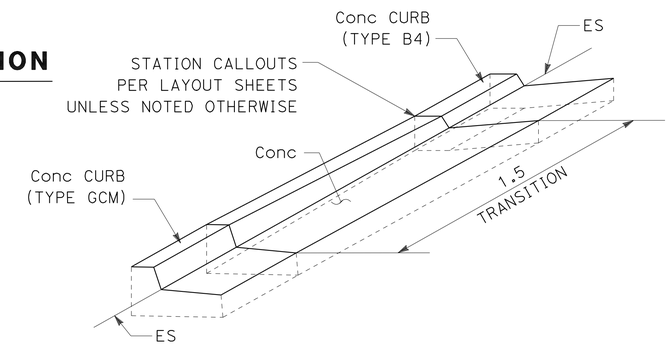

Conc CURB TRANSITION

TYPE GCM TO TYPE B4

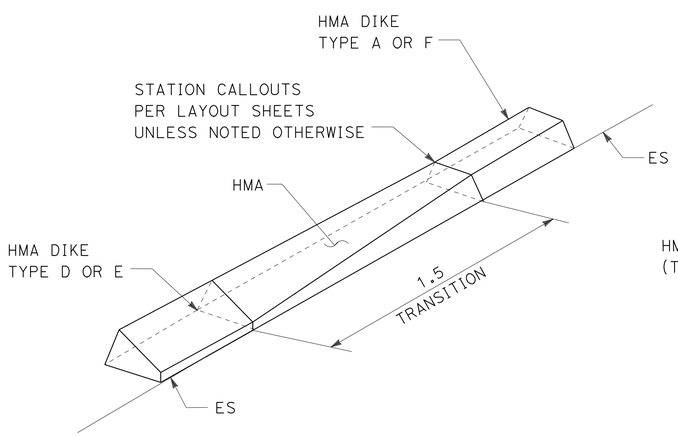

DIKE TRANSITION

TYPE A OR F TO TYPE D OR E

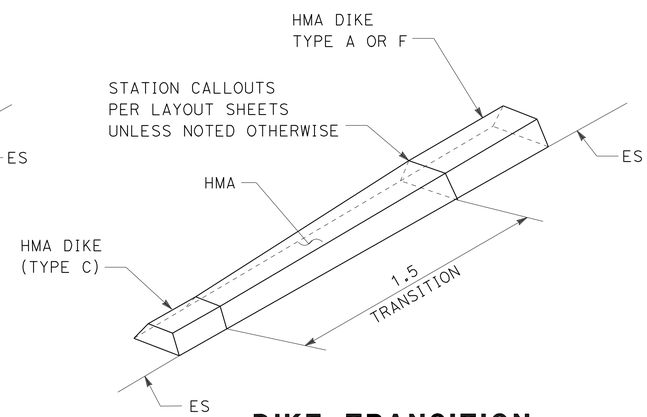

DIKE TRANSITION

TYPE A OR F TO TYPE C

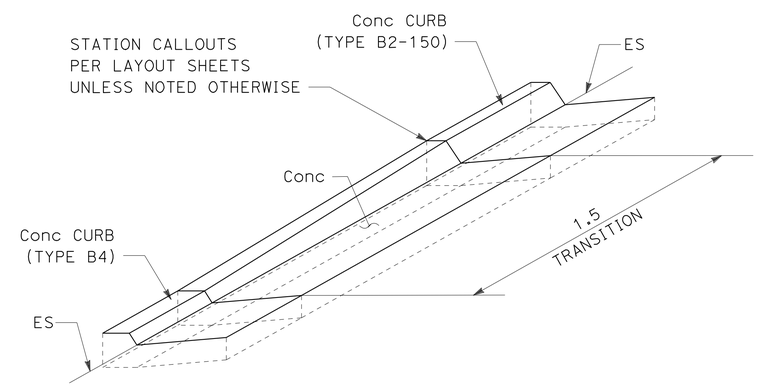

Conc CURB TRANSITION

TYPE B4 TO TYPE B2-150

ALL DIMENSIONS ARE IN METERS UNLESS OTHERWISE SHOWN

CONSTRUCTION DETAILS

NO SCALE

C-13

STATE OF CALIFORNIA - DEPARTMENT OF TRANSPORTATION
Caltrans PROJECT DEVELOPMENT

FUNCTIONAL SUPERVISOR: MAJID KHARRATI
CALCULATED-DESIGNED BY: CHRISTOPHER SCOTT
CHECKED BY: SHAHBAZ A ALVI
REVISED BY
DATE REVISED

LAST REVISION 05-21-09 | DATE PLOTTED => 29-SEP-2010 | TIME PLOTTED => 13:48

Dist	COUNTY	ROUTE	KILOMETER POST TOTAL PROJECT	SHEET No.	TOTAL SHEETS
11	SD	5,805	R49.9/R51.7, 42.6/46.5	84	886

REGISTERED CIVIL ENGINEER 05-12-09 DATE

9-27-10
PLANS APPROVAL DATE

REGISTERED PROFESSIONAL ENGINEER SHAHBAZ A ALVI No. 55293 Exp. 12-31-10 CIVIL STATE OF CALIFORNIA

THE STATE OF CALIFORNIA OR ITS OFFICERS OR AGENTS SHALL NOT BE RESPONSIBLE FOR THE ACCURACY OR COMPLETENESS OF ELECTRONIC COPIES OF THIS PLAN SHEET.

Caltrans Metric

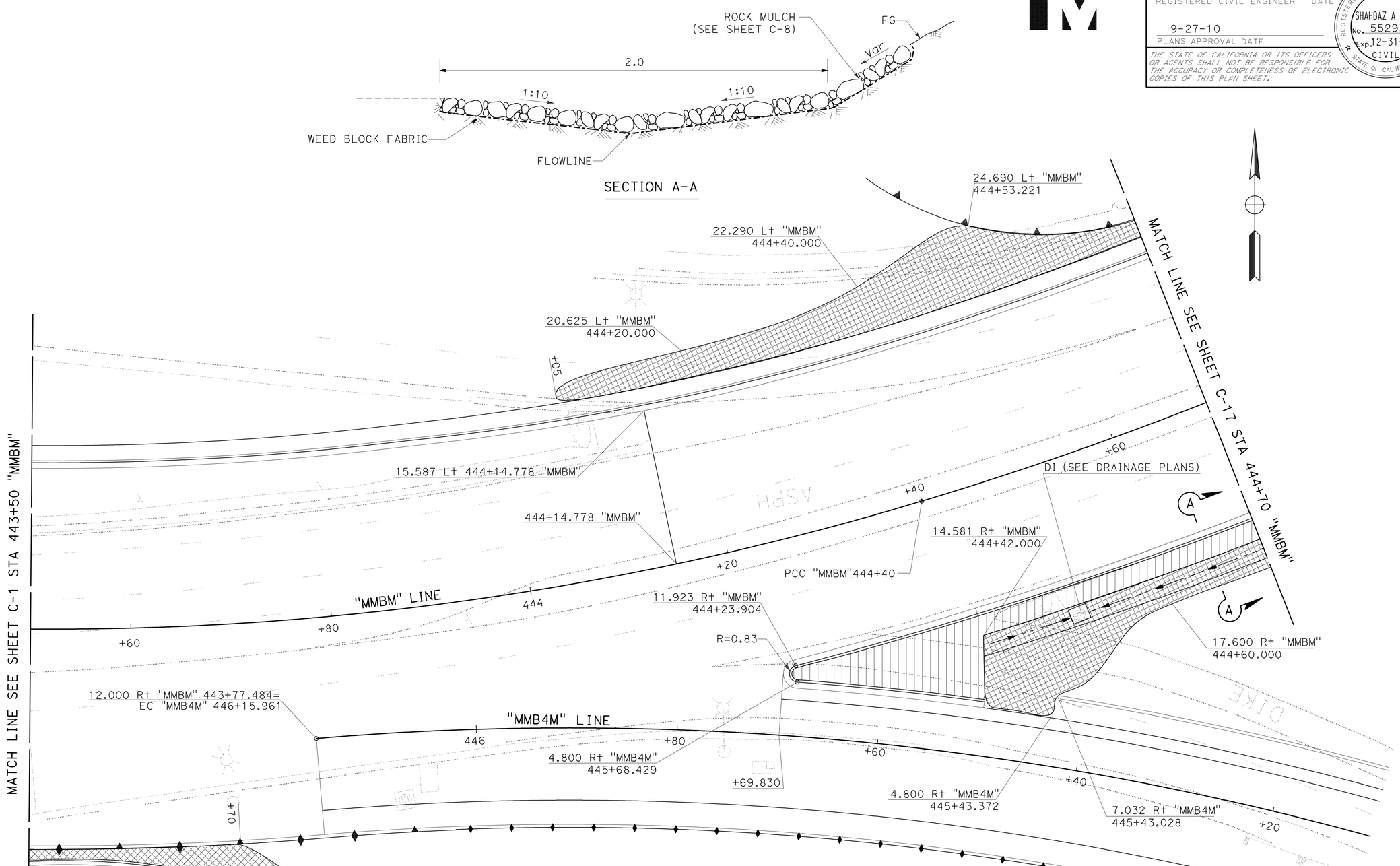

ALL DIMENSIONS ARE IN METERS UNLESS OTHERWISE SHOWN

CONSTRUCTION DETAILS

SCALE 1:200

C-14

STATE OF CALIFORNIA - DEPARTMENT OF TRANSPORTATION
Caltrans PROJECT DEVELOPMENT

FUNCTIONAL SUPERVISOR: MAJID KHARRATI
CALCULATED-DESIGNED BY: CHRISTOPHER SCOTT
CHECKED BY: SHAHBAZ A ALVI
REVISED BY / DATE REVISED

LAST REVISION 05-21-09
DATE PLOTTED => 29-SEP-2010
TIME PLOTTED => 13:48

Dist	COUNTY	ROUTE	KILOMETER POST TOTAL PROJECT	SHEET No.	TOTAL SHEETS
11	SD	5,805	R49.9/R51.7, 42.6/46.5	85	886

REGISTERED CIVIL ENGINEER 05-12-09 DATE

9-27-10
PLANS APPROVAL DATE

REGISTERED PROFESSIONAL ENGINEER SHAHBAZ A ALVI No. 55293 Exp. 12-31-10 CIVIL STATE OF CALIFORNIA

THE STATE OF CALIFORNIA OR ITS OFFICERS OR AGENTS SHALL NOT BE RESPONSIBLE FOR THE ACCURACY OR COMPLETENESS OF ELECTRONIC COPIES OF THIS PLAN SHEET.

Caltrans Metric

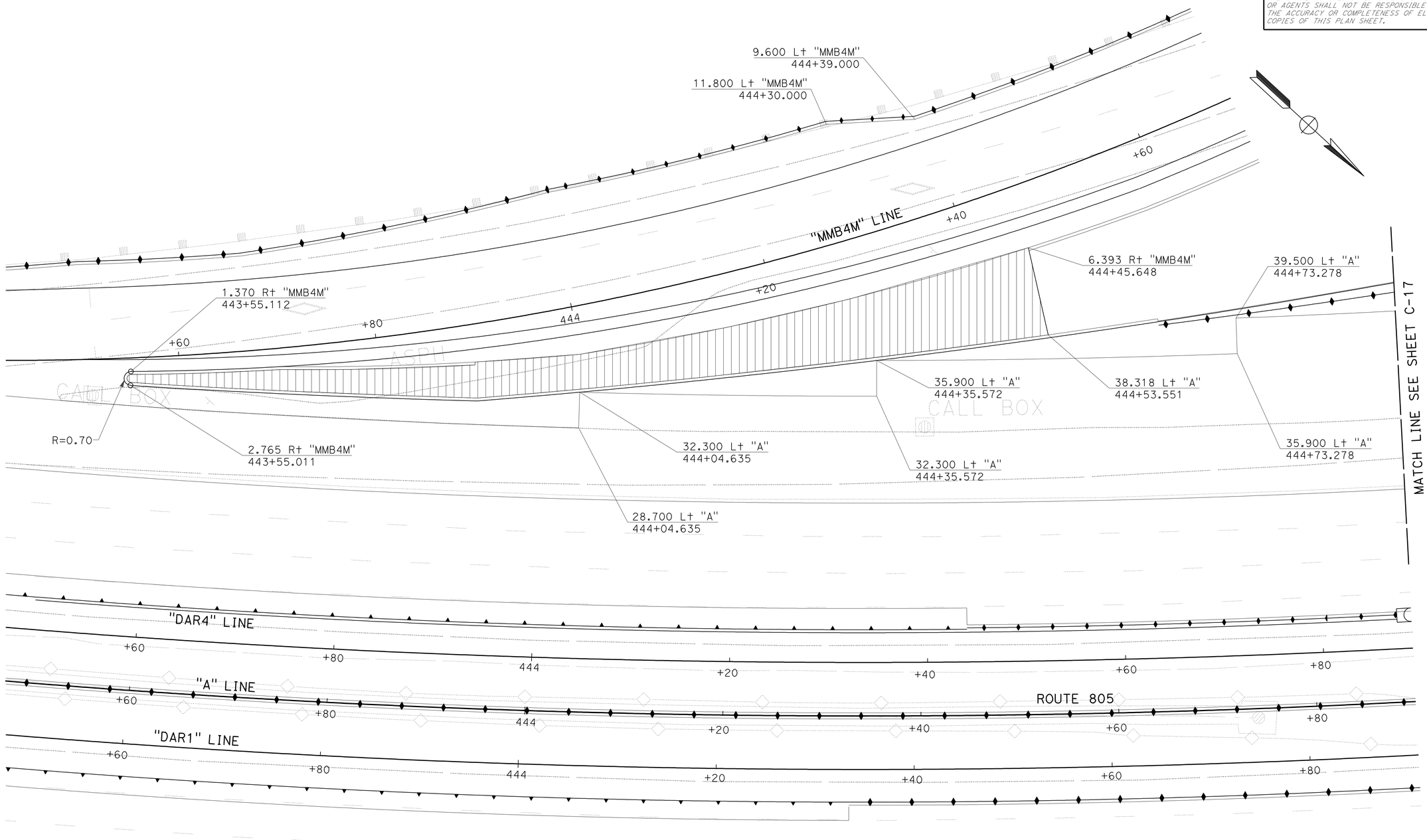

ALL DIMENSIONS ARE IN METERS UNLESS OTHERWISE SHOWN

CONSTRUCTION DETAILS

SCALE 1:200

C-15

STATE OF CALIFORNIA - DEPARTMENT OF TRANSPORTATION
Caltrans
PROJECT DEVELOPMENT

FUNCTIONAL SUPERVISOR: MAJID KHARRATI
CALCULATED-DESIGNED BY: CHRISTOPHER SCOTT
CHECKED BY: SHAHBAZ A ALVI
REVISED BY
DATE REVISED

LAST REVISION 05-21-09
DATE PLOTTED => 29-SEP-2010
TIME PLOTTED => 13:48

Dist	COUNTY	ROUTE	KILOMETER POST TOTAL PROJECT	SHEET No.	TOTAL SHEETS
11	SD	5,805	R49.9/R51.7, 42.6/46.5	86	886

REGISTERED CIVIL ENGINEER 05-12-09 DATE

9-27-10
PLANS APPROVAL DATE

REGISTERED PROFESSIONAL ENGINEER SHAHBAZ A ALVI No. 55293 Exp. 12-31-10 CIVIL STATE OF CALIFORNIA

THE STATE OF CALIFORNIA OR ITS OFFICERS OR AGENTS SHALL NOT BE RESPONSIBLE FOR THE ACCURACY OR COMPLETENESS OF ELECTRONIC COPIES OF THIS PLAN SHEET.

Caltrans Metric

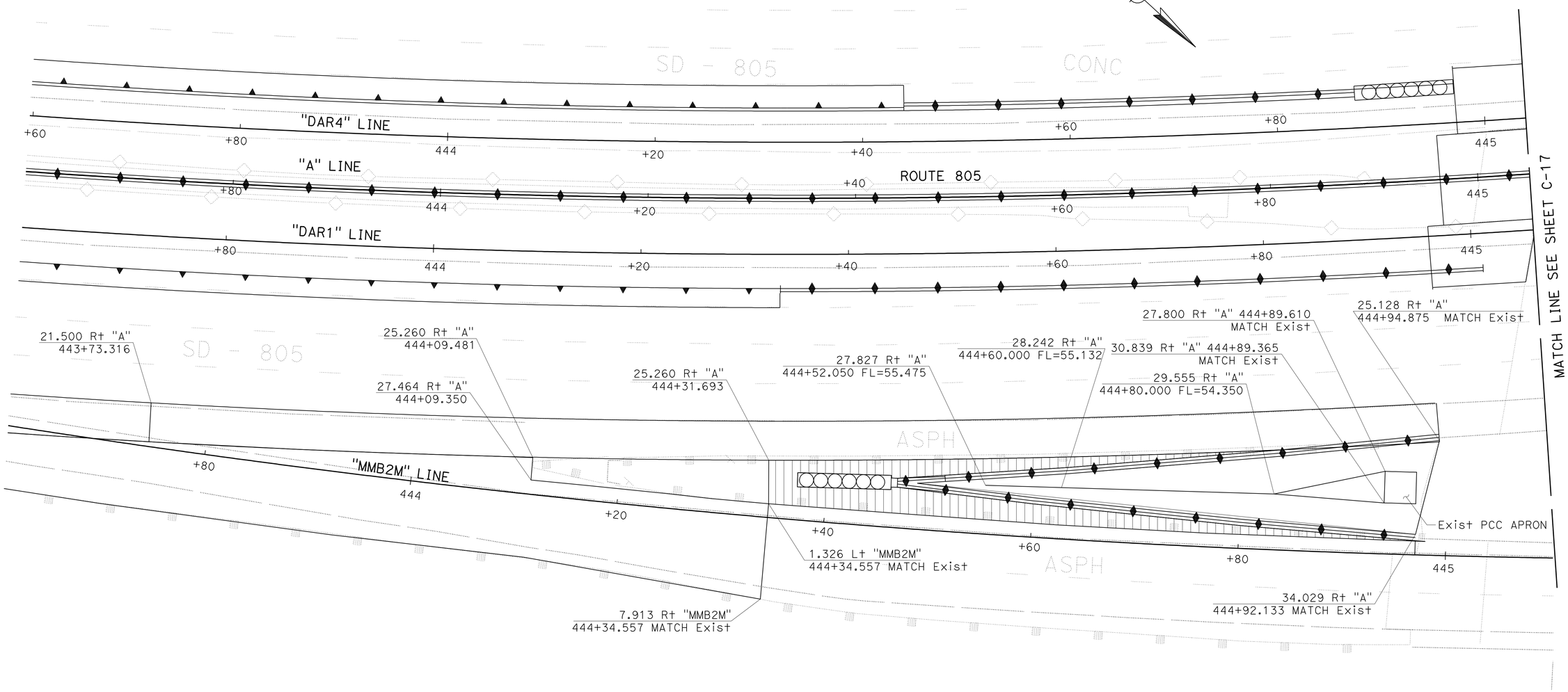

CONSTRUCTION DETAILS

SCALE 1:200

C-16

ALL DIMENSIONS ARE IN METERS UNLESS OTHERWISE SHOWN

REVISED BY	DATE REVISED

CALCULATED-DESIGNED BY: CHRISTOPHER SCOTT
CHECKED BY: SHAHBAZ A ALVI
FUNCTIONAL SUPERVISOR: MAJID KHARRATI

STATE OF CALIFORNIA - DEPARTMENT OF TRANSPORTATION
Caltrans PROJECT DEVELOPMENT

LAST REVISION 05-21-09 DATE PLOTTED => 29-SEP-2010 TIME PLOTTED => 13:48

Dist	COUNTY	ROUTE	KILOMETER POST TOTAL PROJECT	SHEET No.	TOTAL SHEETS
11	SD	5,805	R49.9/R51.7, 42.6/46.5	87	886

REGISTERED CIVIL ENGINEER 05-12-09 DATE

9-27-10
PLANS APPROVAL DATE

REGISTERED PROFESSIONAL ENGINEER SHAHBAZ A ALVI No. 55293 Exp. 12-31-10 CIVIL STATE OF CALIFORNIA

THE STATE OF CALIFORNIA OR ITS OFFICERS OR AGENTS SHALL NOT BE RESPONSIBLE FOR THE ACCURACY OR COMPLETENESS OF ELECTRONIC COPIES OF THIS PLAN SHEET.

Caltrans Metric

ALL DIMENSIONS ARE IN METERS UNLESS OTHERWISE SHOWN

CONSTRUCTION DETAILS

SCALE 1:200

C-17

STATE OF CALIFORNIA - DEPARTMENT OF TRANSPORTATION
Caltrans PROJECT DEVELOPMENT

FUNCTIONAL SUPERVISOR: MAJID KHARRATI
CALCULATED-DESIGNED BY: CHRISTOPHER SCOTT
CHECKED BY: SHAHBAZ A ALVI
REVISED BY
DATE REVISED

LAST REVISION 05-21-09 DATE PLOTTED => 29-SEP-2010 TIME PLOTTED => 13:48

Dist	COUNTY	ROUTE	KILOMETER POST TOTAL PROJECT	SHEET No.	TOTAL SHEETS
11	SD	5,805	R49.9/R51.7, 42.6/46.5	88	886

REGISTERED CIVIL ENGINEER 05-12-09 DATE

9-27-10
PLANS APPROVAL DATE

REGISTERED PROFESSIONAL ENGINEER
SHAHBAZ A ALVI
No. 55293
Exp. 12-31-10
CIVIL
STATE OF CALIFORNIA

THE STATE OF CALIFORNIA OR ITS OFFICERS OR AGENTS SHALL NOT BE RESPONSIBLE FOR THE ACCURACY OR COMPLETENESS OF ELECTRONIC COPIES OF THIS PLAN SHEET.

Caltrans Metric

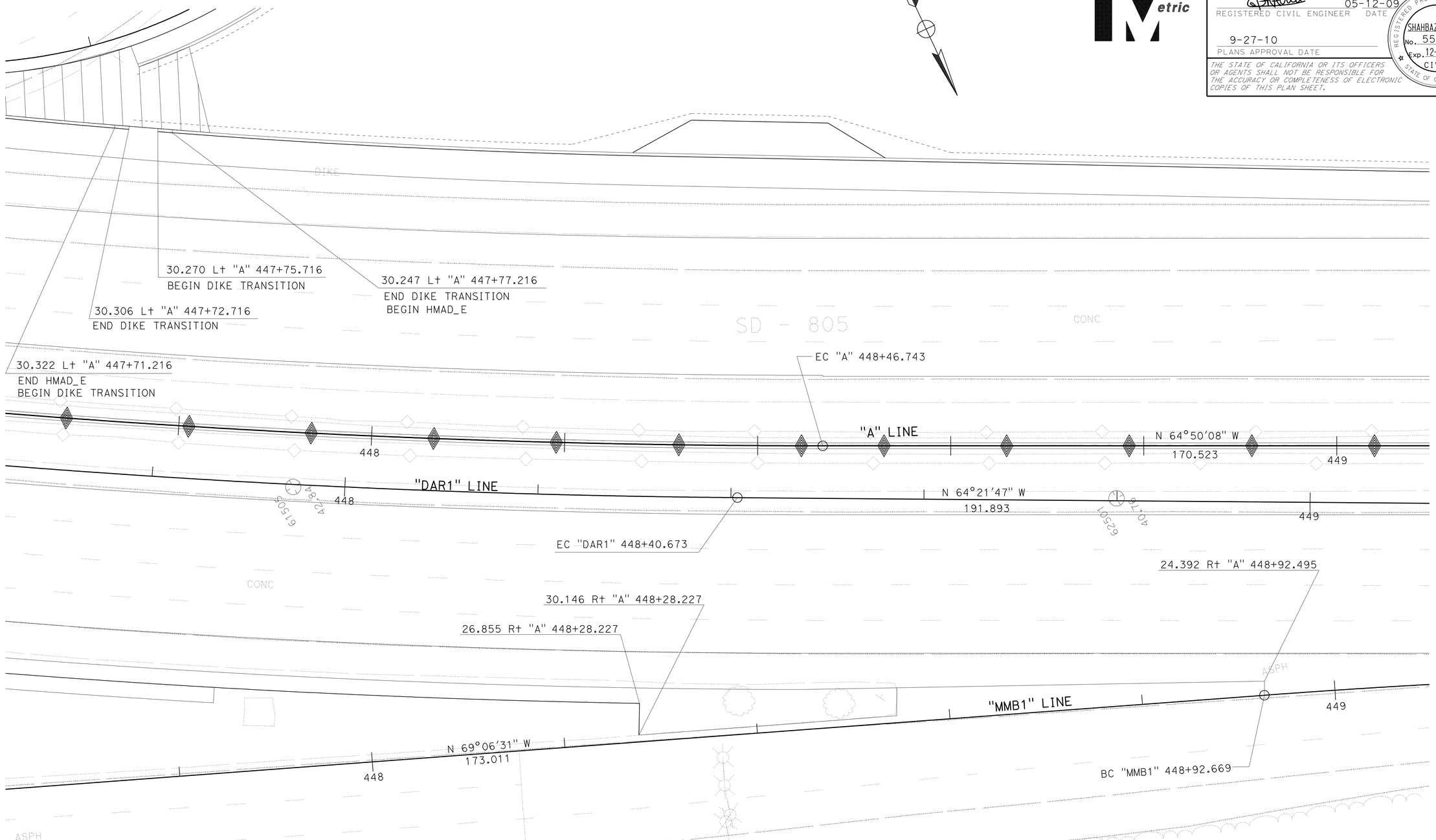

ALL DIMENSIONS ARE IN METERS UNLESS OTHERWISE SHOWN

CONSTRUCTION DETAILS

SCALE 1:200

C-18

STATE OF CALIFORNIA - DEPARTMENT OF TRANSPORTATION
Caltrans PROJECT DEVELOPMENT

FUNCTIONAL SUPERVISOR: MAJID KHARRATI

CALCULATED-DESIGNED BY: CHRISTOPHER SCOTT
CHECKED BY: SHAHBAZ A ALVI

REVISED BY | DATE REVISED

LAST REVISION 05-21-09 | DATE PLOTTED => 29-SEP-2010 | TIME PLOTTED => 13:48

Dist	COUNTY	ROUTE	KILOMETER POST TOTAL PROJECT	SHEET No.	TOTAL SHEETS
11	SD	5,805	R49.9/R51.7, 42.6/46.5	89	886

REGISTERED CIVIL ENGINEER 05-12-09 DATE

9-27-10
PLANS APPROVAL DATE

REGISTERED PROFESSIONAL ENGINEER SHAHBAZ A ALVI No. 55293 Exp. 12-31-10 CIVIL STATE OF CALIFORNIA

THE STATE OF CALIFORNIA OR ITS OFFICERS OR AGENTS SHALL NOT BE RESPONSIBLE FOR THE ACCURACY OR COMPLETENESS OF ELECTRONIC COPIES OF THIS PLAN SHEET.

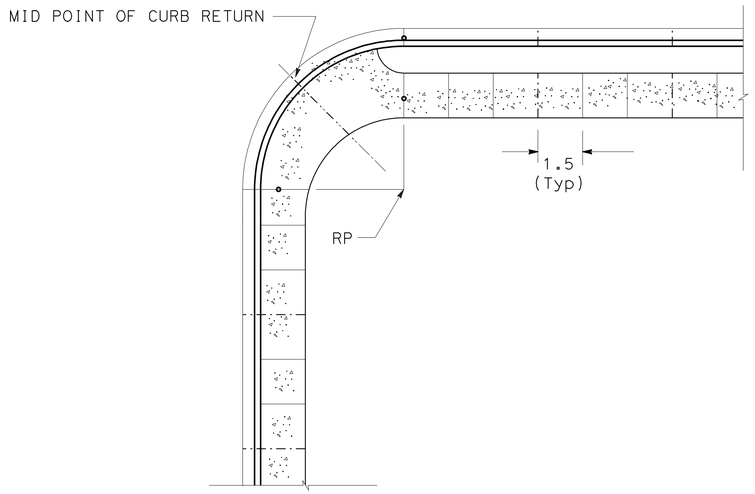

SIDEWALK JOINT LOCATIONS

NO SCALE

NOTES:

1. EXPANSION JOINTS —•— AT CURB RETURNS, ADJACENT TO STRUCTURES AND AT 13.72 m INTERVALS
2. WEAKENED PLANE JOINTS —·—·—·—AT MID POINT OF CURB RETURN, WHEN REQUIRED, AND AT 4.57 m INTERVALS FROM PCR's
3. 6.35 mm GROOVES ——— WITH 6.35 mm RADIUS EDGES AT 1.52 m INTERVALS

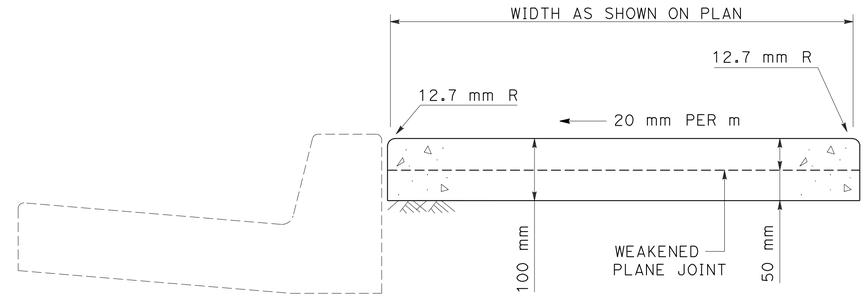

CONTIGUOUS SIDEWALK - TYPICAL SECTION

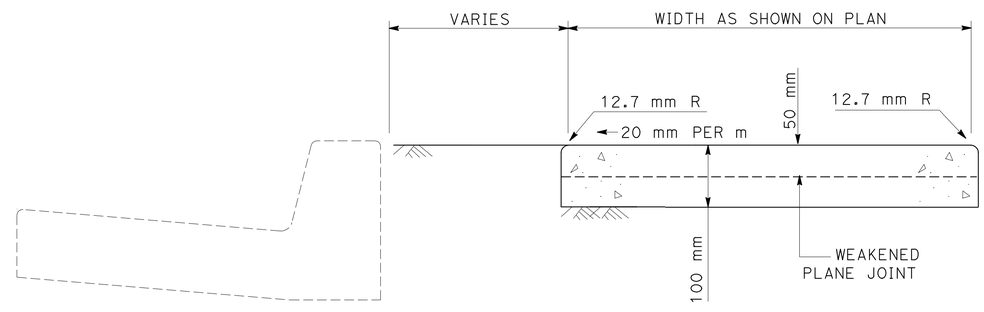

NON-CONTIGUOUS SIDEWALK - TYPICAL SECTION

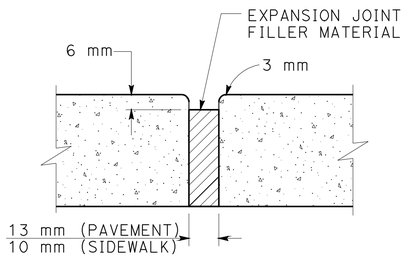

EXPANSION JOINT

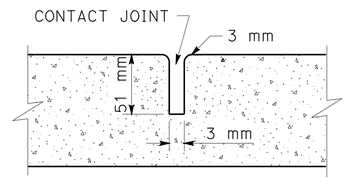

WEAKENED PLANE JOINT

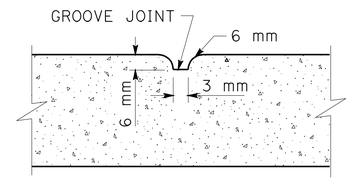

GROOVE JOINT

ALL DIMENSIONS ARE IN METERS UNLESS OTHERWISE SHOWN

CONSTRUCTION DETAILS

NO SCALE

C-19

STATE OF CALIFORNIA - DEPARTMENT OF TRANSPORTATION
Caltrans PROJECT DEVELOPMENT

FUNCTIONAL SUPERVISOR: MAJID KHARRATI
CALCULATED-DESIGNED BY: CHRISTOPHER SCOTT
CHECKED BY: SHAHBAZ A ALVI
REVISED BY / DATE REVISED

LAST REVISION 05-21-09
DATE PLOTTED => 29-SEP-2010
TIME PLOTTED => 13:48

Dist	COUNTY	ROUTE	KILOMETER POST TOTAL PROJECT	SHEET No.	TOTAL SHEETS
11	SD	5,805	R49.9/R51.7, 42.6/46.5	90	886

REGISTERED CIVIL ENGINEER 05-12-09 DATE

9-27-10
PLANS APPROVAL DATE

REGISTERED PROFESSIONAL ENGINEER SHAHBAZ A ALVI No. 55293 Exp. 12-31-10 CIVIL STATE OF CALIFORNIA

THE STATE OF CALIFORNIA OR ITS OFFICERS OR AGENTS SHALL NOT BE RESPONSIBLE FOR THE ACCURACY OR COMPLETENESS OF ELECTRONIC COPIES OF THIS PLAN SHEET.

Caltrans Metric

NOTE: FOR DETAILS NOT SHOWN SEE Std PLANS

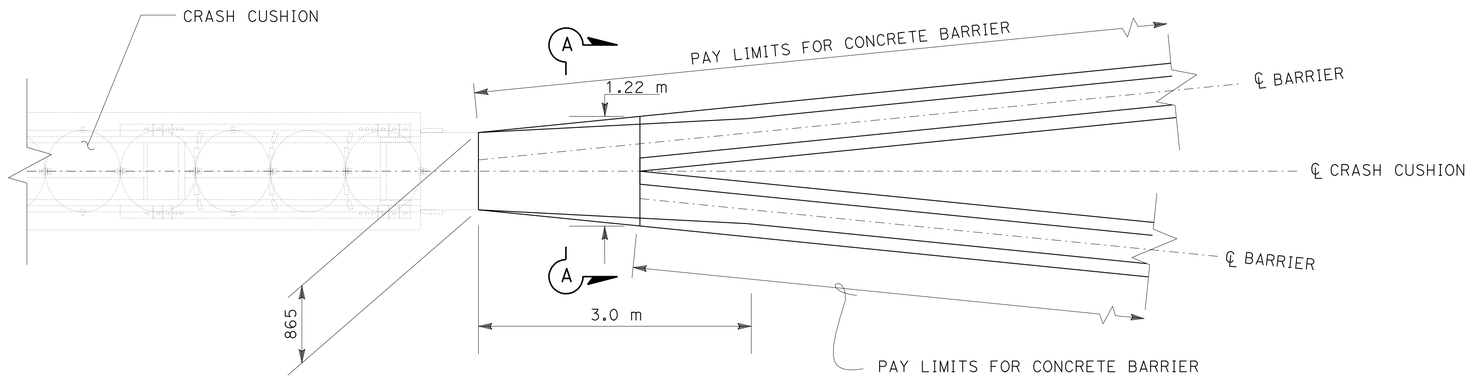

PLAN

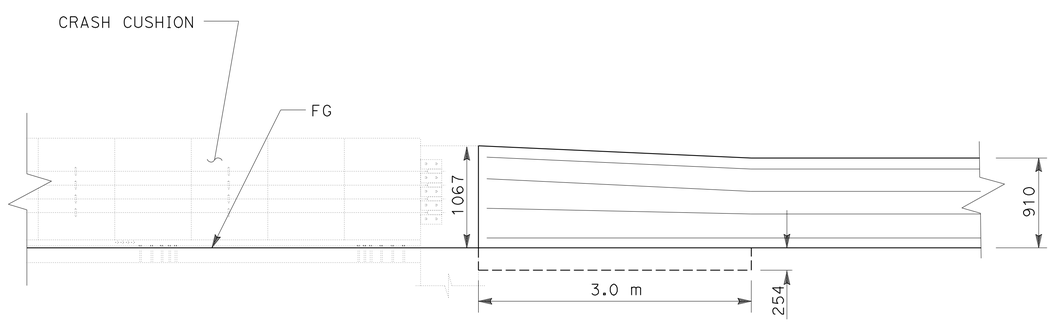

ELEVATION

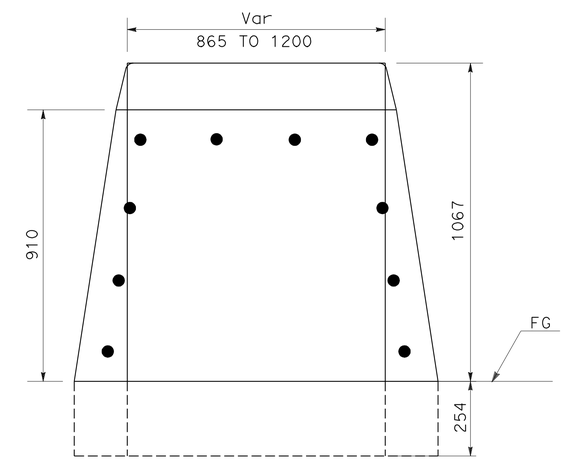

SECTION A-A

CONCRETE BARRIER (TYPE 60) TRANSITION TO CRASH CUSHION (REACT 9CBB)

LOCATION: 27.040 Rt "A" 444+43.809

ALL DIMENSIONS ARE IN MILLIMETERS UNLESS OTHERWISE SHOWN

CONSTRUCTION DETAILS

NO SCALE

C-20

STATE OF CALIFORNIA - DEPARTMENT OF TRANSPORTATION
Caltrans PROJECT DEVELOPMENT

FUNCTIONAL SUPERVISOR: MAJID KHARRATI
CALCULATED-DESIGNED BY: CHRISTOPHER SCOTT
CHECKED BY: SHAHBAZ A ALVI
REVISED BY | DATE REVISED

LAST REVISION 05-21-09 | DATE PLOTTED => 29-SEP-2010 | TIME PLOTTED => 13:48

Dist	COUNTY	ROUTE	KILOMETER POST TOTAL PROJECT	SHEET No.	TOTAL SHEETS
11	SD	5,805	R49.9/R51.7, 42.6/46.5	91	886

REGISTERED CIVIL ENGINEER 05-12-09 DATE

9-27-10
PLANS APPROVAL DATE

REGISTERED PROFESSIONAL ENGINEER SHAHBAZ A ALVI No. 55293 Exp. 12-31-10 CIVIL STATE OF CALIFORNIA

THE STATE OF CALIFORNIA OR ITS OFFICERS OR AGENTS SHALL NOT BE RESPONSIBLE FOR THE ACCURACY OR COMPLETENESS OF ELECTRONIC COPIES OF THIS PLAN SHEET.

Caltrans Metric

NOTE: FOR DETAILS NOT SHOWN SEE Std PLANS

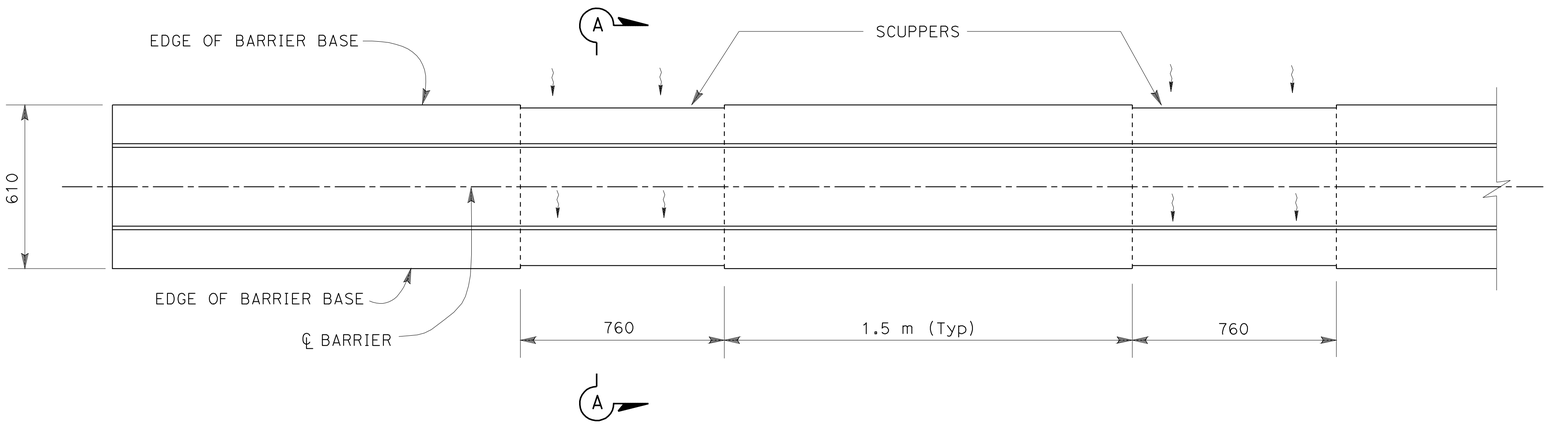

PLAN

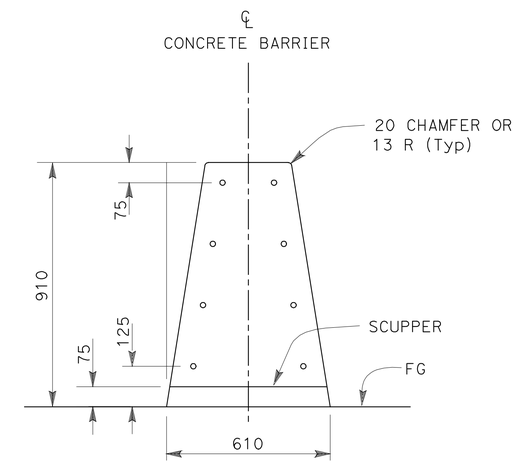

SECTION A-A

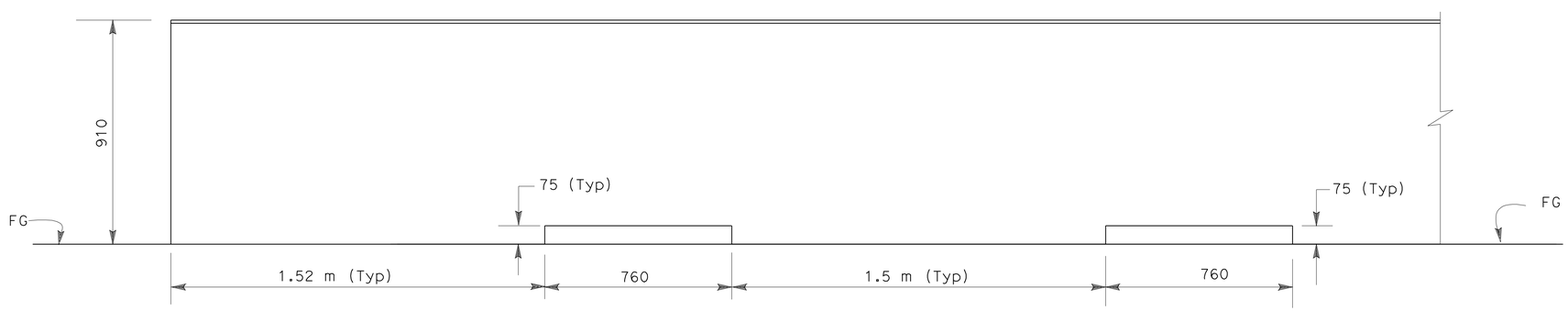

ELEVATION

CONCRETE BARRIER (TYPE 60) WITH SCUPPERS

ALL DIMENSIONS ARE IN MILLIMETERS UNLESS OTHERWISE SHOWN

CONSTRUCTION DETAILS

NO SCALE

C-21

REVISED BY	DATE REVISED

CALCULATED-DESIGNED BY: CHRISTOPHER SCOTT
CHECKED BY: SHAHBAZ A ALVI
FUNCTIONAL SUPERVISOR: MAJID KHARRATI

STATE OF CALIFORNIA - DEPARTMENT OF TRANSPORTATION
Caltrans PROJECT DEVELOPMENT

LAST REVISION 05-21-09
DATE PLOTTED => 29-SEP-2010
TIME PLOTTED => 13:48

Dist	COUNTY	ROUTE	KILOMETER POST TOTAL PROJECT	SHEET No.	TOTAL SHEETS
11	SD	5,805	R49.9/R51.7, 42.6/46.5	92	886

REGISTERED CIVIL ENGINEER 05-12-09 DATE

9-27-10
PLANS APPROVAL DATE

REGISTERED PROFESSIONAL ENGINEER SHAHBAZ A ALVI No. 55293 Exp. 12-31-10 CIVIL STATE OF CALIFORNIA

THE STATE OF CALIFORNIA OR ITS OFFICERS OR AGENTS SHALL NOT BE RESPONSIBLE FOR THE ACCURACY OR COMPLETENESS OF ELECTRONIC COPIES OF THIS PLAN SHEET.

Caltrans Metric

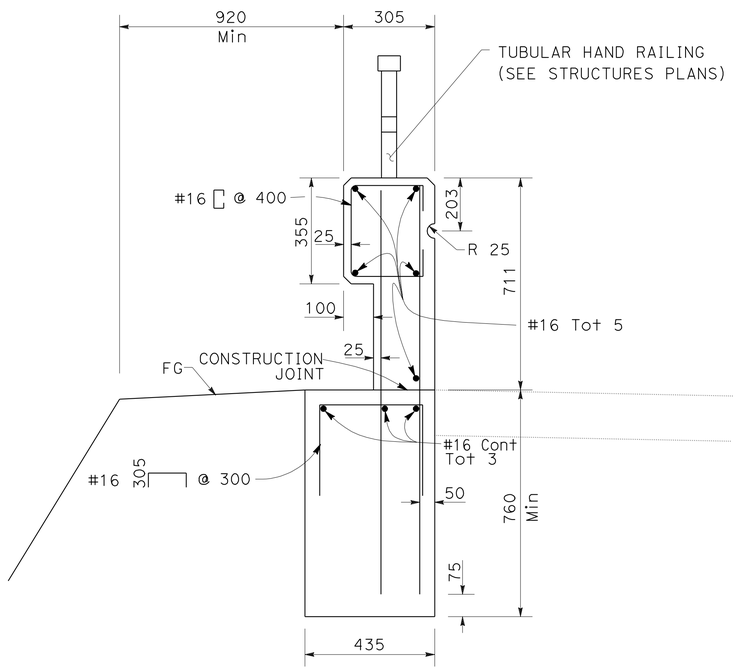

Conc BARRIER (TYPE 26 Mod)

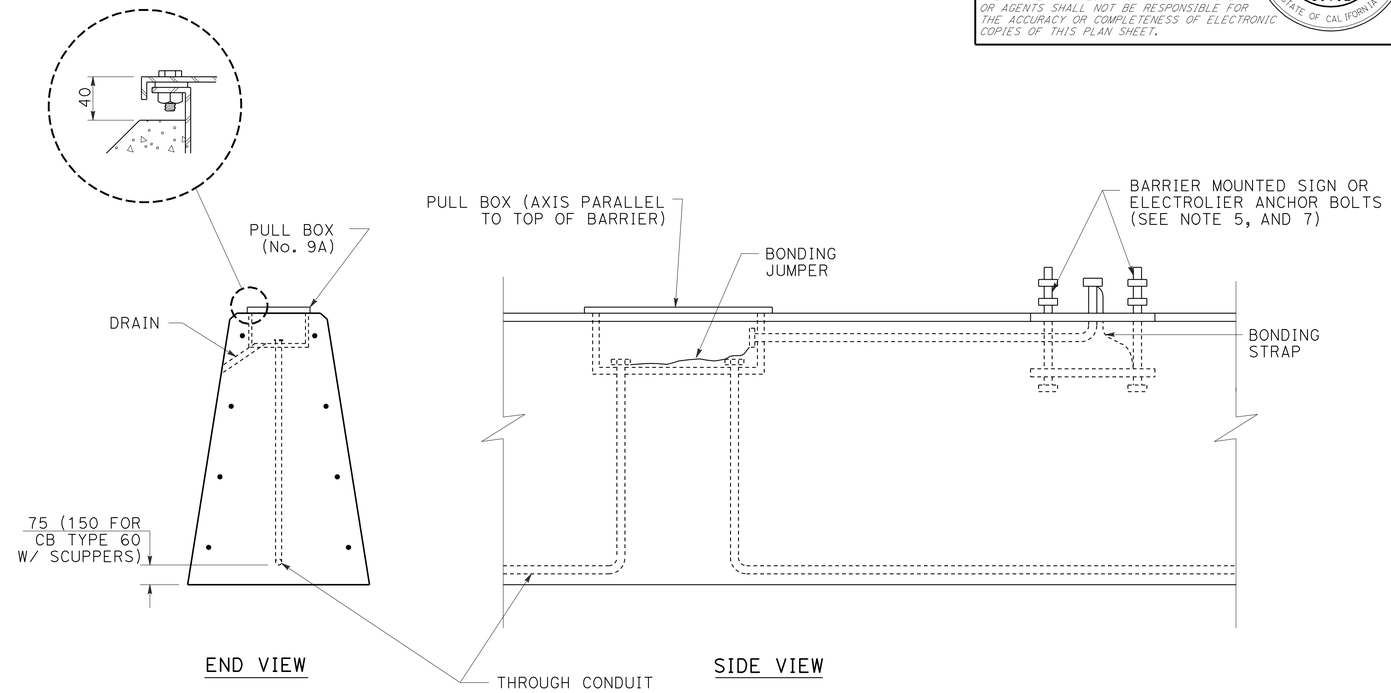

No. 9A PULL BOX INSTALLATION
(Conc BARRIER TYPE 60, 60C, 60 W/SCUPPERS)

NOTES :

1. FOR DETAILS NOT SHOWN, SEE STANDARD PLANS.
2. AXIS OF PULL BOX SHALL BE PARALLEL TO TOP OF BARRIER.
3. SEE BARRIER SHEET FOR BARRIER REINFORCEMENT DETAILS.
4. DRAIN AT LOW END OF BOX.
5. FOR ELECTROLIER ANCHOR BOLTS, SEE STANDARD PLANS.
6. FOR LOCATION OF PULL BOXES SEE ELECTRICAL PLANS.
7. SEE SIGN DETAIL SHEETS FOR BARRIER MOUNTED SIGN DETAILS.

ALL DIMENSIONS ARE IN MILLIMETERS UNLESS OTHERWISE SHOWN

CONSTRUCTION DETAILS

NO SCALE

C-22

REVISED BY	DATE REVISED

CALCULATED-DESIGNED BY: CHRISTOPHER SCOTT
CHECKED BY: SHAHBAZ A ALVI
FUNCTIONAL SUPERVISOR: MAJID KHARRATI

STATE OF CALIFORNIA - DEPARTMENT OF TRANSPORTATION
Caltrans PROJECT DEVELOPMENT

LAST REVISION 05-16-09 | DATE PLOTTED => 29-SEP-2010 | TIME PLOTTED => 13:48

Dist	COUNTY	ROUTE	KILOMETER POST TOTAL PROJECT	SHEET No.	TOTAL SHEETS
11	SD	5,805	R49.9/R51.7, 42.6/46.5	93	886

REGISTERED CIVIL ENGINEER 05-12-09 DATE

9-27-10
PLANS APPROVAL DATE

REGISTERED PROFESSIONAL ENGINEER SHAHBAZ A ALVI No. 55293 Exp. 12-31-10 CIVIL STATE OF CALIFORNIA

THE STATE OF CALIFORNIA OR ITS OFFICERS OR AGENTS SHALL NOT BE RESPONSIBLE FOR THE ACCURACY OR COMPLETENESS OF ELECTRONIC COPIES OF THIS PLAN SHEET.

Caltrans Metric

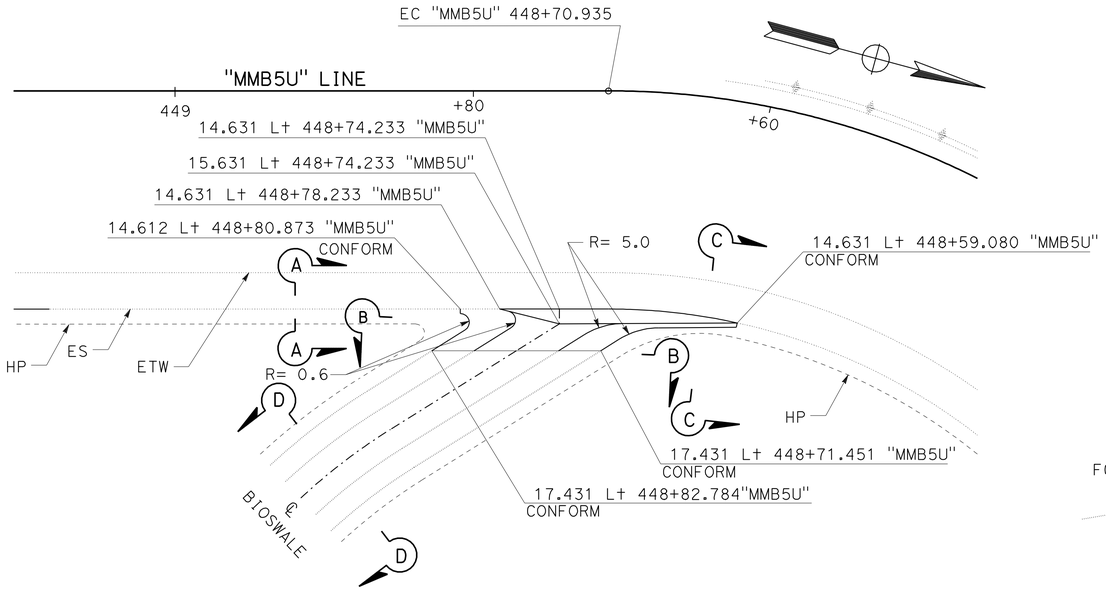

PLAN

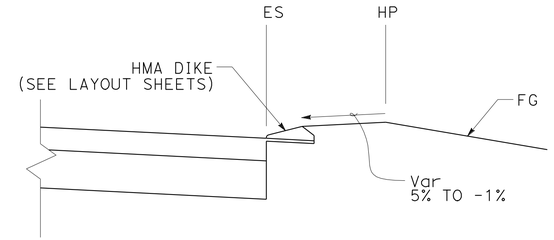

SECTION A-A

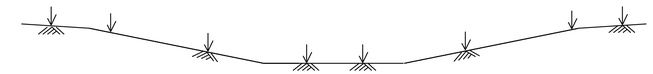

SECTION D-D
BIOSWALE (SEE DRAINAGE DETAILS SHEETS)

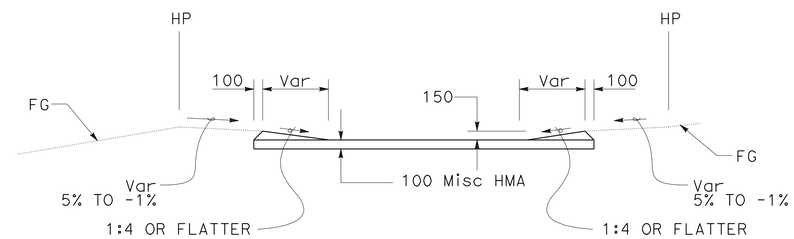

SECTION B-B

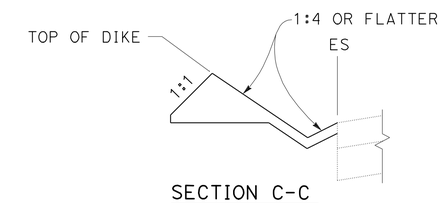

SECTION C-C

HMA OVERSIDE DRAIN (Mod)

THRUST BLOCK DETAIL

INSTALLATION	TYPE FITTING	INSTALLATION	TYPE FITTING
	90° ELL	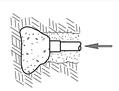	DEAD END
	BEND 45° 22.5° 11.25°		GATE VALVE
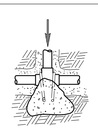	TEE		VERTICAL BEND (TYPE I) 45° 22.5° 11.25°
		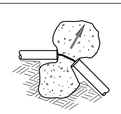	OR VERTICAL BEND (TYPE II) 45° 22.5° 11.25°

NOTES:
1. Min 0.03 m^3 PCC FOR PIPE 40 mm AND SMALLER.
2. Min 0.06 m^3 PCC FOR PIPE 50 mm AND LARGER.
3. USE #10 REINFORCING BAR WHEN REQUIRED (Ω).

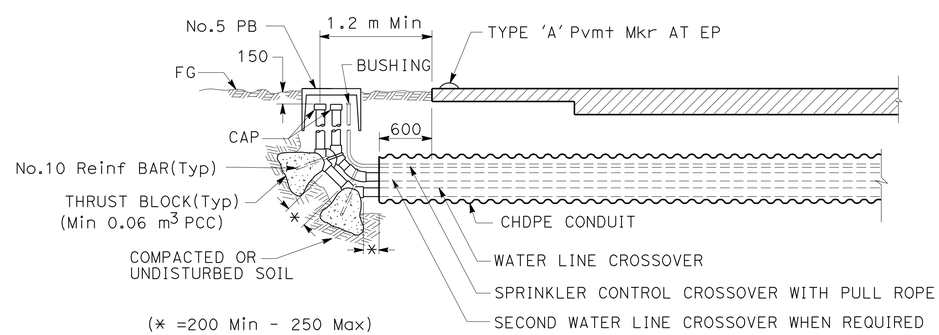

SECTION

IRRIGATION CROSSOVER (Mod)

ALL DIMENSIONS ARE IN MILLIMETERS UNLESS OTHERWISE SHOWN

CONSTRUCTION DETAILS

NO SCALE

C-23

REVISED BY | DATE REVISED

CHRISTOPHER SCOTT | SHAHBAZ A ALVI

CALCULATED-DESIGNED BY | CHECKED BY

FUNCTIONAL SUPERVISOR: MAJID KHARRATI

STATE OF CALIFORNIA - DEPARTMENT OF TRANSPORTATION
Caltrans PROJECT DEVELOPMENT

LAST REVISION 05-21-09 | DATE PLOTTED => 29-SEP-2010 | TIME PLOTTED => 13:49

Dist	COUNTY	ROUTE	POST MILES TOTAL PROJECT	SHEET No.	TOTAL SHEETS
11	SD	5,805	R49.9/R51.7, 42.6/46.5	94	886

REGISTERED CIVIL ENGINEER 05-12-09 DATE

9-27-10
PLANS APPROVAL DATE

REGISTERED PROFESSIONAL ENGINEER
SHAHBAZ A ALVI
No. 55293
Exp. 12-31-10
CIVIL
STATE OF CALIFORNIA

THE STATE OF CALIFORNIA OR ITS OFFICERS OR AGENTS SHALL NOT BE RESPONSIBLE FOR THE ACCURACY OR COMPLETENESS OF SCANNED COPIES OF THIS PLAN SHEET.

Caltrans Metric

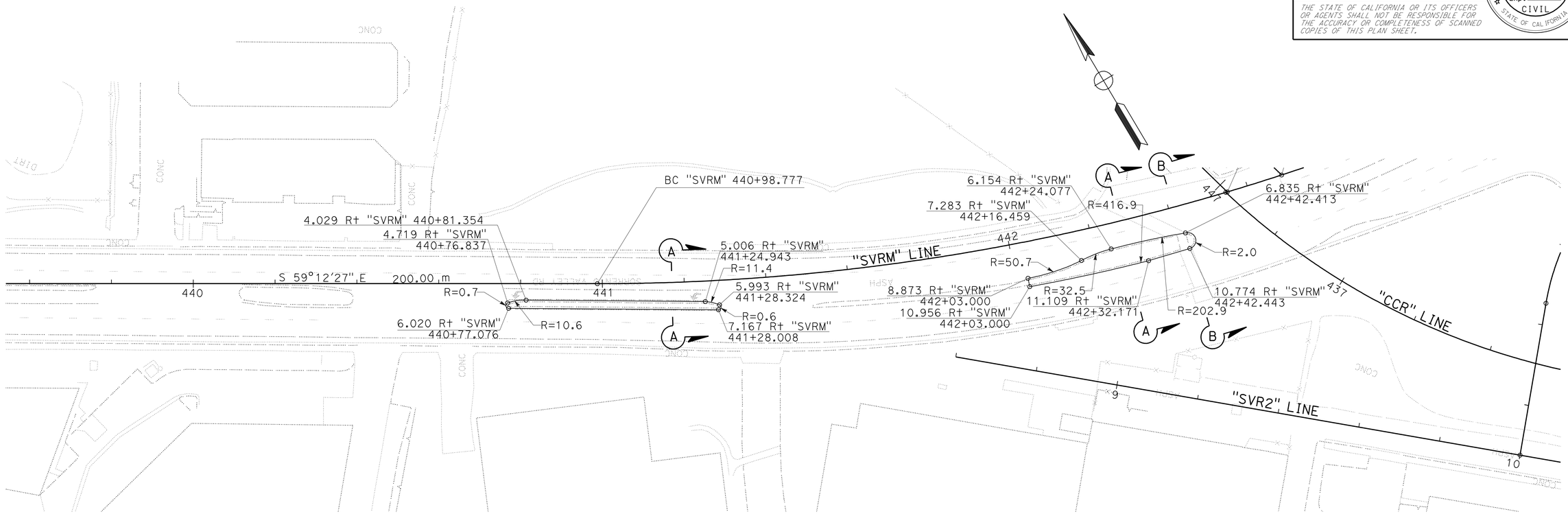

PLAN
SCALE 1:500

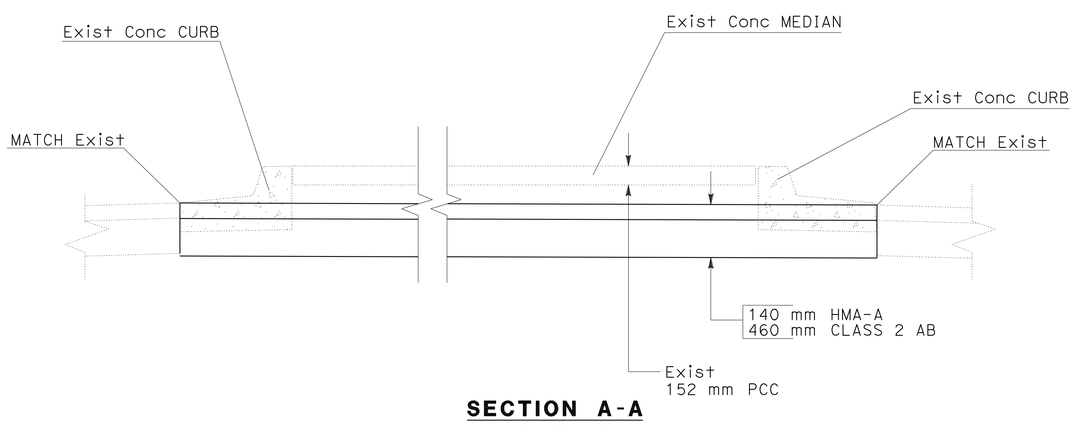

SECTION A-A
NO SCALE

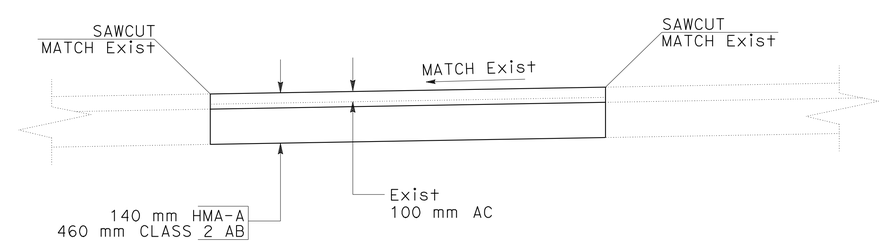

SECTION B-B
NO SCALE

REMOVE RAISED MEDIAN

ALL DIMENSIONS ARE IN METERS UNLESS OTHERWISE SHOWN

CONSTRUCTION DETAILS

SCALE AS SHOWN

C-24

REVISED BY	DATE REVISED

CALCULATED-DESIGNED BY	CHECKED BY
CHRISTOPHER SCOTT	SHAHBAZ A ALVI

FUNCTIONAL SUPERVISOR: MAJID KHARRATI

STATE OF CALIFORNIA - DEPARTMENT OF TRANSPORTATION
Caltrans PROJECT DEVELOPMENT

LAST REVISION 05-21-09 | DATE PLOTTED => 29-SEP-2010 | TIME PLOTTED => 13:49

Dist	COUNTY	ROUTE	KILOMETER POST TOTAL PROJECT	SHEET No.	TOTAL SHEETS
11	SD	5,805	R49.9/R51.7, 42.6/46.5	95	886

REGISTERED CIVIL ENGINEER 05-12-09 DATE

9-27-10
PLANS APPROVAL DATE

REGISTERED PROFESSIONAL ENGINEER SHAHBAZ A ALVI No. 55293 Exp. 12-31-10 CIVIL STATE OF CALIFORNIA

THE STATE OF CALIFORNIA OR ITS OFFICERS OR AGENTS SHALL NOT BE RESPONSIBLE FOR THE ACCURACY OR COMPLETENESS OF ELECTRONIC COPIES OF THIS PLAN SHEET.

Caltrans Metric

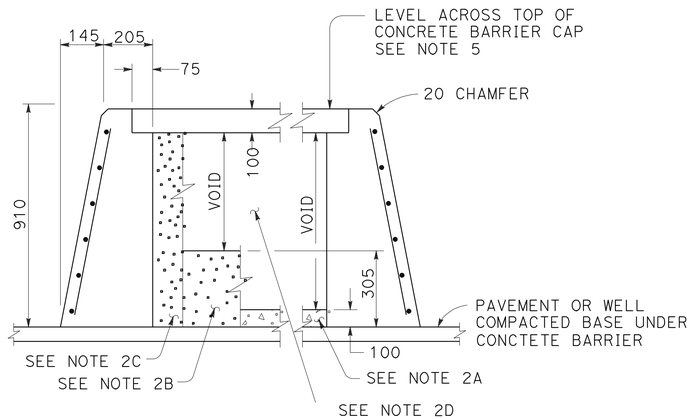

SECTION A-A

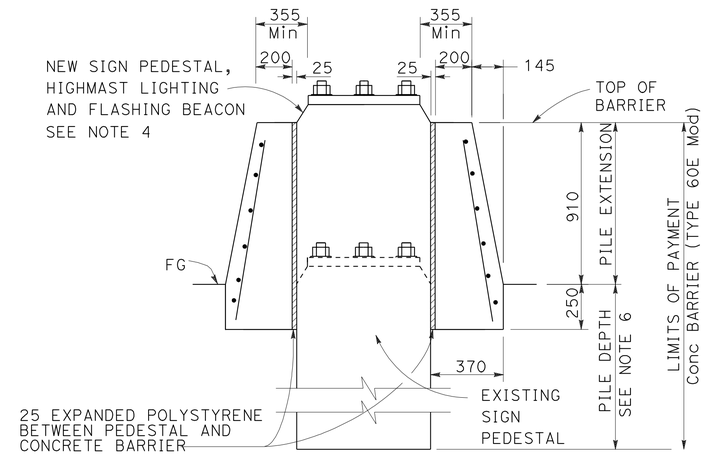

SECTION B-B

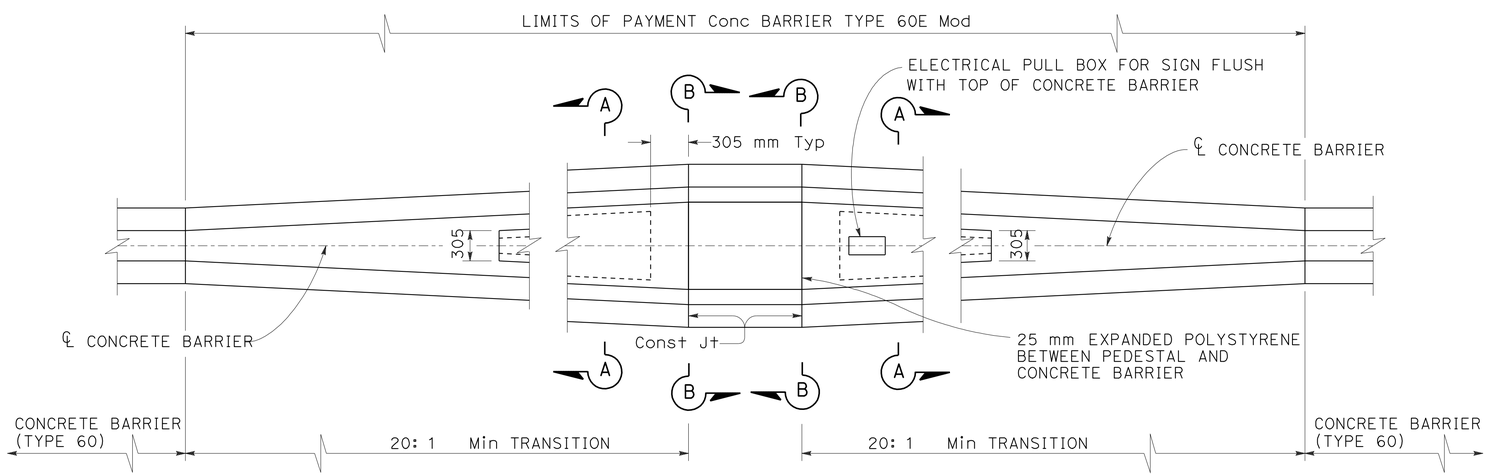

PLAN

NOTES:

1. SEE STANDARD PLAN A76A FOR CONCRETE BARRIER TYPE 60.
2. CONTRACTOR OPTIONS FOR FILL BETWEEN CONCRETE BARRIER WALLS:
   A. PLACE 100 mm PCC AT BASE BETWEEN CONCRETE BARRIER WALLS.
   B. PLACE 305 mm OF GRANULAR MATERIAL AT BASE BETWEEN WALLS.
   C. PLACE GRANULAR MATERIAL FROM BASE TO BOTTOM OF 100 mm CAP.
   D. MONOLITHIC CONCRETE WITH FOAM BLOCKOUTS IS NOT PERMITTED.
3. REINFORCING STEEL SHALL EXTEND CONTINUOUS THROUGH CONSTRUCTION JOINTS.
4. SEE SIGN PLANS FOR SIGN PEDESTAL ELEVATIONS ON NEW CONSTRUCTION.
   SEE ELECTRICAL PLANS FOR LOCATIONS OF HIGHMAST LIGHTING AND FLASHING BEACON.
   SEE Std PLAN ES-6J FOR TYPICAL MEDIAN INSTALLATION OF HIGHMAST AND LIGHT STANDARDS.
   SEE ES-7K FOR FOUNDATION DETAILS FOR FLASHING BEACON.
5. ADJUST HEIGHT OF CONCRETE BARRIER WALL ON LOW SIDE OF OFFSET OR SUPERELEVATED ROADWAYS TO PROVIDE LEVEL GRADE ACROSS TOP OF CONCRETE BARRIER.
6. SEE OVERHEAD SIGN STANDARD PLAN PILE FOUNDATION TABLES.
7. FOR DETAILS NOT SHOWN SEE Std PLAN A76C.

CONCRETE BARRIER TYPE 60E Mod

TRANSITION AT SIGN PEDESTAL

ALL DIMENSIONS ARE IN MILLIMETERS UNLESS OTHERWISE SHOWN

CONSTRUCTION DETAILS

NO SCALE

C-25

STATE OF CALIFORNIA - DEPARTMENT OF TRANSPORTATION
Caltrans PROJECT DEVELOPMENT

FUNCTIONAL SUPERVISOR: MAJID KHARRATI
CALCULATED-DESIGNED BY: CHRISTOPHER SCOTT
CHECKED BY: SHAHBAZ A ALVI
REVISED BY
DATE REVISED

LAST REVISION 05-21-09 | DATE PLOTTED => 29-SEP-2010 | TIME PLOTTED => 13:49

Dist	COUNTY	ROUTE	KILOMETER POST TOTAL PROJECT	SHEET No.	TOTAL SHEETS
11	SD	5,805	R49.9/R51.7, 42.6/46.5	96	886

REGISTERED CIVIL ENGINEER 05-13-09 DATE

9-27-10
PLANS APPROVAL DATE

REGISTERED PROFESSIONAL ENGINEER SHAHBAZ A ALVI No. C55293 Exp. 12-31-10 CIVIL STATE OF CALIFORNIA

THE STATE OF CALIFORNIA OR ITS OFFICERS OR AGENTS SHALL NOT BE RESPONSIBLE FOR THE ACCURACY OR COMPLETENESS OF ELECTRONIC COPIES OF THIS PLAN SHEET.

Caltrans Metric

NOTES:

1. FOR COMPLETE RIGHT OF WAY AND ACCURATE ACCESS DATA, SEE RIGHT OF WAY RECORD MAPS AT DISTRICT OFFICE.
2. FOR SLOPE RATIO INFORMATION SEE CONTOUR GRADING SHEETS.
3. WHEN BMP WAS PLACED ON A PREVIOUS STAGE OR WITHIN THE SAME STAGE AND REPEATED ON ANOTHER SHEET IT IS PREDICTED AS AN EXISTING CONDITION

LEGEND:

- TEMPORARY CONSTRUCTION ENTRANCE (TYPE 2)
- TEMPORARY DRAINAGE INLET PROTECTION (TYPE 4A) (SEE TEMPORARY WATER POLLUTION CONTROL DETAILS)
- TEMPORARY DRAINAGE INLET PROTECTION (TYPE 4B) (SEE TEMPORARY WATER POLLUTION CONTROL DETAILS)
- TEMPORARY CHECK DAM
- TEMPORARY CONCRETE WASHOUT FACILITY
- TFR — TEMPORARY FIBER ROLL
- TSBB — TEMPORARY STRAW BALE BARRIER (TSBB)
- TFESA — TEMPORARY FENCE TYPE ESA
- TEMPORARY HYDRAULIC MULCH (POLYMER STABILIZED FIBER MATRIX)
- SWALE FLOWLINE
- SURFACE FLOW DIRECTION (1:2 SLOPE OR FLATTER UNLESS OTHERWISE NOTED)
- ESA — ENVIRONMENTALLY SENSITIVE AREA

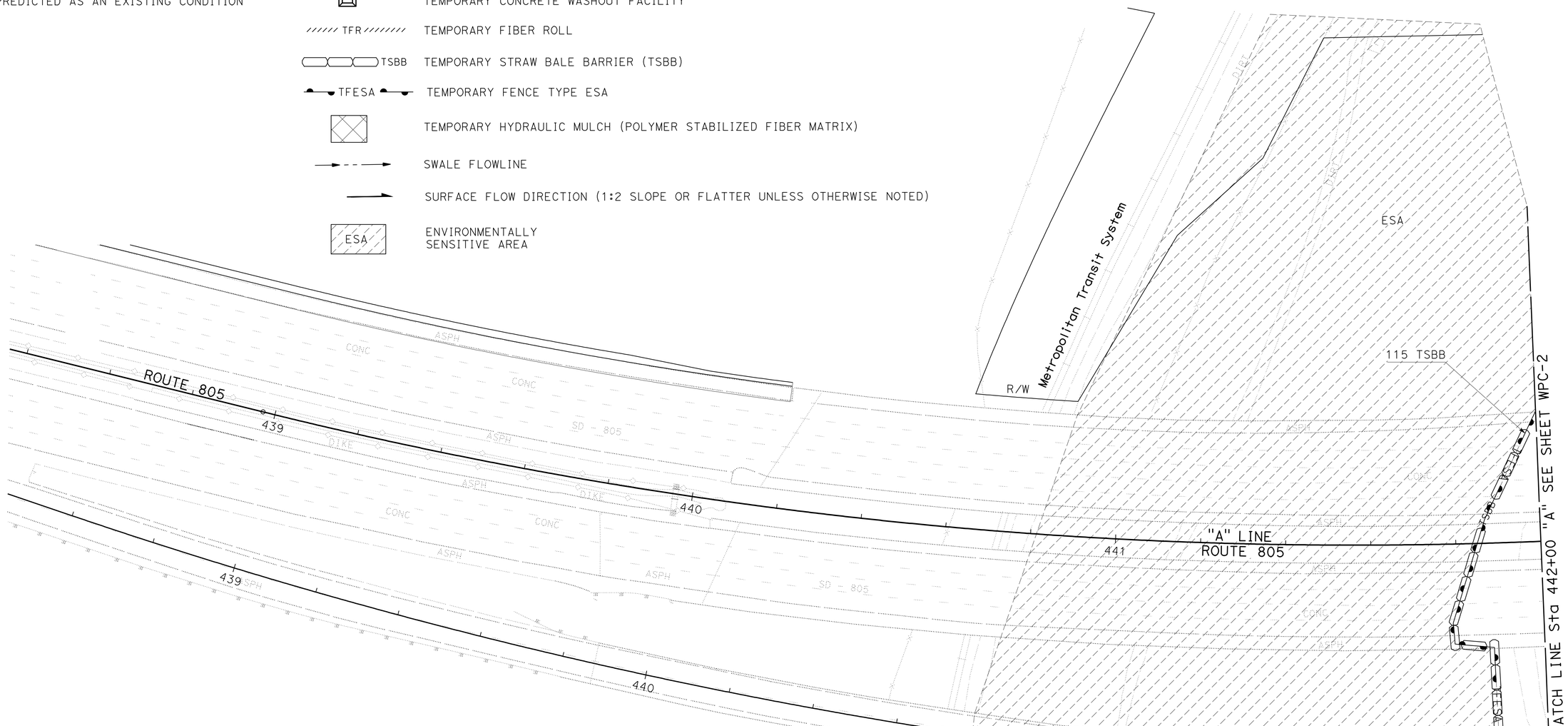

TEMPORARY WATER POLLUTION CONTROL PLAN
STAGE 1A

SCALE 1:500

WPC-1

THIS PLAN ACCURATE FOR TEMPORARY WATER POLLUTION CONTROL WORK ONLY

ALL DIMENSIONS ARE IN METERS UNLESS OTHERWISE SHOWN

STATE OF CALIFORNIA - DEPARTMENT OF TRANSPORTATION
Caltrans PROJECT DEVELOPMENT

FUNCTIONAL SUPERVISOR: MAJID KHARRATI

CALCULATED-DESIGNED BY: ALLEN LOPEZ
CHECKED BY: SHAHBAZ A ALVI

REVISED BY | DATE REVISED

LAST REVISION 05-29-09 | DATE PLOTTED => 29-SEP-2010 | TIME PLOTTED => 13:49

Dist	COUNTY	ROUTE	KILOMETER POST TOTAL PROJECT	SHEET No.	TOTAL SHEETS
11	SD	5,805	R49.9/R51.7, 42.6/46.5	97	886

REGISTERED CIVIL ENGINEER 05-13-09 DATE

9-27-10
PLANS APPROVAL DATE

REGISTERED PROFESSIONAL ENGINEER SHAHBAZ A ALVI No. C55293 Exp. 12-31-10 CIVIL STATE OF CALIFORNIA

THE STATE OF CALIFORNIA OR ITS OFFICERS OR AGENTS SHALL NOT BE RESPONSIBLE FOR THE ACCURACY OR COMPLETENESS OF ELECTRONIC COPIES OF THIS PLAN SHEET.

Caltrans Metric

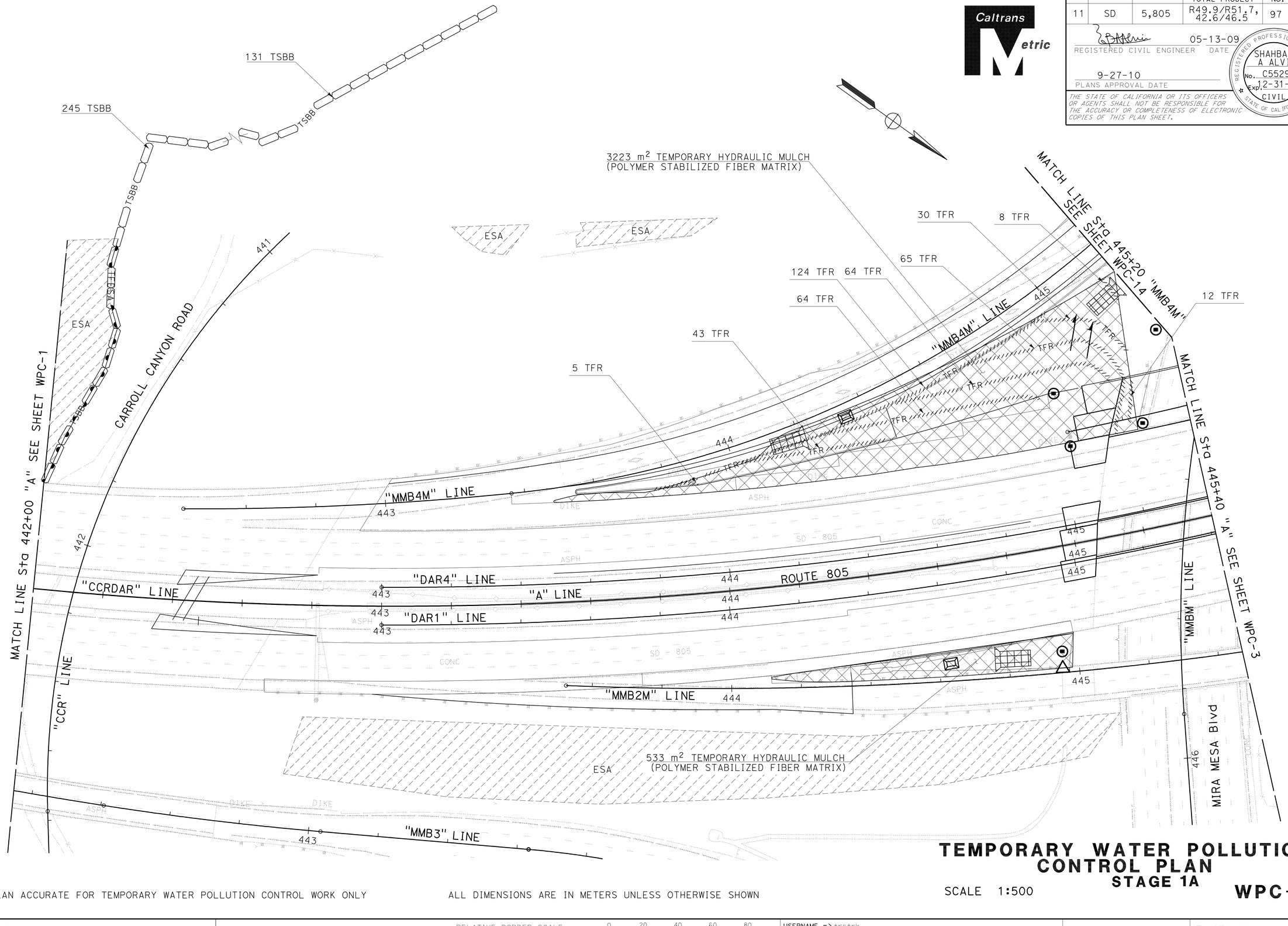

TEMPORARY WATER POLLUTION CONTROL PLAN
STAGE 1A

SCALE 1:500

WPC-2

THIS PLAN ACCURATE FOR TEMPORARY WATER POLLUTION CONTROL WORK ONLY

ALL DIMENSIONS ARE IN METERS UNLESS OTHERWISE SHOWN

REVISED BY	DATE REVISED

CALCULATED-DESIGNED BY	ALLEN LOPEZ
CHECKED BY	SHAHBAZ A ALVI
FUNCTIONAL SUPERVISOR	MAJID KHARRATI

STATE OF CALIFORNIA - DEPARTMENT OF TRANSPORTATION
Caltrans PROJECT DEVELOPMENT

LAST REVISION 05-29-09 | DATE PLOTTED => 29-SEP-2010 | TIME PLOTTED => 13:49

Dist	COUNTY	ROUTE	KILOMETER POST TOTAL PROJECT	SHEET No.	TOTAL SHEETS
11	SD	5,805	R49.9/R51.7, 42.6/46.5	98	886

REGISTERED CIVIL ENGINEER 05-13-09 DATE

9-27-10
PLANS APPROVAL DATE

REGISTERED PROFESSIONAL ENGINEER SHAHBAZ A ALVI No. C55293 Exp. 12-31-10 CIVIL STATE OF CALIFORNIA

THE STATE OF CALIFORNIA OR ITS OFFICERS OR AGENTS SHALL NOT BE RESPONSIBLE FOR THE ACCURACY OR COMPLETENESS OF ELECTRONIC COPIES OF THIS PLAN SHEET.

Caltrans Metric

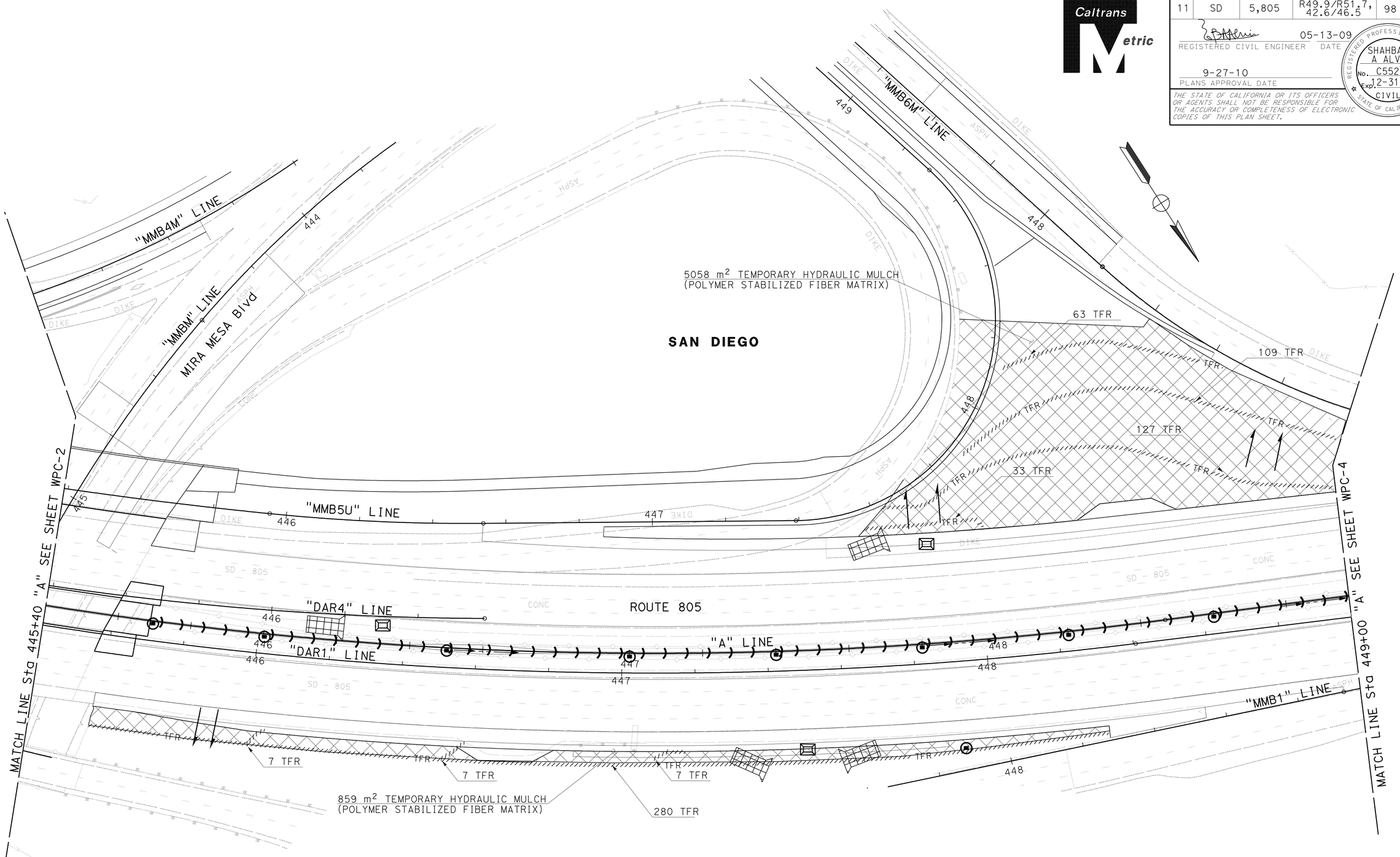

TEMPORARY WATER POLLUTION CONTROL PLAN
STAGE 1A

SCALE 1:500

WPC-3

THIS PLAN ACCURATE FOR TEMPORARY WATER POLLUTION CONTROL WORK ONLY

ALL DIMENSIONS ARE IN METERS UNLESS OTHERWISE SHOWN

STATE OF CALIFORNIA - DEPARTMENT OF TRANSPORTATION
Caltrans PROJECT DEVELOPMENT

FUNCTIONAL SUPERVISOR: MAJID KHARRATI
CALCULATED-DESIGNED BY: ALLEN LOPEZ
CHECKED BY: SHAHBAZ A ALVI
REVISED BY / DATE REVISED

LAST REVISION 05-29-09 | DATE PLOTTED => 29-SEP-2010 | TIME PLOTTED => 13:49

Dist	COUNTY	ROUTE	KILOMETER POST TOTAL PROJECT	SHEET No.	TOTAL SHEETS
11	SD	5,805	R49.9/R51.7, 42.6/46.5	99	886

REGISTERED CIVIL ENGINEER 05-13-09 DATE

9-27-10
PLANS APPROVAL DATE

REGISTERED PROFESSIONAL ENGINEER SHAHBAZ A ALVI No. C55293 Exp. 12-31-10 CIVIL STATE OF CALIFORNIA

THE STATE OF CALIFORNIA OR ITS OFFICERS OR AGENTS SHALL NOT BE RESPONSIBLE FOR THE ACCURACY OR COMPLETENESS OF ELECTRONIC COPIES OF THIS PLAN SHEET.

Caltrans Metric

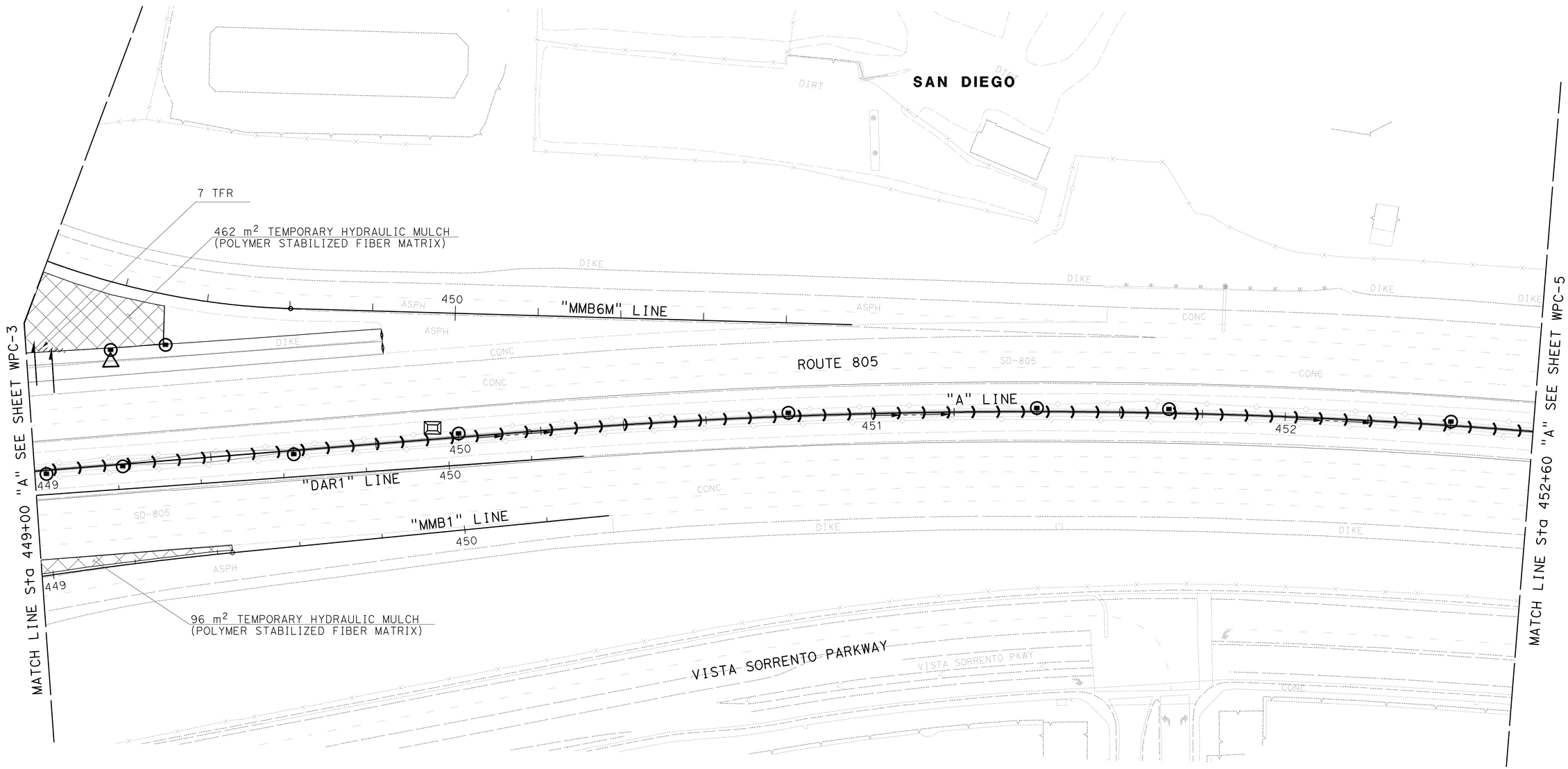

TEMPORARY WATER POLLUTION CONTROL PLAN
STAGE 1A

SCALE 1:500

WPC-4

THIS PLAN ACCURATE FOR TEMPORARY WATER POLLUTION CONTROL WORK ONLY

ALL DIMENSIONS ARE IN METERS UNLESS OTHERWISE SHOWN

STATE OF CALIFORNIA - DEPARTMENT OF TRANSPORTATION
Caltrans PROJECT DEVELOPMENT

FUNCTIONAL SUPERVISOR: MAJID KHARRATI
CALCULATED-DESIGNED BY: ALLEN LOPEZ
CHECKED BY: SHAHBAZ A ALVI
REVISED BY / DATE REVISED

LAST REVISION 05-29-09
DATE PLOTTED => 29-SEP-2010
TIME PLOTTED => 13:49

Dist	COUNTY	ROUTE	KILOMETER POST TOTAL PROJECT	SHEET No.	TOTAL SHEETS
11	SD	5,805	R49.9/R51.7, 42.6/46.5	100	886

REGISTERED CIVIL ENGINEER 05-13-09 DATE

9-27-10
PLANS APPROVAL DATE

REGISTERED PROFESSIONAL ENGINEER SHAHBAZ A ALVI No. C55293 Exp. 12-31-10 CIVIL STATE OF CALIFORNIA

THE STATE OF CALIFORNIA OR ITS OFFICERS OR AGENTS SHALL NOT BE RESPONSIBLE FOR THE ACCURACY OR COMPLETENESS OF ELECTRONIC COPIES OF THIS PLAN SHEET.

Caltrans Metric

NOTE:

FOR COMPLETE RIGHT OF WAY AND ACCURATE ACCESS DATA, SEE RIGHT OF WAY RECORD MAPS AT DISTRICT OFFICE.

SAN DIEGO

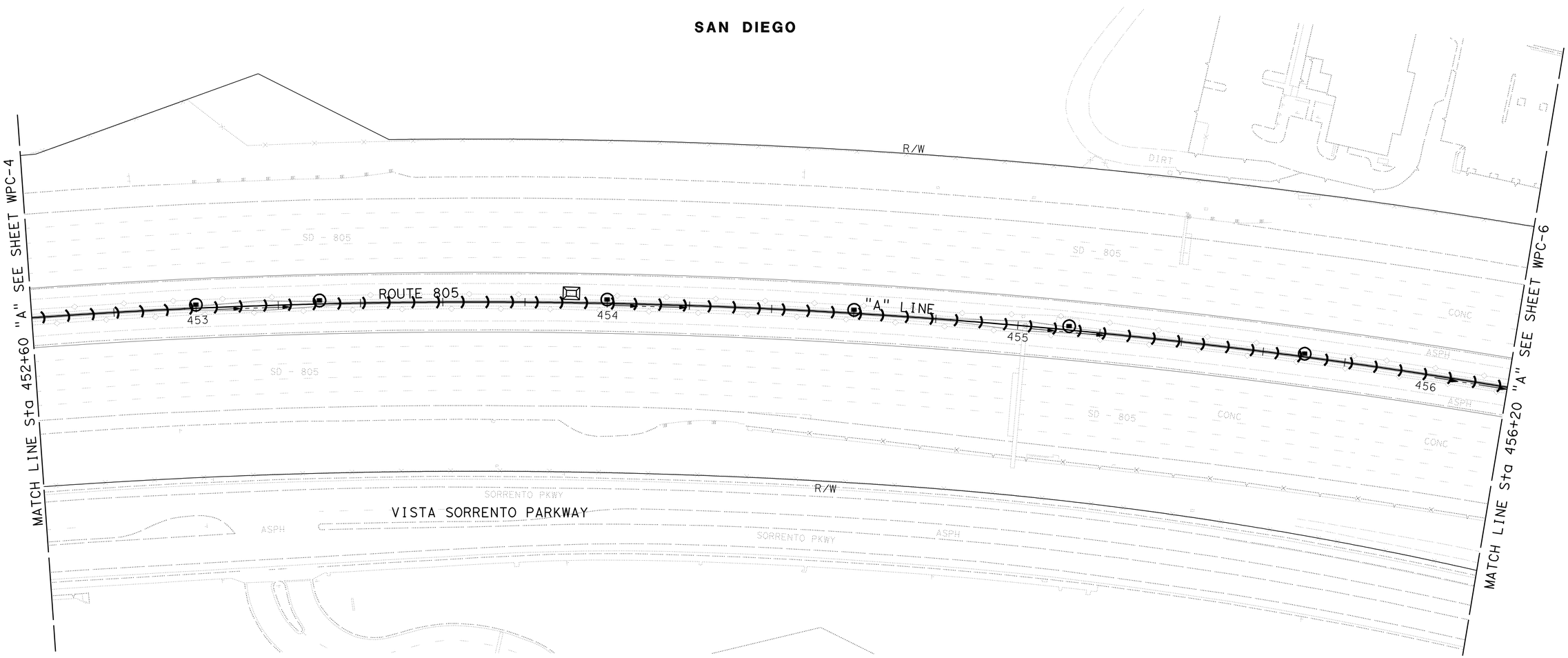

TEMPORARY WATER POLLUTION CONTROL PLAN
STAGE 1A

SCALE 1:500

WPC-5

THIS PLAN ACCURATE FOR TEMPORARY WATER POLLUTION CONTROL WORK ONLY

ALL DIMENSIONS ARE IN METERS UNLESS OTHERWISE SHOWN

STATE OF CALIFORNIA - DEPARTMENT OF TRANSPORTATION
Caltrans PROJECT DEVELOPMENT

FUNCTIONAL SUPERVISOR: MAJID KHARRATI

CALCULATED-DESIGNED BY: ALLEN LOPEZ
CHECKED BY: SHAHBAZ A ALVI

REVISED BY
DATE REVISED

LAST REVISION 05-29-09
DATE PLOTTED => 29-SEP-2010
TIME PLOTTED => 13:49