Dist	COUNTY	ROUTE	POST MILES TOTAL PROJECT	SHEET No.	TOTAL SHEETS
11	SD	78	3.5/5.8	1	87

STATE OF CALIFORNIA

DEPARTMENT OF TRANSPORTATION

NH-P078(112)E

PROJECT PLANS FOR CONSTRUCTION ON

STATE HIGHWAY

IN SAN DIEGO COUNTY
IN OCEANSIDE AND VISTA FROM 0.2 MILE EAST OF COLLEGE BOULEVARD UNDERCROSSING
TO 0.1 MILE WEST OF MELROSE DRIVE UNDERCROSSING

TO BE SUPPLEMENTED BY STANDARD PLANS DATED MAY 2006

INDEX OF PLANS

Sheet No.	Description
1	Title and Location Map
2-6	Typical Cross Sections
7	Project Control
8-16	Layout
17-26	Construction Details
27-30	Drainage Plan, Profiles, Details and Quantities
31-39	Utility Plan
40-41	Construction Area Signs
42-51	Traffic Handling Plan and Quantities
52	Pavement Delineation Details and Quantities
53-62	Sign Plan, Details and Quantities
63-64	Summary of Quantities
65-70	Electrical Plans
71-87	Revised and New Standard Plans

THE STANDARD PLANS LIST APPLICABLE TO THIS CONTRACT IS INCLUDED IN THE NOTICE TO BIDDERS AND SPECIAL PROVISIONS BOOK.

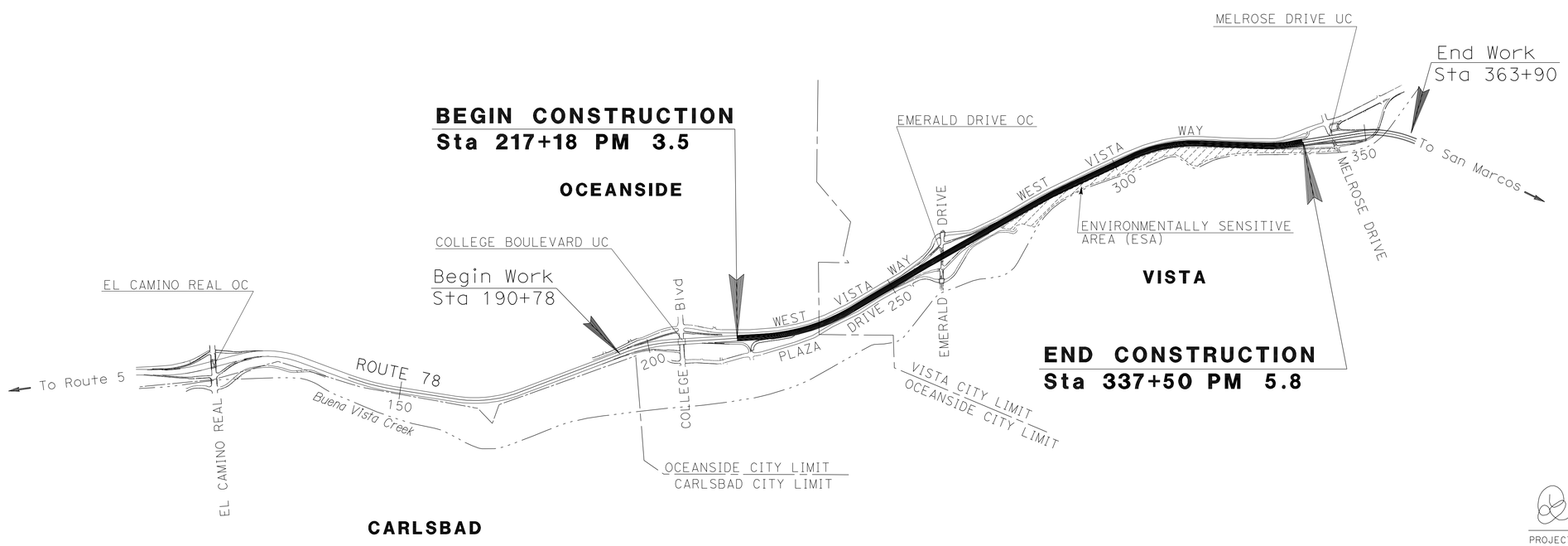

PROJECT MANAGER: RICHARD ESTRADA

DESIGN ENGINEER: LEVY Q. LE

PROJECT ENGINEER REGISTERED CIVIL ENGINEER — DATE 04-15-11

REGISTERED PROFESSIONAL ENGINEER — LEVY Q LE No. 66748 Exp. 9-30-12 CIVIL — STATE OF CALIFORNIA

May 16, 2011
PLANS APPROVAL DATE

THE STATE OF CALIFORNIA OR ITS OFFICERS OR AGENTS SHALL NOT BE RESPONSIBLE FOR THE ACCURACY OR COMPLETENESS OF SCANNED COPIES OF THIS PLAN SHEET.

THE CONTRACTOR SHALL POSSESS THE CLASS (OR CLASSES) OF LICENSE AS SPECIFIED IN THE "NOTICE TO BIDDERS."

NO SCALE

CONTRACT No.	11-294504
PROJECT ID	1100000387

LAST REVISION 00-00-00 DATE PLOTTED => 23-JUN-2011 TIME PLOTTED => 12:

Dist	COUNTY	ROUTE	POST MILES TOTAL PROJECT	SHEET No.	TOTAL SHEETS
11	SD	78	3.5/5.8	2	87

REGISTERED ~~CIVIL~~ ENGINEER 04-15-11 DATE

05-16-11
PLANS APPROVAL DATE

REGISTERED PROFESSIONAL ENGINEER LEVY Q LE No. 66748 Exp. 9-30-12 CIVIL STATE OF CALIFORNIA

THE STATE OF CALIFORNIA OR ITS OFFICERS OR AGENTS SHALL NOT BE RESPONSIBLE FOR THE ACCURACY OR COMPLETENESS OF SCANNED COPIES OF THIS PLAN SHEET.

NOTES:

1. DIMENSIONS OF THE PAVEMENT STRUCTURES (STRUCTURAL SECTIONS) ARE SUBJECT TO TOLERANCES SPECIFIED IN THE STANDARD SPECIFICATIONS.
2. EXACT LOCATIONS AND TYPES OF BARRIERS ARE SHOWN ON LAYOUTS AND SUMMARY OF QUANTITY SHEETS.
3. SEE CONSTRUCTION DETAILS FOR CHAIN LINK RAILING (TYPE 7 Mod), CONCRETE BARRIER (TYPE 60 Mod), CONCRETE BARRIER (TYPE 736SV Mod), AND CONCRETE BARRIER (TYPE 60C Mod).
4. FOG SEAL COAT SHALL BE APLIED TO ALL HMA SURFACES (WITHIN STATE RIGHT OF WAY) EXCEPT TRAVELLED WAYS.

DESIGN DESIGNATION ROUTE 78:

ADT (2008)	144,000	TI(20)	12.5
ADT (2028)	171,000	V	65 mph
DHV (100%)	9,900	D	45/55
ESAL	14,509,771	T	3.85%

LEGEND:

ESA = ENVIRONMENTALLY SENSITIVE AREA

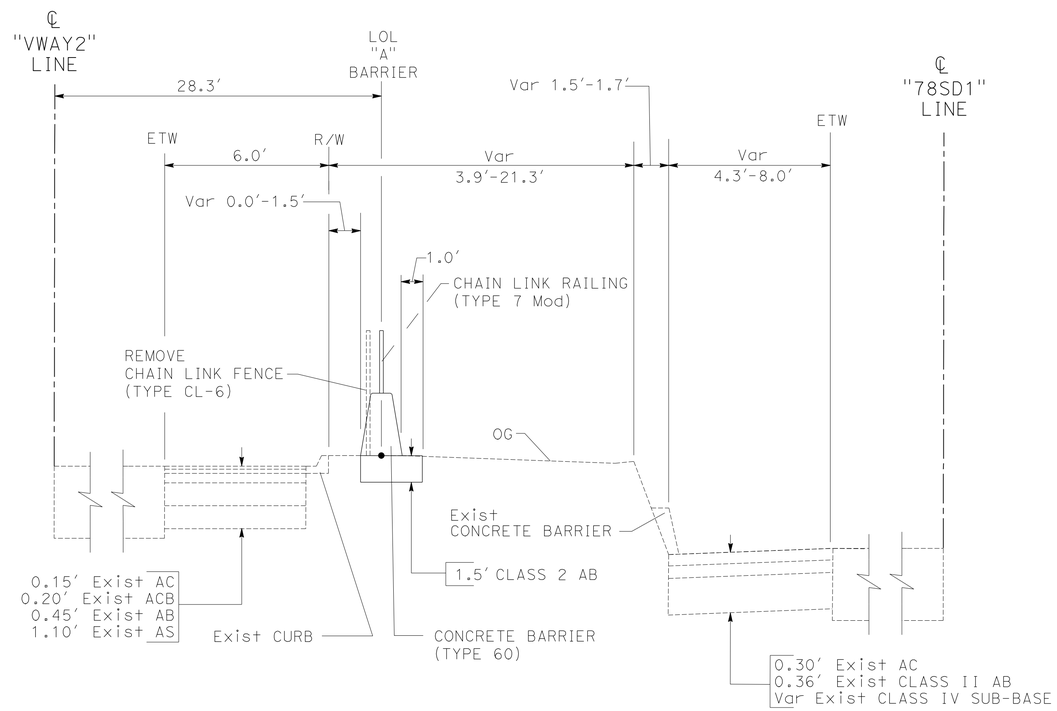

"A" 10+00.0 TO "A" 15+11.3

TYPICAL CROSS SECTIONS

NO SCALE

X-1

REVISED BY | DATE REVISED

BETHNAY DESJARDINS | LEVY Q. LE

CALCULATED-DESIGNED BY | CHECKED BY

FUNCTIONAL SUPERVISOR | RICHARD ESTRADA

STATE OF CALIFORNIA - DEPARTMENT OF TRANSPORTATION
Caltrans® TRAFFIC PROJECT DEVELOPMENT

LAST REVISION 05-09-11 | DATE PLOTTED => 22-JUN-2011 TIME PLOTTED => 13:20

Dist	COUNTY	ROUTE	POST MILES TOTAL PROJECT	SHEET No.	TOTAL SHEETS
11	SD	78	3.5/5.8	3	87

REGISTERED ~~CIVIL~~ ENGINEER 04-15-11 DATE

05-16-11
PLANS APPROVAL DATE

REGISTERED PROFESSIONAL ENGINEER
LEVY Q LE
No. 66748
Exp. 9-30-12
CIVIL
STATE OF CALIFORNIA

THE STATE OF CALIFORNIA OR ITS OFFICERS OR AGENTS SHALL NOT BE RESPONSIBLE FOR THE ACCURACY OR COMPLETENESS OF SCANNED COPIES OF THIS PLAN SHEET.

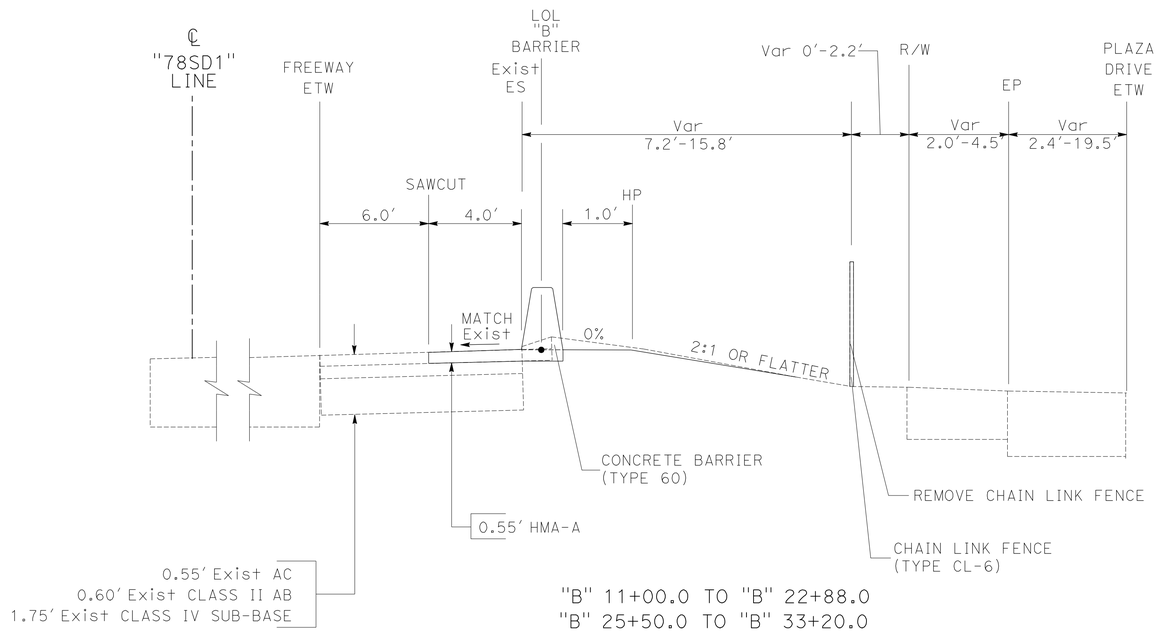

"B" 11+00.0 TO "B" 22+88.0
"B" 25+50.0 TO "B" 33+20.0

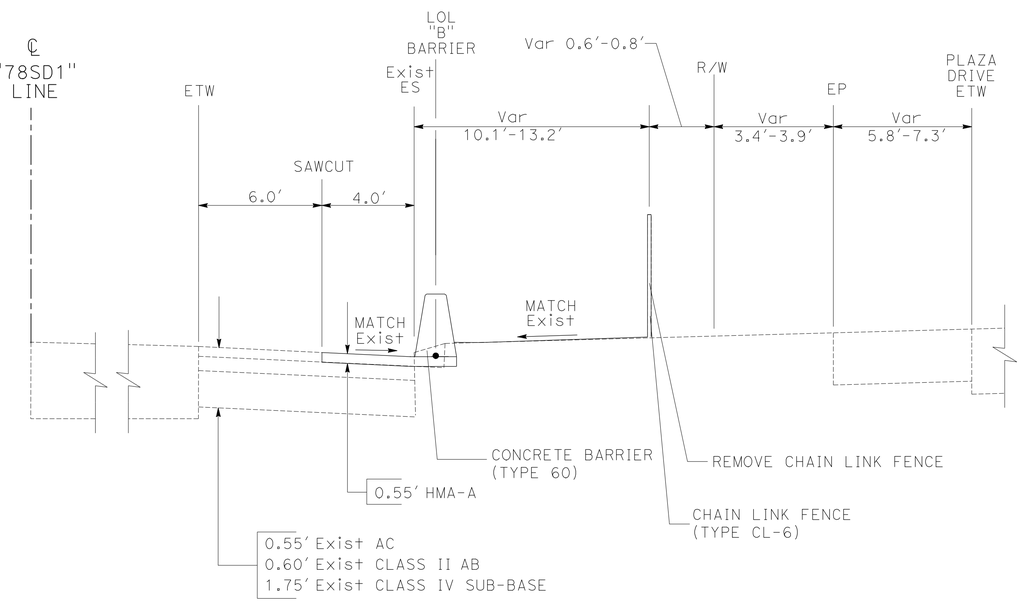

"B" 22+88.0 TO "B" 25+50.0

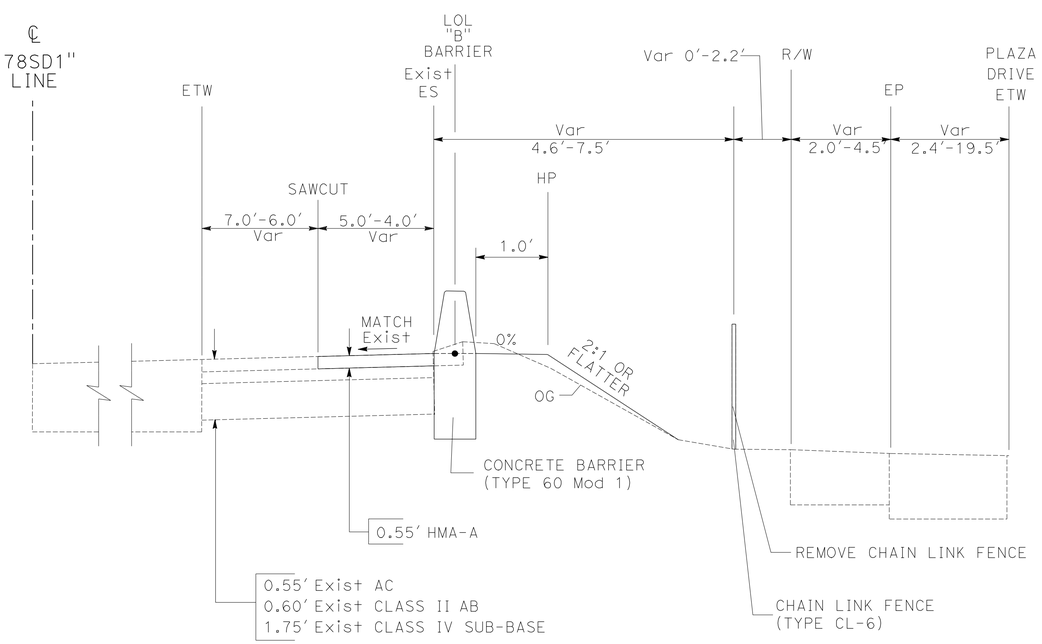

"B" 9+60.0 TO "B" 11+00.0

TYPICAL CROSS SECTIONS

NO SCALE

X-2

STATE OF CALIFORNIA - DEPARTMENT OF TRANSPORTATION
Caltrans® PROJECT DEVELOPMENT
TRAFFIC

FUNCTIONAL SUPERVISOR: RICHARD ESTRADA
CALCULATED-DESIGNED BY: BETHNAY DESJARDINS
CHECKED BY: LEVY Q. LE
REVISED BY
DATE REVISED

LAST REVISION 05-09-11
DATE PLOTTED => 22-JUN-2011
TIME PLOTTED => 13:21

Dist	COUNTY	ROUTE	POST MILES TOTAL PROJECT	SHEET No.	TOTAL SHEETS
11	SD	78	3.5/5.8	4	87

REGISTERED ~~CIVIL~~ ENGINEER 04-15-11 DATE

05-16-11
PLANS APPROVAL DATE

REGISTERED PROFESSIONAL ENGINEER
LEVY Q LE
No. 66748
Exp. 9-30-12
CIVIL
STATE OF CALIFORNIA

THE STATE OF CALIFORNIA OR ITS OFFICERS OR AGENTS SHALL NOT BE RESPONSIBLE FOR THE ACCURACY OR COMPLETENESS OF SCANNED COPIES OF THIS PLAN SHEET.

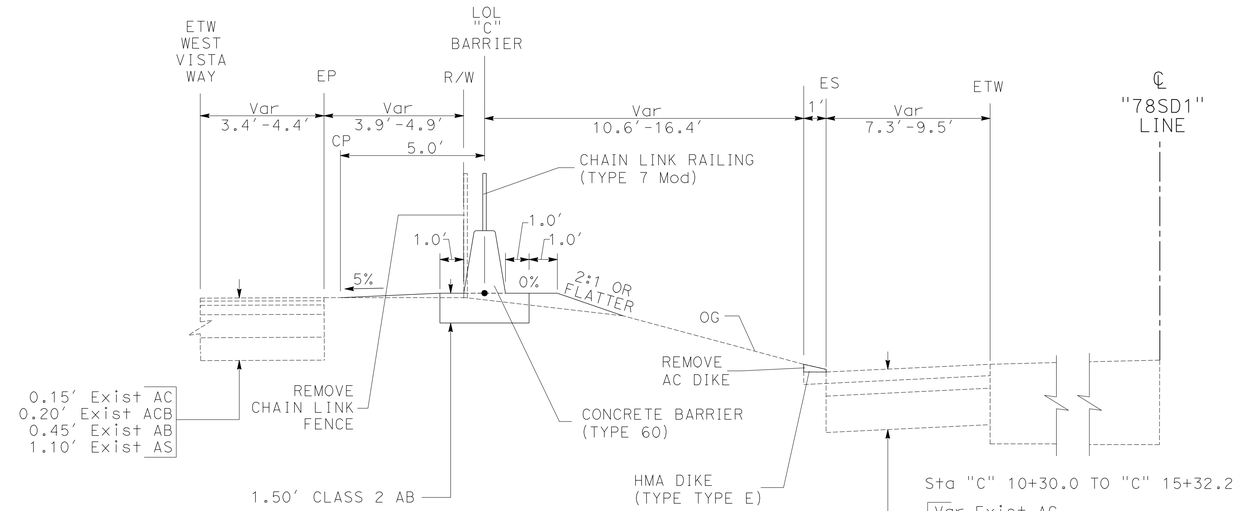

"C" 15+50.0 TO "C" 17+00.0
"C" 18+00.0 TO "C" 18+50.0

Sta "C" 10+30.0 TO "C" 15+32.2

Var Exist AC
0.60' Exist CLASS II AB
1.75' Exist CLASS IV SUB-BASE

Sta "C" 15+32.2 TO "C" 21+70.0

Var Exist AC
0.55' Exist CLASS II AB
1.55' Exist CLASS IV SUB-BASE

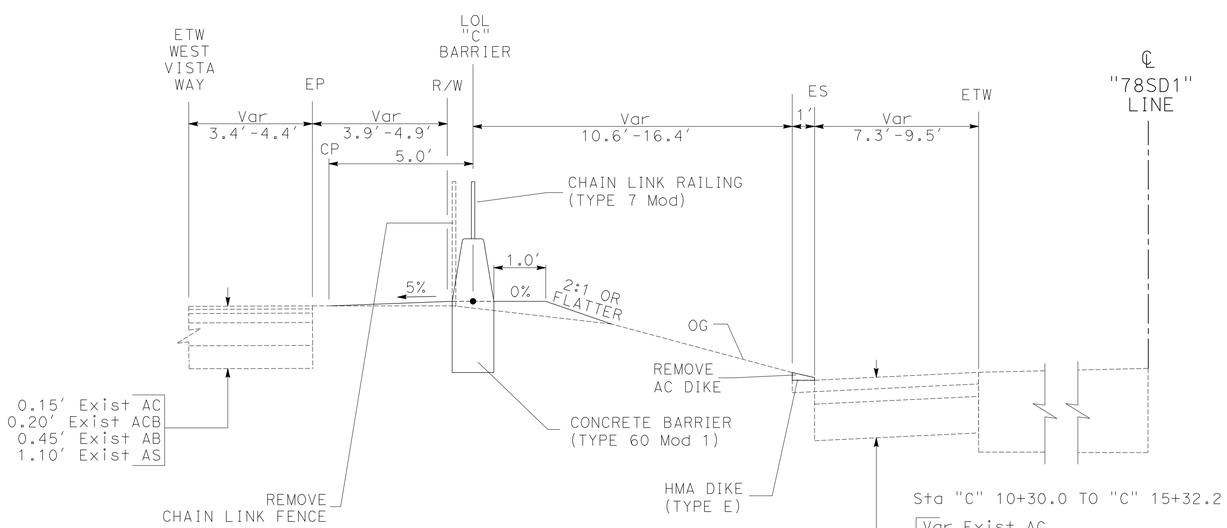

"C" 10+00.0 TO "C" 15+50.0
"C" 17+00.0 TO "C" 18+00.0
"C" 18+50.0 TO "C" 21+70.0

Sta "C" 10+30.0 TO "C" 15+32.2

Var Exist AC
0.60' Exist CLASS II AB
1.75' Exist CLASS IV SUB-BASE

Sta "C" 15+32.2 TO "C" 21+70.0

Var Exist AC
0.55' Exist CLASS II AB
1.55' Exist CLASS IV SUB-BASE

TYPICAL CROSS SECTIONS

NO SCALE

X-3

STATE OF CALIFORNIA - DEPARTMENT OF TRANSPORTATION
Caltrans® TRAFFIC PROJECT DEVELOPMENT

FUNCTIONAL SUPERVISOR: RICHARD ESTRADA
CALCULATED-DESIGNED BY: BETHNAY DESJARDINS
CHECKED BY: LEVY Q. LE
REVISED BY
DATE REVISED

LAST REVISION 05-09-11
DATE PLOTTED => 22-JUN-2011
TIME PLOTTED => 13:21

Dist	COUNTY	ROUTE	POST MILES TOTAL PROJECT	SHEET No.	TOTAL SHEETS
11	SD	78	3.5/5.8	5	87

REGISTERED ~~CIVIL~~ ENGINEER 04-15-11 DATE

05-16-11
PLANS APPROVAL DATE

REGISTERED PROFESSIONAL ENGINEER
LEVY Q LE
No. 66748
Exp. 9-30-12
CIVIL
STATE OF CALIFORNIA

THE STATE OF CALIFORNIA OR ITS OFFICERS OR AGENTS SHALL NOT BE RESPONSIBLE FOR THE ACCURACY OR COMPLETENESS OF SCANNED COPIES OF THIS PLAN SHEET.

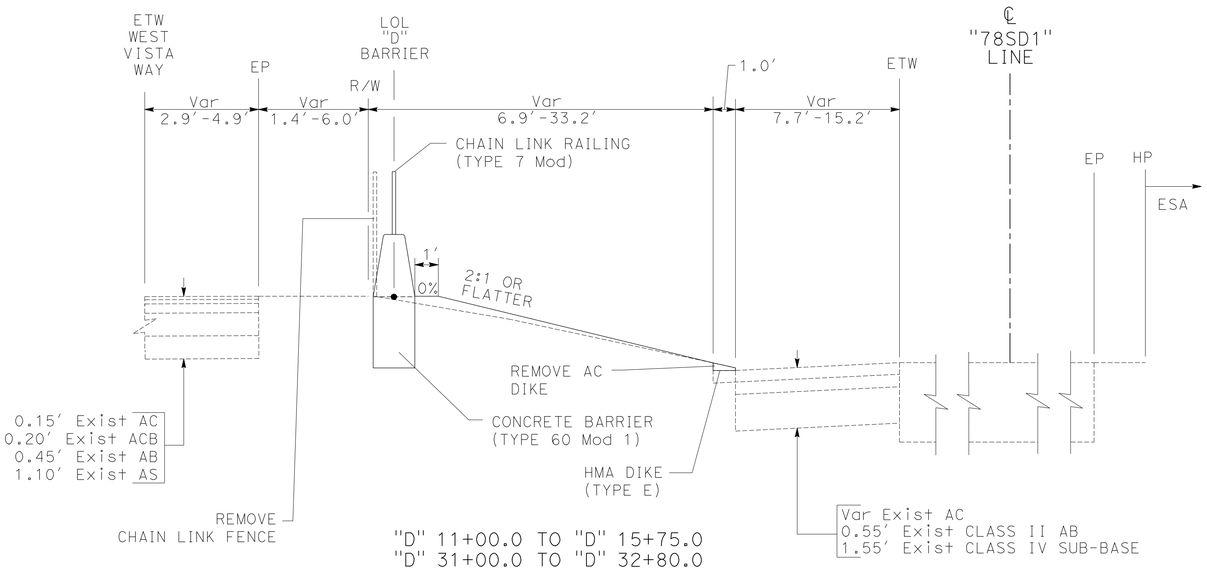

"D" 11+00.0 TO "D" 15+75.0
"D" 31+00.0 TO "D" 32+80.0
"D" 44+50.0 TO "D" 44+75.0
"D" 49+50.0 TO "D" 50+10.0
"D" 58+90.0 TO "D" 60+50.0
"D" 65+90.0 TO "D" 68+05.0

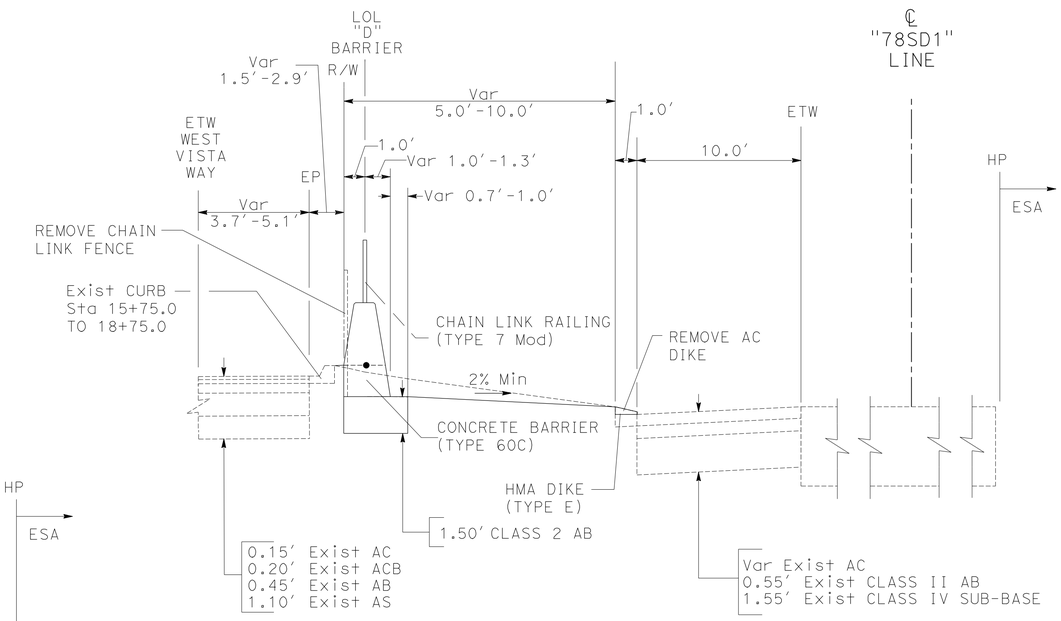

"D" 15+75.0 TO "D" 17+50.0

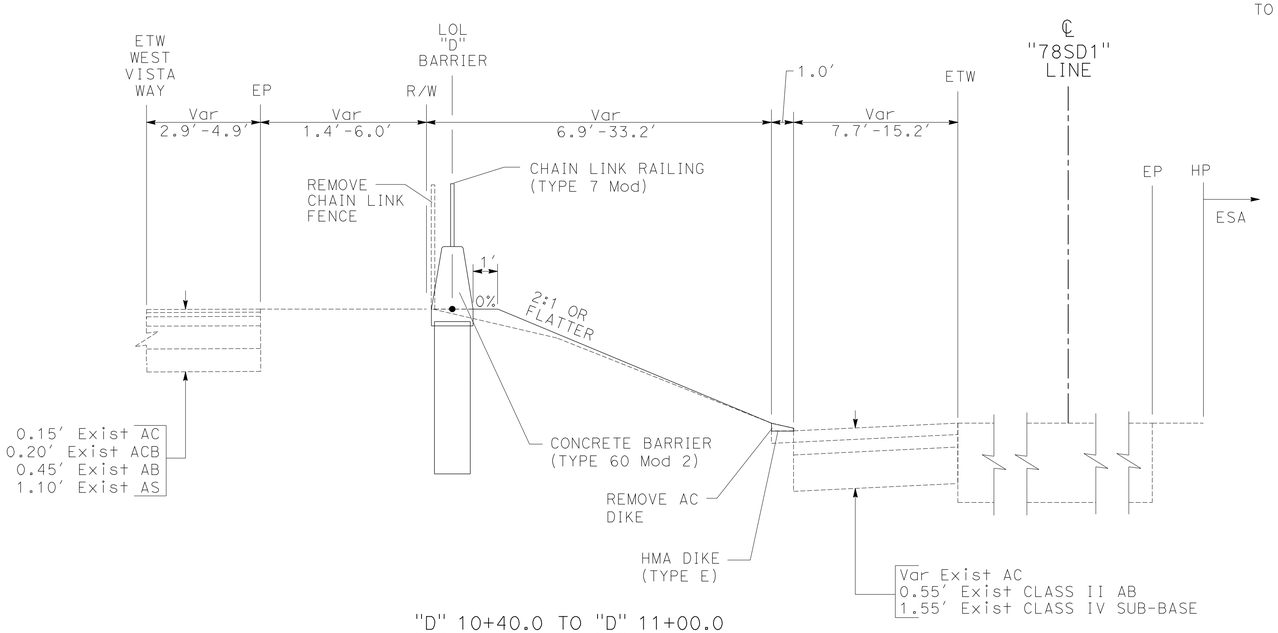

"D" 10+40.0 TO "D" 11+00.0
"D" 32+80.0 TO "D" 44+50.0
"D" 50+10.0 TO "D" 58+90.0
"D" 68+05.0 TO "D" 75+17.0

TYPICAL CROSS SECTIONS

NO SCALE

X-4

STATE OF CALIFORNIA - DEPARTMENT OF TRANSPORTATION
Caltrans PROJECT DEVELOPMENT
TRAFFIC

FUNCTIONAL SUPERVISOR: RICHARD ESTRADA
CALCULATED-DESIGNED BY: BETHNAY DESJARDINS
CHECKED BY: LEVY Q. LE
REVISED BY
DATE REVISED

LAST REVISION 05-09-11
DATE PLOTTED => 22-JUN-2011
TIME PLOTTED => 13:21

Dist	COUNTY	ROUTE	POST MILES TOTAL PROJECT	SHEET No.	TOTAL SHEETS
11	SD	78	3.5/5.8	6	87

REGISTERED ~~CIVIL~~ ENGINEER 04-15-11 DATE

05-16-11
PLANS APPROVAL DATE

REGISTERED PROFESSIONAL ENGINEER
LEVY Q LE
No. 66748
Exp. 9-30-12
CIVIL
STATE OF CALIFORNIA

THE STATE OF CALIFORNIA OR ITS OFFICERS OR AGENTS SHALL NOT BE RESPONSIBLE FOR THE ACCURACY OR COMPLETENESS OF SCANNED COPIES OF THIS PLAN SHEET.

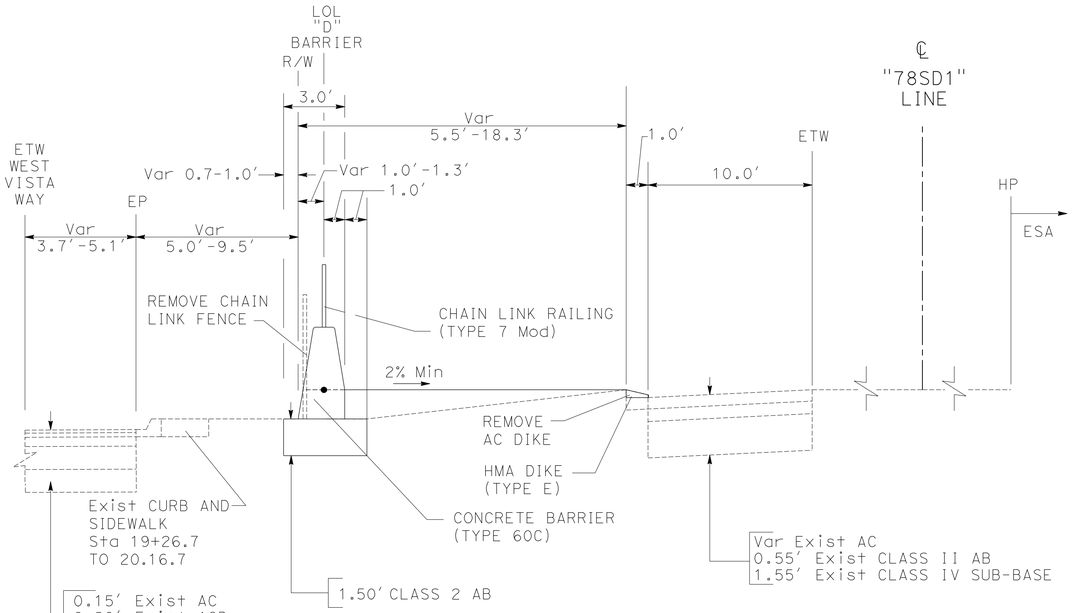

"D" 19+50.0 TO "D" 27+25.0
"D" 46+50.0 TO "D" 48+00.0
"D" 61+50.0 TO "D" 64+75.0

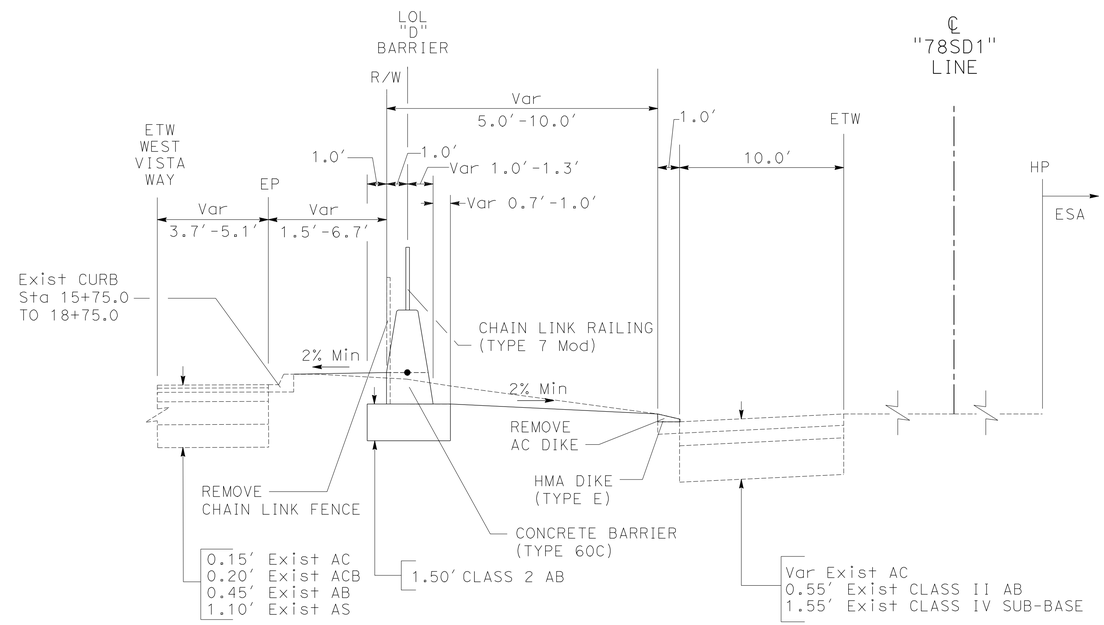

"D" 17+50.0 TO "D" 18+75.0
"D" 44+75.0 TO "D" 48+25.0

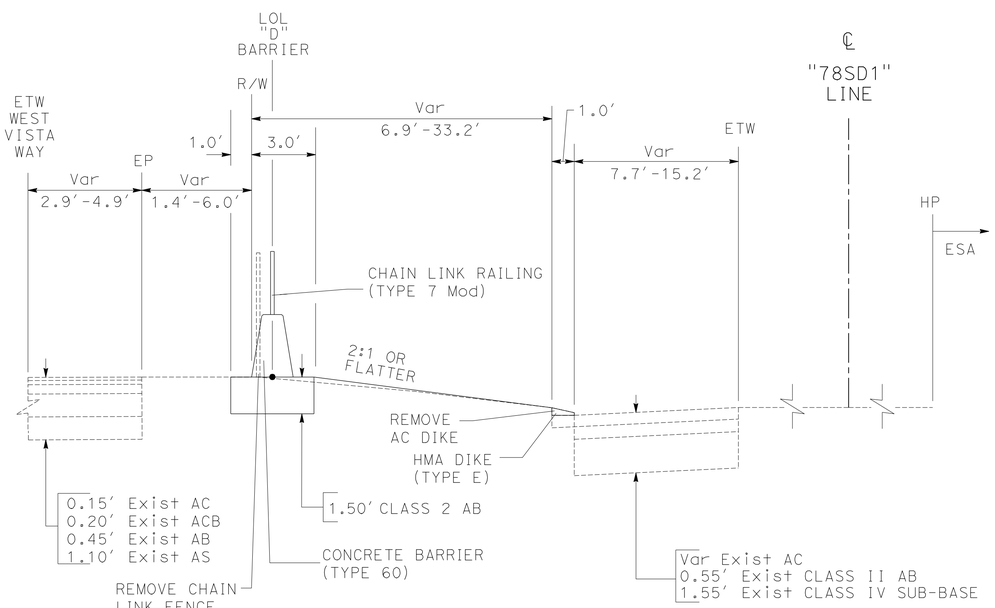

"D" 18+75.0 TO "D" 19+50.0
"D" 27+25.0 TO "D" 31+00.0
"D" 48+25.0 TO "D" 49+50.0
"D" 60+50.0 TO "D" 61+50.0
"D" 64+75.0 TO "D" 65+90.0

TYPICAL CROSS SECTIONS

NO SCALE

X-5

REVISED BY	DATE REVISED
BETHNAY DESJARDINS	LEVY Q. LE
CALCULATED-DESIGNED BY	CHECKED BY
FUNCTIONAL SUPERVISOR	RICHARD ESTRADA

STATE OF CALIFORNIA - DEPARTMENT OF TRANSPORTATION
Caltrans® TRAFFIC PROJECT DEVELOPMENT

LAST REVISION 05-09-11
DATE PLOTTED => 22-JUN-2011
TIME PLOTTED => 13:21

Dist	COUNTY	ROUTE	POST MILES TOTAL PROJECT	SHEET No.	TOTAL SHEETS
11	SD	78	3.5/5.8	7	87

04-18-11
PROFESSIONAL LAND SURVEYOR DATE

05-16-11
PLANS APPROVAL DATE

PROFESSIONAL LAND SURVEYOR MARK D. PHELAN L.S.7111 EXP:12-31-12 STATE OF CALIFORNIA

THE STATE OF CALIFORNIA OR ITS OFFICERS OR AGENTS SHALL NOT BE RESPONSIBLE FOR THE ACCURACY OR COMPLETENESS OF SCANNED COPIES OF THIS PLAN SHEET.

NOTES:

1. CONTACT DISTRICT 11 DIVISION OF LAND SURVEYS, PHONE (858)467-4305, FOR ADDITIONAL INFORMATION OR QUERIES REGARDING THIS SURVEY PROJECT CONTROL.
2. BASIS OF BEARINGS AND COORDINATES
   FOR THIS PROJECT IS THE CALIFORNIA COORDINATE SYSTEM OF 1983, HPGN EPOCH ADJUSTMENT [CCS 83 (1991.35)], ZONE 6. 3RD ORDER PROJECT CONTROL STATIONS WERE ESTABLISHED IN DECEMBER 2000 ACCORDING TO CRITERIA SET FORTH IN THE FEDERAL GEODETIC CONTROL SUBCOMMITTEE'S "GEOMETRIC GEODETIC ACCURACY STANDARDS AND SPECIFICATIONS FOR USING GPS RELATIVE POSITIONING TECHNIQUES" REPRINTED AUGUST 1, 1989.

   THIS GPS SURVEY WAS CONSTRAINED TO 2ND ORDER CONTROL STATIONS "78-6.19", "5-54.39", AND "78-0.0" PER THE ABOVE-REFERENCED STANDARDS.
3. BASIS OF ELEVATIONS
   FOR THIS PROJECT IS THE NORTH AMERICAN VERTICAL DATUM OF 1988 (NAVD88). ELEVATIONS WERE ESTABLISHED BY GPS FAST STATIC SURVEY CONSTRAINING TO 3RD ORDER STATION "78-6.19"
4. IN THE EVENT GPS MACHINE CONTROL/GUIDANCE IS USED FOR THIS PROJECT, THE CONTRACTOR SHALL CONTACT OR MEET WITH DISTRICT 11 LAND SURVEY DIVISION TO OBTAIN THE CONTROL NECESSARY TO ESTABLISH A PROJECT CALIBRATION COMPATIBLE FOR ALL USERS.

ABBREVIATIONS:

CADT	CALIFORNIA DEPARTMENT OF TRANSPORTATION
CDOT	CALIFORNIA DEPARTMENT OF TRANSPORTATION
IP	IRON PIPE

CONTROL FOR DESIGN AND CONSTRUCTION

STATION DESIGNATION	ORDER	NORTHING	EASTING	ELEVATION	DESCRIPTION
5-54.39	2ND	2,022,031.69	6,213,723.05	75.05	2¼" CADT BRASS DISK
78-0.0	2ND	2,009,673.07	6,224,629.81	72.58	2¼" CADT BRASS DISK IN BRIDGE
78-3.41L	3RD	2,011,977.89	6,242,194.95	223.75	2¼" CADT DISK SET IN 2" IP
78-3.7L	3RD	2,012,055.98	6,243,169.98	231.19	2" IP AND CDOT DISC
78-3.9	3RD	2,012,100.29	6,244,343.34	218.91	2¼" CADT BRASS DISK IN SIDEWALK
78-4.37	3RD	2,013,540.91	6,246,637.96	263.71	2¼" CADT BRASS DISK IN SIDEWALK
78-5.11L	3RD	2,015,338.53	6,249,819.07	283.18	2¼" CADT DISK IN 2" IP
78-5.95	3RD	2,015,878.52	6,254,603.62	327.10	2¼" CADT DISK IN BRIDGE
78-6.19	2ND	2,016,758.87	6,256,203.46	317.83	2¼" CADT DISK

LEGEND:

2ND ORDER STATION

3RD ORDER STATION

ESA ENVIRONMENTALLY SENSITIVE AREA

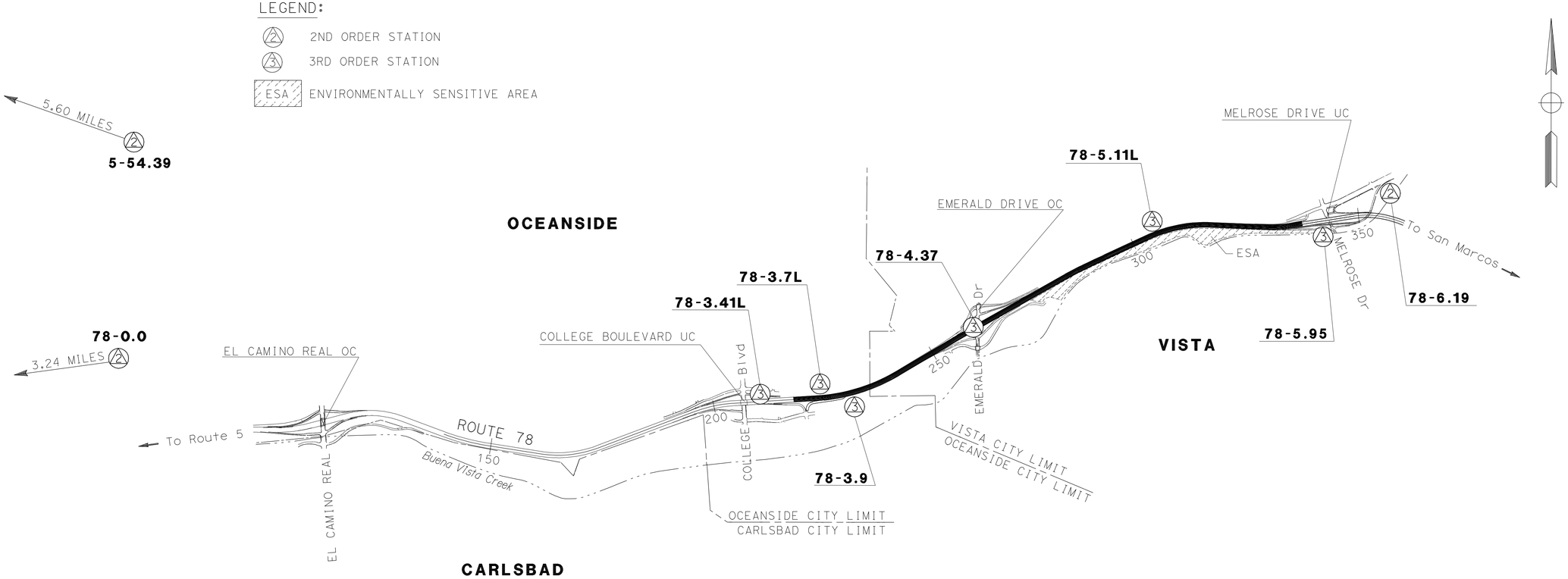

THIS PLAN ACCURATE FOR PROJECT CONTROL WORK ONLY

PROJECT CONTROL

NO SCALE

PC-1

STATE OF CALIFORNIA - DEPARTMENT OF TRANSPORTATION
Caltrans® LAND SURVEYS DIVISION

FUNCTIONAL SUPERVISOR: BRUCE URQUHART

CALCULATED-DESIGNED BY: MARK PHELAN
CHECKED BY: NED SALMAN

REVISED BY
DATE REVISED

LAST REVISION 05-11-11
DATE PLOTTED => 22-JUN-2011
TIME PLOTTED => 13:21

Dist	COUNTY	ROUTE	POST MILES TOTAL PROJECT	SHEET No.	TOTAL SHEETS
11	SD	78	3.5/5.8	8	87

REGISTERED ~~CIVIL~~ ENGINEER 04-15-11 DATE

05-16-11
PLANS APPROVAL DATE

REGISTERED PROFESSIONAL ENGINEER LEVY Q LE No. 66748 Exp. 9-30-12 CIVIL STATE OF CALIFORNIA

THE STATE OF CALIFORNIA OR ITS OFFICERS OR AGENTS SHALL NOT BE RESPONSIBLE FOR THE ACCURACY OR COMPLETENESS OF SCANNED COPIES OF THIS PLAN SHEET.

NOTES:

1. FOR ACCURATE RIGHT OF WAY DATA, CONTACT RIGHT OF WAY ENGINEERING AT THE DISTRICT OFFICE.
2. SEE CONSTRUCTION DETAILS FOR BARRIER ALIGNMENTS "A", "B", "C", AND "D".
3. EXACT LOCATION OF TEMPORARY CONSTRUCTION ETNRANCES AND PCC WASHOUTS TO BE DETERMINED IN THE FIELD.
4. COORDINATES, BEARINGS AND GRID DISTANCES ARE BASED ON CCS83 (1991.35) ZONE 6 (OR PER OTHER SURVEYS.

CURVE DATA

No.	R	Δ	T	L
1	4,000.00′	27°15′02"	969.57′	1,902.45′
10	2,805.11′	15°19′41"	377.47′	750.44′
50	200.00′	82°6′44"	174.20′	286.63′
51	200.00′	89°0′52"	196.59′	310.72′

OCEANSIDE

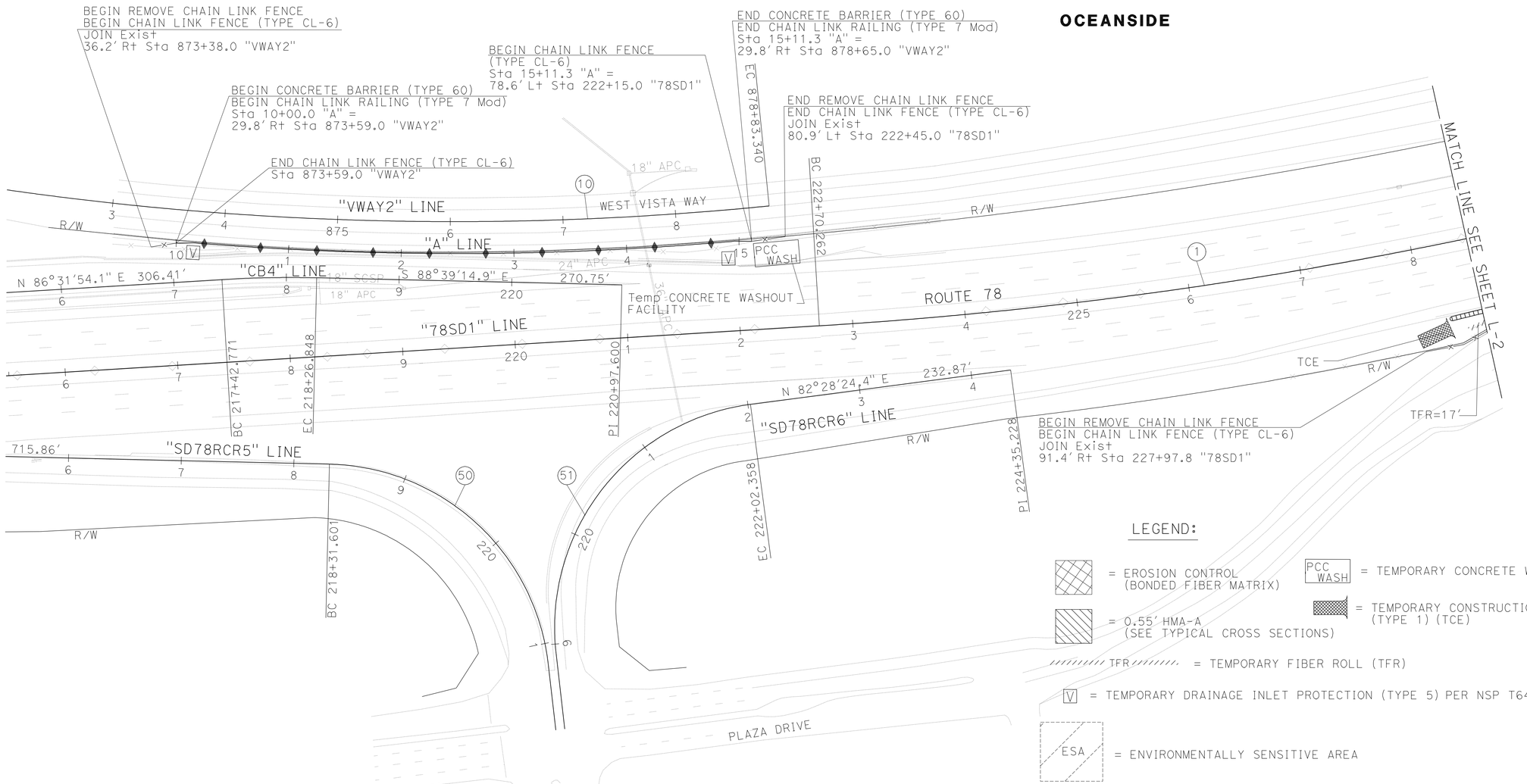

LEGEND:

= EROSION CONTROL (BONDED FIBER MATRIX)

= 0.55′ HMA-A (SEE TYPICAL CROSS SECTIONS)

TFR = TEMPORARY FIBER ROLL (TFR)

V = TEMPORARY DRAINAGE INLET PROTECTION (TYPE 5) PER NSP T64

ESA = ENVIRONMENTALLY SENSITIVE AREA

PCC WASH = TEMPORARY CONCRETE WASHOUT FACILITY

= TEMPORARY CONSTRUCTION ENTRANCE (TYPE 1) (TCE)

LAYOUT

SCALE: 1" = 50′ **L-1**

STATE OF CALIFORNIA - DEPARTMENT OF TRANSPORTATION
Caltrans PROJECT DEVELOPMENT
TRAFFIC

FUNCTIONAL SUPERVISOR: RICHARD ESTRADA
CALCULATED-DESIGNED BY: BETHNAY DESJARDINS
CHECKED BY: LEVY Q. LE
REVISED BY / DATE REVISED

LAST REVISION 05-11-11
DATE PLOTTED => 22-JUN-2011
TIME PLOTTED => 13:21

Dist	COUNTY	ROUTE	POST MILES TOTAL PROJECT	SHEET No.	TOTAL SHEETS
11	SD	78	3.5/5.8	9	87

REGISTERED ~~CIVIL~~ ENGINEER 04-15-11 DATE

05-16-11
PLANS APPROVAL DATE

REGISTERED PROFESSIONAL ENGINEER
LEVY Q LE
No. 66748
Exp. 9-30-12
CIVIL
STATE OF CALIFORNIA

THE STATE OF CALIFORNIA OR ITS OFFICERS OR AGENTS SHALL NOT BE RESPONSIBLE FOR THE ACCURACY OR COMPLETENESS OF SCANNED COPIES OF THIS PLAN SHEET.

NOTES:

1. FOR ACCURATE RIGHT OF WAY DATA, CONTACT RIGHT OF WAY ENGINEERING AT THE DISTRICT OFFICE.

CURVE DATA

No.	R	Δ	T	L
1	4,000.00′	27°15′02″	969.57′	1,902.45′

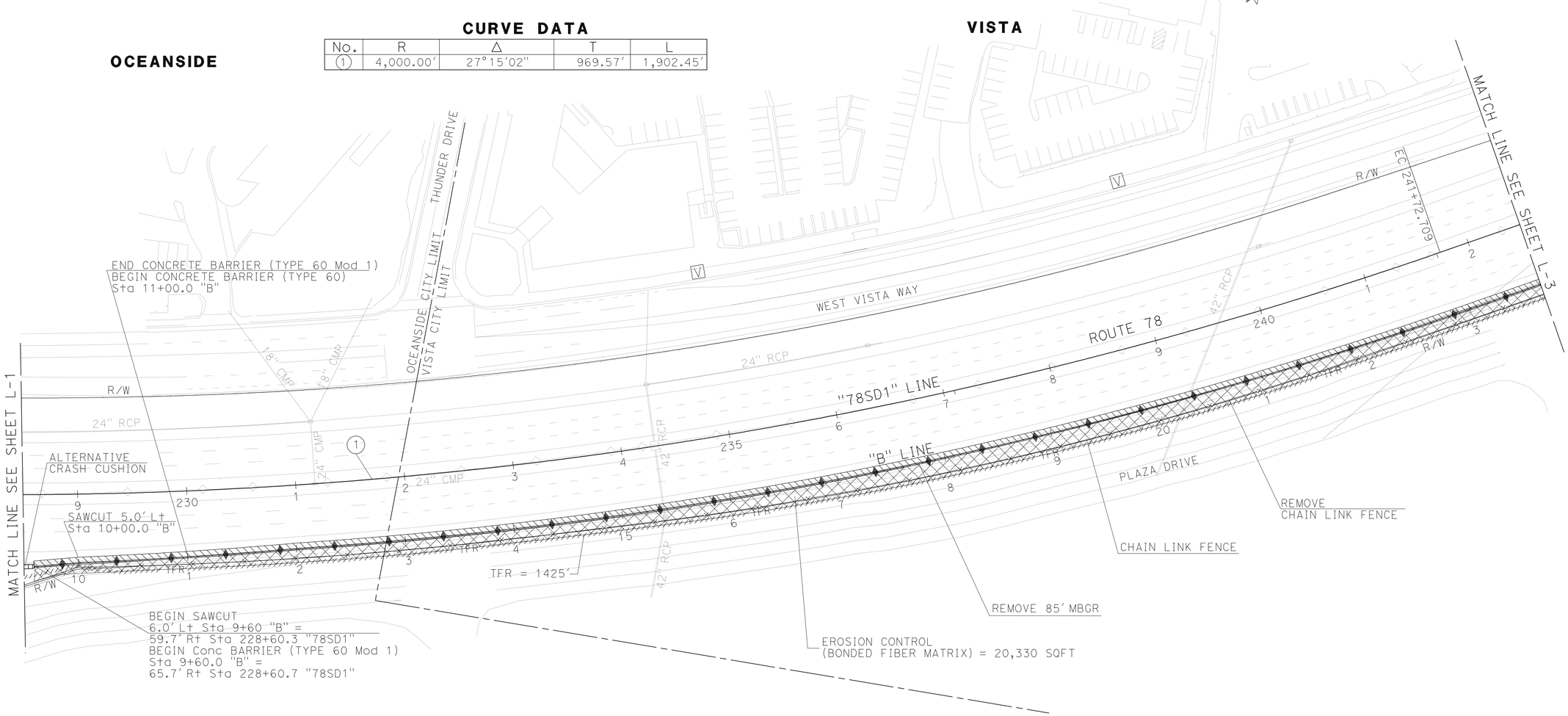

LAYOUT

SCALE: 1" = 50′ **L-2**

REVISED BY	DATE REVISED

BETHNAY DESJARDINS	LEVY Q. LE
CALCULATED-DESIGNED BY	CHECKED BY
FUNCTIONAL SUPERVISOR	RICHARD ESTRADA

STATE OF CALIFORNIA - DEPARTMENT OF TRANSPORTATION
Caltrans® **TRAFFIC PROJECT DEVELOPMENT**

LAST REVISION 05-11-11 | DATE PLOTTED => 22-JUN-2011 | TIME PLOTTED => 13:21

Dist	COUNTY	ROUTE	POST MILES TOTAL PROJECT	SHEET No.	TOTAL SHEETS
11	SD	78	3.5/5.8	10	87

REGISTERED ~~CIVIL~~ ENGINEER 04-15-11 DATE

05-16-11
PLANS APPROVAL DATE

REGISTERED PROFESSIONAL ENGINEER LEVY Q LE No. 66748 Exp. 9-30-12 CIVIL STATE OF CALIFORNIA

THE STATE OF CALIFORNIA OR ITS OFFICERS OR AGENTS SHALL NOT BE RESPONSIBLE FOR THE ACCURACY OR COMPLETENESS OF SCANNED COPIES OF THIS PLAN SHEET.

NOTES:

1. FOR ACCURATE RIGHT OF WAY DATA, CONTACT RIGHT OF WAY ENGINEERING AT THE DISTRICT OFFICE.

CURVE DATA

No.	R	Δ	T	L
2	24,000.00′	0°14′19"	262.02′	524.03′
52	3,000.00′	3°11′29"	83.57′	167.10′
54	1,000.00′	15°35′51"	136.96′	272.23′

VISTA

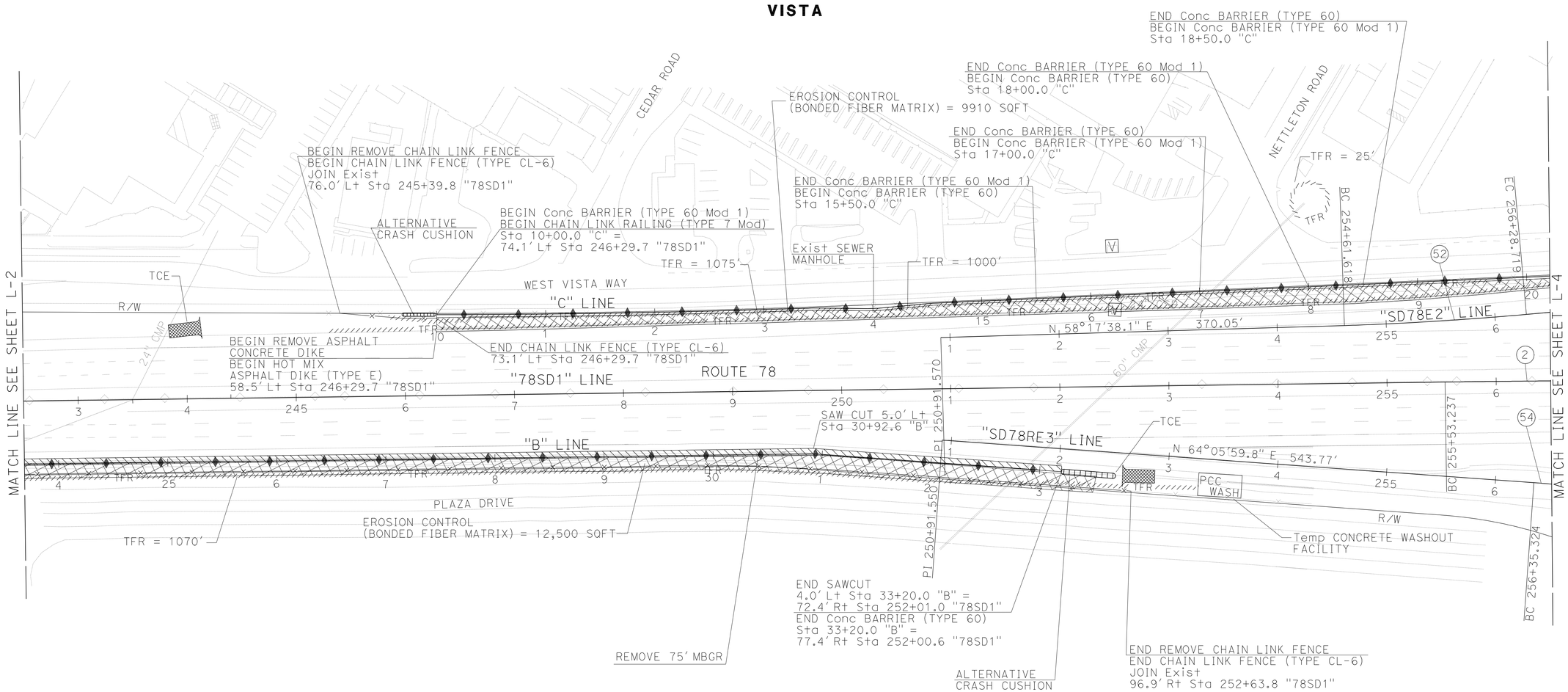

LAYOUT

SCALE: 1" = 50′ **L-3**

REVISED BY	DATE REVISED
BETHNAY DESJARDINS	LEVY Q. LE

CALCULATED-DESIGNED BY
CHECKED BY

FUNCTIONAL SUPERVISOR
RICHARD ESTRADA

STATE OF CALIFORNIA - DEPARTMENT OF TRANSPORTATION
Caltrans
TRAFFIC
PROJECT DEVELOPMENT

LAST REVISION 05-11-11
DATE PLOTTED => 22-JUN-2011
TIME PLOTTED => 13:21

Dist	COUNTY	ROUTE	POST MILES TOTAL PROJECT	SHEET No.	TOTAL SHEETS
11	SD	78	3.5/5.8	11	87

REGISTERED CIVIL ENGINEER 04-15-11 DATE

05-16-11
PLANS APPROVAL DATE

REGISTERED PROFESSIONAL ENGINEER
LEVY Q LE
No. 66748
Exp. 9-30-12
CIVIL
STATE OF CALIFORNIA

THE STATE OF CALIFORNIA OR ITS OFFICERS OR AGENTS SHALL NOT BE RESPONSIBLE FOR THE ACCURACY OR COMPLETENESS OF SCANNED COPIES OF THIS PLAN SHEET.

NOTES:

1. FOR ACCURATE RIGHT OF WAY DATA, CONTACT RIGHT OF WAY ENGINEERING AT THE DISTRICT OFFICE.

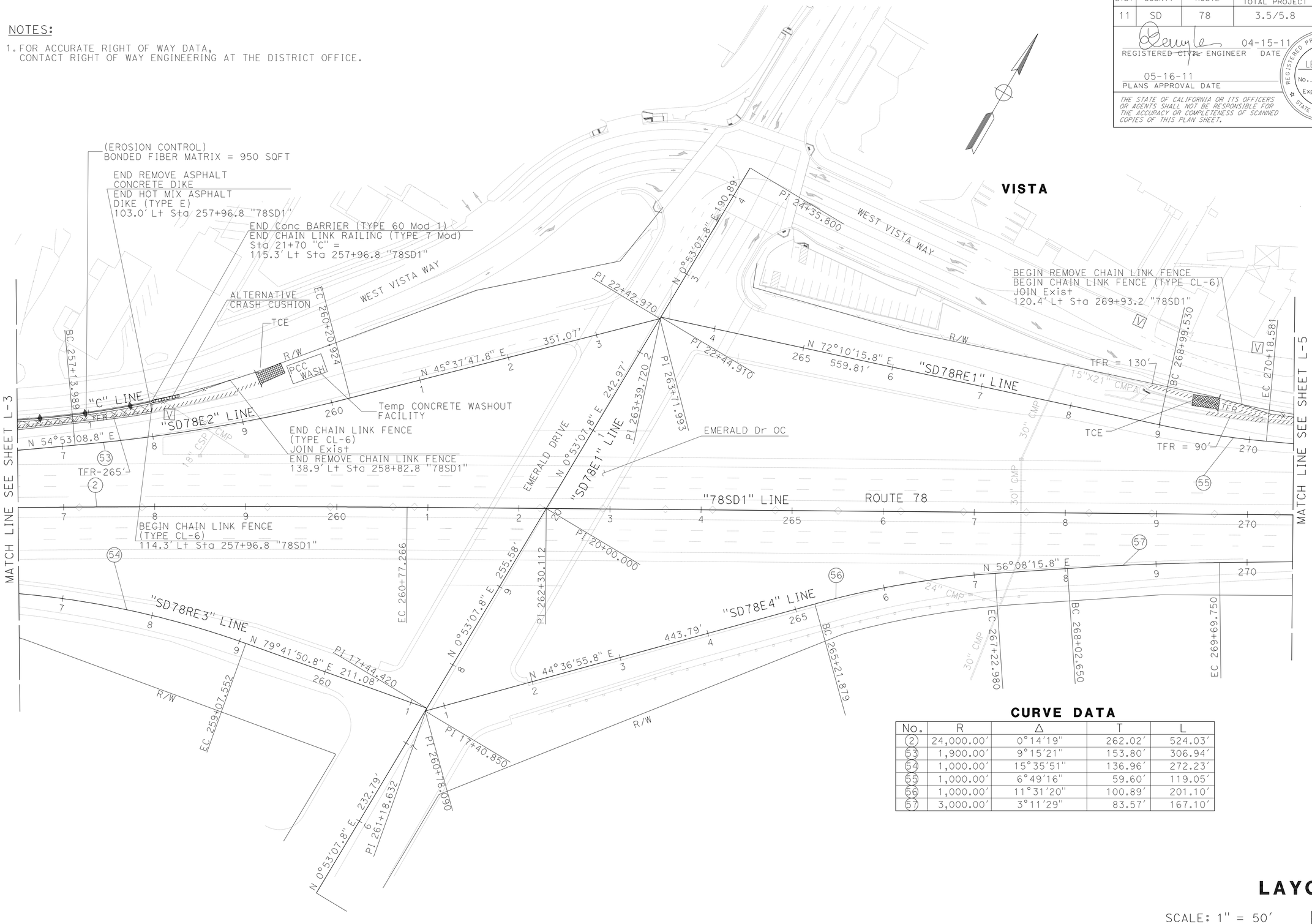

CURVE DATA

No.	R	Δ	T	L
2	24,000.00'	0°14'19"	262.02'	524.03'
53	1,900.00'	9°15'21"	153.80'	306.94'
54	1,000.00'	15°35'51"	136.96'	272.23'
55	1,000.00'	6°49'16"	59.60'	119.05'
56	1,000.00'	11°31'20"	100.89'	201.10'
57	3,000.00'	3°11'29"	83.57'	167.10'

LAYOUT

SCALE: 1" = 50'

L-4

REVISED BY | DATE REVISED
BETHNAY DESJARDINS | LEVY Q. LE
CALCULATED-DESIGNED BY | CHECKED BY
FUNCTIONAL SUPERVISOR | RICHARD ESTRADA

STATE OF CALIFORNIA - DEPARTMENT OF TRANSPORTATION
Caltrans PROJECT DEVELOPMENT
TRAFFIC

LAST REVISION 05-11-11
DATE PLOTTED => 22-JUN-2011
TIME PLOTTED => 13:21

Dist	COUNTY	ROUTE	POST MILES TOTAL PROJECT	SHEET No.	TOTAL SHEETS
11	SD	78	3.5/5.8	12	87

REGISTERED ~~CIVIL~~ ENGINEER 04-15-11 DATE

05-16-11
PLANS APPROVAL DATE

REGISTERED PROFESSIONAL ENGINEER
LEVY Q LE
No. 66748
Exp. 9-30-12
CIVIL
STATE OF CALIFORNIA

THE STATE OF CALIFORNIA OR ITS OFFICERS OR AGENTS SHALL NOT BE RESPONSIBLE FOR THE ACCURACY OR COMPLETENESS OF SCANNED COPIES OF THIS PLAN SHEET.

NOTES:

1. FOR ACCURATE RIGHT OF WAY DATA, CONTACT RIGHT OF WAY ENGINEERING AT THE DISTRICT OFFICE.

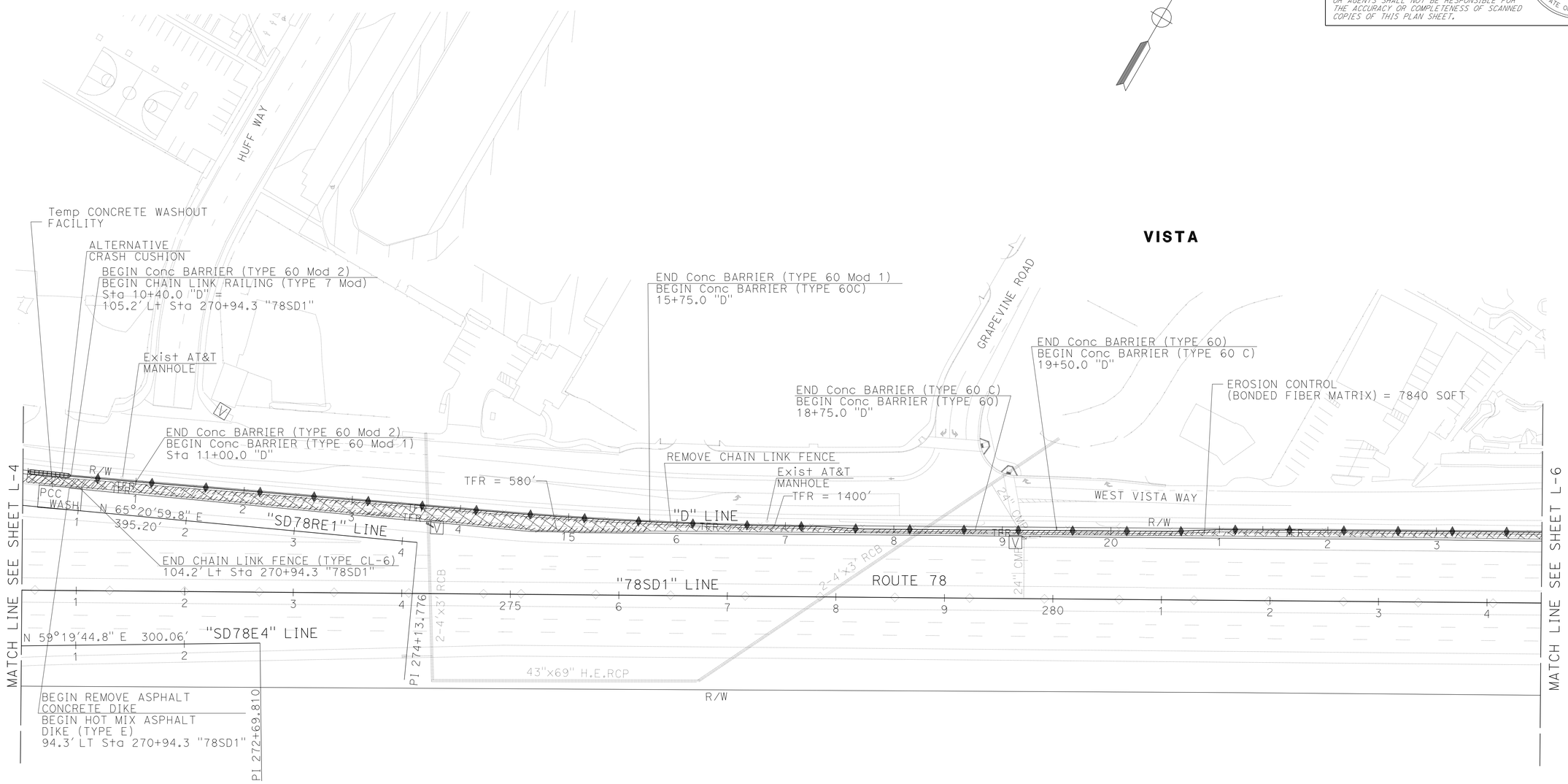

LAYOUT

SCALE: 1" = 50'

L-5

REVISED BY	DATE REVISED

BETHNAY DESJARDINS — LEVY Q. LE

CALCULATED-DESIGNED BY — CHECKED BY

FUNCTIONAL SUPERVISOR — RICHARD ESTRADA

STATE OF CALIFORNIA - DEPARTMENT OF TRANSPORTATION
Caltrans® PROJECT DEVELOPMENT
TRAFFIC

LAST REVISION 05-11-11 — DATE PLOTTED => 22-JUN-2011 TIME PLOTTED => 13:21

Dist	COUNTY	ROUTE	POST MILES TOTAL PROJECT	SHEET No.	TOTAL SHEETS
11	SD	78	3.5/5.8	13	87

REGISTERED ~~CIVIL~~ ENGINEER 04-15-11 DATE

05-16-11
PLANS APPROVAL DATE

REGISTERED PROFESSIONAL ENGINEER
LEVY Q LE
No. 66748
Exp. 9-30-12
CIVIL
STATE OF CALIFORNIA

THE STATE OF CALIFORNIA OR ITS OFFICERS OR AGENTS SHALL NOT BE RESPONSIBLE FOR THE ACCURACY OR COMPLETENESS OF SCANNED COPIES OF THIS PLAN SHEET.

NOTES:

1. FOR ACCURATE RIGHT OF WAY DATA, CONTACT RIGHT OF WAY ENGINEERING AT THE DISTRICT OFFICE.

CURVE DATA

No.	R	Δ	T	L
3	7,000.00′	4°32′51″	277.94′	555.59′

VISTA

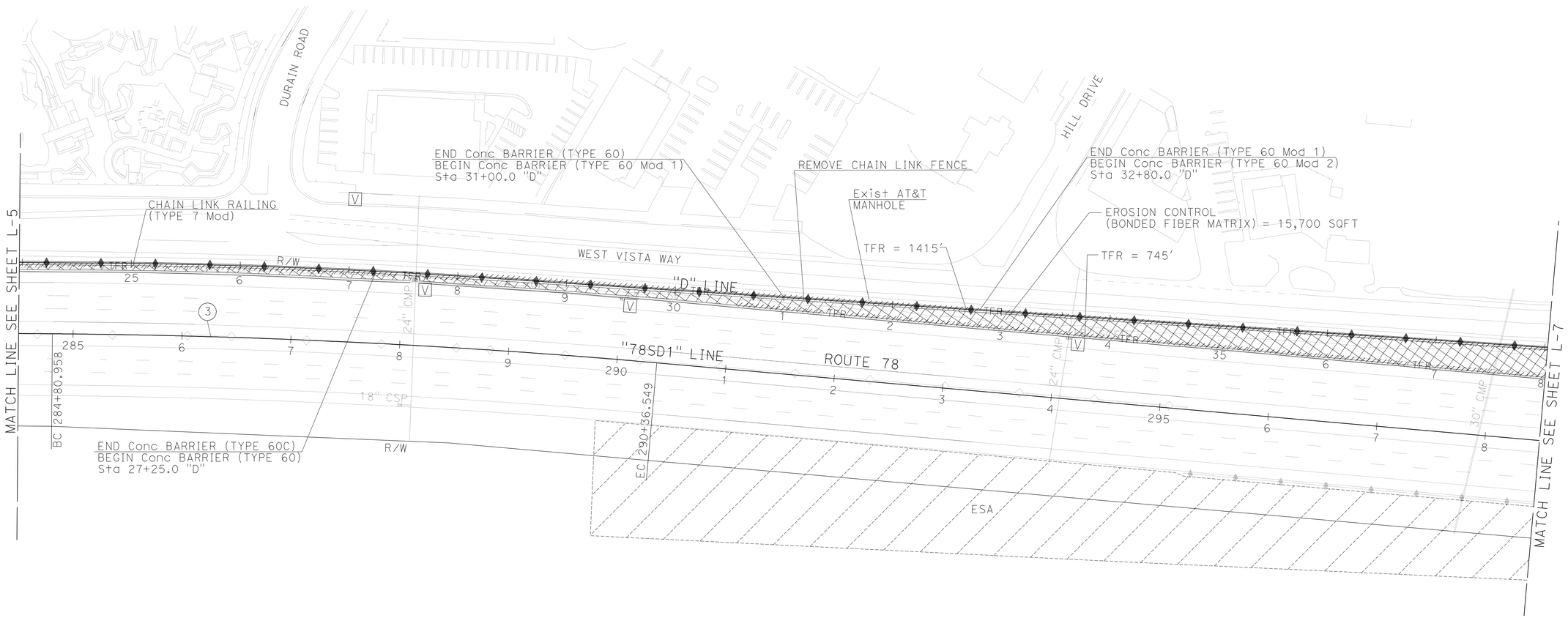

LAYOUT

SCALE: 1" = 50′ **L-6**

STATE OF CALIFORNIA - DEPARTMENT OF TRANSPORTATION
Caltrans PROJECT DEVELOPMENT
TRAFFIC

FUNCTIONAL SUPERVISOR: RICHARD ESTRADA

CALCULATED-DESIGNED BY: BETHNAY DESJARDINS
CHECKED BY: LEVY Q. LE

REVISED BY
DATE REVISED

LAST REVISION 05-11-11
DATE PLOTTED => 22-JUN-2011
TIME PLOTTED => 13:21

Dist	COUNTY	ROUTE	POST MILES TOTAL PROJECT	SHEET No.	TOTAL SHEETS
11	SD	78	3.5/5.8	14	87

REGISTERED ~~CIVIL~~ ENGINEER 04-15-11 DATE

05-16-11
PLANS APPROVAL DATE

REGISTERED PROFESSIONAL ENGINEER
LEVY Q LE
No. 66748
Exp. 9-30-12
CIVIL
STATE OF CALIFORNIA

THE STATE OF CALIFORNIA OR ITS OFFICERS OR AGENTS SHALL NOT BE RESPONSIBLE FOR THE ACCURACY OR COMPLETENESS OF SCANNED COPIES OF THIS PLAN SHEET.

NOTES:

1. FOR ACCURATE RIGHT OF WAY DATA, CONTACT RIGHT OF WAY ENGINEERING AT THE DISTRICT OFFICE.

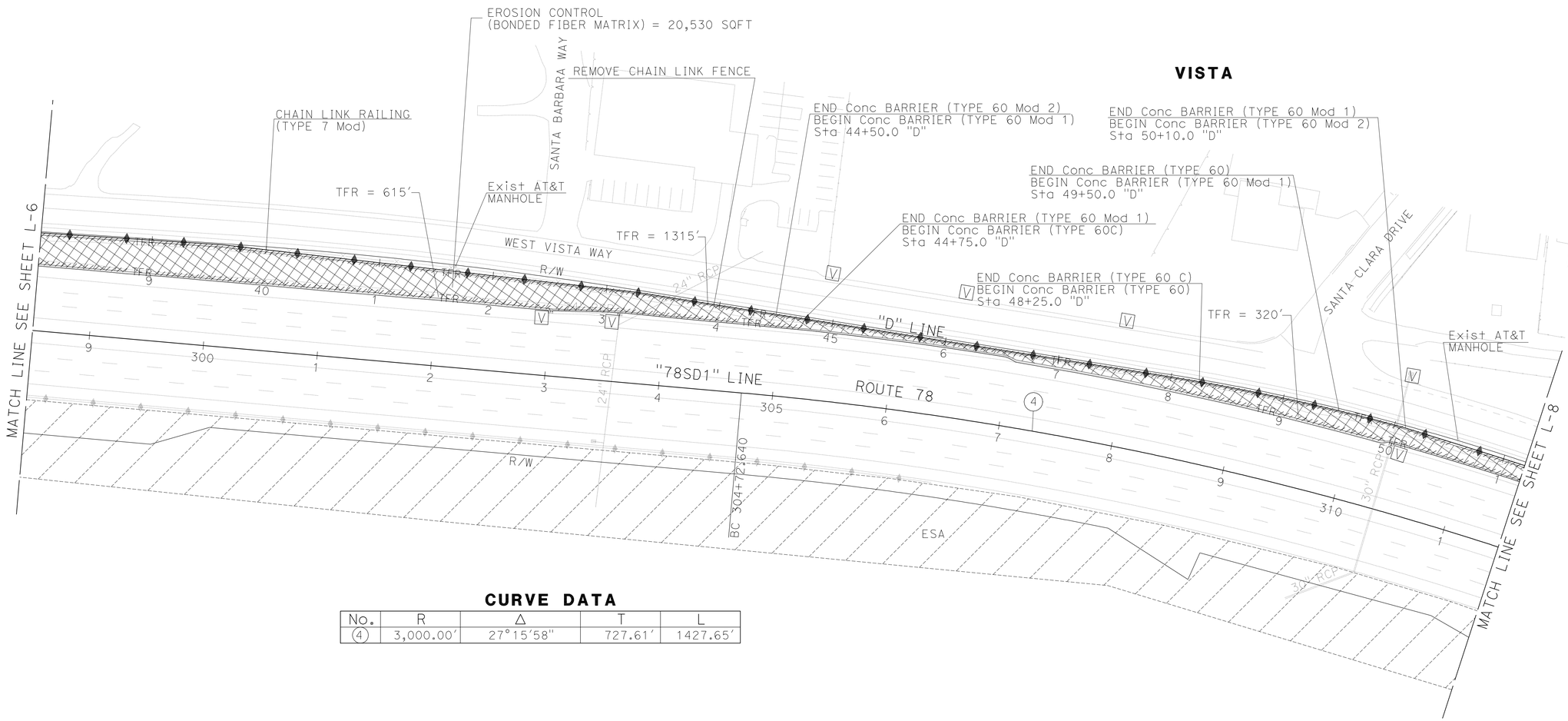

CURVE DATA

No.	R	Δ	T	L
4	3,000.00'	27°15'58"	727.61'	1427.65'

LAYOUT

SCALE: 1" = 50'

L-7

STATE OF CALIFORNIA - DEPARTMENT OF TRANSPORTATION
Caltrans PROJECT DEVELOPMENT
TRAFFIC

FUNCTIONAL SUPERVISOR: RICHARD ESTRADA
CALCULATED-DESIGNED BY: BETHNAY DESJARDINS
CHECKED BY: LEVY Q. LE
REVISED BY
DATE REVISED

LAST REVISION 05-11-11
DATE PLOTTED => 22-JUN-2011
TIME PLOTTED => 13:22

Dist	COUNTY	ROUTE	POST MILES TOTAL PROJECT	SHEET No.	TOTAL SHEETS
11	SD	78	3.5/5.8	15	87

REGISTERED ~~CIVIL~~ ENGINEER 04-15-11 DATE

05-16-11
PLANS APPROVAL DATE

REGISTERED PROFESSIONAL ENGINEER
LEVY Q LE
No. 66748
Exp. 9-30-12
CIVIL
STATE OF CALIFORNIA

THE STATE OF CALIFORNIA OR ITS OFFICERS OR AGENTS SHALL NOT BE RESPONSIBLE FOR THE ACCURACY OR COMPLETENESS OF SCANNED COPIES OF THIS PLAN SHEET.

NOTES:

1. FOR ACCURATE RIGHT OF WAY DATA, CONTACT RIGHT OF WAY ENGINEERING AT THE DISTRICT OFFICE.

CURVE DATA

No.	R	Δ	T	L
4	3,000.00′	27°15′58″	727.61′	1427.65′

VISTA

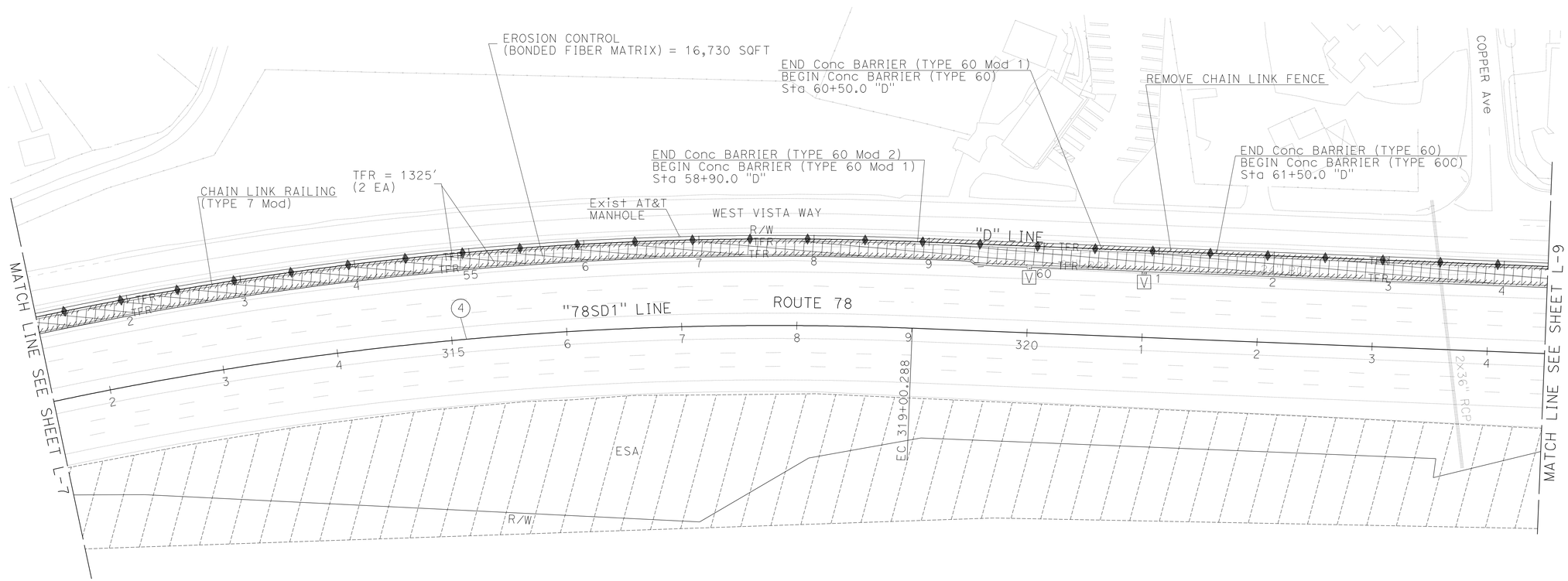

LAYOUT

SCALE: 1" = 50′ **L-8**

BETHNAY DESJARDINS	REVISED BY
LEVY Q. LE	DATE REVISED
CALCULATED-DESIGNED BY	
CHECKED BY	
FUNCTIONAL SUPERVISOR	
RICHARD ESTRADA	

STATE OF CALIFORNIA - DEPARTMENT OF TRANSPORTATION
Caltrans® **TRAFFIC PROJECT DEVELOPMENT**

LAST REVISION 05-11-11
DATE PLOTTED => 22-JUN-2011
TIME PLOTTED => 13:22

Dist	COUNTY	ROUTE	POST MILES TOTAL PROJECT	SHEET No.	TOTAL SHEETS
11	SD	78	3.5/5.8	16	87

REGISTERED ~~CIVIL~~ ENGINEER 04-15-11 DATE

05-16-11
PLANS APPROVAL DATE

REGISTERED PROFESSIONAL ENGINEER LEVY Q LE No. 66748 Exp. 9-30-12 CIVIL STATE OF CALIFORNIA

THE STATE OF CALIFORNIA OR ITS OFFICERS OR AGENTS SHALL NOT BE RESPONSIBLE FOR THE ACCURACY OR COMPLETENESS OF SCANNED COPIES OF THIS PLAN SHEET.

NOTES:

1. FOR ACCURATE RIGHT OF WAY DATA, CONTACT RIGHT OF WAY ENGINEERING AT THE DISTRICT OFFICE.

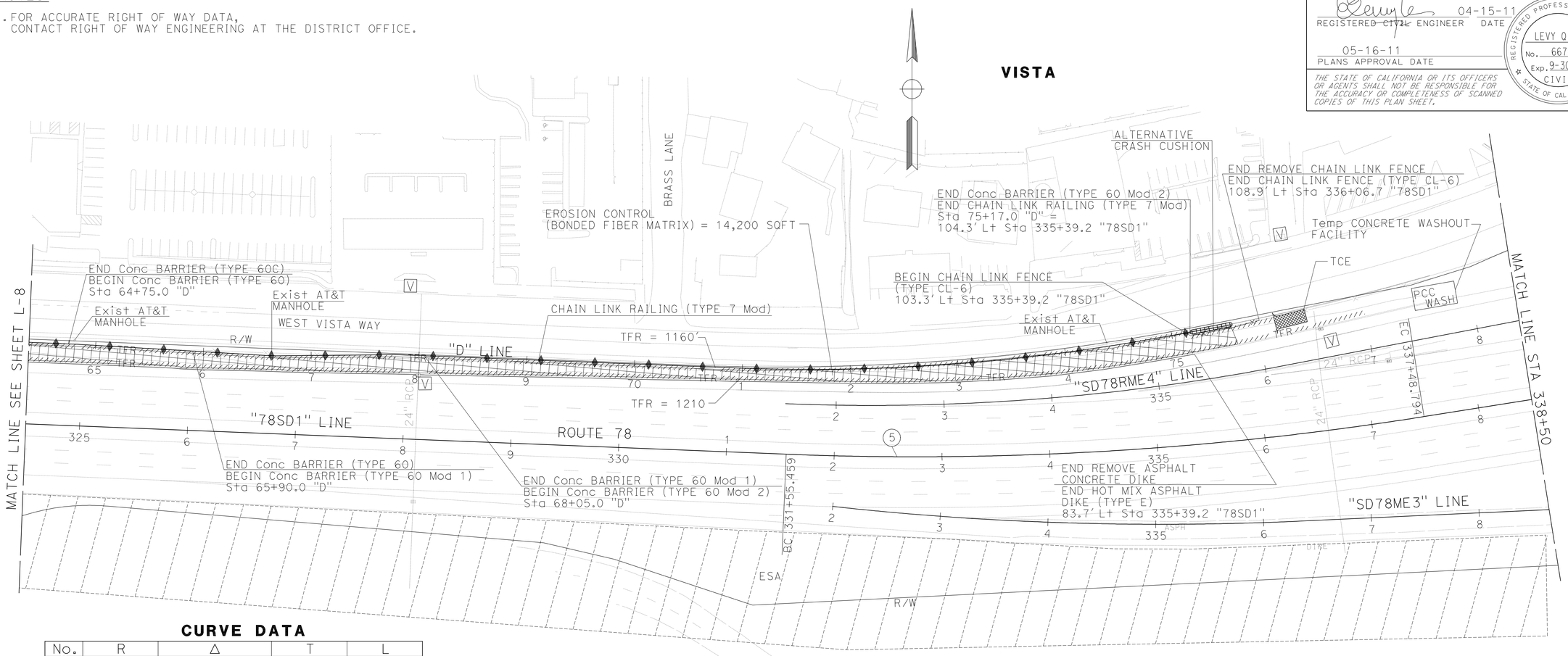

CURVE DATA

No.	R	Δ	T	L
5	3,000.00'	11°19'55"	297.64'	593.33'

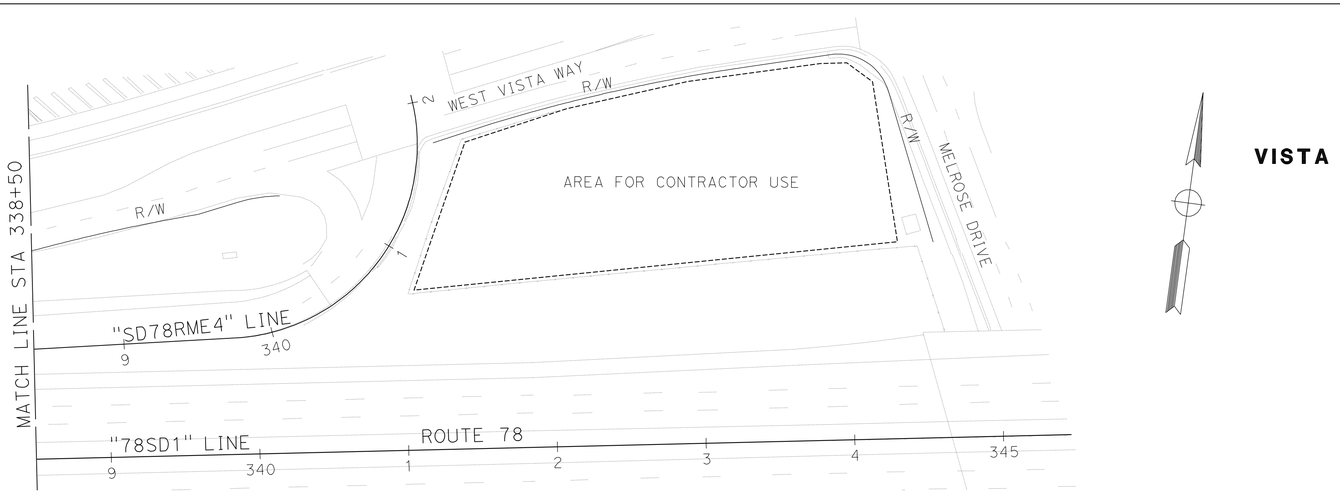

LAYOUT

SCALE: 1" = 50'

L-9

STATE OF CALIFORNIA - DEPARTMENT OF TRANSPORTATION
Caltrans PROJECT DEVELOPMENT
TRAFFIC

FUNCTIONAL SUPERVISOR: RICHARD ESTRADA
CALCULATED-DESIGNED BY: BETHNAY DESJARDINS
CHECKED BY: LEVY Q. LE
REVISED BY
DATE REVISED

LAST REVISION 05-11-11
DATE PLOTTED => 22-JUN-2011
TIME PLOTTED => 13:22

Dist	COUNTY	ROUTE	POST MILES TOTAL PROJECT	SHEET No.	TOTAL SHEETS
11	SD	78	3.5/5.8	17	87

REGISTERED ~~CIVIL~~ ENGINEER 04-15-11 DATE

05-16-11
PLANS APPROVAL DATE

REGISTERED PROFESSIONAL ENGINEER
LEVY Q LE
No. 66748
Exp. 9-30-12
CIVIL
STATE OF CALIFORNIA

THE STATE OF CALIFORNIA OR ITS OFFICERS OR AGENTS SHALL NOT BE RESPONSIBLE FOR THE ACCURACY OR COMPLETENESS OF SCANNED COPIES OF THIS PLAN SHEET.

NOTES:

1. LAPPED SPLICES IN SPIRAL REINFORCEMENT SHALL BE LAPPED AT LEAST 80 WIRE DIAMETERS. SPIRAL REINFORCEMENT AT SPLICES AND AT ENDS SHALL BE TERMINATED WITH A 135° HOOK WITH A 6" TAIL HOOKED AROUND A LONGITUDINAL BAR.
2. CONTRACTOR MUST LOCATE, DOCUMENT, AND PROTECT ALL EXISTING UTILITIES ON SITE PRIOR TO STARTING CONTRACT WORK.

PILE DATA TABLE

"LINE"	BEGIN STATION	END STATION	PILE LENGTH (L) (FEET)	PILE SPACING (FEET)	PILE Reinf
"D"	10+40.0	11+00.0	7.0	10.0	#6 Tot 6
"D"	32+80.0	44+50.0	7.0	10.0	#6 Tot 6
"D"	50+10.0	58+90.0	7.0	10.0	#6 Tot 6
"D"	68+05.0	75+17.0	7.0	10.0	#6 Tot 6

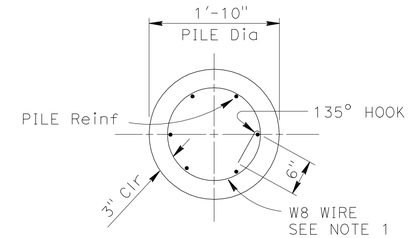

SECTION A-A

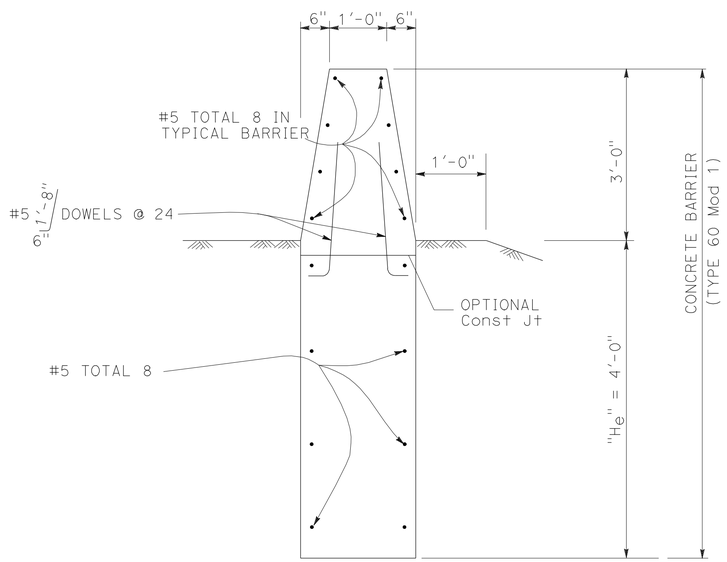

CONCRETE BARRIER (TYPE 60 Mod 1)

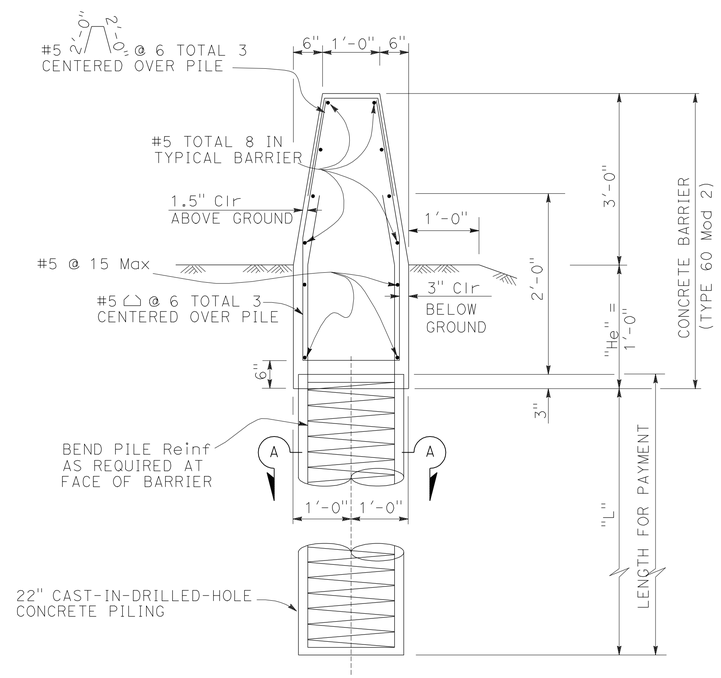

CONCRETE BARRIER (TYPE 60 Mod 2)

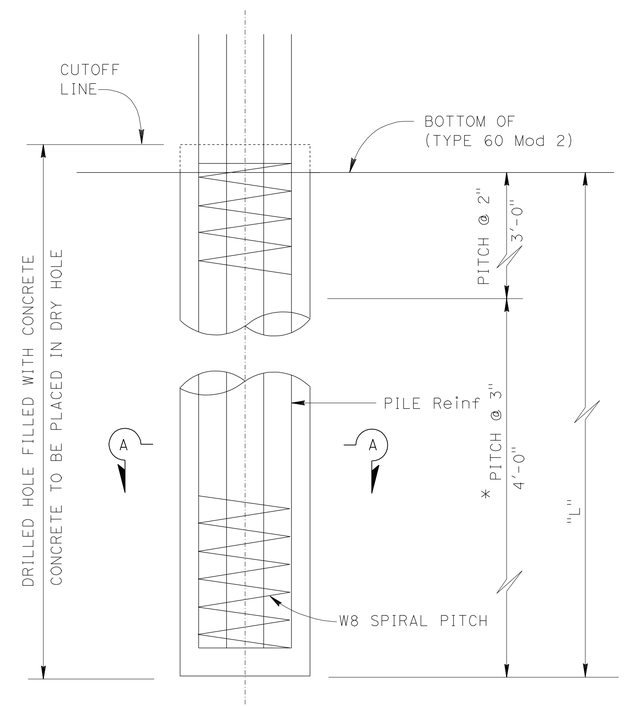

PILE ELEVATION

* @ 2" AT OPTION OF CONTRACTOR

CONSTRUCTION DETAILS

NO SCALE

C-1

STATE OF CALIFORNIA - DEPARTMENT OF TRANSPORTATION
Caltrans PROJECT DEVELOPMENT
TRAFFIC

FUNCTIONAL SUPERVISOR: RICHARD ESTRADA
CALCULATED-DESIGNED BY: BETHNAY DESJARDINS
CHECKED BY: LEVY Q. LE
REVISED BY
DATE REVISED

LAST REVISION 05-13-11
DATE PLOTTED => 22-JUN-2011
TIME PLOTTED => 13:22

Dist	COUNTY	ROUTE	POST MILES TOTAL PROJECT	SHEET No.	TOTAL SHEETS
11	SD	78	3.5/5.8	18	87

REGISTERED ~~CIVIL~~ ENGINEER 04-15-11 DATE

05-16-11
PLANS APPROVAL DATE

REGISTERED PROFESSIONAL ENGINEER LEVY Q LE No. 66748 Exp. 9-30-12 CIVIL STATE OF CALIFORNIA

THE STATE OF CALIFORNIA OR ITS OFFICERS OR AGENTS SHALL NOT BE RESPONSIBLE FOR THE ACCURACY OR COMPLETENESS OF SCANNED COPIES OF THIS PLAN SHEET.

NOTE: FOR DETAILS NOT SHOWN, REFER TO STANDARD PLANS

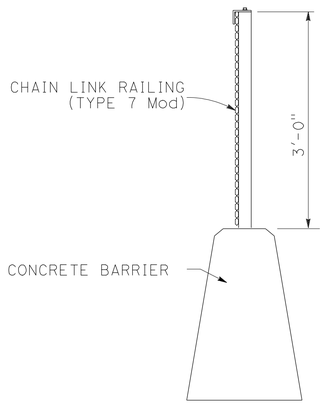

TYPICAL SECTION

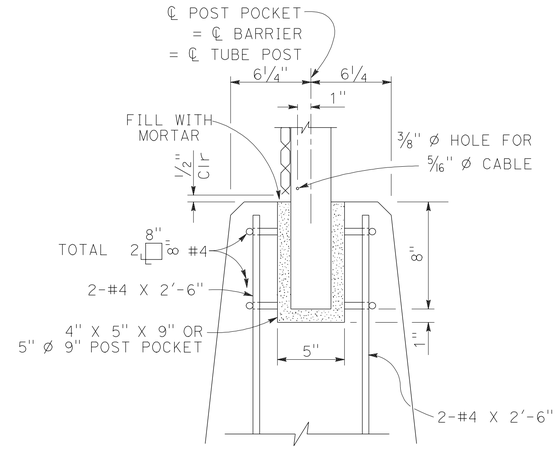

POST ANCHORAGE DETAIL

CHAIN LINK RAILING (TYPE 7 Mod)

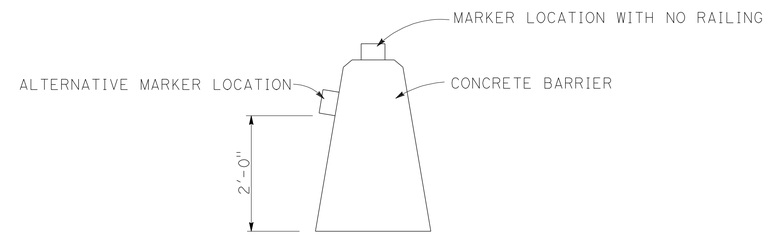

TYPICAL SECTION

CONCRETE BARRIER MARKER

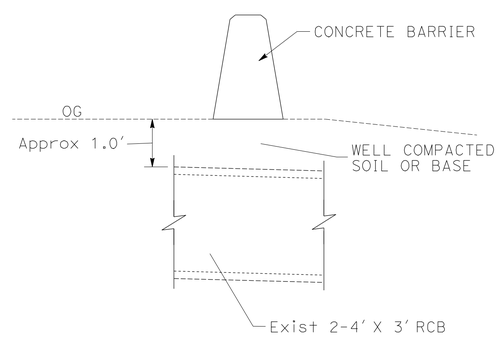

TYPICAL SECTION

CONCRETE BARRIER AT Exist 4'X3' RCB (NO FOOTING)

Approx Sta 13+69.5 TO 13+78.5 "D"
Approx Sta 18+23.8 TO 18+31.8 "D"

CONSTRUCTION DETAILS

NO SCALE

C-2

STATE OF CALIFORNIA - DEPARTMENT OF TRANSPORTATION
Caltrans TRAFFIC PROJECT DEVELOPMENT

FUNCTIONAL SUPERVISOR: RICHARD ESTRADA
CALCULATED-DESIGNED BY: BETHNAY DESJARDINS
CHECKED BY: LEVY Q. LE
REVISED BY
DATE REVISED

LAST REVISION 05-13-11
DATE PLOTTED => 22-JUN-2011
TIME PLOTTED => 13:22

Dist	COUNTY	ROUTE	POST MILES TOTAL PROJECT	SHEET No.	TOTAL SHEETS
11	SD	78	3.5/5.8	19	87

REGISTERED ~~CIVIL~~ ENGINEER 04-15-11 DATE

05-16-11
PLANS APPROVAL DATE

REGISTERED PROFESSIONAL ENGINEER
LEVY Q LE
No. 66748
Exp. 9-30-12
CIVIL
STATE OF CALIFORNIA

THE STATE OF CALIFORNIA OR ITS OFFICERS OR AGENTS SHALL NOT BE RESPONSIBLE FOR THE ACCURACY OR COMPLETENESS OF SCANNED COPIES OF THIS PLAN SHEET.

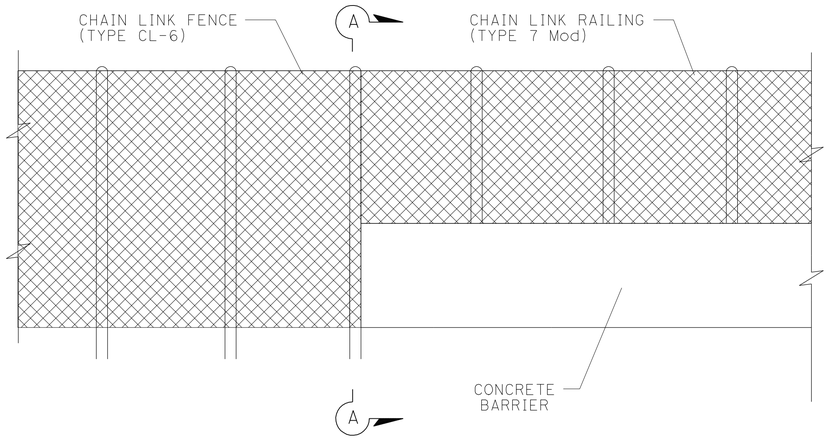

ELEVATION
VIEW FROM FREEWAY

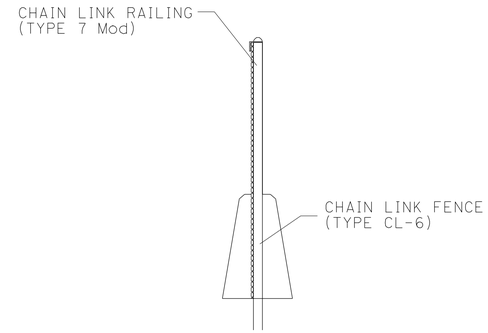

SECTION A-A

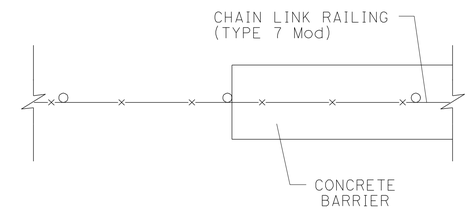

PLAN

TRANSITION FROM CHAIN LINK FENCE (TYPE CL-6) TO CHAIN LINK RAILING (TYPE 7 Mod) WITHOUT ALTERNATIVE CRASH CUSHION

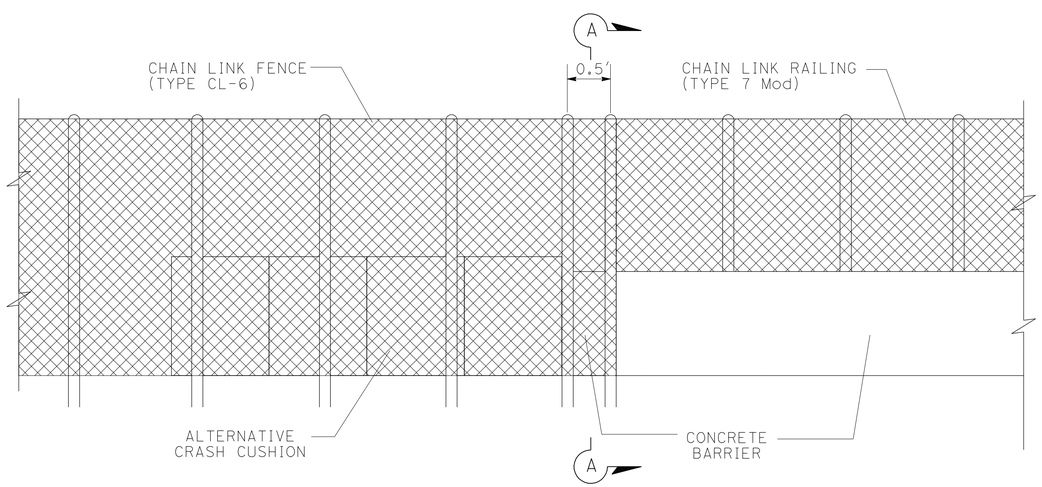

ELEVATION
VIEW FROM FREEWAY

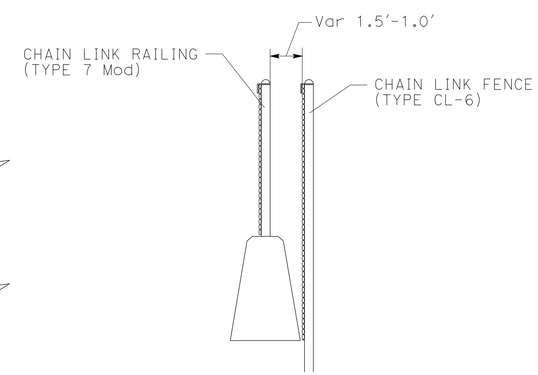

SECTION A-A

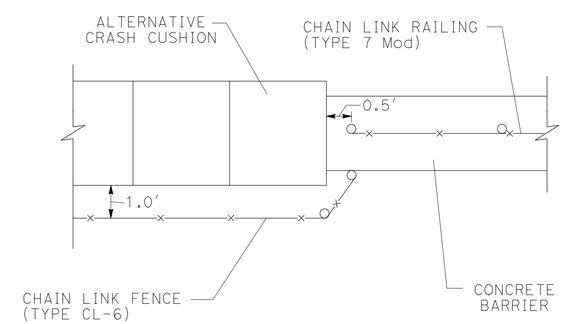

PLAN

TRANSITION FROM CHAIN LINK FENCE (TYPE CL-6) TO CHAIN LINK RAILING (TYPE 7 Mod) WITH ALTERNATIVE CRASH CUSHION

CONSTRUCTION DETAILS

NO SCALE

C-3

STATE OF CALIFORNIA - DEPARTMENT OF TRANSPORTATION
Caltrans PROJECT DEVELOPMENT
TRAFFIC

FUNCTIONAL SUPERVISOR: RICHARD ESTRADA
CALCULATED-DESIGNED BY: BETHNAY DESJARDINS
CHECKED BY: LEVY Q. LE
REVISED BY
DATE REVISED

LAST REVISION 05-13-11
DATE PLOTTED => 22-JUN-2011
TIME PLOTTED => 13:22

Dist	COUNTY	ROUTE	POST MILES TOTAL PROJECT	SHEET No.	TOTAL SHEETS
11	SD	78	3.5/5.8	20	87

REGISTERED CIVIL ENGINEER 04-15-11 DATE

05-16-11
PLANS APPROVAL DATE

REGISTERED PROFESSIONAL ENGINEER LEVY Q LE No. 66748 Exp. 9-30-12 CIVIL STATE OF CALIFORNIA

THE STATE OF CALIFORNIA OR ITS OFFICERS OR AGENTS SHALL NOT BE RESPONSIBLE FOR THE ACCURACY OR COMPLETENESS OF SCANNED COPIES OF THIS PLAN SHEET.

NOTES:

1. FOR DETAILS NOT SHOWN, REFER TO MANUFACTURER'S INSTALLATION MANUAL.
2. SEE STANDARD PLAN A82C2 FOR BACKUP BLOCK DETAILS.

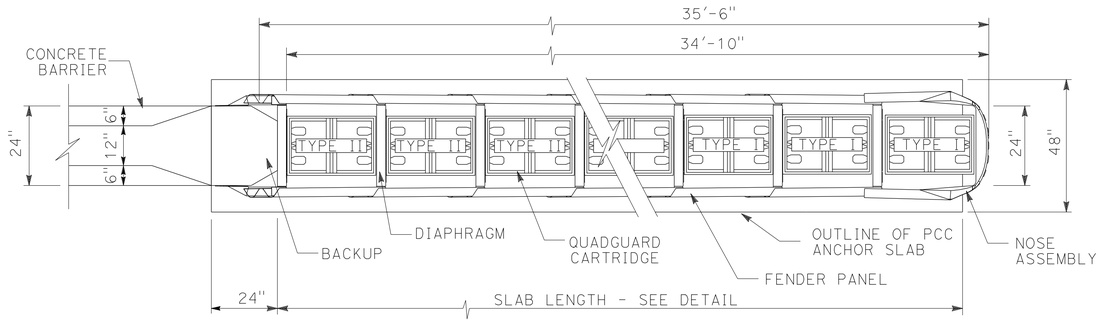

PLAN

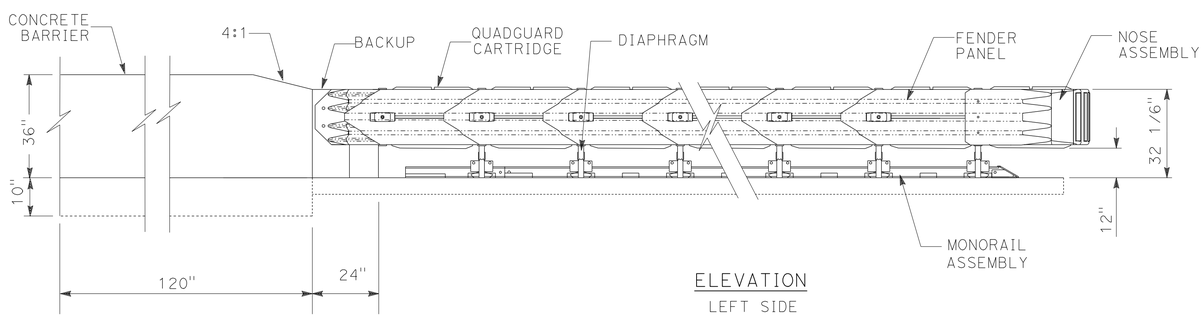

ELEVATION

LEFT SIDE

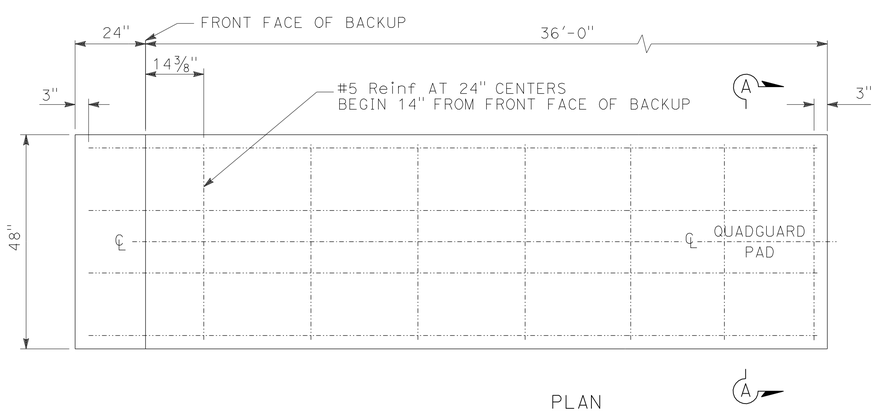

PLAN

CONCRETE ANCHOR SLAB

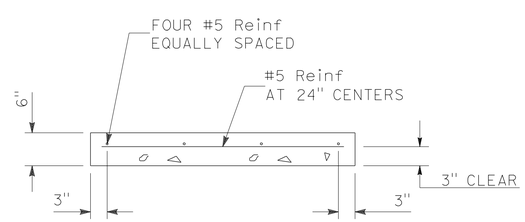

SECTION 'A-A'

ALTERNATIVE CRASH CUSHION (QUADGUARD ELITE)

CONSTRUCTION DETAILS

NO SCALE

C-4

STATE OF CALIFORNIA - DEPARTMENT OF TRANSPORTATION
Caltrans PROJECT DEVELOPMENT
TRAFFIC

FUNCTIONAL SUPERVISOR: RICHARD ESTRADA
CALCULATED-DESIGNED BY: BETHNAY DESJARDINS
CHECKED BY: LEVY Q. LE
REVISED BY
DATE REVISED

LAST REVISION 05-13-11
DATE PLOTTED => 22-JUN-2011
TIME PLOTTED => 13:22

Dist	COUNTY	ROUTE	POST MILES TOTAL PROJECT	SHEET No.	TOTAL SHEETS
11	SD	78	3.5/5.8	21	87

REGISTERED ~~CIVIL~~ ENGINEER 04-15-11 DATE

05-16-11
PLANS APPROVAL DATE

REGISTERED PROFESSIONAL ENGINEER LEVY Q LE No. 66748 Exp. 9-30-12 CIVIL STATE OF CALIFORNIA

THE STATE OF CALIFORNIA OR ITS OFFICERS OR AGENTS SHALL NOT BE RESPONSIBLE FOR THE ACCURACY OR COMPLETENESS OF ELECTRONIC COPIES OF THIS PLAN SHEET.

NOTE: FOR DETAILS NOT SHOWN, REFER TO MANUFACTURER'S INSTALLATION MANUAL.

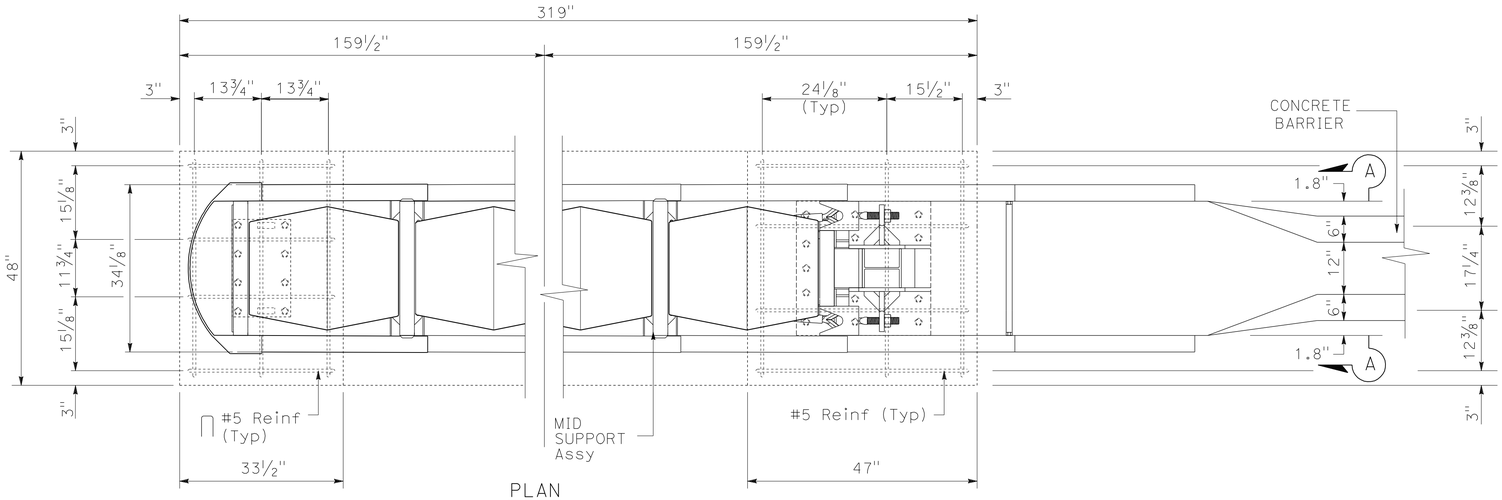

PLAN

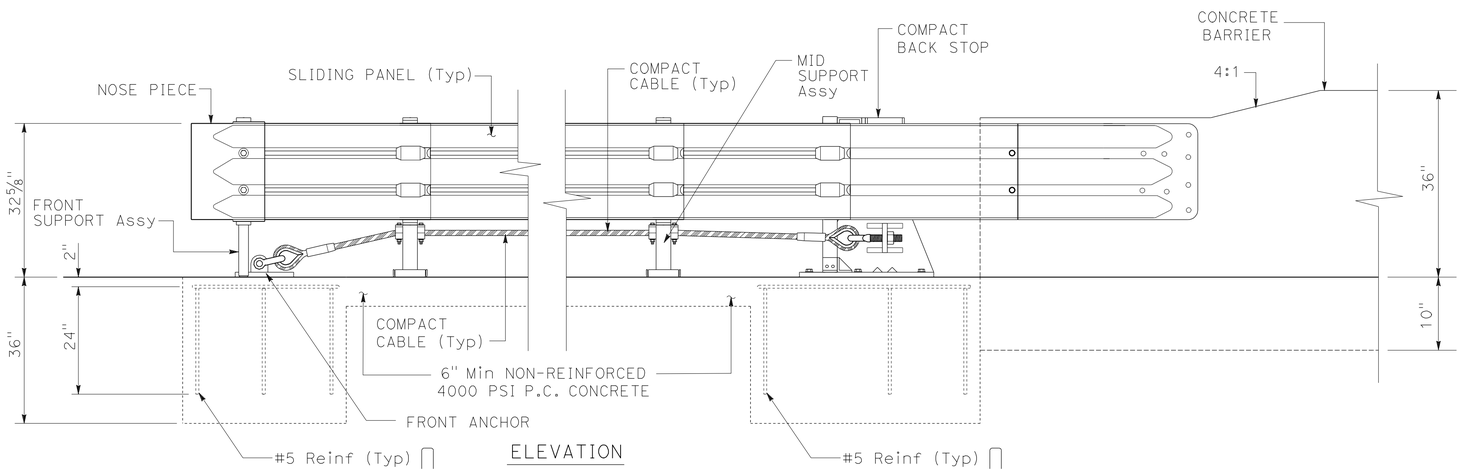

ELEVATION

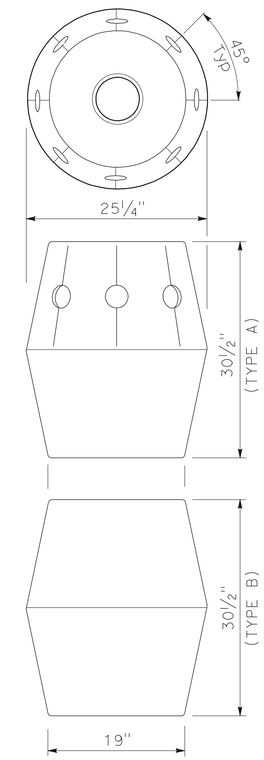

ENERGY ABSORBING CARTRIDGE

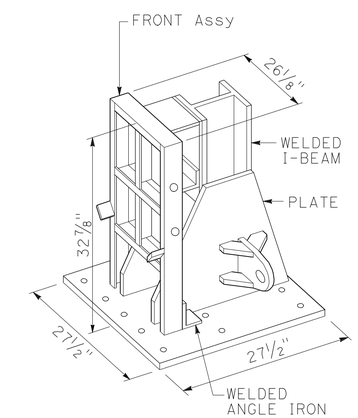

COMPACT BACK STOP

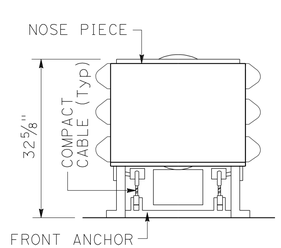

FRONT ELEVATION

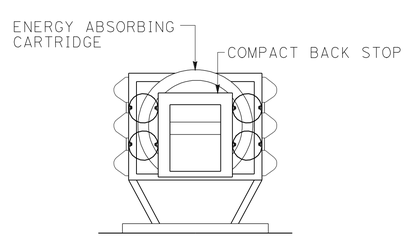

BACK ELEVATION

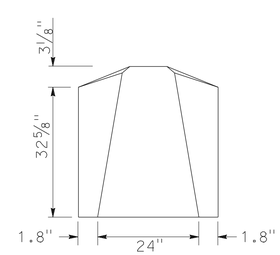

SECTION A-A

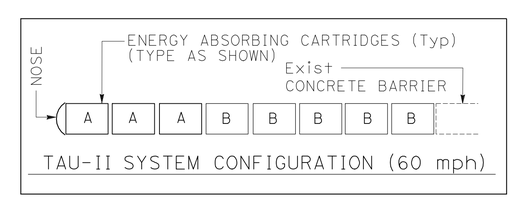

TAU-II SYSTEM CONFIGURATION (60 mph)

ALTERNATIVE CRASH CUSHION (TAU-II)

CONSTRUCTION DETAILS

NO SCALE

C-5

STATE OF CALIFORNIA - DEPARTMENT OF TRANSPORTATION
Caltrans® TRAFFIC PROJECT DEVELOPMENT

FUNCTIONAL SUPERVISOR: RICHARD ESTRADA
CALCULATED-DESIGNED BY: BETHNAY DESJARDINS
CHECKED BY: LEVY Q. LE
REVISED BY / DATE REVISED

LAST REVISION 05-13-11
DATE PLOTTED => 22-JUN-2011
TIME PLOTTED => 13:22

Dist	COUNTY	ROUTE	POST MILES TOTAL PROJECT	SHEET No.	TOTAL SHEETS
11	SD	78	3.5/5.8	22	87

REGISTERED ~~CIVIL~~ ENGINEER 04-15-11 DATE

05-16-11
PLANS APPROVAL DATE

REGISTERED PROFESSIONAL ENGINEER
LEVY Q LE
No. 66748
Exp. 9-30-12
CIVIL
STATE OF CALIFORNIA

THE STATE OF CALIFORNIA OR ITS OFFICERS OR AGENTS SHALL NOT BE RESPONSIBLE FOR THE ACCURACY OR COMPLETENESS OF SCANNED COPIES OF THIS PLAN SHEET.

CURVE DATA

No.	R	Δ	T	L
10	2833.41′	9°43′21″	240.98′	480.80′

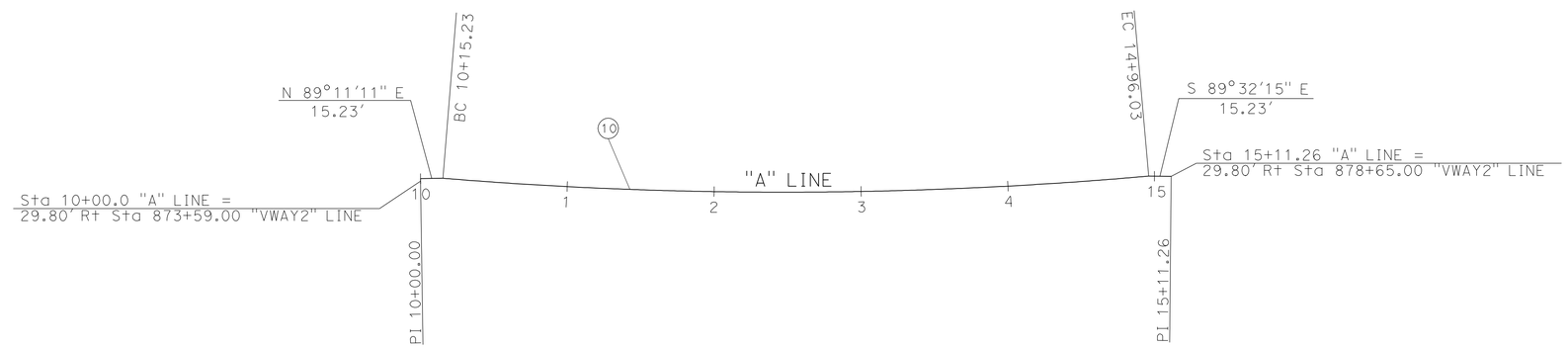

"A" BARRIER ALIGNMENT

CONSTRUCTION DETAILS

SCALE: 1" = 50′

C-6

STATE OF CALIFORNIA - DEPARTMENT OF TRANSPORTATION
Caltrans PROJECT DEVELOPMENT
TRAFFIC

FUNCTIONAL SUPERVISOR: RICHARD ESTRADA
CALCULATED-DESIGNED BY: BETHNAY DESJARDINS
CHECKED BY: LEVY Q. LE
REVISED BY
DATE REVISED

LAST REVISION 05-13-11
DATE PLOTTED => 22-JUN-2011
TIME PLOTTED => 13:22

Dist	COUNTY	ROUTE	POST MILES TOTAL PROJECT	SHEET No.	TOTAL SHEETS
11	SD	78	3.5/5.8	23	87

REGISTERED ~~CIVIL~~ ENGINEER 04-15-11 DATE

05-16-11
PLANS APPROVAL DATE

REGISTERED PROFESSIONAL ENGINEER
LEVY Q LE
No. 66748
Exp. 9-30-12
CIVIL
STATE OF CALIFORNIA

THE STATE OF CALIFORNIA OR ITS OFFICERS OR AGENTS SHALL NOT BE RESPONSIBLE FOR THE ACCURACY OR COMPLETENESS OF SCANNED COPIES OF THIS PLAN SHEET.

CURVE DATA

No.	R	Δ	T	L
20	4316.61′	2°41′49"	101.61′	203.19′
21	4058.00′	15°21′49"	547.35′	1088.14′

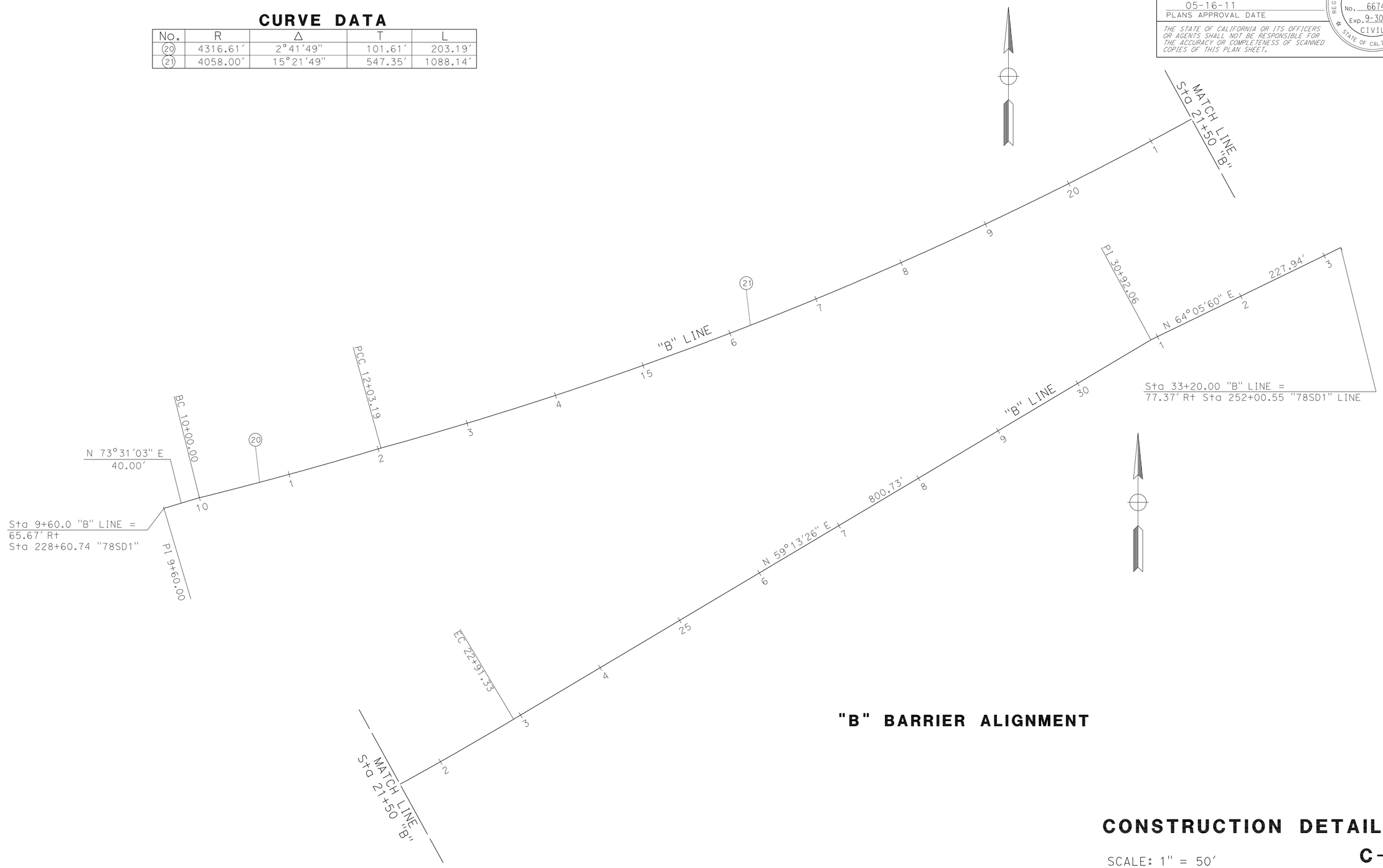

"B" BARRIER ALIGNMENT

CONSTRUCTION DETAILS

SCALE: 1" = 50′

C-7

STATE OF CALIFORNIA - DEPARTMENT OF TRANSPORTATION
Caltrans PROJECT DEVELOPMENT
TRAFFIC

FUNCTIONAL SUPERVISOR: RICHARD ESTRADA
CALCULATED-DESIGNED BY: BETHNAY DESJARDINS
CHECKED BY: LEVY Q. LE
REVISED BY
DATE REVISED

LAST REVISION 05-13-11
DATE PLOTTED => 22-JUN-2011
TIME PLOTTED => 13:22

Dist	COUNTY	ROUTE	POST MILES TOTAL PROJECT	SHEET No.	TOTAL SHEETS
11	SD	78	3.5/5.8	24	87

REGISTERED ~~CIVIL~~ ENGINEER 04-15-11 DATE

05-16-11
PLANS APPROVAL DATE

REGISTERED PROFESSIONAL ENGINEER
LEVY Q LE
No. 66748
Exp. 9-30-12
CIVIL
STATE OF CALIFORNIA

THE STATE OF CALIFORNIA OR ITS OFFICERS OR AGENTS SHALL NOT BE RESPONSIBLE FOR THE ACCURACY OR COMPLETENESS OF SCANNED COPIES OF THIS PLAN SHEET.

CURVE DATA

No.	R	Δ	T	L
30	10020.37′	1°58′22″	172.52′	345.00′
31	1019.14′	9°29′16″	84.57′	168.76′

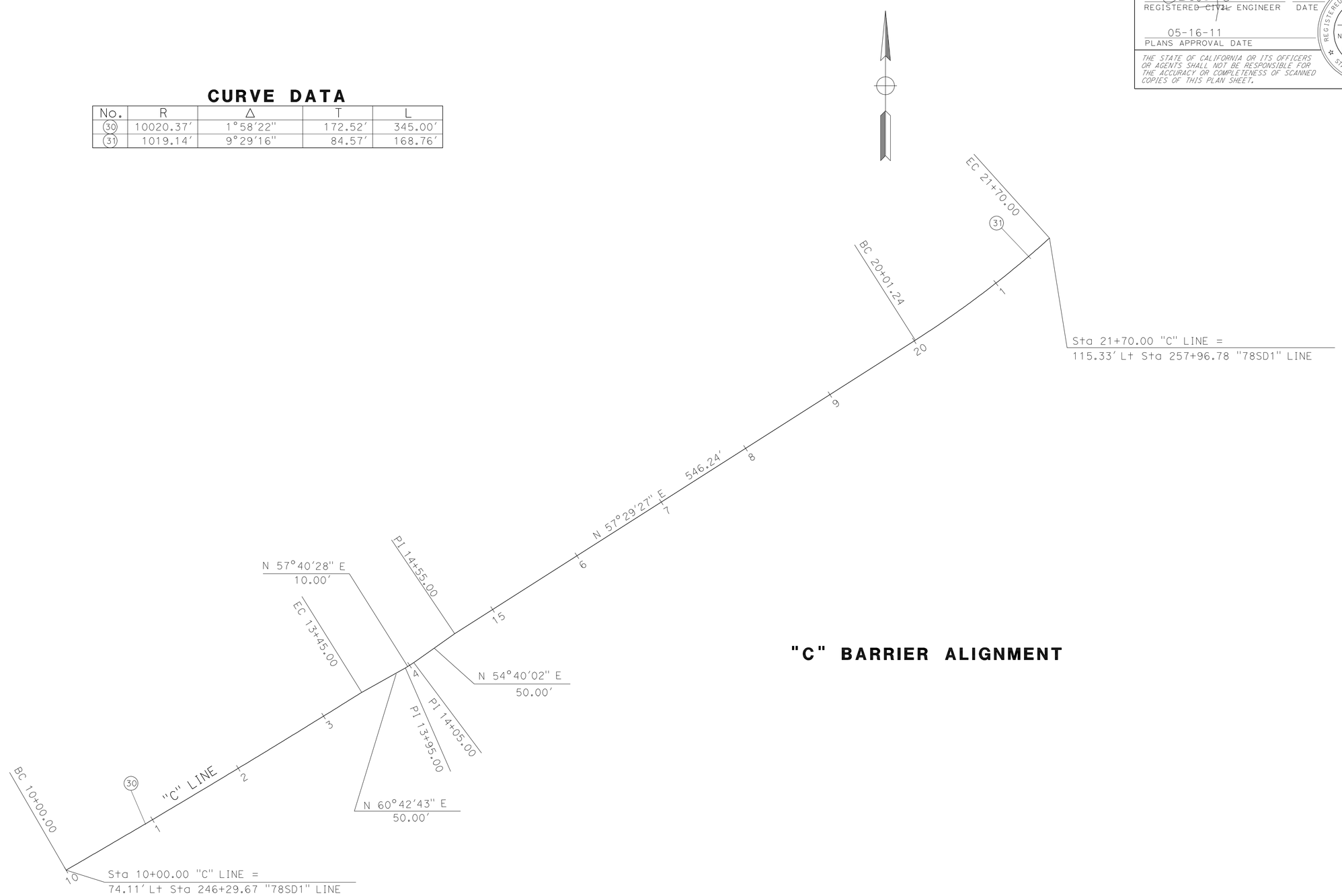

"C" BARRIER ALIGNMENT

CONSTRUCTION DETAILS

SCALE: 1″ = 50′

C-8

STATE OF CALIFORNIA - DEPARTMENT OF TRANSPORTATION
Caltrans® TRAFFIC PROJECT DEVELOPMENT

FUNCTIONAL SUPERVISOR: RICHARD ESTRADA
CALCULATED-DESIGNED BY: BETHNAY DESJARDINS
CHECKED BY: LEVY Q. LE
REVISED BY
DATE REVISED

LAST REVISION 05-13-11
DATE PLOTTED => 22-JUN-2011
TIME PLOTTED => 13:22

Dist	COUNTY	ROUTE	POST MILES TOTAL PROJECT	SHEET No.	TOTAL SHEETS
11	SD	78	3.5/5.8	25	87

REGISTERED ~~CIVIL~~ ENGINEER 04-15-11 DATE

05-16-11
PLANS APPROVAL DATE

REGISTERED PROFESSIONAL ENGINEER
LEVY Q LE
No. 66748
Exp. 9-30-12
CIVIL
STATE OF CALIFORNIA

THE STATE OF CALIFORNIA OR ITS OFFICERS OR AGENTS SHALL NOT BE RESPONSIBLE FOR THE ACCURACY OR COMPLETENESS OF SCANNED COPIES OF THIS PLAN SHEET.

CURVE DATA

No.	R	Δ	T	L
40	4021.31′	4°19′32″	151.87′	303.59′
41	5979.47′	3°18′50″	172.97′	345.84′

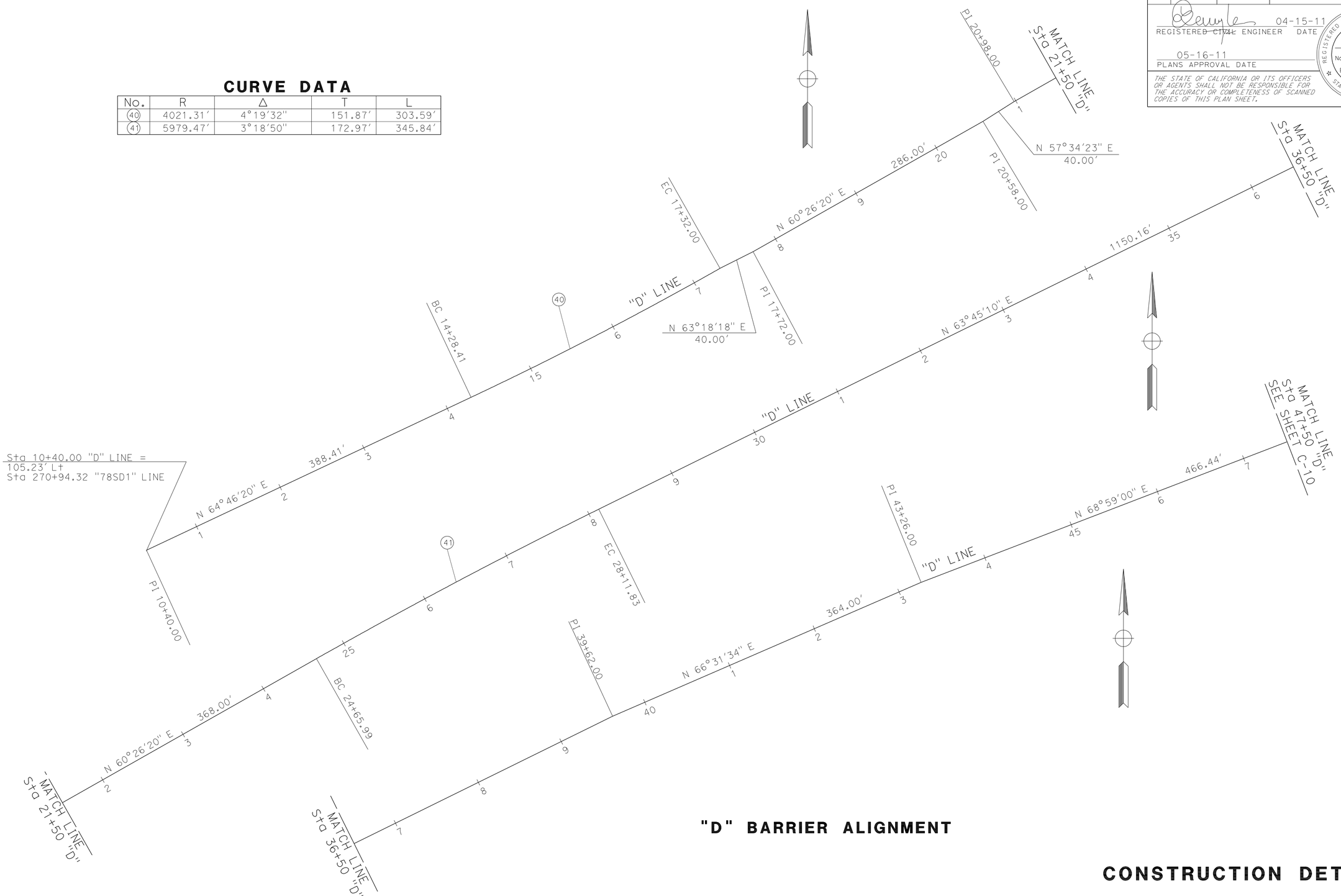

"D" BARRIER ALIGNMENT

CONSTRUCTION DETAILS

SCALE: 1″ = 50′

C-9

STATE OF CALIFORNIA - DEPARTMENT OF TRANSPORTATION
Caltrans PROJECT DEVELOPMENT
TRAFFIC

FUNCTIONAL SUPERVISOR: RICHARD ESTRADA
CALCULATED-DESIGNED BY: BETHNAY DESJARDINS
CHECKED BY: LEVY Q. LE
REVISED BY
DATE REVISED

LAST REVISION 05-13-11
DATE PLOTTED => 22-JUN-2011
TIME PLOTTED => 13:23

Dist	COUNTY	ROUTE	POST MILES TOTAL PROJECT	SHEET No.	TOTAL SHEETS
11	SD	78	3.5/5.8	26	87

REGISTERED ~~CIVIL~~ ENGINEER 04-15-11 DATE

05-16-11
PLANS APPROVAL DATE

REGISTERED PROFESSIONAL ENGINEER
LEVY Q LE
No. 66748
Exp. 9-30-12
CIVIL
STATE OF CALIFORNIA

THE STATE OF CALIFORNIA OR ITS OFFICERS OR AGENTS SHALL NOT BE RESPONSIBLE FOR THE ACCURACY OR COMPLETENESS OF SCANNED COPIES OF THIS PLAN SHEET.

CURVE DATA

No.	R	Δ	T	L
42	1978.16′	6°14′17″	107.79′	215.37′
43	3072.24′	14°36′35″	393.82′	783.38′
44	1800.00′	12°13′22″	192.73′	383.99′

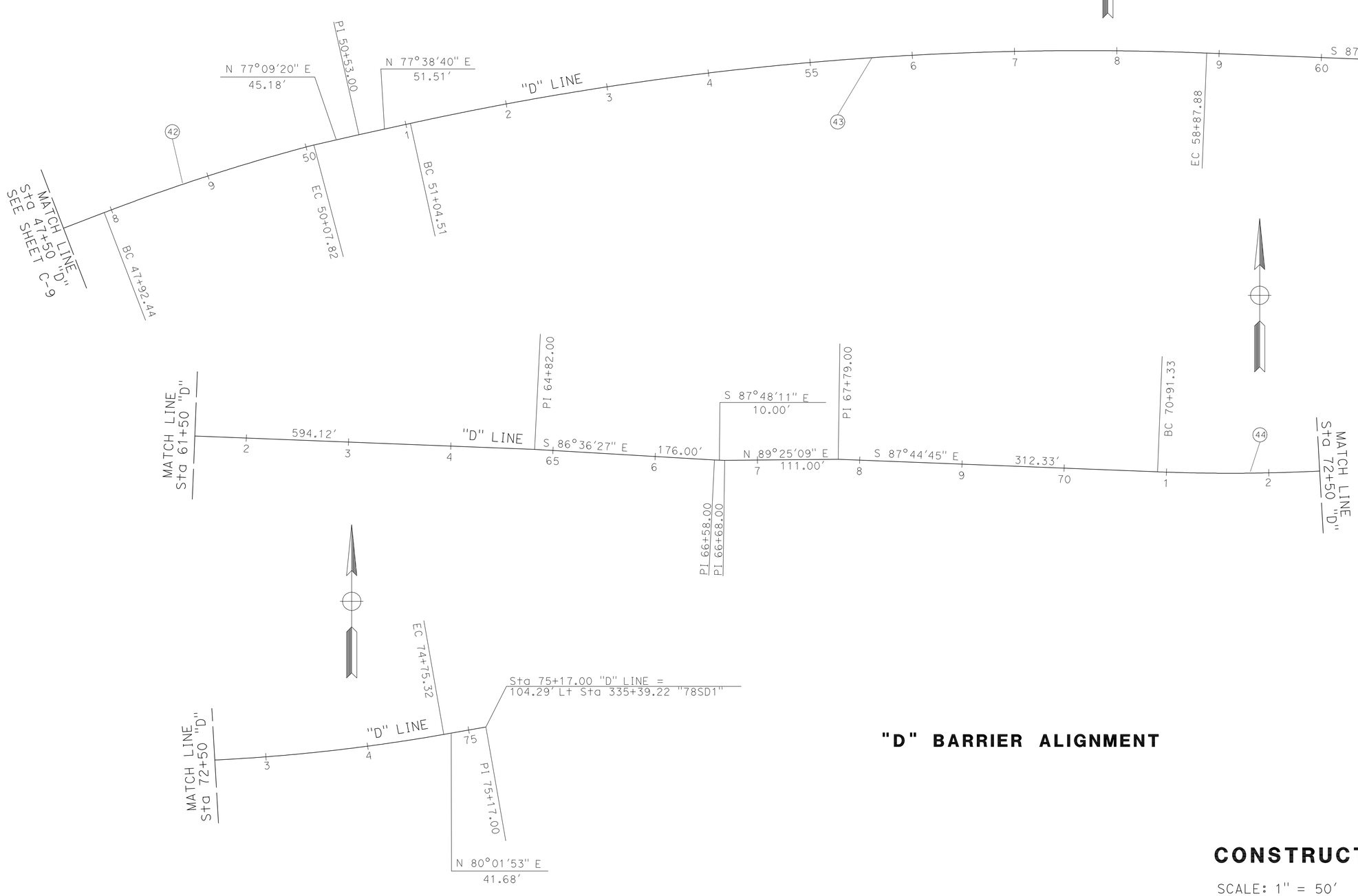

"D" BARRIER ALIGNMENT

CONSTRUCTION DETAILS

SCALE: 1″ = 50′

C-10

STATE OF CALIFORNIA - DEPARTMENT OF TRANSPORTATION
Caltrans® PROJECT DEVELOPMENT
TRAFFIC

FUNCTIONAL SUPERVISOR: RICHARD ESTRADA
CALCULATED-DESIGNED BY: BETHNAY DESJARDINS
CHECKED BY: LEVY Q. LE
REVISED BY
DATE REVISED

LAST REVISION 05-13-11
DATE PLOTTED => 22-JUN-2011
TIME PLOTTED => 13:23

Dist	COUNTY	ROUTE	POST MILES TOTAL PROJECT	SHEET No.	TOTAL SHEETS
11	SD	78	3.5/5.8	27	87

Timothy T. Brownson 04-21-11
REGISTERED CIVIL ENGINEER DATE

05-16-11
PLANS APPROVAL DATE

REGISTERED PROFESSIONAL ENGINEER
TIMOTHY T. BROWNSON
No. C48861
Exp. 9-30-12
CIVIL
STATE OF CALIFORNIA

THE STATE OF CALIFORNIA OR ITS OFFICERS OR AGENTS SHALL NOT BE RESPONSIBLE FOR THE ACCURACY OR COMPLETENESS OF SCANNED COPIES OF THIS PLAN SHEET.

NOTES:

1. FOR ACCURATE RIGHT OF WAY AND ACCESS DATA, CONTACT RIGHT OF WAY ENGINEERING AT THE DISTRICT OFFICE
2. ELEVATIONS ARE BASED ON NAVD88 (OR PER OTHER SURVEYS).

LEGEND:

X DRAINAGE SYSTEM

X DRAINAGE UNIT

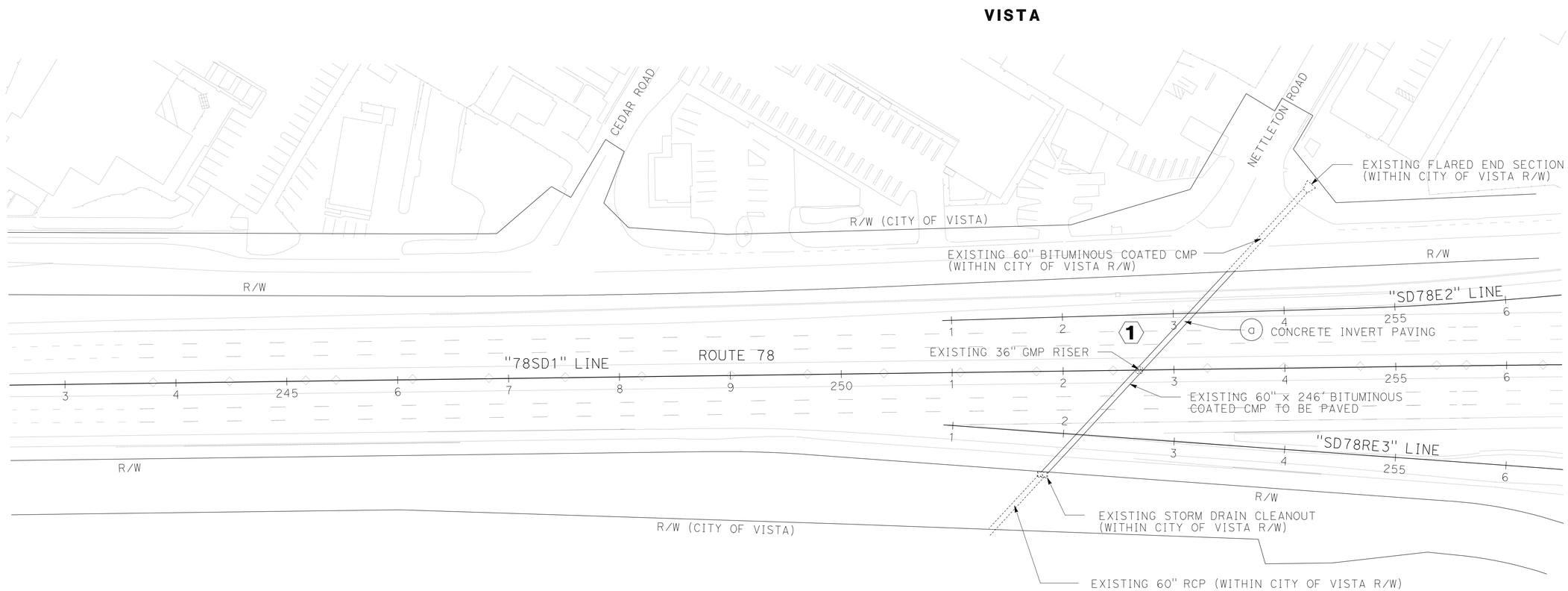

THIS PLAN ACCURATE FOR DRAINAGE WORK ONLY

DRAINAGE PLAN

SCALE: 1" = 50'

D-1

REVISED BY	DATE REVISED
DON LUONG	TIM BROWNSON
CALCULATED-DESIGNED BY	CHECKED BY
FUNCTIONAL SUPERVISOR	RICHARD ESTRADA

STATE OF CALIFORNIA - DEPARTMENT OF TRANSPORTATION
Caltrans TRAFFIC PROJECT DEVELOPMENT

LAST REVISION 05-13-11
DATE PLOTTED => 22-JUN-2011
TIME PLOTTED => 13:23

Dist	COUNTY	ROUTE	POST MILES TOTAL PROJECT	SHEET No.	TOTAL SHEETS
11	SD	78	3.5/5.8	28	87

Timothy T. Brownson 04-21-11
REGISTERED CIVIL ENGINEER DATE

05-16-11
PLANS APPROVAL DATE

REGISTERED PROFESSIONAL ENGINEER
TIMOTHY T. BROWNSON
No. C48861
Exp. 9-30-12
CIVIL
STATE OF CALIFORNIA

THE STATE OF CALIFORNIA OR ITS OFFICERS OR AGENTS SHALL NOT BE RESPONSIBLE FOR THE ACCURACY OR COMPLETENESS OF SCANNED COPIES OF THIS PLAN SHEET.

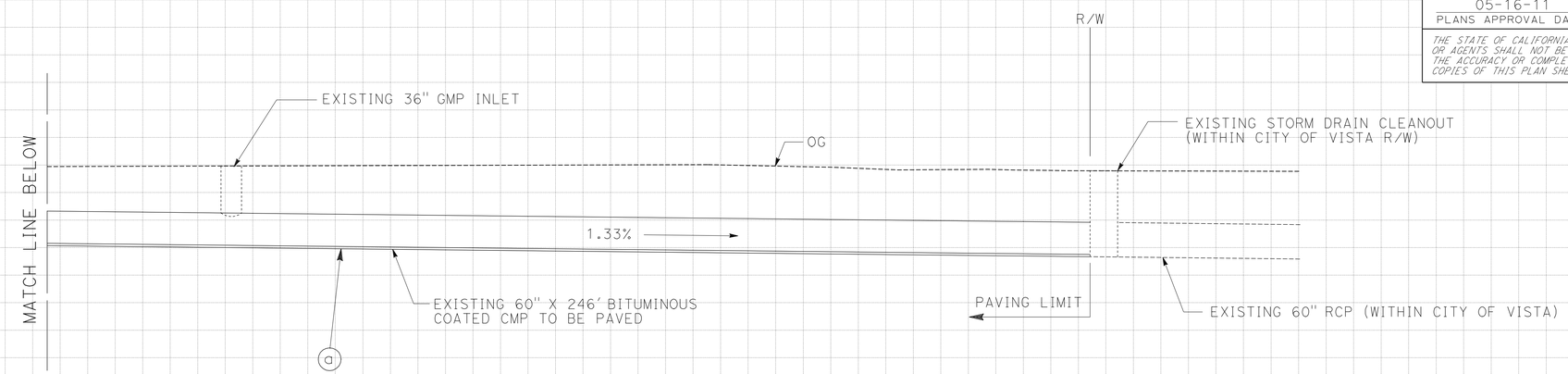

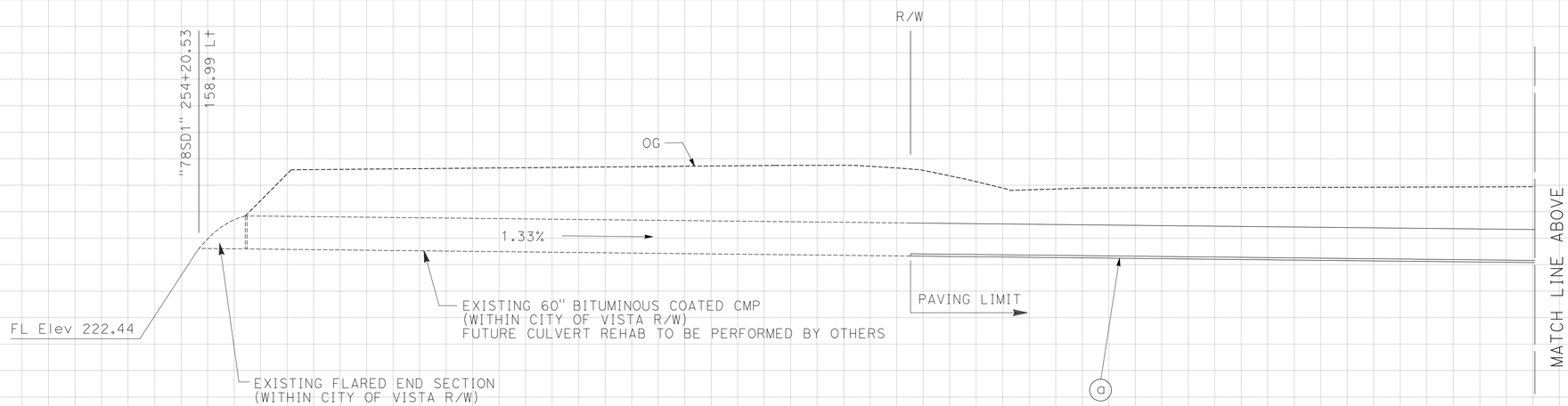

1 DRAINAGE SYSTEM
"78SD1" Sta 251+80.41 to 254+20.53

(a) CONCRETE INVERT PAVING (SEE DRAINAGE DETAILS)

DRAINAGE PROFILES

SCALE: 1"=10' Horz
1"=10' Vert

DP-1

REVISED BY | DATE REVISED
DON LUONG | TIM BROWNSON
CALCULATED-DESIGNED BY | CHECKED BY
FUNCTIONAL SUPERVISOR | RICHARD ESTRADA
STATE OF CALIFORNIA - DEPARTMENT OF TRANSPORTATION
Caltrans PROJECT DEVELOPMENT
TRAFFIC

DATE PLOTTED => 22-JUN-2011
TIME PLOTTED => 13:23
LAST REVISION 05-13-11

Dist	COUNTY	ROUTE	POST MILES TOTAL PROJECT	SHEET No.	TOTAL SHEETS
11	SD	78	3.5/5.8	29	87

Timothy T. Brownson 04-21-11
REGISTERED CIVIL ENGINEER DATE

05-16-11
PLANS APPROVAL DATE

REGISTERED PROFESSIONAL ENGINEER
TIMOTHY T. BROWNSON
No. C48861
Exp. 9-30-12
CIVIL
STATE OF CALIFORNIA

THE STATE OF CALIFORNIA OR ITS OFFICERS OR AGENTS SHALL NOT BE RESPONSIBLE FOR THE ACCURACY OR COMPLETENESS OF SCANNED COPIES OF THIS PLAN SHEET.

CONSTRUCTION NOTES:

1. ANY WATER DIVERSION SCHEDULED AND CONDUCTED BY THE CONTRACTOR PRIOR TO AND DURING THE CONCRETE INVERT PAVING SHALL BE AS DIRECTED AND APPROVED BY THE ENGINEER.
2. INVERT PAVING AGGREGATE SHALL MEET THE FOLLOWING CRITERIA:
   I. DURABILITY COURSE, Dc, SHALL BE GREATER THAN 75 PER CT 229 "METHOD OF TEST FOR DURABILITY INDEX".
   II. THE PERCENT LOSS, PER CT 211 "METHOD OF TEST FOR ABRASION OF COARSE AGGREGATE BY USE OF THE LOS ANGELES ABRASION TESTING MACHINE" SHALL BE LESS THAN 30%.
3. THE CONCRETE SHALL BE CURED FOR A MINIMUM PERIOD OF 48 HOURS BEFORE ANY WATER IS PERMITTED TO FLOW IN THE INVERT.

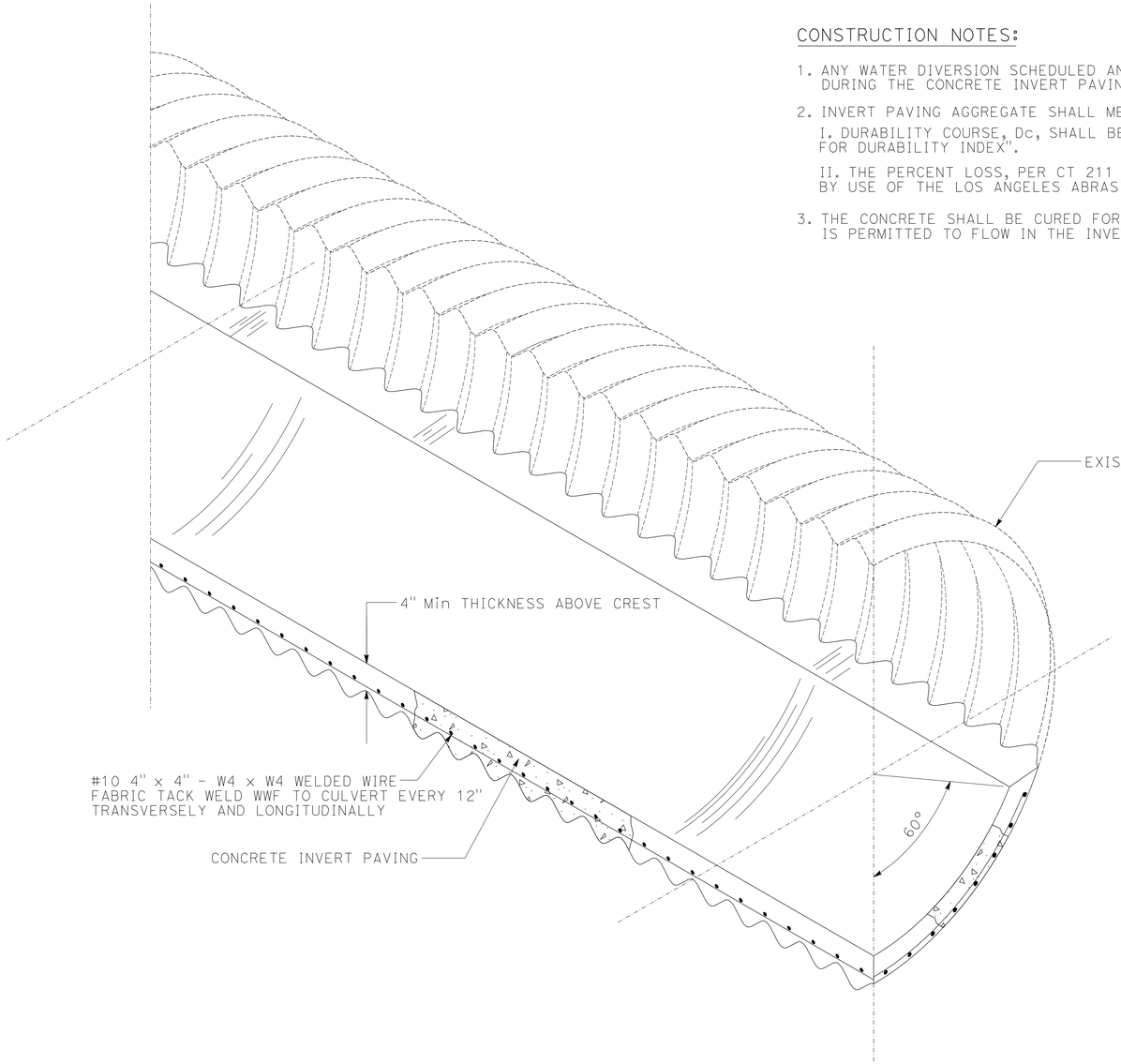

SECTION A - A

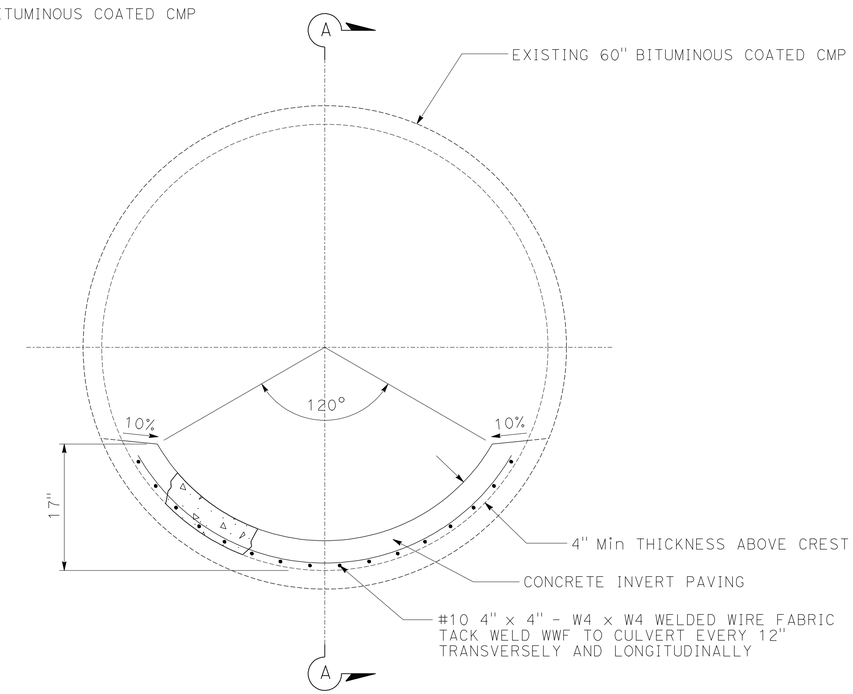

CONCRETE INVERT PAVING DETAIL

DRAINAGE DETAILS

NO SCALE

DD-1

REVISED BY	DATE REVISED

DON LUONG — CALCULATED-DESIGNED BY
TIM BROWNSON — CHECKED BY
RICHARD ESTRADA — FUNCTIONAL SUPERVISOR

STATE OF CALIFORNIA - DEPARTMENT OF TRANSPORTATION
Caltrans® PROJECT DEVELOPMENT
TRAFFIC

LAST REVISION 05-13-11
DATE PLOTTED => 22-JUN-2011
TIME PLOTTED => 13:23

Dist	COUNTY	ROUTE	POST MILES TOTAL PROJECT	SHEET No.	TOTAL SHEETS
11	SD	78	3.5/5.8	30	87

REGISTERED ~~CIVIL~~ ENGINEER 04-15-11 DATE

05-16-11
PLANS APPROVAL DATE

REGISTERED PROFESSIONAL ENGINEER
LEVY Q LE
No. 66748
Exp. 9-30-12
CIVIL
STATE OF CALIFORNIA

THE STATE OF CALIFORNIA OR ITS OFFICERS OR AGENTS SHALL NOT BE RESPONSIBLE FOR THE ACCURACY OR COMPLETENESS OF SCANNED COPIES OF THIS PLAN SHEET.

DRAINAGE QUANTITIES

DRAINAGE PLAN SHEET No.	DRAINAGE SYSTEM No.	DRAINAGE UNIT	CONCRETE INVERT PAVING	CLEANING, INSPECTING, PREPARING HOST PIPE (N)	DESCRIPTION	STATION	DRAINAGE SYSTEM No.	DRAINAGE UNIT
	⬡	○	CY	LF			⬡	○
D-1	1	a	16.0	246.0	CONCRETE INVERT PAVING	"78SD1" Sta 251+80.41 TO 254+20.53	1	a
SHEET TOTAL			16.0					

(N) = NOT A SEPARATE PAY ITEM, FOR INFORMATION ONLY.

DRAINAGE QUANTITIES

DQ-1

STATE OF CALIFORNIA - DEPARTMENT OF TRANSPORTATION
Caltrans PROJECT DEVELOPMENT
TRAFFIC

FUNCTIONAL SUPERVISOR: RICHARD ESTRADA
CALCULATED-DESIGNED BY: LEVY Q. LE
CHECKED BY: BETHNAY DESJARDINS
REVISED BY
DATE REVISED

LAST REVISION 05-13-11
DATE PLOTTED => 22-JUN-2011
TIME PLOTTED => 13:23

Dist	COUNTY	ROUTE	POST MILES TOTAL PROJECT	SHEET No.	TOTAL SHEETS
11	SD	78	3.5/5.8	31	87

REGISTERED CIVIL ENGINEER 04-21-11 DATE

05-16-11
PLANS APPROVAL DATE

REGISTERED PROFESSIONAL ENGINEER
VASANT R KALE
No. 61372
Exp. 6-30-11
CIVIL
STATE OF CALIFORNIA

THE STATE OF CALIFORNIA OR ITS OFFICERS OR AGENTS SHALL NOT BE RESPONSIBLE FOR THE ACCURACY OR COMPLETENESS OF SCANNED COPIES OF THIS PLAN SHEET.

NOTES:

1. FOR ACCURATE RIGHT OF WAY DATA, CONTACT RIGHT OF WAY ENGINEERING AT THE DISTRICT OFFICE.
2. LOCATION OF UTILITY FACILITIES SHOWN ON THESE PLANS WERE OBTAINED FROM OWNERS' RECORDS AND/OR FROM FIELD SURVEYS.
3. CONTRACTOR MUST LOCATE, DOCUMENT, AND PROTECT ALL EXISTING UTILITIES ON SITE PRIOR TO STARTING CONTRACT WORK.
4. PROTECT UNDERGROUND UTILITIES IN PLACE.
5. ALIGNMENTS "C" AND "D" FOR CONCRETE BARRIERS ARE SHOWN IN LAYOUT AND CONSTRUCTION DETAILS SHEETS.
6. SURVEY DATUMS : NAD83(HPGN) NAVD88

LEGEND:

SYMBOL	EXISTING UTILITY	OWNER
—— -s —— -s ——	SEWER	CITY OF OCEANSIDE
- —— w —— w ——	WATER	VISTA IRRIGATION DISTRICT
-e —— -(oh)—	OVERHEAD ELECTRICAL	SDG&E
—— -e —— -e ——	UNDERGROUND ELECTRIC	SDG&E
—— -g —— -g ——	GAS	SDG&E
—— -t —— -t ——	TELEPHONE	AT&T
—— -tv —— -tv ——	CABLE TELEVISION	COX
—— fo —— fo ——	FIBER OPTIC	AT&T
—— tv —— -(oh)—	OVERHEAD TELEVISION	COX

ABBREVIATIONS:

TM - TRANSMISSION MAIN
NF - NOT FOUND

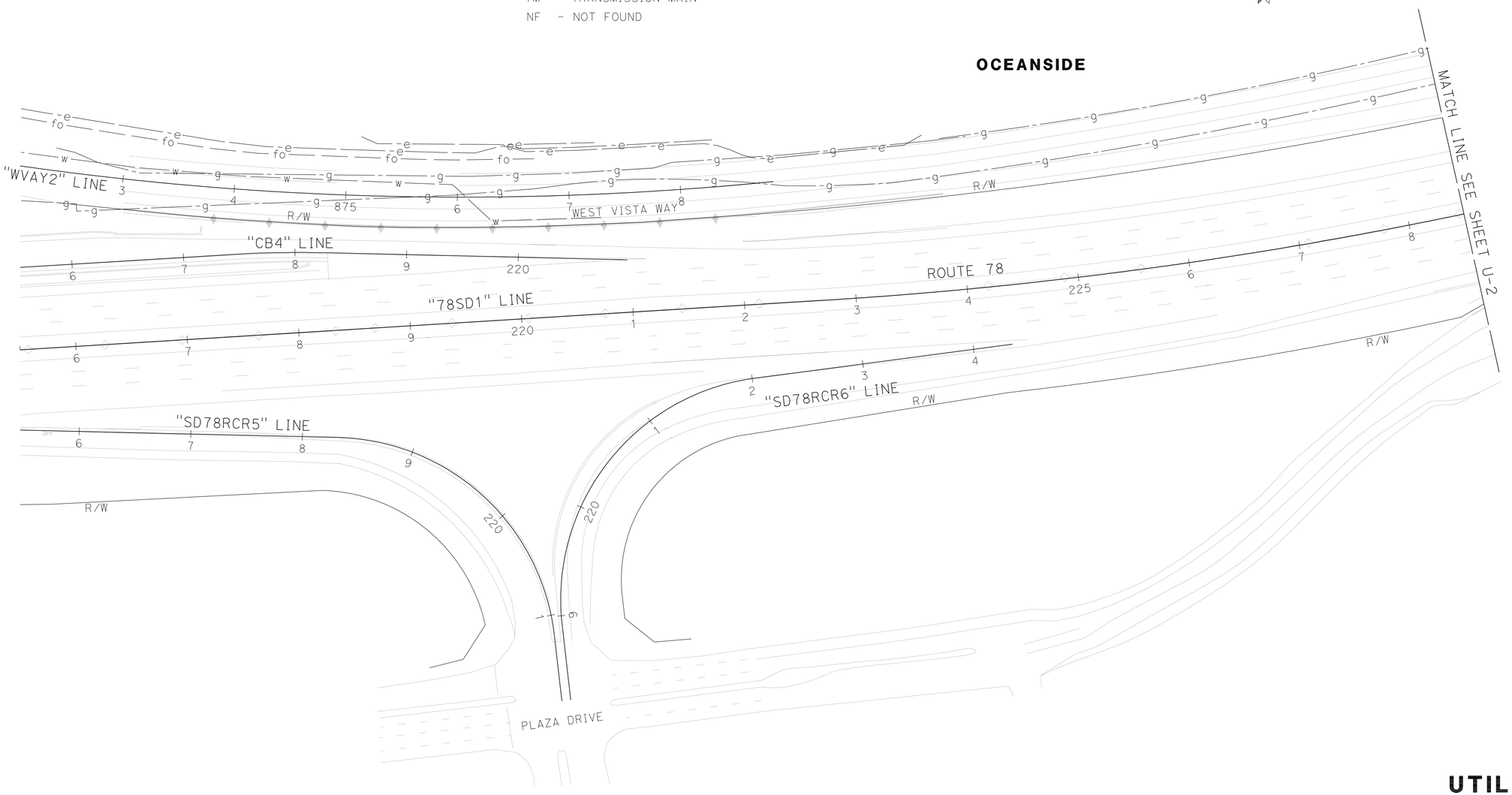

THIS PLAN ACCURATE FOR UTILITY INFORMATION ONLY

UTILITY PLAN

SCALE: 1" = 50'

U-1

STATE OF CALIFORNIA - DEPARTMENT OF TRANSPORTATION
Caltrans
DESIGN

FUNCTIONAL SUPERVISOR: ABU-BAKR H AL-JAFRI
CALCULATED-DESIGNED BY: VASANT R KALE
CHECKED BY: ARTURO REYES
REVISED BY
DATE REVISED

LAST REVISION 05-13-11
DATE PLOTTED => 22-JUN-2011
TIME PLOTTED => 13:23

Dist	COUNTY	ROUTE	POST MILES TOTAL PROJECT	SHEET No.	TOTAL SHEETS
11	SD	78	3.5/5.8	32	87

REGISTERED CIVIL ENGINEER 04-21-11 DATE

05-16-11
PLANS APPROVAL DATE

REGISTERED PROFESSIONAL ENGINEER
VASANT R KALE
No. 61372
Exp. 6-30-11
CIVIL
STATE OF CALIFORNIA

THE STATE OF CALIFORNIA OR ITS OFFICERS OR AGENTS SHALL NOT BE RESPONSIBLE FOR THE ACCURACY OR COMPLETENESS OF SCANNED COPIES OF THIS PLAN SHEET.

NOTE:

1. FOR ACCURATE RIGHT OF WAY DATA, CONTACT RIGHT OF WAY ENGINEERING AT THE DISTRICT OFFICE.

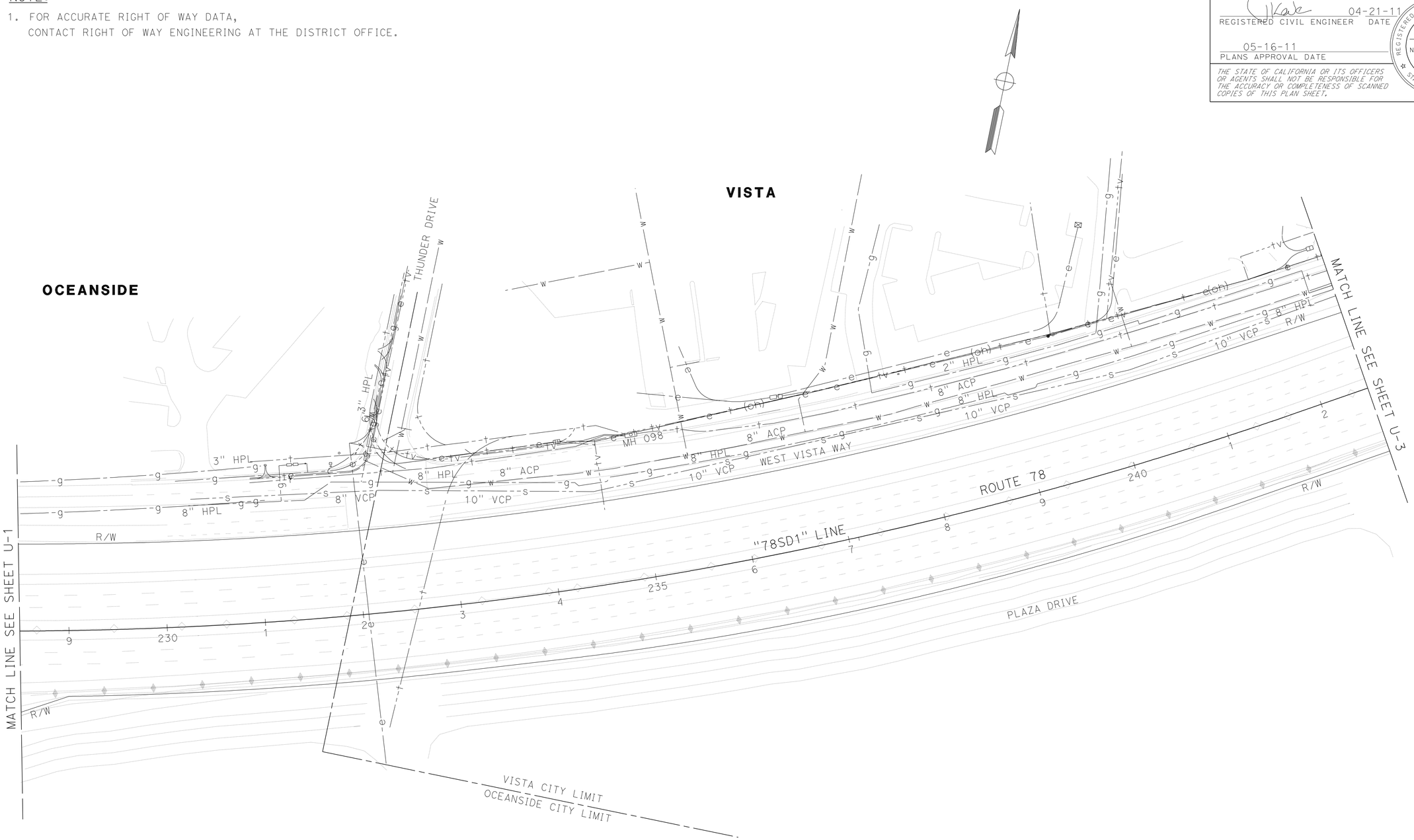

THIS PLAN ACCURATE FOR UTILITY INFORMATION ONLY

UTILITY PLAN

SCALE: 1" = 50'

U-2

STATE OF CALIFORNIA - DEPARTMENT OF TRANSPORTATION
Caltrans® **DESIGN**

FUNCTIONAL SUPERVISOR: ABU-BAKR H AL-JAFRI

CALCULATED-DESIGNED BY: VASANT R KALE
CHECKED BY: ARTURO REYES

REVISED BY
DATE REVISED

LAST REVISION 05-16-11
DATE PLOTTED => 22-JUN-2011
TIME PLOTTED => 13:23

Dist	COUNTY	ROUTE	POST MILES TOTAL PROJECT	SHEET No.	TOTAL SHEETS
11	SD	78	3.5/5.8	33	87

REGISTERED CIVIL ENGINEER 04-21-11 DATE

05-16-11
PLANS APPROVAL DATE

REGISTERED PROFESSIONAL ENGINEER
VASANT R KALE
No. 61372
Exp. 6-30-11
CIVIL
STATE OF CALIFORNIA

THE STATE OF CALIFORNIA OR ITS OFFICERS OR AGENTS SHALL NOT BE RESPONSIBLE FOR THE ACCURACY OR COMPLETENESS OF SCANNED COPIES OF THIS PLAN SHEET.

NOTE:

1. FOR ACCURATE RIGHT OF WAY DATA, CONTACT RIGHT OF WAY ENGINEERING AT THE DISTRICT OFFICE.

POTHOLE LOCATION INFORMATION

No.	NORTHING	EASTING	TOP OF PIPE Elev	DEPTH
1	2,013,143.591	6,245,786.833	229.9	4.8
2	2,013,160.938	6,245,815.858	229.7	5.0′
3	2,013,259.059	6,245,968.388	226.7	7.4′

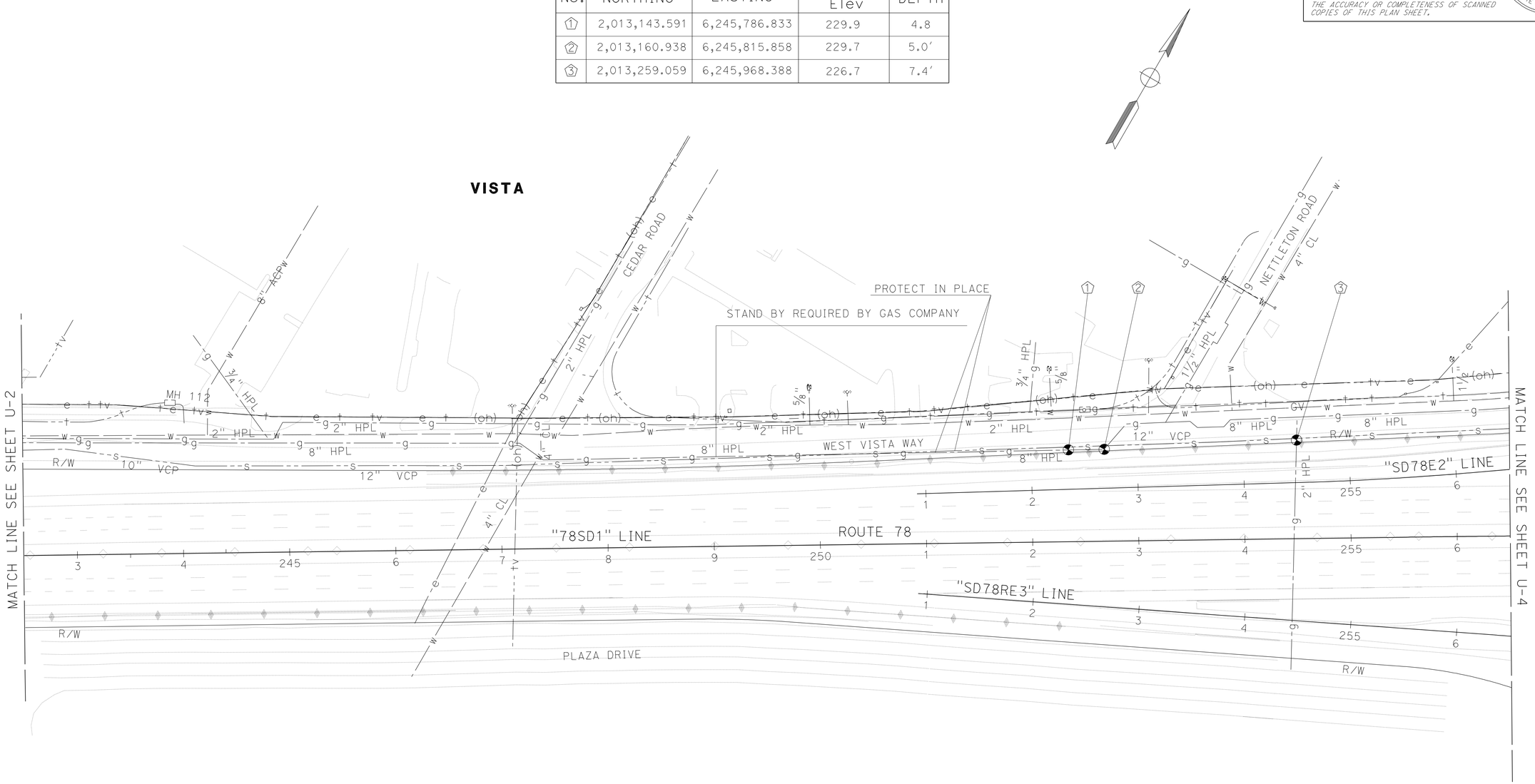

THIS PLAN ACCURATE FOR UTILITY INFORMATION ONLY

UTILITY PLAN

SCALE: 1" = 50′ **U-3**

STATE OF CALIFORNIA - DEPARTMENT OF TRANSPORTATION
Caltrans® **DESIGN**

FUNCTIONAL SUPERVISOR: ABU-BAKR H AL-JAFRI

CALCULATED-DESIGNED BY: VASANT R KALE
CHECKED BY: ARTURO REYES

REVISED BY
DATE REVISED

LAST REVISION 05-16-11
DATE PLOTTED => 22-JUN-2011
TIME PLOTTED => 13:24

Dist	COUNTY	ROUTE	POST MILES TOTAL PROJECT	SHEET No.	TOTAL SHEETS
11	SD	78	3.5/5.8	34	87

REGISTERED CIVIL ENGINEER 04-21-11 DATE

05-16-11
PLANS APPROVAL DATE

REGISTERED PROFESSIONAL ENGINEER
VASANT R KALE
No. 61372
Exp. 6-30-11
CIVIL
STATE OF CALIFORNIA

THE STATE OF CALIFORNIA OR ITS OFFICERS OR AGENTS SHALL NOT BE RESPONSIBLE FOR THE ACCURACY OR COMPLETENESS OF SCANNED COPIES OF THIS PLAN SHEET.

NOTE:

1. FOR ACCURATE RIGHT OF WAY DATA, CONTACT RIGHT OF WAY ENGINEERING AT THE DISTRICT OFFICE.

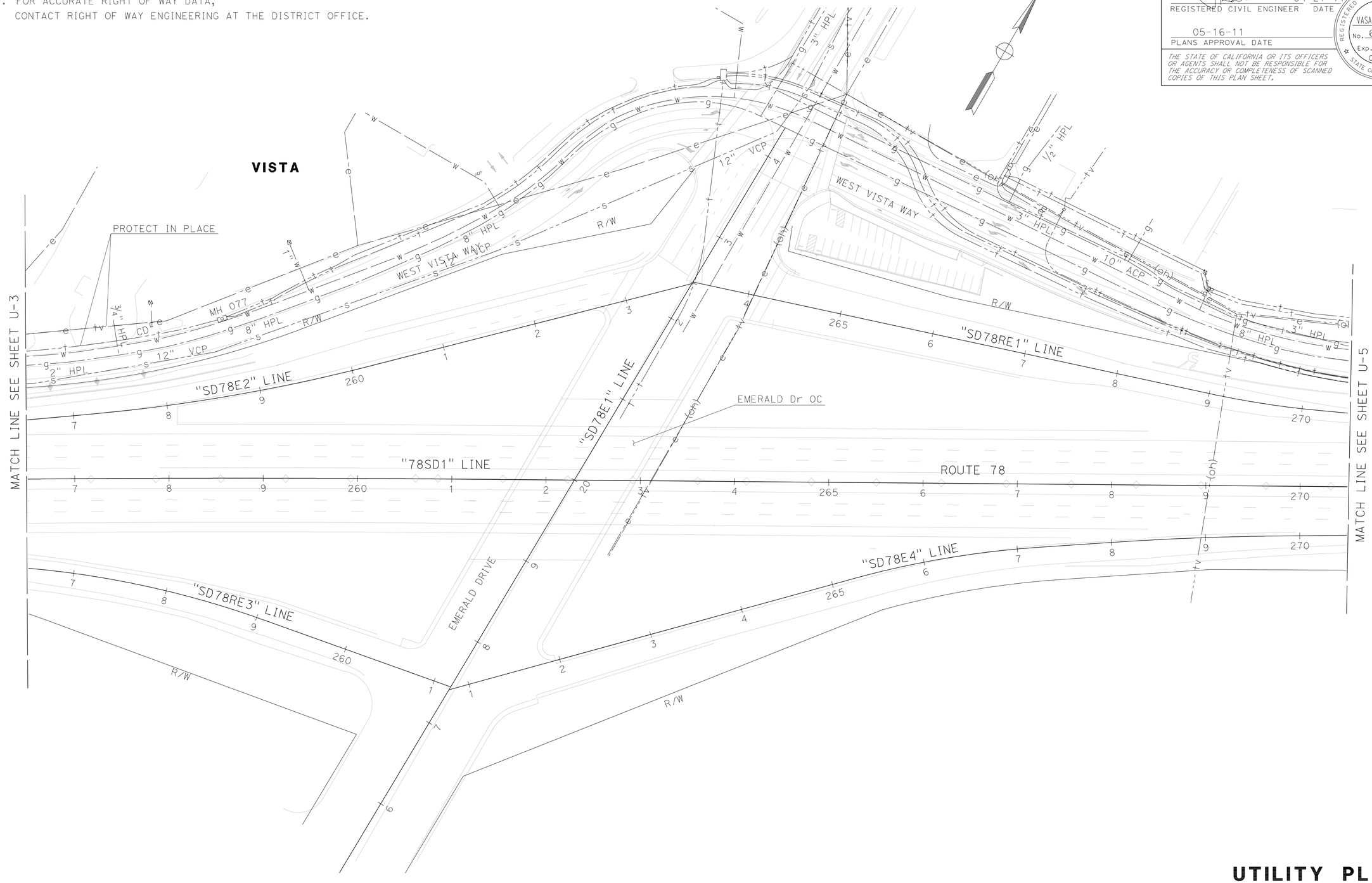

THIS PLAN ACCURATE FOR UTILITY INFORMATION ONLY

UTILITY PLAN

SCALE: 1" = 50'

U-4

STATE OF CALIFORNIA - DEPARTMENT OF TRANSPORTATION
Caltrans
DESIGN

FUNCTIONAL SUPERVISOR: ABU-BAKR H AL-JAFRI

CALCULATED-DESIGNED BY: VASANT R KALE
CHECKED BY: ARTURO REYES

REVISED BY
DATE REVISED

LAST REVISION 05-16-11
DATE PLOTTED => 22-JUN-2011
TIME PLOTTED => 13:24

Dist	COUNTY	ROUTE	POST MILES TOTAL PROJECT	SHEET No.	TOTAL SHEETS
11	SD	78	3.5/5.8	35	87

REGISTERED CIVIL ENGINEER 04-21-11 DATE

05-16-11
PLANS APPROVAL DATE

REGISTERED PROFESSIONAL ENGINEER
VASANT R KALE
No. 61372
Exp. 6-30-11
CIVIL
STATE OF CALIFORNIA

THE STATE OF CALIFORNIA OR ITS OFFICERS OR AGENTS SHALL NOT BE RESPONSIBLE FOR THE ACCURACY OR COMPLETENESS OF SCANNED COPIES OF THIS PLAN SHEET.

NOTE:

1. FOR ACCURATE RIGHT OF WAY DATA, CONTACT RIGHT OF WAY ENGINEERING AT THE DISTRICT OFFICE.

POTHOLE LOCATION INFORMATION

No.	NORTHING	EASTING	TOP OF PIPE Elev	DEPTH
1	2,014,223.136	6,247,665.887	235.7	9.0'

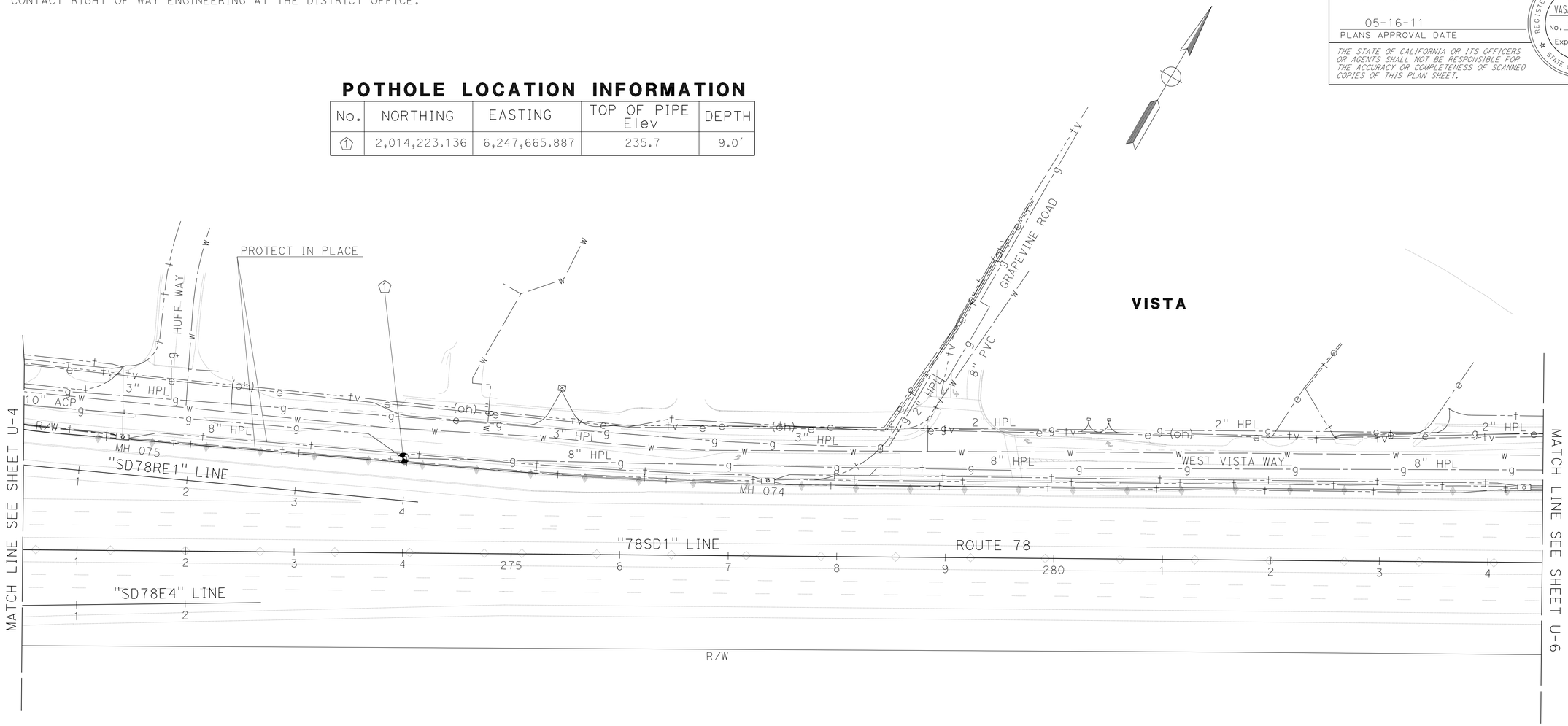

THIS PLAN ACCURATE FOR UTILITY INFORMATION ONLY

UTILITY PLAN

SCALE: 1" = 50'

U-5

STATE OF CALIFORNIA - DEPARTMENT OF TRANSPORTATION
Caltrans® DESIGN

FUNCTIONAL SUPERVISOR: ABU-BAKR H AL-JAFRI
CALCULATED-DESIGNED BY: VASANT R KALE
CHECKED BY: ARTURO REYES
REVISED BY
DATE REVISED

LAST REVISION 05-16-11
DATE PLOTTED => 22-JUN-2011
TIME PLOTTED => 13:24

Dist	COUNTY	ROUTE	POST MILES TOTAL PROJECT	SHEET No.	TOTAL SHEETS
11	SD	78	3.5/5.8	36	87

REGISTERED CIVIL ENGINEER 04-21-11 DATE

05-16-11
PLANS APPROVAL DATE

REGISTERED PROFESSIONAL ENGINEER
VASANT R KALE
No. 61372
Exp. 6-30-11
CIVIL
STATE OF CALIFORNIA

THE STATE OF CALIFORNIA OR ITS OFFICERS OR AGENTS SHALL NOT BE RESPONSIBLE FOR THE ACCURACY OR COMPLETENESS OF SCANNED COPIES OF THIS PLAN SHEET.

NOTE:

1. FOR ACCURATE RIGHT OF WAY DATA, CONTACT RIGHT OF WAY ENGINEERING AT THE DISTRICT OFFICE.

POTHOLE LOCATION INFORMATION

No.	NORTHING	EASTING	TOP OF PIPE Elev	DEPTH
1	2,015,126.847	6,249,380.249	258.0	7.0'

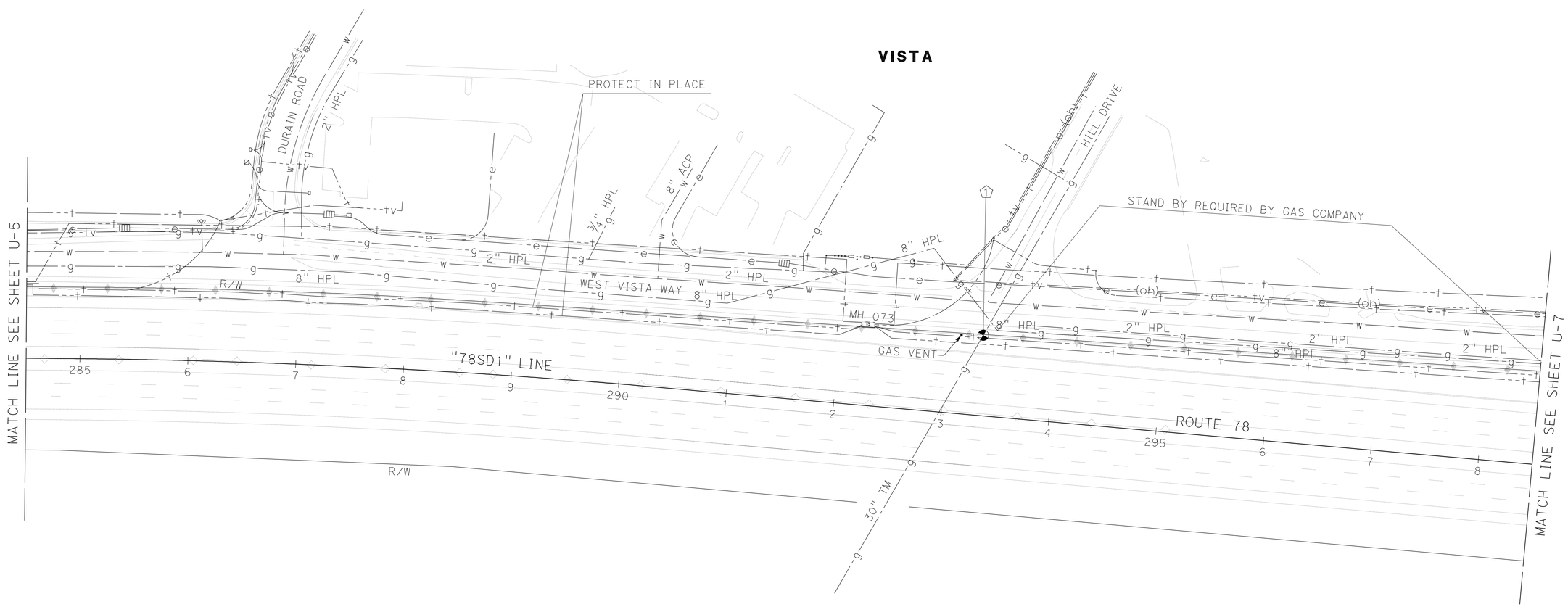

THIS PLAN ACCURATE FOR UTILITY INFORMATION ONLY

UTILITY PLAN

SCALE: 1" = 50'

U-6

REVISED BY	
DATE REVISED	
VASANT R KALE	CALCULATED-DESIGNED BY
ARTURO REYES	CHECKED BY
FUNCTIONAL SUPERVISOR	
ABU-BAKR H AL-JAFRI	

STATE OF CALIFORNIA - DEPARTMENT OF TRANSPORTATION
Caltrans® **DESIGN**

LAST REVISION 05-16-11
DATE PLOTTED => 22-JUN-2011
TIME PLOTTED => 13:24

Dist	COUNTY	ROUTE	POST MILES TOTAL PROJECT	SHEET No.	TOTAL SHEETS
11	SD	78	3.5/5.8	37	87

REGISTERED CIVIL ENGINEER 04-21-11 DATE

05-16-11
PLANS APPROVAL DATE

REGISTERED PROFESSIONAL ENGINEER
VASANT R KALE
No. 61372
Exp. 6-30-11
CIVIL
STATE OF CALIFORNIA

THE STATE OF CALIFORNIA OR ITS OFFICERS OR AGENTS SHALL NOT BE RESPONSIBLE FOR THE ACCURACY OR COMPLETENESS OF SCANNED COPIES OF THIS PLAN SHEET.

NOTE:

1. FOR ACCURATE RIGHT OF WAY DATA, CONTACT RIGHT OF WAY ENGINEERING AT THE DISTRICT OFFICE.

POTHOLE LOCATION INFORMATION

No.	NORTHING	EASTING	TOP OF PIPE Elev	DEPTH
1	2,015,442.872	6,250,015.512	286.0	4.6
2	2,015,601.569	6,250,390.964	279.2	4.4
3	2,015,670.273	6,250,570.009	279.5	4.1
4	2,015,759.177	6,250,804.053	284.2	3.6
5	2,015,766.103	6,250,835.635	281.0	4.6
6	2,015,771.700	6,250,851.917	280.7	5.3

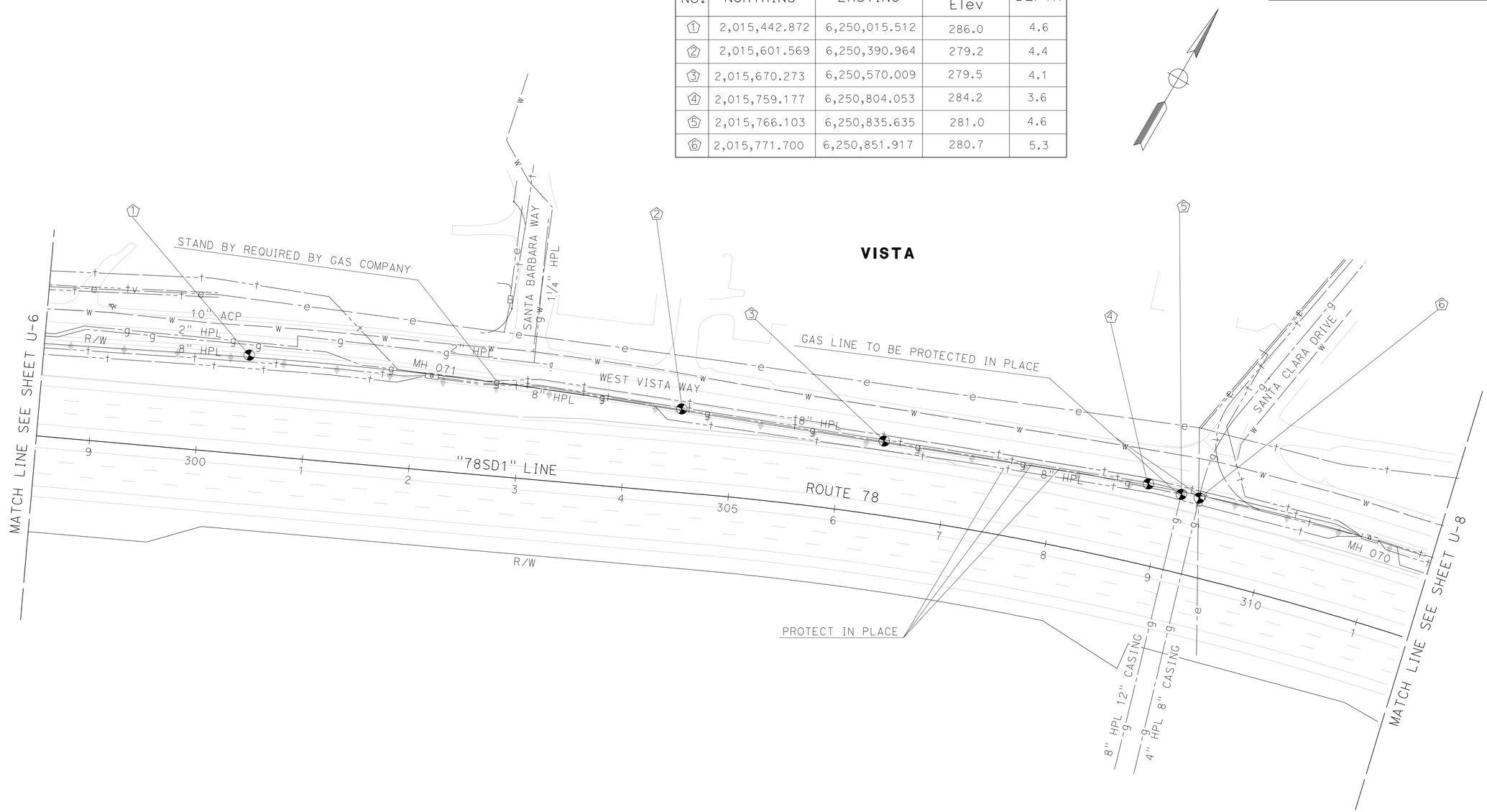

THIS PLAN ACCURATE FOR UTILITY INFORMATION ONLY

UTILITY PLAN

SCALE: 1" = 50' **U-7**

STATE OF CALIFORNIA - DEPARTMENT OF TRANSPORTATION
Caltrans
DESIGN

FUNCTIONAL SUPERVISOR: ABU-BAKR H AL-JAFRI
CALCULATED-DESIGNED BY: VASANT R KALE
CHECKED BY: ARTURO REYES
REVISED BY
DATE REVISED

LAST REVISION 05-16-11
DATE PLOTTED => 22-JUN-2011
TIME PLOTTED => 13:24

Dist	COUNTY	ROUTE	POST MILES TOTAL PROJECT	SHEET No.	TOTAL SHEETS
11	SD	78	3.5/5.8	38	87

REGISTERED CIVIL ENGINEER 04-21-11 DATE

05-16-11
PLANS APPROVAL DATE

REGISTERED PROFESSIONAL ENGINEER
VASANT R KALE
No. 61372
Exp. 6-30-11
CIVIL
STATE OF CALIFORNIA

THE STATE OF CALIFORNIA OR ITS OFFICERS OR AGENTS SHALL NOT BE RESPONSIBLE FOR THE ACCURACY OR COMPLETENESS OF SCANNED COPIES OF THIS PLAN SHEET.

NOTE:

1. FOR ACCURATE RIGHT OF WAY DATA, CONTACT RIGHT OF WAY ENGINEERING AT THE DISTRICT OFFICE.

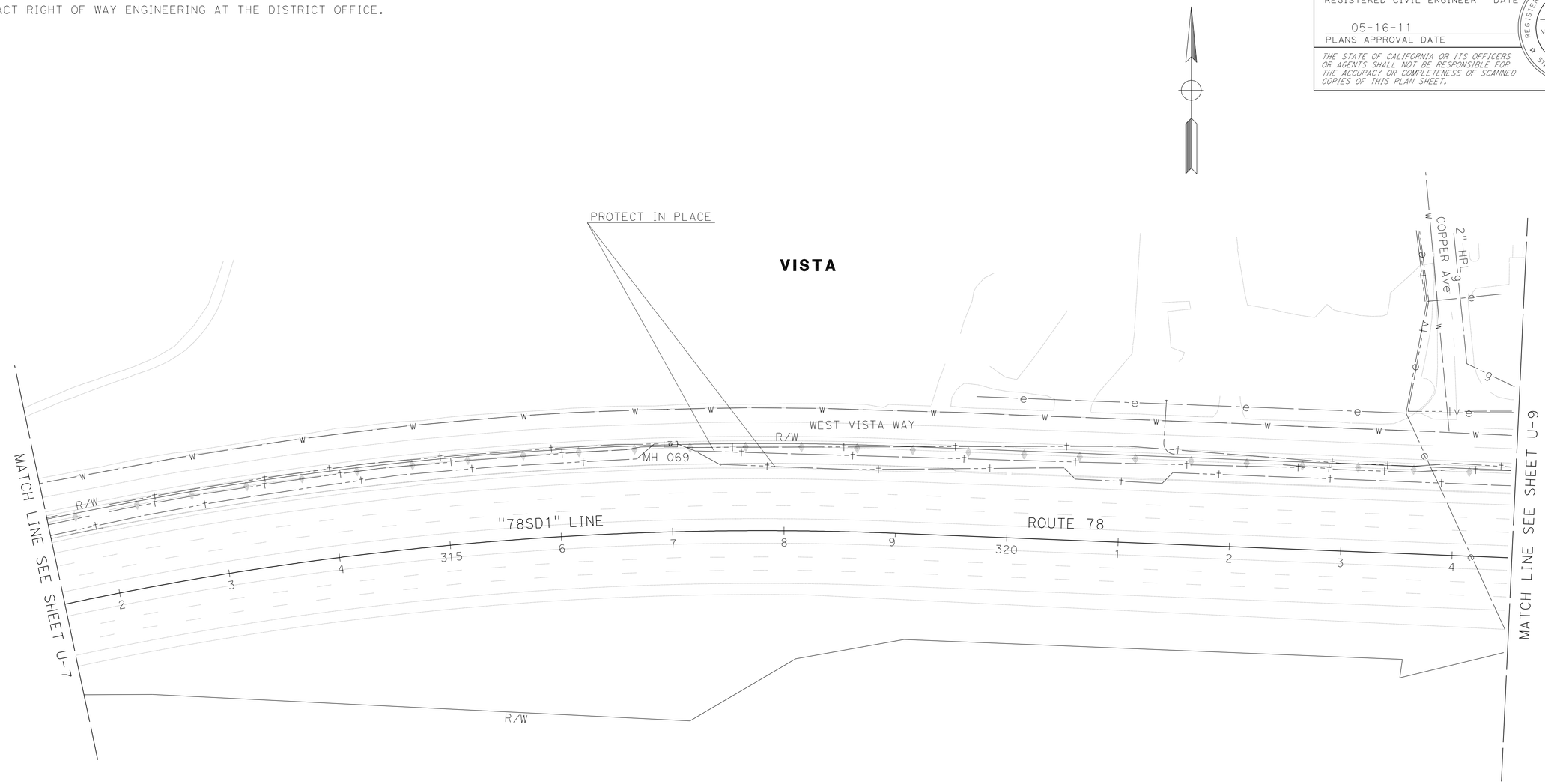

THIS PLAN ACCURATE FOR UTILITY INFORMATION ONLY

UTILITY PLAN

SCALE: 1" = 50'

U-8

STATE OF CALIFORNIA - DEPARTMENT OF TRANSPORTATION
Caltrans
DESIGN

FUNCTIONAL SUPERVISOR: ABU-BAKR H AL-JAFRI
CALCULATED-DESIGNED BY: VASANT R KALE
CHECKED BY: ARTURO REYES
REVISED BY
DATE REVISED

LAST REVISION 05-16-11
DATE PLOTTED => 22-JUN-2011
TIME PLOTTED => 13:24

Dist	COUNTY	ROUTE	POST MILES TOTAL PROJECT	SHEET No.	TOTAL SHEETS
11	SD	78	3.5/5.8	39	87

REGISTERED CIVIL ENGINEER 04-21-11 DATE

05-16-11
PLANS APPROVAL DATE

REGISTERED PROFESSIONAL ENGINEER
VASANT R KALE
No. 61372
Exp. 6-30-11
CIVIL
STATE OF CALIFORNIA

THE STATE OF CALIFORNIA OR ITS OFFICERS OR AGENTS SHALL NOT BE RESPONSIBLE FOR THE ACCURACY OR COMPLETENESS OF SCANNED COPIES OF THIS PLAN SHEET.

NOTE:

1. FOR ACCURATE RIGHT OF WAY DATA, CONTACT RIGHT OF WAY ENGINEERING AT THE DISTRICT OFFICE.

POTHOLE LOCATION INFORMATION

No.	NORTHING	EASTING	TOP OF CONCRETE Elev	DEPTH	REMARK
1	2,015,855.666	6,252,795.603	294.1	5.3	Conc SLURRY

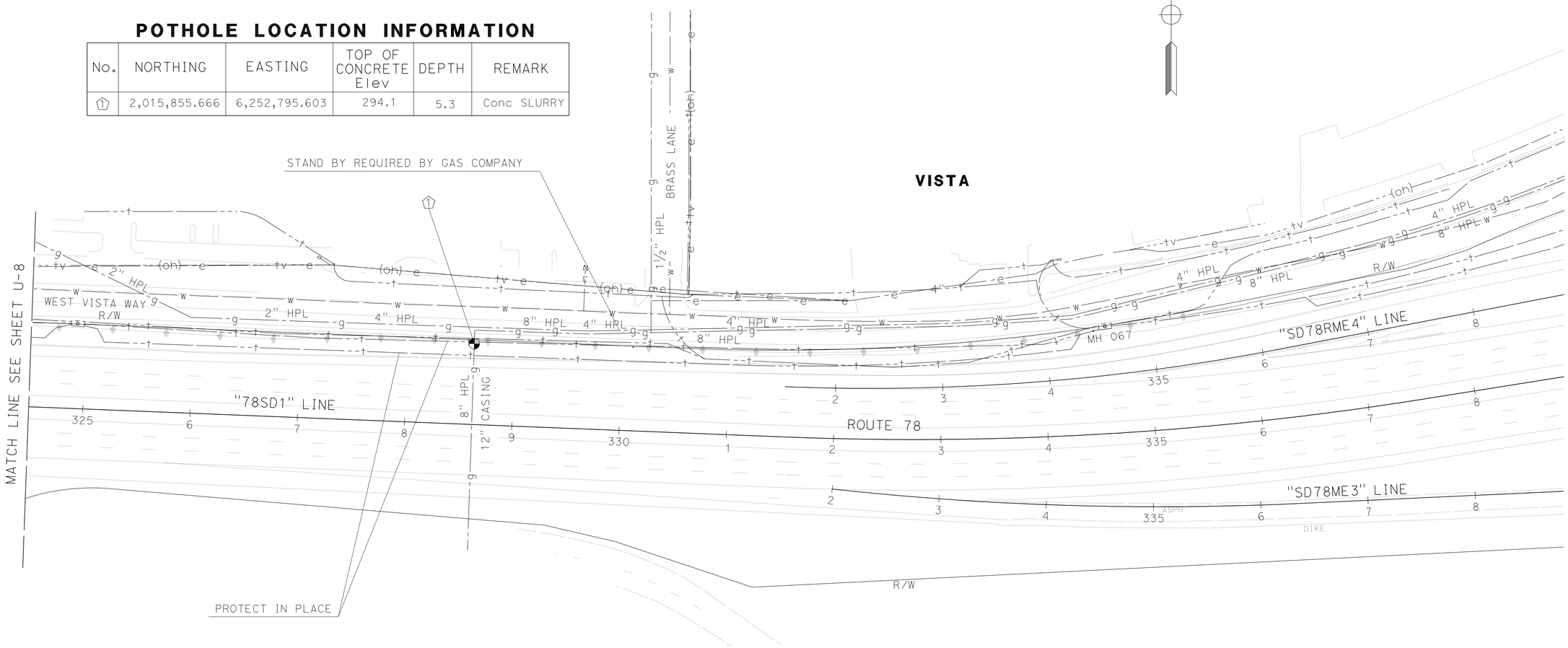

THIS PLAN ACCURATE FOR UTILITY INFORMATION ONLY

UTILITY PLAN

SCALE: 1" = 50'

U-9

STATE OF CALIFORNIA - DEPARTMENT OF TRANSPORTATION
Caltrans®
DESIGN

FUNCTIONAL SUPERVISOR: ABU-BAKR H AL-JAFRI
CALCULATED-DESIGNED BY: VASANT R KALE
CHECKED BY: ARTURO REYES
REVISED BY
DATE REVISED

LAST REVISION 05-16-11
DATE PLOTTED => 22-JUN-2011
TIME PLOTTED => 13:24

Dist	COUNTY	ROUTE	POST MILES TOTAL PROJECT	SHEET No.	TOTAL SHEETS
11	SD	78	3.5/5.8	40	87

REGISTERED CIVIL ENGINEER 04-15-11 DATE

05-16-11
PLANS APPROVAL DATE

REGISTERED PROFESSIONAL ENGINEER
SHAHIN T. ADIBI
No. 54839
Exp. 6-30-12
CIVIL
STATE OF CALIFORNIA

THE STATE OF CALIFORNIA OR ITS OFFICERS OR AGENTS SHALL NOT BE RESPONSIBLE FOR THE ACCURACY OR COMPLETENESS OF SCANNED COPIES OF THIS PLAN SHEET.

LEGEND:

XX = CONSTRUCTION AREA SIGN

NOTES:

1. EXACT LOCATION OF CONSTRUCTION AREA SIGNS WILL BE DETERMINED BY THE ENGINEER.
2. FEDERAL MANUAL ON UNIFORM TRAFFIC CONTROL DEVICES SIGN CODES ARE SHOWN UNLESS DESIGNATED BY (CA) INDICATING STANDARD CALIFORNIA SIGN SPECIFICATIONS ARE USED.
3. EXISTING UTILITIES ARE NOT SHOWN ON THESE PLAN SHEETS. THE CONTRACTOR SHALL VERIFY LOCATIONS OF EXISTING UTILITIES AND ADJUST THE FIELD LOCATION OF SIGN POSTS IN CONSULTATION WITH THE ENGINEER.

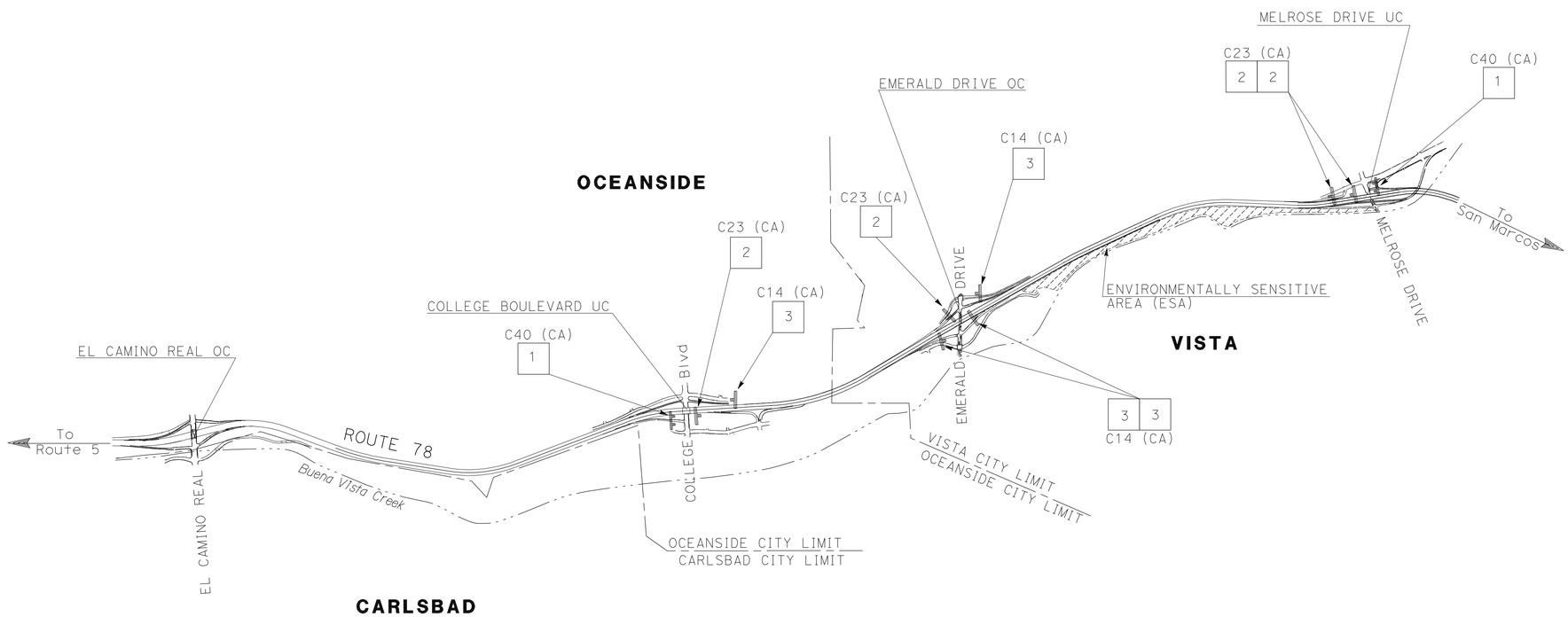

THIS PLAN ACCURATE FOR CONSTRUCTION AREA SIGN WORK ONLY

CONSTRUCTION AREA SIGNS

NO SCALE

CS-1

REVISED BY	DATE REVISED

CALCULATED-DESIGNED BY	CHECKED BY
MARY BETH HAYES	SHAHIN ADIBI

FUNCTIONAL SUPERVISOR: CAMILLE ABOUFADEL

STATE OF CALIFORNIA - DEPARTMENT OF TRANSPORTATION

Caltrans®

TRAFFIC DESIGN

LAST REVISION 05-16-11 | DATE PLOTTED => 22-JUN-2011 | TIME PLOTTED => 13:24

Dist	COUNTY	ROUTE	POST MILES TOTAL PROJECT	SHEET No.	TOTAL SHEETS
11	SD	78	3.5/5.8	41	87

REGISTERED CIVIL ENGINEER 04-15-11 DATE

05-16-11
PLANS APPROVAL DATE

REGISTERED PROFESSIONAL ENGINEER
SHAHIN T. ADIBI
No. 54839
Exp. 6-30-12
CIVIL
STATE OF CALIFORNIA

THE STATE OF CALIFORNIA OR ITS OFFICERS OR AGENTS SHALL NOT BE RESPONSIBLE FOR THE ACCURACY OR COMPLETENESS OF SCANNED COPIES OF THIS PLAN SHEET.

TYPICAL PLACEMENT OF SC6-4 (CA) CONSTRUCTION AREA SIGNS

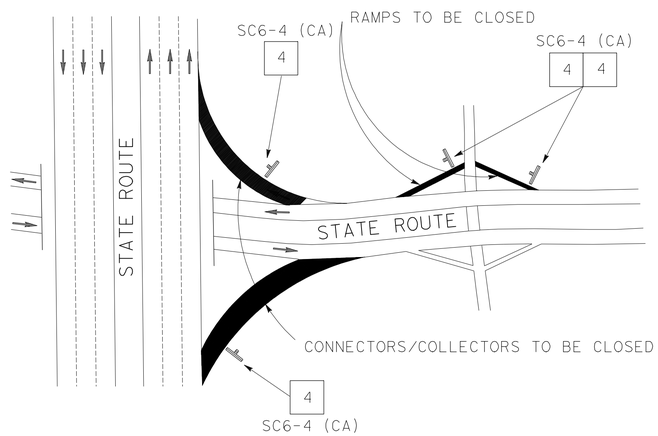

CONSTRUCTION AREA SIGNS

SIGN No.	CODE	PANEL SIZE (In)	No. OF POST AND SIZE (In)	No. OF SIGNS
1	C40 (CA)	72 X 36	2-4 X 6 (S)	2
2	C23 (CA)	48 X 48	1-4 X 6 (S)	4
3	C14 (CA)	48 X 24	1-4 X 4 (S)	4
4	SC6-4 (CA)	48 X 60	PORTABLE	8
			TOTAL	20

SEE TRAFFIC HANDLING QUANTITY CHART FOR ADDITIONAL INFORMATION.
(S) DENOTES STATIONARY MOUNTED SIGN

TYPICAL PLACEMENT OF TRAFFIC PLASTIC DRUM

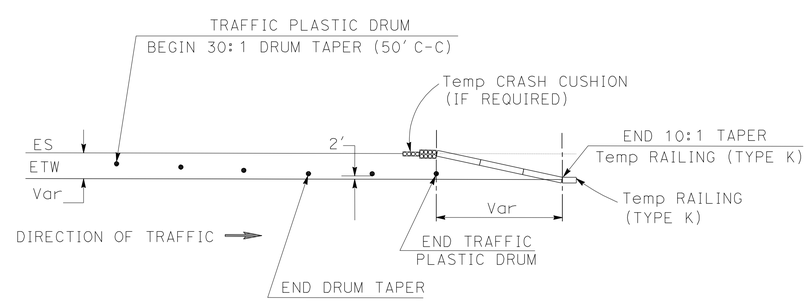

CONSTRUCTION AREA SIGNS

NO SCALE

CS-2

STATE OF CALIFORNIA - DEPARTMENT OF TRANSPORTATION
Caltrans
TRAFFIC DESIGN

FUNCTIONAL SUPERVISOR: CAMILLE ABOUFADEL
CALCULATED-DESIGNED BY: MARY BETH HAYES
CHECKED BY: SHAHIN ADIBI
REVISED BY
DATE REVISED

LAST REVISION 05-16-11
DATE PLOTTED => 22-JUN-2011
TIME PLOTTED => 13:24

Dist	COUNTY	ROUTE	POST MILES TOTAL PROJECT	SHEET No.	TOTAL SHEETS
11	SD	78	3.5/5.8	42	87

REGISTERED ~~CIVIL~~ ENGINEER 04-15-11 DATE

05-16-11
PLANS APPROVAL DATE

REGISTERED PROFESSIONAL ENGINEER
LEVY Q LE
No. 66748
Exp. 9-30-12
CIVIL
STATE OF CALIFORNIA

THE STATE OF CALIFORNIA OR ITS OFFICERS OR AGENTS SHALL NOT BE RESPONSIBLE FOR THE ACCURACY OR COMPLETENESS OF SCANNED COPIES OF THIS PLAN SHEET.

NOTE:

FOR ACCURATE RIGHT OF WAY DATA,
CONTACT RIGHT OF WAY ENGINEERING AT THE DISTRICT OFFICE.

LEGEND:

= CONSTRUCTION WORK AREA

XX = CONSTRUCTION AREA SIGN

—×———×— = TEMPORARY FENCE

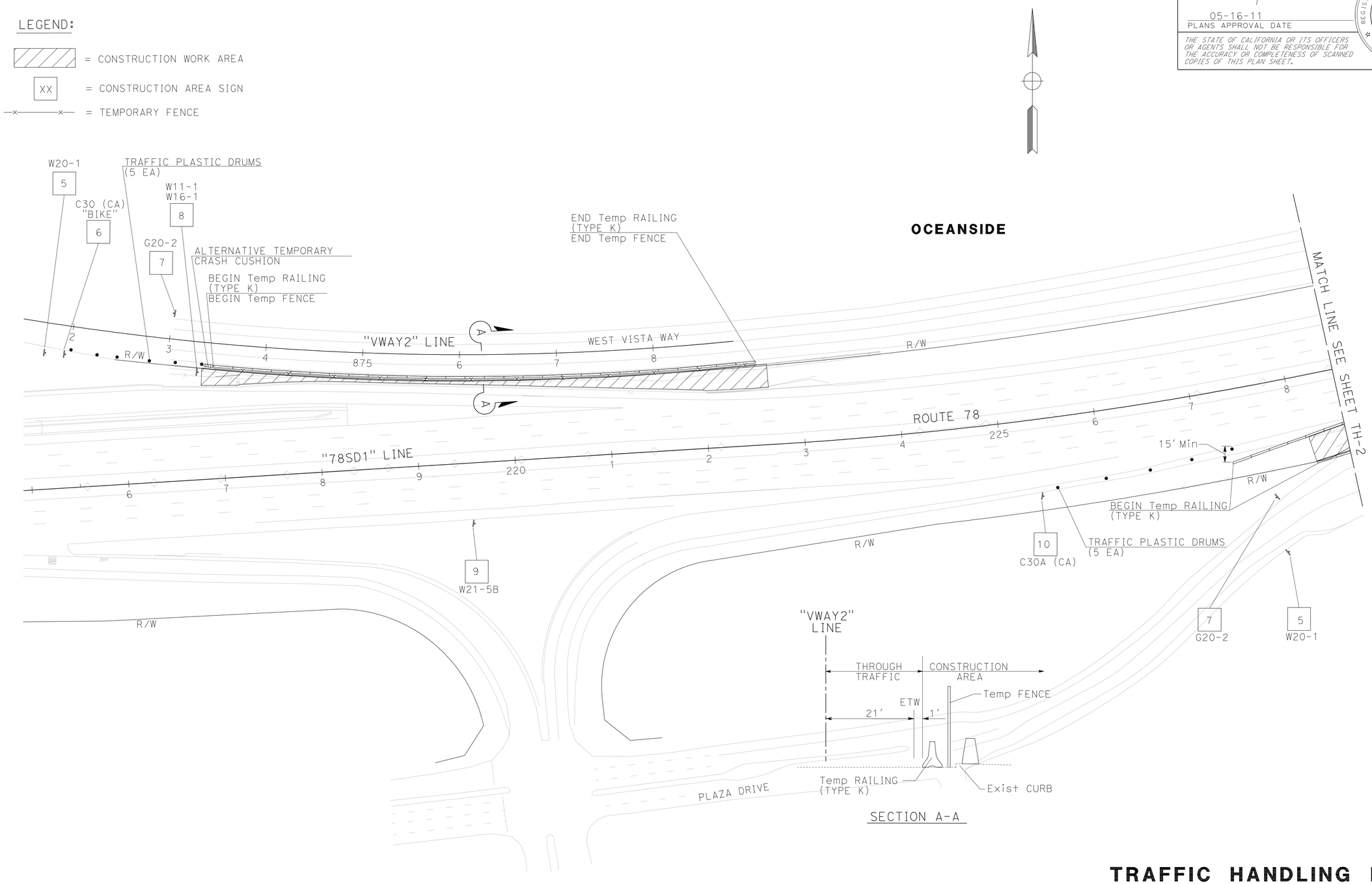

THIS PLAN ACCURATE FOR TRAFFIC HANDLING WORK ONLY.

TRAFFIC HANDLING PLAN

SCALE: 1" = 50'

TH-1

STATE OF CALIFORNIA - DEPARTMENT OF TRANSPORTATION
Caltrans PROJECT DEVELOPMENT
TRAFFIC

FUNCTIONAL SUPERVISOR: RICHARD ESTRADA
CALCULATED-DESIGNED BY: BETHNAY DESJARDINS
CHECKED BY: LEVY Q. LE
REVISED BY
DATE REVISED

LAST REVISION 05-16-11
DATE PLOTTED => 22-JUN-2011
TIME PLOTTED => 13:24

Dist	COUNTY	ROUTE	POST MILES TOTAL PROJECT	SHEET No.	TOTAL SHEETS
11	SD	78	3.5/5.8	43	87

REGISTERED ~~CIVIL~~ ENGINEER 04-15-11 DATE

05-16-11
PLANS APPROVAL DATE

REGISTERED PROFESSIONAL ENGINEER
LEVY Q LE
No. 66748
Exp. 9-30-12
CIVIL
STATE OF CALIFORNIA

THE STATE OF CALIFORNIA OR ITS OFFICERS OR AGENTS SHALL NOT BE RESPONSIBLE FOR THE ACCURACY OR COMPLETENESS OF SCANNED COPIES OF THIS PLAN SHEET.

NOTE:

FOR ACCURATE RIGHT OF WAY DATA,
CONTACT RIGHT OF WAY ENGINEERING AT THE DISTRICT OFFICE.

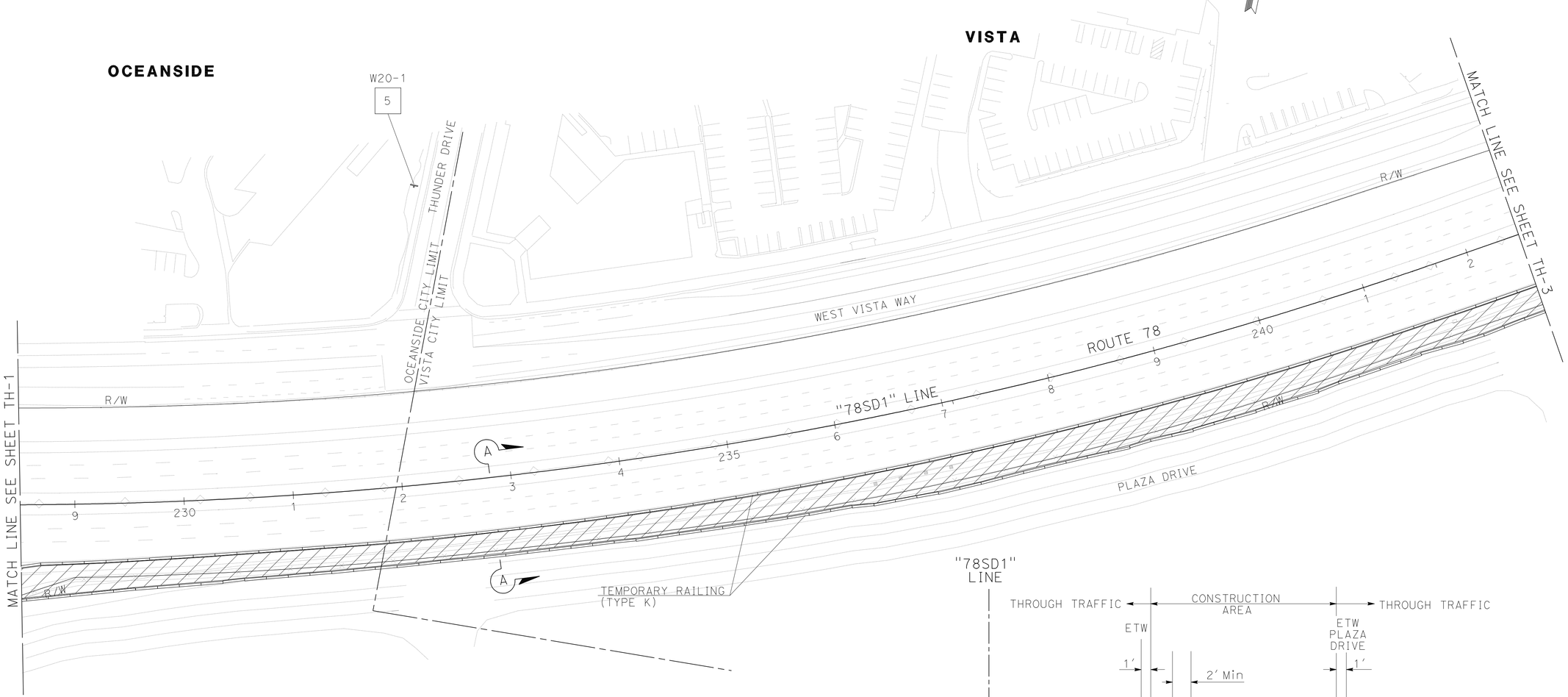

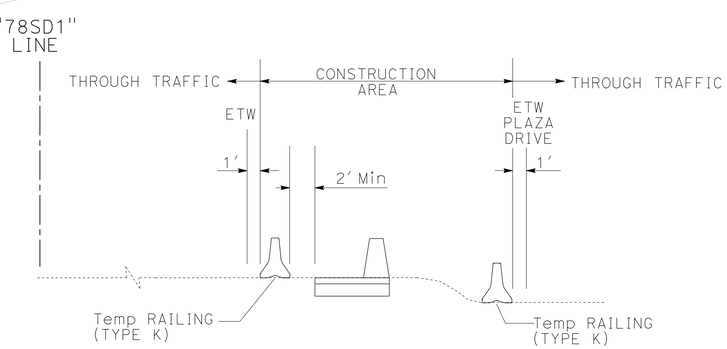

SECTION A-A

THIS PLAN ACCURATE FOR TRAFFIC HANDLING WORK ONLY.

TRAFFIC HANDLING PLAN

SCALE: 1" = 50'

TH-2

REVISED BY	DATE REVISED
BETHNAY DESJARDINS	LEVY Q. LE
CALCULATED-DESIGNED BY	CHECKED BY
FUNCTIONAL SUPERVISOR	RICHARD ESTRADA

STATE OF CALIFORNIA - DEPARTMENT OF TRANSPORTATION
Caltrans PROJECT DEVELOPMENT
TRAFFIC

LAST REVISION 05-16-11
DATE PLOTTED => 22-JUN-2011
TIME PLOTTED => 13:24

Dist	COUNTY	ROUTE	POST MILES TOTAL PROJECT	SHEET No.	TOTAL SHEETS
11	SD	78	3.5/5.8	44	87

REGISTERED ~~CIVIL~~ ENGINEER 04-15-11 DATE

05-16-11
PLANS APPROVAL DATE

REGISTERED PROFESSIONAL ENGINEER LEVY Q LE No. 66748 Exp. 9-30-12 CIVIL STATE OF CALIFORNIA

THE STATE OF CALIFORNIA OR ITS OFFICERS OR AGENTS SHALL NOT BE RESPONSIBLE FOR THE ACCURACY OR COMPLETENESS OF SCANNED COPIES OF THIS PLAN SHEET.

NOTE:

FOR ACCURATE RIGHT OF WAY DATA,
CONTACT RIGHT OF WAY ENGINEERING AT THE DISTRICT OFFICE.

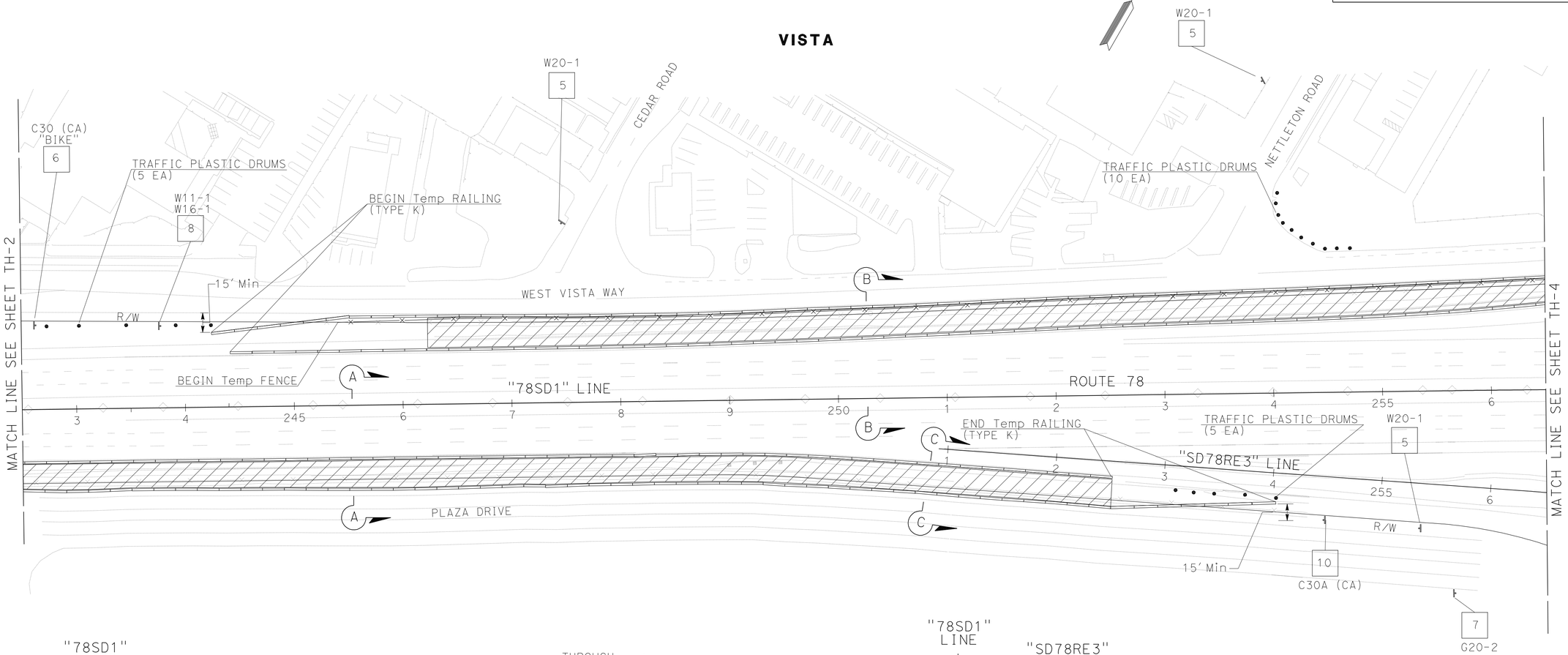

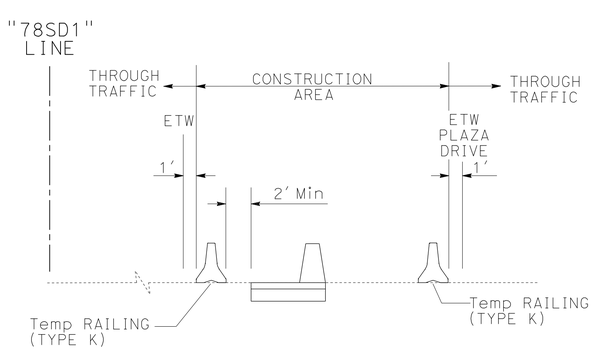

SECTION A-A

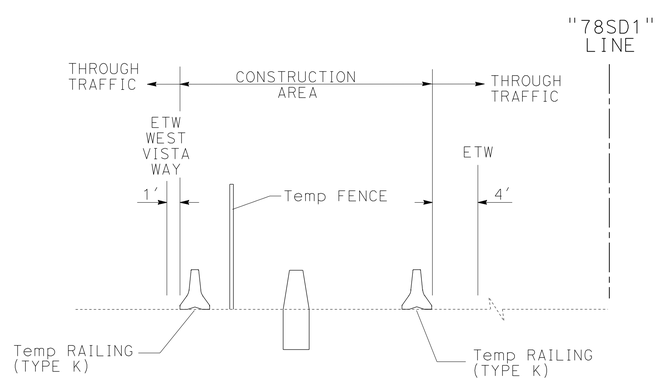

SECTION B-B

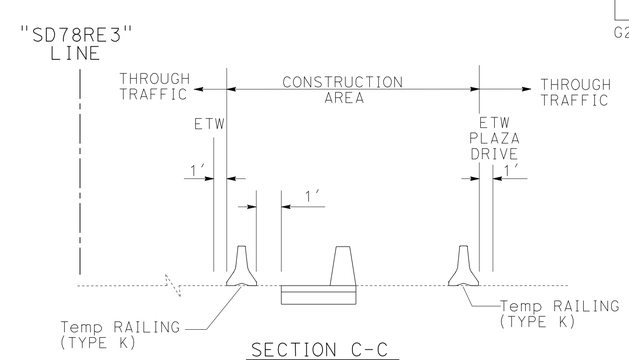

SECTION C-C

THIS PLAN ACCURATE FOR TRAFFIC HANDLING WORK ONLY.

TRAFFIC HANDLING PLAN

SCALE: 1" = 50'

TH-3

STATE OF CALIFORNIA - DEPARTMENT OF TRANSPORTATION
Caltrans PROJECT DEVELOPMENT
TRAFFIC

FUNCTIONAL SUPERVISOR: RICHARD ESTRADA
CALCULATED-DESIGNED BY: BETHNAY DESJARDINS
CHECKED BY: LEVY Q. LE
REVISED BY
DATE REVISED

LAST REVISION 05-16-11
DATE PLOTTED => 22-JUN-2011
TIME PLOTTED => 13:24

Dist	COUNTY	ROUTE	POST MILES TOTAL PROJECT	SHEET No.	TOTAL SHEETS
11	SD	78	3.5/5.8	45	87

REGISTERED ~~CIVIL~~ ENGINEER 04-15-11 DATE

05-16-11
PLANS APPROVAL DATE

REGISTERED PROFESSIONAL ENGINEER
LEVY Q LE
No. 66748
Exp. 9-30-12
CIVIL
STATE OF CALIFORNIA

THE STATE OF CALIFORNIA OR ITS OFFICERS OR AGENTS SHALL NOT BE RESPONSIBLE FOR THE ACCURACY OR COMPLETENESS OF SCANNED COPIES OF THIS PLAN SHEET.

NOTE:

FOR ACCURATE RIGHT OF WAY DATA,
CONTACT RIGHT OF WAY ENGINEERING AT THE DISTRICT OFFICE.

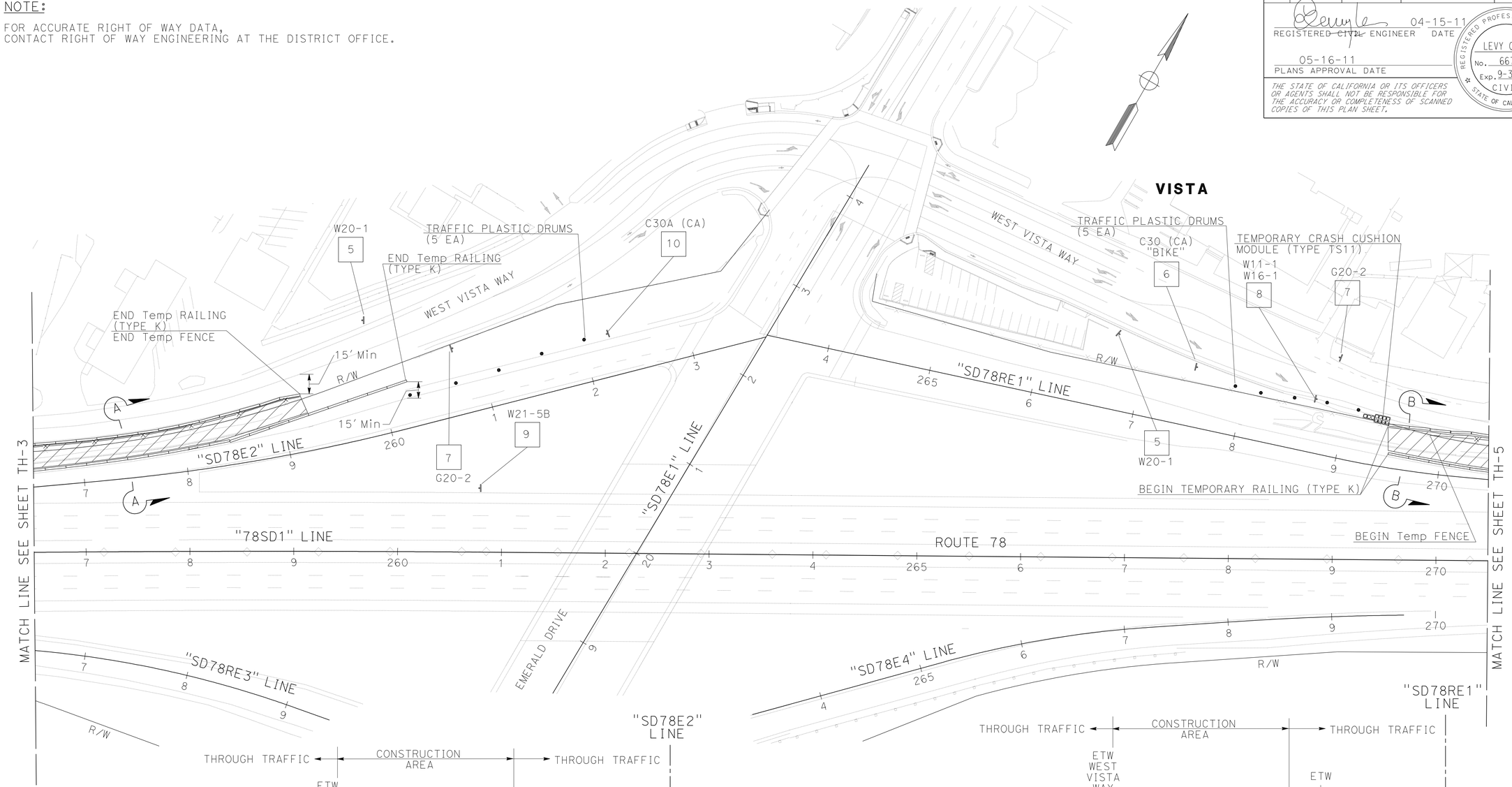

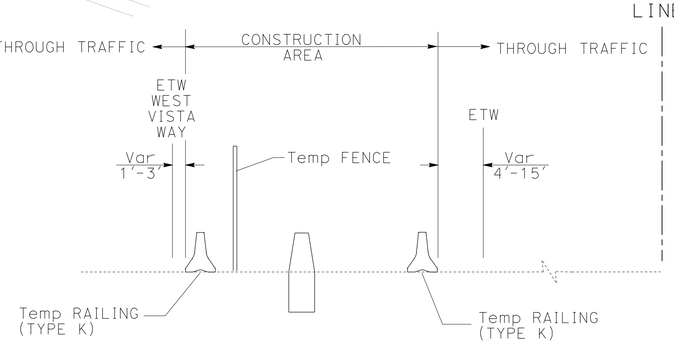

SECTION A-A

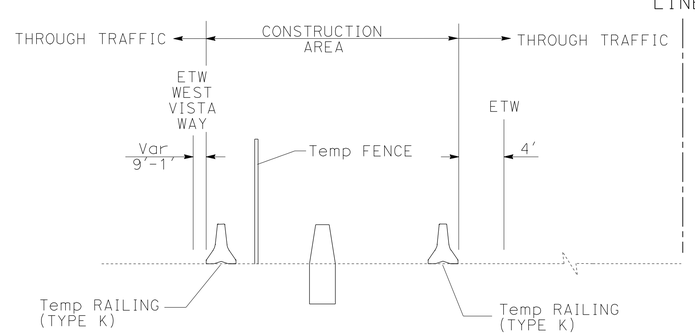

SECTION B-B

THIS PLAN ACCURATE FOR TRAFFIC HANDLING WORK ONLY.

TRAFFIC HANDLING PLAN

SCALE: 1" = 50'

TH-4

STATE OF CALIFORNIA - DEPARTMENT OF TRANSPORTATION
Caltrans PROJECT DEVELOPMENT
TRAFFIC

FUNCTIONAL SUPERVISOR: RICHARD ESTRADA
CALCULATED-DESIGNED BY: BETHNAY DESJARDINS
CHECKED BY: LEVY Q. LE
REVISED BY
DATE REVISED

LAST REVISION 05-16-11
DATE PLOTTED => 22-JUN-2011
TIME PLOTTED => 13:25

Dist	COUNTY	ROUTE	POST MILES TOTAL PROJECT	SHEET No.	TOTAL SHEETS
11	SD	78	3.5/5.8	46	87

REGISTERED ~~CIVIL~~ ENGINEER 04-15-11 DATE

05-16-11
PLANS APPROVAL DATE

REGISTERED PROFESSIONAL ENGINEER
LEVY Q LE
No. 66748
Exp. 9-30-12
CIVIL
STATE OF CALIFORNIA

THE STATE OF CALIFORNIA OR ITS OFFICERS OR AGENTS SHALL NOT BE RESPONSIBLE FOR THE ACCURACY OR COMPLETENESS OF SCANNED COPIES OF THIS PLAN SHEET.

NOTE:

FOR ACCURATE RIGHT OF WAY DATA,
CONTACT RIGHT OF WAY ENGINEERING AT THE DISTRICT OFFICE.

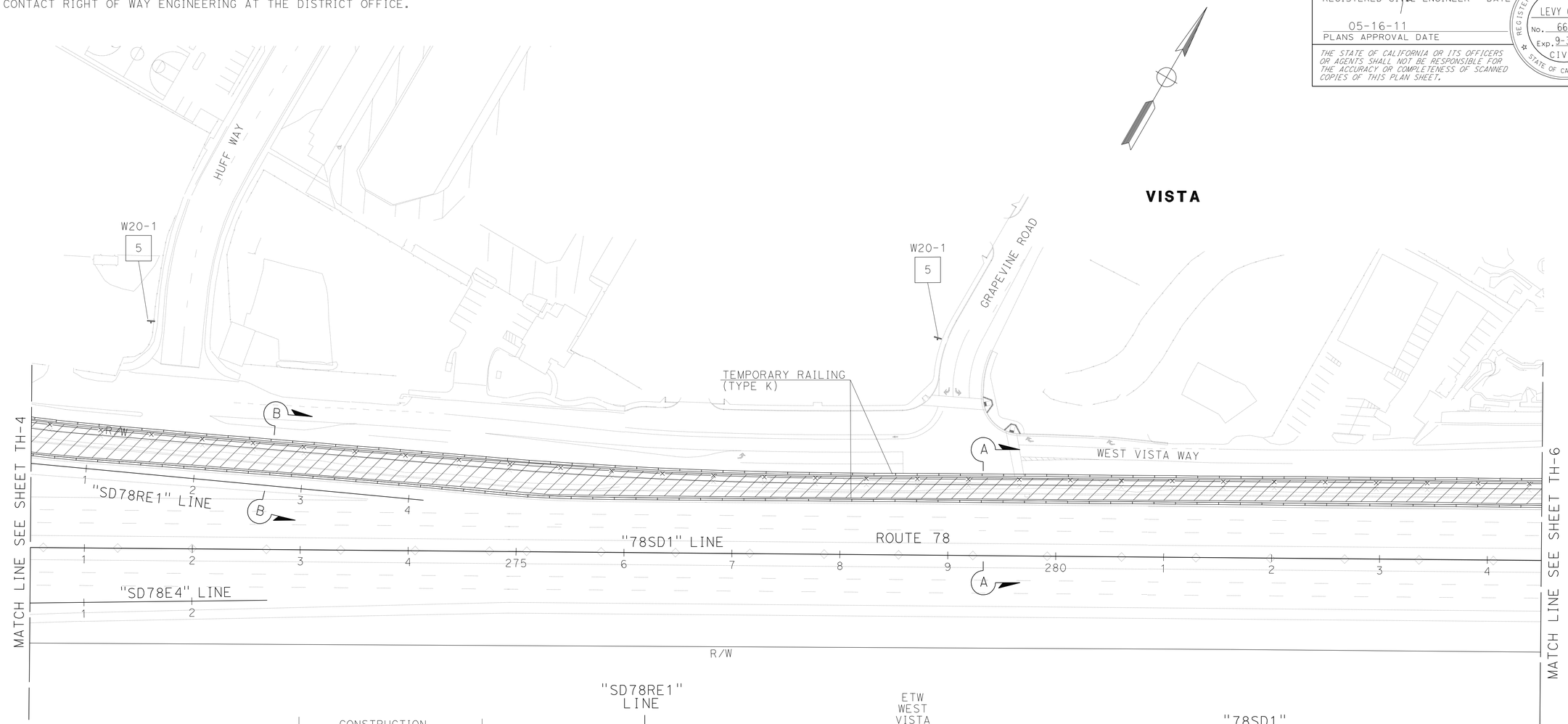

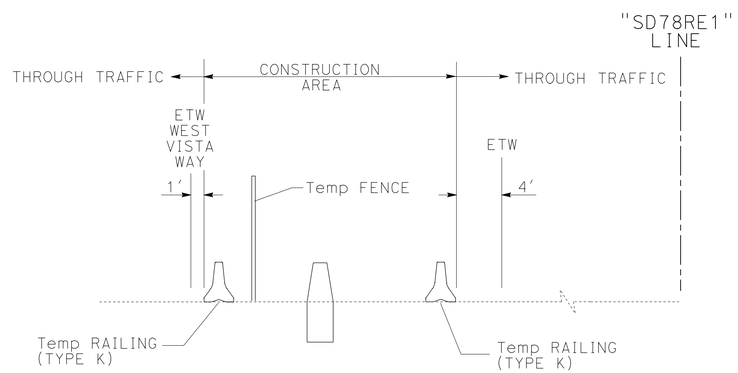

SECTION B-B

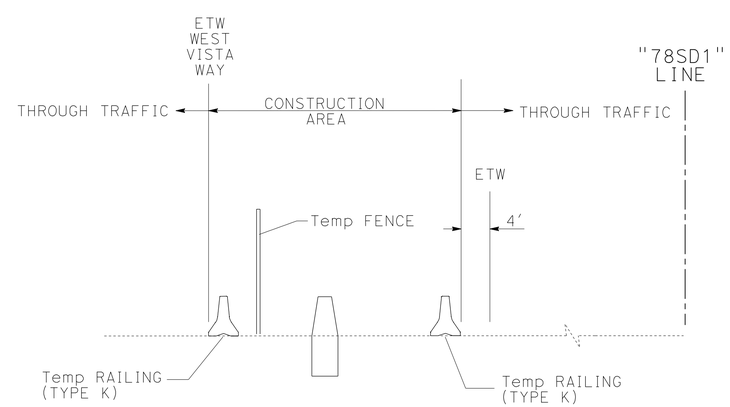

SECTION A-A

THIS PLAN ACCURATE FOR TRAFFIC HANDLING WORK ONLY.

TRAFFIC HANDLING PLAN

SCALE: 1" = 50'

TH-5

REVISED BY	DATE REVISED

CALCULATED-DESIGNED BY	CHECKED BY
BETHNAY DESJARDINS	LEVY Q. LE

FUNCTIONAL SUPERVISOR: RICHARD ESTRADA

STATE OF CALIFORNIA - DEPARTMENT OF TRANSPORTATION
Caltrans® TRAFFIC PROJECT DEVELOPMENT

LAST REVISION 05-16-11
DATE PLOTTED => 22-JUN-2011
TIME PLOTTED => 13:25

Dist	COUNTY	ROUTE	POST MILES TOTAL PROJECT	SHEET No.	TOTAL SHEETS
11	SD	78	3.5/5.8	47	87

REGISTERED ~~CIVIL~~ ENGINEER 04-15-11 DATE

05-16-11
PLANS APPROVAL DATE

REGISTERED PROFESSIONAL ENGINEER
LEVY Q LE
No. 66748
Exp. 9-30-12
CIVIL
STATE OF CALIFORNIA

THE STATE OF CALIFORNIA OR ITS OFFICERS OR AGENTS SHALL NOT BE RESPONSIBLE FOR THE ACCURACY OR COMPLETENESS OF SCANNED COPIES OF THIS PLAN SHEET.

NOTE:

FOR ACCURATE RIGHT OF WAY DATA,
CONTACT RIGHT OF WAY ENGINEERING AT THE DISTRICT OFFICE.

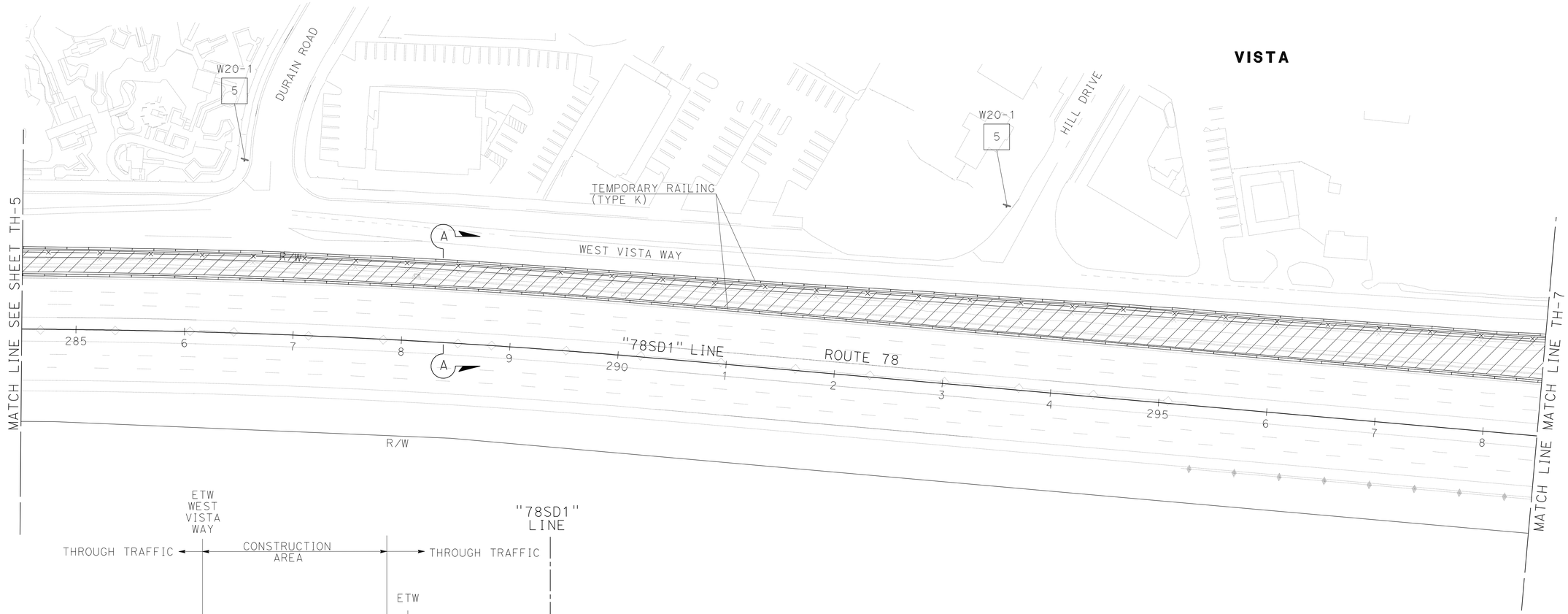

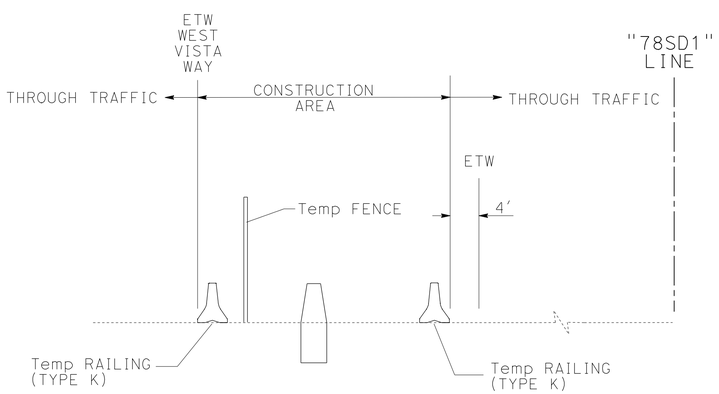

SECTION A-A

THIS PLAN ACCURATE FOR TRAFFIC HANDLING WORK ONLY.

TRAFFIC HANDLING PLAN

SCALE: 1" = 50'

TH-6

STATE OF CALIFORNIA - DEPARTMENT OF TRANSPORTATION
Caltrans PROJECT DEVELOPMENT
TRAFFIC

FUNCTIONAL SUPERVISOR: RICHARD ESTRADA
CALCULATED-DESIGNED BY: BETHNAY DESJARDINS
CHECKED BY: LEVY Q. LE
REVISED BY
DATE REVISED

LAST REVISION 05-16-11
DATE PLOTTED => 22-JUN-2011
TIME PLOTTED => 13:25

Dist	COUNTY	ROUTE	POST MILES TOTAL PROJECT	SHEET No.	TOTAL SHEETS
11	SD	78	3.5/5.8	48	87

REGISTERED ~~CIVIL~~ ENGINEER 04-15-11 DATE

05-16-11
PLANS APPROVAL DATE

REGISTERED PROFESSIONAL ENGINEER
LEVY Q LE
No. 66748
Exp. 9-30-12
CIVIL
STATE OF CALIFORNIA

THE STATE OF CALIFORNIA OR ITS OFFICERS OR AGENTS SHALL NOT BE RESPONSIBLE FOR THE ACCURACY OR COMPLETENESS OF SCANNED COPIES OF THIS PLAN SHEET.

NOTE:

FOR ACCURATE RIGHT OF WAY DATA,
CONTACT RIGHT OF WAY ENGINEERING AT THE DISTRICT OFFICE.

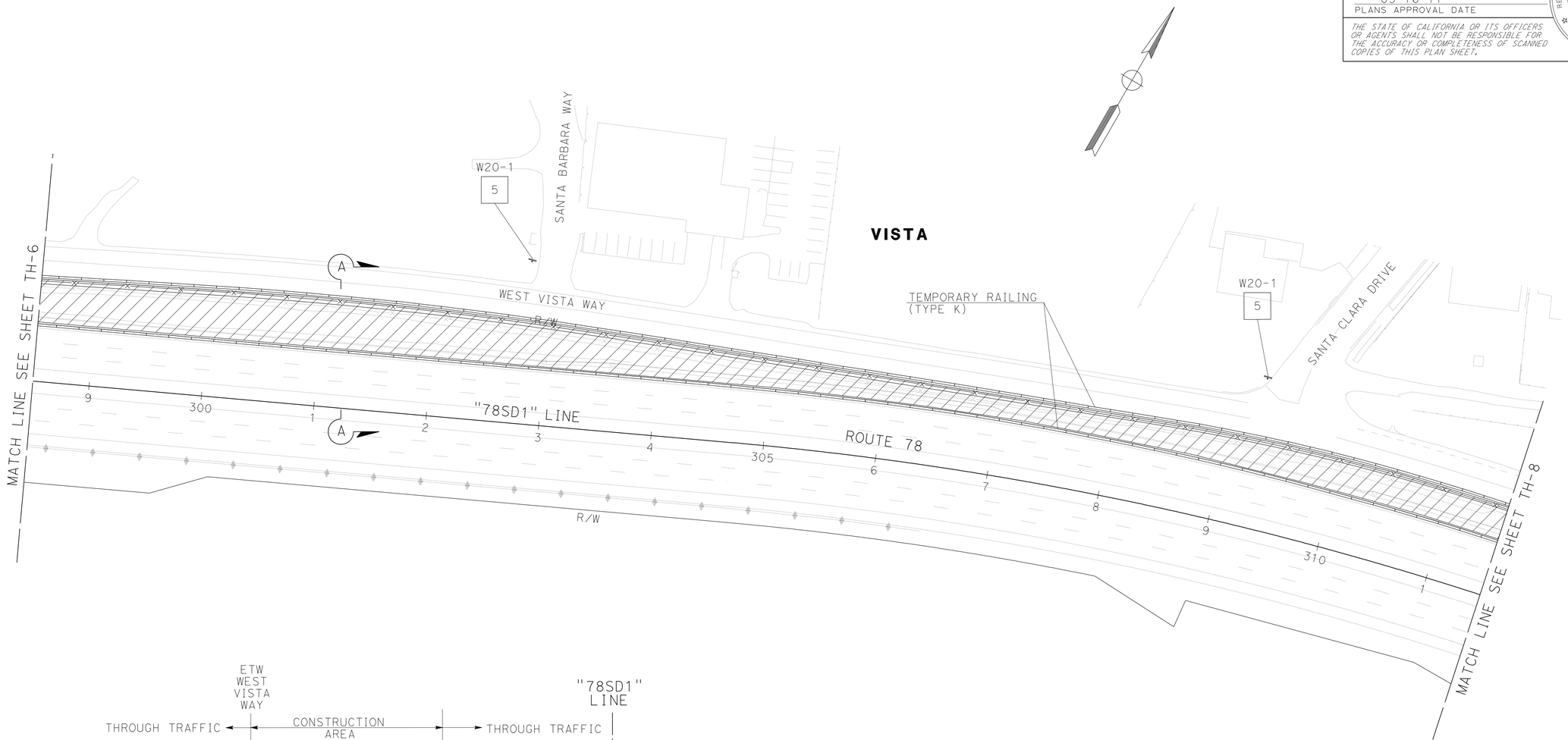

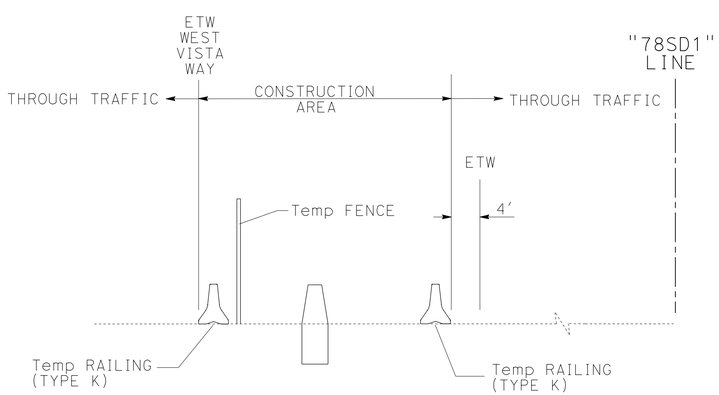

SECTION A-A

THIS PLAN ACCURATE FOR TRAFFIC HANDLING WORK ONLY.

TRAFFIC HANDLING PLAN

SCALE: 1" = 50'

TH-7

STATE OF CALIFORNIA - DEPARTMENT OF TRANSPORTATION
Caltrans PROJECT DEVELOPMENT
TRAFFIC

FUNCTIONAL SUPERVISOR: RICHARD ESTRADA
CALCULATED-DESIGNED BY: BETHNAY DESJARDINS
CHECKED BY: LEVY Q. LE
REVISED BY
DATE REVISED

LAST REVISION 05-16-11
DATE PLOTTED => 22-JUN-2011
TIME PLOTTED => 13:25

Dist	COUNTY	ROUTE	POST MILES TOTAL PROJECT	SHEET No.	TOTAL SHEETS
11	SD	78	3.5/5.8	49	87

REGISTERED ~~CIVIL~~ ENGINEER 04-15-11 DATE

05-16-11
PLANS APPROVAL DATE

REGISTERED PROFESSIONAL ENGINEER
LEVY Q LE
No. 66748
Exp. 9-30-12
CIVIL
STATE OF CALIFORNIA

THE STATE OF CALIFORNIA OR ITS OFFICERS OR AGENTS SHALL NOT BE RESPONSIBLE FOR THE ACCURACY OR COMPLETENESS OF SCANNED COPIES OF THIS PLAN SHEET.

NOTE:

FOR ACCURATE RIGHT OF WAY DATA,
CONTACT RIGHT OF WAY ENGINEERING AT THE DISTRICT OFFICE.

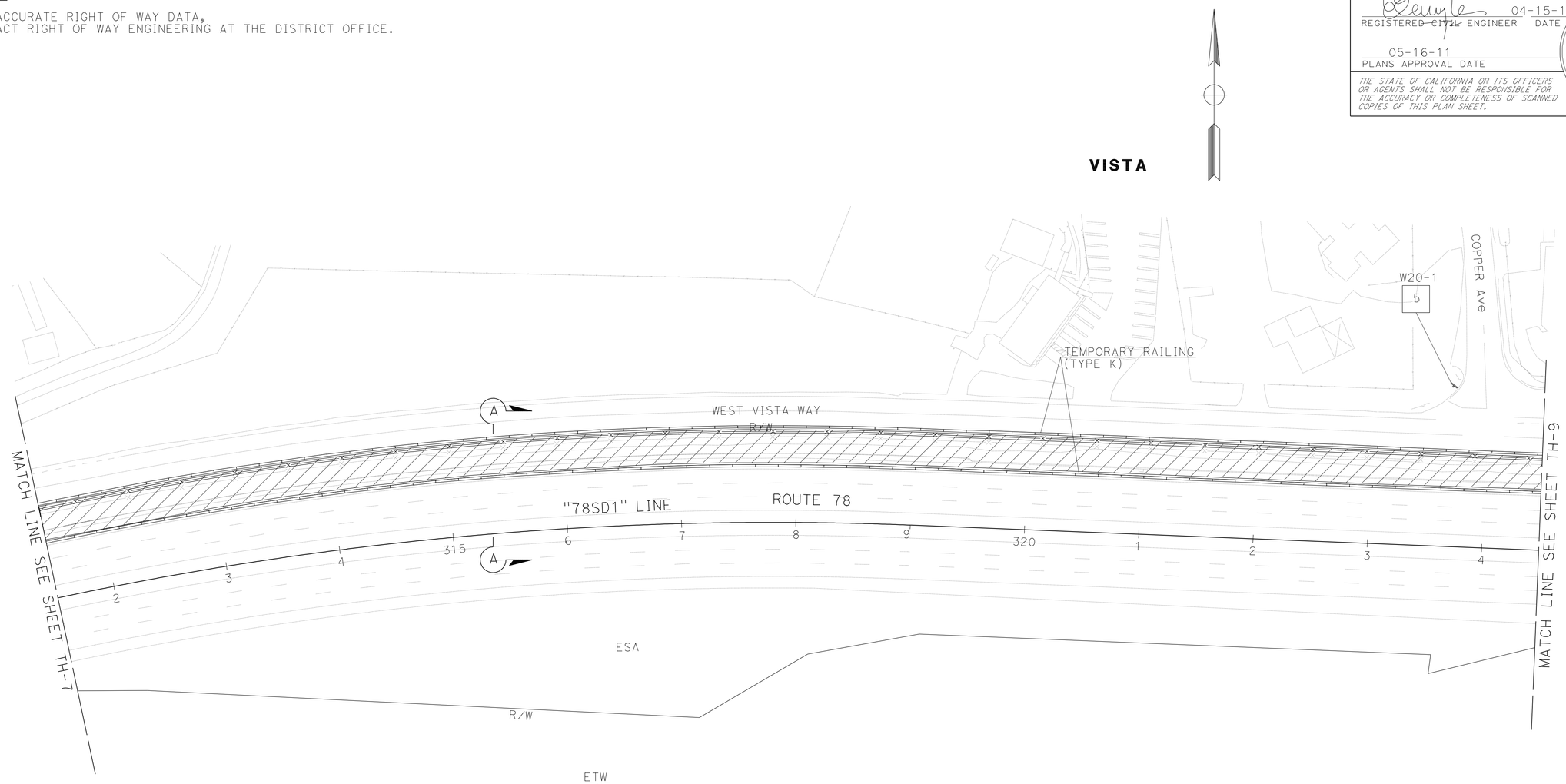

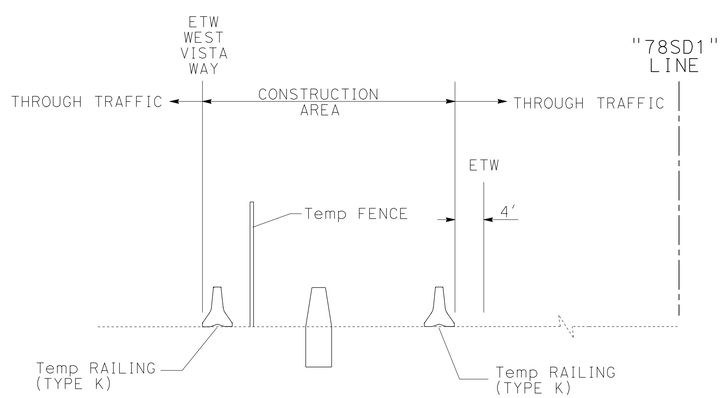

SECTION A-A

THIS PLAN ACCURATE FOR TRAFFIC HANDLING WORK ONLY.

TRAFFIC HANDLING PLAN

SCALE: 1" = 50'

TH-8

REVISED BY	DATE REVISED

CALCULATED-DESIGNED BY	CHECKED BY
BETHNAY DESJARDINS	LEVY Q. LE

FUNCTIONAL SUPERVISOR
RICHARD ESTRADA

STATE OF CALIFORNIA - DEPARTMENT OF TRANSPORTATION
Caltrans
TRAFFIC
PROJECT DEVELOPMENT

LAST REVISION 05-16-11
DATE PLOTTED => 22-JUN-2011
TIME PLOTTED => 13:25

Dist	COUNTY	ROUTE	POST MILES TOTAL PROJECT	SHEET No.	TOTAL SHEETS
11	SD	78	3.5/5.8	50	87

REGISTERED ~~CIVIL~~ ENGINEER 04-15-11 DATE

05-16-11
PLANS APPROVAL DATE

REGISTERED PROFESSIONAL ENGINEER
LEVY Q LE
No. 66748
Exp. 9-30-12
CIVIL
STATE OF CALIFORNIA

THE STATE OF CALIFORNIA OR ITS OFFICERS OR AGENTS SHALL NOT BE RESPONSIBLE FOR THE ACCURACY OR COMPLETENESS OF SCANNED COPIES OF THIS PLAN SHEET.

NOTE:

FOR ACCURATE RIGHT OF WAY DATA,
CONTACT RIGHT OF WAY ENGINEERING AT THE DISTRICT OFFICE.

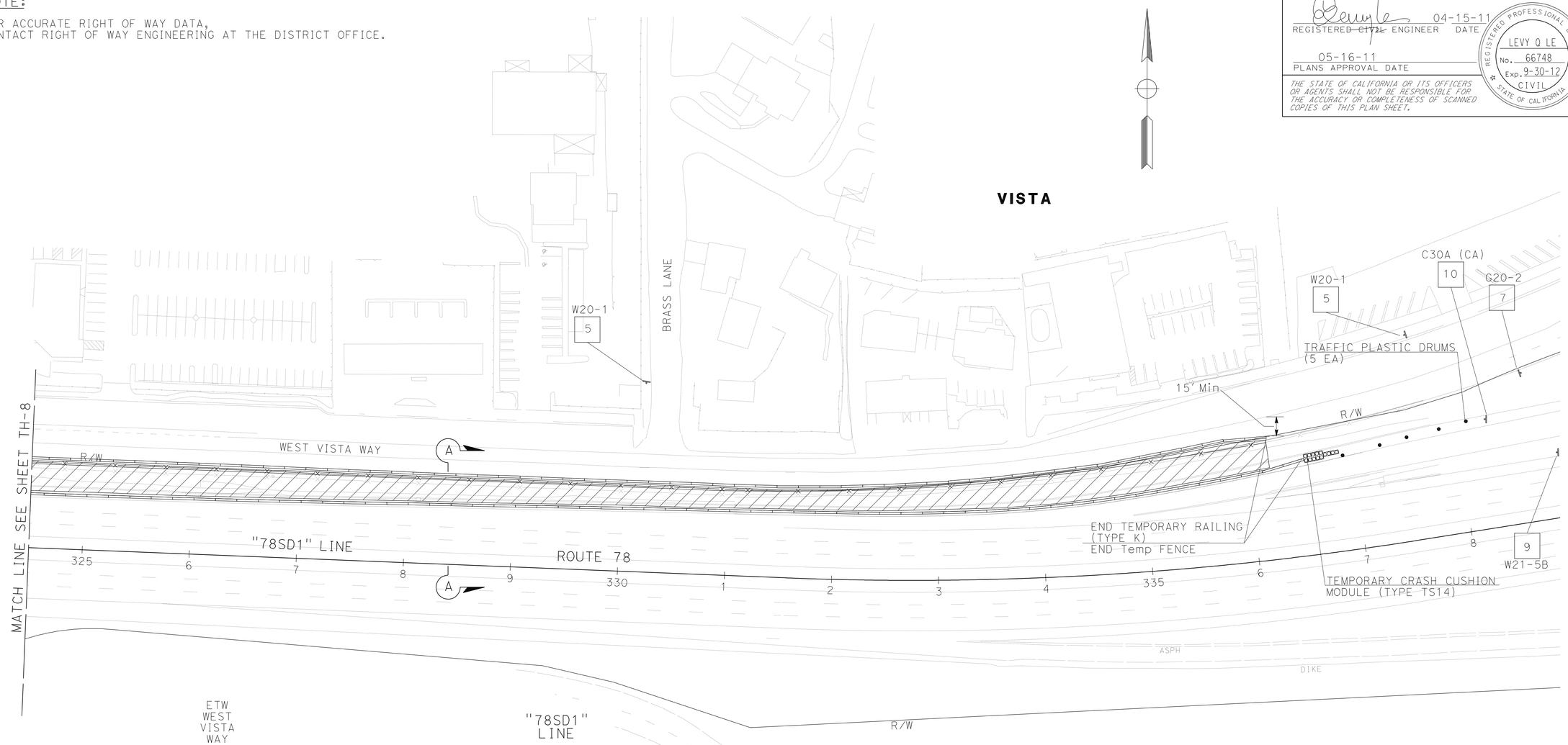

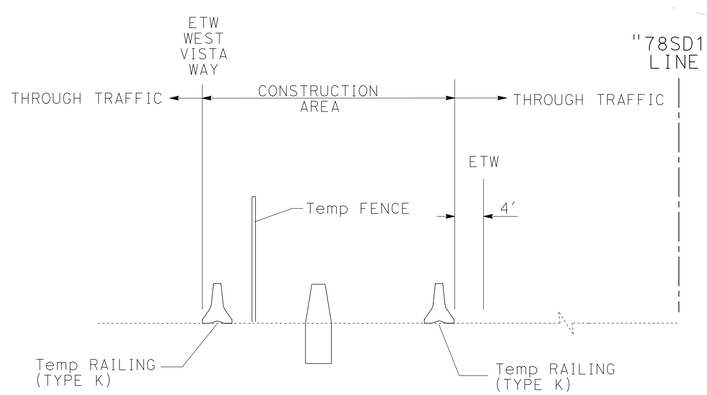

SECTION A-A

THIS PLAN ACCURATE FOR TRAFFIC HANDLING WORK ONLY.

TRAFFIC HANDLING PLAN

SCALE: 1" = 50'

TH-9

REVISED BY	DATE REVISED

BETHNAY DESJARDINS
LEVY Q. LE

CALCULATED-DESIGNED BY
CHECKED BY

FUNCTIONAL SUPERVISOR
RICHARD ESTRADA

STATE OF CALIFORNIA - DEPARTMENT OF TRANSPORTATION
Caltrans PROJECT DEVELOPMENT
TRAFFIC

LAST REVISION 05-17-11
DATE PLOTTED => 22-JUN-2011
TIME PLOTTED => 13:25

Dist	COUNTY	ROUTE	POST MILES TOTAL PROJECT	SHEET No.	TOTAL SHEETS
11	SD	78	3.5/5.8	51	87

REGISTERED ~~CIVIL~~ ENGINEER 04-15-11 DATE

05-16-11
PLANS APPROVAL DATE

REGISTERED PROFESSIONAL ENGINEER
LEVY Q LE
No. 66748
Exp. 9-30-12
CIVIL
STATE OF CALIFORNIA

THE STATE OF CALIFORNIA OR ITS OFFICERS OR AGENTS SHALL NOT BE RESPONSIBLE FOR THE ACCURACY OR COMPLETENESS OF SCANNED COPIES OF THIS PLAN SHEET.

TEMPORARY RAILING (TYPE K)

SHEET	LINE	DIRECTION	STATION LIMITS	LF
TH-1	"VWAY2"	EB	873+45 TO 878+80	535
TH-1	"78SD1"	EB	222+30 TO 222+55	25
TH-1 TO TH-3	"78SD1"	EB	227+30 TO 252+50	2,520
TH-1 TO TH-3	"78SD1"	EB	228+20 TO 253+80	2,560
TH-3 TO TH-4	"78SD1"	WB	244+65 TO 259+05	1,440
TH-3 TO TH-4	"78SD1"	WB	244+40 TO 260+10	1,570
TH-4 TO TH-9	"78SD1"	WB	269+55 TO 336+15	6,660
TH-4 TO TH-9	"78SD1"	WB	269+50 TO 336+50	6,700
			TOTAL	22,010

TEMPORARY FENCE

SHEET	LINE	DIRECTION	STATION LIMITS	LF
TH-1	"VWAY2"	EB	873+45 TO 878+80	535
TH-1	"78SD1"	EB	222+30 TO 222+55	25
TH-3 TO TH-4	"78SD1"	WB	245+40 TO 259+05	1,365
TH-4 TO TH-9	"78SD1"	WB	269+93 TO 336+15	6,622
			TOTAL	8,547

CONSTRUCTION AREA SIGNS

SIGN No.	CODE	PANEL SIZE (In)	No. OF POST AND SIZE (In)	No. OF SIGNS
5	W20-1	36 X 36	1-4 X 4 (S)	17
6	C30 (CA) "BIKE"	36 X 36	1-4 X 4 (S)	3
7	G20-2	36 X 18	1-4 X 4 (S)	6
8	W11-1	30 X 30	1-4 X 4 (S)	3
	W16-1	18 X 24	1-4 X 4 (S)	
9	W21-5B (1000')	36 X 36	1-4 X 4 (S)	3
10	C30A (CA)	36 X 36	1-4 X 4 (S)	4
			TOTAL	36 *

(S) DENOTES STATIONARY MOUNTED SIGN
* SEE CS SHEETS FOR ADDITIONAL QUANTITIES.

TEMPORARY CRASH CUSHION MODULE

SHEET	EA
TH-4	11
TH-9	14
TOTAL	25

ALTERNATIVE TEMPORARY CRASH CUSHION

SHEET	EA
TH-1	1
TOTAL	1

TRAFFIC PLASTIC DRUM

SHEET	EA
TH-1	10
TH-3	20
TH-4	10
TH-9	5
TOTAL	45

TRAFFIC HANDLING QUANTITIES

THQ-1

REVISED BY | DATE REVISED
BETHNAY DESJARDINS | LEVY Q. LE
CALCULATED-DESIGNED BY | CHECKED BY
FUNCTIONAL SUPERVISOR | RICHARD ESTRADA
STATE OF CALIFORNIA - DEPARTMENT OF TRANSPORTATION
Caltrans TRAFFIC PROJECT DEVELOPMENT

LAST REVISION 05-17-11 | DATE PLOTTED => 22-JUN-2011 | TIME PLOTTED => 13:25

Dist	COUNTY	ROUTE	POST MILES TOTAL PROJECT	SHEET No.	TOTAL SHEETS
11	SD	78	3.5/5.8	52	87

REGISTERED CIVIL ENGINEER 04-15-11 DATE

05-16-11
PLANS APPROVAL DATE

REGISTERED PROFESSIONAL ENGINEER
SHAHIN T. ADIBI
No. 54839
Exp. 6-30-12
CIVIL
STATE OF CALIFORNIA

THE STATE OF CALIFORNIA OR ITS OFFICERS OR AGENTS SHALL NOT BE RESPONSIBLE FOR THE ACCURACY OR COMPLETENESS OF SCANNED COPIES OF THIS PLAN SHEET.

TRAFFIC STRIPE SUMMARY

LOCATION	SIDE	DETAIL No.	THERMOPLASTIC 4 In LF
Sta 217+18.0 TO Sta 337+50.0 "78SD1"	L+	27B	12,032.0
Sta 217+18.0 TO Sta 337+50.0 "78SD1"	L+	24	12,032.0
Sta 217+18.0 TO Sta 337+50.0 "78SD1"	R+	27B	12,032.0
Sta 217+18.0 TO Sta 337+50.0 "78SD1"	R+	24	12,032.0
Sta 217+18.0 TO Sta 220+97.6 "CB4"	L+	27B	379.6
Sta 217+18.0 TO Sta 220+97.6 "CB4"	R+	24	379.6
Sta 217+18.0 TO Sta 221+18.2 "SD78RCR5"	L+	27B	400.2
Sta 217+18.0 TO Sta 221+18.2 "SD78RCR5"	R+	24	400.2
Sta 218+91.6 TO Sta 224+35.2 "SD78RCR6"	L+	27B	543.6
Sta 218+91.6 TO Sta 224+35.2 "SD78RCR6"	R+	24	543.6
Sta 250+91.6 TO Sta 261+18.6 "SD78RE3"	L+	27B	1,027.0
Sta 250+91.6 TO Sta 261+18.6 "SD78RE3"	R+	24	1,027.0
Sta 250+91.6 TO Sta 263+39.7 "SD78E2"	L+	27B	1,248.1
Sta 250+91.6 TO Sta 263+39.7 "SD78E2"	R+	24	1,248.1
Sta 260+78.1 TO Sta 272+69.8 "SD78E4"	L+	27B	1,191.7
Sta 260+78.1 TO Sta 272+69.8 "SD78E4"	R+	24	1,191.7
Sta 263+72.0 TO Sta 274+13.8 "SD78RE1"	L+	27B	1,041.8
Sta 263+72.0 TO Sta 274+13.8 "SD78RE1"	R+	24	1,041.8
Sta 331+52.9 TO Sta 337+50.0 "SD78RME4"	L+	27B	597.1
Sta 331+52.9 TO Sta 337+50.0 "SD78RME4"	R+	24	597.1
Sta 331+99.7 TO Sta 337+75.0 "SD78ME3"	L+	27B	550.3
Sta 331+99.7 TO Sta 337+75.0 "SD78ME3"	R+	24	550.3
		TOTAL	62,086.7

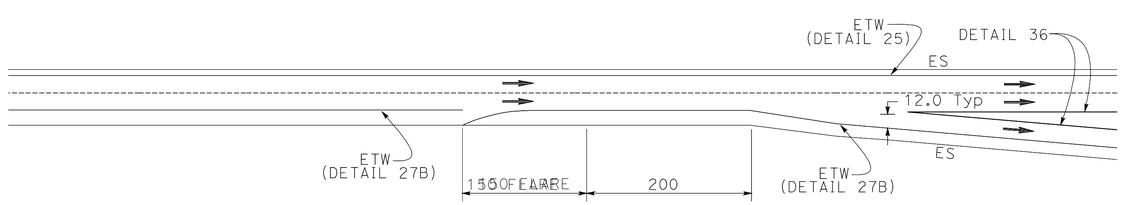

RIGHT EDGELINE FLARE DETAIL

[FOR USE ON ALL EXIT RAMPS EXCEPT WHERE LANE(S) TRAP OFF]

NO SCALE

PAVEMENT DELINEATION DETAILS AND QUANTITIES

PDD-1

REVISED BY	DATE REVISED

MARY BETH HAYES
SHAHIN ADIBI

CALCULATED-DESIGNED BY
CHECKED BY

FUNCTIONAL SUPERVISOR
CAMILLE ABOUFADEL

STATE OF CALIFORNIA - DEPARTMENT OF TRANSPORTATION
Caltrans
TRAFFIC DESIGN

LAST REVISION 05-17-11
DATE PLOTTED => 22-JUN-2011
TIME PLOTTED => 13:25

Dist	COUNTY	ROUTE	POST MILES TOTAL PROJECT	SHEET No.	TOTAL SHEETS
11	SD	78	3.5/5.8	53	87

REGISTERED CIVIL ENGINEER 04-15-11 DATE

05-16-11
PLANS APPROVAL DATE

REGISTERED PROFESSIONAL ENGINEER
SHAHIN T. ADIBI
No. 54839
Exp. 6-30-12
CIVIL
STATE OF CALIFORNIA

THE STATE OF CALIFORNIA OR ITS OFFICERS OR AGENTS SHALL NOT BE RESPONSIBLE FOR THE ACCURACY OR COMPLETENESS OF SCANNED COPIES OF THIS PLAN SHEET.

LEGEND:

XX = ROADSIDE SIGN

RM XX = REMOVE ROADSIDE SIGN

MA XX = MAST ARM MOUNTED ROADSIDE SIGN

EP XX = INSTALL ROADSIDE SIGN PANEL ON EXISTING POST

XX = OVERHEAD SIGN STRUCTURE

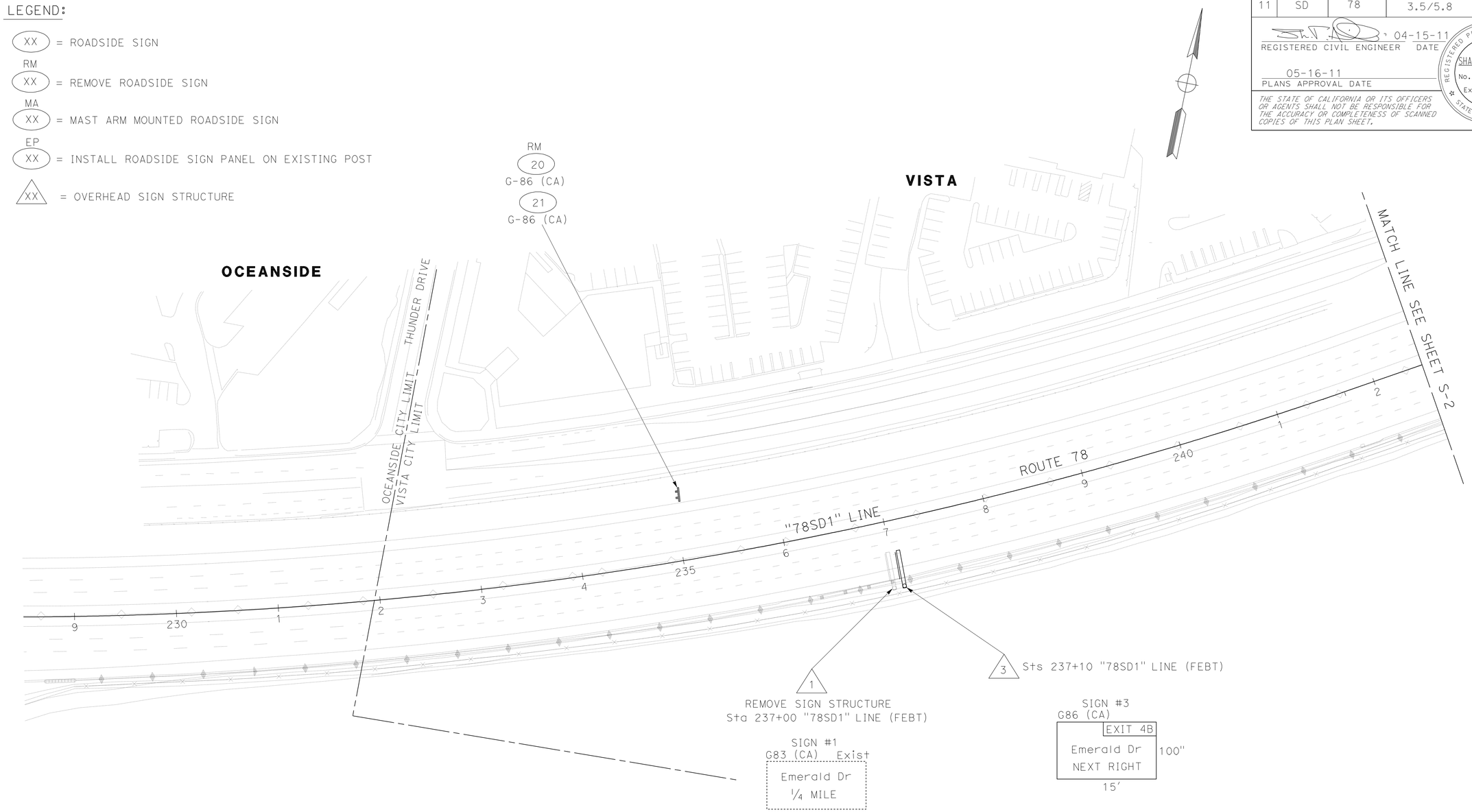

THIS PLAN ACCURATE FOR SIGN WORK ONLY

SIGN PLAN

SCALE: 1" = 50'

S-1

STATE OF CALIFORNIA - DEPARTMENT OF TRANSPORTATION
Caltrans
TRAFFIC DESIGN

FUNCTIONAL SUPERVISOR: CAMILLE ABOUFADEL
CALCULATED-DESIGNED BY: MARY BETH HAYES
CHECKED BY: SHAHIN ADIBI
REVISED BY
DATE REVISED

LAST REVISION 05-18-11
DATE PLOTTED => 22-JUN-2011
TIME PLOTTED => 13:25

Dist	COUNTY	ROUTE	POST MILES TOTAL PROJECT	SHEET No.	TOTAL SHEETS
11	SD	78	3.5/5.8	54	87

REGISTERED CIVIL ENGINEER 04-15-11 DATE

05-16-11
PLANS APPROVAL DATE

REGISTERED PROFESSIONAL ENGINEER
SHAHIN T. ADIBI
No. 54839
Exp. 6-30-12
CIVIL
STATE OF CALIFORNIA

THE STATE OF CALIFORNIA OR ITS OFFICERS OR AGENTS SHALL NOT BE RESPONSIBLE FOR THE ACCURACY OR COMPLETENESS OF SCANNED COPIES OF THIS PLAN SHEET.

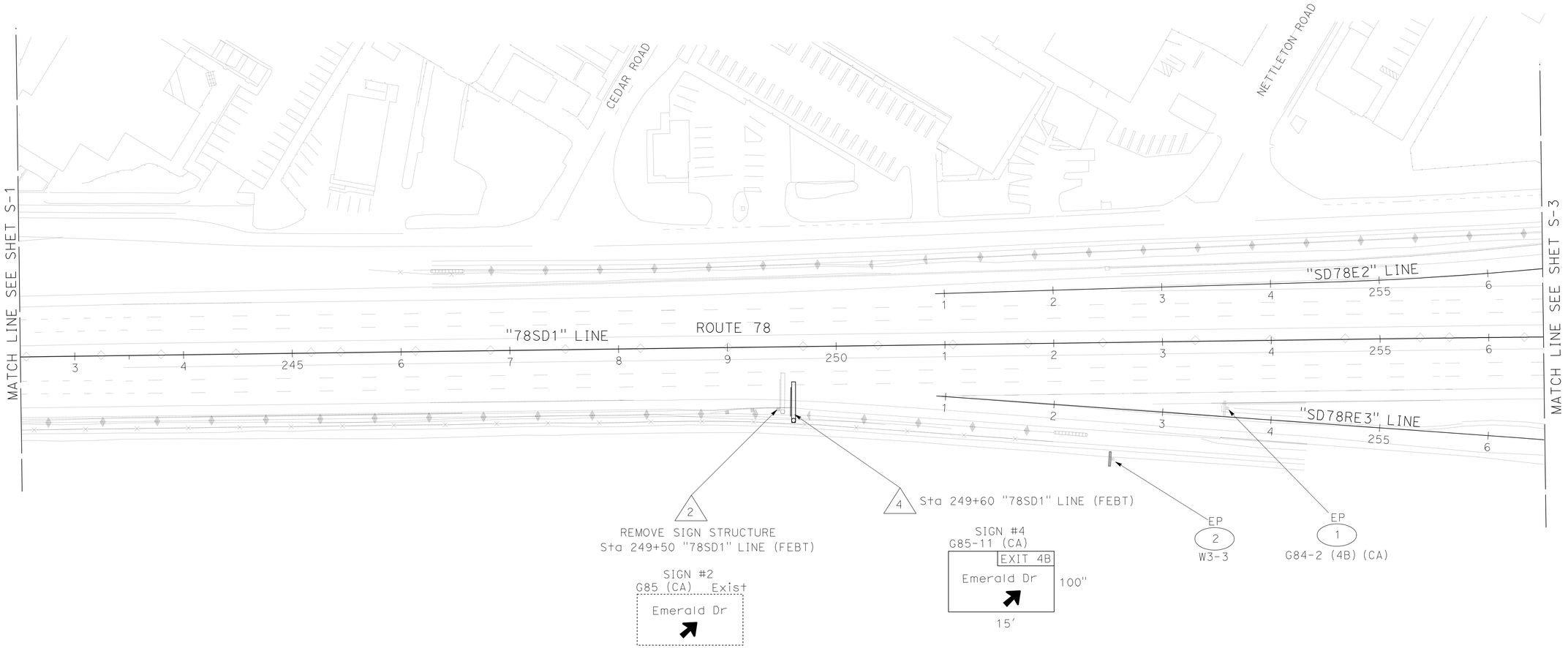

THIS PLAN ACCURATE FOR SIGN WORK ONLY

SIGN PLAN

SCALE: 1" = 50'

S-2

REVISED BY	
DATE REVISED	
MARY BETH HAYES	CALCULATED-DESIGNED BY
SHAHIN ADIBI	CHECKED BY
FUNCTIONAL SUPERVISOR	
CAMILLE ABOUFADEL	

STATE OF CALIFORNIA - DEPARTMENT OF TRANSPORTATION
Caltrans
TRAFFIC DESIGN

LAST REVISION 05-18-11
DATE PLOTTED => 22-JUN-2011
TIME PLOTTED => 13:25

Dist	COUNTY	ROUTE	POST MILES TOTAL PROJECT	SHEET No.	TOTAL SHEETS
11	SD	78	3.5/5.8	55	87

REGISTERED CIVIL ENGINEER 04-15-11 DATE

05-16-11
PLANS APPROVAL DATE

REGISTERED PROFESSIONAL ENGINEER
SHAHIN T. ADIBI
No. 54839
Exp. 6-30-12
CIVIL
STATE OF CALIFORNIA

THE STATE OF CALIFORNIA OR ITS OFFICERS OR AGENTS SHALL NOT BE RESPONSIBLE FOR THE ACCURACY OR COMPLETENESS OF SCANNED COPIES OF THIS PLAN SHEET.

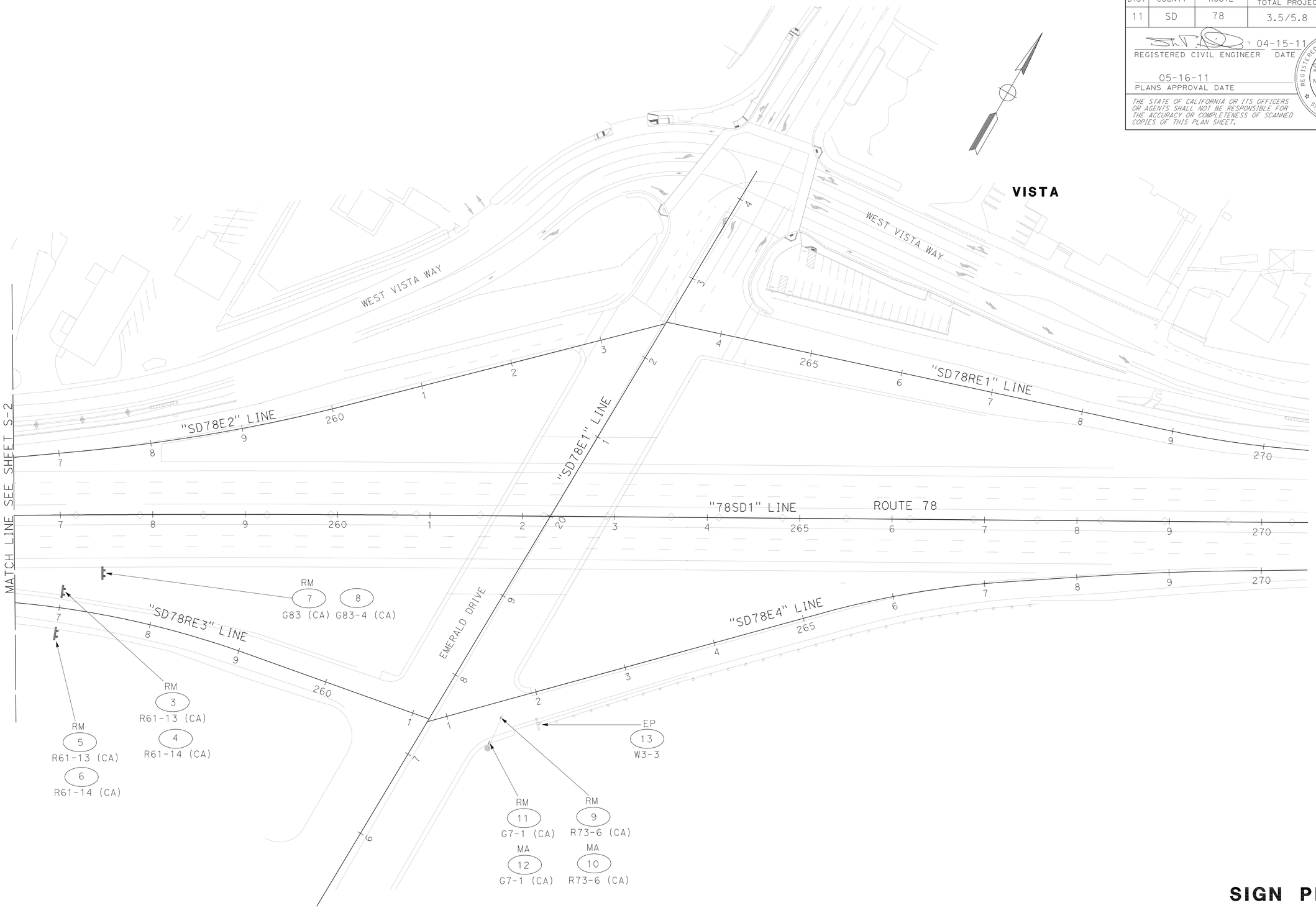

THIS PLAN ACCURATE FOR SIGN WORK ONLY

SIGN PLAN

SCALE: 1" = 50'

S-3

STATE OF CALIFORNIA - DEPARTMENT OF TRANSPORTATION
Caltrans
TRAFFIC DESIGN

FUNCTIONAL SUPERVISOR: CAMILLE ABOUFADEL
CALCULATED-DESIGNED BY: MARY BETH HAYES
CHECKED BY: SHAHIN ADIBI
REVISED BY
DATE REVISED

LAST REVISION 05-18-11
DATE PLOTTED => 22-JUN-2011
TIME PLOTTED => 13:25

Dist	COUNTY	ROUTE	POST MILES TOTAL PROJECT	SHEET No.	TOTAL SHEETS
11	SD	78	3.5/5.8	56	87

04-15-11
REGISTERED CIVIL ENGINEER DATE

05-16-11
PLANS APPROVAL DATE

REGISTERED PROFESSIONAL ENGINEER
SHAHIN T. ADIBI
No. 54839
Exp. 6-30-12
CIVIL
STATE OF CALIFORNIA

THE STATE OF CALIFORNIA OR ITS OFFICERS OR AGENTS SHALL NOT BE RESPONSIBLE FOR THE ACCURACY OR COMPLETENESS OF SCANNED COPIES OF THIS PLAN SHEET.

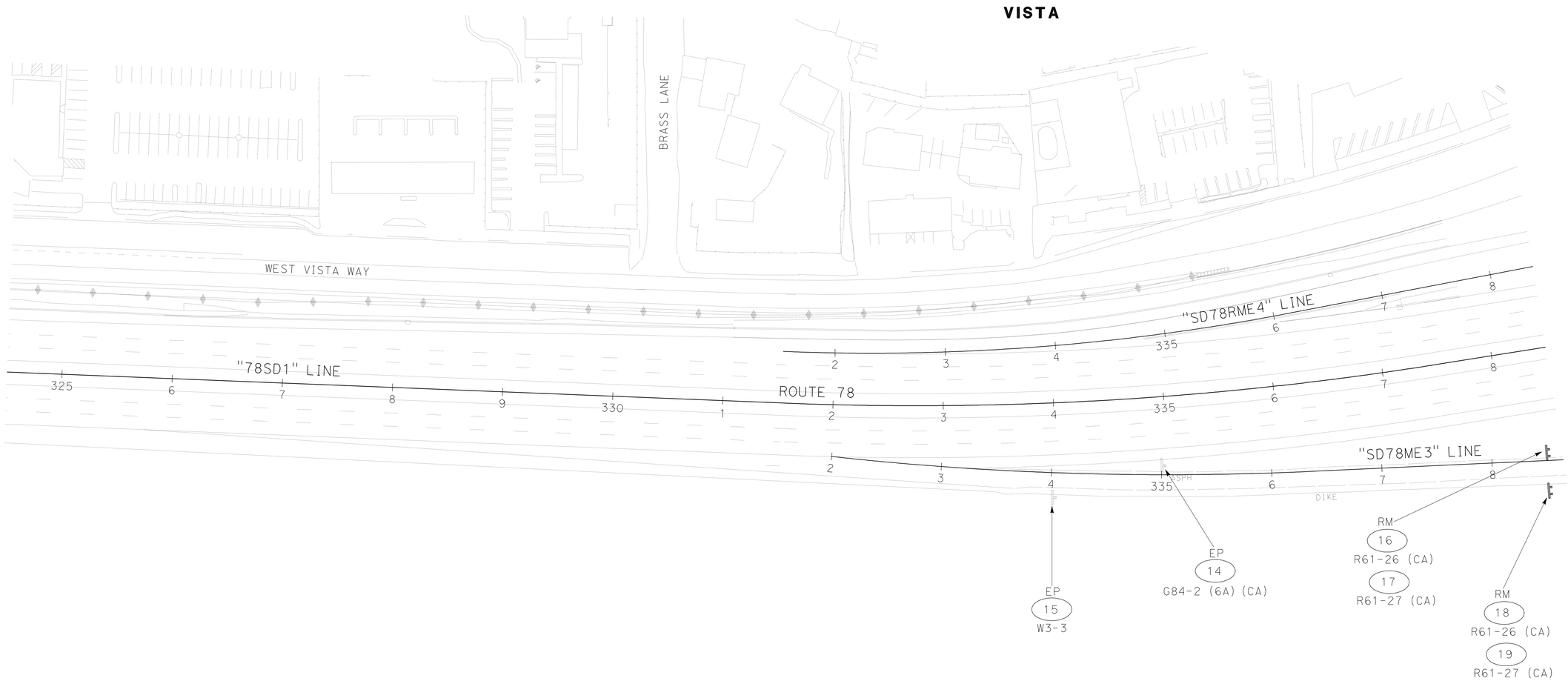

THIS PLAN ACCURATE FOR SIGN WORK ONLY

SIGN PLAN

SCALE: 1" = 50'

S-4

REVISED BY	DATE REVISED

CALCULATED-DESIGNED BY: MARY BETH HAYES
CHECKED BY: SHAHIN ADIBI

FUNCTIONAL SUPERVISOR: CAMILLE ABOUFADEL

STATE OF CALIFORNIA - DEPARTMENT OF TRANSPORTATION
Caltrans
TRAFFIC DESIGN

LAST REVISION 05-18-11
DATE PLOTTED => 22-JUN-2011
TIME PLOTTED => 13:25

Dist	COUNTY	ROUTE	POST MILES TOTAL PROJECT	SHEET No.	TOTAL SHEETS
11	SD	78	3.5/5.8	57	87

04-15-11
REGISTERED CIVIL ENGINEER DATE

05-16-11
PLANS APPROVAL DATE

REGISTERED PROFESSIONAL ENGINEER
SHAHIN T. ADIBI
No. 54839
Exp. 6-30-12
CIVIL
STATE OF CALIFORNIA

THE STATE OF CALIFORNIA OR ITS OFFICERS OR AGENTS SHALL NOT BE RESPONSIBLE FOR THE ACCURACY OR COMPLETENESS OF SCANNED COPIES OF THIS PLAN SHEET.

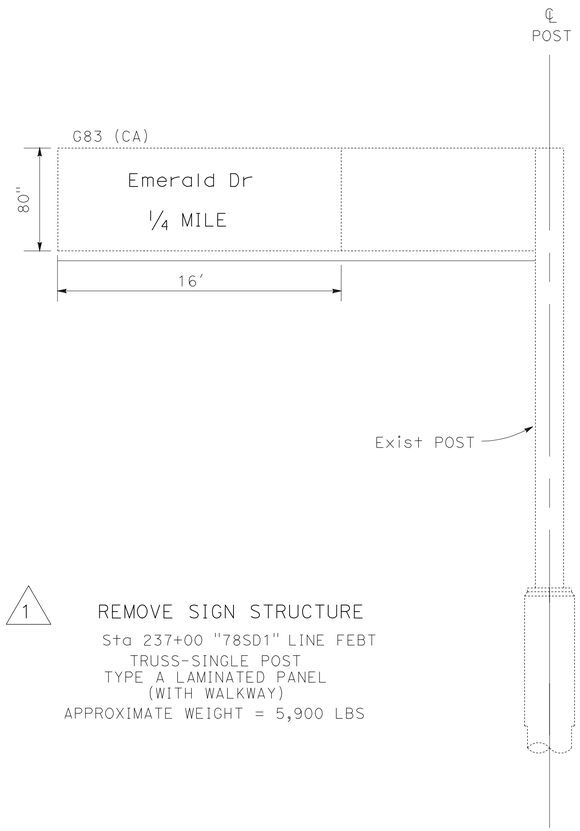

1 REMOVE SIGN STRUCTURE
Sta 237+00 "78SD1" LINE FEBT
TRUSS-SINGLE POST
TYPE A LAMINATED PANEL
(WITH WALKWAY)
APPROXIMATE WEIGHT = 5,900 LBS

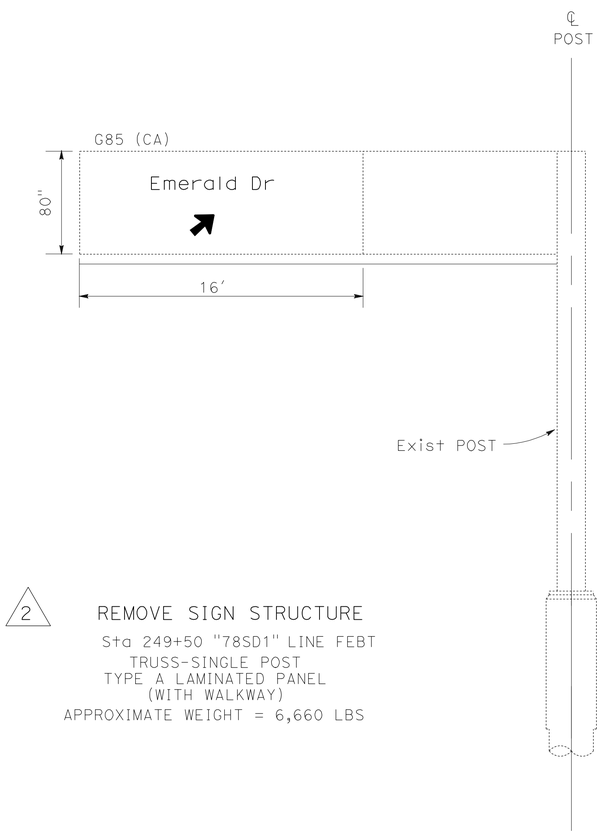

2 REMOVE SIGN STRUCTURE
Sta 249+50 "78SD1" LINE FEBT
TRUSS-SINGLE POST
TYPE A LAMINATED PANEL
(WITH WALKWAY)
APPROXIMATE WEIGHT = 6,660 LBS

SIGN DETAILS
OVERHEAD SIGN STRUCTURE

NO SCALE

SD-1

STATE OF CALIFORNIA - DEPARTMENT OF TRANSPORTATION
Caltrans
TRAFFIC DESIGN

FUNCTIONAL SUPERVISOR: CAMILLE ABOUFADEL
CALCULATED-DESIGNED BY: MARY BETH HAYES
CHECKED BY: SHAHIN ADIBI
REVISED BY
DATE REVISED

LAST REVISION 05-18-11
DATE PLOTTED => 22-JUN-2011
TIME PLOTTED => 13:26

Dist	COUNTY	ROUTE	POST MILES TOTAL PROJECT	SHEET No.	TOTAL SHEETS
11	SD	78	3.5/5.8	58	87

REGISTERED CIVIL ENGINEER 04-15-11 DATE

05-16-11
PLANS APPROVAL DATE

REGISTERED PROFESSIONAL ENGINEER
SHAHIN T. ADIBI
No. 54839
Exp. 6-30-12
CIVIL
STATE OF CALIFORNIA

THE STATE OF CALIFORNIA OR ITS OFFICERS OR AGENTS SHALL NOT BE RESPONSIBLE FOR THE ACCURACY OR COMPLETENESS OF SCANNED COPIES OF THIS PLAN SHEET.

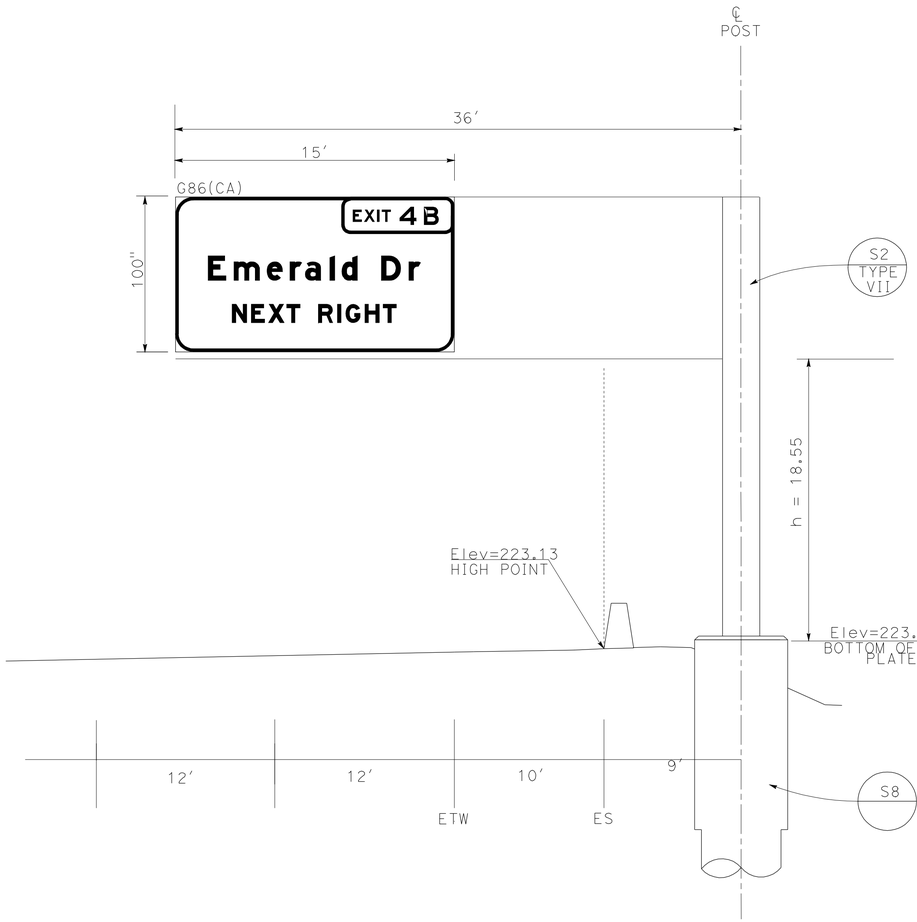

3 STA 237+10 "78SD1" LINE FEBT

TRUSS-SINGLE POST
TYPE A LAMINATED PANEL
(WITH WALKWAY)

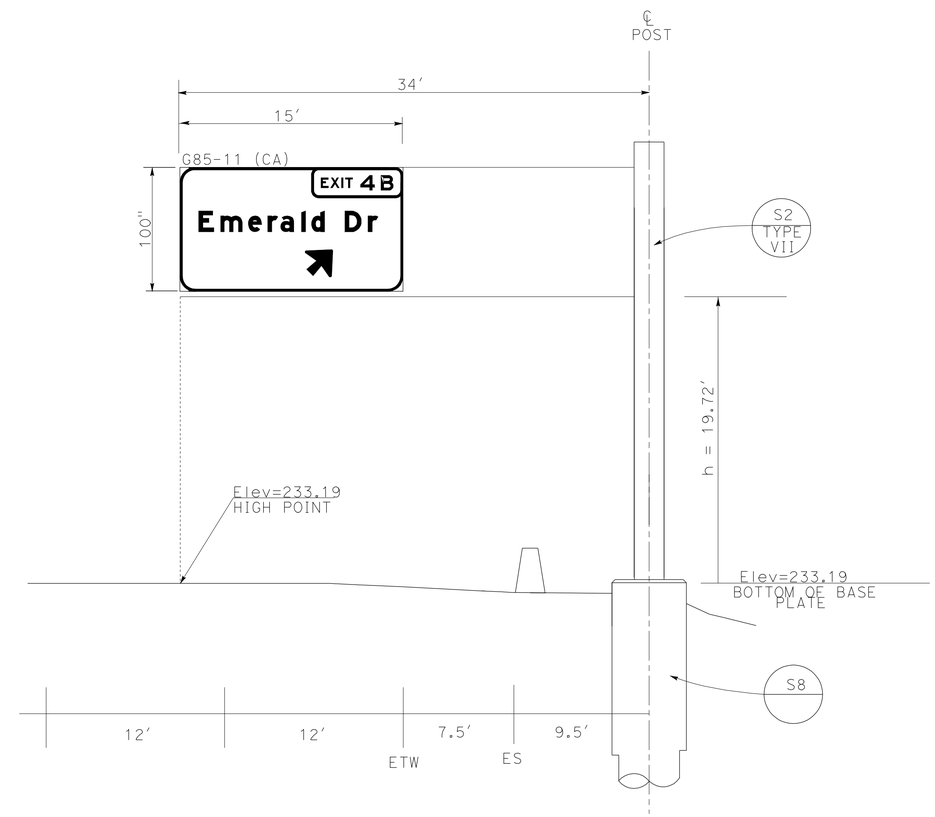

4 STA 249+60 "78SD1" LINE FEBT

TRUSS-SINGLE POST
TYPE A LAMINATED PANEL
(WITH WALKWAY)

SIGN DETAILS
OVERHEAD SIGN STRUCTURE

NO SCALE

SD-2

REVISED BY	DATE REVISED

CALCULATED-DESIGNED BY	MARY BETH HAYES
CHECKED BY	SHAHIN ADIBI

FUNCTIONAL SUPERVISOR: CAMILLE ABOUFADEL

STATE OF CALIFORNIA - DEPARTMENT OF TRANSPORTATION
Caltrans
TRAFFIC DESIGN

LAST REVISION 05-18-11
DATE PLOTTED => 22-JUN-2011
TIME PLOTTED => 13:26

Dist	COUNTY	ROUTE	POST MILES TOTAL PROJECT	SHEET No.	TOTAL SHEETS
11	SD	78	3.5/5.8	59	87

REGISTERED CIVIL ENGINEER 04-15-11 DATE

05-16-11
PLANS APPROVAL DATE

REGISTERED PROFESSIONAL ENGINEER SHAHIN T. ADIBI No. 54839 Exp. 6-30-12 CIVIL STATE OF CALIFORNIA

THE STATE OF CALIFORNIA OR ITS OFFICERS OR AGENTS SHALL NOT BE RESPONSIBLE FOR THE ACCURACY OR COMPLETENESS OF SCANNED COPIES OF THIS PLAN SHEET.

LEGEND:

U/L = UPPER/LOWER CASE LETTERING
Caps = CAPITAL LETTERING
Num = NUMERAL SIZE
Deg = DEGREE

G70-2 (CA)

G86 (CA)

3 Sta 237+10 "78SD1" LINE FEBT

LEGEND				ARROW	
LINE No.	U/L	Caps	Num	Deg	LENGTH
1		8" E	12" E		
2	16" E(M)/12" E(M)				
3		12" E			

G70-2 (CA)

G85-11(CA)

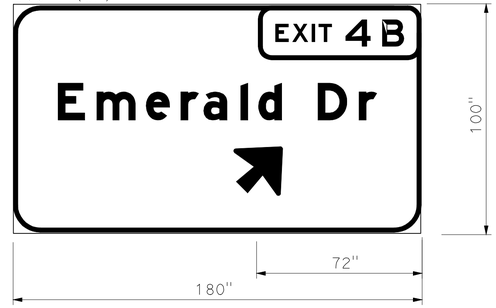

4 Sta 249+60 "78SD1" LINE FEBT

LEGEND				ARROW	
LINE No.	U/L	Caps	Num	Deg	LENGTH
1		8" E	12" E		
2	16" E(M)/12" E(M)				
3				45	25"

G70-2 (CA)

SIGN #8
G83-4 (CA)

TOTAL FRACTION HEIGHT = 18"

LEGEND				ARROW	
LINE No.	U/L	Caps	Num	Deg	LENGTH
1		6" E	10" E		
2	13.3" E(M)/10" E(M)				
3		10" E	12" E		

SIGN #12
G7-1 (CA)

LEGEND				ARROW	
LINE No.	U/L	Caps	Num	Deg	LENGTH
1	6" E(M)/4.5" E(M)				

SIGN #21
G86 (CA)

LEGEND				ARROW	
LINE No.	U/L	Caps	Num	Deg	LENGTH
1	13.3" E(M)/10" E(M)				
2	13.3" E(M)/10" E(M)				
3		10" E			

SIGN DETAILS

CONTRACTOR FURNISHED SIGN PANEL

NO SCALE

SD-3

REVISED BY | DATE REVISED
MARY BETH HAYES | SHAHIN ADIBI
CALCULATED-DESIGNED BY | CHECKED BY
FUNCTIONAL SUPERVISOR
CAMILLE ABOUFADEL

STATE OF CALIFORNIA - DEPARTMENT OF TRANSPORTATION
Caltrans
TRAFFIC DESIGN

LAST REVISION 05-18-11
DATE PLOTTED => 22-JUN-2011
TIME PLOTTED => 13:26

Dist	COUNTY	ROUTE	POST MILES TOTAL PROJECT	SHEET No.	TOTAL SHEETS
11	SD	78	3.5/5.8	60	87

REGISTERED CIVIL ENGINEER 04-15-11 DATE

05-16-11
PLANS APPROVAL DATE

REGISTERED PROFESSIONAL ENGINEER SHAHIN T. ADIBI No. 54839 Exp. 6-30-12 CIVIL STATE OF CALIFORNIA

THE STATE OF CALIFORNIA OR ITS OFFICERS OR AGENTS SHALL NOT BE RESPONSIBLE FOR THE ACCURACY OR COMPLETENESS OF SCANNED COPIES OF THIS PLAN SHEET.

NOTES:

1. FEDERAL MANUAL ON UNIFORM TRAFFIC CONTROL DEVICES SIGN CODES ARE SHOWN UNLESS DESIGNATED BY (CA) INDICATING STANDARD CALIFORNIA SIGN SPECIFICATIONS.
2. EXACT LOCATION OF SIGNS AND POSTS TO BE DETERMINED BY THE ENGINEER.
3. MINIMUM POST LENGTHS WERE CALCULATED ASSUMING LEVEL GROUND SURFACE FROM THE EP. ENSURE "C" DIMENSIONS ARE MET. POST LENGTHS MAY VARY DUE TO SITE CONDITIONS.
4. REFER TO "FURNISH ROADSIDE SIGN PANEL" CHART FOR FURTHER INFORMATION.

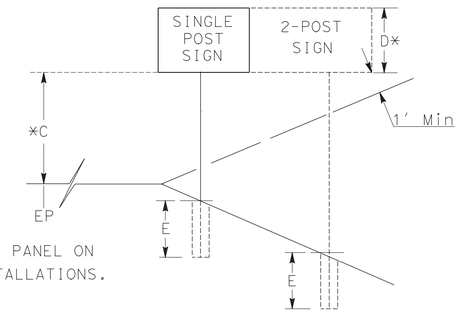

*TO BOTTOM OF LOWER PANEL ON MULTIPLE SIGN INSTALLATIONS.

ROADSIDE SIGN QUANTITIES

SIGN No.	CODE	SHEET No.	PANEL SIZE Horiz	PANEL SIZE Vert	D	C	E	Min POST LENGTH	POST SIZE 4X4	POST SIZE 4X6	POST SIZE 6X6	POST SIZE 6X8	ROADSIDE SIGN ONE POST	ROADSIDE SIGN TWO POST	REMOVE ROADSIDE SIGN	INSTALL ROADSIDE SIGN PANEL ON EXISTING POST	INSTALL SIGN (MAST-ARM HANGER METHOD)	REMARKS
			INCHES X INCHES		F†	F†	F†	F†	INCHES X INCHES				EA	EA	EA	EA	EA	
1	G84-2 (4B) (CA)	S-1	54	48												1		REMOVE PANEL
2	W3-3		36	36												1		REMOVE PANEL
3	R61-13 (CA)														1			
4	R61-14 (CA)		72	45	4.0	7.0	4.5	15.5		X				1				
5	R61-13 (CA)														1			
6	R61-14 (CA)		72	45	4.0	7.0	4.5	15.5		X				1				
7	G83 (CA)														1			
8	G83-4 (CA)		138	84	7.0	7.0	6.0	20.0				X		1				
9	R73-6 (CA)														1			
10	R73-6 (CA)		36	36													1	
11	G7-1 (CA)														1			
12	G7-1 (CA)		66	18													1	
13	W3-3		36	36												1		REMOVE PANEL
14	G84-2 (6A) (CA)		54	48												1		REMOVE PANEL
15	W3-3		36	36												1		REMOVE PANEL
16	R61-26 (CA)														1			
17	R61-27 (CA)		72	45	4.0	7.0	4.5	15.5		X				1				
18	R61-26 (CA)														1			
19	R61-27 (CA)		72	45	4.0	7.0	4.5	15.5		X				1				
20	G86 (CA)														1			
21	G86 (CA)		138	78	7.0	7.0	6.0	20.0				X		1				
												TOTAL		6	8	5	2	

SIGN QUANTITIES

SQ-1

STATE OF CALIFORNIA - DEPARTMENT OF TRANSPORTATION
Caltrans® TRAFFIC DESIGN

FUNCTIONAL SUPERVISOR: CAMILLE ABOUFADEL
CALCULATED-DESIGNED BY: SHAHIN ADIBI
CHECKED BY: MARY BETH HAYES
REVISED BY
DATE REVISED

LAST REVISION 05-18-11
DATE PLOTTED => 22-JUN-2011
TIME PLOTTED => 13:26

Dist	COUNTY	ROUTE	POST MILES TOTAL PROJECT	SHEET No.	TOTAL SHEETS
11	SD	78	3.5/5.8	61	87

REGISTERED CIVIL ENGINEER 04-15-11 DATE

05-16-11
PLANS APPROVAL DATE

REGISTERED PROFESSIONAL ENGINEER SHAHIN T. ADIBI No. 54839 Exp. 6-30-12 CIVIL STATE OF CALIFORNIA

THE STATE OF CALIFORNIA OR ITS OFFICERS OR AGENTS SHALL NOT BE RESPONSIBLE FOR THE ACCURACY OR COMPLETENESS OF SCANNED COPIES OF THIS PLAN SHEET.

NOTES:

1. GREEN-Grn, WHITE-Wht, BLACK-Blk, BLUE-Blu, YELLOW-Ylw, BROWN-Brn, RED-Red, ORANGE-Org, CREAM-Crm.
2. REFER TO "ROADSIDE SIGN QUANTITIES" CHART FOR FURTHER INFORMATION.
3. FEDERAL MANUAL ON UNIFORM TRAFFIC CONTROL DEVICES SIGN CODES ARE SHOWN UNLESS DESIGNATED BY (CA) INDICATING STANDARD CALIFORNIA SIGN SPECIFICATIONS.

FURNISH ROADSIDE SIGN PANEL

SIGN No.	CODE	PANEL SIZE Horiz (In X In)	PANEL SIZE Vert (In X In)	BACKGROUND SHEETING COLOR	BACKGROUND RETRO-REFLECTIVE ASTM TYPE	LEGEND SHEETING COLOR	SIGN PANEL REFLECTIVE ASTM TYPE	SIGN PANEL BLACK (NON-REFLECTIVE)	SINGLE SHEET ALUMINUM (SQFT) UNFRAMED 0.063 In	SINGLE SHEET ALUMINUM (SQFT) UNFRAMED 0.080 In	SINGLE SHEET ALUMINUM (SQFT) FRAMED 0.063 In	SINGLE SHEET ALUMINUM (SQFT) FRAMED 0.080 In	LAMINATED (SQFT) TYPE B 1 In	LAMINATED (SQFT) TYPE H 2.5 In	PROTECTIVE OVERLAY PREMIUM FILM	REMARKS
1	G84-2 (4B) (CA)	54	48	GREEN	IV	WHITE	IV			18.0					X	
2	W3-3	36	36	YELLOW	IV	BLACK		X	9.0						X	
4	R61-14 (CA)	72	45	WHITE	IV	BLACK		X	22.5						X	
6	R61-14 (CA)	72	45	WHITE	IV	BLACK		X	22.5						X	
8	G83-4 (CA)	138	84	GREEN	IV	WHITE	IV		9.0				80.5		X	
10	R73-6 (CA)	36	36	WHITE	IV	BLACK		X	9.0						X	
12	G7-1 (CA)	66	18	GREEN	IV	WHITE	IV		8.25						X	
13	W3-3	36	36	YELLOW	IV	BLACK		X	9.0						X	
14	G84-2 (6A) (CA)	54	48	GREEN	IV	WHITE	IV			18.0					X	
15	W3-3	36	36	YELLOW	IV	BLACK		X	9.0						X	
17	R61-27 (CA)	72	45	WHITE	IV	BLACK		X	22.5						X	
19	R61-27 (CA)	72	45	WHITE	IV	BLACK		X	22.5						X	
21	G86 (CA)	138	78	GREEN	IV	WHITE	IV						75.0		X	
								TOTAL	143.25	36.0			155.5			

SIGN QUANTITIES

SQ-2

STATE OF CALIFORNIA - DEPARTMENT OF TRANSPORTATION
Caltrans
TRAFFIC DESIGN

FUNCTIONAL SUPERVISOR: CAMILLE ABOUFADEL
CALCULATED-DESIGNED BY: MARY BETH HAYES
CHECKED BY: SHAHIN ADIBI
REVISED BY
DATE REVISED

LAST REVISION 05-18-11
DATE PLOTTED => 22-JUN-2011
TIME PLOTTED => 13:26

Dist	COUNTY	ROUTE	POST MILES TOTAL PROJECT	SHEET No.	TOTAL SHEETS
11	SD	78	3.5/5.8	62	87

REGISTERED CIVIL ENGINEER 04-15-11 DATE

05-16-11
PLANS APPROVAL DATE

REGISTERED PROFESSIONAL ENGINEER SHAHIN T. ADIBI No. 54839 Exp. 6-30-12 CIVIL STATE OF CALIFORNIA

THE STATE OF CALIFORNIA OR ITS OFFICERS OR AGENTS SHALL NOT BE RESPONSIBLE FOR THE ACCURACY OR COMPLETENESS OF SCANNED COPIES OF THIS PLAN SHEET.

NOTES:

1. FEDERAL MANUAL ON UNIFORM TRAFFIC CONTROL DEVICES SIGN CODES ARE SHOWN UNLESS DESIGNATED BY (CA) INDICATING STANDARD CALIFORNIA SIGN SPECIFICATIONS.
2. REFER TO "ROADSIDE SIGN QUANTITY" TABLE FOR FURTHER INFORMATION

OVERHEAD SIGN STRUCTURE QUANTITIES

SIGN No. △	SIGN CODE	STATION	INSTALL SIGN STRUCTURE (TRUSS)	FURNISH SIGN STRUCTURE (TRUSS)	INSTALL SIGN PANEL ON EXISTING SIGN STRUCTURE	INSTALL SIGN STRUCTURE (BRIDGE MOUNTED WITH WALKWAY)	FURNISH SIGN STRUCTURE (BRIDGE MOUNTED WITH WALKWAY)	CIDH CONCRETE PILE (SIGN FOUNDATION) 60 INCH L†	60 INCH R†	36 INCH L†	36 INCH R†	REMOVE SIGN STRUCTURE	REMARKS
			(LB)	(LB)	(SQFT)	(LB)	(LB)	(LF)	(LF)	(LF)	(LF)	(EA)	
1	G83 (CA)	237+00 "78SD1"										1	APPROXIMATE WEIGHT = 5,900 LBS
2	G85 (CA)	249+50 "78SD1"										1	APPROXIMATE WEIGHT = 6,660 LBS
3	G86 (CA)	237+10 "78SD1"	19,625	19,625					23				
4	G85-11 (CA)	249+60 "78SD1"	19,485	19,485					23				
		TOTAL	39,110	39,110					46			2	

FURNISH OVERHEAD SIGN PANEL

SIGN No. △	SIGN CODE	SHEET No.	PANEL SIZE Horiz	PANEL SIZE Vert	BACKGROUND SHEETING COLOR	BACKGROUND RETRO-REFLECTIVE ASTM TYPE	LEGEND SHEETING COLOR	LEGEND REFLECTIVE ASTM TYPE	FURNISH SIGN PANEL FORMED	LAMINATED (1"-TYPE A)	HARDWARE TYPE	PROTECTIVE OVERLAY	REMARKS
			In X In						SQFT	SQFT	A-1	PREMIUM FILM	
3	G86 (CA)	S-2	180 X 100		GREEN	IV	WHITE	IV		124.5		X	
4	G85-11 (CA)	S-3	180 X 100		GREEN	IV	WHITE	IV		124.5		X	
									TOTAL	249.0			

SIGN QUANTITIES
SQ-3

REVISED BY | DATE REVISED
MARY BETH HAYES | SHAHIN ADIBI
CALCULATED-DESIGNED BY | CHECKED BY
FUNCTIONAL SUPERVISOR: CAMILLE ABOUFADEL

STATE OF CALIFORNIA - DEPARTMENT OF TRANSPORTATION
Caltrans
TRAFFIC DESIGN

LAST REVISION 05-18-11 | DATE PLOTTED => 22-JUN-2011 | TIME PLOTTED => 13:26

Dist	COUNTY	ROUTE	POST MILES TOTAL PROJECT	SHEET No.	TOTAL SHEETS
11	SD	78	3.5/5.8	63	87

REGISTERED ~~CIVIL~~ ENGINEER 04-15-11 DATE

05-16-11
PLANS APPROVAL DATE

REGISTERED PROFESSIONAL ENGINEER LEVY Q LE No. 66748 Exp. 9-30-12 CIVIL STATE OF CALIFORNIA

THE STATE OF CALIFORNIA OR ITS OFFICERS OR AGENTS SHALL NOT BE RESPONSIBLE FOR THE ACCURACY OR COMPLETENESS OF SCANNED COPIES OF THIS PLAN SHEET.

CONCRETE BARRIER

STATION	LENGTH (LF) (TYPE 60)	(TYPE 60 Mod 1)	(TYPE 60 Mod 2)	(TYPE 60C)
Sta 10+00.0 TO 15+11.3 "A"	511.3			
Sta 9+60.0 TO 11+00.0 "B"		140.0		
Sta 11+00.0 TO 33+20.0 "B"	2,220.0			
Sta 10+00.0 TO 15+50.0 "C"		550.0		
Sta 15+50.0 TO 17+00.0 "C"	150.0			
Sta 17+00.0 TO 18+00.0 "C"		100.0		
Sta 18+00.0 TO 18+50.0 "C"	50.0			
Sta 18+50.0 TO 21+70.0 "C"		320.0		
Sta 10+40.0 TO 11+00.0 "D"			60.0	
Sta 11+00.0 TO 15+75.0 "D"		475.0		
Sta 15+75.0 TO 18+75.0 "D"				300.0
Sta 18+75.0 TO 19+50.0 "D"	75.0			
Sta 19+50.0 TO 27+25.0 "D"				775.0
Sta 27+25.0 TO 31+00.0 "D"	375.0			
Sta 31+00.0 TO 32+80.0 "D"		180.0		
Sta 32+80.0 TO 44+50.0 "D"			1,170.0	
Sta 44+50.0 TO 44+75.0 "D"		25.0		
Sta 44+75.0 TO 48+25.0 "D"				350.0
Sta 48+25.0 TO 49+50.0 "D"	125.0			
Sta 49+50.0 TO 50+10.0 "D"		60.0		
Sta 50+10.0 TO 58+90.0 "D"			880.0	
Sta 58+90.0 TO 60+50.0 "D"		160.0		
Sta 60+50.0 TO 61+50.0 "D"	100.0			
Sta 61+50.0 TO 64+75.0 "D"				325.0
Sta 64+75.0 TO 65+90.0 "D"	115.0			
Sta 65+90.0 TO 68+05.0 "D"		215.0		
Sta 68+05.0 TO 75+17.0 "D"			712.0	
TOTAL	3,721.3	2,225.0	2,822.0	1,750.0

ALTERNATIVE CRASH CUSHION SYSTEM

SHEET	EA
L-2	1
L-3	2
L-4	1
L-5	1
L-9	1
TOTAL	6

22" CIDH CONCRETE PILE

LOCATION	(LF)
Sta 10+40.0 TO 11+00.0 "D"	43.5
Sta 32+80.0 TO 44+50.0 "D"	848.3
Sta 50+10.0 TO 58+90.0 "D"	638.0
Sta 68+05.0 TO 75+17.0 "D"	514.8
TOTAL	2,044.6

RIGHT OF WAY FENCE QUANTITIES

STATION	SIDE	CHAIN LINK FENCE (TYPE CL-6) (LF)	CHAIN LINK RAILING (TYPE 7 Mod) (LF)
Sta 873+38.0 TO 873+59.0 "VWAY2"	Rt	21.0	
Sta 10+00.0 TO 15+11.3 "A"	--		511.3
Sta 222+15.0 TO 222+45.0 "78SD1"	Lt	30.0	
Sta 227+97.8 TO 252+63.8 "78SD1"	Rt	2,466.0	
Sta 245+39.8 TO 246+29.7 "78SD1"	Lt	89.9	
Sta 10+00.0 TO 21+70.0 "C"	--		1,170.0
Sta 257+96.8 TO 258+82.8 "78SD1"	Lt	86.0	
Sta 269+93.2 TO 270+84.3 "78SD1"	Lt	91.1	
Sta 10+40.0 TO 75+17.0 "D"	--		6,477.0
Sta 335+39.2 TO 336+06.7 "78SD1"	Lt	67.5	
TOTAL		2,861.5	8,133.8

STRUCTURAL SECTION QUANTITIES

LOCATION	ASPHALTIC EMULSION (FOG SEAL COAT) (TON)	CLASS 2 AGGREGATE BASE (CY)	HOT MIX ASPHALT (TYPE A) (TON)	TACK COAT (TON)
Sta 10+00.0 TO 15+11.3 "A"		85.2		
Sta 9+60.0 TO 33+20.0 "B"			581.7	1.4
Sta 15+50.0 TO 17+00.0 "C"		25.0		
Sta 18+00.0 TO 18+50.0 "C"		8.3		
Sta 15+75.0 TO 31+00.0 "D"		338.9		
Sta 45+10.0 TO 49+50.0 "D"		97.8		
Sta 60+50.0 TO 65+90.0 "D"		120.0		
Sta 217+18.0 TO Sta 337+50.0 "78SD1"	11.1			
Sta 217+18.0 TO Sta 220+97.6 "CB4"	0.2			
Sta 217+18.0 TO Sta 221+18.2 "SD78RCR5"	0.2			
Sta 218+91.6 TO Sta 224+35.2 "SD78RCR6"	0.3			
Sta 250+91.6 TO Sta 261+18.6 "SD78RE3"	0.6			
Sta 250+91.6 TO Sta 263+39.7 "SD78E2"	0.7			
Sta 260+78.1 TO Sta 272+69.8 "SD78E4"	0.7			
Sta 263+72.0 TO Sta 274+13.8 "SD78RE1"	0.6			
Sta 331+52.9 TO Sta 337+50.0 "SD78RME4"	0.3			
Sta 331+99.7 TO Sta 337+75.0 "SD78ME3"	0.3			
TOTAL	15.0	675.2	581.7	1.4

CONCRETE BARRIER MARKER (N)

LOCATION	MARKER SPACING (FT)	MARKERS (EA)	MARKER PLACEMENT	REMARKS
Sta 10+00.0 TO 15+11.3 "A"	24	22	SIDE	WEST VISTA WAY SIDE
Sta 9+60.0 TO 33+20.0 "B"	24	99	TOP	FACING SOUTH ROUTE 78
Sta 10+00.0 TO 21+70.0 "B"	24	49	SIDE	WEST VISTA WAY SIDE
Sta 10+40.0 TO 75+17.0 "D"	24	270	SIDE	WEST VISTA WAY SIDE

(N) = NOT A SEPARATE PAY ITEM, FOR INFORMATION ONLY.

SUMMARY OF QUANTITIES

Q-1

REVISED BY | DATE REVISED
BETHNAY DESJARDINS | LEVY Q. LE
CALCULATED-DESIGNED BY | CHECKED BY
FUNCTIONAL SUPERVISOR | RICHARD ESTRADA
STATE OF CALIFORNIA - DEPARTMENT OF TRANSPORTATION
Caltrans PROJECT DEVELOPMENT
TRAFFIC

LAST REVISION 05-18-11 | DATE PLOTTED => 22-JUN-2011 TIME PLOTTED => 13:26

Dist	COUNTY	ROUTE	POST MILES TOTAL PROJECT	SHEET No.	TOTAL SHEETS
11	SD	78	3.5/5.8	64	87

REGISTERED ~~CIVIL~~ ENGINEER 04-15-11 DATE

05-16-11
PLANS APPROVAL DATE

REGISTERED PROFESSIONAL ENGINEER LEVY Q LE No. 66748 Exp. 9-30-12 CIVIL STATE OF CALIFORNIA

THE STATE OF CALIFORNIA OR ITS OFFICERS OR AGENTS SHALL NOT BE RESPONSIBLE FOR THE ACCURACY OR COMPLETENESS OF SCANNED COPIES OF THIS PLAN SHEET.

TEMPORARY WATER POLLUTION CONTROL QUANTITY SUMMARY

SHEET	TEMPORARY FIBER ROLL	TEMPORARY DRAINAGE INLET PROTECTION	TEMPORARY CONSTRUCTION ENTRANCE	TEMPORARY CONCRETE WASHOUT FACILITY
	(LF)	(TYPE 5) (EA)	(EA)	(EA)
L-1	17	2	1	1
L-2	1,425	2		
L-3	3,170	2	2	1
L-4	485	3	2	1
L-5	1,980	3		1
L-6	2,160	4		
L-7	2,250	7		
L-8	2,650	2		
L-9	2,370	4	1	1
TOTAL	16,507	29	6	5

EARTHWORK QUANTITIES

LOCATION	EMBANKMENT (CY) (N)	BARRIER FOOTING EXCAVATION (CY) (N)	ROADWAY EXCAVATION (CY)
Sta 10+00.0 TO 15+11.3 "A"	8.8	85.2	4.9
Sta 9+60.0 TO 33+20.0 "B"	0.2	41.5	322.9
Sta 10+00.0 TO 21+70.0 "C"	71.6	331.9	9.7
Sta 10+40.0 TO 75+17.0 "D"	577.3	1103.9	413.6
		TOTAL	751.1

(N) = NOT A SEPARATE PAY ITEM, FOR INFORMATION ONLY.

EROSION CONTROL (BONDED FIBER MATRIX)

SHEET	(SQFT)
L-2	20,330
L-3	22,410
L-4	950
L-5	7,840
L-6	15,700
L-7	20,530
L-8	16,730
L-9	14,200
TOTAL	118,690

REMOVE CHAIN LINK FENCE

STATION	SIDE	(LF)
Sta 873+38.0 TO 878+65.0 "VWAY2"	R+	527.0
Sta 222+15.0 TO 222+45.0 "78SD1"	L+	30.0
Sta 227+97.8 TO 252+63.8 "78SD1"	R+	2,466.0
Sta 243+39.8 TO 258+82.8 "78SD1"	L+	1,543.0
Sta 269+93.2 TO 336+06.7 "78SD1"	L+	6,613.5
	TOTAL	11,179.5

REMOVE METAL BEAM GUARD RAILING

SHEET	LENGTH (LF)
L-2	85.0
L-3	75.0
TOTAL	160.0

DIKE QUANTITIES

LOCATION	SIDE	PLACE HOT MIX ASPHALT DIKE (TYPE E)(LF)	MINOR HOT MIX ASPHALT (TON)	REMOVE ASPHALT CONCRETE DIKE (LF)
Sta 246+29.7 "78SD1" TO Sta 257+96.8 "78SD1"	L+	1,167.1	30.3	1,167.1
Sta 270+94.3 "78SD1" TO Sta 335+39.2 "78SD1"	L+	6,444.9	167.6	6,444.9
TOTAL		7,612.0	197.9	7,612.0

SUMMARY OF QUANTITIES
Q-2

REVISED BY | DATE REVISED
BETHNAY DESJARDINS | LEVY Q. LE
CALCULATED-DESIGNED BY | CHECKED BY
FUNCTIONAL SUPERVISOR | RICHARD ESTRADA
STATE OF CALIFORNIA - DEPARTMENT OF TRANSPORTATION
Caltrans TRAFFIC PROJECT DEVELOPMENT

LAST REVISION 05-18-11 | DATE PLOTTED => 22-JUN-2011 | TIME PLOTTED => 13:26

Dist	COUNTY	ROUTE	POST MILES TOTAL PROJECT	SHEET No.	TOTAL SHEETS
11	SD	78	3.5/5.8	65	87

Enrique P. Bernal 04-18-11
REGISTERED ELECTRICAL ENGINEER DATE

05-16-11
PLANS APPROVAL DATE

REGISTERED PROFESSIONAL ENGINEER ENRIQUE P. BERNAL No. 15675 Exp. 6-30-12 ELECTRICAL STATE OF CALIFORNIA

THE STATE OF CALIFORNIA OR ITS OFFICERS OR AGENTS SHALL NOT BE RESPONSIBLE FOR THE ACCURACY OR COMPLETENESS OF SCANNED COPIES OF THIS PLAN SHEET.

CONDUIT NOTES (TSO):

N△1 C - Exist 1½"C, 2#8 (ltg).

△2 - 2"C, 2#8 (LTG), 2#8 (SIGN).

N△3 C - Exist 1½"C, 2#8 (SIGN).

△4 - Exist 1½"C, 2#8 (ltg), 2#8 (SIGN).

△5 - Exist 1½"C, 2#8 (ltg).
ADD 2#8 (SIGN).

△6 - Exist 3"C, 2-3CSC, 2-12CSC, 2#8 (ltg), 1 evc, 2 sic, 5 dlc.
ADD 2#8 (SIGN).

△7 - 1½"C, 2#8 (ltg), 2#8 (SIGN).

N△8 C - Exist 1½"C, 2#8 (ltg), 2#8 (SIGN).

N△9 C - Exist 1½"C, 1-3CSC, 1-12CSC, 2#8 (ltg), 2#8 (SIGN), 2 dlc.

N△10 C - Exist 3"C, 4-3CSC, 4-12CSC, 2#8 (ltg), 2#8 (SIGN), 7 dlc, 4 sic.

NOTES (TSO):

1 - RC Exist TYPE 15.

2 - SEE DETAIL 'A' ON THIS SHEET FOR MOUNTING OF TYPE 15 (MODIFIED).

3 - RC EXISTING PULL BOX.

4 - PULL BOXES SEE E-6 FOR DETAILS AND SPECIAL PROVISIONS.

NOTE:

FOR ACCURATE RIGHT OF WAY AND ACCESS DATA, CONTACT RIGHT OF WAY ENGINEERING AT THE DISTRICT OFFICE.

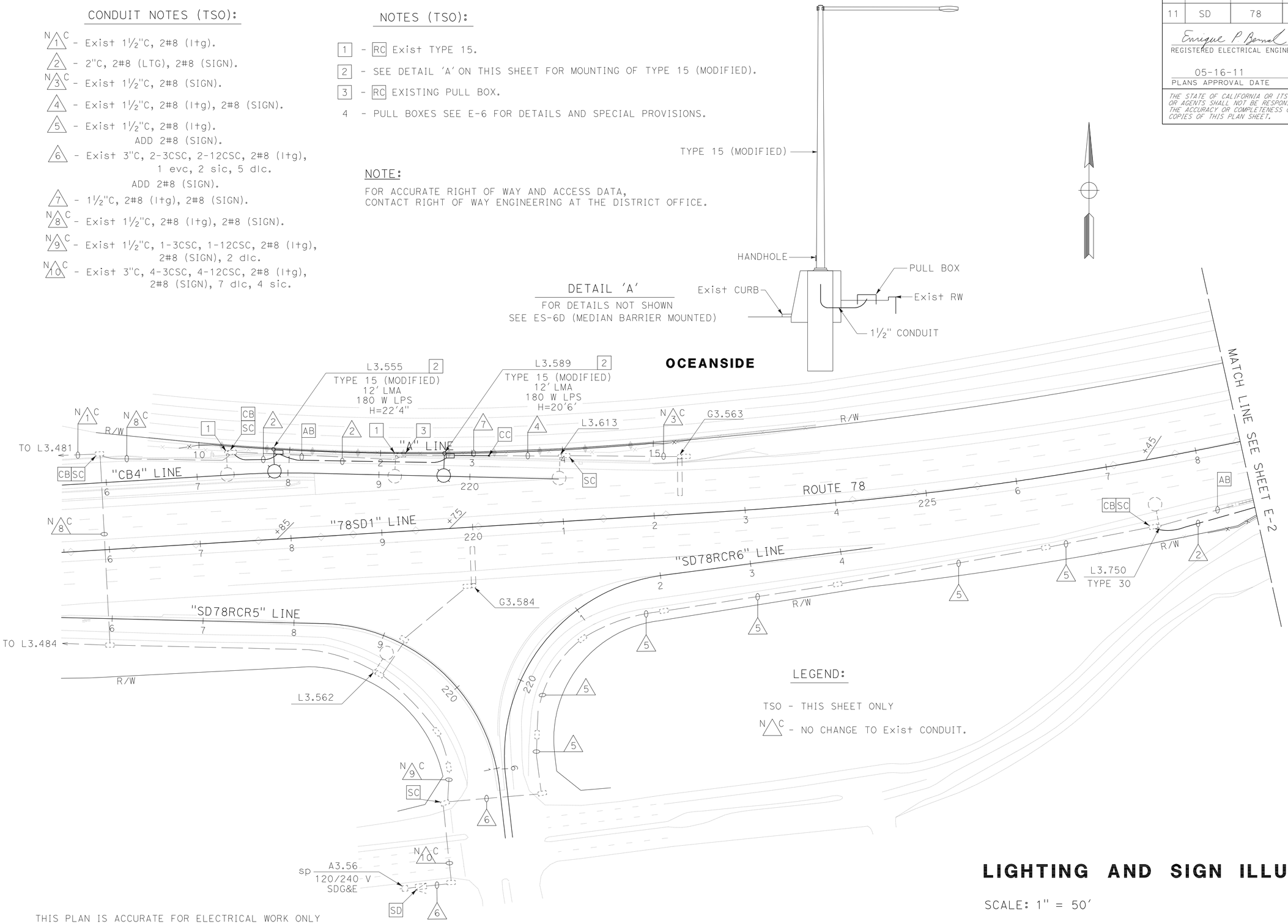

THIS PLAN IS ACCURATE FOR ELECTRICAL WORK ONLY

LIGHTING AND SIGN ILLUMINATION

SCALE: 1" = 50'

E-1

REVISED BY | DATE REVISED
HENRY TSUI | ENRIQUE BERNAL
CALCULATED-DESIGNED BY | CHECKED BY
FUNCTIONAL SUPERVISOR
DALE WILSON

STATE OF CALIFORNIA - DEPARTMENT OF TRANSPORTATION
Caltrans® **TRAFFIC ELECTRICAL**

LAST REVISION 05-18-11
DATE PLOTTED => 22-JUN-2011
TIME PLOTTED => 13:26

Dist	COUNTY	ROUTE	POST MILES TOTAL PROJECT	SHEET No.	TOTAL SHEETS
11	SD	78	3.5/5.8	66	87

Enrique P. Bernal 04-18-11
REGISTERED ELECTRICAL ENGINEER DATE

05-16-11
PLANS APPROVAL DATE

REGISTERED PROFESSIONAL ENGINEER ENRIQUE P. BERNAL No. 15675 Exp. 6-30-12 ELECTRICAL STATE OF CALIFORNIA

THE STATE OF CALIFORNIA OR ITS OFFICERS OR AGENTS SHALL NOT BE RESPONSIBLE FOR THE ACCURACY OR COMPLETENESS OF SCANNED COPIES OF THIS PLAN SHEET.

CONDUIT NOTES (TSO):

1 - 2"C, 2#8 (SIGN).
2 - 2"C, 2#8 (LTG), 2#8 (SIGN).

NOTE (TSO):

1 - PULL BOXES SEE E-6 FOR DETAILS AND SPECIAL PROVISIONS.

NOTE:

FOR ACCURATE RIGHT OF WAY AND ACCESS DATA,
CONTACT RIGHT OF WAY ENGINEERING AT THE DISTRICT OFFICE.

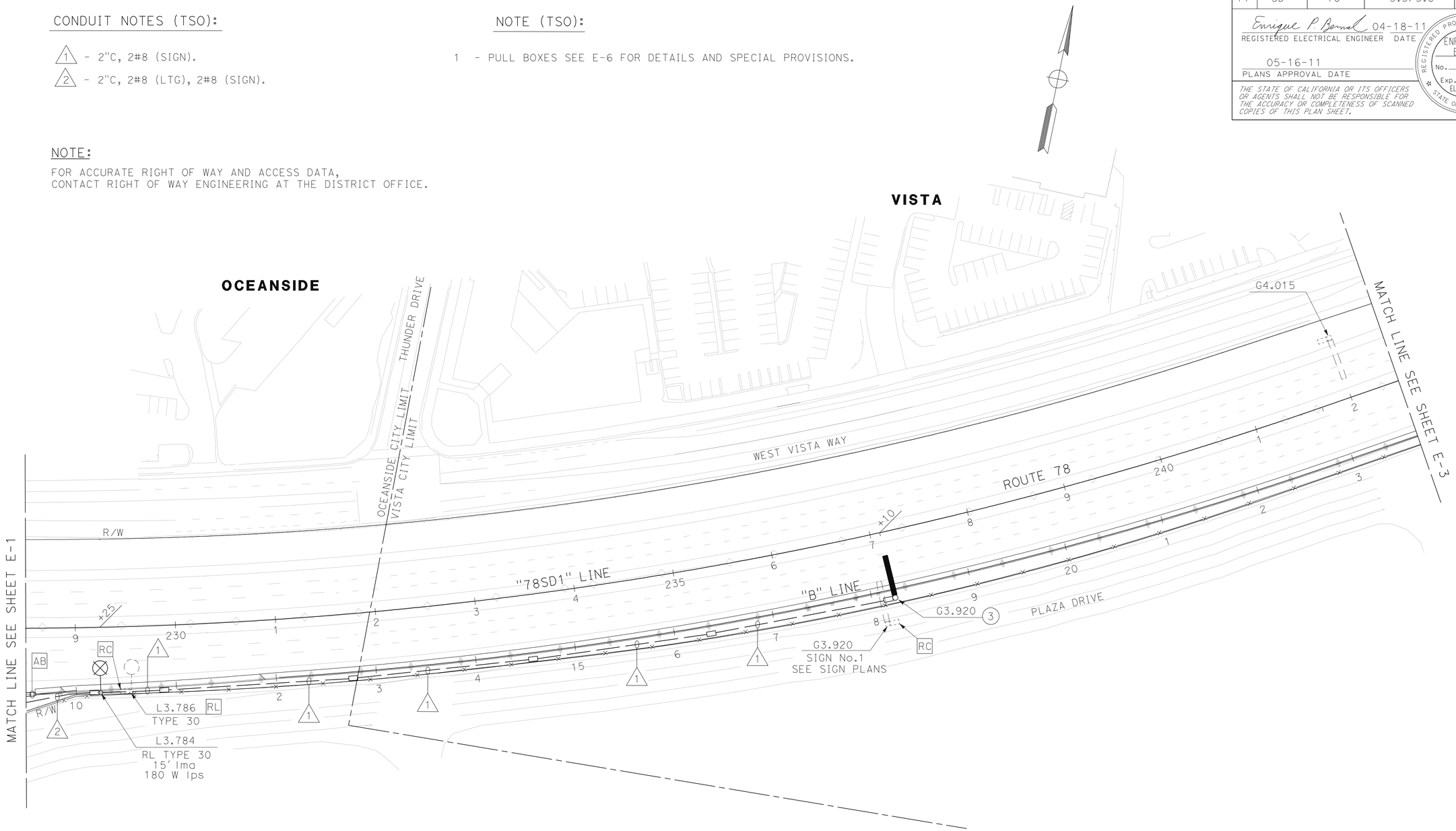

SIGN No.	QUANTITY OF 85 W ISL FIXTURES	VOLTAGE (SERVICE)	LOAD	REMARKS
3	1	240 V	87 W	SEE Std PLAN ES-15A AND RSP ES-15D(SC1A)

THIS PLAN IS ACCURATE FOR ELECTRICAL WORK ONLY

LIGHTING AND SIGN ILLUMINATION

SCALE: 1" = 50'

E-2

STATE OF CALIFORNIA - DEPARTMENT OF TRANSPORTATION
Caltrans® TRAFFIC ELECTRICAL

FUNCTIONAL SUPERVISOR: DALE WILSON
CALCULATED-DESIGNED BY: HENRY TSUI
CHECKED BY: ENRIQUE BERNAL
REVISED BY
DATE REVISED

LAST REVISION 05-18-11
DATE PLOTTED => 22-JUN-2011
TIME PLOTTED => 13:26

Dist	COUNTY	ROUTE	POST MILES TOTAL PROJECT	SHEET No.	TOTAL SHEETS
11	SD	78	3.5/5.8	67	87

Enrique P. Bernal 04-18-11
REGISTERED ELECTRICAL ENGINEER DATE

05-16-11
PLANS APPROVAL DATE

REGISTERED PROFESSIONAL ENGINEER ENRIQUE P. BERNAL No. 15675 Exp. 6-30-12 ELECTRICAL STATE OF CALIFORNIA

THE STATE OF CALIFORNIA OR ITS OFFICERS OR AGENTS SHALL NOT BE RESPONSIBLE FOR THE ACCURACY OR COMPLETENESS OF SCANNED COPIES OF THIS PLAN SHEET.

CONDUIT NOTES (TSO):

- N 1 C - Exist 1½"C, 2#8 (Itg), 2#8 (SIGN), 3#14 (peu).
- 2 - 2"C, 2#8 (LTG), 2#8 (SIGN), 3#14 (PEU).
- N 3 C - Exist 1½"C, 2#8 (Itg), 3#14 (peu).
- N 4 C - Exist 1½"C, 2#8 (Itg).
- 5 - Exist 1½"C, 2#8 (Itg), 2#8 (SIGN).
- N 6 C - Exist 1½"C, 2#8 (SIGN).
- 7 - 1½"C, 2#8 (LTG), 2#8 (SIGN).
- 8 - 2"C, 2#8 (SIGN).

NOTES (TSO):

1 - RC mv.

2 - PULL BOXES SEE E-6 FOR DETAILS AND SPECIAL PROVISIONS.

NOTE:

FOR ACCURATE RIGHT OF WAY AND ACCESS DATA,
CONTACT RIGHT OF WAY ENGINEERING AT THE DISTRICT OFFICE.

VISTA

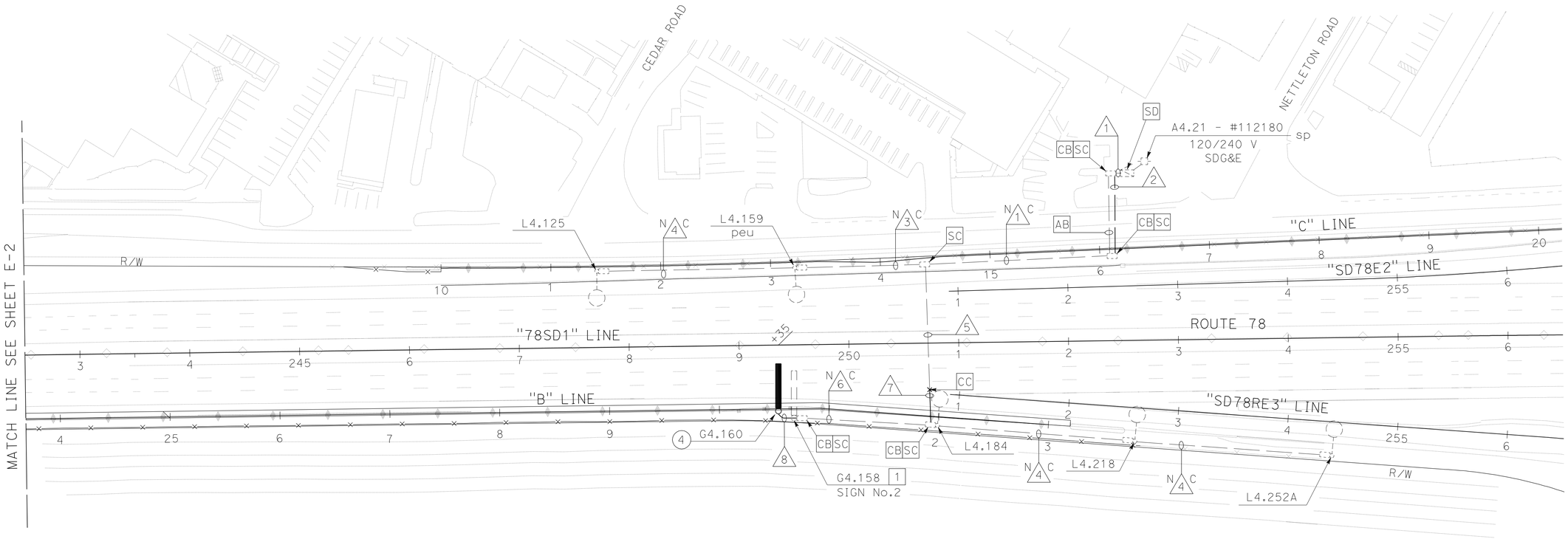

SIGN No.	QUANTITY OF 85 W ISL FIXTURES	VOLTAGE (SERVICE)	LOAD	SEE SIGN PLANS REMARKS
4	1	240 V	87 W	SEE Std PLAN ES-15A AND RSP ES-15D(SC1A)

THIS PLAN IS ACCURATE FOR ELECTRICAL WORK ONLY

LIGHTING AND SIGN ILLUMINATION

SCALE: 1" = 50'

E-3

STATE OF CALIFORNIA - DEPARTMENT OF TRANSPORTATION
Caltrans® **TRAFFIC ELECTRICAL**

FUNCTIONAL SUPERVISOR: DALE WILSON
CALCULATED-DESIGNED BY: HENRY TSUI
CHECKED BY: ENRIQUE BERNAL
REVISED BY / DATE REVISED

LAST REVISION 05-18-11
DATE PLOTTED => 22-JUN-2011
TIME PLOTTED => 13:27

Dist	COUNTY	ROUTE	POST MILES TOTAL PROJECT	SHEET No.	TOTAL SHEETS
11	SD	78	3.5/5.8	68	87

Enrique P. Bernal 04-18-11
REGISTERED ELECTRICAL ENGINEER DATE

05-16-11
PLANS APPROVAL DATE

REGISTERED PROFESSIONAL ENGINEER ENRIQUE P. BERNAL No. 15675 Exp. 6-30-12 ELECTRICAL STATE OF CALIFORNIA

THE STATE OF CALIFORNIA OR ITS OFFICERS OR AGENTS SHALL NOT BE RESPONSIBLE FOR THE ACCURACY OR COMPLETENESS OF SCANNED COPIES OF THIS PLAN SHEET.

CONDUIT NOTES:

1 - Exist 1½"C, 2#8 (Itg), 2#8 (SIGN), 3#14 (peu).
2 - 2"C, 2#8 (LTG), 2#8 (SIGN), 3#14 (PEU).
3 - 2"C, 2#8 (LTG), 3#14 (PEU).
N 4 C - Exist 1½"C, 2#8 (Itg), 2#8 (SIGN).
N 5 C - Exist 1½"C, 2#8 (SIGN).
N 6 C - Exist 1½"C, 2#8 (Itg).

NOTES:

1 - RC Exist TYPE 31 AND Exist PEU.
2 - PLACE CIDH PILE FOUNDATION 3' FROM CHAIN LINK FENCE.
3 - PULL BOXES SEE E-6 FOR DETAILS AND SPECIAL PROVISIONS.

NOTE:

FOR ACCURATE RIGHT OF WAY AND ACCESS DATA,
CONTACT RIGHT OF WAY ENGINEERING AT THE DISTRICT OFFICE.

THIS PLAN IS ACCURATE FOR ELECTRICAL WORK ONLY

LIGHTING AND SIGN ILLUMINATION

SCALE: 1" = 50'

E-4

STATE OF CALIFORNIA - DEPARTMENT OF TRANSPORTATION
Caltrans® **TRAFFIC ELECTRICAL**

FUNCTIONAL SUPERVISOR: DALE WILSON
CALCULATED-DESIGNED BY: HENRY TSUI
CHECKED BY: ENRIQUE BERNAL
REVISED BY
DATE REVISED

LAST REVISION 05-18-11
DATE PLOTTED => 22-JUN-2011
TIME PLOTTED => 13:27

Dist	COUNTY	ROUTE	POST MILES TOTAL PROJECT	SHEET No.	TOTAL SHEETS
11	SD	78	3.5/5.8	69	87

Enrique P. Bernal 04-18-11
REGISTERED ELECTRICAL ENGINEER DATE

05-16-11
PLANS APPROVAL DATE

REGISTERED PROFESSIONAL ENGINEER ENRIQUE P. BERNAL No. 15675 Exp. 6-30-12 ELECTRICAL STATE OF CALIFORNIA

THE STATE OF CALIFORNIA OR ITS OFFICERS OR AGENTS SHALL NOT BE RESPONSIBLE FOR THE ACCURACY OR COMPLETENESS OF SCANNED COPIES OF THIS PLAN SHEET.

CONDUIT NOTES:

N/1 C - Exist 1½"C, 2#8 (ltg).

N/2 C - Exist 1½"C, 2#8 (ltg), 3#14 (peu).

N/3 C - Exist 1½"C, 2#8 (ltg), 2#8 (SIGN).

4 - Exist 1½"C, 2#8 (ltg), 2#8 (SIGN), 3#14 (peu).

5 - 1½"C, 2#8 (LTG), 2#8 (SIGN), 3#14 (PEU).

NOTE:

1 - PULL BOXES SEE E-6 FOR DETAILS AND SPECIAL PROVISIONS.

NOTE:

FOR ACCURATE RIGHT OF WAY AND ACCESS DATA,
CONTACT RIGHT OF WAY ENGINEERING AT THE DISTRICT OFFICE.

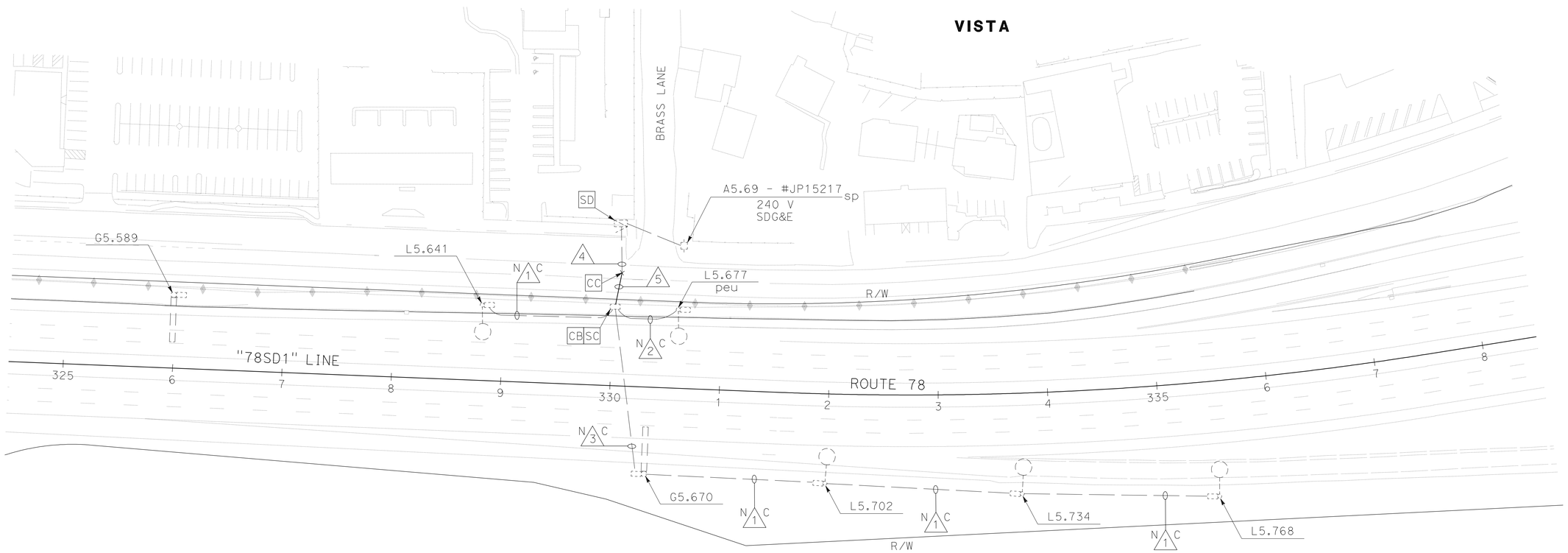

THIS PLAN IS ACCURATE FOR ELECTRICAL WORK ONLY

LIGHTING AND SIGN ILLUMINATION

SCALE: 1" = 50'

E-5

STATE OF CALIFORNIA - DEPARTMENT OF TRANSPORTATION
Caltrans® **TRAFFIC ELECTRICAL**

FUNCTIONAL SUPERVISOR: DALE WILSON
CALCULATED-DESIGNED BY: HENRY TSUI
CHECKED BY: ENRIQUE BERNAL
REVISED BY
DATE REVISED

LAST REVISION 05-18-11
DATE PLOTTED => 22-JUN-2011
TIME PLOTTED => 13:27

Dist	COUNTY	ROUTE	POST MILES TOTAL PROJECT	SHEET No.	TOTAL SHEETS
11	SD	78	3.5/5.8	70	87

Enrique P Bernal 04-18-11
REGISTERED ELECTRICAL ENGINEER DATE

05-16-11
PLANS APPROVAL DATE

REGISTERED PROFESSIONAL ENGINEER ENRIQUE P. BERNAL No. 15675 Exp. 6-30-12 ELECTRICAL STATE OF CALIFORNIA

THE STATE OF CALIFORNIA OR ITS OFFICERS OR AGENTS SHALL NOT BE RESPONSIBLE FOR THE ACCURACY OR COMPLETENESS OF SCANNED COPIES OF THIS PLAN SHEET.

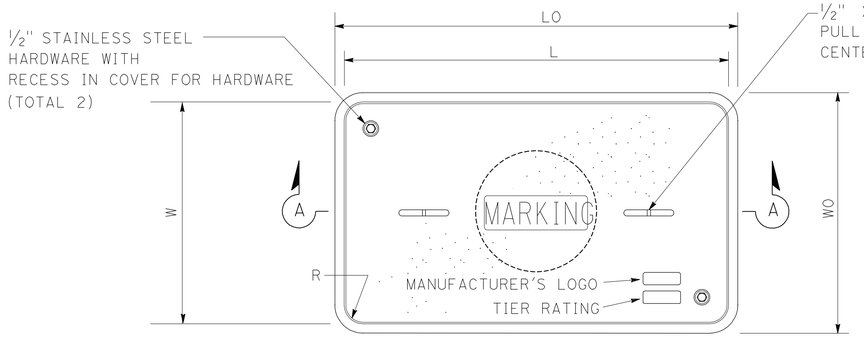

TOP VIEW

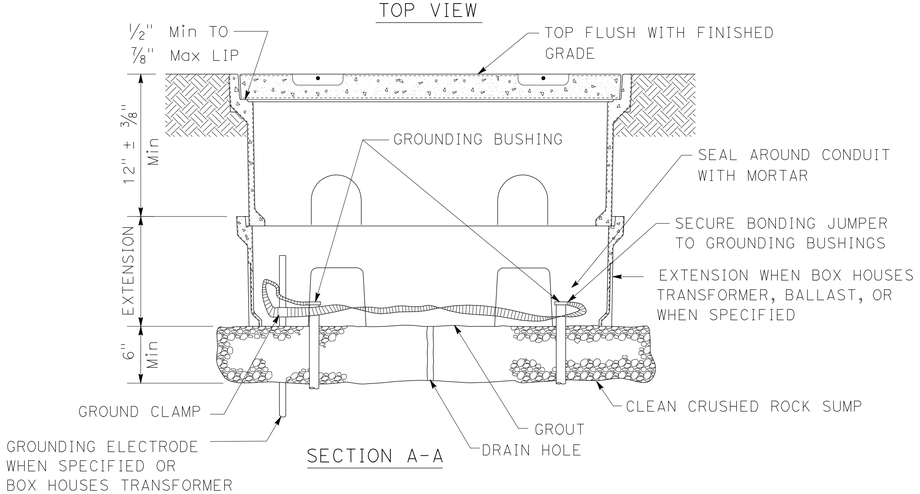

SECTION A-A

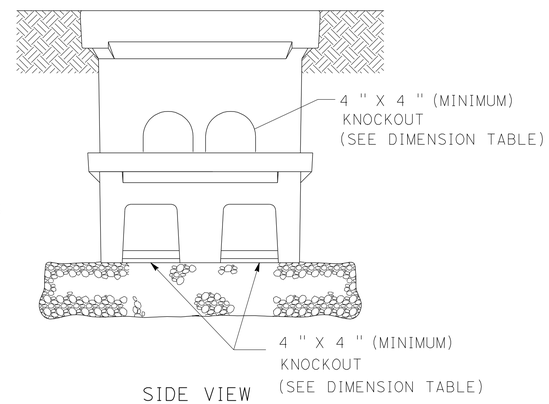

SIDE VIEW

LEGEND:

UNC - UNIFIED NATIONAL COARSE THREAD
LO - LENGTH OUTSIDE
WO - WIDTH OUTSIDE
L - LENGTH (TOP OF COVER)
W - WIDTH (TOP OF COVER)
R - COVER CORNER RADIUS
D - COVER EDGE TO COVER BOLT CENTER DISTANCE
TE - COVER EDGE THICKNESS
TA - COVER EDGE TAPER

NOTES:

1. ALL NON-TRAFFIC RATED PULL BOXES AND COVERS, FOR IN GROUND AND IN SIDEWALK APPLICATIONS, MUST BE INDEPENDENTLY TESTED AND CERTIFIED AS COMPLYING WITH THE PROVISIONS OF ANSI/SCTE 77 2010 "SPECIFICATION FOR UNDERGROUND ENCLOSURE INTEGRITY." PULL BOXES MUST MEET THE TIER 22 APPLICATION. COVERS NOT INSTALLED IN SIDEWALKS MUST MEET THE TIER 22 APPLICATION. COVERS INSTALLED IN SIDEWALKS MUST MEET THE TIER 8 APPLICATION.
2. COVERS MUST BE SECURED WITH A CAPTIVE BOLT DESIGN USING 1/2-13 UNC LARGE PENTA-HEAD BOLTS. THE BOLTS AND WASHERS MUST BE STAINLESS STEEL.
3. THE CAPTIVE BOLT DESIGN MUST BE INDEPENDENTLY TESTED AND CERTIFIED AS CAPABLE OF WITHSTANDING A TORQUE OF 56 FT. LBS AND A MINIMUM PULL OUT STRENGTH OF 750 LBS. THE PULL OUT TEST MUST BE PERFORMED WITH THE COVER IN PLACE AND THE BOLTS TORQUED TO 56 FT.LBS. THE BOLTS, INSERTS, AND COVER MUST NOT BE DAMAGED WHEN TESTED UP TO THE MINIMUM PULL OUT STRENGTH.
4. MARKINGS, SHOWING THE TIER RATING, MUST BE LABELED OR STENCILED ON THE INSIDE AND OUTSIDE OF THE PULL BOX AND ON THE UNDERSIDE OF THE COVER.
5. THE TIER RATING MUST BE EMBOSSED ON THE TOP SURFACE OF THE COVER.
6. COVERS AND PULL BOXES MUST BE INTERCHANGEABLE WITH CALIFORNIA STANDARD MALE AND FEMALE GAGES. SEE STANDARD PLAN ES-8, NOTE 7. MINIMUM RADIUS OF TOP OUTSIDE EDGE IS ⅛".
7. PULL BOXES MUST NOT BE INSTALLED WITHIN THE BOUNDARIES OF NEW OR EXISTING CURB RAMPS OR DRIVEWAYS.
8. AN EXTENSION MAY BE SUBSTITUTED WITH A PULL BOX IF THE BOTTOM EDGE OF THE PULL BOX FITS INTO THE PULL BOX COVER OPENING. A PULL BOX AND EXTENSION MAY BE SUBSTITUTED WITH A PULL BOX OF EQUAL DEPTH. IF SUBSTITUTIONS ARE MADE, THE INSTALLED UNIT MUST MEET THE TIER 22 LOAD REQUIREMENTS.
9. SEE STANDARD PLAN ES-8, NOTES 3,4,6 AND 9 FOR OTHER REQUIREMENTS. THESE ADDRESS, BUT ARE NOT LIMITED TO: PLACEMENT, SURROUNDING GRADE, REQUIREMENTS IN UNPAVED AREAS, PULL BOX COVER MARKING, NOMINAL DIMENSIONS OF THE OPENING, AND THE LOCATION OF BOXES FOR ELECTROLIERS AND STANDARDS.

PULL BOX INSTALLATION DETAILS

No. 5 & No. 6

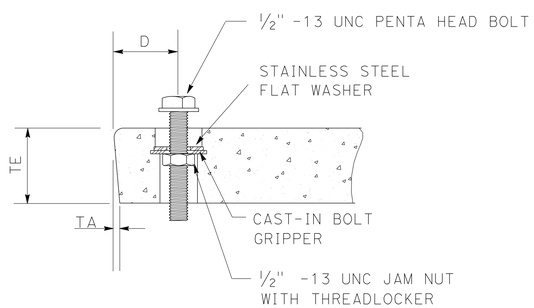

SECTION OF COVER BOLTDOWN
(AS SHOWN OR SIMILAR)

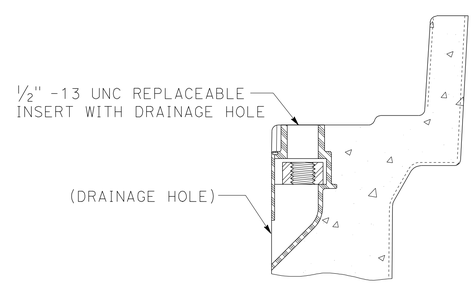

SECTION OF REPLACEABLE INSERT
(AS SHOWN OR SIMILAR)

DIMENSION TABLE

PULL BOX	PULL BOX: MINIMUM DEPTH BOX (In)	PULL BOX: MINIMUM DEPTH EXTENSION (In)	PULL BOX: MAXIMUM WEIGHT (LBS)	COVER: L (In)	COVER: W (In)	COVER: R (In)	COVER: TE (In)	COVER: TA (In)	COVER: D (In)	COVER: MAXIMUM WEIGHT (LBS)	PULL BOX KNOCKOUTS: SIDE	PULL BOX KNOCKOUTS: END	EXTENSION KNOCKOUTS: SIDE	EXTENSION KNOCKOUTS: END
No. 5	12	10	55	23¼	13¾	1⅜	2	⅛	1¾	60	2	1	2	1
No. 6	12	10	70	30½	17½	1⅜	2	⅛	2	85	2	2	2	2

ELECTRICAL SYSTEMS (NON-TRAFFIC RATED PULL BOX)

NO SCALE

E-6

REVISED BY | DATE REVISED
HENRY TSUI | ENRIQUE BERNAL
CALCULATED-DESIGNED BY | CHECKED BY
FUNCTIONAL SUPERVISOR | DALE WILSON

STATE OF CALIFORNIA - DEPARTMENT OF TRANSPORTATION
Caltrans® TRAFFIC ELECTRICAL

LAST REVISION 05-18-11 | DATE PLOTTED => 22-JUN-2011 | TIME PLOTTED => 13:27

DIST	COUNTY	ROUTE	POST MILES TOTAL PROJECT	SHEET NO.	TOTAL SHEETS
11	SD	78	3.5/5.8	71	87

REGISTERED CIVIL ENGINEER

June 5, 2009
PLANS APPROVAL DATE

REGISTERED PROFESSIONAL ENGINEER Glenn DeCou No. C34547 Exp. 9-30-09 CIVIL STATE OF CALIFORNIA

The State of California or its officers or agents shall not be responsible for the accuracy or completeness of electronic copies of this plan sheet.

To accompany plans dated 05-16-11

NOTES:

1. H is 2'-6" for fabric less than 5'-0" high. H is 3'-0" for fabric 5'-0" and over.
2. T is not less than 3 times maximum cross section of post with minimum of 8".
3. Arms with barbed wire to be used where shown on plans.
4. See Revised Standard Plan RSP A85 for Chain Link Fencing dimensions.
5. Reinforcing must comply with ASTM A 706.
6. See Detail A on New Standard Plan NSP A86B for connection at headwall.

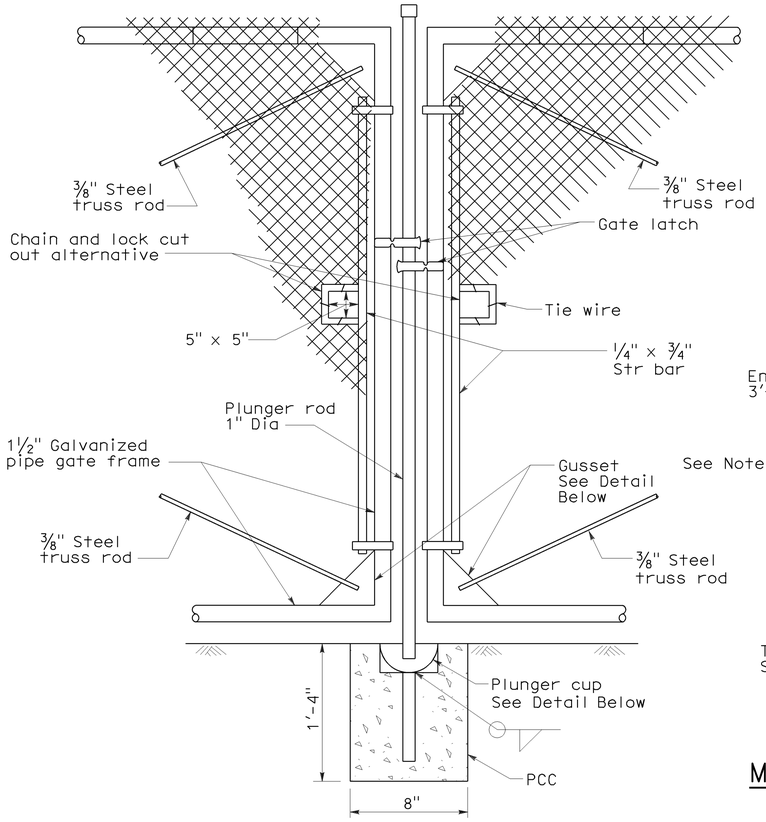

TYPICAL DOUBLE GATE REMOVABLE CENTER POST

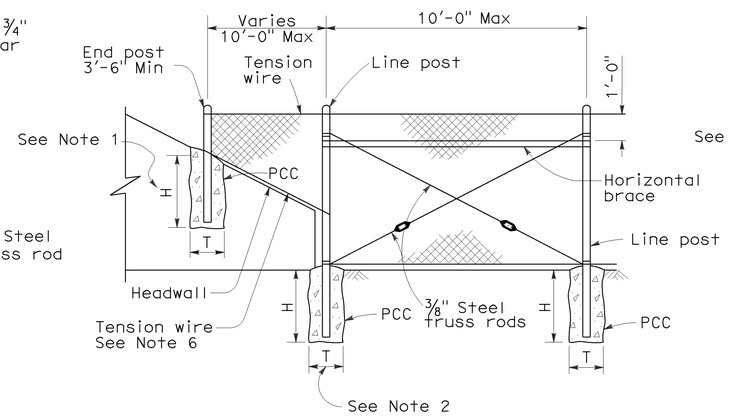

METHOD OF TYING FENCE TO HEADWALL

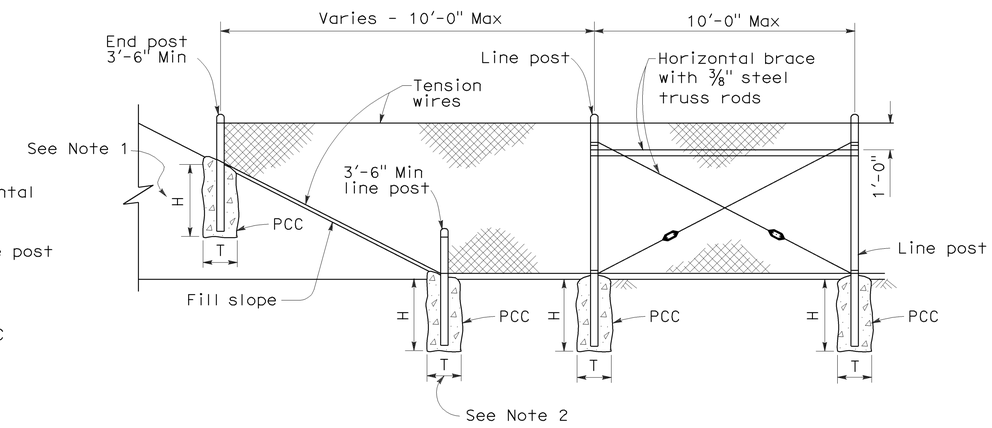

METHOD OF ERECTING FENCE FOR FILL SLOPE

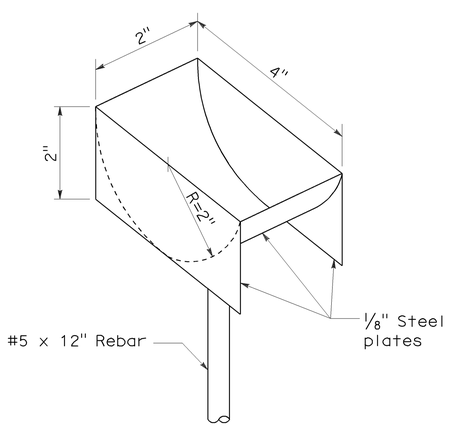

PLUNGER CUP DETAIL

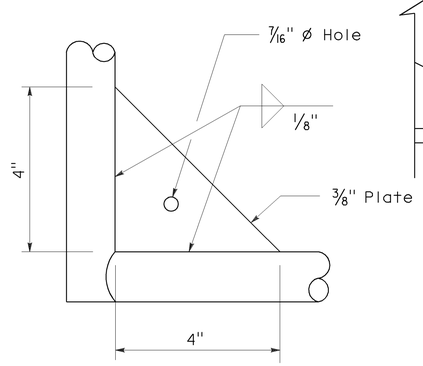

GUSSET DETAIL

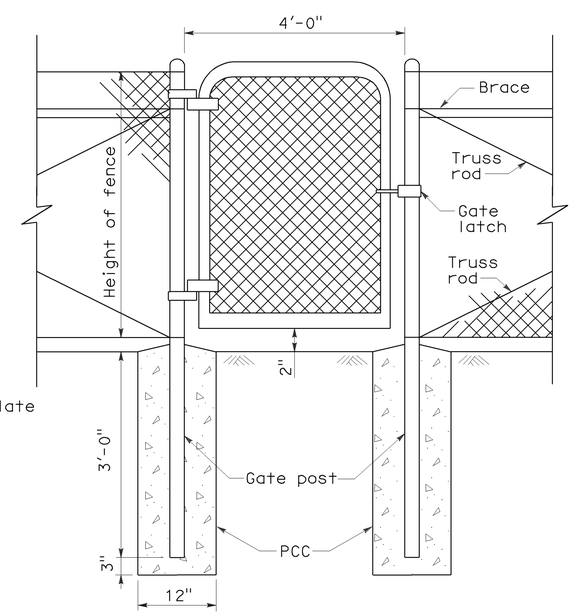

WALK GATE

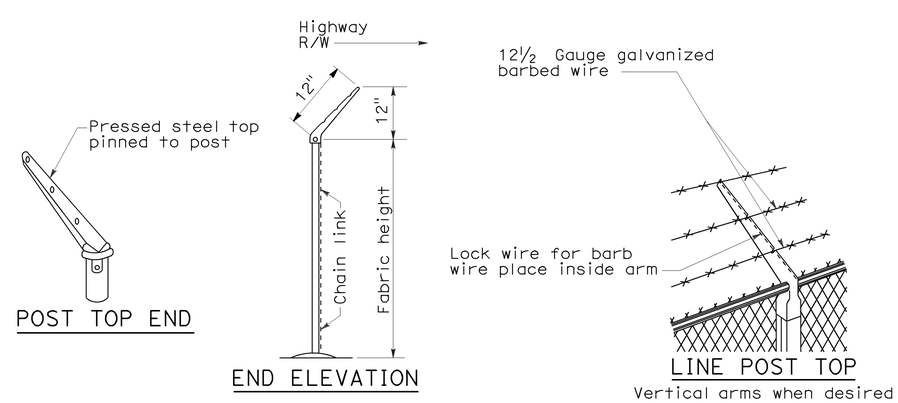

POST TOP END

END ELEVATION

LINE POST TOP
Vertical arms when desired

BARBED WIRE POST TOP
See Note 3

STATE OF CALIFORNIA
DEPARTMENT OF TRANSPORTATION

CHAIN LINK FENCE DETAILS

NO SCALE

NSP A85A DATED JUNE 5, 2009 SUPPLEMENTS THE STANDARD PLANS BOOK DATED MAY 2006.

NEW STANDARD PLAN NSP A85A

2006 NEW STANDARD PLAN NSP A85A

5-7-09

DIST	COUNTY	ROUTE	POST MILES TOTAL PROJECT	SHEET NO.	TOTAL SHEETS
11	SD	78	3.5/5.8	72	87

REGISTERED CIVIL ENGINEER

June 5, 2009
PLANS APPROVAL DATE

Glenn DeCou No. C34547 Exp. 9-30-09 CIVIL
REGISTERED PROFESSIONAL ENGINEER
STATE OF CALIFORNIA

The State of California or its officers or agents shall not be responsible for the accuracy or completeness of electronic copies of this plan sheet.

To accompany plans dated 05-16-11

TYPE "A"

3′ and 6′ Single
6′ and 12′ Double

TYPE "B"

Over 6′ to 12′ Single.
Over 12′ to 24′ Double

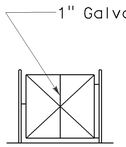

TYPE "C"

Over 12′ to 18′ Single
Over 24′ to 36′ Double.

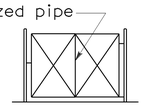

TYPE "D"

Over 18′ to 24′ Single
Over 36′ to 48′ Double

TYPICAL FRAMEWORK SHOWING NUMBER OF BAYS IN GATE

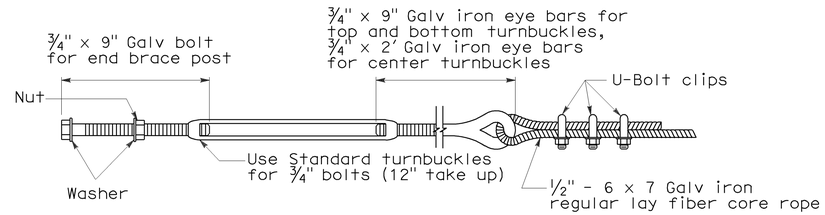

TURNBUCKLE A

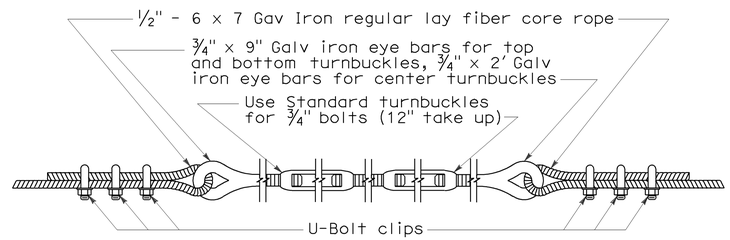

TURNBUCKLE B

NOTES:

1. All material for abutment connection to be galvanized.
2. The chain link fabric shall be replaced by barbed wire strands at 12" maximum centers between the double posts.
3. When the width of the culvert makes it necessary to anchor a post to the top of the culvert, a cast iron shoe or other device approved by the Engineer shall be used.
4. Fencing over stream and around headwall may also use Barbed Wire or Wire Mesh fencing with either wood post or steel post installation.
5. See Revised Standard Plan RSP A85 for Chain Link fence dimensions. See Standard Plan A86 for Barbed Wire and Wire Mesh fence dimensions and for wood post and steel post installation.

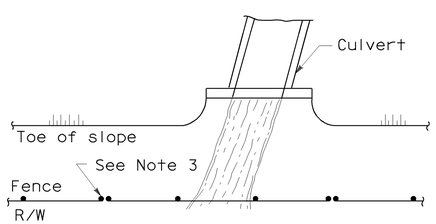

PLAN

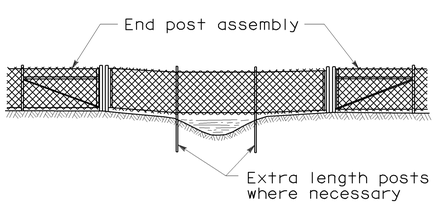

ELEVATION

INSTALLATION OVER STREAM

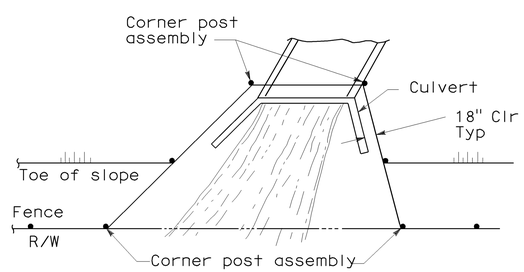

PLAN

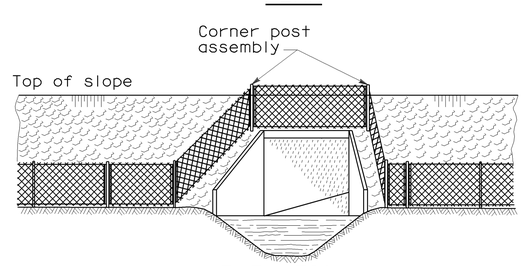

ELEVATION

INSTALLATION AROUND HEADWALL

See Note 4

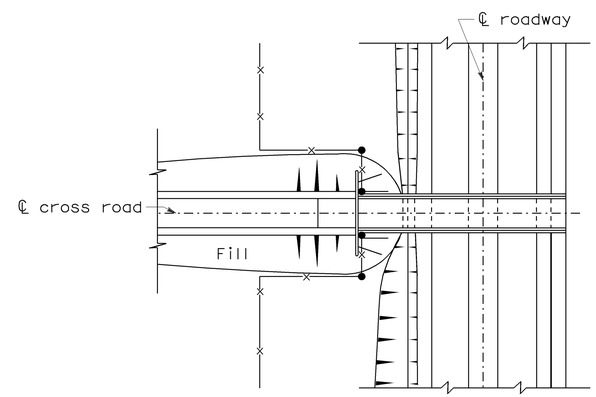

PLAN OF ROADWAY - UNDERPASS

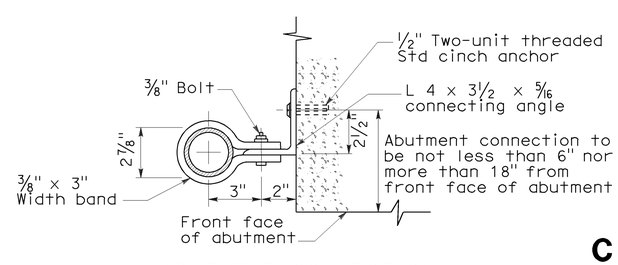

ABUTMENT CONNECTION

TYPICAL INSTALLATION AT BRIDGES

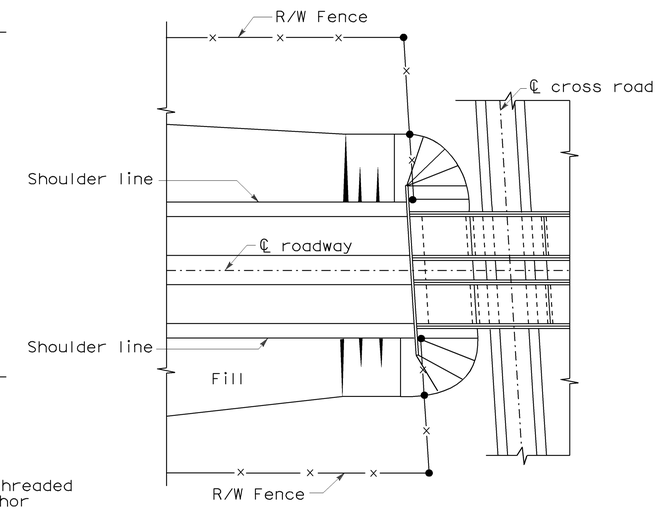

PLAN OF ROADWAY - OVERPASS

STATE OF CALIFORNIA
DEPARTMENT OF TRANSPORTATION

CHAIN LINK FENCE DETAILS

NO SCALE

NSP A85B DATED JUNE 5, 2009 SUPPLEMENTS THE STANDARD PLANS BOOK DATED MAY 2006.

NEW STANDARD PLAN NSP A85B

2006 NEW STANDARD PLAN NSP A85B

5-12-09

DIST	COUNTY	ROUTE	POST MILES TOTAL PROJECT	SHEET NO.	TOTAL SHEETS
11	SD	78	3.5/5.8	73	87

Robert B Schott
LICENSED LANDSCAPE ARCHITECT

August 15, 2008
PLANS APPROVAL DATE

LICENSED LANDSCAPE ARCHITECT
ROBERT B. SCHOTT 3605
Robert B Schott
Signature
11-04-08
Renewal Date
08-11-08
Date
STATE OF CALIFORNIA

The State of California or its officers or agents shall not be responsible for the accuracy or completeness of electronic copies of this plan sheet.

To accompany plans dated 05-16-11

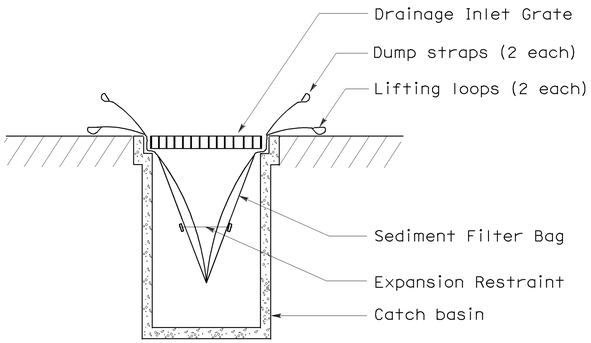

SECTION B-B

SEDIMENT FILTER BAG DETAIL

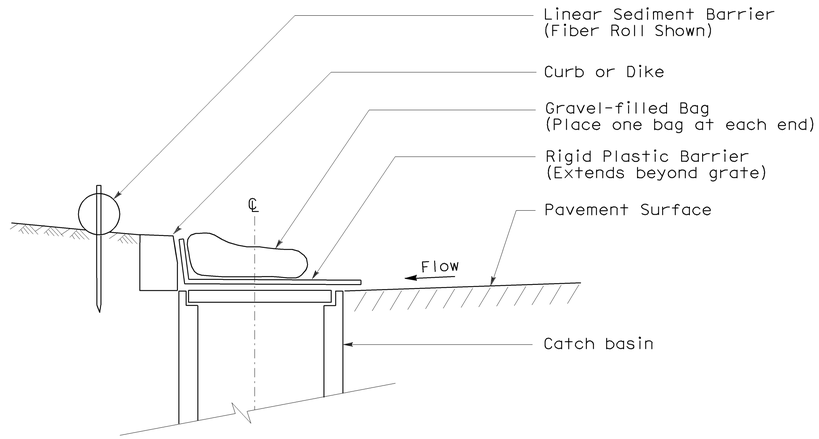

SECTION

TEMPORARY DRAINAGE INLET PROTECTION (TYPE 6A) (CATCH BASIN WITH GRATE)

NOTES:

1. See Standard Plan T51 for Temporary Silt Fence.
2. Dimensions may vary to fit field conditions.

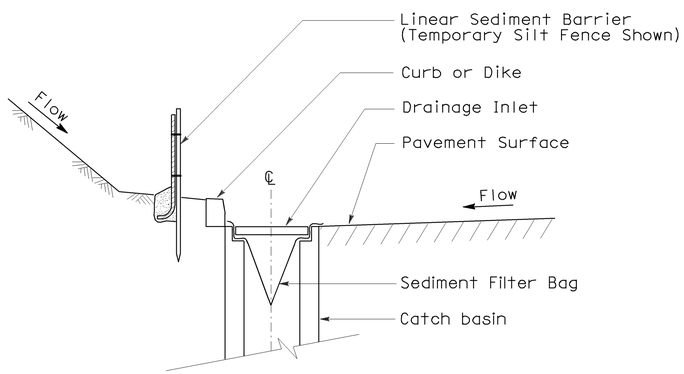

SECTION A-A

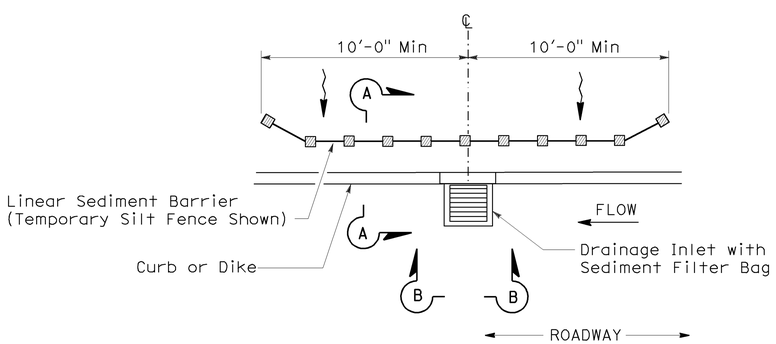

PLAN

TEMPORARY DRAINAGE INLET PROTECTION (TYPE 5) (SEDIMENT FILTER BAG)

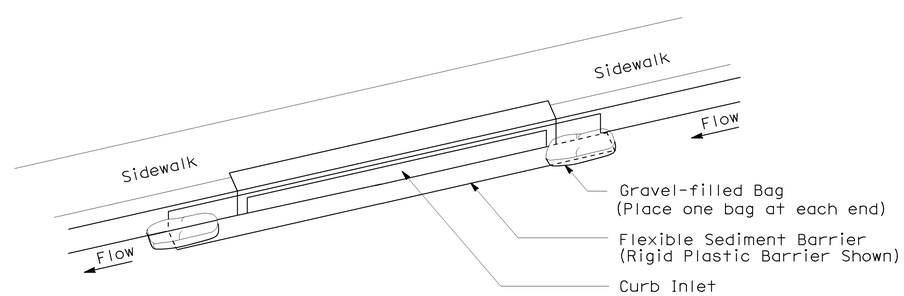

PERSPECTIVE

TEMPORARY DRAINAGE INLET PROTECTION (TYPE 6B) (CURB INLET WITHOUT GRATE)

STATE OF CALIFORNIA
DEPARTMENT OF TRANSPORTATION

TEMPORARY WATER POLLUTION CONTROL DETAILS (TEMPORARY DRAINAGE INLET PROTECTION)

NO SCALE

NSP T64 DATED AUGUST 15, 2008 SUPPLEMENTS
THE STANDARD PLANS BOOK DATED MAY 2006.

NEW STANDARD PLAN NSP T64

2006 NEW STANDARD PLAN NSP T64

7-11-08

DIST	COUNTY	ROUTE	POST MILES TOTAL PROJECT	SHEET NO.	TOTAL SHEETS
11	SD	78	3.5/5.8	74	87

Randell D. Hiatt
REGISTERED CIVIL ENGINEER

June 6, 2008
PLANS APPROVAL DATE

The State of California or its officers or agents shall not be responsible for the accuracy or completeness of electronic copies of this plan sheet.

REGISTERED PROFESSIONAL ENGINEER
Randell D. Hiatt
No. C50200
Exp. 6-30-09
CIVIL
STATE OF CALIFORNIA

To accompany plans dated 05-16-11

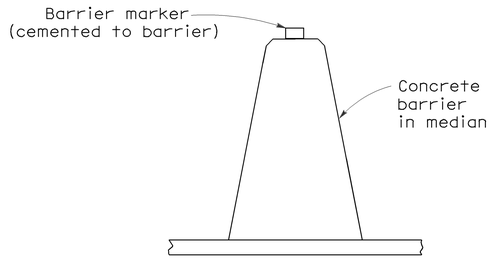

CONCRETE BARRIER TYPE 60 DELINEATION

See Notes 7 and 8

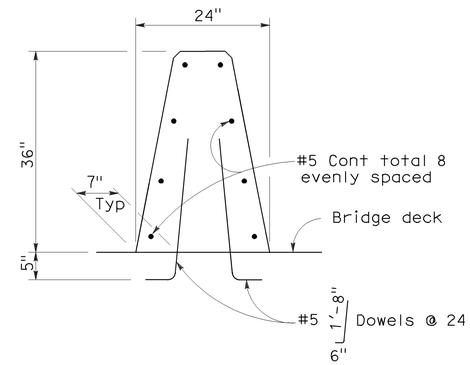

CONCRETE BARRIER TYPE 60A

Details similar to Type 60 except as noted.

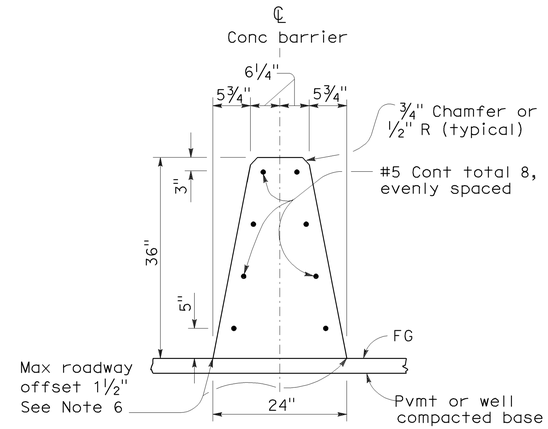

CONCRETE BARRIER TYPE 60

NOTES:

1. See Standard Plan A76B for details of Concrete Barrier Type 60 end anchors, connection to structures and transitions to Concrete Barrier Type 50 and Concrete Barrier Type 60S.
2. See Standard Plan A76C for Concrete Barrier Type 60 transitions at bridge column and sign pedestals.
3. Where glare screen is required on Concrete Barrier Type 60, use Concrete Barrier Type 60G.
4. Where the concrete barrier is added to the face of existing concrete structure, match existing weep holes.
5. Expansion joints in concrete barrier shall be located at all deck, pavement and principal wall joints. Expansion joint filler material shall be the same size as joint or ½" minimum.
6. Where roadway offset is greater than 1½", see Concrete Barrier Type 60C.
7. Barrier delineation to be used when required by the Special Provisions.
8. Spacing of barrier markers to match spacing of raised pavement markers on the adjacent median edgeline pavement delineation.
9. Reinforcing stirrup not required for roadway offsets less than 1'-0".
10. For roadway surfaces offset greater than 1½" to 3", no rebars required. For roadway surfaces offset greater than 3" to 8" use two #4 rebars at 3" above the lower roadway surface. For roadway surfaces offset greater than 8" to 12", use two #4 rebars at 3" above the lower roadway surface and two #4 rebars at 8" above the lower roadway surface. For roadway surfaces offset greater than 12" to 36", use two #4 rebars at 3" above the lower roadway surface and two #4 rebars at every 8" increment vertical spacing above the first two #4 rebars.

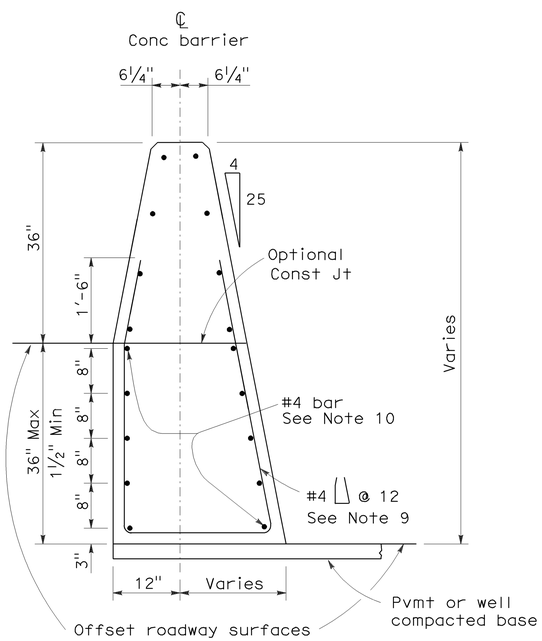

CONCRETE BARRIER TYPE 60C

Details similar to Type 60 except as noted.
Concrete barrier end anchor when necessary.
36" roadway surfaces offset shown.

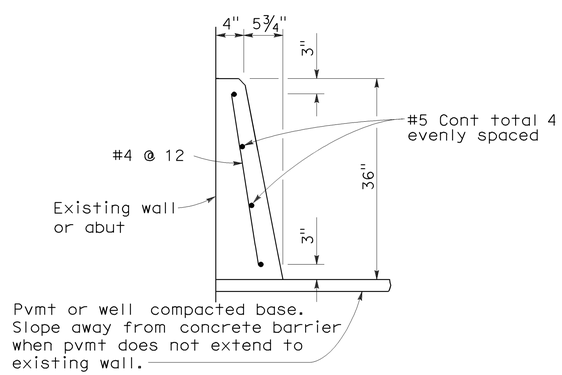

CONCRETE BARRIER TYPE 60D

STATE OF CALIFORNIA
DEPARTMENT OF TRANSPORTATION

CONCRETE BARRIER TYPE 60

NO SCALE

RSP A76A DATED JUNE 6, 2008 SUPERSEDES STANDARD PLAN A76A
DATED MAY 1, 2006 - PAGE 29 OF THE STANDARD PLANS BOOK DATED MAY 2006.

REVISED STANDARD PLAN RSP A76A

2006 REVISED STANDARD PLAN RSP A76A

5-21-08

DIST	COUNTY	ROUTE	POST MILES TOTAL PROJECT	SHEET NO.	TOTAL SHEETS
11	SD	78	3.5/5.8	75	87

Randell D. Hiatt
REGISTERED CIVIL ENGINEER

October 20, 2006
PLANS APPROVAL DATE

REGISTERED PROFESSIONAL ENGINEER
Randell D. Hiatt
No. C50200
Exp. 6-30-07
CIVIL
STATE OF CALIFORNIA

The State of California or its officers or agents shall not be responsible for the accuracy or completeness of electronic copies of this plan sheet.

To accompany plans dated 05-16-11

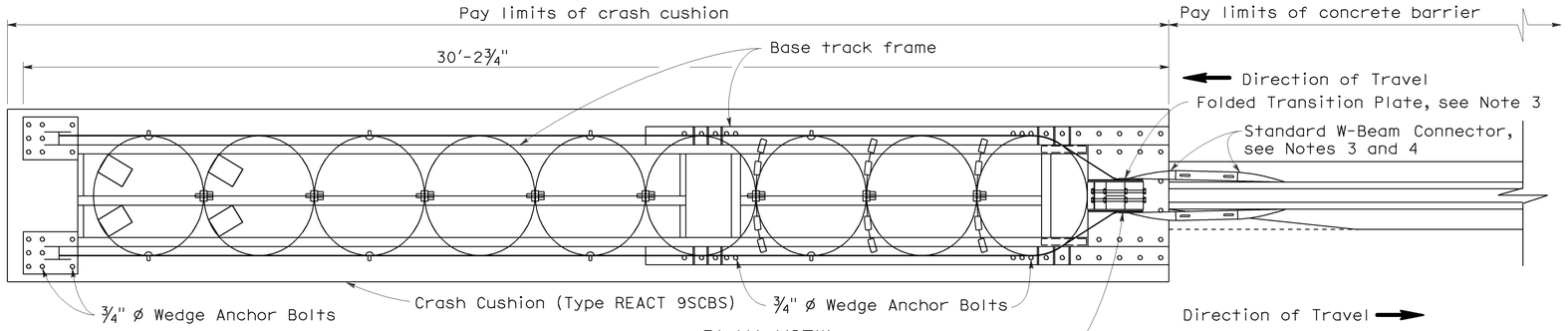

PLAN VIEW

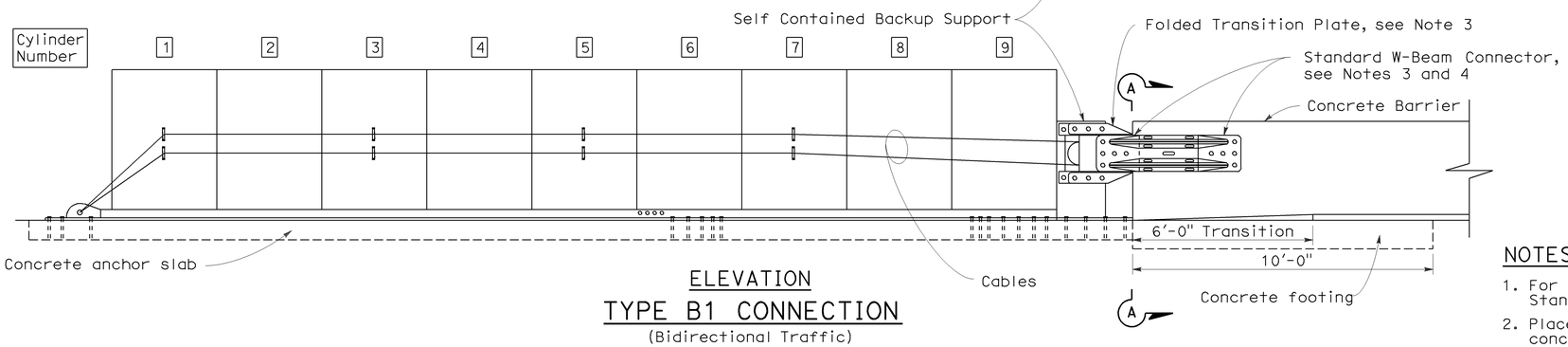

ELEVATION

TYPE B1 CONNECTION

(Bidirectional Traffic)

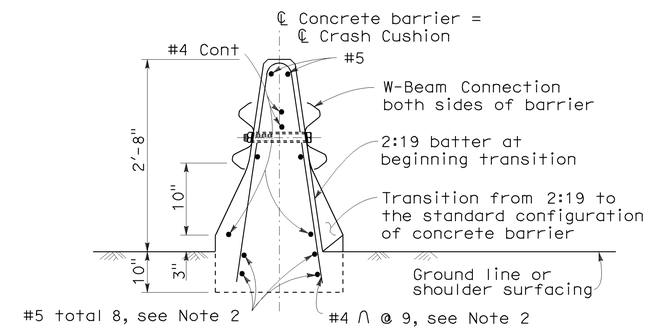

SECTION A-A

(Type 50 Barrier shown)

NOTES:

1. For additional details of Crash Cushion (Type REACT 9SCBS), see Standard Plan A82D1.
2. Place this reinforcement for the full 10′-0″ length of the terminus of the concrete barrier.
3. Attach manufacturer supplied folded transition plates and W-Beam connectors to backup support with manufacturer supplied bolts.
4. Attach W-Beam Connectors to barrier with manufacturer supplied anchor bolts in the manner recommended by the manufacturer.

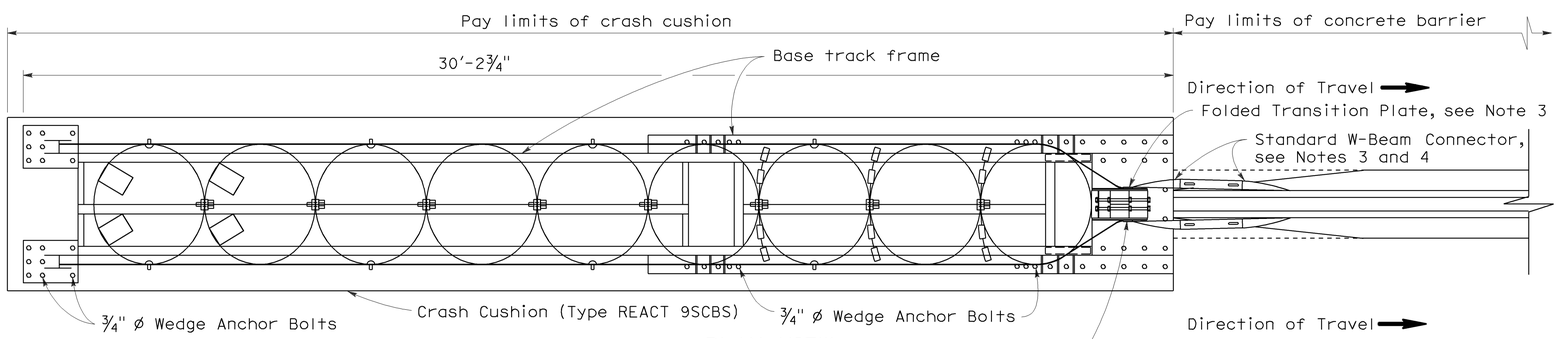

PLAN VIEW

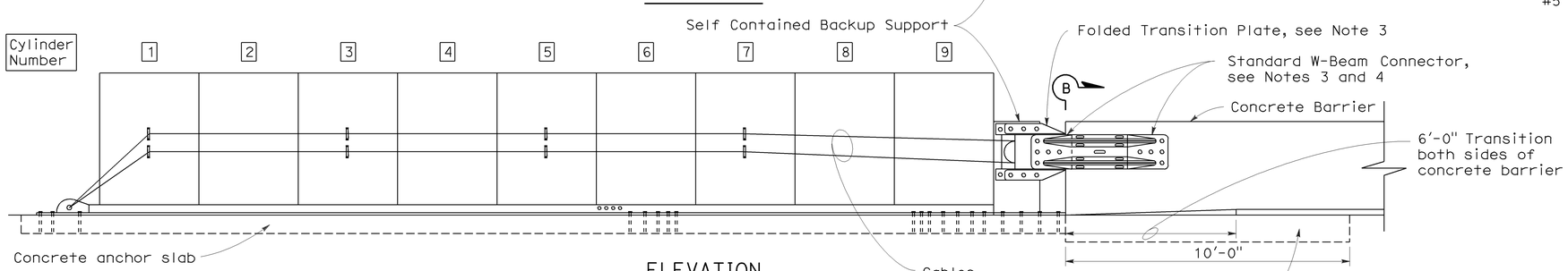

ELEVATION

TYPE U1 CONNECTION

(Unidirectional Traffic)

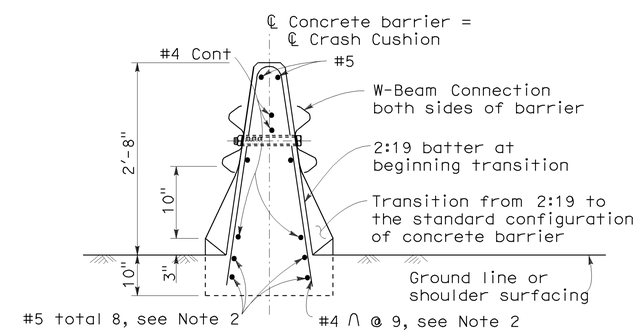

SECTION B-B

(Type 50 Barrier shown)

STATE OF CALIFORNIA
DEPARTMENT OF TRANSPORTATION

CRASH CUSHION (TYPE REACT 9SCBS) CONNECTION TO CONCRETE BARRIER

NO SCALE

RSP A82D2 DATED OCTOBER 20, 2006 SUPERSEDES STANDARD PLAN A82D2 DATED MAY 1, 2006 - PAGE 108 OF THE STANDARD PLANS BOOK DATED MAY 2006.

REVISED STANDARD PLAN RSP A82D2

2006 REVISED STANDARD PLAN RSP A82D2

9-13-06

DIST	COUNTY	ROUTE	POST MILES TOTAL PROJECT	SHEET NO.	TOTAL SHEETS
11	SD	78	3.5/5.8	76	87

REGISTERED CIVIL ENGINEER

June 5, 2009
PLANS APPROVAL DATE

REGISTERED PROFESSIONAL ENGINEER Glenn DeCou No. C34547 Exp. 9-30-09 CIVIL STATE OF CALIFORNIA

The State of California or its officers or agents shall not be responsible for the accuracy or completeness of electronic copies of this plan sheet.

To accompany plans dated 05-16-11

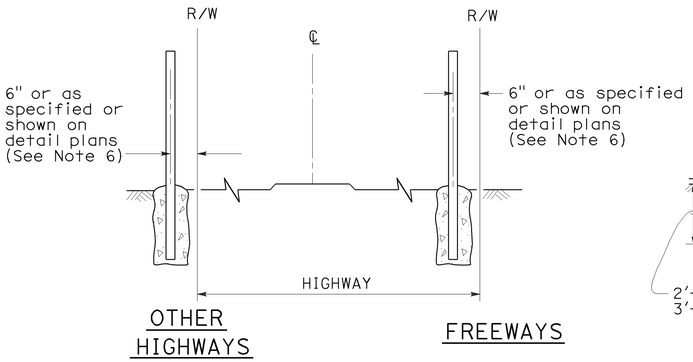

FENCE LOCATION

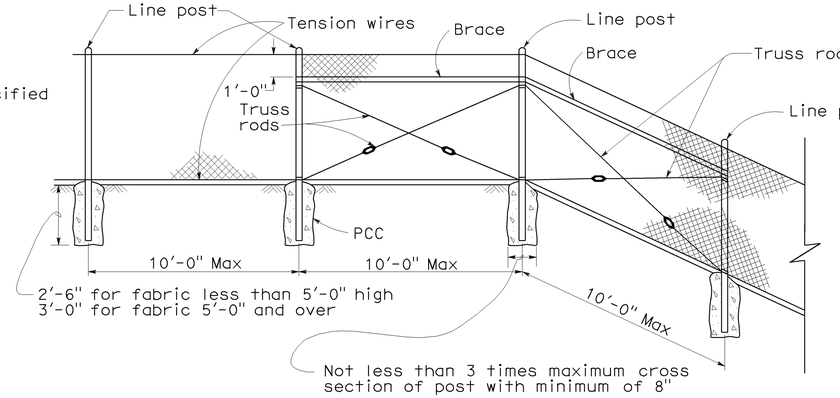

CHAIN LINK FENCE ON SHARP BREAK IN GRADE

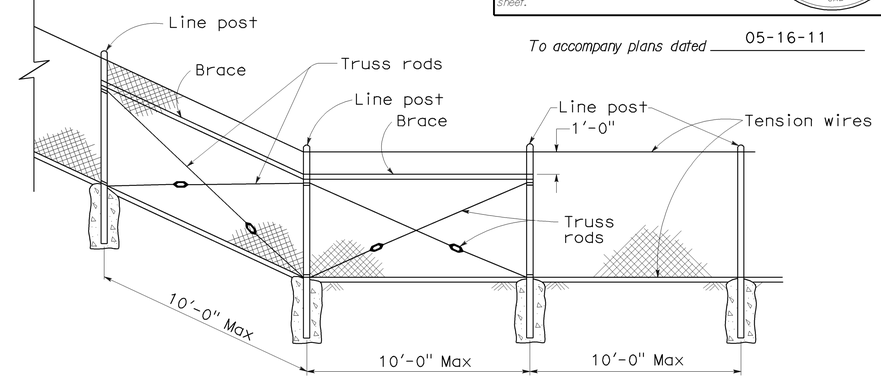

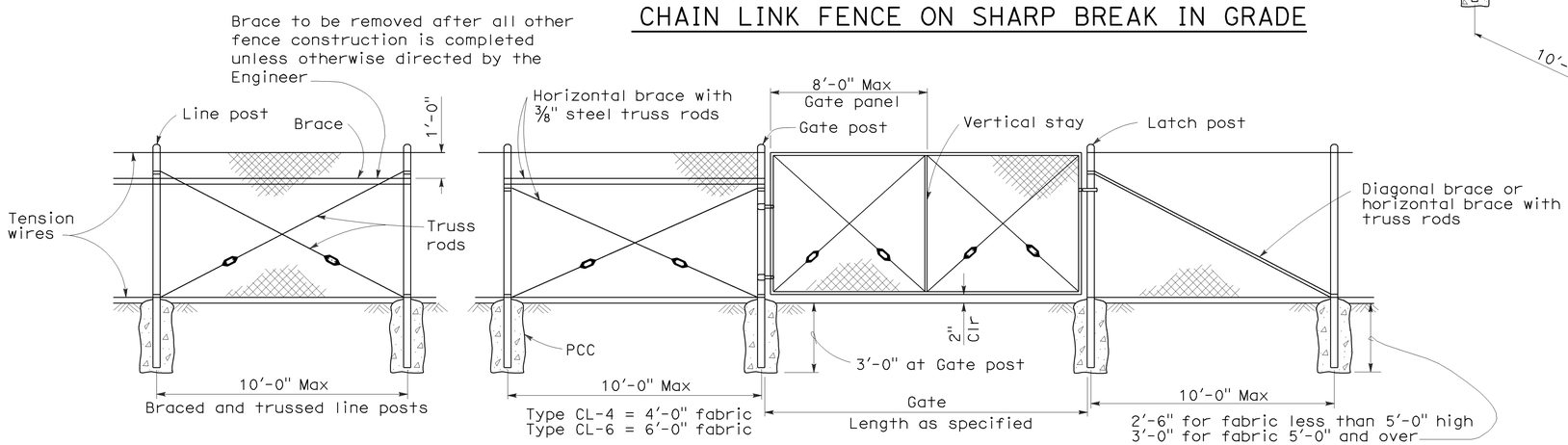

CHAIN LINK GATE INSTALLATION

GATE POST			
FENCE HEIGHT	GATE WIDTHS	NOMINAL ID	WEIGHT PER FOOT
6'-0" and Less	Up thru 6'-0"	2½"	4.95 LB
	Over 6'-0" thru 12'-0"	4"	10.79 LB
	Over 12'-0" thru 18'-0"	5"	14.62 LB
	Over 18'-0" to 24'-0" Max	6"	18.97 LB
Over 6'-0"	Up thru 6'-0"	3"	7.58 LB
	Over 6'-0" thru 12'-0"	5"	14.62 LB
	Over 12'-0" thru 18'-0"	6"	18.97 LB
	Over 18'-0" to 24'-0" Max	8"	28.55 LB

Above post dimensions and weights are minimums. Larger sizes may be used on approval of the Engineer.

NOTES:

1. The below table shows examples of post and brace sections which may comply with the Specifications.
2. Sections shown in the tables must also comply with the strength requirements and other provisions of the Specifications.
3. Other sections which comply with the strength requirements and other provisions of the Specifications may be used on approval of the Engineer.
4. Options exercised shall be uniform on any one project.
5. Dimensions shown are nominal.
6. Offset to be 2'-0" at monument locations, measured at right angles to R/W lines. Taper to achieve offset to be at least 20'-0" long.

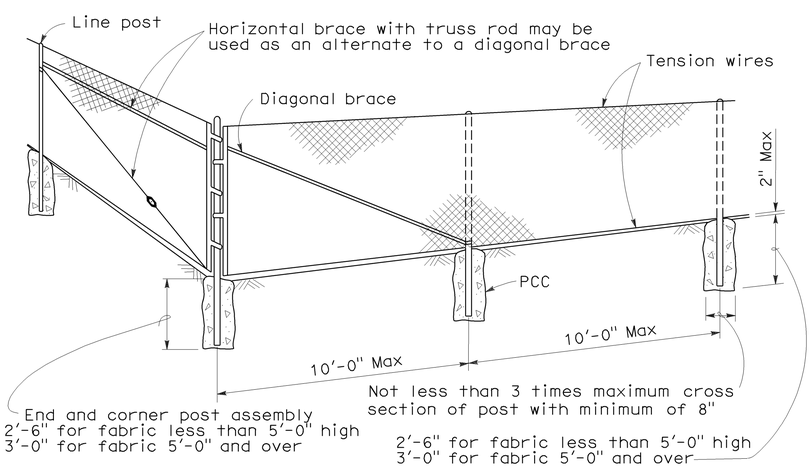

CORNER POST

TYPICAL MEMBER DIMENSIONS (See Notes)											
FENCE HEIGHT	LINE POSTS			END, LATCH & CORNER POSTS				BRACES			
	ROUND ID	H	ROLL FORMED	ROUND ID	ROLL FORMED			ROUND ID	H	ROLL FORMED	
6' & less	1½"	1⅞" × 1⅝"	1⅞" × 1⅝"	2"	3½" × 3½"	2" × 1¾"		1¼"	1½" × 1 5/16"	1⅝" × 1¼"	1¾" × 1¼"
Over 6'	2"	2¼" × 2"	2" × 1¾"	2½"	3½" × 3½"	2½" × 2½"		1¼"	1½" × 1 5/16"	1⅝" × 1¼"	1¾" × 1¼"

STATE OF CALIFORNIA
DEPARTMENT OF TRANSPORTATION

CHAIN LINK FENCE

NO SCALE

RSP A85 DATED JUNE 5, 2009 SUPERSEDES STANDARD PLAN A85
DATED MAY 1, 2006 - PAGE 111 OF THE STANDARD PLANS BOOK DATED MAY 2006.

REVISED STANDARD PLAN RSP A85

2006 REVISED STANDARD PLAN RSP A85

5-7-09

DIST	COUNTY	ROUTE	POST MILES TOTAL PROJECT	SHEET NO.	TOTAL SHEETS
11	SD	78	3.5/5.8	77	87

REGISTERED ELECTRICAL ENGINEER

October 5, 2007
PLANS APPROVAL DATE

REGISTERED PROFESSIONAL ENGINEER Jeffery G. McRae No. E14512 Exp. 6-30-08 ELECTRICAL STATE OF CALIFORNIA

The State of California or its officers or agents shall not be responsible for the accuracy or completeness of electronic copies of this plan sheet.

To accompany plans dated 05-16-11

ELECTROLIERS

STANDARD TYPES
15, 15D
15 STRUCTURE
21, 21D STRUCTURE
30
31
32
35
36-20A

High mast light pole

Double Arm lighting standard

Existing electrolier

Electrolier foundation (Future installation)

NOTES:

1. Luminaires shall be 310 W HPS when installed on Type 21, 21D, 30, 31, 32, 35 and 36-20A Standards, unless otherwise specified. Luminaires shall be 200 W HPS when installed on other type standards or poles, unless otherwise specified.
2. Luminaires shall be the cutoff type, ANSI Type III medium cutoff lighting distribution, unless otherwise specified.
3. Variations noted adjacent to symbol on project plans.

Electrolier (see project notes or project plans)

Luminaire on wood pole

STANDARD NOTES:

- AB Abandon. If applied to conduit, remove conductors.
- BC Install pull box in existing conduit run.
- BP Pedestrian barricade, type as indicated on plan.
- CB Install conduit into existing pull box.
- CC Connect new and existing conduit. Remove existing conductors and install conductors as indicated.
- CF Conduit to remain for future use. Remove conductors. Install pull wire or rope.
- DH Detector handhole.
- FA Foundation to be abandoned.
- IS Install sign on signal mast arm.
- NS No slip base on standard.
- PEC Photoelectric control.
- PEU Photoelectric unit.
- RC Equipment or material to be removed and become the property of the Contractor.
- RE Remove electrolier, fuses and ballast. Tape ends of conductors.
- RL Relocate equipment.
- RR Remove and reuse equipment.
- RS Remove and salvage equipment.
- SC Splice new to existing conductors.
- SD Service disconnect.
- SF Standard to remain for future use. Remove luminaire, pole conductors, fuses and ballast.
- TSP Telephone service point.

ABBREVIATIONS AND EQUIPMENT DESIGNATIONS

PROPOSED	EXISTING	
BBS	bbs	Battery backup system
BC	bc	Bolt circle
C	C	Conduit
CCTV	cctv	Closed circuit television
CKT	ckt	Circuit
CMS	cms	Changeable message sign
DLC	dlc	Loop detector lead-in cable
EMS	ems	Extinguishable message sign
EVC	evc	Emergency vehicle cable
EVD	evd	Emergency vehicle detector
FB	fb	Flashing beacon
FBCA	fbca	Flashing beacon control assembly
FBS	fbs	Flashing beacon with slip base
FO	fo	Fiber optic
G	G	Ground (Equipment Grounding Conductor)
GFCI	GFCI	Ground fault circuit interrupt
HAR	har	Highway advisory radio
HEX	hex	Hexagonal
HPS	hps	High pressure sodium
IISNS	iisns	Internally illuminated street name sign
ISL	isl	Induction sign lighting
LED	led	Light emitting diode
LMA	lma	Luminaire mast arm
LPS	lps	Low pressure sodium
LTG	ltg	Lighting
LUM	lum	Luminaire
MAT	mat	Mast arm mounting vehicle signal faces, top attachment
MAS	mas	Mast arm mounting vehicle signal faces, side attachment
MAS-4A	mas-4A	Mast arm mounting vehicle signal faces, side attachment - 4 signal section
MAS-4B	mas-4B	
MAS-4C	mas-4C	
MAS-5A	mas-5A	Mast arm mounting vehicle signal faces, side attachment - 5 signal section
MAS-5B	mas-5B	
MC	mc	Mercury contactor
M/M	m/m	Multiple to multiple transformer
MT	mt	Conduit with pull wire or rope only
MTG	mtg	Mounting
	mv	Mercury vapor lighting fixture
N	N	Neutral (Grounded Conductor)
NC	NC	Normally closed
NO	NO	Normally open
PB	pb	Pull box
PEC	pec	Photoelectric control (Type I, II, III, IV or V as shown)
PED	ped	Pedestrian
PEU	peu	Photoelectric unit
PPB	ppb	Pedestrian push button
RL		Relocated equipment
RM	rm	Ramp metering
SB	sb	Slip base
SIC	sic	Signal interconnect cable
SIG	sig	Signal
SMA	sma	Signal mast arm
SNS	sns	Street name sign
SP	sp	Service point
TDC	tdc	Telephone demarcation cabinet
TMS	tms	Traffic monitoring station
TOS	tos	Traffic Operations System
VEH	veh	Vehicle
XFMR	xfmr	Transformer
COMM	comm	Communication
RWIS	rwis	Roadway weather information system

SOFFIT AND WALL MOUNTED LUMINAIRES

Pendant, 70 W HPS unless otherwise specified.

Flush, 70 W HPS unless otherwise specified.

Wall surface, 70 W HPS unless otherwise specified.

Existing soffit or wall luminaire to remain unmodified.

Existing soffit or wall luminaire to be modified as specified.

NOTE:

Arrow indicates "street side" of luminaire.

STATE OF CALIFORNIA
DEPARTMENT OF TRANSPORTATION

ELECTRICAL SYSTEMS (SYMBOLS AND ABBREVIATIONS)

NO SCALE

RSP ES-1A DATED OCTOBER 5, 2007 SUPERSEDES STANDARD PLAN ES-1A DATED MAY 1, 2006 - PAGE 400 OF THE STANDARD PLANS BOOK DATED MAY 2006.

REVISED STANDARD PLAN RSP ES-1A

2006 REVISED STANDARD PLAN RSP ES-1A

DIST	COUNTY	ROUTE	POST MILES TOTAL PROJECT	SHEET NO.	TOTAL SHEETS
11	SD	78	3.5/5.8	78	87

REGISTERED ELECTRICAL ENGINEER

October 5, 2007
PLANS APPROVAL DATE

REGISTERED PROFESSIONAL ENGINEER Jeffery G. McRae No. E14512 Exp. 6-30-08 ELECTRICAL STATE OF CALIFORNIA

The State of California or its officers or agents shall not be responsible for the accuracy or completeness of electronic copies of this plan sheet.

To accompany plans dated 05-16-11

CONDUIT

PROPOSED	EXISTING	
		Lighting Conduit, unless otherwise indicated or noted
		Traffic signal conduit
C	c	Communication conduit
T	t	Telephone conduit
F	f	Fire alarm conduit
FO	fo	Fiber optic conduit
		Conduit termination (RSP ES-9A C)
R	r	Conduit riser in/on structure or service pole

SERVICE EQUIPMENT

PROPOSED	EXISTING	
OH	oh	Overhead lines
U	U	Wood pole "U" indicates utility owned
		Pole guy with anchor
		Utility transformer - ground mounted
III		Service equipment enclosure type
		Service equipment enclosure door indicates front of enclosure
T	t	Telephone demarcation cabinet

POLE-MOUNTED SERVICE DESIGNATION

Type of installation

TYPE H SERVICE - 28'-10" ← Pole height above grade

ILLUMINATED OVERHEAD SIGN

PROPOSED	EXISTING	
		Overhead sign - Single post
		Overhead sign - Two post
		Overhead sign - Mounted on structure
		Overhead sign with electrolier

SIGNAL EQUIPMENT

PROPOSED	EXISTING	
		Pedestrian signal face
		Pedestrian push button post
		Pedestrian barricade
		Vehicle signal face (with backplate, 3-Section: red, yellow and green)
		Vehicle signal face with angle visors
PV	PV	Modifications of basic symbols: "L" Indicates all non-arrow sections louvered "LG" Indicates louvered green section only "PV" Indicates 12" programmed visibility sections "8" indicates all 8" sections (only when specified)
		Type 15TS and Vehicle signal face
		Vehicle signal face with red, yellow and green left arrow sections
		Vehicle signal face with red and yellow sections and up green arrow
		Vehicle signal face (5 Section) with red, yellow and green sections and yellow and green right arrows
		Type 1 Standard and attached vehicle signal faces
		Standard with signal mast arm only and attached vehicle signal faces and internally illuminated street name sign
		Type 33 Standard, Left-turn vehicle signal face and sign
		Standard with luminaire and signal mast arms and attached vehicle signal faces
		Cantilever flashing beacon Type 9 Frame, with a sign unless otherwise specified or indicated
		Type 15-FBS Standard with two vehicle signal face sections with lens, backplate and visor with a sign
R	Y	Flashing beacon. One vehicle signal face section with lens, backplate and visor. "R" indicates red indication, "Y" indicates yellow indication
		Controller assembly. Door indicates front of cabinet

SIGNAL EQUIPMENT Cont

PROPOSED	EXISTING	
		Guard post
		Type 1 Standard with "Meter On" sign
		Emergency Vehicle detector

NOTES:

1. All signal sections shall be 12" unless shown otherwise.
2. Signal heads shall be provided with backplates unless shown otherwise.
3. Signal indication shall be LED.

STATE OF CALIFORNIA
DEPARTMENT OF TRANSPORTATION

ELECTRICAL SYSTEMS (SYMBOLS AND ABBREVIATIONS)

NO SCALE

RSP ES-1B DATED OCTOBER 5, 2007 SUPERCEDES STANDARD PLAN ES-1B DATED MAY 1, 2006 - PAGE 401 OF THE STANDARD PLANS BOOK DATED MAY 2006.

REVISED STANDARD PLAN RSP ES-1B

2006 REVISED STANDARD PLAN RSP ES-1B

7-10-07

DIST	COUNTY	ROUTE	POST MILES TOTAL PROJECT	SHEET NO.	TOTAL SHEETS
11	SD	78	3.5/5.8	79	87

REGISTERED ELECTRICAL ENGINEER

October 5, 2007
PLANS APPROVAL DATE

REGISTERED PROFESSIONAL ENGINEER Jeffery G. McRae No. E14512 Exp. 6-30-08 ELECTRICAL STATE OF CALIFORNIA

The State of California or its officers or agents shall not be responsible for the accuracy or completeness of electronic copies of this plan sheet.

To accompany plans dated 05-16-11

EQUIPMENT IDENTIFICATION

ILLUMINATED SIGN IDENTIFICATION NUMBER:

Sign No. 12345

10 ISL SCI 1.0

- Sign number - Place on post or structure
- Transformer rating (kVA)
- Lighting control type
- Number and type of fixtures

Do NOT place on standard or structure

ELECTROLIER OR EQUIPMENT IDENTIFICATION NUMBER:

12345 - 15'-0"

- Mast arm length, if shown. Do not place on standard or structure.
- Equipment number - Place on standard or structure. Existing equipment numbers are shown in parenthesis

CONDUIT AND CONDUCTOR IDENTIFICATION:

1½"C, 2#10, 15#14, 2 DLC

- Number and size of conductors and cables
- Size of conduit in inches

ø1, ø2, ø2P, etc.	Traffic phase identification for signal faces, detectors and phase diagrams
1 2 3	Project note numbers
A B C	Equipment description, installation or item numbers
1 2 3	Conduit run numbers

SIGNAL AND LIGHTING STANDARD (TYPICAL DESIGNATION):

19A - 3 - 100

- Wind velocity = 100 mph
- Case 3 arm loading
- Standard type
- Standard Plan sheet number
- Detail number or letter

MISCELLANEOUS EQUIPMENT

PROPOSED	EXISTING	
CMS	cms	Changeable message sign
		Closed circuit television camera
		Highway advisory radio pole and antenna
EMS	ems	Extinguishable message sign
M V	m v	Detection device M = Microwave sensor V = Video image sensor

WIRING DIAGRAM LEGEND

P	Pole
CB	Circuit breaker
A	Ampere
V	Volt
M	Metered
UM	Unmetered
NB	Neutral bus
GB	Ground bus
G	Equipment grounding conductor
N	Grounded conductor (Neutral)

- External conductor
- Conductor or bus
- Tie point
- Contactor coil
- Contactor, Contact NO
- Terminal blocks
- Contactor, Contact NC
- Enclosure bond
- Grounding electrode
- Circuit breaker
- Receptacle

PULL BOXES

PROPOSED	EXISTING	
		Pull box-No. 5 unless otherwise indicated or noted.
3	9A(21)	Pull box-Additional designations or descriptions

3 = No. 3½ pull box
5 = No. 5 pull box
6 = No. 6 pull box
7 = No. 7 (Ceiling pull box)
8 = No. 8 (Pendant soffit pull box)
9 = No. 9 pull box
9A = No. 9A pull box

(C) = Communications pull box
(E) = Pull box with extension
(S) = Sprinkler control pull box
(21) = Anchor bolts and conduit for future installation of Type 21 Standard
(T) = Traffic pull box

VEHICLE DETECTORS

5 J 9 U

- Vehicle detector designation
- U = Upper
  L = Lower
- Slot number in input file
- Input file (I or J)
- Phase

PROPOSED	EXISTING	
		Type A detector loop. Outline of sawcut shown.
		Type B detector loop. Outline of sawcut shown.
		Type C detector loop. Outline of sawcut shown.
		Type D detector loop. Outline of sawcut shown.
		Type E detector loop. Outline of sawcut shown.
		Type Q detector loop. Outline of sawcut shown.
		Magnetic detector
DH	dh	Detector handhole
		Microwave or video detection zone

STATE OF CALIFORNIA
DEPARTMENT OF TRANSPORTATION

ELECTRICAL SYSTEMS (SYMBOLS AND ABBREVIATIONS)

NO SCALE

RSP ES-1C DATED OCTOBER 5, 2007 SUPERCEDES STANDARD PLAN ES-1C DATED MAY 1, 2006 - PAGE 402 OF THE STANDARD PLANS BOOK DATED MAY 2006.

REVISED STANDARD PLAN RSP ES-1C

2006 REVISED STANDARD PLAN RSP ES-1C

DIST	COUNTY	ROUTE	POST MILES TOTAL PROJECT	SHEET NO.	TOTAL SHEETS
11	SD	78	3.5/5.8	80	87

REGISTERED CIVIL ENGINEER

October 5, 2007
PLANS APPROVAL DATE

REGISTERED PROFESSIONAL ENGINEER
Stanley P. Johnson
No. C57793
Exp. 3-31-08
CIVIL
STATE OF CALIFORNIA

The State of California or its officers or agents shall not be responsible for the accuracy or completeness of electronic copies of this plan sheet.

To accompany plans dated 05-16-11

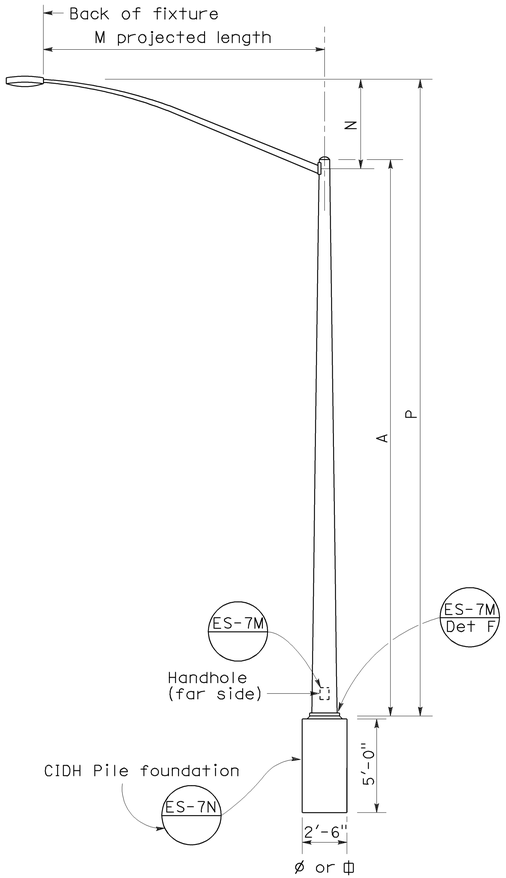

ELEVATION
TYPE 15 AND TYPE 21

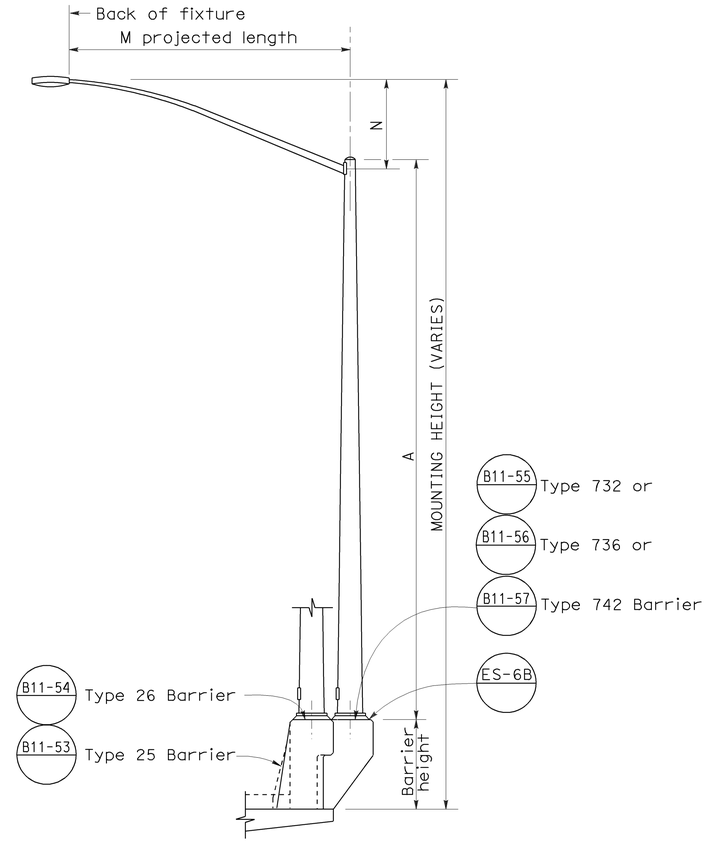

ELEVATION
TYPE 15 AND TYPE 21 BARRIER RAIL MOUNTED

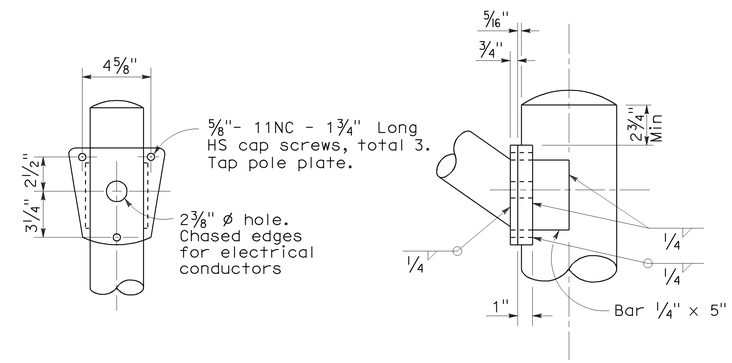

DETAIL R
LUMINAIRE ARM CONNECTION

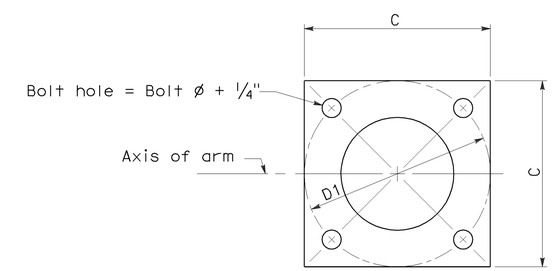

BASE PLATE

POLE TYPE	POLE DATA				BASE PLATE DATA				LUMINAIRE ARM
	A Height	Min OD Base	Min OD Top	Wall Thickness	C	D1 Bolt Circle	Thick-ness	Anchor Bolts Size	
15	30'	8"	3 7/8"	0.1196"	1'-0"	1'-0"	1"	1" ø x 3'-0" x 4"*	6' - 15' [12']
21	35'	8 5/8"	3 7/8"	0.1196"	1'-0"	1'-0"	1"	1 1/4"ø x 3'-0" x 4"*	6' - 15' [12']

* For barrier rail bolts, see Standard Plan ES-6B.

LUMINAIRE ARM DATA					
M Projected Length	N Rise	Min OD At Pole	Nominal Thickness	P Type 15	P Type 21
6'-0"	2'-0"±	3 1/4"	0.1196"	31'-6"±	36'-6"±
8'-0"	2'-6"±	3 1/2"	0.1196"	32'-0"±	37'-0"±
10'-0"	3'-3"±	3 7/8"	0.1196"	32'-9"±	37'-9"±
12'-0"	4'-3"±	3 7/8"	0.1196"	33'-9"±	38'-9"±
15'-0"	4'-9"±	4 1/4"	0.1196"	34'-3"±	39'-3"±

NOTES:

1. ☐ Indicates arm length to be used unless otherwise noted on the plans.
2. For Type 15-SB, use Type 15 standard with Type 30 slip base plate details, see Standard Plan ES-6F.
3. For additional notes, see Standard Plan ES-7M and ES-7N.

STATE OF CALIFORNIA
DEPARTMENT OF TRANSPORTATION

ELECTRICAL SYSTEMS (LIGHTING STANDARD TYPES 15 AND 21)

NO SCALE

RSP ES-6A DATED OCTOBER 5, 2007 SUPERCEDES STANDARD PLAN ES-6A DATED MAY 1, 2006 - PAGE 427 OF THE STANDARD PLANS BOOK DATED MAY 2006.

REVISED STANDARD PLAN RSP ES-6A

2006 REVISED STANDARD PLAN RSP ES-6A

7-10-07

DIST	COUNTY	ROUTE	POST MILES TOTAL PROJECT	SHEET NO.	TOTAL SHEETS
11	SD	78	3.5/5.8	81	87

REGISTERED ELECTRICAL ENGINEER

October 5, 2007
PLANS APPROVAL DATE

REGISTERED PROFESSIONAL ENGINEER Jeffery G. McRae No. E14512 Exp. 6-30-08 ELECTRICAL STATE OF CALIFORNIA

The State of California or its officers or agents shall not be responsible for the accuracy or completeness of electronic copies of this plan sheet.

To accompany plans dated 05-16-11

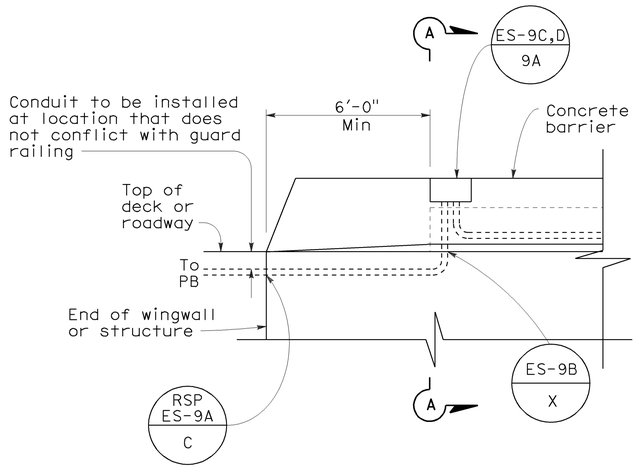

SIDEVIEW

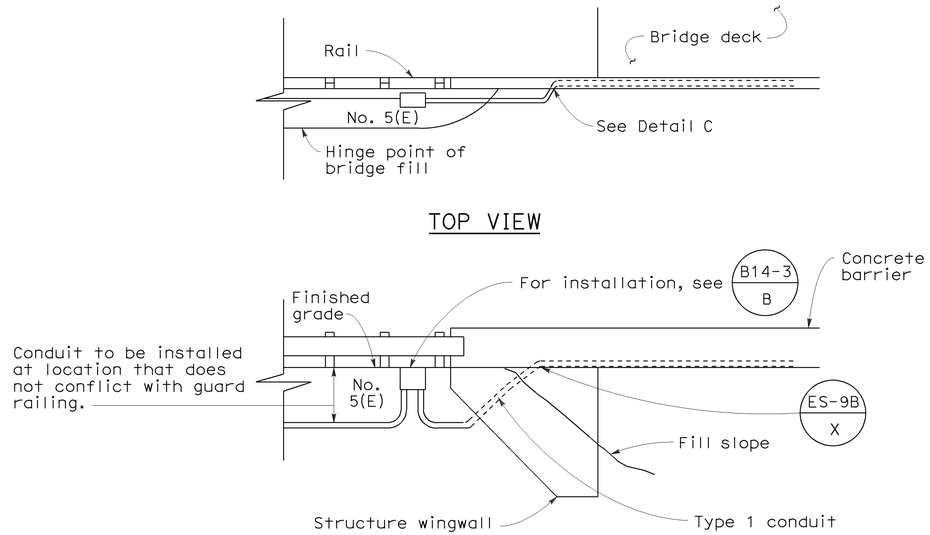

SIDE VIEW
DETAIL I
CONDUIT TERMINATION

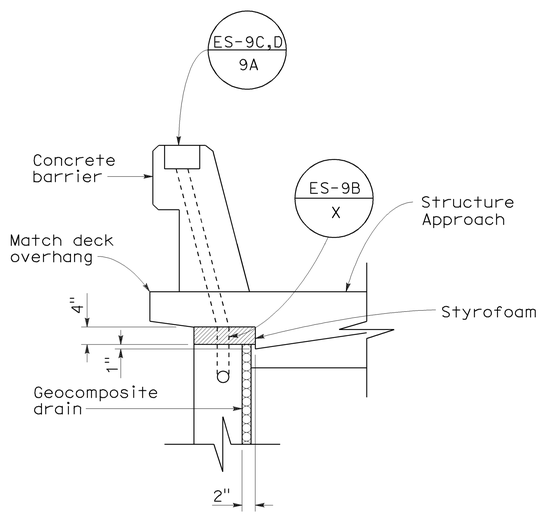

SECTION A-A

DETAIL A
CONDUIT TERMINATION

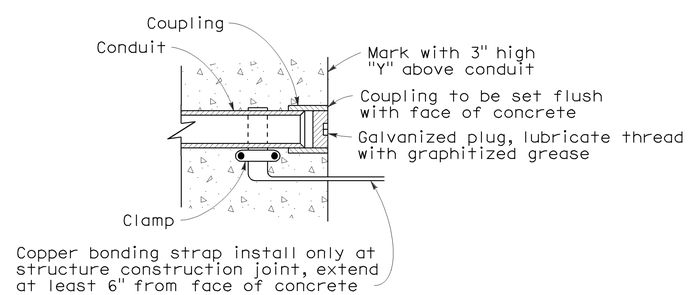

DETAIL C
CONDUIT TERMINATION

STATE OF CALIFORNIA
DEPARTMENT OF TRANSPORTATION

ELECTRICAL SYSTEMS (ELECTRICAL DETAILS STRUCTURE INSTALLATIONS)

NO SCALE

RSP ES-9A DATED OCTOBER 5, 2007 SUPERCEDES STANDARD PLAN ES-9A DATED MAY 1, 2006 - PAGE 454 OF THE STANDARD PLANS BOOK DATED MAY 2006.

REVISED STANDARD PLAN RSP ES-9A

2006 REVISED STANDARD PLAN RSP ES-9A

7-11-07

DIST	COUNTY	ROUTE	POST MILES TOTAL PROJECT	SHEET NO.	TOTAL SHEETS
11	SD	78	3.5/5.8	82	87

REGISTERED ELECTRICAL ENGINEER

October 5, 2007
PLANS APPROVAL DATE

REGISTERED PROFESSIONAL ENGINEER Jeffery G. McRae No. E14512 Exp. 6-30-08 ELECTRICAL STATE OF CALIFORNIA

The State of California or its officers or agents shall not be responsible for the accuracy or completeness of electronic copies of this plan sheet.

To accompany plans dated 05-16-11

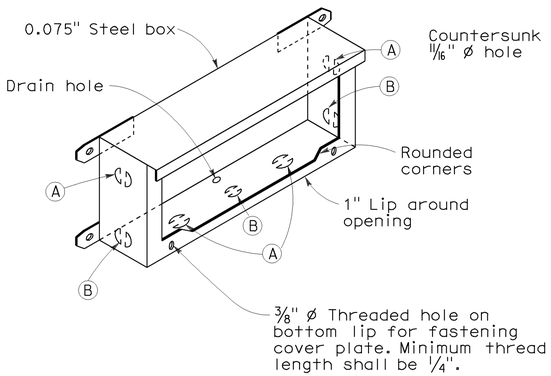

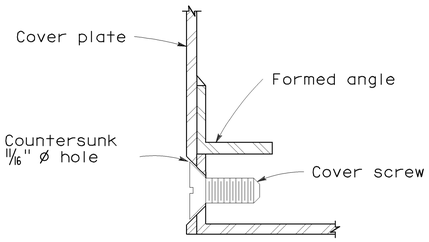

DETAIL J

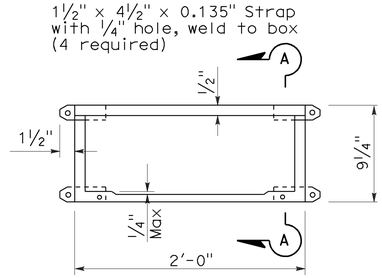

PLAN

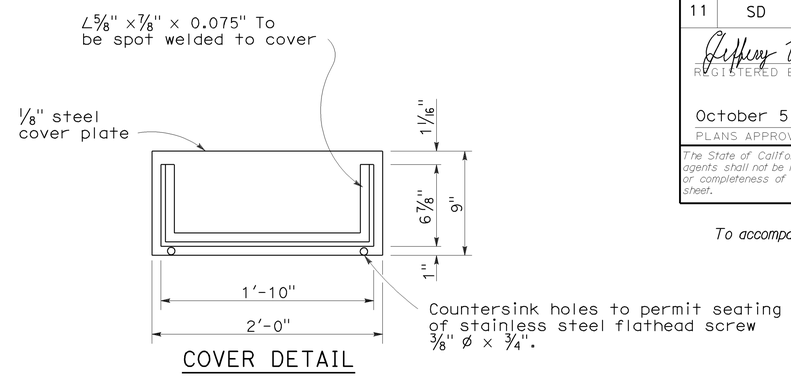

COVER DETAIL

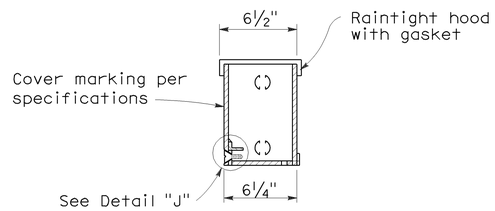

SECTION A-A

INSTALLATION NOTE:

Box shall be parallel to top of railing. Close cover box during pouring with 1/4" plywood of sufficient size to provide 1:1 chamfer on 3 sides of cover. Upper edge of plywood shall fit against lower edge of raintight hood.

No. 9 STRUCTURE PULL BOX

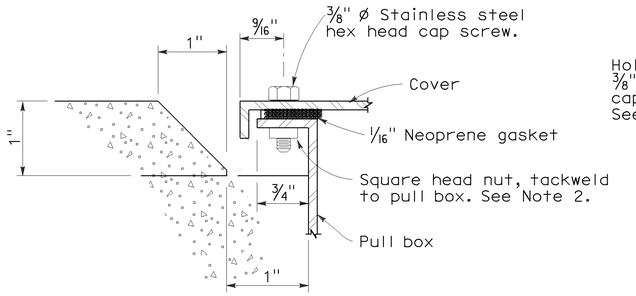

SECTION C-C

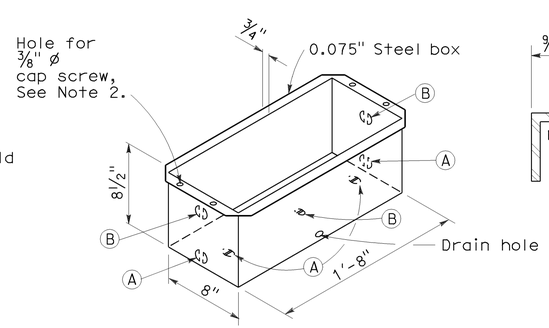

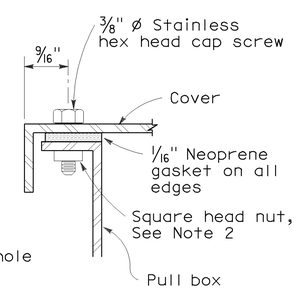

DETAIL A

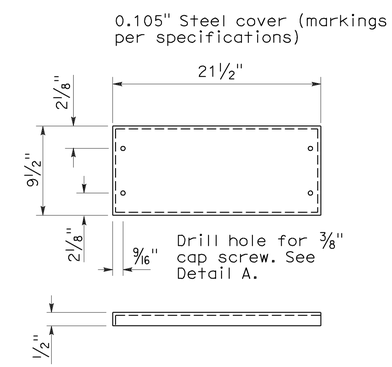

COVER DETAIL

NOTES: No. 9 and 9A Pull Box

1. Corner joints shall be lapped and secured by spot welding or riveting.
2. Where cap screws are used to attach cover to box, either of the following methods of providing adequate threading may be used:
   a. Tack weld square nut to bottom of flange (Total 4), or
   b. Tack weld a 1/4" x 5/8" x 8" bar beneath flange (Total 2).
3. Pound knockouts flat after punching.
4. Multiple size knockouts shall not be permitted.
5. Pull box covers shall be marked as shown on Standard Plan ES-8.

No. 9A STRUCTURE PULL BOX

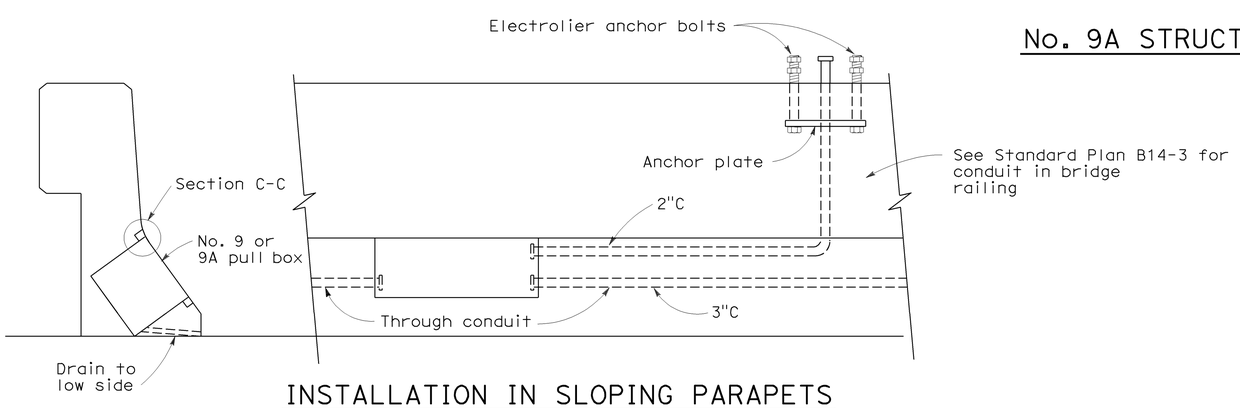

INSTALLATION IN SLOPING PARAPETS

For reinforcement in area of electrolier, see railing sheets. For electrolier anchor bolts, see Standard Plan ES-6B.

KNOCKOUT SCHEDULE
No. 9 AND 9A PULL BOX

(A) 2"C, 1 each end, 2 on bottom.

(B) 3"C, 1 each end, 1 on bottom.

STATE OF CALIFORNIA
DEPARTMENT OF TRANSPORTATION

ELECTRICAL SYSTEMS (ELECTRICAL DETAILS STRUCTURE INSTALLATIONS)

NO SCALE

RSP ES-9C DATED OCTOBER 5, 2007 SUPERCEDES STANDARD PLAN ES-9C DATED MAY 1, 2006 - PAGE 456 OF THE STANDARD PLANS BOOK DATED MAY 2006.

REVISED STANDARD PLAN RSP ES-9C

2006 REVISED STANDARD PLAN RSP ES-9C

7-26-07

DIST	COUNTY	ROUTE	POST MILES TOTAL PROJECT	SHEET NO.	TOTAL SHEETS
11	SD	78	3.5/5.8	83	87

Randell D. Hiatt
REGISTERED CIVIL ENGINEER

June 6, 2008
PLANS APPROVAL DATE

REGISTERED PROFESSIONAL ENGINEER
Randell D. Hiatt
No. C50200
Exp. 6-30-09
CIVIL
STATE OF CALIFORNIA

The State of California or its officers or agents shall not be responsible for the accuracy or completeness of electronic copies of this plan sheet.

To accompany plans dated 05-16-11

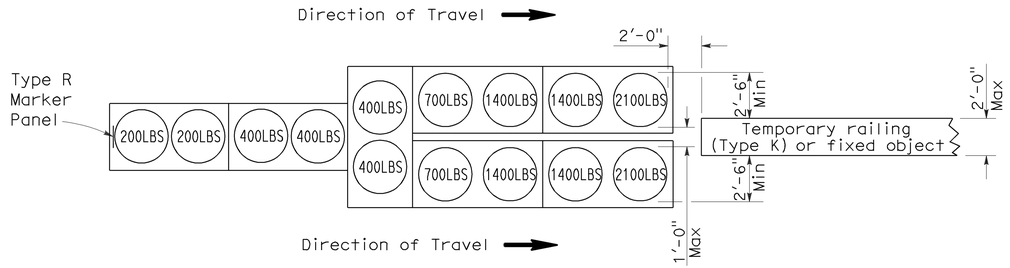

ARRAY 'TU14'

Approach speed 45 mph or more

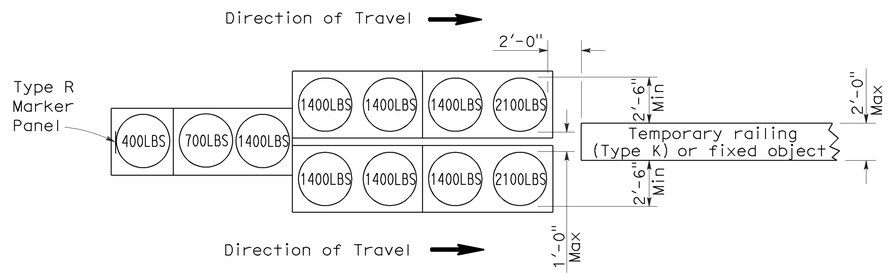

ARRAY 'TU11'

Approach speed less than 45 mph

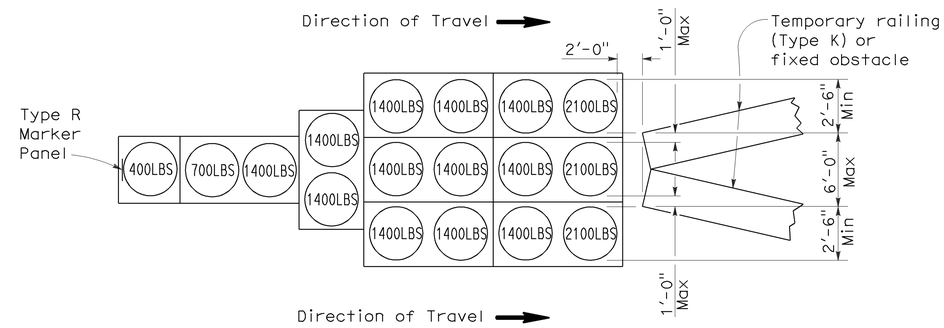

ARRAY 'TU17'

Approach speed less than 45 mph

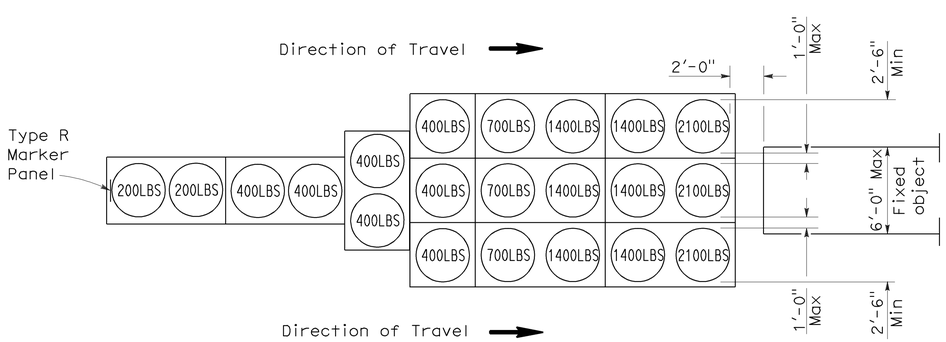

ARRAY 'TU21'

Approach speed 45 mph or more

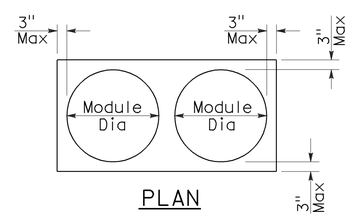

PLAN

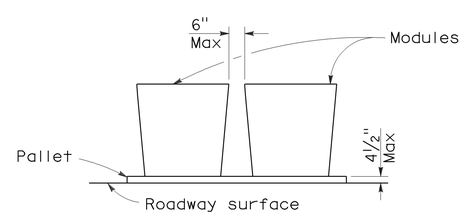

ELEVATION

CRASH CUSHION PALLET DETAIL

See Note 7

NOTES:

1. (XXX) Indicates sand filled module location and weight of sand in pounds for each module. Module spacing is based on the greater diameter of the module.
2. All sand weights are nominal.
3. Temporary crash cushion arrays shall not encroach on the traveled way.
4. Place the top of Type R marker panel 1" below the module lid.
5. Refer to Standard Plan A73B for marker details.
6. Approach speeds indicated conform to NCHRP 350 Report criteria.
7. Use of pallets is optional.

STATE OF CALIFORNIA
DEPARTMENT OF TRANSPORTATION

TEMPORARY CRASH CUSHION, SAND FILLED (UNIDIRECTIONAL)

NO SCALE

RSP T1A DATED JUNE 6, 2008 SUPERSEDES STANDARD PLAN T1A
DATED MAY 1, 2006 - PAGE 211 OF THE STANDARD PLANS BOOK DATED MAY 2006.

REVISED STANDARD PLAN RSP T1A

2006 REVISED STANDARD PLAN RSP T1A

5-15-08

DIST	COUNTY	ROUTE	POST MILES TOTAL PROJECT	SHEET NO.	TOTAL SHEETS
11	SD	78	3.5/5.8	84	87

Randell D. Hiatt
REGISTERED CIVIL ENGINEER

June 6, 2008
PLANS APPROVAL DATE

REGISTERED PROFESSIONAL ENGINEER
Randell D. Hiatt
No. C50200
Exp. 6-30-09
CIVIL
STATE OF CALIFORNIA

The State of California or its officers or agents shall not be responsible for the accuracy or completeness of electronic copies of this plan sheet.

To accompany plans dated 05-16-11

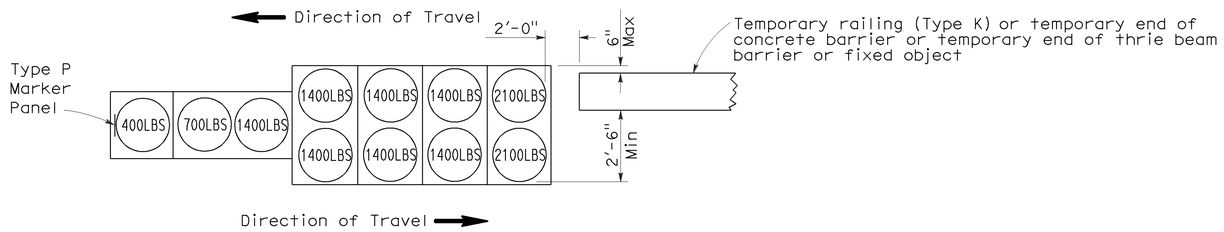

ARRAY 'TB11'

Approach speed less than 45 mph

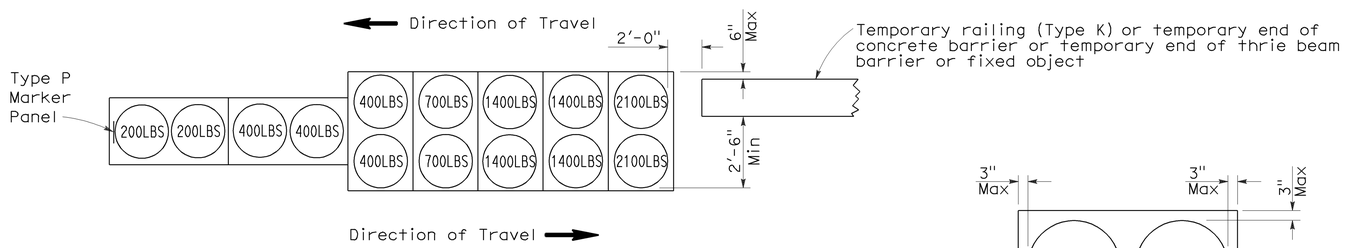

ARRAY 'TB14'

Approach speed 45 mph or more

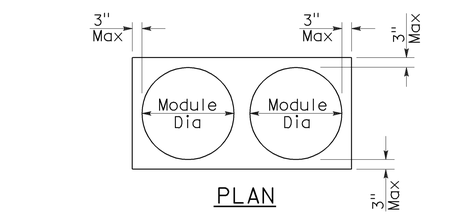

PLAN

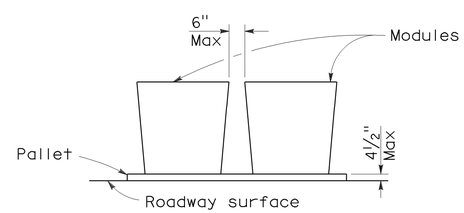

ELEVATION

CRASH CUSHION PALLET DETAIL

See Note 7

NOTES:

1. (XXX) Indicates sand filled module location and weight of sand in pounds for each module. Module spacing is based on the greater diameter of the module.
2. All sand weights are nominal.
3. Temporary crash cushion arrays shall not encroach on the traveled way.
4. Place the Type P marker panel so that the bottom of the panel rests upon the pallet.
5. Refer to Standard Plan A73B for marker details.
6. Approach speeds indicated conform to NCHRP 350 Report criteria.
7. Use of pallets is optional.

STATE OF CALIFORNIA
DEPARTMENT OF TRANSPORTATION

TEMPORARY CRASH CUSHION, SAND FILLED (BIDIRECTIONAL)

NO SCALE

RSP T1B DATED JUNE 6, 2008 SUPERSEDES STANDARD PLAN T1B
DATED MAY 1, 2006 - PAGE 212 OF THE STANDARD PLANS BOOK DATED MAY 2006.

REVISED STANDARD PLAN RSP T1B

2006 REVISED STANDARD PLAN RSP T1B

5-15-08

DIST	COUNTY	ROUTE	POST MILES TOTAL PROJECT	SHEET NO.	TOTAL SHEETS
11	SD	78	3.5/5.8	85	87

Randell D. Hiatt
REGISTERED CIVIL ENGINEER

June 6, 2008
PLANS APPROVAL DATE

REGISTERED PROFESSIONAL ENGINEER
Randell D. Hiatt
No. C50200
Exp. 6-30-09
CIVIL
STATE OF CALIFORNIA

The State of California or its officers or agents shall not be responsible for the accuracy or completeness of electronic copies of this plan sheet.

To accompany plans dated 05-16-11

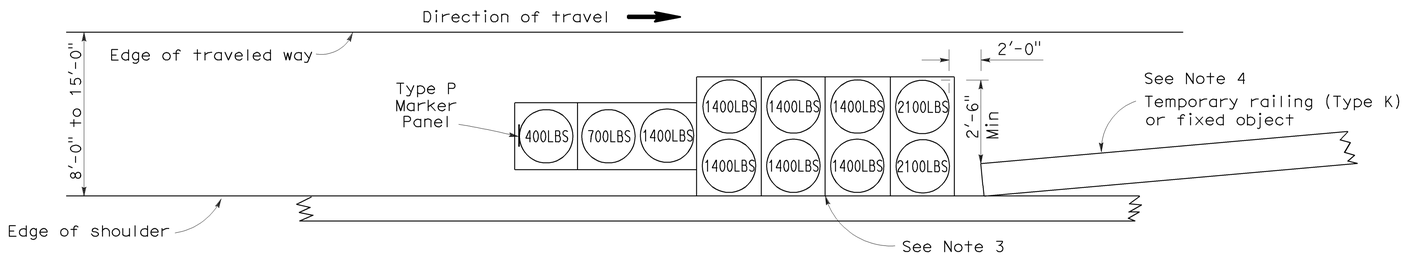

ARRAY 'TS11'

Approach speed less than 45 mph
See Note 9

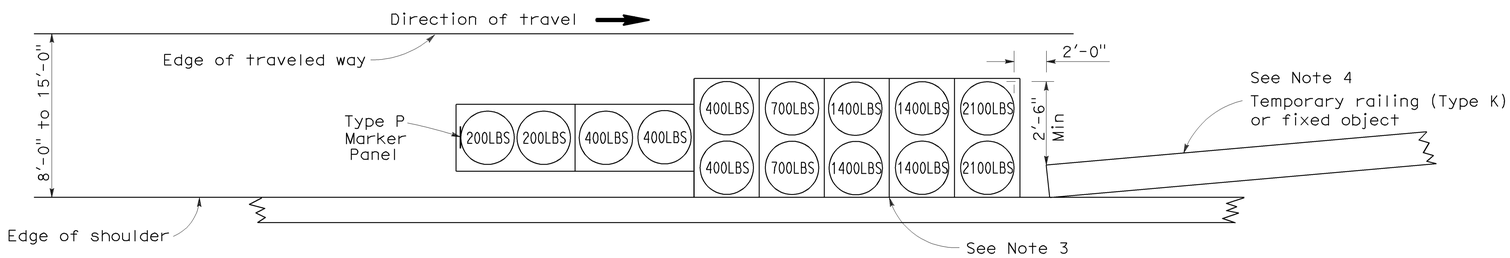

ARRAY 'TS14'

Approach speed 45 mph or more
See Note 9

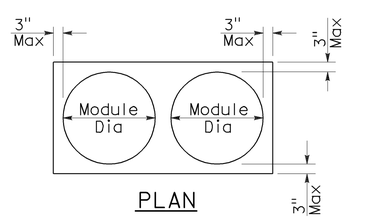

PLAN

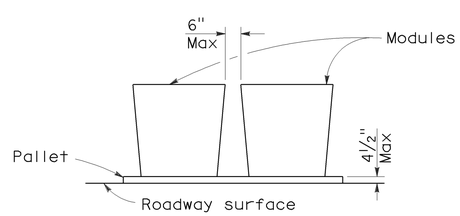

ELEVATION

CRASH CUSHION PALLET DETAIL

See Note 11

NOTES:

1. (XXX) Indicates sand filled module location and weight of sand in pounds for each module. Module spacing is based on the greater diameter of the module.
2. All sand weights are nominal.
3. The temporary crash cushion arrays shown on this plan shall be used only in locations where there will be traffic on one side of the temporary crash cushion array.
4. If the fixed object or approach end of the temporary railing is less than 15'-0" from the edge of traveled way, a temporary crash cushion is required in a construction or work zone.
5. Temporary crash cushion arrays shall not encroach on the traveled way.
6. Arrays for median shoulders shall conform to details shown on this plan for outside shoulders.
7. Place the Type P marker panel so that the bottom of the panel rests upon the pallet and faces traffic.
8. Refer to Standard Plan A73B for marker details.
9. For shoulder widths less than 8'-0", appropriate approved crash cushion protection, other than sand filled modules, shall be provided at fixed objects and at approach ends of temporary railing. The specific type of crash cushion shall be as shown on the project plans or as specified in the Special Provisions, or if not shown on the project plans or specified in the Special Provisions, shall be as approved by the Engineer.
10. Approach speeds indicated conform to NCHRP 350 Report criteria.
11. Use of pallets is optional.

STATE OF CALIFORNIA
DEPARTMENT OF TRANSPORTATION

TEMPORARY CRASH CUSHION, SAND FILLED (SHOULDER INSTALLATIONS)

NO SCALE

RSP T2 DATED JUNE 6, 2008 SUPERSEDES STANDARD PLAN T2
DATED MAY 1, 2006 - PAGE 213 OF THE STANDARD PLANS BOOK DATED MAY 2006.

REVISED STANDARD PLAN RSP T2

2006 REVISED STANDARD PLAN RSP T2

5-15-08

DIST	COUNTY	ROUTE	POST MILES TOTAL PROJECT	SHEET NO.	TOTAL SHEETS
11	SD	78	3.5/5.8	86	87

REGISTERED CIVIL ENGINEER

November 17, 2006
PLANS APPROVAL DATE

REGISTERED PROFESSIONAL ENGINEER
Greg W. Edwards
No. C36386
Exp. 6-30-08
CIVIL
STATE OF CALIFORNIA

The State of California or its officers or agents shall not be responsible for the accuracy or completeness of electronic copies of this plan sheet.

To accompany plans dated 05-16-11

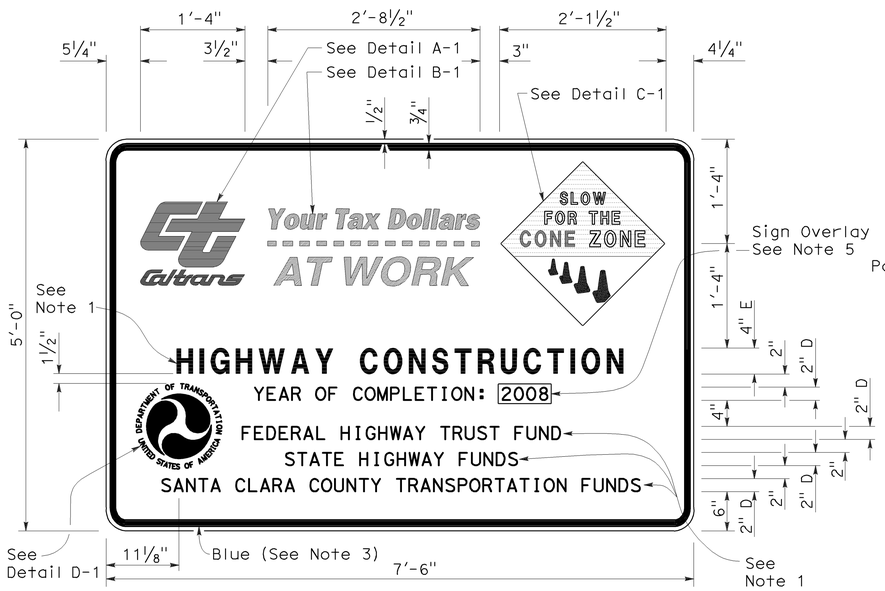

TYPE 1

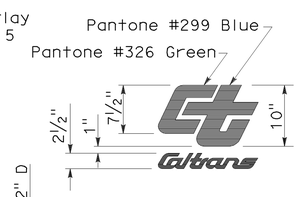

DETAIL A-1

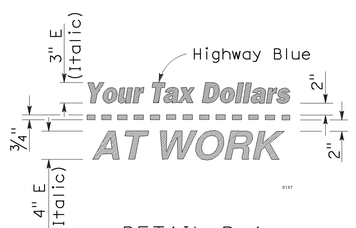

DETAIL B-1
(See Note 3)

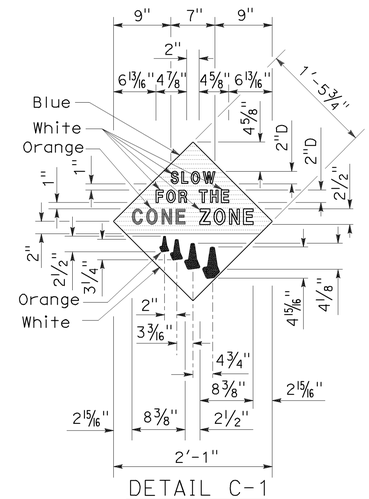

DETAIL C-1
(See Note 4)

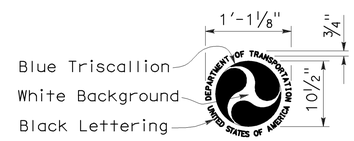

DETAIL D-1
(See Note 6)

NOTES:

1. The sign messages shown for type of project and fund types are examples only. See the Special Provisions for the applicable type of project and fund type messages to be used.
2. Except as otherwise shown, the legend of sign shall be black on a white background (non-reflective).
3. The border of the signs and details "B-1" and "B-2" shall be blue (non-reflective).
4. The diamond in details "C-1" and "C-2" shall be blue for the background of message, " SLOW FOR THE CONE ZONE", and white background for the orange cones. The color and type of font for the "SLOW FOR THE CONE ZONE" message shall be: "SLOW" white D; "FOR THE" white D; "CONE" orange Arial font; "ZONE" white Arial font.
5. Year of completion of project construction shown on the overlay is an example only. See the Special Provisions.
6. Use when the Project involves Federal Highway Trust Fund.

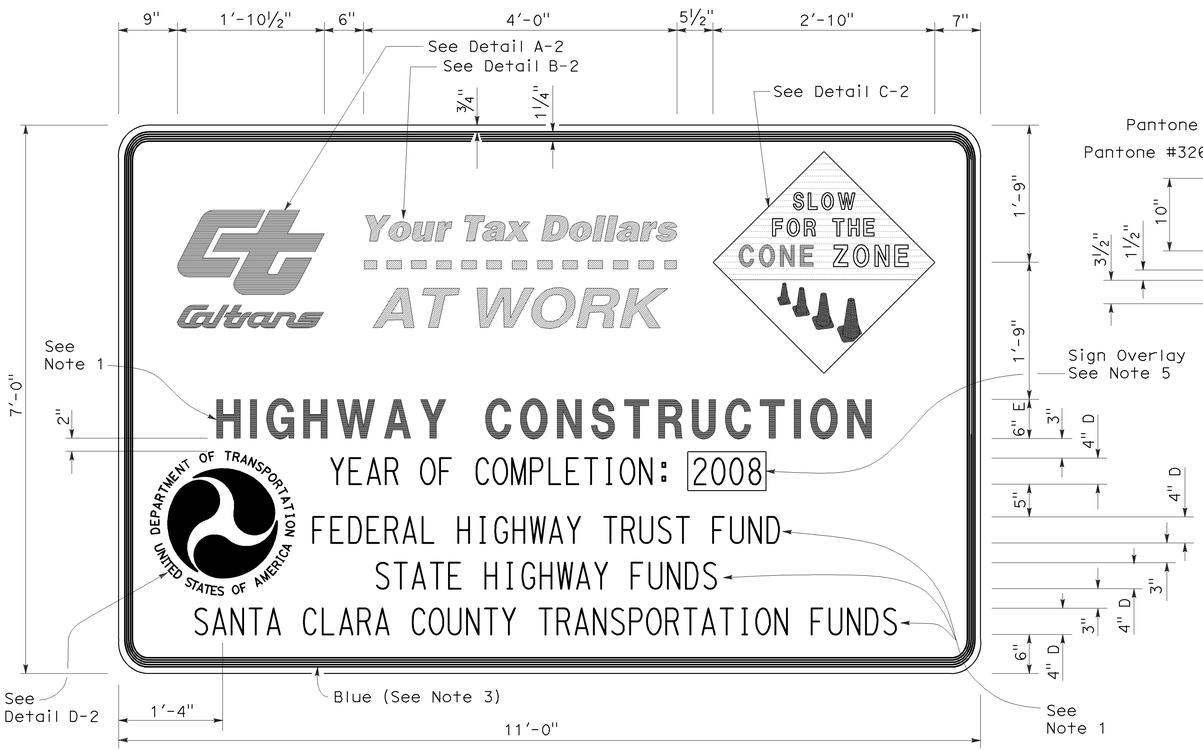

TYPE 2

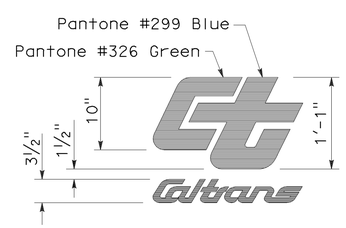

DETAIL A-2

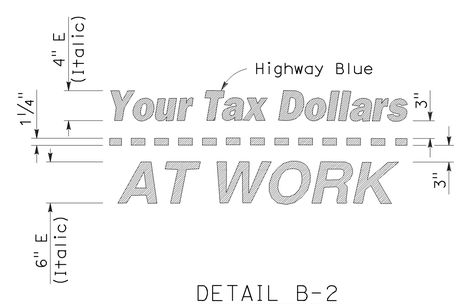

DETAIL B-2
(See Note 3)

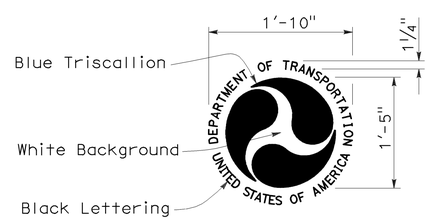

DETAIL D-2
(See Note 6)

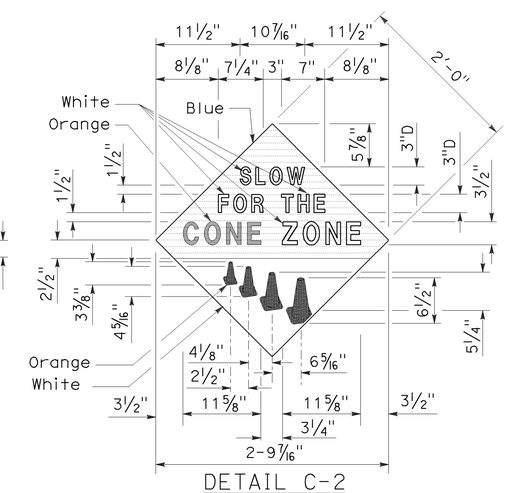

DETAIL C-2
(See Note 4)

STATE OF CALIFORNIA
DEPARTMENT OF TRANSPORTATION

CONSTRUCTION PROJECT FUNDING IDENTIFICATION SIGNS

NO SCALE

RSP T7 DATED NOVEMBER 17, 2006 SUPERSEDES STANDARD PLAN T7
DATED MAY 1, 2006 - PAGE 217 OF THE STANDARD PLANS BOOK DATED MAY 2006.

REVISED STANDARD PLAN RSP T7

2006 REVISED STANDARD PLAN RSP T7

9-7-06

DIST	COUNTY	ROUTE	POST MILES TOTAL PROJECT	SHEET NO.	TOTAL SHEETS
11	SD	78	3.5/5.8	87	87

LICENSED LANDSCAPE ARCHITECT

April 3, 2009
PLANS APPROVAL DATE

The State of California or its officers or agents shall not be responsible for the accuracy or completeness of electronic copies of this plan sheet.

LICENSED LANDSCAPE ARCHITECT
Robert B. Schott 3805
11-30-10 Renewal Date
2-25-09 Date
STATE OF CALIFORNIA

To accompany plans dated 05-16-11

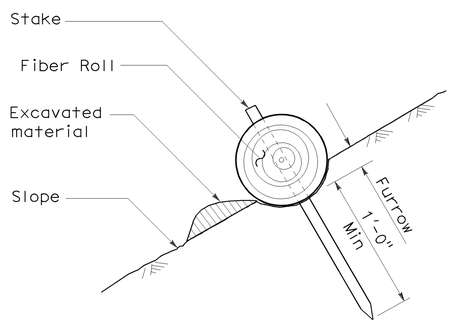

SECTION

TEMPORARY FIBER ROLL (TYPE 1)

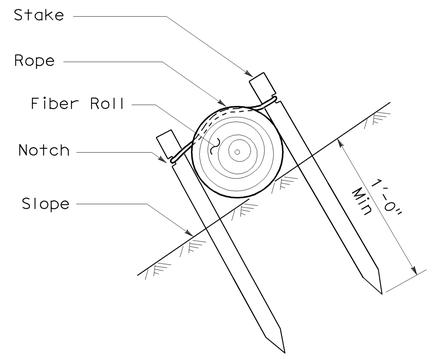

SECTION

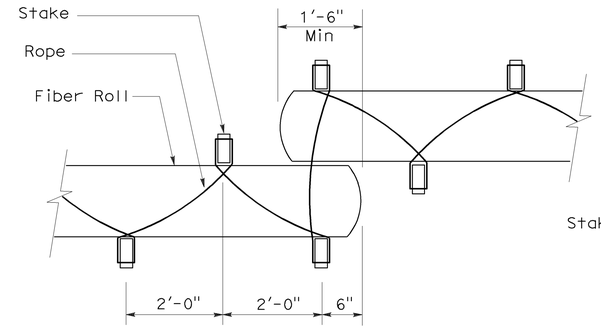

PLAN

TEMPORARY FIBER ROLL (TYPE 2)

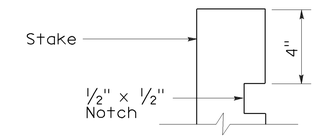

ELEVATION

STAKE NOTCH DETAIL

NOTES:

1. Temporary fiber roll spacing varies depending upon slope inclination.
2. Installations shown in the perspectives are for slope inclination of 10:1 and steeper.

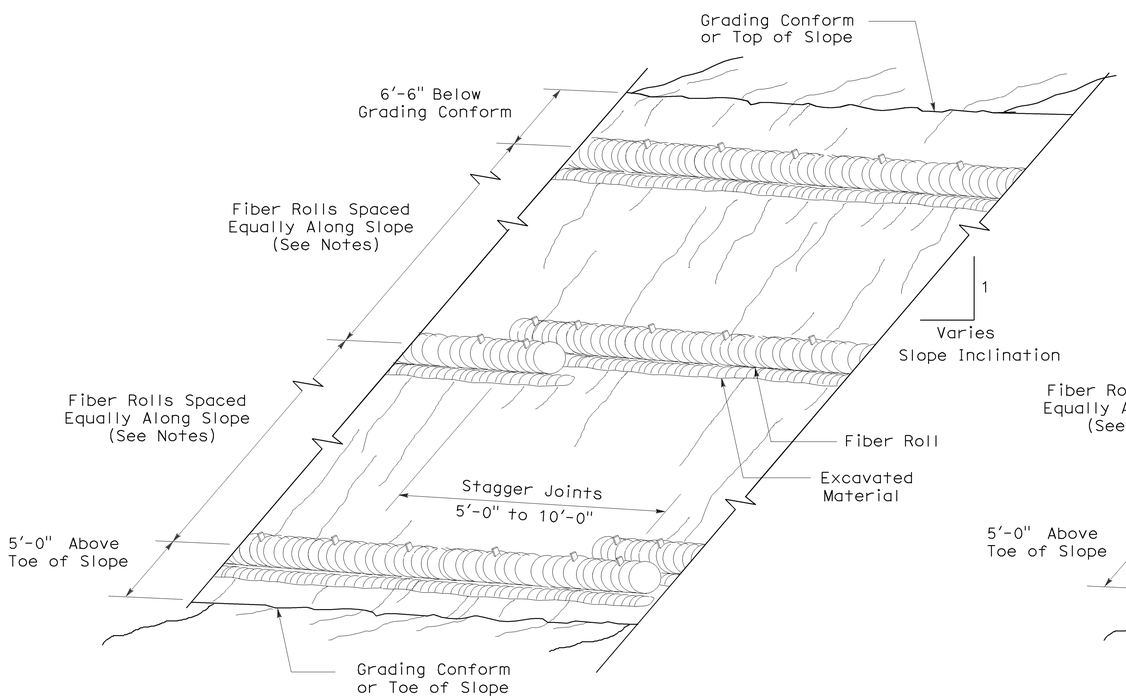

PERSPECTIVE

TEMPORARY FIBER ROLL (TYPE 1)

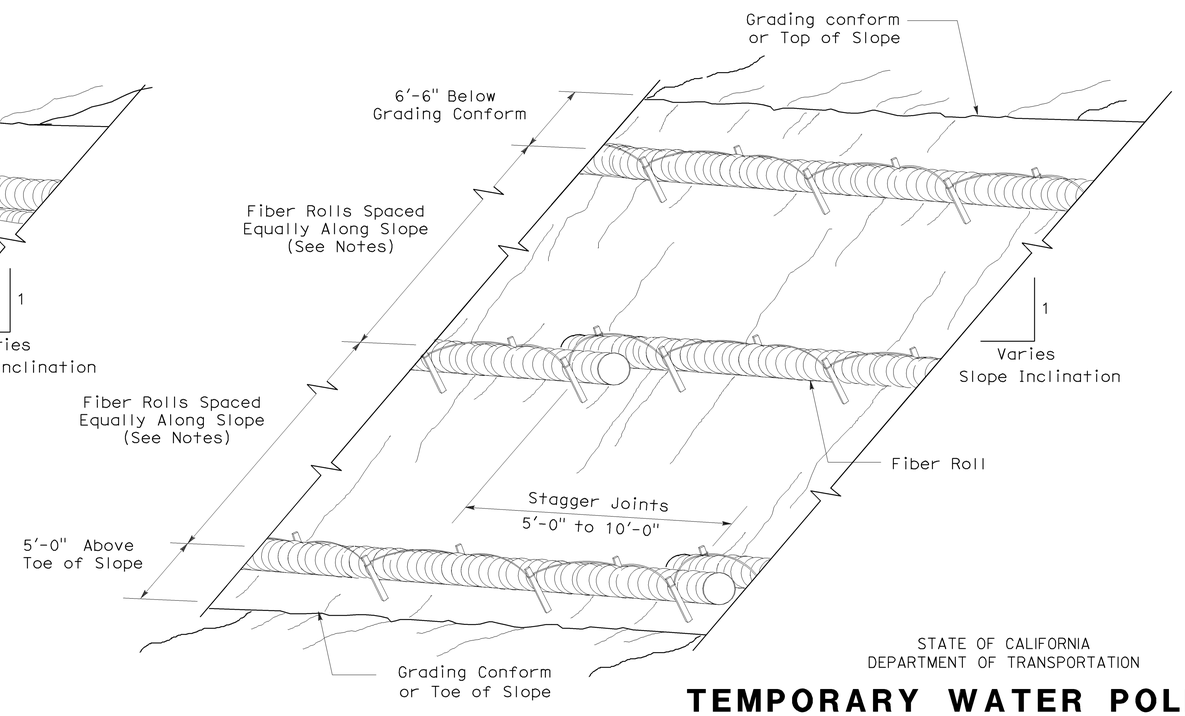

PERSPECTIVE

TEMPORARY FIBER ROLL (TYPE 2)

STATE OF CALIFORNIA
DEPARTMENT OF TRANSPORTATION

TEMPORARY WATER POLLUTION CONTROL DETAILS (TEMPORARY FIBER ROLL)

NO SCALE

RSP T56 DATED APRIL 3, 2009 SUPERSEDES STANDARD PLAN T56
DATED MAY 1, 2006 - PAGE 232 OF THE STANDARD PLANS BOOK DATED MAY 2006.

REVISED STANDARD PLAN RSP T56

2006 REVISED STANDARD PLAN RSP T56

2-23-09