DIST	COUNTY	ROUTE	KILOMETER POST TOTAL PROJECT	SHEET NO.	TOTAL SHEETS
11	SD	805	40.6/42.4	501	567

Caltrans Metric

REGISTERED ELECTRICAL ENGINEER

October 5, 2007
PLANS APPROVAL DATE

REGISTERED PROFESSIONAL ENGINEER
Jeffery G. McRae
No. E14512
Exp. 6-30-08
ELECTRICAL
STATE OF CALIFORNIA

The State of California or its officers or agents shall not be responsible for the accuracy or completeness of electronic copies of this plan sheet.

To get to the Caltrans web site, go to: http://www.dot.ca.gov

To accompany plans dated 6-14-10

2004 REVISED Std PLAN RSP ES-2C

NOTES-TYPE III SERVICE EQUIPMENT ENCLOSURES:

1. Service equipment enclosure and metering equipment shall meet the requirements of the service utility. The meter area shall have a sealable, lockable, weathertight cover that can be removed without the use of tools.

2. Service equipment enclosures shall be factory wired and conform to NEMA standards.

3. Dimensions of service equipment enclosures shall meet the requirements of the service utility.

4. The dead front panels on Type III-A service equipment enclosures shall have a continuous stainless steel or aluminum piano hinge. The panel in front of the breakers shall be secured with a latch or captive screws. No live parts shall be mounted on the dead front panel.

5. The exterior door shall have provisions for padlocking. The padlock hole shall be a minimum diameter of 11 mm.

6. Enclosures housing transformers of more than one kVA shall have effective screened ventilation louvers of not less than 32 000 mm^2. Screen shall be stainless steel No. 304, with a No. 10 size mesh. Framed screen shall be secured with at least four bolts.

7. Fasteners on the exterior of the enclosure shall be vandal-resistant and shall not be removable from the exterior. Screws, nuts, bolts and washers shall be stainless steel.

8. Landing lugs for incoming service conductors shall be compatible with either copper or aluminum conductors sized to suit the conductors shown on the plan. Landing lugs shall be copper or tin-plated aluminum. Neutral bus shall be rated for 125 A and be suitable for copper or aluminum conductors unless otherwise specified. The terminal shall include but not be limited to:

   a) Incoming terminals (landing lugs)
   b) Neutral lugs
   c) Solid neutral terminal strip

9. At least 6 standard single pole circuit breaker spaces, 20 mm nominal, shall be provided for branch circuits. Circuit breaker interiors shall be copper. Interiors of enclosure shall accept plug-in or cable-in/cable-out circuit breakers.

10. Control wiring shall be 600 V, 14 stranded machine tool wire. Where subject to flexing, 19 strand wire shall be used.

11. Main bus shall be rated for 125 A and shall be tin-plated copper.

12. A plastic laminated wiring diagram shall be provided with brass mounting eyelets and attached to the inside of the enclosure and the wiring diagram shall affixed to the interior with a UL or ETL approved method.

13. An engraved phenolic nameplate on the dead front panel indicating the function of each circuit or device shall be installed with stainless steel rivets or stainless steel screws:

    a) Adjacent to the breaker or device with character size a minimum of 3 mm.

    b) At the top of the exterior door panel indicating system number, voltage level and number of phases with character size a minimum of 5 mm.

14. The plan shows the approximate location of devices within the enclosure. Components may be rearranged, however, the "working" clearances within the service equipment enclosure shall be maintained.

15. In unpaved areas a raised portland cement concrete pad 600 mm x 100 mm x width of foundation shall be constructed in front of new service equipment enclosure installation. Pad shall be set to elevation of foundation.

16. Foundation shall extend 50 mm minimum beyond edge of service equipment enclosure.

17. Internal bus, where shown, is typical only. Alternative design of proposed service equipment enclosure shall be submitted to the Engineer for approval.

18. Plug-in circuit breakers may be mounted in the vertical or horizontal position. Cable-in/cable-out circuit breakers shall be mounted in the vertical position.

19. Type III-AF and Type III-BF service equipment enclosures shall have the meter viewing windows located on the front side of the service equipment enclosures.

20. Type III-AR and Type III-BR service equipment enclosures shall be similarly constructed as Type III-AF and Type III-BF respectively, except the meter viewing windows shall be located on the back side of the service equipment enclosures.

21. Minimum clearance shall be required for front and back of service equipment enclosure per National Electrical Code, Article 110.26, "Spaces About Electric Equipment (600 Volts, Nominal, or Less)".

STATE OF CALIFORNIA
DEPARTMENT OF TRANSPORTATION

ELECTRICAL SYSTEMS (SERVICE EQUIPMENT NOTES TYPE III SERIES)

NO SCALE

ALL DIMENSIONS ARE IN MILLIMETERS UNLESS OTHERWISE SHOWN

RSP ES-2C DATED OCTOBER 5, 2007 SUPERSEDES STANDARD PLAN ES-2C DATED JULY 1, 2004-PAGE 418 OF THE STANDARD PLANS BOOK DATED JULY 2004.

REVISED STANDARD PLAN RSP ES-2C

DIST	COUNTY	ROUTE	KILOMETER POST TOTAL PROJECT	SHEET NO.	TOTAL SHEETS
11	SD	805	40.6/42.4	502	567

Caltrans Metric

Jeffery G. McRae
REGISTERED ELECTRICAL ENGINEER

October 5, 2007
PLANS APPROVAL DATE

REGISTERED PROFESSIONAL ENGINEER Jeffery G. McRae No. E14512 Exp. 6-30-08 ELECTRICAL STATE OF CALIFORNIA

The State of California or its officers or agents shall not be responsible for the accuracy or completeness of electronic copies of this plan sheet.

To get to the Caltrans web site, go to: http://www.dot.ca.gov

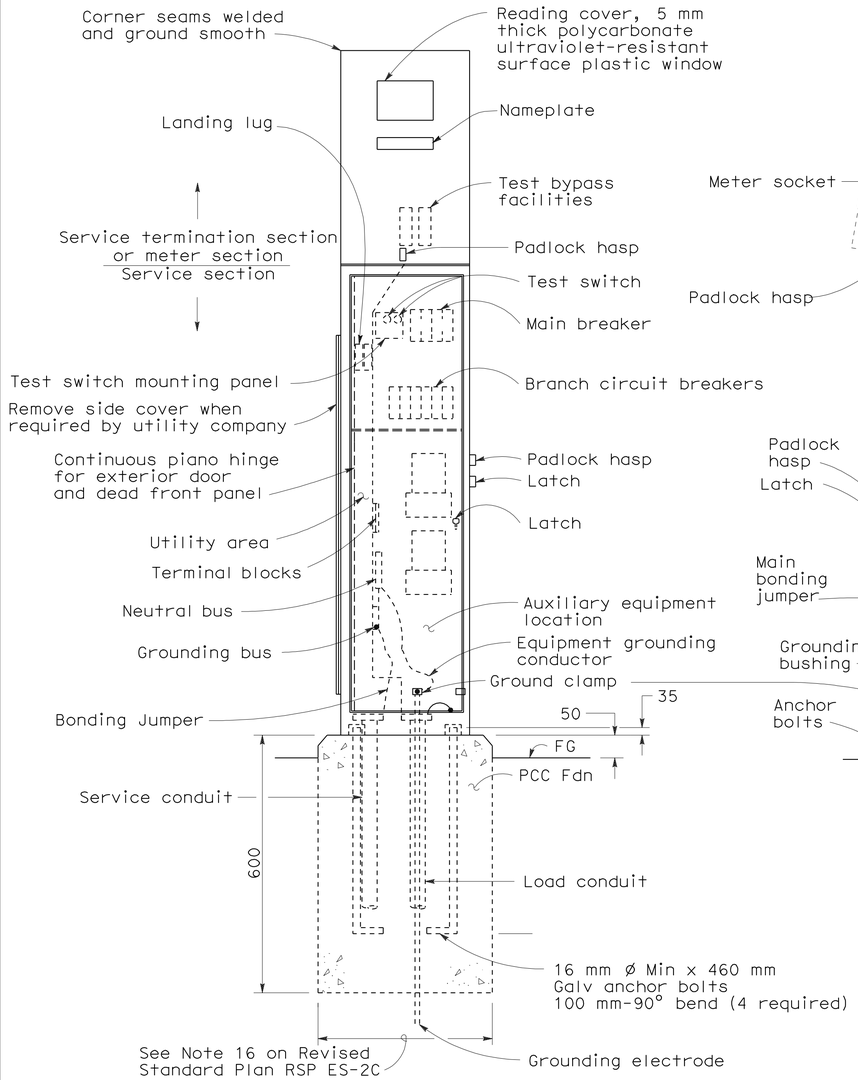

FRONT VIEW

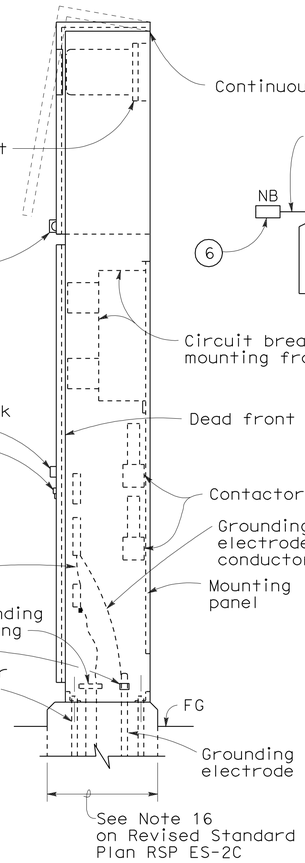

SIDE VIEW

TYPE III-AF SERVICE EQUIPMENT ENCLOSURE (TYPICAL)

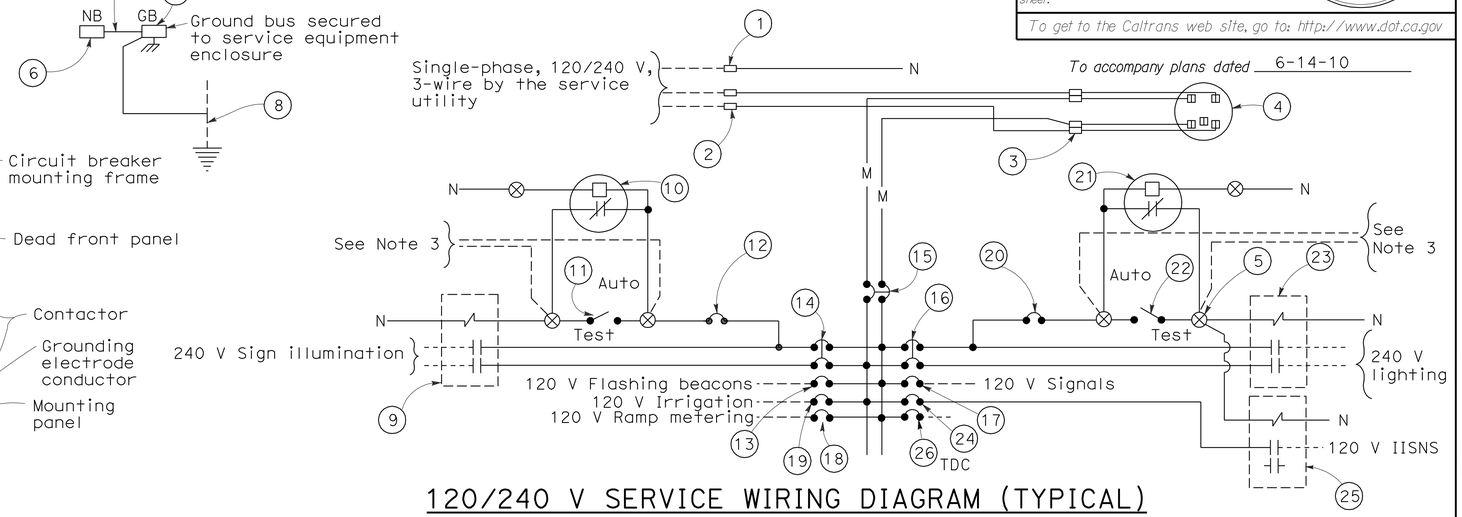

To accompany plans dated 6-14-10

120/240 V SERVICE WIRING DIAGRAM (TYPICAL)

TYPE III-A SERVICE (120/240 V) EQUIPMENT LEGEND

ITEM No.	COMPONENT	NAME PLATE DESCRIPTION	ITEM No.	COMPONENT	NAME PLATE DESCRIPTION
1	Neutral lug		14	30 A, 240 V, 2P, CB	Sign Illumination
2	Landing lug (Note 6)		15	100 A, 240 V, 2P, CB	Main Breaker
3	Test bypass facility		16	30 A, 240 V, 2P, CB	Lighting
4	Meter socket and support		17	50 A, 120 V, 1P, CB	Signals
5	Terminal blocks		18	30 A, 120 V, 1P, CB	Ramp Metering
6	Neutral bus		19	20 A, 120 V, 1P, CB	Irrigation
7	Ground bus		20	15 A, 120 V, 1P, CB	Lighting Control
8	Grounding electrode		21	Photoelectric unit (Note 7)	
9	30 A, 2PNO Contactor	Sign Illumination	22	15 A, 1P, Test switch	Lighting Test Switch
10	Photoelectric unit (Note 7)		23	60 A, 2PNO Contactor	Lighting
11	15 A, 1P, Test switch	Sign Illumination Test Switch	24	15 A, 120 V, 1P, CB	IISNS
12	15 A, 120 V, 1P, CB	Sign Illumination Control	25	30 A, 2PNO Contactor	IISNS
13	15 A, 120 V, 1P, CB	Flashing Beacon	26	20 A, 120 V, 1P, CB	Telephone Demarcation Cabinet

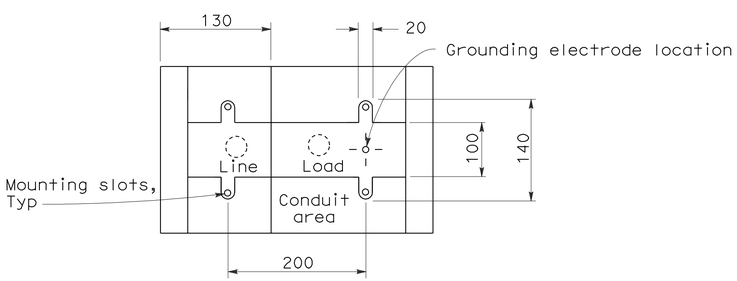

BASE FOR TYPE III-A SERVICE EQUIPMENT ENCLOSURE

NOTES: (FOR SERVICE EQUIPMENT ENCLOSURE)

1. Voltage ratings of service equipment shall conform to the service voltages indicated on the plans.
2. Unless otherwise indicated on the plans, service equipment items shall be provided for each service equipment enclosure as shown.
3. Connect to remote test switch mounted on lighting standards, sign post or structure when required.
4. Items No. 1 and 6 shall be isolated from the service equipment enclosure.
5. Meter sockets shall be 5 clip type.
6. The landing lug shall be suitable for multiple conductors.
7. Type V photoelectric control shall be used unless otherwise indicated on the plans.

STATE OF CALIFORNIA
DEPARTMENT OF TRANSPORTATION

ELECTRICAL SYSTEMS (SERVICE EQUIPMENT AND TYPICAL WIRING DIAGRAM, TYPE III -A SERIES)

NO SCALE

ALL DIMENSIONS ARE IN MILLIMETERS UNLESS OTHERWISE SHOWN

RSP ES-2D DATED OCTOBER 5, 2007 SUPERSEDES STANDARD PLAN ES-2D DATED JULY 1, 2004-PAGE 419 OF THE STANDARD PLANS BOOK DATED JULY 2004.

REVISED STANDARD PLAN RSP ES-2D

2004 REVISED Std PLAN RSP ES-2D

10-1-07

DIST	COUNTY	ROUTE	KILOMETER POST TOTAL PROJECT	SHEET NO.	TOTAL SHEETS
11	SD	805	40.6/42.4	503	567

Caltrans Metric

REGISTERED ELECTRICAL ENGINEER

October 5, 2007
PLANS APPROVAL DATE

REGISTERED PROFESSIONAL ENGINEER Jeffery G. McRae No. E14512 Exp. 6-30-08 ELECTRICAL STATE OF CALIFORNIA

The State of California or its officers or agents shall not be responsible for the accuracy or completeness of electronic copies of this plan sheet.

To get to the Caltrans web site, go to: http://www.dot.ca.gov

To accompany plans dated 6-14-10

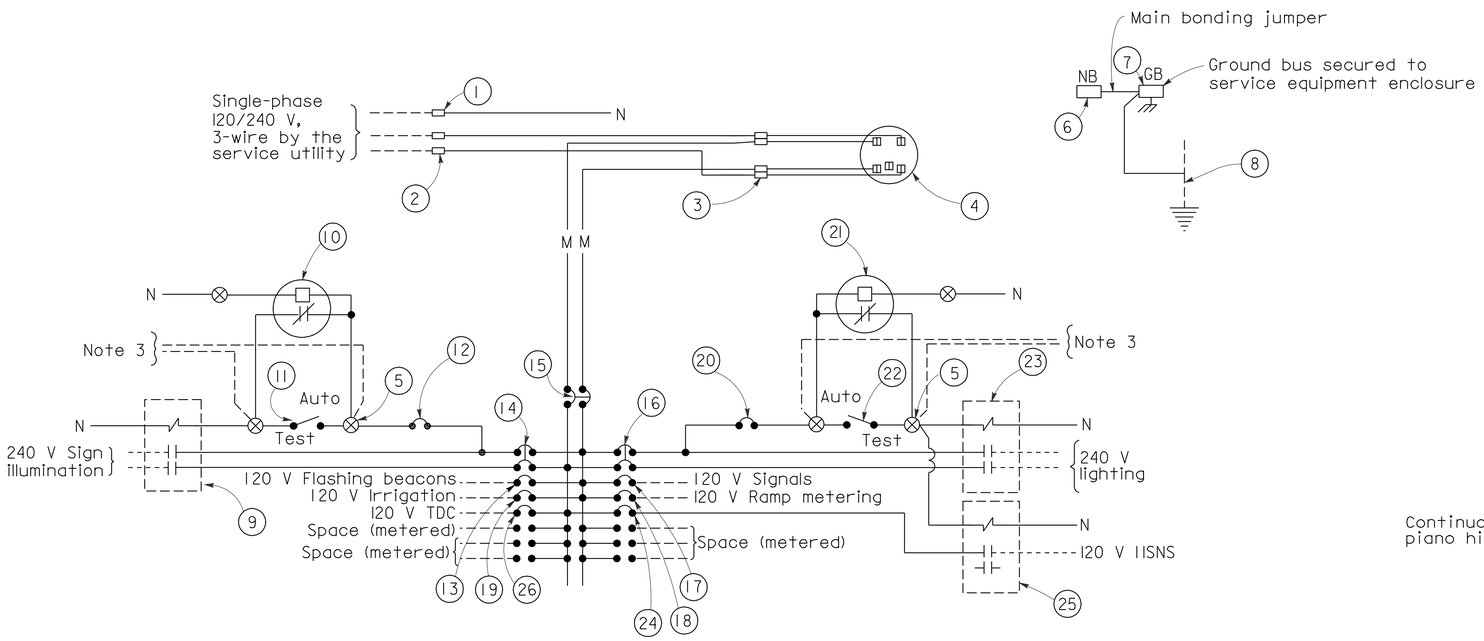

120/240 V SERVICE WIRING DIAGRAM (TYPICAL)

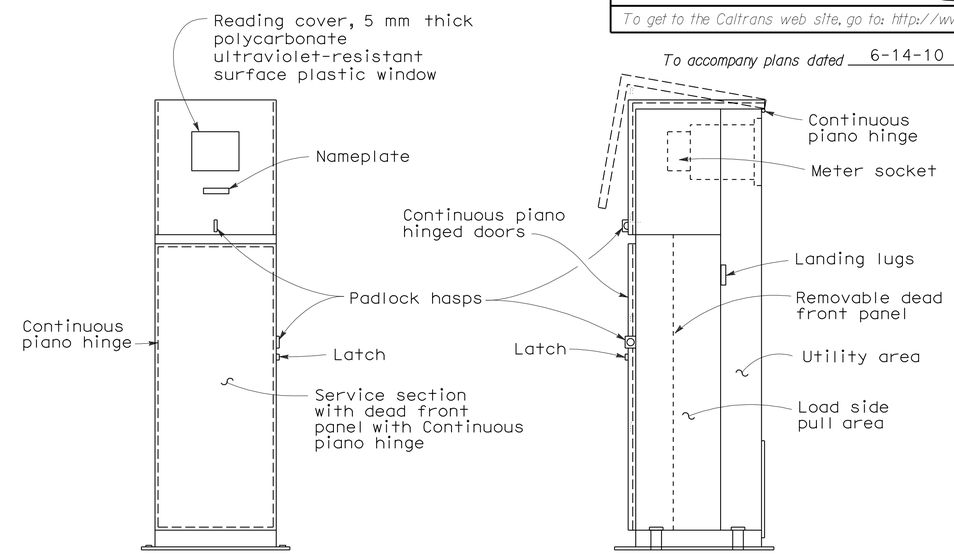

FRONT VIEW

SIDE VIEW

TYPE III-BF SERVICE EQUIPMENT ENCLOSURE WITH PROVISIONS FOR ONE 100 A METER (TYPICAL)

TYPE III-B SERVICE (120/240 V) EQUIPMENT LEGEND		
ITEM No.	COMPONENT	NAME PLATE DESCRIPTION
1	Neutral lug	
2	Landing lug (Note 6)	
3	Test bypass facility	
4	Meter socket and support	
5	Terminal blocks	
6	Neutral bus	
7	Ground bus	
8	Grounding electrode	
9	30 A, 2PNO Contactor	Sign Illumination
10	Photoelectric unit (Note 7)	
11	15 A, IP, Test switch	Sign Illumination Test Switch
12	15 A, 120 V, IP, CB	Sign Illumination Control
13	15 A, 120 V, IP, CB	Flashing Beacon
14	30 A, 240 V, 2P, CB	Sign Illumination
15	100 A, 240 V, 2P, CB	Main Breaker
16	30 A, 240 V, 2P, CB	Lighting
17	50 A, 120 V, IP, CB	Signals
18	30 A, 120 V, IP, CB	Ramp Metering
19	20 A, 120 V, IP, CB	Irrigation
20	15 A, 120 V, IP, CB	Lighting Control
21	Photoelectric unit (Note 7)	
22	15 A, IP, Test switch	Lighting Test Switch
23	60 A, 2PNO Contactor	Lighting
24	15 A, 120 V, IP, CB	IISNS
25	30 A, 2PNO Contactor	IISNS
26	20 A, 120 V, IP, CB	Telephone Demarcation Cabinet

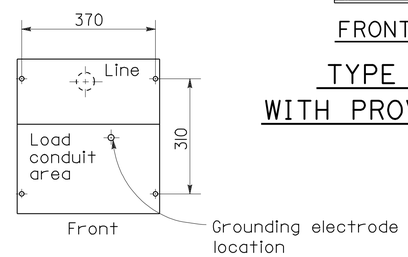

BASE FOR TYPE III-B SERVICE EQUIPMENT ENCLOSURE

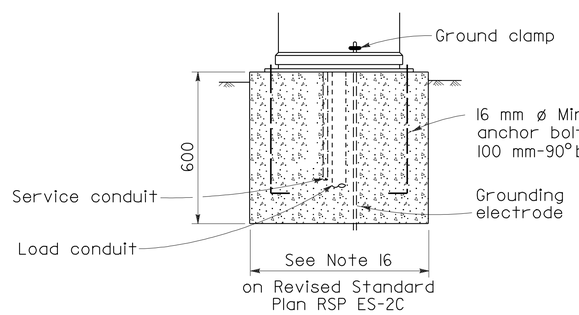

FRONT VIEW

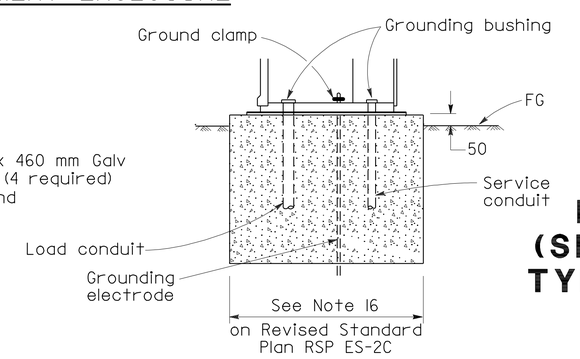

SIDE VIEW

TYPE III-B SERVICE EQUIPMENT ENCLOSURE FOUNDATION DETAILS

NOTES (FOR SERVICE EQUIPMENT ENCLOSURE)

1. Voltage ratings of service equipment shall conform to the service voltages indicated on the plans.
2. Unless otherwise indicated on the plans, service equipment items shall be provided for each service equipment enclosure as shown.
3. Connect to remote test switch mounted on lighting standards, sign post or structure when required.
4. Items No. 1 and 6 shall be isolated from the service equipment enclosure.
5. Meter sockets shall be 5 clip type.
6. The landing lug shall be suitable for multiple conductors.
7. Type V photoelectric control shall be used unless otherwise indicated on the plans.

STATE OF CALIFORNIA
DEPARTMENT OF TRANSPORTATION

ELECTRICAL SYSTEMS (SERVICE EQUIPMENT AND TYPICAL WIRING DIAGRAM, TYPE III -B SERIES)

NO SCALE

ALL DIMENSIONS ARE IN MILLIMETERS UNLESS OTHERWISE SHOWN

RSP ES-2E DATED OCTOBER 5, 2007 SUPERSEDES STANDARD PLAN ES-2E DATED JULY 1, 2004-PAGE 420 OF THE STANDARD PLANS BOOK DATED JULY 2004.

REVISED STANDARD PLAN RSP ES-2E

2004 REVISED Std PLAN RSP ES-2E

8-9-07

DIST	COUNTY	ROUTE	KILOMETER POST TOTAL PROJECT	SHEET NO.	TOTAL SHEETS
11	SD	805	40.6/42.4	504	567

Caltrans Metric

Jeffery G. McRae
REGISTERED ELECTRICAL ENGINEER

October 5, 2007
PLANS APPROVAL DATE

REGISTERED PROFESSIONAL ENGINEER Jeffery G. McRae No. E14512 Exp. 6-30-08 ELECTRICAL STATE OF CALIFORNIA

The State of California or its officers or agents shall not be responsible for the accuracy or completeness of electronic copies of this plan sheet.

To get to the Caltrans web site, go to: http://www.dot.ca.gov

To accompany plans dated 6-14-10

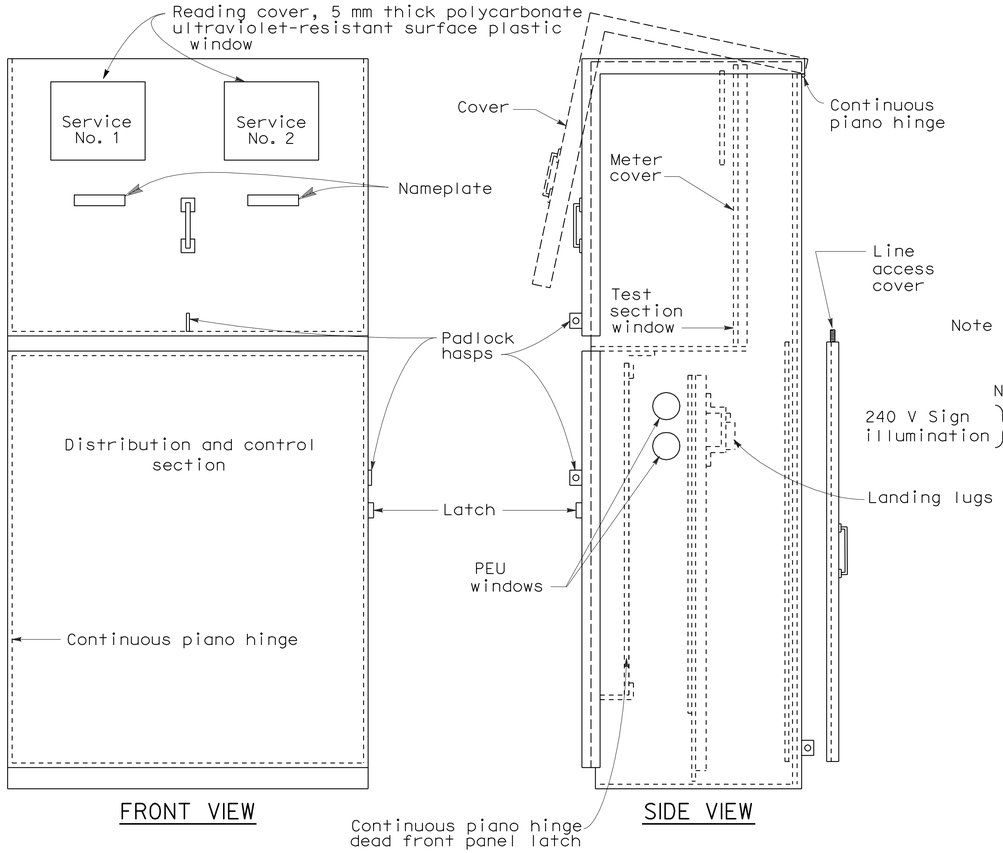

TYPE III-CF SERVICE EQUIPMENT ENCLOSURE WITH PROVISIONS FOR TWO 100 A METERS (TYPICAL)

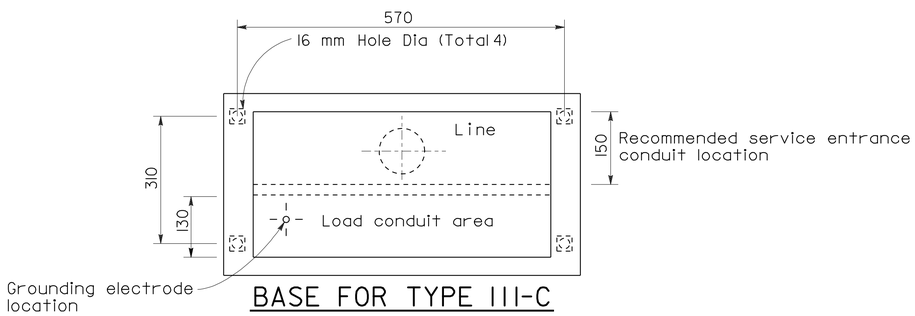

BASE FOR TYPE III-C SERVICE EQUIPMENT ENCLOSURE

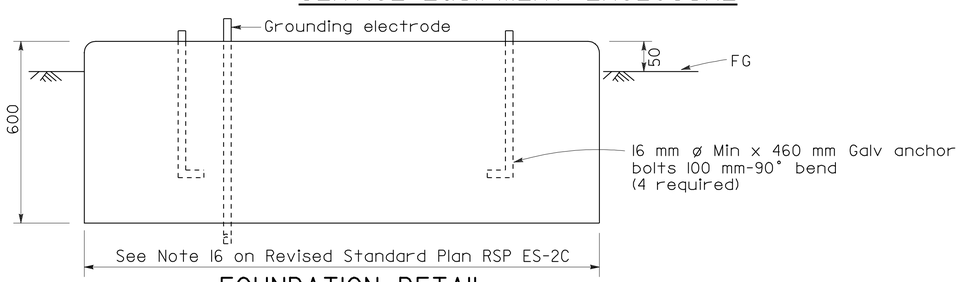

FOUNDATION DETAIL

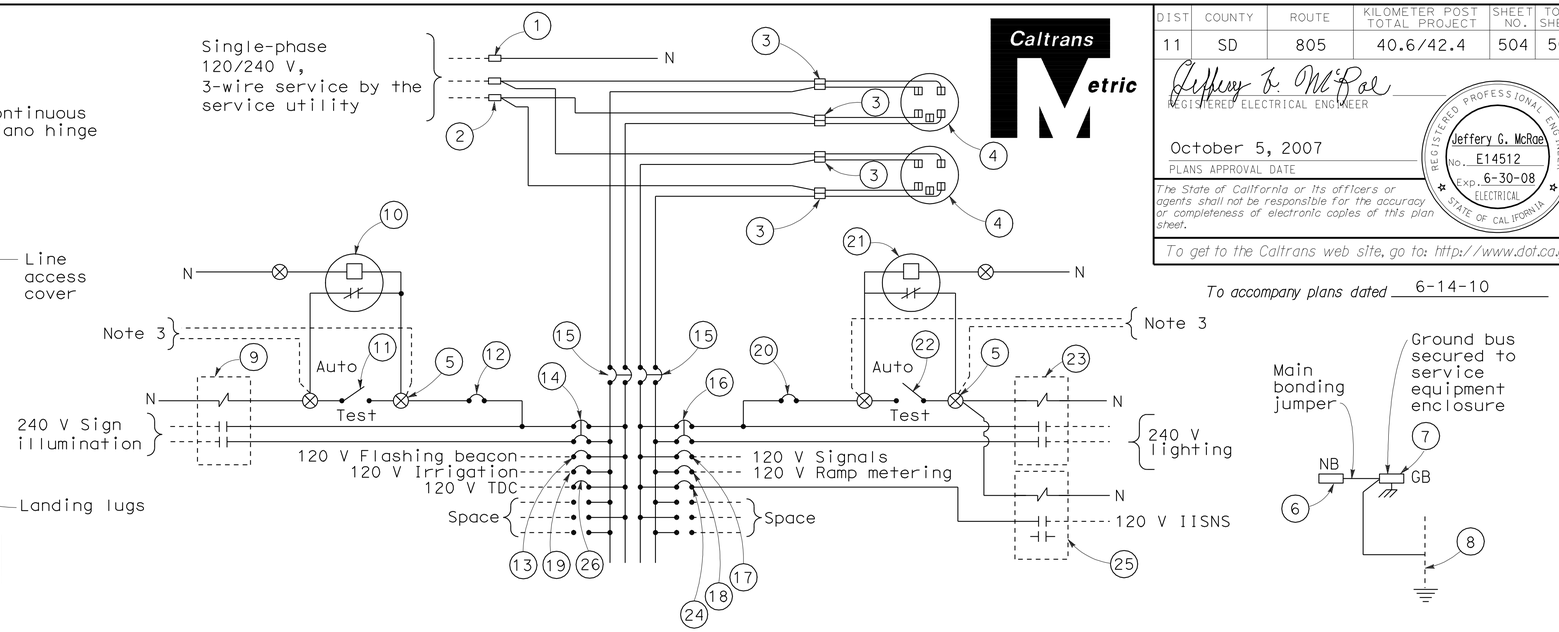

120/240 V SERVICE WIRING DIAGRAM (TYPICAL)

TYPE III-C SERVICE (120/240 V) EQUIPMENT LEGEND

ITEM No.	COMPONENT	NAME PLATE DESCRIPTION	ITEM No.	COMPONENT	NAME PLATE DESCRIPTION
1	Neutral lug		14	30 A,240 V,2P,CB	Sign Illumination
2	Landing lug (Note 6)		15	100 A,240 V,2P,CB	Main Breaker
3	Test bypass facility		16	30 A,240 V,2P,CB	Lighting
4	Meter socket and support		17	50 A,120 V,1P,CB	Signals
5	Terminal blocks		18	30 A,120 V,1P,CB	Ramp Metering
6	Neutral bus		19	20 A,120 V,1P,CB	Irrigation
7	Ground bus		20	15 A,120 V,1P,CB	Lighting Control
8	Grounding electrode		21	Photoelectric unit(Note 7)	
9	30 A,2PNO, Contactor	Sign Illumination	22	15 A,1P,Test switch	Lighting Control
10	Photoelectric unit (Note 7)		23	60 A,2PNO Contactor	Lighting
11	15 A,1P, Test switch	Sign Illumination Test Switch	24	15 A,120 V,1P,CB	IISNS
12	15 A,120 V,1P,CB	Sign Illumination Control	25	30 A,2PNO Contactor	IISNS
13	15 A,120 V,1P,CB	Flashing Beacon	26	20 A,120 V,1P,CB	Telephone Demarcation Cabinet

NOTES (FOR SERVICE EQUIPMENT ENCLOSURE)

1. Voltage ratings of service equipment shall conform to the service voltages indicated on the plans.
2. Unless otherwise indicated on the plans, service equipment items shall be provided for each service equipment enclosure as shown.
3. Connect to remote test switch mounted on lighting standards, sign post or structure when required.
4. Items No. 1 and 6 shall be isolated from the service equipment enclosure.
5. Meter sockets shall be 5 clip type.
6. The landing lug shall be suitable for multiple conductors.
7. Type V photoelectric control shall be used unless otherwise indicated on the plans.

STATE OF CALIFORNIA
DEPARTMENT OF TRANSPORTATION

ELECTRICAL SYSTEMS (SERVICE EQUIPMENT AND TYPICAL WIRING DIAGRAM TYPE III -C SERIES)

NO SCALE

ALL DIMENSIONS ARE IN MILLIMETERS UNLESS OTHERWISE SHOWN

RSP ES-2F DATED OCTOBER 5, 2007 SUPERSEDES STANDARD PLAN ES-2F DATED JULY 1, 2004-PAGE 421 OF THE STANDARD PLANS BOOK DATED JULY 2004.

REVISED STANDARD PLAN RSP ES-2F

2004 REVISED Std PLAN RSP ES-2F

8-9-07

NOTES: (FOR SERVICE EQUIPMENT ENCLOSURE)

1. Voltage ratings of service equipment shall conform to the service voltages indicated on the plans.
2. Unless otherwise indicated on the plans, service equipment items shall be provided for each service equipment enclosure as shown.
3. Connect to remote test switch mounted on lighting standards, sign post or structure when required.
4. Items No. 1 and 6 shall be isolated from the service equipment enclosure.
5. Meter sockets shall be the 7 clip type.
6. The landing lug shall be suitable for multiple conductors.
7. Type V photoelectric control shall be used unless otherwise indicated on the plans.
8. Service pedestal shall meet the requirements of EUSERC 308 or 309 in addition to the information given on this sheet.
9. Color of insulation of the neutral shall be gray for the 277/480 V system and shall be white for the 120/240 V system.
10. 120/240 V transformer grounded circuit conductor (neutral conductor).
11. 120/240 V transformer grounding electrode conductor.
12. 120/240 V system neutral bus and ground bus.
13. 120/240 V enclosure bonding jumper.

Caltrans Metric

DIST	COUNTY	ROUTE	KILOMETER POST TOTAL PROJECT	SHEET NO.	TOTAL SHEETS
11	SD	805	40.6/42.4	505	567

REGISTERED ELECTRICAL ENGINEER

October 5, 2007
PLANS APPROVAL DATE

REGISTERED PROFESSIONAL ENGINEER Jeffery G. McRae No. E14512 Exp. 6-30-08 ELECTRICAL STATE OF CALIFORNIA

The State of California or its officers or agents shall not be responsible for the accuracy or completeness of electronic copies of this plan sheet.

To get to the Caltrans web site, go to: http://www.dot.ca.gov

To accompany plans dated 6-14-10

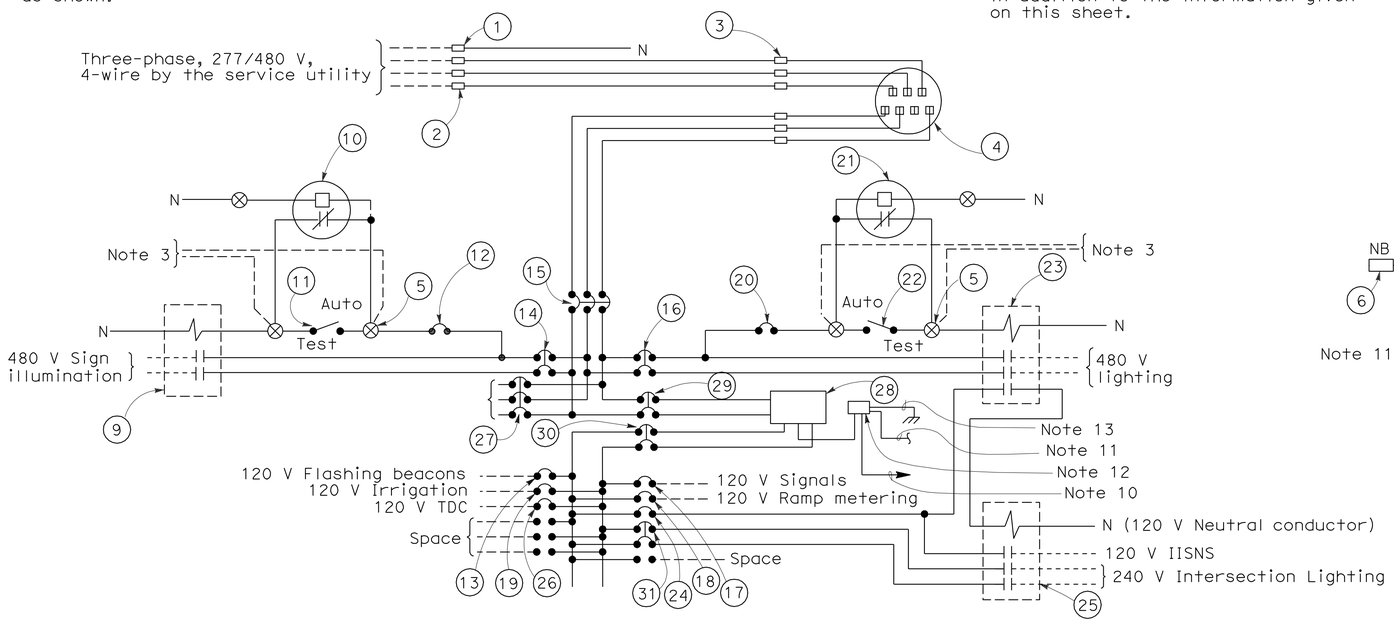

277/480 V SERVICE WIRING DIAGRAM (TYPICAL)

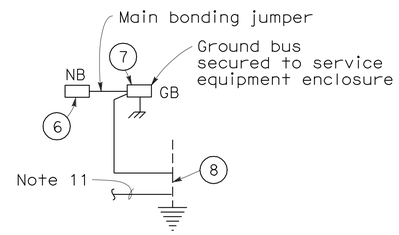

TYPE III-D SERVICE (277/480 V) EQUIPMENT LEGEND		
ITEM No.	COMPONENT	NAME PLATE DESCRIPTION
1	Neutral lug	
2	Landing lug	
3	Test bypass facility	
4	Meter socket and support	
5	Terminal blocks	
6	Neutral bus	
7	Ground bus	
8	Grounding electrode	
9	30 A, 2PNO Contactor	Sign Illumination (480 V)
10	Photoelectric unit (Note 7)	
11	15 A, 1P, Test switch	Sign Illumination Test Switch (277 V)
12	15 A, 277 V, 1P, CB	Sign Illumination Control (277 V)
13	15 A, 120 V, 1P, CB	Flashing Beacon (120 V)
14	15 A, 480 V, 2P, CB	Sign Illumination (480 V)
15	100 A, 480 V, 3P, CB	Main Breaker (480 V)
16	15 A, 480 V, 2P, CB	Lighting (480 V)
17	50 A, 120 V, 1P, CB	Signals (120 V)
18	30 A, 120 V, 1P, CB	Ramp Metering (120 V)
19	20 A, 120 V, 1P, CB	Irrigation (120 V)
20	15 A, 277 V, 1P, CB	Lighting Control (277 V)
21	Photoelectric unit (Note 7)	
22	15 A, 1P, Test switch	Lighting Test Switch (277 V)
23	30 A, 3PNO Contactor	Lighting (480 V)
24	15 A, 120 V, 1P, CB	IISNS (120 V)
25	30 A, 3PNO Contactor	Intersection Lighting (240 V)
26	20 A, 120 V, 1P, CB	Telephone Demarcation Cabinet (120 V)
27	20 A, 480 V, 3P, CB	Spare
28	10 kVA, 480-120/240 V Transformer	10 kVA, 480-120/240 V, 1Ø
29	30 A, 480 V, 2P, CB	Xfmr Primary (480 V)
30	60 A, 240 V, 2P, CB	Xfmr Secondary (240 V)
31	30 A, 240 V, 2P, CB	Intersection Lighting (240 V)

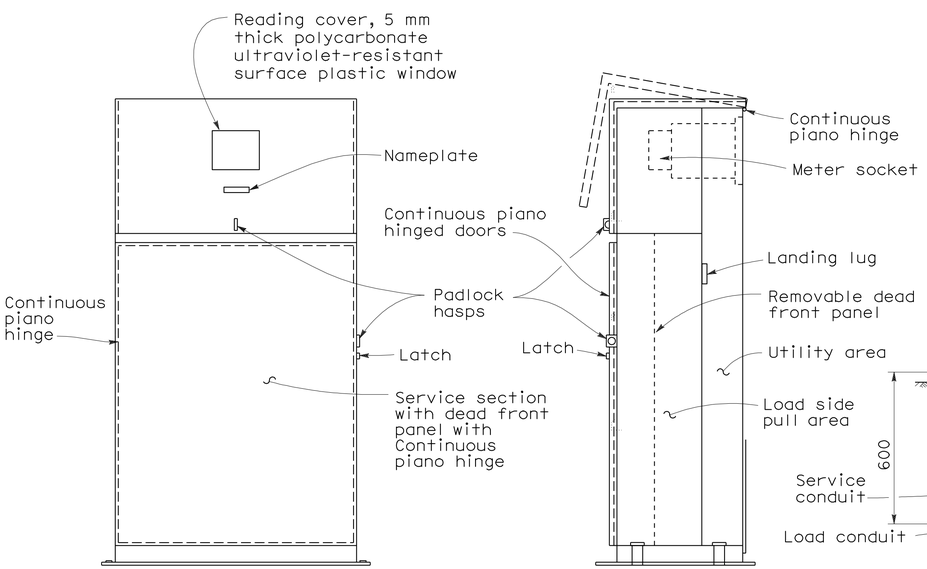

FRONT VIEW

SIDE VIEW

TYPE III-DF SERVICE EQUIPMENT ENCLOSURE WITH PROVISIONS FOR ONE 100 A METER (TYPICAL)

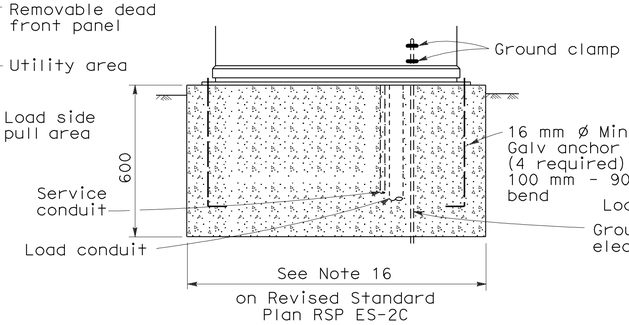

FRONT VIEW

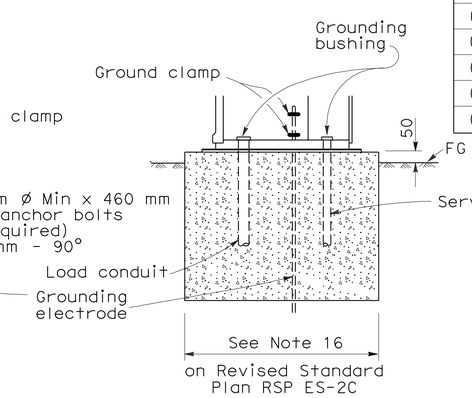

SIDE VIEW

TYPE III-D SERVICE EQUIPMENT ENCLOSURE FOUNDATION DETAILS

STATE OF CALIFORNIA
DEPARTMENT OF TRANSPORTATION

ELECTRICAL SYSTEMS (SERVICE EQUIPMENT AND TYPICAL WIRING DIAGRAM, TYPE III -D SERIES)

NO SCALE

ALL DIMENSIONS ARE IN MILLIMETERS UNLESS OTHERWISE SHOWN

RSP ES-2G DATED OCTOBER 5, 2007 SUPERSEDES STANDARD PLAN ES-2G DATED JULY 1, 2004-PAGE 422 OF THE STANDARD PLANS BOOK DATED JULY 2004.

REVISED STANDARD PLAN RSP ES-2G

2004 REVISED Std PLAN RSP ES-2G

10-1-07

DIST	COUNTY	ROUTE	KILOMETER POST TOTAL PROJECT	SHEET NO.	TOTAL SHEETS
11	SD	805	40.6/42.4	506	567

Caltrans Metric

Jeffery G. McRae
REGISTERED ELECTRICAL ENGINEER

October 5, 2007
PLANS APPROVAL DATE

REGISTERED PROFESSIONAL ENGINEER
Jeffery G. McRae
No. E14512
Exp. 6-30-08
ELECTRICAL
STATE OF CALIFORNIA

The State of California or its officers or agents shall not be responsible for the accuracy or completeness of electronic copies of this plan sheet.

To get to the Caltrans web site, go to: http://www.dot.ca.gov

To accompany plans dated 6-14-10

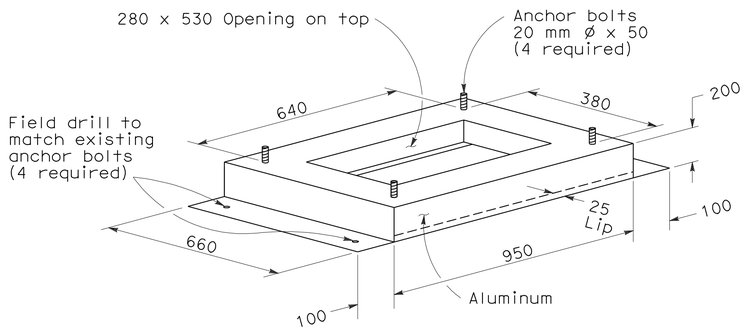

TYPE PR CABINET ADAPTER

1. Material: 4.78 thickness aluminum plate.
2. Mount adapter on Type P or Type R cabinet foundation.

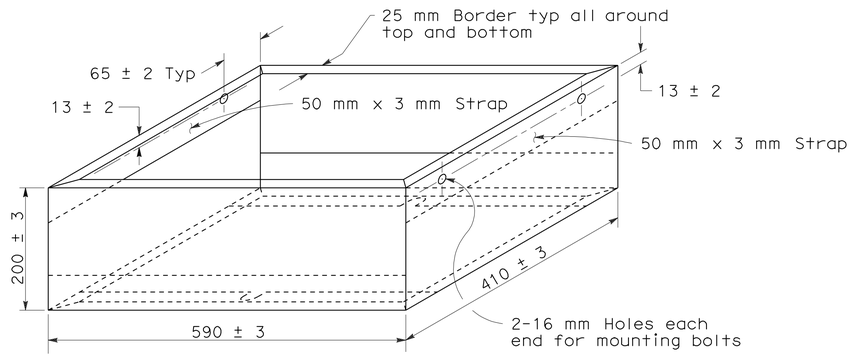

TYPE M CABINET ADAPTER

1. Mount adapter on Type M cabinet foundation.
2. Mounting bolts shall be 10 mm ø minimum size.
3. Aluminum (4.78 mm thickness).

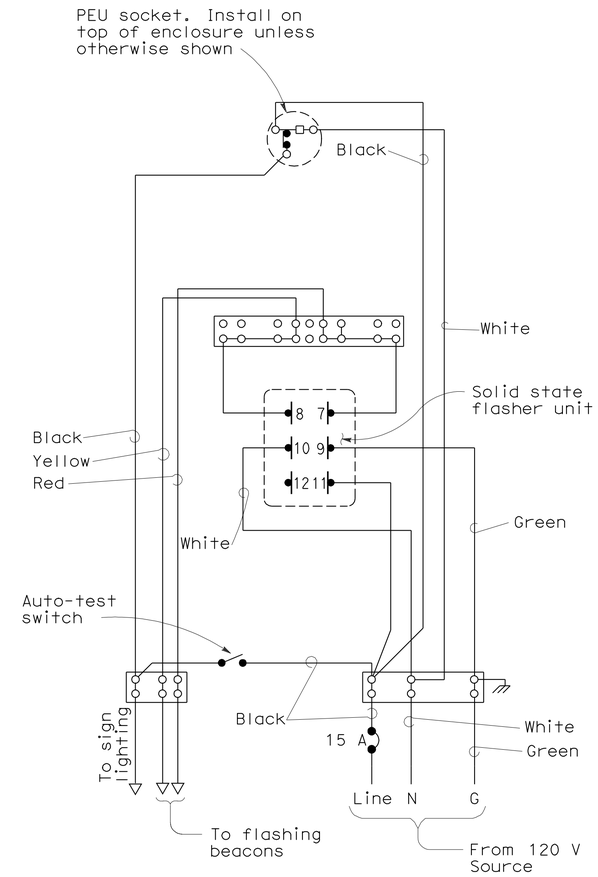

WIRING DIAGRAM
LED FLASHING BEACON CONTROL ASSEMBLY

The flasher transfer relay shall intermate with a CINCH-JONES Socket S-408-SB or equal connected as follows:

Pin No.	Circuit	Pin No.	Circuit
1	Coil	5	Common, Circuit #1
2	Coil	6	Common, Circuit #2
3	NC Circuit #1	7	NO Circuit #1
4	NC Circuit #2	8	NO Circuit #2

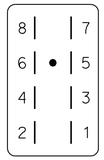

CONNECTOR SOCKET
FLASH TRANSFER RELAY

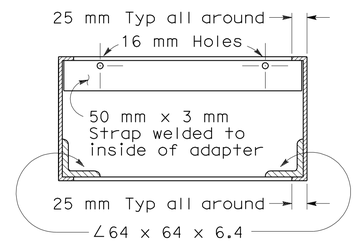

SECTION A-A

The flasher shall intermate with a CINCH-JONES Socket S-406-SB or equal connected as follows:

Pin No.	Circuit	Pin No.	Circuit
7	Load, Circuit #1	10	ac+
8	Load, Circuit #2	11	ac-
9	Chassis Ground	12	Not used

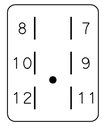

CONNECTOR SOCKET
SOLID STATE FLASHER UNIT

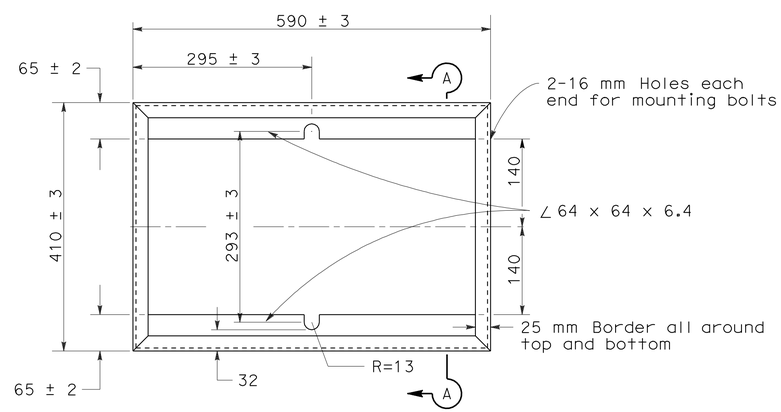

TOP VIEW

The Solid-state switching device shall intermate with a CINCH-JONES Socket S-2412-SB or equal connected as follows:

Pin No.	Circuit	Pin No.	Circuit
1	ac + Lights	7	Green or Walk Output
2	Chassis Ground	8	Yellow Input
3	Red or Don't Walk Output	9	dc+ (15 to 24 V)
4	Not used	10	Green or Walk Input
5	Yellow Output	11	ac-
6	Red or Don't Walk Input	12	Not used

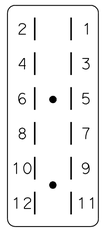

CONNECTOR SOCKET
SOLID STATE SWITCHING DEVICE

STATE OF CALIFORNIA
DEPARTMENT OF TRANSPORTATION

ELECTRICAL SYSTEMS (CONTROLLER CABINET DETAILS)

NO SCALE

ALL DIMENSIONS ARE IN
MILLIMETERS UNLESS OTHERWISE SHOWN

RSP ES-3B DATED OCTOBER 5, 2007 SUPERSEDES STANDARD PLAN ES-3B
DATED JULY 1, 2004-PAGE 424 OF THE STANDARD PLANS BOOK DATED JULY 2004.

REVISED STANDARD PLAN RSP ES-3B

2004 REVISED Std PLAN RSP ES-3B

6-27-07

DIST	COUNTY	ROUTE	KILOMETER POST TOTAL PROJECT	SHEET NO.	TOTAL SHEETS
11	SD	805	40.6/42.4	507	567

Caltrans Metric

REGISTERED ELECTRICAL ENGINEER

October 5, 2007
PLANS APPROVAL DATE

REGISTERED PROFESSIONAL ENGINEER Jeffery G. McRae No. E14512 Exp. 6-30-08 ELECTRICAL STATE OF CALIFORNIA

The State of California or its officers or agents shall not be responsible for the accuracy or completeness of electronic copies of this plan sheet.

To get to the Caltrans web site, go to: http://www.dot.ca.gov

To accompany plans dated 6-14-10

NOTES - CONTROLLER CABINETS

1. Cabinet dimensions are nominal.
2. Foundations shall be located to provide 600 mm minimum clearance between face of curb and any portion of cabinet.
3. Type G, M, P, R, S and Model 336 cabinets shall be installed with the back toward the nearest lane of traffic.
4. The controller cabinet ground bus shall be bonded to the controller equipment enclosure.
5. In unpaved areas, a raised portland cement concrete pad shall be constructed in front of each controller cabinet. Pad shall be 900 mm x 900 mm x 100 mm for Type G cabinets and shall be 900 mm x 100 mm thick x width of foundation for Types M, P, R, S and Model 336 cabinets.
6. In unpaved areas, the top of foundation for Type G, P, R and S cabinets shall be 150 mm above surrounding grade. Top of foundation for Type M or Model 336 cabinet shall be 460 mm above surrounding grade.
7. In sidewalks and other paved areas, top of foundation for Type G cabinet shall be level with surrounding grade. Top of foundation for Type P, R and S cabinets shall be 90 mm above surrounding grade.
8. The steel pedestal, base plate, bolt circle and foundation for Type G cabinet shall be the same as that shown for a Type 1-C Standard. Pedestal shall be 640 mm - 760 mm in length. Anchor bolts shall be 19 mm ø x 460 mm with a 50 mm - 90° bend. Four bolts required per cabinet.
9. Type G cabinet shall be provided with a slipfitter to permit mounting an 114 mm outside diameter pedestal. Slipfitter shall be bolted to bottom of the cabinet.
10. Type G cabinet shall be provided with 8 screened, raintight holes, 13 mm diameter or larger, in the bottom of the cabinet.
11. A 25 mm drain shall be provided through the foundation of a Type M or Model 336 cabinet. Drain pipe shall be screened.
12. See Table for cabinet and foundation dimensions; "D" = Depth, "H" = Height and "W" = Width.
13. Cabinet shelves shall be adjustable for vertical spacing and shall be removable. Type M, P, R and S cabinets shall be provided with a minimum of two shelves.
14. Anchor bolts for Type M, P, R, S and Model 336 cabinets shall be 19 mm ø x 460 mm with a 50 mm - 90° bend.
15. An approved mastic or caulking compound shall be placed on the foundation prior to placing the cabinet to seal openings between bottom of cabinet and foundation.
16. Controller units, plug-mounted equipment, shelf-mounted equipment and wall-mounted equipment shall be located to permit safe and easy removal or replacement without removing any other piece of equipment.
17. Cabinet fan may be installed at an alternate location near the top of the cabinet when approved by the Engineer.
18. Where telephone interconnect is required, a minimum of 130 mm clear vertical space shall be provided inside the cabinet for the equipment.
19. Telephone interconnect conductors shall be enclosed in a 21C or larger conduit through the foundation. Type 4 metal conduit shall be used to separate telephone and power conductors in cabinets and pedestals.
20. For Model 332, 334 and 336 cabinet details, see "Traffic signal controller equipment specifications".

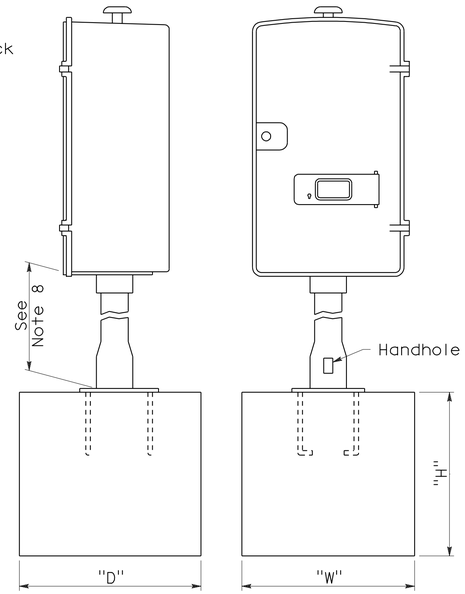

FOUNDATION FOR TYPE G CABINET

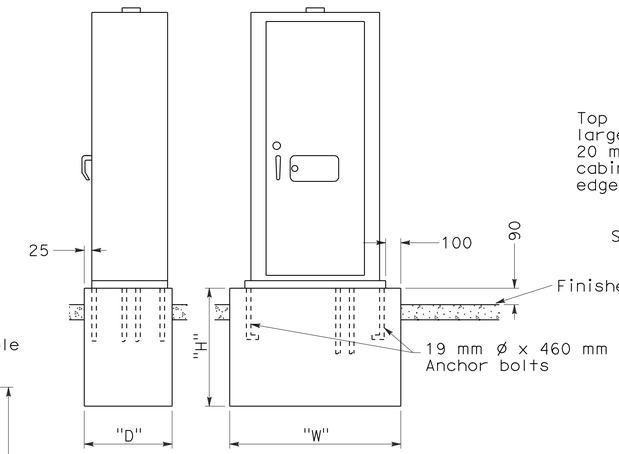

FOUNDATION FOR TYPE P, R AND S CABINETS

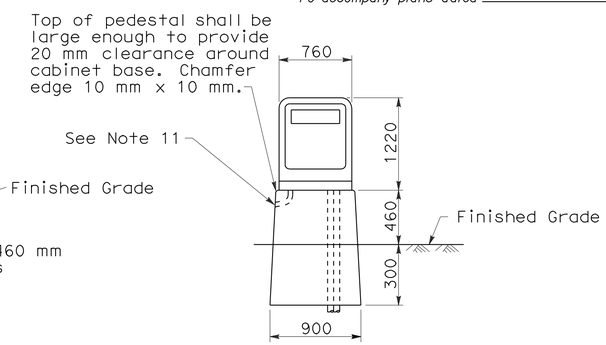

PEDESTAL FOUNDATION FOR TYPE M OR MODEL 336 CABINET

CABINET	FOUNDATION		
TYPE/ MODEL	H (mm)	W (mm)	D (mm)
G	900	600	600
M 336	760	900	560
P	460	1330	710
R	460	1330	710
S	460	1820	710

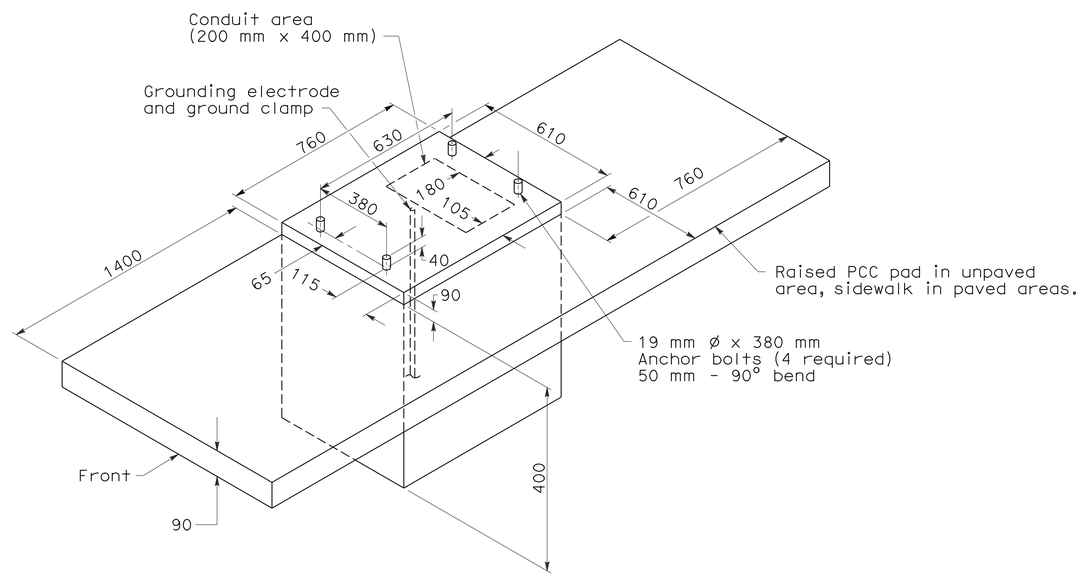

FOUNDATION DETAILS
For Model 332 and 334 cabinets

STATE OF CALIFORNIA
DEPARTMENT OF TRANSPORTATION

ELECTRICAL SYSTEMS (CONTROLLER CABINET DETAILS)

NO SCALE

ALL DIMENSIONS ARE IN MILLIMETERS UNLESS OTHERWISE SHOWN

RSP ES-3C DATED OCTOBER 5, 2007 SUPERSEDES STANDARD PLAN ES-3C DATED JULY 1, 2004-PAGE 425 OF THE STANDARD PLANS BOOK DATED JULY 2004.

REVISED STANDARD PLAN RSP ES-3C

2004 REVISED Std PLAN RSP ES-3C

6-27-07

DIST	COUNTY	ROUTE	KILOMETER POST TOTAL PROJECT	SHEET NO.	TOTAL SHEETS
11	SD	805	40.6/42.4	508	567

Caltrans Metric

REGISTERED ELECTRICAL ENGINEER

October 5, 2007
PLANS APPROVAL DATE

REGISTERED PROFESSIONAL ENGINEER Jeffery G. McRae No. E14512 Exp. 6-30-08 ELECTRICAL STATE OF CALIFORNIA

The State of California or its officers or agents shall not be responsible for the accuracy or completeness of electronic copies of this plan sheet.

To get to the Caltrans web site, go to: http://www.dot.ca.gov

To accompany plans dated 6-14-10

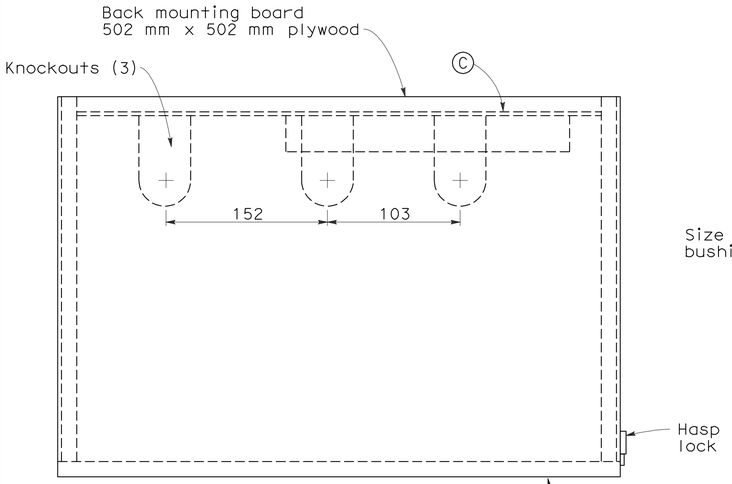

TOP

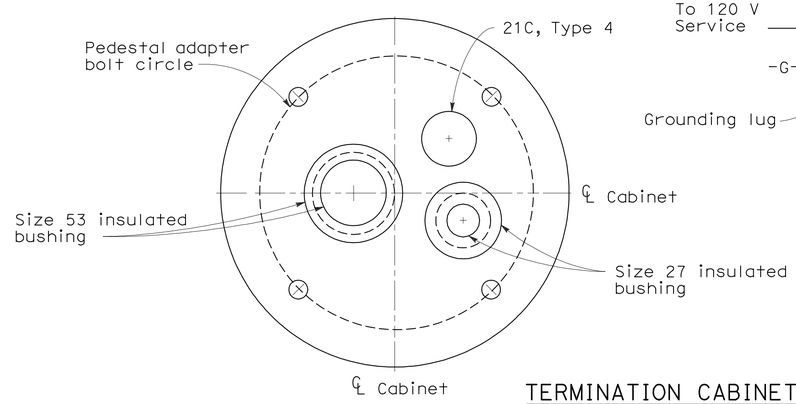

SECTION A-A

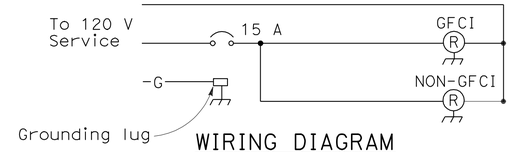

WIRING DIAGRAM

TERMINATION CABINET NOTES

1. Mount cabinet on Type G cabinet pedestal. See Revised Standard Plan RSP ES-3C.
2. Use Type G cabinet foundation.

NOTES

1. Telephone demarcation cabinet shall be furnished with mounting boards, outlet boxes, circuit breakers and outlet plates. Dimensions are nominal.
2. Telephone demarcation cabinet shall be installed with the back toward the nearest lane of traffic.
3. All conduits shall be bonded to the enclosure.
4. In unpaved areas, the top of foundation for the telephone demarcation cabinet shall be 150 mm above surrounding grade.
5. In sidewalks and other paved areas, top of foundation for the telephone demarcation cabinet shall be level with finished grade.
6. The steel pedestal, base plate, bolt circle and foundation for the telephone demarcation cabinet shall be the same as that shown for a Type 1-C Standard. Pedestal shall be 640 mm - 760 mm in length. Anchor bolts required shall be 19 mm ø x 460 mm with a 50 mm - 90° bend. Four bolts required per cabinet.
7. Telephone demarcation cabinet shall be provided with a slip fitter to permit mounting on 114 mm outside diameter pedestal. Slip fitter shall be bolted to bottom of cabinet.
8. Telephone interconnect conductors shall be enclosed in a 21C or larger conduit through the foundation. Type 4 metal conduit shall be used to separate telephone and power conductors in cabinets and pedestals.
9. Install circuit breaker inside the junction box. The circuit breaker should be operated externally without opening the junction cover.

NEMA 3R enclosure 508 mm X 508 mm X 305 mm (W x H x D)
hinged cover with padlock hasp.
2 mm minimum thickness

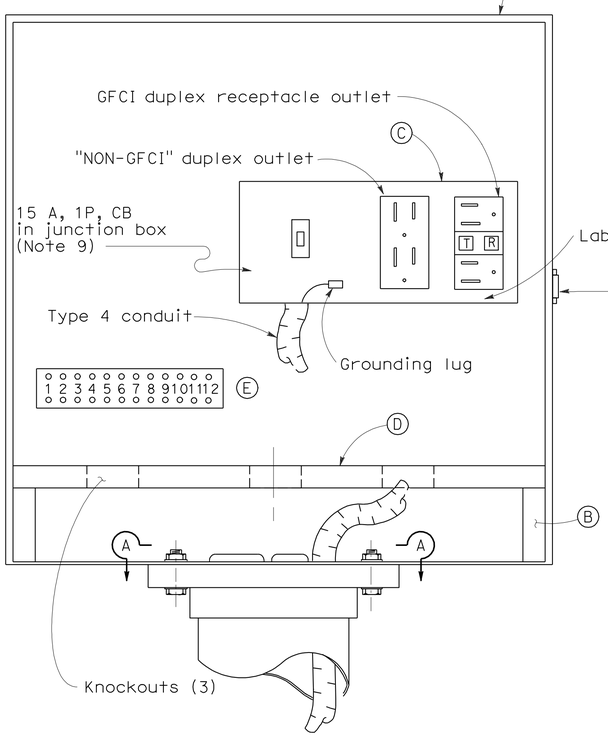

FRONT

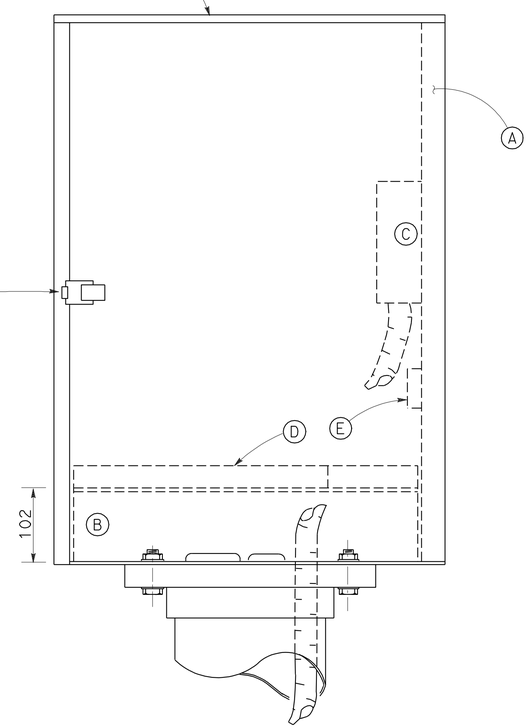

RIGHT SIDE

COMPONENTS

A	Back mounting board	4 - 19 mm (length) wood screws
B	Shelf supports (2)	4 - 19 mm (length) wood screws
C	Junction box duplex outlet to backboard	4 - 13 mm (length) wood screws
D	Bottom shelf	
E	Terminal block, 12 positions	4 - 19 mm (length) wood screws

FASTENER SCHEDULE

STATE OF CALIFORNIA
DEPARTMENT OF TRANSPORTATION

ELECTRICAL SYSTEMS (TELEPHONE DEMARCATION CABINET, TYPE A)

NO SCALE

ALL DIMENSIONS ARE IN MILLIMETERS UNLESS OTHERWISE SHOWN

RSP ES-3D DATED OCTOBER 5, 2007 SUPERSEDES STANDARD PLAN ES-3D DATED JULY 1, 2004-PAGE 426 OF THE STANDARD PLANS BOOK DATED JULY 2004.

REVISED STANDARD PLAN RSP ES-3D

2004 REVISED Std PLAN RSP ES-3D

7-2-07

DIST	COUNTY	ROUTE	KILOMETER POST TOTAL PROJECT	SHEET NO.	TOTAL SHEETS
11	SD	805	40.6/42.4	509	567

Caltrans Metric

Jeffery G. McRae
REGISTERED ELECTRICAL ENGINEER

October 5, 2007
PLANS APPROVAL DATE

REGISTERED PROFESSIONAL ENGINEER
Jeffery G. McRae
No. E14512
Exp. 6-30-08
ELECTRICAL
STATE OF CALIFORNIA

The State of California or its officers or agents shall not be responsible for the accuracy or completeness of electronic copies of this plan sheet.

To get to the Caltrans web site, go to: http://www.dot.ca.gov

To accompany plans dated 6-14-10

2004 REVISED Std PLAN RSP ES-3E

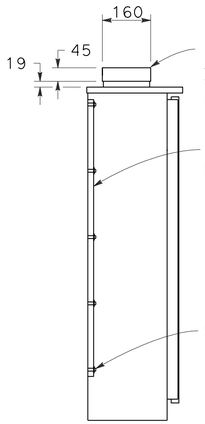

SECTION A-A

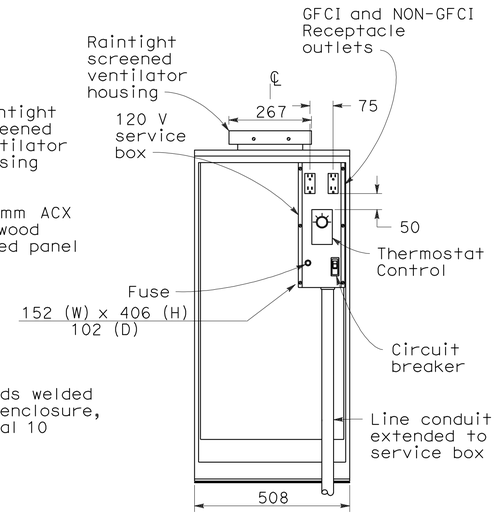

FRONT VIEW

(Exterior door removed for clarity)

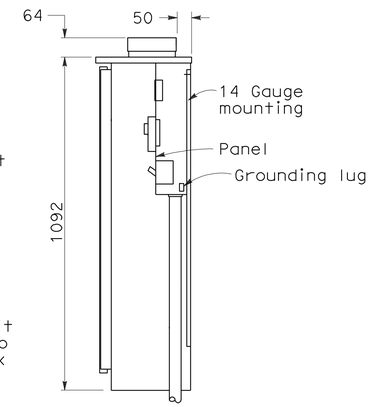

SECTION B-B

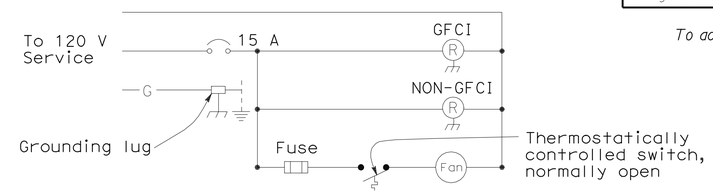

WIRING DIAGRAM

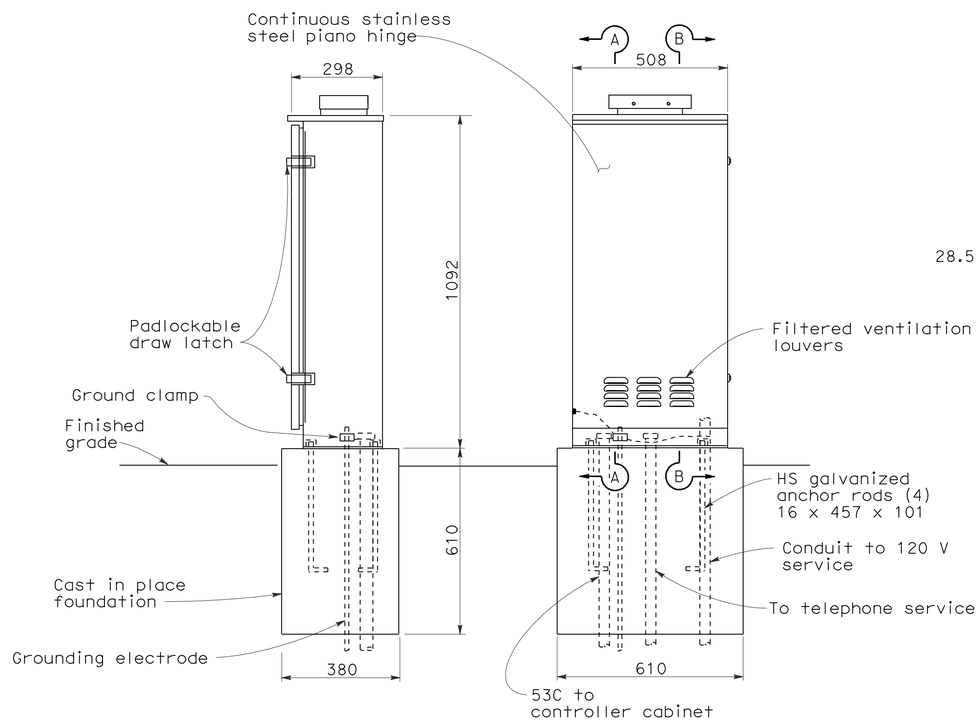

SIDE VIEW

FRONT VIEW

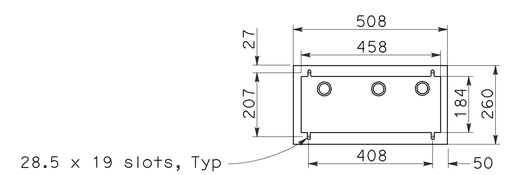

BASE PLAN

NOTES

1. Telephone demarcation cabinet shall be furnished with a mounting panel, outlets, circuit breaker and deadfront plates in place. Dimensions are nominal.
2. An approved mastic or caulking compound shall be placed on the foundation prior to placing the cabinet to seal openings between the bottom of the cabinet and the foundation.
3. In unpaved areas, a raised PCC pad shall be placed in front of the telephone demarcation cabinet. Pad shall be 610 mm x 560 mm x 100 mm thick, with 50 mm above the finished grade.
4. All conduits shall be bonded to the enclosure.
5. Telephone demarcation cabinet:
   a) Material shall be anodized aluminum (3.2 mm thick).
   b) Fabrication shall conform to the requirements of the Standard Specifications.
   c) The exterior door shall be side hung and secured with a padlockable draw latch, the padlock hole shall be a minimum diameter of 11 mm to receive a padlock.
   d) Ventilation louvers shall be located on the door.
   e) Fan shall be mounted in a ventilator housing.
   f) Fan shall be thermostatically controlled and adjustable to turn on between 32°C and 65°C.
   g) Fan circuit shall be fused at 175 percent of the fan motor capacity.
   h) Fan capacity shall be at least 0.7 m^3 per minute.
   i) Fasten fixed mounting panels with nuts, lock and flat washers to 5 mm ø x 25 mm studs welded to enclosure.

STATE OF CALIFORNIA
DEPARTMENT OF TRANSPORTATION

ELECTRICAL SYSTEMS (TELEPHONE DEMARCATION CABINET, TYPE B)

NO SCALE

ALL DIMENSIONS ARE IN MILLIMETERS UNLESS OTHERWISE SHOWN

RSP ES-3E DATED OCTOBER 5, 2007 SUPERSEDES STANDARD PLAN ES-3E DATED JULY 1, 2004-PAGE 427 OF THE STANDARD PLANS BOOK DATED JULY 2004.

REVISED STANDARD PLAN RSP ES-3E

10-1-07

DIST	COUNTY	ROUTE	KILOMETER POST TOTAL PROJECT	SHEET NO.	TOTAL SHEETS
11	SD	805	40.6/42.4	510	567

Caltrans Metric

REGISTERED ELECTRICAL ENGINEER

October 5, 2007
PLANS APPROVAL DATE

REGISTERED PROFESSIONAL ENGINEER Jeffery G. McRae No. E14512 Exp. 6-30-08 ELECTRICAL STATE OF CALIFORNIA

The State of California or its officers or agents shall not be responsible for the accuracy or completeness of electronic copies of this plan sheet.

To get to the Caltrans web site, go to: http://www.dot.ca.gov

To accompany plans dated 6-14-10

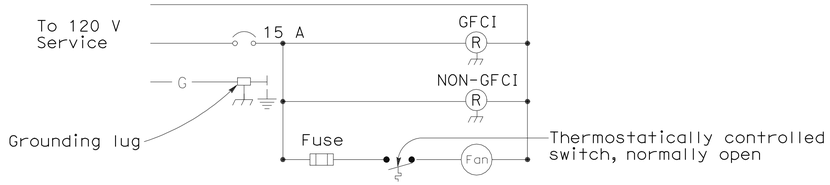

WIRING DIAGRAM

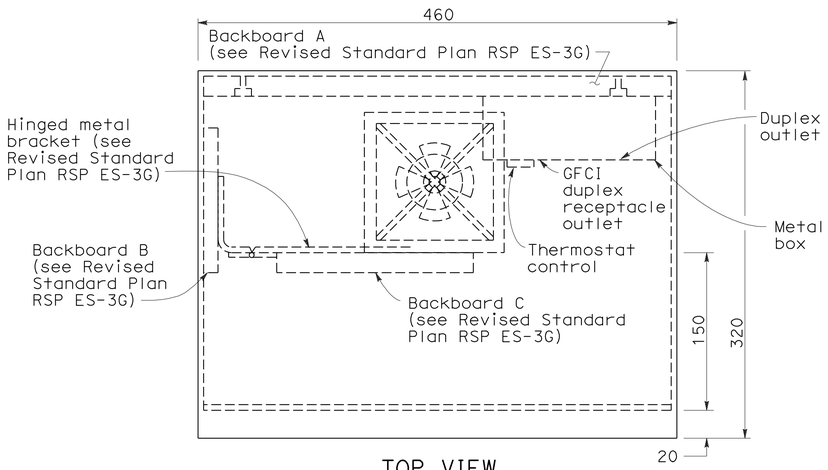

TOP VIEW

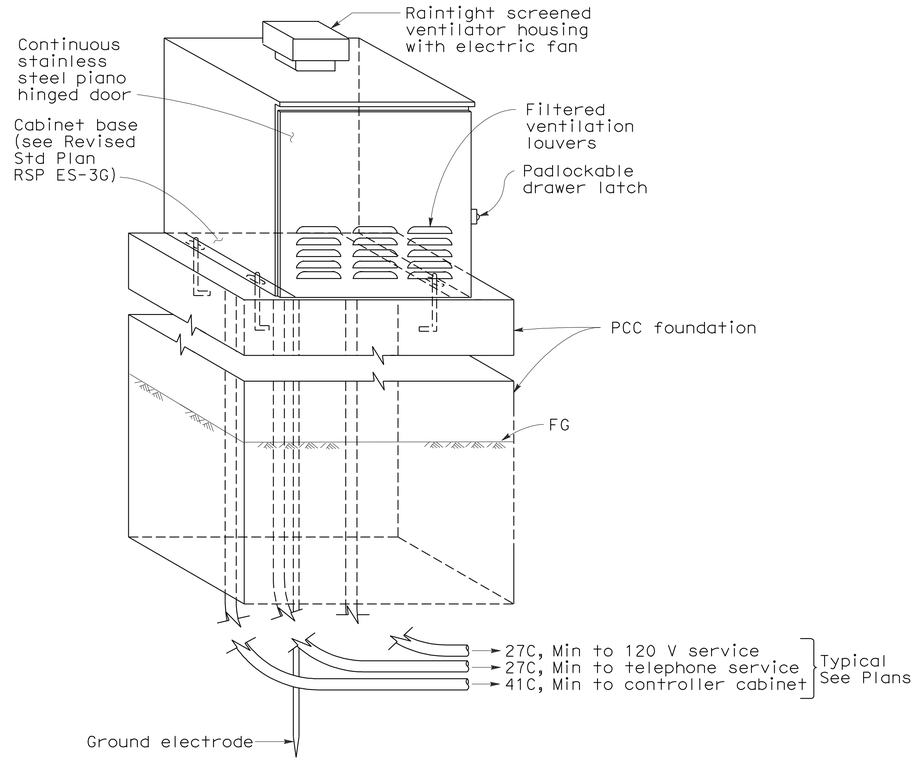

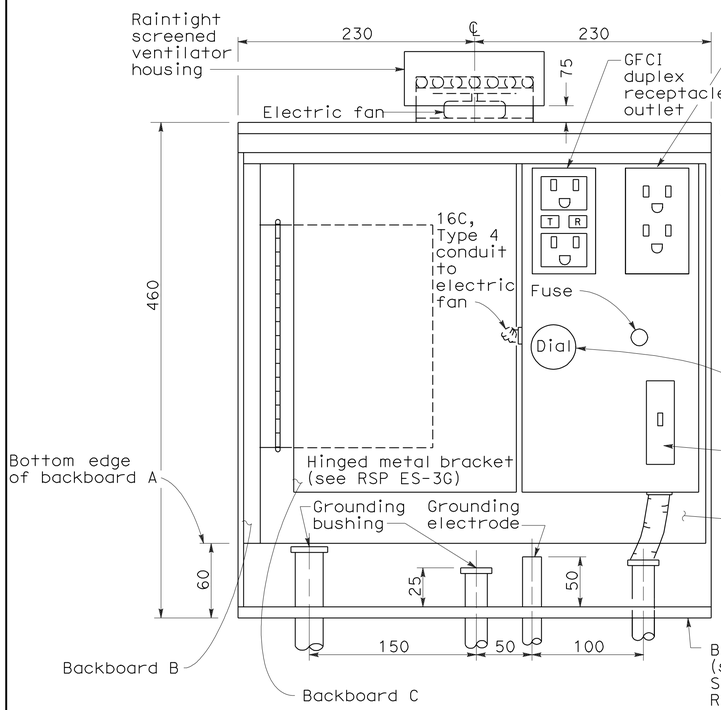

FRONT VIEW
(Outer door removed)

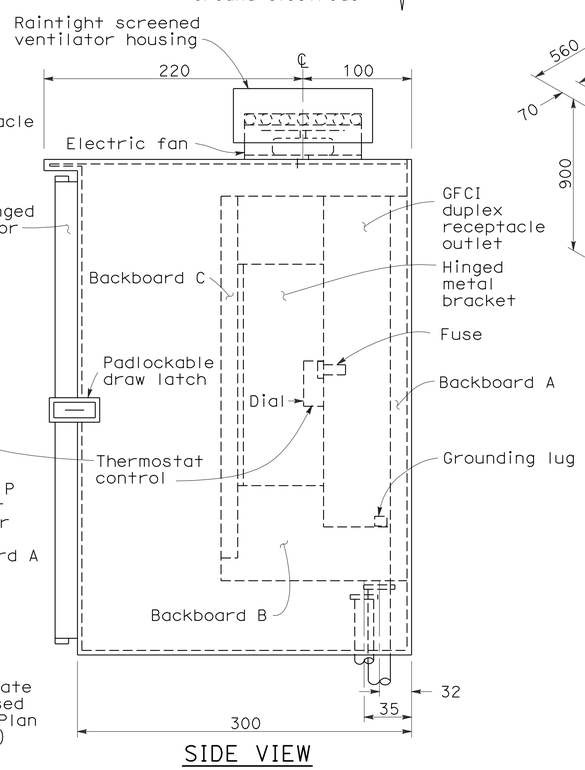

SIDE VIEW

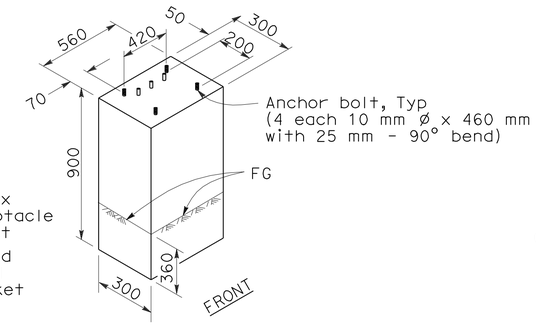

FOUNDATION DETAILS

NOTES

1. Telephone demarcation cabinet shall be furnished with mounting boards, thermostat, fan, outlet box, circuit breaker and outlet plate. Dimensions are nominal.
2. An approved mastic or caulking compound shall be placed on the foundation prior to placing the cabinet to seal openings between bottom of cabinet and foundation.
3. In unpaved areas, a raised PCC pad shall be placed in front of the telephone demarcation cabinet. Pad shall be 560 mm x 900 mm x 100 mm thick, with 50 mm above the finished grade.
4. All conduits shall be bonded to the enclosure.
5. Telephone demarcation cabinet:
   a) Material shall be anodized aluminum (3.2 mm thick).
   b) Fabrication shall conform to the requirements of the Standard Specifications.
   c) Ventilation louvers shall be located in door.
   d) Door shall be lockable with padlock.
   e) Fan shall be mounted in a ventilator housing.
   f) Fan capacity shall be at least 0.7 m^3 per minute.
   g) Fan shall be thermostatically controlled and adjustable to turn on between 32°C and 65°C.
   h) Fan circuit shall be fused at 175 percent of the fan motor capacity.
6. Hardware for fastening of mounting boards:
   a) Fasten backboard A and backboard B to telephone demarcation cabinet with 5 mm ø x 20 mm stainless steel carriage bolts (8 required).
   b) Fasten hinged metal bracket to backboard B and backboard C to hinged metal bracket with number 10 mm x 20 mm wood screws (9 required).

STATE OF CALIFORNIA
DEPARTMENT OF TRANSPORTATION

ELECTRICAL SYSTEMS (TELEPHONE DEMARCATION CABINET, TYPE C)

NO SCALE

ALL DIMENSIONS ARE IN MILLIMETERS UNLESS OTHERWISE SHOWN

RSP ES-3F DATED OCTOBER 5, 2007 SUPERSEDES STANDARD PLAN ES-3F DATED JULY 1, 2004-PAGE 428 OF THE STANDARD PLANS BOOK DATED JULY 2004.

REVISED STANDARD PLAN RSP ES-3F

2004 REVISED Std PLAN RSP ES-3F

7-2-07

DIST	COUNTY	ROUTE	KILOMETER POST TOTAL PROJECT	SHEET NO.	TOTAL SHEETS
11	SD	805	40.6/42.4	511	567

Caltrans Metric

REGISTERED ELECTRICAL ENGINEER

October 5, 2007
PLANS APPROVAL DATE

REGISTERED PROFESSIONAL ENGINEER
Jeffery G. McRae
No. E14512
Exp. 6-30-08
ELECTRICAL
STATE OF CALIFORNIA

The State of California or its officers or agents shall not be responsible for the accuracy or completeness of electronic copies of this plan sheet.

To get to the Caltrans web site, go to: http://www.dot.ca.gov

To accompany plans dated 6-14-10

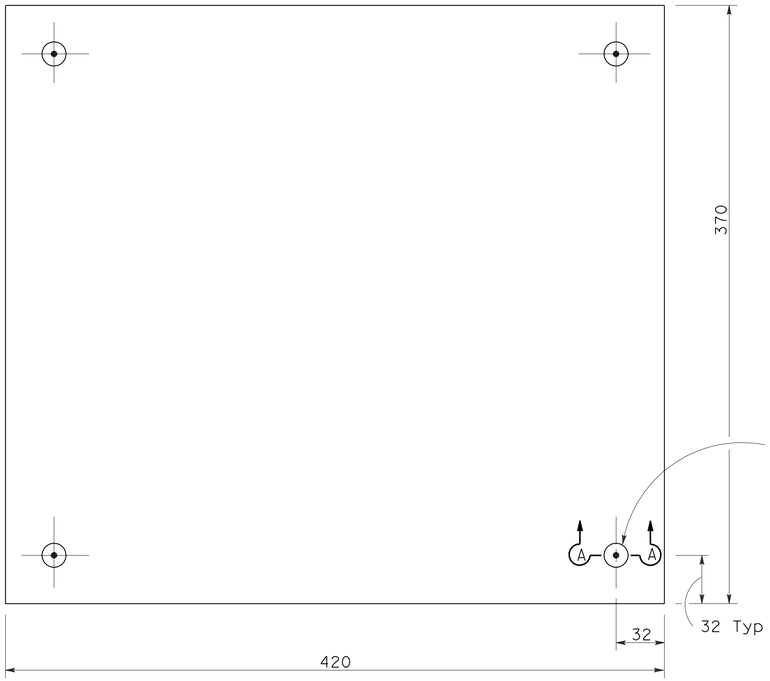

BACKBOARD A
(Material: 18 mm A-C plywood)

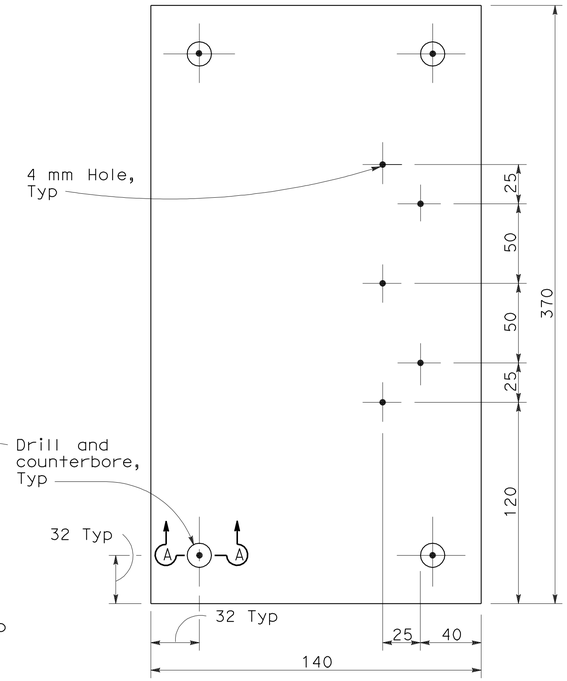

BACKBOARD B
(Material: 18 mm A-C plywood)

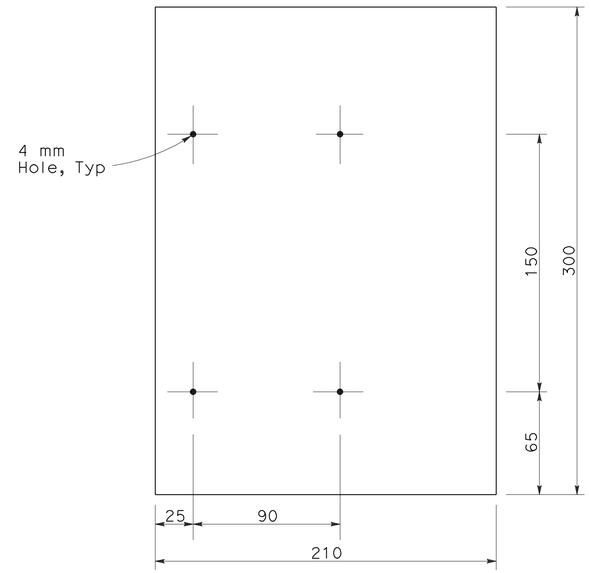

BACKBOARD C
(Material: 18 mm A-C plywood)

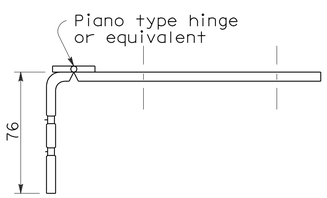

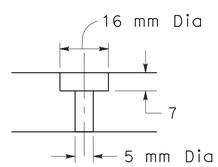

SECTION A-A

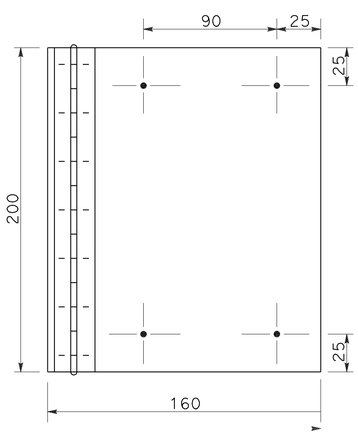

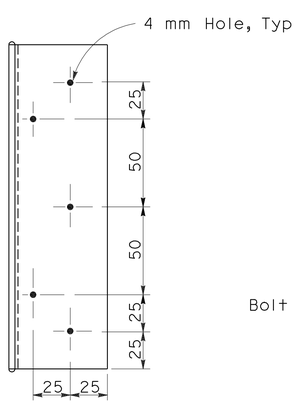

HINGED METAL BRACKET

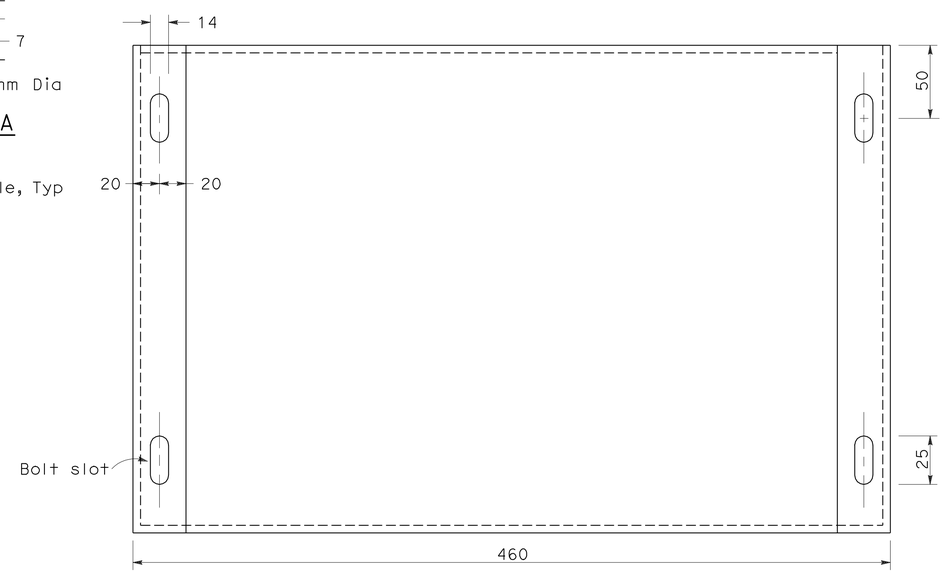

CABINET BASE
(Material: 3.42 mm Galvanized Steel)

STATE OF CALIFORNIA
DEPARTMENT OF TRANSPORTATION

ELECTRICAL SYSTEMS (TELEPHONE DEMARCATION CABINET, TYPE C DETAILS)

NO SCALE

ALL DIMENSIONS ARE IN MILLIMETERS UNLESS OTHERWISE SHOWN

RSP ES-3G DATED OCTOBER 5, 2007 SUPERSEDES STANDARD PLAN ES-3G DATED JULY 1, 2004-PAGE 429 OF THE STANDARD PLANS BOOK DATED JULY 2004.

REVISED STANDARD PLAN RSP ES-3G

2004 REVISED Std PLAN RSP ES-3G

10-1-07

DIST	COUNTY	ROUTE	KILOMETER POST TOTAL PROJECT	SHEET NO.	TOTAL SHEETS
11	SD	805	40.6/42.4	512	567

Caltrans Metric

Jeffery G. McRae
REGISTERED ELECTRICAL ENGINEER

October 5, 2007
PLANS APPROVAL DATE

REGISTERED PROFESSIONAL ENGINEER
Jeffery G. McRae
No. E14512
Exp. 6-30-08
ELECTRICAL
STATE OF CALIFORNIA

The State of California or its officers or agents shall not be responsible for the accuracy or completeness of electronic copies of this plan sheet.

To get to the Caltrans web site, go to: http://www.dot.ca.gov

To accompany plans dated 6-14-10

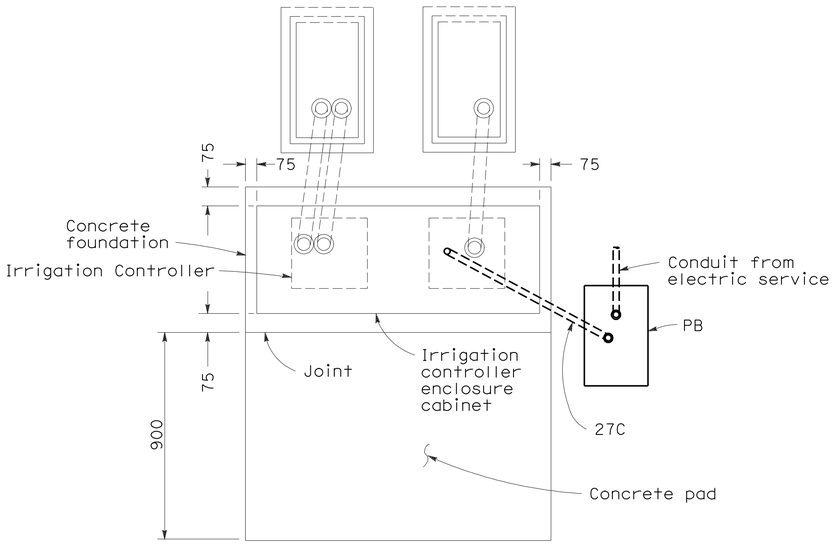

PLAN

NOTE:

See Standard Plan H10 for other details.

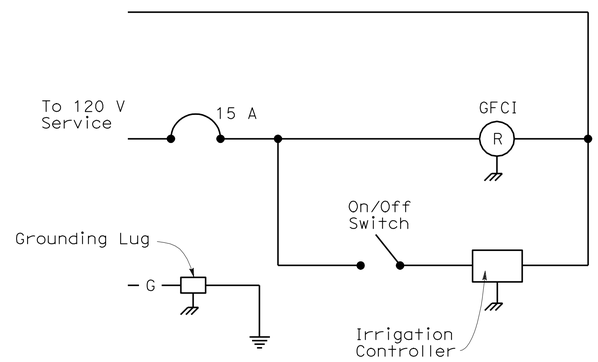

IRRIGATION CONTROLLER ENCLOSURE CABINET WIRING DIAGRAM (TYPICAL)

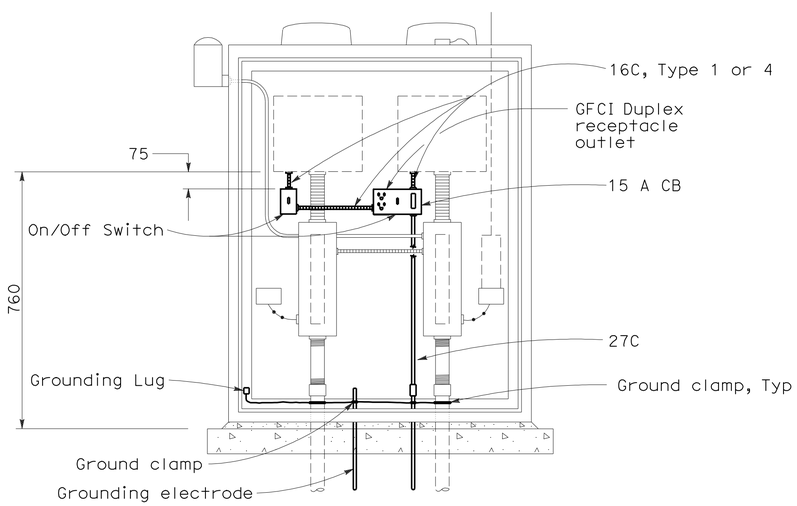

ELEVATION

STATE OF CALIFORNIA
DEPARTMENT OF TRANSPORTATION

ELECTRICAL SYSTEMS (IRRIGATION CONTROLLER ENCLOSURE CABINET)

NO SCALE

ALL DIMENSIONS ARE IN MILLIMETERS UNLESS OTHERWISE SHOWN

RSP ES-3H DATED OCTOBER 5, 2007 SUPERSEDES STANDARD PLAN ES-3H DATED JULY 1, 2004-PAGE 430 OF THE STANDARD PLANS BOOK DATED JULY 2004.

REVISED STANDARD PLAN RSP ES-3H

2004 REVISED Std PLAN RSP ES-3H

8-9-07

DIST	COUNTY	ROUTE	KILOMETER POST TOTAL PROJECT	SHEET NO.	TOTAL SHEETS
11	SD	805	40.6/42.4	513	567

Caltrans Metric

Jeffrey G. McRae
REGISTERED ELECTRICAL ENGINEER

June 6, 2008
PLANS APPROVAL DATE

REGISTERED PROFESSIONAL ENGINEER Jeffrey G. McRae No. E14512 Exp. 6-30-10 ELECTRICAL STATE OF CALIFORNIA

The State of California or its officers or agents shall not be responsible for the accuracy or completeness of electronic copies of this plan sheet.

To get to the Caltrans web site, go to: http://www.dot.ca.gov

To accompany plans dated 6-14-10

VISORS

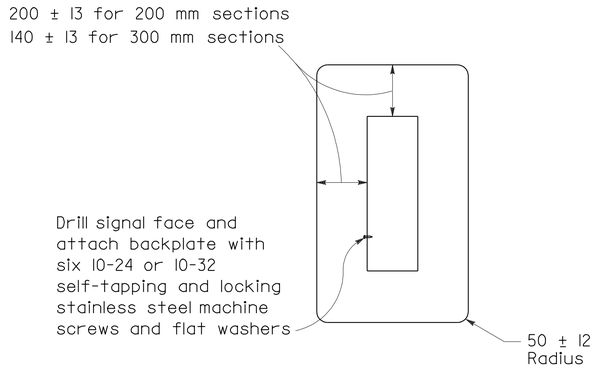

200 mm AND 300 mm SECTIONS

BACKPLATE

1.5 mm minimum thickness 3001-14 aluminum, or plastic when specified

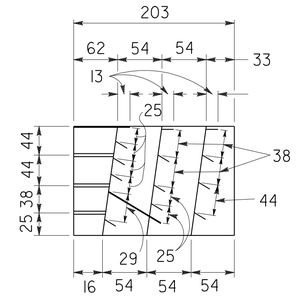

SECTION A-A

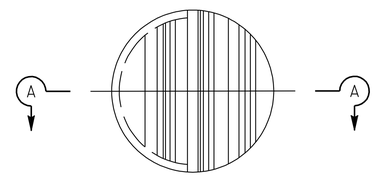

FRONT VIEW

DIRECTIONAL LOUVER

Directional louvers shall be oriented as directed by the Engineer and secured in place with one plated brass machine screw and nut.

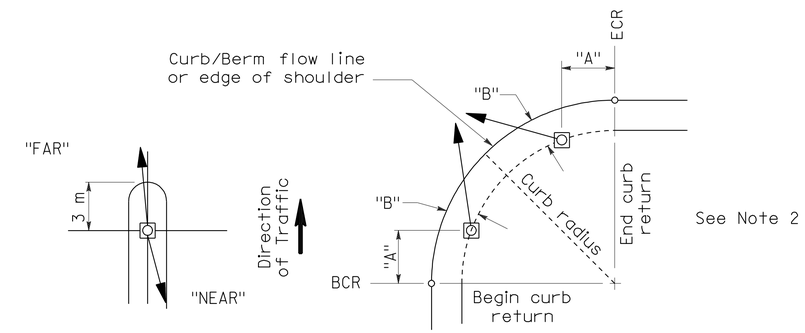

NOTES:

1. Typical signal pole placement unless dimensioned on plans.
2. For "A" and "B" dimensions, see Pole Schedule, or as directed by the Engineer.

SIGNAL STANDARD PLACEMENT DIMENSIONS AND EQUIPMENT LOCATIONS

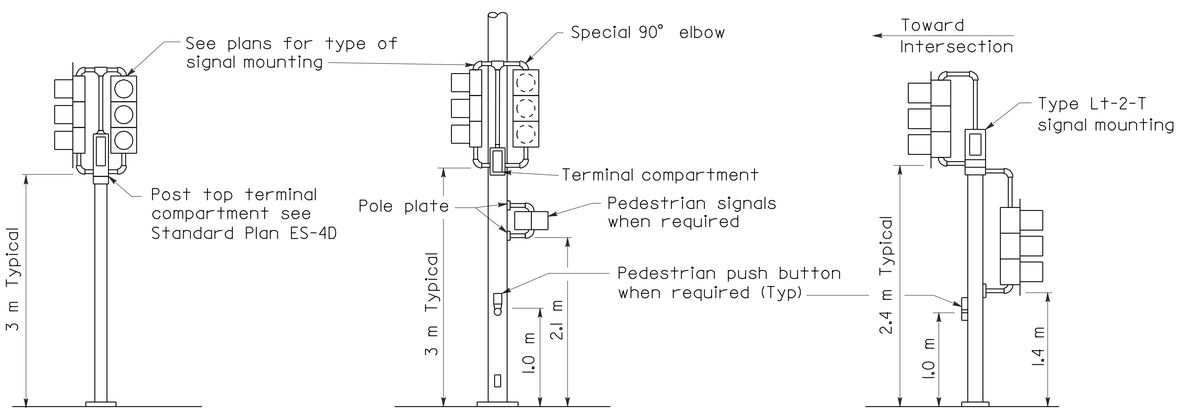

TOP MOUNTED SIGNALS (TV)

Type 1-A, 1-B, 1-C and 1-D standard as indicated on the plans

SIDE MOUNTED SIGNALS (SV AND SP)

Normally used on standards with luminaire or signal mast arm

LEFT TURN LANE SIGNAL

Type 1-A, 1-B, 1-C and 1-D standard as indicated on plans

TYPICAL SIGNAL INSTALLATIONS

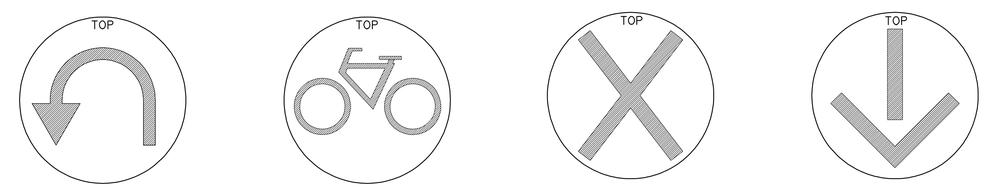

U-TURN SIGNAL FACE

BICYCLE SIGNAL FACE

LANE CONTROL SIGNAL FACE

LANE CONTROL SIGNAL FACE

STATE OF CALIFORNIA
DEPARTMENT OF TRANSPORTATION

ELECTRICAL SYSTEMS (SIGNAL HEADS AND MOUNTINGS)

NO SCALE

ALL DIMENSIONS ARE IN MILLIMETERS UNLESS OTHERWISE SHOWN

RSP ES-4C DATED JUNE 6, 2008 SUPERSEDES STANDARD PLAN ES-4C DATED July 1, 2004 - PAGE 433 OF THE STANDARD PLANS BOOK DATED July 2004.

REVISED STANDARD PLAN RSP ES-4C

2004 REVISED Std PLAN RSP ES-4C

5-19-08

DIST	COUNTY	ROUTE	KILOMETER POST TOTAL PROJECT	SHEET NO.	TOTAL SHEETS
11	SD	805	40.6/42.4	514	567

Caltrans Metric

Jeffery G. McRae
REGISTERED ELECTRICAL ENGINEER

June 6, 2008
PLANS APPROVAL DATE

REGISTERED PROFESSIONAL ENGINEER Jeffery G. McRae No. E14512 Exp. 6-30-10 ELECTRICAL STATE OF CALIFORNIA

The State of California or its officers or agents shall not be responsible for the accuracy or completeness of electronic copies of this plan sheet.

To get to the Caltrans web site, go to: http://www.dot.ca.gov

To accompany plans dated 6-14-10

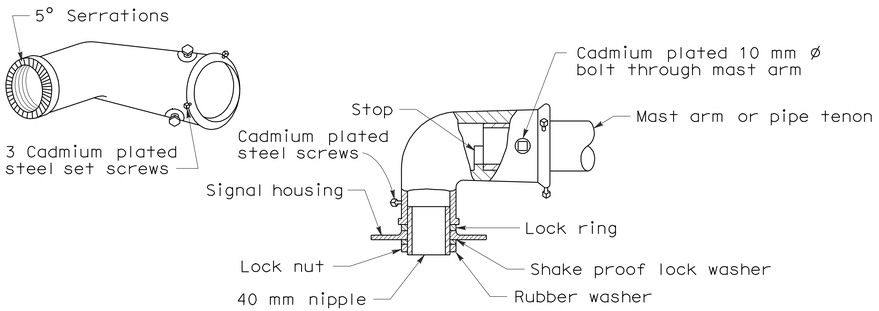

MAST ARM MOUNTING - TYPE "MAT"

For 2 NPS pipe, see Note 1.

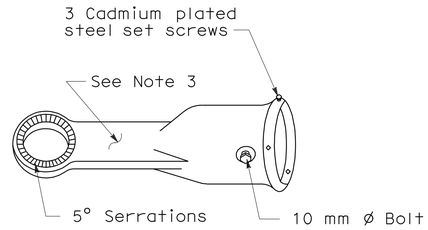

MAST ARM MOUNTING - TYPE "MAS"

For 2 NPS pipe. See Note 1.

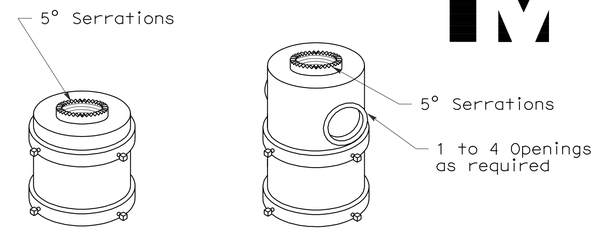

For one mounting For mulitiple mountings

TOP MOUNTINGS

For 4 NPS pipe, see Note 2.

SIGNAL SLIP FITTERS

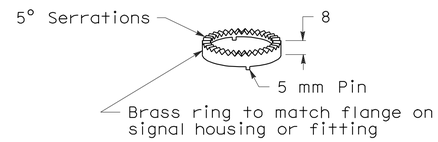

LOCK RING

Use where locking ring is not integral with signal housing or fitting.

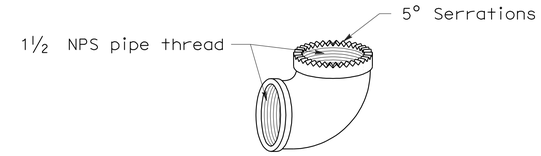

SPECIAL 90° ELBOW

One for each signal head, except those with special slip fitter mounting

MISCELLANEOUS MOUNTING HARDWARE

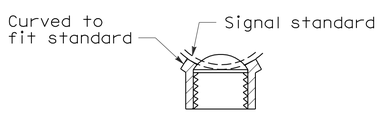

SECTION A-A

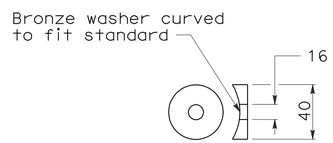

WASHER DETAIL "C"

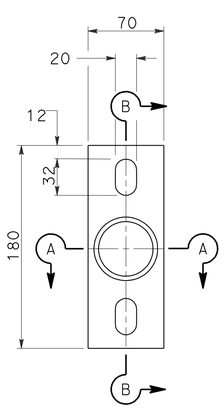

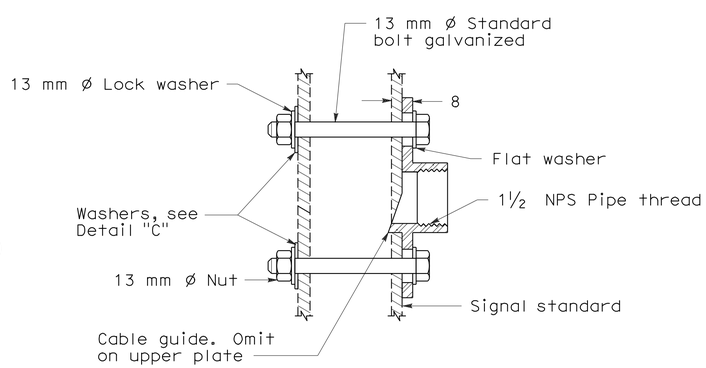

SECTION B-B

POLE PLATE

For side mountings

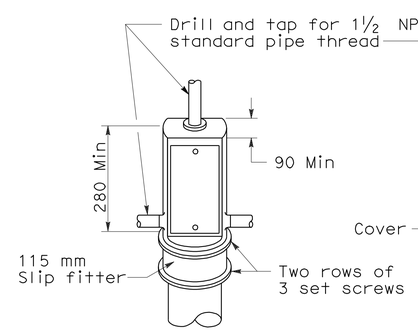

TOP MOUNTING

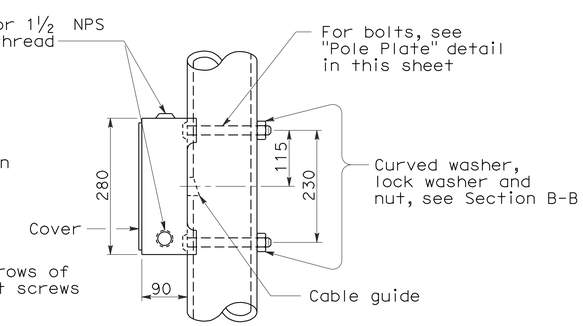

SIDE MOUNTING

TERMINAL COMPARTMENTS

NOTES

1. After mast arm signal has been plumbed and secured, drill 11 mm hole through mast arm tenon in line with slip fitter hole. Place a cadmium plated 10 mm ø galvanized bolt with washer under bolt head through hole and secure with washer, nut, and locknut. Seal openings between mast arm mountings and mast arm with mastic.
2. (a) Threaded top mounted slip fitter openings shall be 1½ NPS.
   (b) Serrations in fittings shall match those on bottom of signal heads or in lock ring.
   (c) Top opening shall be offset when backplate is used.
3. Wireway shall have a cross section area of 600 mm^2 minimum. Minimum width of 13 mm.

STATE OF CALIFORNIA
DEPARTMENT OF TRANSPORTATION

ELECTRICAL SYSTEMS (SIGNAL HEADS AND MOUNTINGS)

NO SCALE

ALL DIMENSIONS ARE IN MILLIMETERS UNLESS OTHERWISE SHOWN

RSP ES-4D DATED JUNE 6, 2008 SUPERSEDES STANDARD PLAN ES-4D DATED July 1, 2004 - PAGE 434 OF THE STANDARD PLANS BOOK DATED July 2004.

REVISED STANDARD PLAN RSP ES-4D

2004 REVISED Std PLAN RSP ES-4D

5-20-08

DIST	COUNTY	ROUTE	KILOMETER POST TOTAL PROJECT	SHEET NO.	TOTAL SHEETS
11	SD	805	40.6/42.4	515	567

Caltrans Metric

Jeffery G. McRae
REGISTERED ELECTRICAL ENGINEER

October 5, 2007
PLANS APPROVAL DATE

REGISTERED PROFESSIONAL ENGINEER Jeffery G. McRae No. E14512 Exp. 6-30-08 ELECTRICAL STATE OF CALIFORNIA

The State of California or its officers or agents shall not be responsible for the accuracy or completeness of electronic copies of this plan sheet.

To get to the Caltrans web site, go to: http://www.dot.ca.gov

To accompany plans dated 6-14-10

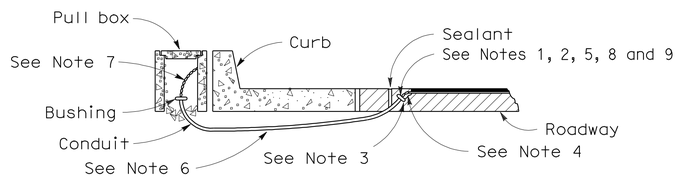

TYPE A
CURB TERMINATION DETAIL

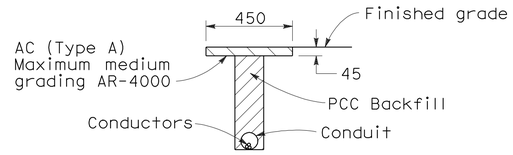

"T" TRENCH DETAIL

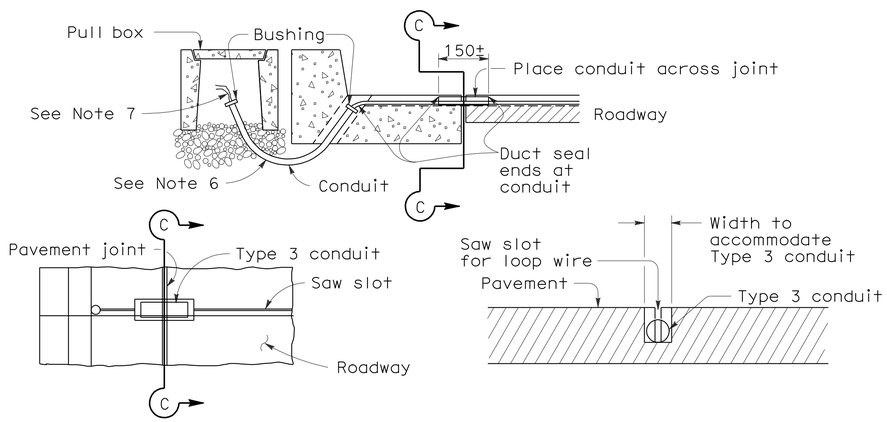

PLAN VIEW

SECTION C-C

TYPE B
CURB TERMINATION DETAILS

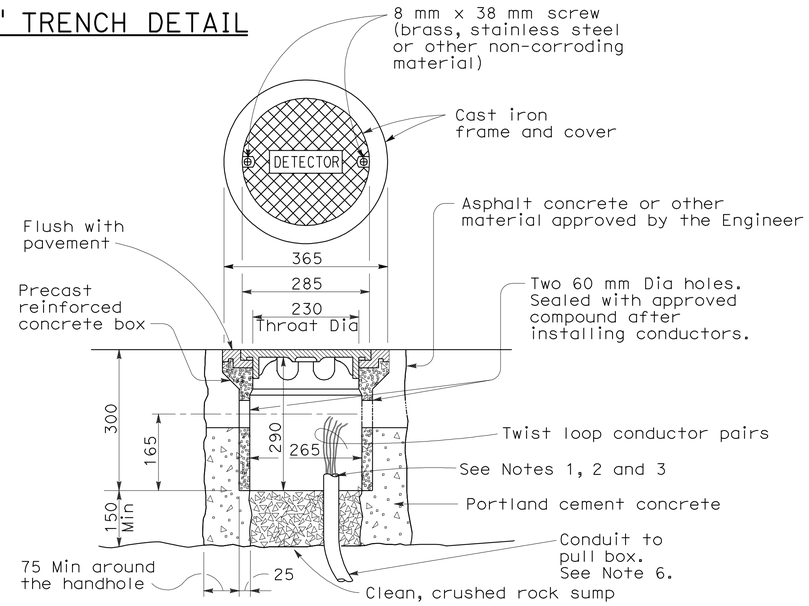

DETECTOR HANDHOLE DETAILS

NOTES (This sheet only):

1. Bushing shall be used at end of conduit.
2. Tape detector conductors or cables 75 mm each side of bushings.
3. Install duct seal compound to each end of termination conduit before installing sealant.
4. Round all sharp edges where detector conductors or cables have to pass.
5. End of conduit shall be 80 mm below roadway surface.
6. Conduit size / Loop Conductors
   - 27C Minimum — 1 to 2 pairs
   - 41C Minimum — 3 to 4 pairs
   - 53C Minimum — 5 or more pairs
7. Splice detector conductors or cables to lead-in-cable run to controller cabinet.
8. Location of detector handhole when shown on plans.
9. When the shoulder and traveled way are paved with the same material and there is no joint between them, the conduit shall extend only 600 mm into the shoulder pavement.

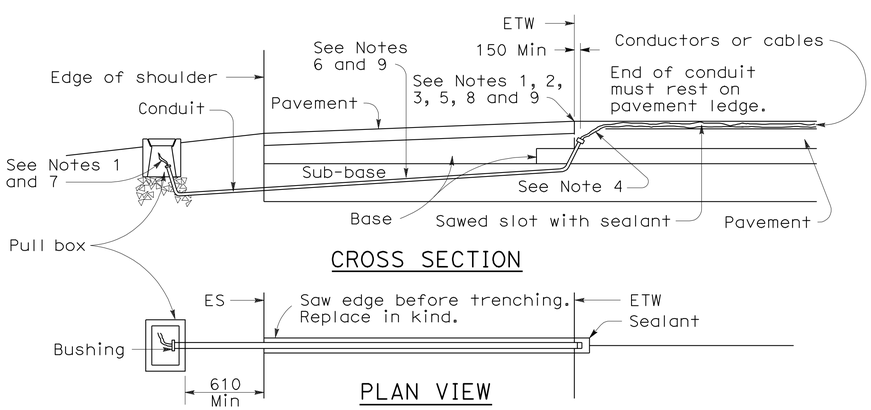

CROSS SECTION

PLAN VIEW

SHOULDER TERMINATION DETAILS

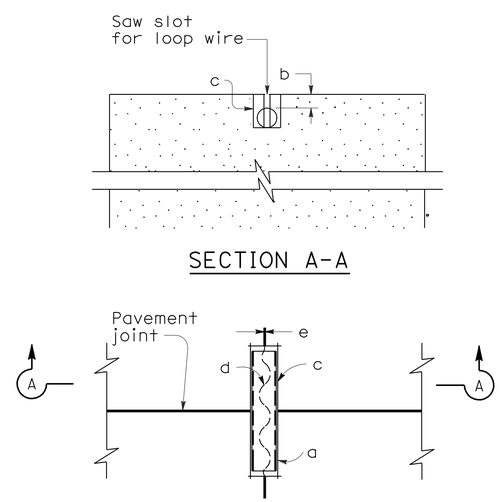

SECTION A-A

PLAN VIEW

TYPICAL LOOP LEAD-IN DETAILS AT PAVEMENT JOINT

NOTES:

a. 21C, Type 3 conduit 150 mm long minimum, plug both ends with caulking compound to keep out sealant.

b. 13 mm minimum between top of conduit and pavement surface.

c. Saw cut shall not exceed 25 mm in width and 3 mm longer than conduit to be installed.

d. Conductors with 13 mm minimum slack inside conduit.

e. Inductive loop detector saw slot.

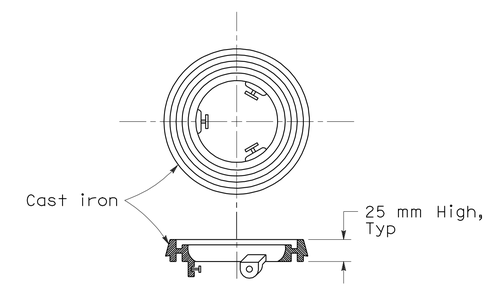

NOTE:

Use for Type A detector handhole on pavement resurfacing only.

LOCKING GRADE RING

STATE OF CALIFORNIA
DEPARTMENT OF TRANSPORTATION

ELECTRICAL SYSTEMS (DETECTORS)

NO SCALE

ALL DIMENSIONS ARE IN
MILLIMETERS UNLESS OTHERWISE SHOWN

RSP ES-5D DATED OCTOBER 5, 2007 SUPERSEDES STANDARD PLAN ES-5D
DATED JULY 1, 2004-PAGE 439 OF THE STANDARD PLANS BOOK DATED JULY 2004.

REVISED STANDARD PLAN RSP ES-5D

2004 REVISED Std PLAN RSP ES-5D

10-1-07

DIST	COUNTY	ROUTE	KILOMETER POST TOTAL PROJECT	SHEET NO.	TOTAL SHEETS
11	SD	805	40.6/42.4	516	567

REGISTERED CIVIL ENGINEER

October 5, 2007
PLANS APPROVAL DATE

REGISTERED PROFESSIONAL ENGINEER
Stanley P. Johnson
No. C57793
Exp. 03-31-08
CIVIL
STATE OF CALIFORNIA

The State of California or its officers or agents shall not be responsible for the accuracy or completeness of electronic copies of this plan sheet.

To get to the Caltrans web site, go to: http://www.dot.ca.gov

To accompany plans dated 6-14-10

2004 REVISED Std PLAN RSP ES-6A

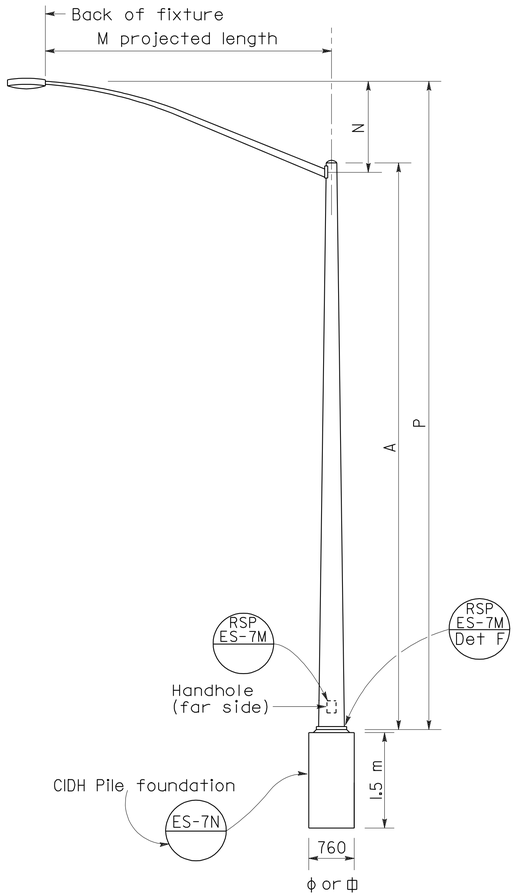

ELEVATION
TYPE 15 AND TYPE 21

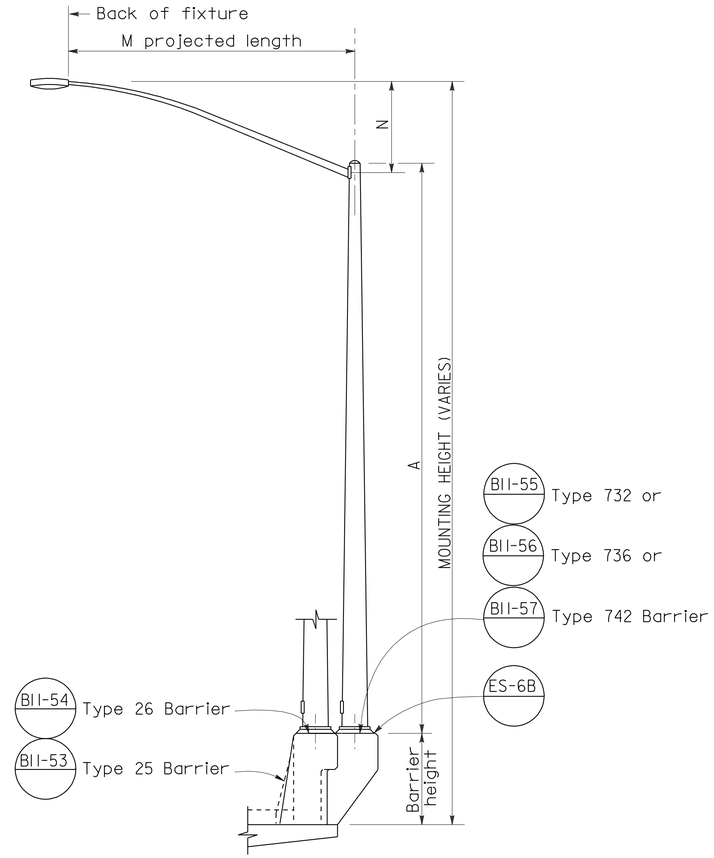

ELEVATION
TYPE 15 AND TYPE 21 BARRIER RAIL MOUNTED

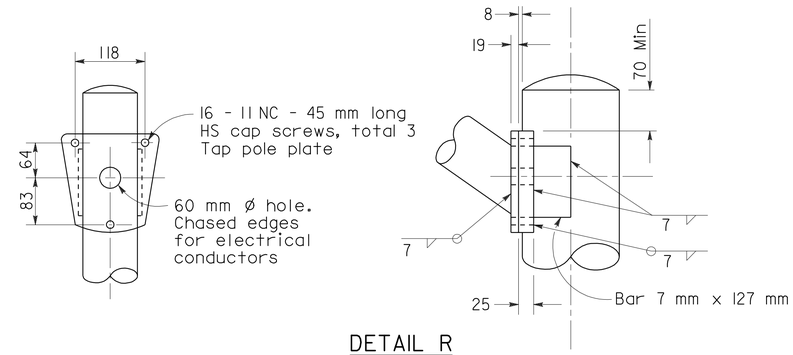

DETAIL R
LUMINAIRE ARM CONNECTION

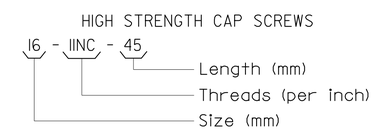

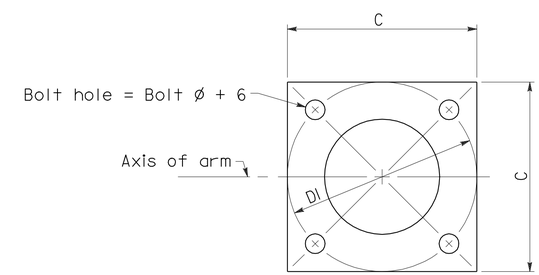

BASE PLATE

POLE TYPE	POLE DATA				BASE PLATE DATA				LUMINAIRE ARM
	A Height	Min OD Base	Min OD Top	Wall Thickness	C	DI Bolt Circle	Thick-ness	Anchor Bolts Size	
	m	mm	mm	mm	mm				m
15	9.1	203	98	3.04	305	305	25	25 ø x 915 x 102*	1.8-4.6 [3.7]
21	10.7	219	98	3.04	305	305	25	See ES-6B	1.8-4.6 [3.7]

*For barrier rail bolts, see Standard Plan ES-6B.

LUMINAIRE ARM DATA					
M Projected Length	N Rise	Min OD At Pole	Nominal Thickness	P Type 15	P Type 21
m	mm	mm	mm	m	m
1.8	610±	83	3.04	9.5±	11.2±
2.4	760±	89	3.04	9.7±	11.3±
3.1	990±	98	3.04	9.9±	11.5±
3.7	1290±	98	3.04	10.2±	11.8±
4.6	1450±	108	3.04	10.3±	11.9±

NOTES:

1. ☐ Indicates arm length to be used unless otherwise noted on the plans.
2. For Type 15-SB, use Type 15 standard with Type 30 base plate details, see Standard Plan ES-6F.
3. For additional notes, see Revised Standard Plan RSP ES-7M and ES-7N.

STATE OF CALIFORNIA
DEPARTMENT OF TRANSPORTATION

ELECTRICAL SYSTEMS (LIGHTING STANDARD TYPES 15 AND 21)

NO SCALE

ALL DIMENSIONS ARE IN MILLIMETERS UNLESS OTHERWISE SHOWN

RSP ES-6A DATED OCTOBER 5, 2007 SUPERSEDES STANDARD PLAN ES-6A DATED JULY 1, 2004-PAGE 440 OF THE STANDARD PLANS BOOK DATED JULY 2004.

REVISED STANDARD PLAN RSP ES-6A

6-20-07

DIST	COUNTY	ROUTE	KILOMETER POST TOTAL PROJECT	SHEET NO.	TOTAL SHEETS
11	SD	805	40.6/42.4	517	567

REGISTERED CIVIL ENGINEER

January 18, 2008
PLANS APPROVAL DATE

REGISTERED PROFESSIONAL ENGINEER Stanley P. Johnson No. C57793 Exp. 03-31-08 CIVIL STATE OF CALIFORNIA

The State of California or its officers or agents shall not be responsible for the accuracy or completeness of electronic copies of this plan sheet.

To get to the Caltrans web site, go to: http://www.dot.ca.gov

To accompany plans dated 6-14-10

LUMINAIRE ARM DATA

	PROJECTED LENGTH	THICKNESS	MINIMUM OD @ POLE	MOUNTING HEIGHT
	m	mm	mm	m
*	1.8	3.04	83	11.2±
	2.4		89	11.4±
	3.1		95	11.6±
	3.7		95	11.9±
	4.6		108	12.0±
**	6.1	4.55	127	11.3±

* Type 30 - arm length 1.8 m - 4.6 m maximum

** Type 31 - arm lengths 6.1 m

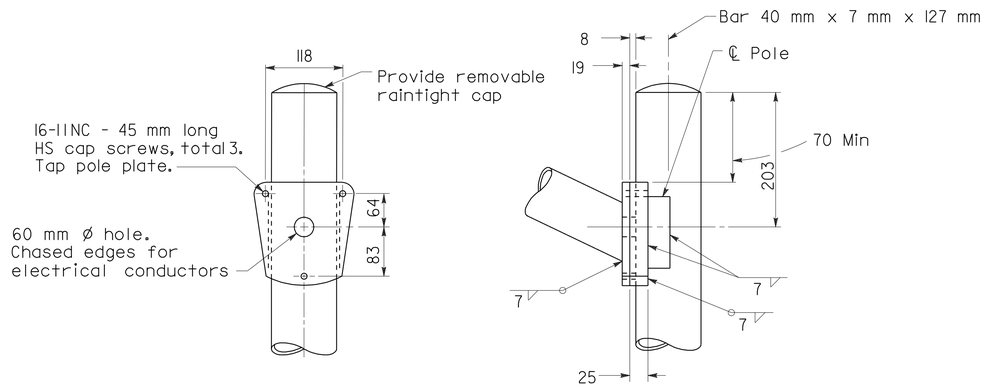

DETAIL A - TYPE 30

HIGH STRENGTH CAP SCREWS

16 - 11NC - 45
- Length (mm)
- Threads (per inch)
- Size (mm)

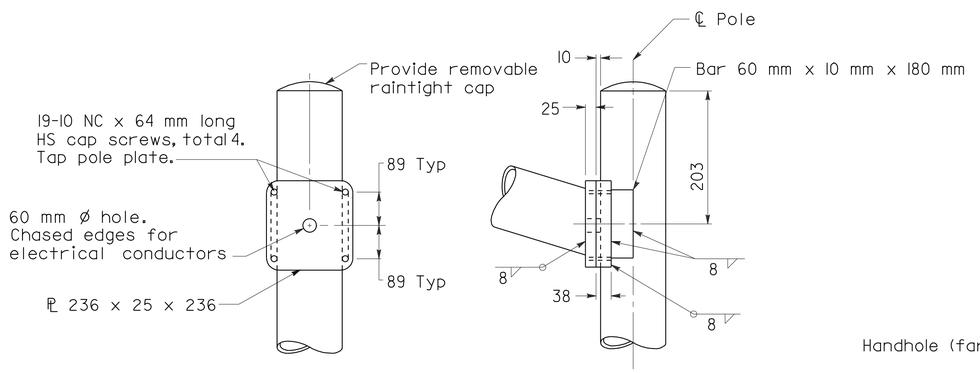

DETAIL A - TYPE 31

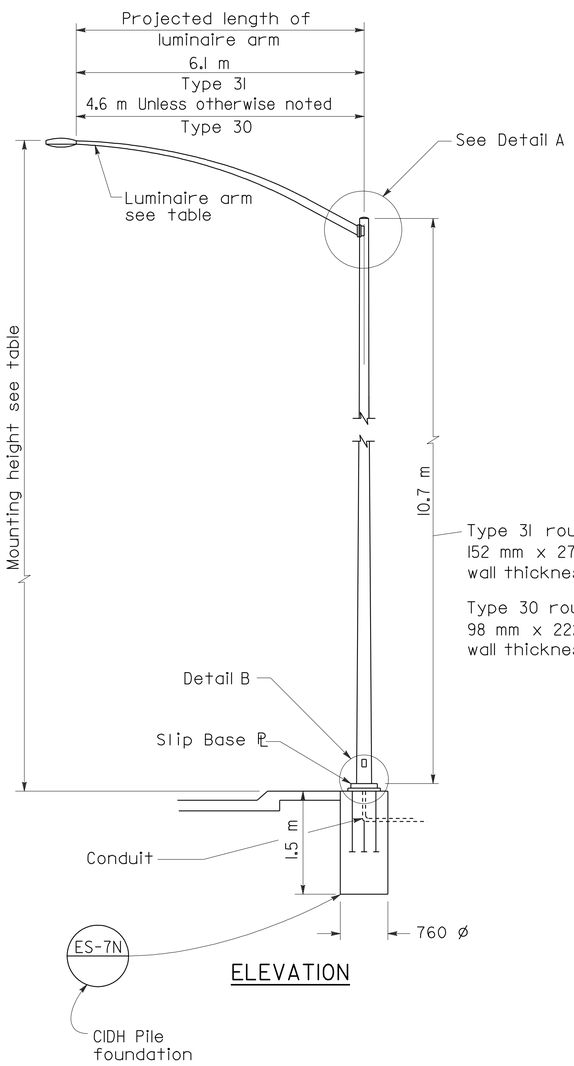

ELEVATION

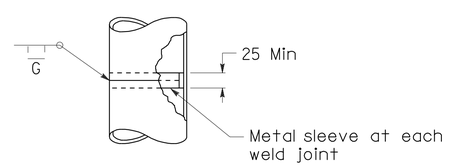

POLE SPLICE

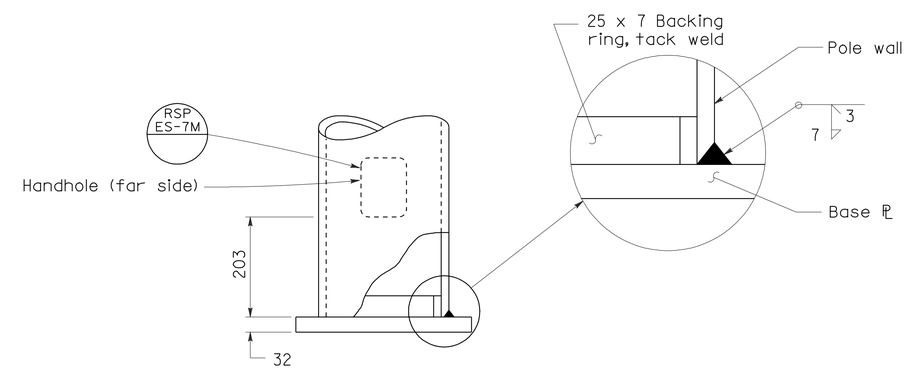

DETAIL B

NOTES:

1. Sheet steel shall have a minimum yield of 330 MPa.
2. For slip base details see Standard Plan ES-6F.
3. For Type 30 fixed base use Type 15 base plate, and foundation shown on Revised Standard Plan RSP ES-6A. Use 32 Dia x 915 x 104 anchor bolts
4. For Type 31 fixed base use Type 32 base plate, anchor bolts and foundation on Standard Plan ES-6G.
5. Handhole shall be located on downstream side of traffic unless noted otherwise on plans.
6. For additional general notes refer to Revised Standard Plan RSP ES-7M.

STATE OF CALIFORNIA
DEPARTMENT OF TRANSPORTATION

ELECTRICAL SYSTEMS (LIGHTING STANDARDS TYPES 30 AND 31

NO SCALE

ALL DIMENSIONS ARE IN MILLIMETERS UNLESS OTHERWISE SHOWN

RSP ES-6E DATED JANUARY 18, 2008 SUPERSEDES RSP ES-6E DATED JANUARY 218, 2005 AND STANDARD PLAN ES-6E DATED JULY 1, 2004-PAGE 444 OF THE STANDARD PLANS BOOK DATED JULY 2004.

REVISED STANDARD PLAN RSP ES-6E

2004 REVISED Std PLAN RSP ES-6E

11-19-07

DIST	COUNTY	ROUTE	KILOMETER POST TOTAL PROJECT	SHEET NO.	TOTAL SHEETS
11	SD	805	40.6/42.4	518	567

Caltrans Metric

REGISTERED CIVIL ENGINEER

October 5, 2007
PLANS APPROVAL DATE

REGISTERED PROFESSIONAL ENGINEER
Stanley P. Johnson
No. C57793
Exp. 3-31-08
CIVIL
STATE OF CALIFORNIA

The State of California or its officers or agents shall not be responsible for the accuracy or completeness of electronic copies of this plan sheet.

To get to the Caltrans web site, go to: http://www.dot.ca.gov

To accompany plans dated 6-14-10

LUMINAIRE ARM DATA			
M Projected Length	N Rise	Min OD At Pole	Nominal Thickness
m	mm	mm	mm
4.6	1450±	108	3.04
6.1	750±	127	4.55

Pole Extension Type	Pole Data			
	Height "H" (m)	Min OD (mm)		Thickness (mm)
		BASE	TOP	
Type 5	1.5	165	152	4.55
Type 10	3.0	184	152	4.55

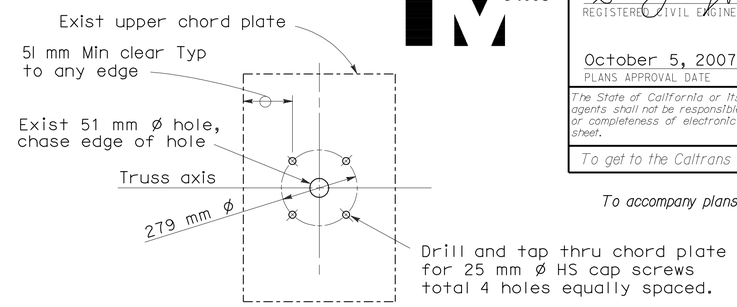

UPPER CHORD PLATE

RSP S13

HIGH STRENGTH CAP SCREWS

16 - 11NC - 45
- Length (mm)
- Threads (per inch)
- Size (mm)

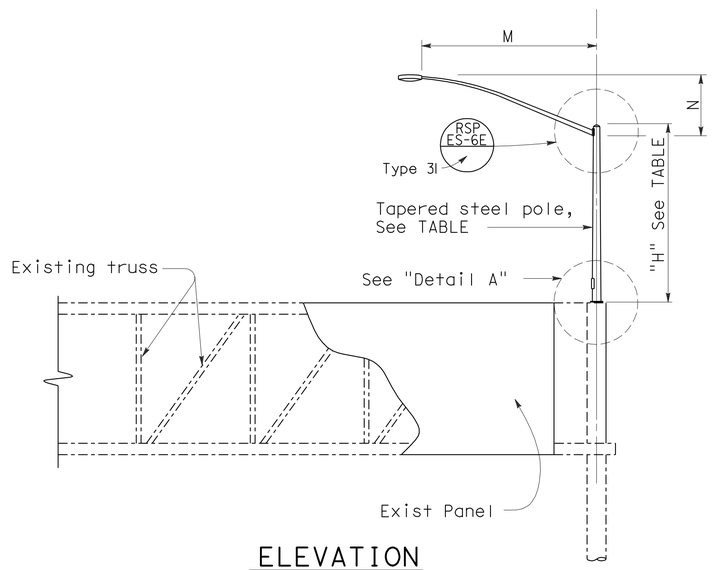

ELEVATION

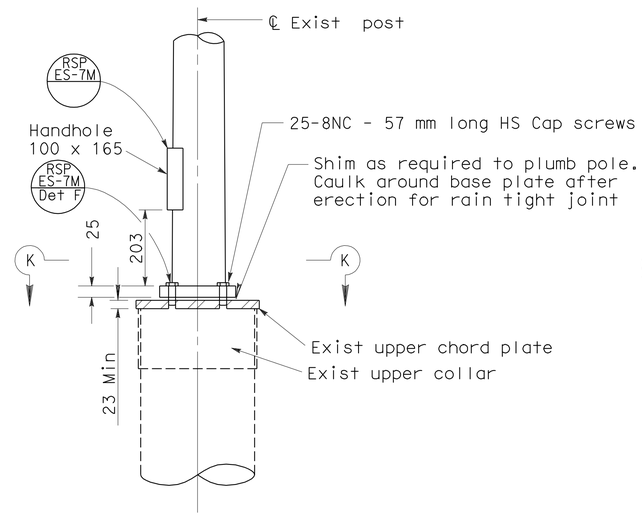

DETAIL A

GENERAL NOTES:

SPECIFICATIONS

Design : AASHTO Standard specifications for structural supports for highway signs, luminaires and traffic signals, dated 2001

LOADING

Wind Loadings : 129 km/h

UNIT STRESSES

Structural Steel : fy = 330 MPa tapered steel tube (Pole)
fy = 250 MPa unless otherwise noted

NOTES:

1. The Contractor shall verify all controlling field dimensions before ordering or fabricating any material.
2. All steel shall be galvanized after fabrication.
3. Bolt hole locations may vary at the discretion of the Engineer.

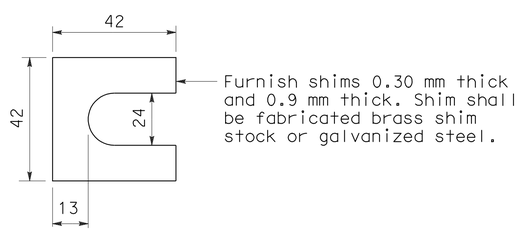

SHIM DETAIL

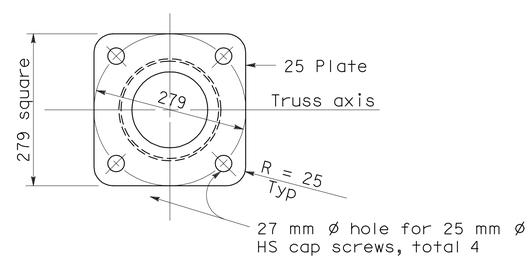

SECTION K-K

STATE OF CALIFORNIA
DEPARTMENT OF TRANSPORTATION

ELECTRICAL SYSTEMS (LIGHTING STANDARDS TYPE 5 AND TYPE 10 OVERHEAD SIGN MOUNTED)

NO SCALE

ALL DIMENSIONS ARE IN MILLIMETERS UNLESS OTHERWISE SHOWN

RSP ES-6K DATED OCTOBER 5, 2007 SUPERSEDES RSP ES-6K DATED JANUARY 24, 2005 AND STANDARD PLAN ES-6K DATED JULY 1, 2004-PAGE 450 OF THE STANDARD PLANS BOOK DATED JULY 2004.

REVISED STANDARD PLAN RSP ES-6K

2004 REVISED Std PLAN RSP ES-6K

9-13-07

DIST	COUNTY	ROUTE	KILOMETER POST TOTAL PROJECT	SHEET NO.	TOTAL SHEETS
11	SD	805	40.6/42.4	519	567

REGISTERED CIVIL ENGINEER

January 24, 2005
PLANS APPROVAL DATE

REGISTERED PROFESSIONAL ENGINEER
Tillat Sattar
No. C42892
Exp. 03-31-06
CIVIL
STATE OF CALIFORNIA

The State of California or its officers or agents shall not be responsible for the accuracy or completeness of electronic copies of this plan sheet.

To get to the Caltrans web site, go to: http://www.dot.ca.gov

To accompany plans dated 6-14-10

2004 REVISED Std PLAN RSP ES-7A

NOTES:

1. Pipe dimensions for pedestrian push button post are nominal. See ASTM A6M.
2. For additional details and data for Type 15TS Standard, see Standard Plan ES-6A.

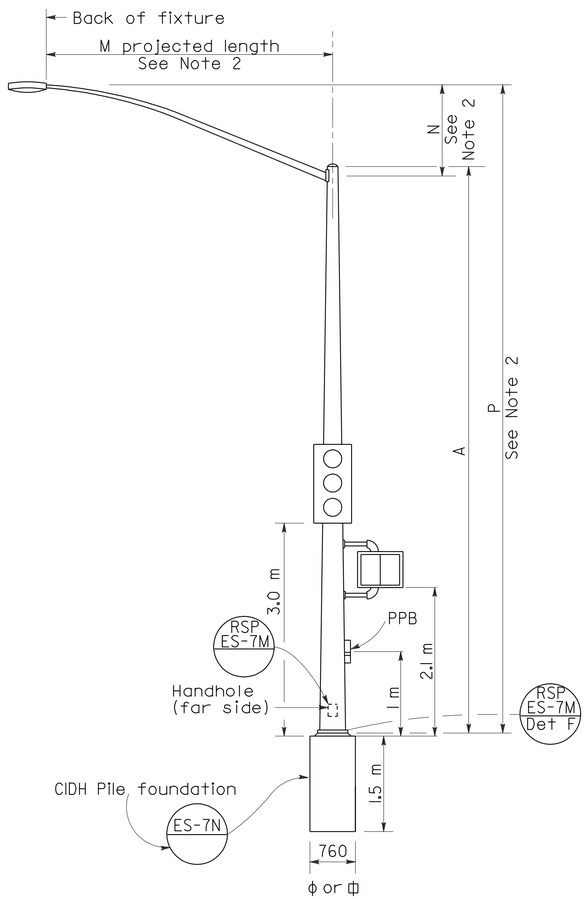

ELEVATION
TYPE 15TS STANDARD
See Note 2

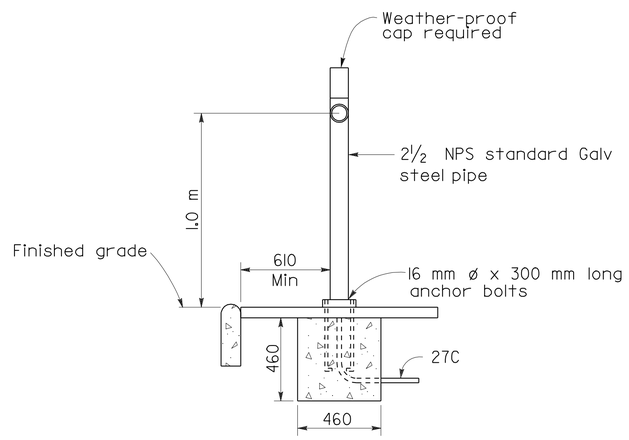

ELEVATION

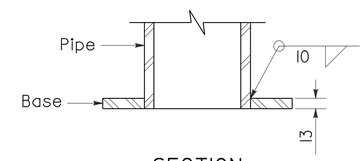

SECTION

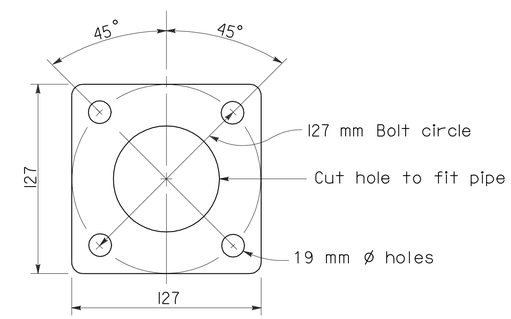

BASE PLATE
PPB POST

PEDESTRIAN PUSH BUTTON POST

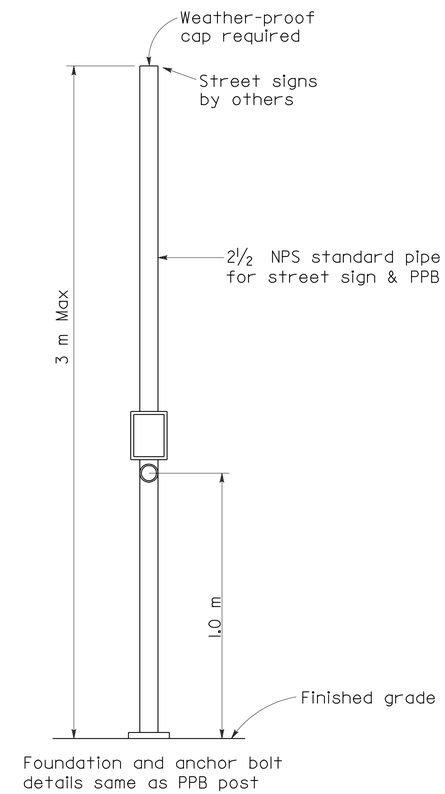

COMBINED STREET SIGN
PEDESTRIAN PUSH BUTTON POST

TYPE 15TS STANDARD (See Note 2)

POLE DATA				BASE PLATE DATA			
A Height	Min OD Base	Min OD Top	Wall Thickness	C	DI Bolt Circle	Thick-ness	Anchor Bolts Size
m	mm	mm	mm	mm			
9.1	203	98	4.55	305	305	25	32 ø x 915 x 152

STATE OF CALIFORNIA
DEPARTMENT OF TRANSPORTATION

ELECTRICAL SYSTEMS (SIGNAL STANDARDS PUSH BUTTON POSTS AND TYPE 15TS STANDARD)

NO SCALE

ALL DIMENSIONS ARE IN MILLIMETERS UNLESS OTHERWISE SHOWN

RSP ES-7A DATED JANUARY 24, 2005 SUPERSEDES STANDARD PLAN ES-7A DATED JULY 1, 2004-PAGE 451 OF THE STANDARD PLANS BOOK DATED JULY 2004.

REVISED STANDARD PLAN RSP ES-7A

DIST	COUNTY	ROUTE	KILOMETER POST TOTAL PROJECT	SHEET NO.	TOTAL SHEETS
11	SD	805	40.6/42.4	520	567

REGISTERED CIVIL ENGINEER

October 5, 2007
PLANS APPROVAL DATE

REGISTERED PROFESSIONAL ENGINEER Stanley P. Johnson No. C57793 Exp. 03-31-08 CIVIL STATE OF CALIFORNIA

The State of California or its officers or agents shall not be responsible for the accuracy or completeness of electronic copies of this plan sheet.

To get to the Caltrans web site, go to: http://www.dot.ca.gov

Caltrans Metric

To accompany plans dated 6-14-10

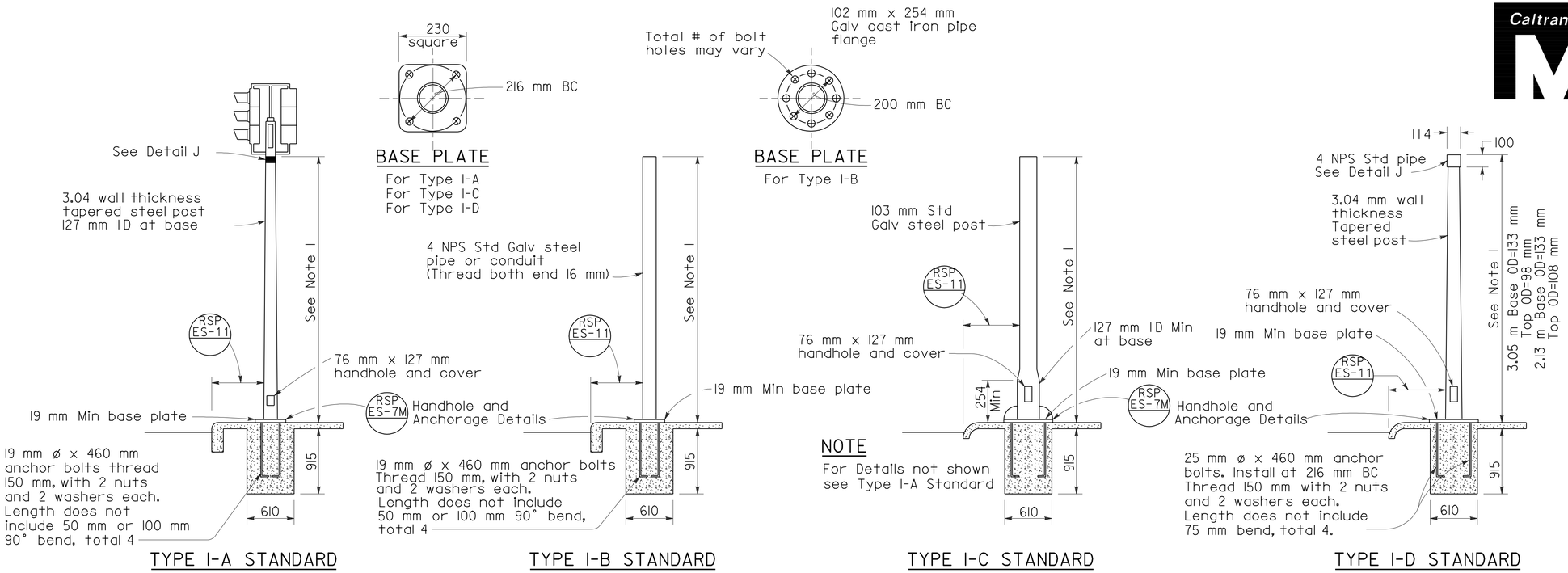

TYPE I SIGNAL STANDARDS

NOTES:

1. Standards shall be 3.05 m± 50 mm for vehicle signals and 2.13 m± 50 mm for pedestrian signals unless otherwise noted on plans.
2. Top of standards shall be 114 mm OD.
3. Conduits shall extend 50 mm maximum above finished surface of foundation and for Types I-A, I-C and I-D shall be sloped toward handhole.
4. Anchor bolts shall be bonded to conduit or grounding conductor.
5. Conduit between standard and adjacent pull box shall be Size 53 minimum.
6. Paint numbers on roadway side facing traffic when electrolier or post is left of direction of traffic.

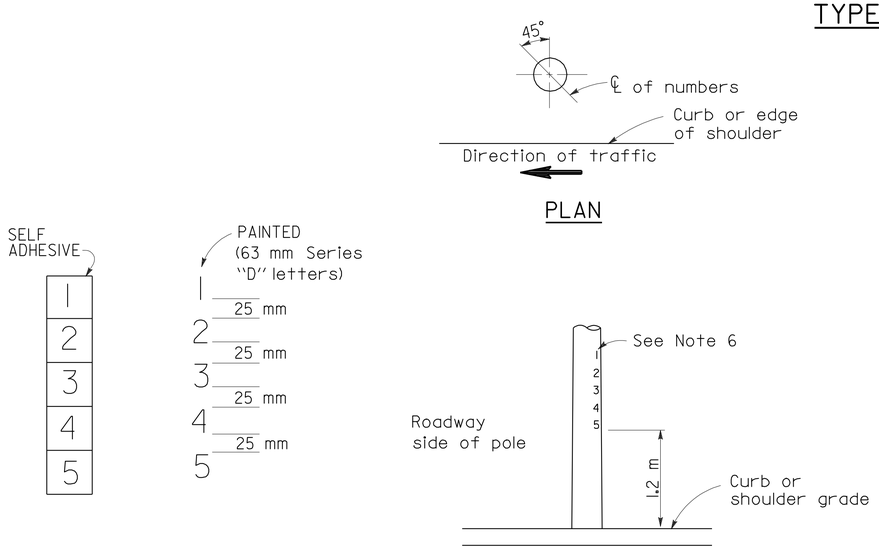

LOCATION OF EQUIPMENT NUMBERS ON STANDARDS AND POSTS

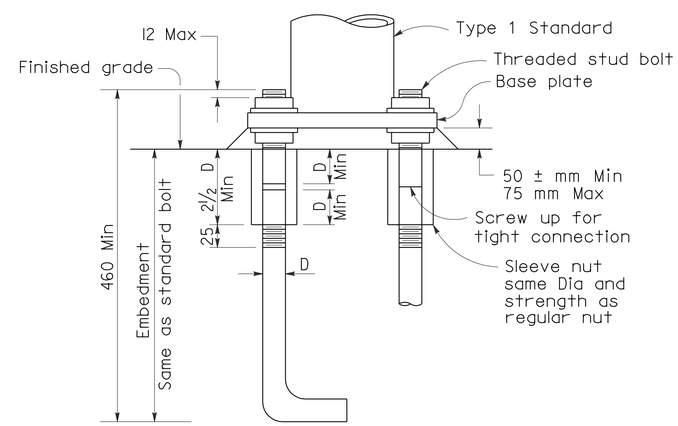

ANCHOR BOLTS WITH SLEEVE NUTS

Sleeve nuts to be used only when shown or specified on Project Plans
D = Diameter of anchor bolt

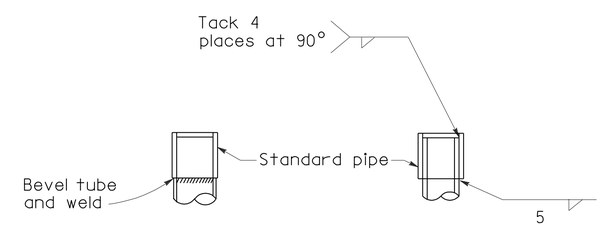

DETAIL J

Tube may be inserted into pipe or butted as required

STATE OF CALIFORNIA
DEPARTMENT OF TRANSPORTATION

ELECTRICAL SYSTEM (SIGNAL AND LIGHTING STANDARD TYPE 1 STANDARDS AND EQUIPMENT NUMBERING)

NO SCALE

ALL DIMENSIONS ARE IN MILLIMETERS UNLESS OTHERWISE SHOWN

RSP ES-7B DATED OCTOBER 5, 2007 SUPERSEDES STANDARD PLAN ES-7B DATED JULY 1, 2004-PAGE 452 OF THE STANDARD PLANS BOOK DATED JULY 2004.

REVISED STANDARD PLAN RSP ES-7B

2004 REVISED Std PLAN RSP ES-7B

10-1-07

DIST	COUNTY	ROUTE	KILOMETER POST TOTAL PROJECT	SHEET NO.	TOTAL SHEETS
11	SD	805	40.6/42.4	521	567

REGISTERED CIVIL ENGINEER

October 5, 2007
PLANS APPROVAL DATE

Registered Professional Engineer — Stanley P. Johnson, No. C57793, Exp. 03-31-08, CIVIL, State of California

The State of California or its officers or agents shall not be responsible for the accuracy or completeness of electronic copies of this plan sheet.

To get to the Caltrans web site, go to: http://www.dot.ca.gov

To accompany plans dated 6-14-10

Caltrans Metric

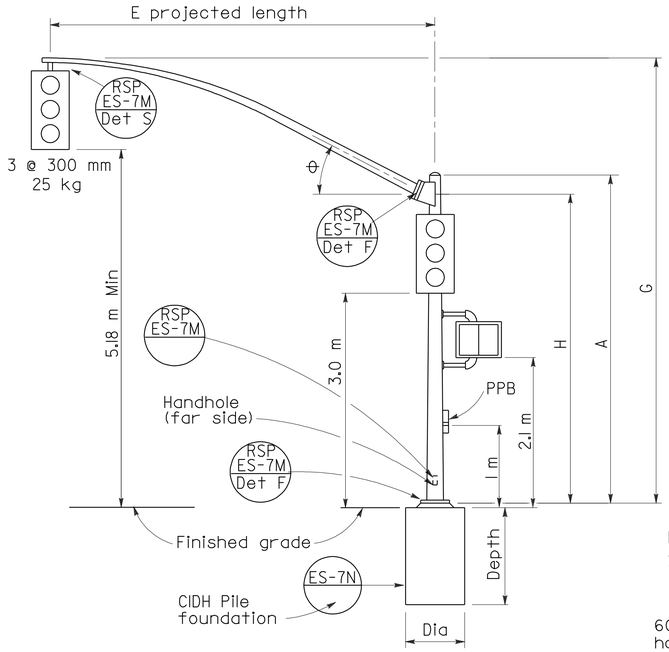

ELEVATION

TYPE 16-1-161, 18-1-161

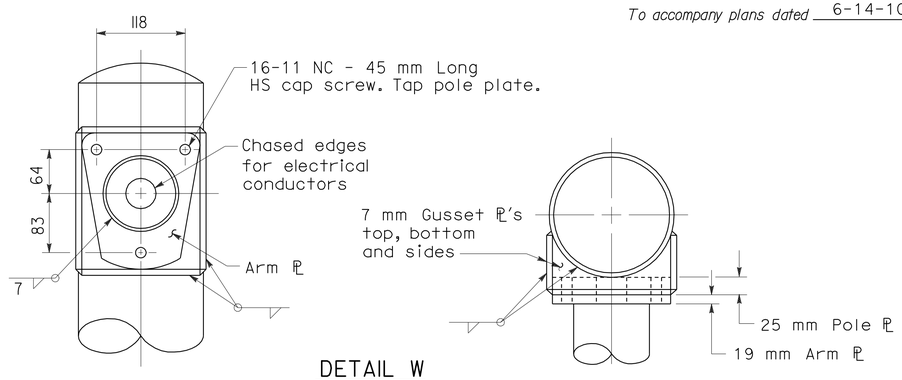

DETAIL W

LUMINAIRE ARM CONNECTION

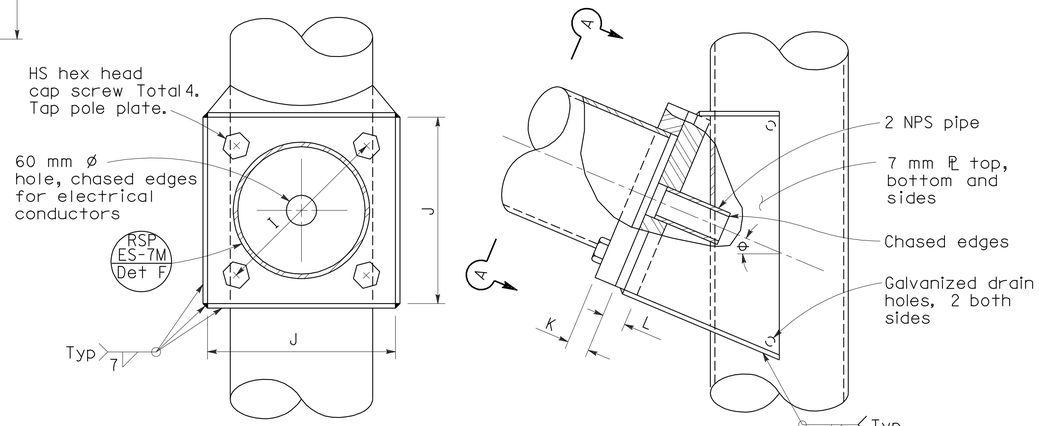

SECTION A-A

ELEVATION

SIGNAL ARM CONNECTION DETAILS

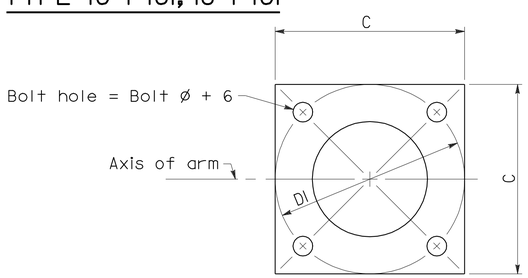

BASE PLATE

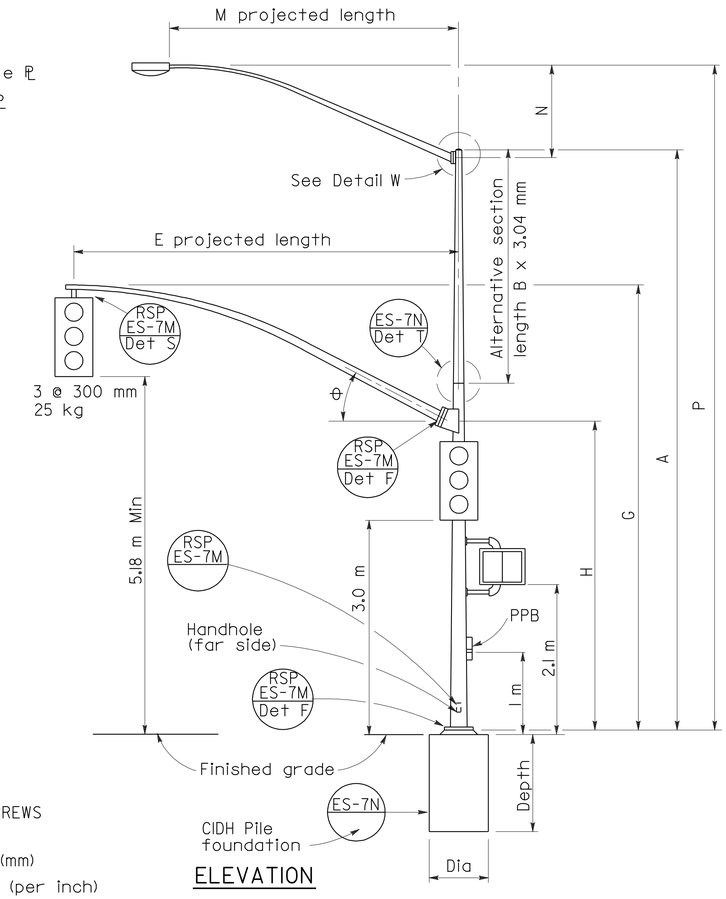

ELEVATION

TYPE 19-1-161, 19A-1-161

HIGH STRENGTH CAP SCREWS

16 - 11NC - 45
- Length (mm)
- Threads (per inch)
- Size (mm)

SIGNAL ARM DATA										
E Projected Length	G Mounting Height	H	Min OD At Pole	Thickness	I Bolt Circle	HS Cap Screws	J Plate Size	K Arm ℙ Thickness	L Pole ℙ Thickness	θ
m			mm							
4.6	6.6 ±	5.3	178	3.04	305	32-7NC-76	305	32	38	23°
6.1	6.6 ±		181							
7.6	6.9 ±	4.9	186							
9.1	7.0 ±		203							

LUMINAIRE ARM DATA					
M Projected Length	N Rise	Min OD at Pole	Thickness	P Mounting Height 9.1 Pole	P Mounting Height 10.7 Pole
m	mm			m	
1.8	610 ±	83	3.04	9.5 ±	11.1 ±
2.4	760 ±	89		9.7 ±	11.3 ±
3.1	990 ±	98		9.9 ±	11.5 ±
3.7	1290 ±			10.2 ±	11.8 ±
4.6	1450 ±	108		10.4 ±	12.0 ±

Pole Type	Load Case	Wind Velocity km/h	POLE DATA: A Height	Min OD Base	Min OD Top	Thickness	Alternative Section B Length	Alternative Section Bottom	Alternative Section Top	BASE PLATE DATA: C	DI Bolt Circle	Thickness	Anchor Bolts Size	Luminaire Arm	Signal Arm	CIDH PILE FOUNDATION: Diameter	Depth	Reinforced
			m	mm			m	mm		mm				m		mm	m	
16-1-161	1	161	5.6	273	210	4.55	None			457	445	32	38 ø x 925 x 152	None	4.6, 6.1	760	2.2	Yes
18-1-161			5.2		214		None							None				
19-1-161			9.1		168		3.0	203	168					1.8-4.6 [3.7]	7.6, 9.1			
19A-1-161			10.7		151		4.6		151					1.8-4.6 [4.6]				

☐ Indicates arm length to be used unless otherwise noted on plans.

STATE OF CALIFORNIA
DEPARTMENT OF TRANSPORTATION

ELECTRICAL SYSTEMS (SIGNAL AND LIGHTING STANDARD CASE 1 ARM LOADING WIND VELOCITY=161 km/h ARM LENGTHS 4.6 m TO 9.1 m)

NO SCALE

ALL DIMENSIONS ARE IN MILLIMETERS UNLESS OTHERWISE SHOWN

RSP ES-7C DATED OCTOBER 5, 2007 SUPERSEDES
RSP ES-7C DATED JANUARY 24, 2005 AND STANDARD PLAN ES-7C
DATED JULY 1, 2004-PAGE 453 OF THE STANDARD PLANS BOOK DATED JULY 2004.

REVISED STANDARD PLAN RSP ES-7C

2004 REVISED Std PLAN RSP ES-7C

6-19-07

DIST	COUNTY	ROUTE	KILOMETER POST TOTAL PROJECT	SHEET NO.	TOTAL SHEETS
11	SD	805	40.6/42.4	522	567

REGISTERED CIVIL ENGINEER

October 5, 2007
PLANS APPROVAL DATE

REGISTERED PROFESSIONAL ENGINEER Stanley P. Johnson No. C57793 Exp. 03-31-08 CIVIL STATE OF CALIFORNIA

The State of California or its officers or agents shall not be responsible for the accuracy or completeness of electronic copies of this plan sheet.

To get to the Caltrans web site, go to: http://www.dot.ca.gov

To accompany plans dated 6-14-10

Caltrans Metric

2004 REVISED Std PLAN RSP ES-7D

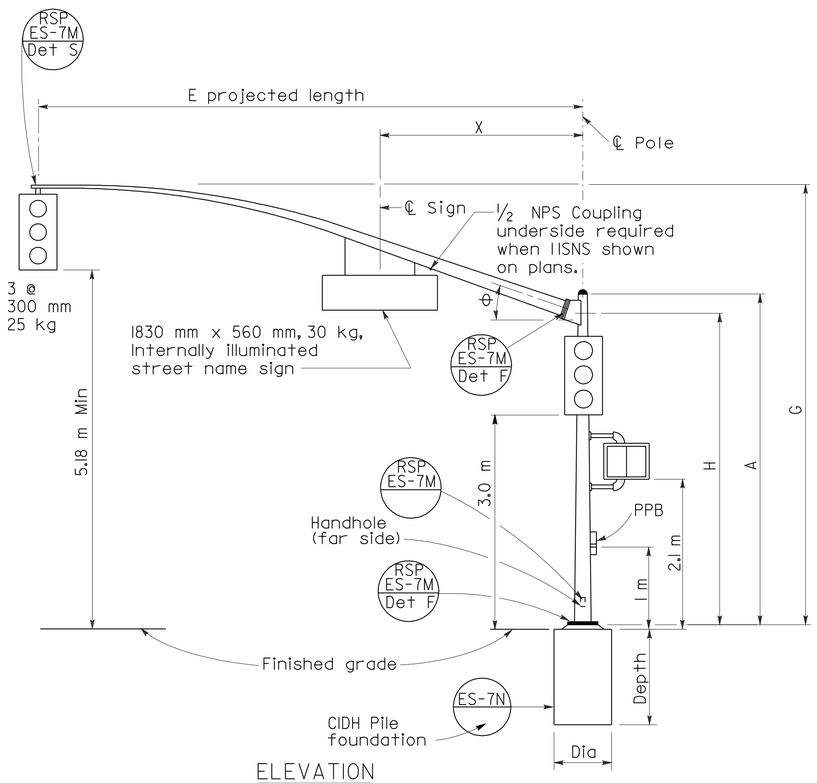

ELEVATION

TYPE 16-2-161, 18-2-161

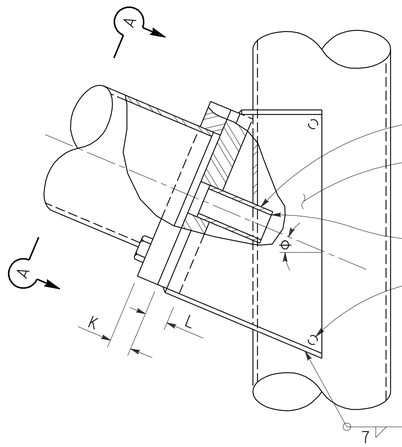

ELEVATION

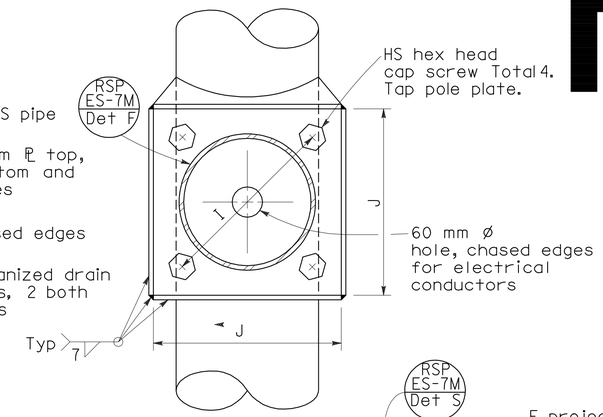

SECTION A-A

SIGNAL ARM CONNECTION DETAILS

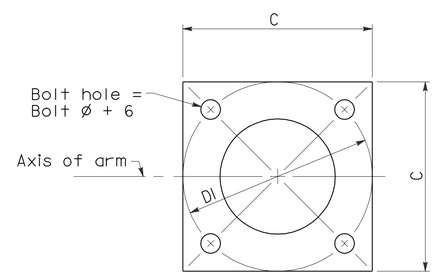

BASE PLATE

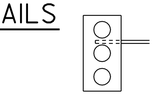

Required for Type 17-2-161 Type 17A-2-161

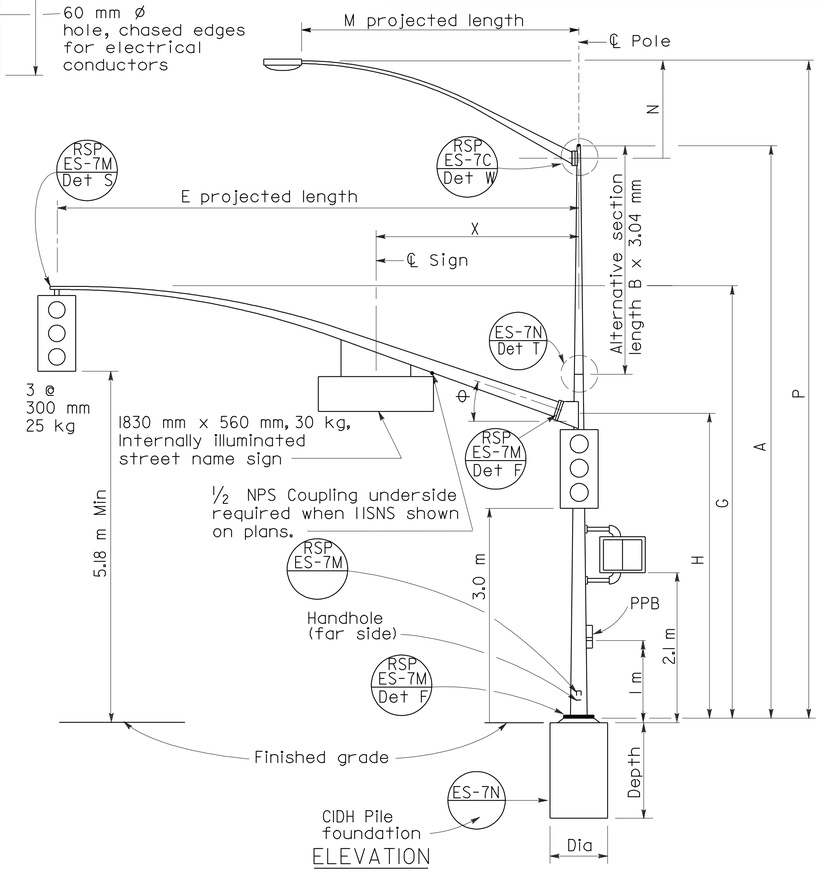

ELEVATION

TYPE 17-2-161, 17A-2-161, 19-2-161, 19A-2-161

SIGNAL ARM DATA											
E Projected Length	G Mounting Height	H	Min OD At Pole	Thickness	I Bolt Circle	HS Cap Screws	J Plate Size	K Arm ℙ Thickness	L Pole ℙ Thickness	⊖	X Max
m			mm								m
4.6	6.6 ±	5.3	168	4.55	305	32-7NC-76	305	32	38	23°	3.2
6.1	6.6 ±		168								
7.6	6.9 ±	4.9	186								
9.1	7.0 ±		203								

LUMINAIRE ARM DATA					
M Projected Length	N Rise	Min OD at Pole	Thickness	P Mounting Height 9.1 Pole	P Mounting Height 10.7 Pole
m	mm			m	
1.8	610 ±	83	3.04	9.5 ±	11.1 ±
2.4	760 ±	89		9.7 ±	11.3 ±
3.1	990 ±	98		9.9 ±	11.5 ±
3.7	1290 ±			10.2 ±	11.8 ±
4.6	1450 ±	108		10.4 ±	12.0 ±

HIGH STRENGTH CAP SCREWS

16 - 11NC - 45

- Length (mm)
- Threads (per inch)
- Size (mm)

Pole Type	Load Case	Wind Velocity km/h	POLE DATA A Height	Min OD Base	Min OD Top	Thickness	Alternative Section B Length	Alternative Section Bottom	Alternative Section Top	BASE PLATE DATA C	DI Bolt Circle	Thickness	Anchor Bolts Size	Luminaire Arm	Signal Arm	CIDH PILE FOUNDATION Diameter	Depth	Reinforced
			m	mm			m	mm		mm				m		mm	m	
16-2-161	2	161	5.6	273	210	4.55	None	203	168	457	445	38	51 ø x 1067 x 152	None	4.6, 6.1	760	2.2	Yes
17-2-161			9.1		168		3.0							1.8-4.6 [3.7]				
17A-2-161			10.7		151		4.6		151					1.8-4.6 [4.6]				
18-2-161			5.2		214		None							None	7.6, 9.1			
19-2-161			9.1		168	6.07	3.0	203	168					1.8-4.6 [3.7]				
19A-2-161			10.7		151		4.6		151					1.8-4.6 [4.6]				

☐ Indicates arm length to be used unless otherwise noted on plans.

STATE OF CALIFORNIA
DEPARTMENT OF TRANSPORTATION

ELECTRICAL SYSTEMS (SIGNAL AND LIGHTING STANDARD CASE 2 ARM LOADING WIND VELOCITY=161 km/h ARM LENGTHS 4.6 m TO 9.1 m)

NO SCALE

ALL DIMENSIONS ARE IN MILLIMETERS UNLESS OTHERWISE SHOWN

RSP ES-7D DATED OCTOBER 5, 2007 SUPERSEDES RSP ES-7D DATED JANUARY 24, 2005 AND STANDARD PLAN ES-7D DATED JULY 1, 2004-PAGE 454 OF THE STANDARD PLANS BOOK DATED JULY 2004.

REVISED STANDARD PLAN RSP ES-7D

6-19-07

DIST	COUNTY	ROUTE	KILOMETER POST TOTAL PROJECT	SHEET NO.	TOTAL SHEETS
11	SD	805	40.6/42.4	523	567

REGISTERED CIVIL ENGINEER

October 5, 2007
PLANS APPROVAL DATE

REGISTERED PROFESSIONAL ENGINEER Stanley P. Johnson No. C57793 Exp. 03-31-08 CIVIL STATE OF CALIFORNIA

The State of California or its officers or agents shall not be responsible for the accuracy or completeness of electronic copies of this plan sheet.

To get to the Caltrans web site, go to: http://www.dot.ca.gov

Caltrans Metric

To accompany plans dated 6-14-10

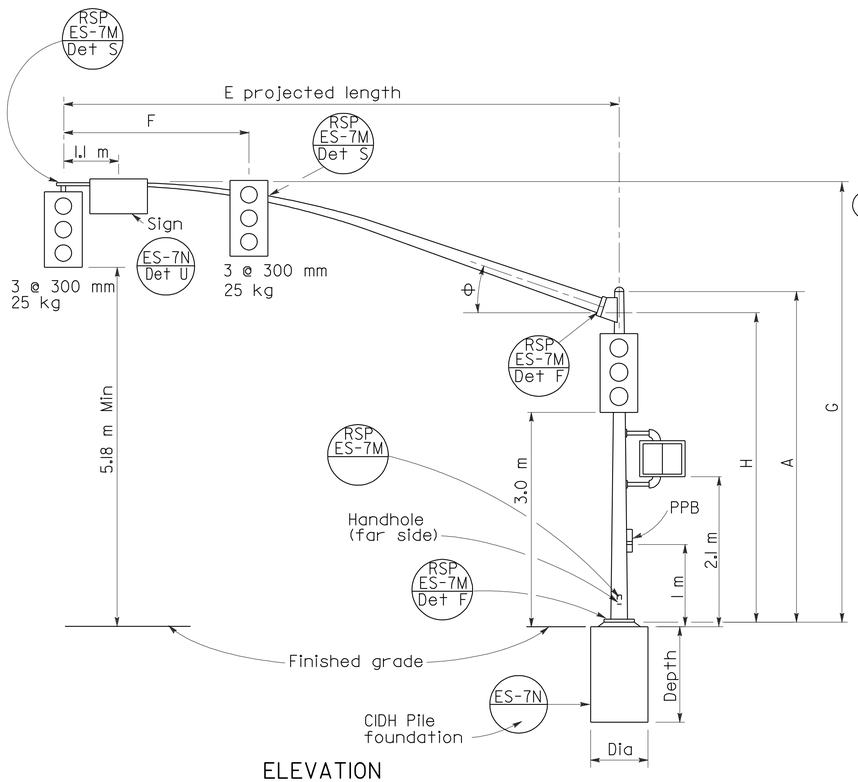

ELEVATION

TYPE 16-3-161, 18-3-161, 23-3-161, 27-3-161

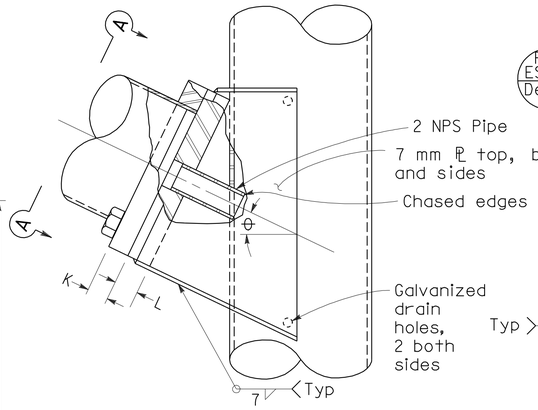

ELEVATION

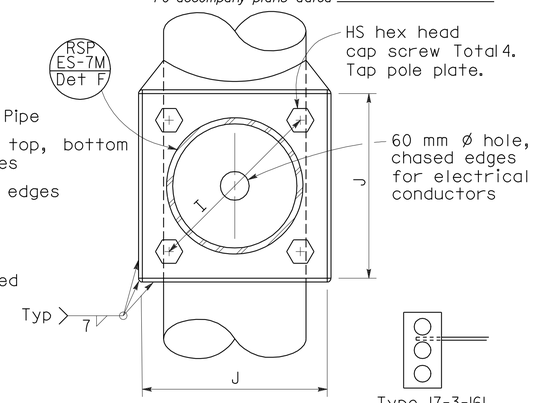

SECTION A-A

Type 17-3-161

SIGNAL ARM CONNECTION DETAILS

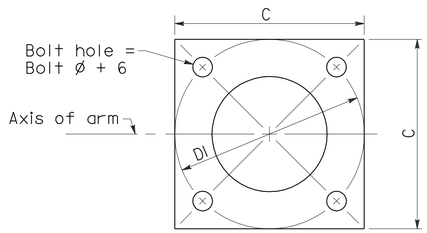

BASE PLATE

HIGH STRENGTH CAP SCREWS

16 - 11NC - 45

Length (mm)
Threads (per inch)
Size (mm)

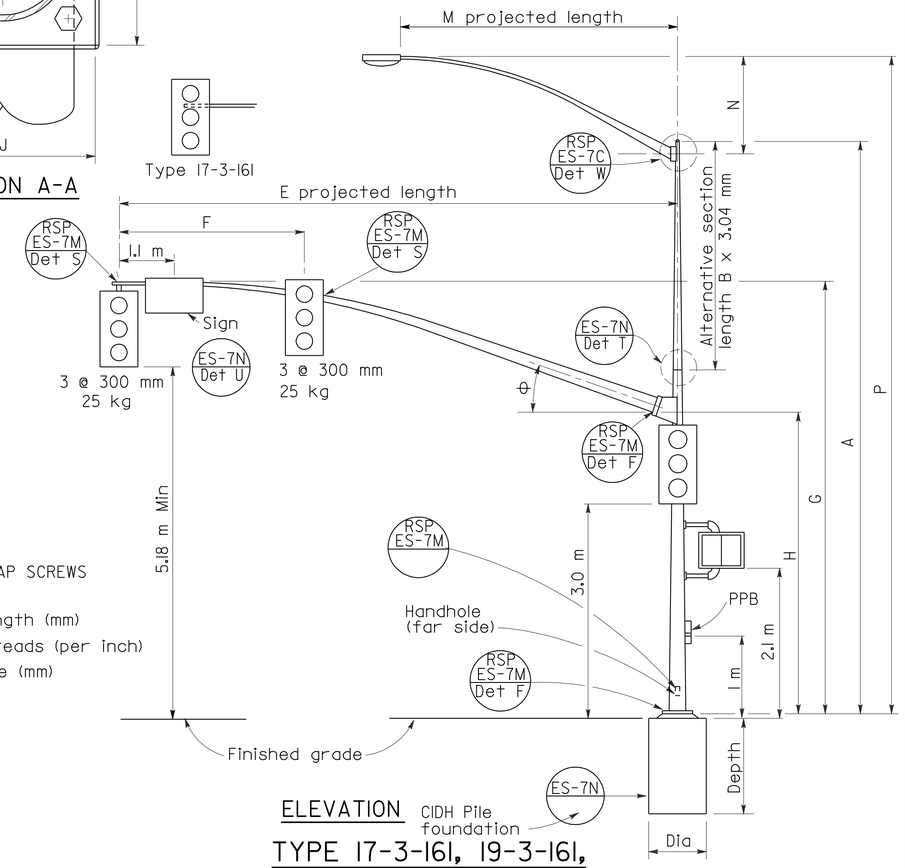

ELEVATION

TYPE 17-3-161, 19-3-161, 19A-3-161, 24-3-161, 24A-3-161, 26-3-161, 26A-3-161

SIGNAL ARM DATA											
E Projected Length	F Min Spacing	G Mounting Height	H	Min OD At Pole	Thickness	I Bolt Circle	HS Cap Screws	J Plate Size	K Arm PL Thickness	L Pole PL Thickness	θ
m				mm							
4.6	2.4	6.6 ±	5.3	168	4.55	305	32-7NC-76	305	32	38	23°
6.1		6.6 ±		178							
7.6	3.7	6.9 ±	4.9	186	6.07						
9.1		7.0 ±		203							
10.7	4.3			222		330		330	38	45	21°
12.2	4.6			238							15°
13.7		7.2 ±		256							

LUMINAIRE ARM DATA					
M Projected Length	N Rise	Min OD at Pole	Thickness	P Mounting Height 9.1 Pole	P Mounting Height 10.7 Pole
m	mm			m	
1.8	610 ±	83	3.04	9.5 ±	11.1 ±
2.4	760 ±	89		9.7 ±	11.3 ±
3.1	990 ±	98		9.9 ±	11.5 ±
3.7	1290 ±			10.2 ±	11.8 ±
4.6	1450 ±	108		10.4 ±	12.0 ±

Pole Type	Load Case	Wind Velocity km/h	POLE DATA: A Height	Min OD Base	Min OD Top	Thickness	Alternative Section B Length	Alternative Section Bottom	Alternative Section Top	BASE PLATE DATA: C	DI Bolt Circle	Thickness	Anchor Bolts Size	Luminaire Arm	Signal Arm	CIDH PILE FOUNDATION: Diameter	Depth	Reinforced
			m	mm			m	mm		mm				m		mm	m	
16-3-161	3	161	5.6	273	210	4.55	None			457	445	38	51 ø x 1067 x 152	None	4.6, 6.1	914	2.7	Yes
17-3-161			9.1		168		3.1	203	186					1.8-4.6 [3.7]				
18-3-161			5.2		214	6.07	None							None	7.6, [9.1]			
19-3-161			9.1	305	200		3.1	235	200					1.8-4.6 [3.7]				
19A-3-161			10.7		183		4.6		183					1.8-4.6 [4.6]				
23-3-161			5.2		245		None							None	10.7			
24-3-161			9.1		200		3.1	235	200					1.8-4.6 [3.7]				
24A-3-161			10.7		183		4.6		183					1.8-4.6 [4.6]				
26-3-161			9.1	308	203	7.94	3.1	238	203					1.8-4.6 [3.7]	12.2, [13.7]			
26A-3-161			10.7		186		4.6		186					1.8-4.6 [4.6]				
27-3-161			5.2		248		None							None				

☐ Indicates arm length to be used unless otherwise noted on plans.

STATE OF CALIFORNIA
DEPARTMENT OF TRANSPORTATION

ELECTRICAL SYSTEMS (SIGNAL AND LIGHTING STANDARD CASE 3 ARM LOADING WIND VELOCITY=161 km/h ARM LENGTHS 4.6 m TO 13.7 m)

NO SCALE

ALL DIMENSIONS ARE IN MILLIMETERS UNLESS OTHERWISE SHOWN

RSP ES-7E DATED OCTOBER 5, 2007 SUPERSEDES RSP ES-7E DATED JANUARY 24, 2005 AND STANDARD PLAN ES-7E DATED JULY 1, 2004-PAGE 455 OF THE STANDARD PLANS BOOK DATED JULY 2004.

REVISED STANDARD PLAN RSP ES-7E

2004 REVISED Std PLAN RSP ES-7E

6-19-07

DIST	COUNTY	ROUTE	KILOMETER POST TOTAL PROJECT	SHEET NO.	TOTAL SHEETS
11	SD	805	40.6/42.4	524	567

REGISTERED CIVIL ENGINEER

October 5, 2007
PLANS APPROVAL DATE

REGISTERED PROFESSIONAL ENGINEER — Stanley P. Johnson — No. C57793 — Exp. 3-31-08 — CIVIL — STATE OF CALIFORNIA

The State of California or its officers or agents shall not be responsible for the accuracy or completeness of electronic copies of this plan sheet.

To get to the Caltrans web site, go to: http://www.dot.ca.gov

To accompany plans dated 6-14-10

2004 REVISED Std PLAN RSP ES-7F

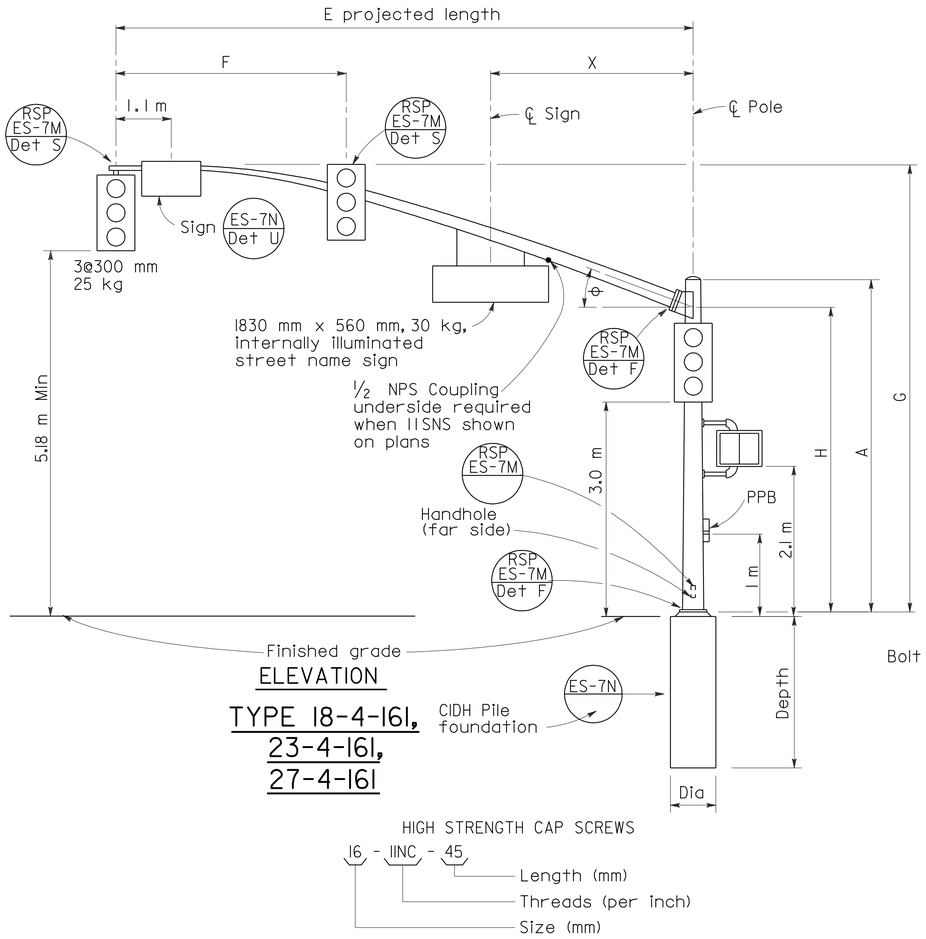

ELEVATION

TYPE 18-4-161, 23-4-161, 27-4-161

HIGH STRENGTH CAP SCREWS

16 - 11NC - 45
Length (mm)
Threads (per inch)
Size (mm)

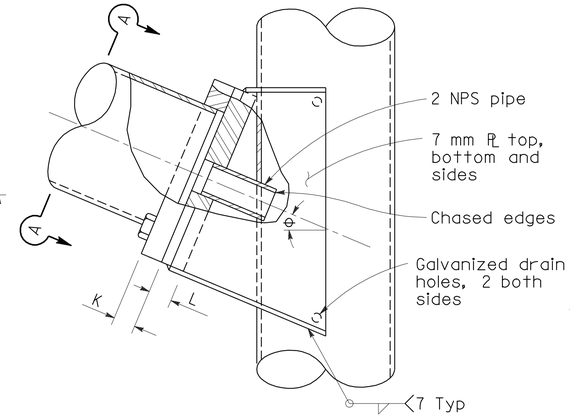

ELEVATION

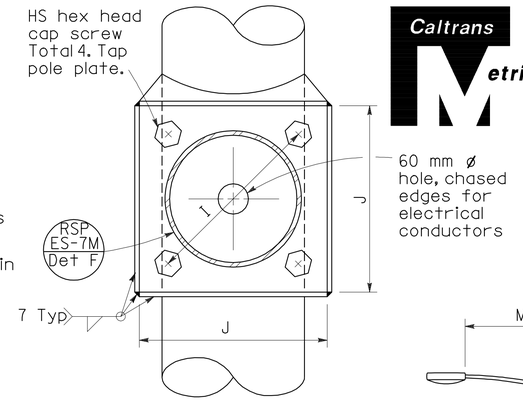

SECTION A-A

SIGNAL ARM CONNECTION DETAILS

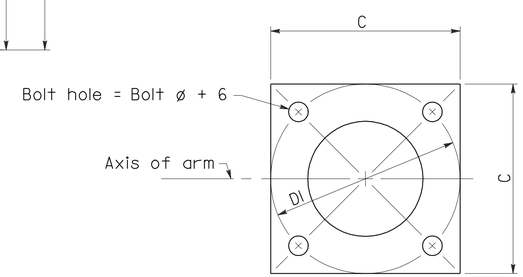

BASE PLATE

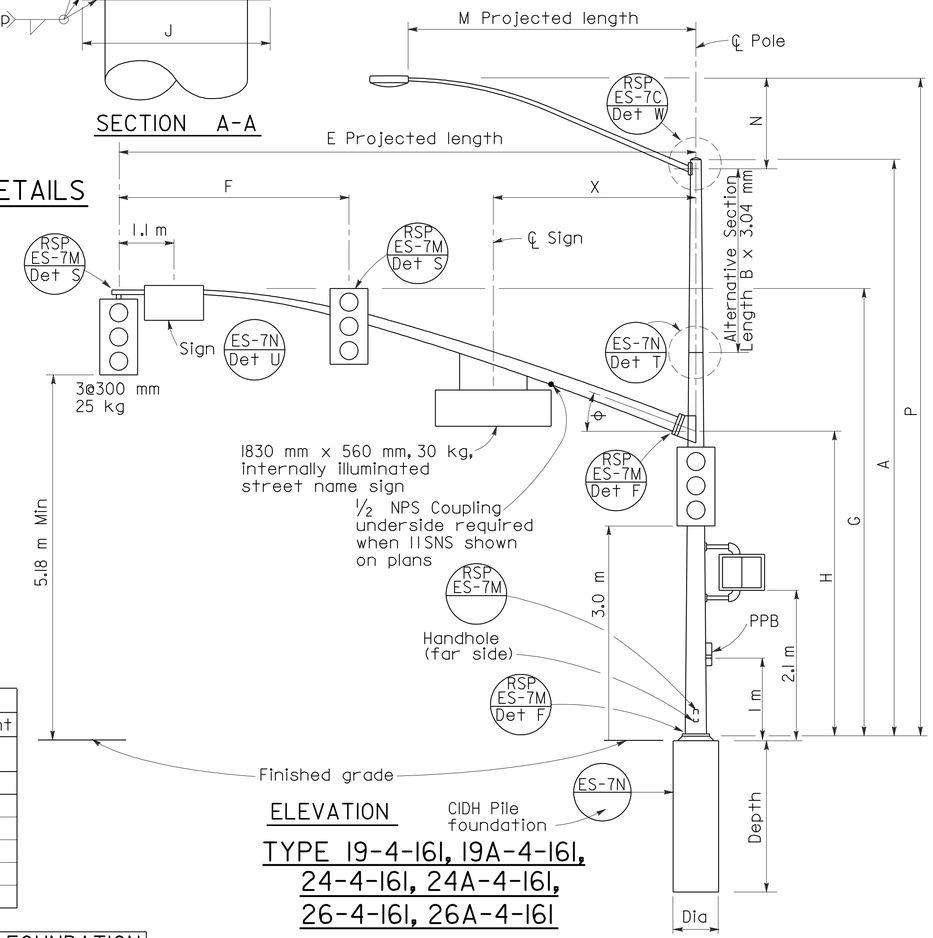

ELEVATION

TYPE 19-4-161, 19A-4-161, 24-4-161, 24A-4-161, 26-4-161, 26A-4-161

SIGNAL ARM DATA

E Projected Length	F Min Spacing	G Mounting Height	H	Min OD At Pole	Thickness	I Bolt Circle	HS Cap Screws	J Plate Size	K Arm PL Thickness	L Pole PL Thickness	θ	X Max
m				mm								m
7.6	3.1	6.9 ±	4.9	186	6.07	305	32-7NC-76	305	32	38	23°	3.2
9.1	3.7	7.0 ±		203								
10.7	4.3			221		343		343	38	45	21°	
12.2	4.6			238							15°	4.0
13.7		7.2 ±		260								

LUMINAIRE ARM DATA

M Projected Length	N Rise	Min OD at Pole	Thickness	P Mounting Height 9.1 Pole	P Mounting Height 10.7 Pole
m	mm			m	
1.8	610 ±	83	3.04	9.5 ±	11.1 ±
2.4	760 ±	89		9.7 ±	11.3 ±
3.1	990 ±	98		9.9 ±	11.5 ±
3.7	1290 ±			10.2 ±	11.8 ±
4.6	1450 ±	108		10.4 ±	12.0 ±

Pole Type	Load Case	Wind Velocity km/h	POLE DATA: A Height	Min OD Base	Min OD Top	Thickness	Alternative Section B Length	Alternative Section Bottom	Alternative Section Top	BASE PLATE DATA: C	Dl Bolt Circle	Thickness	Anchor Bolts Size	Luminaire Arm	Signal Arm	CIDH PILE FOUNDATION: Diameter	Depth	Reinforced
			m	mm			m	mm		mm				m		mm	m	
18-4-161	4	161	5.2	305	229	6.07	None	238	203	457	457	38	51ø x 1067 x 152	None	7.6, 9.1	914	2.7	Yes
19-4-161			9.1		203		3.1							1.8-4.6 3.7				
19A-4-161			10.7		186		4.6		186					1.8-4.6 4.6				
23-4-161			5.2		229		None							None	10.7			
24-4-161			9.1		203		3.1	238	203					1.8-4.6 3.7				
24A-4-161			10.7		186		4.6		186					1.8-4.6 4.6				
26-4-161			9.1	318	203	7.94	3.1	248	213					1.8-4.6 3.7	12.2, 13.7			
26A-4-161			10.7		186		4.6		196					1.8-4.6 4.6				
27-4-161			5.2		248		None							None				

☐ Indicates arm length to be used unless otherwise noted on plans.

STATE OF CALIFORNIA
DEPARTMENT OF TRANSPORTATION

ELECTRICAL SYSTEMS (SIGNAL AND LIGHTING STANDARD CASE 4 ARM LOADING WIND VELOCITY=161 km/h ARM LENGTHS 7.6 m TO 13.7 m)

NO SCALE

ALL DIMENSIONS ARE IN MILLIMETERS UNLESS OTHERWISE SHOWN

RSP ES-7F DATED OCTOBER 5, 2007 SUPERSEDES RSP ES-7F DATED JANUARY 24, 2005 AND STANDARD PLAN ES-7F DATED JULY 1, 2004-PAGE 456 OF THE STANDARD PLANS BOOK DATED JULY 2004.

REVISED STANDARD PLAN RSP ES-7F

6-19-07

DIST	COUNTY	ROUTE	KILOMETER POST TOTAL PROJECT	SHEET NO.	TOTAL SHEETS
11	SD	805	40.6/42.4	525	567

REGISTERED CIVIL ENGINEER

October 5, 2007
PLANS APPROVAL DATE

REGISTERED PROFESSIONAL ENGINEER Stanley P. Johnson No. C57793 Exp. 3-31-08 CIVIL STATE OF CALIFORNIA

The State of California or its officers or agents shall not be responsible for the accuracy or completeness of electronic copies of this plan sheet.

To get to the Caltrans web site, go to: http://www.dot.ca.gov

To accompany plans dated 6-14-10

Caltrans Metric

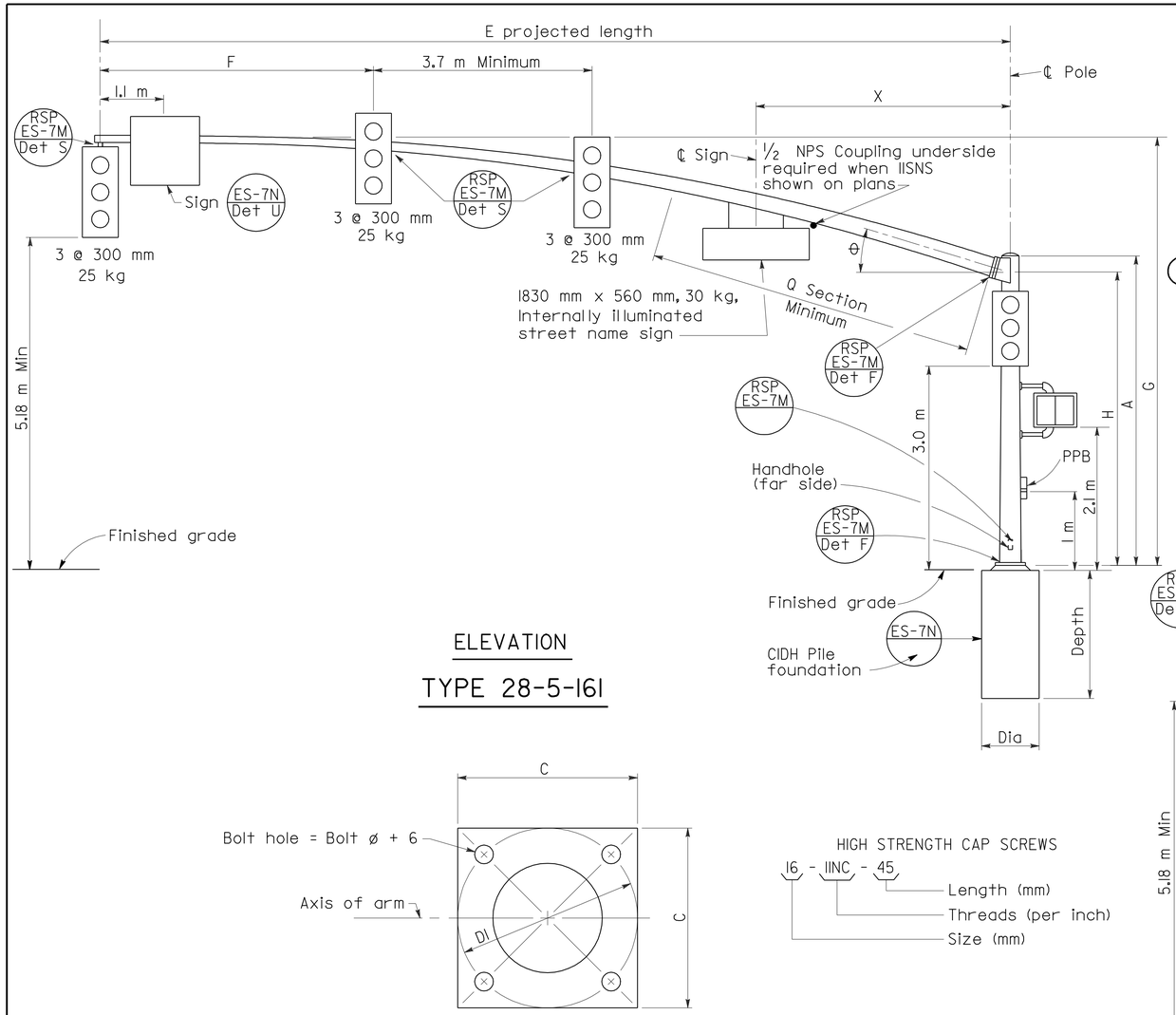

ELEVATION

TYPE 28-5-161

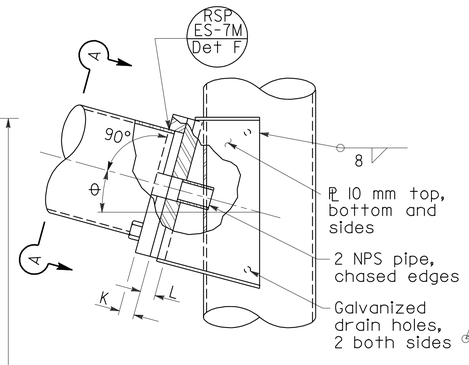

ELEVATION

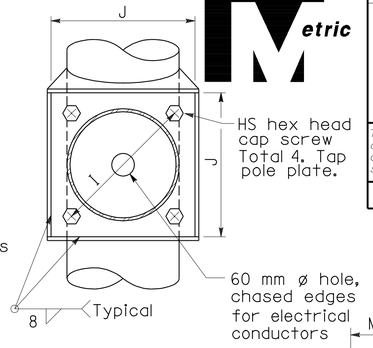

SECTION A-A

SIGNAL ARM CONNECTION DETAILS

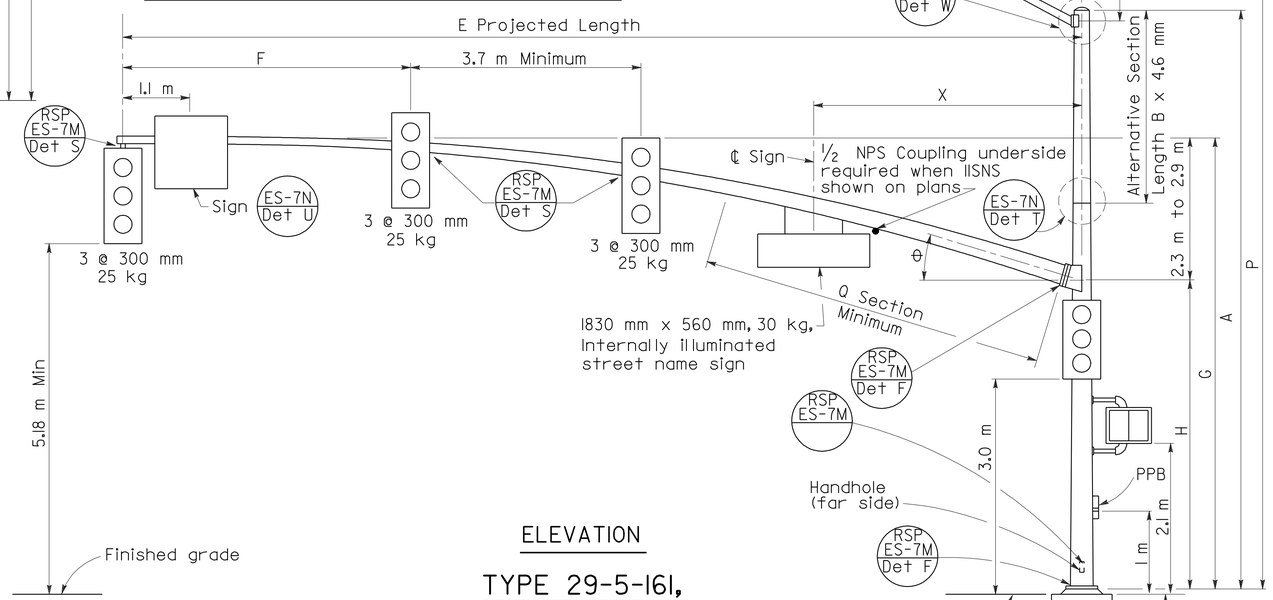

ELEVATION

TYPE 29-5-161, 29A-5-161

BASE PLATE

HIGH STRENGTH CAP SCREWS

16 - IINC - 45
- Length (mm)
- Threads (per inch)
- Size (mm)

SIGNAL ARM DATA														
E Projected Length	F Min Spacing	G Mounting Height	H	Min OD At Pole	Thickness	I Bolt Circle	HS Cap Screws	J Plate Size	K Arm ℄ Thickness	L Pole ℄ Thickness	θ	Q SECTION Length	Q SECTION Thickness	X Max
m				mm								m	mm	m
15.2	4.6	7.2 to 7.8	4.9	291	4.6	406	38-6NC-83	406	45	45	15°	5.5	6.1	4.3
16.8				311								7.0		

LUMINAIRE ARM DATA					
M Projected Length	N Rise	Min OD at Pole	Thickness	P Mounting Height 9.1 Pole	P Mounting Height 10.7 Pole
m	mm			m	
1.8	610 ±	83	3.04	9.5 ±	11.1 ±
2.4	760 ±	89		9.7 ±	11.3 ±
3.1	990 ±	98		9.9 ±	11.5 ±
3.7	1290 ±			10.2 ±	11.8 ±
4.6	1450 ±	108		10.4 ±	12.0 ±

Pole Type	Load Case	Wind Velocity km/h	POLE DATA A Height	Min OD Base	Min OD Top	Thickness	Alternative Section B Length	Alternative Section Bottom	Alternative Section Top	BASE PLATE DATA C	DI Bolt Circle	Thickness	Anchor Bolts Size	Luminaire Arm	Signal Arm	CIDH PILE FOUNDATION Diameter	Depth	Reinforced
			m	mm			m	mm		mm				m		mm	m	
28-5-161	5	161	5.2	356	297	7.94	None			533	533	45	51ø x 1067 x 152	None	15.2, 16.8	914	2.8	Yes
29-5-161			9.1		251		3.1	286	251					1.8 - 4.6 [4.6]				
29A-5-161			10.7		233		4.6		233	584	584							

☐ Indicates arm length to be used unless otherwise noted on plans.

STATE OF CALIFORNIA
DEPARTMENT OF TRANSPORTATION

ELECTRICAL SYSTEMS (SIGNAL AND LIGHTING STANDARD CASE 5 ARM LOADING WIND VELOCITY=161 km/h ARM LENGTHS 15.2 m TO 16.8 m)

NO SCALE

ALL DIMENSIONS ARE IN MILLIMETERS UNLESS OTHERWISE SHOWN

RSP ES-7G DATED OCTOBER 5, 2007 SUPERSEDES RSP ES-7G DATED JANUARY 24, 2005 AND STANDARD PLAN ES-7G DATED JULY 1, 2004-PAGE 457 OF THE STANDARD PLANS BOOK DATED JULY 2004.

REVISED STANDARD PLAN RSP ES-7G

2004 REVISED Std PLAN RSP ES-7G

6-19-07

To accompany plans dated 6-14-10

Caltrans Metric

DIST	COUNTY	ROUTE	KILOMETER POST TOTAL PROJECT	SHEET NO.	TOTAL SHEETS
11	SD	805	40.6/42.4	526	567

REGISTERED CIVIL ENGINEER

October 5, 2007
PLANS APPROVAL DATE

REGISTERED PROFESSIONAL ENGINEER Stanley P. Johnson No. C57793 Exp. 3-31-08 CIVIL STATE OF CALIFORNIA

The State of California or its officers or agents shall not be responsible for the accuracy or completeness of electronic copies of this plan sheet.

To get to the Caltrans web site, go to: http://www.dot.ca.gov

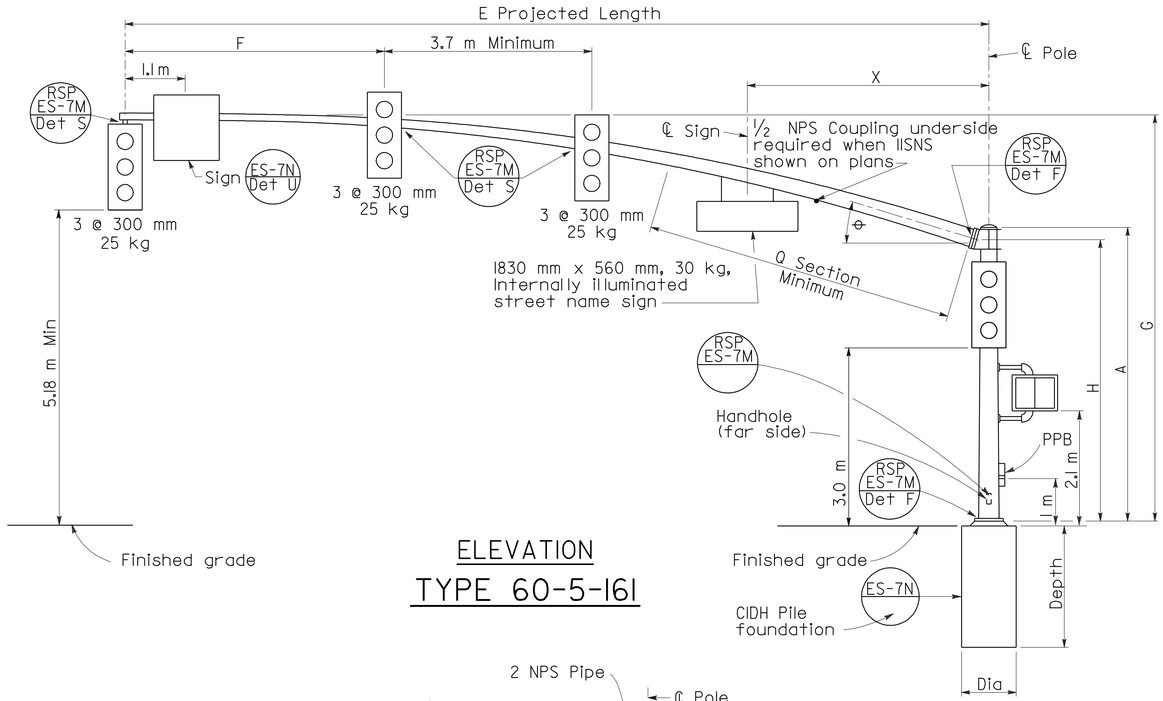

ELEVATION

TYPE 60-5-161

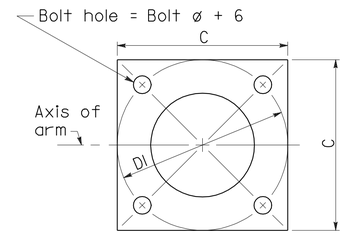

BASE PLATE

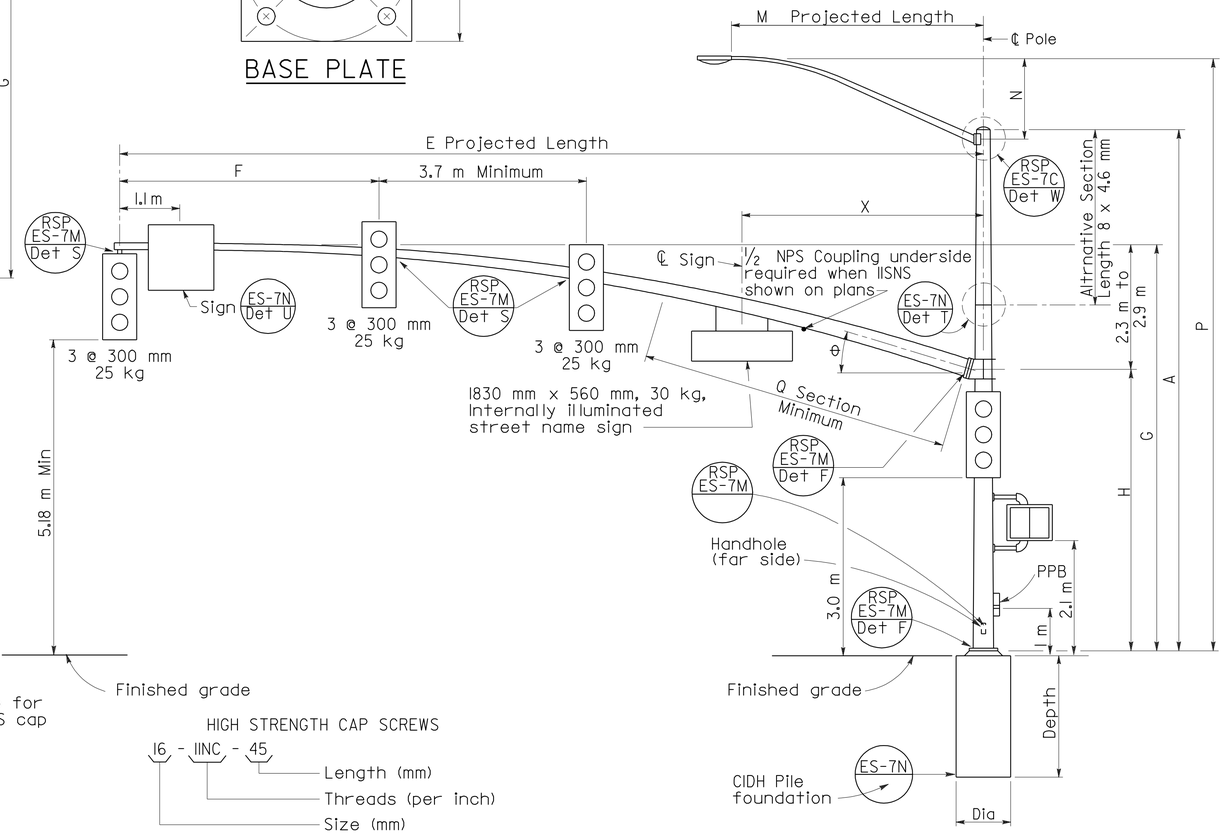

ELEVATION

TYPE 61-5-161, 61A-5-161

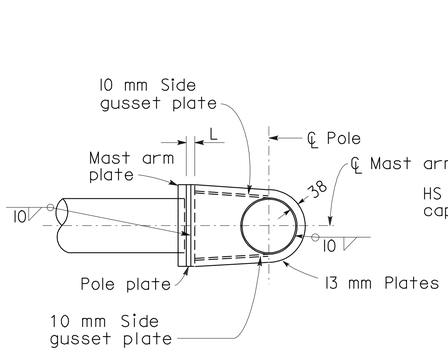

PLAN

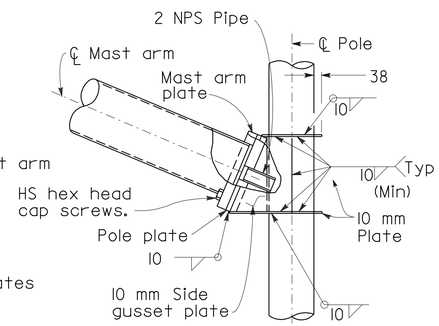

ELEVATION

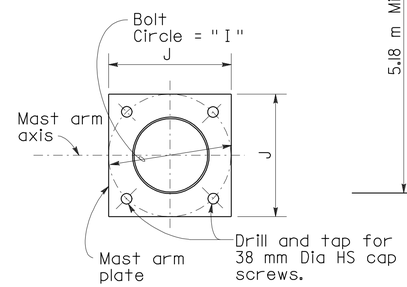

MAST ARM PLATE

HIGH STRENGTH CAP SCREWS

16 - 11NC - 45
- Length (mm)
- Threads (per inch)
- Size (mm)

SIGNAL ARM CONNECTION DETAIL

NOTE

The radial separation between the face of the pole and the adjacent insides of the top and bottom gusset plates shall not exceed 5 mm. Fillet weld size to be increased by amount of gap.

SIGNAL ARM DATA

E Projected Length	F Min Spacing	G Mounting Height	H	Min OD At Pole	Thickness	I Bolt Circle	HS Cap Screws	J Plate Size	K Arm ℙ Thickness	L Pole ℙ Thickness	θ	Q SECTION Length	Q SECTION Thickness	X Max
m				mm								m	mm	m
18.2	4.6	7.2 to 7.8	4.9	343	4.6	508	38-6NC-102	508	51	51	15°	7.3	6.1	4.3
19.8				343	6.1							8.8	7.9	

LUMINAIRE ARM DATA

M Projected Length	N Rise	Min OD at Pole	Thickness	P Mounting Height 9.1 Pole	P Mounting Height 10.7 Pole
m	mm			m	
1.8	610 ±	83	3.04	9.5 ±	11.1 ±
2.4	760 ±	89		9.7 ±	11.3 ±
3.1	990 ±	98		9.9 ±	11.5 ±
3.7	1290 ±			10.2 ±	11.8 ±
4.6	1450 ±	108		10.4 ±	12.0 ±

Pole Type	Load Case	Wind Velocity km/h	POLE DATA A Height	Min OD Base	Min OD Top	Thickness	BASE PLATE DATA C	DI Bolt Circle	Thickness	Anchor Bolts Size	Luminaire Arm	Signal Arm	CIDH PILE FOUNDATION Diameter	Depth	Reinforced
			m	mm			mm				m		mm	m	
60-5-161	5	161	5.2	406	347	7.94	584	584	51	57 ø x 1524 x 152	None	18.2, 19.8	914	4.9	Yes
61-5-161			9.1		301						1.8-4.6 [4.6]				
61A-5-161			10.7		282										

☐ Indicates arm length to be used unless otherwise noted on plans.

ELECTRICAL SYSTEMS (SIGNAL AND LIGHTING STANDARD CASE 5 ARM LOADING WIND VELOCITY=161 km/h ARM LENGTHS 18.2 m TO 19.8 m)

NO SCALE

ALL DIMENSIONS ARE IN MILLIMETERS UNLESS OTHERWISE SHOWN

RSP ES-7H DATED OCTOBER 5, 2007 SUPERSEDES RSP ES-7H DATED JANUARY 24, 2005 AND STANDARD PLAN ES-7H DATED JULY 1, 2004-PAGE 458 OF THE STANDARD PLANS BOOK DATED JULY 2004.

REVISED STANDARD PLAN RSP ES-7H

2004 REVISED Std PLAN RSP ES-7H

10-1-07

To accompany plans dated 6-14-10

DIST	COUNTY	ROUTE	KILOMETER POST TOTAL PROJECT	SHEET NO.	TOTAL SHEETS
11	SD	805	40.6/42.4	527	567

Caltrans Metric

REGISTERED CIVIL ENGINEER

October 5, 2007
PLANS APPROVAL DATE

REGISTERED PROFESSIONAL ENGINEER Stanley P. Johnson No. C57793 Exp. 03-31-08 CIVIL STATE OF CALIFORNIA

The State of California or its officers or agents shall not be responsible for the accuracy or completeness of electronic copies of this plan sheet.

To get to the Caltrans web site, go to: http://www.dot.ca.gov

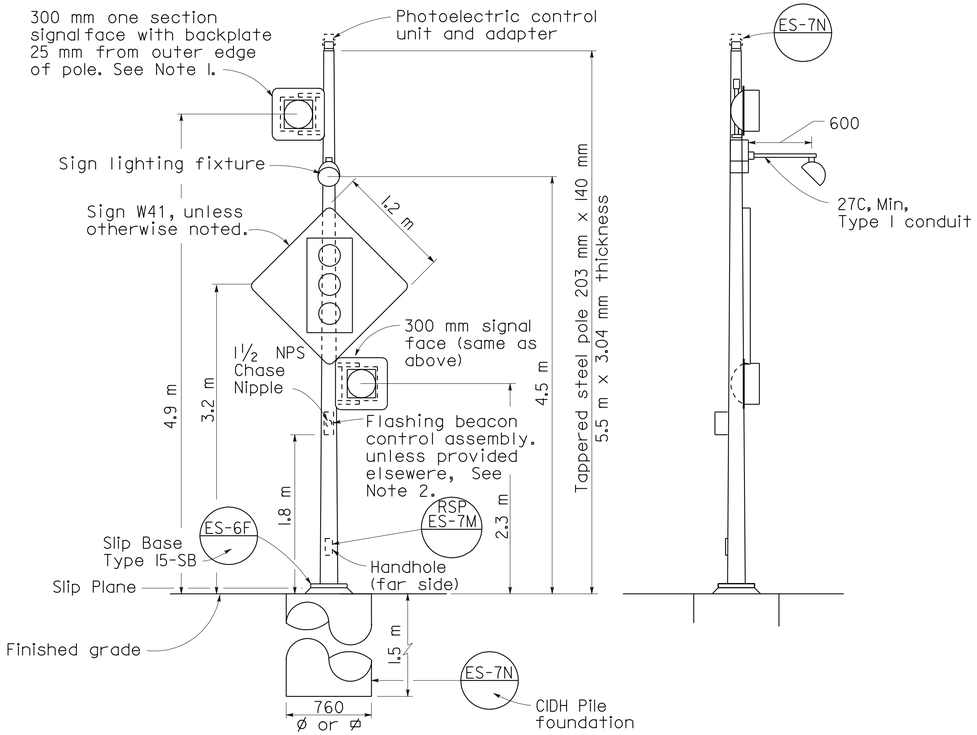

FRONT VIEW

SIDE VIEW

TYPE 15-FBS

ADVANCE FLASHING BEACON WITH SLIP BASE INSTALLATION

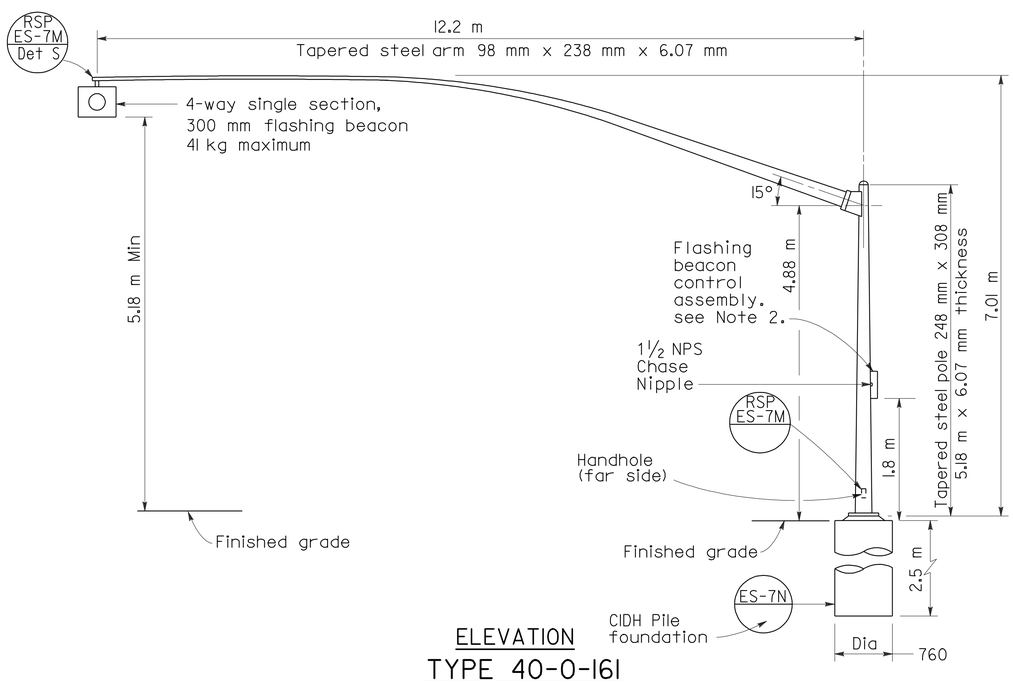

ELEVATION

TYPE 40-0-161

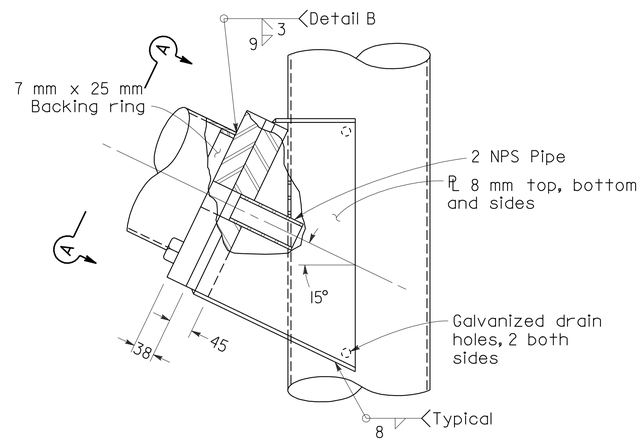

ELEVATION

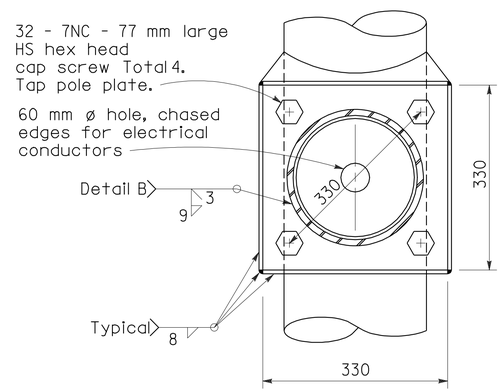

SECTION A-A

SIGNAL ARM CONNECTION DETAILS

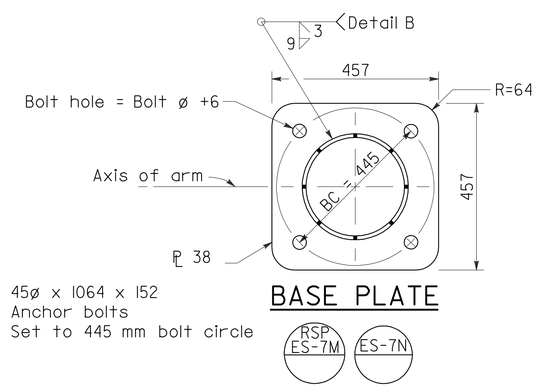

BASE PLATE

HIGH STRENGTH CAP SCREWS

16 - 11NC - 45
- Length (mm)
- Threads (per inch)
- Size (mm)

NOTES:

1. See Standard Plans ES-4D and ES-4E for attachment fitting details.
2. For wiring diagram, see Standard Plan ES-3B.

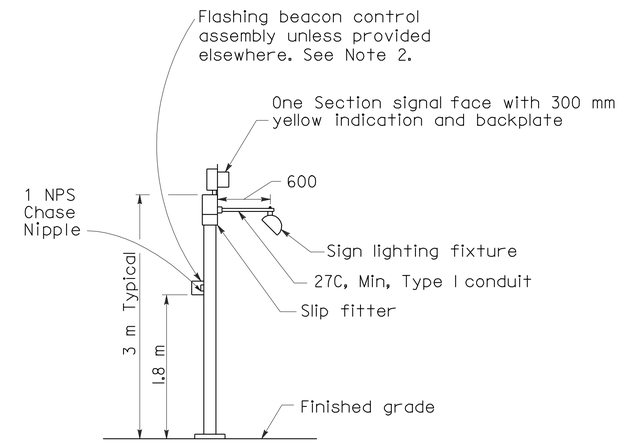

TYPE I-A, I-B, I-C AND I-D

ADVANCE FLASHING BEACON INSTALLATION

(See Project Plans for type of standard to be installed)

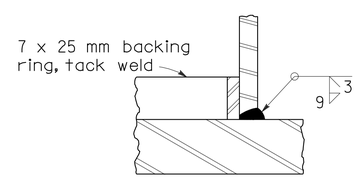

DETAIL B

STATE OF CALIFORNIA
DEPARTMENT OF TRANSPORTATION

ELECTRICAL SYSTEMS (SIGNAL AND LIGHTING STANDARD ADVANCE FLASHING BEACONS)

NO SCALE

ALL DIMENSIONS ARE IN MILLIMETERS UNLESS OTHERWISE SHOWN

RSP ES-7J DATED OCTOBER 5, 2007 SUPERSEDES STANDARD PLAN ES-7J DATED JULY 1, 2004-PAGE 460 OF THE STANDARD PLANS BOOK DATED JULY 2004.

REVISED STANDARD PLAN RSP ES-7J

2004 REVISED Std PLAN RSP ES-7J

10-1-07

DIST	COUNTY	ROUTE	KILOMETER POST TOTAL PROJECT	SHEET NO.	TOTAL SHEETS
11	SD	805	40.6/42.4	528	567

REGISTERED CIVIL ENGINEER

April 28, 2005
PLANS APPROVAL DATE

REGISTERED PROFESSIONAL ENGINEER — Tillat Sattar — No. C42892 — Exp. 03-31-2006 — CIVIL — STATE OF CALIFORNIA

The State of California or its officers or agents shall not be responsible for the accuracy or completeness of electronic copies of this plan sheet.

To get to the Caltrans web site, go to: http://www.dot.ca.gov

To accompany plans dated 6-14-10

Caltrans Metric

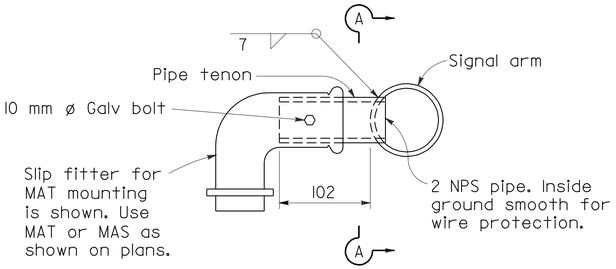

ES-4D

DETAIL S-SIDE TENON

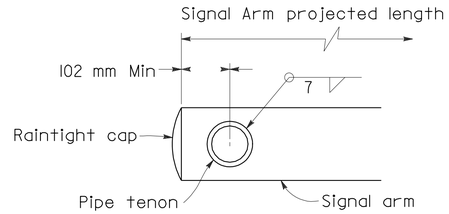

SECTION A-A

PIPE TENONS

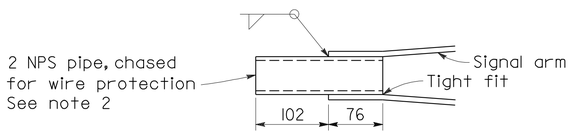

DETAIL TS-TIP TENON

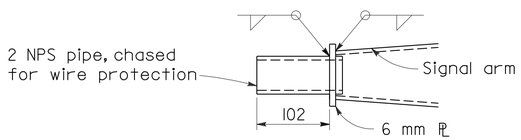

DETAIL TL-TIP TENON

This detail supersedes Detail S when so designated

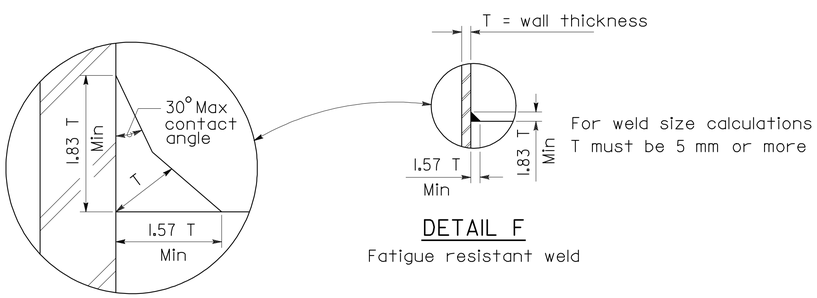

DETAIL F

Fatigue resistant weld

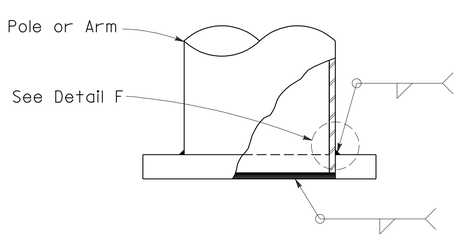

Weld Size	Wall Thickness
7	3.04
8	4.55
10	6.07
11	7.94
4	3.04
5	4.55
7	6.07
8	7.94

ELEVATION A

IDENTIFICATION NUMBER

Attach a stamped metal tag with each pole's indentification number to shaft above handhole. 7 mm high number minimum.

A similar tag shall be attached to the top of the signal mast arm near the pole plate.

Sample Identification Number

Type — Load case — Design wind velocity (km/h) — Signal arm length maximum (m) — Standard plan year — Only for poles with fatigue resistant welds

19A - 3 - 161 - 9.1 - 04 - F

Use SL for special load case

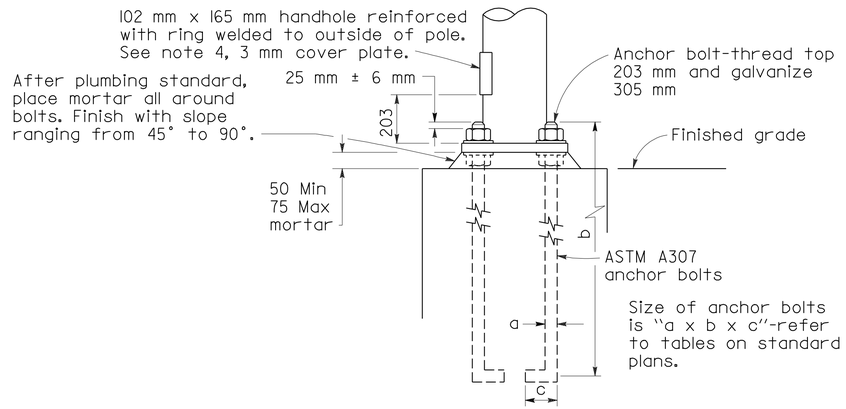

HANDHOLE AND ANCHORAGE DETAILS

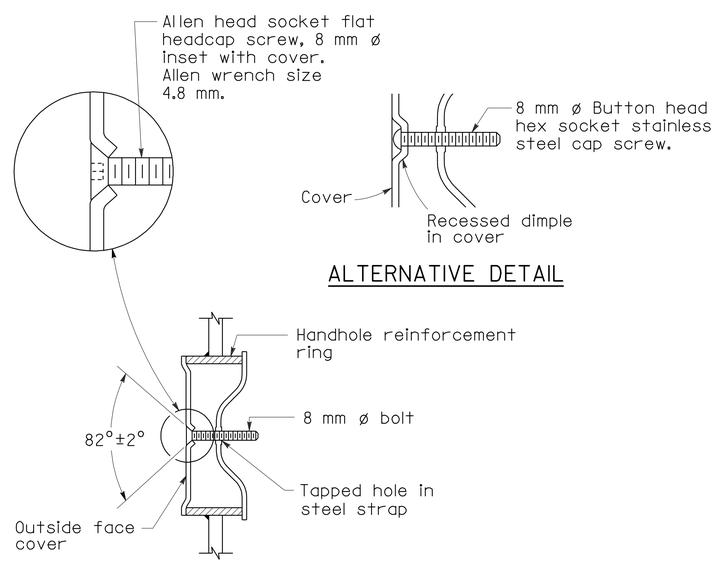

ALTERNATIVE DETAIL

TAMPER RESISTANT HANDHOLE COVER

GENERAL NOTES

SPECIFICATIONS

DESIGN : AASHTO Standard specifications for structural supports for highway signs, luminaires and traffic signals dated 2001.

Loading

WIND LOADINGS : 161 km/h

Unit Stresses

STRUCTURAL STEEL : fy = 330 MPa tapered steel tube
fy = 250 MPa unless otherwise noted

CONSTRUCTION : Standard Specifications and the Special Provisions

NOTES

1. ASTM A307 anchor bolts are required for each pole. Provide a hex nut, leveling nut and 2 washers for each bolt.
2. Luminaire arms shall be round, tapered steel tubes, taper of 11.45 mm/m to 11.66 mm/m with an end section 60 mm OD for mounting hardware. Extensions of 2 NPS Standard pipe and 178 mm long may be used at the option of the manufacturer. When low pressure sodium luminaires are required, the extension shall be 381 mm.
3. Signal arms shall be round, tapered steel tubes, maximum taper 11.66 mm/m.
4. Handhole reinforcement ring shall be 6 mm x 51 mm for 3.04 mm to 6.07 mm poles, 10 mm x 51mm for 7.94 mm.
5. Handholes for lighting standards shall be located on the downstream side of the pole unless otherwise noted on the plans.
6. Detail F, fatigue resistant weld, is required at signal arm plate and pole base plate.
7. Cap screws shall be tightened by the turn-of-nut method 1/3 turn to form a snug tight condition. No washer will be required.
8. During pole erection, the post shall be raked as necessary with the use of leveling nuts to provide a plumb pole axis.
9. When Project Plans show a lesser number of signs and signals, the Project Plans shall prevail.
10. Outside diameter, wall thickness, and corresponding section properties at the base of traffic signal poles and arms as shown in the Standard Plans are minimums. Unless otherwise specified, alternative sections require approval by the Engineer.

STATE OF CALIFORNIA
DEPARTMENT OF TRANSPORTATION

ELECTRICAL SYSTEMS (SIGNAL AND LIGHTING STANDARDS DETAILS No. 1)

NO SCALE

ALL DIMENSIONS ARE IN MILLIMETERS UNLESS OTHERWISE SHOWN

RSP ES-7M DATED APRIL 28, 2005 SUPERSEDES RSP ES-7M DATED JANUARY 24,2005 AND STANDARD PLAN ES-7M DATED JULY 1, 2004-PAGE 463 OF THE STANDARD PLANS BOOK DATED JULY 2004.

REVISED STANDARD PLAN RSP ES-7M

2004 REVISED Std PLAN RSP ES-7M

DIST	COUNTY	ROUTE	KILOMETER POST TOTAL PROJECT	SHEET NO.	TOTAL SHEETS
11	SD	805	40.6/42.4	529	567

Caltrans Metric

REGISTERED CIVIL ENGINEER

October 5, 2007
PLANS APPROVAL DATE

REGISTERED PROFESSIONAL ENGINEER
Stanley P. Johnson
No. C57793
Exp. 03-31-08
CIVIL
STATE OF CALIFORNIA

The State of California or its officers or agents shall not be responsible for the accuracy or completeness of electronic copies of this plan sheet.

To get to the Caltrans web site, go to: http://www.dot.ca.gov

To accompany plans dated 6-14-10

2004 REVISED Std PLAN RSP ES-7P

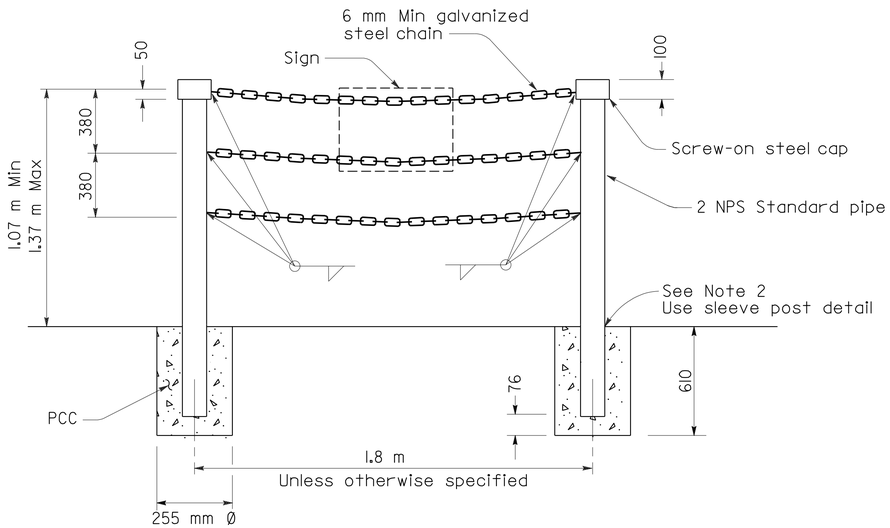

TYPE II

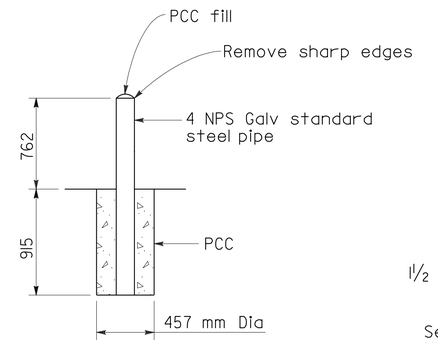

GUARD POST

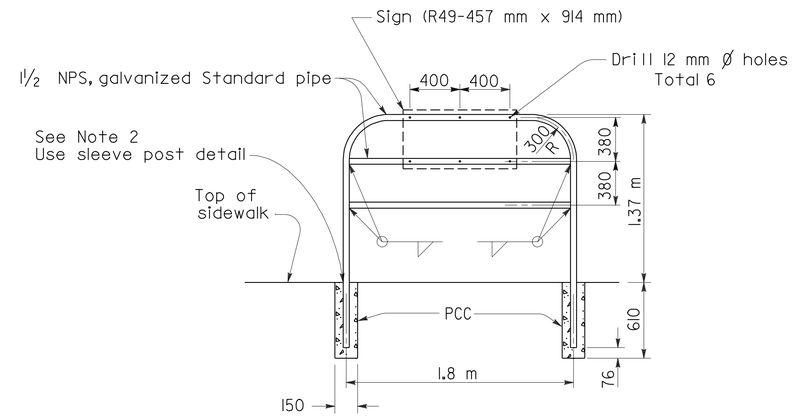

TYPE I

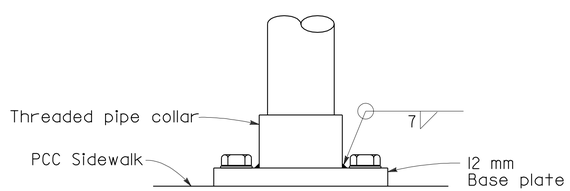

ELEVATION

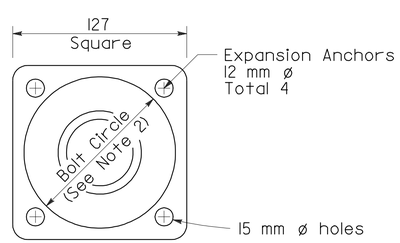

PLAN

POST ANCHORAGE DETAIL

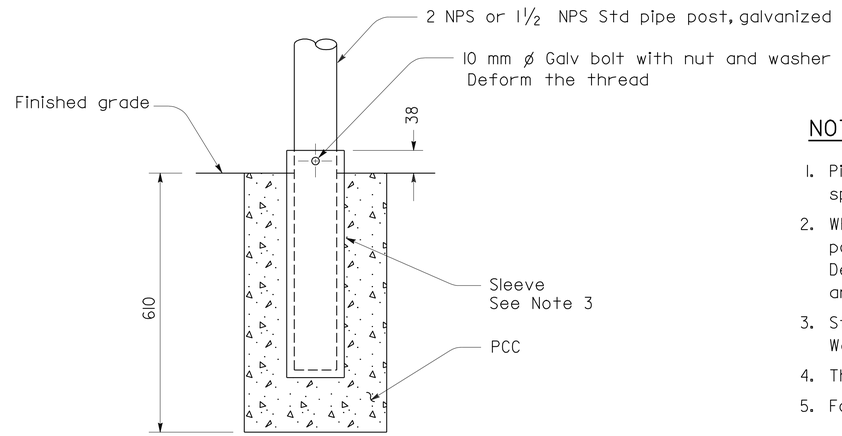

SLEEVE POST DETAIL

Use unless otherwise specified or shown on plans

NOTES:

1. Pipe post to be set 460 mm back from face of curb unless otherwise specified.
2. Where barricade posts are installed in existing concrete sidewalk, the post may be anchored to the sidewalk as shown in the "Post Anchorage Detail". Bolt circle diameter shall be 102 mm minimum for Type I barricade and 127 mm minimum for Type II barricade.
3. Steel sleeve to be constructed with a diameter 2.5 mm larger than post. Wall thickness of sleeve to be same as post or larger.
4. The Contractor may submit alternative details for approval by the Engineer.
5. For minimum pipe diameters and wall thickness refer to ASTM A6M.

STATE OF CALIFORNIA
DEPARTMENT OF TRANSPORTATION

ELECTRICAL SYSTEMS (PEDESTRIAN BARRICADES)

NO SCALE

ALL DIMENSIONS ARE IN MILLIMETERS UNLESS OTHERWISE SHOWN

RSP ES-7P DATED OCTOBER 5, 2007 SUPERSEDES STANDARD PLAN ES-7P DATED JULY 1, 2004-PAGE 466 OF THE STANDARD PLANS BOOK DATED JULY 2004.

REVISED STANDARD PLAN RSP ES-7P

6-12-07

DIST	COUNTY	ROUTE	KILOMETER POST TOTAL PROJECT	SHEET NO.	TOTAL SHEETS
11	SD	805	40.6/42.4	530	567

Caltrans Metric

Jeffery G. McRae
REGISTERED ELECTRICAL ENGINEER

October 5, 2007
PLANS APPROVAL DATE

REGISTERED PROFESSIONAL ENGINEER Jeffery G. McRae No. E14512 Exp. 6-30-08 ELECTRICAL STATE OF CALIFORNIA

The State of California or its officers or agents shall not be responsible for the accuracy or completeness of electronic copies of this plan sheet.

To get to the Caltrans web site, go to: http://www.dot.ca.gov

To accompany plans dated 6-14-10

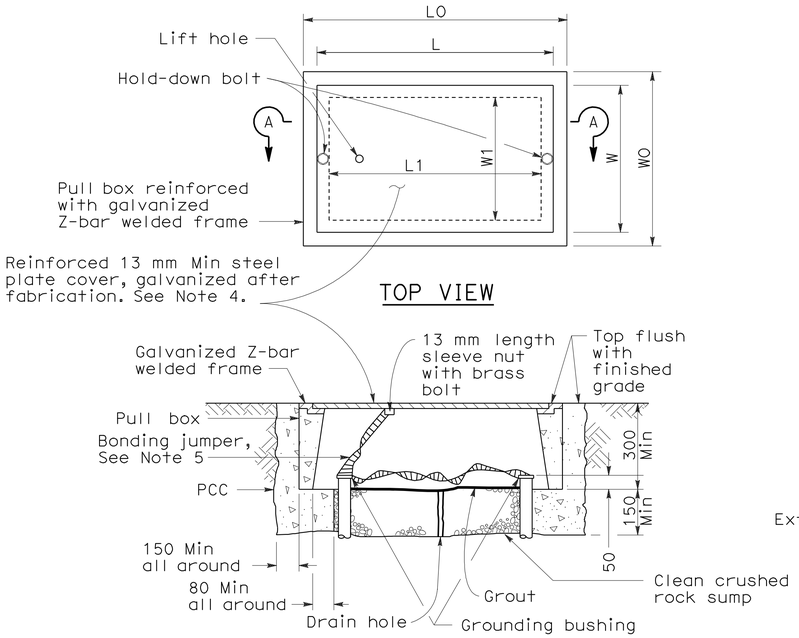

SECTION A-A

No. 3½(T), No. 5(T) AND No. 6(T) TRAFFIC PULL BOX

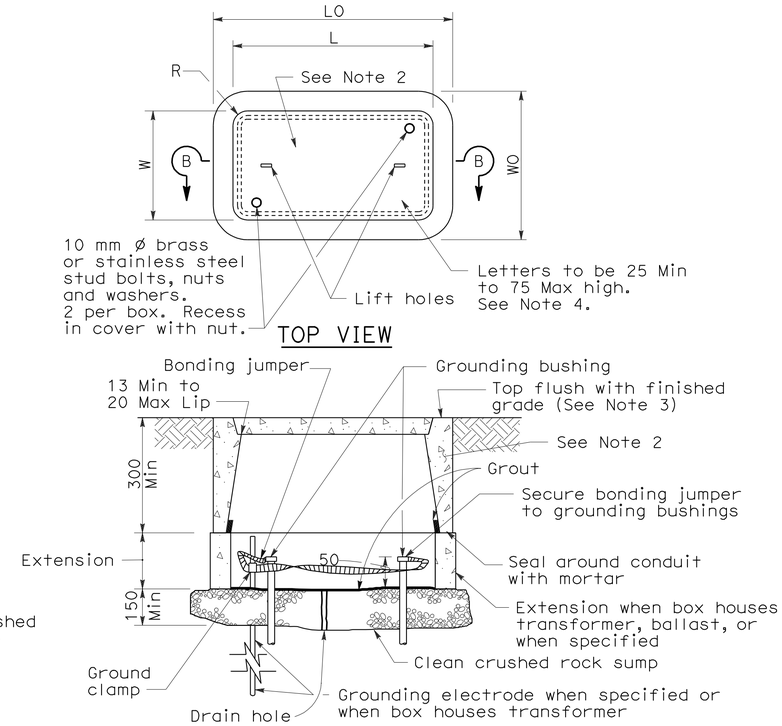

SECTION B-B

INSTALLATION DETAILS

DIMENSION TABLE

PULL BOX	CONCRETE BOX				NON-PCC BOX		CONCRETE OR NON-PCC COVERS				
	Minimum * Thickness	Minimum Depth Box and Extension	LO (mm)	WO (mm)	Minimum ** Thickness	Minimum Depth Box and Extension	L ** (mm)	W ** (mm)	R (mm)	Edge Thickness	Edge Taper
No. 3½	25 mm	No Extension	457	330	8 mm	No Extension	390	260	27	45 mm	3 mm
No. 5	25 mm	560 mm	666	425	8 mm	510 mm	590	350	32	50 mm	3 mm
No. 6	40 mm	610 mm	854	524	10 mm	510 mm	775	444	32	50 mm	3 mm

* Excluding conduit web ** Top dimension

DIMENSION TABLE

PULL BOX	CONCRETE BOX						NON-PCC BOX		CONCRETE OR NON-PCC COVERS				
	Minimum * Thickness	Minimum Depth Box and Extension	LO (mm)	WO (mm)	L1 (mm)	W1 (mm)	Minimum ** Thickness	Minimum Depth Box and Extension	L ** (mm)	W ** (mm)	R (mm)	Edge Thickness	Edge Taper
No. 3½(T)	40 mm	305 mm	530 ±	430 ± 25	370 ±	270 ± 25	Does Not Apply		510 ±	350 ±	0	13 mm	None
No. 5(T)	45 mm	305 mm	750 ±	600 ± 25	480 ±	330 ± 25	Does Not Apply		690 ±	410 ±	0	13 mm	None
No. 6(T)	50 mm	305 mm	900 ±	760 ± 25	600 ±	430 ± 25	Does Not Apply		840 ±	510 ±	0	13 mm	None

* Excluding conduit web ** Top dimension

NOTES ON PULL BOXES:

1. Traffic pull box shall be provided with steel cover and special concrete footing. Steel cover shall have embossed non-skid pattern.

2. Steel reinforcing shall be as regularly used in the standard products of the respective manufacturer.

3. Top of pull boxes shall be flush with surrounding grade or top of adjacent curb, except that in unpaved areas where pull box is not immediately adjacent to and protected by a concrete foundation, pole or other protective construction, the box shall be placed with its top 30 mm above surrounding grade. Where practicable, pull boxes shown in the vicinity of curbs shall be placed adjacent to the back of curb, and pull boxes shown adjacent to standards shall be placed on side of foundation facing away from traffic, unless otherwise noted. When pull box is installed in sidewalk area, the depth of the pull box shall be adjusted so that the top of the pull box is flush with the sidewalk.

4. Pull box covers shall be marked as follows: "SERVICE" Service circuits between service point and service disconnect; "SPRINKLER-CONTROL" Sprinkler control circuits, 50 V or less; "CALTRANS" On all pull boxes, except pull boxes marked "SPRINKLER-CONTROL"; and "TELEPHONE" Telephone service.

   a) No. 3½ pull box.

      1) "SIGNAL" Traffic signal circuits with or without street or sign lighting circuits.

      2) "ST LIGHTING" Street or sign lighting circuits where voltage is under 600 V.

   b) No. 5, 6, 9 or 9A pull box.

      1) "TRAFFIC SIGNAL" Traffic signal circuits with or without street or sign lighting circuits.

      2) "STREET LIGHTING" Street or sign lighting circuits where voltage is under 600 V.

      3) "STREET LIGHTING-HIGH VOLTAGE" Street or sign lighting circuits where voltage is above 600 V.

      4) "IRRIGATION" Circuits to irrigation controller 120 V or more.

      5) "RAMP METER" Ramp meter circuits.

      6) "COUNT STATION" Count or speed monitor circuits.

      7) "COMMUNICATION" Communication circuits.

      8) "TOS COMMUNICATIONS" TOS communications line.

      9) "TOS POWER" TOS power.

      10) "TDC POWER" Telephone demarcation cabinet power.

      11) "CCTV" Closed circuit television circuits.

      12) "TMS" Traffic monitoring station circuits.

      13) "CMS" Changeable message sign circuits.

      14) "HAR" Highway advisory radio circuits.

5. Bonding jumper for metal covers shall be 1 m long, minimum.

6. The nominal dimensions of the opening in which the cover sets shall be the same as the cover dimensions except the length and width dimensions shall be 3 mm greater.

7. Covers and boxes shall be interchangeable with California standard male and female gages. When interchanged with a standard male or female gage, the top surfaces shall be flush within 3 mm. Top outside edge of concrete covers and pull boxes shall have a 6 mm minimum radius.

8. Pull box shall not be installed within the boundaries of new or existing curb ramps.

9. Pull boxes for electroliers, post and signal standards shall be located ± 1.5 m from the station of the adjacent electrolier, post or signal standard. Pull boxes shall be placed adjacent to back of curb or edge of shoulder except where this is impractical, a box may be placed in another suitable protected and accessible location.

STATE OF CALIFORNIA
DEPARTMENT OF TRANSPORTATION

ELECTRICAL SYSTEMS (PULL BOX DETAILS)

NO SCALE

ALL DIMENSIONS ARE IN MILLIMETERS UNLESS OTHERWISE SHOWN

RSP ES-8 DATED OCTOBER 5, 2007 SUPERSEDES STANDARD PLAN ES-8 DATED JULY 1, 2004-PAGE 467 OF THE STANDARD PLANS BOOK DATED JULY 2004.

REVISED STANDARD PLAN RSP ES-8

2004 REVISED Std PLAN RSP ES-8

7-3-07

DIST	COUNTY	ROUTE	KILOMETER POST TOTAL PROJECT	SHEET NO.	TOTAL SHEETS
11	SD	805	40.6/42.4	531	567

Caltrans Metric

REGISTERED ELECTRICAL ENGINEER

October 5, 2007
PLANS APPROVAL DATE

REGISTERED PROFESSIONAL ENGINEER Jeffery G. McRae No. E14512 Exp. 6-30-08 ELECTRICAL STATE OF CALIFORNIA

The State of California or its officers or agents shall not be responsible for the accuracy or completeness of electronic copies of this plan sheet.

To get to the Caltrans web site, go to: http://www.dot.ca.gov

To accompany plans dated 6-14-10

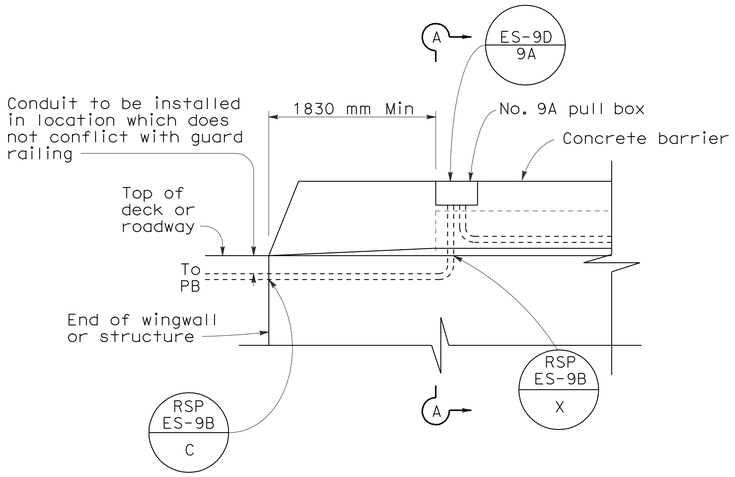

SIDEVIEW

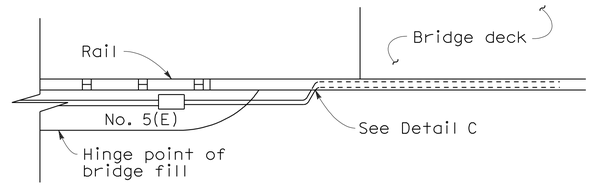

TOP VIEW

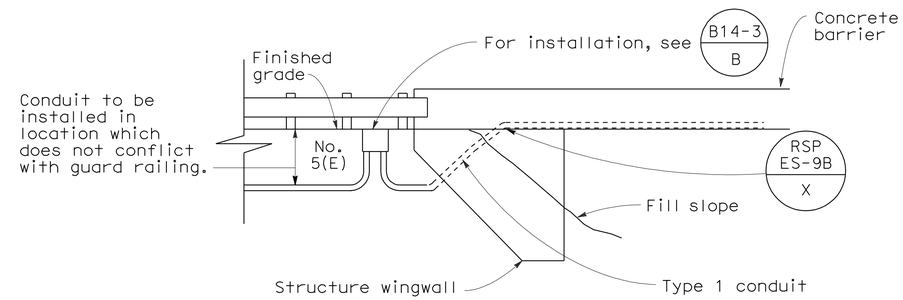

SIDE VIEW
DETAIL I
CONDUIT TERMINATION

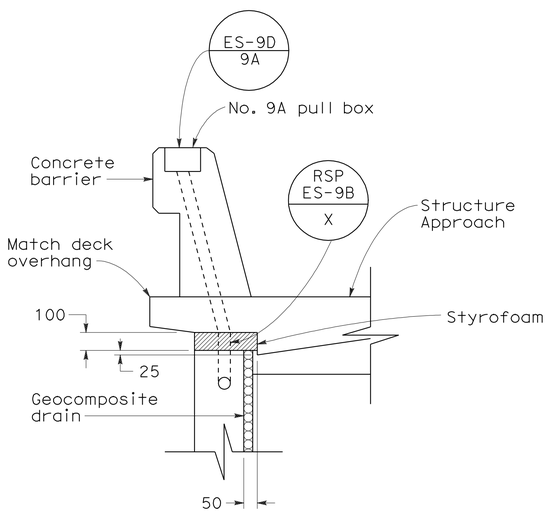

SECTION A-A

DETAIL A
CONDUIT TERMINATION

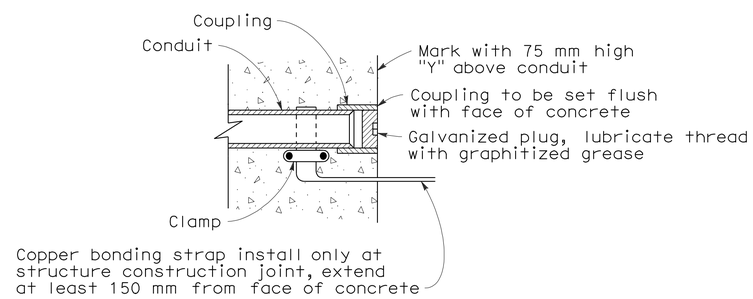

DETAIL C
CONDUIT TERMINATION

STATE OF CALIFORNIA
DEPARTMENT OF TRANSPORTATION

ELECTRICAL SYSTEMS (ELECTRICAL DETAILS STRUCTURE INSTALLATIONS)

NO SCALE

ALL DIMENSIONS ARE IN MILLIMETERS UNLESS OTHERWISE SHOWN

RSP ES-9A DATED OCTOBER 5, 2007 SUPERSEDES STANDARD PLAN ES-9A DATED JULY 1, 2004-PAGE 468 OF THE STANDARD PLANS BOOK DATED JULY 2004.

REVISED STANDARD PLAN RSP ES-9A

2004 REVISED Std PLAN RSP ES-9A

10-1-07

DIST	COUNTY	ROUTE	KILOMETER POST TOTAL PROJECT	SHEET NO.	TOTAL SHEETS
11	SD	805	40.6/42.4	532	567

Caltrans Metric

Jaswender S Sandhu
REGISTERED ELECTRICAL ENGINEER

October 5, 2007
PLANS APPROVAL DATE

REGISTERED PROFESSIONAL ENGINEER J. S. Sandhu No. E11803 Exp. 9-30-08 ELECTRICAL STATE OF CALIFORNIA

The State of California or its officers or agents shall not be responsible for the accuracy or completeness of electronic copies of this plan sheet.

To get to the Caltrans web site, go to: http://www.dot.ca.gov

To accompany plans dated 6-14-10

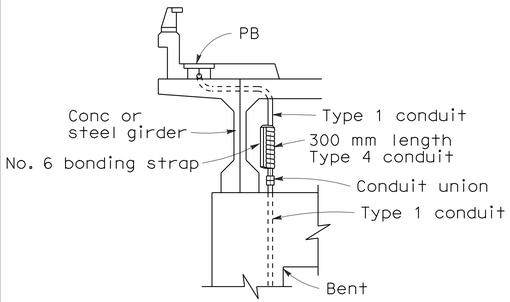

DETAIL R
CONDUIT RISER CONNECTION

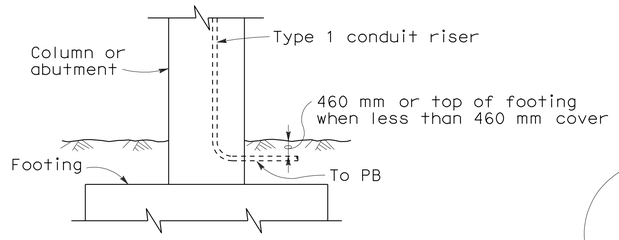

DETAIL T
LOWER END OF CONDUIT RISER AT COLUMN OR ABUTMENT

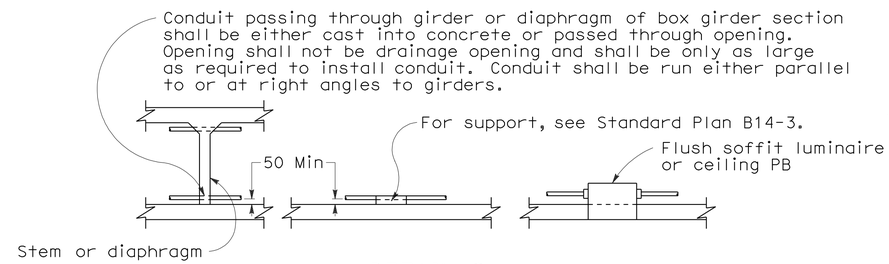

DETAIL S
CONDUIT INSTALLATION WITHIN BOX GIRDER SECTIONS

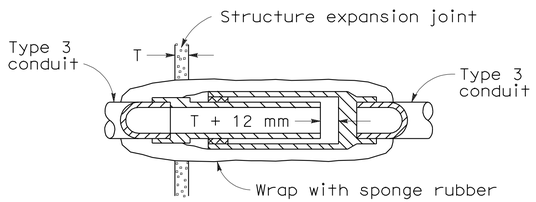

NON-METALLIC CONDUIT EXPANSION FITTING INSTALLATION DETAIL
(To be used only when shown or specified on Project Plans)

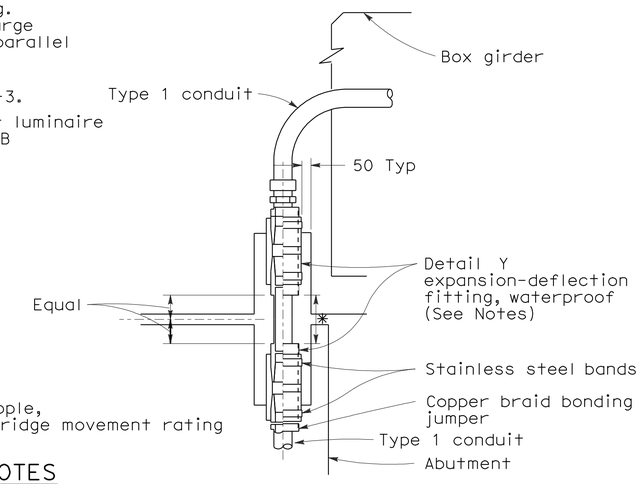

NOTES

1. Fitting and pocket required only where movement can occur between girder and abutment.
2. Fill pocket around fitting with resilient waterproof compound.

DETAIL U
CONDUIT RISER CONNECTION AT COLUMN, ABUTMENT OR STRUCTURE WING WALL

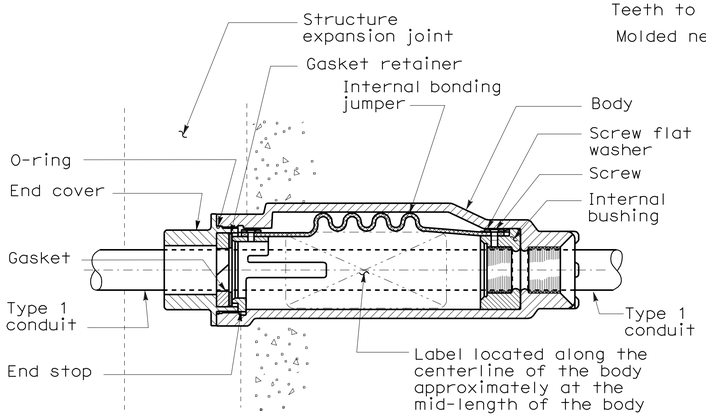

DETAIL X
CONDUIT EXPANSION FITTINGS

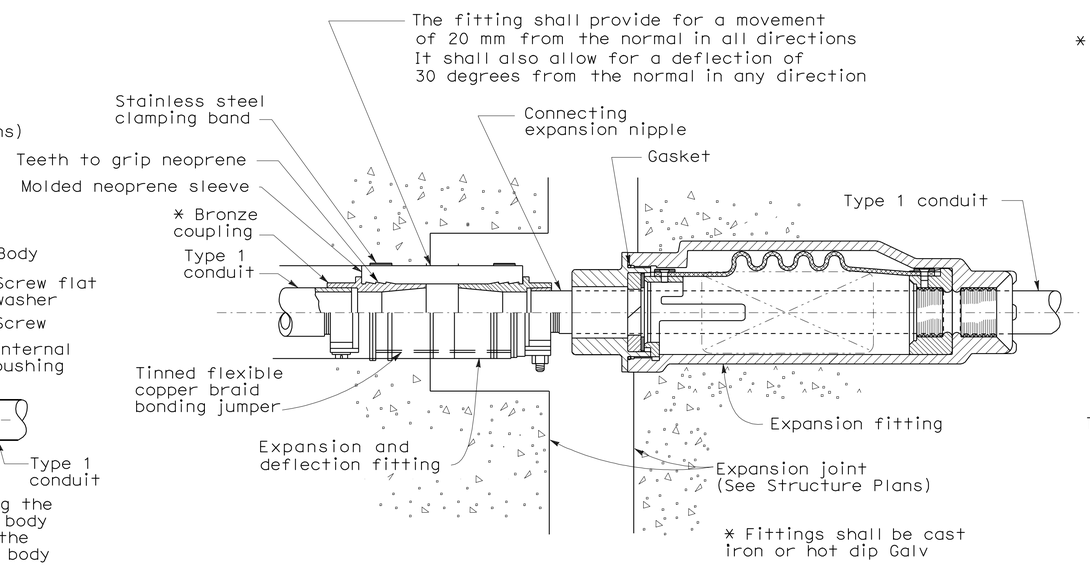

DETAIL XY
COMBINATION EXPANSION-DEFLECTION FITTINGS
METALLIC CONDUIT INSTALLATION

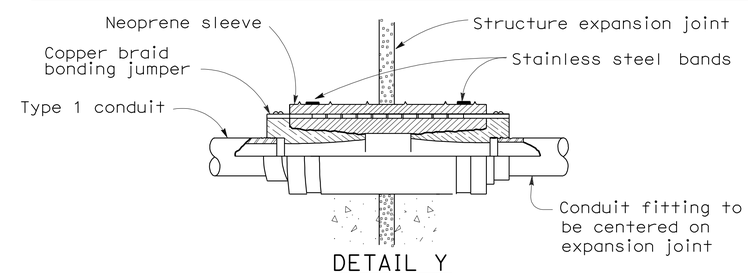

DETAIL Y
CONDUIT EXPANSION-DEFLECTION FITTING

NOTES

1. Except for sidewalk joints, a conduit expansion fitting or expansion-deflection fitting shall be installed at each 13 mm or greater structure joint, hinge or abutment.
2. Fittings or combination of fittings shall be installed to accommodate the movement rating as shown on the structure plans.
3. Fittings shall be installed parallel to superstructure girders.
4. Where lateral movement greater than 6 mm may occur, a neoprene sleeve expansion-deflection fitting shall be installed straddling the joint.

STATE OF CALIFORNIA
DEPARTMENT OF TRANSPORTATION

ELECTRICAL SYSTEMS (ELECTRICAL DETAILS STRUCTURE INSTALLATIONS)

NO SCALE
ALL DIMENSIONS ARE IN MILLIMETERS UNLESS OTHERWISE SHOWN

RSP ES-9B DATED OCTOBER 5, 2007 SUPERSEDES STANDARD PLAN ES-9B DATED JULY 1, 2004-PAGE 469 OF THE STANDARD PLANS BOOK DATED JULY 2004.

REVISED STANDARD PLAN RSP ES-9B

2004 REVISED Std PLAN RSP ES-9B

7-2-07

DIST	COUNTY	ROUTE	KILOMETER POST TOTAL PROJECT	SHEET NO.	TOTAL SHEETS
11	SD	805	40.6/42.4	533	567

Caltrans Metric

Jeffery G. McRae
REGISTERED ELECTRICAL ENGINEER

October 5, 2007
PLANS APPROVAL DATE

REGISTERED PROFESSIONAL ENGINEER
Jeffery G. McRae
No. E14512
Exp. 6-30-08
ELECTRICAL
STATE OF CALIFORNIA

The State of California or its officers or agents shall not be responsible for the accuracy or completeness of electronic copies of this plan sheet.

To get to the Caltrans web site, go to: http://www.dot.ca.gov

To accompany plans dated 6-14-10

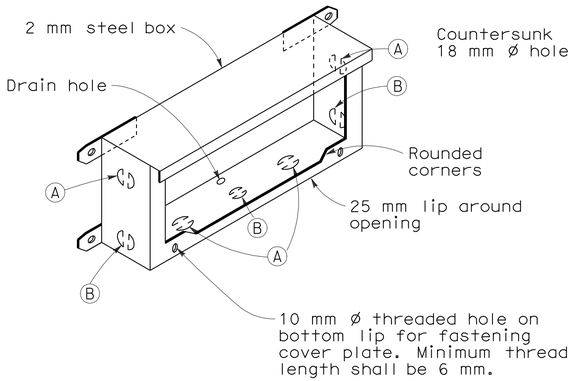

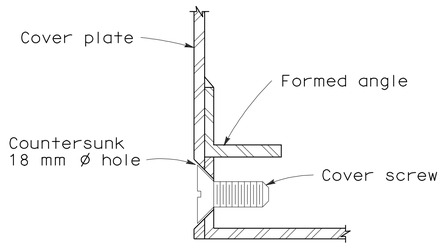

DETAIL J

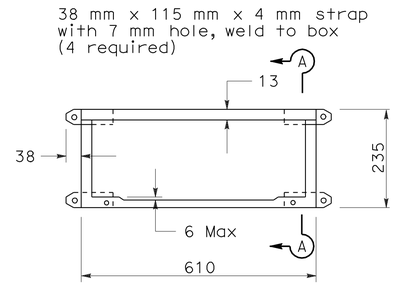

PLAN

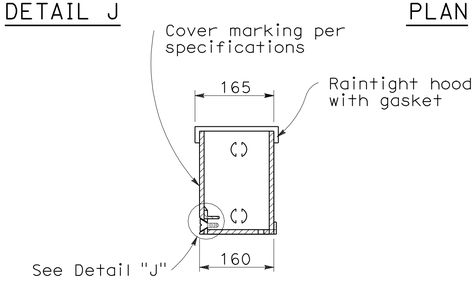

SECTION A-A

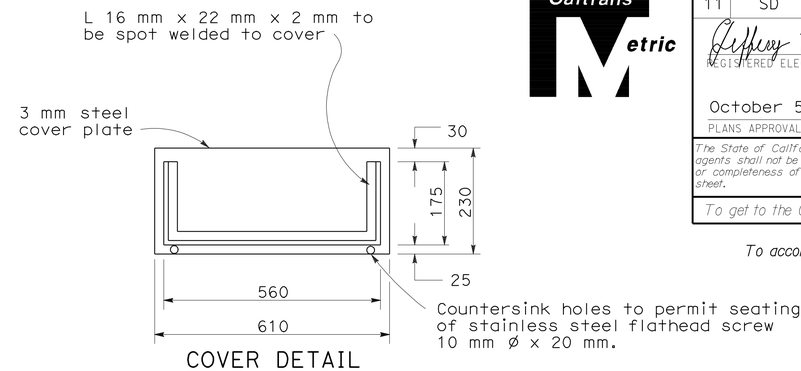

COVER DETAIL

INSTALLATION NOTE:

Box shall be parallel to top of railing. Close cover box during pouring with 6 mm plywood of sufficient size to provide 1:1 chamfer on 3 sides of cover. Upper edge of plywood shall fit against lower edge of raintight hood.

No. 9 STRUCTURE PULL BOX

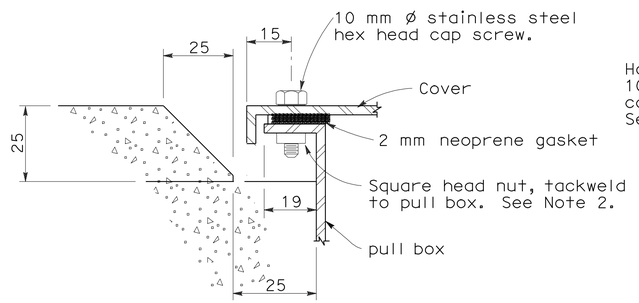

SECTION C-C

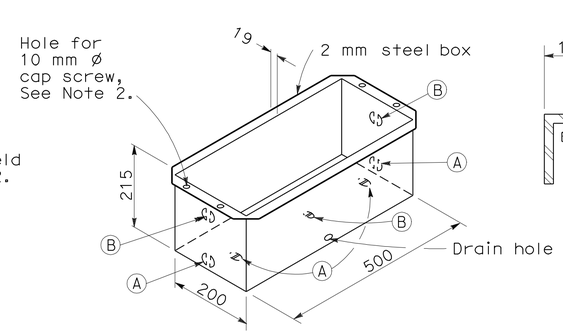

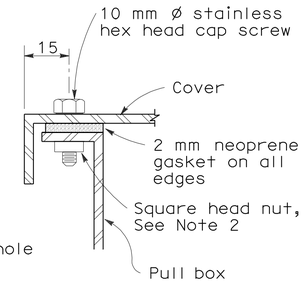

DETAIL A

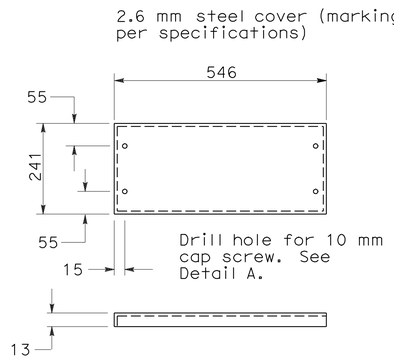

COVER DETAIL

No. 9A STRUCTURE PULL BOX

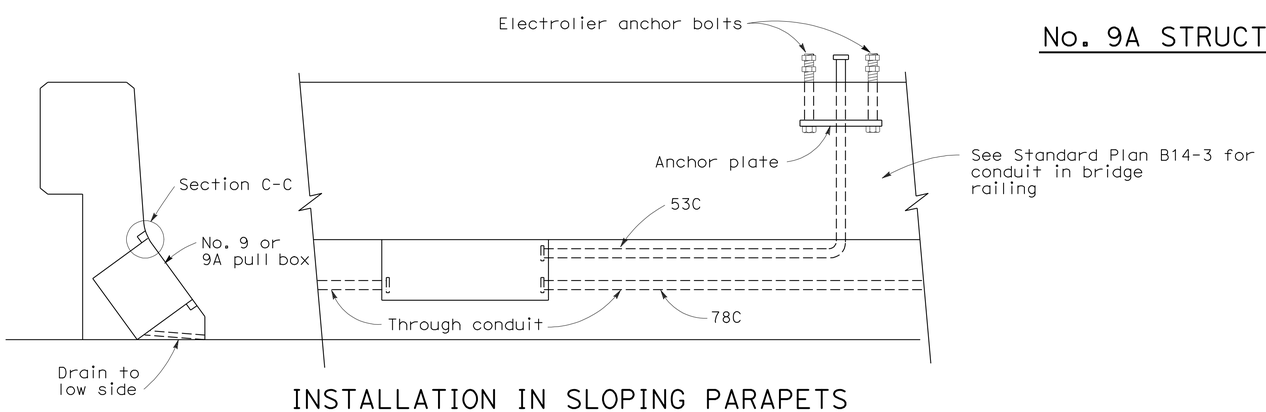

INSTALLATION IN SLOPING PARAPETS

For reinforcement in area of electrolier, see railing sheets. For electrolier anchor bolts, see Standard Plan ES-6B.

NOTES: No. 9 and 9A Pull Box

1. Corner joints shall be lapped and secured by spot welding or riveting.
2. Where cap screws are used to attach cover to box, either of the following methods of providing adequate threading may be used:
   a. Tack weld square nut to bottom of flange (Total 4), or
   b. Tack weld a 6 mm x 16 mm x 200 mm bar beneath flange (Total 2).
3. Pound knockouts flat after punching.
4. Multiple size knockouts shall not be permitted.
5. Pull box covers shall be marked as shown on Revised Standard Plan RSP ES-8.

KNOCKOUT SCHEDULE
No. 9 AND 9A PULL BOX

(A) 53C, 1 each end, 2 on bottom.

(B) 78C, 1 each end, 1 on bottom.

STATE OF CALIFORNIA
DEPARTMENT OF TRANSPORTATION

ELECTRICAL SYSTEMS (ELECTRICAL DETAILS STRUCTURE INSTALLATIONS)

NO SCALE

ALL DIMENSIONS ARE IN MILLIMETERS UNLESS OTHERWISE SHOWN

RSP ES-9C DATED OCTOBER 5, 2007 SUPERSEDES STANDARD PLAN ES-9C DATED JULY 1, 2004-PAGE 470 OF THE STANDARD PLANS BOOK DATED JULY 2004.

REVISED STANDARD PLAN RSP ES-9C

2004 REVISED Std PLAN RSP ES-9C

7-26-07

DIST	COUNTY	ROUTE	KILOMETER POST TOTAL PROJECT	SHEET NO.	TOTAL SHEETS
11	SD	805	40.6/42.4	534	567

Jeffery G. McRae
REGISTERED ELECTRICAL ENGINEER

October 5, 2007
PLANS APPROVAL DATE

REGISTERED PROFESSIONAL ENGINEER Jeffery G. McRae No. E14512 Exp. 6-30-08 ELECTRICAL STATE OF CALIFORNIA

The State of California or its officers or agents shall not be responsible for the accuracy or completeness of electronic copies of this plan sheet.

To get to the Caltrans web site, go to: http://www.dot.ca.gov

Caltrans Metric

To accompany plans dated 6-14-10

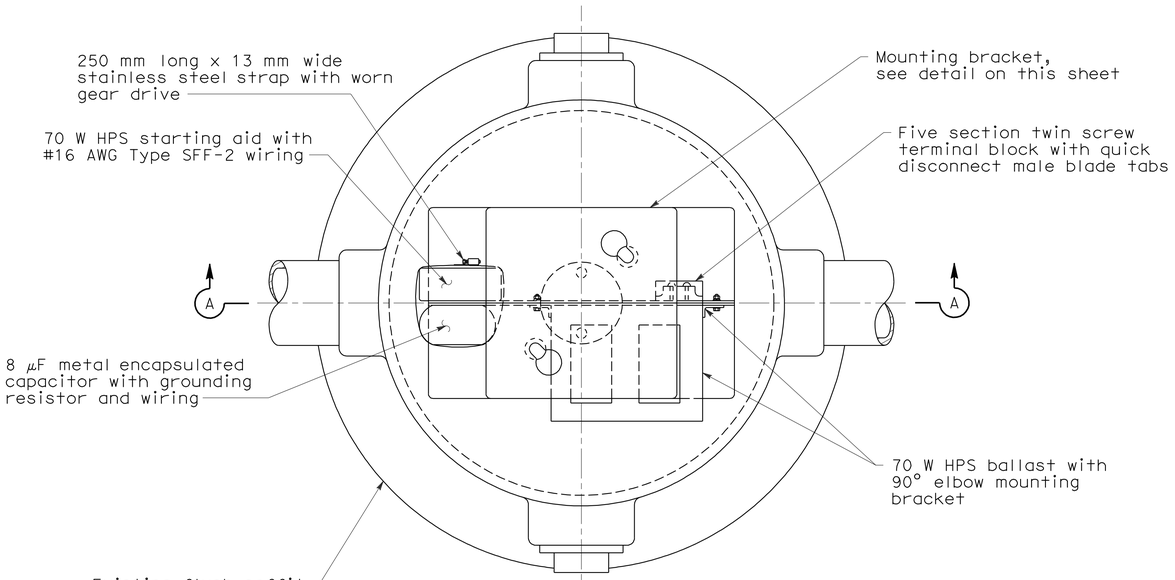

PLAN

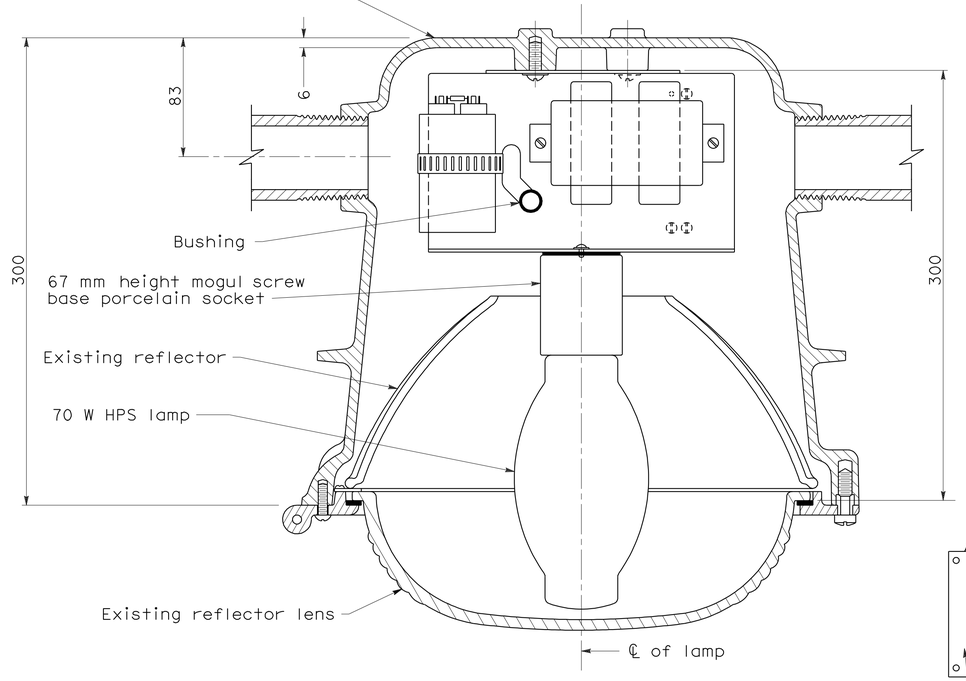

SECTION A-A

FLUSH SOFFIT LUMINAIRE ASSEMBLY

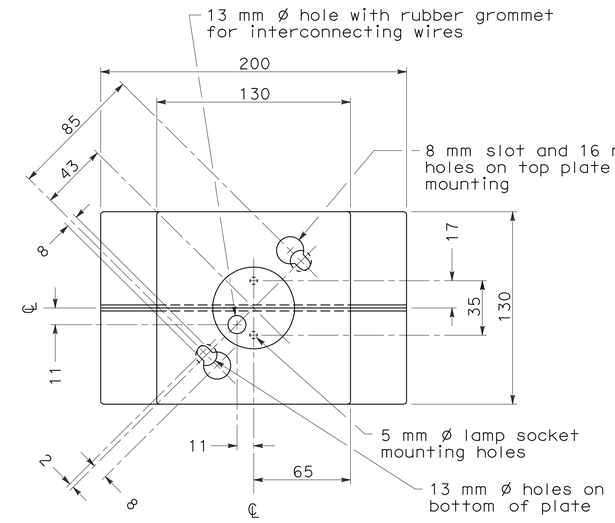

TOP VIEW

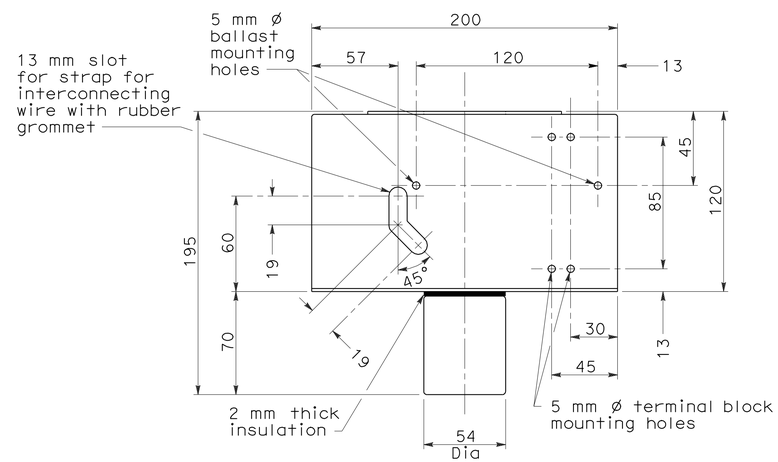

FRONT VIEW

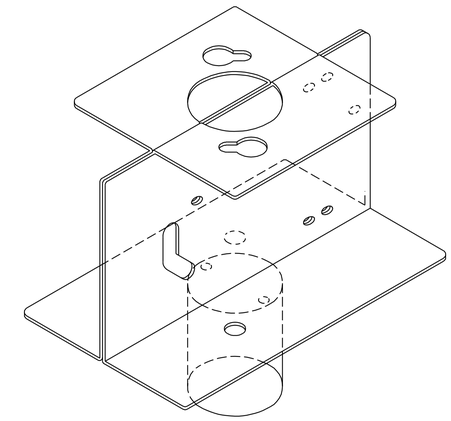

Preform two sheets 1.6 mm mild steel as shown, spotweld together in each corner with four spotwelds.

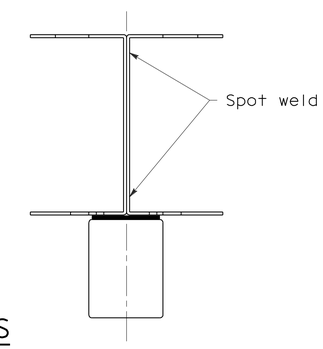

SIDE VIEW

MOUNTING BRACKET DETAILS

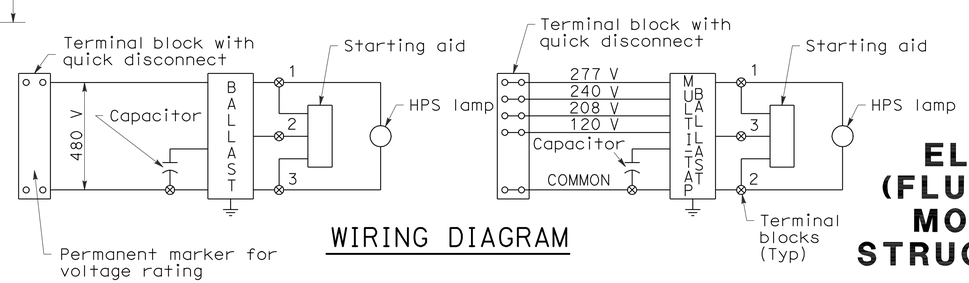

WIRING DIAGRAM

NOTES

1. Fixture wiring shall be Type SFF-2.
2. Use 4.2 mm ø machine screws, lockwashers and nuts for mounting ballast and terminal strips.
3. In-line fuse as required on Revised Standard Plan RSP ES-13B.

STATE OF CALIFORNIA
DEPARTMENT OF TRANSPORTATION

ELECTRICAL SYSTEMS (FLUSH SOFFIT LUMINAIRE MODIFICATION DETAILS STRUCTURE INSTALLATIONS)

NO SCALE

ALL DIMENSIONS ARE IN MILLIMETERS UNLESS OTHERWISE SHOWN

RSP ES-9F DATED OCTOBER 5, 2007 SUPERSEDES STANDARD PLAN ES-9F DATED JULY 1, 2004-PAGE 473 OF THE STANDARD PLANS BOOK DATED JULY 2004.

REVISED STANDARD PLAN RSP ES-9F

2004 REVISED Std PLAN RSP ES-9F

6-27-07

DIST	COUNTY	ROUTE	KILOMETER POST TOTAL PROJECT	SHEET NO.	TOTAL SHEETS
11	SD	805	40.6/42.4	535	567

Caltrans Metric

Jeffery G. McRae
REGISTERED ELECTRICAL ENGINEER

October 5, 2007
PLANS APPROVAL DATE

REGISTERED PROFESSIONAL ENGINEER Jeffery G. McRae No. E14512 Exp. 6-30-08 ELECTRICAL STATE OF CALIFORNIA

The State of California or its officers or agents shall not be responsible for the accuracy or completeness of electronic copies of this plan sheet.

To get to the Caltrans web site, go to: http://www.dot.ca.gov

To accompany plans dated 6-14-10

ISOLUX CURVE - MINIMUM

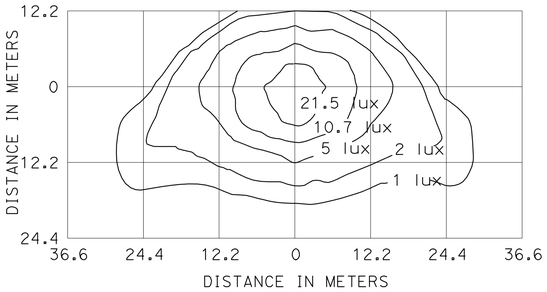

TYPE III MEDIUM CUTOFF

Cutoff Luminaire
10.4 m Mounting Height
LAMP OPERATED AT 22 000 lm
200 W HIGH PRESSURE SODIUM LAMP
ANSI DESIGNATION S66

ISOLUX CURVE - MINIMUM

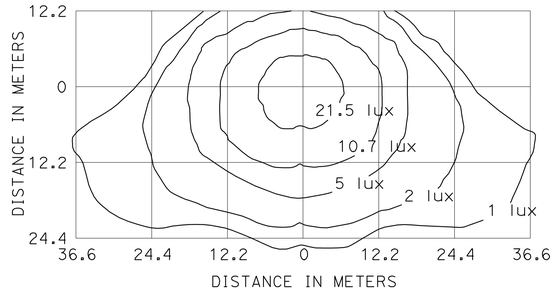

TYPE III MEDIUM CUTOFF

Cutoff Luminaire
12.2 m Mounting Height
LAMP OPERATED AT 37 000 lm
310 W HIGH PRESSURE SODIUM LAMP
ANSI DESIGNATION S67

ISOLUX CURVE - MINIMUM

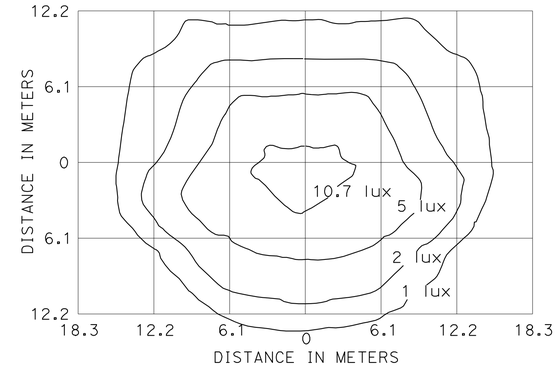

FLUSH SOFFIT LUMINAIRE

5.2 m Mounting Height
LAMP OPERATED AT 5800 lm
70 W HIGH PRESSURE SODIUM LAMP
ANSI DESIGNATION S62

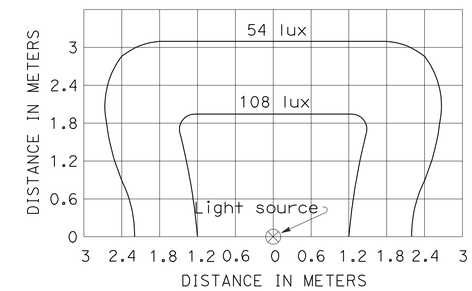

SIGN LIGHTING FIXTURE ISOLUX DIAGRAM

1. Curves represent the minimum lux of initial illumination on a 3 m x 6 m panel.
2. The lux shown are with the fixture attached to the light fixture mounting channel which places the center of the source 1420 mm in front of panel and 300 mm below the bottom edge.
3. Applicable lamp: 85-W fluorescent phosphor coated induction lamp.

ISOLUX CURVE - MINIMUM

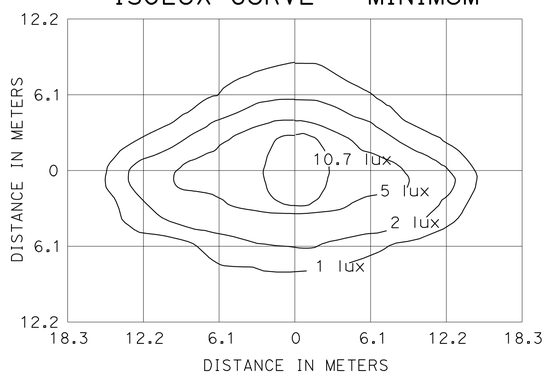

PENDANT SOFFIT LUMINAIRE
TYPE III SHORT

5.2 m Mounting Height
LAMP OPERATED AT 5800 lm
70 W HIGH PRESSURE SODIUM LAMP
ANSI DESIGNATION S62

ISOLUX CURVE - MINIMUM

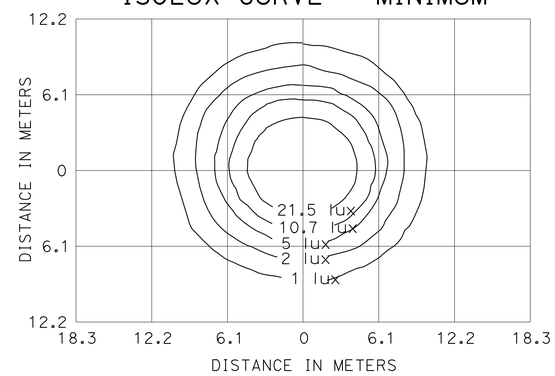

PENDANT SOFFIT LUMINAIRE

5.2 m Mounting Height
LAMP OPERATED AT 5800 lm
70 W HIGH PRESSURE SODIUM LAMP
ANSI DESIGNATION S62

ISOLUX CURVE - MINIMUM

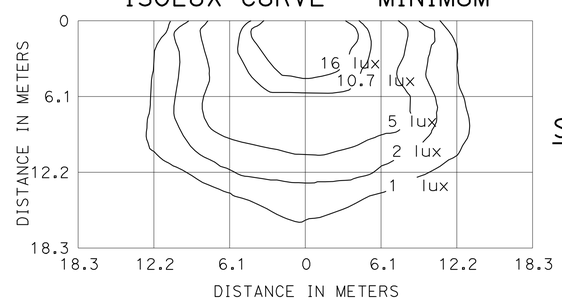

DETAIL ``W'' WALL LUMINAIRE

4.6 m Mounting Height
LAMP OPERATED AT 9500 lm
100 W HIGH PRESSURE SODIUM LAMP
ANSI DESIGNATION S54

ISOLUX CURVE - MINIMUM

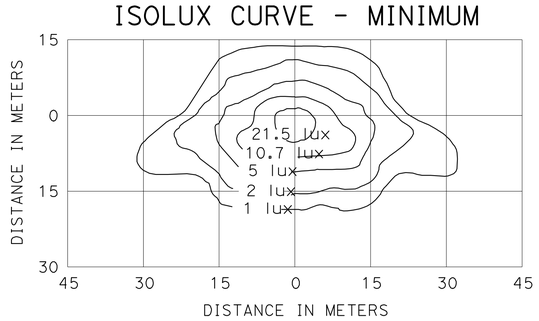

TYPE III MEDIUM CUTOFF

Cutoff Luminaire
9.1 m Mounting Height
LAMP OPERATED AT 16 000 lm
150 W HIGH PRESSURE SODIUM LAMP
ANSI DESIGNATION S55

ISOLUX CURVE - MINIMUM

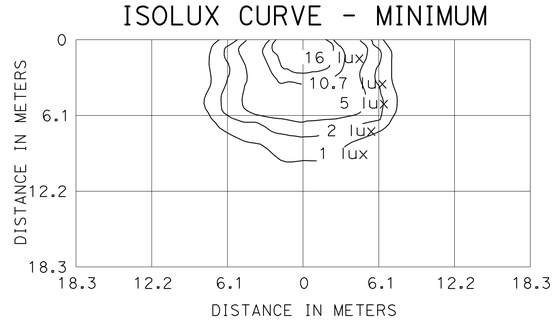

WALL LUMINAIRE

4.6 m Mounting Height
LAMP OPERATED AT 5800 lm
70 W HIGH PRESSURE SODIUM LAMP
ANSI DESIGNATION S62

ISOLUX CURVE - MINIMUM

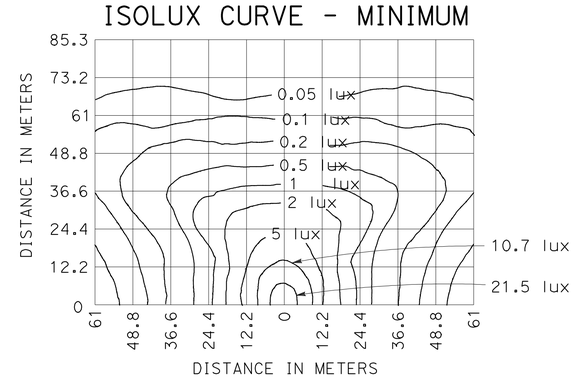

LOW PRESSURE SODIUM LUMINAIRE

12.2 m Mounting Height
LAMP OPERATED AT 33 000 lm
180 W LOW PRESSURE SODIUM LAMP

NOTE

Isolux diagrams show the minimum horizontal lux required.

STATE OF CALIFORNIA
DEPARTMENT OF TRANSPORTATION

ELECTRICAL SYSTEMS (ISOLUX DIAGRAMS)

NO SCALE

ALL DIMENSIONS ARE IN MILLIMETERS UNLESS OTHERWISE SHOWN

RSP ES-10 DATED OCTOBER 5, 2007 SUPERSEDES STANDARD PLAN ES-10 DATED JULY 1, 2004-PAGE 474 OF THE STANDARD PLANS BOOK DATED JULY 2004.

REVISED STANDARD PLAN RSP ES-10

2004 REVISED Std PLAN RSP ES-10

6-27-07

DIST	COUNTY	ROUTE	KILOMETER POST TOTAL PROJECT	SHEET NO.	TOTAL SHEETS
11	SD	805	40.6/42.4	536	567

REGISTERED CIVIL ENGINEER

October 5, 2007
PLANS APPROVAL DATE

REGISTERED PROFESSIONAL ENGINEER
Stanley P. Johnson
No. C57793
Exp. 03-31-08
CIVIL
STATE OF CALIFORNIA

The State of California or its officers or agents shall not be responsible for the accuracy or completeness of electronic copies of this plan sheet.

To get to the Caltrans web site, go to: http://www.dot.ca.gov

To accompany plans dated 6-14-10

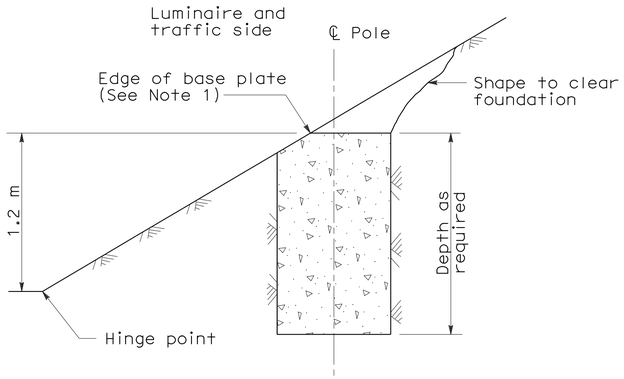

CUT SLOPES
STEEPER THAN 1:4
See Note 2

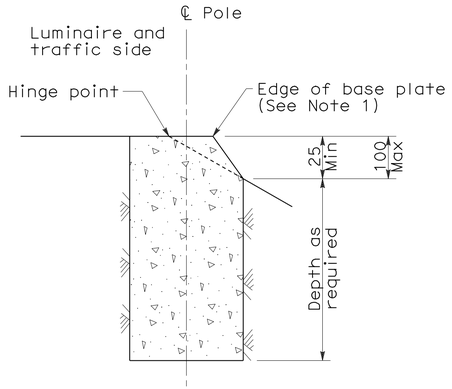

FILL SLOPES
STEEPER THAN 1:4
See Note 2

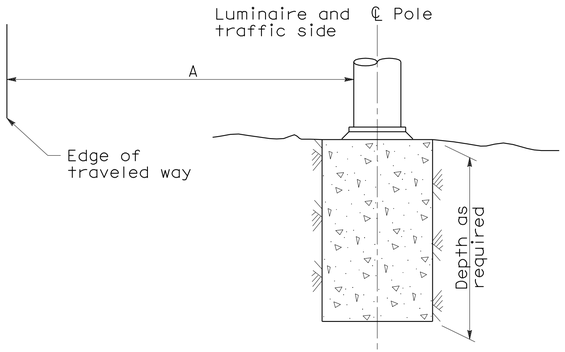

FLAT SECTIONS, CUT OR FILL SLOPES
1:4 OR FLATTER

STANDARD TYPE	SETBACK (DIMENSION A)
32	9 m Min
31, 36-20A	6 m Min
15, 15D, 15-SB, 21, 21D, 30	Mast Arm Length (Min)

FOUNDATIONS ADJACENT TO ALL ROADWAYS EXCEPT
IN SIDEWALK, MEDIAN AND ISLAND AREAS

NOTES:

1. Where a portion of the foundation is above grade, the top edges shall have a 25 mm chamfer.
2. Horizontal setbacks on cut and fill slopes steeper than 1:4 shall not exceed the distance shown for flat sections.

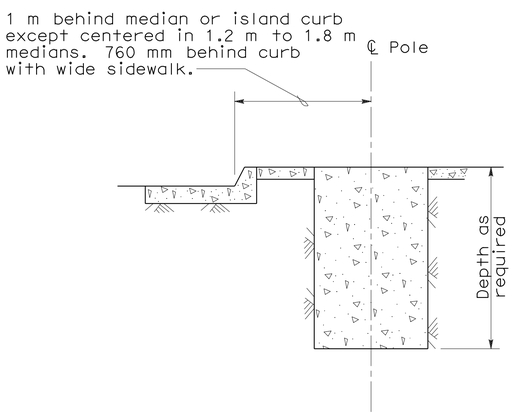

MEDIAN, ISLAND
OR WIDE SIDEWALK
(2 m wide and wider)

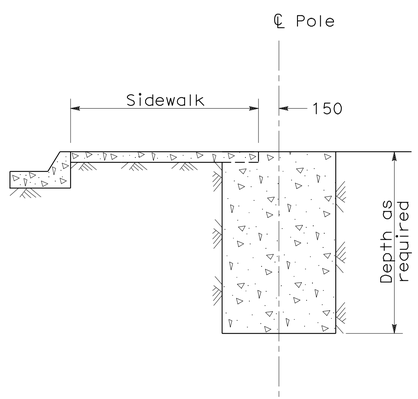

NARROW SIDEWALK
(Less than 2 m wide)

FOUNDATIONS IN SIDEWALK, MEDIAN AND ISLAND AREAS

STATE OF CALIFORNIA
DEPARTMENT OF TRANSPORTATION

ELECTRICAL SYSTEMS (FOUNDATION INSTALLATIONS)

NO SCALE

ALL DIMENSIONS ARE IN
MILLIMETERS UNLESS OTHERWISE SHOWN

RSP ES-11 DATED OCTOBER 5, 2007 SUPERSEDES STANDARD PLAN ES-11
DATED JULY 1, 2004-PAGE 475 OF THE STANDARD PLANS BOOK DATED JULY 2004.

REVISED STANDARD PLAN RSP ES-11

2004 REVISED Std PLAN RSP ES-11

10-1-07

DIST	COUNTY	ROUTE	KILOMETER POST TOTAL PROJECT	SHEET NO.	TOTAL SHEETS
11	SD	805	40.6/42.4	537	567

Caltrans Metric

REGISTERED ELECTRICAL ENGINEER

October 5, 2007
PLANS APPROVAL DATE

REGISTERED PROFESSIONAL ENGINEER
Jeffery G. McRae
No. E14512
Exp. 6-30-08
ELECTRICAL
STATE OF CALIFORNIA

The State of California or its officers or agents shall not be responsible for the accuracy or completeness of electronic copies of this plan sheet.

To get to the Caltrans web site, go to: http://www.dot.ca.gov

To accompany plans dated 6-14-10

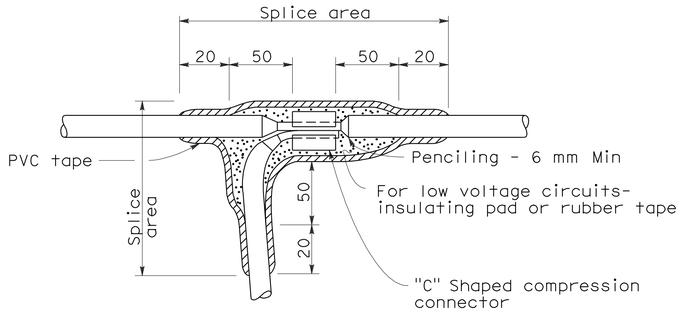

TYPE "C" SPLICE

Between 1 free-end and 1 through conductor

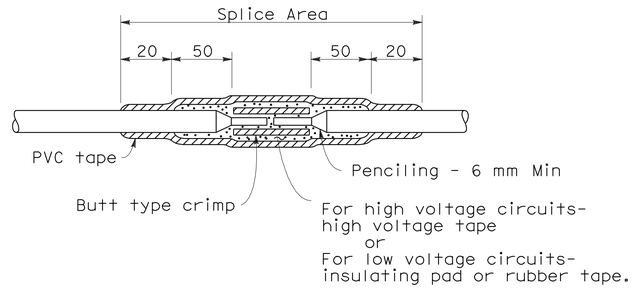

TYPE "S" SPLICE

Between 2 free-ends

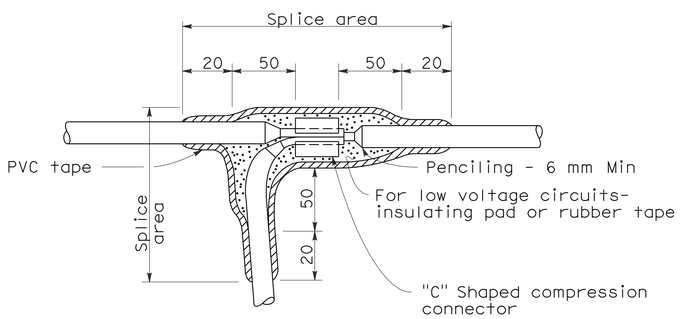

TYPE "T" SPLICE

For 3 free-ends

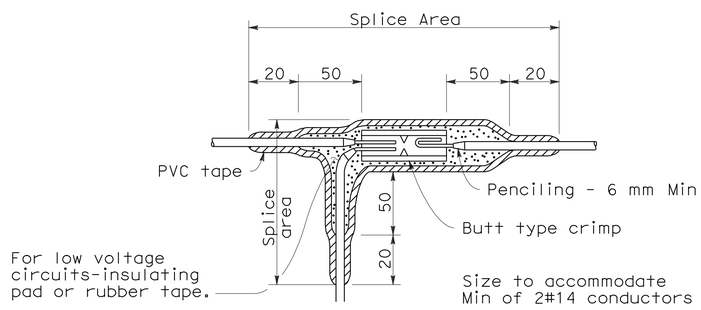

TYPE "ST" SPLICE

NOTES:

1. Dimensions are minimum.
2. Rubber tapes shall be rolled after application.

INSULATION METHODS

Low Voltage Circuits (0-600 V)

METHOD "B"

1. Completely cover the splice area with electrical insulating coating and allow to dry.
2. Apply 2 layers of electrical insulating pad with minimum thickness of 4 mm each layer or 2 layers, half lapped, synthetic oil resistant, self fusing rubber tape.
3. Apply 3 layers half lapped polyvinyl chloride tape.
4. Cover entire splice with electrical insulating coating and allow to dry.

High Voltage Circuits (Over 600 V)

1. Completely cover the splice area with electrical insulating coating and allow to dry.
2. Apply high voltage tape to a minimum thickness equal to original insulation.
3. Apply 3 layers half lapped polyvinyl chloride tape.
4. Cover entire splice with electrical insulating coating and allow to dry.

STATE OF CALIFORNIA
DEPARTMENT OF TRANSPORTATION

ELECTRICAL SYSTEMS (SPLICING DETAILS)

NO SCALE

ALL DIMENSIONS ARE IN MILLIMETERS UNLESS OTHERWISE SHOWN

RSP ES-13A DATED OCTOBER 5, 2007 SUPERSEDES STANDARD PLAN ES-13A DATED JULY 1, 2004-PAGE 478 OF THE STANDARD PLANS BOOK DATED JULY 2004.

REVISED STANDARD PLAN RSP ES-13A

2004 REVISED Std PLAN RSP ES-13A

6-27-07

DIST	COUNTY	ROUTE	KILOMETER POST TOTAL PROJECT	SHEET NO.	TOTAL SHEETS
11	SD	805	40.6/42.4	538	567

Caltrans Metric

REGISTERED ELECTRICAL ENGINEER

October 5, 2007
PLANS APPROVAL DATE

REGISTERED PROFESSIONAL ENGINEER Jeffery G. McRae No. E14512 Exp. 6-30-08 ELECTRICAL STATE OF CALIFORNIA

The State of California or its officers or agents shall not be responsible for the accuracy or completeness of electronic copies of this plan sheet.

To get to the Caltrans web site, go to: http://www.dot.ca.gov

To accompany plans dated 6-14-10

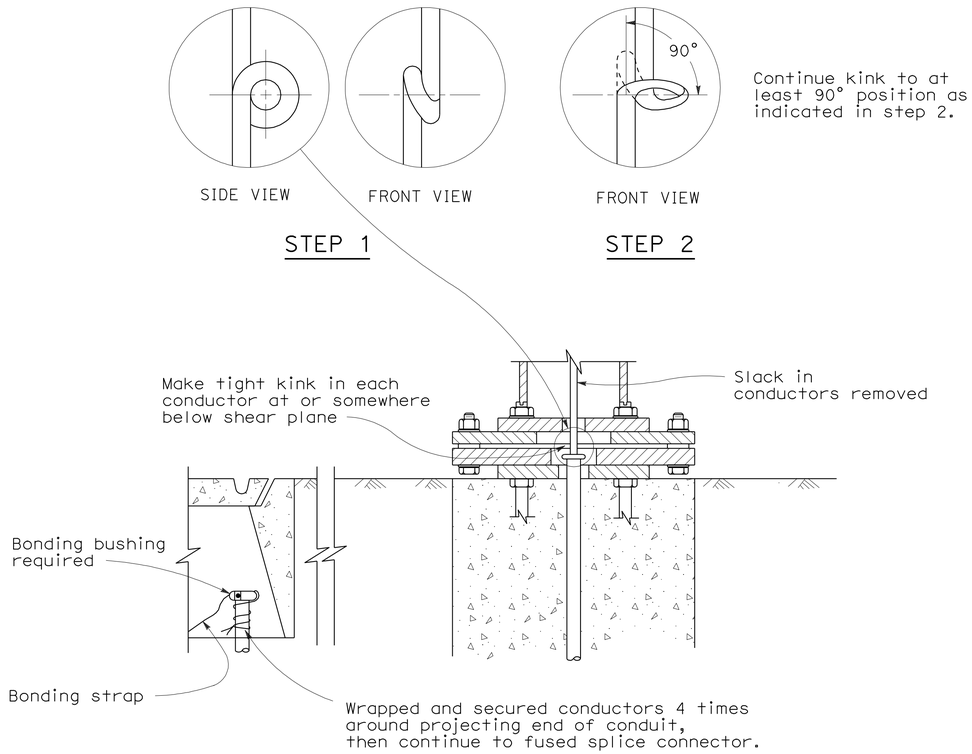

KINKING DETAIL FOR SLIP BASE STANDARDS

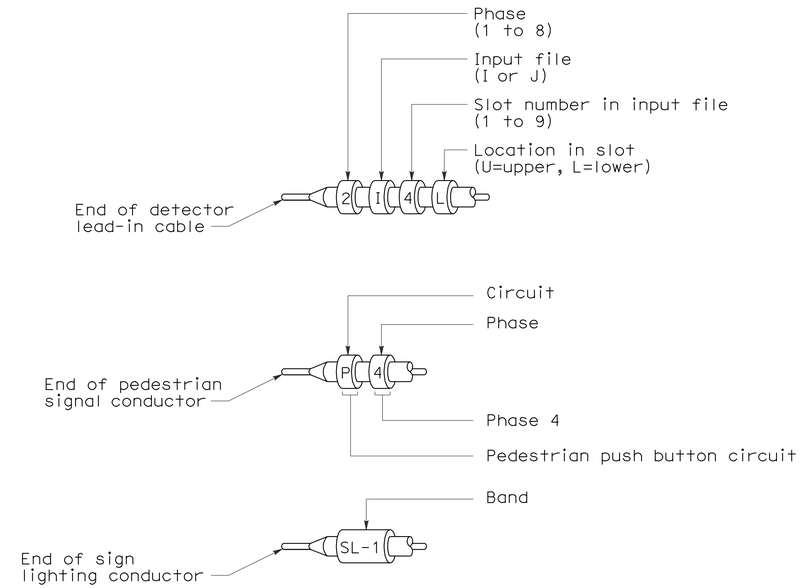

TYPICAL BANDING OF CONDUCTOR ENDS

Primary lines of multiple ballasts shall be provided with fused connectors.
Fuse ratings shall be as noted below.

CIRCUIT VOLTAGE	FUSE VOLTAGE RATING	FUSE CURRENT RATING																
		HPS LAMP BALLAST								LOW PRESSURE SODIUM BALLAST					INDUCTION SIGN LIGHTING	SINGLE PHASE (TWO WIRE) TRANSFORMERS (PRIMARY SIDE)		
		70 W	100 W	150 W	200 W	250 W	310 W	400 W	1000 W	35 W	55 W	90 W	135 W	180 W	85 W	1 kVA	2 kVA	3 kVA
120 V	250 V	5	5	5	5	5	5	5	-	5	5	5	5	5	5	10	20	30
240 V	250 V	5	5	5	5	5	5	5	5	3	3	3	5	5	5	6	10	20
480 V	500-600 V	5	5	5	5	5	5	5	5	2	2	2	3	3	1*	3	6	10

* See Revised Standard Plan RSP ES-15D, Type SC3 Control.

FUSE RATINGS FOR FUSED CONNECTORS

LUMINAIRE BALLAST FUSING

STATE OF CALIFORNIA
DEPARTMENT OF TRANSPORTATION

ELECTRICAL SYSTEMS (WIRING DETAILS AND FUSE RATINGS)

NO SCALE

ALL DIMENSIONS ARE IN MILLIMETERS UNLESS OTHERWISE SHOWN

RSP ES-13B DATED OCTOBER 5, 2007 SUPERSEDES STANDARD PLAN ES-13B DATED JULY 1, 2004-PAGE 479 OF THE STANDARD PLANS BOOK DATED JULY 2004.

REVISED STANDARD PLAN RSP ES-13B

2004 REVISED Std PLAN RSP ES-13B

10-1-07

DIST	COUNTY	ROUTE	KILOMETER POST TOTAL PROJECT	SHEET NO.	TOTAL SHEETS
11	SD	805	40.6/42.4	539	567

Caltrans Metric

REGISTERED ELECTRICAL ENGINEER

October 5, 2007
PLANS APPROVAL DATE

REGISTERED PROFESSIONAL ENGINEER
Jeffery G. McRae
No. E14512
Exp. 6-30-08
ELECTRICAL
STATE OF CALIFORNIA

The State of California or its officers or agents shall not be responsible for the accuracy or completeness of electronic copies of this plan sheet.

To get to the Caltrans web site, go to: http://www.dot.ca.gov

To accompany plans dated 6-14-10

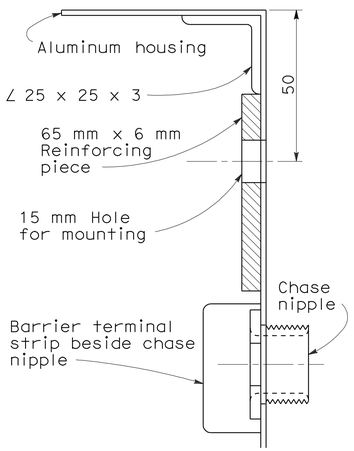

REINFORCING DETAIL

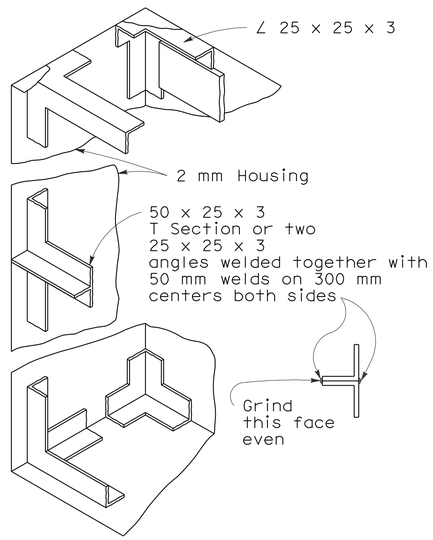

FRAMING DETAILS

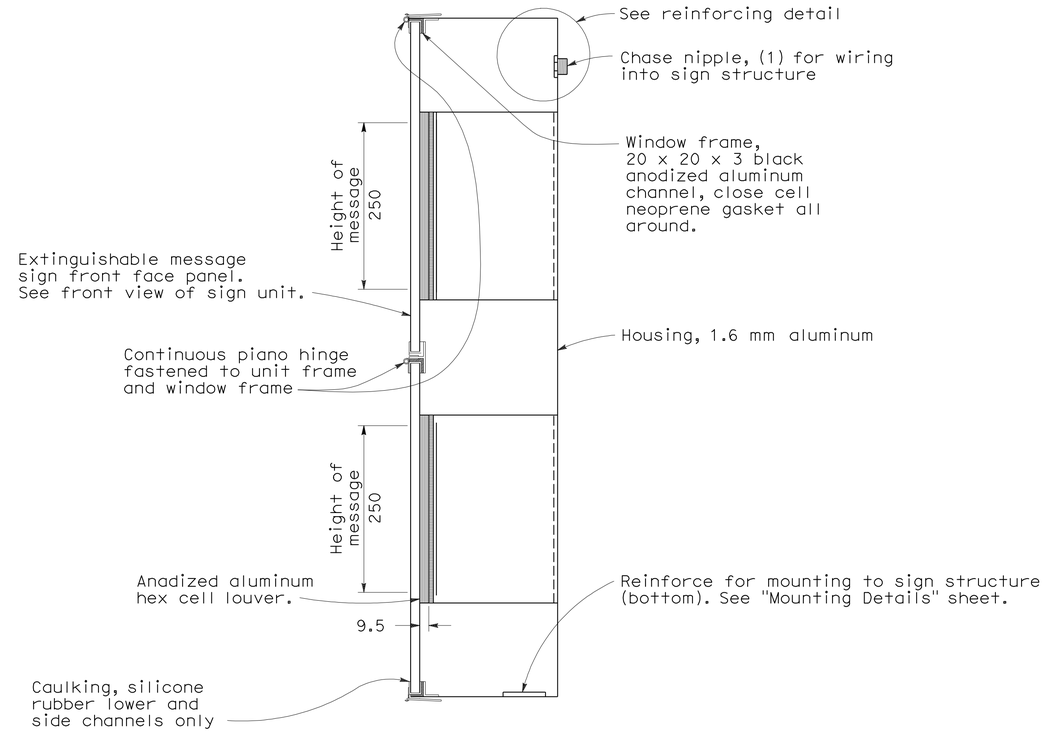

CROSS-SECTION OF SIGN

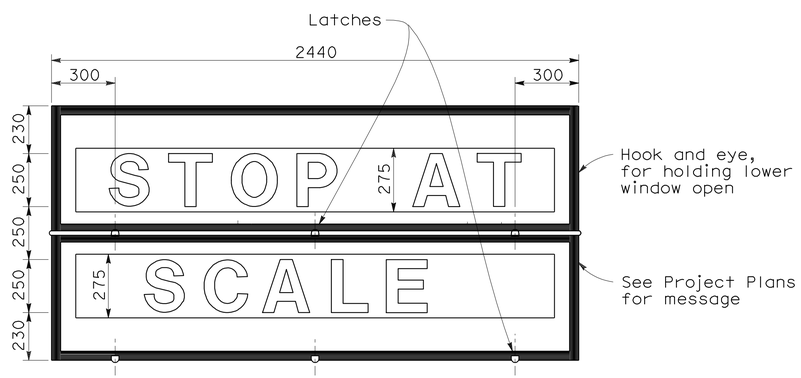

FRONT VIEW OF SIGN UNIT

Note: See Wiring Notes and Symbols on Revised Standard Plan RSP ES-14B.

STATE OF CALIFORNIA
DEPARTMENT OF TRANSPORTATION

ELECTRICAL SYSTEMS (LED EXTINGUISHABLE MESSAGE SIGN 250 mm LETTERS)

NO SCALE

ALL DIMENSIONS ARE IN MILLIMETERS UNLESS OTHERWISE SHOWN

RSP ES-14A DATED OCTOBER 5, 2007 SUPERSEDES STANDARD PLAN ES-14A DATED JULY 1, 2004-PAGE 480 OF THE STANDARD PLANS BOOK DATED JULY 2004.

REVISED STANDARD PLAN RSP ES-14A

2004 REVISED Std PLAN RSP ES-14A

8-9-07

DIST	COUNTY	ROUTE	KILOMETER POST TOTAL PROJECT	SHEET NO.	TOTAL SHEETS
11	SD	805	40.6/42.4	540	567

Jeffery G. McRae
REGISTERED ELECTRICAL ENGINEER

October 5, 2007
PLANS APPROVAL DATE

REGISTERED PROFESSIONAL ENGINEER
Jeffery G. McRae
No. E14512
Exp. 6-30-08
ELECTRICAL
STATE OF CALIFORNIA

The State of California or its officers or agents shall not be responsible for the accuracy or completeness of electronic copies of this plan sheet.

To get to the Caltrans web site, go to: http://www.dot.ca.gov

To accompany plans dated 6-14-10

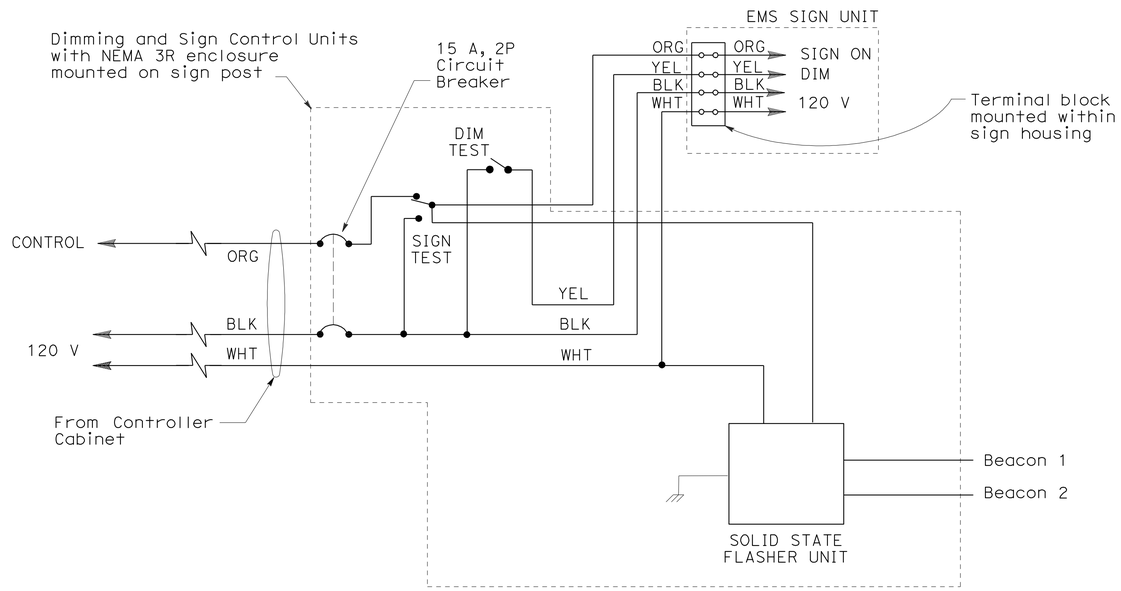

STATE OF CALIFORNIA
DEPARTMENT OF TRANSPORTATION

ELECTRICAL SYSTEMS (LED EXTINGUISHABLE MESSAGE SIGN WIRING DIAGRAM)

NO SCALE

ALL DIMENSIONS ARE IN MILLIMETERS UNLESS OTHERWISE SHOWN

RSP ES-14B DATED OCTOBER 5, 2007 SUPERSEDES STANDARD PLAN ES-14B DATED JULY 1, 2004-PAGE 481 OF THE STANDARD PLANS BOOK DATED JULY 2004.

REVISED STANDARD PLAN RSP ES-14B

2004 REVISED Std PLAN RSP ES-14B

6-27-07

To accompany plans dated 6-14-10

DIST	COUNTY	ROUTE	KILOMETER POST TOTAL PROJECT	SHEET NO.	TOTAL SHEETS
11	SD	805	40.6/42.4	541	567

REGISTERED CIVIL ENGINEER

October 5, 2007
PLANS APPROVAL DATE

Stanley P. Johnson No. C57793 Exp. 3-31-08 CIVIL — REGISTERED PROFESSIONAL ENGINEER — STATE OF CALIFORNIA

The State of California or its officers or agents shall not be responsible for the accuracy or completeness of electronic copies of this plan sheet.

To get to the Caltrans web site, go to: http://www.dot.ca.gov

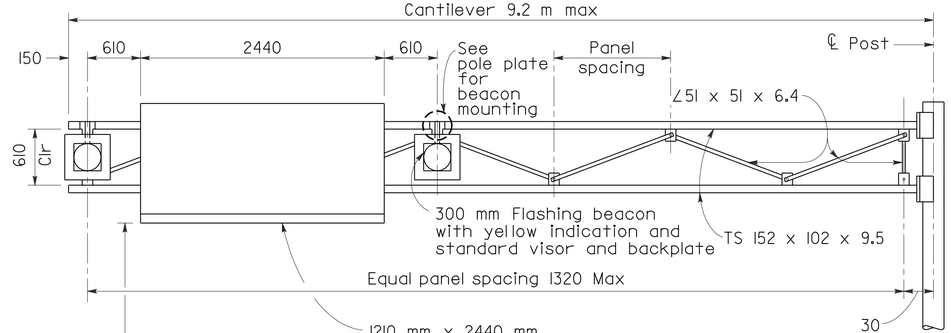

Post 8 NPS; "t" = 12.7 mm for cantilever 7.3 m or less.

Post 10 NPS; "t" = 12.7 mm for cantilever over 7.3 m.

ELEVATION

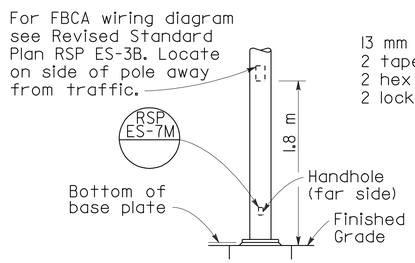

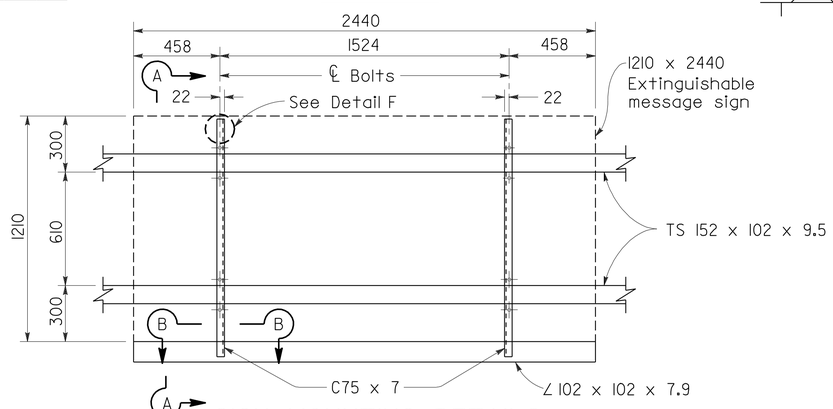

SIGN MOUNTING DETAILS

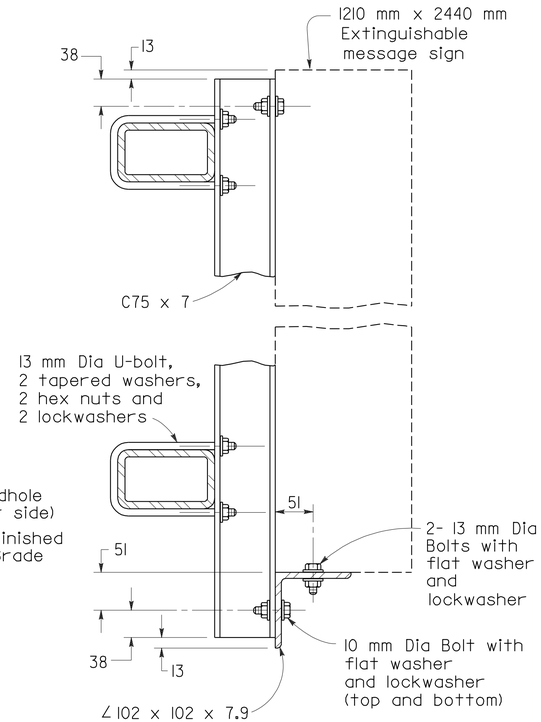

SECTION A-A

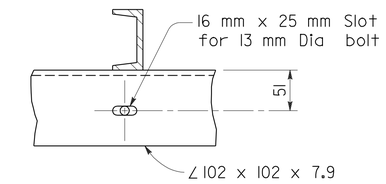

SECTION B-B

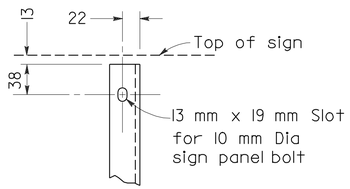

DETAIL F

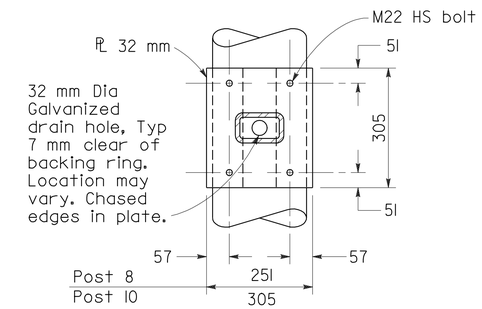

SECTION C-C

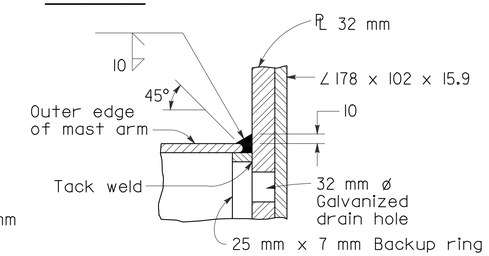

DETAIL G

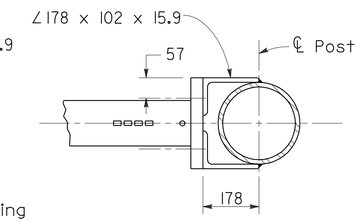

SECTION D-D

∠51 x 51 x 6.4 not shown for clarity

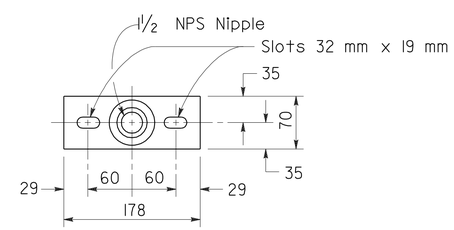

POLE PLATE DETAIL

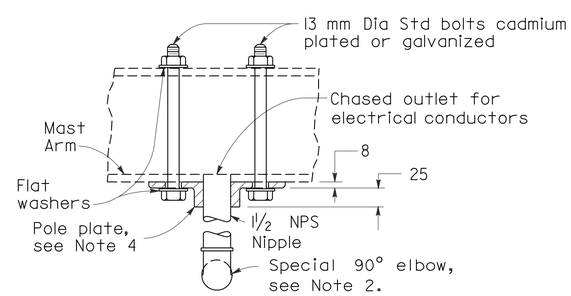

POLE PLATE FOR BEACON MOUNTING

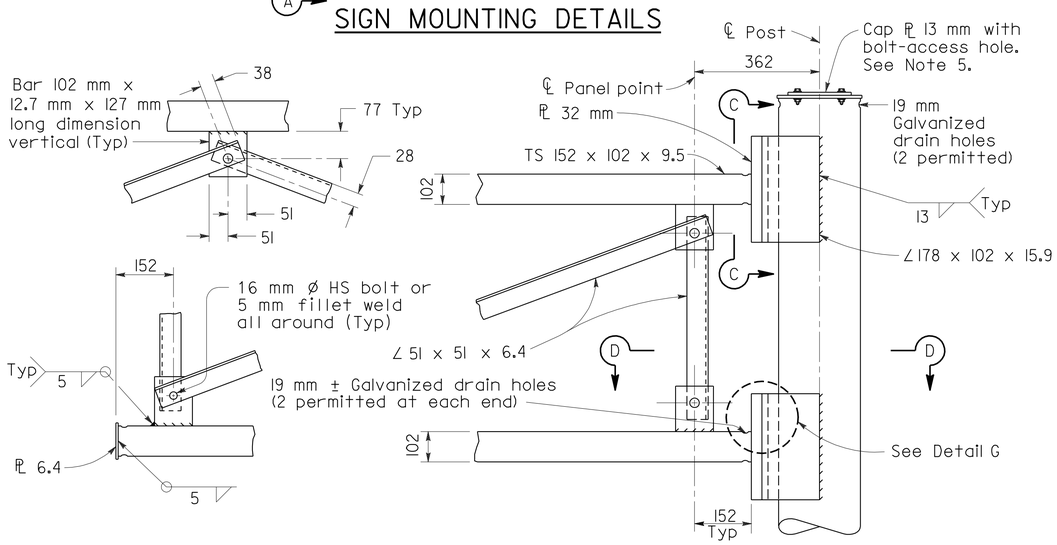

TRUSS FRAME CONNECTION DETAILS

NOTES:

1. For general notes, base plates, anchor bolts and foundations refer to Lightweight Signs, Post Details and Foundation Details sheets of the Standard Plans.
2. For details of special 90° elbow, see Standard Plans ES-4D.
3. For sign structure dimensions, see Project Plans.
4. Pole plate shall be bronze, aluminum or ductile iron as specified in the Standard Specifications.
5. For Bolt-Access Hole Details, see Overhead Signs-Truss Frame Juncture Details.

STATE OF CALIFORNIA
DEPARTMENT OF TRANSPORTATION

ELECTRICAL SYSTEMS (EXTINGUISHABLE MESSAGE SIGN AND FLASHING BEACONS)

NO SCALE
ALL DIMENSIONS ARE IN MILLIMETERS UNLESS OTHERWISE SHOWN

RSP ES-14C DATED OCTOBER 5, 2007 SUPERSEDES RSP ES-14C DATED JANUARY 24, 2005 AND STANDARD PLAN ES-14C DATED JULY 1, 2004-PAGE 482 OF THE STANDARD PLANS BOOK DATED JULY 2004.

REVISED STANDARD PLAN RSP ES-14C

2004 REVISED Std PLAN RSP ES-14C

10-1-07

DIST	COUNTY	ROUTE	KILOMETER POST TOTAL PROJECT	SHEET NO.	TOTAL SHEETS
11	SD	805	40.6/42.4	542	567

Caltrans Metric

REGISTERED ELECTRICAL ENGINEER

October 5, 2007
PLANS APPROVAL DATE

REGISTERED PROFESSIONAL ENGINEER Jeffery G. McRae No. E14512 Exp. 6-30-08 ELECTRICAL STATE OF CALIFORNIA

The State of California or its officers or agents shall not be responsible for the accuracy or completeness of electronic copies of this plan sheet.

To get to the Caltrans web site, go to: http://www.dot.ca.gov

To accompany plans dated 6-14-10

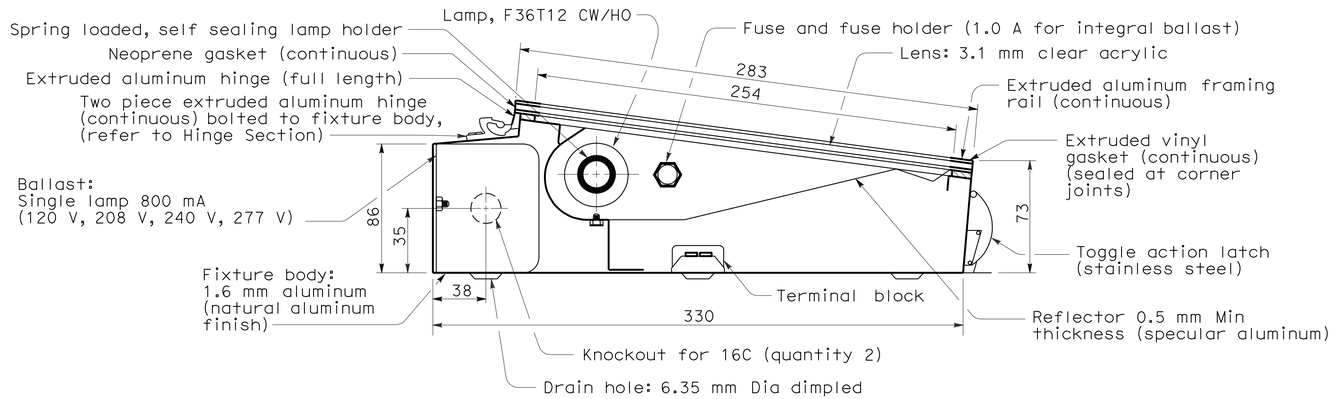

SECTION-LIGHTING FIXTURE

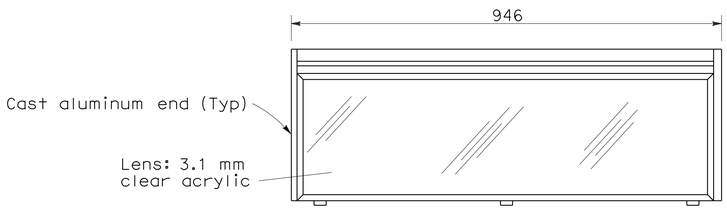

TOP VIEW

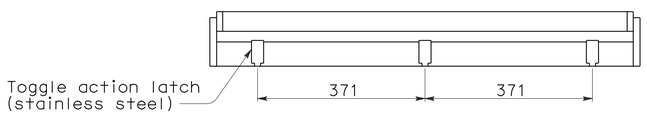

FRONT VIEW

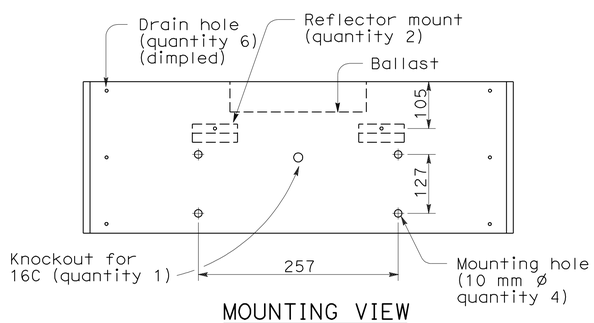

MOUNTING VIEW

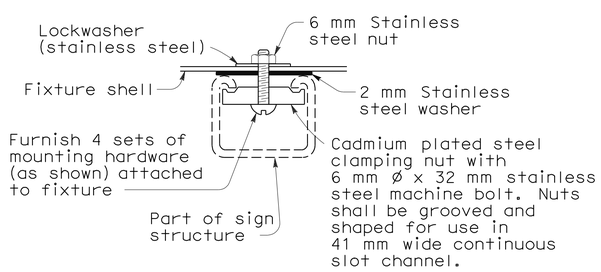

DETAIL "M"

FIXTURE MOUNTING
ON CONTINUOUS SLOT CHANNEL

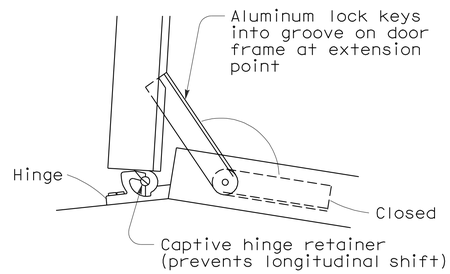

HINGE SECTION

SIGN LOAD (WATTS) AND FUSING	
1 Lamp and ballast - 75 W	1 A
2 Lamps and ballast - 150 W	2.5 A
3 Lamps and ballast - 225 W	3 A

NOTES:

1. Conduit shall be secured to nearest member using one-hole galvanized mallable iron or steel straps at 1.5 m maximum centers and brass machine screws tapped into the member.
2. Ballasts and terminal boards shall be marked with legible symbols. Conductors shall be tagged and their identification marked on the corresponding terminal on the terminal board as shown on the Typical Fixture Wiring Diagram. An alternative cover design shall be submitted for approval.
3. Ballast shall be one, two or three lamp types as required, rated at 800 mA.
4. Each ballast shall be fused with 32 mm x 6 mm slow-blow glass tube fuse.
5. Fuseholder shall be a panel mounted type, with screw type finger knob.
6. The Contractor shall supply the fixtures with an integral ballast.

STATE OF CALIFORNIA
DEPARTMENT OF TRANSPORTATION

ELECTRICAL SYSTEMS (915 mm FLUORESCENT SIGN ILLUMINATION EQUIPMENT)

NO SCALE

ALL DIMENSIONS ARE IN MILLIMETERS UNLESS OTHERWISE SHOWN

RSP ES-15B DATED OCTOBER 5, 2007 SUPERSEDES STANDARD PLAN ES-15B DATED JULY 1, 2004-PAGE 484 OF THE STANDARD PLANS BOOK DATED JULY 2004.

REVISED STANDARD PLAN RSP ES-15B

2004 REVISED Std PLAN RSP ES-15B

10-1-07

DIST	COUNTY	ROUTE	KILOMETER POST TOTAL PROJECT	SHEET NO.	TOTAL SHEETS
11	SD	805	40.6/42.4	543	567

Caltrans Metric

REGISTERED ELECTRICAL ENGINEER

October 5, 2007
PLANS APPROVAL DATE

REGISTERED PROFESSIONAL ENGINEER
Jeffery G. McRae
No. E14512
Exp. 6-30-08
ELECTRICAL
STATE OF CALIFORNIA

The State of California or its officers or agents shall not be responsible for the accuracy or completeness of electronic copies of this plan sheet.

To get to the Caltrans web site, go to: http://www.dot.ca.gov

To accompany plans dated 6-14-10

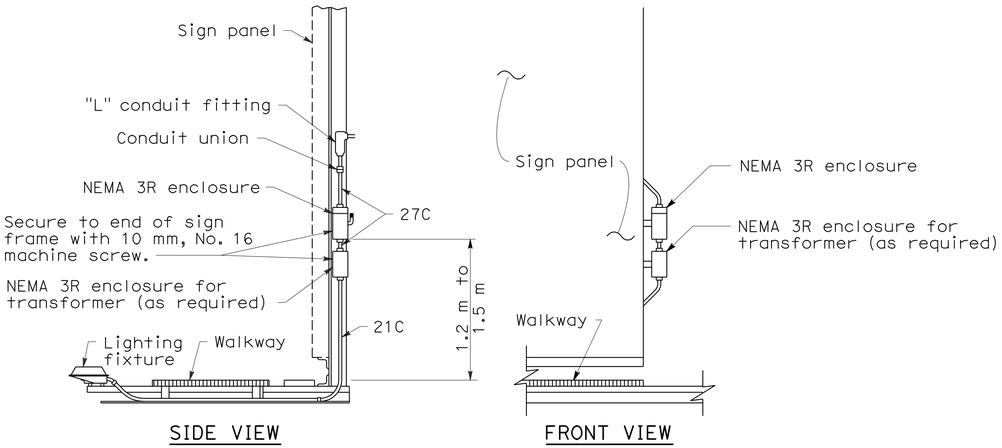

TYPICAL SIGN ILLUMINATION EQUIPMENT INSTALLATION FOR OVERHEAD SIGNS BRIDGE MOUNTED

Contactor and test switch enclosure shall be readily accessible from the sign walkway.

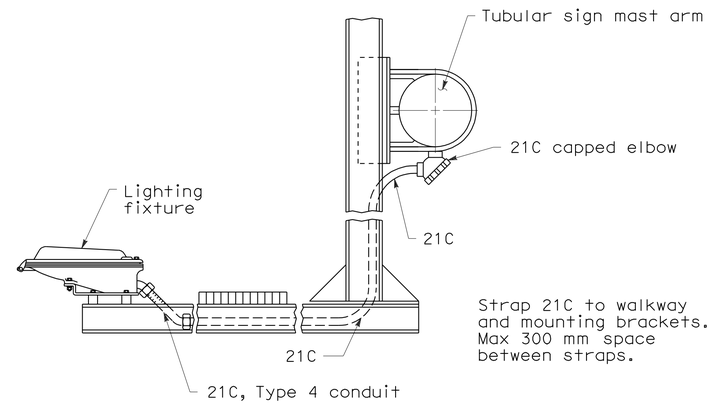

TYPICAL SIGN ILLUMINATION EQUIPMENT INSTALLATION FOR OVERHEAD SIGNS TUBULAR

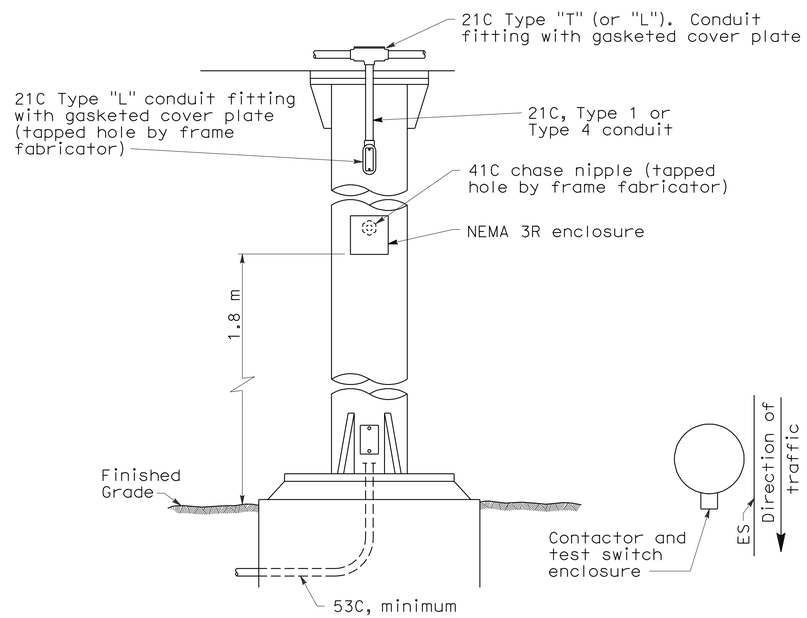

TYPICAL SIGN ILLUMINATION EQUIPMENT INSTALLATION FOR OVERHEAD SIGNS ROUND POST

NOTES:

1. Type 4 conduit shall be secured to the nearest walkway bracket using one-hole galvanized malleable iron or steel straps and brass machine screws tapped into the bracket.
2. See Overhead Signs Standard Plans for overhead signs and frame jucture details for photoelectric unit installation.
3. Enclosures and straps shall be secured by 6 mm maximum size screws.

STATE OF CALIFORNIA
DEPARTMENT OF TRANSPORTATION

ELECTRICAL SYSTEMS (SIGN ILLUMINATION EQUIPMENT)

NO SCALE

ALL DIMENSIONS ARE IN MILLIMETERS UNLESS OTHERWISE SHOWN

RSP ES-15C DATED OCTOBER 5, 2007 SUPERSEDES STANDARD PLAN ES-15C DATED JULY 1, 2004-PAGE 485 OF THE STANDARD PLANS BOOK DATED JULY 2004.

REVISED STANDARD PLAN RSP ES-15C

2004 REVISED Std PLAN RSP ES-15C

6-27-07

DIST	COUNTY	ROUTE	KILOMETER POST TOTAL PROJECT	SHEET NO.	TOTAL SHEETS
11	SD	805	40.6/42.4	544	567

Caltrans Metric

Jeffery G. McRae
REGISTERED ELECTRICAL ENGINEER

October 5, 2007
PLANS APPROVAL DATE

REGISTERED PROFESSIONAL ENGINEER
Jeffery G. McRae
No. E14512
Exp. 6-30-08
ELECTRICAL
STATE OF CALIFORNIA

The State of California or its officers or agents shall not be responsible for the accuracy or completeness of electronic copies of this plan sheet.

To get to the Caltrans web site, go to: http://www.dot.ca.gov

To accompany plans dated 6-14-10

NOTES: (FOR LIGHTING AND SIGN ILLUMINATION CONTROL)

1. The ballast voltages of lighting fixtures and luminaires shall match line service voltages.
2. Voltage rating of photoelectric controls shall conform to the service voltage indicated on the plans.
3. Terminal strip shall be provided for wiring to fixtures.
4. Type SC1A, SC2A, SC3A controls are similar to Types SC1, SC2, SC3 controls respectively except test switch and wiring are not required.

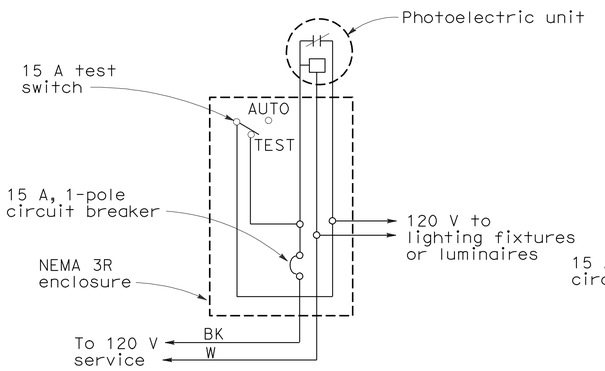

TYPE LC1 CONTROL

For 120 V unswitched circuit with no more than 800 W load.

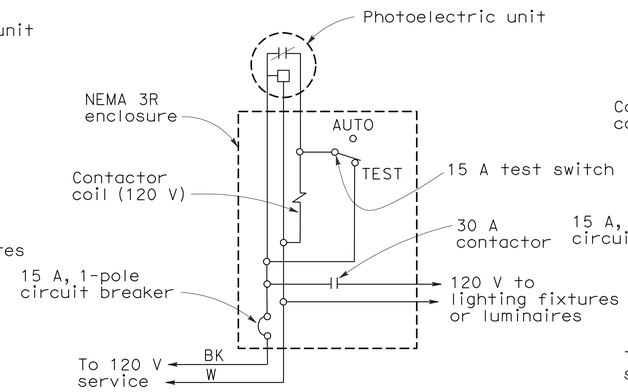

TYPE LC2 CONTROL

For 120 V unswitched circuit

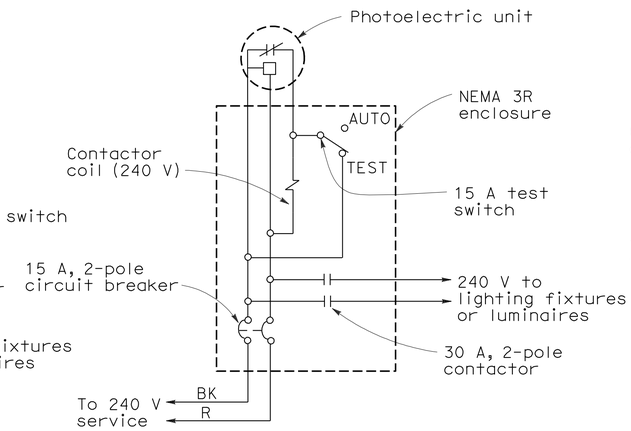

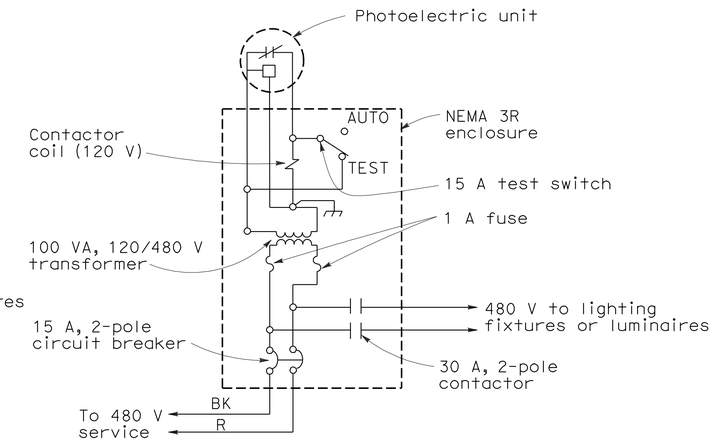

TYPE LC3 CONTROL

For 240 V and 480 V unswitched circuit

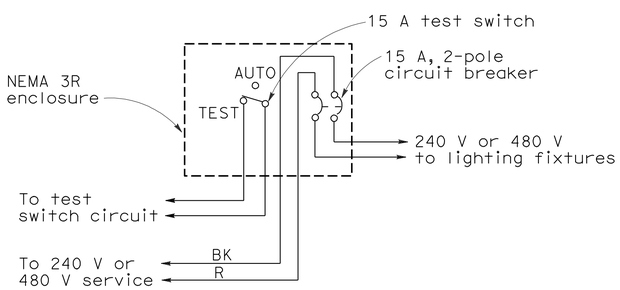

TYPE SC1 CONTROL

For 240 V or 480 V switched circuit, see Note 4 for Type SC1A

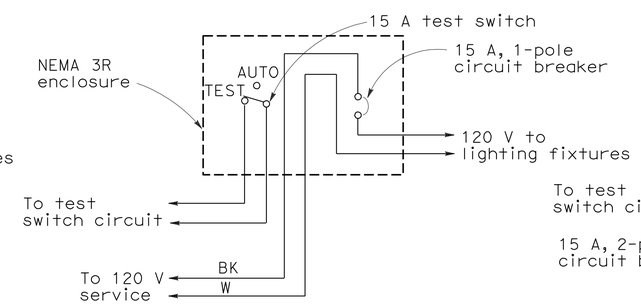

TYPE SC2 CONTROL

For 120 V switched circuit, see Note 4 for Type SC2A

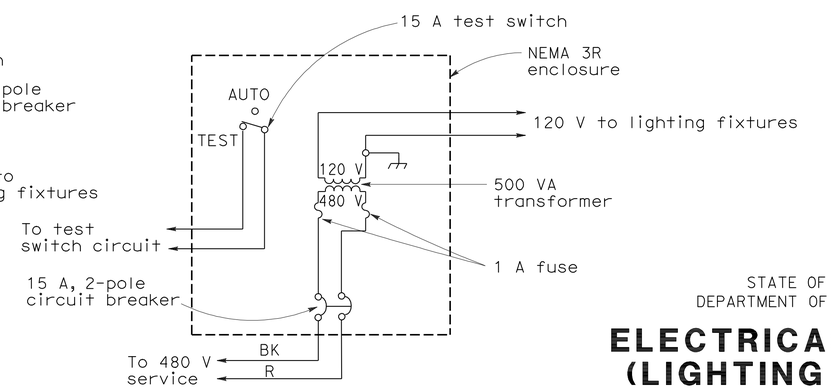

TYPE SC3 CONTROL

For 480 V switched sign circuit, see Note 4 for Type SC3A

STATE OF CALIFORNIA
DEPARTMENT OF TRANSPORTATION

ELECTRICAL SYSTEMS (LIGHTING AND SIGN ILLUMINATION CONTROL)

NO SCALE

ALL DIMENSIONS ARE IN MILLIMETERS UNLESS OTHERWISE SHOWN

RSP ES-15D DATED OCTOBER 5, 2007 SUPERSEDES RSP ES-15D DATED APRIL 28, 2005 AND STANDARD PLAN ES-15D DATED JULY 1, 2004-PAGE 486 OF THE STANDARD PLANS BOOK DATED JULY 2004.

REVISED STANDARD PLAN RSP ES-15D

2004 REVISED Std PLAN RSP ES-15D

10-1-07

DIST	COUNTY	ROUTE	KILOMETER POST TOTAL PROJECT	SHEET NO.	TOTAL SHEETS
11	SD	805	40.6/42.4	545	567

REGISTERED CIVIL ENGINEER

January 24, 2005
PLANS APPROVAL DATE

REGISTERED PROFESSIONAL ENGINEER
Tillat Sattar
No. C42892
Exp. 03-31-2006
CIVIL
STATE OF CALIFORNIA

The State of California or its officers or agents shall not be responsible for the accuracy or completeness of electronic copies of this plan sheet.

To get to the Caltrans web site, go to: http://www.dot.ca.gov

To accompany plans dated 6-14-10

Pole Type	Pole Data				Base Plate Data				"d" 610 mm ø CIDH Pile (m)	Structural Steel kg plus 3.5% Galvanizing
	Height "h" (m)	Min OD (mm)		Thickness (mm)	"C" (mm)	Thickness (mm)	Anchor Bolts (mm)			
		BASE	TOP				SIZE	BC=BOLT CIRCLE		
CCTV 25	7.62	187	98	4.55	305	25.4	25 x 920 x 102	267	1.83	180
CCTV 30	9.14	203	98	4.55	305	25.4	25 x 920 x 102	279	2.13	215
CCTV 35	10.67	219	98	4.55	305	25.4	25 x 920 x 102	305	2.13	250
CCTV 40	12.19	238	98	4.55	330	25.4	32 x 920 x 102	330	2.13	295
CCTV 45	13.72	254	98	4.55	330	25.4	32 x 920 x 102	343	2.44	340

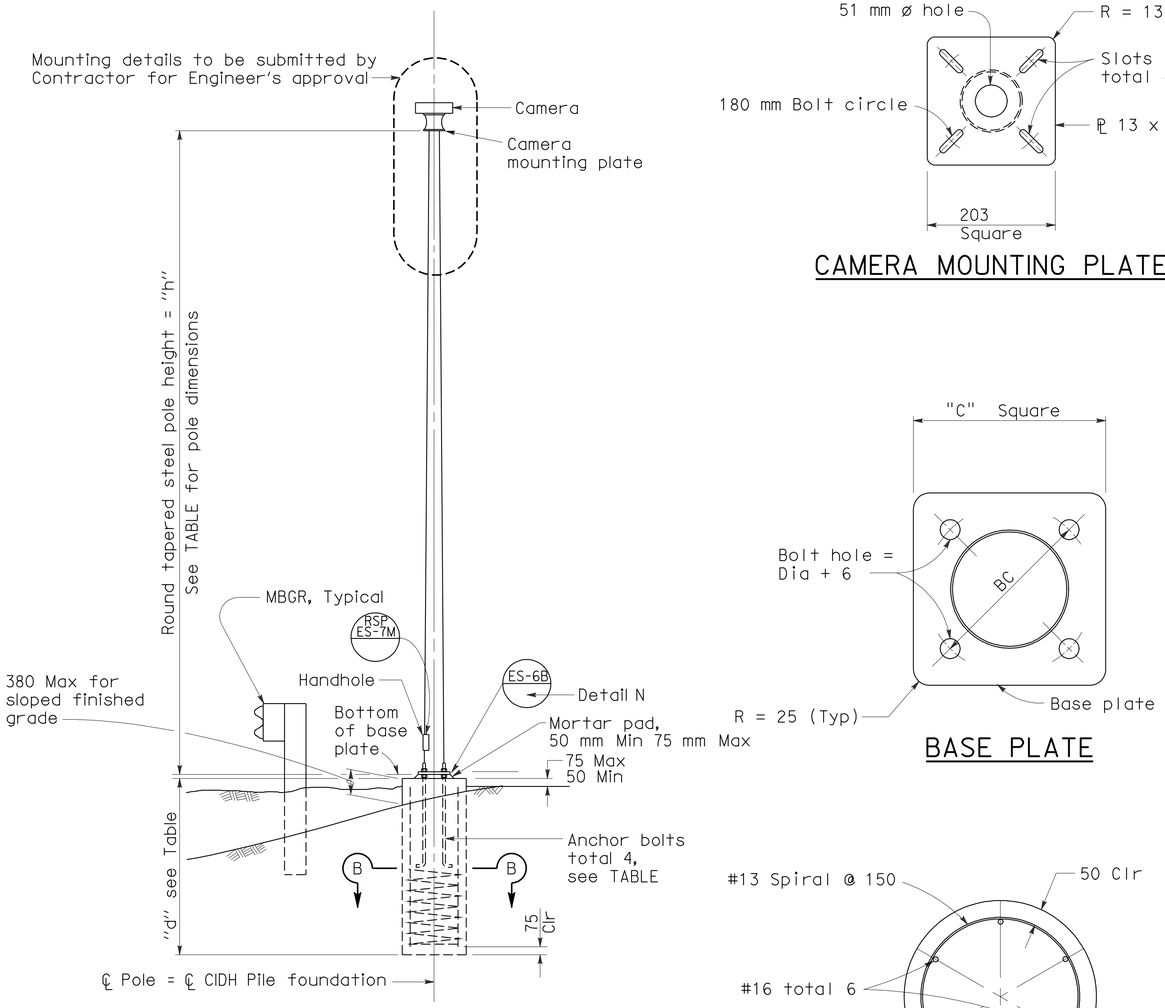

ELEVATION

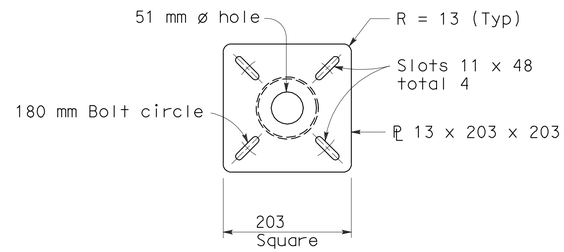

CAMERA MOUNTING PLATE

BASE PLATE

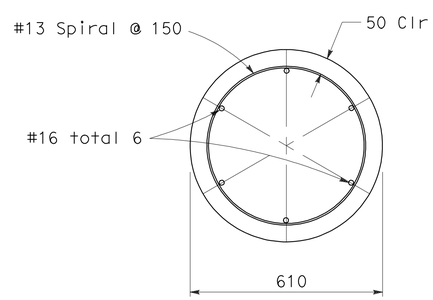

SECTION B-B

GENERAL NOTES:

SPECIFICATIONS

Design : AASHTO Standard specifications for structural supports for highway signs, luminaires and traffic signals dated 2001.

LOADING

Wind Loadings : 161km/h

UNIT STRESSES

Structural Steel : fy = 330 MPa tapered steel tube
fy = 250 MPa unless otherwise noted
Anchor bolts = A307
Reinforced Concrete : f'c = 25 MPa
fy = 415 MPa

NOTES:

1. The Contractor shall verify controlling field dimensions before ordering or fabricating any material.
2. All steel shall be galvanized after fabrication.
3. During pole erection, the post shall be raked as necessary with the use of leveling nuts to provide a plumb pole axis.

STATE OF CALIFORNIA
DEPARTMENT OF TRANSPORTATION

ELECTRICAL SYSTEMS (CLOSED CIRCUIT TELEVISION POLE DETAILS)

NO SCALE

ALL DIMENSIONS ARE IN MILLIMETERS UNLESS OTHERWISE SHOWN

RSP ES-16A DATED JANUARY 24, 2005 SUPERSEDES STANDARD PLAN ES-16A DATED JULY 1, 2004-PAGE 487 OF THE STANDARD PLANS BOOK DATED JULY 2004.

REVISED STANDARD PLAN RSP ES-16A

2004 REVISED Std PLAN RSP ES-16A

Pole Extension Type	Pole Data			
	Height "H" (m)	Min OD (mm)		Thickness (mm)
		BASE	TOP	
CCTV 5	1.5	116	98	4.55
CCTV 10	3.0	133	98	4.55
CCTV 15	4.5	151	98	4.55

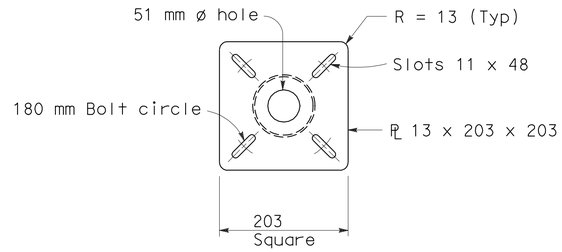

CAMERA MOUNTING PLATE

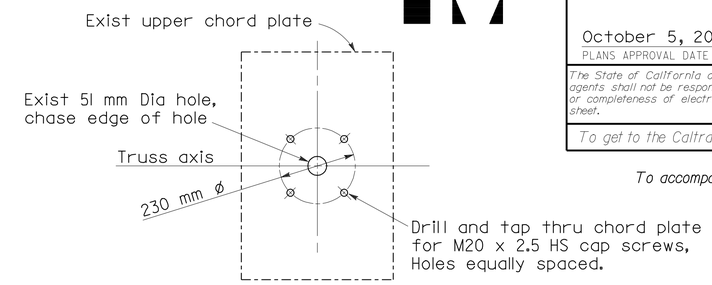

UPPER CHORD PLATE (RSP S13)

HIGH STRENGTH CAP SCREWS

16 - 11NC - 45

- 45 — Length (mm)
- 11NC — Threads (per inch)
- 16 — Size (mm)

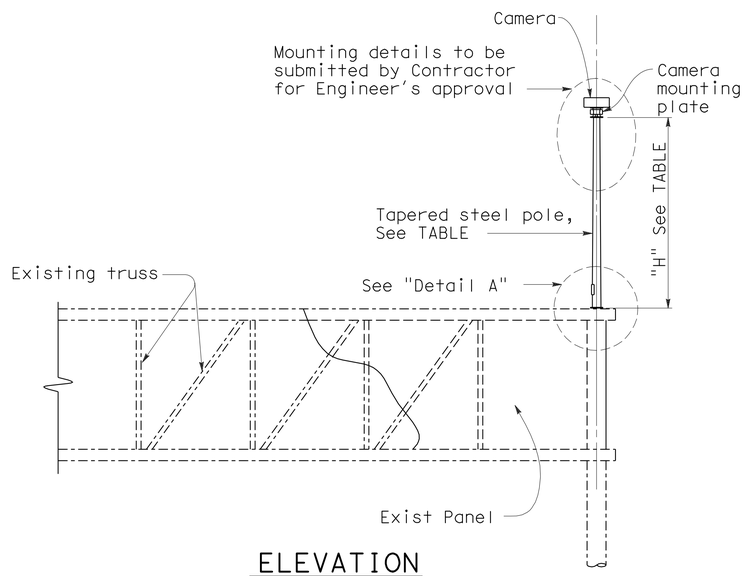

ELEVATION

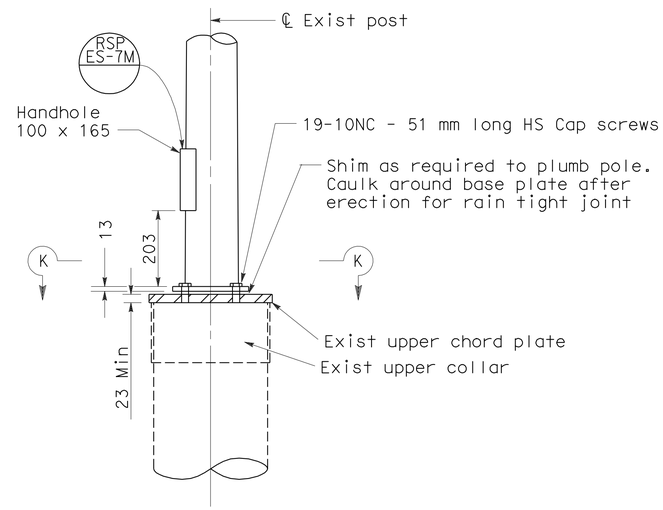

DETAIL A

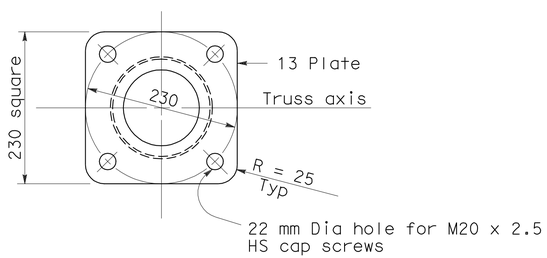

SECTION K-K

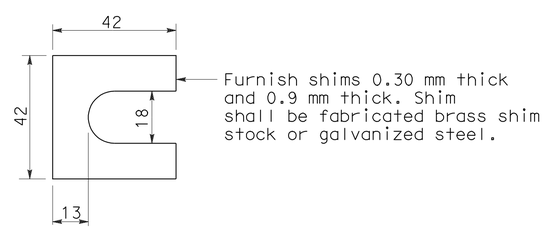

SHIM DETAIL

GENERAL NOTES:

SPECIFICATIONS

Design : AASHTO Standard specifications for structural supports for highway signs, luminaires and traffic signals dated 2001.

LOADING

Wind Loadings : 161 km/h

UNIT STRESSES

Structural Steel : fy = 330 MPa tapered steel tube
fy = 250 MPa unless otherwise noted

NOTES:

1. The Contractor shall verify controlling field dimensions before ordering or fabricating any material.
2. All steel shall be galvanized after fabrication.
3. Bolt hole locations may vary at the discretion of the Engineer.

DIST	COUNTY	ROUTE	KILOMETER POST TOTAL PROJECT	SHEET NO.	TOTAL SHEETS
11	SD	805	40.6/42.4	546	567

REGISTERED CIVIL ENGINEER

October 5, 2007
PLANS APPROVAL DATE

REGISTERED PROFESSIONAL ENGINEER Stanley P. Johnson No. C57793 Exp. 3-31-08 CIVIL STATE OF CALIFORNIA

The State of California or its officers or agents shall not be responsible for the accuracy or completeness of electronic copies of this plan sheet.

To get to the Caltrans web site, go to: http://www.dot.ca.gov

To accompany plans dated 6-14-10

STATE OF CALIFORNIA
DEPARTMENT OF TRANSPORTATION

ELECTRICAL SYSTEMS (CLOSED CIRCUIT TELEVISION POLE DETAILS-OVERHEAD SIGN MOUNTED)

NO SCALE

ALL DIMENSIONS ARE IN MILLIMETERS UNLESS OTHERWISE SHOWN

RSP ES16B DATED OCTOBER 5, 2007 SUPERSEDES RSP ES-16B DATED JANUARY 24, 2005 AND STANDARD PLAN ES-16B DATED JULY 1, 2004-PAGE 488 OF THE STANDARD PLANS BOOK DATED JULY 2004.

REVISED STANDARD PLAN RSP ES-16B

2004 REVISED Std PLAN RSP ES-16B

9-13-07

Post Type	Pole Data				Base Plate Data (mm)					CIDH Pile Data		
	Height "h" (m)	Min OD		Min Thickness	Dia	Thickness	Anchor Bolts			"D" (mm)	"L" (m)	Pile Reinf
		BASE	TOP				Total	Size "d"	BC			
CCTV 90	27.4	610	281	4.55*	914	51	6	51	737	1067	3.6	15 - #22
CCTV 80	24.3	559	256	4.55*	864	51	6	51	686	1067	3.3	15 - #22
CCTV 70	21.3	508	260	4.55	813	51	6	51	635	1067	3.0	15 - #22
CCTV 60	18.2	457	248	4.55	762	51	6	51	584	1067	2.7	15 - #22

*Lower pole segment thickness, see Pole Details

DIST	COUNTY	ROUTE	KILOMETER POST TOTAL PROJECT	SHEET NO.	TOTAL SHEETS
11	SD	805	40.6/42.4	547	567

REGISTERED CIVIL ENGINEER

January 24, 2005
PLANS APPROVAL DATE

REGISTERED PROFESSIONAL ENGINEER Tillat Sattar No. C42892 Exp. 03-31-2006 CIVIL STATE OF CALIFORNIA

The State of California or its officers or agents shall not be responsible for the accuracy or completeness of electronic copies of this plan sheet.

To get to the Caltrans web site, go to: http://www.dot.ca.gov

To accompany plans dated 6-14-10

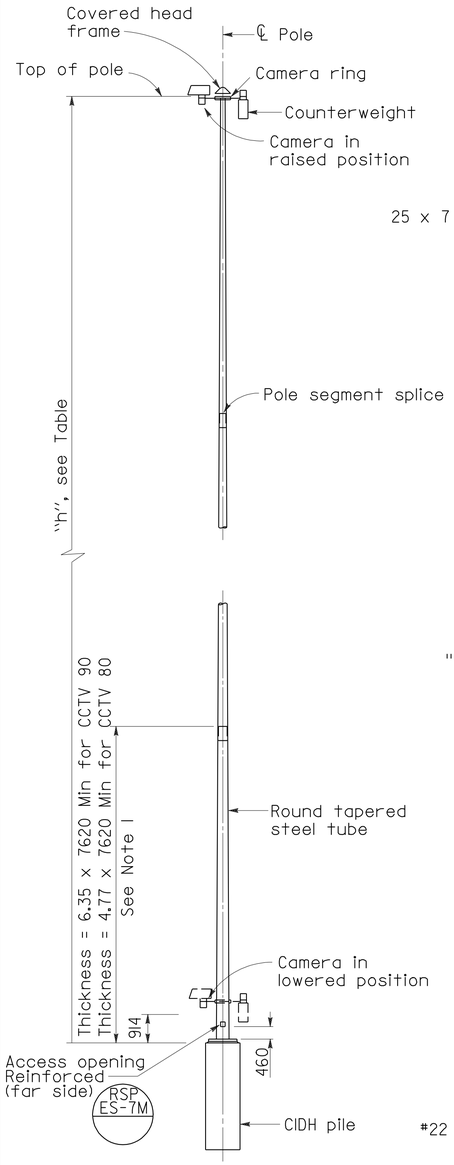

POLE DETAILS

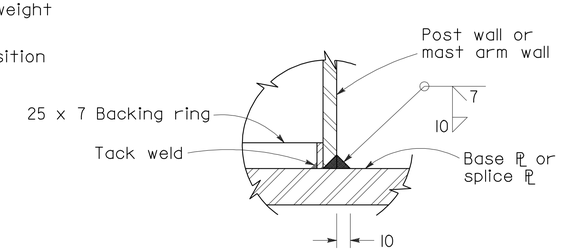

WELD DETAIL

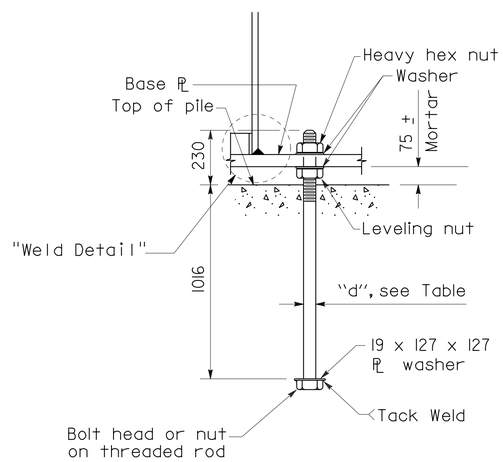

ANCHOR BOLT DETAIL

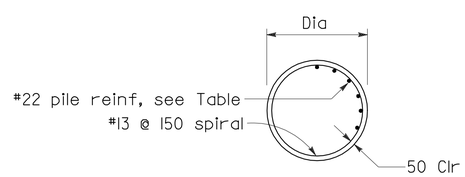

SECTION A-A

CIDH PILE DETAILS

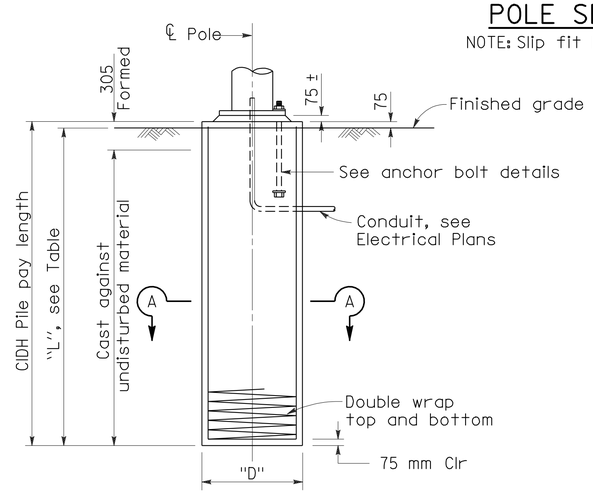

TYPICAL ELEVATION

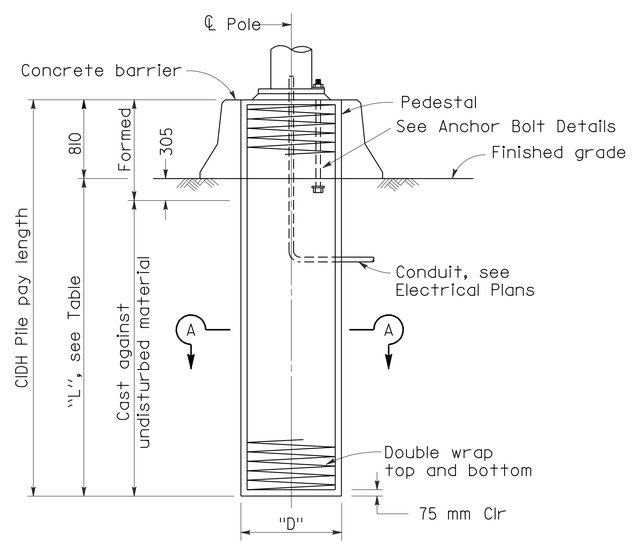

MEDIAN LOCATION

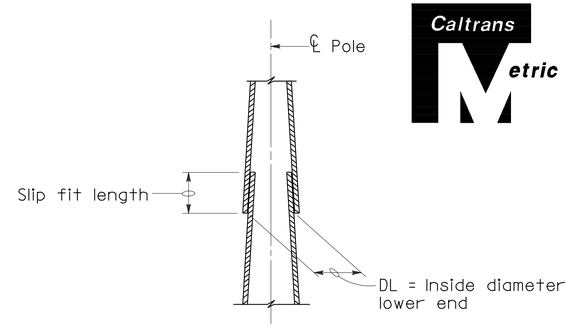

POLE SEGMENT SPLICE DETAIL

NOTE: Slip fit length shall not be less than 1.5 DL.

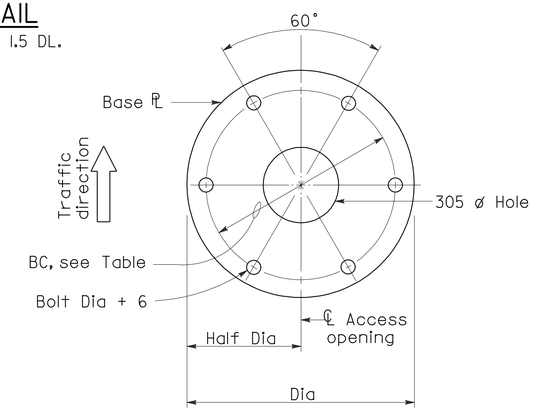

BASE PLATE DETAILS

GENERAL NOTES:

SPECIFICATIONS

Design : AASHTO Standard specifications for structural supports for highway signs, luminaires and traffic signals dated 1994.

LOADING

Wind Loadings : 129 km/h

UNIT STRESSES

Structural Steel : f_s Maximum allowed for design of tapered steel tube (pole) to be 379 MPa.

NOTES

1. Pole details shall suit the lowering device and this foundation plan. Pole details shall be submitted to the Engineer for approval.
2. Pole finishes shall be galvanized.
3. For camera details, see Electrical Plans.
4. Foundation design is based on a maximum wind velocity of 129 km/h.

STATE OF CALIFORNIA
DEPARTMENT OF TRANSPORTATION

ELECTRICAL SYSTEMS (CLOSED CIRCUIT TELEVISION 18.2 m TO 27.4 m HIGH MAST POLE FOUNDATION DETAILS)

NO SCALE

ALL DIMENSIONS ARE IN MILLIMETERS UNLESS OTHERWISE SHOWN

RSP ES-16C DATED JANUARY 24, 2005 SUPERSEDES STANDARD PLAN ES-16C DATED JULY 1, 2004-PAGE 489 OF THE STANDARD PLANS BOOK DATED JULY 2004.

REVISED STANDARD PLAN RSP ES-16C

2004 REVISED Std PLAN RSP ES-16C

DIST	COUNTY	ROUTE	KILOMETER POST TOTAL PROJECT	SHEET No	TOTAL SHEETS
11	SD	805	40.6/42.4	548	567

Caltrans Metric

REGISTERED CIVIL ENGINEER 6/02/08

6-14-10
PLANS APPROVAL DATE

REGISTERED PROFESSIONAL ENGINEER James L. Rucker No. C47796 Exp. 12/31/09 CIVIL STATE OF CALIFORNIA

The State of California or its officers or agents shall not be responsible for the accuracy or completeness of electronic copies of this plan sheet.

CITY OF SAN DIEGO
1010 Second Avenue, Suite 1200
San Diego, CA 92111

T.Y. LIN INTERNATIONAL
5030 Camino de la Siesta, Suite 204
San Diego, CA 92108 Phone (619)692-1920

UTILITIES:

1. - 53 mm Dia Communication Conduit
2. - 78 mm Signal Conduit
3. - 53 mm Lighting Conduit
4. - 78 mm Sprinkler Controller
5. - Relocated 50 mm Dia conduit for street lighting
6. - 53 mm Interconnect Conduit
7. - 50 mm Dia conduit for Fiber Optic
8. - 100mm DIP Irrigation Supply Line, see "Road Plans"

EXISTING UTILITIES:

1. - 510W X 760H Opening for Electrical
2. - 710W X 275H Opening for Telephone
3. - 355 Dia Opening for SDG&E
4. - 610 Dia Opening for Future Utility

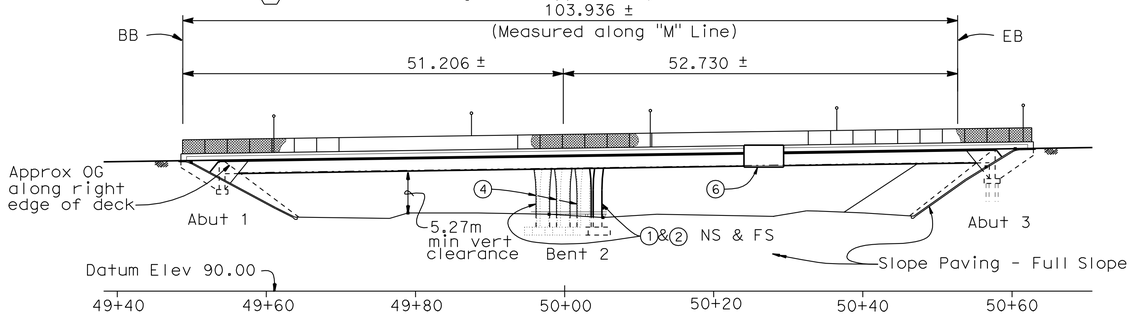

ELEVATION
1:400

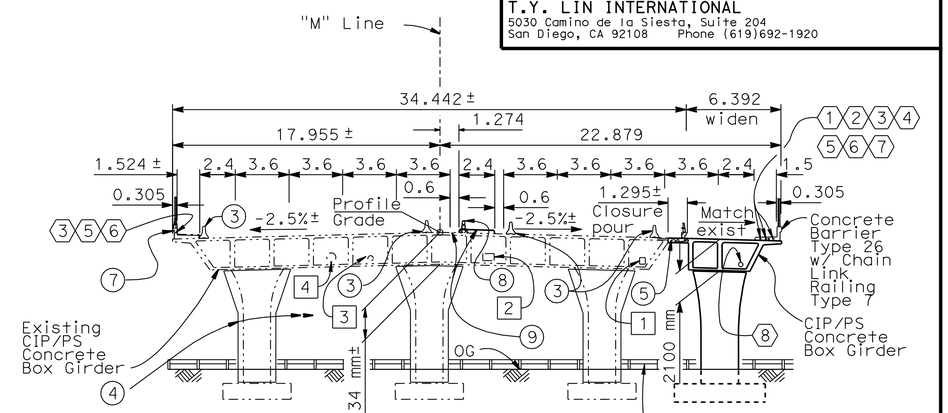

TYPICAL SECTION
1:200

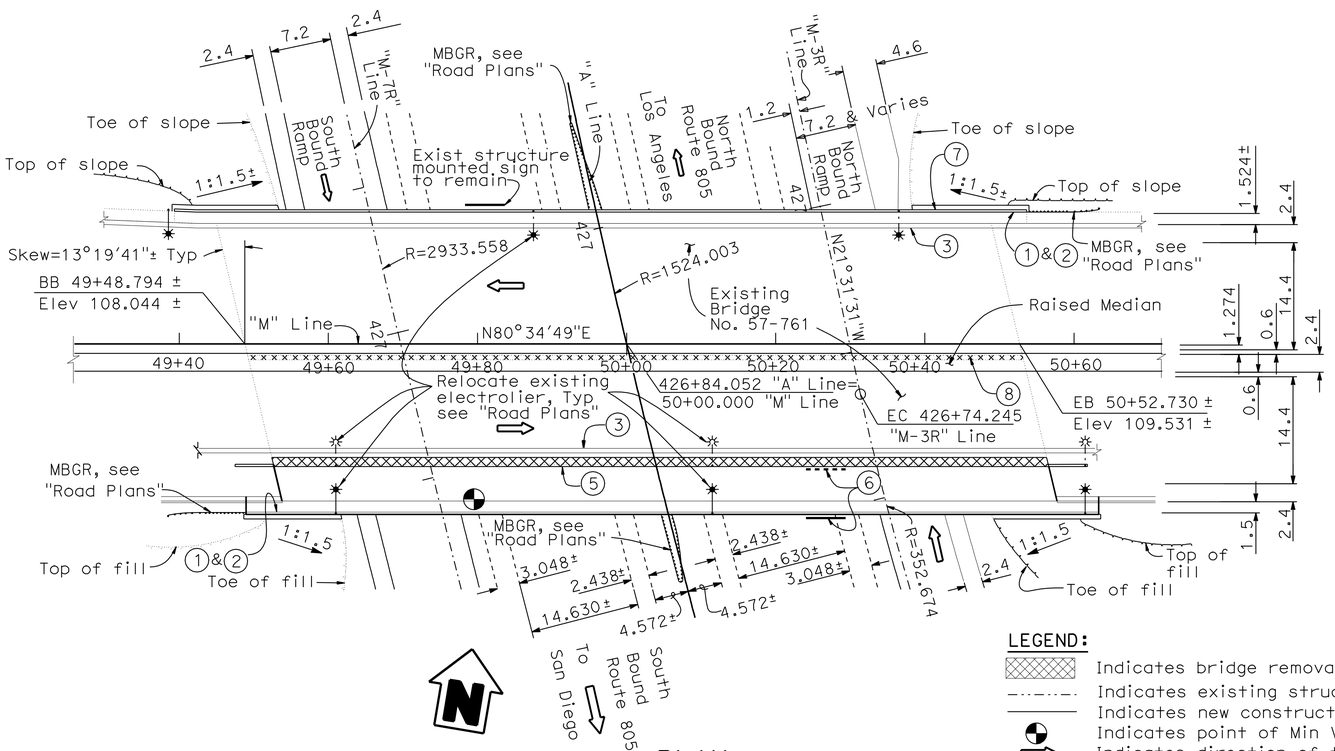

PLAN
1:400

NOTES

1. Paint "La Jolla Village Drive Overcrossing"
2. Paint "Bridge Number 57-0761"
3. Temporary Railing (Type K), see "Road Plans"
4. Retrofit existing columns
5. Existing metal railing, concrete barrier and overhang concrete to be removed
6. Relocate existing structure mounted sign, see "Road plans"
7. Modify existing Barrier Railing Type 11 w/ Concrete Barrier Type 26 (Mod) w/ Chain Link Railing Type 7
8. Remove existing Concrete Barrier Type 50
9. Raised Median & Polyester concrete overlay
10. For bridge construction staging, see "Miscellaneous Details No. 2" sheet.

LA JOLLA VILLAGE DRIVE OC(WIDEN/RETROFIT) BR NO 57-0761
QUANTITIES

PREPARE CONCRETE BRIDGE DECK SURFACE	133	m^2
BRIDGE REMOVAL (PORTION)	LUMP	SUM
STRUCTURE EXCAVATION (BRIDGE)	250	m^3
STRUCTURE BACKFILL (BRIDGE)	165	m^3
750 MM CAST-IN-DRILLED-HOLE CONCRETE PILING	63	m
PRESTRESSING CAST-IN-PLACE CONCRETE	LUMP	SUM
STRUCTURAL CONCRETE, BRIDGE FOOTING	50	m^3
STRUCTURAL CONCRETE, BRIDGE	518	m^3
MINOR CONCRETE (MEDIAN)	37	m^3
FURNISH POLYESTER CONCRETE OVERLAY	6	m^3
PLACE POLYESTER CONCRETE OVERLAY	133	m^2
BAR REINFORCING STEEL (BRIDGE)	79 950	kg
HEADED BAR REINFORCEMENT	230	EA
ASPHALT MEMBRANE WATERPROOFING	29	m2
COLUMN CASING	18 600	kg
SLOPE PAVING (CONCRETE)	94	m^3
CHAIN LINK RAILING (TYPE 7)	228	m
CONCRETE BARRIER (TYPE 26)	114	m
CONCRETE BARRIER (TYPE 26 MODIFIED)	114	m

LEGEND:

- Indicates bridge removal (portion)
- Indicates existing structure
- Indicates new construction
- Indicates point of Min Vert clearance
- Indicates direction of traffic
- Indicates electrolier

SDG&E Denotes San Diego Gas and Electric

Note:
The Contractor shall verify all controlling field dimensions before ordering or fabricating any material.

For "General Notes", "Standard Plans", and "Index to Bridge Plans", see "Foundation Plan" sheet

ALL DIMENSIONS ARE IN METERS UNLESS OTHERWISE SHOWN

DESIGN OVERSIGHT Lilly Sun	DESIGN	BY Brett Makley	CHECKED Anthony Sanchez	LOAD FACTOR DESIGN	LIVE LOADING: HS20-44 AND ALTERNATIVE AND PERMIT DESIGN LOAD	
10-23-09 SIGN OFF DATE	DETAILS	BY Oscar Colcol/B Arce	CHECKED Brett Makley	LAYOUT	BY O Colcol/AT/BA	CHECKED Brett Makley
	QUANTITIES	BY Brett Makley	CHECKED Brian Rochelle	SPECIFICATIONS	BY James Rucker	PLANS AND SPECS COMPARED James Rucker

PREPARED FOR THE STATE OF CALIFORNIA DEPARTMENT OF TRANSPORTATION

James L. Rucker
PROJECT ENGINEER

BRIDGE NO. 57-0761
KILOMETER POST 41.7

LA JOLLA VILLAGE DRIVE OC (WIDEN/RETROFIT)
GENERAL PLAN

DESIGN GENERAL PLAN SHEET (METRIC) (REV. 10/27/05)

ORIGINAL SCALE IN MILLIMETERS FOR REDUCED PLANS 0 10 20 30 40 50 60 70 80 90 100

CU 11223
EA 089751

DISREGARD PRINTS BEARING EARLIER REVISION DATES

REVISION DATES (PRELIMINARY STAGE ONLY): 6/02/08 09/18/09 07/08/04 11/08/04 12/08/04 4/04/05 8/02/05 9/04/05 4/24/08

SHEET 1 OF 20

FILE => 57-761-a-gp01.dgn

USERNAME => rtrenard DATE PLOTTED => 17-JUN-2010 TIME PLOTTED => 14:04

DIST	COUNTY	ROUTE	KILOMETER POST TOTAL PROJECT	SHEET No	TOTAL SHEETS
11	SD	805	40.6/42.4	549	567

REGISTERED CIVIL ENGINEER 6/02/08

6-14-10
PLANS APPROVAL DATE

REGISTERED PROFESSIONAL ENGINEER James L. Rucker No. C47796 Exp. 12/31/09 CIVIL STATE OF CALIFORNIA

The State of California or its officers or agents shall not be responsible for the accuracy or completeness of electronic copies of this plan sheet.

CITY OF SAN DIEGO
1010 Second Avenue, Suite 1200
San Diego, CA 92111

T.Y. LIN INTERNATIONAL
5030 Camino de la Siesta, Suite 204
San Diego, CA 92108 Phone (619)692-1920

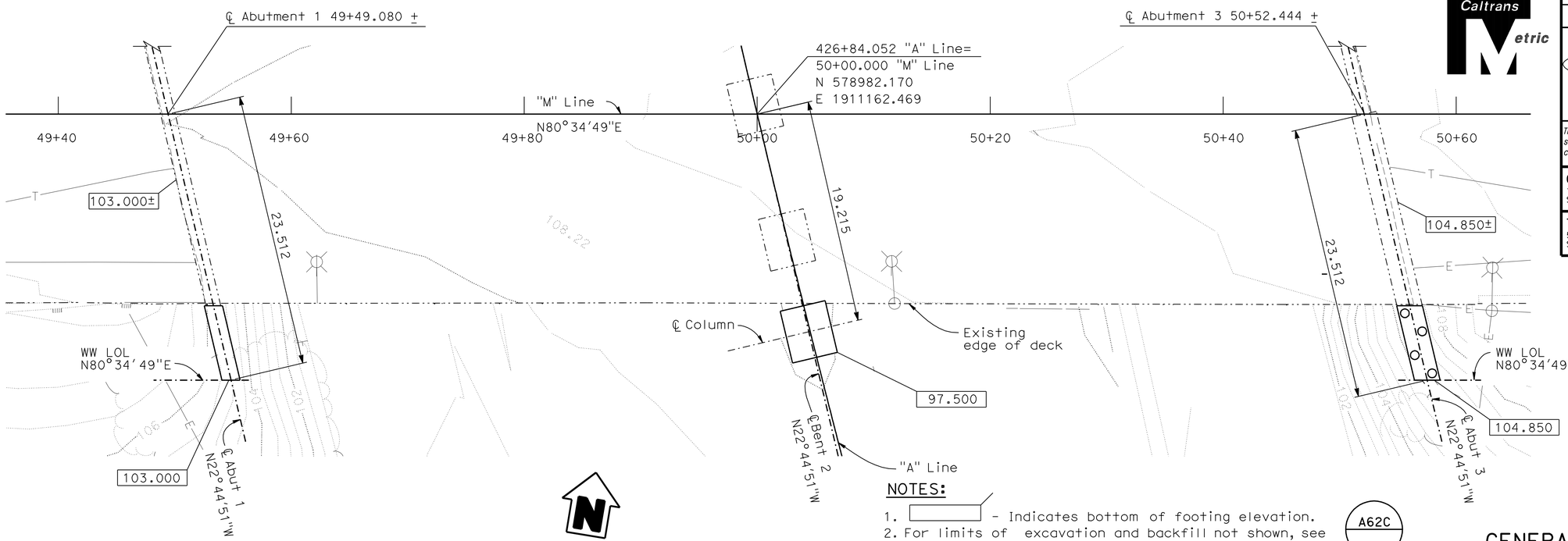

PLAN
1:200

NOTES:

1. [ ] - Indicates bottom of footing elevation.
2. For limits of excavation and backfill not shown, see A62C
3. O - Indicates CIDH Pile
4. -·-·-·- Indicates existing structure
5. ——— Indicates new structure

INDEX TO BRIDGE PLANS

SHEET NO.	TITLE
1	GENERAL PLAN
2	FOUNDATION PLAN
3	ABUTMENT 1 LAYOUT
4	ABUTMENT 3 LAYOUT
5	ABUTMENT DETAILS No.1
6	ABUTMENT DETAILS No.2
7	ABUTMENT DETAILS No.3
8	ABUTMENT DETAILS No.4
9	BENT DETAILS No. 1
10	BENT DETAILS No. 2
11	BENT RETROFIT DETAILS
12	TYPICAL SECTION
13	GIRDER LAYOUT
14	MISCELLANEOUS DETAILS No.1
15	MISCELLANEOUS DETAILS No.2
16	STEEL COLUMN CASINGS
17	BARRIER RAIL UPGRADE
18	SLOPE PAVING-FULL SLOPE
19	LOG OF TEST BORINGS 1 OF 2
20	LOG OF TEST BORINGS 2 OF 2

STANDARD PLANS DATED JULY, 2004

	A10A	ACRONYMS AND ABBREVIATIONS (A-L)
	A10B	ACRONYMS AND ABBREVIATIONS (M-Z)
	A62C	LIMITS OF PAYMENT FOR EXCAVATION AND BACKFILL BRIDGE
	B0-1	BRIDGE DETAILS
RSP	B0-3	BRIDGE DETAILS
	B0-5	BRIDGE DETAILS
	B0-13	BRIDGE DETAILS
	B2-3	400 mm CAST-IN-DRILLED-HOLE CONCRETE PILE
	B7-1	BOX GIRDER DETAILS
	B7-10	UTILITY OPENING BOX GIRDER
	B7-11	UTILITY DETAILS
	B8-5	CAST-IN-PLACE PRESTRESSED GIRDER DETAILS
	B11-52	CHAIN LINK RAILING TYPE 7
	B11-54	CONCRETE BARRIER TYPE 26
	B14-5	WATER SUPPLY LINE (DETAILS) (PIPE SIZES LESS THAN NPS 4)

BENCH MARK

1) La Jolla Village Dr & I-805 *BP Top
S'ly CB Inlet @ So-Bd Ramp
Elev = 105.196 = 105.193 (#44)

2) Miramar Rd & I-805* BP Top
S'ly CB Inlet @ No-Bd Ramp
Elev = 110.407 = 110.404 (#45)

* Vertical Datum is NAVD29 Metric per CalTrans 1993 Densification Project

GENERAL NOTES
LOAD FACTOR DESIGN

DESIGN: CALTRANS BRIDGE DESIGN SPECIFICATIONS, April 2000 (LFD) (1996 AASHTO with INTERIMS and REVISIONS by CALTRANS)

SEISMIC DESIGN: CALTRANS SEISMIC DESIGN CRITERIA, SDC, V1.4, JUNE 2006

DEAD LOAD: Includes 1.675 kPa for future wearing surface

LIVE LOADING: HS20-44 and alternative and permit design load

SEISMIC LOADING: SDC Fig B.5, ARS Curve for Soil Profile C (M=7.25 ±0.25) PBA=0.5g with modification (0-20%)

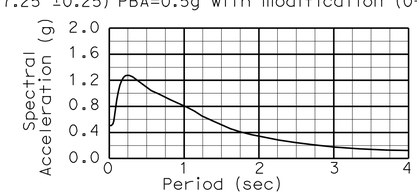

REINFORCED CONCRETE:
fy = 420 MPa
f'c = 25 MPa
n = 8
Transverse Deck Slabs (Working Stress Design)
fs = 138 MPa fc = 8.3 MPa n = 10

PRESTRESSED CONCRETE: See "Prestressing Notes" on "Girder Layout" sheet

SPREAD FOOTING DATA TABLE

Support Location	Allowable Bearing Capacity q_{all}	Nominal Bearing Resistance q_n
Abut 1	335 kPa	N/A
Bent 2	N/A	2870 kPa

ALL DIMENSIONS ARE IN METERS UNLESS OTHERWISE SHOWN

PLAN SYMBOLS

A — Section Identification

Standard Plan (July 1999) Sheet No.

Detail No.

PILE DATA TABLE

LOCATION	PILE TYPE	DESIGN LOADING	NOMINAL RESISTANCE		DESIGN TIP ELEVATIONS	SPECIFIED TIP ELEVATIONS
			COMPRESSION	TENSION		
Abut 3	750 mm CIDH Concrete Pile	1000 kN	2000 kN	0	89.250 (1,2)	89.250

DESIGN TIP ELEVATION IS CONTROLLED BY THE FOLLOWING DEMANDS:
(1) COMPRESSION, (2) LATERAL LOADS

Note:
The Contractor shall verify all controlling field dimensions before ordering or fabricating any material.

Geotechnical Professional 5/01/2008 APPROVAL DATE

DESIGN OVERSIGHT Lilly Sun
10-23-09
SIGN OFF DATE

SCALE:	VERT.DATUM	HORZ.DATUM
PHOTOGRAMMETRY AS OF:	DRAWN BY	
SURVEYED BY	TRACED BY	
FIELD CHECKED BY	CHECKED BY	

	BY	CHECKED
DESIGN	Brett Makley	Anthony Sanchez
DETAILS	B Arce	Brett Makley
QUANTITIES	Brett Makley	Brian Rochelle

PREPARED FOR THE STATE OF CALIFORNIA DEPARTMENT OF TRANSPORTATION

James L. Rucker
PROJECT ENGINEER

BRIDGE NO. 57-0761
KILOMETER POST 41.7

LA JOLLA VILLAGE DRIVE OC (WIDEN/RETROFIT)
FOUNDATION PLAN

FOUNDATION PLAN SHEET (METRIC) (REV. 10/27/05)

ORIGINAL SCALE IN MILLIMETERS FOR REDUCED PLANS 0 10 20 30 40 50 60 70 80 90 100

CU 11223
EA 089751

DISREGARD PRINTS BEARING EARLIER REVISION DATES

REVISION DATES (PRELIMINARY STAGE ONLY) 12/07/05 4/17/08 6/02/08 09/18/09 12/08/04 4/04/05 6/09/05 8/02/05 9/01/05

SHEET 2 OF 20

FILE => 57-761-e-fdp101.dgn

USERNAME => trlenard DATE PLOTTED => 17-JUN-2010 TIME PLOTTED => 14:05

DIST	COUNTY	ROUTE	KILOMETER POST TOTAL PROJECT	SHEET No	TOTAL SHEETS
11	SD	805	40.6/42.4	550	567

Caltrans Metric

6/02/08
REGISTERED CIVIL ENGINEER

6-14-10
PLANS APPROVAL DATE

REGISTERED PROFESSIONAL ENGINEER James L. Rucker No. C47796 Exp. 12/31/09 CIVIL STATE OF CALIFORNIA

The State of California or its officers or agents shall not be responsible for the accuracy or completeness of electronic copies of this plan sheet.

CITY OF SAN DIEGO
1010 Second Avenue, Suite 1200
San Diego, CA 92111

T.Y. LIN INTERNATIONAL
5030 Camino de la Siesta, Suite 204
San Diego, CA 92108 Phone (619)692-1920

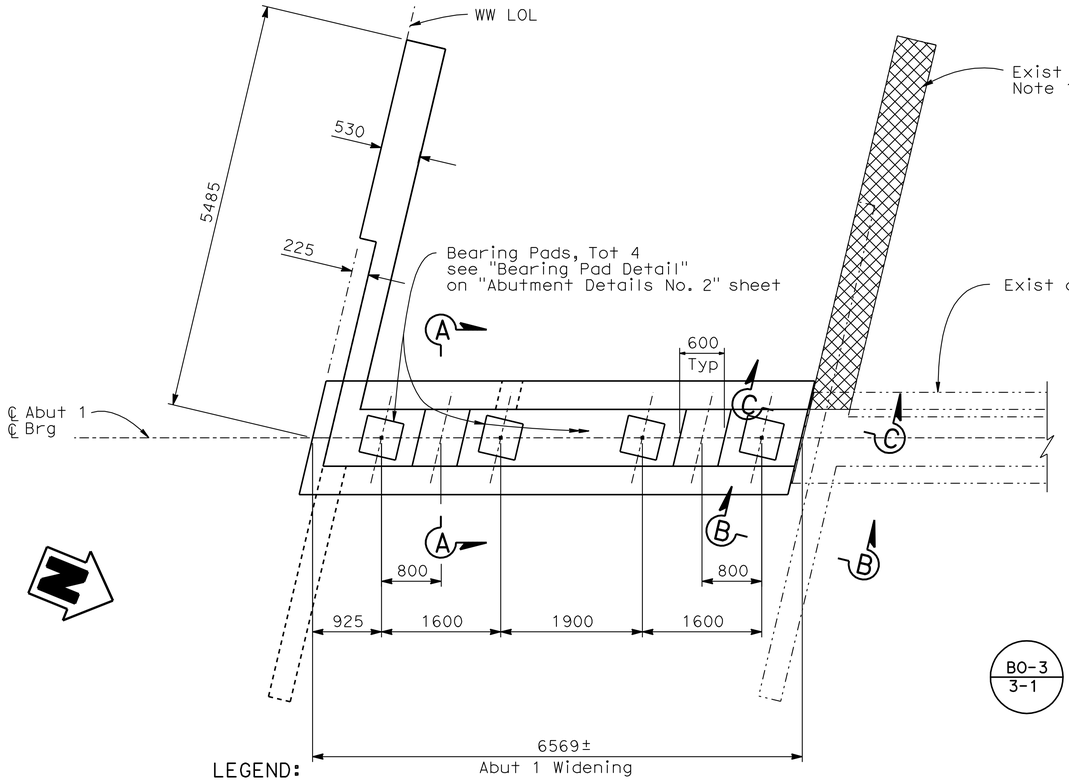

NOTES:

1. For Bridge Removal (Portion) limits, see "Abutment Details No. 3" sheet
2. For "Section B-B" and "Section C-C" see "Abutment Details No. 4" sheet

(8) 100mm DIP Irrigation Supply Line, see "Road Plans"

LEGEND:

- Indicates Bridge Removal (Portion), for details see "Abutment Details No. 3" sheet

PLAN
1:40

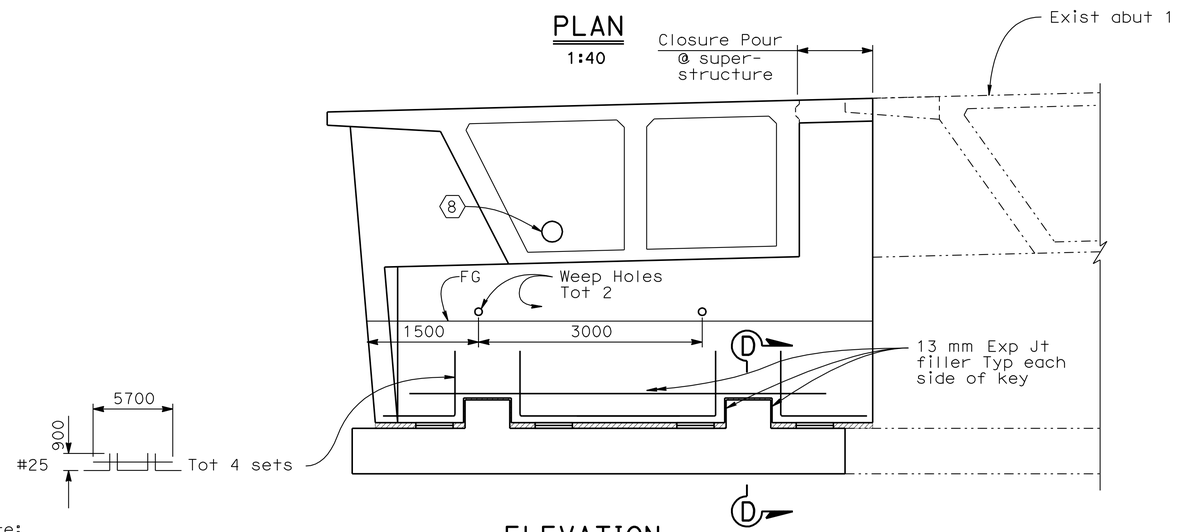

ELEVATION
1:40

Note:
The Contractor shall verify all controlling field dimensions before ordering or fabricating any material.

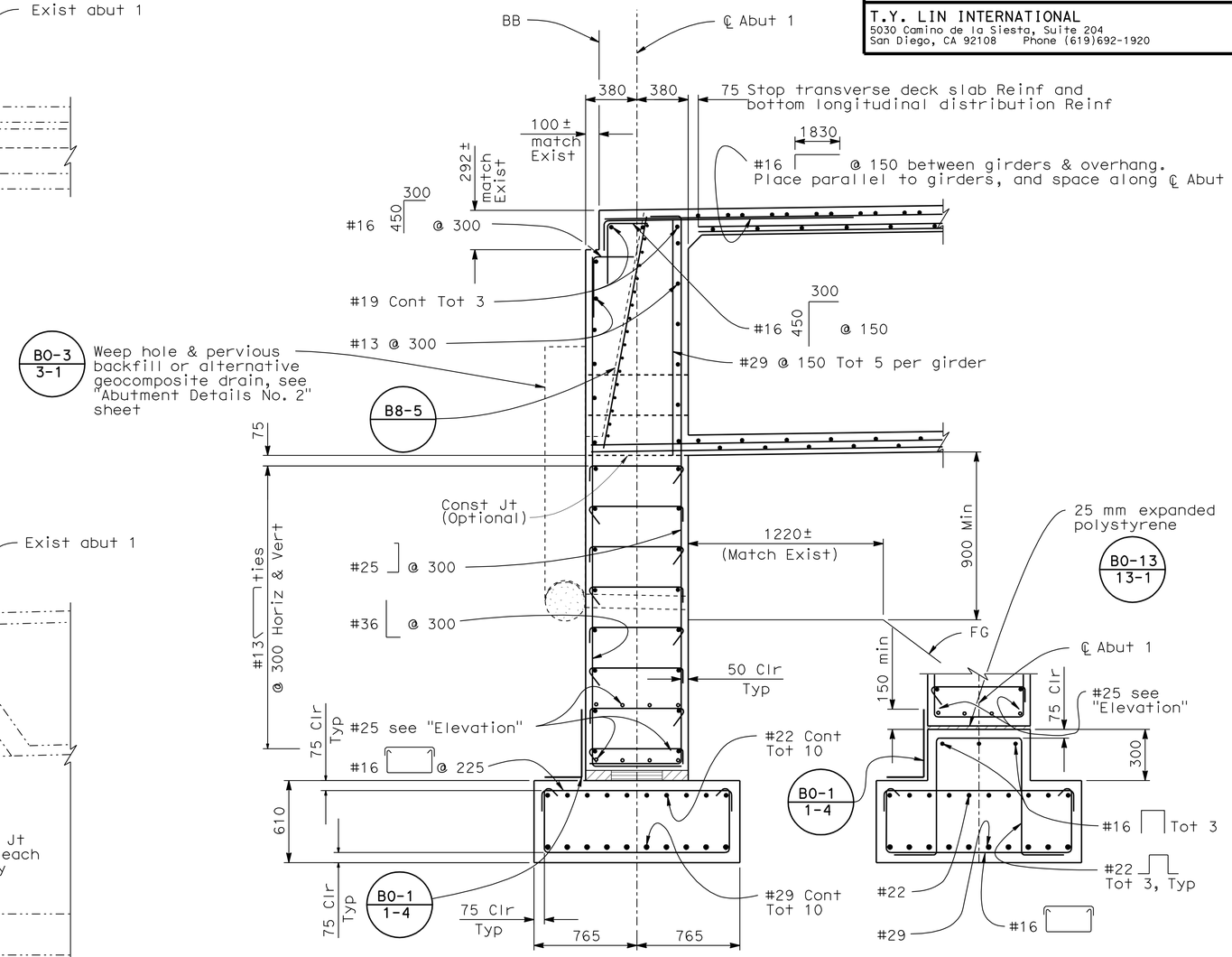

SECTION A-A
1:20

SECTION D-D
1:20

ALL DIMENSIONS ARE IN
MILLIMETERS UNLESS OTHERWISE SHOWN

DESIGN OVERSIGHT Lilly Sun		DESIGN	BY Brett Makley	CHECKED Anthony Sanchez	PREPARED FOR THE STATE OF CALIFORNIA DEPARTMENT OF TRANSPORTATION
10-23-09 SIGN OFF DATE		DETAILS	BY O Colcol/B Arce	CHECKED Brett Makley	
		QUANTITIES	BY Brett Makley	CHECKED Brian Rochelle	

James L. Rucker
PROJECT ENGINEER

BRIDGE NO. 57-0761
KILOMETER POST 41.7

LA JOLLA VILLAGE DRIVE OC (WIDEN/RETROFIT)
ABUTMENT 1 LAYOUT

DESIGN DETAIL SHEET (METRIC) (REV. 10/27/05)

ORIGINAL SCALE IN MILLIMETERS FOR REDUCED PLANS 0 10 20 30 40 50 60 70 80 90 100

CU 11223
EA 089751

DISREGARD PRINTS BEARING EARLIER REVISION DATES

REVISION DATES (PRELIMINARY STAGE ONLY) 6/02/08 2/14/08 09/18/09 11/08/04 12/02/04 4/04/05 8/02/05 9/01/05 4/21/08

SHEET 3 OF 20

FILE => 57-761-f-a01_lo1.dgn

USERNAME => friehard DATE PLOTTED => 17-JUN-2010 TIME PLOTTED => 14:05

DIST	COUNTY	ROUTE	KILOMETER POST TOTAL PROJECT	SHEET No	TOTAL SHEETS
11	SD	805	40.6/42.4	551	567

REGISTERED CIVIL ENGINEER 6/02/08

6-14-10
PLANS APPROVAL DATE

The State of California or its officers or agents shall not be responsible for the accuracy or completeness of electronic copies of this plan sheet.

REGISTERED PROFESSIONAL ENGINEER James L. Rucker No. C47796 Exp. 12/31/09 CIVIL STATE OF CALIFORNIA

CITY OF SAN DIEGO
1010 Second Avenue, Suite 1200
San Diego, CA 92111

T.Y. LIN INTERNATIONAL
5030 Camino de la Siesta, Suite 204
San Diego, CA 92108 Phone (619)692-1920

Caltrans Metric

NOTES:

1. For Bridge Removal (Portion) limits, see "Abutment Details No. 3" sheet
2. For "Section B-B" and "Section C-C" see "Abutment Details No. 4" sheet

(8) 100mm DIP Irrigation Supply Line, see "Road Plans"

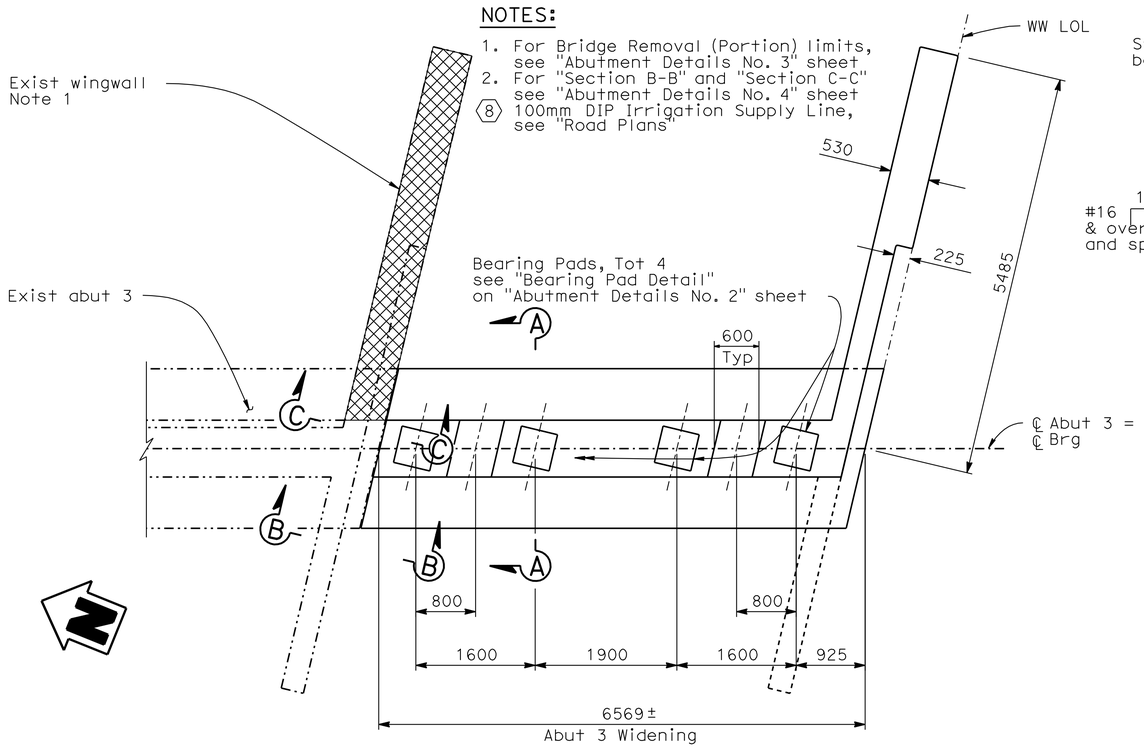

PLAN
1:40

LEGEND:

- Indicates Bridge Removal (Portion), for details see "Abutment Details No. 3" sheet

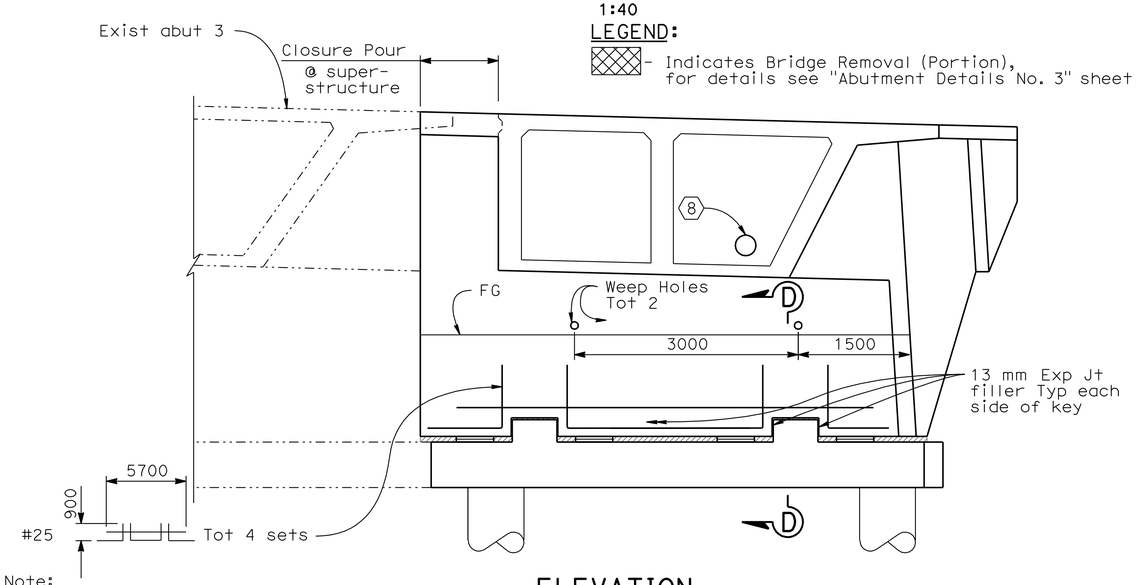

ELEVATION
1:40

Note: Not all piles shown

Note:
The Contractor shall verify all controlling field dimensions before ordering or fabricating any material.

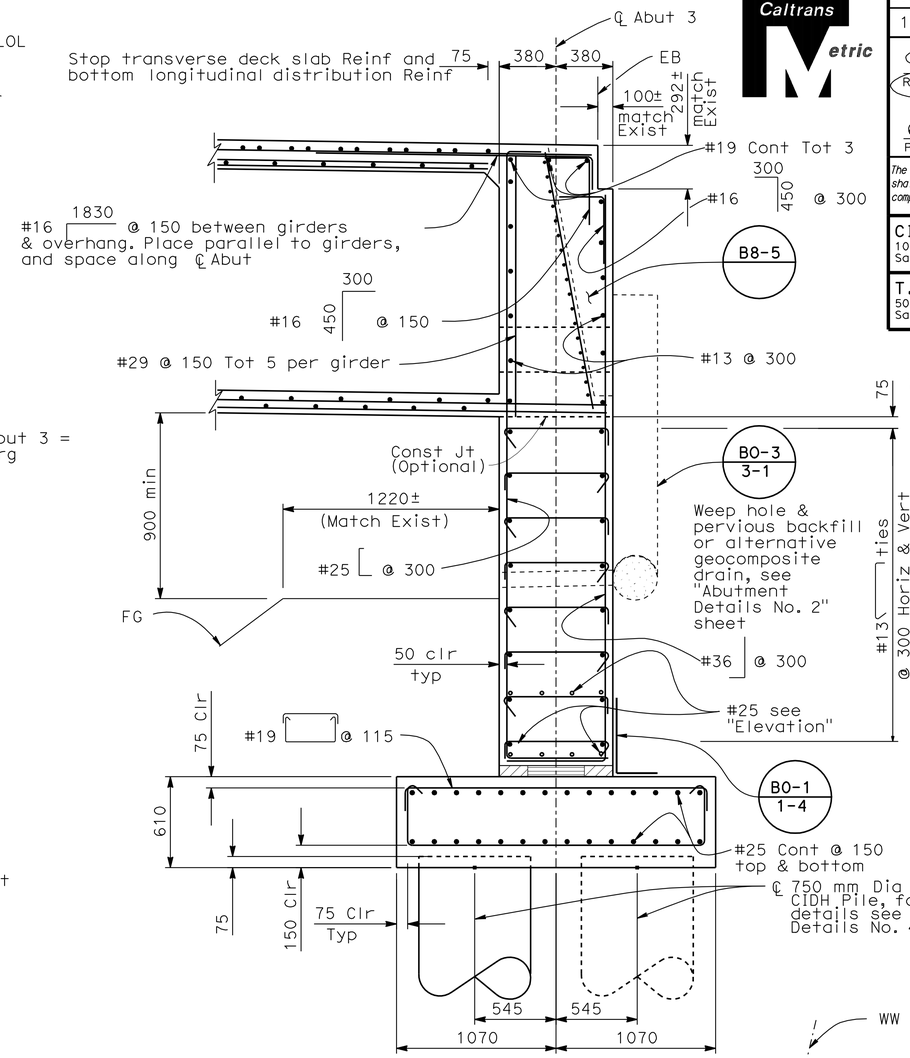

SECTION A-A
1:20

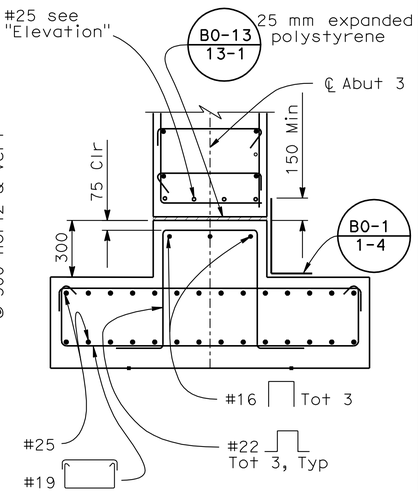

SECTION D-D
1:20

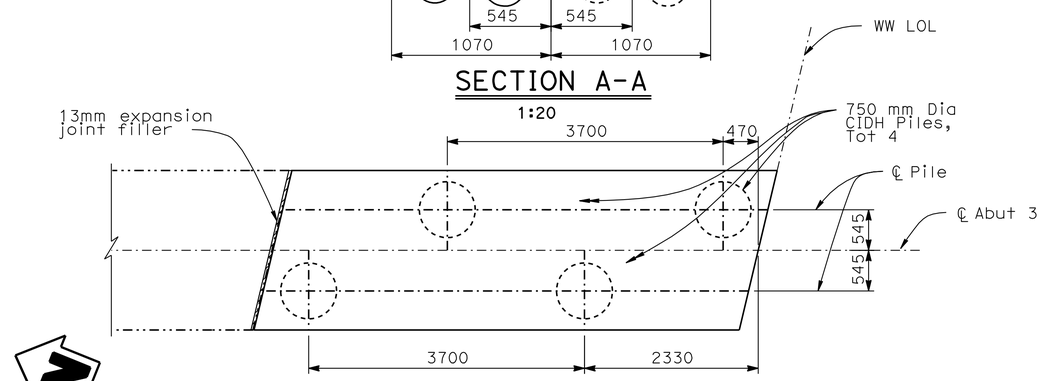

FOOTING PLAN
1:40

ALL DIMENSIONS ARE IN MILLIMETERS UNLESS OTHERWISE SHOWN

Lily Sun
DESIGN OVERSIGHT Lilly Sun
10-23-09
SIGN OFF DATE

	BY	CHECKED
DESIGN	Brett Makley	Anthony Sanchez
DETAILS	O Colcol/B Arce	Brett Makley
QUANTITIES	Brett Makley	Brian Rochelle

PREPARED FOR THE STATE OF CALIFORNIA DEPARTMENT OF TRANSPORTATION

James L. Rucker
PROJECT ENGINEER

BRIDGE NO. 57-0761
KILOMETER POST 41.7

LA JOLLA VILLAGE DRIVE OC (WIDEN/RETROFIT)

ABUTMENT 3 LAYOUT

DESIGN DETAIL SHEET (METRIC) (REV. 10/27/05)

ORIGINAL SCALE IN MILLIMETERS FOR REDUCED PLANS 0 10 20 30 40 50 60 70 80 90 100

CU 11223
EA 089751

DISREGARD PRINTS BEARING EARLIER REVISION DATES

REVISION DATES (PRELIMINARY STAGE ONLY): 6/02/08 12/19/08 09/18/09 11/08/04 12/07/04 4/04/05 8/02/05 9/04/05 4/17/06

SHEET 4 OF 20

FILE => 57-761-f-a01_lo2.dgn

USERNAME => trlenard DATE PLOTTED => 17-JUN-2010 TIME PLOTTED => 14:05

DIST	COUNTY	ROUTE	KILOMETER POST TOTAL PROJECT	SHEET No	TOTAL SHEETS
11	SD	805	40.6/42.4	552	567

REGISTERED CIVIL ENGINEER 6/02/08

6-14-10
PLANS APPROVAL DATE

REGISTERED PROFESSIONAL ENGINEER James L. Rucker No. C47796 Exp. 12/31/09 CIVIL STATE OF CALIFORNIA

The State of California or its officers or agents shall not be responsible for the accuracy or completeness of electronic copies of this plan sheet.

CITY OF SAN DIEGO
1010 Second Avenue, Suite 1200
San Diego, CA 92111

T.Y. LIN INTERNATIONAL
5030 Camino de la Siesta, Suite 204
San Diego, CA 92108 Phone (619)692-1920

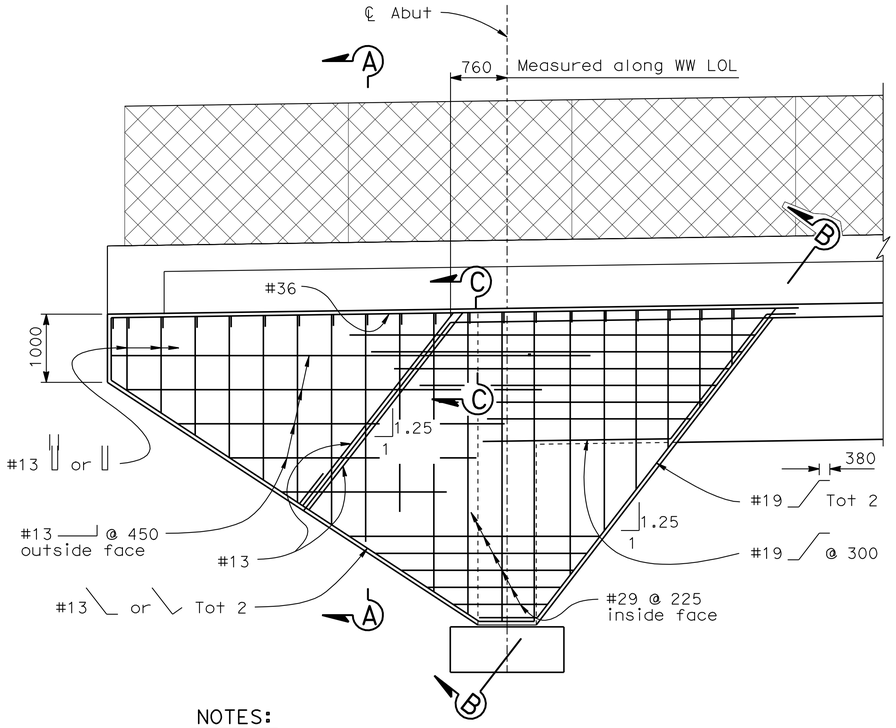

NOTES:

1. Wingwall Abut 1 shown, Abut 3 similar except as noted
2. For details not shown, see B0-1

WINGWALL ELEVATION
1:40

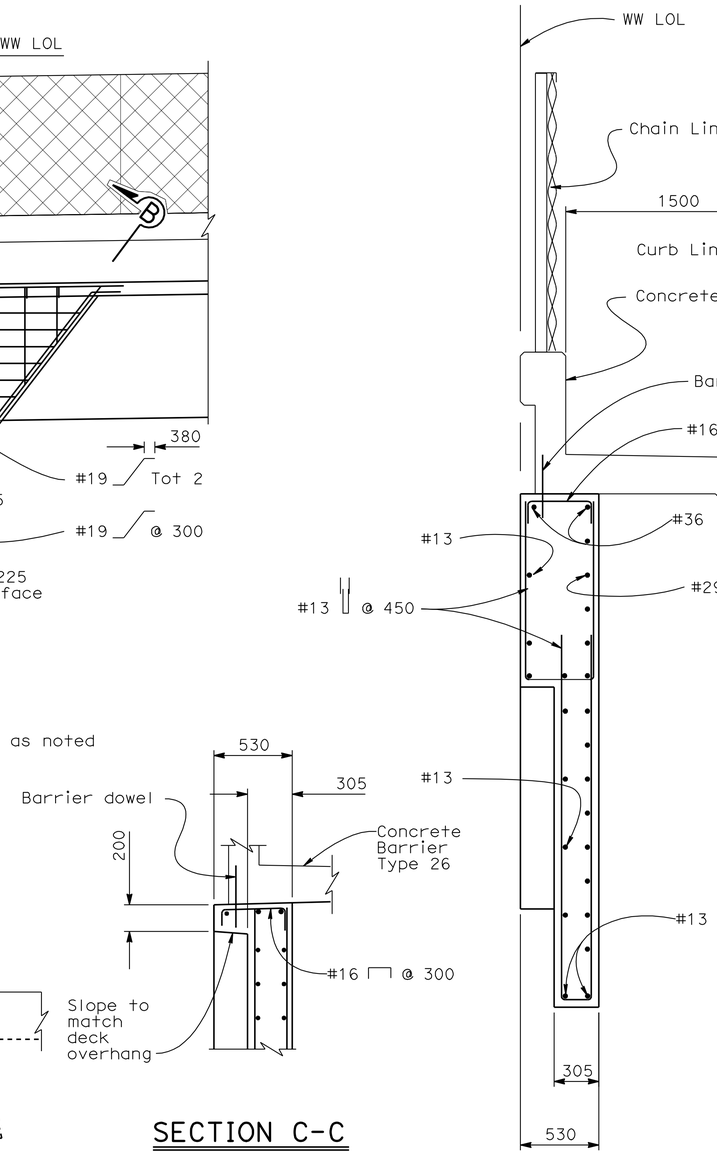

SECTION A-A
1:20

SECTION C-C
1:20

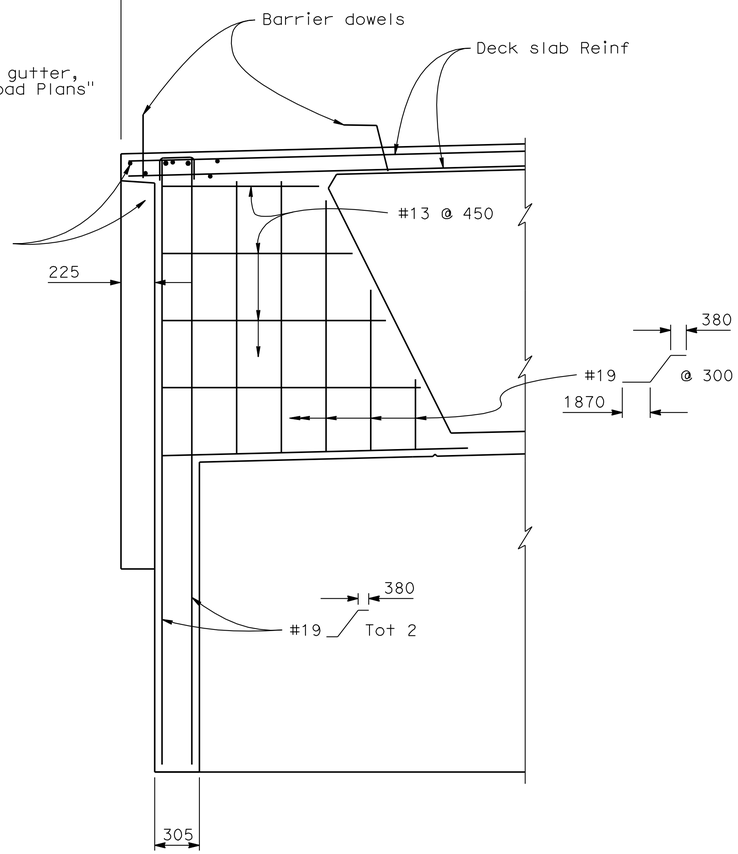

SECTION B-B (Face of sloped Abut)
1:20

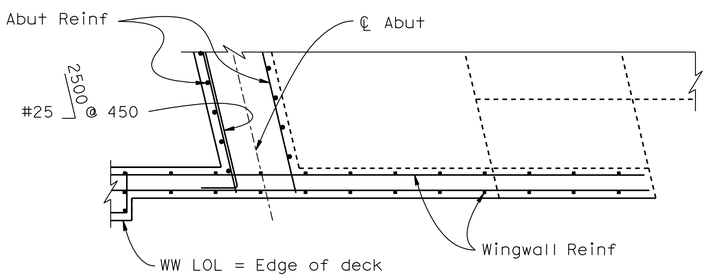

CORNER DETAIL
1:30

Note:
The Contractor shall verify all controlling field dimensions before ordering or fabricating any material.

ALL DIMENSIONS ARE IN MILLIMETERS UNLESS OTHERWISE SHOWN

DESIGN OVERSIGHT Lilly Sun	DESIGN	BY Brett Makley	CHECKED Anthony Sanchez
12-9-08 SIGN OFF DATE	DETAILS	BY O Colcol/B Arce	CHECKED Brett Makley
	QUANTITIES	BY Brett Makley	CHECKED Brian Rochelle

PREPARED FOR THE STATE OF CALIFORNIA DEPARTMENT OF TRANSPORTATION

James L. Rucker
PROJECT ENGINEER

BRIDGE NO. 57-0761
KILOMETER POST 41.7

LA JOLLA VILLAGE DRIVE OC (WIDEN/RETROFIT)
ABUTMENT DETAILS No.1

DESIGN DETAIL SHEET (METRIC) (REV. 10/27/05)

ORIGINAL SCALE IN MILLIMETERS FOR REDUCED PLANS 0 10 20 30 40 50 60 70 80 90 100

CU 11223
EA 089751

DISREGARD PRINTS BEARING EARLIER REVISION DATES

REVISION DATES (PRELIMINARY STAGE ONLY) 6/02/08 01/30/03 02/27/04 07/08/04 11/08/04 12/02/04 4/04/05 8/02/05 9/01/05 4/27/08

SHEET 5 OF 20

FILE => 57-761-f-a01dt01.dgn

USERNAME => friehard DATE PLOTTED => 17-JUN-2010 TIME PLOTTED => 14:05

DIST	COUNTY	ROUTE	KILOMETER POST TOTAL PROJECT	SHEET No	TOTAL SHEETS
11	SD	805	40.6/42.4	553	567

Caltrans Metric

6/02/08
REGISTERED CIVIL ENGINEER

6-14-10
PLANS APPROVAL DATE

REGISTERED PROFESSIONAL ENGINEER James L. Rucker No. C47796 Exp. 12/31/09 CIVIL STATE OF CALIFORNIA

The State of California or its officers or agents shall not be responsible for the accuracy or completeness of electronic copies of this plan sheet.

CITY OF SAN DIEGO
1010 Second Avenue, Suite 1200
San Diego, CA 92111

T.Y. LIN INTERNATIONAL
5030 Camino de la Siesta, Suite 204
San Diego, CA 92108 Phone (619)692-1920

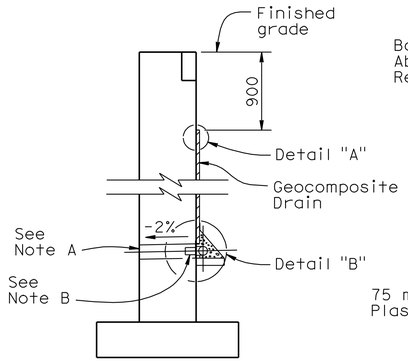

WALL SECTION

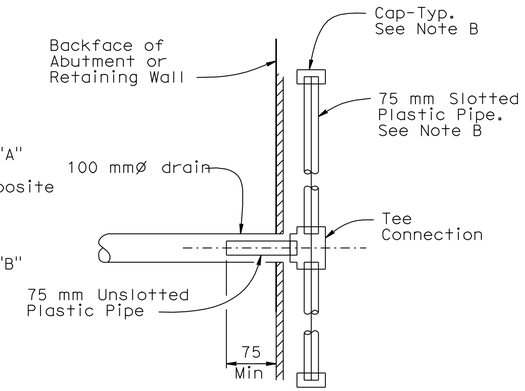

SECTION A-A

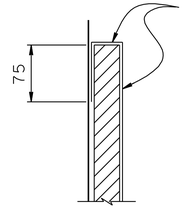

DETAIL "A"

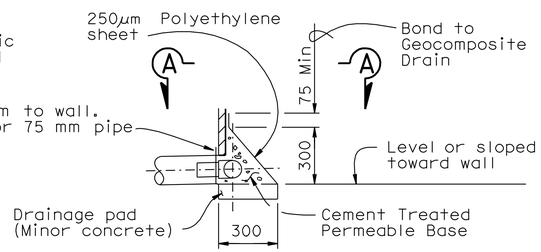

DETAIL "B"

WEEP HOLE AND GEOCOMPOSITE DRAIN

Alternative to Bridge Detail BO-3 / 3-1

NOTES:

A. 100mmØ drains at intermediate sag points and at 7.60 meters maximum center to center (2.75 meters c-c for Type 3 and 2.80 meters c-c for Type 4 retaining walls). For walls adjacent to sidewalks or curbs, provide 100 mm cast iron or asbestos cement pipe under the sidewalk to discharge through curb face. Exposed wall drains shall be located 75 mm ±above finished grade.

B. Geocomposite drain, cement treated permeable base, and 75 mmØ slotted plastic pipe continuous behind retaining wall or abutment. Cap ends of pipe. Provide "Tee" connection at each 100 mm Ø drain.

C. Connect the low end of plastic pipe to the main outlet pipe as applicable.

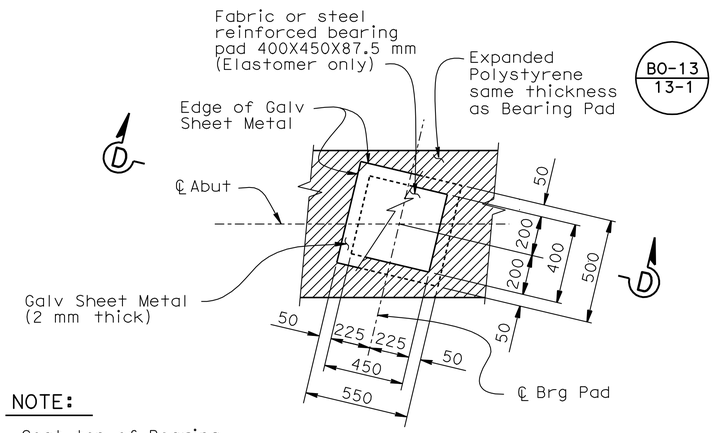

NOTE:

Coat top of Bearing Pad with silicone grease prior to placing sheet metal.

PLAN

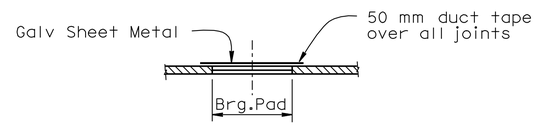

SECTION D-D

BEARING PAD DETAIL

No Scale

Details typical at all bearing pads

Note:
The Contractor shall verify all controlling field dimensions before ordering or fabricating any material.

ALL DIMENSIONS ARE IN MILLIMETERS UNLESS OTHERWISE SHOWN

DESIGN OVERSIGHT Lilly Sun	DESIGN	BY Brett Makley	CHECKED Anthony Sanchez
12-9-08 SIGN OFF DATE	DETAILS	BY O Colcol/B Arce	CHECKED Brett Makley
	QUANTITIES	BY Brett Makley	CHECKED Brian Rochelle

PREPARED FOR THE STATE OF CALIFORNIA DEPARTMENT OF TRANSPORTATION

James L. Rucker
PROJECT ENGINEER

BRIDGE NO. 57-0761
KILOMETER POST 41.7

LA JOLLA VILLAGE DRIVE OC (WIDEN/RETROFIT)

ABUTMENT DETAILS No.2

DESIGN DETAIL SHEET (METRIC) (REV. 10/27/05)

ORIGINAL SCALE IN MILLIMETERS FOR REDUCED PLANS 0 10 20 30 40 50 60 70 80 90 100

CU 11223
EA 089751

DISREGARD PRINTS BEARING EARLIER REVISION DATES

REVISION DATES (PRELIMINARY STAGE ONLY) 6/02/08 01/30/03 02/27/04 07/08/04 11/08/04 12/08/04 4/04/05 8/02/05 9/04/05 4/27/06

SHEET 6 OF 20

FILE => 57-761-f-a01dt02.dgn

USERNAME => trlenard DATE PLOTTED => 17-JUN-2010 TIME PLOTTED => 14:05

DIST	COUNTY	ROUTE	KILOMETER POST TOTAL PROJECT	SHEET No	TOTAL SHEETS
11	SD	805	40.6/42.4	554	567

Caltrans Metric

REGISTERED CIVIL ENGINEER 6/02/08

6-14-10
PLANS APPROVAL DATE

REGISTERED PROFESSIONAL ENGINEER James L. Rucker No. C47796 Exp. 12/31/09 CIVIL STATE OF CALIFORNIA

The State of California or its officers or agents shall not be responsible for the accuracy or completeness of electronic copies of this plan sheet.

CITY OF SAN DIEGO
1010 Second Avenue, Suite 1200
San Diego, CA 92111

T.Y. LIN INTERNATIONAL
5030 Camino de la Siesta, Suite 204
San Diego, CA 92108 Phone (619)692-1920

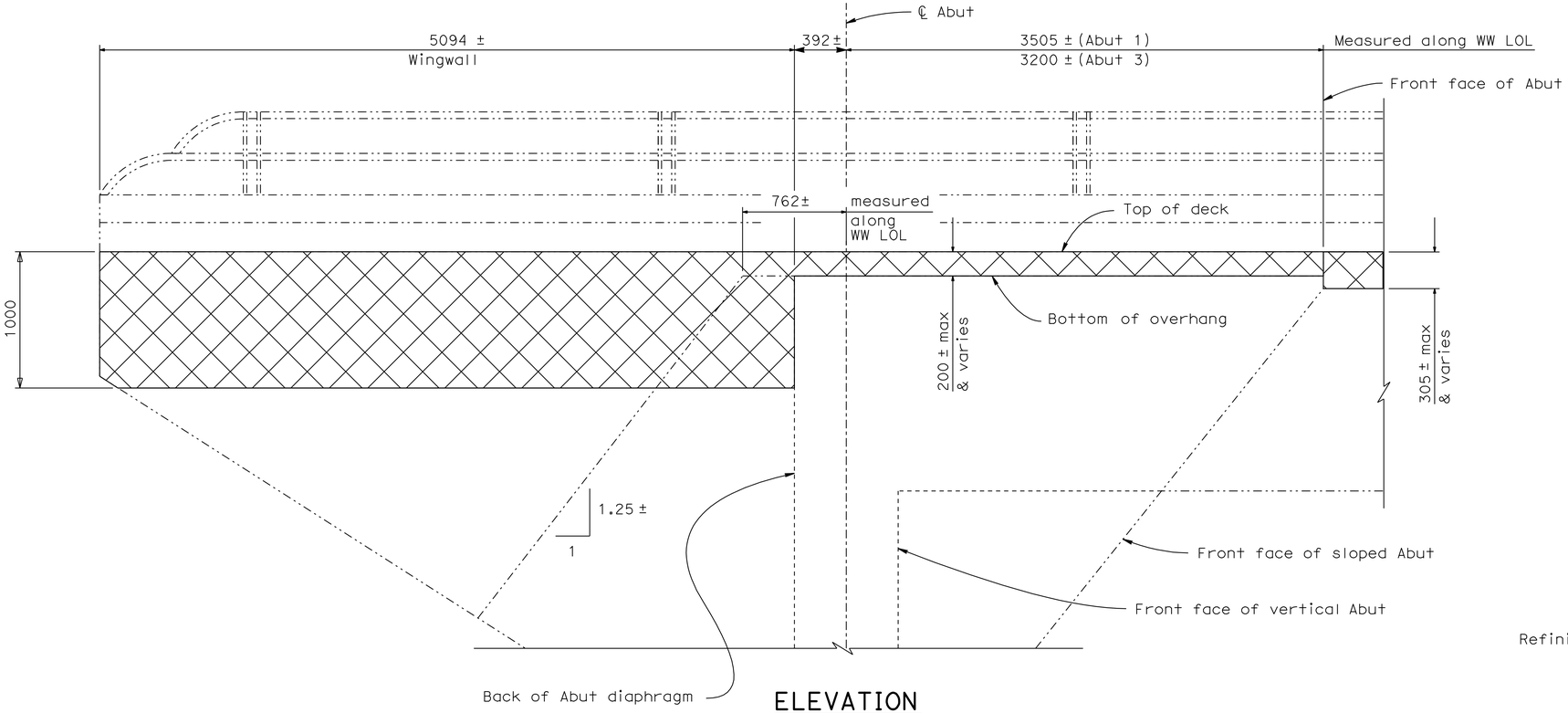

ELEVATION
No Scale

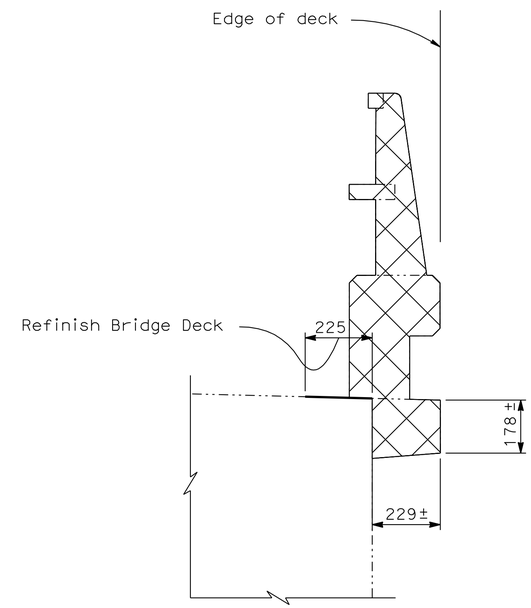

SECTION A-A
1:10

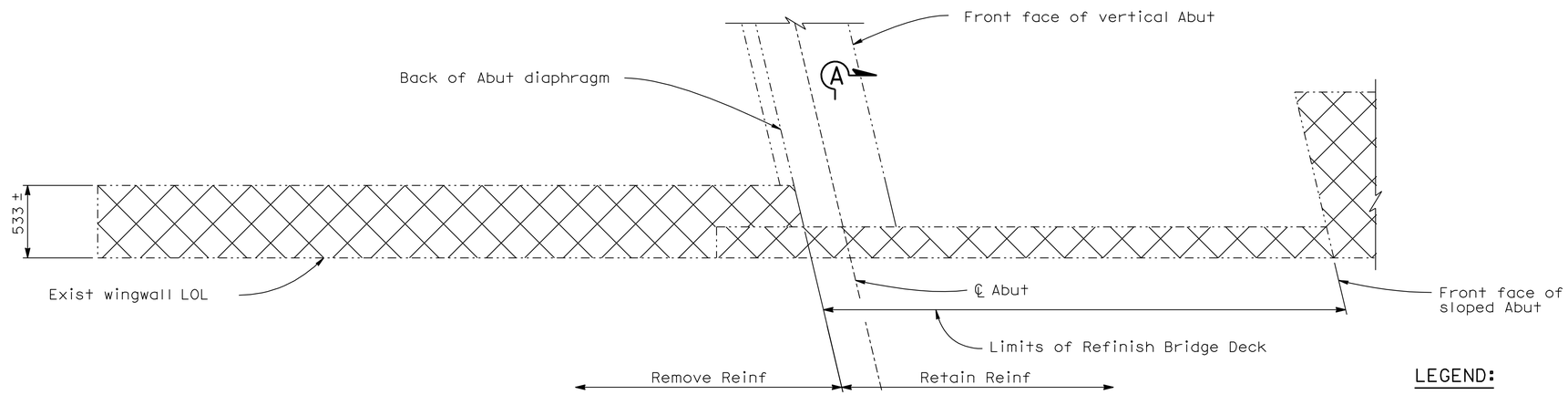

PART PLAN
1:20

A

LEGEND:

- Indicates Bridge Removal (Portion)

Note:
The Contractor shall verify all controlling field dimensions before ordering or fabricating any material.

ALL DIMENSIONS ARE IN MILLIMETERS UNLESS OTHERWISE SHOWN

DESIGN OVERSIGHT Lilly Sun	DESIGN	BY Brett Makley	CHECKED Anthony Sanchez
12-9-08 SIGN OFF DATE	DETAILS	BY O Colcol/B Arce	CHECKED Brett Makley
	QUANTITIES	BY Brett Makley	CHECKED Brian Rochelle

PREPARED FOR THE STATE OF CALIFORNIA DEPARTMENT OF TRANSPORTATION

James L. Rucker
PROJECT ENGINEER

BRIDGE NO. 57-0761
KILOMETER POST 41.7

LA JOLLA VILLAGE DRIVE OC (WIDEN/RETROFIT)

ABUTMENT DETAILS No.3

DESIGN DETAIL SHEET (METRIC) (REV. 10/27/05)

ORIGINAL SCALE IN MILLIMETERS FOR REDUCED PLANS 0 10 20 30 40 50 60 70 80 90 100

CU 11223
EA 089751

DISREGARD PRINTS BEARING EARLIER REVISION DATES

REVISION DATES (PRELIMINARY STAGE ONLY): 6/02/08 01/30/05 02/17/04 07/08/04 11/08/04 12/08/04 4/04/05 8/02/05 9/01/05 4/27/06

SHEET 7 OF 20

FILE => 57-761-f-a01dt03.dgn

USERNAME => trlenard DATE PLOTTED => 17-JUN-2010 TIME PLOTTED => 14:05

DIST	COUNTY	ROUTE	KILOMETER POST TOTAL PROJECT	SHEET No	TOTAL SHEETS
11	SD	805	40.6/42.4	555	567

Caltrans Metric

REGISTERED CIVIL ENGINEER 6/02/08

6-14-10
PLANS APPROVAL DATE

REGISTERED PROFESSIONAL ENGINEER James L. Rucker No. C47796 Exp. 12/31/09 CIVIL STATE OF CALIFORNIA

The State of California or its officers or agents shall not be responsible for the accuracy or completeness of electronic copies of this plan sheet.

CITY OF SAN DIEGO
1010 Second Avenue, Suite 1200
San Diego, CA 92111

T.Y. LIN INTERNATIONAL
5030 Camino de la Siesta, Suite 204
San Diego, CA 92108 Phone (619)692-1920

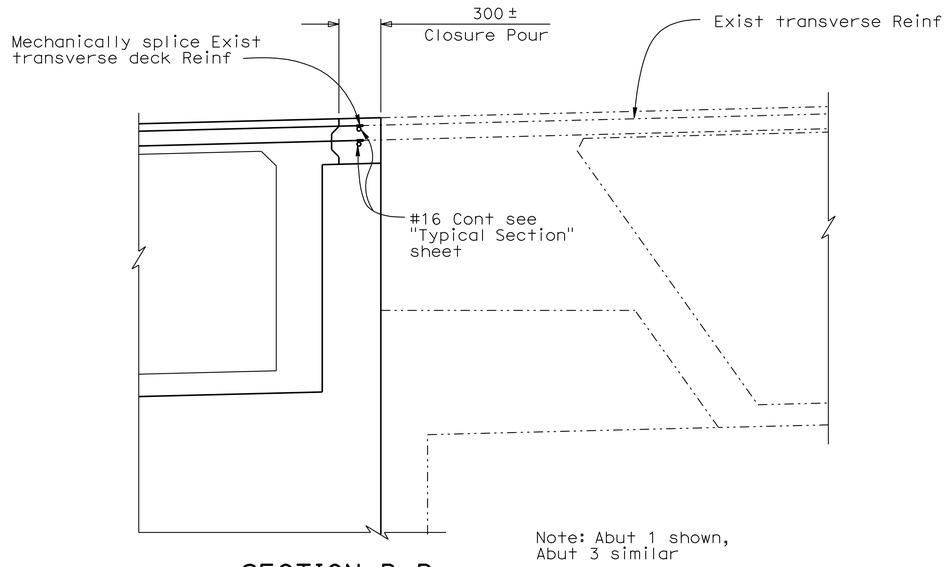

SECTION B-B
1:20

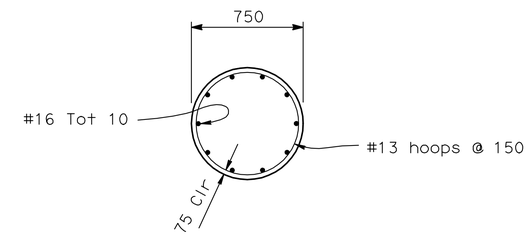

SECTION A-A
No Scale

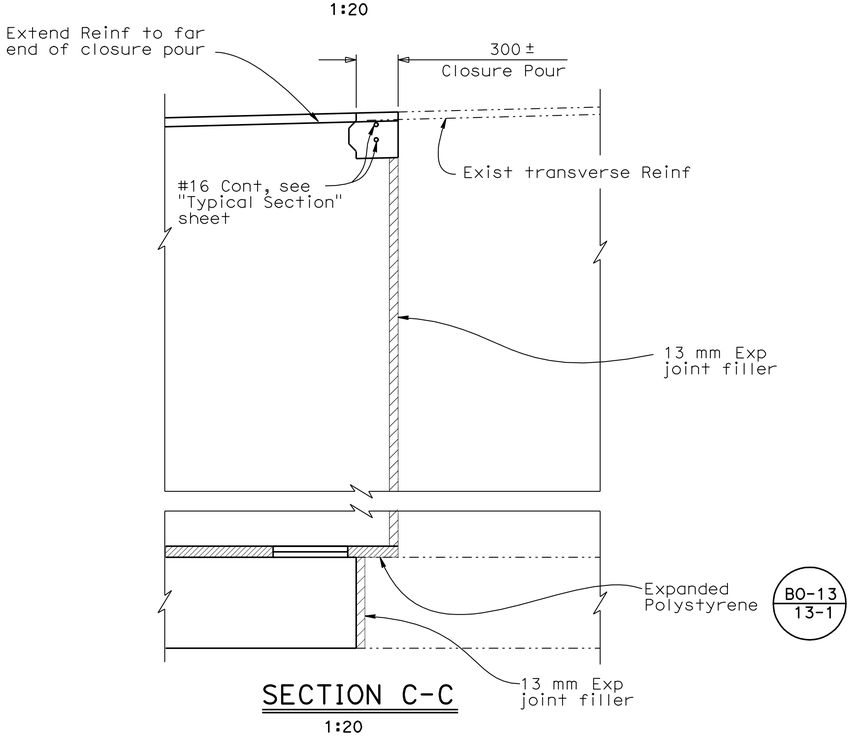

SECTION C-C
1:20

Note: Abut 1shown, Abut 3 similar

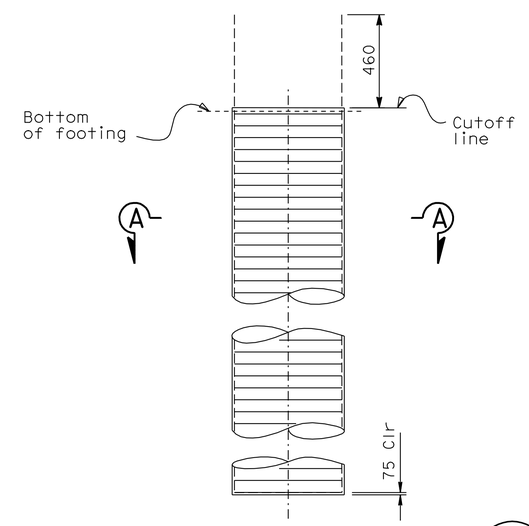

Note: For details not shown see B2-3

ELEVATION
No Scale

750 mm CIDH CONCRETE PILE

Note:
The Contractor shall verify all controlling field dimensions before ordering or fabricating any material.

ALL DIMENSIONS ARE IN MILLIMETERS UNLESS OTHERWISE SHOWN

Lily Sun
DESIGN OVERSIGHT Lilly Sun
10-23-09
SIGN OFF DATE

	BY	CHECKED
DESIGN	Brett Makley	Anthony Sanchez
DETAILS	O Colcol/B Arce	Brett Makley
QUANTITIES	Brett Makley	Brian Rochelle

PREPARED FOR THE STATE OF CALIFORNIA DEPARTMENT OF TRANSPORTATION

James L. Rucker
PROJECT ENGINEER

BRIDGE NO. 57-0761
KILOMETER POST 41.7

LA JOLLA VILLAGE DRIVE OC (WIDEN/RETROFIT)

ABUTMENT DETAILS No.4

DESIGN DETAIL SHEET (METRIC) (REV. 10/27/05)

ORIGINAL SCALE IN MILLIMETERS FOR REDUCED PLANS 0 10 20 30 40 50 60 70 80 90 100

CU 11223
EA 089751

DISREGARD PRINTS BEARING EARLIER REVISION DATES

REVISION DATES (PRELIMINARY STAGE ONLY): 6/02/08 09/18/09 07/08/04 11/08/04 12/08/04 4/04/05 8/02/05 9/04/05 4/24/08

SHEET 8 OF 20

FILE => 57-761-f-a01dt04.dgn

USERNAME => trlenard DATE PLOTTED => 17-JUN-2010 TIME PLOTTED => 14:05

DIST	COUNTY	ROUTE	KILOMETER POST TOTAL PROJECT	SHEET No	TOTAL SHEETS
11	SD	805	40.6/42.4	556	567

Caltrans Metric

REGISTERED CIVIL ENGINEER 6/02/08

6-14-10
PLANS APPROVAL DATE

REGISTERED PROFESSIONAL ENGINEER James L. Rucker No. C47796 Exp. 12/31/09 CIVIL STATE OF CALIFORNIA

The State of California or its officers or agents shall not be responsible for the accuracy or completeness of electronic copies of this plan sheet.

CITY OF SAN DIEGO
1010 Second Avenue, Suite 1200
San Diego, CA 92111

T.Y. LIN INTERNATIONAL
5030 Camino de la Siesta, Suite 204
San Diego, CA 92108 Phone (619)692-1920

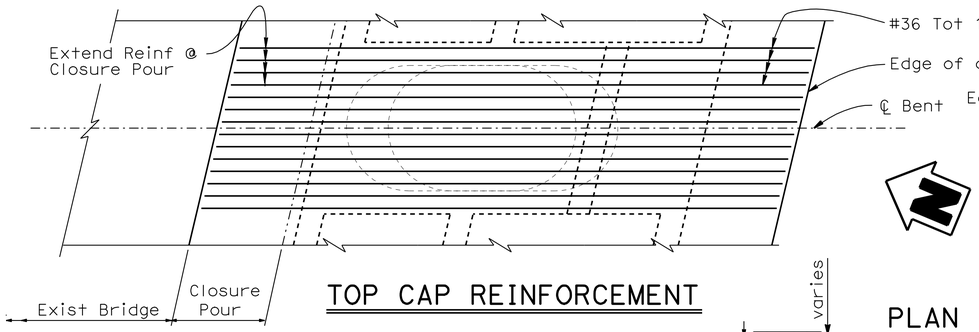

TOP CAP REINFORCEMENT

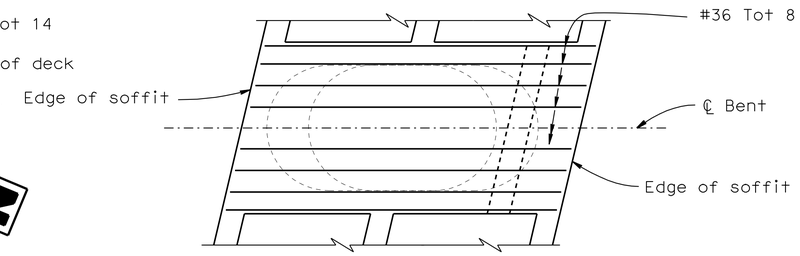

BOTTOM CAP REINFORCEMENT

PLAN
1:40

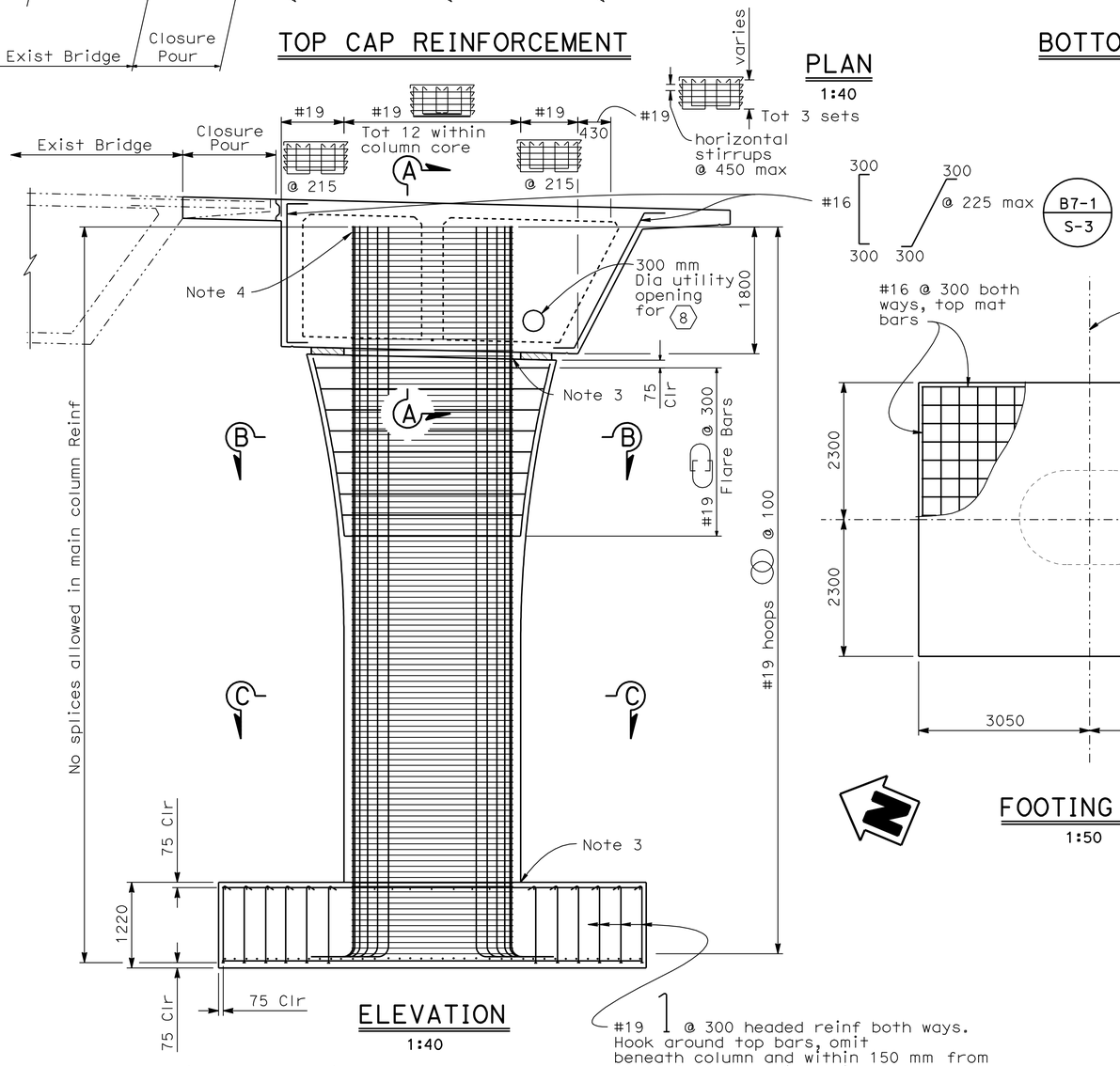

ELEVATION
1:40

Note:
The Contractor shall verify all controlling field dimensions before ordering or fabricating any material.

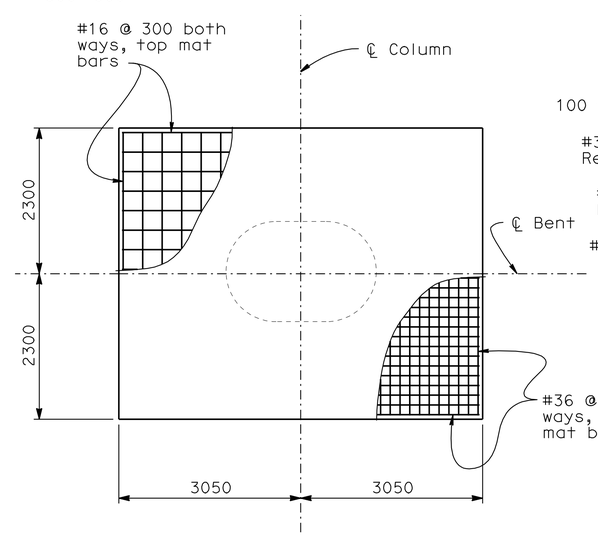

FOOTING PLAN
1:50

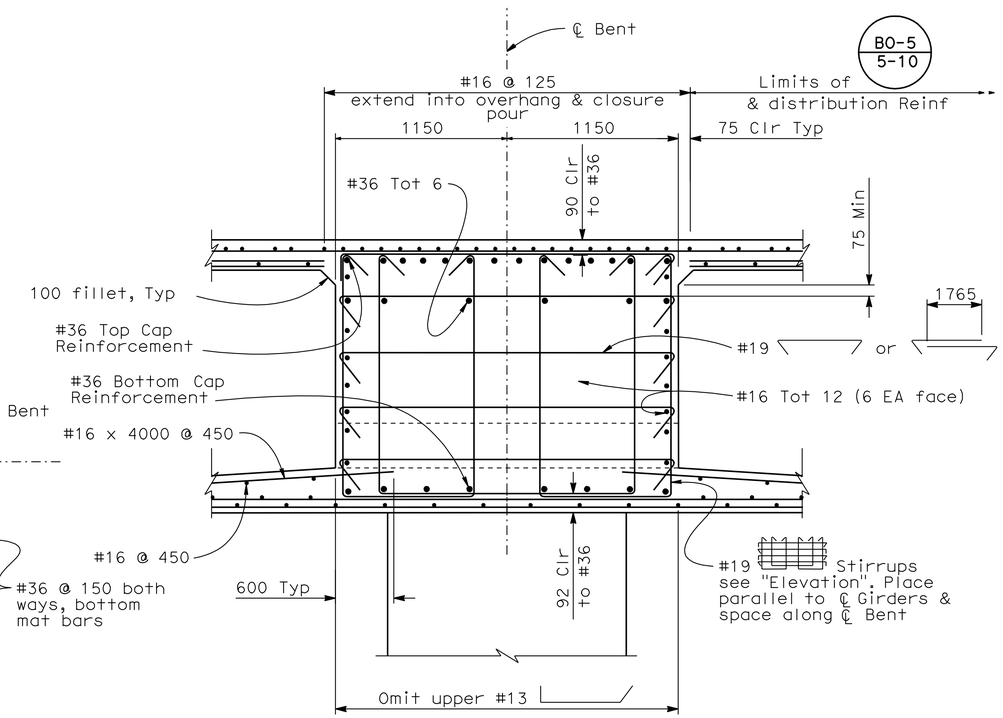

SECTION A-A
1:20

NOTES:

1. For "Sections B-B & C-C" see "Bent Details No.2" sheet.
2. All hoops are "Ultimate" butt spliced continuous
3. Hoops may be adjusted at Bentcap & footing to allow for placing cap & footing reinforcement
4. Main column reinforcement may be adjusted or cut to avoid prestressing ducts

8 - 100mm DIP Irrigation Supply Line, see "Road Plans"

ALL DIMENSIONS ARE IN MILLIMETERS UNLESS OTHERWISE SHOWN

DESIGN OVERSIGHT Lilly Sun	DESIGN	BY Brett Makley	CHECKED Anthony Sanchez	PREPARED FOR THE STATE OF CALIFORNIA DEPARTMENT OF TRANSPORTATION	James L. Rucker PROJECT ENGINEER
10-23-09 SIGN OFF DATE	DETAILS	BY O Colcol/B Arce	CHECKED Brett Makley		
	QUANTITIES	BY Brett Makley	CHECKED Brian Rochelle		

BRIDGE NO. 57-0761
KILOMETER POST 41.7

LA JOLLA VILLAGE DRIVE OC (WIDEN/RETROFIT)

BENT DETAILS No. 1

DESIGN DETAIL SHEET (METRIC) (REV. 10/27/05)

ORIGINAL SCALE IN MILLIMETERS FOR REDUCED PLANS 0 10 20 30 40 50 60 70 80 90 100

CU 11223
EA 089751

DISREGARD PRINTS BEARING EARLIER REVISION DATES

REVISION DATES (PRELIMINARY STAGE ONLY): 6/02/08 9/18/09 07/08/04 11/08/04 12/08/04 4/04/05 8/02/05 9/04/05 4/24/08

SHEET 9 OF 20

FILE => 57-761-h-b01dt01.dgn

USERNAME => trlenard DATE PLOTTED => 17-JUN-2010 TIME PLOTTED => 14:05

DIST	COUNTY	ROUTE	KILOMETER POST TOTAL PROJECT	SHEET No	TOTAL SHEETS
11	SD	805	40.6/42.4	557	567

Caltrans Metric

REGISTERED CIVIL ENGINEER 6/02/08

6-14-10
PLANS APPROVAL DATE

REGISTERED PROFESSIONAL ENGINEER James L. Rucker No. C47796 Exp. 12/31/09 CIVIL STATE OF CALIFORNIA

The State of California or its officers or agents shall not be responsible for the accuracy or completeness of electronic copies of this plan sheet.

CITY OF SAN DIEGO
1010 Second Avenue, Suite 1200
San Diego, CA 92111

T.Y. LIN INTERNATIONAL
5030 Camino de la Siesta, Suite 204
San Diego, CA 92108 Phone (619)692-1920

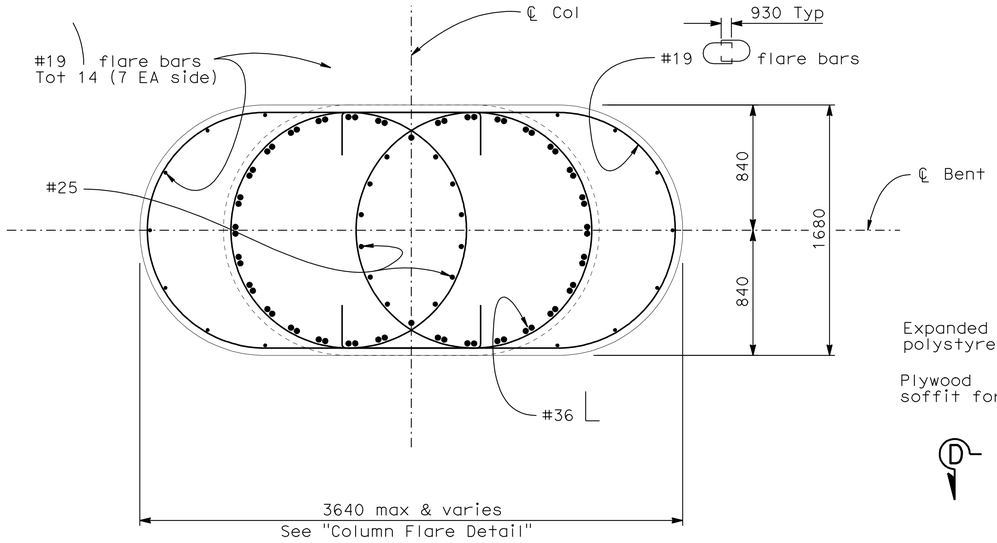

SECTION B-B
1:20

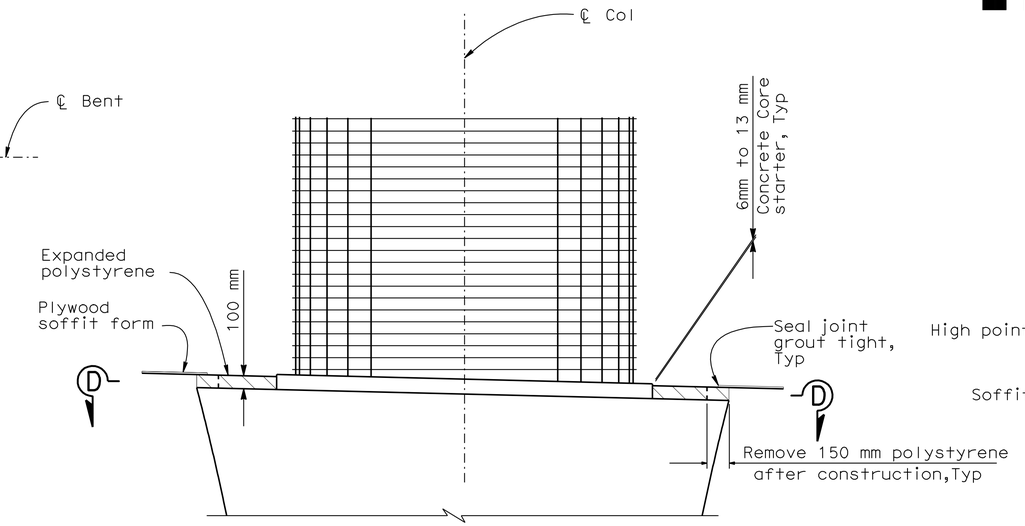

ELEVATION
No Scale

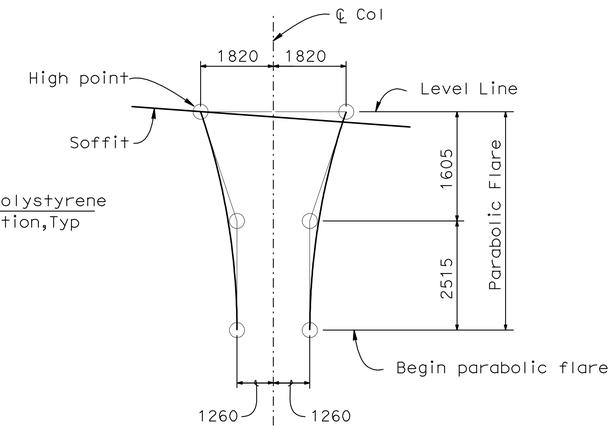

COLUMN FLARE DETAIL
No Scale

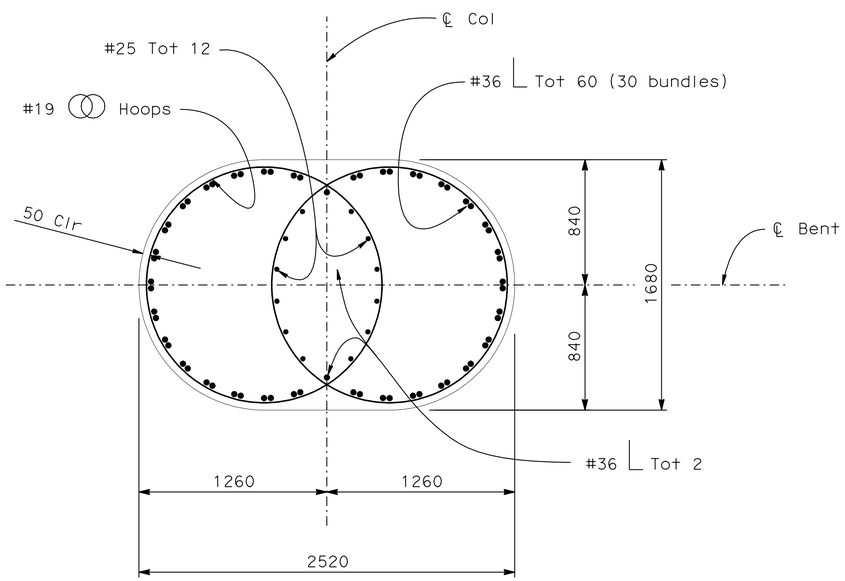

SECTION C-C
1:20

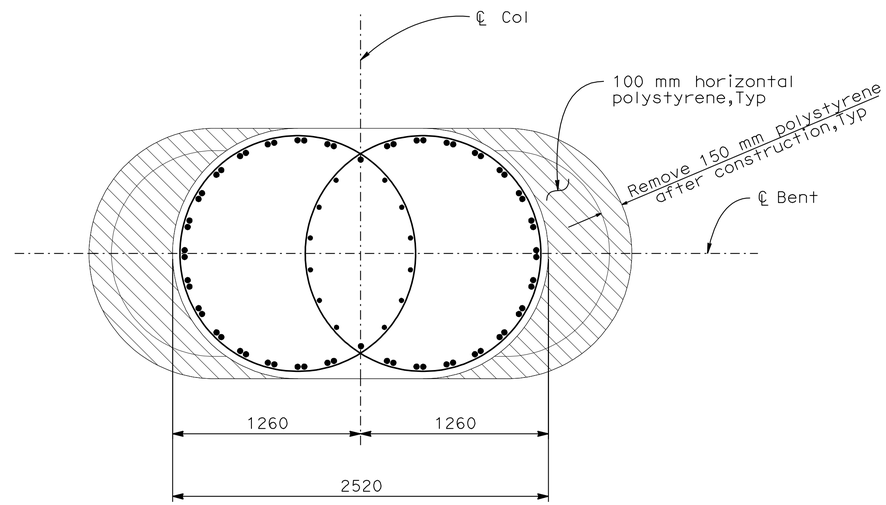

SECTION D-D
1:20

FLARE ISOLATION DETAILS
No Scale

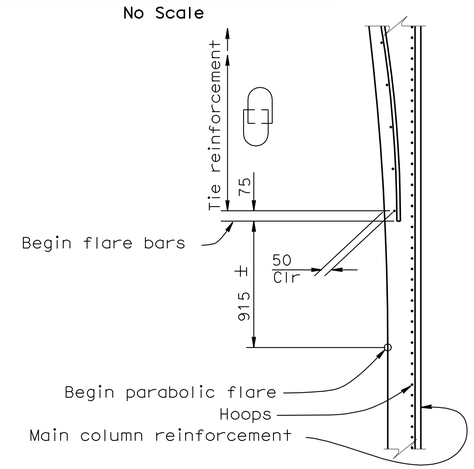

HOOP AND TIE DETAIL
No Scale

Note:
The Contractor shall verify all controlling field dimensions before ordering or fabricating any material.

ALL DIMENSIONS ARE IN MILLIMETERS UNLESS OTHERWISE SHOWN

DESIGN OVERSIGHT Lilly Sun	DESIGN	BY Brett Makley	CHECKED Anthony Sanchez
12-9-08 SIGN OFF DATE	DETAILS	BY O Colcol/B Arce	CHECKED Brett Makley
	QUANTITIES	BY Brett Makley	CHECKED Brian Rochelle

PREPARED FOR THE STATE OF CALIFORNIA DEPARTMENT OF TRANSPORTATION

James L. Rucker
PROJECT ENGINEER

BRIDGE NO. 57-0761
KILOMETER POST 41.7

LA JOLLA VILLAGE DRIVE OC (WIDEN/RETROFIT)

BENT DETAILS No. 2

DESIGN DETAIL SHEET (METRIC) (REV. 10/27/05)

ORIGINAL SCALE IN MILLIMETERS FOR REDUCED PLANS 0 10 20 30 40 50 60 70 80 90 100

CU 11223
EA 089751

DISREGARD PRINTS BEARING EARLIER REVISION DATES

REVISION DATES (PRELIMINARY STAGE ONLY) 11/15/02 01/30/03 02/17/04 07/08/04 11/08/04 12/02/04 4/04/05 9/01/05 6/17/08 6/02/08

SHEET 10 OF 20

FILE => 57-761-h-b01dt02.dgn

USERNAME => friehard DATE PLOTTED => 17-JUN-2010 TIME PLOTTED => 14:05

DIST	COUNTY	ROUTE	KILOMETER POST TOTAL PROJECT	SHEET No	TOTAL SHEETS
11	SD	805	40.6/42.4	558	567

Caltrans Metric

6/02/08
REGISTERED CIVIL ENGINEER

6-14-10
PLANS APPROVAL DATE

REGISTERED PROFESSIONAL ENGINEER James L. Rucker No. C47796 Exp. 12/31/09 CIVIL STATE OF CALIFORNIA

The State of California or its officers or agents shall not be responsible for the accuracy or completeness of electronic copies of this plan sheet.

CITY OF SAN DIEGO
1010 Second Avenue, Suite 1200
San Diego, CA 92111

T.Y. LIN INTERNATIONAL
5030 Camino de la Siesta, Suite 204
San Diego, CA 92108 Phone (619)692-1920

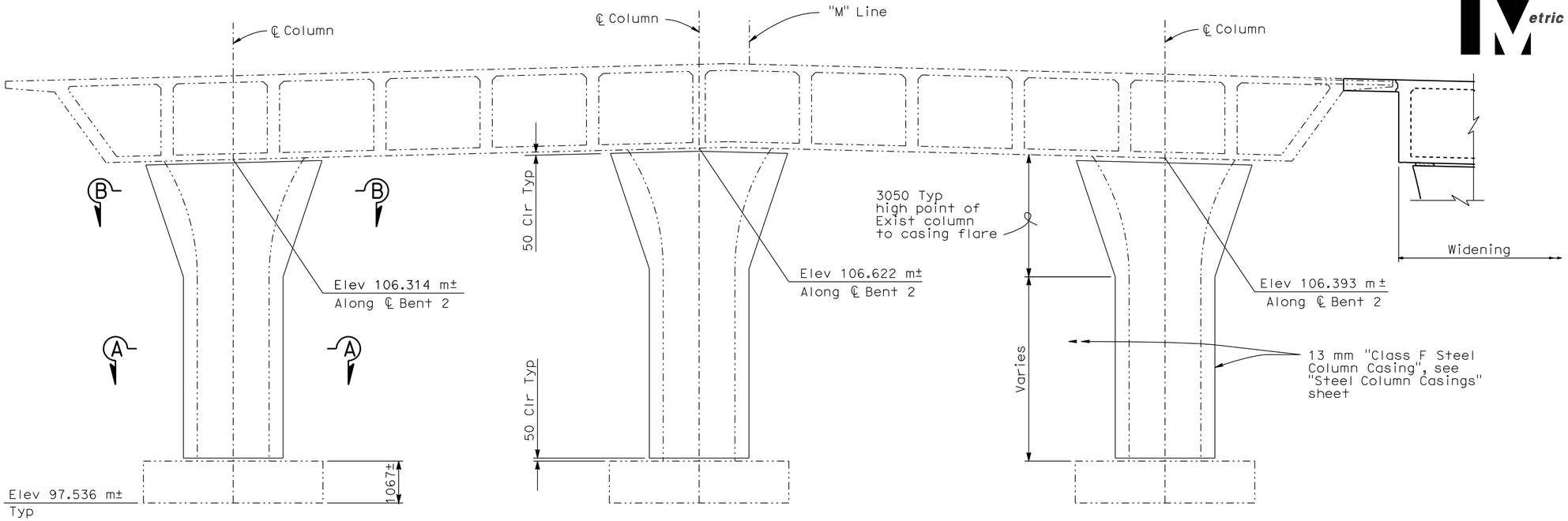

LEFT COLUMN

CENTER COLUMN

RIGHT COLUMN

EXISTING BENT 2 ELEVATION

1:60

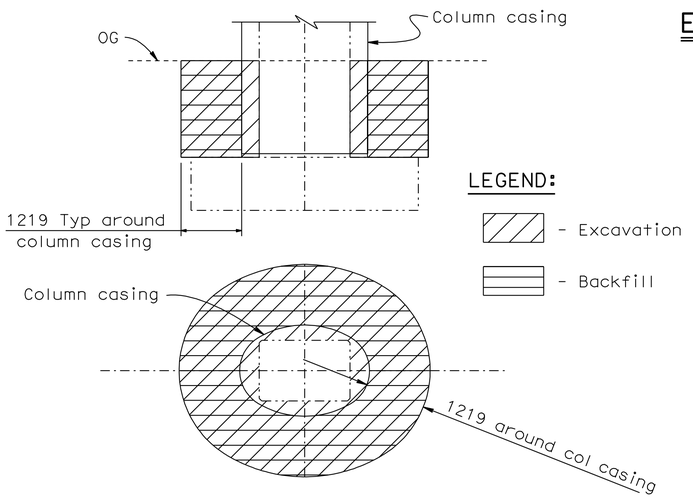

EXISTING COLUMN LIMITS OF PAYMENT FOR EXCAVATION AND BACKFILL

No Scale

Note:
The Contractor shall verify all controlling field dimensions before ordering or fabricating any material.

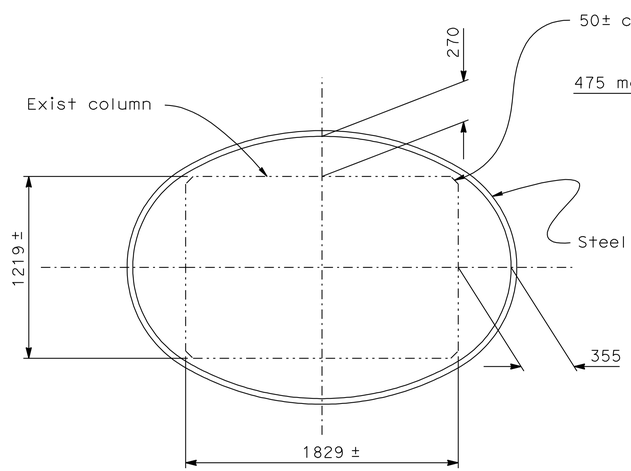

SECTION A-A

1:20

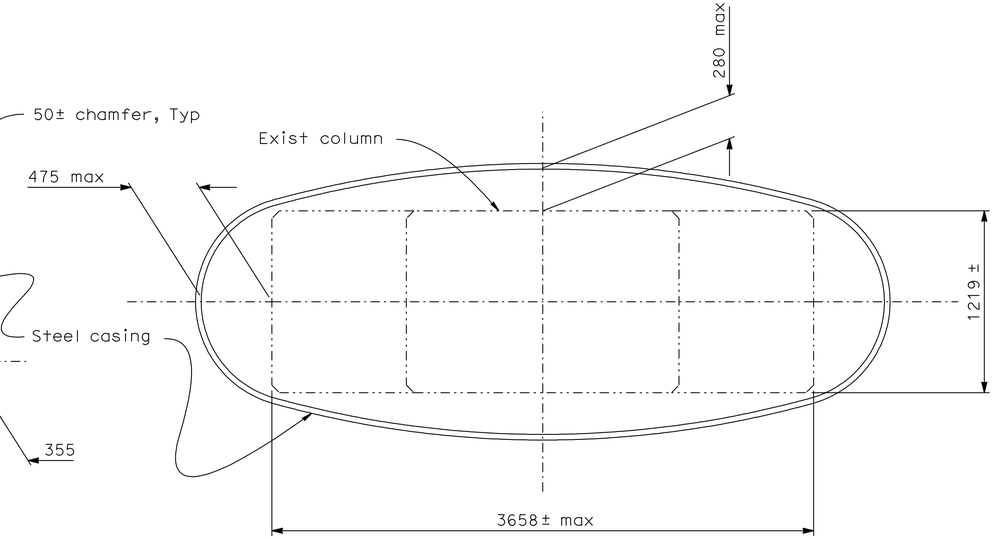

SECTION B-B

1:20

ALL DIMENSIONS ARE IN MILLIMETERS UNLESS OTHERWISE SHOWN

DESIGN OVERSIGHT Lilly Sun		DESIGN	BY Brett Makley	CHECKED Anthony Sanchez	PREPARED FOR THE STATE OF CALIFORNIA DEPARTMENT OF TRANSPORTATION
10-23-09 SIGN OFF DATE		DETAILS	BY O Colcol/B Arce	CHECKED Brett Makley	
		QUANTITIES	BY Brett Makley	CHECKED Brian Rochelle	

James L. Rucker
PROJECT ENGINEER

BRIDGE NO. 57-0761
KILOMETER POST 41.7

LA JOLLA VILLAGE DRIVE OC (WIDEN/RETROFIT)

BENT RETROFIT DETAILS

DESIGN DETAIL SHEET (METRIC) (REV. 10/27/05)

ORIGINAL SCALE IN MILLIMETERS FOR REDUCED PLANS 0 10 20 30 40 50 60 70 80 90 100

CU 11223
EA 089751

DISREGARD PRINTS BEARING EARLIER REVISION DATES

REVISION DATES (PRELIMINARY STAGE ONLY): 6/02/08 9/18/09 07/08/04 11/08/04 12/02/04 4/04/05 8/02/05 9/01/05 4/21/08

SHEET 11 OF 20

FILE => 57-761-h-b01dt03.dgn

USERNAME => friehard DATE PLOTTED => 17-JUN-2010 TIME PLOTTED => 14:05

DIST	COUNTY	ROUTE	KILOMETER POST TOTAL PROJECT	SHEET No	TOTAL SHEETS
11	SD	805	40.6/42.4	559	567

Caltrans Metric

REGISTERED CIVIL ENGINEER 6/02/08

6-14-10
PLANS APPROVAL DATE

REGISTERED PROFESSIONAL ENGINEER James L. Rucker No. C47796 Exp. 12/31/09 CIVIL STATE OF CALIFORNIA

The State of California or its officers or agents shall not be responsible for the accuracy or completeness of electronic copies of this plan sheet.

CITY OF SAN DIEGO
1010 Second Avenue, Suite 1200
San Diego, CA 92111

T.Y. LIN INTERNATIONAL
5030 Camino de la Siesta, Suite 204
San Diego, CA 92108 Phone (619)692-1920

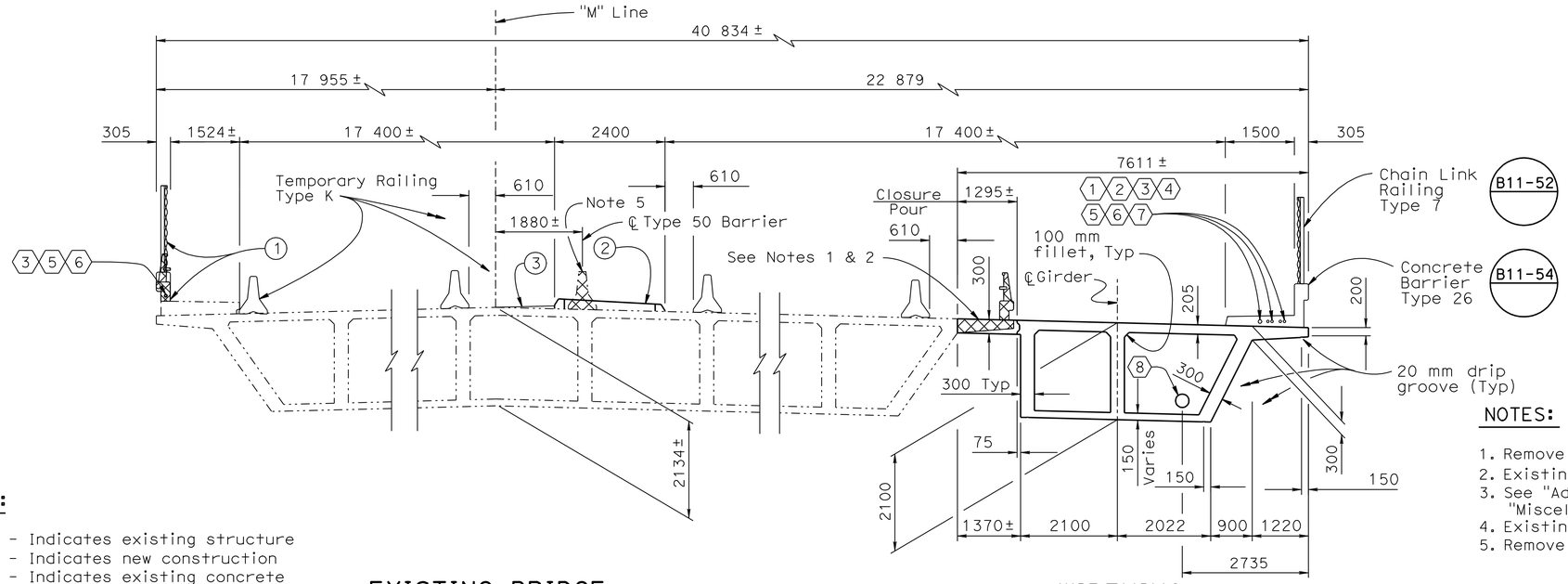

EXISTING BRIDGE

WIDENING

TYPICAL SECTION

1:60

NOTES:

1. Remove existing Type 9-11 barrier railing and existing overhang
2. Existing transverse reinforcement & girder stirrups to remain
3. See "Additional Top Slab Reinforcement" on "Miscellaneous Details No.1" sheet
4. Existing utilities not shown
5. Remove existing Type 50 Barrier

LEGEND:

- Indicates existing structure
- Indicates new construction
- Indicates existing concrete to be removed

NOTES:

1. Modify Exist Type II Barrier Railing w/ Concrete Barrier Type 26 (Mod) w/ Chain Link Type 7. See "Barrier Rail Upgrade" sheet
2. New Concrete Raised Median, see "Miscellaneous Details No.2" sheet
3. Polyester concrete overlay, see "Miscellaneous Details No.2" sheet.

UTILITIES:

1. - 53 mm Dia Communication Conduit
2. - 78 mm Signal Conduit
3. - 53 mm Lighting Conduit
4. - 78 mm Sprinkler Controller
5. - Relocated 50 mm Dia conduit for street lighting
6. - 53 mm Interconnect Conduit
7. - 50 mm Dia conduit for Fiber Optic
8. - 100mm DIP Irrigation Supply Line, see "Road Plans"

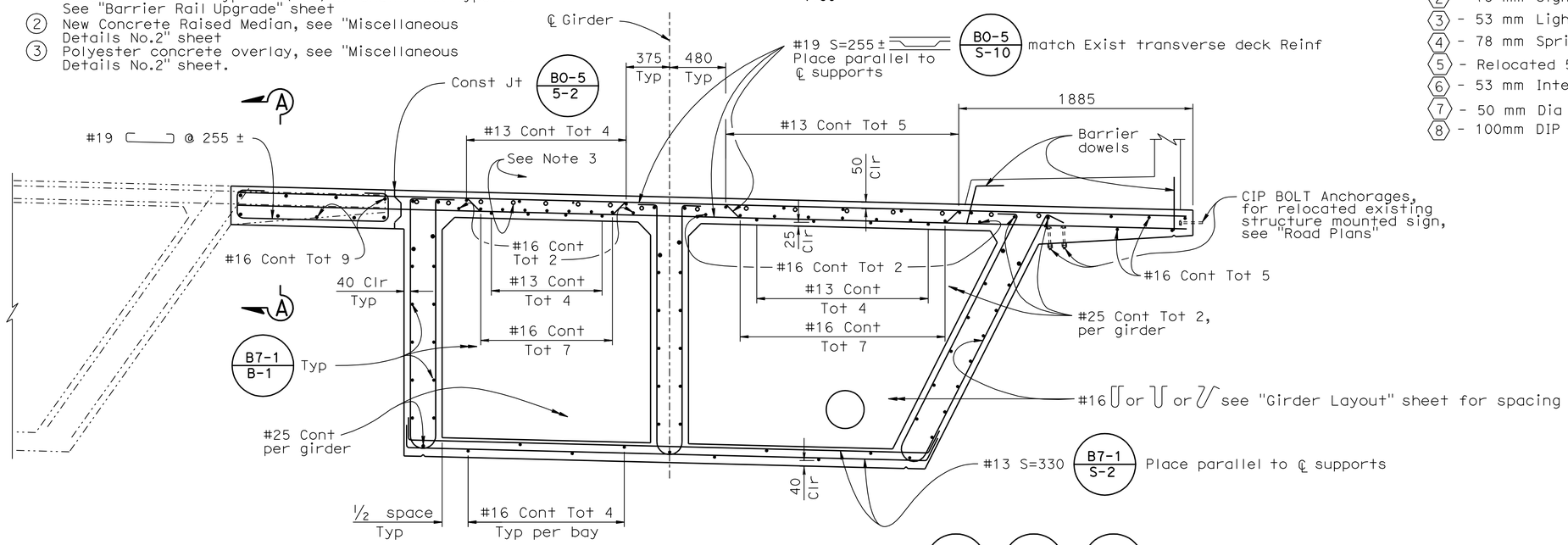

PART TYPICAL SECTION

1:20

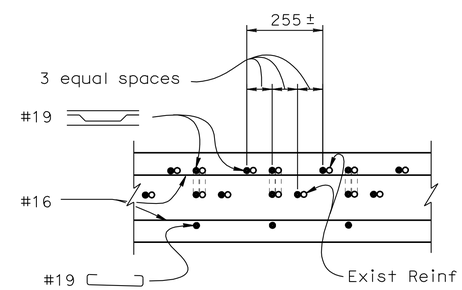

SECTION A-A

1:10

Note:
The Contractor shall verify all controlling field dimensions before ordering or fabricating any material.

ALL DIMENSIONS ARE IN MILLIMETERS UNLESS OTHERWISE SHOWN

DESIGN	BY Brett Makley	CHECKED Anthony Sanchez	
DETAILS	BY O Colcol/B Arce	CHECKED Brett Makley	
QUANTITIES	BY Brett Makley	CHECKED Brian Rochelle	

DESIGN OVERSIGHT Lilly Sun
10-23-09
SIGN OFF DATE

PREPARED FOR THE STATE OF CALIFORNIA DEPARTMENT OF TRANSPORTATION

James L. Rucker
PROJECT ENGINEER

CU 11223
EA 089751

BRIDGE NO. 57-0761
KILOMETER POST 41.7

LA JOLLA VILLAGE DRIVE OC (WIDEN/RETROFIT)

TYPICAL SECTION

DISREGARD PRINTS BEARING EARLIER REVISION DATES

REVISION DATES (PRELIMINARY STAGE ONLY): 6/02/08 9/18/09 01/08/04 11/08/04 12/08/04 4/04/05 8/04/05 9/04/05 4/13/08

SHEET 12 OF 20

DESIGN DETAIL SHEET (METRIC) (REV. 10/27/05)

ORIGINAL SCALE IN MILLIMETERS FOR REDUCED PLANS 0 10 20 30 40 50 60 70 80 90 100

FILE => 57-761-k-ts01.dgn

USERNAME => trrichard DATE PLOTTED => 17-JUN-2010 TIME PLOTTED => 14:05

DIST	COUNTY	ROUTE	KILOMETER POST TOTAL PROJECT	SHEET No	TOTAL SHEETS
11	SD	805	40.6/42.4	560	567

Caltrans Metric

6/02/08
REGISTERED CIVIL ENGINEER

6-14-10
PLANS APPROVAL DATE

REGISTERED PROFESSIONAL ENGINEER James L. Rucker No. C47796 Exp. 12/31/09 CIVIL STATE OF CALIFORNIA

The State of California or its officers or agents shall not be responsible for the accuracy or completeness of electronic copies of this plan sheet.

CITY OF SAN DIEGO
1010 Second Avenue, Suite 1200
San Diego, CA 92111

T.Y. LIN INTERNATIONAL
5030 Camino de la Siesta, Suite 204
San Diego, CA 92108 Phone (619)692-1920

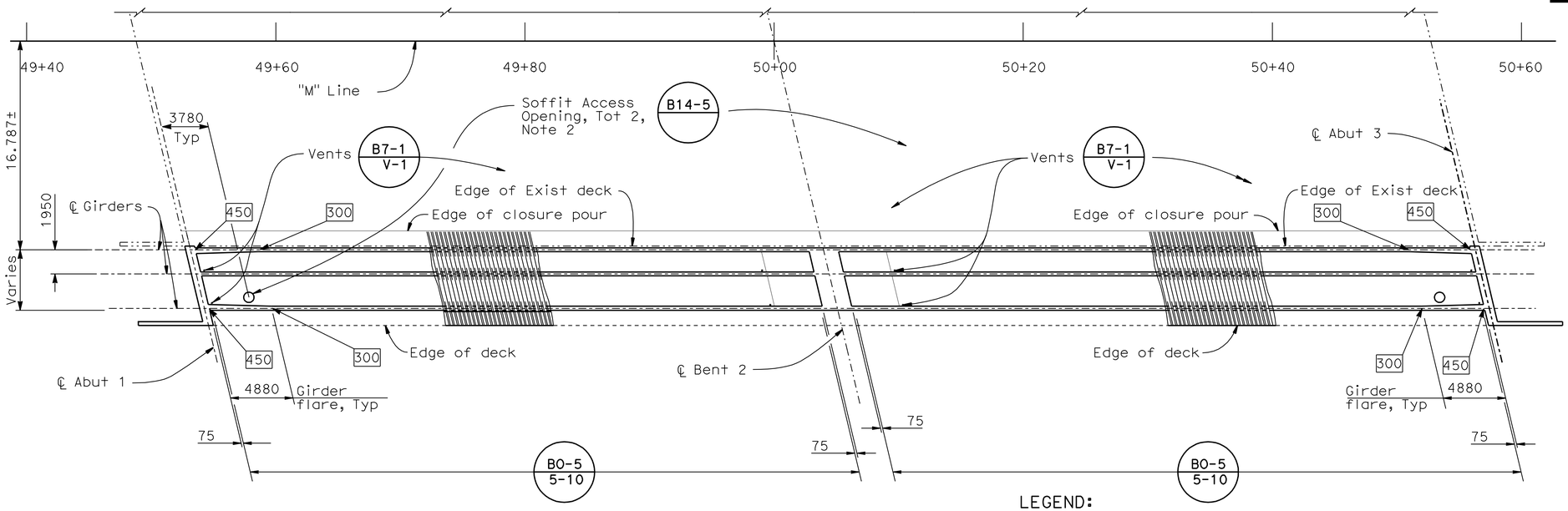

GIRDER LAYOUT

1:200

LEGEND:

☐ - Indicates girder stem width in millimeters

PRESTRESSING NOTES

Pjack = 25,750 kN

1860 MPa Low Relaxation Strand

Total number of girders = 3

Anchor set = 10 mm

Distribution of prestressing force (Pjack) between girders shall not exceed the ratio of 3:2. Maximum final force variation between girders shall not exceed 3225 kN

Concrete: f'c = 31 MPa @ 28 days
f'ci = 25 MPa @ time of stressing

Contractor shall submit elongation calculations based on initial stress at ⊠ = 0.876 times jacking stress

Friction and wobble coeficients:
μ = 0.15
k = 0.00066/m

One-end stressing shall be performed from Abutment 3

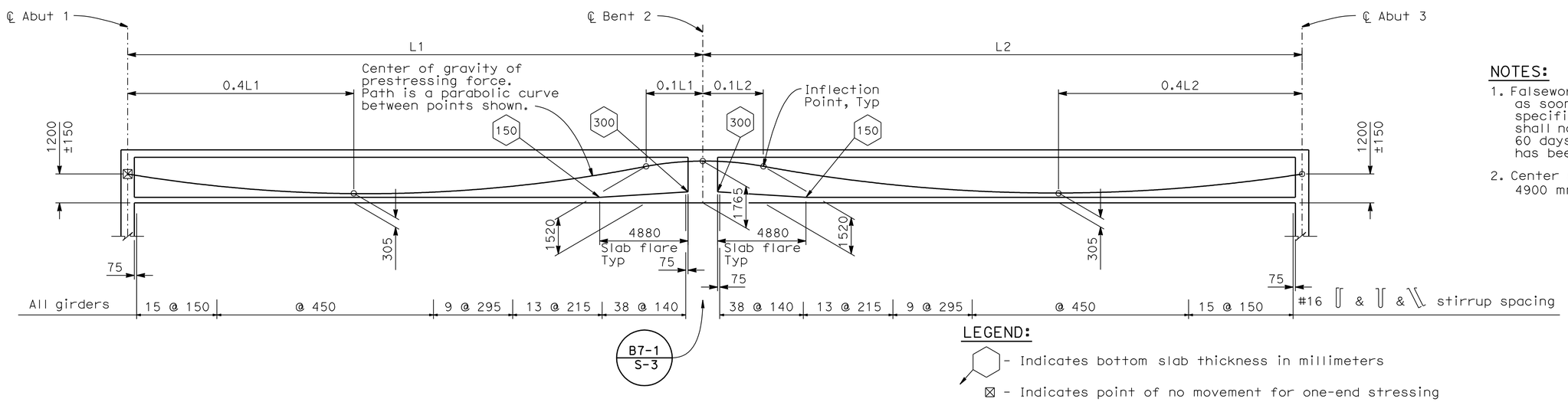

LEGEND:

⬡ - Indicates bottom slab thickness in millimeters

⊠ - Indicates point of no movement for one-end stressing

NOTES:

1. Falsework shall be released as soon as permitted by the specifications. Closure pour shall not be placed sooner than 60 days after the falsework has been released.
2. Center soffit access opening at 4900 mm from edge of deck

Note:
The Contractor shall verify all controlling field dimensions before ordering or fabricating any material.

LONGITUDINAL SECTION

No Scale

B0-5 B7-1 B14-5

ALL DIMENSIONS ARE IN MILLIMETERS UNLESS OTHERWISE SHOWN

Lily Sun
DESIGN OVERSIGHT Lilly Sun
10-23-09
SIGN OFF DATE

	BY	CHECKED
DESIGN	Brett Makley	Anthony Sanchez
DETAILS	O Colcol/B Arce	Brett Makley
QUANTITIES	Brett Makley	Brian Rochelle

PREPARED FOR THE STATE OF CALIFORNIA DEPARTMENT OF TRANSPORTATION

James L. Rucker
PROJECT ENGINEER

BRIDGE NO. 57-0761
KILOMETER POST 41.7

LA JOLLA VILLAGE DRIVE OC (WIDEN/RETROFIT)

GIRDER LAYOUT

DESIGN DETAIL SHEET (METRIC) (REV. 10/27/05)

ORIGINAL SCALE IN MILLIMETERS FOR REDUCED PLANS 0 10 20 30 40 50 60 70 80 90 100

CU 11223
EA 089751

DISREGARD PRINTS BEARING EARLIER REVISION DATES

REVISION DATES (PRELIMINARY STAGE ONLY) 6/02/08 9/18/09 07/08/04 11/08/04 12/02/04 4/04/05 8/02/05 9/01/05 4/27/08

SHEET 13 OF 20

FILE => 57-761-1-g_1o01.dgn

USERNAME => friehard DATE PLOTTED => 17-JUN-2010 TIME PLOTTED => 14:05

DIST	COUNTY	ROUTE	KILOMETER POST TOTAL PROJECT	SHEET No	TOTAL SHEETS
11	SD	805	40.6/42.4	561	567

Caltrans Metric

REGISTERED CIVIL ENGINEER 6/02/08

6-14-10
PLANS APPROVAL DATE

REGISTERED PROFESSIONAL ENGINEER James L. Rucker No. C47796 Exp. 12/31/09 CIVIL STATE OF CALIFORNIA

The State of California or its officers or agents shall not be responsible for the accuracy or completeness of electronic copies of this plan sheet.

CITY OF SAN DIEGO
1010 Second Avenue, Suite 1200
San Diego, CA 92111

T.Y. LIN INTERNATIONAL
5030 Camino de la Siesta, Suite 204
San Diego, CA 92108 Phone (619)692-1920

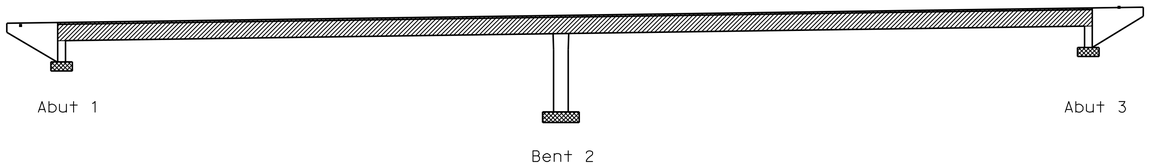

CONCRETE STRENGTH AND TYPE LIMITS

No Scale

- Structural Concrete, Bridge (25 MPa @ 28 days)
- Structural Concrete, Bridge (31 MPa @ 28 days)
- Structural Concrete, Bridge Footing (25 MPa @ 28 days)

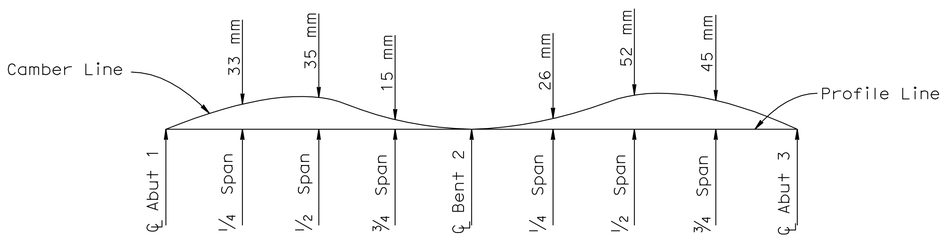

CAMBER DIAGRAM

No Scale

(Does not include allowance for falsework settlement)

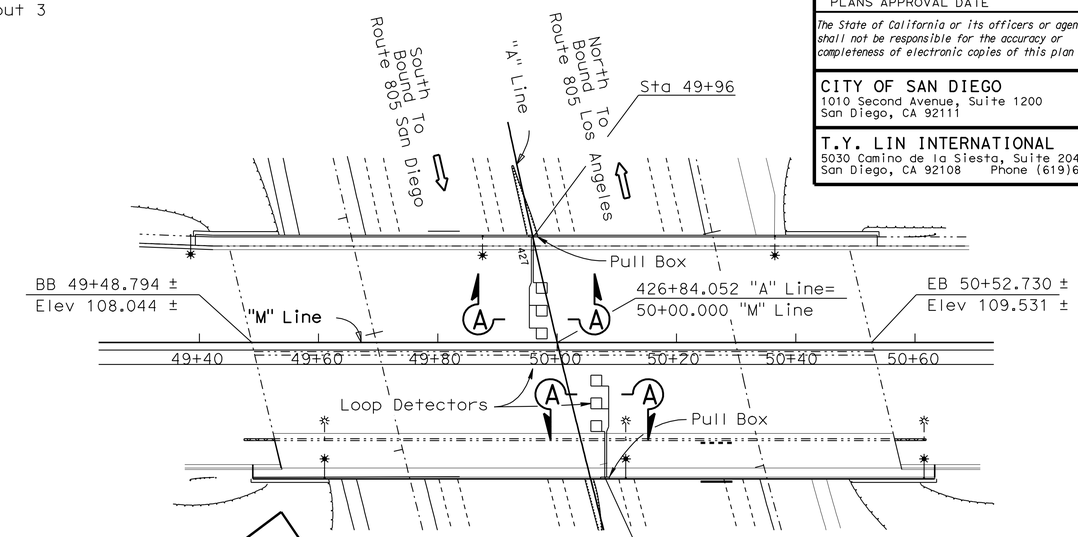

PLAN

1:500

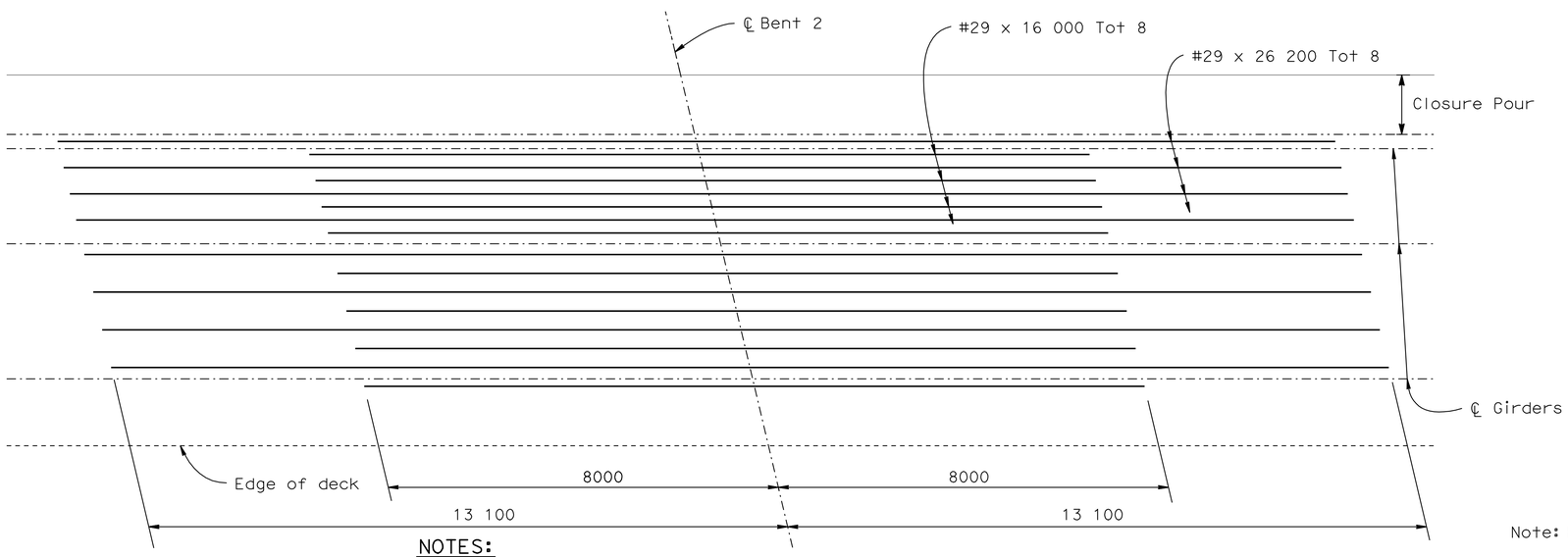

NOTES:
1. Additional top slab reinforcement shall be "Service Spliced".
2. See "Typical Section" sheet for spacing & location.

ADDITIONAL TOP SLAB REINFORCEMENT

No Scale

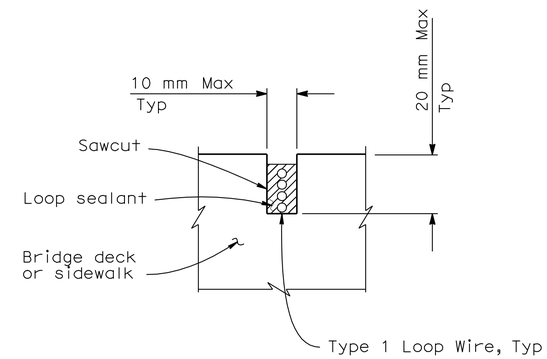

SECTION A-A

No Scale

LOOP DETECTOR DETAIL

Note: For details not shown, see Road plans and Standard Plans

ES-5A

Note:
The Contractor shall verify all controlling field dimensions before ordering or fabricating any material.

ALL DIMENSIONS ARE IN MILLIMETERS UNLESS OTHERWISE SHOWN

DESIGN OVERSIGHT Lily Sun	DESIGN	BY Brett Makley	CHECKED Anthony Sanchez
12-9-08 SIGN OFF DATE	DETAILS	BY O Colcol/B Arce	CHECKED Brett Makley
	QUANTITIES	BY Brett Makley	CHECKED Brian Rochelle

PREPARED FOR THE STATE OF CALIFORNIA DEPARTMENT OF TRANSPORTATION

James L. Rucker
PROJECT ENGINEER

BRIDGE NO. 57-0761
KILOMETER POST 41.7

LA JOLLA VILLAGE DRIVE OC (WIDEN/RETROFIT)

MISCELLANEOUS DETAILS No.1

DESIGN DETAIL SHEET (METRIC) (REV. 10/27/05)

ORIGINAL SCALE IN MILLIMETERS FOR REDUCED PLANS 0 10 20 30 40 50 60 70 80 90 100

CU 11223
EA 089751

DISREGARD PRINTS BEARING EARLIER REVISION DATES

REVISION DATES (PRELIMINARY STAGE ONLY) 6/02/08 01/30/03 02/11/04 07/08/04 11/08/04 12/08/04 4/04/05 8/02/05 9/04/05 4/27/06

SHEET 14 OF 20

FILE => 57-761-u-miscdt01.dgn

USERNAME => trlenard DATE PLOTTED => 17-JUN-2010 TIME PLOTTED => 14:06

DIST	COUNTY	ROUTE	KILOMETER POST TOTAL PROJECT	SHEET No	TOTAL SHEETS
11	SD	805	40.6/42.4	562	567

Caltrans Metric

6/02/08
REGISTERED CIVIL ENGINEER

6-14-10
PLANS APPROVAL DATE

REGISTERED PROFESSIONAL ENGINEER James L. Rucker No. C47796 Exp. 12/31/09 CIVIL STATE OF CALIFORNIA

The State of California or its officers or agents shall not be responsible for the accuracy or completeness of electronic copies of this plan sheet.

CITY OF SAN DIEGO
1010 Second Avenue, Suite 1200
San Diego, CA 92111

T.Y. LIN INTERNATIONAL
5030 Camino de la Siesta, Suite 204
San Diego, CA 92108 Phone (619)692-1920

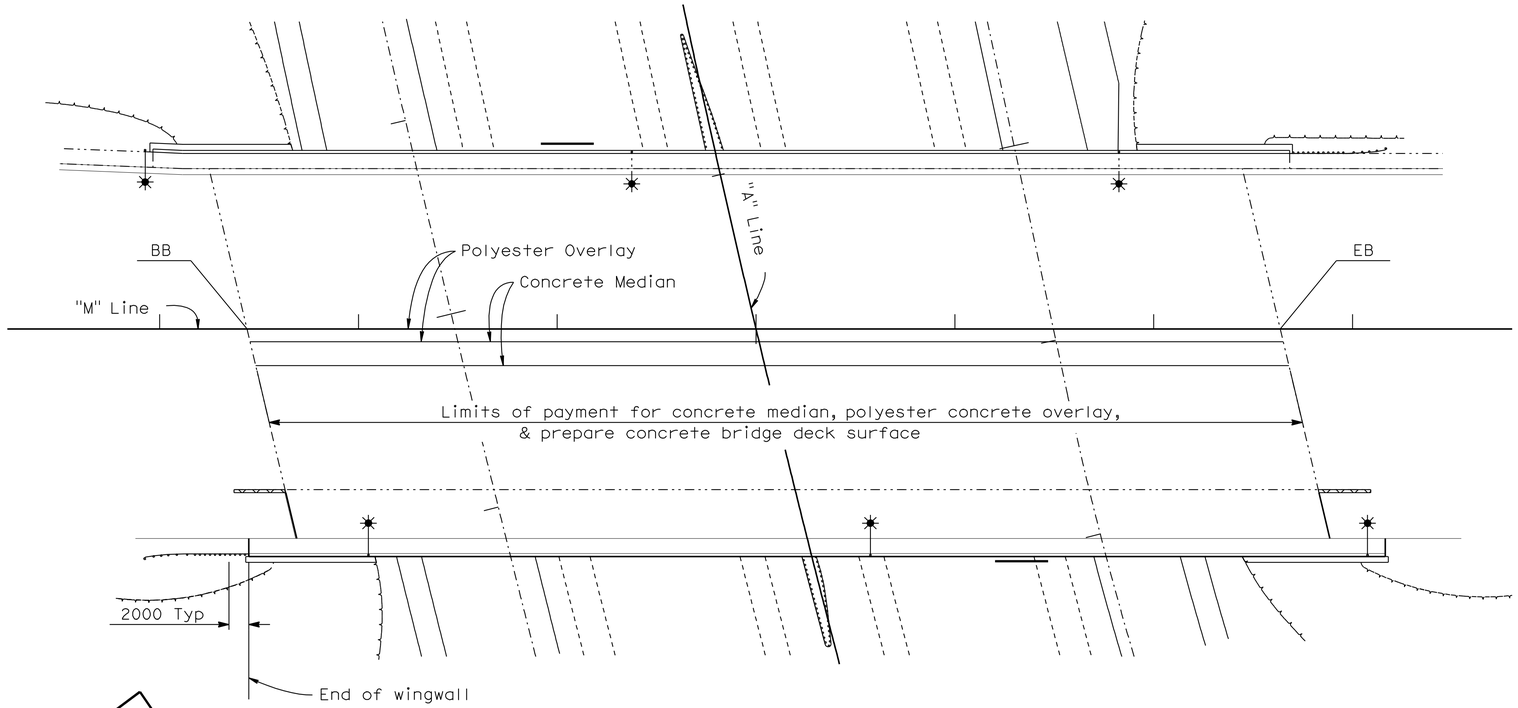

LIMITS OF PAYMENT FOR CONCRETE MEDIAN, POLYESTER CONCRETE OVERLAY & PREPARE CONCRETE BRIDGE DECK SURFACE

No Scale

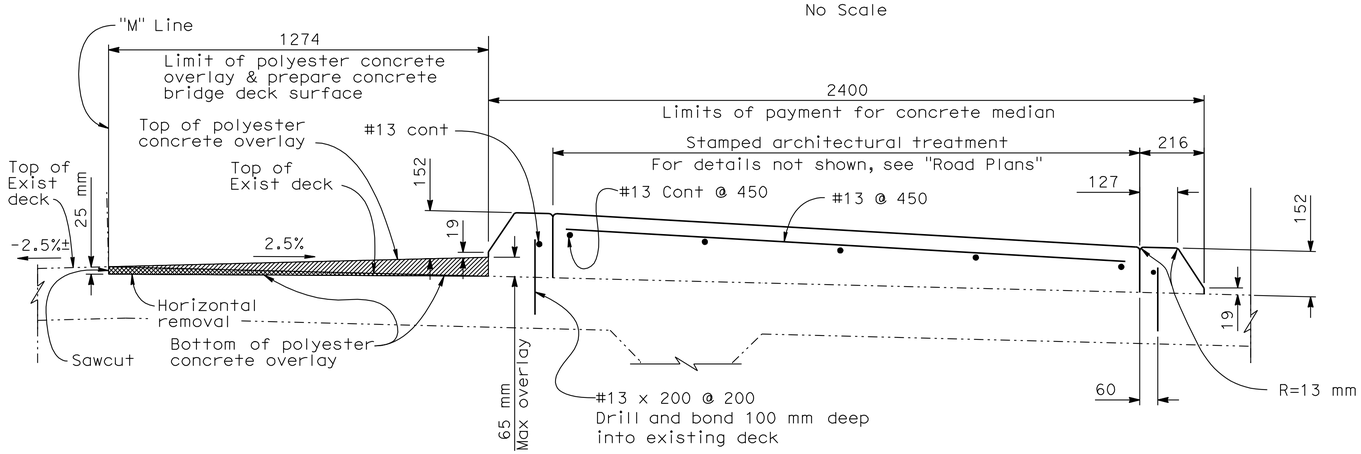

POLYESTER CONCRETE OVERLAY, PREPARE CONCRETE BRIDGE DECK SURFACE & MEDIAN DETAIL

1:10

LEGEND:

- Polyester concrete overlay
- Remove concrete

Note:
The Contractor shall verify all controlling field dimensions before ordering or fabricating any material.

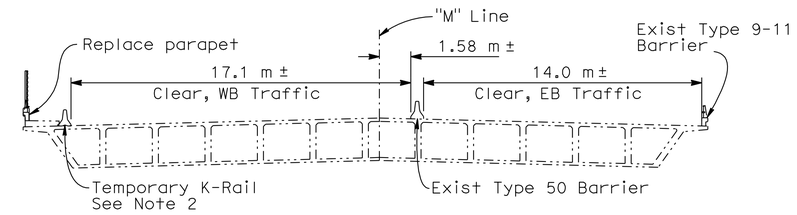

STAGE 1C, SEE ROAD PLANS

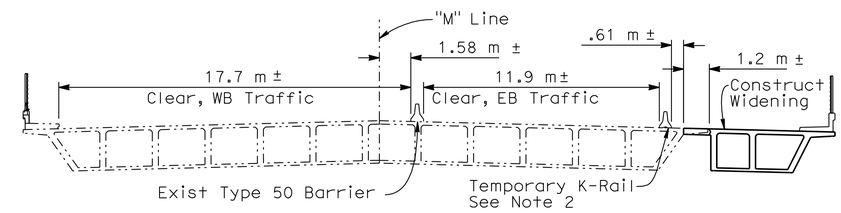

STAGE 1C, SEE ROAD PLANS

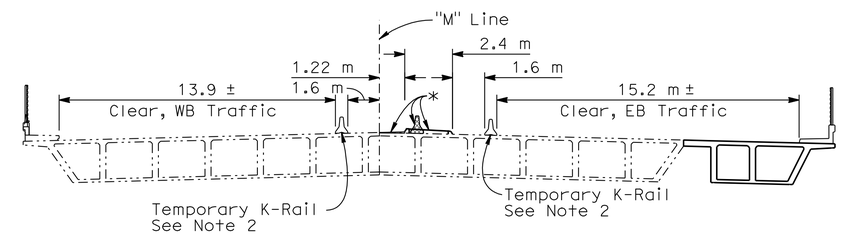

STAGE 3E, SEE ROAD PLANS

* - Remove Exist Type 50 Barrier, construct Concrete Median & Polyester Overlay

BRIDGE CONSTRUCTION STAGING

No Scale

NOTES:
1. Looking upstation
2. See Road Plans for exact location of the Temporary K-Rail

ALL DIMENSIONS ARE IN MILLIMETERS UNLESS OTHERWISE SHOWN

DESIGN OVERSIGHT Lilly Sun	DESIGN	BY Brett Makley	CHECKED Anthony Sanchez
10-23-09 SIGN OFF DATE	DETAILS	BY O Colcol/B Arce	CHECKED Brett Makley
	QUANTITIES	BY Brett Makley	CHECKED Brian Rochelle

PREPARED FOR THE STATE OF CALIFORNIA DEPARTMENT OF TRANSPORTATION

James L. Rucker
PROJECT ENGINEER

BRIDGE NO. 57-0761
KILOMETER POST 41.7

LA JOLLA VILLAGE DRIVE OC (WIDEN/RETROFIT)

MISCELLANEOUS DETAILS No.2

DESIGN DETAIL SHEET (METRIC) (REV. 10/27/05)

ORIGINAL SCALE IN MILLIMETERS FOR REDUCED PLANS 0 10 20 30 40 50 60 70 80 90 100

CU 11223
EA 089751

DISREGARD PRINTS BEARING EARLIER REVISION DATES

REVISION DATES (PRELIMINARY STAGE ONLY): 6/02/08 9/18/09 07/06/04 11/06/04 12/02/04 4/04/05 8/02/05 9/04/05 4/24/06

SHEET 15 OF 20

FILE => 57-761-u-miscdt02.dgn

USERNAME => trlenard DATE PLOTTED => 17-JUN-2010 TIME PLOTTED => 14:06

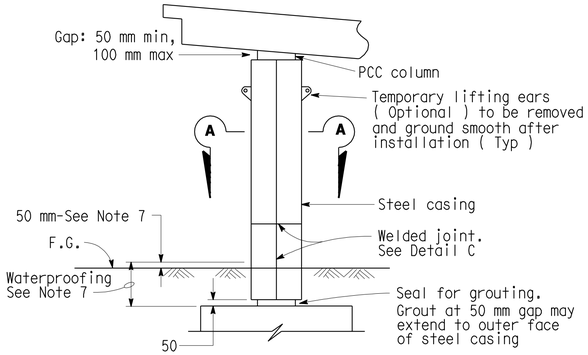

CLASS F COLUMN

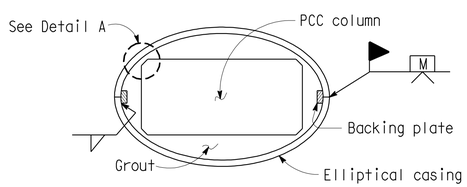

SECTION A-A
RECTANGULAR COLUMN

DETAIL A

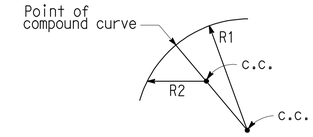

ELLIPTICAL CASING DETAIL
CLASS F COLUMN

Radii R1 and R2 to be determined by the Contractor subject to the approval of the Engineer

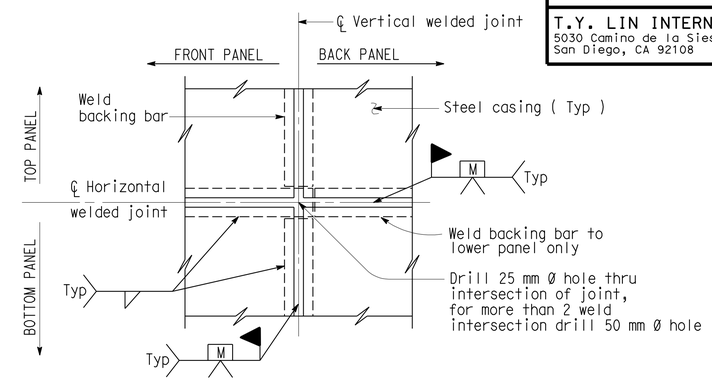

(TWO WELDED INTERSECTION JOINT)
DETAIL C

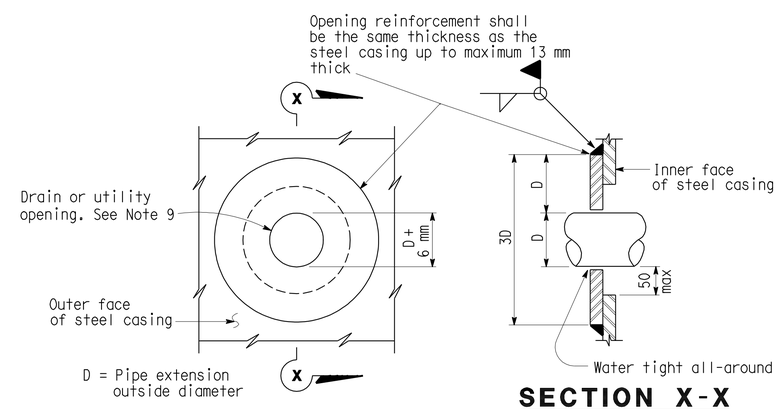

SECTION X-X
CASING OPENING

Note: Opening reinforcement required for drain or utility openings larger than 100 mm.

NOTES:

1)

2) Appropriate injection nozzles to be provided on casing, but removed and ground flush following completion of grouting operation.

3) All voids between steel casing and PCC column (Class F) to be filled with grout.

4) Location and number of vertical and horizontal welds to be determined by the Contractor, and subject to the approval of the Engineer. The location of casing welds are for illustration. No skip welds allowed.

5) Backing plates to be the same thickness as casing up to maximum 13 mm thick.

6)

7) Waterproof limits for steel casings. Typical for Class "F".

8)

9) For pipe extensions, opening shall be no more than 6 mm greater than the pipe extension diameter. For other openings, the opening diameter to be determined by the Engineer.

NO SCALE
ALL DIMENSIONS ARE IN MILLIMETERS UNLESS OTHERWISE SHOWN
SPECIAL DETAILS

DIST.	COUNTY	ROUTE	KILOMETER POST TOTAL PROJECT	SHEET NO.	TOTAL SHEETS
11	SD	805	40.6/42.4	563	567

Caltrans Metric

6/02/08
REGISTERED ENGINEER - CIVIL
6-14-10
PLANS APPROVAL DATE
REGISTERED PROFESSIONAL ENGINEER James L. Rucker No. C47796 Exp. 12/31/09 CIVIL STATE OF CALIFORNIA

The State of California or its officers or agents shall not be responsible for the accuracy or completeness of electronic copies of this plan sheet.

CITY OF SAN DIEGO
1010 Second Avenue, Suite 1200
San Diego, CA 92111

T.Y. LIN INTERNATIONAL
5030 Camino de la Siesta, Suite 204
San Diego, CA 92108 Phone (619)692-1920

STANDARD DRAWING

RELEASE DATE	Revised	DESIGN	BY BRIAN MARONEY	CHECKED R.J. ZELINSKI	RELEASED BY
		DETAILS	BY R. YEE	CHECKED PAT HIPLEY	
FILE NO.	xs7-010	SUBMITTED	BY R.J. ZELINSKI	DRAWING DATE 8/93	OFFICE CHIEF

1 Deleted Details
2 Revised Title
3 Deleted Notes
4 Revised Notes

STATE OF CALIFORNIA
DEPARTMENT OF TRANSPORTATION

DIVISION OF ENGINEERING SERVICES

BRIDGE NO. 57-0761
KILOMETER POST 41.7

LA JOLLA VILLAGE DRIVE OC (WIDEN/RETROFIT)

STEEL COLUMN CASINGS

DS OSD 2147A (METRIC) (REV. 2/25/97)

ORIGINAL SCALE IN MILLIMETERS FOR REDUCED PLANS 0 10 20 30 40 50 60 70 80 90 100

CU 11223
EA 089751

DISREGARD PRINTS BEARING EARLIER REVISION DATES

REVISION DATES (PRELIMINARY STAGE ONLY) 11/18/02 01/30/03 02/11/04 07/06/04 12/06/04 4/04/05 8/02/05 9/04/05 4/11/08 6/02/08

SHEET 16 OF 20

USERNAME => trlenard

DATE PLOTTED => 17-JUN-2010 TIME PLOTTED => 14:06

57-761-u-miscdt03.

DIST	COUNTY	ROUTE	KILOMETER POST TOTAL PROJECT	SHEET No	TOTAL SHEETS
11	SD	805	40.6/42.4	564	567

Caltrans Metric

6/02/08
REGISTERED CIVIL ENGINEER

6-14-10
PLANS APPROVAL DATE

REGISTERED PROFESSIONAL ENGINEER
James L. Rucker
No. C47796
Exp. 12/31/09
CIVIL
STATE OF CALIFORNIA

The State of California or its officers or agents shall not be responsible for the accuracy or completeness of electronic copies of this plan sheet.

CITY OF SAN DIEGO
1010 Second Avenue, Suite 1200
San Diego, CA 92111

T.Y. LIN INTERNATIONAL
5030 Camino de la Siesta, Suite 204
San Diego, CA 92108 Phone (619)692-1920

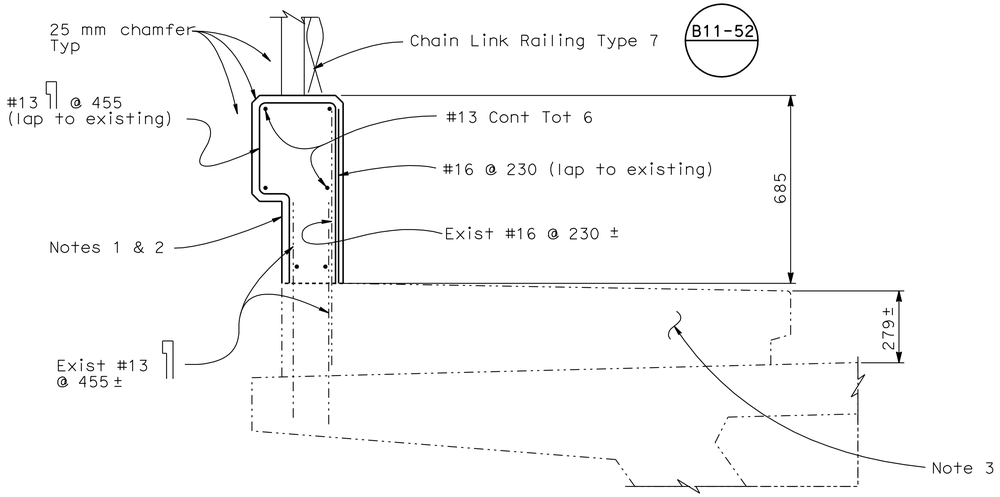

SECTION A-A
1:20

NOTES:
1. Exist parapet & railing to be removed (retain reinforcement)
2. Construct parapet for Concrete Barrier Type 26 (Mod) and Chain Link Railing Type 7
3. Existing sidewalk to remain

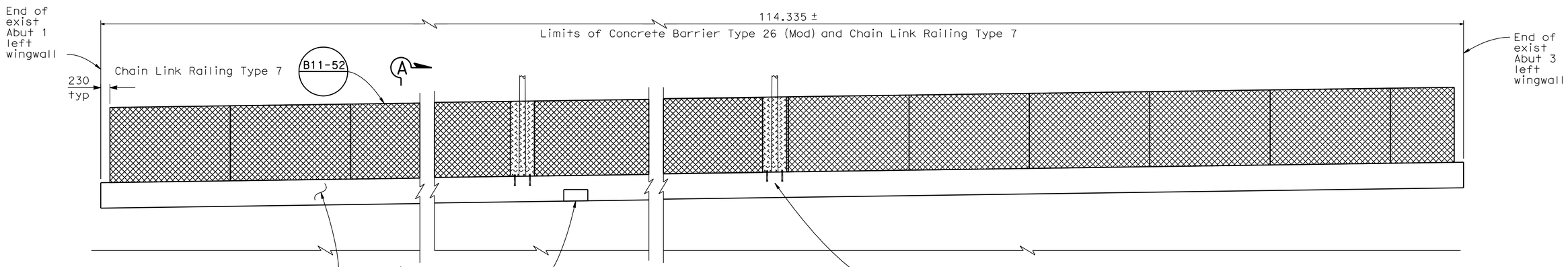

BARRIER RAIL ELEVATION
1:50

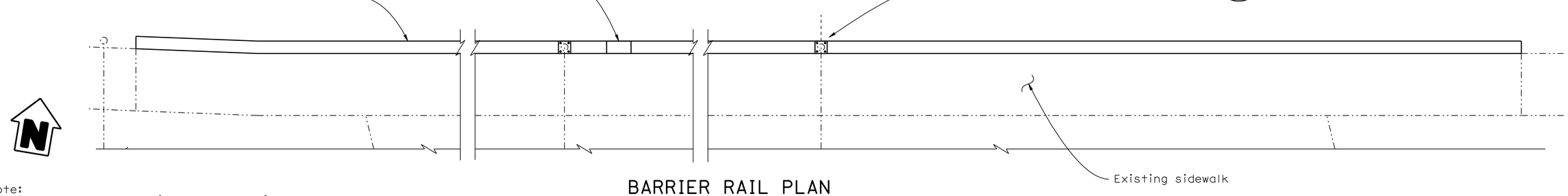

BARRIER RAIL PLAN
1:50

Note:
The Contractor shall verify all controlling field dimensions before ordering or fabricating any material.

ALL DIMENSIONS ARE IN MILLIMETERS UNLESS OTHERWISE SHOWN

DESIGN OVERSIGHT Lilly Sun	DESIGN	BY Brett Makley	CHECKED Anthony Sanchez
12-9-08 SIGN OFF DATE	DETAILS	BY O Colcol/B Arce	CHECKED Brett Makley
	QUANTITIES	BY Brett Makley	CHECKED Brian Rochelle

PREPARED FOR THE STATE OF CALIFORNIA DEPARTMENT OF TRANSPORTATION

James L. Rucker
PROJECT ENGINEER

BRIDGE NO. 57-0761
KILOMETER POST 41.7

LA JOLLA VILLAGE DRIVE OC (WIDEN/RETROFIT)
BARRIER RAIL UPGRADE

DESIGN DETAIL SHEET (METRIC) (REV. 10/27/05)

ORIGINAL SCALE IN MILLIMETERS FOR REDUCED PLANS 0 10 20 30 40 50 60 70 80 90 100

CU 11223
EA 089751

DISREGARD PRINTS BEARING EARLIER REVISION DATES

REVISION DATES (PRELIMINARY STAGE ONLY): 6/02/08 01/30/03 02/27/04 07/08/04 11/08/04 12/08/04 4/04/05 8/02/05 9/04/05 4/24/08

SHEET 17 OF 20

FILE => 57-761-u-miscdt04.dgn

USERNAME => rtrenard DATE PLOTTED => 17-JUN-2010 TIME PLOTTED => 14:06

DIST.	COUNTY	ROUTE	KILOMETER POST TOTAL PROJECT	SHEET NO.	TOTAL SHEETS
11	SD	805	40.6/42.4	565	567

Caltrans Metric

REGISTERED ENGINEER - CIVIL 6/02/08

6-14-10
PLANS APPROVAL DATE

REGISTERED PROFESSIONAL ENGINEER James L. Rucker No. C47796 Exp. 12/31/09 CIVIL STATE OF CALIFORNIA

The State of California or its officers or agents shall not be responsible for the accuracy or completeness of electronic copies of this plan sheet.

CITY OF SAN DIEGO
1010 Second Avenue, Suite 1200
San Diego, CA 92111

T.Y. LIN INTERNATIONAL
5030 Camino de la Siesta, Suite 204
San Diego, CA 92108 Phone (619)692-1920

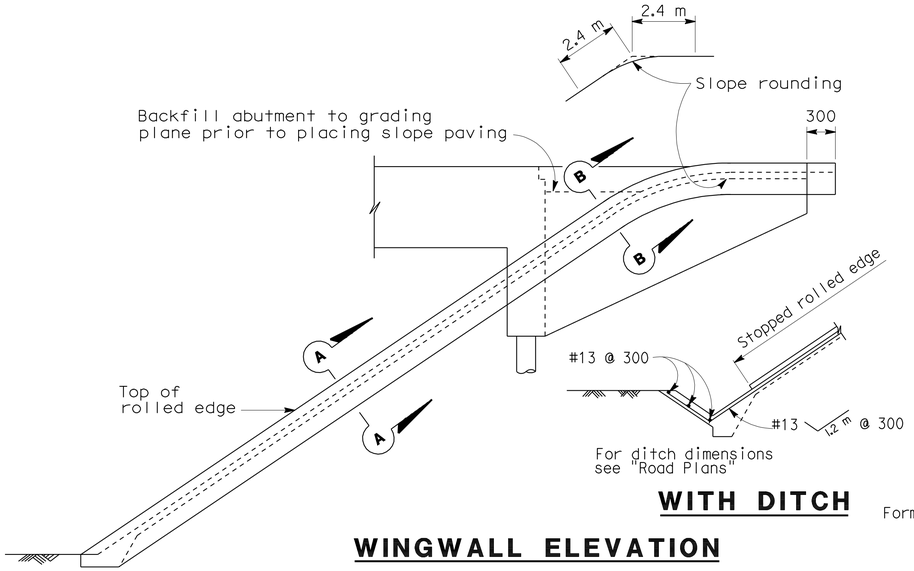

WITH DITCH

WINGWALL ELEVATION

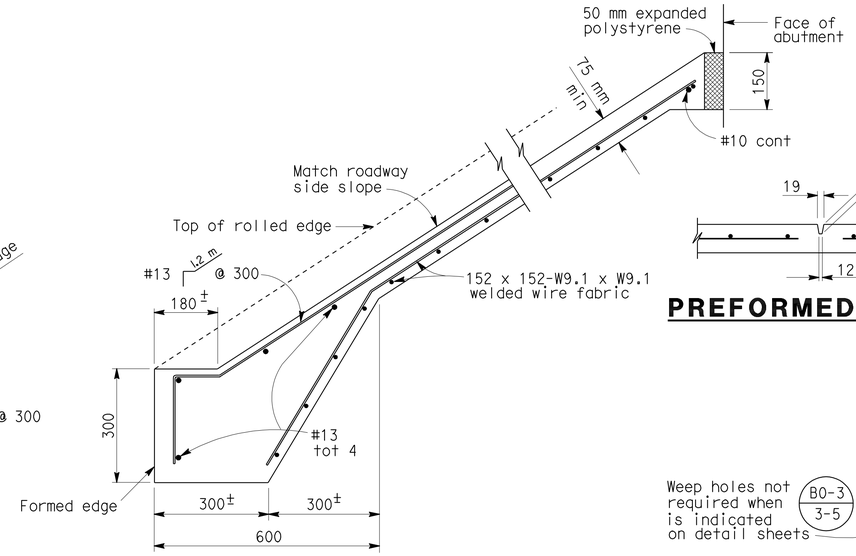

TYPICAL SECTION - CONCRETE PAVING

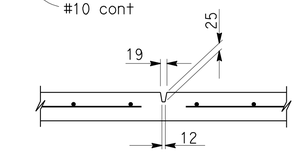

PREFORMED GROOVE

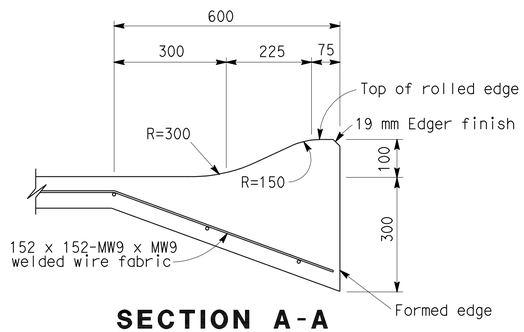

SECTION A-A

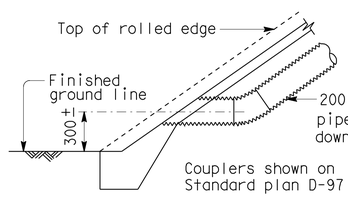

TYPICAL - NO CURB

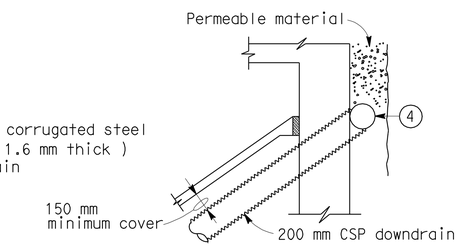

TYPICAL - DRAIN CONNECTION

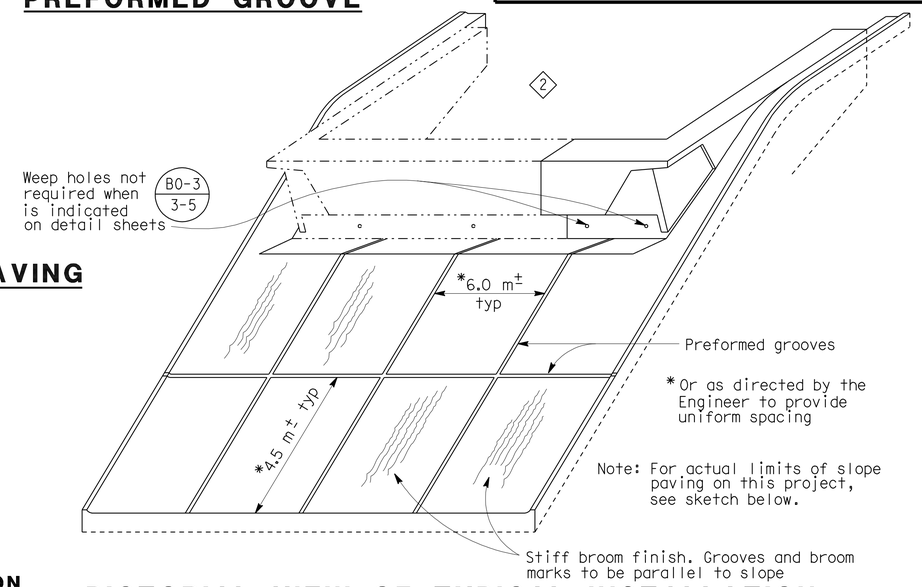

* Or as directed by the Engineer to provide uniform spacing

Note: For actual limits of slope paving on this project, see sketch below.

PICTORIAL VIEW OF TYPICAL INSTALLATION

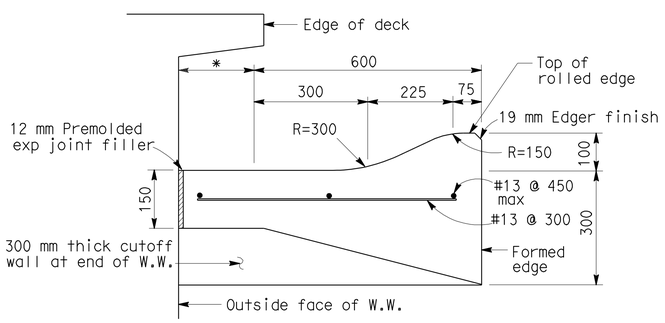

SECTION B-B

*This dimension becomes zero when edge of deck is at outside face of W.W.

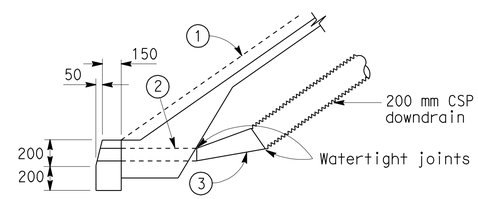

TYPICAL - WITH CURB

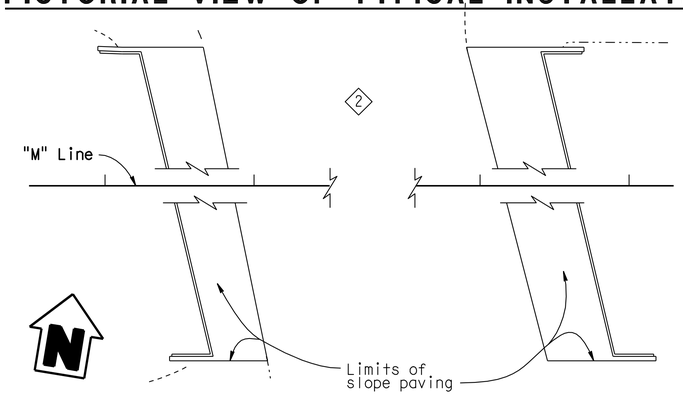

LIMITS OF SLOPE PAVING & DRAINAGE LAYOUT

NO SCALE

ALL DIMENSIONS ARE IN MILLIMETERS UNLESS OTHERWISE SHOWN

SPECIAL DETAILS

DRAINAGE DETAILS

Note: Drainage details are only applicable when B0-3 / 3-5 is indicated on detail sheets.

1. Top of rolled edge
2. Conduit: 1.6 mm galv corrugated steel or 2.8 mm smooth galv steel
3. Taper: 1.6 mm / 2.8 mm smooth galv steel
4. 200 mm perforated steel pipe (1.6 mm thick) underdrain behind abutment. Connect to downdrain as shown on limits of Slope Paving & Drainage layout.

STANDARD DRAWING

RELEASE DATE	Revised	DESIGN	BY	CHECKED	RELEASED BY
		DETAILS	BY R. YEE	CHECKED	Roberto Lovelle OFFICE CHIEF
FILE NO.	xs4-210	SUBMITTED	BY C.W. PURKISS	DRAWING DATE 3/89	

1. Deleted Details
2. Modified Details

STATE OF CALIFORNIA
DEPARTMENT OF TRANSPORTATION

DIVISION OF ENGINEERING SERVICES

BRIDGE NO. 57-0761
KILOMETER POST 41.7

LA JOLLA VILLAGE DRIVE OC (WIDEN/RETROFIT)

SLOPE PAVING - FULL SLOPE

DS OSD 2147A (METRIC) (REV. 2/25/97)

ORIGINAL SCALE IN MILLIMETERS FOR REDUCED PLANS 0 10 20 30 40 50 60 70 80 90 100

CU 11223
EA 089751

DISREGARD PRINTS BEARING EARLIER REVISION DATES

REVISION DATES (PRELIMINARY STAGE ONLY) 3/08/04 2/02/04 4/04/05 8/02/05 3/01/06 4/21/08 6/02/08

SHEET 18 OF 20

USERNAME => trlenard

DATE PLOTTED => 17-JUN-2010 TIME PLOTTED => 14:06

57-761-u-miscd05.

DIST	COUNTY	ROUTE	KILOMETER POST TOTAL PROJECT	SHEET No	TOTAL SHEETS
11	SD	805	40.6/42.4	566	567

REGISTERED CIVIL ENGINEER — DATE 6/02/08

6-14-10
PLANS APPROVAL DATE

REGISTERED PROFESSIONAL ENGINEER — EMIL RUDOLPH — No. C64301 — Exp. 6-30-11 — CIVIL — STATE OF CALIFORNIA

The State of California or its officers or agents shall not be responsible for the accuracy or completeness of electronic copies of this plan sheet.

CITY OF SAN DIEGO
1010 Second Avenue, Suite 1200
San Diego, CA 92111

NINYO & MOORE
5710 RUFFIN ROAD
SAN DIEGO, CA 92123

DATUM:
1983 CCS83 ZONE 6

BENCHMARK:
NVP ON NORTHERLY CURB OF MIRAMAR BRIDGE
320m WESTERLY OF EASTGATE MALL 117.498m, NGVD 29m

SPT (blows/0.3m)	MODIFIED SPLIT BARREL (blows/0.3m)	GRANULAR SOILS	SPT (blows/0.3m)	MODIFIED SPLIT BARREL (blows/0.3m)	COHESIVE SOILS
0-4	0-7	Very Loose	<2	<3	Very Soft
5-10	8-18	Loose	2-4	3-5	Soft
11-30	19-36	Medium Dense	5-8	6-10	Firm
31-50	37-59	Dense	9-15	11-20	Stiff
>50	60-110	Very Dense	16-30	21-39	Very Stiff
			>31	>39	Hard

NOTES: 1. AUTOTRIP HAMMER EFFICIENCY APPROXIMATELY 90%.
2. SPT BLOW COUNT IS APPROXIMATELY 55% OF MODIFIED SPLIT BARREL BLOW COUNT

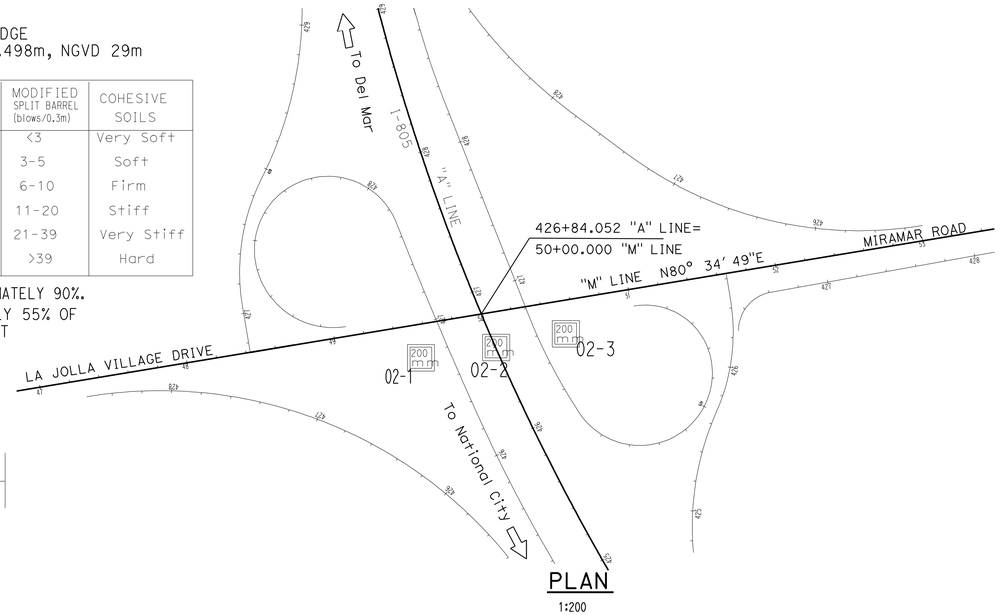

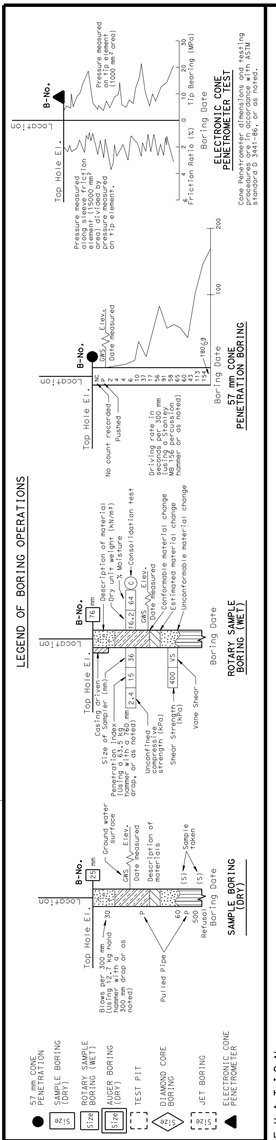

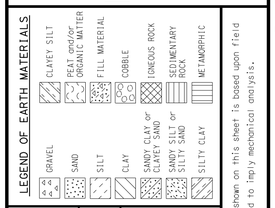

CONSISTENCY CLASSIFICATION FOR SOILS

According to the Standard Penetration Test			
SPT N-Value (Blows/0.3m)	Granular	SPT N-Value (Blows/0.3m)	Cohesive
0-4	Very Loose	<2	Very Soft
5-10	Loose	2-4	Soft
11-30	Medium Dense	5-8	Firm
31-50	Dense	9-15	Stiff
>50	Very Dense	16-30	Very stiff
		>31	Hard

NOTE: Classification of earth material as shown on this sheet is based upon field inspection and is not to be construed to imply mechanical analysis.

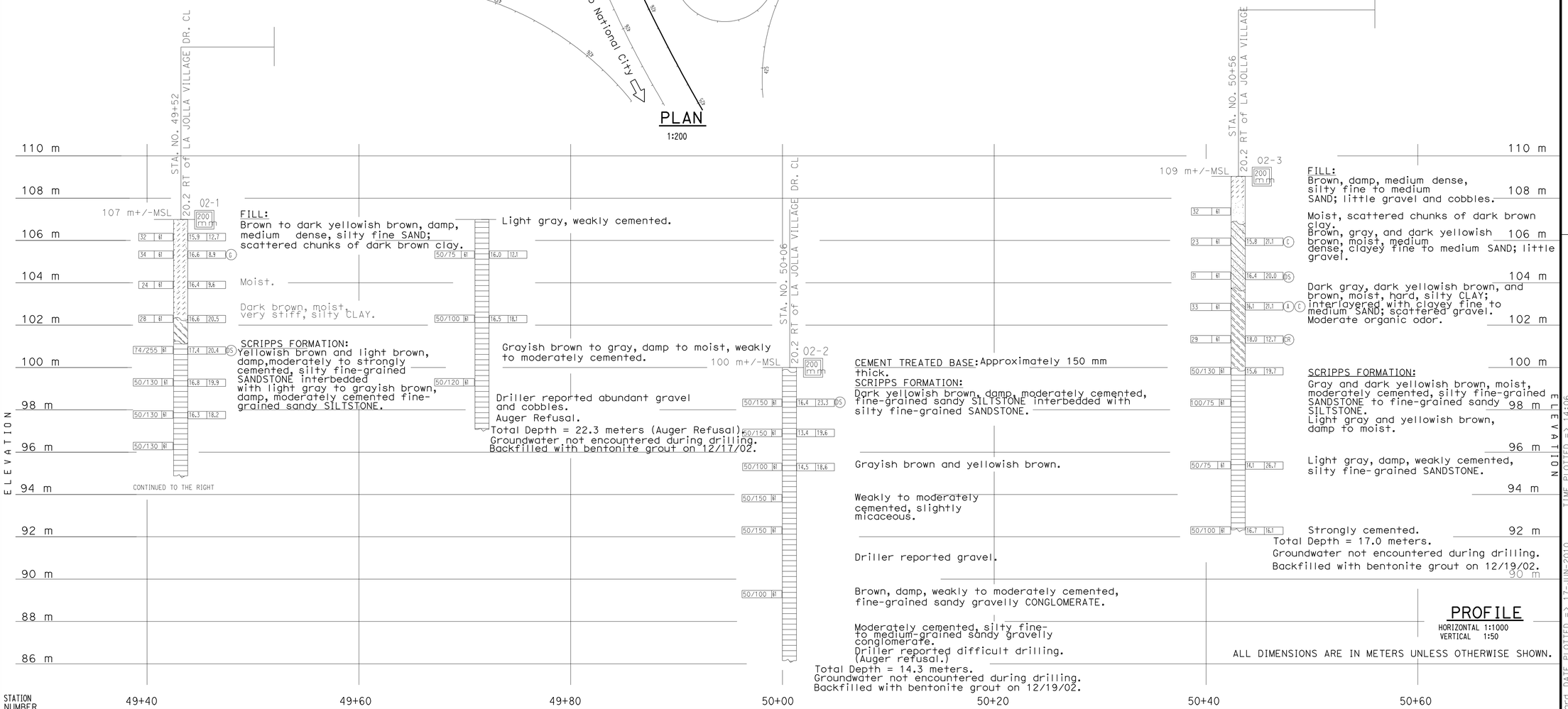

PROFILE
HORIZONTAL 1:1000
VERTICAL 1:50

ALL DIMENSIONS ARE IN METERS UNLESS OTHERWISE SHOWN.

DESIGN OVERSIGHT — Lilly Sun
10-23-09
SIGN OFF DATE

DRAWN BY	ELZBIETA KARCZEWSKI	ROBERT T. WHEELER, PROJECT GEOLOGIST
CHECKED BY	ERIK OLSEN	FIELD INVESTIGATION BY: DATE: 12-17 THROUGH 12-19-02

PREPARED FOR THE STATE OF CALIFORNIA DEPARTMENT OF TRANSPORTATION

EMIL RUDOLPH
PROJECT ENGINEER

BRIDGE NO. 57-0761
KILOMETER POST 41.7

LA JOLLA VILLAGE DRIVE OC (WIDEN/RETROFIT)

LOG OF TEST BORINGS 1 OF 2

CU 11223
EA 089751

DISREGARD PRINTS BEARING EARLIER REVISION DATES

REVISION DATES (PRELIMINARY STAGE ONLY): ~~02-23~~ ~~05-24~~ ~~06-24~~ ~~8-05~~ ~~8/22/05~~ ~~9/01/05~~ ~~5/01/08~~ 6/02/08

SHEET 19 OF 20

ORIGINAL SCALE IN MILLIMETERS FOR REDUCED PLANS 0 10 20 30 40 50 60 70 80 90 100

CIVIL LOG OF TEST BORINGS SHEET (METRIC) (REV. 10/27/05)

FILE => 57-761-z-ltb01.dgn

USERNAME => trhenard DATE PLOTTED => 17-JUN-2010 TIME PLOTTED => 14:06

BENCH MARK

B.M. 331 Elev. 302.47

CMB brass disc in 3" I.P. 15.62m Rt. Sta. 144+42.77 R.L.C. "B"

Revisions made to this Log of Test Borings from the 1988 original are the addition of the following notes and table:

1. See the "As Built" plans dated August 9, 1971 for stationing. Sta. 144+00.00 (English) = Sta. 43+32.444 (Metric)
2. The data presented in the table below is based on a conversion from the As-Built Station Line (English) to the new "M" Station Line (metric), referenced to the existing structure location. This table is presented on the "As Built" Log of Test Borings sheet for the convenience of any bidder, contractor, or other interested party.
3. Metric boring locations are as follows:

As-Built Boring Locations along New Metric "M" Line

As-Built Boring	Metric	Converted English
B1	1.22m Lt Sta 50+01.94	4' Lt Sta 164+10.6
B2	15.24m Lt Sta 49+47.68	50' Lt Sta 162+32.5
B3	15.24m Rt Sta 49+47.68	50' Rt Sta 162+32.5
B4	15.24m Rt Sta 50+63.75	50' Rt Sta 165+80.5
B5	13.72m Lt Sta 50+54.36	45' Lt Sta 165+82.5

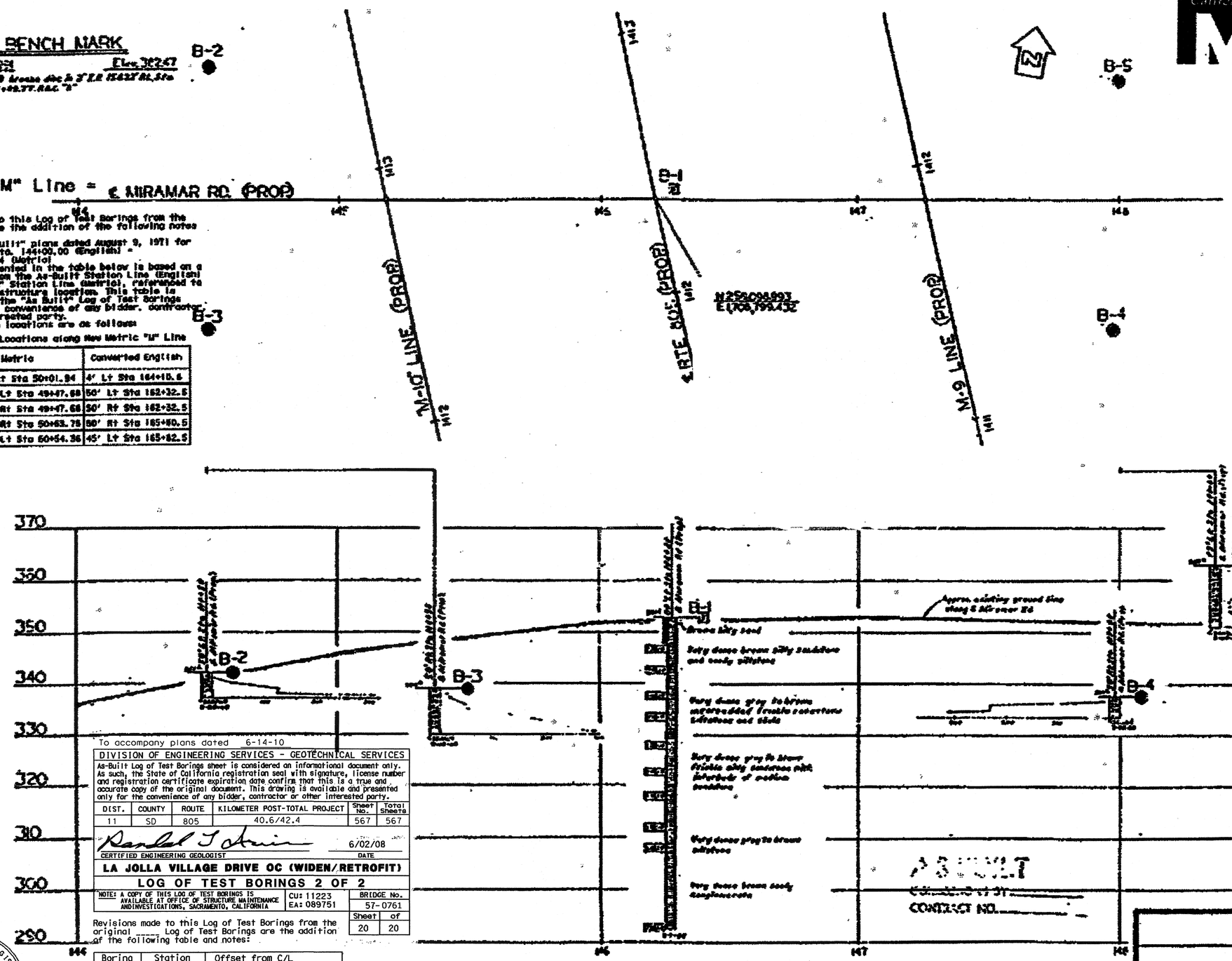

To accompany plans dated 6-14-10

DIVISION OF ENGINEERING SERVICES - GEOTECHNICAL SERVICES

As-Built Log of Test Borings sheet is considered an informational document only. As such, the State of California registration seal with signature, license number and registration certificate expiration date confirm that this is a true and accurate copy of the original document. This drawing is available and presented only for the convenience of any bidder, contractor or other interested party.

DIST.	COUNTY	ROUTE	KILOMETER POST-TOTAL PROJECT	Sheet No.	Total Sheets
11	SD	805	40.6/42.4	567	567

Randal L. Irwin — 6/02/08

CERTIFIED ENGINEERING GEOLOGIST — DATE

LA JOLLA VILLAGE DRIVE OC (WIDEN/RETROFIT)

LOG OF TEST BORINGS 2 OF 2

NOTE: A COPY OF THIS LOG OF TEST BORINGS IS AVAILABLE AT OFFICE OF STRUCTURE MAINTENANCE AND INVESTIGATIONS, SACRAMENTO, CALIFORNIA

CU: 11223 EA: 089751

BRIDGE No. 57-0761

Sheet 20 of 20

Revisions made to this Log of Test Borings from the original _____ Log of Test Borings are the addition of the following table and notes:

Boring	Station	Offset from C/L

Notes:

1. See the General Plan and/or Foundation Plan for Metric Stationing.
2. The data are the metric locations for the As-Built Test Borings referenced to the proposed new structure location. This table is presented on the As-Built Log of Test Boring sheet for the convenience of any bidder, contractor or other interested party.

REGISTERED GEOLOGIST
Randal L. Irwin
No. 1521
Exp. 9/30/11
CERTIFIED ENGINEERING GEOLOGIST
STATE OF CALIFORNIA

AS BUILT PLANS
Contract No. 11-04 5114
Date Completed 8-9-71
Document No. 20000 R 9

Caltrans Metric

September 17, 1987

PROFILE

BRIDGE DEPARTMENT
ENGINEERING GEOLOGY SECTION

NOW: Classification of each material as shown on this sheet is based upon field inspection and is not to be construed to imply mechanical analysis.

142

STATE OF CALIFORNIA
DEPARTMENT OF PUBLIC WORKS
DIVISION OF HIGHWAYS

NEW MIRAMAR ROAD OVERCROSSING

LOG OF TEST BORINGS

SCALE As Noted | Bridge 57-761 | File | Drawing 5776.1-10

SHEET 10 OF 10

FILENAME => 57-761-Z-LTB02.tif