Dist	COUNTY	ROUTE	POST MILES TOTAL PROJECT	SHEET No.	TOTAL SHEETS
11	SD	5	R29.1/R30.5	701	1012

05-23-14
REGISTERED CIVIL ENGINEER DATE

JON M. COLLINS
No. C62090
Exp. 09/30/15
CIVIL
REGISTERED PROFESSIONAL ENGINEER
STATE OF CALIFORNIA

07-21-14
PLANS APPROVAL DATE

THE STATE OF CALIFORNIA OR ITS OFFICERS OR AGENTS SHALL NOT BE RESPONSIBLE FOR THE ACCURACY OR COMPLETENESS OF SCANNED COPIES OF THIS PLAN SHEET.

CITY OF SAN DIEGO
525 B STREET
SUITE 7
SAN DIEGO, CA 92101

KIMLEY-HORN AND ASSOCIATES, INC.
401 B STREET, SUITE 600
SAN DIEGO, CA 92101

CONDUIT NOTES:
(THIS SHEET ONLY)

1 - MDCS(2), 1 FO12

2 - MDCS(8), 1 FO72, 1 FO12

3 - MDCS(8), 1 FO72

NOTES: (THIS SHEET ONLY)

1 - MDCS SHALL BE PLACED BY JACKING/ DRILLING METHOD.

2 - 6(E)(T) PULL BOX, EXTEND PULL BOX 2" Min. BELOW BOTTOM OF CONDUIT. CONDUIT BENDS SHALL BE AT AN ANGLE OF 22.5°. PULL BOX COVER SHALL BE MARKED AS 'FIBER OPTIC'

3 - FOR ACCURATE RIGHT OF WAY DATA, CONTACT RIGHT OF WAY ENGINEERING AT THE DISTRICT OFFICE.

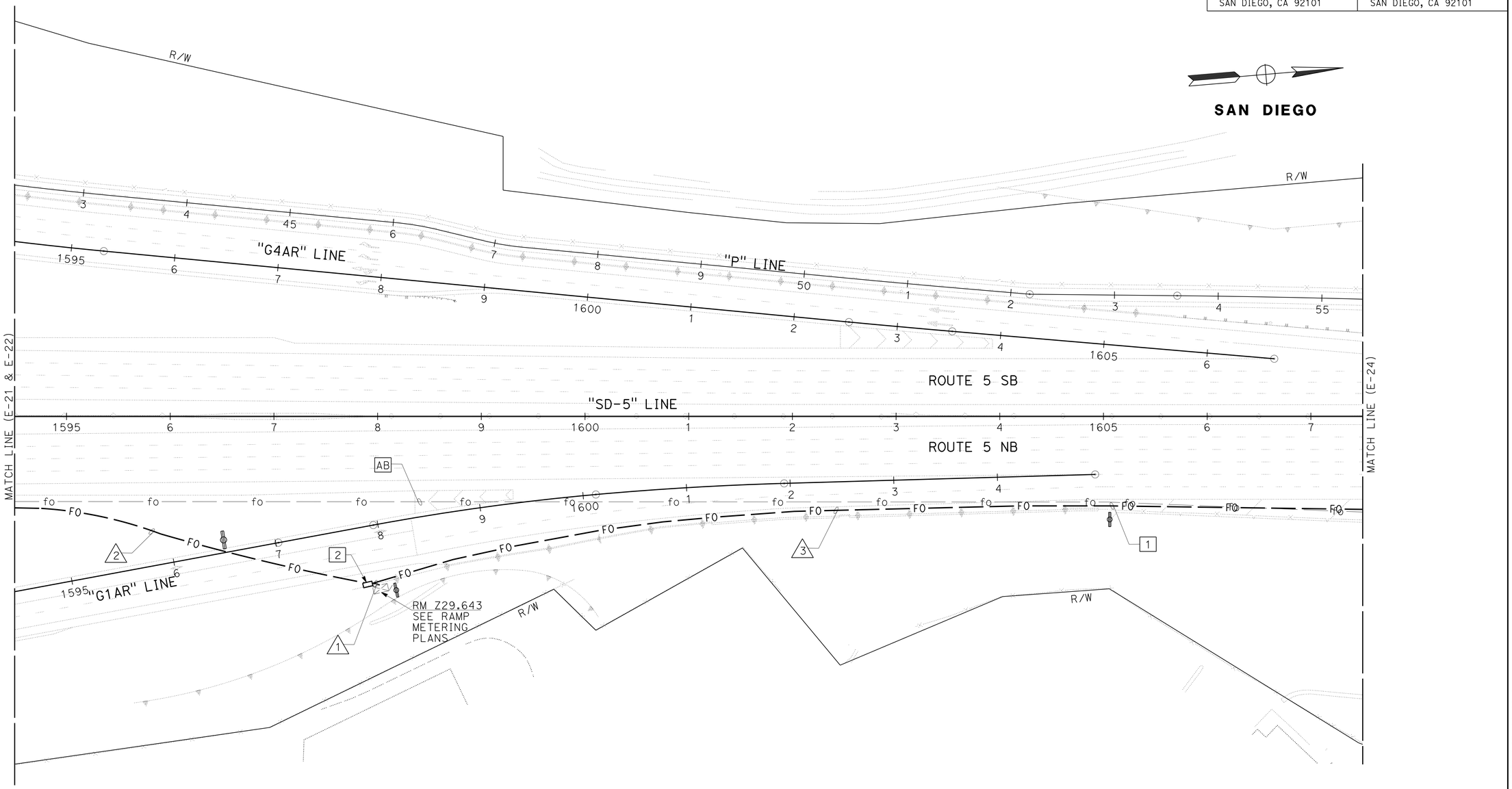

CLOSED CIRCUIT TELEVISION SYSTEM

APPROVED FOR ELECTRICAL WORK ONLY

SCALE: 1"=50'

E-23

STATE OF CALIFORNIA - DEPARTMENT OF TRANSPORTATION
Caltrans
CONSULTANT FUNCTIONAL SUPERVISOR: JON COLLINS
CALCULATED-DESIGNED BY: JOHN KISSINGER
CHECKED BY: JON COLLINS
REVISED BY
DATE REVISED

LAST REVISION
DATE PLOTTED => 23-JUL-2014
TIME PLOTTED => 14:54
07-17-14

BORDER LAST REVISED 07/02/10
USERNAME => s127400
DGN FILE => 1112000102ua023.dgn
RELATIVE BORDER SCALE IS IN INCHES 0 1 2 3
UNIT 2771
PROJECT NUMBER & PHASE 11120001021

Dist	COUNTY	ROUTE	POST MILES TOTAL PROJECT	SHEET No.	TOTAL SHEETS
11	SD	5	R29.1/R30.5	702	1012

05-23-14
REGISTERED CIVIL ENGINEER DATE

07-21-14
PLANS APPROVAL DATE

JON M. COLLINS No. C62090 Exp. 09/30/15 CIVIL — REGISTERED PROFESSIONAL ENGINEER — STATE OF CALIFORNIA

THE STATE OF CALIFORNIA OR ITS OFFICERS OR AGENTS SHALL NOT BE RESPONSIBLE FOR THE ACCURACY OR COMPLETENESS OF SCANNED COPIES OF THIS PLAN SHEET.

CITY OF SAN DIEGO
525 B STREET
SUITE 7
SAN DIEGO, CA 92101

KIMLEY-HORN AND ASSOCIATES, INC.
401 B STREET, SUITE 600
SAN DIEGO, CA 92101

CONDUIT NOTES:
(THIS SHEET ONLY)

△1 - Exist mdcs(8), 1 fo72, RC1 fo72, ADD 1 FO72

△2 - MDCS(8), 1 FO72

NOTES: (THIS SHEET ONLY)

1 - MDCS SHALL BE PLACED BY JACKING/ DRILLING METHOD.

2 - FOR ACCURATE RIGHT OF WAY DATA, CONTACT RIGHT OF WAY ENGINEERING AT THE DISTRICT OFFICE.

SAN DIEGO

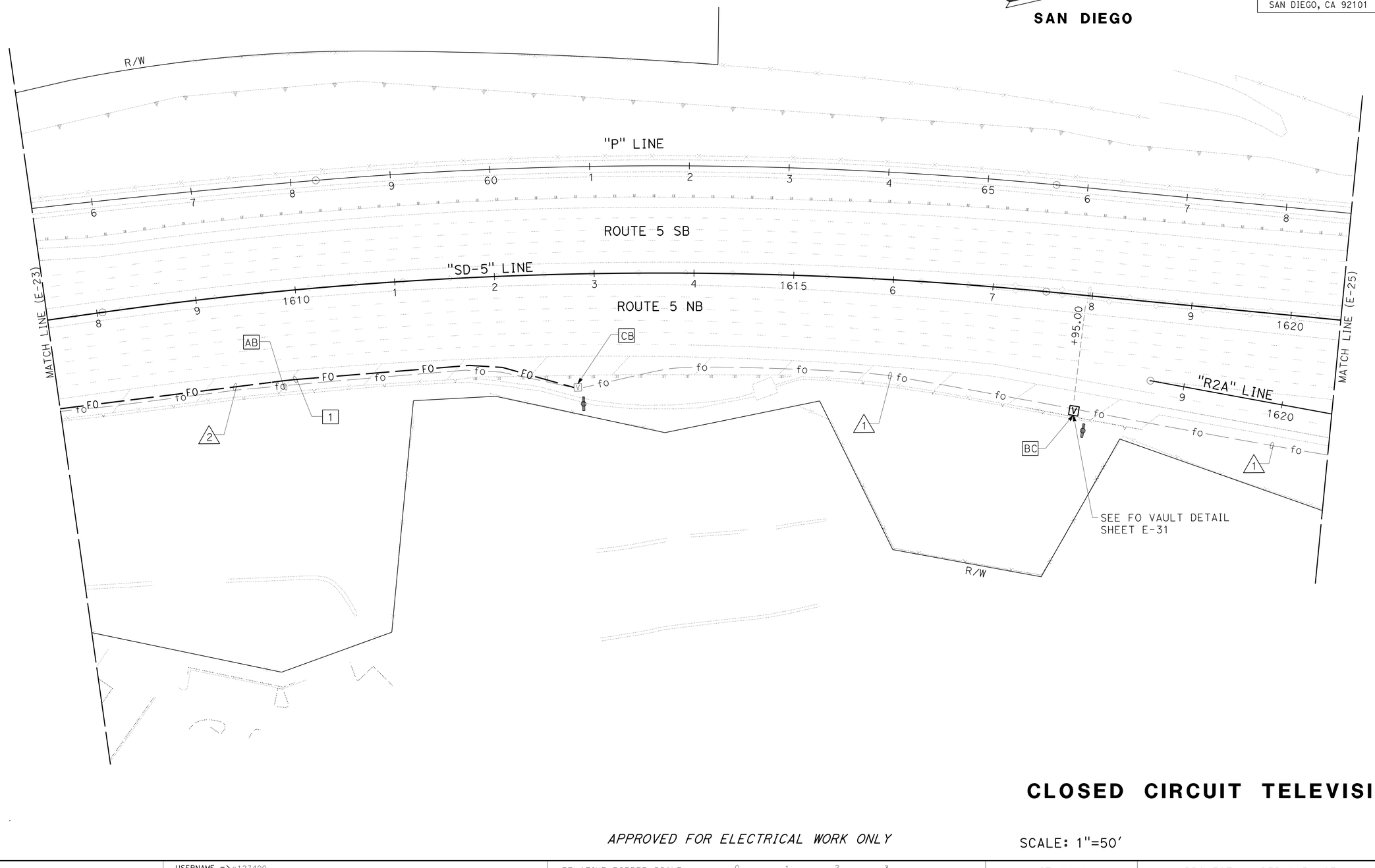

CLOSED CIRCUIT TELEVISION SYSTEM

APPROVED FOR ELECTRICAL WORK ONLY

SCALE: 1"=50'

E-24

STATE OF CALIFORNIA - DEPARTMENT OF TRANSPORTATION
Caltrans

CONSULTANT FUNCTIONAL SUPERVISOR: JON COLLINS
CALCULATED-DESIGNED BY: JOHN KISSINGER
CHECKED BY: JON COLLINS
REVISED BY
DATE REVISED

LAST REVISION DATE PLOTTED => 23-JUL-2014
07-17-14 TIME PLOTTED => 14:54

BORDER LAST REVISED 07/02/10
USERNAME => s127400
DGN FILE => 1112000102ua024.dgn
RELATIVE BORDER SCALE IS IN INCHES 0 1 2 3
UNIT 2771
PROJECT NUMBER & PHASE 11120001021

Dist	COUNTY	ROUTE	POST MILES TOTAL PROJECT	SHEET No.	TOTAL SHEETS
11	SD	5	R29.1/R30.5	703	1012

05-23-14
REGISTERED CIVIL ENGINEER DATE

07-21-14
PLANS APPROVAL DATE

REGISTERED PROFESSIONAL ENGINEER
JON M. COLLINS
No. C62090
Exp. 09/30/15
CIVIL
STATE OF CALIFORNIA

THE STATE OF CALIFORNIA OR ITS OFFICERS OR AGENTS SHALL NOT BE RESPONSIBLE FOR THE ACCURACY OR COMPLETENESS OF SCANNED COPIES OF THIS PLAN SHEET.

CITY OF SAN DIEGO
525 B STREET
SUITE 7
SAN DIEGO, CA 92101

KIMLEY-HORN AND ASSOCIATES, INC.
401 B STREET, SUITE 600
SAN DIEGO, CA 92101

CONDUIT NOTES:
(THIS SHEET ONLY)

1 - MDCS(2), 1 FO12

2 - MDCS (8), 1 FO72

3 - Exist mdcs(8), 1 fo72, RC 1 fo72 ADD 1 FO72

4 - Exist 2"C, 1 fo12, RC 1 fo12 ADD 1 FO12

NOTES: (THIS SHEET ONLY)

1 - 6(E)(T) PULL BOX, EXTEND PULL BOX 2" Min. BELOW BOTTOM OF CONDUIT. CONDUIT BENDS SHALL BE AT AN ANGLE OF 22.5°. PULL BOX COVER SHALL BE MARKED AS 'FIBER OPTIC'

2 - FOR ACCURATE RIGHT OF WAY DATA, CONTACT RIGHT OF WAY ENGINEERING AT THE DISTRICT OFFICE.

SAN DIEGO

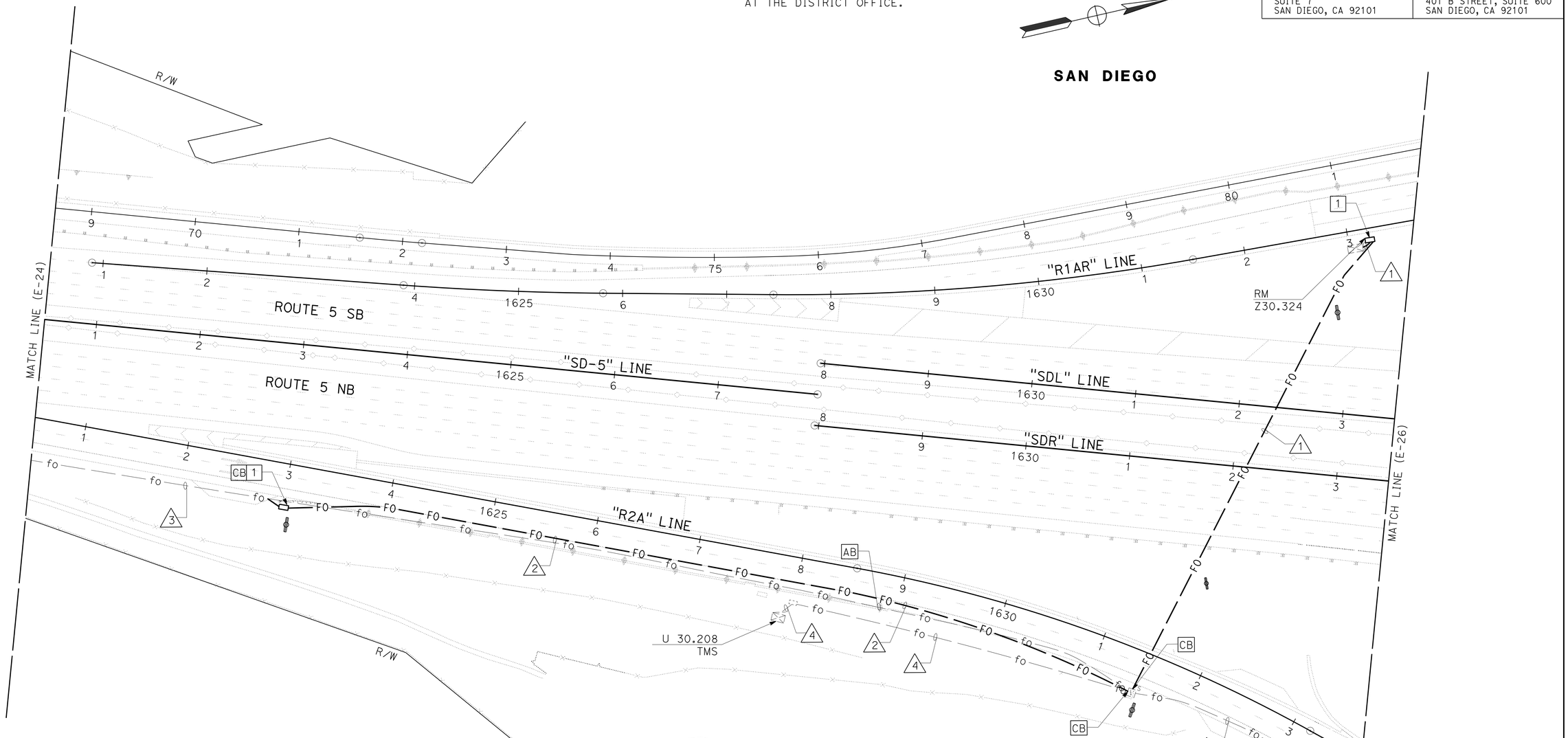

CLOSED CIRCUIT TELEVISION SYSTEM

APPROVED FOR ELECTRICAL WORK ONLY

SCALE: 1"=50'

E-25

JOHN KISSINGER — CALCULATED-DESIGNED BY
JON COLLINS — CHECKED BY
JON COLLINS — CONSULTANT FUNCTIONAL SUPERVISOR
STATE OF CALIFORNIA - DEPARTMENT OF TRANSPORTATION — Caltrans

REVISED BY | DATE REVISED

LAST REVISION | DATE PLOTTED => 23-JUL-2014
07-17-14 | TIME PLOTTED => 14:54

BORDER LAST REVISED 07/02/10
USERNAME => s127400
DGN FILE => 1112000102ua025.dgn
RELATIVE BORDER SCALE IS IN INCHES 0 1 2 3
UNIT 2771
PROJECT NUMBER & PHASE 11120001021

Dist	COUNTY	ROUTE	POST MILES TOTAL PROJECT	SHEET No.	TOTAL SHEETS
11	SD	5	R29.1/R30.5	704	1012

05-23-14
REGISTERED CIVIL ENGINEER DATE

07-21-14
PLANS APPROVAL DATE

JON M. COLLINS
No. C62090
Exp. 09/30/15
CIVIL
REGISTERED PROFESSIONAL ENGINEER
STATE OF CALIFORNIA

THE STATE OF CALIFORNIA OR ITS OFFICERS OR AGENTS SHALL NOT BE RESPONSIBLE FOR THE ACCURACY OR COMPLETENESS OF SCANNED COPIES OF THIS PLAN SHEET.

CITY OF SAN DIEGO
525 B STREET
SUITE 7
SAN DIEGO, CA 92101

KIMLEY-HORN AND ASSOCIATES, INC.
401 B STREET, SUITE 600
SAN DIEGO, CA 92101

NOTE:

FOR ACCURATE RIGHT OF WAY DATA, CONTACT RIGHT OF WAY ENGINEERING AT THE DISTRICT OFFICE.

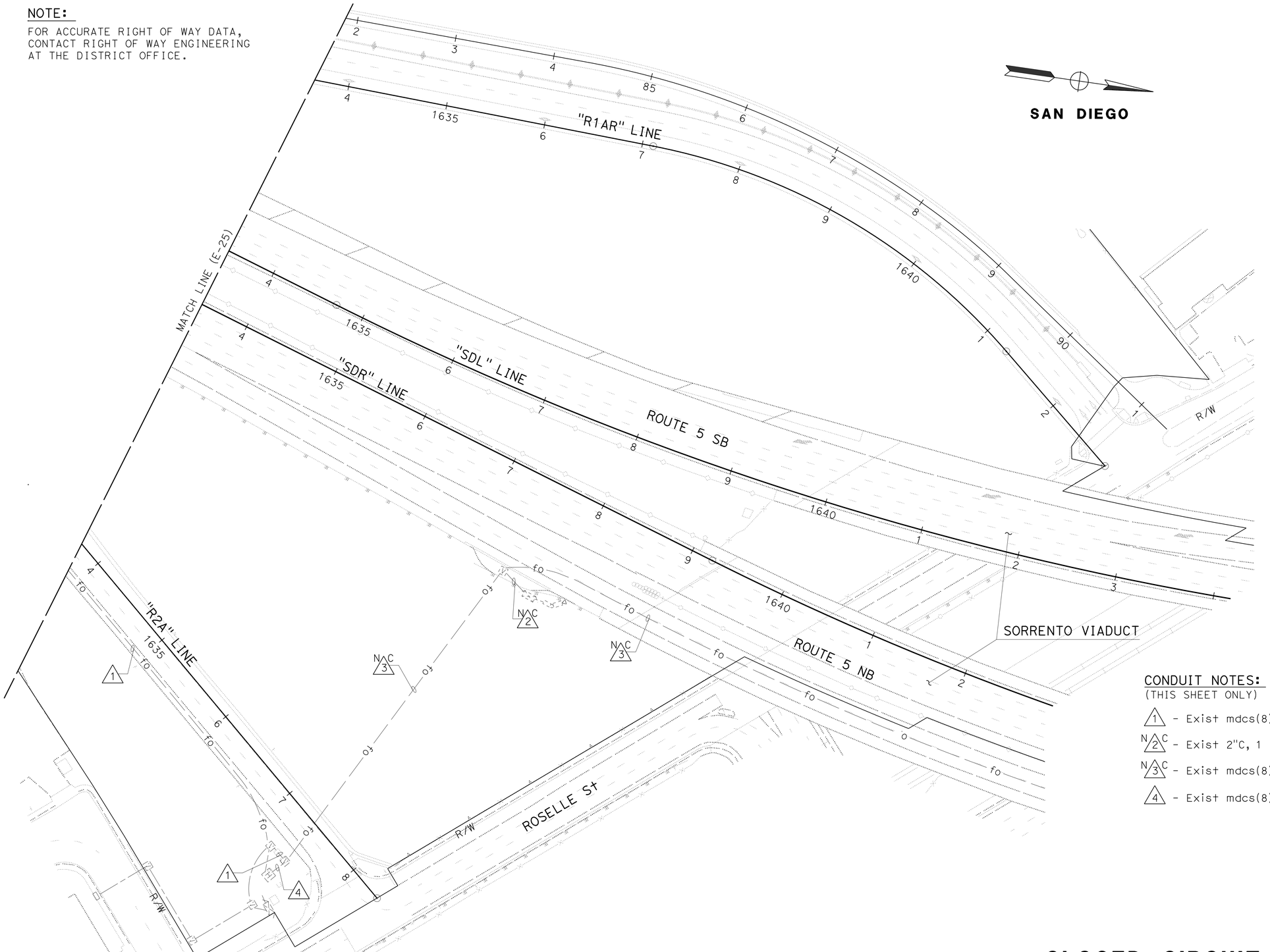

CONDUIT NOTES:
(THIS SHEET ONLY)

1 - Exist mdcs(8), 1 fo72, RC 1 fo72, ADD 1 FO72

NAC 2 - Exist 2"C, 1 fo12

NAC 3 - Exist mdcs(8), 2 fo72

4 - Exist mdcs(8), 3 fo72, RC 1 fo12, ADD 1 FO12

APPROVED FOR ELECTRICAL WORK ONLY

CLOSED CIRCUIT TELEVISION SYSTEM

SCALE: 1"=50'

E-26

STATE OF CALIFORNIA - DEPARTMENT OF TRANSPORTATION
Caltrans

CONSULTANT FUNCTIONAL SUPERVISOR: JON COLLINS

CALCULATED-DESIGNED BY: JOHN KISSINGER
CHECKED BY: JON COLLINS

REVISED BY | DATE REVISED

LAST REVISION | DATE PLOTTED => 23-JUL-2014
07-17-14 | TIME PLOTTED => 14:54

BORDER LAST REVISED 07/02/10

USERNAME => s127400
DGN FILE => 11120001021ua026.dgn

RELATIVE BORDER SCALE IS IN INCHES 0 1 2 3

UNIT 2771

PROJECT NUMBER & PHASE 11120001021

Dist	COUNTY	ROUTE	POST MILES TOTAL PROJECT	SHEET No.	TOTAL SHEETS
11	SD	5	R29.1/R30.5	705	1012

Enrique P Bernal 05-23-14
REGISTERED ELECTRICAL ENGINEER DATE

07-21-14
PLANS APPROVAL DATE

REGISTERED PROFESSIONAL ENGINEER ENRIQUE P. BERNAL No. 15675 Exp. 6-30-14 ELECTRICAL STATE OF CALIFORNIA

THE STATE OF CALIFORNIA OR ITS OFFICERS OR AGENTS SHALL NOT BE RESPONSIBLE FOR THE ACCURACY OR COMPLETENESS OF SCANNED COPIES OF THIS PLAN SHEET.

NOTES:

1 - THE CONTRACTOR SHALL VERIFY CONTROLLING FIELD DIMENSIONS BEFORE ORDERING OR FABRICATING ANY MATERIAL.

2 - CONDUITS SHALL BE PLACED BY DIRECTIONAL BORING METHOD WHEN DIRECTED BY THE ENGINEER.

3 - 6(E)(T) PB. EXTEND PULL BOX 2" Min BELOW BOTTOM OF CONDUIT. CONDUIT BENDS SHALL BE AT AN ANGLE OF 22.5°. PULL BOX COVER SHALL BE MARKED AS "FIBER OPTIC".

4 - FOR ACCURATE RIGHT OF WAY AND ACCESS DATA, CONTACT RIGHT OF WAY ENGINEERING AT THE DISTRICT OFFICE.

CONDUIT NOTES:

1 - 3-4"C, MT. CONDUCTOR/CABLES BY OTHER.

2 - Exist 3-4"C, MT. CONDUCTOR/CABLES BY OTHER.

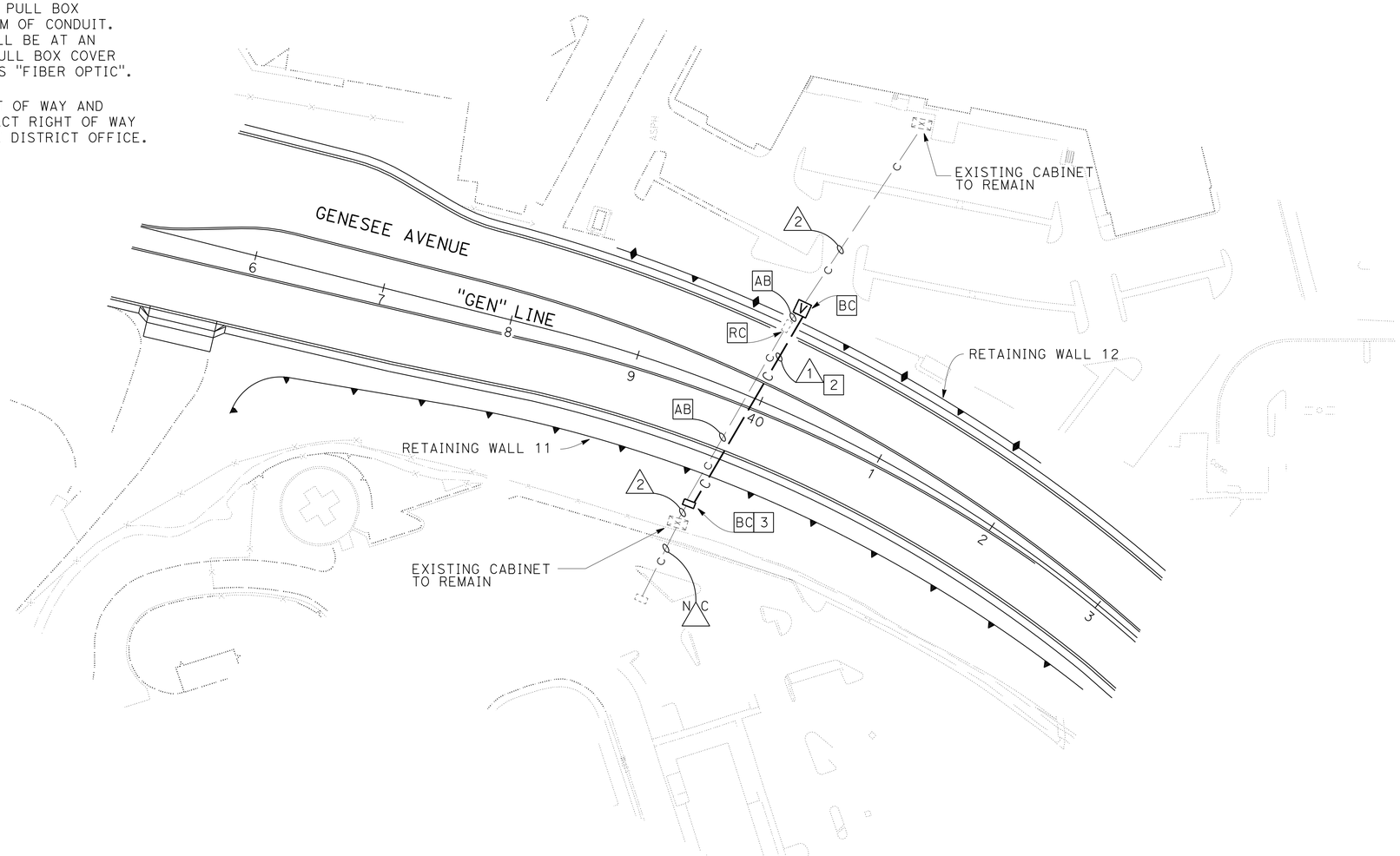

CLOSED CIRCUIT TELEVISION SYSTEM

APPROVED FOR ELECTRICAL WORK ONLY

SCALE: 1" = 50'

E-27

STATE OF CALIFORNIA - DEPARTMENT OF TRANSPORTATION
Caltrans® TRAFFIC ELECTRICAL

FUNCTIONAL SUPERVISOR: BRIAN T PECUS
CALCULATED-DESIGNED BY: HUA SAWAYA
CHECKED BY: ENRIQUE P. BERNAL
REVISED BY
DATE REVISED

LAST REVISION 07-17-14
DATE PLOTTED => 23-JUL-2014
TIME PLOTTED => 14:54

Dist	COUNTY	ROUTE	POST MILES TOTAL PROJECT	SHEET No.	TOTAL SHEETS
11	SD	5	R29.1/R30.5	706	1012

05-23-14
REGISTERED CIVIL ENGINEER DATE

07-21-14
PLANS APPROVAL DATE

REGISTERED PROFESSIONAL ENGINEER — JON M. COLLINS — No. C62090 — Exp. 09/30/15 — CIVIL — STATE OF CALIFORNIA

THE STATE OF CALIFORNIA OR ITS OFFICERS OR AGENTS SHALL NOT BE RESPONSIBLE FOR THE ACCURACY OR COMPLETENESS OF SCANNED COPIES OF THIS PLAN SHEET.

CITY OF SAN DIEGO
525 B STREET
SUITE 7
SAN DIEGO, CA 92101

KIMLEY-HORN AND ASSOCIATES, INC.
401 B STREET, SUITE 600
SAN DIEGO, CA 92101

NOTES:

1 - SEE CAMERA CABLE CROSS SECTION ON THIS SHEET.

2 - RJ-45 OR CONNECTOR PER VIDEO ENCODER MANUFACTURER'S REQUIREMENT.

3 - PROTECT AND INSULATE CABLES/CONDUCTORS USING HEAT-SHRINK TUBING METHOD. NO SPLICES ALLOWED EXCEPT FOR POWER.

4 - GROUND CAMERA CABLE AT CCTV CABINET.

5 - Min 50" OF SLACK IS REQUIRED FROM CAMERA CABLE TO THE CONNECTORS IN CCTV CABINETS.

6 - CAMERA CONTROL CABLE 22 AWG OR LARGER.

7 - TO VIDEO ENCODER AT CCTV CABINET, VIDEO INPUT.

8 - SEE TABLE "A" FOR CONNECTOR'S PIN ASSIGNMENT.

9 - PLACE WATER TIGHT CABLE ENTRY SEAL AND WATER TIGHT SEAL RING REQUIRED FOR CONNECTOR.

10 - THE CONTRACTOR SHALL VERIFY THE LENGTH OF CAMERA CABLE AT EACH LOCATION AS SHOWN IN ELECTRICAL PLANS. A SLACK OF 80" IS REQUIRED AT EACH LOCATION.

11 - SEE ELECTRICAL DETAILS FOR CCTV CABINET COMPONENT DIAGRAM.

12 - STRAIN RELIEF CABLE GRIP SUITABLE FOR CABLE WEIGHT AND DIAMETER.

13 - CONNECT TO ADAPETER, SEE "ADAPTER DETAIL".

14 - OUTSIDE JACKET OR SLEEVING REQUIRED.

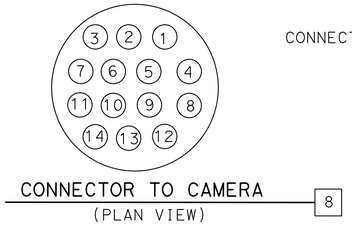

CONNECTOR TO CAMERA
(PLAN VIEW) 8

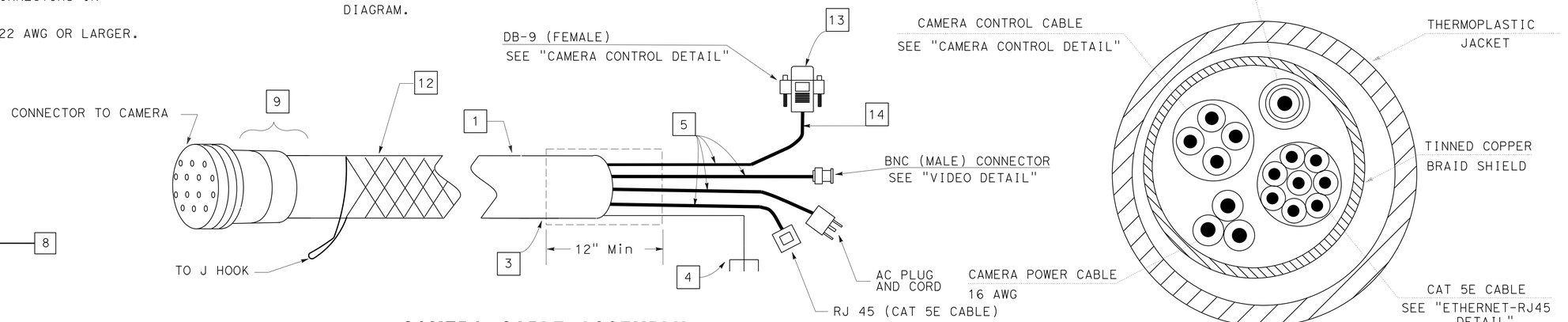

CAMERA CABLE ASSEMBLY

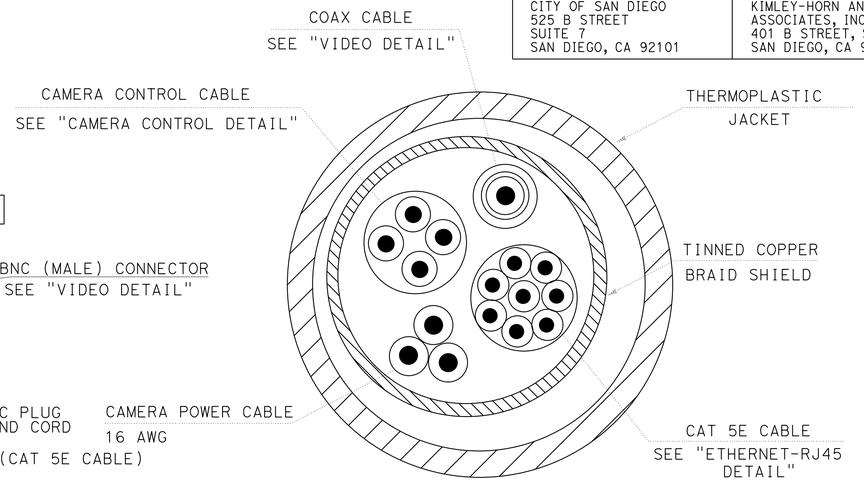

CAMERA CABLE CROSS SECTION

TABLE "A":

PIN ASSIGNMENT	
PIN	FUNCTION
1	CAMERA CONTROL RX-
2	CAMERA CONTROL RX+
3	CAMERA CONTROL TX-
4	CAMERA CONTROL TX+
6	CAMERA CABLE GROUND (SHIELD)
8	VIDEO SIGNAL COAX INNER CORE
9	VIDEO SIGNAL COAX SHIELD
10	CAMERA POWER,GROUND
13	CAMERA POWER,AC LOW
14	CAMERA POWER,AC HIGH
5	ETHERNET Tx+
7	ETHERNET Tx-
11	ETHERNET Rx+
12	ETHERNET Rx-

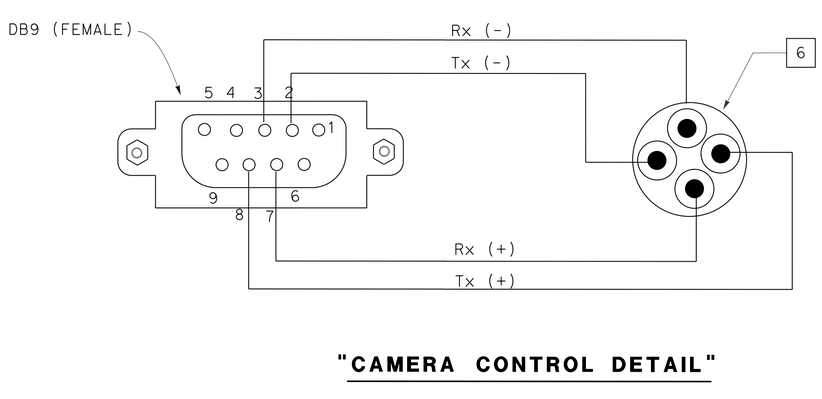

"CAMERA CONTROL DETAIL"

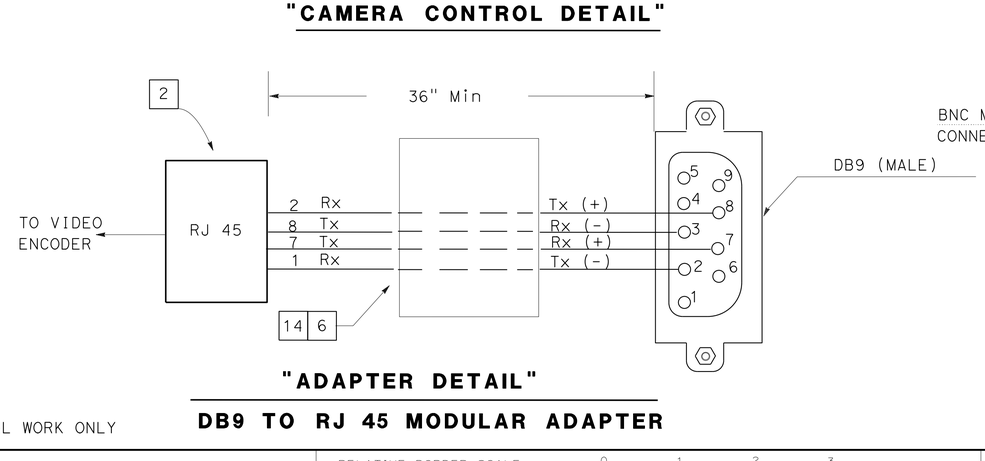

"ADAPTER DETAIL"

DB9 TO RJ 45 MODULAR ADAPTER

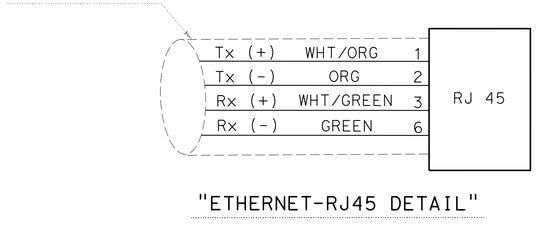

"ETHERNET-RJ45 DETAIL"

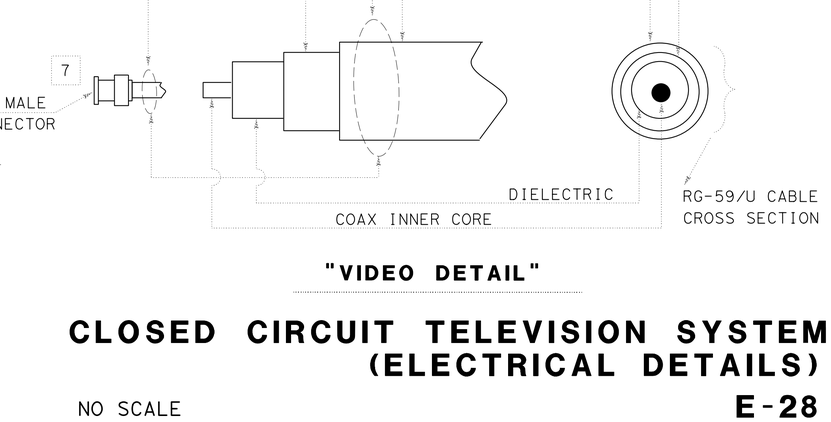

"VIDEO DETAIL"

CLOSED CIRCUIT TELEVISION SYSTEM (ELECTRICAL DETAILS)

NO SCALE

E-28

THIS PLAN IS ACCURATE FOR ELECTRICAL WORK ONLY

REVISED BY | DATE REVISED
JOHN KISSINGER | JON COLLINS
CALCULATED-DESIGNED BY | CHECKED BY
CONSULTANT FUNCTIONAL SUPERVISOR: JON COLLINS
STATE OF CALIFORNIA - DEPARTMENT OF TRANSPORTATION
Caltrans

LAST REVISION | DATE PLOTTED => 23-JUL-2014
07-17-14 | TIME PLOTTED => 14:54

BORDER LAST REVISED 07/02/10 | USERNAME => s127400 | DGN FILE => 1112000102ua028.dgn | RELATIVE BORDER SCALE IS IN INCHES 0 1 2 3 | UNIT 2771 | PROJECT NUMBER & PHASE 11120001021

Dist	COUNTY	ROUTE	POST MILES TOTAL PROJECT	SHEET No.	TOTAL SHEETS
11	SD	5	R29.1/R30.5	707	1012

REGISTERED CIVIL ENGINEER — DATE: 05-23-14

JON M. COLLINS No. C62090 Exp. 09/30/15 CIVIL — REGISTERED PROFESSIONAL ENGINEER — STATE OF CALIFORNIA

07-21-14
PLANS APPROVAL DATE

THE STATE OF CALIFORNIA OR ITS OFFICERS OR AGENTS SHALL NOT BE RESPONSIBLE FOR THE ACCURACY OR COMPLETENESS OF SCANNED COPIES OF THIS PLAN SHEET.

CITY OF SAN DIEGO
525 B STREET
SUITE 7
SAN DIEGO, CA 92101

KIMLEY-HORN AND ASSOCIATES, INC.
401 B STREET, SUITE 600
SAN DIEGO, CA 92101

LEGEND:

SPLICE CABLES

NOTES:

1 - FOR EQUIPMENT CONNECTIVITY IN CABINETS SEE ELECTRICAL DETAILS "COMPONET DIAGRAM"

2 - SEE DETAIL "RM-SYS" ON SHEET E-32 FOR EQUIPMENT LOCATION IN RM CABINET.

3 - SEE DETAIL "SIG-Loc1" ON SHEET E-32 FOR EQUIPMENT LOCATION IN SIGNAL CABINET.

4 - SEE DETAIL "CCTV-RL" ON SHEET E-32 FOR EQUIPMENT LOCATION IN CCTV CABINET.

5 - SEE DDETAIL "SIG-Loc2" ON SHEET E-32 FOR EQUIPMENT LOCATION IN SIGNAL CABINET.

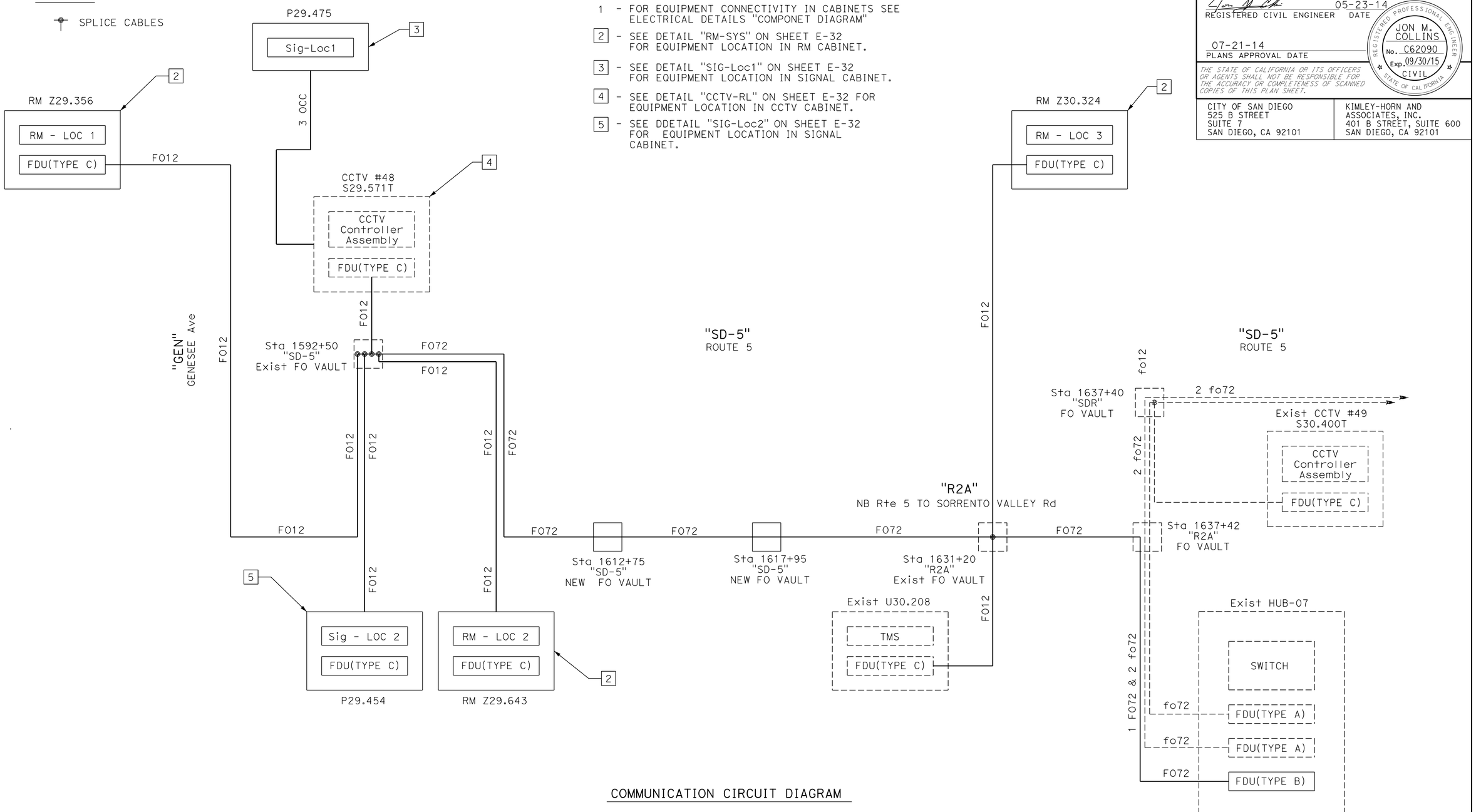

COMMUNICATION CIRCUIT DIAGRAM

CLOSED CIRCUIT TELEVISION SYSTEM (ELECTRICAL DETAILS)

APPROVED FOR ELECTRICAL WORK ONLY

NO SCALE

E-29

STATE OF CALIFORNIA - DEPARTMENT OF TRANSPORTATION
Caltrans

CONSULTANT FUNCTIONAL SUPERVISOR: JON COLLINS
CALCULATED-DESIGNED BY: JOHN KISSINGER
CHECKED BY: JON COLLINS
REVISED BY
DATE REVISED

LAST REVISION — DATE PLOTTED => 23-JUL-2014 — 07-17-14 — TIME PLOTTED => 14:54

BORDER LAST REVISED 07/02/10
USERNAME => s127400
DGN FILE => 1112000102ua029.dgn
RELATIVE BORDER SCALE IS IN INCHES 0 1 2 3
UNIT 2771
PROJECT NUMBER & PHASE 11120001021

Dist	COUNTY	ROUTE	POST MILES TOTAL PROJECT	SHEET No.	TOTAL SHEETS
11	SD	5	R29.1/R30.5	708	1012

05-23-14
REGISTERED CIVIL ENGINEER DATE

07-21-14
PLANS APPROVAL DATE

REGISTERED PROFESSIONAL ENGINEER
JON M. COLLINS
No. C62090
Exp. 09/30/15
CIVIL
STATE OF CALIFORNIA

THE STATE OF CALIFORNIA OR ITS OFFICERS OR AGENTS SHALL NOT BE RESPONSIBLE FOR THE ACCURACY OR COMPLETENESS OF SCANNED COPIES OF THIS PLAN SHEET.

CITY OF SAN DIEGO
525 B STREET
SUITE 7
SAN DIEGO, CA 92101

KIMLEY-HORN AND ASSOCIATES, INC.
401 B STREET, SUITE 600
SAN DIEGO, CA 92101

LEGEND:

- SPLICE OF TWO FIBER OR FULL TUBE
- CUT END OF FIBER, NOT SPLICED
- SC FEMALE CONNECTOR ON A FDU PANEL
- SC MALE CONNECTOR ON A SMFO PATCHCORD

NOTES:

1 - FO72 SHOWN ONLY

2 - TERMINATE FIBERS 13 THROUGH 24 AND 37 THROUGH 72 AT FDU. BUFFER TUBES ARE SHOWN ONLY.

COLOR CODES FOR BUFFER TUBES AND FIBERS

1. BLUE (BL)
2. ORANGE (OR)
3. GREEN (GR)
4. BROWN (BR)
5. SLATE (SL)
6. WHITE (WT)
7. RED (RD)
8. BLACK (BK)
9. YELLOW (YL)
10. VIOLET (VL)
11. ROSE (RS)
12. AQUA (AQ)

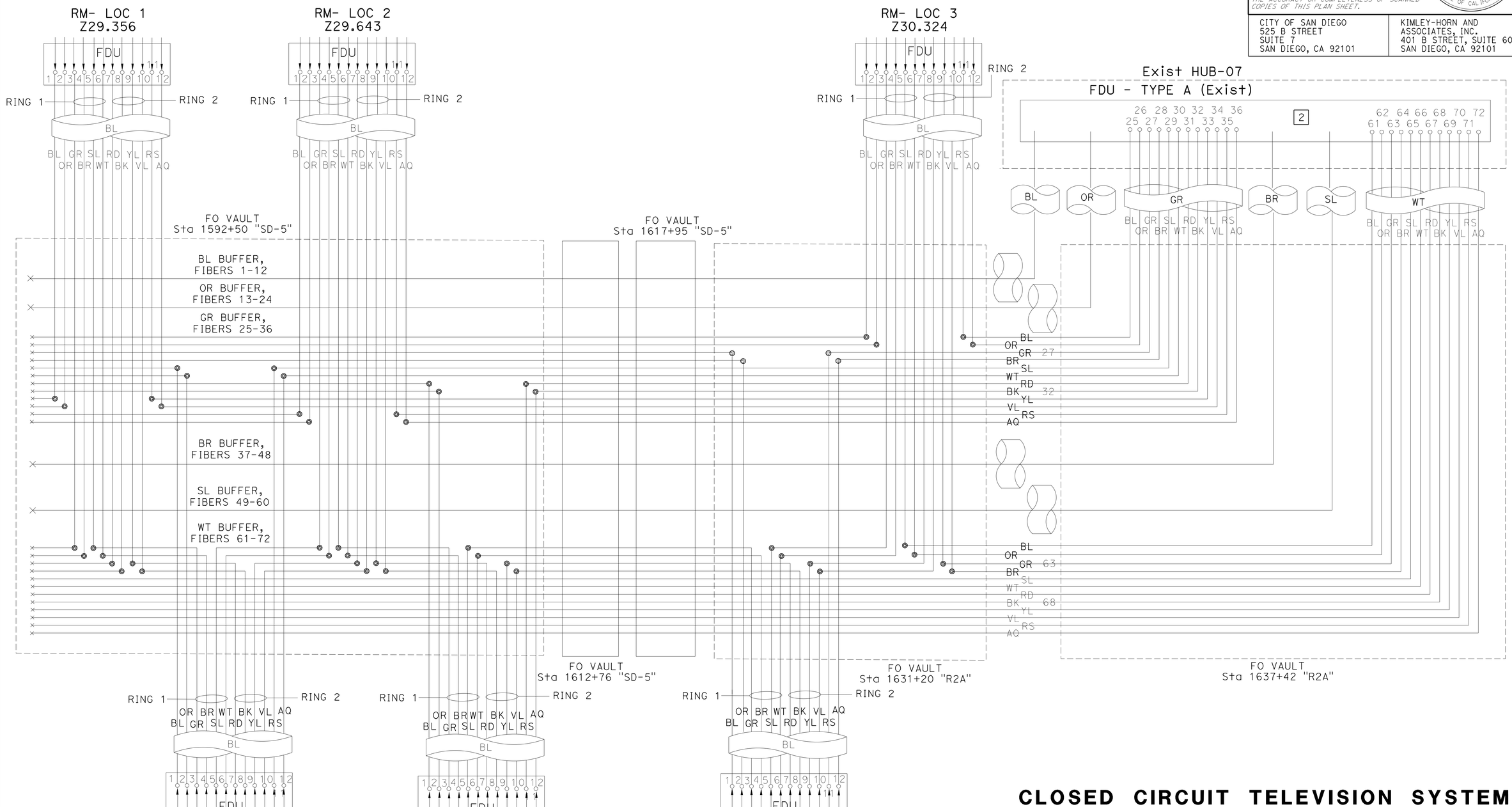

SPLICE DETAIL

APPROVED FOR ELECTRICAL WORK ONLY

CLOSED CIRCUIT TELEVISION SYSTEM (ELECTRICAL DETAILS)

NO SCALE

E-30

REVISED BY | DATE REVISED
JOHN KISSINGER | JON COLLINS
CALCULATED-DESIGNED BY | CHECKED BY
CONSULTANT FUNCTIONAL SUPERVISOR | JON COLLINS
STATE OF CALIFORNIA - DEPARTMENT OF TRANSPORTATION
Caltrans

LAST REVISION | DATE PLOTTED => 23-JUL-2014
07-17-14 | TIME PLOTTED => 14:54

BORDER LAST REVISED 07/02/10
USERNAME => s127400
DGN FILE => 1112000102ua030.dgn
RELATIVE BORDER SCALE IS IN INCHES 0 1 2 3
UNIT 2771
PROJECT NUMBER & PHASE 11120001021

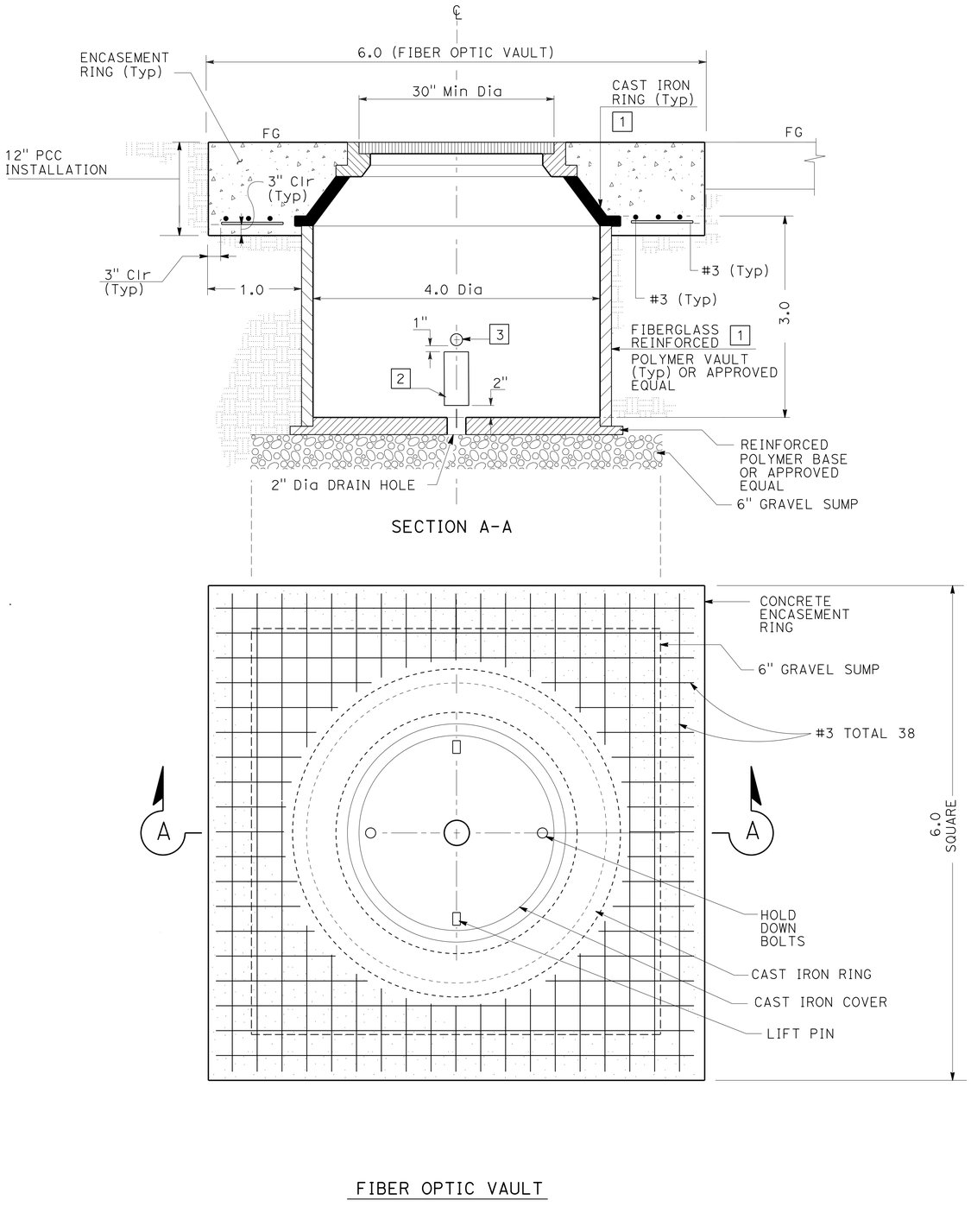

FIBER OPTIC VAULT

NOTES: (THIS SHEET ONLY)

1 - INSTALL PER MANUFACTURER'S RECOMMENDATION

2 - 4"x 6" KNOCKOUT FOR MDCS(8) PROVIDE TWO EQUALLY SPACED AROUND VAULT

3 - 2" KNOCKOUT (TOTAL 4) EQUALLY SPACED AROUND VAULT

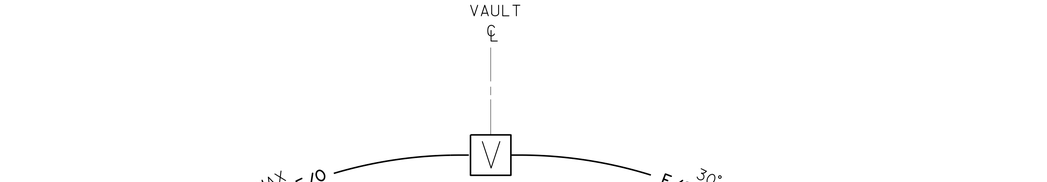

HORIZONTAL DEFLECTION DETAIL

Dist	COUNTY	ROUTE	POST MILES TOTAL PROJECT	SHEET No.	TOTAL SHEETS
11	SD	5	R29.1/R30.5	709	1012

05-23-14
REGISTERED CIVIL ENGINEER DATE

07-21-14
PLANS APPROVAL DATE

REGISTERED PROFESSIONAL ENGINEER
JON M. COLLINS
No. C62090
Exp. 09/30/15
CIVIL
STATE OF CALIFORNIA

THE STATE OF CALIFORNIA OR ITS OFFICERS OR AGENTS SHALL NOT BE RESPONSIBLE FOR THE ACCURACY OR COMPLETENESS OF SCANNED COPIES OF THIS PLAN SHEET.

CITY OF SAN DIEGO
525 B STREET
SUITE 7
SAN DIEGO, CA 92101

KIMLEY-HORN AND ASSOCIATES, INC.
401 B STREET, SUITE 600
SAN DIEGO, CA 92101

REVISED BY | JOHN KISSINGER
DATE REVISED |
CALCULATED-DESIGNED BY | JON COLLINS
CHECKED BY |
CONSULTANT FUNCTIONAL SUPERVISOR | JON COLLINS
STATE OF CALIFORNIA - DEPARTMENT OF TRANSPORTATION | Caltrans

APPROVED FOR ELECTRICAL WORK ONLY

FIBER OPTIC VAULT DETAILS

CLOSED CIRCUIT TELEVISION SYSTEM (ELECTRICAL DETAILS)

NO SCALE

E-31

LAST REVISION | DATE PLOTTED => 23-JUL-2014
07-17-14 | TIME PLOTTED => 14:54

BORDER LAST REVISED 07/02/10 | USERNAME => s127400 | DGN FILE => 11120001102ua031.dgn | RELATIVE BORDER SCALE IS IN INCHES 0 1 2 3 | UNIT 2771 | PROJECT NUMBER & PHASE 11120001021

Dist	COUNTY	ROUTE	POST MILES TOTAL PROJECT	SHEET No.	TOTAL SHEETS
11	SD	5	R29.1/R30.5	710	1012

REGISTERED CIVIL ENGINEER — 05-23-14 DATE

PLANS APPROVAL DATE — 07-21-14

REGISTERED PROFESSIONAL ENGINEER — JON M. COLLINS — No. C62090 — Exp. 09/30/15 — CIVIL — STATE OF CALIFORNIA

THE STATE OF CALIFORNIA OR ITS OFFICERS OR AGENTS SHALL NOT BE RESPONSIBLE FOR THE ACCURACY OR COMPLETENESS OF SCANNED COPIES OF THIS PLAN SHEET.

CITY OF SAN DIEGO
525 B STREET
SUITE 7
SAN DIEGO, CA 92101

KIMLEY-HORN AND ASSOCIATES, INC.
401 B STREET, SUITE 600
SAN DIEGO, CA 92101

GENESEE RM CABINET
Z29.356, Z29.643 AND Z30.324
(S/F TYPE 334L)

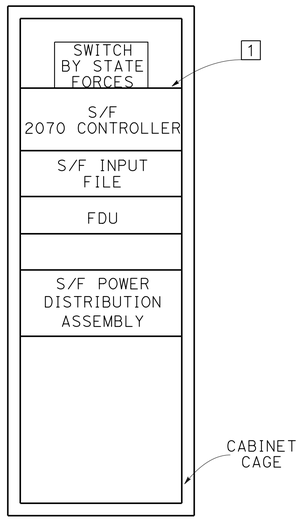

RM CABINET EQUIPMENT PLACEMENT
DETAIL "RM-SYS" (TYPICAL)

RM CABINET
Z29.356, Z29.643 AND Z30.324

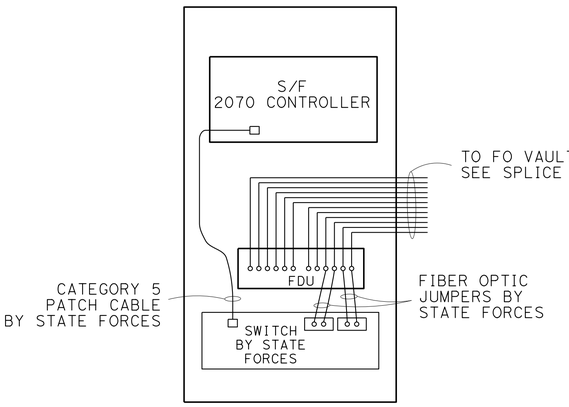

RM CABINET
COMPONENT DIAGRAM

P29.454
(TYPE 332L S/F CABINET)

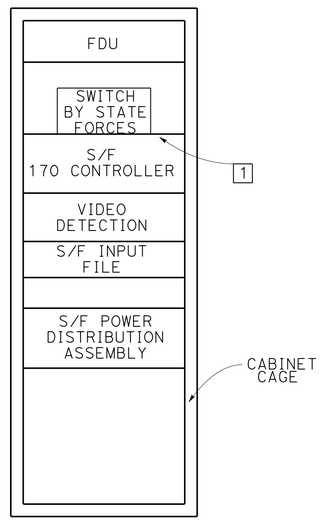

TRAFFIC SIGNAL CABINET
EQUIPMENT PLACEMENT
DETAIL "Sig-Loc2"

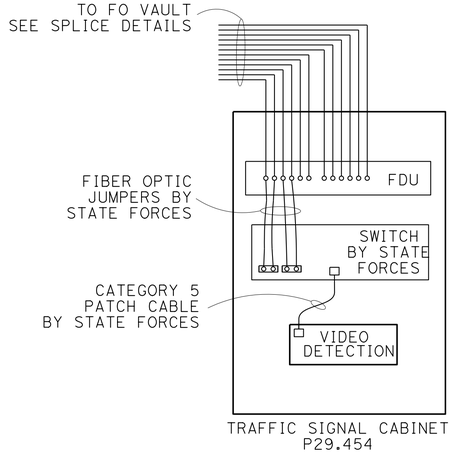

TRAFFIC SIGNAL CABINET
COMPONENT DIAGRAM

P29.475
(TYPE 332L S/F CABINET)

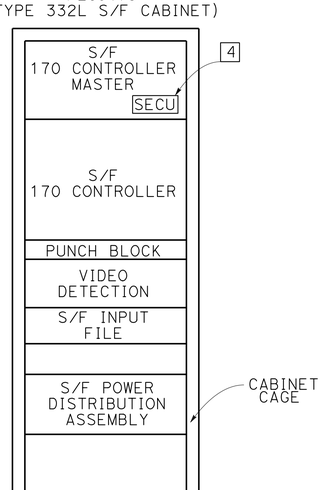

TRAFFIC SIGNAL CABINET
EQUIPMENT PLACEMENT
DETAIL "Sig-Loc1"

CCTV CABINET
CCTV #48
(TYPE 334)

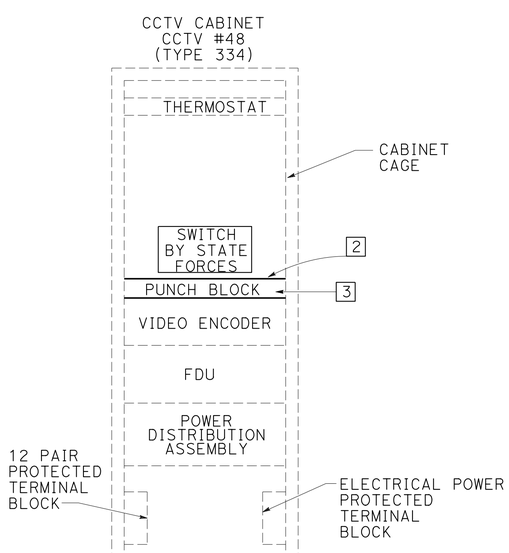

CCTV SYSTEM CABINET
DETAIL AND EQUIPMENT PLACEMENT
DETAIL"CCTV-RL"

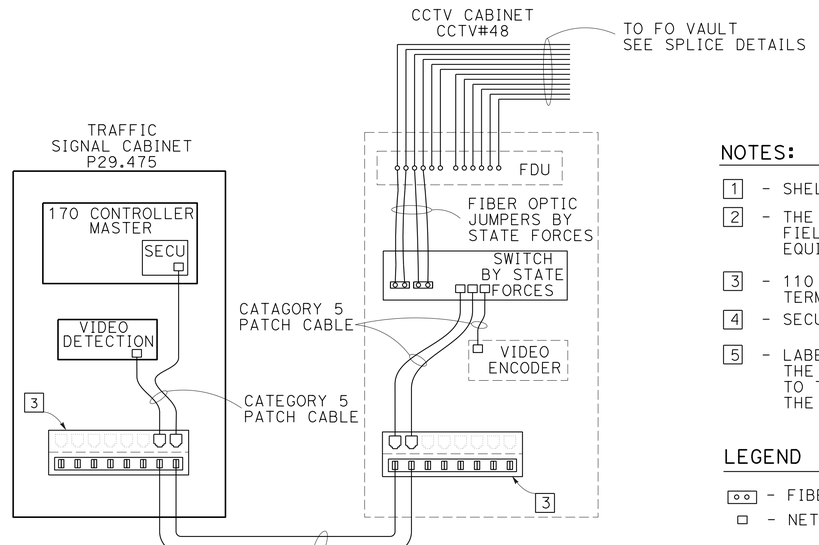

TRAFFIC SIGNAL CABINET TO
CCTV CABINET
COMPONENT DIAGRAM

NOTES:

1. SHELF REQUIRED FOR EQUIPMENT.
2. THE CONTRACTOR SHALL VERIFY ALL CONTROLLING FIELD DIMENSIONS BEFORE ORDERING AND INSTALLING EQUIPMENT.
3. 110 PUNCH BLOCK WITH RJ45 CONNECTION. TERMINATE OCC PER EIA/TIA 568B.
4. SECU IN 170 CONTROLLER CARD SLOT.
5. LABEL CABLE END IN EACH CABINET. THE LABEL NAME SHALL CORRESPOND TO TERMINAL BLOCK TERMINATION IN THE SIGNAL CABINET.

LEGEND

- FIBER OPTIC TRANSMITTER/RECEIVER
- NETWORK PORT

CLOSED CIRCUIT TELEVISION SYSTEM (ELECTRICAL DETAILS)

NO SCALE

E-32

REVISED BY | DATE REVISED
JOHN KISSINGER | JON COLLINS
CALCULATED-DESIGNED BY | CHECKED BY
CONSULTANT FUNCTIONAL SUPERVISOR: JON COLLINS
STATE OF CALIFORNIA - DEPARTMENT OF TRANSPORTATION
Caltrans

LAST REVISION: DATE PLOTTED => 23-JUL-2014 | 07-17-14 TIME PLOTTED => 14:54

Dist	COUNTY	ROUTE	POST MILES TOTAL PROJECT	SHEET No.	TOTAL SHEETS
11	SD	5	R29.1/R30.5	711	1012

05-23-14
REGISTERED CIVIL ENGINEER DATE

JON M. COLLINS No. C62090 Exp. 09/30/15 CIVIL — REGISTERED PROFESSIONAL ENGINEER — STATE OF CALIFORNIA

07-21-14
PLANS APPROVAL DATE

THE STATE OF CALIFORNIA OR ITS OFFICERS OR AGENTS SHALL NOT BE RESPONSIBLE FOR THE ACCURACY OR COMPLETENESS OF SCANNED COPIES OF THIS PLAN SHEET.

CITY OF SAN DIEGO
525 B STREET
SUITE 7
SAN DIEGO, CA 92101

KIMLEY-HORN AND ASSOCIATES, INC.
401 B STREET, SUITE 600
SAN DIEGO, CA 92101

NOTES:

1- TRAFFIC SIGNAL SHALL REMAIN IN OPERATION UNTIL STAGE CONSTRUCTION TRAFFIC SIGNAL IS IN PLACE AND OPERATIONAL.

2- ABANDON ALL TRAFFIC SIGNAL DETECTOR LOOPS.

3- FOR ACCURATE RIGHT OF WAY DATA, CONTACT RIGHT OF WAY ENGINEERING AT THE DISTRICT OFFICE.

EXISTING POLE AND EQUIPMENT SCHEDULE

LOC	STANDARD			SIGNAL MOUNTING AND PLACEMENT	
		SMA	LMA	VEHICLE	
	TYPE	(ft)	(ft)	POLE	MAST ARM
(a)	19-1-100	20	12	sv-2-ta	mas
(b)	1-a(10)	--	--	tv-1-t	--
(c)	19-1-100	20	12	sv-2-ta	mas
(d)	16-1-100	30	--	sv-2-ta	mas
(e)	1-a(10)	--	--	tv-1-t	--

SAN DIEGO

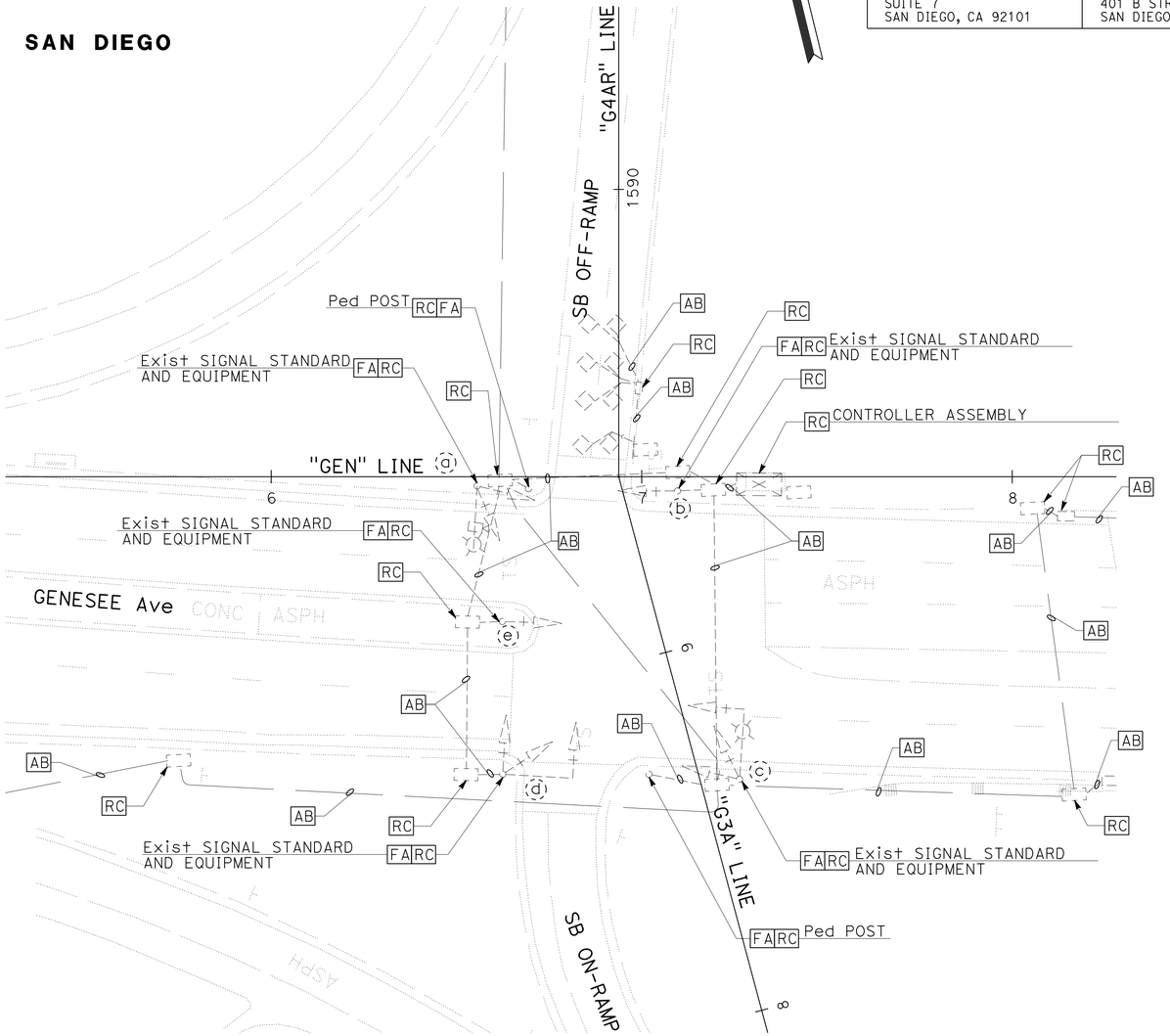

APPROVED FOR ELECTRICAL WORK ONLY

SCALE: 1"=20'

SIGNAL #P 29.475

SIGNAL AND LIGHTING (EXISTING AND REMOVE) (LOCATION 1)

E-33

STATE OF CALIFORNIA - DEPARTMENT OF TRANSPORTATION
Caltrans
CONSULTANT FUNCTIONAL SUPERVISOR: JON COLLINS
CALCULATED-DESIGNED BY: JOHN KISSINGER
CHECKED BY: JON COLLINS
REVISED BY
DATE REVISED

LAST REVISION DATE PLOTTED => 23-JUL-2014
07-17-14 TIME PLOTTED => 14:54

BORDER LAST REVISED 07/02/10
USERNAME => s127400
DGN FILE => 1112000102ua033.dgn
RELATIVE BORDER SCALE IS IN INCHES 0 1 2 3
UNIT 2771
PROJECT NUMBER & PHASE 11120001021

Dist	COUNTY	ROUTE	POST MILES TOTAL PROJECT	SHEET No.	TOTAL SHEETS
11	SD	5	R29.1/R30.5	712	1012

05-23-14
REGISTERED CIVIL ENGINEER DATE

07-21-14
PLANS APPROVAL DATE

REGISTERED PROFESSIONAL ENGINEER
JON M. COLLINS
No. C62090
Exp. 09/30/15
CIVIL
STATE OF CALIFORNIA

THE STATE OF CALIFORNIA OR ITS OFFICERS OR AGENTS SHALL NOT BE RESPONSIBLE FOR THE ACCURACY OR COMPLETENESS OF SCANNED COPIES OF THIS PLAN SHEET.

CITY OF SAN DIEGO
525 B STREET
SUITE 7
SAN DIEGO, CA 92101

KIMLEY-HORN AND ASSOCIATES, INC.
401 B STREET, SUITE 600
SAN DIEGO, CA 92101

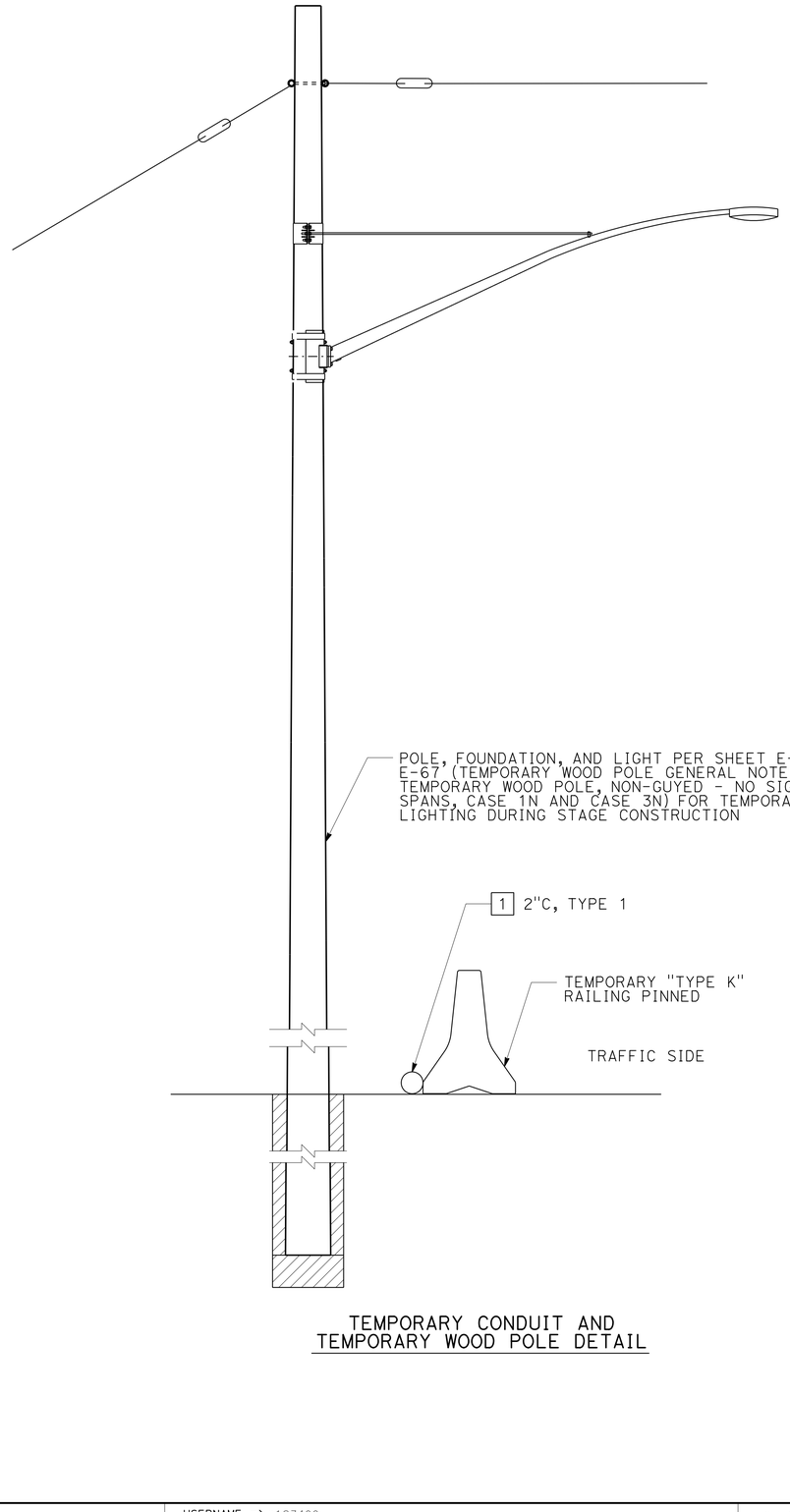

TEMPORARY CONDUIT AND TEMPORARY WOOD POLE DETAIL

NOTES FOR SIGNAL AND LIGHTING/LIGHTING AND SIGN ILLUMINATION (STAGE CONSTRUCTION):

1. EXISTING AND TEMPORARY ELECTRICAL EQUIPMENT NO LONGER REQUIRED AT THE END OF A CONSTRUCTION STAGE SHALL BE REMOVED OR REUSED IN THE FOLLOWING STAGES.

2. OTHER PERMANENT ELECTRICAL EQUIPMENT NOT SHOWN ON THE STAGE CONSTRUCTION PLANS MAY BE INSTALLED AT ANY STAGE IF NOT INTERFERING WITH CONSTRUCTION OR TRAFFIC AND AS DIRECTED BY THE ENGINEER.

3. AT LOCATIONS WHERE PERMANENT CONDUIT INSTALLATION IS SHOWN, CONDUCTORS AND CABLES REQUIRED ONLY DURING STAGE CONSTRUCTION ARE INDICATED ON THE PLANS. AT CONTRACTOR'S OPTION, OTHER PERMANENT CONDUCTORS AND CABLES MAY BE INSTALLED IF NOT INTERFERING WITH FUTURE STAGES OF CONSTRUCTION.

NOTE:

[1] SECURE CONDUIT TO CONCRETE BARRIER AT 10' INTERVALS (Typ).

[2] ALL STATIONS ARE APPROXIMATE, COORDINATE WITH RESIDENT ENGINEER FOR EXACT LOCATION OF TEMPORARY WOOD POLES DURING STAGED CONSTRUCTION. RELOCATE LUMINAIRE AND LUMINAIRE MAST ARM TO NEW LOCATION AT THE APPROXIMATE STATION SHOWN BELOW.

EXISTING LIGHT POLES TO BE RELOCATED DURING STAGE CONSTRUCTION [2]

STAGE 2A:
1577+62 "G3A"
1587+26 "G3A"
1587+26 "G3A"
1578+80 "G2A"
1580+33 "G2A"
1591+19 "G4AR"
1597+50 "G4AR"
1599+09 "G4AR"
1597+98 "G1AR"
1599+75 "G1AR"
1601+59 "G1AR"
1620+00 "SD-5"

APPROVED FOR ELECTRICAL WORK ONLY

SIGNAL AND LIGHTING
LIGHTING AND SIGN ILLUMINATION
STAGE CONSTRUCTION NOTES AND DETAIL

NO SCALE

E-34

CALCULATED-DESIGNED BY
CHECKED BY
JOHN KISSINGER
JON COLLINS
REVISED BY
DATE REVISED
CONSULTANT FUNCTIONAL SUPERVISOR
JON COLLINS
STATE OF CALIFORNIA - DEPARTMENT OF TRANSPORTATION
Caltrans

LAST REVISION | DATE PLOTTED => 23-JUL-2014
07-17-14 | TIME PLOTTED => 14:54

Dist	COUNTY	ROUTE	POST MILES TOTAL PROJECT	SHEET No.	TOTAL SHEETS
11	SD	5	R29.1/R30.5	713	1012

05-23-14
REGISTERED CIVIL ENGINEER DATE

07-21-14
PLANS APPROVAL DATE

REGISTERED PROFESSIONAL ENGINEER
JON M. COLLINS
No. C62090
Exp. 09/30/15
CIVIL
STATE OF CALIFORNIA

THE STATE OF CALIFORNIA OR ITS OFFICERS OR AGENTS SHALL NOT BE RESPONSIBLE FOR THE ACCURACY OR COMPLETENESS OF SCANNED COPIES OF THIS PLAN SHEET.

CITY OF SAN DIEGO
525 B STREET
SUITE 7
SAN DIEGO, CA 92101

KIMLEY-HORN AND ASSOCIATES, INC.
401 B STREET, SUITE 600
SAN DIEGO, CA 92101

NOTES:

1- SEE SIGNAL AND LIGHTING (LOCATION 1) EXISTING AND REMOVE.

2 STATE FURNISHED MODEL 170E CONTROLLER ASSEMBLY. INSTALL VDU AND VIDEO DISPLAY IN MODEL 332 CABINET. INSTALL EXTERNAL BBS CABINET AND BATTERIES. SEE SHEET E-47.

3 TYPE III-B SERVICE EQUIPMENT ENCLOSURE. SEE WIRING DIAGRAM ON THIS SHEET.

4 INSTALL PERMANENT TRAFFIC SIGNAL STANDARD IN TEMPORARY LOCATION. SEE POLE AND EQUIPMENT SCHEDULE THIS SHEET.

5 TENON FOR VEHICULAR SIGNAL MOUNTING IN SEPARATE STAGE CONSTRUCTION.

7 EVD. SEE RSP ES-4E, DETAIL "B".

8 SIGN MOUNTING. SEE RSP ES-7N, DETAIL "U".

9- FOR ACCURATE RIGHT OF WAY DATA, CONTACT RIGHT OF WAY ENGINEERING AT THE DISTRICT OFFICE.

CONDUIT NOTES:

T1 - 2"C, 1-12CSC, 2#10 (LIGHTING)

T2 - 3"C, 2-12CSC, 2#10 (LIGHTING), 1-VCH, 1-EVC

T3 - 2"C, 1-12CSC, 2#10 (LIGHTING), 1-VCH, 1-EVC

T4 - 2-3"C, 5-12CSC, 3-VCH, 3-EVC

T5 - 2"C, 2#6

T6 - 2"C, 1 SIC

T7 - 2"C, 2#10(LIGHTING), 3#14 (PEU)

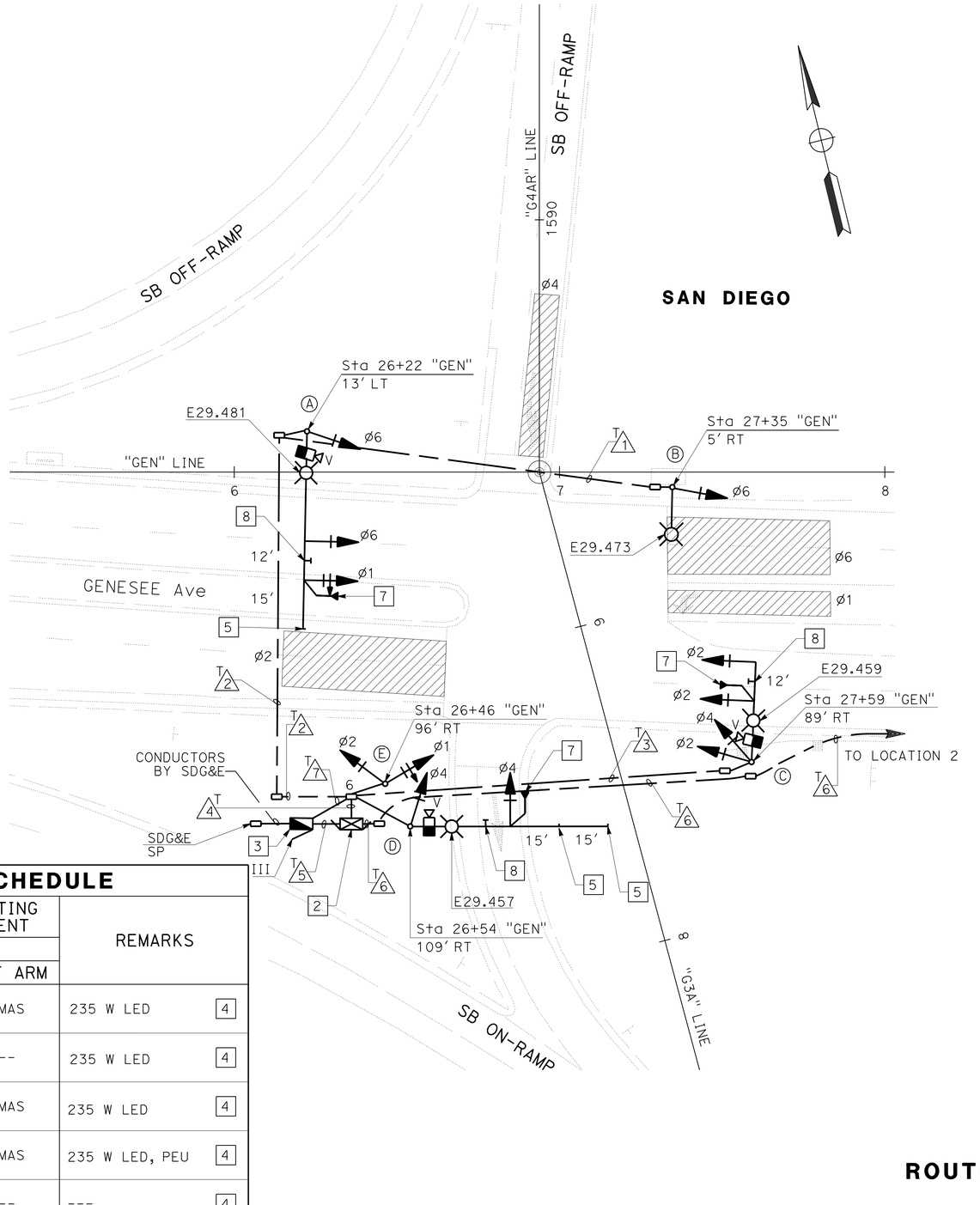

POLE AND EQUIPMENT SCHEDULE

LOC	STANDARD TYPE	SMA (ft)	LMA (ft)	PLACEMENT DIMENSIONS A (ft)	PLACEMENT DIMENSIONS B (ft)	SIGNAL MOUNTING AND PLACEMENT VEHICLE POLE	SIGNAL MOUNTING AND PLACEMENT VEHICLE MAST ARM	REMARKS	
A	61-5-100	60	15	SEE	PLAN	SV-1-T	2-MAS	235 W LED	4
B	15TS	--	12	SEE	PLAN	SV-1-T	---	235 W LED	4
C	19-4-100	30	12	SEE	PLAN	SV-2-TB	2-MAS	235 W LED	4
D	61-5-100	60	15	SEE	PLAN	SV-1-T	1-MAS	235 W LED, PEU	4
E	1-A (10')	--	--	SEE	PLAN	TV-2-T	---	---	4

CIRCUIT BREAKERS

MAIN-2P-100 A

A 1P-30 A
B 1P-15 A
C, D } 2P-20 A

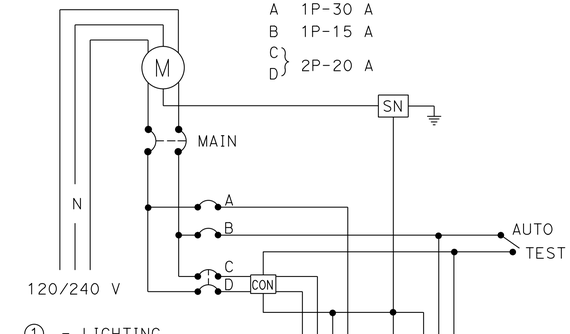

① - LIGHTING
② - SIGNAL (LOCATION 1)
③ - PEU

WIRING DIAGRAM

(TYPE III-B SERVICE EQUIPMENT ENCLOSURE SEE ES-2E)

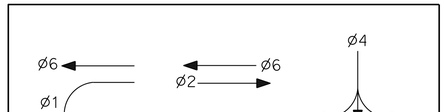

PROPOSED TRAFFIC PHASE DIAGRAM

STEADY DEMAND SEQUENCE

APPROVED FOR ELECTRICAL WORK ONLY

SCALE: 1"=20'

ROUTE 5 SB RAMP AT GENESEE Ave

SIGNAL AND LIGHTING (STAGE CONSTRUCTION STAGE 1) (LOCATION 1)

E-35

LAST REVISION | DATE PLOTTED => 23-JUL-2014
07-17-14 | TIME PLOTTED => 14:54

REVISED BY | DATE REVISED
JOHN KISSINGER | JON COLLINS
CALCULATED-DESIGNED BY | CHECKED BY
CONSULTANT FUNCTIONAL SUPERVISOR: JON COLLINS
STATE OF CALIFORNIA - DEPARTMENT OF TRANSPORTATION
Caltrans

BORDER LAST REVISED 07/02/10 | USERNAME => s127400 | DGN FILE => 11120001021ua035.dgn | RELATIVE BORDER SCALE IS IN INCHES 0 1 2 3 | UNIT 2771 | PROJECT NUMBER & PHASE 11120001021

Dist	COUNTY	ROUTE	POST MILES TOTAL PROJECT	SHEET No.	TOTAL SHEETS
11	SD	5	R29.1/R30.5	714	1012

05-23-14
REGISTERED CIVIL ENGINEER DATE

JON M. COLLINS No. C62090 Exp. 09/30/15 CIVIL — REGISTERED PROFESSIONAL ENGINEER — STATE OF CALIFORNIA

07-21-14
PLANS APPROVAL DATE

THE STATE OF CALIFORNIA OR ITS OFFICERS OR AGENTS SHALL NOT BE RESPONSIBLE FOR THE ACCURACY OR COMPLETENESS OF SCANNED COPIES OF THIS PLAN SHEET.

CITY OF SAN DIEGO
525 B STREET
SUITE 7
SAN DIEGO, CA 92101

KIMLEY-HORN AND ASSOCIATES, INC.
401 B STREET, SUITE 600
SAN DIEGO, CA 92101

NOTES:

1- SEE SIGNAL AND LIGHTING (LOCATION 1) EXISTING AND REMOVE, SIGNAL AND LIGHTING (LOCATION 1) STAGE CONSTRUCTION AND SIGNAL AND LIGHTING (LOCATION 1) FOR ADDITIONAL INFORMATION.

[2] EVD. SEE RSP ES-4E, DETAIL "B".

[3] SIGN MOUNTING. SEE RSP ES-7N, DETAIL "U".

[4] MAINTAIN SERVICE EQUIPMENT ENCLOSURE IN TEMPORARY LOCATION UNTIL PERMANENT CAN BE INSTALLED IN ULTIMATE LOCATION. SEE INSTALLATION DETAILS ON SHEET E-3.

5- FOR ACCURATE RIGHT OF WAY DATA, CONTACT RIGHT OF WAY ENGINEERING AT THE DISTRICT OFFICE.

CONDUIT NOTES:

T1 - Exist 2"C, 1-12csc, 2#10 (Ltg)

T2 - Exist 3"C, 2-12csc, 2#10 (Ltg), 1-vch, 1-EVUC

T3 - Exist 2"C, 1-12csc, 2#10 (Ltg), 1-vch, 1-EVUC

T4 - Exist 2-3"C, 5-12csc, 2#10 (Ltg), 3-vch, 3-EVUC

T5 - Exist 2"C, 2#6

T6 - Exist 2"C, 1 SIC

T7 - Exist 2"C, 2#10(ltg), 3#14 (peu)

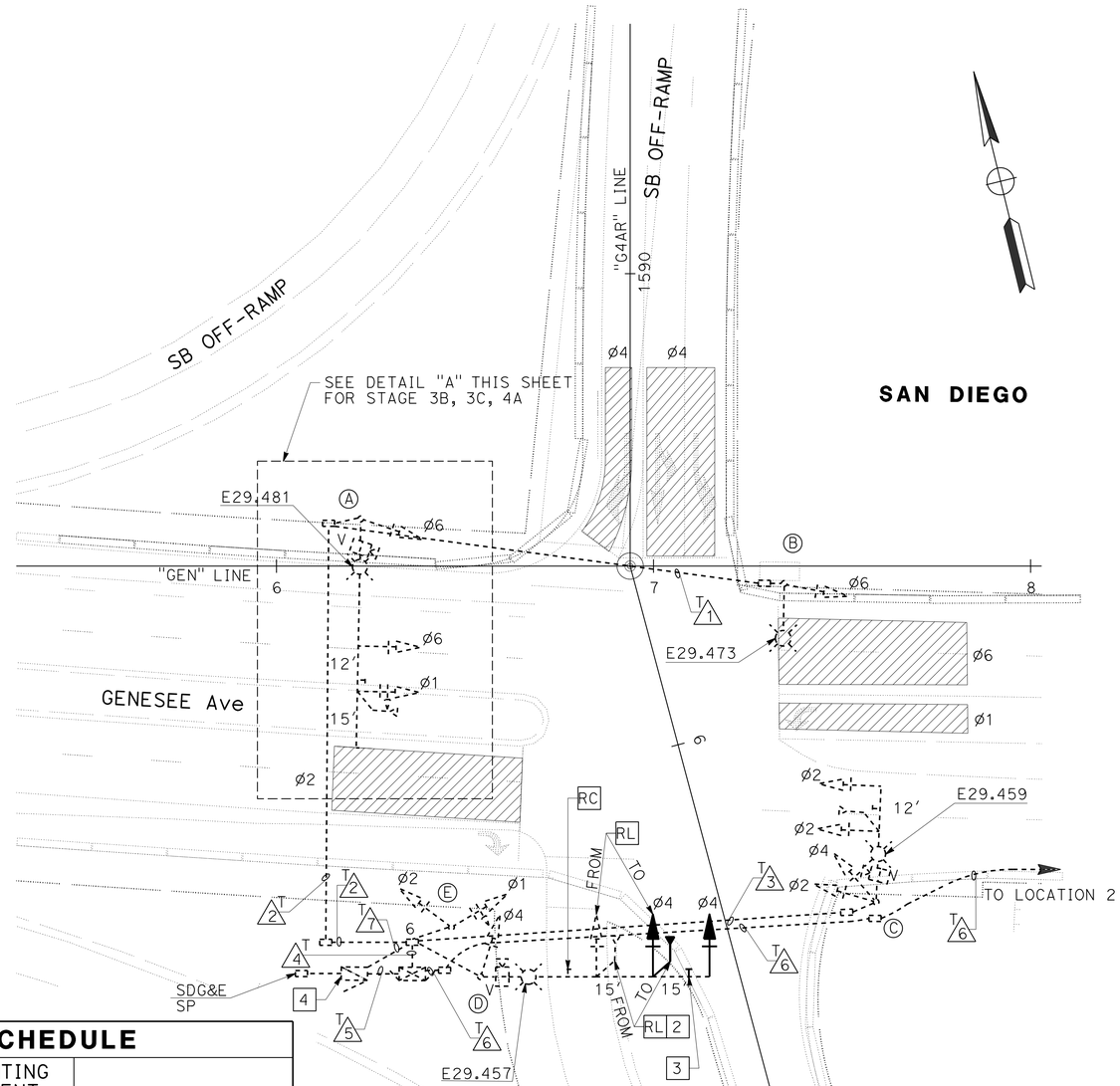

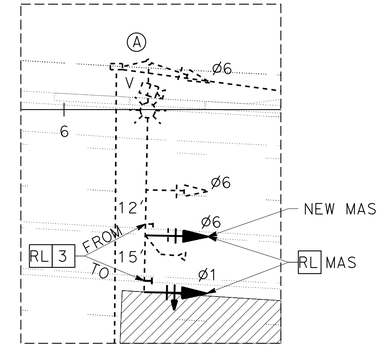

DETAIL A - STAGE 3B, 3C, 4A

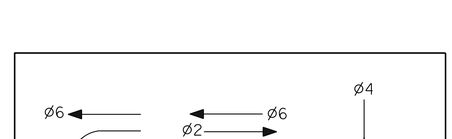

POLE AND EQUIPMENT SCHEDULE

LOC	STANDARD TYPE	SMA (ft)	LMA (ft)	PLACEMENT DIMENSIONS A (ft)	B (ft)	SIGNAL MOUNTING AND PLACEMENT VEHICLE POLE	MAST ARM	REMARKS
(A)	61-5-100 (Exist)	60	15	Exist		SV-1-T (Exist)	2-mas (Exist) *	235 W led
(B)	15TS (Exist)	--	12	Exist		SV-1-T (Exist)	---	235 W led
(C)	19-4-100 (Exist)	30	12	Exist		SV-2-TB (Exist)	2-mas (Exist)	235 W led
(D)	61-5-100 (Exist)	60	15	Exist		SV-1-T (Exist)	1-mas (Exist) 1-MAS (NEW) 1-MAS RL	235 W led, peu
(E)	1-A (10') (Exist)	--	--	Exist		TV-2-T (Exist)	---	---

*SEE DETAIL "A" FOR MAS RELOCATION

ROUTE 5 SB RAMP AT GENESEE Ave

SIGNAL AND LIGHTING (STAGE CONSTRUCTION STAGE 2A, 2B, 3A, 3B, 3C, 4A) (LOCATION 1)

APPROVED FOR ELECTRICAL WORK ONLY

SCALE: 1"=20'

E-36

STATE OF CALIFORNIA - DEPARTMENT OF TRANSPORTATION
Caltrans
CONSULTANT FUNCTIONAL SUPERVISOR: JON COLLINS
CALCULATED-DESIGNED BY: JOHN KISSINGER
CHECKED BY: JON COLLINS
REVISED BY | DATE REVISED

LAST REVISION DATE PLOTTED => 23-JUL-2014
07-17-14 TIME PLOTTED => 14:54

BORDER LAST REVISED 07/02/10
USERNAME => s127400
DGN FILE => 1112000102ua036.dgn
RELATIVE BORDER SCALE IS IN INCHES 0 1 2 3
UNIT 2771
PROJECT NUMBER & PHASE 11120001021

Dist	COUNTY	ROUTE	POST MILES TOTAL PROJECT	SHEET No.	TOTAL SHEETS
11	SD	5	R29.1/R30.5	715	1012

05-23-14
REGISTERED CIVIL ENGINEER DATE

07-21-14
PLANS APPROVAL DATE

JON M. COLLINS No. C62090 Exp. 09/30/15 CIVIL — REGISTERED PROFESSIONAL ENGINEER — STATE OF CALIFORNIA

THE STATE OF CALIFORNIA OR ITS OFFICERS OR AGENTS SHALL NOT BE RESPONSIBLE FOR THE ACCURACY OR COMPLETENESS OF SCANNED COPIES OF THIS PLAN SHEET.

CITY OF SAN DIEGO
525 B STREET
SUITE 7
SAN DIEGO, CA 92101

KIMLEY-HORN AND ASSOCIATES, INC.
401 B STREET, SUITE 600
SAN DIEGO, CA 92101

SAN DIEGO

NOTES:

1- SEE SIGNAL AND LIGHTING (LOCATION 1) EXISTING AND REMOVE, SIGNAL AND LIGHTING (LOCATION 1) STAGE CONSTRUCTION AND SIGNAL AND LIGHTING (LOCATION 1) FOR ADDITIONAL INFORMATION.

2 INSTALL PERMANENT TRAFFIC SIGNAL STANDARD IN TEMPORARY LOCATION. SEE POLE AND EQUIPMENT SCHEDULE THIS SHEET.

3 STATE FUNISHED MODEL 170E CONTROLLER ASSEMBLY. INSTALL VDU AND VIDEO DISPLAY IN MODEL 332 CABINET. INSTALL EXTERNAL BBS CABINET AND BATTERIES. SEE E-45 FOR FOUNDATION.

4 TENON FOR VEHICULAR SIGNAL MOUNTING IN SEPARATE STAGE LOCATION.

5 EVD. SEE RSP ES-4E, DETAIL "B".

6 SIGN MOUNTING. SEE RSP ES-7N, DETAIL "U".

7 TYPE III-B SERVICE EQUIPMENT ENCLOSURE. SEE RSP ES-2E AND WIRING DIAGRAM ON THIS SHEET.

8- FOR ACCURATE RIGHT OF WAY DATA, CONTACT RIGHT OF WAY ENGINEERING AT THE DISTRICT OFFICE.

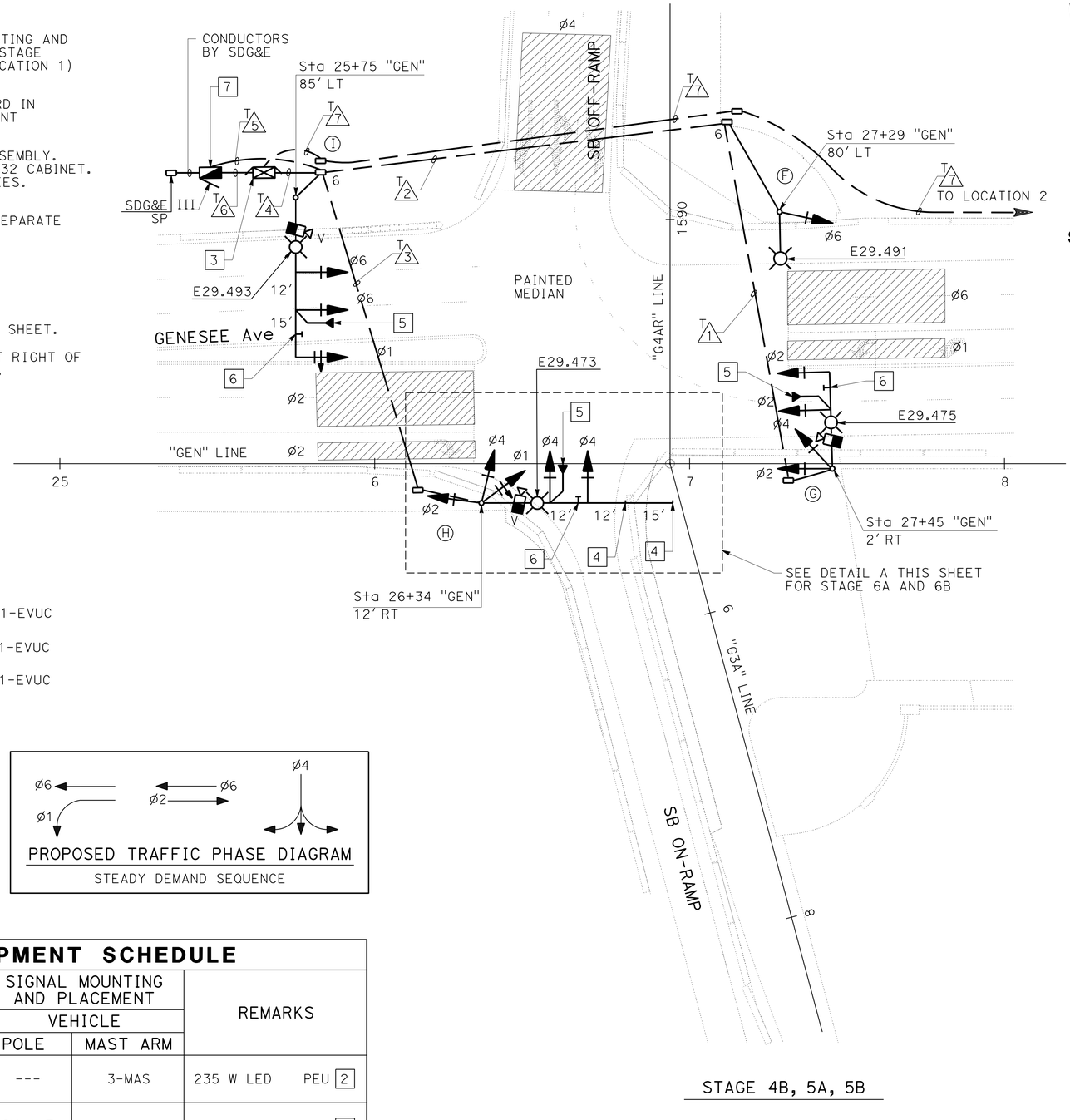

STAGE 4B, 5A, 5B

CIRCUIT BREAKERS

MAIN-2P-100 A

A 1P-30 A
B 1P-15 A
C, D 2P-20 A

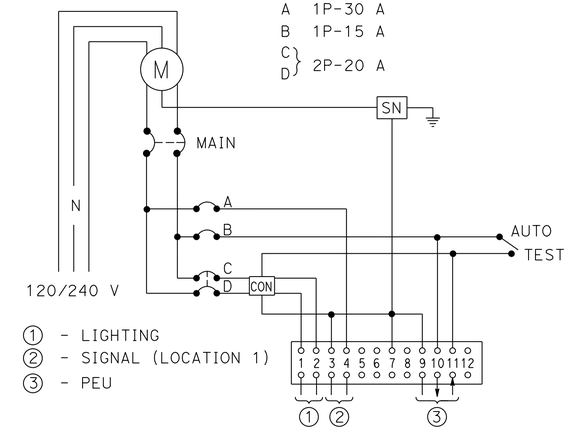

① - LIGHTING
② - SIGNAL (LOCATION 1)
③ - PEU

WIRING DIAGRAM

(TYPE III-BF SERVICE EQUIPMENT ENCLOSURE ES-2E)

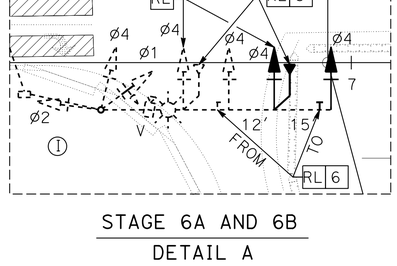

STAGE 6A AND 6B
DETAIL A

CONDUIT NOTES:

T1 - 2"C, 1-12CSC, 2#10 (LIGHTING), 1-VCH, 1-EVUC
T2 - 3"C, 2-12CSC, 2#10 (LIGHTING), 1-VCH, 1-EVUC
T3 - 3"C, 1-12CSC, 2#10 (LIGHTING), 1-VCH, 1-EVUC
T4 - 2-3"C, 4-12CSC, 3-VCH, 3-EVUC
T5 - 2"C, 2#10 (LIGHTING), 3#14 (PEU)
T6 - 2"C, 2#6
T7 - 2"C, 1 SIC

PROPOSED TRAFFIC PHASE DIAGRAM
STEADY DEMAND SEQUENCE

POLE AND EQUIPMENT SCHEDULE

LOC	STANDARD TYPE	SMA (ft)	LMA (ft)	PLACEMENT DIMENSIONS A (ft)	B (ft)	SIGNAL MOUNTING AND PLACEMENT VEHICLE POLE	MAST ARM	REMARKS	
(I)	29-5-100	50	15	SEE	PLAN	---	3-MAS	235 W LED	PEU 2
(F)	15TS	--	12	SEE	PLAN	SV-1-T	---	235 W LED	2
(G)	19-4-100	30	12	SEE	PLAN	SV-2-TB	2-MAS	235 W LED	2
(H)	61-5-100	60	15	SEE	PLAN	SV-3-TB	2-MAS	235 W LED	2

APPROVED FOR ELECTRICAL WORK ONLY

SCALE: 1"=20'

ROUTE 5 SB RAMP AT GENESEE Ave

SIGNAL AND LIGHTING (STAGE CONSTRUCTION STAGE 4B, 5A, 5B, 6A, 6B) (LOCATION 1)

E-37

JOHN KISSINGER — REVISED BY
JON COLLINS — DATE REVISED
CALCULATED-DESIGNED BY
CHECKED BY
JON COLLINS — CONSULTANT FUNCTIONAL SUPERVISOR
STATE OF CALIFORNIA - DEPARTMENT OF TRANSPORTATION
Caltrans

LAST REVISION | DATE PLOTTED => 23-JUL-2014
07-17-14 | TIME PLOTTED => 14:54

BORDER LAST REVISED 07/02/10
USERNAME => s127400
DGN FILE => 1112000102ua037.dgn
RELATIVE BORDER SCALE IS IN INCHES 0 1 2 3
UNIT 2771
PROJECT NUMBER & PHASE 11120001021

Dist	COUNTY	ROUTE	POST MILES TOTAL PROJECT	SHEET No.	TOTAL SHEETS
11	SD	5	R29.1/R30.5	716	1012

05-23-14
REGISTERED CIVIL ENGINEER DATE

07-21-14
PLANS APPROVAL DATE

REGISTERED PROFESSIONAL ENGINEER
JON M. COLLINS
No. C62090
Exp. 09/30/15
CIVIL
STATE OF CALIFORNIA

THE STATE OF CALIFORNIA OR ITS OFFICERS OR AGENTS SHALL NOT BE RESPONSIBLE FOR THE ACCURACY OR COMPLETENESS OF SCANNED COPIES OF THIS PLAN SHEET.

CITY OF SAN DIEGO
525 B STREET
SUITE 7
SAN DIEGO, CA 92101

KIMLEY-HORN AND ASSOCIATES, INC.
401 B STREET, SUITE 600
SAN DIEGO, CA 92101

NOTES:

1. INSTALL EXTERNAL BBS CABINET AND BATTERIES SEE SHEET E-47 FOR FOUNDATION.
2. INSTALL VDU, VIDEO DISPLAY AND COMMUNICATION CARD IN TYPE 332 CABINET.
3. DETAIL "U" ON Std PLAN ES-7N, SEE SIGN PLANS
4. REFER TO SHEET E-15 FOR CONDUIT PLACEMENT IN GENESEE Ave BRIDGE.
5. TYPE III-BF. SEE WIRING DIAGRAM LOCATION "D" ON SHEET E-62. SEE CIRCUIT DIAGRAM ON SHEET E-11.
6. CONDUIT TO ENTER PER SDG&E REQUIREMENTS.
7. FOR CIRCUIT CONTINUITY SEE RAMP METERING SYSTEM (LOCATION 1).
8. TO CCTV SYSTEM.
9. INSTALL PHOTOELECTRIC CONTROLS TYPE II.
10. FOR ACCURATE RIGHT OF WAY DATA, CONTACT RIGHT OF WAY ENGINEERING AT THE DISTRICT OFFICE.

EQUIPMENT AND POLE SCHEDULE:
SEE E-39

CONDUIT AND CONDUCTOR SCHEDULE:
SEE E-39

SAN DIEGO

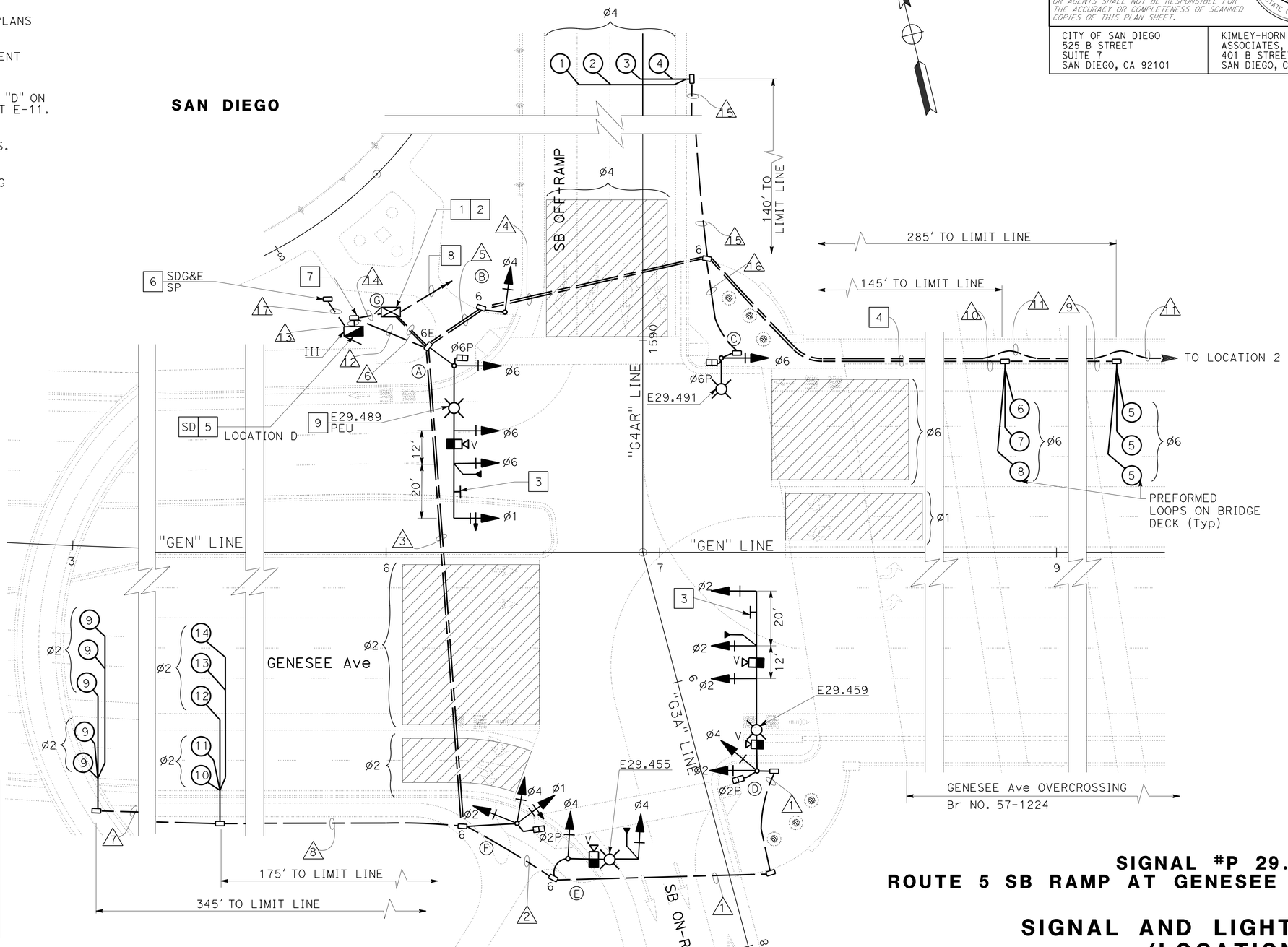

PROPOSED TRAFFIC PHASE DIAGRAM
STEADY DEMAND SEQUENCE

APPROVED FOR ELECTRICAL WORK ONLY

SCALE: 1"=20'

SIGNAL #P 29.475
ROUTE 5 SB RAMP AT GENESEE Ave

SIGNAL AND LIGHTING (LOCATION 1)

E-38

REVISED BY | DATE REVISED
JOHN KISSINGER | JON COLLINS
CALCULATED-DESIGNED BY | CHECKED BY
CONSULTANT FUNCTIONAL SUPERVISOR: JON COLLINS
STATE OF CALIFORNIA - DEPARTMENT OF TRANSPORTATION
Caltrans

LAST REVISION | DATE PLOTTED => 23-JUL-2014
07-17-14 | TIME PLOTTED => 14:54

BORDER LAST REVISED 07/02/10
USERNAME => s127400
DGN FILE => 1112000102ua038.dgn
RELATIVE BORDER SCALE IS IN INCHES 0 1 2 3
UNIT 2771
PROJECT NUMBER & PHASE 11120001021

Dist	COUNTY	ROUTE	POST MILES TOTAL PROJECT	SHEET No.	TOTAL SHEETS
11	SD	5	R29.1/R30.5	717	1012

05-23-14
REGISTERED CIVIL ENGINEER DATE

07-21-14
PLANS APPROVAL DATE

REGISTERED PROFESSIONAL ENGINEER
JON M. COLLINS
No. C62090
Exp. 09/30/15
CIVIL
STATE OF CALIFORNIA

THE STATE OF CALIFORNIA OR ITS OFFICERS OR AGENTS SHALL NOT BE RESPONSIBLE FOR THE ACCURACY OR COMPLETENESS OF SCANNED COPIES OF THIS PLAN SHEET.

CITY OF SAN DIEGO
525 B STREET
SUITE 7
SAN DIEGO, CA 92101

KIMLEY-HORN AND ASSOCIATES, INC.
401 B STREET, SUITE 600
SAN DIEGO, CA 92101

EQUIPMENT AND POLE SCHEDULE

LOC	STANDARD TYPE	SMA FT	LMA FT	PLACEMENT DIMENSIONS A FT	B FT	SIGNAL MOUNTING AND PLACEMENT VEHICLE POLE	MASTARM	PEDESTRIAN SIGNAL*	PPB	REMARKS
(A)	29-5-100	55	15	14.5′	4.0′	SV-1-T	3-MAS	SP-1-T	←Ø6P	235 W LED, PEU, VIVDS
(B)	1-A (10′)	—	—	13.0′	4.0′	TV-1-T	—	—	—	
(C)	TYPE 15 TS	—	15	7.0′	4.0′	SV-1-T	—	SP-1-T	→Ø6P	235 W LED
(D)	61-5-100	65	15	6.6′	3.6′	SV-2-TB	3-MAS	SP-1-T	←Ø2P	235 W LED, VIVDS
(E)	19-4-100	25	15	6.9′	5.2′	SV-1-T	MAS	—		235 W LED, VIVDS
(F)	1-A (10′)	—	—	21.8′	5.5′	TV-3-T	—	SP-1-T	→Ø2P	
(G)	STATE FURNISHED MODEL 170 CONTROLLER ASSEMBLY. FOUNDATION SEE ELECTRICAL DETAILS ON E-47.									

*ALL PEDESTRIAN MODULES SHALL BE PER RSP ES-4B DETAIL B WITH ACCESSIBLE PEDESTRIAN SIGNAL (APS).

CONDUIT AND CONDUCTOR SCHEDULE

AWG SIZE OR CABLE TYPE	PHASE	POLE OR CIRCUIT	CONDUIT SIZE AND RUN 3" (1)	3" (2)	2-3" (3)	2-3" (4)	2-3" (5)	2-3" (6)	2" (7)	2" (8)	2" (9)	2" (10)	2" (11)	2" (12)	2" (13)	2" (14)	2" (15)
No. 14 CONDUCTORS																	
3CSC / 12CSC	Ø1,Ø6	POLE - A						1 1									
	Ø4	B					1 1	1 1									
	Ø6	C				1 1	1 1	1 1									
	Ø2,Ø4	D	1 1	1 1	1 1			1 1									
	Ø4	E			1 1			1 1									
	Ø1,Ø2,Ø4	F			1 2			1 2									
TOTAL	3CSC / 12CSC		1 1	1 2	2 4	1 1	1 2	4 7									
2		RM													2		
6		SIGNAL													2	2	
8		LIGHTING	2	2	2	2	2							2	2		
14		PEU												3	3		
TYPE B DLC	Ø2				6			6	2	6							
	Ø6					4	4	4			1	4					
	Ø4					4	4	4									4
VIDEO CABLE HARNESS	Ø2	POLE D	2	2	2			2									
	Ø1/Ø6	POLE A						1									
	Ø4	POLE E		1	1			1									
EVC			1	2	2			3									
OCC						1	1	1					1				
SIC						1	1	1					1				
TOTAL CONDUCTORS / CABLES			7	11	20	14	16	35	2	6	1	4	2	5	9	2	4

CONDUIT NOTES:

(16) - 2"C, 1 3CSC, 1 12CSC, 2#8(LIGHTING)

(17) - 3"C, MT, CONDUCTORS BY SDG&E

APPROVED FOR ELECTRICAL WORK ONLY

SIGNAL AND LIGHTING (LOCATION 1)

E-39

REVISED BY | DATE REVISED
JOHN KISSINGER | JON COLLINS
CALCULATED-DESIGNED BY | CHECKED BY
CONSULTANT FUNCTIONAL SUPERVISOR: JON COLLINS
STATE OF CALIFORNIA - DEPARTMENT OF TRANSPORTATION
Caltrans

LAST REVISION 07-17-14 | DATE PLOTTED => 23-JUL-2014 | TIME PLOTTED => 14:54

BORDER LAST REVISED 07/02/10 | USERNAME => s127400 | DGN FILE => 1112000102ua039.dgn | RELATIVE BORDER SCALE IS IN INCHES 0 1 2 3 | UNIT 2771 | PROJECT NUMBER & PHASE 11120001021

Dist	COUNTY	ROUTE	POST MILES TOTAL PROJECT	SHEET No.	TOTAL SHEETS
11	SD	5	R29.1/R30.5	718	1012

05-23-14
REGISTERED CIVIL ENGINEER DATE

07-21-14
PLANS APPROVAL DATE

REGISTERED PROFESSIONAL ENGINEER
JON M. COLLINS
No. C62090
Exp. 09/30/15
CIVIL
STATE OF CALIFORNIA

THE STATE OF CALIFORNIA OR ITS OFFICERS OR AGENTS SHALL NOT BE RESPONSIBLE FOR THE ACCURACY OR COMPLETENESS OF SCANNED COPIES OF THIS PLAN SHEET.

CITY OF SAN DIEGO
525 B STREET
SUITE 7
SAN DIEGO, CA 92101

KIMLEY-HORN AND ASSOCIATES, INC.
401 B STREET, SUITE 600
SAN DIEGO, CA 92101

NOTES:

1- TRAFFIC SIGNAL SHALL REMAIN IN OPERATION UNTIL STAGE CONSTRUCTION TRAFFIC SIGNAL IS IN PLACE AND OPERATIONAL.

2- ABANDON ALL TRAFFIC SIGNAL DETECTOR LOOPS

3- FOR ACCURATE RIGHT OF WAY DATA, CONTACT RIGHT OF WAY ENGINEERING AT THE DISTRICT OFFICE.

SAN DIEGO

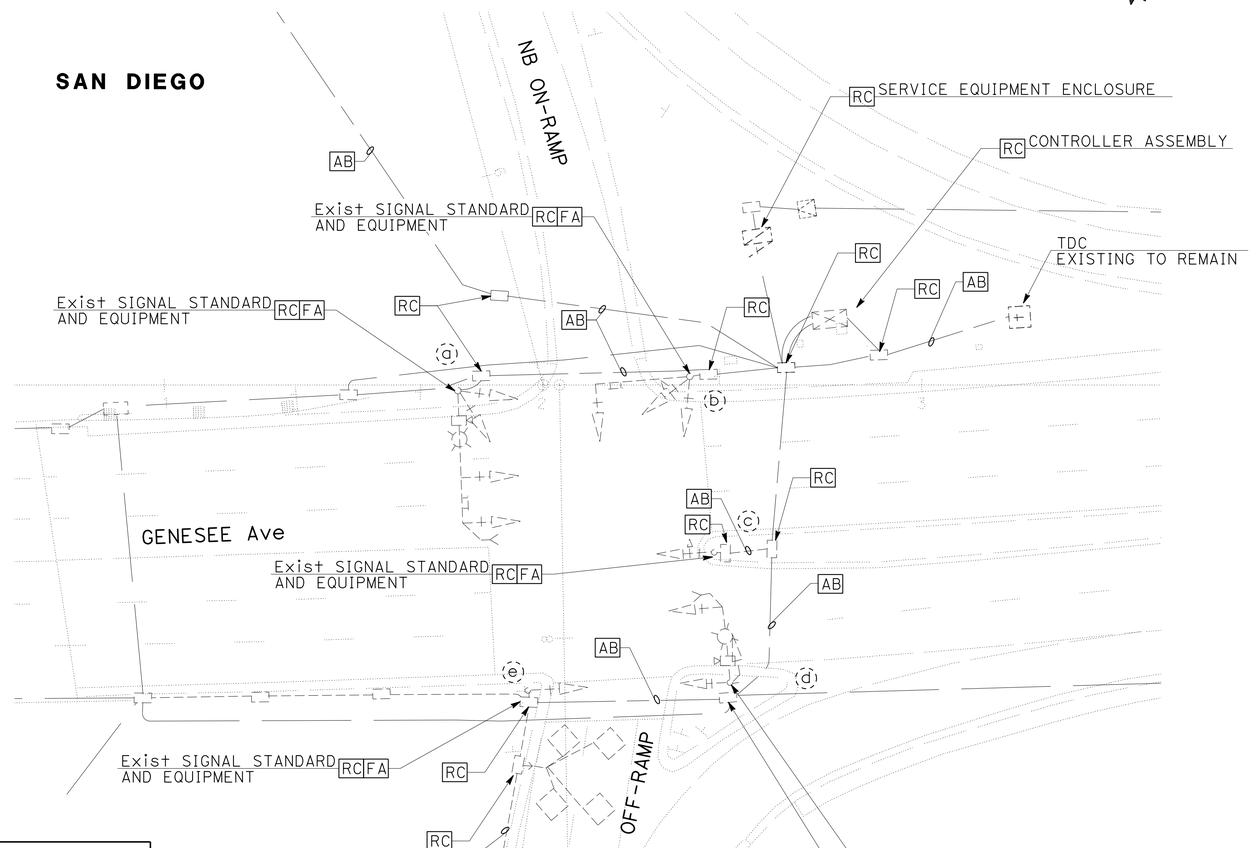

EXISTING POLE AND EQUIPMENT SCHEDULE

LOC	STANDARD			SIGNAL MOUNTING AND PLACEMENT	
	TYPE	SMA (ft)	LMA (ft)	VEHICLE POLE	VEHICLE MAST ARM
(a)*	19-4-100	35	12	sv-2-ta	2-mas
(b)	19-1-100	20	12	sv-2-ta	mas
(c)	1-a(10′)	--	--	tv-1-t	--
(d)*	19-1-100	20	12	sv-2-ta	mas
(e)	1-a(10)	--	--	tv-1-t	--

* EXISTING VIVDS MOUNTED ON SIGNAL OR LUMINAIRE MAST ARM.

APPROVED FOR ELECTRICAL WORK ONLY

SIGNAL #P 29.454

SIGNAL AND LIGHTING (EXISTING AND REMOVE) (LOCATION 2)

SCALE: 1"=20′

E-40

LAST REVISION DATE PLOTTED => 23-JUL-2014
07-17-14 TIME PLOTTED => 14:54

REVISED BY | DATE REVISED
JOHN KISSINGER | JON COLLINS
CALCULATED-DESIGNED BY | CHECKED BY
CONSULTANT FUNCTIONAL SUPERVISOR: JON COLLINS
STATE OF CALIFORNIA - DEPARTMENT OF TRANSPORTATION
Caltrans

BORDER LAST REVISED 07/02/10
USERNAME => s127400
DGN FILE => 11120001021ua040.dgn
RELATIVE BORDER SCALE IS IN INCHES 0 1 2 3
UNIT 2771
PROJECT NUMBER & PHASE 11120001021

Dist	COUNTY	ROUTE	POST MILES TOTAL PROJECT	SHEET No.	TOTAL SHEETS
11	SD	5	R29.1/R30.5	719	1012

05-23-14
REGISTERED CIVIL ENGINEER DATE

07-21-14
PLANS APPROVAL DATE

REGISTERED PROFESSIONAL ENGINEER — JON M. COLLINS — No. C62090 — Exp. 09/30/15 — CIVIL — STATE OF CALIFORNIA

THE STATE OF CALIFORNIA OR ITS OFFICERS OR AGENTS SHALL NOT BE RESPONSIBLE FOR THE ACCURACY OR COMPLETENESS OF SCANNED COPIES OF THIS PLAN SHEET.

CITY OF SAN DIEGO
525 B STREET
SUITE 7
SAN DIEGO, CA 92101

KIMLEY-HORN AND ASSOCIATES, INC.
401 B STREET, SUITE 600
SAN DIEGO, CA 92101

NOTES:

1- SEE SIGNAL AND LIGHTING (LOCATION 2) EXISTING AND REMOVE, SIGNAL AND LIGHTING (LOCATION 2) STAGE CONSTRUCTION AND SIGNAL AND LIGHTING (LOCATION 2) FOR ADDITIONAL FORMATION.

[2] STATE FURNISHED MODEL 170E CONTROLLER ASSEMBLY. INSTALL VDU AND VIDEO DISPLAY IN MODEL 332 CABINET. BBS REQUIRED. INSTALL EXTERNAL BBS CABINET AND BATTERIES. SEE SHEET E-47 FOR FOUNDATION.

[3] TYPE III-B SERVICE EQUIPMENT ENCLOSURE. SEE WIRING DIAGRAM ON THIS SHEET.

[4] INSTALL PERMANENT TRAFFIC SIGNAL STANDARD IN TEMPORARY LOCATION. SEE POLE AND EQUIPMENT SCHEDULE THIS SHEET.

[5] TENON FOR VEHICULAR SIGNAL MOUNTING IN SEPARATE STAGE CONSTRUCTION.

[8] EVD. SEE RSP ES-4E, DETAIL "B".

[9] SIGN MOUNTING. SEE RSP ES-7N, DETAIL "U".

10- FOR ACCURATE RIGHT OF WAY DATA, CONTACT RIGHT OF WAY ENGINEERING AT THE DISTRICT OFFICE.

T1 - 3"C, MT
T2 - 3"C, 1-12CSC, 2#10 (LIGHTING), 1-VCH, 1-EVUC
T3 - 2"C, 1 SIC (Tel)
T4 - 3"C, 2-12CSC, 2#10 (LIGHTING), 2-VCH, 2-EVUC
T5 - 3"C, 1-12CSC, 2#10 (LIGHTING), 1-VCH, 1-EVUC
T6 - 2-3"C, 4-12CSC, 2#10 (LIGHTING), 3-VCH, 3-EVUC, 3#14 PEU
T7 - 2"C, 2#6
T8 - 2"C, 1 SIC
T9 - Exist 1"C, ADD 1 SIC (Tel)
T10 - Exist 1½"C, 2#12
T11 - 2"C, 2#10 (TDC), 2#10 (LTG), 3#14 (PEU)
T12 - 2"C, 2#10 (TDC)

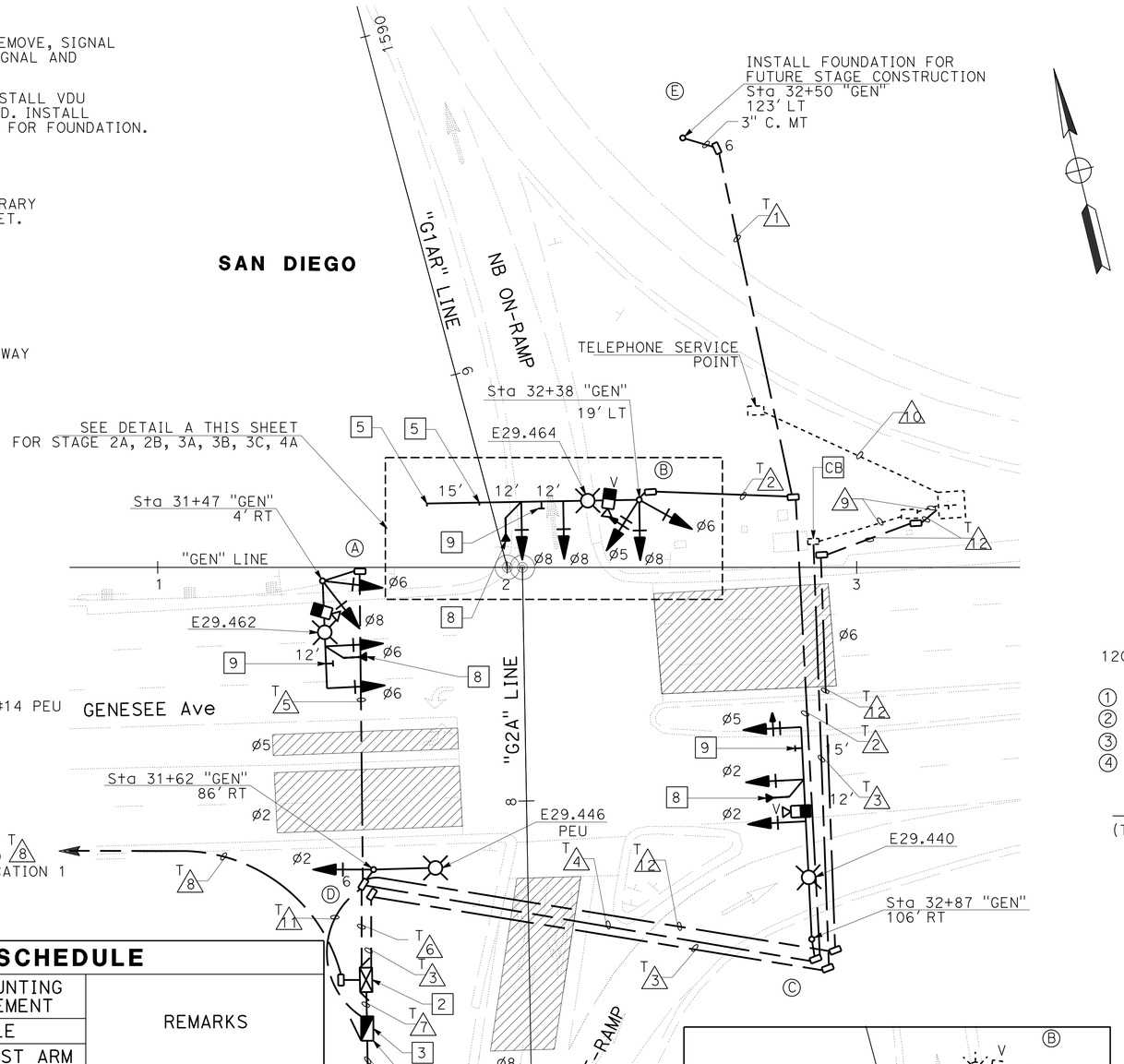

POLE AND EQUIPMENT SCHEDULE

LOC	STANDARD TYPE	SMA FT	LMA FT	PLACEMENT DIMENSIONS A FT	PLACEMENT DIMENSIONS B FT	SIGNAL MOUNTING AND PLACEMENT VEHICLE POLE	SIGNAL MOUNTING AND PLACEMENT VEHICLE MAST ARM	REMARKS	
(A)	19-3-100	30	12	SEE	PLAN	SV-2-TB	2-MAS	235 W LED	[4]
(B)	60-5-100	60	15	SEE	PLAN	SV-3-TB	2-MAS	235 W LED	[4]
(C)	60-5-100	60	15	SEE	PLAN	------	3-MAS	235 W LED	[4]
(D)	15TS	--	12	SEE	PLAN	SV-1-T	-----	235 W LED, PEU	[4]
(E)	26-4-100	--	--	SEE	PLAN	-----	-----	INSTALL FOUNDATION FOR FUTURE STAGE	[5]

DETAIL A - STAGE 2A, 2B, 3A, 3B, 3C, 4A

CIRCUIT BREAKERS
MAIN-2P-100 A
A 1P-30 A
B 1P-15 A
C, D 2P-20 A
E 1P-15 A

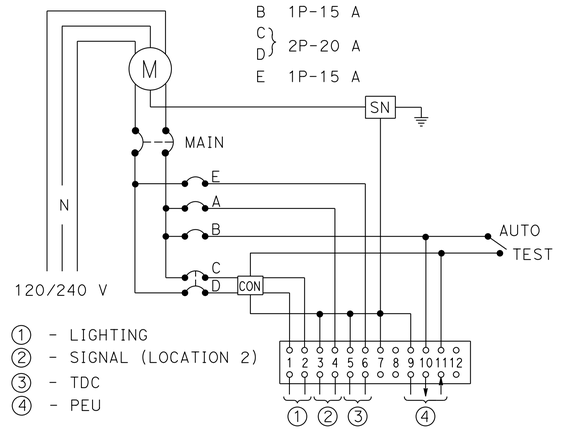

① - LIGHTING
② - SIGNAL (LOCATION 2)
③ - TDC
④ - PEU

WIRING DIAGRAM
(TYPE III-B SERVICE EQUIPMENT ENCLOSURE ES-2E)

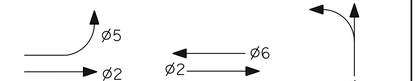

PROPOSED TRAFFIC PHASE DIAGRAM
STEADY DEMAND SEQUENCE

ROUTE 5 NB RAMP AT GENESEE Ave

SIGNAL AND LIGHTING (STAGE CONSTRUCTION STAGE 1, 2A, 2B, 3A, 3B, 3C, 4A) (LOCATION 2)

APPROVED FOR ELECTRICAL WORK ONLY

SCALE: 1"=20'

E-41

REVISED BY | DATE REVISED
JOHN KISSINGER | JON COLLINS
CALCULATED-DESIGNED BY | CHECKED BY
CONSULTANT FUNCTIONAL SUPERVISOR | JON COLLINS
STATE OF CALIFORNIA - DEPARTMENT OF TRANSPORTATION Caltrans

LAST REVISION | DATE PLOTTED => 23-JUL-2014
07-17-14 | TIME PLOTTED => 14:54

BORDER LAST REVISED 07/02/10 | USERNAME => s127400 | DGN FILE => 1112000102ua041.dgn | RELATIVE BORDER SCALE IS IN INCHES 0 1 2 3 | UNIT 2771 | PROJECT NUMBER & PHASE 11120001021

Dist	COUNTY	ROUTE	POST MILES TOTAL PROJECT	SHEET No.	TOTAL SHEETS
11	SD	5	R29.1/R30.5	720	1012

REGISTERED CIVIL ENGINEER — 05-23-14 (DATE)

PLANS APPROVAL DATE — 07-21-14

REGISTERED PROFESSIONAL ENGINEER — JON M. COLLINS — No. C62090 — Exp. 09/30/15 — CIVIL — STATE OF CALIFORNIA

THE STATE OF CALIFORNIA OR ITS OFFICERS OR AGENTS SHALL NOT BE RESPONSIBLE FOR THE ACCURACY OR COMPLETENESS OF SCANNED COPIES OF THIS PLAN SHEET.

CITY OF SAN DIEGO
525 B STREET
SUITE 7
SAN DIEGO, CA 92101

KIMLEY-HORN AND ASSOCIATES, INC.
401 B STREET, SUITE 600
SAN DIEGO, CA 92101

REVISED BY | DATE REVISED

JOHN KISSINGER | JON COLLINS

CALCULATED-DESIGNED BY | CHECKED BY

CONSULTANT FUNCTIONAL SUPERVISOR: JON COLLINS

STATE OF CALIFORNIA - DEPARTMENT OF TRANSPORTATION

Caltrans

NOTES:

1- SEE SIGNAL AND LIGHTING (LOCATION 2) EXISTING AND SALVAGE, SIGNAL AND LIGHTING (LOCATION 2) STAGE CONSTRUCTION AND SIGNAL AND LIGHTING (LOCATION 2) FOR ADDITIONAL INFORMATION.

[2] INSTALL PERMANENT TRAFFIC SIGNAL STANDARD IN TEMPORARY LOCATION. SEE POLE AND EQUIPMENT SCHEDULE THIS SHEET.

[3] INSTALL PERMANENT TRAFFIC SIGNAL STANDARD ON EXISTING FOUNDATION INSTALLED IN PREVIOUS STAGE CONSTRUCTION.

[5] EVD. SEE RSP ES-4E, DETAIL "B".

[6] SIGN MOUNTING. SEE RSP ES-7N, DETAIL "U".

[7] STATE FURNISHED MODEL 170E CONTROLLER ASSEMBLY. INSTALL VDU AND VIDEO DISPLAY IN MODEL 332 CABINET. INSTALL EXTERNAL BBS CABINET AND BATTERIES. SEE SHEET E-47 FOR FOUNDATION.

[8] TYPE III-B SERVICE EQUIPMENT ENCLOSURE. SEE WIRING DIAGRAM ON THIS SHEET.

9- FOR ACCURATE RIGHT OF WAY DATA, CONTACT RIGHT OF WAY ENGINEERING AT THE DISTRICT OFFICE.

CONDUIT NOTES:

T1 - 3", 1-12CSC, 2#10 (LIGHTING), 1-VCH, 1-EVUC

T2 - Exist 3"C, 1-12CSC, 2#10 (LIGHTING), 1-VCH, 1-EVUC

T3 - 2", 1 SIC

T4 - 3"C, 1-12CSC, 2#10 (LIGHTING), 1-VCH, 1-EVUC

T5 - 3"C, 3-12CSC, 2#10 (LIGHTING), 3-VCH, 3-EVUC, 3#14 (PEU)

T6 - 2"C, 2#6

T7 - 2"C, 1-12CSC, 2#10 (LIGHTING)

T8 - 1"C, 2#12 TDC

T9 - 2"C, 2#10 (Ltg), 3#14 (PEU)

POLE AND EQUIPMENT SCHEDULE

LOC	STANDARD TYPE	SMA FT	LMA FT	PLACEMENT DIMENSIONS A FT	PLACEMENT DIMENSIONS B FT	SIGNAL MOUNTING AND PLACEMENT VEHICLE POLE	VEHICLE MAST ARM	REMARKS	
(E)	26-4-100	45	12	Exist	FND	SV-2-T	2-MAS	235V W LED, PEU	2 3
(F)	26-4-100	45	12	SEE	PLAN	SV-1-T	3-MAS	235 W LED	2
(G)	19-4-100	30	12	SEE	PLAN	SV-2-TB	2-MAS	235 W LED	2

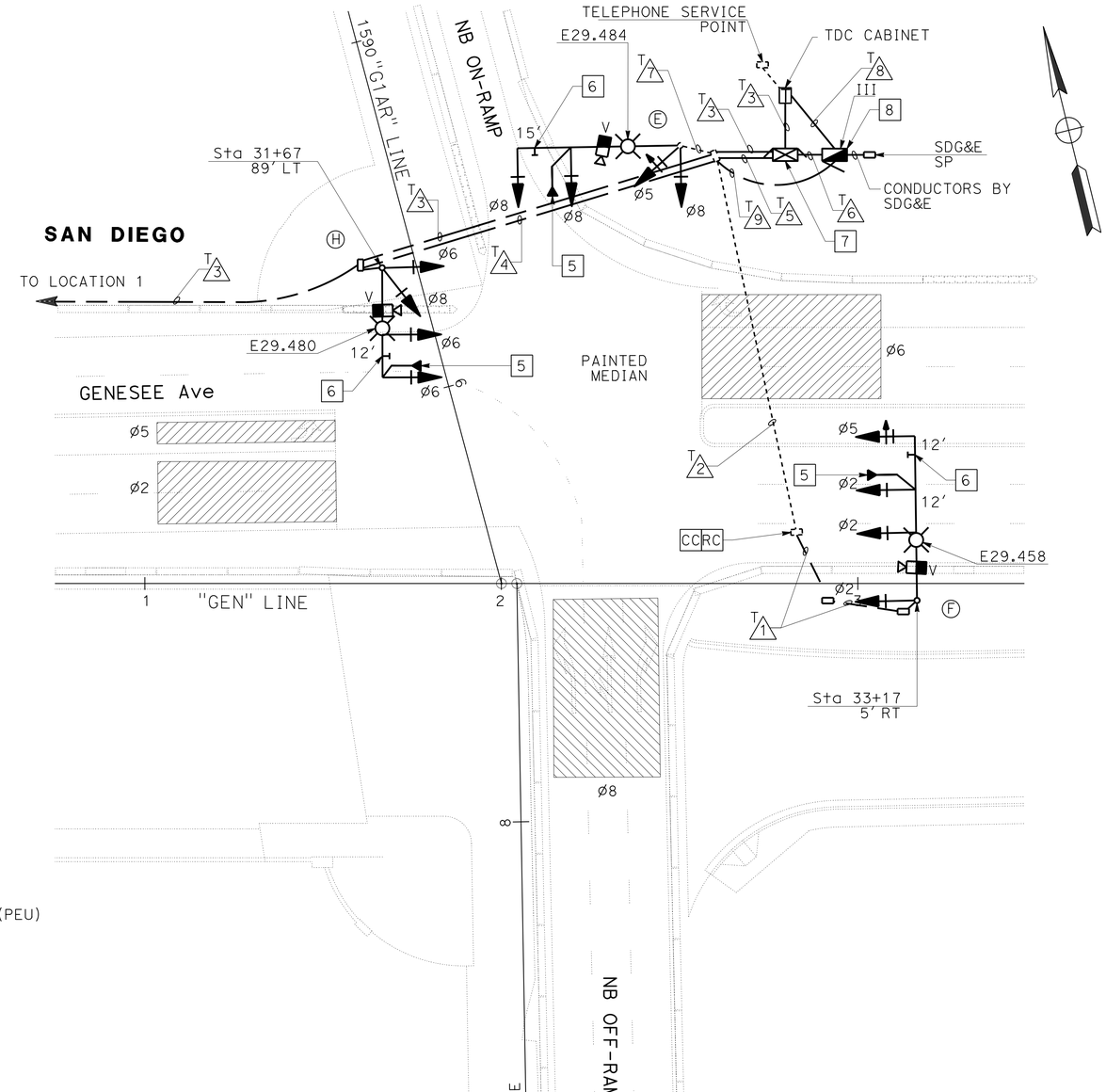

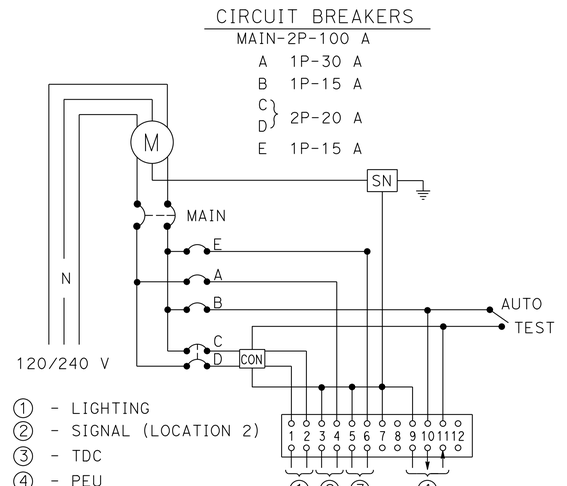

WIRING DIAGRAM

(TYPE III-B SERVICE EQUIPMENT ENCLOSURE ES-2E)

PROPOSED TRAFFIC PHASE DIAGRAM

STEADY DEMAND SEQUENCE

ROUTE 5 NB RAMP AT GENESEE Ave

SIGNAL AND LIGHTING (STAGE CONSTRUCTION STAGE 4B, 5A, 5B, 6A, 6B) (LOCATION 2)

APPROVED FOR ELECTRICAL WORK ONLY

SCALE: 1"=20'

E-42

LAST REVISION DATE PLOTTED => 23-JUL-2014
07-17-14 TIME PLOTTED => 14:54

Dist	COUNTY	ROUTE	POST MILES TOTAL PROJECT	SHEET No.	TOTAL SHEETS
11	SD	5	R29.1/R30.5	721	1012

05-23-14
REGISTERED CIVIL ENGINEER DATE

07-21-14
PLANS APPROVAL DATE

REGISTERED PROFESSIONAL ENGINEER
JON M. COLLINS
No. C62090
Exp. 09/30/15
CIVIL
STATE OF CALIFORNIA

THE STATE OF CALIFORNIA OR ITS OFFICERS OR AGENTS SHALL NOT BE RESPONSIBLE FOR THE ACCURACY OR COMPLETENESS OF SCANNED COPIES OF THIS PLAN SHEET.

CITY OF SAN DIEGO
525 B STREET
SUITE 7
SAN DIEGO, CA 92101

KIMLEY-HORN AND ASSOCIATES, INC.
401 B STREET, SUITE 600
SAN DIEGO, CA 92101

SAN DIEGO

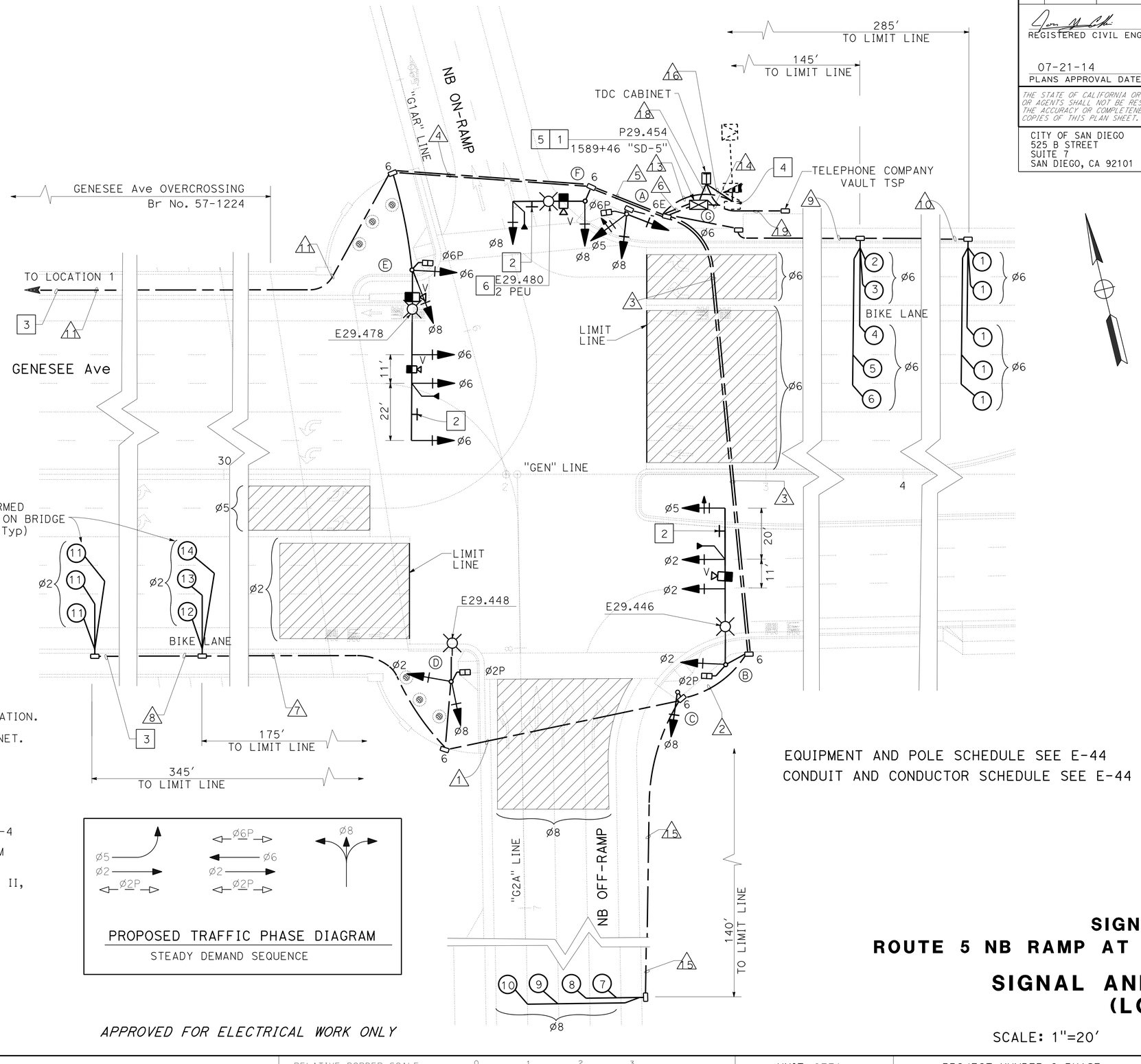

NOTES:

1. INSTALL EXTERNAL BBS CABINET AND BATTERIES. SEE SHEET E-47 FOR FOUNDATION. INSTALL VDU, VIDEO DISPLAY AND COMMUNICATION CARD IN TYPE 332 CABINET.
2. DETAIL "U" ON Std PLAN ES-7N, SEE SIGN PLANS.
3. REFER TO SHEET E-15 FOR CONDUIT PLACEMENT IN GENESEE Ave BRIDGE.
4. SEE INSTALLATION DETAILS ON SHEET E-4
5. SEE CLOSED CIRCUIT TELEVISION SYSTEM FOR CONNECTION TO FIBER OPTIC.
6. INSTALL PHOTOELECTRIC CONTROLS TYPE II, PER STANDARD SPECIFICATIONS.
7. FOR ACCURATE RIGHT OF WAY DATA, CONTACT RIGHT OF WAY ENGINEERING AT THE DISTRICT OFFICE.

PROPOSED TRAFFIC PHASE DIAGRAM
STEADY DEMAND SEQUENCE

EQUIPMENT AND POLE SCHEDULE SEE E-44
CONDUIT AND CONDUCTOR SCHEDULE SEE E-44

APPROVED FOR ELECTRICAL WORK ONLY

SIGNAL #P 29.454
ROUTE 5 NB RAMP AT GENESEE Ave

SIGNAL AND LIGHTING (LOCATION 2)

SCALE: 1"=20'

E-43

LAST REVISION: DATE PLOTTED => 23-JUL-2014
07-17-14 TIME PLOTTED => 14:54

STATE OF CALIFORNIA - DEPARTMENT OF TRANSPORTATION
Caltrans
CONSULTANT FUNCTIONAL SUPERVISOR: JON COLLINS
CALCULATED-DESIGNED BY: JOHN KISSINGER
CHECKED BY: JON COLLINS
REVISED BY
DATE REVISED

BORDER LAST REVISED 07/02/10
USERNAME => s127400
DGN FILE => 1112000102ua043.dgn
RELATIVE BORDER SCALE IS IN INCHES 0 1 2 3
UNIT 2771
PROJECT NUMBER & PHASE 11120001021

Dist	COUNTY	ROUTE	POST MILES TOTAL PROJECT	SHEET No.	TOTAL SHEETS
11	SD	5	R29.1/R30.5	722	1012

05-23-14
REGISTERED CIVIL ENGINEER DATE

07-21-14
PLANS APPROVAL DATE

REGISTERED PROFESSIONAL ENGINEER
JON M. COLLINS
No. C62090
Exp. 09/30/15
CIVIL
STATE OF CALIFORNIA

THE STATE OF CALIFORNIA OR ITS OFFICERS OR AGENTS SHALL NOT BE RESPONSIBLE FOR THE ACCURACY OR COMPLETENESS OF SCANNED COPIES OF THIS PLAN SHEET.

CITY OF SAN DIEGO
525 B STREET
SUITE 7
SAN DIEGO, CA 92101

KIMLEY-HORN AND ASSOCIATES, INC.
401 B STREET, SUITE 600
SAN DIEGO, CA 92101

CONDUIT NOTES:

(16) 1"C, 2#8(TDC)

(18) 1"C, 1 SIC

(19) 2"C, CONDUCTORS BY AT&T

POLE AND EQUIPMENT SCHEDULE

LOC	STANDARD TYPE	STANDARD SMA FT	STANDARD LMA FT	PLACEMENT DIMENSIONS A FT	PLACEMENT DIMENSIONS B FT	SIGNAL MOUNTING AND PLACEMENT VEHICLE POLE	VEHICLE MAST ARM	PEDESTRIAN SIGNAL*	PEDESTRIAN PPB	REMARKS
(A)	1-A (10′)	--	--	-10.0′	10.0′	TV-3-T	-----	SP-1-T	Ø6P ←	
(B)	61-5-100	60	15	-9.9′	9.0′	SV-1-T	3-MAS	SP-1-T	Ø2P →	235 W LED, VIVDS
(C)	1-A (10′)	--	--	-28.5′	7.0′	TV-1-T	-----	-----	---	
(D)	15TS	--	15	-5.0′	12.5′	SV-2-TB	-----	SP-1-T	Ø2P ←	235 W LED
(E)	61-5-100	65	15	-0.9′	2.5′	SV-2-TB	3-MAS	SP-1-T	Ø6P ←	235 W LED, VIVDS
(F)	19-4-100	30	15	-25.5′	6.25′	SV-1-T	MAS		---	235 W LED, 2 PEU, VIVDS
(G)	STATE FURNISHED MODEL 170 CONTROLLER ASSEMBLY. FOUNDATION SEE ELECTRICAL DETAILS E-47.									

*ALL PEDESTRIAN MODULES SHALL BE PER RSP ES-4B DETAIL B WITH ACCESSIBLE PEDESTRIAN SIGNAL.

CONDUIT AND CONDUCTOR SCHEDULE

AWG SIZE OR CABLE TYPE	PHASE	POLE OR CIRCUIT	CONDUIT SIZE AND RUN 3" (1)	3" (2)	2-3" (3)	2-3" (4)	2-3" (5)	2-3" (6)	2" (7)	2" (8)	2" (9)	2" (10)	2" (11)	2" (13)	2" (14)	2" (15)
No. 14 CONDUCTORS																
3CSC	Ø5,Ø6,Ø8	POLE - A						2 2								
	Ø2	B			1 1			1 1								
	Ø8	C		1 1				1								
12CSC	Ø2,Ø8	D	1 1	1 1	1 1			1 1								
	Ø6,Ø8	E				1 1	1 1	1 1								
	Ø8	POLE - F					1 1	1 1								
TOTAL	3CSC / 12CSC		1 1	1 2	2 3	1 1	2 2	5 7								
8		LIGHTING	2	2	2	2	2						2			
8		TDC														
6		SIGNAL													2	
14		PEU					4						4			
TYPE B DLC	Ø2		4	4	4			4	4	1						
	Ø8			4	4			4								4
	Ø6							6			6	1				
VIDEO CABLE HARNESS	Ø2/Ø5	POLE - B			1			1								
	Ø6	POLE - E				2		2								
	Ø8	POLE - F					1	1								
EVC					1	1	2	3								
OCC						1	1	1					1			
SIC						1	1	1					1			
TOTAL CONDUCTORS / CABLES			8	14	17	9	15	35	4	1	6	1	2	6	2	4

APPROVED FOR ELECTRICAL WORK ONLY

SIGNAL AND LIGHTING (LOCATION 2)

E-44

REVISED BY | DATE REVISED
JOHN KISSINGER | JON COLLINS
CALCULATED-DESIGNED BY | CHECKED BY
CONSULTANT FUNCTIONAL SUPERVISOR | JON COLLINS
STATE OF CALIFORNIA - DEPARTMENT OF TRANSPORTATION | Caltrans

LAST REVISION | DATE PLOTTED => 23-JUL-2014
07-17-14 | TIME PLOTTED => 14:54

BORDER LAST REVISED 07/02/10 | USERNAME => s127400 | DGN FILE => 1112000102ua044.dgn | RELATIVE BORDER SCALE IS IN INCHES 0 1 2 3 | UNIT 2771 | PROJECT NUMBER & PHASE 11120001021

NOTE:

FOR ACCURATE RIGHT OF WAY DATA,
CONTACT RIGHT OF WAY ENGINEERING
AT THE DISTRICT OFFICE.

Dist	COUNTY	ROUTE	POST MILES TOTAL PROJECT	SHEET No.	TOTAL SHEETS
11	SD	5	R29.1/R30.5	723	1012

05-23-14
REGISTERED CIVIL ENGINEER DATE

07-21-14
PLANS APPROVAL DATE

REGISTERED PROFESSIONAL ENGINEER
JON M. COLLINS
No. C62090
Exp. 09/30/15
CIVIL
STATE OF CALIFORNIA

THE STATE OF CALIFORNIA OR ITS OFFICERS OR AGENTS SHALL NOT BE RESPONSIBLE FOR THE ACCURACY OR COMPLETENESS OF SCANNED COPIES OF THIS PLAN SHEET.

CITY OF SAN DIEGO
525 B STREET
SUITE 7
SAN DIEGO, CA 92101

KIMLEY-HORN AND
ASSOCIATES, INC.
401 B STREET, SUITE 600
SAN DIEGO, CA 92101

SAN DIEGO

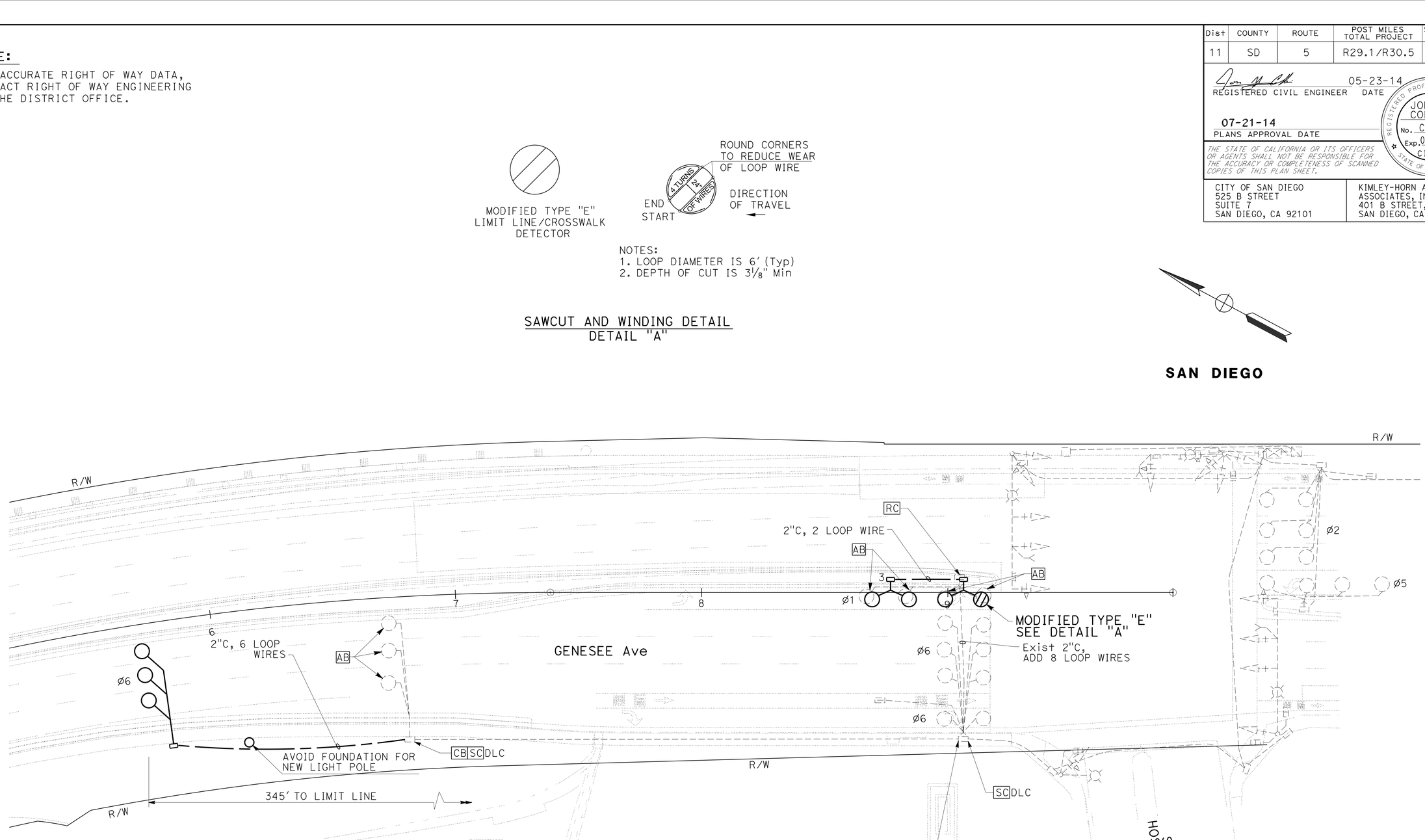

MODIFIED TYPE "E"
LIMIT LINE/CROSSWALK
DETECTOR

NOTES:
1. LOOP DIAMETER IS 6' (Typ)
2. DEPTH OF CUT IS 3⅛" Min

SAWCUT AND WINDING DETAIL
DETAIL "A"

GENESEE Ave - SCRIPPS HOSPITAL Dr

MODIFY SIGNAL AND LIGHTING (CITY STREET- LOCATION 1)

SCALE: 1"=20'

E-45

APPROVED FOR ELECTRICAL WORK ONLY

REVISED BY	DATE REVISED

CALCULATED-DESIGNED BY: JOHN KISSINGER
CHECKED BY: JON COLLINS
CONSULTANT FUNCTIONAL SUPERVISOR: JON COLLINS
STATE OF CALIFORNIA - DEPARTMENT OF TRANSPORTATION
Caltrans

LAST REVISION DATE PLOTTED => 23-JUL-2014
TIME PLOTTED => 14:54
07-17-14

Dist	COUNTY	ROUTE	POST MILES TOTAL PROJECT	SHEET No.	TOTAL SHEETS
11	SD	5	R29.1/R30.5	724	1012

05-23-14
REGISTERED CIVIL ENGINEER DATE

07-21-14
PLANS APPROVAL DATE

REGISTERED PROFESSIONAL ENGINEER
JON M. COLLINS
No. C62090
Exp. 09/30/15
CIVIL
STATE OF CALIFORNIA

THE STATE OF CALIFORNIA OR ITS OFFICERS OR AGENTS SHALL NOT BE RESPONSIBLE FOR THE ACCURACY OR COMPLETENESS OF SCANNED COPIES OF THIS PLAN SHEET.

CITY OF SAN DIEGO
525 B STREET
SUITE 7
SAN DIEGO, CA 92101

KIMLEY-HORN AND ASSOCIATES, INC.
401 B STREET, SUITE 600
SAN DIEGO, CA 92101

NOTE:

FOR ACCURATE RIGHT OF WAY DATA, CONTACT RIGHT OF WAY ENGINEERING AT THE DISTRICT OFFICE.

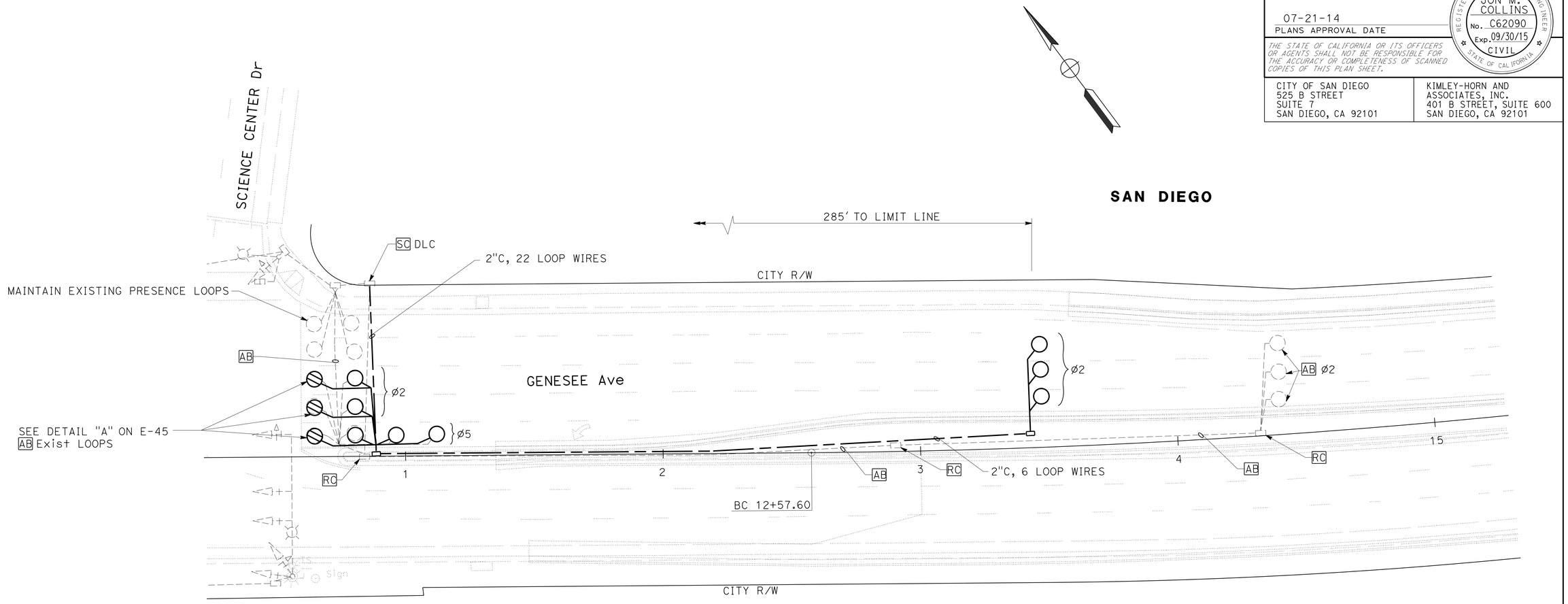

(GENESEE Ave - SCIENCE CENTER Dr)

APPROVED FOR ELECTRICAL WORK ONLY

MODIFY SIGNAL AND LIGHTING (CITY STREET - LOCATION 2)

SCALE: 1"=20'

E-46

STATE OF CALIFORNIA - DEPARTMENT OF TRANSPORTATION
Caltrans

CONSULTANT FUNCTIONAL SUPERVISOR: JON COLLINS

CALCULATED-DESIGNED BY: JOHN KISSINGER
CHECKED BY: JON COLLINS

REVISED BY
DATE REVISED

LAST REVISION: DATE PLOTTED => 23-JUL-2014
07-17-14 TIME PLOTTED => 14:54

BORDER LAST REVISED 07/02/10

USERNAME => s127400
DGN FILE => 1112000102ua046.dgn

RELATIVE BORDER SCALE IS IN INCHES 0 1 2 3

UNIT 2771

PROJECT NUMBER & PHASE 11120001021

Dist	COUNTY	ROUTE	POST MILES TOTAL PROJECT	SHEET No.	TOTAL SHEETS
11	SD	5	R29.1/R30.5	725	1012

REGISTERED CIVIL ENGINEER — 05-23-14 DATE

PLANS APPROVAL DATE — 07-21-14

JON M. COLLINS No. C62090 Exp. 09/30/15 CIVIL — REGISTERED PROFESSIONAL ENGINEER — STATE OF CALIFORNIA

THE STATE OF CALIFORNIA OR ITS OFFICERS OR AGENTS SHALL NOT BE RESPONSIBLE FOR THE ACCURACY OR COMPLETENESS OF SCANNED COPIES OF THIS PLAN SHEET.

CITY OF SAN DIEGO
525 B STREET
SUITE 7
SAN DIEGO, CA 92101

KIMLEY-HORN AND ASSOCIATES, INC.
401 B STREET, SUITE 600
SAN DIEGO, CA 92101

NOTES:

1. THE EXTERNAL BBS CABINET SHALL BE MOUNTED TO THE MODEL 332 OR 334 CABINET WITH FOUR 18-8 STAINLESS STEEL HEX HEAD, FULLY-THREADED, ⅜"-16 X 1" BOLTS; TWO WASHERS PER BOLT, DESIGNED FOR ⅜" BOLTS AND ARE 18-8 STAINLESS STEEL, 1" OUTSIDE DIAMETER, ROUND, AND FLAT; AND ONE K-LOCK NUT PER BOLT THAT IS 18-8 STAINLESS STEEL AND A HEX-NUT. THE ENGINEER WILL HAVE TO APPROVE THE BOLT MOUNTING LOCATION PRIOR TO INSTALLATION.
2. THE ANCHOR BOLTS SHALL BE ¾" Dia X 15" WITH A 2"-90° BEND. THE CABINET MANUFACTURER'S SPECIFICATION SHALL DETERMINE THE LOCATION OF THE ANCHOR BOLTS IN THE FOUNDATION. THE ENGINEER WILL HAVE TO APPROVE THE ANCHOR BOLTS AND ITS LOCATION IN THE FOUNDATION PRIOR TO CONSTRUCTION.
3. THE CONTRACTOR SHALL VERIFY THE DIMENSIONS OF THE BBS CABINET PRIOR TO CONSTRUCTING THE FOUNDATION OF THE MODIFIED PORTION OF THE Std MODEL 332 AND 334 CABINET FOUNDATION. THE ENGINEER WILL HAVE TO APPROVE ANY NECESSARY DEVIATIONS PRIOR TO CONSTRUCTION.
4. ALL DIMENSIONS ARE NOMINAL.

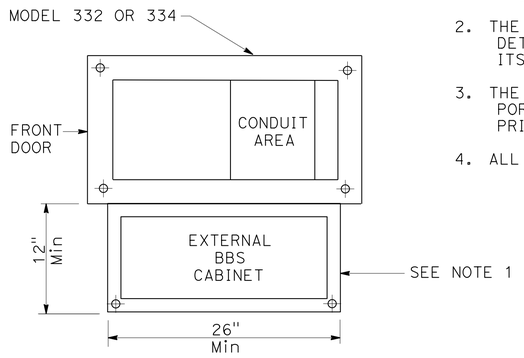

BASE PLAN FOR BBS MOUNTED TO THE MODEL 332 OR 334 CABINET

(FOR DIMENSIONS AND DETAILS NOT SHOWN, SEE SHEET A6-1 TO A6-4, CABINET HOUSING DETAILS OF THE TRANSPORTATION ELECTRICAL EQUIPMENT SPECIFICATION (TEES))

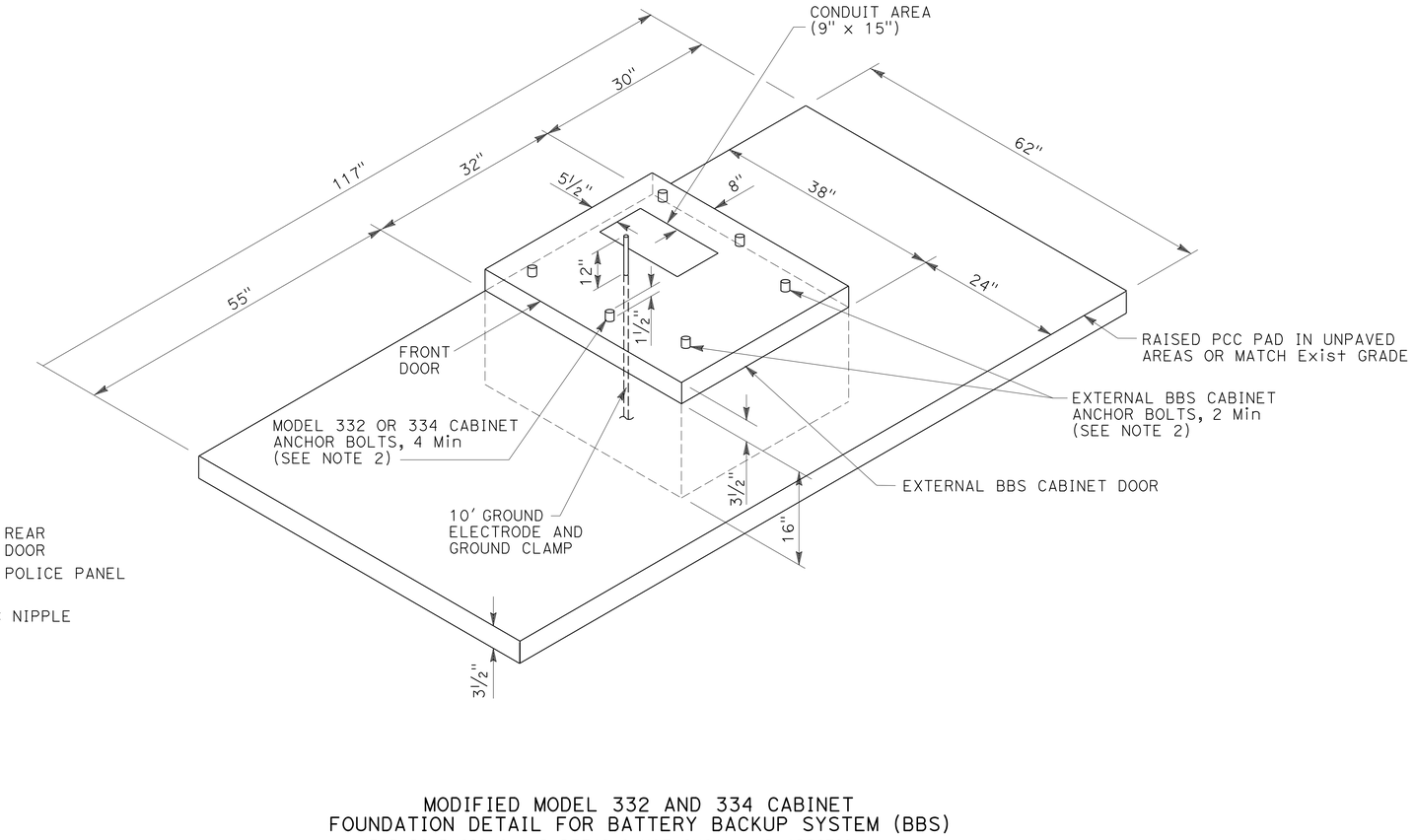

MODIFIED MODEL 332 AND 334 CABINET FOUNDATION DETAIL FOR BATTERY BACKUP SYSTEM (BBS)

(FOR DIMENSIONS AND DETAILS NOT SHOWN AND ADDITIONAL NOTES, SEE Std PLANS ES-3C FOR MODEL 332 AND 334 CABINETS)

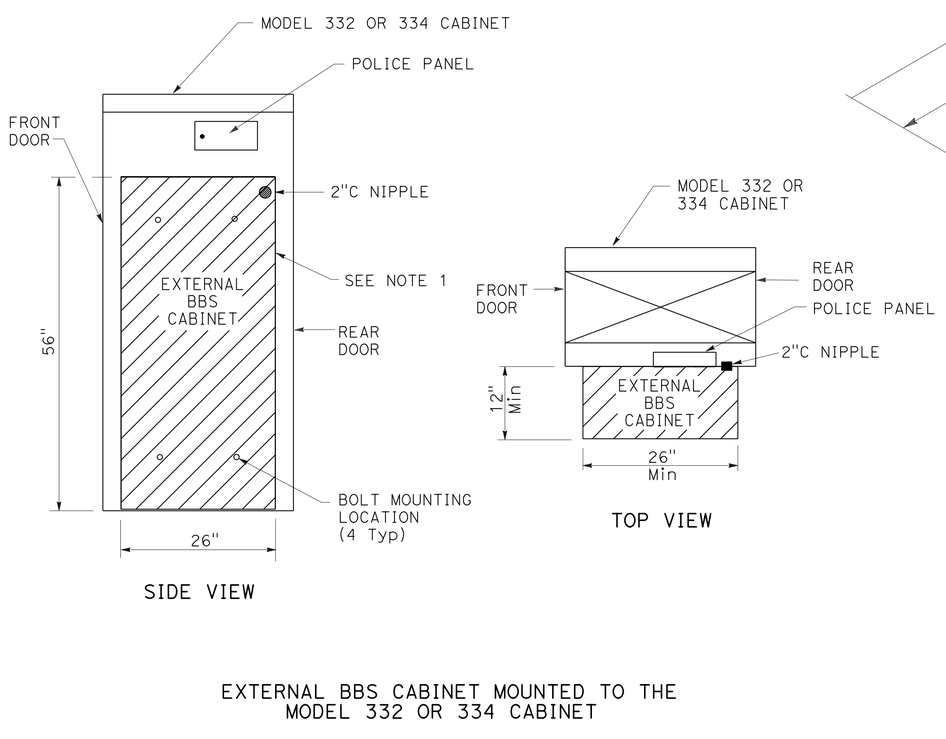

EXTERNAL BBS CABINET MOUNTED TO THE MODEL 332 OR 334 CABINET

APPROVED FOR ELECTRICAL WORK ONLY

NO SCALE

SIGNAL AND LIGHTING (ELECTRICAL DETAILS)

E-47

STATE OF CALIFORNIA - DEPARTMENT OF TRANSPORTATION — Caltrans

CONSULTANT FUNCTIONAL SUPERVISOR: JON COLLINS

CALCULATED-DESIGNED BY: JON COLLINS — CHECKED BY: JOHN KISSINGER

REVISED BY — DATE REVISED

LAST REVISION | DATE PLOTTED => 23-JUL-2014 | 07-17-14 | TIME PLOTTED => 14:54

BORDER LAST REVISED 07/02/10 | USERNAME => s127400 | DGN FILE => 11120001021ua047.dgn | RELATIVE BORDER SCALE IS IN INCHES 0 1 2 3 | UNIT 2771 | PROJECT NUMBER & PHASE 11120001021

Dist	COUNTY	ROUTE	POST MILES TOTAL PROJECT	SHEET No.	TOTAL SHEETS
11	SD	5	R29.1/R30.5	726	1012

05-23-14
REGISTERED CIVIL ENGINEER DATE

JON M. COLLINS No. C62090 Exp. 09/30/15 CIVIL — REGISTERED PROFESSIONAL ENGINEER — STATE OF CALIFORNIA

07-21-14
PLANS APPROVAL DATE

THE STATE OF CALIFORNIA OR ITS OFFICERS OR AGENTS SHALL NOT BE RESPONSIBLE FOR THE ACCURACY OR COMPLETENESS OF SCANNED COPIES OF THIS PLAN SHEET.

CITY OF SAN DIEGO
525 B STREET
SUITE 7
SAN DIEGO, CA 92101

KIMLEY-HORN AND ASSOCIATES, INC.
401 B STREET, SUITE 600
SAN DIEGO, CA 92101

NOTES:

1 STATE-FURNISHED MODEL 2070 CONTROLLER ASSEMBLY. CONSTRUCT FOUNDATION PER Std PLAN ES-3C.

2 DETAIL "A" RAMP METER SIGNAL SHALL BE LOCATED 4'-0" FROM EDGE OF Shld AND 1'-0" DOWNSTREAM OF THE LIMIT LINE.

3 SEE SHEET E-21 FOR CLOSED CIRCUIT TELEVISION SYSTEM.

4- SEE SHEETS E-53 THROUGH E-55 FOR RAMP METERING SYSTEM DETAILS.

5- PULL BOXES ARE TYPE 6(T) UNLESS OTHERWISE SHOWN.

6- FOR ACCURATE RIGHT OF WAY DATA, CONTACT RIGHT OF WAY ENGINEERING AT THE DISTRICT OFFICE.

CONDUIT NOTES:

10 2"C, 2#8(L+g)

11 2"C, 2#14(FB), 10DLC

12 2"C, 2#2(RM), 2#8(L+g)

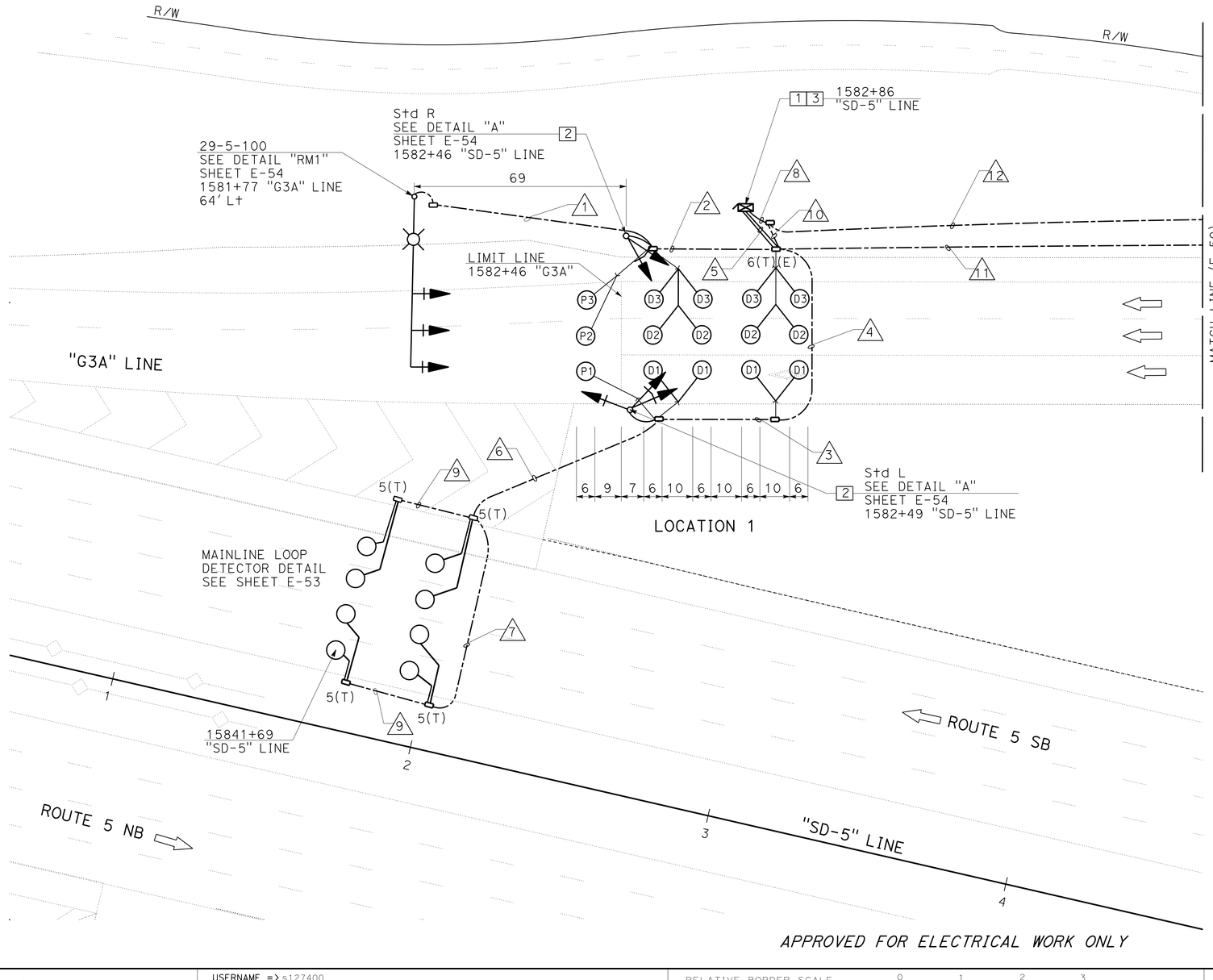

SAN DIEGO

CONDUIT AND CONDUCTOR SCHEDULE

CABLE/ AWG SIZE	CIRCUIT ID	CONDUIT SIZE AND RUN No								
		2" 1	3" 2	3" 3	3" 4	2-3" 5	3" 6	2" 7	2" 8	2" 9
2	RM POWER								2	
8	LIGHTING	2	2							
14	FB					2				
12 CSC	STD M	2	2			2				
9 CSC	STD L OR R		1	1	1	2				
DLC	LOOP WIRES		8	4				8		4
	DETECTORS ML			8	8	8	8			
	D				1	3				
	P		2	1	1	3				
	Q					6				
	OR					4				
12FO	REFER TO SHEET E-21 FOR CLOSED CIRCUIT TELEVISION SYSTEM.									
TOTAL CONDUCTORS/CABLES		4	15	14	11	30	8	8	2	4

Z29.356
GENESEE Ave SB ON-RAMP

RAMP METERING SYSTEM (LOCATION 1)

SCALE: 1"=20'

E-48

REVISED BY | DATE REVISED
JOHN KISSINGER | JON COLLINS
CALCULATED-DESIGNED BY | CHECKED BY
CONSULTANT FUNCTIONAL SUPERVISOR
JON COLLINS
STATE OF CALIFORNIA - DEPARTMENT OF TRANSPORTATION
Caltrans

LAST REVISION | DATE PLOTTED => 23-JUL-2014
07-17-14 | TIME PLOTTED => 14:54

BORDER LAST REVISED 07/02/10
USERNAME => s127400
DGN FILE => 1112000102ua048.dgn
RELATIVE BORDER SCALE IS IN INCHES 0 1 2 3
UNIT 2771
PROJECT NUMBER & PHASE 11120001021

Dist	COUNTY	ROUTE	POST MILES TOTAL PROJECT	SHEET No.	TOTAL SHEETS
11	SD	5	R29.1/R30.5	727	1012

05-23-14
REGISTERED CIVIL ENGINEER DATE

JON M. COLLINS No. C62090 Exp. 09/30/15 CIVIL — REGISTERED PROFESSIONAL ENGINEER — STATE OF CALIFORNIA

07-21-14
PLANS APPROVAL DATE

THE STATE OF CALIFORNIA OR ITS OFFICERS OR AGENTS SHALL NOT BE RESPONSIBLE FOR THE ACCURACY OR COMPLETENESS OF SCANNED COPIES OF THIS PLAN SHEET.

CITY OF SAN DIEGO
525 B STREET
SUITE 7
SAN DIEGO, CA 92101

KIMLEY-HORN AND ASSOCIATES, INC.
401 B STREET, SUITE 600
SAN DIEGO, CA 92101

SAN DIEGO

NOTES:

[1] STATE-FURNISHED MODEL 2070 CONTROLLER ASSEMBLY. CONSTRUCT FOUNDATION PER Std PLAN ES-3C.

[2] DETAIL "A" RAMP METER SIGNAL SHALL BE LOCATED DOWNSTREAM OF THE LIMIT LINE AT THE STATION SHOWN.

[3] SEE SHEET E-23 FOR CLOSED CIRCUIT TELEVISION SYSTEM.

4- SEE SHEETS E-53 THROUGH E-56 FOR RAMP METERING SYSTEM DETAILS.

5- PULL BOXES ARE TYPE 6(T) UNLESS OTHERWISE SHOWN.

6- FOR ACCURATE RIGHT OF WAY DATA, CONTACT RIGHT OF WAY ENGINEERING AT THE DISTRICT OFFICE.

CONDUIT NOTES:

(11) 3"C, 2#14(FB), 13DLC

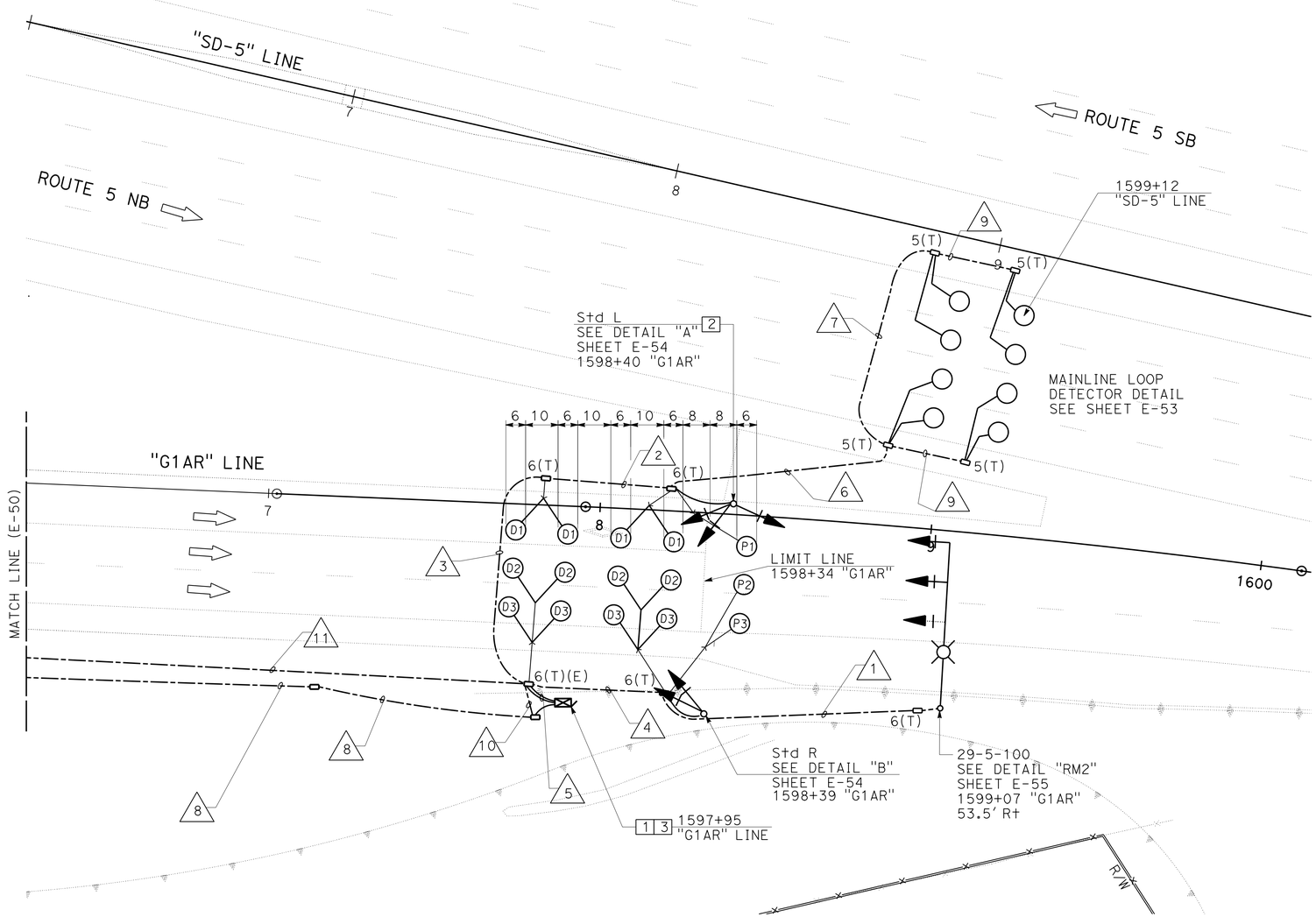

CONDUIT AND CONDUCTOR SCHEDULE

CABLE/ AWG SIZE	CIRCUIT ID	CONDUIT SIZE AND RUN No									
		2" (1)	3" (2)	3" (3)	3" (4)	2-3" (5)	3" (6)	2" (7)	2" (8)	2" (9)	2" (10)
2	RM POWER								2		
8	LIGHTING	2			2				2		2
14	FB					2					
12 CSC	STD M	2			2	2					
9 CSC	STD L OR R		1	1	1	2					
DLC	LOOP WIRES		4		8			8		4	
	DETECTORS ML		8	8		8	8				
	D			1		3					
	P		1	1	2	3					
	Q					9					
	OR					4					
12FO	REFER TO SHEET E-23 FOR CLOSED CIRCUIT TELEVISION SYSTEM.										
TOTAL CONDUCTORS/CABLES		4	14	11	15	33	8	8	4	4	2

APPROVED FOR ELECTRICAL WORK ONLY

Z29.643
GENESEE Ave ON-RAMP

RAMP METERING SYSTEM (LOCATION 2)

SCALE: 1"=20'

E-49

REVISED BY | DATE REVISED
JOHN KISSINGER | JON COLLINS
CALCULATED-DESIGNED BY | CHECKED BY
CONSULTANT FUNCTIONAL SUPERVISOR: JON COLLINS
STATE OF CALIFORNIA - DEPARTMENT OF TRANSPORTATION
Caltrans

LAST REVISION | DATE PLOTTED => 23-JUL-2014
07-17-14 | TIME PLOTTED => 14:54

BORDER LAST REVISED 07/02/10 | USERNAME => s127400 | DGN FILE => 1112000102ua049.dgn | RELATIVE BORDER SCALE IS IN INCHES 0 1 2 3 | UNIT 2771 | PROJECT NUMBER & PHASE 11120001021

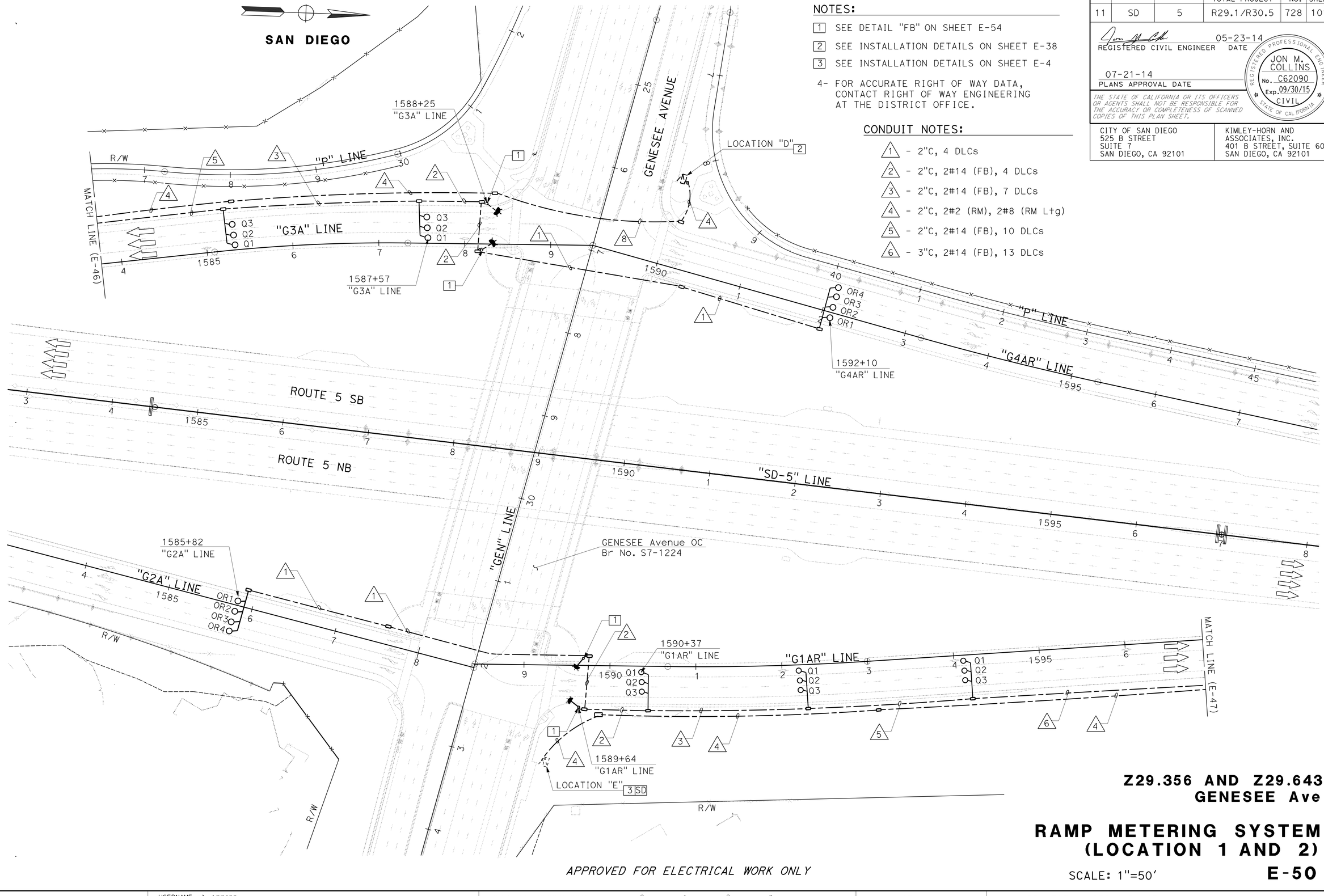

NOTES:

1. SEE DETAIL "FB" ON SHEET E-54
2. SEE INSTALLATION DETAILS ON SHEET E-38
3. SEE INSTALLATION DETAILS ON SHEET E-4
4. FOR ACCURATE RIGHT OF WAY DATA, CONTACT RIGHT OF WAY ENGINEERING AT THE DISTRICT OFFICE.

CONDUIT NOTES:

1. - 2"C, 4 DLCs
2. - 2"C, 2#14 (FB), 4 DLCs
3. - 2"C, 2#14 (FB), 7 DLCs
4. - 2"C, 2#2 (RM), 2#8 (RM L+g)
5. - 2"C, 2#14 (FB), 10 DLCs
6. - 3"C, 2#14 (FB), 13 DLCs

Dist	COUNTY	ROUTE	POST MILES TOTAL PROJECT	SHEET No.	TOTAL SHEETS
11	SD	5	R29.1/R30.5	728	1012

REGISTERED CIVIL ENGINEER — DATE: 05-23-14

JON M. COLLINS No. C62090 Exp. 09/30/15 CIVIL — REGISTERED PROFESSIONAL ENGINEER — STATE OF CALIFORNIA

PLANS APPROVAL DATE: 07-21-14

THE STATE OF CALIFORNIA OR ITS OFFICERS OR AGENTS SHALL NOT BE RESPONSIBLE FOR THE ACCURACY OR COMPLETENESS OF SCANNED COPIES OF THIS PLAN SHEET.

CITY OF SAN DIEGO
525 B STREET
SUITE 7
SAN DIEGO, CA 92101

KIMLEY-HORN AND ASSOCIATES, INC.
401 B STREET, SUITE 600
SAN DIEGO, CA 92101

APPROVED FOR ELECTRICAL WORK ONLY

Z29.356 AND Z29.643
GENESEE Ave

RAMP METERING SYSTEM (LOCATION 1 AND 2)

SCALE: 1"=50'

E-50

REVISED BY: JOHN KISSINGER
DATE REVISED:
CALCULATED-DESIGNED BY:
CHECKED BY:
CONSULTANT FUNCTIONAL SUPERVISOR: JON COLLINS
STATE OF CALIFORNIA - DEPARTMENT OF TRANSPORTATION
Caltrans

LAST REVISION: DATE PLOTTED => 23-JUL-2014 07-17-14 TIME PLOTTED => 14:54

BORDER LAST REVISED 07/02/10 | USERNAME => s127400 | DGN FILE => 1112000102ua050.dgn | RELATIVE BORDER SCALE IS IN INCHES 0 1 2 3 | UNIT 2771 | PROJECT NUMBER & PHASE 11120001021

Dist	COUNTY	ROUTE	POST MILES TOTAL PROJECT	SHEET No.	TOTAL SHEETS
11	SD	5	R29.1/R30.5	729	1012

05-23-14
REGISTERED CIVIL ENGINEER DATE

07-21-14
PLANS APPROVAL DATE

REGISTERED PROFESSIONAL ENGINEER
JON M. COLLINS
No. C62090
Exp. 09/30/15
CIVIL
STATE OF CALIFORNIA

THE STATE OF CALIFORNIA OR ITS OFFICERS OR AGENTS SHALL NOT BE RESPONSIBLE FOR THE ACCURACY OR COMPLETENESS OF SCANNED COPIES OF THIS PLAN SHEET.

SAN DIEGO

CITY OF SAN DIEGO
525 B STREET
SUITE 7
SAN DIEGO, CA 92101

KIMLEY-HORN AND ASSOCIATES, INC.
401 B STREET, SUITE 600
SAN DIEGO, CA 92101

NOTES:

1 STATE-FURNISHED MODEL 2070 CONTROLLER ASSEMBLY. CONSTRUCT FOUNDATION PER Std PLAN ES-3C.

2 DETAIL "A" RAMP METER SIGNAL SHALL BE LOCATED AT THE STATION SHOWN.

3 SEE SHEET E-25 FOR CLOSED CIRCUIT TELEVISION SYSTEM.

4 INSTALL PHOTOELECTRIC CONTROLS TYPE II, PER STANDARD SPECIFICATIONS.

5- SEE SHEETS E-53 THROUGH E-55 FOR RAMP METERING SYSTEM DETAILS.

6- PULL BOXES ARE TYPE 6(T) UNLESS OTHERWISE SHOWN.

7- FOR ACCURATE RIGHT OF WAY DATA, CONTACT RIGHT OF WAY ENGINEERING AT THE DISTRICT OFFICE.

CONDUIT NOTES:

10 2"C, 2#2(RM)

11 2"C, 2#8(L+g), 3#8(PEU)

12 2"C, 2#14(FB), 9DLC

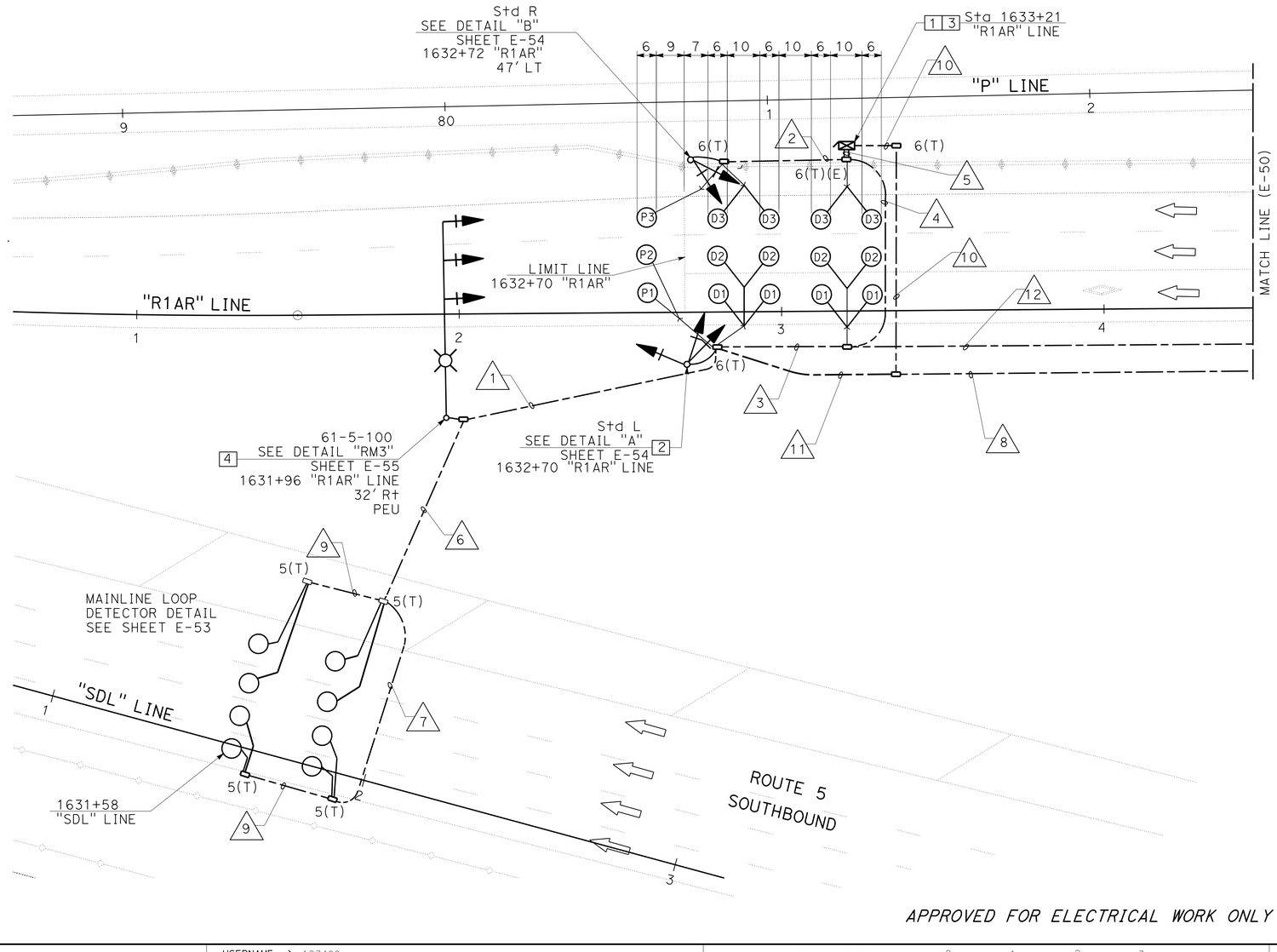

CONDUIT AND CONDUCTOR SCHEDULE

CABLE/ AWG SIZE	CIRCUIT ID	CONDUIT SIZE AND RUN No 3" 1	3" 2	3" 3	3" 4	2-3" 5	3" 6	2" 7	2" 8	2" 9
2	RM POWER								2	
8	LIGHTING	2							2	
14	FB				2	2				
8	PEU	3							3	
12 CSC	STD M	2		2	2	2				
9 CSC	STD L OR R		1	1	1	2				
DLC	LOOP WIRES		4	8				8		4
	DETECTORS ML	8			8	8	8			
	D				2	3				
	P		1	2	2	3				
	Q				9	9				
	OR									
12FO	REFER TO SHEET E-25 FOR CLOSED CIRCUIT TELEVISION SYSTEM.									
TOTAL CONDUCTORS/CABLES		15	6	13	26	29	8	8	7	6

APPROVED FOR ELECTRICAL WORK ONLY

Z30.324
ROSELLE St SB ON-RAMP

RAMP METERING SYSTEM (LOCATION 3)

SCALE: 1"=20'

E-51

REVISED BY | DATE REVISED
CALCULATED-DESIGNED BY: JOHN KISSINGER
CHECKED BY: JON COLLINS
CONSULTANT FUNCTIONAL SUPERVISOR: JON COLLINS
STATE OF CALIFORNIA - DEPARTMENT OF TRANSPORTATION
Caltrans

LAST REVISION | DATE PLOTTED => 23-JUL-2014
07-17-14 | TIME PLOTTED => 14:54

BORDER LAST REVISED 07/02/10
USERNAME => s127400
DGN FILE => 1112000102ua051.dgn
RELATIVE BORDER SCALE IS IN INCHES 0 1 2 3
UNIT 2771
PROJECT NUMBER & PHASE 11120001021

Dist	COUNTY	ROUTE	POST MILES TOTAL PROJECT	SHEET No.	TOTAL SHEETS
11	SD	5	R29.1/R30.5	730	1012

05-23-14
REGISTERED CIVIL ENGINEER DATE

07-21-14
PLANS APPROVAL DATE

REGISTERED PROFESSIONAL ENGINEER
JON M. COLLINS
No. C62090
Exp. 09/30/15
CIVIL
STATE OF CALIFORNIA

THE STATE OF CALIFORNIA OR ITS OFFICERS OR AGENTS SHALL NOT BE RESPONSIBLE FOR THE ACCURACY OR COMPLETENESS OF SCANNED COPIES OF THIS PLAN SHEET.

CITY OF SAN DIEGO
525 B STREET
SUITE 7
SAN DIEGO, CA 92101

KIMLEY-HORN AND ASSOCIATES, INC.
401 B STREET, SUITE 600
SAN DIEGO, CA 92101

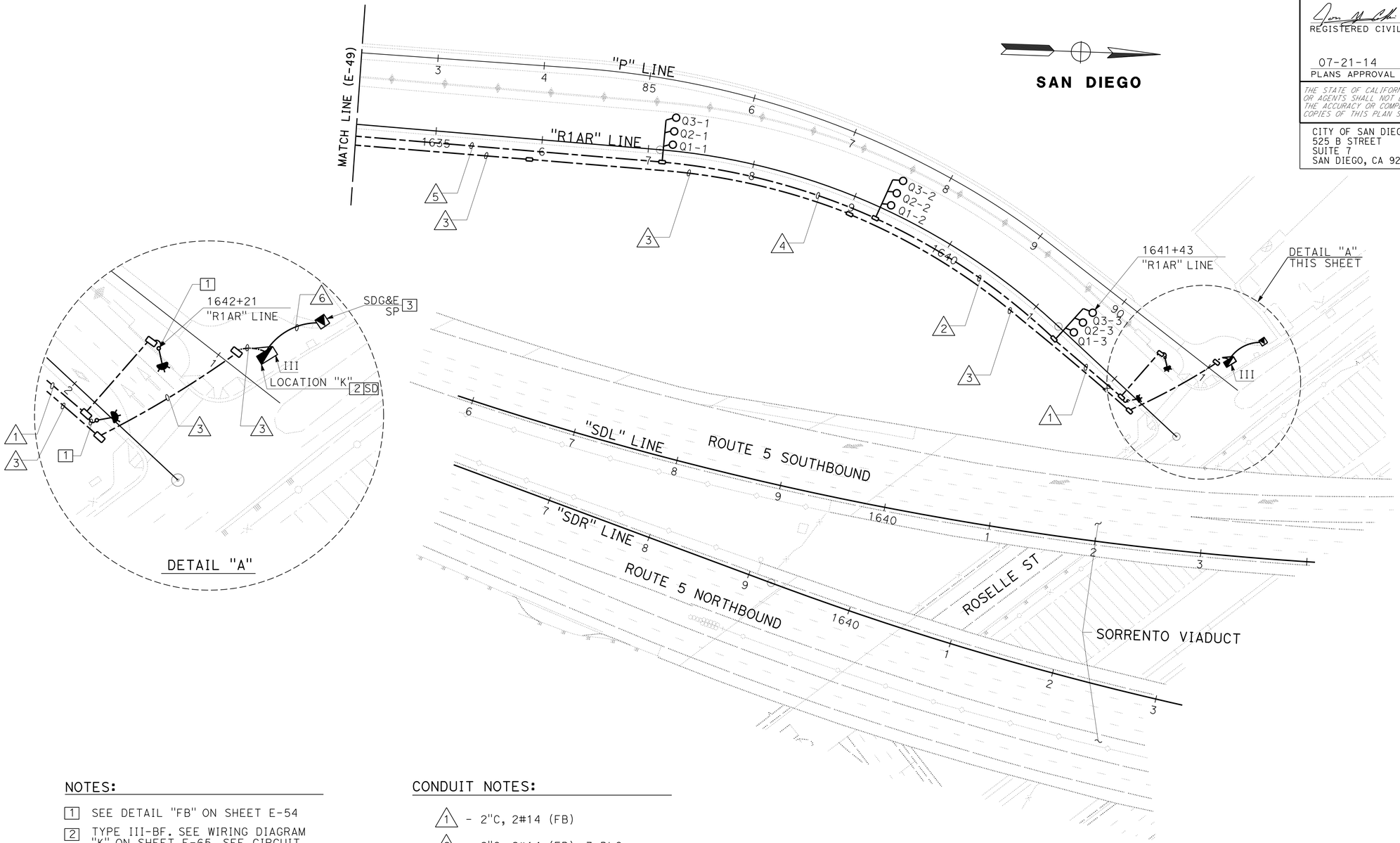

NOTES:

1 SEE DETAIL "FB" ON SHEET E-54

2 TYPE III-BF. SEE WIRING DIAGRAM "K" ON SHEET E-65. SEE CIRCUIT DIAGRAM ON SHEET E-13.

3 CONDUIT TO ENTER PER SDG&E REQUIREMENTS.

4- FOR ACCURATE RIGHT OF WAY DATA, CONTACT RIGHT OF WAY ENGINEERING AT THE DISTRICT OFFICE.

CONDUIT NOTES:

1 - 2"C, 2#14 (FB)

2 - 2"C, 2#14 (FB), 3 DLC

3 - 2"C, 2#2 (RM), 2#8 (L+g), 3#8 (PEU)

4 - 2"C, 2#14 (FB), 6 DLC

5 - 3"C, 2#14 (FB), 9 DLC

6 - 2"C, CONDUCTORS PER SDG&E REQUIREMENTS

APPROVED FOR ELECTRICAL WORK ONLY

Z30.324
ROSELLE St SB ON-RAMP

RAMP METERING SYSTEM (LOCATION 3)

SCALE: 1"=50'

E-52

LAST REVISION DATE PLOTTED => 23-JUL-2014
LAST REVISION TIME PLOTTED => 14:54
07-17-14

REVISED BY | DATE REVISED
JOHN KISSINGER | JON COLLINS
CALCULATED-DESIGNED BY | CHECKED BY
CONSULTANT FUNCTIONAL SUPERVISOR | JON COLLINS
STATE OF CALIFORNIA - DEPARTMENT OF TRANSPORTATION | Caltrans

Dist	COUNTY	ROUTE	POST MILES TOTAL PROJECT	SHEET No.	TOTAL SHEETS
11	SD	5	R29.1/R30.5	731	1012

05-23-14
REGISTERED CIVIL ENGINEER DATE

JON M. COLLINS No. C62090 Exp. 09/30/15 CIVIL — REGISTERED PROFESSIONAL ENGINEER — STATE OF CALIFORNIA

07-21-14
PLANS APPROVAL DATE

THE STATE OF CALIFORNIA OR ITS OFFICERS OR AGENTS SHALL NOT BE RESPONSIBLE FOR THE ACCURACY OR COMPLETENESS OF SCANNED COPIES OF THIS PLAN SHEET.

CITY OF SAN DIEGO
525 B STREET
SUITE 7
SAN DIEGO, CA 92101

KIMLEY-HORN AND ASSOCIATES, INC.
401 B STREET, SUITE 600
SAN DIEGO, CA 92101

NOTE:

ALL LOOP DETECTORS SHALL BE INSTALLED IN THE CENTER OF THE LANE BASED ON THE FINAL STRIPING PLAN.

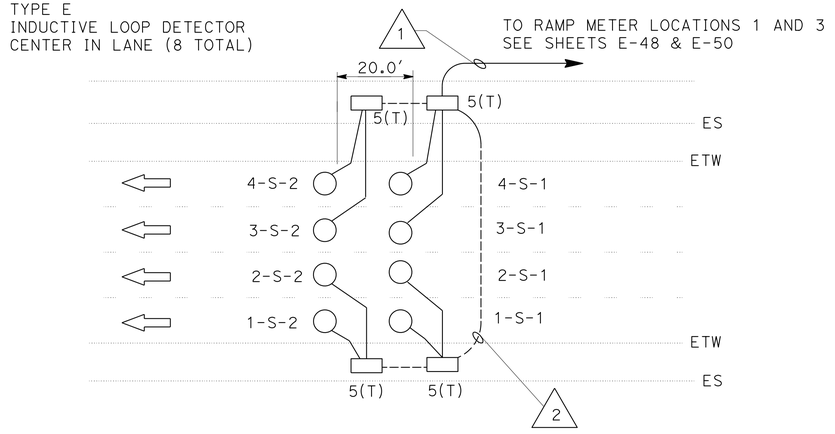

MAINLINE LOOP DETECTOR DETAIL
SOUTHBOUND (LOCATIONS 1 AND 3)

CONDUIT NOTES:

NORTHBOUND AND SOUTHBOUND MAINLINE

1. 2"C, 8 DLC
2. 3"C, 8 LOOP WIRES

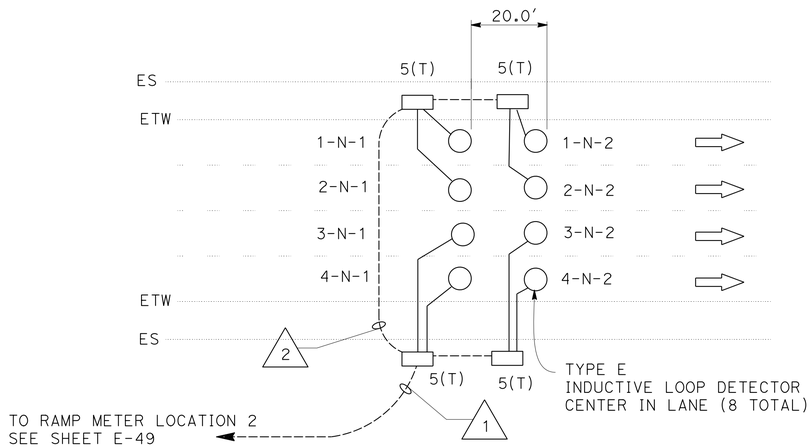

MAINLINE LOOP DETECTOR DETAIL
NORTHBOUND (LOCATION 2)

NUMBER OF LANES FROM LEFT WITH RESPECT TO DIRECTION OF TRAFFIC:
- 1= FIRST LANE FROM LEFT
- 2= SECOND LANE FROM LEFT
- 3= THIRD LANE FROM LEFT
- 4= FOURTH LANE FROM LEFT

FREEWAY MAINLINE DETECTOR DESIGNATION:
- N= NORTHBOUND LANES (NB)
- S= SOUTHBOUND LANES (SB)

NUMBER OF DETECTOR IN THE SAME LANE:
- 1= ENTERING DETECTOR
- 2= LEAVING DETECTOR

4-N-1

MAINLINE LOOP DETECTOR IDENTIFICATION

APPROVED FOR ELECTRICAL WORK ONLY

RAMP METERING SYSTEM (ELECTRICAL DETAILS)

NO SCALE

E-53

STATE OF CALIFORNIA - DEPARTMENT OF TRANSPORTATION
Caltrans
CONSULTANT FUNCTIONAL SUPERVISOR: JON COLLINS
CALCULATED-DESIGNED BY: JOHN KISSINGER
CHECKED BY: JON COLLINS
REVISED BY
DATE REVISED

LAST REVISION | DATE PLOTTED => 23-JUL-2014 | TIME PLOTTED => 14:54 | 07-17-14

BORDER LAST REVISED 07/02/10
USERNAME => s127400
DGN FILE => 1112000102ua053.dgn
RELATIVE BORDER SCALE IS IN INCHES 0 1 2 3
UNIT 2771
PROJECT NUMBER & PHASE 11120001021

Dist	COUNTY	ROUTE	POST MILES TOTAL PROJECT	SHEET No.	TOTAL SHEETS
11	SD	5	R29.1/R30.5	732	1012

05-23-14
REGISTERED CIVIL ENGINEER DATE

07-21-14
PLANS APPROVAL DATE

REGISTERED PROFESSIONAL ENGINEER
JON M. COLLINS
No. C62090
Exp. 09/30/15
CIVIL
STATE OF CALIFORNIA

THE STATE OF CALIFORNIA OR ITS OFFICERS OR AGENTS SHALL NOT BE RESPONSIBLE FOR THE ACCURACY OR COMPLETENESS OF SCANNED COPIES OF THIS PLAN SHEET.

CITY OF SAN DIEGO
525 B STREET
SUITE 7
SAN DIEGO, CA 92101

KIMLEY-HORN AND ASSOCIATES, INC.
401 B STREET, SUITE 600
SAN DIEGO, CA 92101

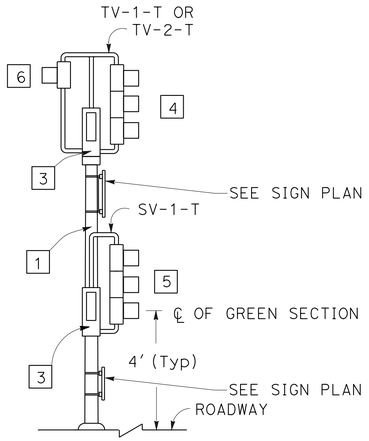

DETAIL "A"

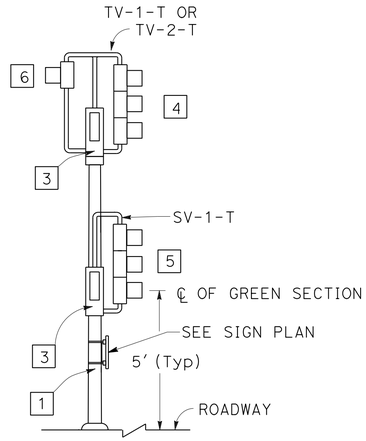

DETAIL "B"

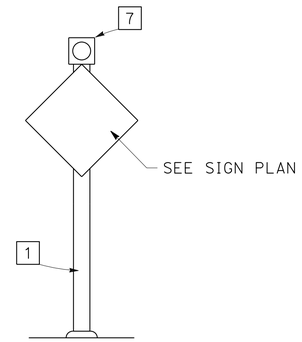

DETAIL "FB"

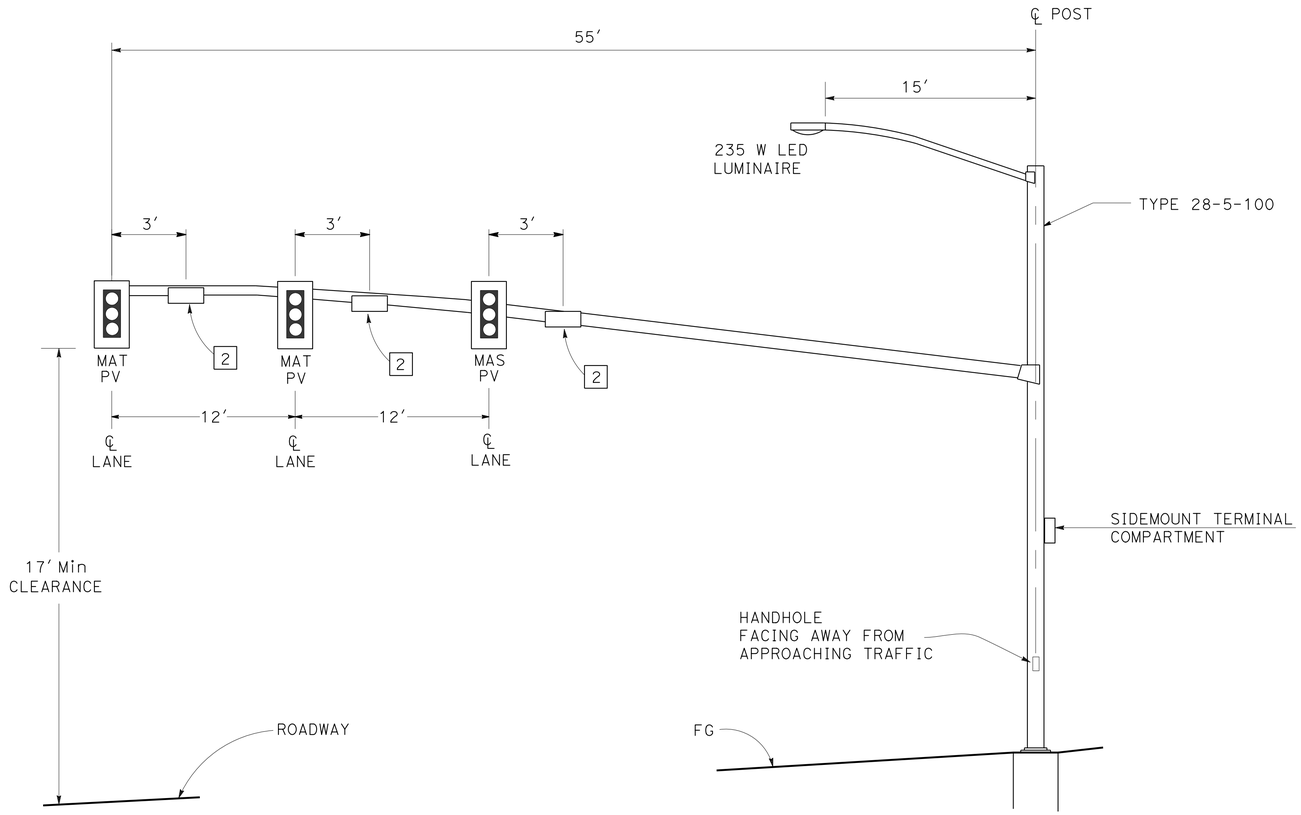

DETAIL "RM1"
LOCATION 1
SEE RSP ES-7F FOR DETAILS NOT SHOWN

NOTES:

1 - TYPE 1-A (10′) SIGNAL AND LIGHTING Std ES-7B.

2 - DETAIL "U" ON RSP ES-7N, SEE SIGN PLAN.

3 - PLACE TERMINAL COMPARTMENT ON SIDE OF POLE AWAY FROM METERED TRAFFIC.

4 - THREE SECTION SIGNAL HEAD, 12" RED, YELLOW AND GREEN. BACKPLATE REQUIRED.

5 - TWO OR THREE SECTION SIGNAL HEAD, AS SHOWN ON THE PLANS. BACKPLATE NOT REQUIRED. ALL SECTIONS SHALL BE 8".

6 - ONE SECTION RED SIGNAL HEAD WITH 8" RED WHEN SHOWN ON PLAN.

7 - TOP MOUNTED ONE SECTION HEAD WITH 8" YELLOW. BACKPLATE NOT REQUIRED.

APPROVED FOR ELECTRICAL WORK ONLY

RAMP METERING SYSTEM (ELECTRICAL DETAILS)

NO SCALE

E-54

LAST REVISION DATE PLOTTED => 23-JUL-2014
07-17-14 TIME PLOTTED => 14:55

REVISED BY | DATE REVISED
JOHN KISSINGER | JON COLLINS
CALCULATED-DESIGNED BY | CHECKED BY
CONSULTANT FUNCTIONAL SUPERVISOR: JON COLLINS
STATE OF CALIFORNIA - DEPARTMENT OF TRANSPORTATION
Caltrans

BORDER LAST REVISED 07/02/10 | USERNAME => s127400 | DGN FILE => 1112000102ua054.dgn | RELATIVE BORDER SCALE IS IN INCHES 0 1 2 3 | UNIT 2771 | PROJECT NUMBER & PHASE 11120001021

Dist	COUNTY	ROUTE	POST MILES TOTAL PROJECT	SHEET No.	TOTAL SHEETS
11	SD	5	R29.1/R30.5	733	1012

05-23-14
REGISTERED CIVIL ENGINEER DATE

JON M. COLLINS
No. C62090
Exp. 09/30/15
CIVIL
REGISTERED PROFESSIONAL ENGINEER
STATE OF CALIFORNIA

07-21-14
PLANS APPROVAL DATE

THE STATE OF CALIFORNIA OR ITS OFFICERS OR AGENTS SHALL NOT BE RESPONSIBLE FOR THE ACCURACY OR COMPLETENESS OF SCANNED COPIES OF THIS PLAN SHEET.

CITY OF SAN DIEGO
525 B STREET
SUITE 7
SAN DIEGO, CA 92101

KIMLEY-HORN AND ASSOCIATES, INC.
401 B STREET, SUITE 600
SAN DIEGO, CA 92101

NOTE:

1 - DETAIL "U" ON RSP ES-7N, SEE SIGN PLAN.

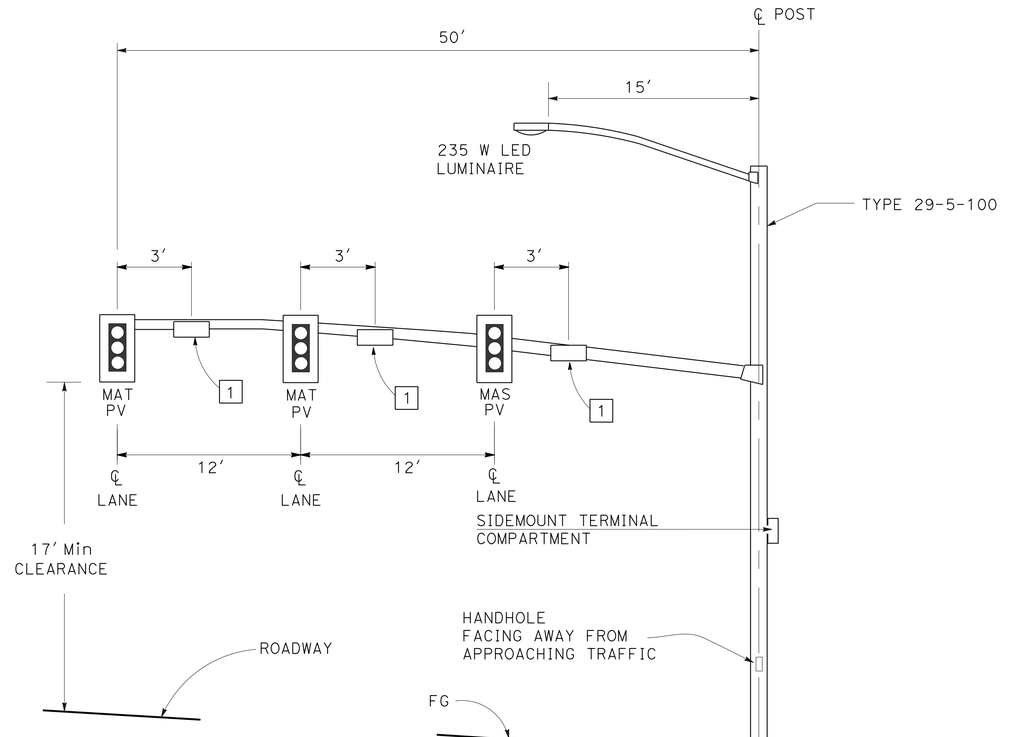

DETAIL "RM2"
LOCATION 2
SEE RSP ES-7G FOR DETAILS NOT SHOWN

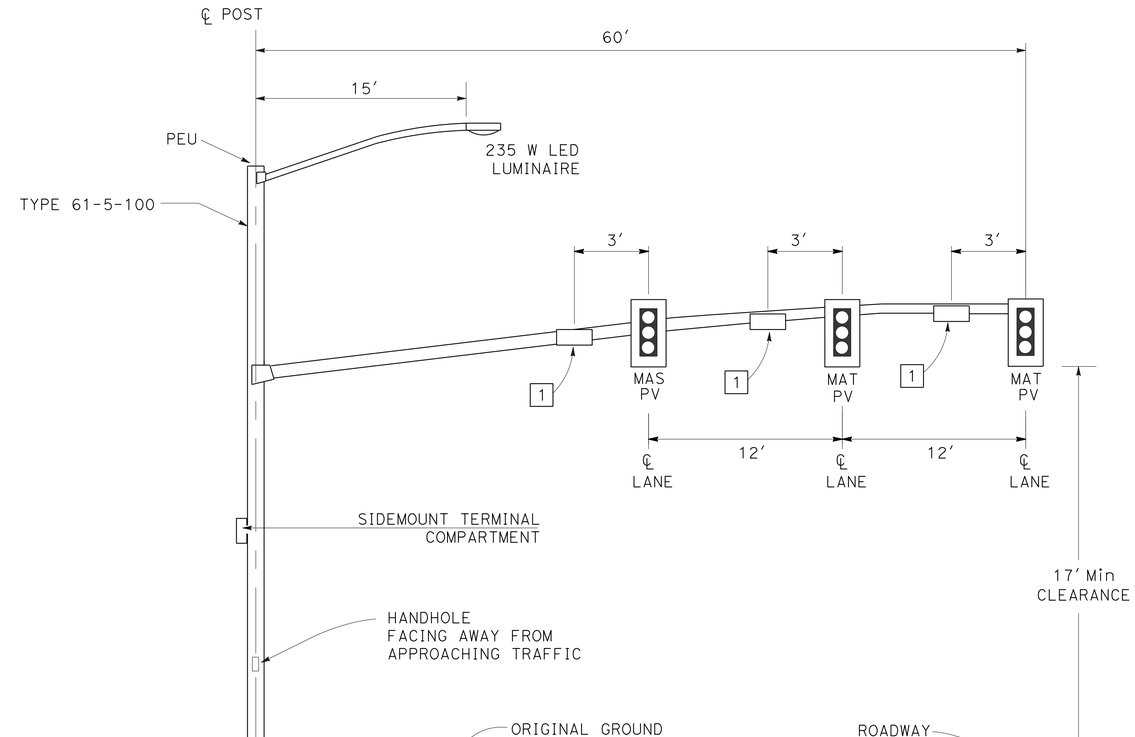

DETAIL "RM3"
LOCATION 3
SEE RSP ES-7H FOR DETAILS NOT SHOWN

APPROVED FOR ELECTRICAL WORK ONLY

RAMP METERING SYSTEM (ELECTRICAL DETAILS)

NO SCALE

E-55

STATE OF CALIFORNIA - DEPARTMENT OF TRANSPORTATION
Caltrans
CONSULTANT FUNCTIONAL SUPERVISOR: JON COLLINS
CALCULATED-DESIGNED BY: JOHN KISSINGER
CHECKED BY: JON COLLINS
REVISED BY
DATE REVISED

LAST REVISION 07-17-14
DATE PLOTTED => 23-JUL-2014
TIME PLOTTED => 14:55

BORDER LAST REVISED 07/02/10
USERNAME => s127400
DGN FILE => 1112000102ua055.dgn
RELATIVE BORDER SCALE IS IN INCHES 0 1 2 3
UNIT 2771
PROJECT NUMBER & PHASE 11120001021

NOTE:

FOR ACCURATE RIGHT OF WAY DATA,
CONTACT RIGHT OF WAY ENGINEERING
AT THE DISTRICT OFFICE.

Dist	COUNTY	ROUTE	POST MILES TOTAL PROJECT	SHEET No.	TOTAL SHEETS
11	SD	5	R29.1/R30.5	734	1012

05-23-14
REGISTERED CIVIL ENGINEER DATE

07-21-14
PLANS APPROVAL DATE

JON M. COLLINS
No. C62090
Exp. 09/30/15
CIVIL
REGISTERED PROFESSIONAL ENGINEER
STATE OF CALIFORNIA

THE STATE OF CALIFORNIA OR ITS OFFICERS OR AGENTS SHALL NOT BE RESPONSIBLE FOR THE ACCURACY OR COMPLETENESS OF SCANNED COPIES OF THIS PLAN SHEET.

CITY OF SAN DIEGO
525 B STREET
SUITE 7
SAN DIEGO, CA 92101

KIMLEY-HORN AND ASSOCIATES, INC.
401 B STREET, SUITE 600
SAN DIEGO, CA 92101

SAN DIEGO

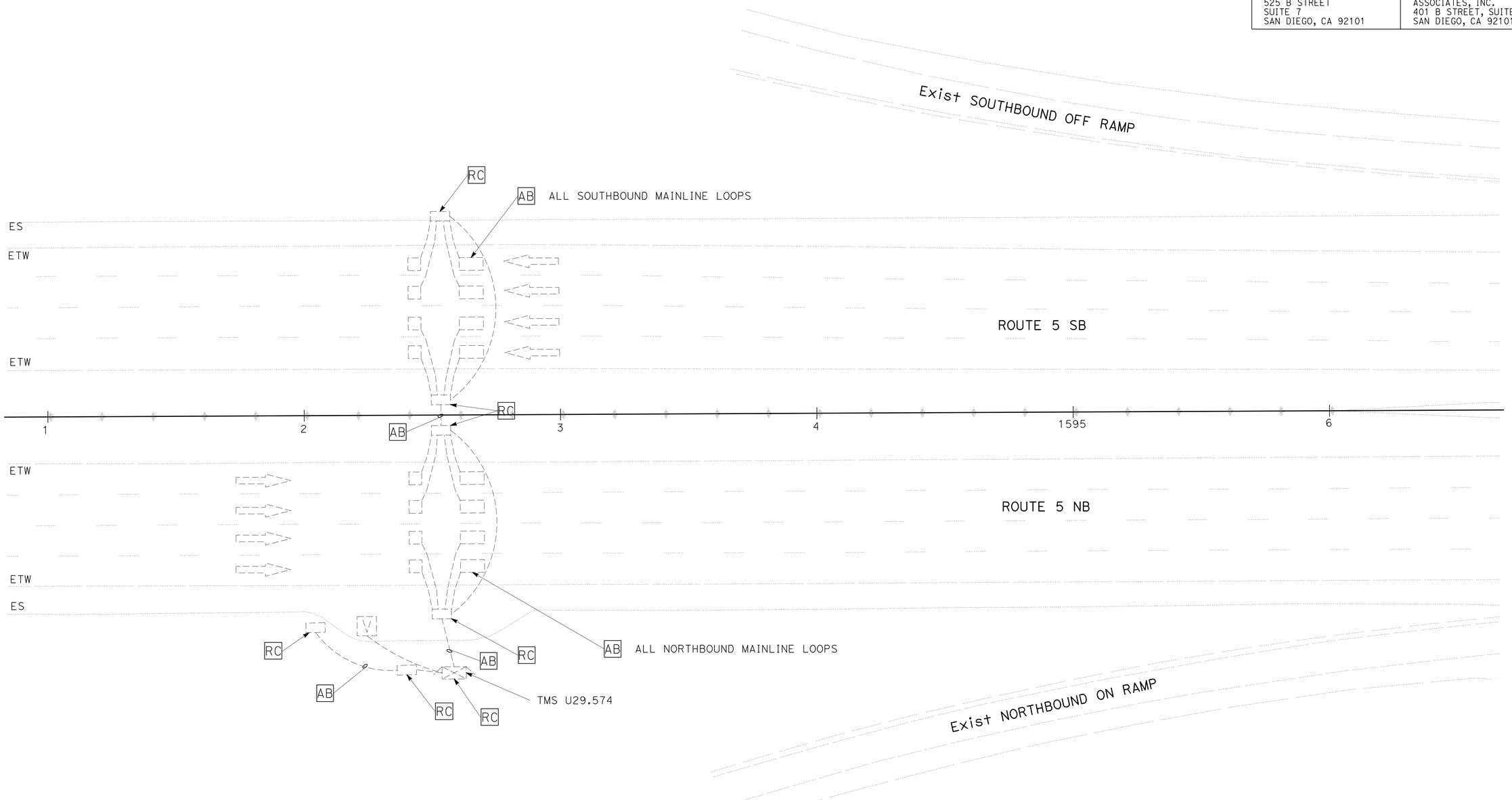

APPROVED FOR ELECTRICAL WORK ONLY

REMOVE TRAFFIC MONITORING STATION

SCALE: 1"=20'

E-56

JOHN KISSINGER — REVISED BY
JON COLLINS — DATE REVISED
CALCULATED-DESIGNED BY
CHECKED BY
JON COLLINS — CONSULTANT FUNCTIONAL SUPERVISOR
STATE OF CALIFORNIA - DEPARTMENT OF TRANSPORTATION
Caltrans

LAST REVISION DATE PLOTTED => 23-JUL-2014
07-17-14 TIME PLOTTED => 14:55

BORDER LAST REVISED 07/02/10
USERNAME => s127400
DGN FILE => 1112000102ua056.dgn
RELATIVE BORDER SCALE IS IN INCHES 0 1 2 3
UNIT 2771
PROJECT NUMBER & PHASE 11120001021

Dist	COUNTY	ROUTE	POST MILES TOTAL PROJECT	SHEET No.	TOTAL SHEETS
11	SD	5	R29.1/R30.5	735	1012

REGISTERED CIVIL ENGINEER — 05-23-14 DATE

JON M. COLLINS No. C62090 Exp. 09/30/15 CIVIL — REGISTERED PROFESSIONAL ENGINEER — STATE OF CALIFORNIA

07-21-14
PLANS APPROVAL DATE

THE STATE OF CALIFORNIA OR ITS OFFICERS OR AGENTS SHALL NOT BE RESPONSIBLE FOR THE ACCURACY OR COMPLETENESS OF SCANNED COPIES OF THIS PLAN SHEET.

CITY OF SAN DIEGO
525 B STREET
SUITE 7
SAN DIEGO, CA 92101

KIMLEY-HORN AND ASSOCIATES, INC.
401 B STREET, SUITE 600
SAN DIEGO, CA 92101

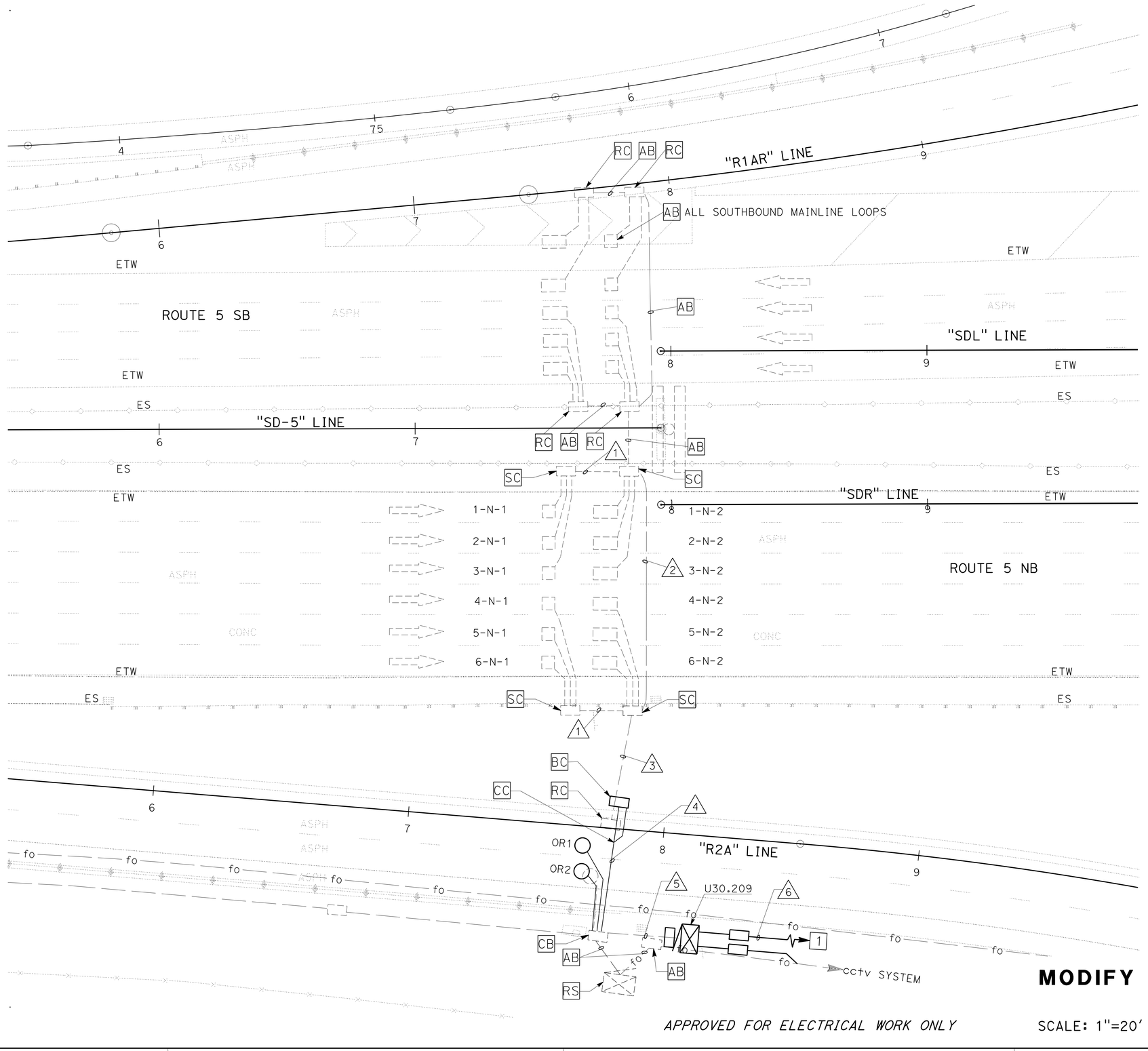

SAN DIEGO

NOTES: (THIS SHEET ONLY)

1 TIE INTO EXISTING CONDUIT AND CONNECT TO Exist SERVICE DISCONNECT CO.36 (480V) LOCATED AT ROSELLE St.

2- FOR ACCURATE RIGHT OF WAY DATA, CONTACT RIGHT OF WAY ENGINEERING AT THE DISTRICT OFFICE.

CONDUIT NOTES: (THIS SHEET ONLY)

1. Exist 2"C, RC Exist CONDUCTORS ADD: 3 DLC
2. Exist 4"C, RC Exist CONDUCTORS ADD: 6 DLC
3. Exist 4"C, RC Exist CONDUCTORS ADD: 12 DLC
4. Exist 4"C, 12 DLC
5. 4"C, 14 DLC
6. 2"C, 2#10 (TMS)

APPROVED FOR ELECTRICAL WORK ONLY

SCALE: 1"=20'

U30.208

MODIFY TRAFFIC MONITORING STATION

E-57

REVISED BY | DATE REVISED
JOHN KISSINGER | JON COLLINS
CALCULATED-DESIGNED BY | CHECKED BY
CONSULTANT FUNCTIONAL SUPERVISOR: JON COLLINS
STATE OF CALIFORNIA - DEPARTMENT OF TRANSPORTATION
Caltrans

LAST REVISION | DATE PLOTTED => 23-JUL-2014
07-17-14 | TIME PLOTTED => 14:55

BORDER LAST REVISED 07/02/10 | USERNAME => s127400 | DGN FILE => 1112000102ua057.dgn | RELATIVE BORDER SCALE IS IN INCHES 0 1 2 3 | UNIT 2771 | PROJECT NUMBER & PHASE 11120001021

Dist	COUNTY	ROUTE	POST MILES TOTAL PROJECT	SHEET No.	TOTAL SHEETS
11	SD	5	R29.1/R30.5	736	1012

05-23-14
REGISTERED CIVIL ENGINEER DATE

07-21-14
PLANS APPROVAL DATE

REGISTERED PROFESSIONAL ENGINEER
JON M. COLLINS
No. C62090
Exp. 09/30/15
CIVIL
STATE OF CALIFORNIA

THE STATE OF CALIFORNIA OR ITS OFFICERS OR AGENTS SHALL NOT BE RESPONSIBLE FOR THE ACCURACY OR COMPLETENESS OF SCANNED COPIES OF THIS PLAN SHEET.

CITY OF SAN DIEGO
525 B STREET
SUITE 7
SAN DIEGO, CA 92101

KIMLEY-HORN AND ASSOCIATES, INC.
401 B STREET, SUITE 600
SAN DIEGO, CA 92101

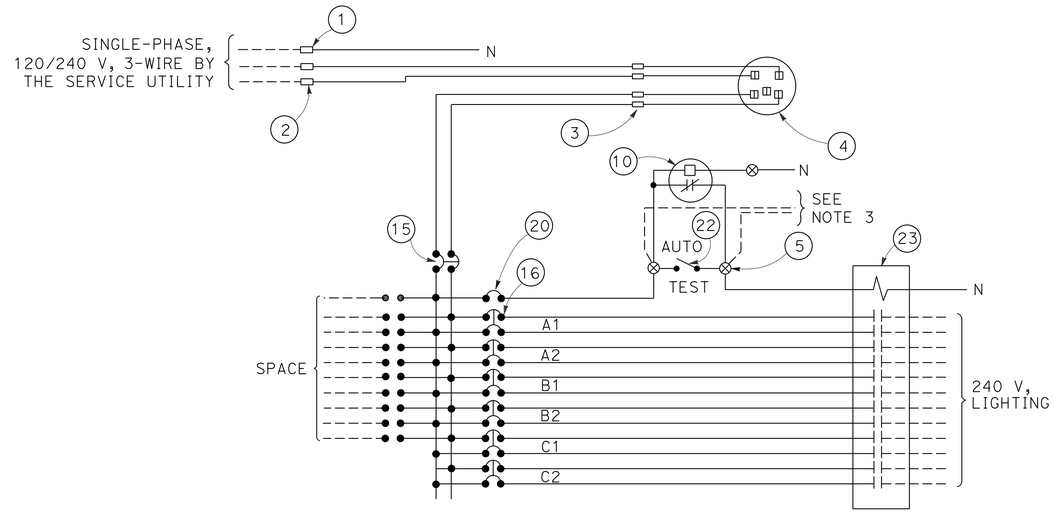

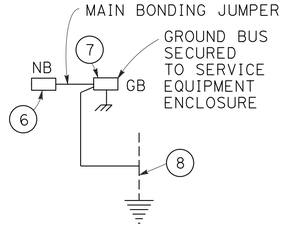

NOTES:

1. VOLTAGE RATINGS OF SERVICE EQUIPMENT SHALL CONFORM TO THE SERVICE VOLTAGES INDICATED ON THE PLANS.
2. UNLESS OTHERWISE INDICATED ON THE PLANS, SERVICE EQUIPMENT ITEMS SHALL BE PROVIDED FOR EACH SERVICE EQUIPMENT ENCLOSURE AS SHOWN.
3. CONNECT TO REMOTE TEST SWITCH MOUNTED ON LIGHTING STANDARDS, SIGN POST OR STRUCTURE WHEN REQUIRED.
4. ITEMS (1) AND (6) SHALL BE ISOLATED FROM THE SERVICE EQUIPMENT ENCLOSURE.
5. METER SOCKETS SHALL BE 5 CLIP TYPE.
6. THE LANDING LUG SHALL BE SUITABLE FOR MULTIPLE CONDUCTORS.
7. TYPE V PHOTOELECTRIC CONTROL SHALL BE USED.
8. ITEM (20) SHALL BE GANGED OPERATED CB.

TYPE III-B SERVICE EQUIPMENT ENCLOSURE LEGEND (120/240 V)

ITEM	COMPONENT	NAMEPLATE DESCRIPTION	ITEM	COMPONENT	NAMEPLATE DESCRIPTION
(1)	NEUTRAL LUG				
(2)	LANDING LUG (NOTE 6)		(15)	100 A, 240 V, 2P, CB	MAIN BREAKER
(3)	TEST BYPASS FACILITY		(16)	SIX 20 A, 240 V, 2P, CB	LIGHTING
(4)	METER SOCKET AND SUPPORT				
(5)	TERMINAL BLOCKS				
(6)	NEUTRAL BUS				
(7)	GROUND BUS		(20)	15 A, 120 V, 1P, CB	LIGHTING CONTROL
(8)	GROUNDING ELECTRODE				
			(22)	15 A, 1P, TEST SWITCH	LIGHTING TEST SWITCH
(10)	PHOTOELECTRIC UNIT (NOTE 7)	PEU	(23)	SIX 60 A, 2P, NO CONTACTORS	LIGHTING CONTACTOR

120/240 V SERVICE WIRING DIAGRAM (LOCATION "A")

APPROVED FOR ELECTRICAL WORK ONLY

LIGHTING (BIKE FACILITY) (ELECTRICAL DETAILS)

NO SCALE

E-58

STATE OF CALIFORNIA - DEPARTMENT OF TRANSPORTATION
Caltrans
CONSULTANT FUNCTIONAL SUPERVISOR: JON COLLINS
CALCULATED-DESIGNED BY: JOHN KISSINGER
CHECKED BY: JON COLLINS
REVISED BY
DATE REVISED

LAST REVISION 07-17-14
DATE PLOTTED => 23-JUL-2014
TIME PLOTTED => 14:55

BORDER LAST REVISED 07/02/10
USERNAME => s127400
DGN FILE => 1112000102ua058.dgn
RELATIVE BORDER SCALE IS IN INCHES 0 1 2 3
UNIT 2771
PROJECT NUMBER & PHASE 11120001021

Dist	COUNTY	ROUTE	POST MILES TOTAL PROJECT	SHEET No.	TOTAL SHEETS
11	SD	5	R29.1/R30.5	737	1012

05-23-14
REGISTERED CIVIL ENGINEER DATE

07-21-14
PLANS APPROVAL DATE

REGISTERED PROFESSIONAL ENGINEER
JON M. COLLINS
No. C62090
Exp. 09/30/15
CIVIL
STATE OF CALIFORNIA

THE STATE OF CALIFORNIA OR ITS OFFICERS OR AGENTS SHALL NOT BE RESPONSIBLE FOR THE ACCURACY OR COMPLETENESS OF SCANNED COPIES OF THIS PLAN SHEET.

CITY OF SAN DIEGO
525 B STREET
SUITE 7
SAN DIEGO, CA 92101

KIMLEY-HORN AND ASSOCIATES, INC.
401 B STREET, SUITE 600
SAN DIEGO, CA 92101

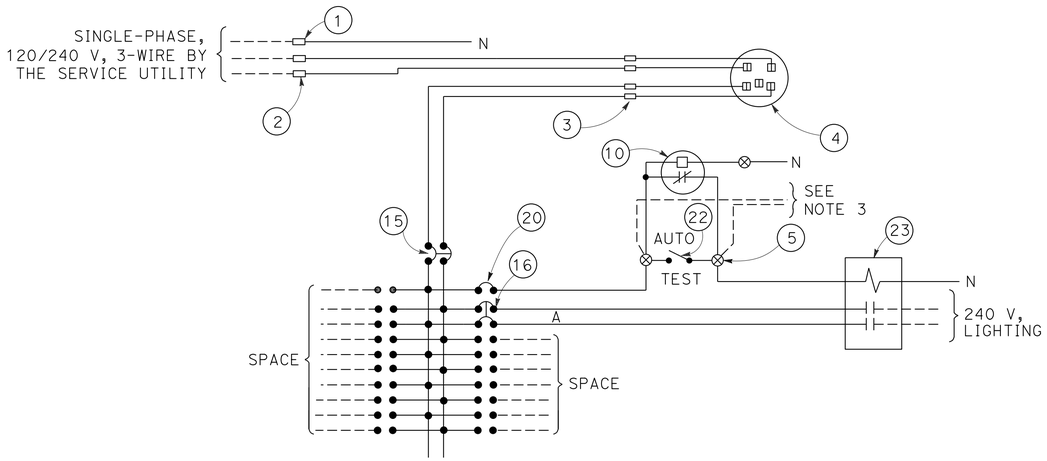

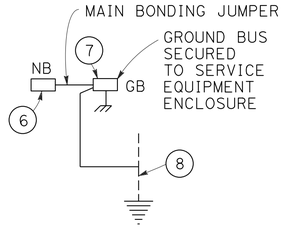

NOTES:

1. VOLTAGE RATINGS OF SERVICE EQUIPMENT SHALL CONFORM TO THE SERVICE VOLTAGES INDICATED ON THE PLANS.
2. UNLESS OTHERWISE INDICATED ON THE PLANS, SERVICE EQUIPMENT ITEMS SHALL BE PROVIDED FOR EACH SERVICE EQUIPMENT ENCLOSURE AS SHOWN.
3. CONNECT TO REMOTE TEST SWITCH MOUNTED ON LIGHTING STANDARDS, SIGN POST OR STRUCTURE WHEN REQUIRED.
4. ITEMS (1) AND (6) SHALL BE ISOLATED FROM THE SERVICE EQUIPMENT ENCLOSURE.
5. METER SOCKETS SHALL BE 5 CLIP TYPE.
6. THE LANDING LUG SHALL BE SUITABLE FOR MULTIPLE CONDUCTORS.
7. TYPE V PHOTOELECTRIC CONTROL SHALL BE USED.
8. ITEM (20) SHALL BE GANGED OPERATED CB.

TYPE III-B SERVICE EQUIPMENT ENCLOSURE LEGEND (120/240 V)

ITEM	COMPONENT	NAMEPLATE DESCRIPTION	ITEM	COMPONENT	NAMEPLATE DESCRIPTION
(1)	NEUTRAL LUG				
(2)	LANDING LUG (NOTE 6)		(15)	100 A, 240 V, 2P, CB	MAIN BREAKER
(3)	TEST BYPASS FACILITY		(16)	30 A, 240 V, 2P, CB	LIGHTING
(4)	METER SOCKET AND SUPPORT				
(5)	TERMINAL BLOCKS				
(6)	NEUTRAL BUS				
(7)	GROUND BUS		(20)	15 A, 120 V, 1P, CB	LIGHTING CONTROL
(8)	GROUNDING ELECTRODE				
			(22)	15 A, 1P, TEST SWITCH	LIGHTING TEST SWITCH
(10)	PHOTOELECTRIC UNIT (NOTE 7)	PEU	(23)	60 A, 2P, NO CONTACTOR	LIGHTING CONTACTOR

120/240 V SERVICE WIRING DIAGRAM (LOCATION "B")

APPROVED FOR ELECTRICAL WORK ONLY

LIGHTING (BIKE FACILITY) (ELECTRICAL DETAILS)

NO SCALE

E-59

CALCULATED-DESIGNED BY: JOHN KISSINGER
CHECKED BY: JON COLLINS
CONSULTANT FUNCTIONAL SUPERVISOR: JON COLLINS
REVISED BY
DATE REVISED
STATE OF CALIFORNIA - DEPARTMENT OF TRANSPORTATION
Caltrans

LAST REVISION | DATE PLOTTED => 23-JUL-2014
07-17-14 | TIME PLOTTED => 14:55

Dist	COUNTY	ROUTE	POST MILES TOTAL PROJECT	SHEET No.	TOTAL SHEETS
11	SD	5	R29.1/R30.5	738	1012

05-23-14
REGISTERED CIVIL ENGINEER DATE

07-21-14
PLANS APPROVAL DATE

REGISTERED PROFESSIONAL ENGINEER
JON M. COLLINS
No. C62090
Exp. 09/30/15
CIVIL
STATE OF CALIFORNIA

THE STATE OF CALIFORNIA OR ITS OFFICERS OR AGENTS SHALL NOT BE RESPONSIBLE FOR THE ACCURACY OR COMPLETENESS OF SCANNED COPIES OF THIS PLAN SHEET.

CITY OF SAN DIEGO
525 B STREET
SUITE 7
SAN DIEGO, CA 92101

KIMLEY-HORN AND ASSOCIATES, INC.
401 B STREET, SUITE 600
SAN DIEGO, CA 92101

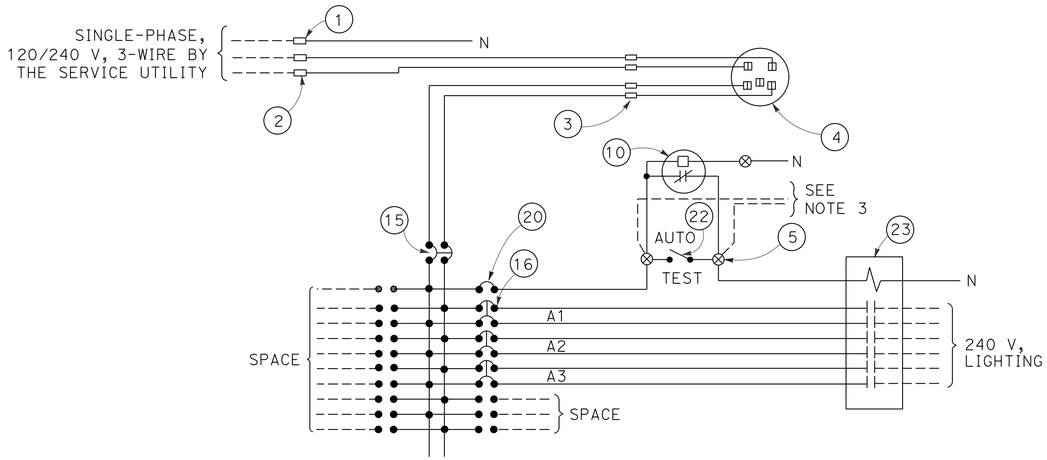

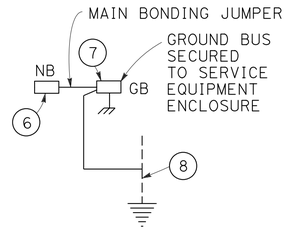

NOTES:

1. VOLTAGE RATINGS OF SERVICE EQUIPMENT SHALL CONFORM TO THE SERVICE VOLTAGES INDICATED ON THE PLANS.
2. UNLESS OTHERWISE INDICATED ON THE PLANS, SERVICE EQUIPMENT ITEMS SHALL BE PROVIDED FOR EACH SERVICE EQUIPMENT ENCLOSURE AS SHOWN.
3. CONNECT TO REMOTE TEST SWITCH MOUNTED ON LIGHTING STANDARDS, SIGN POST OR STRUCTURE WHEN REQUIRED.
4. ITEMS (1) AND (6) SHALL BE ISOLATED FROM THE SERVICE EQUIPMENT ENCLOSURE.
5. METER SOCKETS SHALL BE 5 CLIP TYPE.
6. THE LANDING LUG SHALL BE SUITABLE FOR MULTIPLE CONDUCTORS.
7. TYPE II PHOTOELECTRIC CONTROL SHALL BE USED, AND PEU MOUNTED ON LIGHT POLE PER PLANS.
8. ITEM (20) SHALL BE GANGED OPERATED CB.

TYPE III-B SERVICE EQUIPMENT ENCLOSURE LEGEND (120/240 V)

ITEM	COMPONENT	NAMEPLATE DESCRIPTION	ITEM	COMPONENT	NAMEPLATE DESCRIPTION
(1)	NEUTRAL LUG				
(2)	LANDING LUG (NOTE 6)		(15)	100 A, 240 V, 2P, CB	MAIN BREAKER
(3)	TEST BYPASS FACILITY		(16)	THREE 20 A, 240 V, 2P, CB	LIGHTING
(4)	METER SOCKET AND SUPPORT				
(5)	TERMINAL BLOCKS				
(6)	NEUTRAL BUS				
(7)	GROUND BUS		(20)	15 A, 120 V, 1P, CB	LIGHTING CONTROL
(8)	GROUNDING ELECTRODE				
			(22)	15 A, 1P, TEST SWITCH	LIGHTING TEST SWITCH
(10)	PHOTOELECTRIC UNIT (NOTE 7)	PEU	(23)	THREE 60A, 2P, NO CONTACTORS	LIGHTING CONTACTOR

120/240 V SERVICE WIRING DIAGRAM (LOCATION "C")

APPROVED FOR ELECTRICAL WORK ONLY

LIGHTING (BIKE FACILITY) (ELECTRICAL DETAILS)

NO SCALE

E-60

REVISED BY | DATE REVISED
JOHN KISSINGER | JON COLLINS
CALCULATED-DESIGNED BY | CHECKED BY
CONSULTANT FUNCTIONAL SUPERVISOR: JON COLLINS
STATE OF CALIFORNIA - DEPARTMENT OF TRANSPORTATION
Caltrans

LAST REVISION 07-17-14 | DATE PLOTTED => 23-JUL-2014 | TIME PLOTTED => 14:55

BORDER LAST REVISED 07/02/10 | USERNAME => s127400 | DGN FILE => 1112000102ua060.dgn | RELATIVE BORDER SCALE IS IN INCHES 0 1 2 3 | UNIT 2771 | PROJECT NUMBER & PHASE 11120001021

Dist	COUNTY	ROUTE	POST MILES TOTAL PROJECT	SHEET No.	TOTAL SHEETS
11	SD	5	R29.1/R30.5	739	1012

05-23-14
REGISTERED CIVIL ENGINEER DATE

07-21-14
PLANS APPROVAL DATE

REGISTERED PROFESSIONAL ENGINEER
JON M. COLLINS
No. C62090
Exp. 09/30/15
CIVIL
STATE OF CALIFORNIA

THE STATE OF CALIFORNIA OR ITS OFFICERS OR AGENTS SHALL NOT BE RESPONSIBLE FOR THE ACCURACY OR COMPLETENESS OF SCANNED COPIES OF THIS PLAN SHEET.

CITY OF SAN DIEGO
525 B STREET
SUITE 7
SAN DIEGO, CA 92101

KIMLEY-HORN AND ASSOCIATES, INC.
401 B STREET, SUITE 600
SAN DIEGO, CA 92101

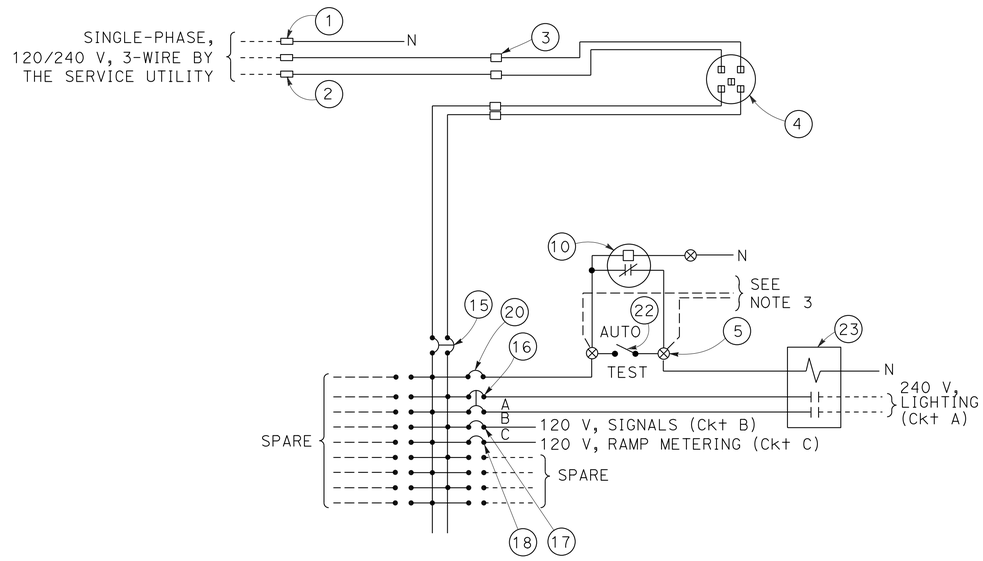

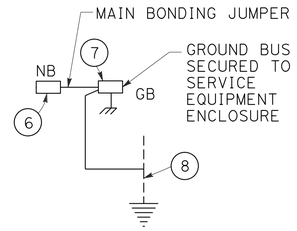

NOTES:

1. VOLTAGE RATINGS OF SERVICE EQUIPMENT SHALL CONFORM TO THE SERVICE VOLTAGES INDICATED ON THE PLANS.
2. UNLESS OTHERWISE INDICATED ON THE PLANS, SERVICE EQUIPMENT ITEMS SHALL BE PROVIDED FOR EACH SERVICE EQUIPMENT ENCLOSURE AS SHOWN.
3. CONNECT TO REMOTE TEST SWITCH MOUNTED ON LIGHTING STANDARDS, SIGN POST OR STRUCTURE WHEN REQUIRED.
4. ITEMS (1) AND (6) SHALL BE ISOLATED FROM THE SERVICE EQUIPMENT ENCLOSURE.
5. METER SOCKETS SHALL BE 5 CLIP TYPE.
6. THE LANDING LUG SHALL BE SUITABLE FOR MULTIPLE CONDUCTORS.
7. TYPE II PHOTOELECTRIC CONTROL SHALL BE USED, AND PEU MOUNTED ON LIGHT POLE PER PLANS.
8. ITEM (20) SHALL BE GANGED OPERATED CB.

TYPE III-B SERVICE EQUIPMENT ENCLOSURE LEGEND (120/240 V)

ITEM	COMPONENT	NAMEPLATE DESCRIPTION	ITEM	COMPONENT	NAMEPLATE DESCRIPTION
(1)	NEUTRAL LUG				
(2)	LANDING LUG (NOTE 6)		(15)	100 A, 240 V, 2P, CB	MAIN BREAKER
(3)	TEST BYPASS FACILITY		(16)	30 A, 240 V, 2P, CB	LIGHTING
(4)	METER SOCKET AND SUPPORT		(17)	50 A, 120 V, 1P, CB	SIGNAL (LOCATION 1)
(5)	TERMINAL BLOCKS		(18)	30 A, 120 V, 1P, CB	RAMP METER (LOCATION 1)
(6)	NEUTRAL BUS				
(7)	GROUND BUS		(20)	15 A, 120 V, 1P, CB	LIGHTING CONTROL
(8)	GROUNDING ELECTRODE				
			(22)	15 A, 1P, TEST SWITCH	LIGHTING TEST SWITCH
(10)	PHOTOELECTRIC UNIT (NOTE 7)	PEU	(23)	60 A, 2P, NO CONTACTOR	LIGHTING CONTACTOR

120/240 V SERVICE WIRING DIAGRAM (LOCATION "D")

APPROVED FOR ELECTRICAL WORK ONLY

SIGNAL AND LIGHTING (ELECTRICAL DETAILS)

NO SCALE

E-61

REVISED BY	DATE REVISED
JOHN KISSINGER	JON COLLINS

CALCULATED-DESIGNED BY
CHECKED BY

CONSULTANT FUNCTIONAL SUPERVISOR
JON COLLINS

STATE OF CALIFORNIA - DEPARTMENT OF TRANSPORTATION
Caltrans

LAST REVISION 07-17-14
DATE PLOTTED => 23-JUL-2014
TIME PLOTTED => 14:55

Dist	COUNTY	ROUTE	POST MILES TOTAL PROJECT	SHEET No.	TOTAL SHEETS
11	SD	5	R29.1/R30.5	740	1012

05-23-14
REGISTERED CIVIL ENGINEER DATE

07-21-14
PLANS APPROVAL DATE

REGISTERED PROFESSIONAL ENGINEER
JON M. COLLINS
No. C62090
Exp. 09/30/15
CIVIL
STATE OF CALIFORNIA

THE STATE OF CALIFORNIA OR ITS OFFICERS OR AGENTS SHALL NOT BE RESPONSIBLE FOR THE ACCURACY OR COMPLETENESS OF SCANNED COPIES OF THIS PLAN SHEET.

CITY OF SAN DIEGO
525 B STREET
SUITE 7
SAN DIEGO, CA 92101

KIMLEY-HORN AND ASSOCIATES, INC.
401 B STREET, SUITE 600
SAN DIEGO, CA 92101

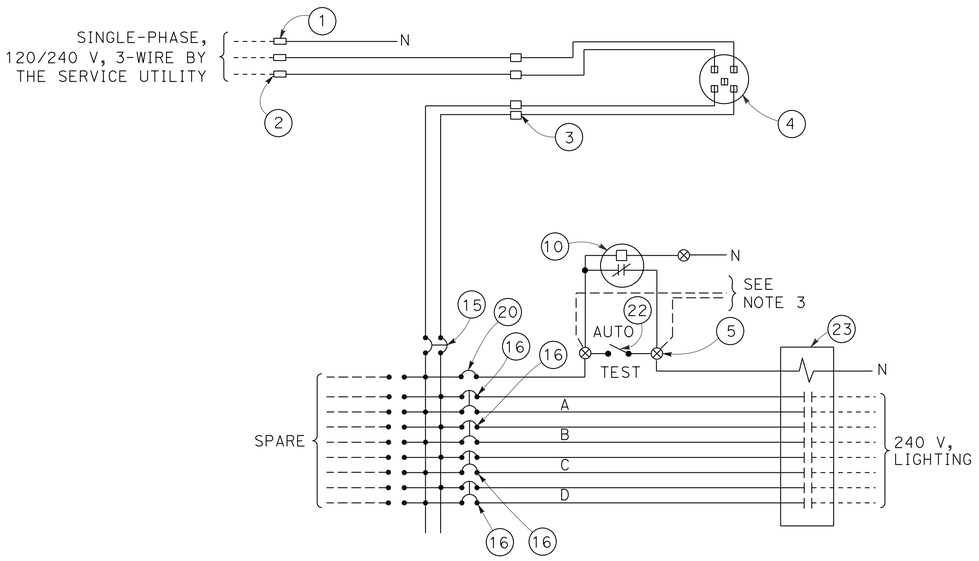

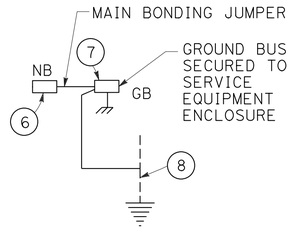

NOTES:

1. VOLTAGE RATINGS OF SERVICE EQUIPMENT SHALL CONFORM TO THE SERVICE VOLTAGES INDICATED ON THE PLANS.
2. UNLESS OTHERWISE INDICATED ON THE PLANS, SERVICE EQUIPMENT ITEMS SHALL BE PROVIDED FOR EACH SERVICE EQUIPMENT ENCLOSURE AS SHOWN.
3. CONNECT TO REMOTE TEST SWITCH MOUNTED ON LIGHTING STANDARDS, SIGN POST OR STRUCTURE WHEN REQUIRED.
4. ITEMS (1) AND (6) SHALL BE ISOLATED FROM THE SERVICE EQUIPMENT ENCLOSURE.
5. METER SOCKETS SHALL BE 5 CLIP TYPE.
6. THE LANDING LUG SHALL BE SUITABLE FOR MULTIPLE CONDUCTORS.
7. TYPE II PHOTOELECTRIC CONTROL SHALL BE USED, AND PEU MOUNTED ON LIGHT POLE PER PLANS.
8. ITEM (20) SHALL BE GANGED OPERATED CB.

TYPE III-B SERVICE EQUIPMENT ENCLOSURE LEGEND (120/240 V)

ITEM	COMPONENT	NAMEPLATE DESCRIPTION	ITEM	COMPONENT	NAMEPLATE DESCRIPTION
(1)	NEUTRAL LUG				
(2)	LANDING LUG (NOTE 6)		(15)	100 A, 240 V, 2P, CB	MAIN BREAKER
(3)	TEST BYPASS FACILITY		(16)	20 A, 240 V, 2P, CB	LIGHTING
(4)	METER SOCKET AND SUPPORT				
(5)	TERMINAL BLOCKS				
(6)	NEUTRAL BUS				
(7)	GROUND BUS		(20)	15 A, 120 V, 1P, CB	LIGHTING CONTROL
(8)	GROUNDING ELECTRODE				
			(22)	15 A, 1P, TEST SWITCH	LIGHTING TEST SWITCH
(10)	PHOTOELECTRIC UNIT (NOTE 7)	PEU	(23)	FOUR 60 A, 2P, NO CONTACTORS	LIGHTING CONTACTOR

120/240 V SERVICE WIRING DIAGRAM (LOCATION "F")

APPROVED FOR ELECTRICAL WORK ONLY

LIGHTING (CITY STREET) (ELECTRICAL DETAILS)

NO SCALE

E-62

CALCULATED-DESIGNED BY	CHECKED BY	REVISED BY	DATE REVISED
JOHN KISSINGER	JON COLLINS		

CONSULTANT FUNCTIONAL SUPERVISOR: JON COLLINS

STATE OF CALIFORNIA - DEPARTMENT OF TRANSPORTATION
Caltrans

LAST REVISION: DATE PLOTTED => 23-JUL-2014
07-17-14 TIME PLOTTED => 14:55

Dist	COUNTY	ROUTE	POST MILES TOTAL PROJECT	SHEET No.	TOTAL SHEETS
11	SD	5	R29.1/R30.5	741	1012

05-23-14
REGISTERED CIVIL ENGINEER DATE

07-21-14
PLANS APPROVAL DATE

REGISTERED PROFESSIONAL ENGINEER
JON M. COLLINS
No. C62090
Exp. 09/30/15
CIVIL
STATE OF CALIFORNIA

THE STATE OF CALIFORNIA OR ITS OFFICERS OR AGENTS SHALL NOT BE RESPONSIBLE FOR THE ACCURACY OR COMPLETENESS OF SCANNED COPIES OF THIS PLAN SHEET.

CITY OF SAN DIEGO
525 B STREET
SUITE 7
SAN DIEGO, CA 92101

KIMLEY-HORN AND ASSOCIATES, INC.
401 B STREET, SUITE 600
SAN DIEGO, CA 92101

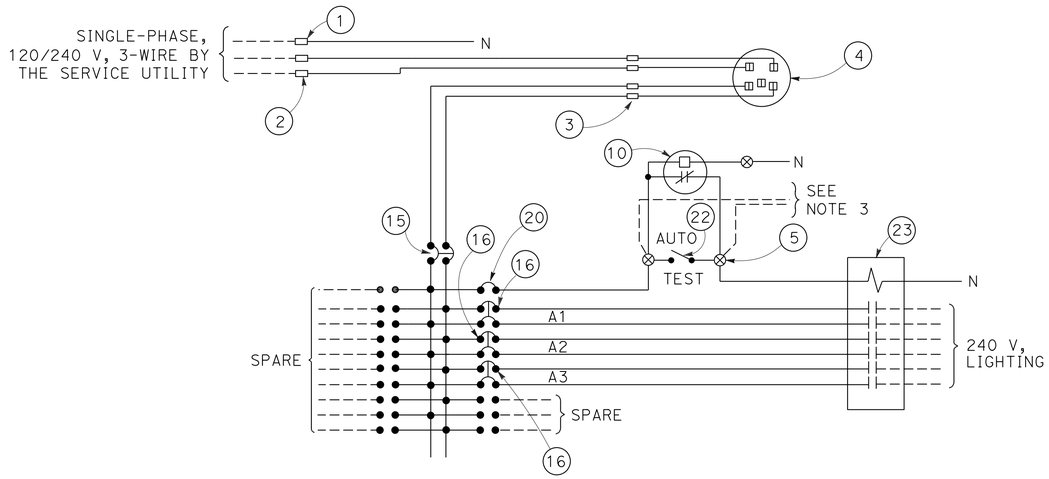

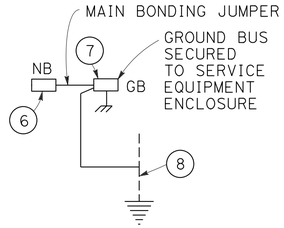

NOTES:

1. VOLTAGE RATINGS OF SERVICE EQUIPMENT SHALL CONFORM TO THE SERVICE VOLTAGES INDICATED ON THE PLANS.
2. UNLESS OTHERWISE INDICATED ON THE PLANS, SERVICE EQUIPMENT ITEMS SHALL BE PROVIDED FOR EACH SERVICE EQUIPMENT ENCLOSURE AS SHOWN.
3. CONNECT TO REMOTE TEST SWITCH MOUNTED ON LIGHTING STANDARDS, SIGN POST OR STRUCTURE WHEN REQUIRED.
4. ITEMS (1) AND (6) SHALL BE ISOLATED FROM THE SERVICE EQUIPMENT ENCLOSURE.
5. METER SOCKETS SHALL BE 5 CLIP TYPE.
6. THE LANDING LUG SHALL BE SUITABLE FOR MULTIPLE CONDUCTORS.
7. TYPE II PHOTOELECTRIC CONTROL SHALL BE USED, AND PEU MOUNTED ON LIGHT POLE PER PLANS.
8. ITEM (20) SHALL BE GANGED OPERATED CB.

TYPE III-B SERVICE EQUIPMENT ENCLOSURE LEGEND (120/240 V)

ITEM	COMPONENT	NAMEPLATE DESCRIPTION	ITEM	COMPONENT	NAMEPLATE DESCRIPTION
(1)	NEUTRAL LUG				
(2)	LANDING LUG (NOTE 6)		(15)	100 A, 240 V, 2P, CB	MAIN BREAKER
(3)	TEST BYPASS FACILITY		(16)	20 A, 240 V, 2P, CB	LIGHTING
(4)	METER SOCKET AND SUPPORT				
(5)	TERMINAL BLOCKS				
(6)	NEUTRAL BUS				
(7)	GROUND BUS		(20)	15 A, 120 V, 1P, CB	LIGHTING CONTROL
(8)	GROUNDING ELECTRODE				
			(22)	15 A, 1P, TEST SWITCH	LIGHTING TEST SWITCH
(10)	PHOTOELECTRIC UNIT (NOTE 7)	PEU	(23)	THREE 60 A, 2P, NO CONTACTORS	LIGHTING CONTACTOR

120/240 V SERVICE WIRING DIAGRAM (LOCATION "G")

APPROVED FOR ELECTRICAL WORK ONLY

LIGHTING (BIKE FACILITY) (ELECTRICAL DETAILS)

NO SCALE

E-63

STATE OF CALIFORNIA - DEPARTMENT OF TRANSPORTATION
Caltrans

CONSULTANT FUNCTIONAL SUPERVISOR: JON COLLINS

CALCULATED-DESIGNED BY: JOHN KISSINGER
CHECKED BY: JON COLLINS
REVISED BY
DATE REVISED

LAST REVISION DATE PLOTTED => 23-JUL-2014
07-17-14 TIME PLOTTED => 14:55

BORDER LAST REVISED 07/02/10
USERNAME => s127400
DGN FILE => 1112000102ua063.dgn
RELATIVE BORDER SCALE IS IN INCHES 0 1 2 3
UNIT 2771
PROJECT NUMBER & PHASE 11120001021

Dist	COUNTY	ROUTE	POST MILES TOTAL PROJECT	SHEET No.	TOTAL SHEETS
11	SD	5	R29.1/R30.5	742	1012

05-23-14
REGISTERED CIVIL ENGINEER DATE

07-21-14
PLANS APPROVAL DATE

REGISTERED PROFESSIONAL ENGINEER
JON M. COLLINS
No. C62090
Exp. 09/30/15
CIVIL
STATE OF CALIFORNIA

THE STATE OF CALIFORNIA OR ITS OFFICERS OR AGENTS SHALL NOT BE RESPONSIBLE FOR THE ACCURACY OR COMPLETENESS OF SCANNED COPIES OF THIS PLAN SHEET.

CITY OF SAN DIEGO
525 B STREET
SUITE 7
SAN DIEGO, CA 92101

KIMLEY-HORN AND ASSOCIATES, INC.
401 B STREET, SUITE 600
SAN DIEGO, CA 92101

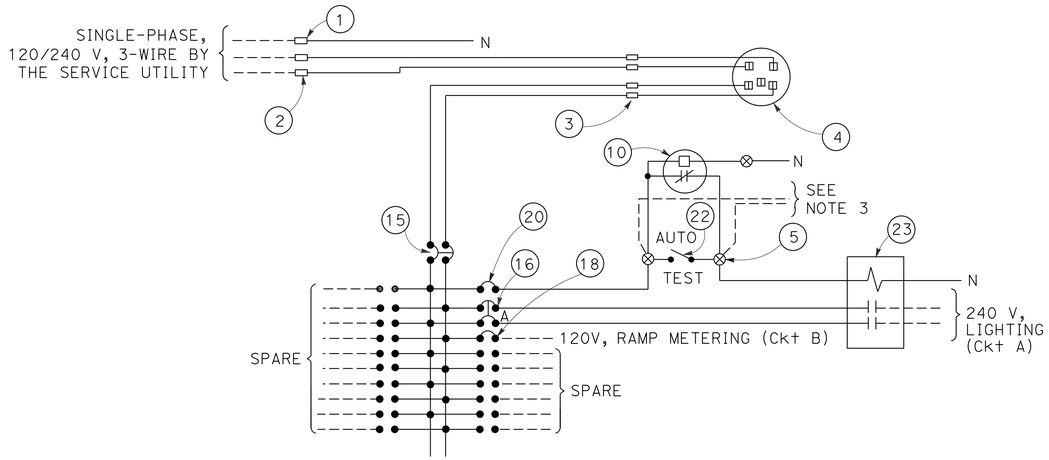

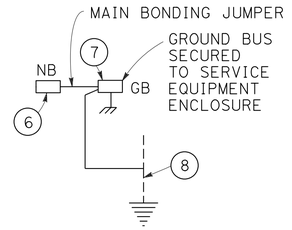

NOTES:

1. VOLTAGE RATINGS OF SERVICE EQUIPMENT SHALL CONFORM TO THE SERVICE VOLTAGES INDICATED ON THE PLANS.
2. UNLESS OTHERWISE INDICATED ON THE PLANS, SERVICE EQUIPMENT ITEMS SHALL BE PROVIDED FOR EACH SERVICE EQUIPMENT ENCLOSURE AS SHOWN.
3. CONNECT TO REMOTE TEST SWITCH MOUNTED ON LIGHTING STANDARDS, SIGN POST OR STRUCTURE WHEN REQUIRED.
4. ITEMS (1) AND (6) SHALL BE ISOLATED FROM THE SERVICE EQUIPMENT ENCLOSURE.
5. METER SOCKETS SHALL BE 5 CLIP TYPE.
6. THE LANDING LUG SHALL BE SUITABLE FOR MULTIPLE CONDUCTORS.
7. TYPE II PHOTOELECTRIC CONTROL SHALL BE USED, AND PEU MOUNTED ON LIGHT POLE PER PLANS.
8. ITEM (20) SHALL BE GANGED OPERATED CB.

TYPE III-B SERVICE EQUIPMENT ENCLOSURE LEGEND (120/240 V)

ITEM	COMPONENT	NAMEPLATE DESCRIPTION	ITEM	COMPONENT	NAMEPLATE DESCRIPTION
(1)	NEUTRAL LUG				
(2)	LANDING LUG (NOTE 6)		(15)	100 A, 240 V, 2P, CB	MAIN BREAKER
(3)	TEST BYPASS FACILITY		(16)	30 A, 240 V, 2P, CB	LIGHTING
(4)	METER SOCKET AND SUPPORT				
(5)	TERMINAL BLOCKS		(18)	30 A, 120 V, 1P, CB	RAMP METERING (LOCATION 3)
(6)	NEUTRAL BUS				
(7)	GROUND BUS		(20)	15 A, 120 V, 1P, CB	LIGHTING CONTROL
(8)	GROUNDING ELECTRODE				
			(22)	15 A, 1P, TEST SWITCH	LIGHTING TEST SWITCH
(10)	PHOTOELECTRIC UNIT (NOTE 7)	PEU	(23)	60 A, 2P, NO CONTACTOR	LIGHTING CONTACTOR

120/240 V SERVICE WIRING DIAGRAM (LOCATION "K")

APPROVED FOR ELECTRICAL WORK ONLY

RAMP METERING SYSTEM (ELECTRICAL DETAILS)

NO SCALE

E-64

REVISED BY	DATE REVISED
JOHN KISSINGER	
JON COLLINS	

CALCULATED-DESIGNED BY
CHECKED BY

CONSULTANT FUNCTIONAL SUPERVISOR
JON COLLINS

STATE OF CALIFORNIA - DEPARTMENT OF TRANSPORTATION
Caltrans®

LAST REVISION 07-17-14
DATE PLOTTED => 23-JUL-2014
TIME PLOTTED => 14:55

Dist	COUNTY	ROUTE	POST MILES TOTAL PROJECT	SHEET No.	TOTAL SHEETS
11	SD	5	R29.1/R30.5	743	1012

KARTHIK RAMANATHAN — 05-23-14
REGISTERED CIVIL ENGINEER — DATE

07-21-14
PLANS APPROVAL DATE

REGISTERED PROFESSIONAL ENGINEER — KARTHIK RAMANATHAN — No. C65553 — Exp. 9/30/15 — CIVIL — STATE OF CALIFORNIA

THE STATE OF CALIFORNIA OR ITS OFFICERS OR AGENTS SHALL NOT BE RESPONSIBLE FOR THE ACCURACY OR COMPLETENESS OF SCANNED COPIES OF THIS PLAN SHEET.

CITY OF SAN DIEGO
525 B STREET
SUITE 7
SAN DIEGO, CA 92101

KIMLEY-HORN AND ASSOCIATES, INC.
401 B STREET, SUITE 600
SAN DIEGO, CA 92101

GENERAL NOTES:

1. DESIGN OF KIPP (10′), KIM (15′) LIGHT POLES IS IN ACCORDANCE WITH CALTRANS STANDARD PLANS 2010 AND AASHTO STANDARD SPECIFICATIONS FOR STRUCTURAL SUPPORTS FOR HIGHWAY SIGNS, LUMINAIRES AND TRAFFIC SIGNALS, 5TH EDITION 2009.
2. DESIGN WIND SPEED = 100 MPH, 25 YEAR RECCURANCE INTERVAL. FATIGUE IS NOT CONSIDERED IN ACCORDANCE WITH SECTION 11 OF THE SPECIFICATIONS FOR LIGHTING STRUCTURES.
3. MATERIAL SPECIFICATIONS:
   CONCRETE: f′c = 3625 psi
   REINFORCING STEEL: ASTM A615 fy= 60 ksi (NON-WELDED)
   ASTM A706 fy= 60 ksi (WELDABLE)
   ANCHOR BOLTS: ASTM F-1554 fy= 55 ksi
   ALUMINUM: 6061-T6 ALLOY (TUBE): 35 ksi (Min)
   STRUCTURAL STEEL: fy= 36 ksi (Min)
4. FOUNDATION DESIGN FOR COHESIONLESS SOILS PER "BROM'S METHOD"
   SOIL WEIGHT= 120 pcf
   ANGLE OF INTERNAL FRICTION: ø= 30°

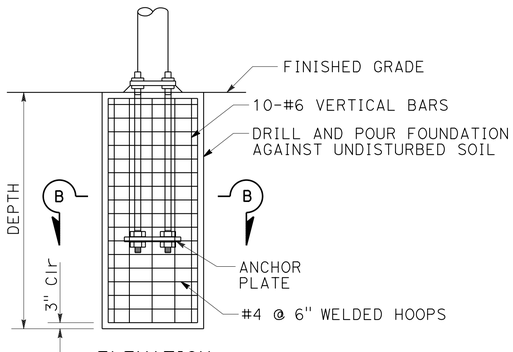

ELEVATION

CAST-IN-DRILLED HOLE PILE FOUNDATION, REINFORCED PILE
DETAIL A

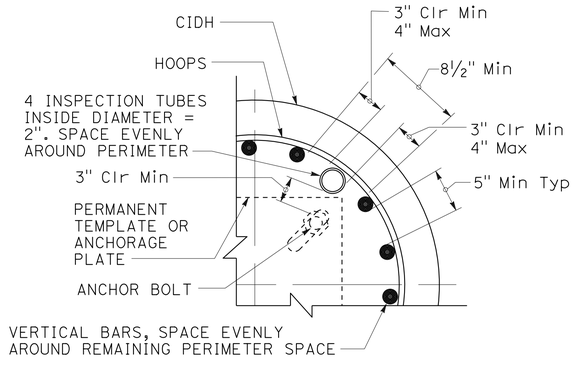

INSPECTION TUBE PLACEMENT
DETAIL I

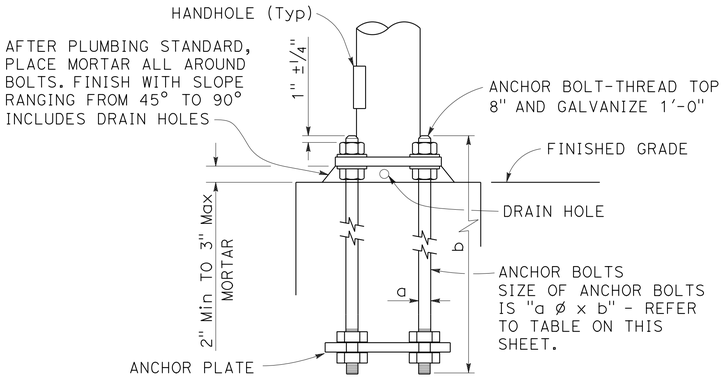

HANDHOLE AND ANCHORAGE
DETAIL B

CIDH PILE FOUNDATION (2′-6"ø) SCHEDULE		
TYPE	ANCHOR BOLTS	CIDH DEPTH
POULSEN KIPP 10′	4-¾" X 24" 9¼" B.C.	4′
KIM LIGHTING 15′	4-¾" X 30" 8½" B.C.	5′

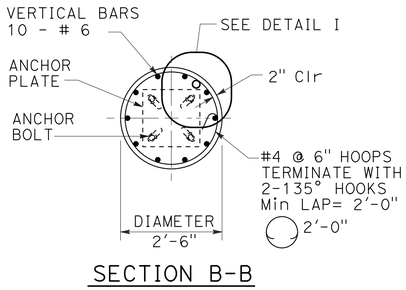

SECTION B-B

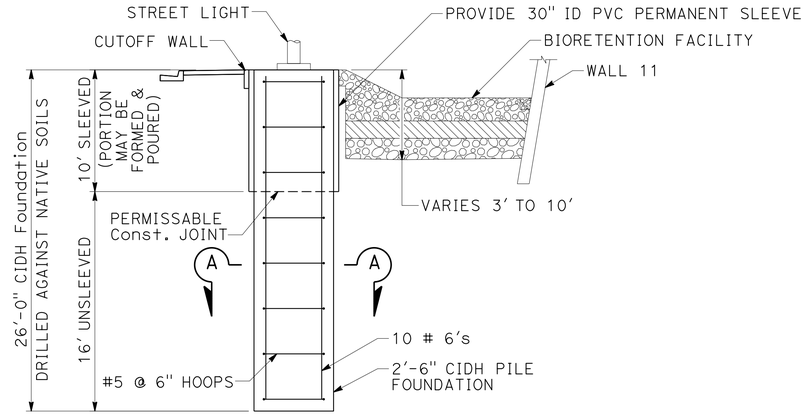

GENESEE FOUNDATION FOR 15TS POLE (15' MAST ARM)

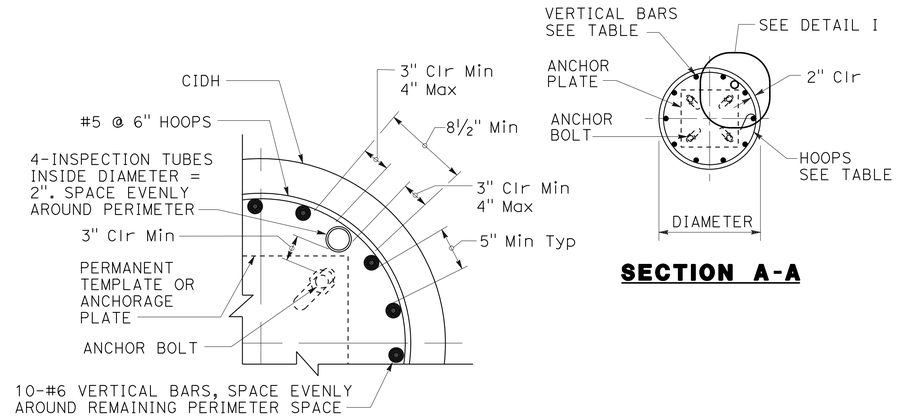

SECTION A-A

DETAIL I

GENESEE FOUNDATION INSPECTION TUBE PLACEMENT

LIGHT POLE FOUNDATION DETAILS

NO SCALE

E-65

APPROVED FOR ELECTRICAL WORK ONLY

REVISED BY | DATE REVISED
RYAN BARNHART | KARTHIK RAMANATHAN
CALCULATED-DESIGNED BY | CHECKED BY
CONSULTANT FUNCTIONAL SUPERVISOR: KARTHIK RAMANATHAN
STATE OF CALIFORNIA - DEPARTMENT OF TRANSPORTATION
Caltrans

LAST REVISION | DATE PLOTTED => 23-JUL-2014
07-17-14 | TIME PLOTTED => 14:55

BORDER LAST REVISED 07/02/10 | USERNAME => s127400 | DGN FILE => 1112000102ua065.dgn | RELATIVE BORDER SCALE IS IN INCHES 0 1 2 3 | UNIT 2771 | PROJECT NUMBER & PHASE 11120001021

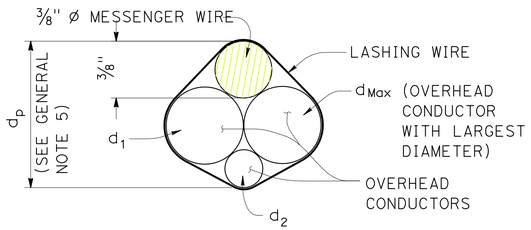

$d_p = 3/8" + d_{Max} + 0.30 * (d_1 + d_2 + ... d_n)$

PROJECTED DEPTH OF OVERHEAD BUNDLE, (d_p)

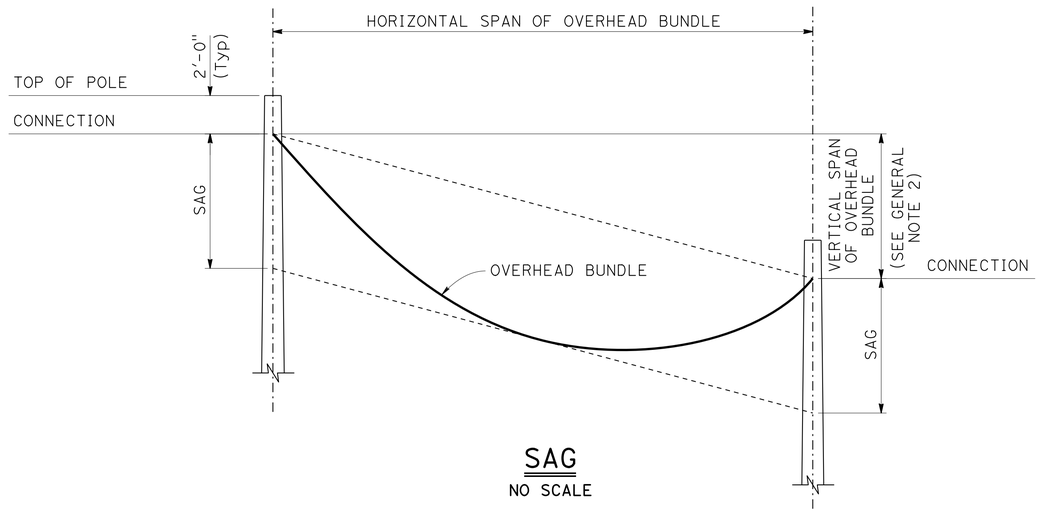

SAG

NO SCALE

Dist	COUNTY	ROUTE	POST MILES TOTAL PROJECT	SHEET No.	TOTAL SHEETS
11	SD	5	R29.1/R30.5	744	1012

05-23-14
REGISTERED CIVIL ENGINEER DATE

REGISTERED PROFESSIONAL ENGINEER
JON M. COLLINS
No. C62090
Exp. 09/30/15
CIVIL
STATE OF CALIFORNIA

07-21-14
PLANS APPROVAL DATE

THE STATE OF CALIFORNIA OR ITS OFFICERS OR AGENTS SHALL NOT BE RESPONSIBLE FOR THE ACCURACY OR COMPLETENESS OF SCANNED COPIES OF THIS PLAN SHEET.

CITY OF SAN DIEGO
525 B STREET
SUITE 7
SAN DIEGO, CA 92101

KIMLEY-HORN AND ASSOCIATES, INC.
401 B STREET, SUITE 600
SAN DIEGO, CA 92101

Design: AASHTO Standard Specifications for Structural Supports for Highway Signs, Luminaires and Traffic Signals, Fifth Edition (LTS-5).

GROUP LOAD COMBINATIONS:

I Dead Load
II Dead Load + Wind Load
III Dead Load + 0.5 (Wind Load) + Ice Load
IV Fatigue: Not used

LOADING:

Wind Loading: 100 mph (3-second gust)
Wind Recurrence Interval: 10 years
Combined height, exposure, and elevated terrain factor = 1.05 (Exposure C, structure is not located on or over the top half of a ridge, hill, or escarpment)

Ice Loading: 3.0 psf on surfaces, 0.60 in radial thickness of ice at a unit weight of 60 pcf on overhead bundles

BASIC DESIGN VALUES:

Timber Poles: Fb = 1850 psi
Fv = 110 psi
Fcp = 230 psi
Fc = 950 psi
E = 1500 x 10^3 psi

DESIGN WIRE BREAKING STRENGTHS:

ASTM A475, Utilities Grade, 7 strand modified by termination efficiency factor of 0.8

FOUNDATION DESIGN NOTES:

1. Pole embedment depth design is based on Broms' approximate procedure as described in Article 13.6 of AASHTO LTS-5.
2. Embedment depth is calculated based on following soil parameters,
   Cohesive Soil:
   Shear strength of soil c = 1500 psf.
   Cohesionless Soil:
   ø = 30 deg, γ = 120 pcf.
   Soil assumed to be unsaturated.
3. An overload factor of 2.0 and an undercapacity factor of 0.7 were used for safety factor of 2.86.
4. Allowable vertical bearing pressure at the end bearing of poles is 3000 psf at 6 feet or more embedment.

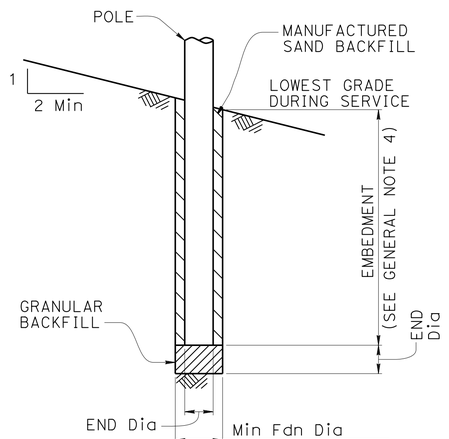

POLE FOUNDATION

GENERAL NOTES:

1. The messenger wire and any combination of overhead conductors must not exceed either a self weight of 3.0 lb/ft or the maximun d_p.
2. The maximum vertical span is 10% of the horizontal span.
3. For poles with adjacent unbalanced horizontal spans, the shortest horizontal span must be at least 50% of the largest horizontal span.
4. Add 2'-0" for slopes above 1V:4H.
5. For a pole supporting multiple spans, calculate d_p for each span and use the largest value.
6. Do not exceed the attachments shown.

DIAMETERS AND SELF WEIGHT OF OVERHEAD CONDUCTORS

CONDUCTOR OR CABLE TYPE	DIAMETER d (in)	WEIGHT w (plf)
3 CONDUCTOR SIGNAL CABLE (3CSC)	0.400	0.0980
5 CONDUCTOR SIGNAL CABLE (5CSC)	0.500	0.1560
9 CONDUCTOR SIGNAL CABLE (9CSC)	0.650	0.2760
12 CONDUCTOR SIGNAL CABLE (12CSC)	0.800	0.3970
28 CONDUCTOR SIGNAL CABLE (28CSC)	0.900	0.6490
1-#14	0.166	0.0235
1-#12	0.185	0.0330
1-#10	0.210	0.0476
1-#8	0.271	0.0774
1-#6	0.310	0.1130
1-#4	0.359	0.1690
1-#3	0.388	0.2080
1-#2	0.420	0.2560
1-#1	0.498	0.3340
6-CONDUCTOR SIGNAL INTERCONNECT CABLE (SIC)	0.350	0.0860
12-CONDUCTOR SIGNAL INTERCONNECT CABLE (SIC)	0.500	0.1440
DETECTOR LEAD-IN CABLE (DLC)	0.310	0.0440
12 to 48-STRAND FIBER OPTIC CABLE (48FOC)	0.424	0.0600
72-STRAND FIBER OPTIC CABLE (72FOC)	0.484	0.0770
96-STRAND FIBER OPTIC CABLE (96FOC)	0.535	0.1050
144-STRAND FIBER OPTIC CABLE (144FOC)	0.670	0.1890
3/8" ø MESSENGER WIRE	0.375	0.2730

APPROVED FOR ELECTRICAL WORK ONLY

TEMPORARY WOOD POLES GENERAL NOTES

NO SCALE

E-66

REVISED BY | DATE REVISED
JOHN KISSINGER | JON COLLINS
CALCULATED-DESIGNED BY | CHECKED BY
CONSULTANT FUNCTIONAL SUPERVISOR: JON COLLINS
STATE OF CALIFORNIA - DEPARTMENT OF TRANSPORTATION
Caltrans

LAST REVISION: DATE PLOTTED => 23-JUL-2014 | 06-17-14 TIME PLOTTED => 14:55

BORDER LAST REVISED 07/02/10 | USERNAME => s127400 | DGN FILE => 1112000102ua066.dgn | RELATIVE BORDER SCALE IS IN INCHES 0 1 2 3 | UNIT 2771 | PROJECT NUMBER & PHASE 11120001021

Dist	COUNTY	ROUTE	POST MILES TOTAL PROJECT	SHEET No.	TOTAL SHEETS
11	SD	5	R29.1/R30.5	745	1012

05-23-14
REGISTERED CIVIL ENGINEER DATE

07-21-14
PLANS APPROVAL DATE

REGISTERED PROFESSIONAL ENGINEER
JON M. COLLINS
No. C62090
Exp. 09/30/15
CIVIL
STATE OF CALIFORNIA

THE STATE OF CALIFORNIA OR ITS OFFICERS OR AGENTS SHALL NOT BE RESPONSIBLE FOR THE ACCURACY OR COMPLETENESS OF SCANNED COPIES OF THIS PLAN SHEET.

CITY OF SAN DIEGO
525 B STREET
SUITE 7
SAN DIEGO, CA 92101

KIMLEY-HORN AND ASSOCIATES, INC.
401 B STREET, SUITE 600
SAN DIEGO, CA 92101

POLE SELECTION TABLE

LEGEND

- Wood Pole No Attachments
- A — Wood Pole with Attachments
- —OH— Overhead Bundle

OVERHEAD BUNDLE HORIZONTAL SPAN (Max)			CASE 1N				CASE 2N				CASE 3N				CASE 4N				CASE 5N
		MAXIMUM d_p	1"	1.5"	2.0"	2.5"	1"	1.5"	2.0"	2.5"	1.0"	1.5"	2.0"	2.5"	1"	1.5"	2.0"	2.5"	N/A
50′		MINIMUM POLE CLASS	H-1	H-2	H-2	H-2	4	3	2	1	H-2	H-2	H-3	H-3	H-4	H-4	H-4	H-5	CLASS 1 E = 10′
		POLE EMBEDMENT (E)	11′				10′				11′				12′				
100′		MINIMUM POLE CLASS	H-2	H-3	H-4	H-5	1	H-1	H-2	H-3	H-4	H-5	H-5	H-6	H-5	H-5	H-6		
		POLE EMBEDMENT (E)	12′				11′				12′				12′				
150′		MINIMUM POLE CLASS	H-4	H-5	H-6		H-1	H-2	H-3	H-5	H-6				H-6				
		POLE EMBEDMENT (E)	12′				12′				12′				12′				
200′		MINIMUM POLE CLASS	H-5	H-6			H-2	H-3	H-5										
		POLE EMBEDMENT (E)	12′				12′												

1. CCTV CAMERA ASSEMBLY OR VEHICLE DETECTION SYSTEM
2. OVERHEAD BUNDLE CONSISTING OF A 3/8" Ø MESSENGER WIRE AND OVERHEAD CONDUCTORS AND LASHING WIRE.
3. LUMINAIRE WITH MAST ARM
4. PEDESTRIAN PUSHBUTTON
5. SIGNAL FACE WITH 3 INDICATIONS OR SINGLE SHEET SIGN PANEL (10 SQFT MAX)
6. RISER WITH WEATHER HEAD AS REQUIRED
7. PULL BOX AS REQUIRED
8. GROUNDING AS REQUIRED
9. SINGLE SECTION FLASHING BEACON OR SINGLE SHEET SIGN PANEL (4 SQFT MAX)
10. SINGLE SHEET SIGN PANEL (4′ X 4′ MAX) OR SIGNAL FACE WITH 3 INDICATIONS
11. FLASHING BEACON CONTROL ASSEMBLY
12. NEMA 3R ENCLOSURE, 26"(W) X 56"(H) X 12"(D) MAX DIMENSIONS. MAX WEIGHT INCLUDING BATTERIES, 450 LBS
13. 25′ SQFT MAX TOTAL PHOTOVOLTAIC PANELS MOUNTED AS SHOWN AS REQUIRED
14. 2-SECTION 12" FLASHING BEACON

NOTES:

1. IN ADDITION TO OTHER RESTRICTIONS ON MAXIMUM HORIZONTAL SPAN, THIS HORIZONTAL SPAN MUST NOT EXCEED 100′.
2. CASES 1N, 3N AND 4N MAY SUBSTITUTE THE ATTACHMENTS SHOWN IN CASE 5N IF THE PHOTOVOLTAIC PANEL IS NOT INCLUDED.

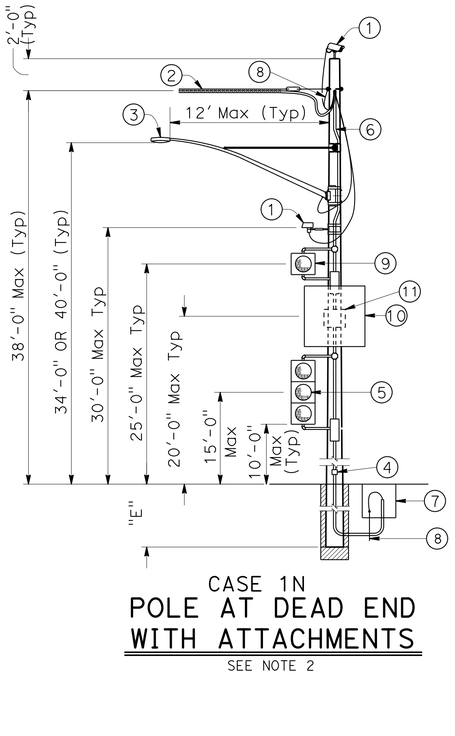

CASE 1N
POLE AT DEAD END WITH ATTACHMENTS
SEE NOTE 2

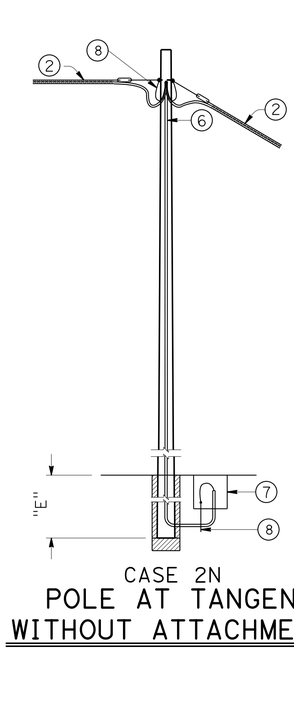

CASE 2N
POLE AT TANGENT WITHOUT ATTACHMENTS

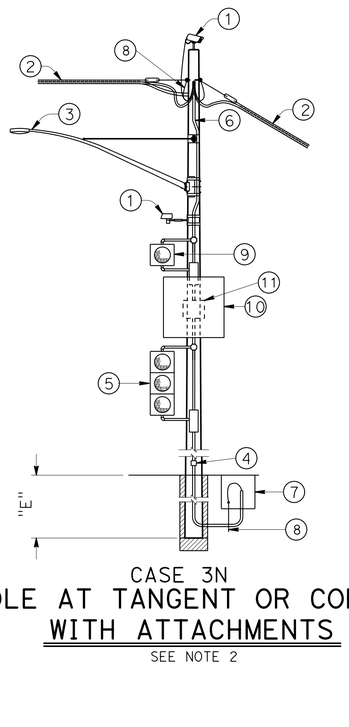

CASE 3N
POLE AT TANGENT OR CORNER WITH ATTACHMENTS
SEE NOTE 2

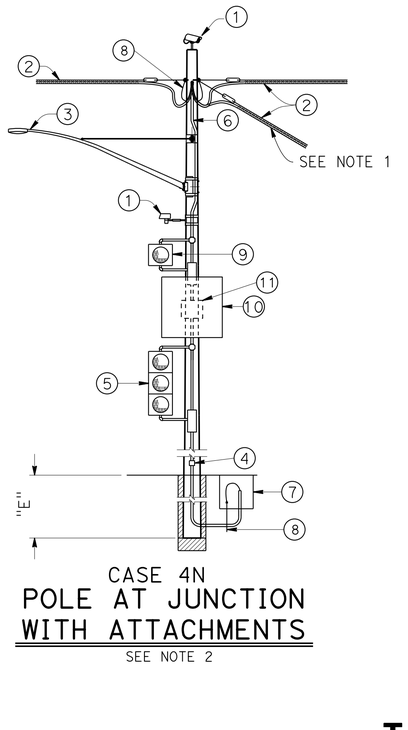

CASE 4N
POLE AT JUNCTION WITH ATTACHMENTS
SEE NOTE 2

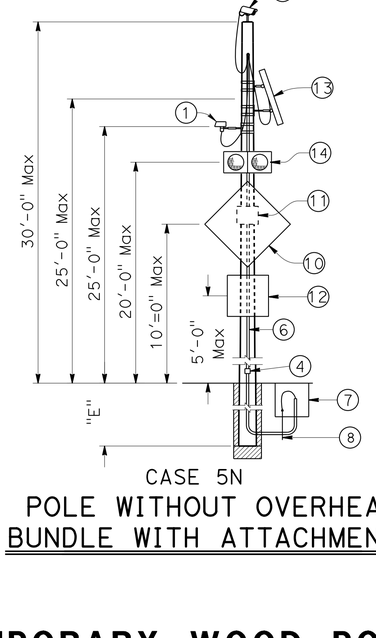

CASE 5N
POLE WITHOUT OVERHEAD BUNDLE WITH ATTACHMENTS

TEMPORARY WOOD POLES
NON-GUYED - NO SIGNALS ON SPANS

NO SCALE

E-67

APPROVED FOR ELECTRICAL WORK ONLY

STATE OF CALIFORNIA - DEPARTMENT OF TRANSPORTATION
Caltrans
CONSULTANT FUNCTIONAL SUPERVISOR: JON COLLINS
CALCULATED-DESIGNED BY: JOHN KISSINGER
CHECKED BY: JON COLLINS
REVISED BY
DATE REVISED

LAST REVISION | DATE PLOTTED => 23-JUL-2014 | TIME PLOTTED => 14:55
07-17-14

M

Maint	MAINTENANCE
Max	MAXIMUM
MB	METAL BEAM
MBB	METAL BEAM BARRIER
MBGR	METAL BEAM GUARD RAILING
Med	MEDIAN
MGS	MIDWEST GUARDRAIL SYSTEM
MH	MANHOLE
Min	MINIMUM
Misc	MISCELLANEOUS
Misc I & S	MISCELLANEOUS IRON AND STEEL
Mkr	MARKER
Mod	MODIFIED, MODIFY
Mon	MONUMENT
MP	METAL PLATE
MPGR	METAL PLATE GUARD RAILING
MR	MOVEMENT RATING
MSE	MECHANICALLY STABILIZED EMBANKMENT
Mt	MOUNTAIN, MOUNT
Mtl	MATERIAL
MVP	MAINTENANCE VEHICLE PULLOUT

N

N	NORTH
NB	NORTHBOUND
No.	NUMBER (MUST HAVE PERIOD)
Nos.	NUMBERS (MUST HAVE PERIOD)
NPS	NOMINAL PIPE SIZE
NS	NEAR SIDE
NSP	NEW STANDARD PLAN
NTS	NOT TO SCALE

O

Oblr	OBLITERATE
OC	OVERCROSSING
OD	OUTSIDE DIAMETER
OF	OUTSIDE FACE
OG	ORIGINAL GROUND
OGAC	OPEN GRADED ASPHALT CONCRETE
OGFC	OPEN GRADED FRICTION COURSE
OH	OVERHEAD
OHWM	ORDINARY HIGH WATER MARK
O-O	OUT TO OUT
Opp	OPPOSITE
OSD	OVERSIDE DRAIN

P

P	PAGE
PAP	PERFORATED ALUMINUM PIPE
PB	PULL BOX
PC	POINT OF CURVATURE, PRECAST
PCC	POINT OF COMPOUND CURVE, PORTLAND CEMENT CONCRETE
PCMS	PORTABLE CHANGEABLE MESSAGE SIGN
PCP	PERFORATED CONCRETE PIPE, PRESTRESSED CONCRETE PIPE
PCVC	POINT OF COMPOUND VERTICAL CURVE
PEC	PERMIT TO ENTER AND CONSTRUCT
Ped	PEDESTRIAN
Ped OC	PEDESTRIAN OVERCROSSING
Ped UC	PEDESTRIAN UNDERCROSSING
Perm Mtl	PERMEABLE MATERIAL

P continued

PG	PROFILE GRADE
PI	POINT OF INTERSECTION
PJP	PARTIAL JOINT PENETRATION
Pkwy	PARKWAY
℄,PL	PLATE
P/L	PROPERTY LINE
PM	POST MILE, TIME FROM NOON TO MIDNIGHT
PN	PAVING NOTCH
POC	POINT OF HORIZONTAL CURVE
POT	POINT OF TANGENT
POVC	POINT OF VERTICAL CURVE
PP	PIPE PILE, PLASTIC PIPE, POWER POLE
PPL	PREFORMED PERMEABLE LINER
PPP	PERFORATED PLASTIC PIPE
PRC	POINT OF REVERSE CURVE
PRF	PAVEMENT REINFORCING FABRIC
PRVC	POINT OF REVERSE VERTICAL CURVE
PS&E	PLANS, SPECIFICATIONS AND ESTIMATES
PS, P/S	PRESTRESSED
PSP	PERFORATED STEEL PIPE
PT	POINT OF TANGENCY
PVC	POLYVINYL CHLORIDE
Pvmt	PAVEMENT

Q

Qty	QUANTITY

R

R	RADIUS
R & D	REMOVE AND DISPOSE
R & S	REMOVE AND SALVAGE
R/C	RATE OF CHANGE
RCA	REINFORCED CONCRETE ARCH
RCB	REINFORCED CONCRETE BOX
RCP	REINFORCED CONCRETE PIPE
RCPA	REINFORCED CONCRETE PIPE ARCH
Rd	ROAD
Reinf	REINFORCED, REINFORCEMENT, REINFORCING
Rel	RELOCATE
Repl	REPLACEMENT
Ret	RETAINING
Rev	REVISED, REVISION
Rdwy	ROADWAY
RHMA	RUBBERIZED HOT MIX ASPHALT
Riv	RIVER
RM	ROAD-MIXED
RP	RADIUS POINT, REFERENCE POINT
RR	RAILROAD
RSP	ROCK SLOPE PROTECTION, REVISED STANDARD PLAN
Rt	RIGHT
Rte	ROUTE
RW	REDWOOD, RETAINING WALL
R/W	RIGHT OF WAY
Rwy	RAILWAY

S

S	SOUTH, SUPPLEMENT
SAE	STRUCTURE APPROACH EMBANKMENT
Salv	SALVAGE
SAPP	STRUCTURAL ALUMINUM PLATE PIPE
SB	SOUTHBOUND
SC	SAND CUSHION
SCSP	SLOTTED CORRUGATED STEEL PIPE
SD	STORM DRAIN
Sec	SECOND, SECTION
Sep	SEPARATION
SG	SUBGRADE
Shld	SHOULDER
Sht	SHEET
Sim	SIMILAR
℄	STATION LINE
SM	SELECTED MATERIAL
Spec	SPECIAL, SPECIFICATIONS
SPP	SLOTTED PLASTIC PIPE
SS	SLOPE STAKE
SSBM	STRAP AND SADDLE BRACKET METHOD
SSD	STRUCTURAL SECTION DRAIN
SSPA	STRUCTURAL STEEL PLATE ARCH
SSPP	STRUCTURAL STEEL PLATE PIPE
SSPPA	STRUCTURAL STEEL PLATE PIPE ARCH
SSRP	STEEL SPIRAL RIB PIPE
St	STREET
Sta	STATION
STBB	SINGLE THRIE BEAM BARRIER
Std	STANDARD
Str	STRUCTURE
Surf	SURFACING
SW	SIDEWALK, SOUND WALL
Swr	SEWER
Sym	SYMMETRICAL
S4S	SURFACE 4 SIDES

T

T	SEMI-TANGENT
Tan	TANGENT
TBB	THRIE BEAM BARRIER
Tbr	TIMBER
TC	TOP OF CURB
TCB	TRAFFIC CONTROL BOX
TCE	TEMPORARY CONSTRUCTION EASEMENT
Tel	TELEPHONE
Temp	TEMPORARY
TG	TOP OF GRADE
Tot	TOTAL
TP	TELEPHONE POLE
TPB	TREATED PERMEABLE BASE
TPM	TREATED PERMEABLE MATERIAL
Trans	TRANSITION

T continued

TS	TRANSVERSE, TRAFFIC SIGNAL, TUBULAR STEEL
Typ	TYPICAL

U

UC	UNDERCROSSING
UD	UNDERDRAIN
UG	UNDERGROUND
UON	UNLESS OTHERWISE NOTED
UP	UNDERPASS

V

V	VALVE, DESIGN SPEED
Var	VARIABLE, VARIES
VC	VERTICAL CURVE
VCP	VITRIFIED CLAY PIPE
Vert	VERTICAL
Via	VIADUCT
Vol	VOLUME

W

W	WEST, WIDTH
WB	WESTBOUND
WH	WEEP HOLE
WM	WIRE MESH
WS	WATER SURFACE
WSP	WELDED STEEL PIPE
Wt	WEIGHT
WV	WATER VALVE
WW	WINGWALL
WWLOL	WINGWALL LAYOUT LINE

X

X Sec	CROSS SECTION
Xing	CROSSING

Y

Yr	YEAR
Yrs	YEARS

Dist	COUNTY	ROUTE	POST MILES TOTAL PROJECT	SHEET No.	TOTAL SHEETS
11	SD	5	R29.1/R30.5	746	1012

Grace M. Tsushima
REGISTERED CIVIL ENGINEER

July 19, 2013
PLANS APPROVAL DATE

Grace M. Tsushima No. C49814 Exp. 9-30-14 CIVIL — REGISTERED PROFESSIONAL ENGINEER — STATE OF CALIFORNIA

THE STATE OF CALIFORNIA OR ITS OFFICERS OR AGENTS SHALL NOT BE RESPONSIBLE FOR THE ACCURACY OR COMPLETENESS OF SCANNED COPIES OF THIS PLAN SHEET.

TO ACCOMPANY PLANS DATED 07-21-14

UNIT OF MEASUREMENT SYMBOLS:

Some of the symbols used in the project plan quantity tables and in the Bid Item List are:

TABLE A

SYMBOL USED	DEFINITIONS
ACRE	ACRE
CF	CUBIC FOOT
CY	CUBIC YARD
EA	EACH
GAL	GALLON
LB	POUND
LF	LINEAR FOOT
SQFT	SQUARE FOOT
SQYD	SQUARE YARD
STA	100 FEET
TAB	TABLET
TON	2,000 POUNDS

Some of the symbols used in the plans other than in the project plan quantity tables are:

TABLE B

SYMBOL USED	DEFINITIONS
ksi	KIPS PER SQUARE INCH
ksf	KIPS PER SQUARE FOOT
psi	POUNDS PER SQUARE INCH
psf	POUNDS PER SQUARE FOOT
lb/ft^3, pcf	POUNDS PER CUBIC FOOT
tsf	TONS PER SQUARE FOOT
mph, MPH *	MILES PER HOUR
ø	NOMINAL DIAMETER
oz	OUNCE
lb	POUND
kip	1,000 POUNDS
cal	CALORIE
ft	FOOT OR FEET
gal	GALLON

* For use on a sign panel only

STATE OF CALIFORNIA
DEPARTMENT OF TRANSPORTATION

ABBREVIATIONS (SHEET 2 OF 2)

NO SCALE

RSP A10B DATED JULY 19, 2013 SUPERSEDES STANDARD PLAN A10B DATED MAY 20, 2011 - PAGE 2 OF THE STANDARD PLANS BOOK DATED 2010.

REVISED STANDARD PLAN RSP A10B

2010 REVISED STANDARD PLAN RSP A10B

6-7-13

Dist	COUNTY	ROUTE	POST MILES TOTAL PROJECT	SHEET No.	TOTAL SHEETS
11	SD	5	R29.1/R30.5	747	1012

Roberta L. McLaughlin
REGISTERED CIVIL ENGINEER

July 19, 2013
PLANS APPROVAL DATE

REGISTERED PROFESSIONAL ENGINEER
Roberta L. McLaughlin
No. C40375
Exp. 3-31-15
CIVIL
STATE OF CALIFORNIA

THE STATE OF CALIFORNIA OR ITS OFFICERS OR AGENTS SHALL NOT BE RESPONSIBLE FOR THE ACCURACY OR COMPLETENESS OF SCANNED COPIES OF THIS PLAN SHEET.

TO ACCOMPANY PLANS DATED 07-21-14

EXIT RAMP NEUTRAL AREA (GORE) TREATMENT

DETAIL 36

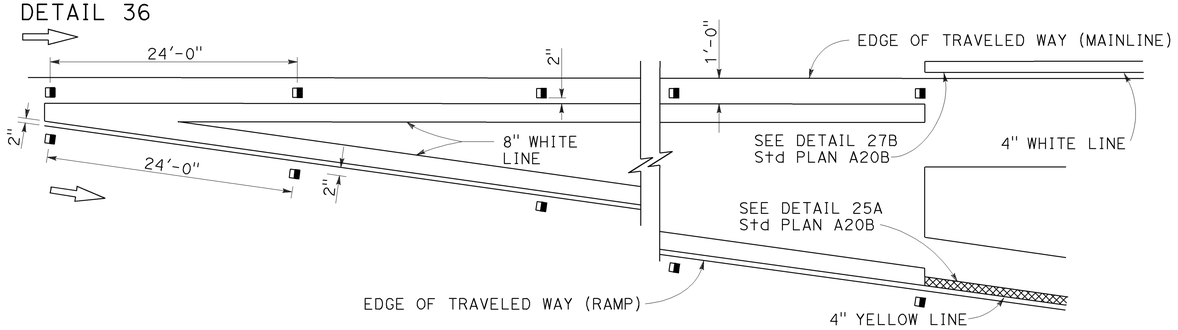

ENTRANCE RAMP NEUTRAL AREA (MERGE) TREATMENT

DETAIL 36A

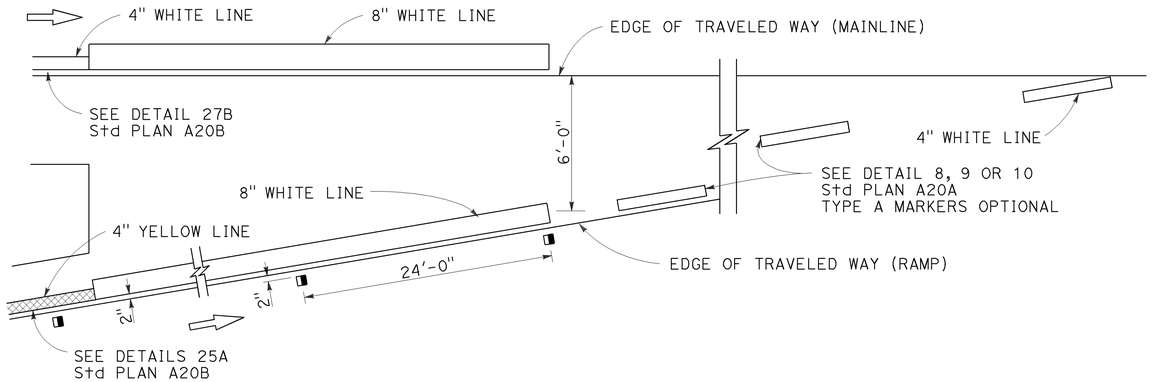

ENTRANCE RAMP NEUTRAL AREA (ACCELERATION LANE) TREATMENT

DETAIL 36B

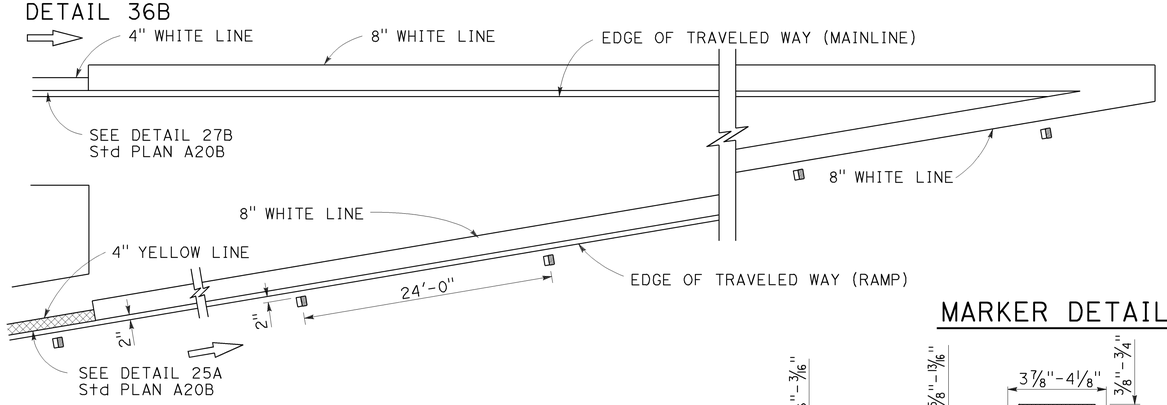

LANE DROP AT EXIT RAMPS

DETAIL 37

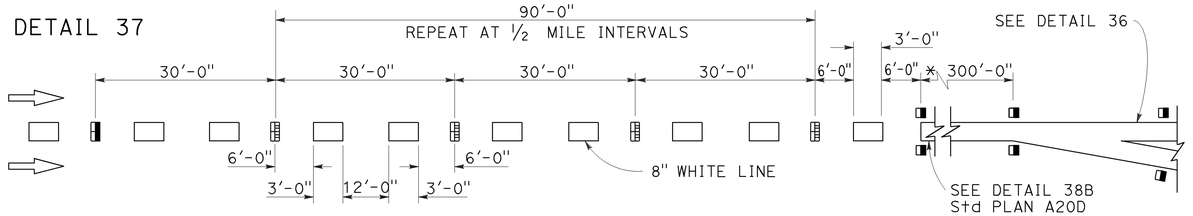

DETAIL 37A

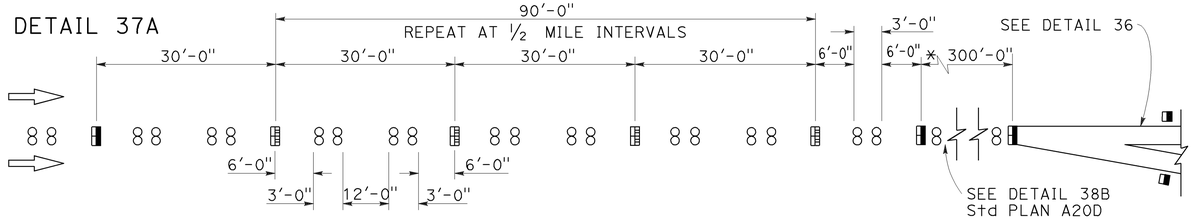

* The solid channelizing line shown may be omitted on short auxiliary lanes where weaving length is critical.

LANE DROP AT INTERSECTIONS

DETAIL 37B

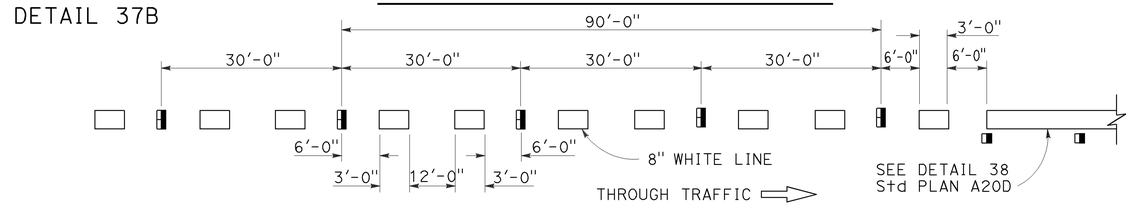

DETAIL 37C

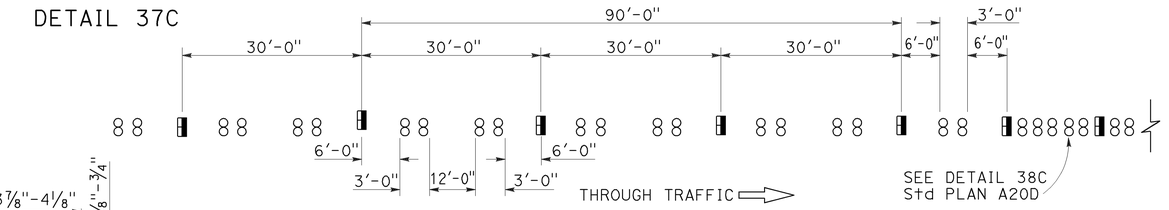

MARKER DETAILS

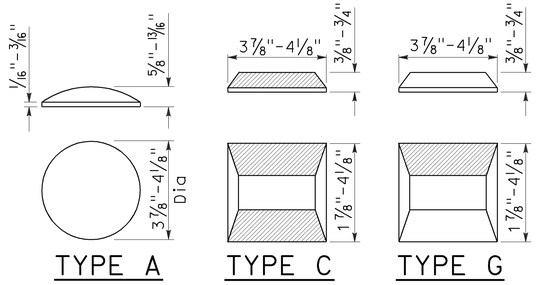

LEGEND:

MARKERS

- ○ TYPE A WHITE NON-REFLECTIVE
- ▣ TYPE C RED-CLEAR RETROREFLECTIVE
- ◨ TYPE G ONE-WAY CLEAR RETROREFLECTIVE

STATE OF CALIFORNIA
DEPARTMENT OF TRANSPORTATION

PAVEMENT MARKERS AND TRAFFIC LINE TYPICAL DETAILS

NO SCALE

RSP A20C DATED JULY 19, 2013 SUPERSEDES STANDARD PLAN A20C
DATED MAY 20, 2011 - PAGE 11 OF THE STANDARD PLANS BOOK DATED 2010.

REVISED STANDARD PLAN RSP A20C

2010 REVISED STANDARD PLAN RSP A20C

4-29-13

Dist	COUNTY	ROUTE	POST MILES TOTAL PROJECT	SHEET No.	TOTAL SHEETS
11	SD	5	R29.1/R30.5	748	1012

Roberta L. McLaughlin
REGISTERED CIVIL ENGINEER

April 20, 2012
PLANS APPROVAL DATE

REGISTERED PROFESSIONAL ENGINEER
Roberta L. McLaughlin
No. C40375
Exp. 3-31-13
CIVIL
STATE OF CALIFORNIA

THE STATE OF CALIFORNIA OR ITS OFFICERS OR AGENTS SHALL NOT BE RESPONSIBLE FOR THE ACCURACY OR COMPLETENESS OF SCANNED COPIES OF THIS PLAN SHEET.

TO ACCOMPANY PLANS DATED 07-21-14

2010 REVISED STANDARD PLAN RSP A24A

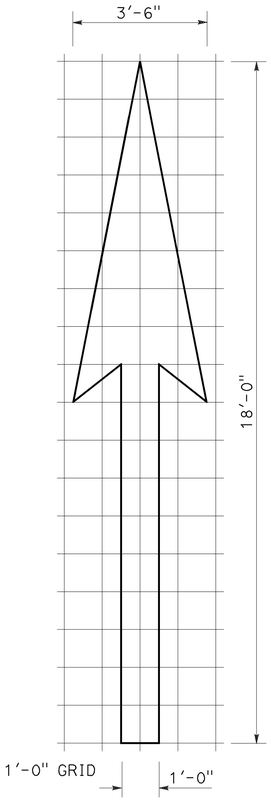

A=25 ft²

TYPE I 18'-0" ARROW

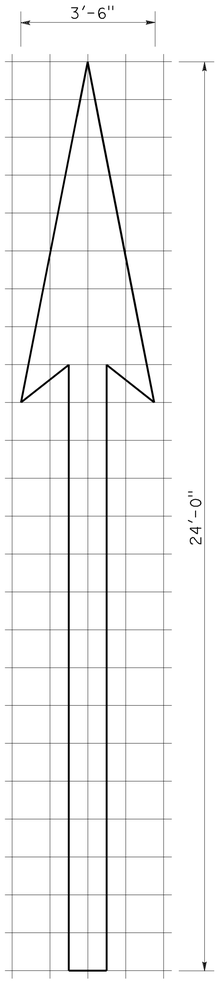

A=31 ft²

TYPE I 24'-0" ARROW

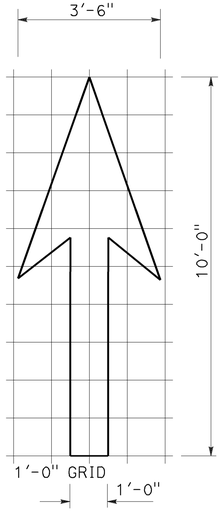

A=14 ft²

TYPE I 10'-0" ARROW

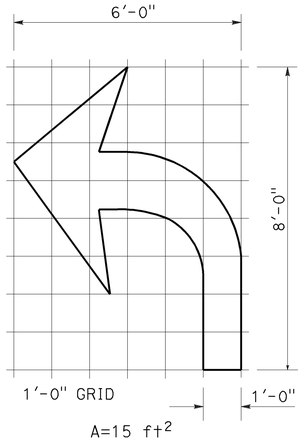

A=15 ft²

TYPE IV (L) ARROW

(For Type IV (R) arrow, use mirror image)

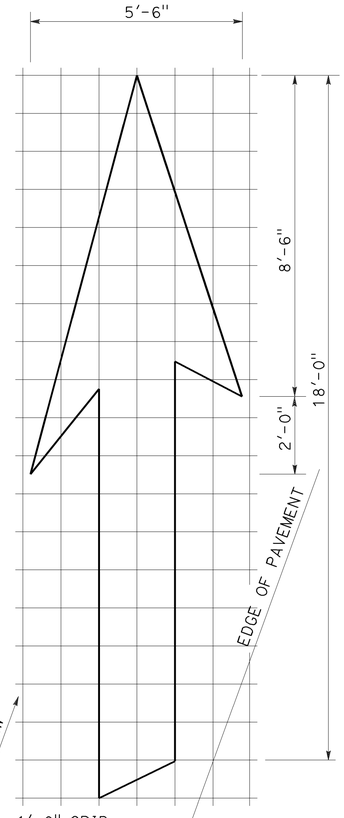

A=42 ft²

TYPE VI ARROW

Right lane drop arrow (For left lane, use mirror image)

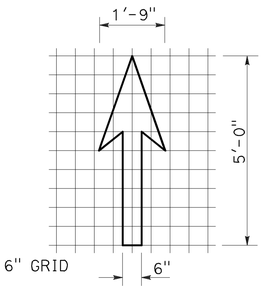

A=3.5 ft²

BIKE LANE ARROW

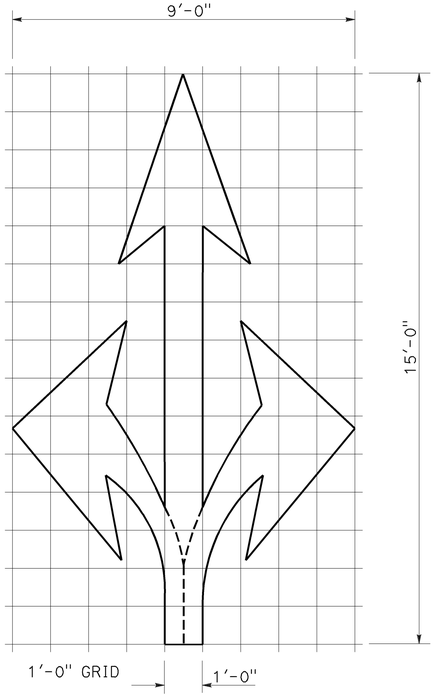

A=36 ft²

TYPE VIII ARROW

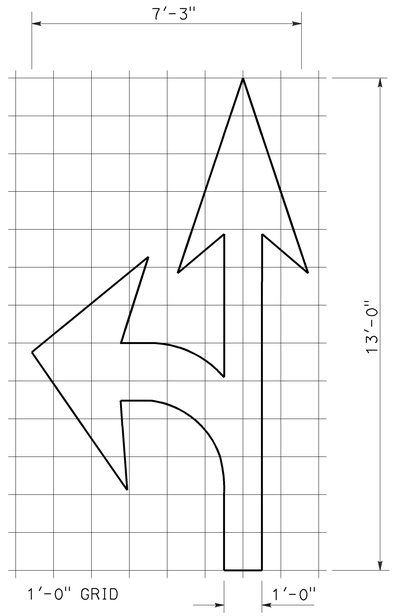

A=27 ft²

TYPE VII (L) ARROW

(For Type VII (R) arrow, use mirror image)

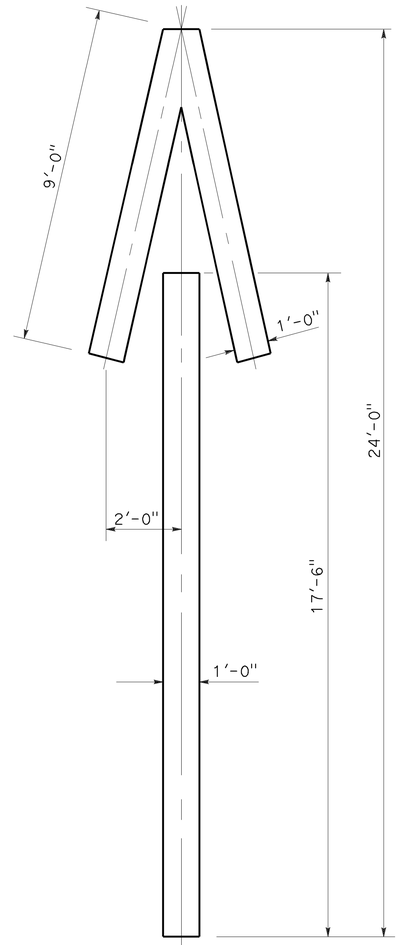

A=33 ft²

TYPE V ARROW

NOTE:
Minor variations in dimensions may be accepted by the Engineer.

STATE OF CALIFORNIA
DEPARTMENT OF TRANSPORTATION

PAVEMENT MARKINGS ARROWS

NO SCALE

RSP A24A DATED APRIL 20, 2012 SUPERSEDES STANDARD PLAN A24A DATED MAY 20, 2011 - PAGE 13 OF THE STANDARD PLANS BOOK DATED 2010.

REVISED STANDARD PLAN RSP A24A

3-14-12

Dist	COUNTY	ROUTE	POST MILES TOTAL PROJECT	SHEET No.	TOTAL SHEETS
11	SD	5	R29.1/R30.5	749	1012

REGISTERED CIVIL ENGINEER

October 19, 2012
PLANS APPROVAL DATE

THE STATE OF CALIFORNIA OR ITS OFFICERS OR AGENTS SHALL NOT BE RESPONSIBLE FOR THE ACCURACY OR COMPLETENESS OF SCANNED COPIES OF THIS PLAN SHEET.

REGISTERED PROFESSIONAL ENGINEER
Roberta L. McLaughlin
No. C40375
Exp. 3-31-13
CIVIL
STATE OF CALIFORNIA

NOTE: TO ACCOMPANY PLANS DATED 07-21-14

Minor variations in dimensions may be accepted by the Engineer.

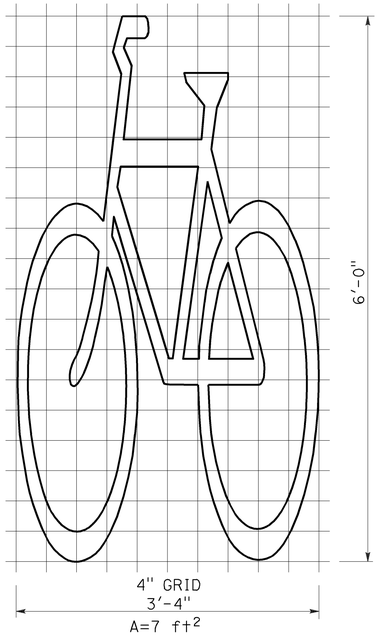

BIKE LANE SYMBOL WITHOUT PERSON

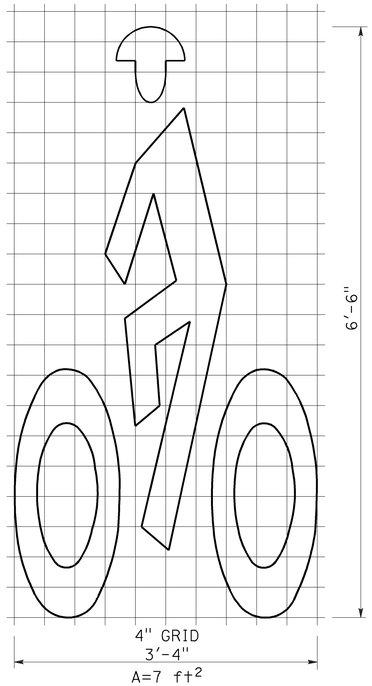

BIKE LANE SYMBOL WITH PERSON

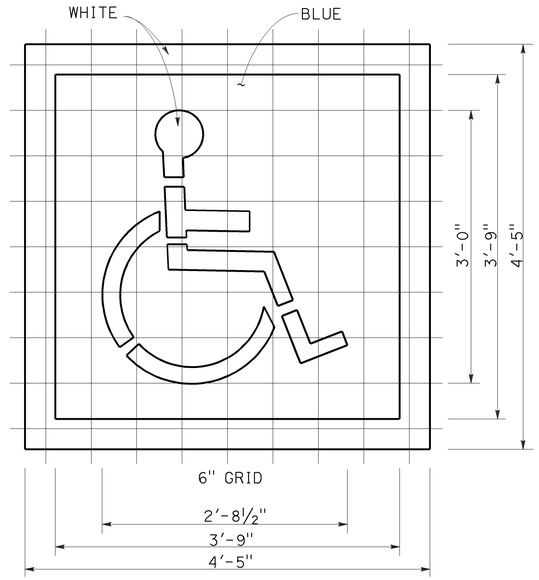

INTERNATIONAL SYMBOL OF ACCESSIBILITY (ISA) MARKING

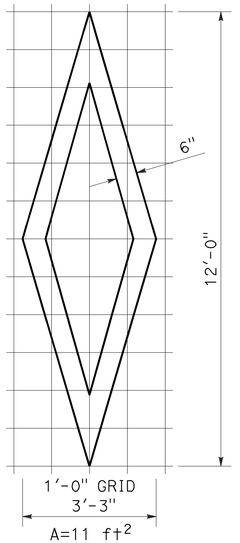

DIAMOND SYMBOL

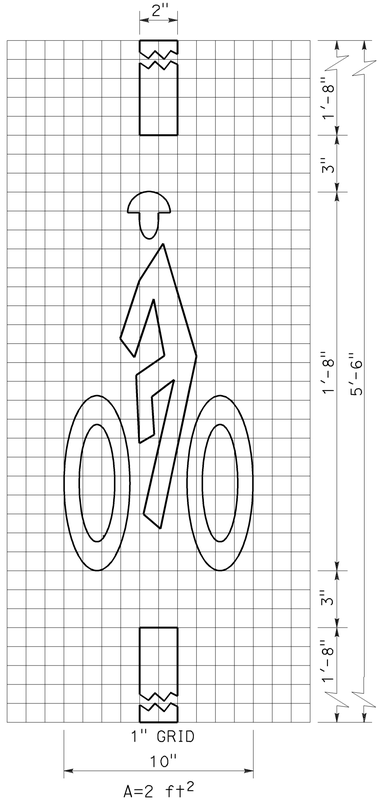

BICYCLE LOOP DETECTOR SYMBOL

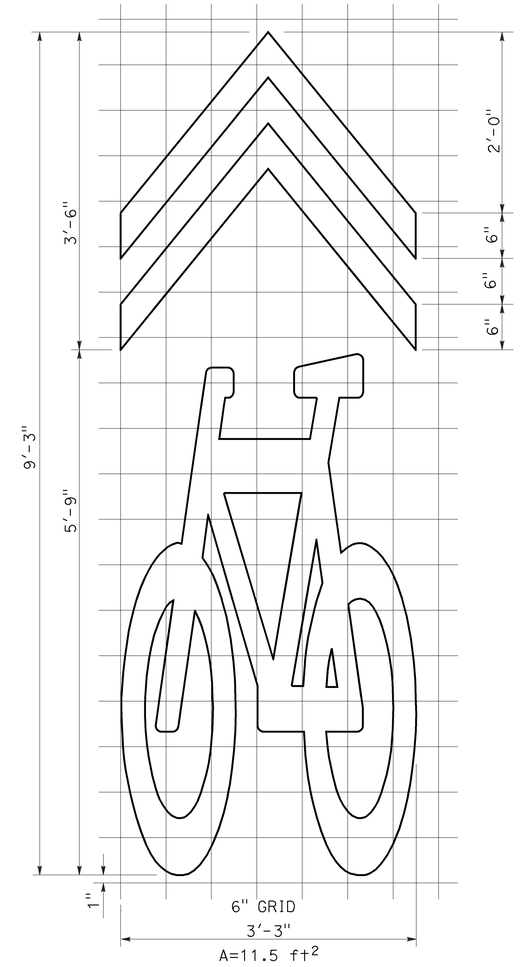

SHARED ROADWAY BICYCLE MARKING

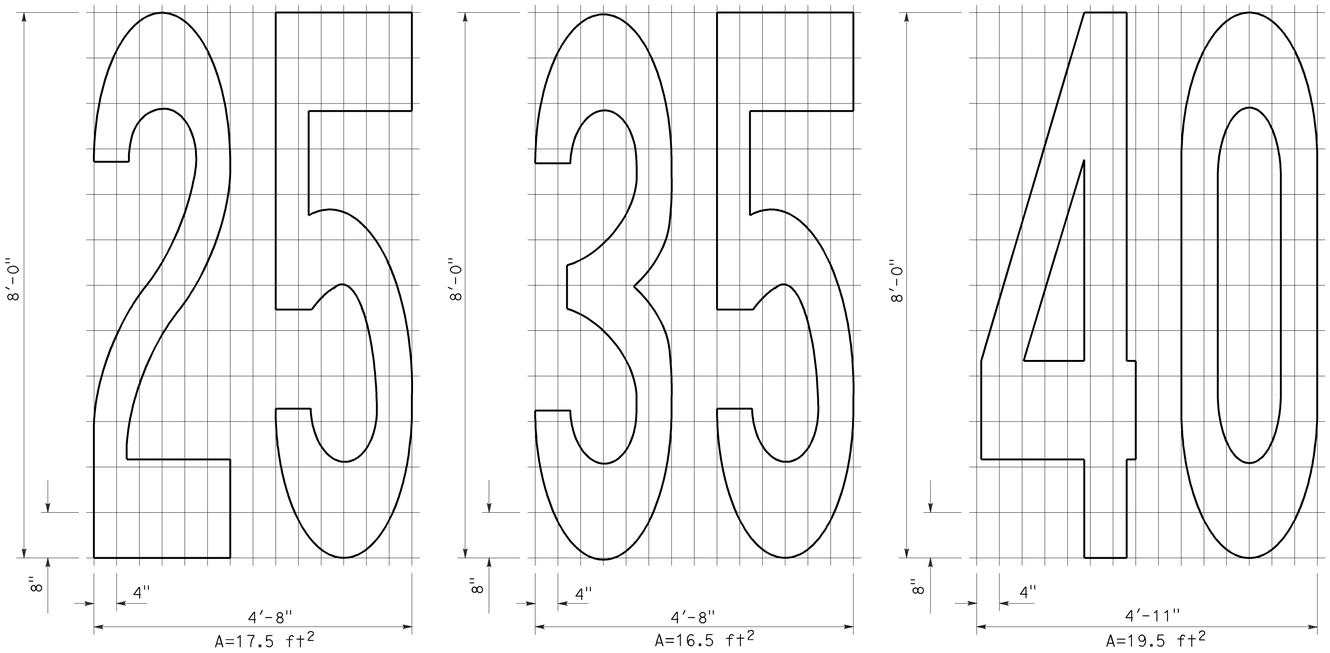

NUMERALS

STATE OF CALIFORNIA
DEPARTMENT OF TRANSPORTATION

PAVEMENT MARKINGS SYMBOLS AND NUMERALS

NO SCALE

RSP A24C DATED OCTOBER 19, 2012 SUPERSEDES STANDARD PLAN A24C DATED MAY 20, 2011 - PAGE 15 OF THE STANDARD PLANS BOOK DATED 2010.

REVISED STANDARD PLAN RSP A24C

2010 REVISED STANDARD PLAN RSP A24C

6-28-12

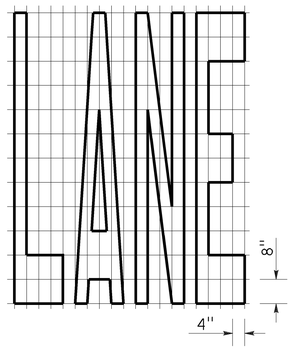

A=24 ft²

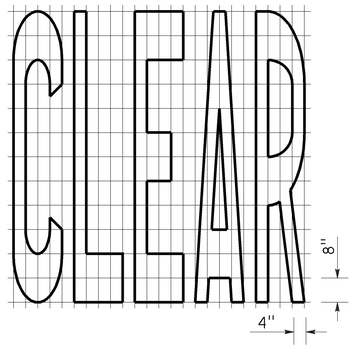

A=27 ft²

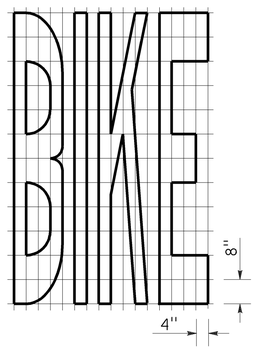

A=21 ft²

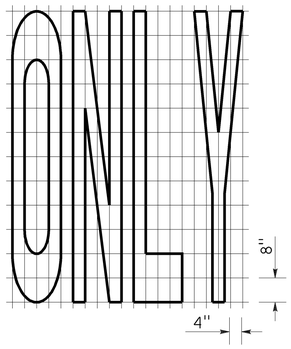

A=22 ft²

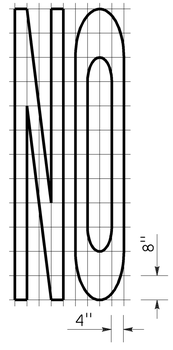

A=14 ft²

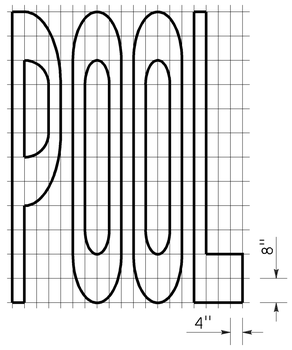

A=23 ft²

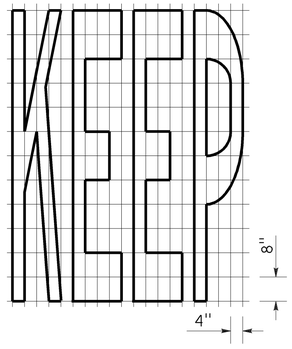

A=24 ft²

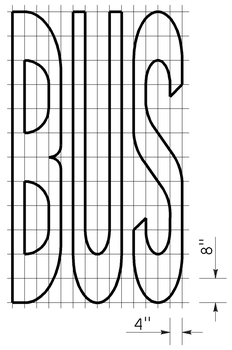

A=20 ft²

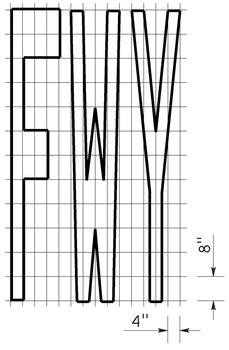

A=16 ft²

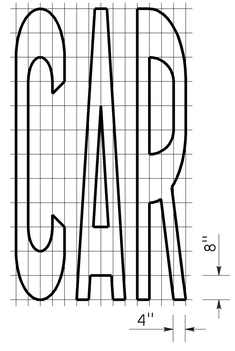

A=17 ft²

Dist	COUNTY	ROUTE	POST MILES TOTAL PROJECT	SHEET No.	TOTAL SHEETS
11	SD	5	R29.1/R30.5	750	1012

Roberta L. McLaughlin
REGISTERED CIVIL ENGINEER

July 20, 2012
PLANS APPROVAL DATE

REGISTERED PROFESSIONAL ENGINEER
Roberta L. McLaughlin
No. C40375
Exp. 3-31-13
CIVIL
STATE OF CALIFORNIA

THE STATE OF CALIFORNIA OR ITS OFFICERS OR AGENTS SHALL NOT BE RESPONSIBLE FOR THE ACCURACY OR COMPLETENESS OF SCANNED COPIES OF THIS PLAN SHEET.

TO ACCOMPANY PLANS DATED 07-21-14

WORD MARKINGS			
ITEM	ft²	ITEM	ft²
LANE	24	NO	14
POOL	23	BIKE	21
CAR	17	BUS	20
CLEAR	27	ONLY	22
KEEP	24	FWY	16

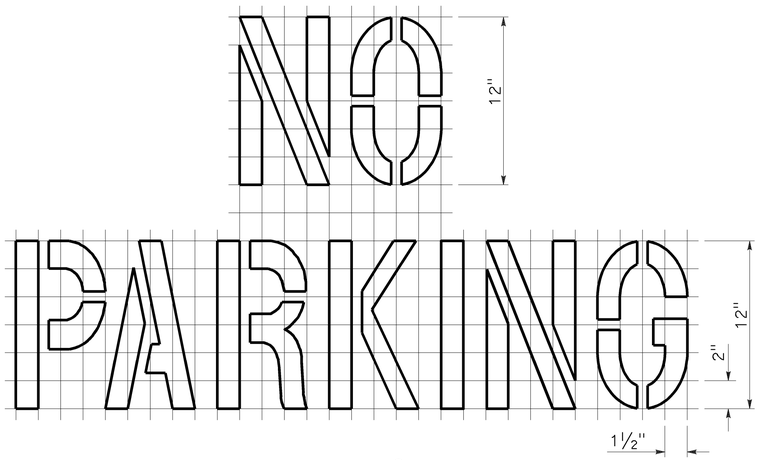

A=2 ft²
See Notes 6 and 7

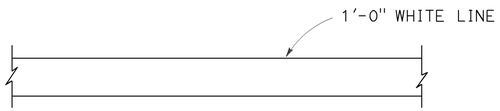

LIMIT LINE (STOP LINE)

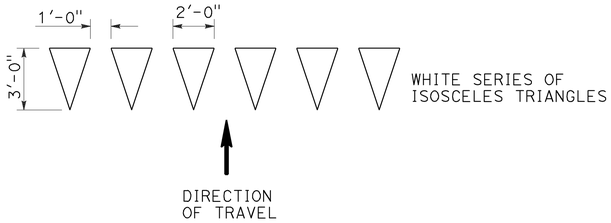

YIELD LINE

NOTES:

1. If a message consists of more than one word, it should read "UP", i.e., the first word should be nearest the driver.
2. The space between words should be at least four times the height of the characters for low speed roads, but not more than ten times the height of the characters. The space may be reduced appropriately where there is limited space because of local conditions.
3. Minor variations in dimensions may be accepted by the Engineer.
4. Portions of a letter, number or symbol may be separated by connecting segments not to exceed 2" in width.
5. The words "NO PARKING" pavement marking is to be used for parking facilities. For typical locations of markings, see Standard Plans A90A and A90B.
6. The words "NO PARKING", shall be painted in white letters no less than 1'-0" high on a contrasting background and located so that it is visible to traffic enforcement officials.

STATE OF CALIFORNIA
DEPARTMENT OF TRANSPORTATION

PAVEMENT MARKINGS WORDS, LIMIT AND YIELD LINES

NO SCALE

RSP A24E DATED JULY 20, 2012 SUPERSEDES STANDARD PLAN A24E
DATED MAY 20, 2011 - PAGE 17 OF THE STANDARD PLANS BOOK DATED 2010.

REVISED STANDARD PLAN RSP A24E

2010 REVISED STANDARD PLAN RSP A24E

6-12-12

Dist	COUNTY	ROUTE	POST MILES TOTAL PROJECT	SHEET No.	TOTAL SHEETS
11	SD	5	R29.1/R30.5	751	1012

Roberta L. McLaughlin
REGISTERED CIVIL ENGINEER

July 20, 2012
PLANS APPROVAL DATE

REGISTERED PROFESSIONAL ENGINEER
Roberta L. McLaughlin
No. C40375
Exp. 3-31-13
CIVIL
STATE OF CALIFORNIA

THE STATE OF CALIFORNIA OR ITS OFFICERS OR AGENTS SHALL NOT BE RESPONSIBLE FOR THE ACCURACY OR COMPLETENESS OF SCANNED COPIES OF THIS PLAN SHEET.

TO ACCOMPANY PLANS DATED 07-21-14

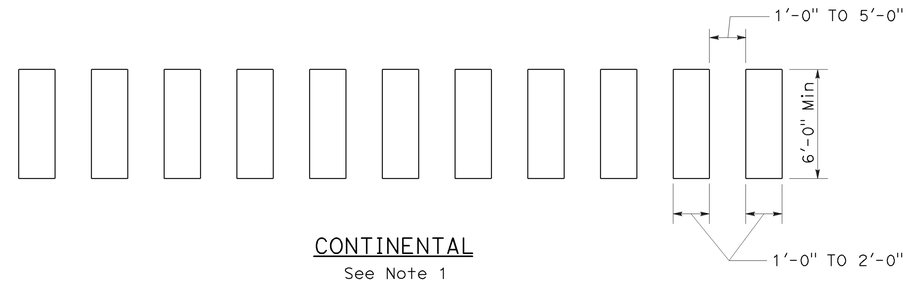

CONTINENTAL
See Note 1

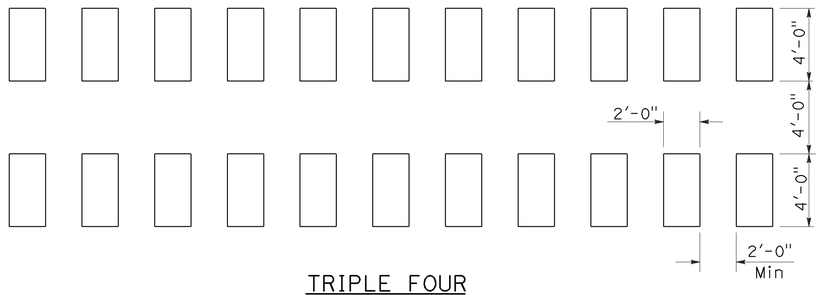

TRIPLE FOUR
See Note 1

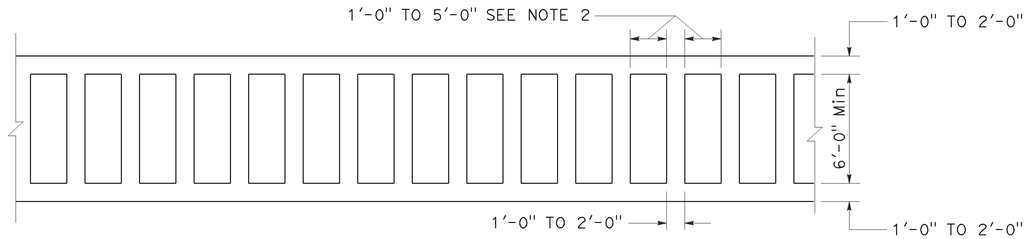

LADDER

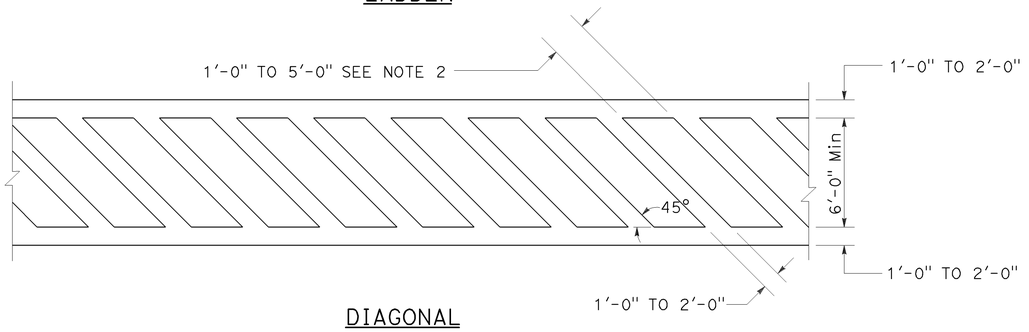

DIAGONAL

HIGHER VISIBILITY CROSSWALKS

NOTES:

1. Spaces between markings should be placed in wheel tracks of each lane.
2. Spacings not to exceed 2.5 times width of longitudinal line.
3. All crosswalk markings must be white except for those near schools must be yellow.

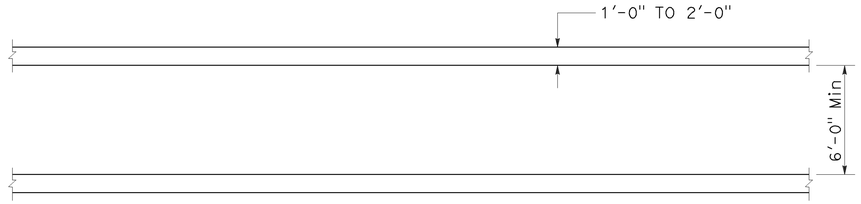

BASIC

STATE OF CALIFORNIA
DEPARTMENT OF TRANSPORTATION

PAVEMENT MARKINGS CROSSWALKS

NO SCALE

RSP A24F DATED JULY 20, 2012 SUPPLEMENTS THE STANDARD PLANS BOOK DATED 2010.

REVISED STANDARD PLAN RSP A24F

2010 REVISED STANDARD PLAN RSP A24F

6-28-12

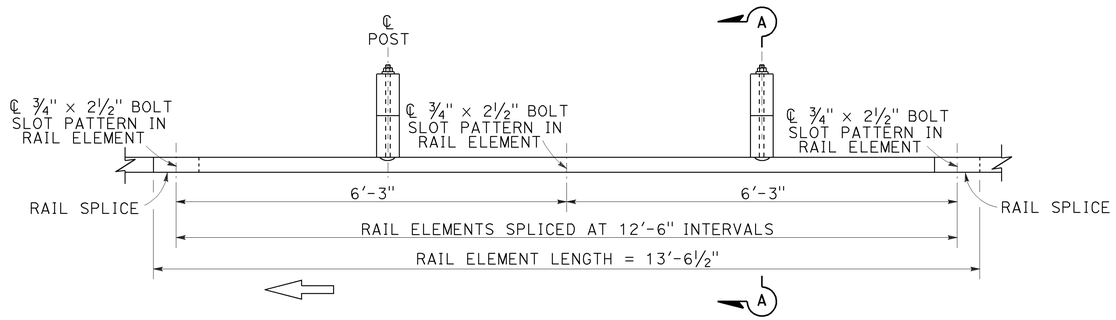

PLAN

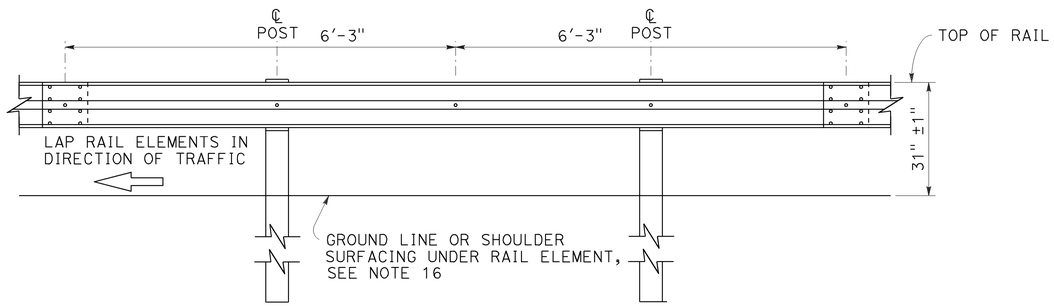

ELEVATION

MIDWEST GUARDRAIL SYSTEM WITH WOOD POST AND BLOCKS

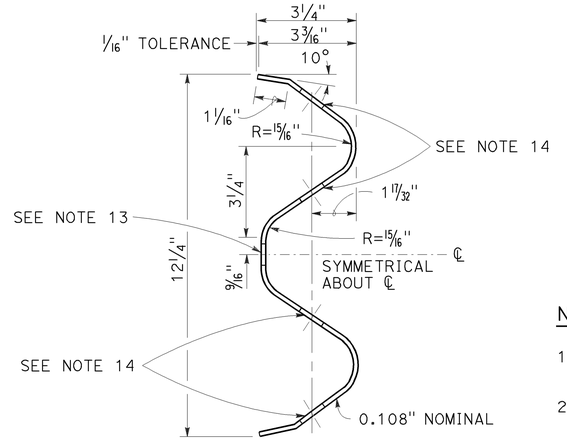

SECTION THRU RAIL ELEMENT

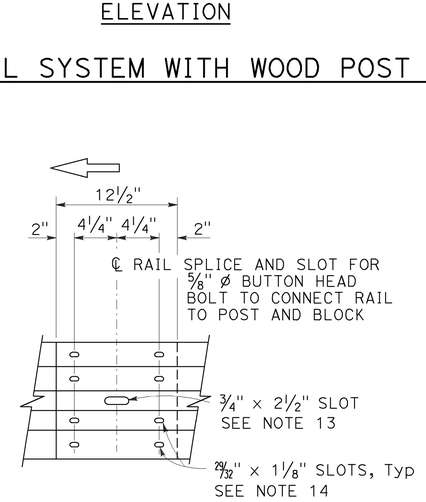

ELEVATION

RAIL ELEMENT SPLICE DETAIL

a) Connect the over lapped end of the rail elements with ⅝" ø x 1⅜" button head oval shoulder splice bolts inserted into the 29⁄32" x 1⅛" slots and bolted together with ⅝" ø recessed hex nuts. Recess of hex nut points toward rail element. A total of 8 bolts and nuts are to be used at each rail splice connection.

b) The ends of the rail elements are to be overlapped in the direction of traffic (see details).

c) Where end cap is to be attached to the end of a rail element, a total of 4 of the above described splice bolts and nuts are to be used.

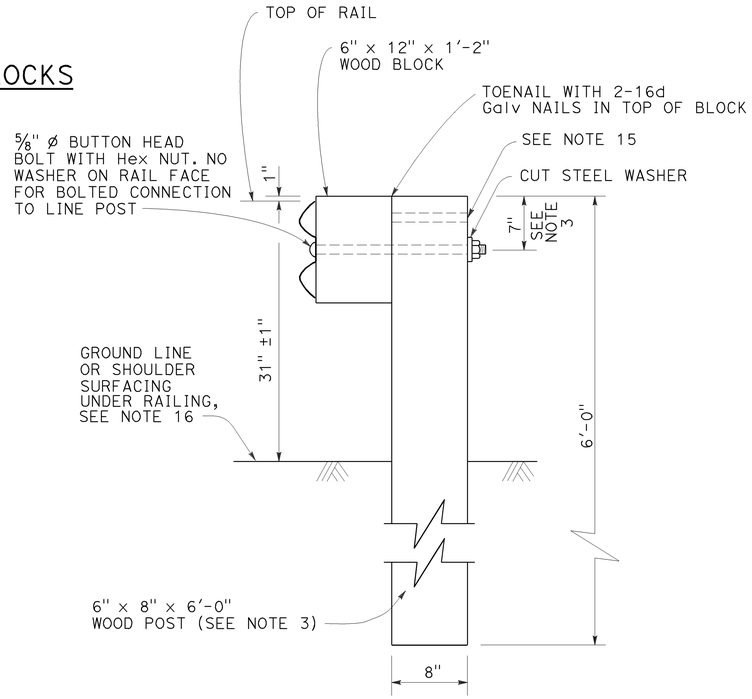

SECTION A-A

TYPICAL WOOD LINE POST INSTALLATION

See Note 4

NOTES:

1. For details of steel post installations, see Revised Standard Plan RSP A77L2.
2. For details of standard hardware used to construct MGS, see Revised Standard Plan RSP A77M1.
3. For details of wood posts and wood blocks used to construct MGS, see Revised Standard Plan RSP A77N1.
4. For additional installation details, see Revised Standard Plan RSP A77N3.
5. MGS post spacing to be 6'-3" center to center, except as otherwise noted.
6. For MGS typical layouts, see the A77P, A77Q and A77R Series of Standard Plans.
7. If railing is connected to terminal system end treatment, use 31" height terminal system end treatment.
8. For MGS end anchor details, see Revised Standard Plans RSP A77S1 and RSP A77T2.
9. For details of MGS transition to bridge railing, see Revised Standard Plan RSP A77U4.
10. For additional details of MSG connection to bridge railing, see Revised Standard Plans RSP A77U1, RSP A77U2 and RSP A77V1.
11. For MGS connection details to abutments and walls, see Revised Standard Plan RSP A77U3.
12. For typical MGS delineation and dike positioning details, see Revised Standard Plan RSP A77N4.
13. Slotted hole for bolted connection of rail element to block and post. See "Section Thru Rail Element".
14. Slotted holes for splice bolts to overlap ends of rail element. See "Section Thru Rail Element".
15. Additional hole in uppermost portion of line post is for potential future adjustments of railing height. See Revised Standard Plan RSP A77N1.
16. Install posts in soil.

Dist	COUNTY	ROUTE	POST MILES TOTAL PROJECT	SHEET No.	TOTAL SHEETS
11	SD	5	R29.1/R30.5	752	1012

Randell D. Hiatt
REGISTERED CIVIL ENGINEER

July 19, 2013
PLANS APPROVAL DATE

REGISTERED PROFESSIONAL ENGINEER — Randell D. Hiatt — No. C50200 — Exp. 6-30-15 — CIVIL — STATE OF CALIFORNIA

THE STATE OF CALIFORNIA OR ITS OFFICERS OR AGENTS SHALL NOT BE RESPONSIBLE FOR THE ACCURACY OR COMPLETENESS OF SCANNED COPIES OF THIS PLAN SHEET.

TO ACCOMPANY PLANS DATED 07-21-14

STATE OF CALIFORNIA
DEPARTMENT OF TRANSPORTATION

MIDWEST GUARDRAIL SYSTEM STANDARD RAILING SECTION (WOOD POST WITH WOOD BLOCK)

NO SCALE

RSP A77L1 DATED JULY 19, 2013 SUPPLEMENTS STANDARD PLANS BOOK DATED 2010.

REVISED STANDARD PLAN RSP A77L1

2010 REVISED STANDARD PLAN RSP A77L1

7-3-13

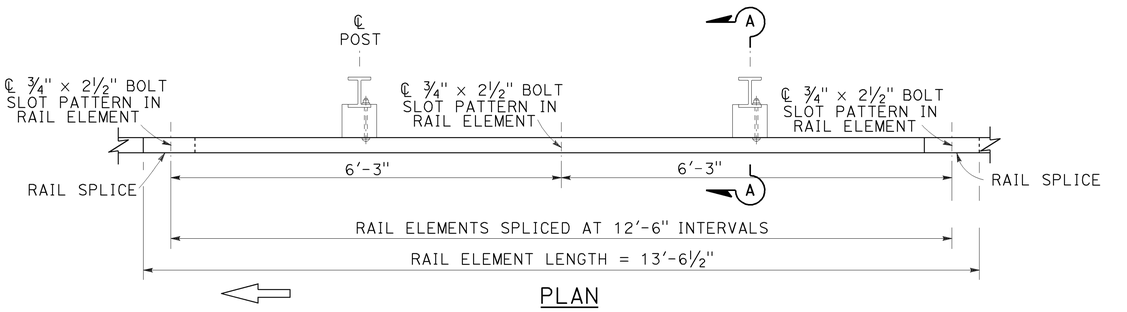

PLAN

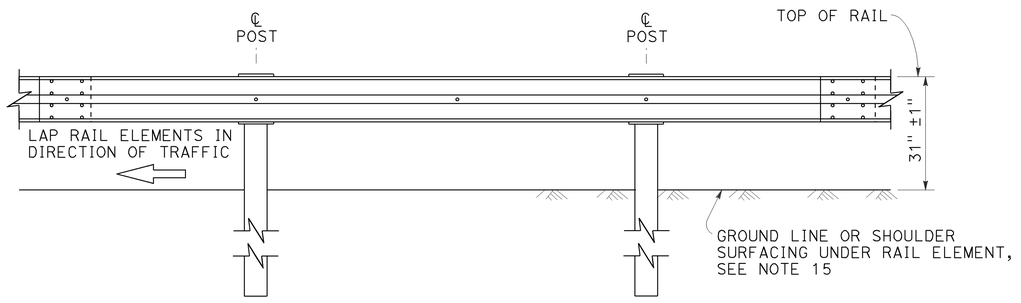

ELEVATION

MIDWEST GUARDRAIL SYSTEM WITH STEEL POSTS AND NOTCHED WOOD OR NOTCHED RECYCLED PLASTIC BLOCKS

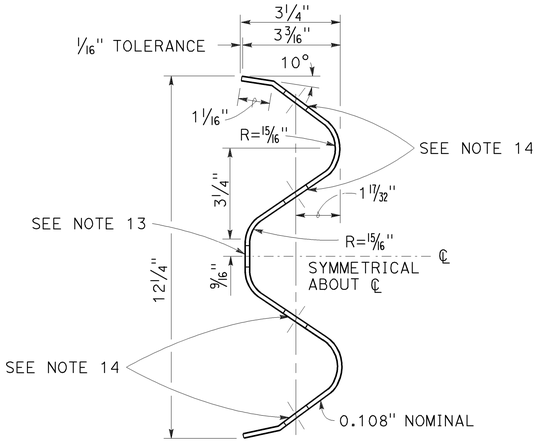

SECTION THRU RAIL ELEMENT

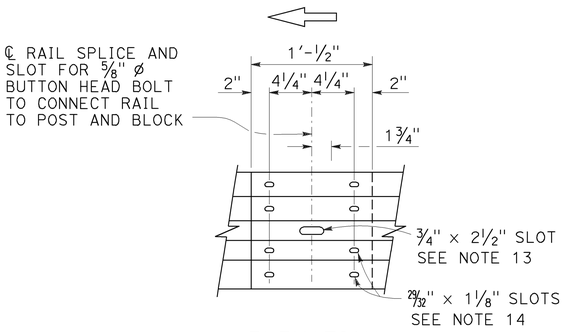

ELEVATION

RAIL ELEMENT SPLICE DETAIL

a) Connect the over lapped end of the rail elements with ⅝" ø x 1⅜" button head oval shoulder splice bolts inserted into the 29/32" x 1⅛" slots and bolted together with ⅝" ø recessed hex nuts. Recess of hex nut points toward rail element. A total of 8 bolts and nuts are to be used at each rail splice connection.

b) The ends of the rail elements are to be overlapped in the direction of traffic (see details).

c) Where end cap is to be attached to the end of a rail element, a total of 4 of the above described splice bolts and nuts are to be used.

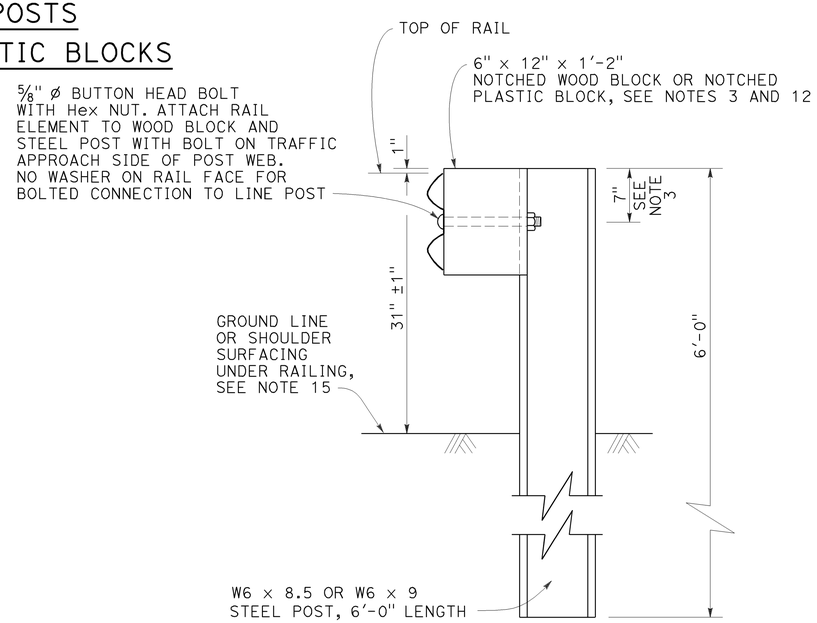

SECTION A-A

TYPICAL STEEL LINE POST INSTALLATION

See Note 4

Dist	COUNTY	ROUTE	POST MILES TOTAL PROJECT	SHEET No.	TOTAL SHEETS
11	SD	5	R29.1/R30.5	753	1012

Randell D. Hiatt
REGISTERED CIVIL ENGINEER

July 19, 2013
PLANS APPROVAL DATE

REGISTERED PROFESSIONAL ENGINEER — Randell D. Hiatt — No. C50200 — Exp. 6-30-15 — CIVIL — STATE OF CALIFORNIA

THE STATE OF CALIFORNIA OR ITS OFFICERS OR AGENTS SHALL NOT BE RESPONSIBLE FOR THE ACCURACY OR COMPLETENESS OF SCANNED COPIES OF THIS PLAN SHEET.

TO ACCOMPANY PLANS DATED 07-21-14

NOTES:

1. For details of wood post installations, see Revised Standard Plan RSP A77L1.
2. For details of standard hardware used to construct MGS, see Revised Standard Plan RSP A77M1.
3. For details of steel posts and notched wood blocks used to construct MGS, see Revised Standard Plan RSP A77N2.
4. For additional installation details, see Revised Standard Plan RSP A77N3.
5. MGS post spacing to be 6'-3" center to center, except as otherwise noted.
6. For MGS typical layouts, see the A77P, A77Q and A77R Series of Standard Plans.
7. If railing is connected to terminal system end treatment, use 31" height terminal system end treatment.
8. For MGS end anchor details, see Revised Standard Plans RSP A77S1 and RSP A77T2.
9. For details of MGS transition to bridge railing, see Revised Standard Plan RSP A77U4.
10. For additional details of MGS connection to bridge railings, see Revised Standard Plans RSP A77U1, RSP A77U2 and RSP A77V1.
11. For dike positioning and MGS delineation details, see Revised Standard Plan RSP A77N4.
12. Notched face of block faces steel post.
13. Slotted hole for bolted connection of rail element to block and post. See "Section Thru Rail Element".
14. Slotted holes for splice bolts to overlap ends of rail element. See "Section Thru Rail Element".
15. Install posts in soil.

STATE OF CALIFORNIA
DEPARTMENT OF TRANSPORTATION

MIDWEST GUARDRAIL SYSTEM STANDARD RAILING SECTION (STEEL POST WITH NOTCHED WOOD OR NOTCHED RECYCLED PLASTIC BLOCK)

NO SCALE

RSP A77L2 DATED JULY 19, 2013 SUPPLEMENTS THE STANDARD PLANS BOOK DATED 2010.

REVISED STANDARD PLAN RSP A77L2

2010 REVISED STANDARD PLAN RSP A77L2

7-3-13

Dist	COUNTY	ROUTE	POST MILES TOTAL PROJECT	SHEET No.	TOTAL SHEETS
11	SD	5	R29.1/R30.5	754	1012

Randell D. Hiatt
REGISTERED CIVIL ENGINEER

July 19, 2013
PLANS APPROVAL DATE

REGISTERED PROFESSIONAL ENGINEER
Randell D. Hiatt
No. C50200
Exp. 6-30-15
CIVIL
STATE OF CALIFORNIA

THE STATE OF CALIFORNIA OR ITS OFFICERS OR AGENTS SHALL NOT BE RESPONSIBLE FOR THE ACCURACY OR COMPLETENESS OF SCANNED COPIES OF THIS PLAN SHEET.

TO ACCOMPANY PLANS DATED 07-21-14

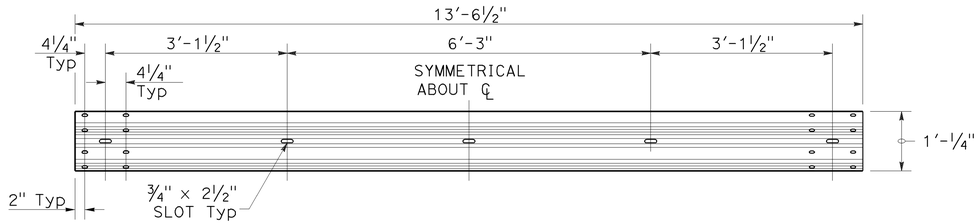

TYPICAL RAIL ELEMENT

NOTE:

1. Slotted holes for splice bolts to overlap ends of rail element.

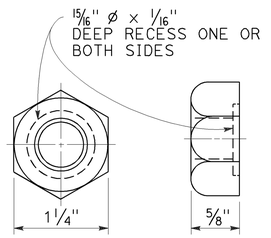

⅝" ø RECESS NUT

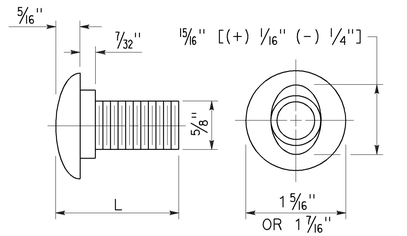

⅝" ø BUTTON HEAD BOLT

BUTTON HEAD BOLT

L	THREAD LENGTH
1⅜"	FULL THREAD LENGTH
2"	FULL THREAD LENGTH
10"	4" Min THREAD LENGTH
18"	4" Min THREAD LENGTH
20"	4" Min THREAD LENGTH
22"	4" Min THREAD LENGTH
26"	4" Min THREAD LENGTH
36"	4" Min THREAD LENGTH
** 2¾"	2" Min THREAD LENGTH
** 19"	4" Min THREAD LENGTH

** For nested rail applications.

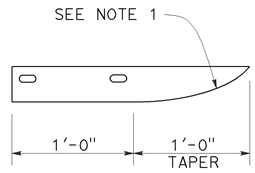

PLAN

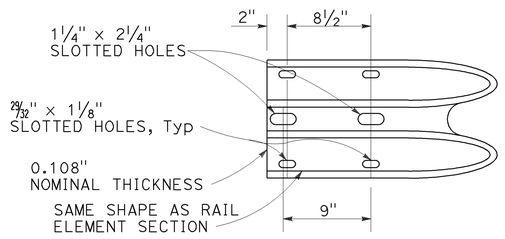

ELEVATION

END CAP (TYPE A)

STATE OF CALIFORNIA
DEPARTMENT OF TRANSPORTATION

MIDWEST GUARDRAIL SYSTEM STANDARD HARDWARE

NO SCALE

RSP A77M1 DATED JULY 19, 2013 SUPPLEMENTS THE STANDARD PLANS BOOK DATED 2010.

REVISED STANDARD PLAN RSP A77M1

2010 REVISED STANDARD PLAN RSP A77M1

7-3-13

Dist	COUNTY	ROUTE	POST MILES TOTAL PROJECT	SHEET No.	TOTAL SHEETS
11	SD	5	R29.1/R30.5	755	1012

Randell D. Hiatt
REGISTERED CIVIL ENGINEER

July 19, 2013
PLANS APPROVAL DATE

REGISTERED PROFESSIONAL ENGINEER
Randell D. Hiatt
No. C50200
Exp. 6-30-15
CIVIL
STATE OF CALIFORNIA

THE STATE OF CALIFORNIA OR ITS OFFICERS OR AGENTS SHALL NOT BE RESPONSIBLE FOR THE ACCURACY OR COMPLETENESS OF SCANNED COPIES OF THIS PLAN SHEET.

TO ACCOMPANY PLANS DATED 07-21-14

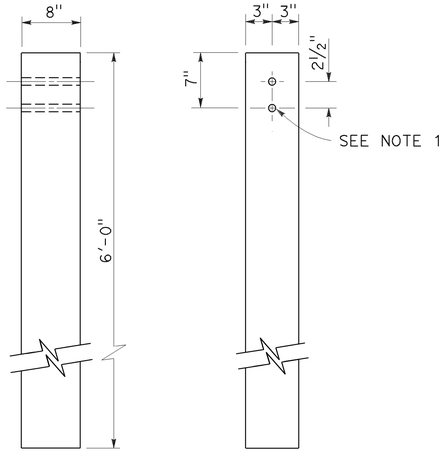

SIDE FRONT

6" x 8" WOOD POST
See Note 3

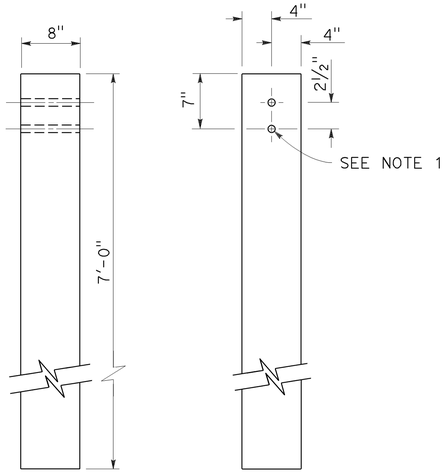

SIDE FRONT

8" x 8" WOOD POST
See Note 4

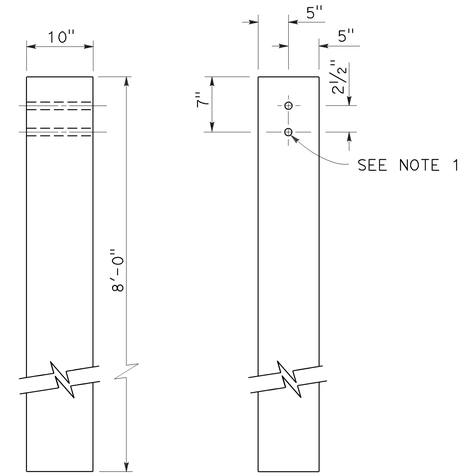

SIDE FRONT

10" x 10" WOOD POST
See Note 5

NOTES:

1. All holes in wood posts and blocks shall be ¾" Dia ± 1/16".
2. Dimensions shown for wood post are nominal.
3. This post and block combination used for standard line post sections of MGS.
4. This post and 8" x 12" block combination used for line post sections of MGS on narrow roadways.
5. This post and 8" x 12" block combination is typically used where strengthened line post sections of MGS are warranted to shield fixed objects.
6. See Revised Standard Plan RSP A77L3 for use of 6" x 8" and 8" x 8" wood blocks.

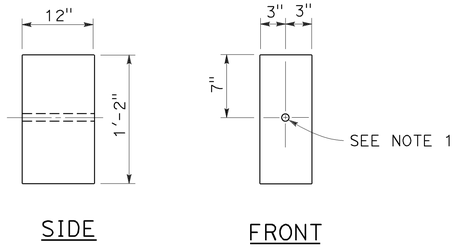

SIDE FRONT

6" x 12" WOOD BLOCK
See Note 3

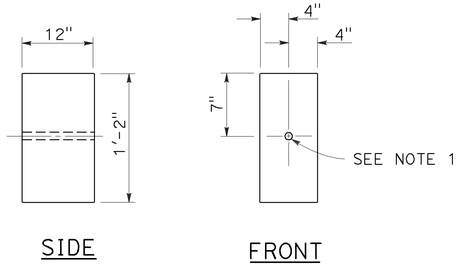

SIDE FRONT

8" x 12" WOOD BLOCK

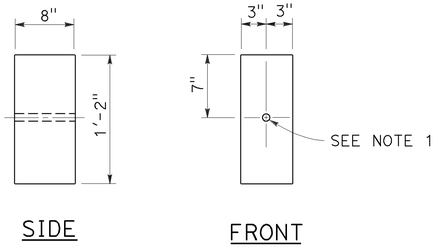

SIDE FRONT

6" x 8" WOOD BLOCK
Only for use with metal beam guard rail see Note 6

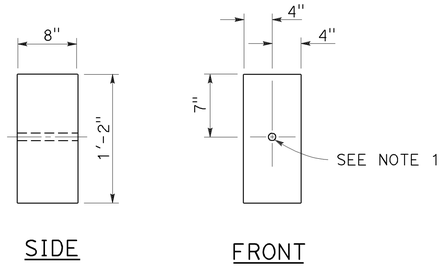

SIDE FRONT

8" x 8" WOOD BLOCK
Only for use with metal beam guard rail see Note 6

STATE OF CALIFORNIA
DEPARTMENT OF TRANSPORTATION

MIDWEST GUARDRAIL SYSTEM WOOD POST AND WOOD BLOCK DETAILS

NO SCALE

RSP A77N1 DATED JULY 19, 2013 SUPPLEMENTS THE STANDARD PLANS BOOK DATED 2010.

REVISED STANDARD PLAN RSP A77N1

2010 REVISED STANDARD PLAN RSP A77N1

7-3-13

Dist	COUNTY	ROUTE	POST MILES TOTAL PROJECT	SHEET No.	TOTAL SHEETS
11	SD	5	R29.1/R30.5	756	1012

Randell D. Hiatt
REGISTERED CIVIL ENGINEER

July 19, 2013
PLANS APPROVAL DATE

REGISTERED PROFESSIONAL ENGINEER
Randell D. Hiatt
No. C50200
Exp. 6-30-15
CIVIL
STATE OF CALIFORNIA

THE STATE OF CALIFORNIA OR ITS OFFICERS OR AGENTS SHALL NOT BE RESPONSIBLE FOR THE ACCURACY OR COMPLETENESS OF SCANNED COPIES OF THIS PLAN SHEET.

TO ACCOMPANY PLANS DATED 07-21-14

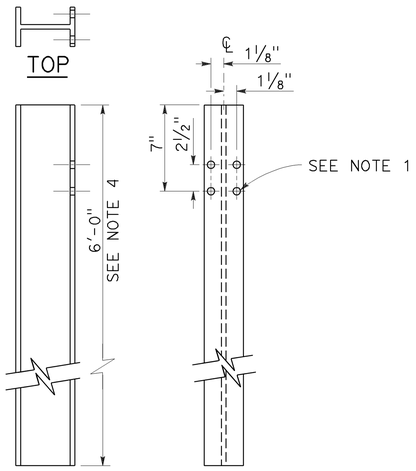

W6 x 9 OR W6 x 8.5 STEEL POST

See Note 4

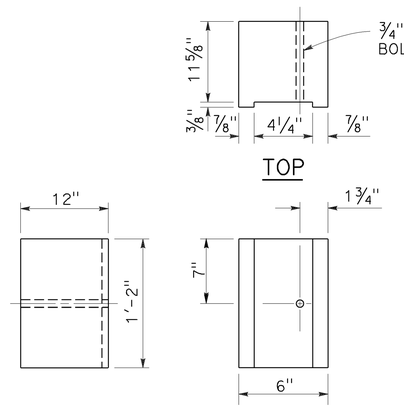

6" x 12" NOTCHED WOOD BLOCK

See Notes 2 and 3

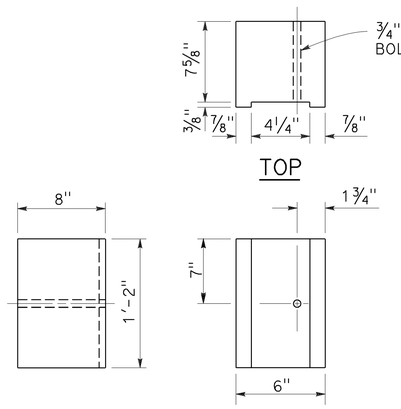

6" x 8" NOTCHED WOOD BLOCK

Only for use with metal beam guard railing. See Note 5

NOTES:

1. All holes in steel post shall be 13/16" Dia maximum.
2. Dimensions shown for wood block are nominal.
3. Notched face of block faces steel post.
4. 6'-0" length posts to be used for typical roadway installation. 7'-0" length posts to be used for narrow roadway installation. See Revised Standard Plan RSP A77N3.
5. See Revised Standard Plan RSP A77L3 for use of 6" x 8" and 8" x 8" notched wood blocks.
6. This post and 8" x 12" block combination to be used for line post sections of MGS on narrow roadways and where strengthened line post sections of MGS are warranted to shield fixed objects.

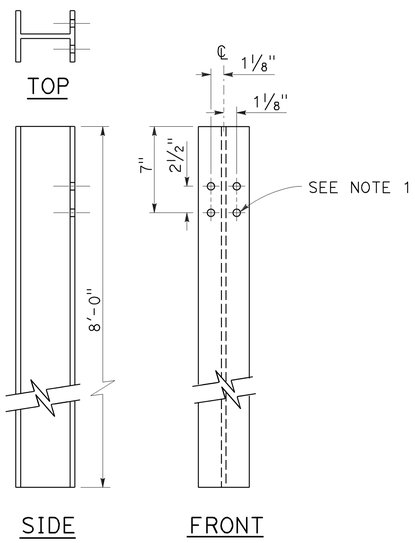

W6 x 15 STEEL POST

See Note 6

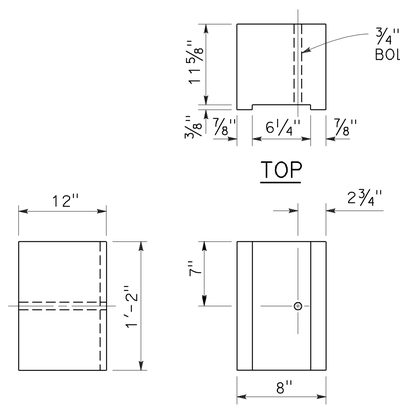

8" x 12" NOTCHED WOOD BLOCK

See Notes 2 and 3

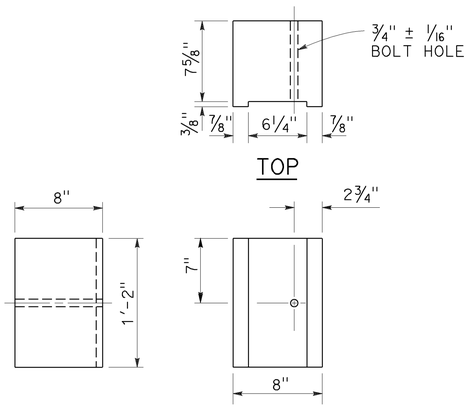

8" x 8" NOTCHED WOOD BLOCK

Only for use with metal beam guard railing. See Note 5

STATE OF CALIFORNIA
DEPARTMENT OF TRANSPORTATION

MIDWEST GUARDRAIL SYSTEM STEEL POST AND NOTCHED WOOD BLOCK DETAILS

NO SCALE

RSP A77N2 DATED JULY 19, 2013 SUPPLEMENTS THE STANDARD PLANS BOOK DATED 2010.

REVISED STANDARD PLAN RSP A77N2

2010 REVISED STANDARD PLAN RSP A77N2

7-3-13

Dist	COUNTY	ROUTE	POST MILES TOTAL PROJECT	SHEET No.	TOTAL SHEETS
11	SD	5	R29.1/R30.5	757	1012

Randell D. Hiatt
REGISTERED CIVIL ENGINEER

July 19, 2013
PLANS APPROVAL DATE

REGISTERED PROFESSIONAL ENGINEER
Randell D. Hiatt
No. C50200
Exp. 6-30-15
CIVIL
STATE OF CALIFORNIA

THE STATE OF CALIFORNIA OR ITS OFFICERS OR AGENTS SHALL NOT BE RESPONSIBLE FOR THE ACCURACY OR COMPLETENESS OF SCANNED COPIES OF THIS PLAN SHEET.

TO ACCOMPANY PLANS DATED 07-21-14

2010 REVISED STANDARD PLAN RSP A77N3

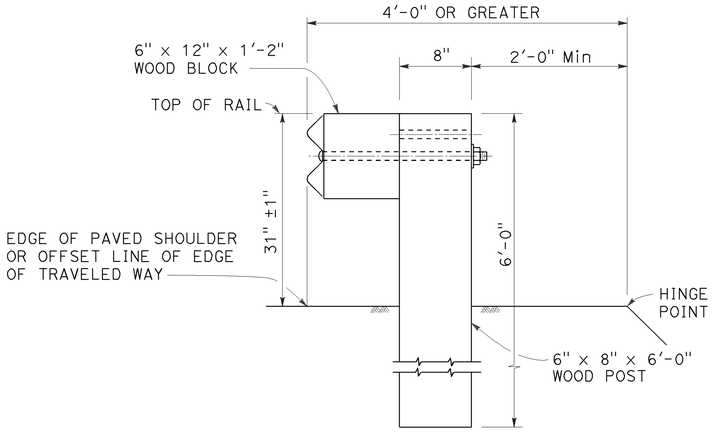

DETAIL A

TYPICAL ROADWAY INSTALLATION

See Note 1

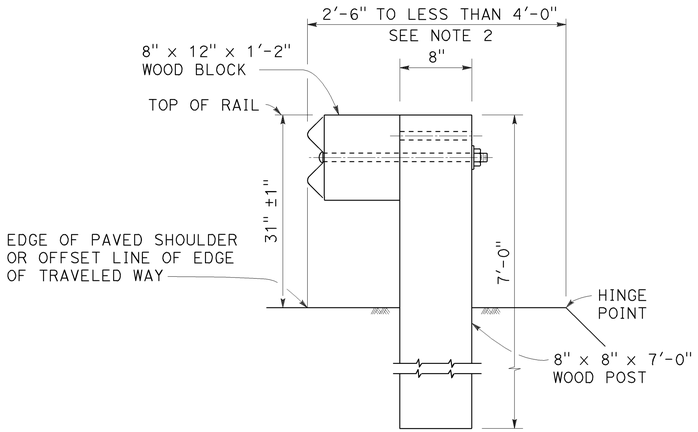

DETAIL B

NARROW ROADWAY INSTALLATION

See Note 1

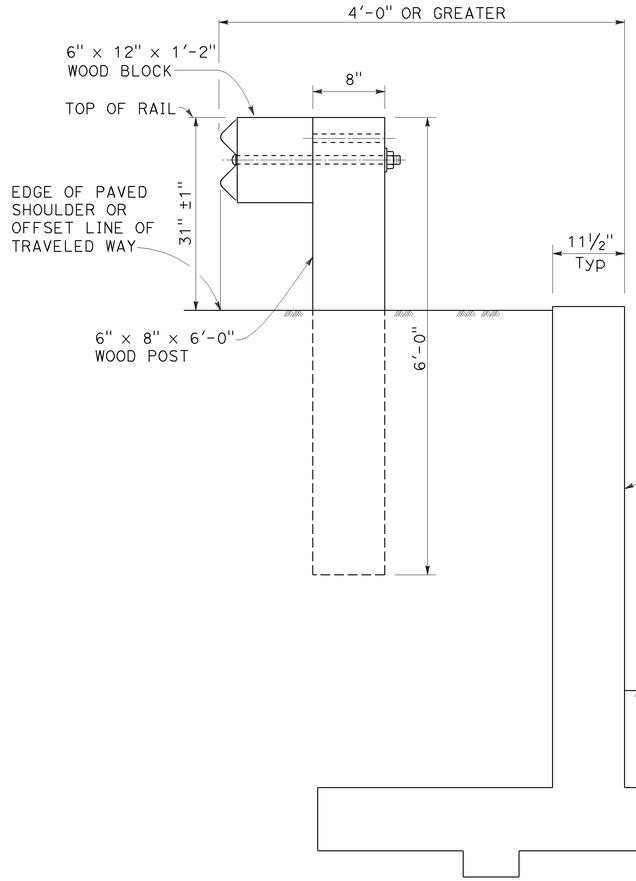

DETAIL C

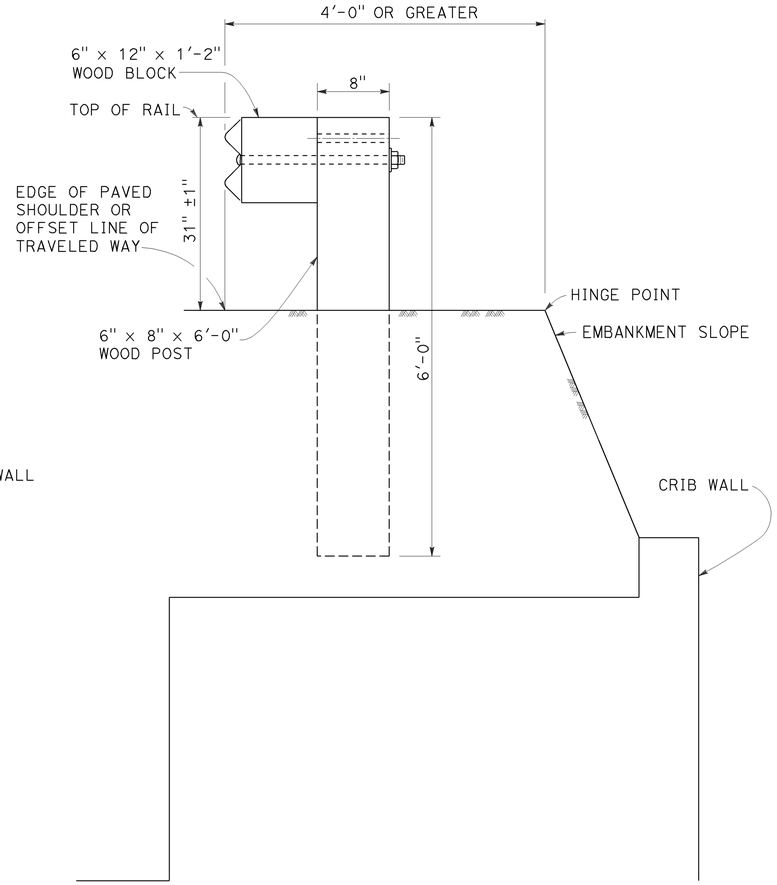

DETAIL D

POST EMBEDMENT

INSTALLATION AT EARTH RETAINING WALLS

NOTES:

1. These installation details also applicable to steel line post installations. For Detail A, C, and D, where steel line post installations are constructed, W6 x 8.5 or W6 x 9 steel post, 6'-0" in length, with 6" x 12" x 1'-2" notched wood blocks or notched recycled plastic blocks are to be used in place of the size of wood post and wood block shown. For Detail B, where steel line post installations are constructed, or W6 x 15 steel post, 8'-0" in length, with 8" x 12" x 1'-2" notched wood blocks or notched recycled plastic blocks are to be used in place of the size of wood post and wood block shown. For additional installation details, see Revised Standard Plan RSP A77L1 and RSP A77L2.
2. Where the distance between the face of the rail and the hinge point is less than 2'-6", see the Project Plans for special details.
3. For dike positioning with MGS installations, see Revised Standard Plan RSP A77N4.

STATE OF CALIFORNIA
DEPARTMENT OF TRANSPORTATION

MIDWEST GUARDRAIL SYSTEM TYPICAL LINE POST EMBEDMENT AND HINGE POINT OFFSET DETAILS

NO SCALE

RSP A77N3 DATED JULY 19, 2013 SUPPLEMENTS THE STANDARD PLANS BOOK DATED 2010.

REVISED STANDARD PLAN RSP A77N3

7-3-13

Dist	COUNTY	ROUTE	POST MILES TOTAL PROJECT	SHEET No.	TOTAL SHEETS
11	SD	5	R29.1/R30.5	758	1012

Randell D. Hiatt
REGISTERED CIVIL ENGINEER

July 19, 2013
PLANS APPROVAL DATE

REGISTERED PROFESSIONAL ENGINEER
Randell D. Hiatt
No. C50200
Exp. 6-30-15
CIVIL
STATE OF CALIFORNIA

THE STATE OF CALIFORNIA OR ITS OFFICERS OR AGENTS SHALL NOT BE RESPONSIBLE FOR THE ACCURACY OR COMPLETENESS OF SCANNED COPIES OF THIS PLAN SHEET.

TO ACCOMPANY PLANS DATED 07-21-14

NOTES:

1. When necessary to place dike more than 7" in front of face of MGS, only Type C dike may be used. For dike details, see Revised Standard Plan RSP A87B.
2. For standard railing post embedment, see Revised Standard Plan RSP A77N3.
3. MGS delineation to be used where shown on the Project Plans.
4. When dike or curb is placed under MGS, the maximum height of the dike or curb shall be 6". Mountable dike should not be used. For dike and curb details, see Revised Standard Plans RSP A87A and RSP A87B.
5. For details of typical distance between the face of rail and hinge point, see Revised Standard Plan RSP A77N3.
6. For steel line posts, use 1/4 - 20 self-tapping screws in 0.22" diameter holes or 1/4" bolts in 9/32" diameter holes.

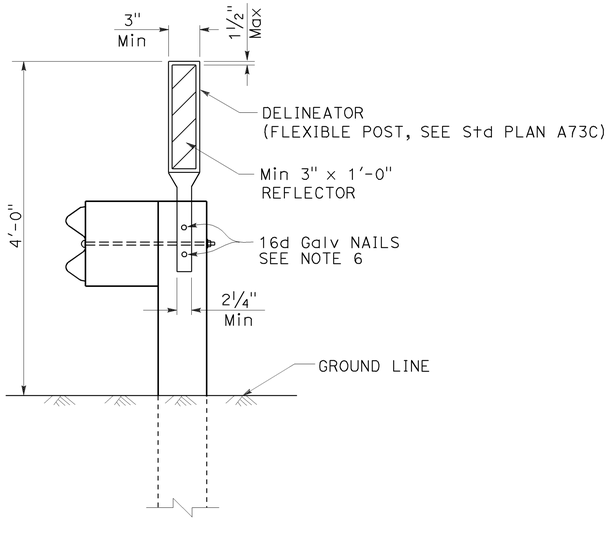

MGS DELINEATION

See Note 3

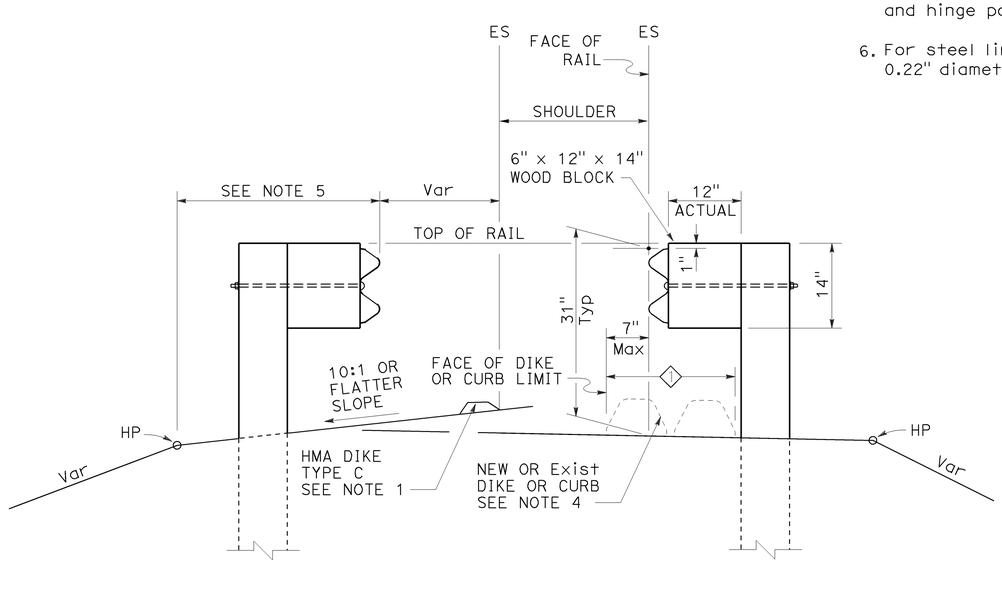

DIKE POSITIONING

See Note 1

◇1 PERMISSIBLE DIKE OR CURB PLACEMENT AREA

STATE OF CALIFORNIA
DEPARTMENT OF TRANSPORTATION

MIDWEST GUARDRAIL SYSTEM TYPICAL RAILING DELINEATION AND DIKE POSITIONING DETAILS

NO SCALE

RSP A77N4 DATED JULY 19, 2013 SUPPLEMENTS THE STANDARD PLANS BOOK DATED 2010.

REVISED STANDARD PLAN RSP A77N4

2010 REVISED STANDARD PLAN RSP A77N4

7-10-13

Dist	COUNTY	ROUTE	POST MILES TOTAL PROJECT	SHEET No.	TOTAL SHEETS
11	SD	5	R29.1/R30.5	759	1012

Randell D. Hiatt
REGISTERED CIVIL ENGINEER

July 19, 2013
PLANS APPROVAL DATE

REGISTERED PROFESSIONAL ENGINEER
Randell D. Hiatt
No. C50200
Exp. 6-30-15
CIVIL
STATE OF CALIFORNIA

THE STATE OF CALIFORNIA OR ITS OFFICERS OR AGENTS SHALL NOT BE RESPONSIBLE FOR THE ACCURACY OR COMPLETENESS OF SCANNED COPIES OF THIS PLAN SHEET.

TO ACCOMPANY PLANS DATED 07-21-14

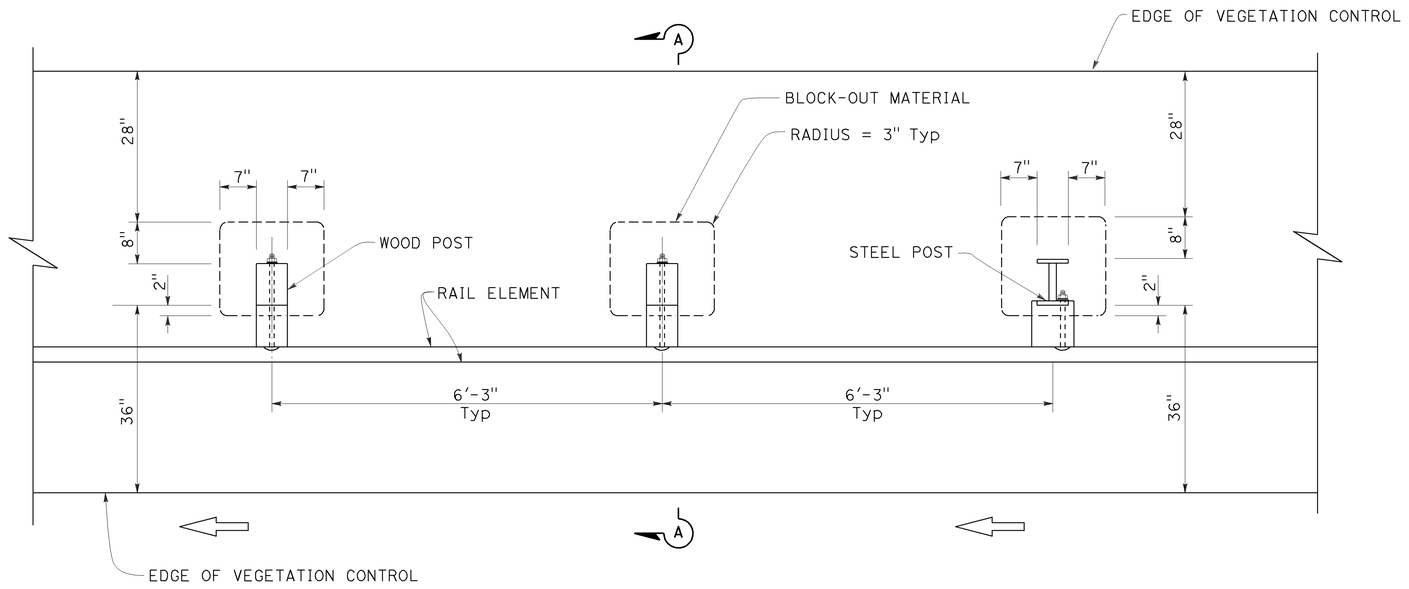

PLAN

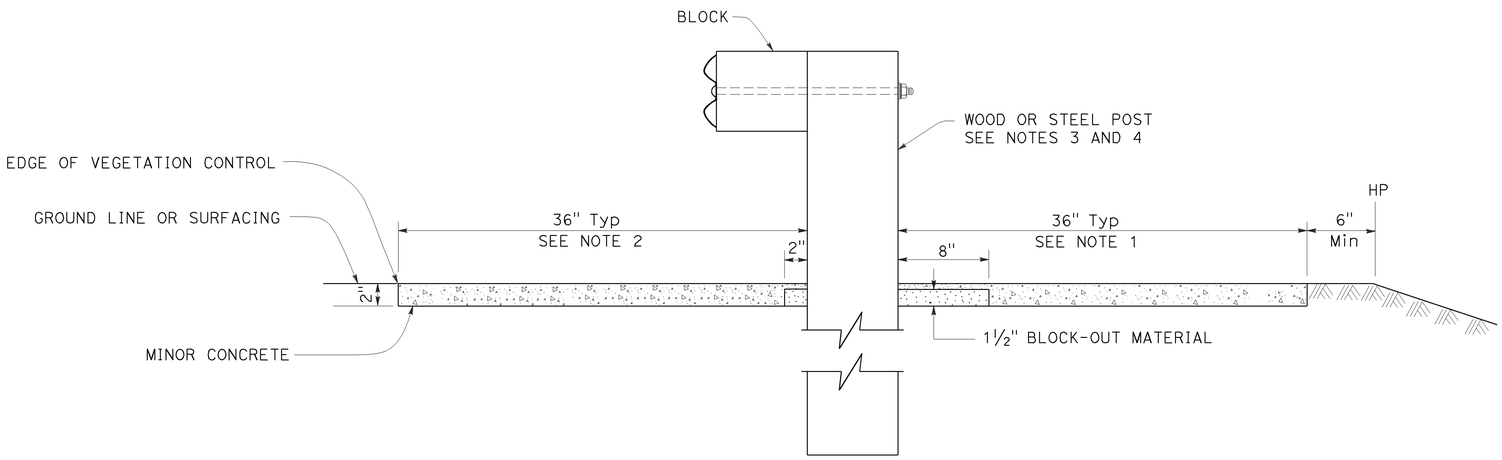

SECTION A-A

NOTES:

1. Where the distance between back of post and hinge point is less than 42", construct vegetation control to 6" from hinge point while maintaining the 8" block-out at back of post. If the 8" block-out at back of post can not be maintained, construct vegetation control flush with the back edge of post.
2. Where dike is constructed under railing, construct vegetation control to back edge of dike. Where paved shoulder is constructed within 36" in front of the post, construct vegetation control to the edge of paved shoulder.
3. For wood post sizes, see Revised Standard Plan RSP A77N1.
4. For steel post sizes, see Revised Standard Plan RSP A77N2.
5. For details not shown, see Revised Standard Plans RSP A77L1 and RSP A77L2.

STATE OF CALIFORNIA
DEPARTMENT OF TRANSPORTATION

MIDWEST GUARDRAIL SYSTEM
TYPICAL VEGETATION CONTROL
STANDARD RAILING SECTION

NO SCALE

RSP A77N5 DATED JULY 19, 2013 SUPPLEMENTS THE STANDARD PLANS BOOK DATED 2010.

REVISED STANDARD PLAN RSP A77N5

2010 REVISED STANDARD PLAN RSP A77N5

7-3-13

Dist	COUNTY	ROUTE	POST MILES TOTAL PROJECT	SHEET No.	TOTAL SHEETS
11	SD	5	R29.1/R30.5	760	1012

Randell D. Hiatt
REGISTERED CIVIL ENGINEER

July 19, 2013
PLANS APPROVAL DATE

REGISTERED PROFESSIONAL ENGINEER
Randell D. Hiatt
No. C50200
Exp. 6-30-15
CIVIL
STATE OF CALIFORNIA

THE STATE OF CALIFORNIA OR ITS OFFICERS OR AGENTS SHALL NOT BE RESPONSIBLE FOR THE ACCURACY OR COMPLETENESS OF SCANNED COPIES OF THIS PLAN SHEET.

TO ACCOMPANY PLANS DATED 07-21-14

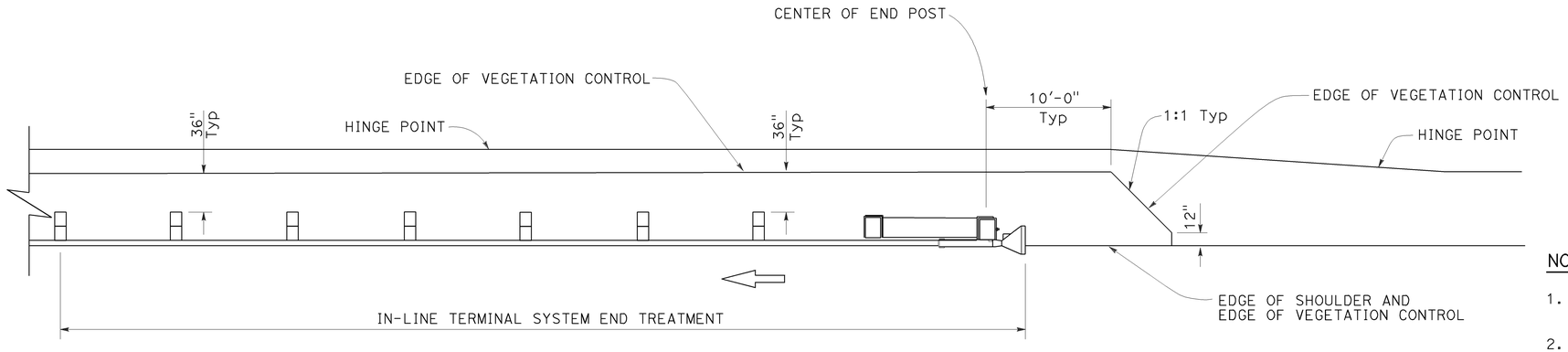

PLAN

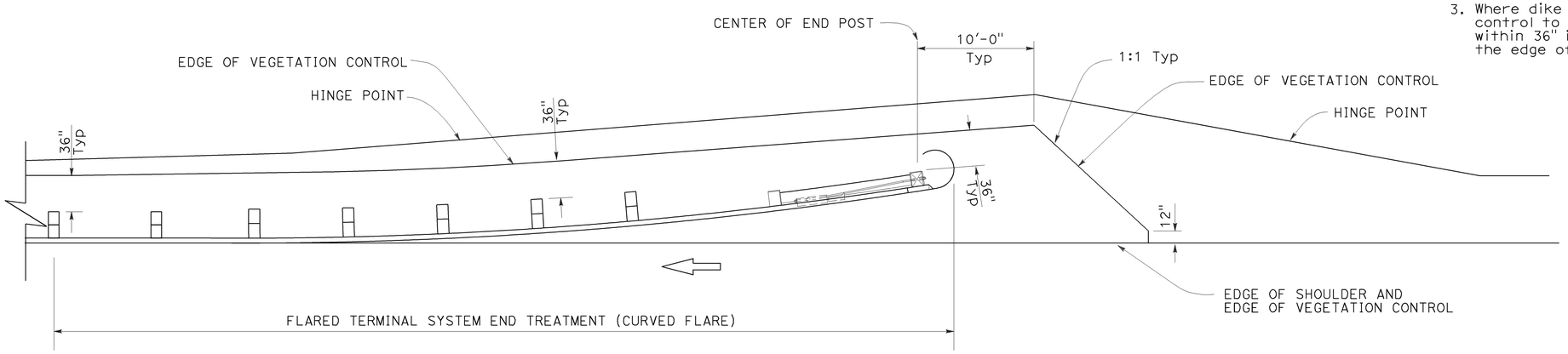

PLAN

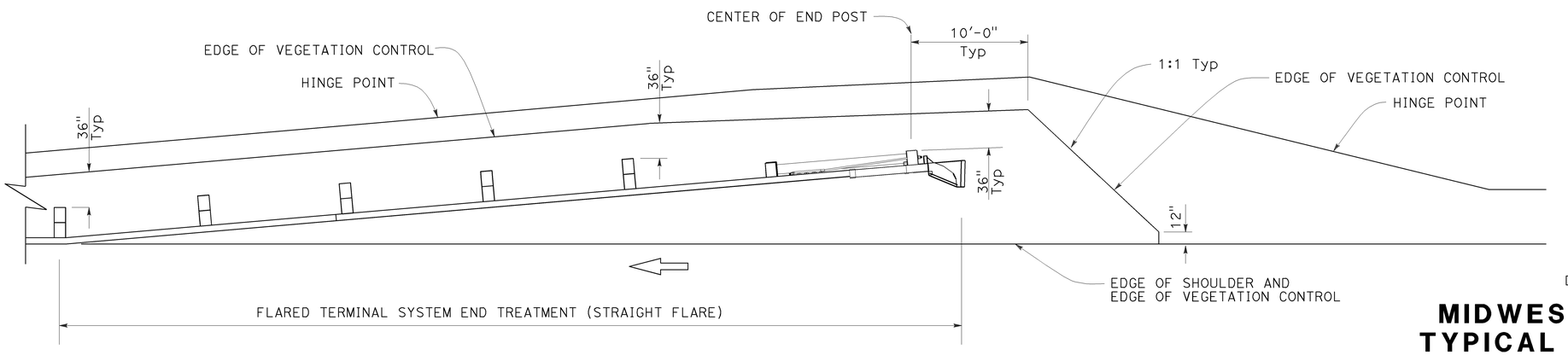

PLAN

NOTES:

1. See Revised Standard Plan RSP A77N5 for additional vegetation control details.
2. Where the distance between back of post and hinge point is less than 42", construct vegetation control to 6" from hinge point while maintaining the 8" block-out at back of post. If the 8" block-out at back of post can not be maintained, construct vegetation control flush with the back edge of post.
3. Where dike is constructed under railing, construct vegetation control to back edge of dike. Where paved shoulder is constructed within 36" in front of the post, construct vegetation control to the edge of paved shoulder.

STATE OF CALIFORNIA
DEPARTMENT OF TRANSPORTATION

MIDWEST GUARDRAIL SYSTEM TYPICAL VEGETATION CONTROL FOR TERMINAL SYSTEM END TREATMENTS

NO SCALE

RSP A77N6 DATED JULY 19, 2013 SUPPLEMENTS THE STANDARD PLANS BOOK DATED 2010.

REVISED STANDARD PLAN RSP A77N6

2010 REVISED STANDARD PLAN RSP A77N6

6-12-13

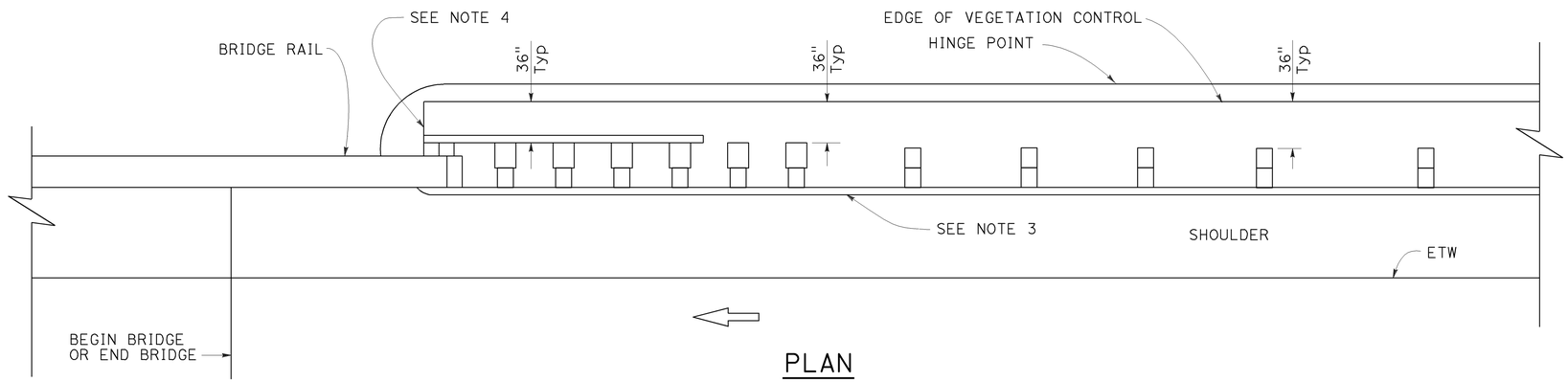

PLAN

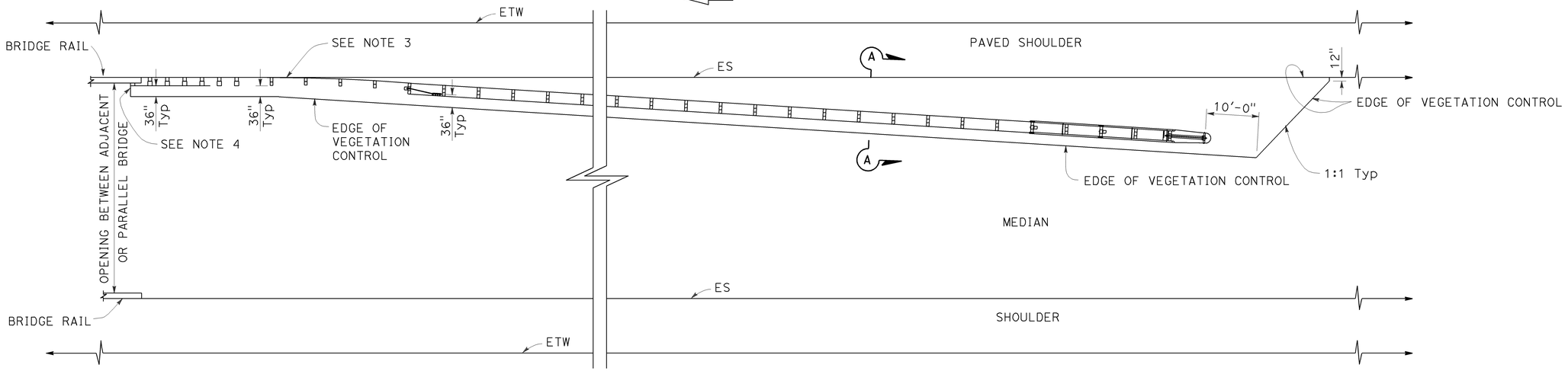

PLAN

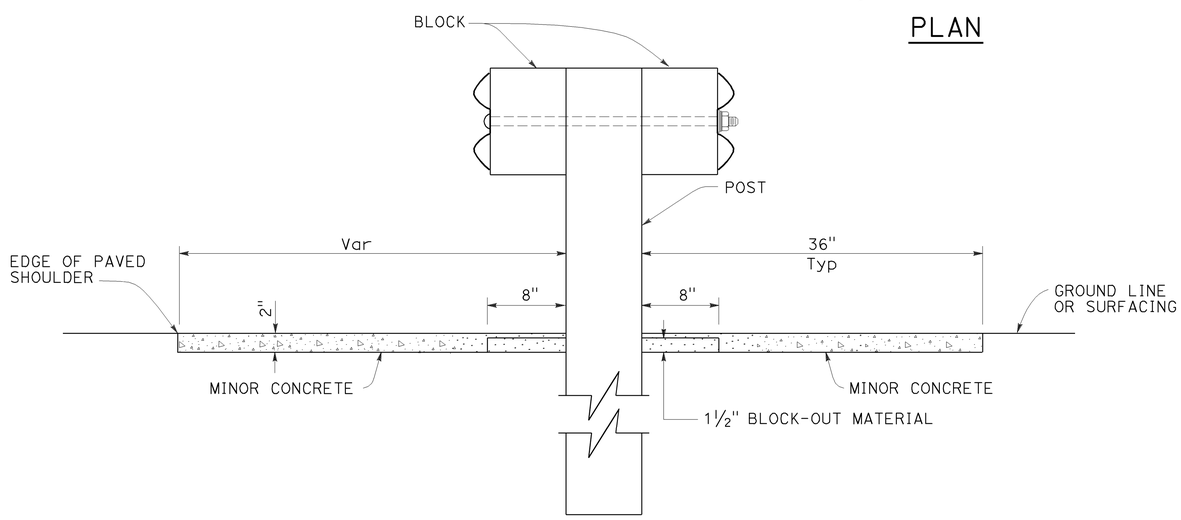

SECTION A-A

Dist	COUNTY	ROUTE	POST MILES TOTAL PROJECT	SHEET No.	TOTAL SHEETS
11	SD	5	R29.1/R30.5	761	1012

Randell D. Hiatt
REGISTERED CIVIL ENGINEER

July 19, 2013
PLANS APPROVAL DATE

REGISTERED PROFESSIONAL ENGINEER
Randell D. Hiatt
No. C50200
Exp. 6-30-15
CIVIL
STATE OF CALIFORNIA

THE STATE OF CALIFORNIA OR ITS OFFICERS OR AGENTS SHALL NOT BE RESPONSIBLE FOR THE ACCURACY OR COMPLETENESS OF SCANNED COPIES OF THIS PLAN SHEET.

TO ACCOMPANY PLANS DATED 07-21-14

2010 REVISED STANDARD PLAN RSP A77N7

NOTES:

1. See Revised Standard Plan RSP A77N5 for additional vegetation control details.
2. Where the distance between back of post and hinge point is less than 42", construct vegetation control to 6" from hinge point while maintaining the 8" block-out at back of post. If the 8" block-out at back of post can not be maintained, construct vegetation control flush with the back edge of post.
3. Where dike is constructed under railing, construct vegetation control to back edge of dike. Where paved shoulder is constructed within 36" in front of the post, construct vegetation control to the edge of paved shoulder.
4. End vegetation control at end of backside rail element.

STATE OF CALIFORNIA
DEPARTMENT OF TRANSPORTATION

MIDWEST GUARDRAIL SYSTEM TYPICAL VEGETATION CONTROL AT STRUCTURE APPROACH

NO SCALE

RSP A77N7 DATED JULY 19, 2013 SUPPLEMENTS THE STANDARD PLANS BOOK DATED 2010.

REVISED STANDARD PLAN RSP A77N7

6-12-13

Dist	COUNTY	ROUTE	POST MILES TOTAL PROJECT	SHEET No.	TOTAL SHEETS
11	SD	5	R29.1/R30.5	762	1012

Randell D. Hiatt
REGISTERED CIVIL ENGINEER

July 19, 2013
PLANS APPROVAL DATE

REGISTERED PROFESSIONAL ENGINEER
Randell D. Hiatt
No. C50200
Exp. 6-30-15
CIVIL
STATE OF CALIFORNIA

THE STATE OF CALIFORNIA OR ITS OFFICERS OR AGENTS SHALL NOT BE RESPONSIBLE FOR THE ACCURACY OR COMPLETENESS OF SCANNED COPIES OF THIS PLAN SHEET.

TO ACCOMPANY PLANS DATED 07-21-14

NOTES:

1. See Revised Standard Plan RSP A77N5 for additional vegetation control details.
2. Where the distance between back of post and hinge point is less than 42", construct vegetation control to 6" from hinge point while maintaining the 8" block-out at back of post. If the 8" block-out at back of post can not be maintained, construct vegetation control flush with the back edge of post.
3. Where dike is constructed under railing, construct vegetation control to back edge of dike. Where paved shoulder is constructed within 36" in front of the post, construct vegetation control to the edge of paved shoulder.

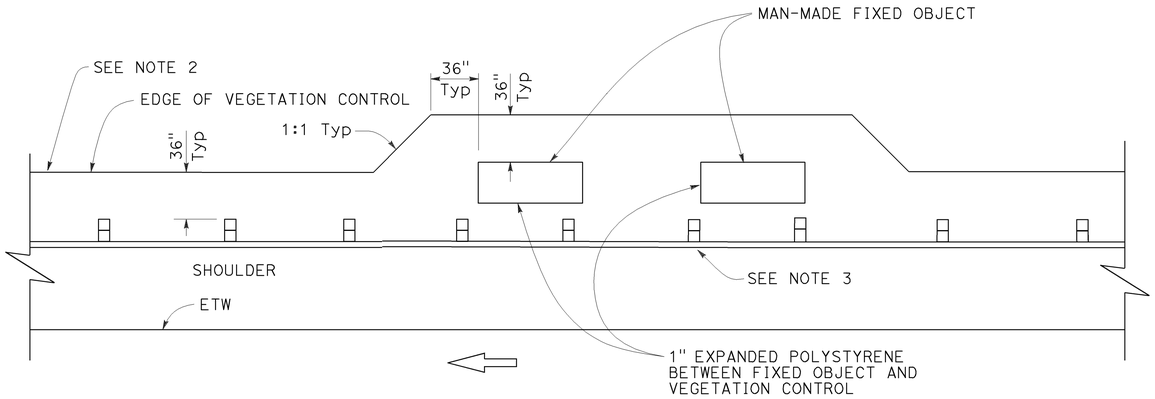

PLAN

Fixed object(s) on shoulder

STATE OF CALIFORNIA
DEPARTMENT OF TRANSPORTATION

MIDWEST GUARDRAIL SYSTEM
TYPICAL VEGETATION CONTROL AT FIXED OBJECT

NO SCALE

RSP A77N8 DATED JULY 19, 2013 SUPPLEMENTS THE STANDARD PLANS BOOK DATED 2010.

REVISED STANDARD PLAN RSP A77N8

2010 REVISED STANDARD PLAN RSP A77N8

6-12-13

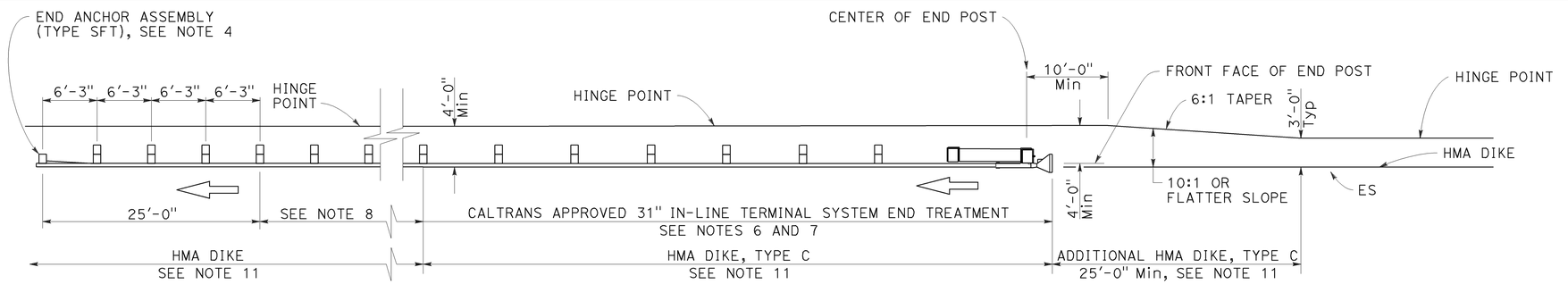

TYPE 11A LAYOUT

(Embankment MGS installation with 31" in-line end treatment at traffic approach end of railing) see Note 5

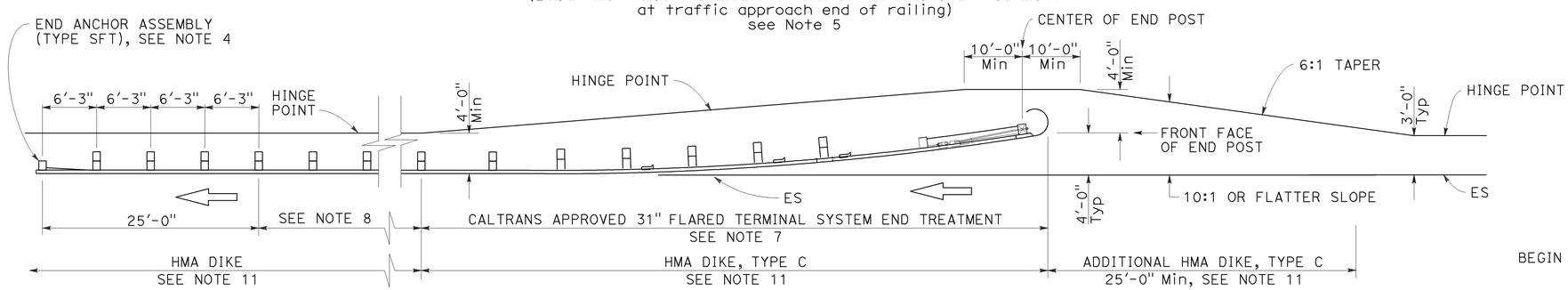

TYPE 11B LAYOUT

(Embankment MGS installation with 31" flared end treatment at traffic approach end of railing) see Note 5

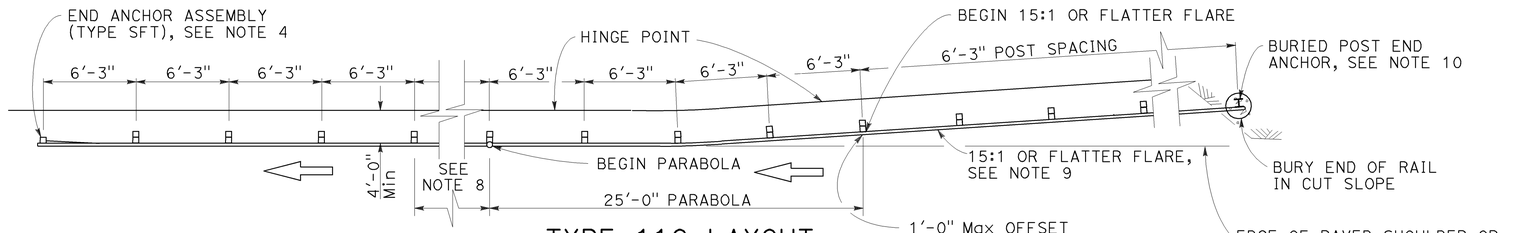

TYPE 11C LAYOUT

(Embankment MGS installation with buried end anchor treatment at traffic approach end of railing) see Notes 5 and 11

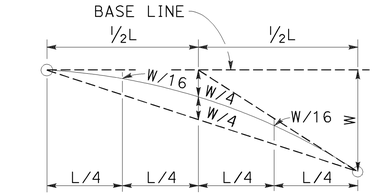

TYPICAL PARABOLIC LAYOUT

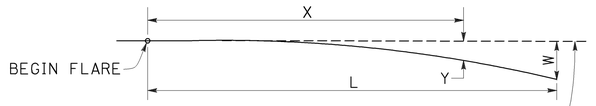

BASE LINE (EDGE OF PAVED SHOULDER OR OFFSET LINE OF EDGE OF TRAVELED WAY)

$$Y = \frac{WX^2}{L^2}$$

Y = OFFSET FROM BASE LINE
W = MAXIMUM OFFSET
X = DISTANCE ALONG BASE LINE
L = LENGTH OF FLARE

PARABOLIC FLARE OFFSETS

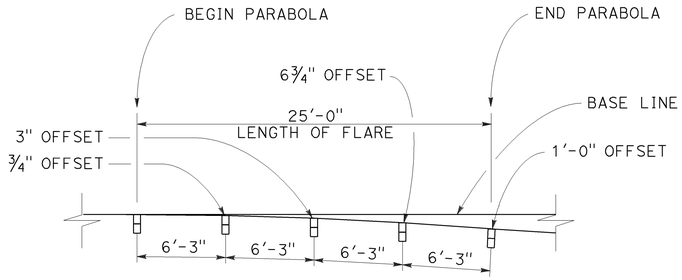

TYPICAL FLARE OFFSETS FOR 1 FOOT Max END OFFSET

NOTES:

1. Line post, blocks and hardware to be used are shown on Revised Standard Plans RSP A77L1, RSP A77L2, RSP A77M1, RSP A77N1 and RSP A77N2.
2. MGS post spacing to be 6'-3" center to center, except as otherwise noted.
3. Except as noted, line posts are 6" x 8" x 6'-0" wood with 6" x 12" x 1'-2" wood blocks. W6 x 8.5 or W6 x 9 steel posts, 6'-0" in length, with 6" x 12" x 1'-2" notched wood blocks or recycled plastic blocks may be used for 6" x 8" x 6'-0" wood post with 6" x 12" x 1'-2" wood blocks where applicable and when specified.
4. For End Anchor Assembly (Type SFT) details, see Revised Standard Plan RSP A77H1.
5. Layout Types 11A, 11B or 11C are typically used where MGS is recommended to shield embankment slopes and a crashworthy end treatment is required for only one direction of traffic.
6. 31" in-line terminal system end treatments are used where site conditions will not accommodate a flared end treatment.
7. The type of 31" terminal system end treatment to be used will be shown on the Project Plans.
8. Dependent on site conditions (embankment height and side slope), construction of additional MGS (length equal to multiples of 12'-6" with 6'-3" post spacing) may be advisable.
9. The 15:1 or flatter flare used with buried end anchors is based on the edge of the paved shoulder or offset line of edge of the traveled way. The length of MGS within the 15:1 or flatter flare is based on site conditions and should be a length equal to multiples of 12'-6".
10. For details of the buried post end anchor used with Type 11C Layout, see Revised Standard Plan RSP A77T2.
11. Where placement of dike is required with MGS installations, see Revised Standard Plan RSP A77N4 for dike positioning details.

Dist	COUNTY	ROUTE	POST MILES TOTAL PROJECT	SHEET No.	TOTAL SHEETS
11	SD	5	R29.1/R30.5	763	1012

Randell D. Hiatt
REGISTERED CIVIL ENGINEER

July 19, 2013
PLANS APPROVAL DATE

REGISTERED PROFESSIONAL ENGINEER — Randell D. Hiatt — No. C50200 — Exp. 6-30-15 — CIVIL — STATE OF CALIFORNIA

THE STATE OF CALIFORNIA OR ITS OFFICERS OR AGENTS SHALL NOT BE RESPONSIBLE FOR THE ACCURACY OR COMPLETENESS OF SCANNED COPIES OF THIS PLAN SHEET.

TO ACCOMPANY PLANS DATED 07-21-14

STATE OF CALIFORNIA
DEPARTMENT OF TRANSPORTATION

MIDWEST GUARDRAIL SYSTEM TYPICAL LAYOUTS FOR EMBANKMENTS

NO SCALE

RSP A77P1 DATED JULY 19, 2013 SUPPLEMENTS THE STANDARD PLANS BOOK DATED 2010.

REVISED STANDARD PLAN RSP A77P1

2010 REVISED STANDARD PLAN RSP A77P1

6-20-13

Dist	COUNTY	ROUTE	POST MILES TOTAL PROJECT	SHEET No.	TOTAL SHEETS
11	SD	5	R29.1/R30.5	764	1012

Randell D. Hiatt
REGISTERED CIVIL ENGINEER

July 19, 2013
PLANS APPROVAL DATE

REGISTERED PROFESSIONAL ENGINEER
Randell D. Hiatt
No. C50200
Exp. 6-30-15
CIVIL
STATE OF CALIFORNIA

THE STATE OF CALIFORNIA OR ITS OFFICERS OR AGENTS SHALL NOT BE RESPONSIBLE FOR THE ACCURACY OR COMPLETENESS OF SCANNED COPIES OF THIS PLAN SHEET.

TO ACCOMPANY PLANS DATED 07-21-14

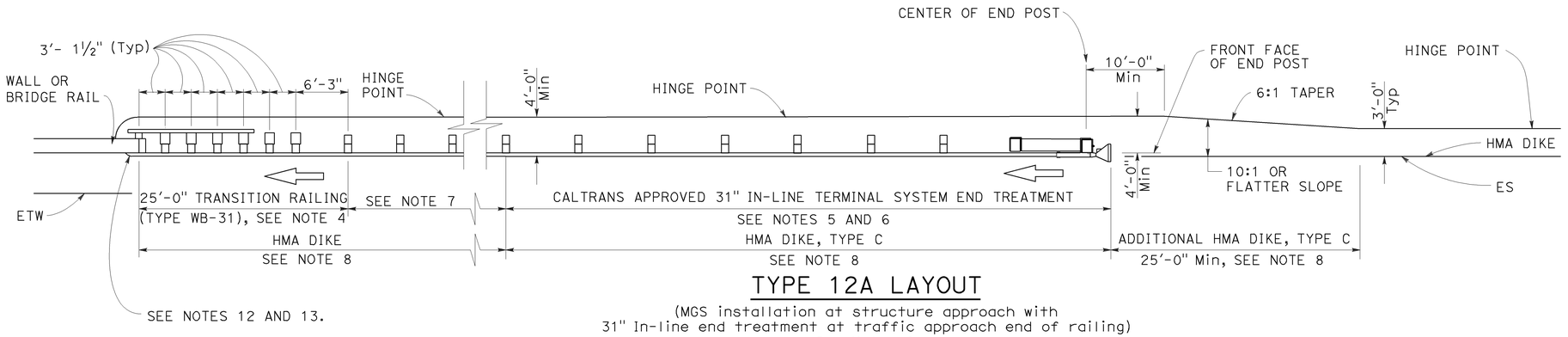

TYPE 12A LAYOUT

(MGS installation at structure approach with
31" In-line end treatment at traffic approach end of railing)
See Notes 9

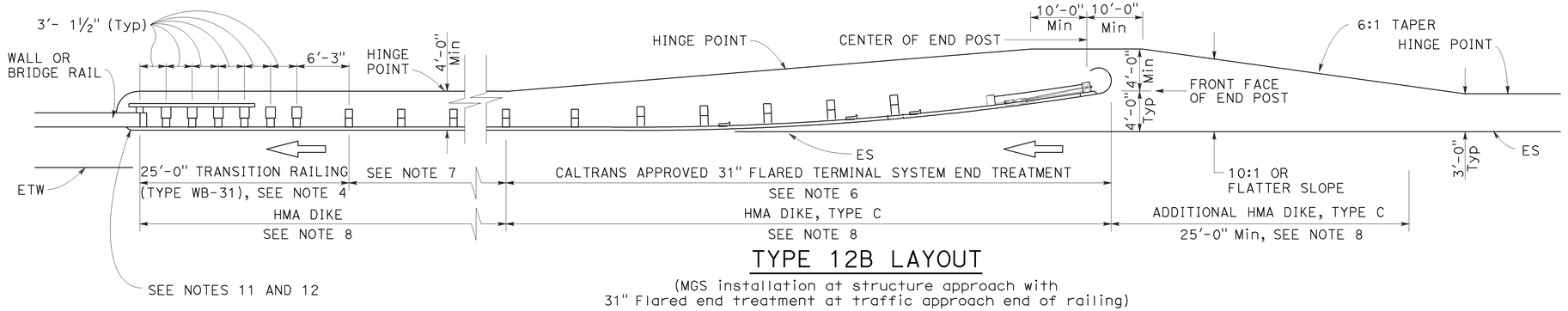

TYPE 12B LAYOUT

(MGS installation at structure approach with
31" Flared end treatment at traffic approach end of railing)
See Notes 9

NOTES:

1. Line post, blocks and hardware to be used are shown on Revised Standard Plans RSP A77L1, RSP A77L2, RSP A77M1, RSP A77N1 and RSP A77N2.
2. MGS post spacing to be 6'-3" center to center, except as otherwise noted.
3. Except as noted, line posts are 6" x 8" x 6'-0" wood with 6" x 12" x 1'-2" wood blocks. W6 x 8.5 or W6 x 9 steel posts, 6'-0" in length, with 6" x 12" x 1'-2" notched wood blocks or plastic blocks may be used for 6" x 8" x 6'-0" wood posts with 6" x 12" x 1'-2" wood blocks where applicable and when specified.
4. For Transition Railing (Type WB-31) details for Types 12A and 12B Layouts, see Revised Standard Plan RSP A77U4.
5. 31" in-line terminal system end treatments are used where site conditions will not accommodate a 31" flared end treatment.
6. The type 31" of terminal system end treatment to be used will be shown on the Project Plans.
7. Dependent on site conditions (embankment height, side slopes, or other fixed objects), it may be advisable to construct additional guard railing (a length equal to multiples of 12'-6" with 6'-3" post spacing) between the transition railing and end treatment. A 12.5 degree angle of departure can be drawn on the Project Plans from the edge of traveled way through the outer most point of the fixed object to determine the additional length of railing needed.
8. Where placement of dike is required with guard railing installations, see Revised Standard Plan RSP A77N4 for dike positioning details.
9. Type 12A or Type 12B Layouts are typically used:
   a. To the right of approaching traffic, at the end of a structure, on two-lane conventional highway where the roadbed width across the structure is less than 40 feet.
   b. To the left of approaching traffic, at the end of a structure, on two-lane conventional highway where the roadbed width across the structure is less than 40 feet.
   c. To the right of approaching traffic at the end of each structure on multilane freeways or expressways with separate adjacent or parallel bridges.
   d. To the right of approaching traffic at the end of the structure on multilane freeways or expressways with decked median on the bridge.
10. See Revised Standard Plan RSP A77Q3 for typical layout used left of approaching traffic at the ends of each structure on multilane freeways or expressways with separate adjacent or parallel bridges.
11. For additional details of typical connections to bridge rail, see Connection Detail AA on Revised Standard Plans RSP A77U1 and RSP A77U2 and Connection Detail FF on Revised Standard Plans RSP A77V1 and RSP A77V2.
12. For additional details of a typical connection to walls or abutments, see Revised Standard Plan RSP A77U3.

STATE OF CALIFORNIA
DEPARTMENT OF TRANSPORTATION

MIDWEST GUARDRAIL SYSTEM TYPICAL LAYOUTS FOR STRUCTURE APPROACH

NO SCALE

RSP A77Q1 DATED JULY 19, 2013 SUPPLEMENTS THE STANDARD PLANS BOOK DATED 2010.

REVISED STANDARD PLAN RSP A77Q1

2010 REVISED STANDARD PLAN RSP A77Q1

6-19-13

Dist	COUNTY	ROUTE	POST MILES TOTAL PROJECT	SHEET No.	TOTAL SHEETS
11	SD	5	R29.1/R30.5	765	1012

Randell D. Hiatt
REGISTERED CIVIL ENGINEER

July 19, 2013
PLANS APPROVAL DATE

REGISTERED PROFESSIONAL ENGINEER
Randell D. Hiatt
No. C50200
Exp. 6-30-15
CIVIL
STATE OF CALIFORNIA

THE STATE OF CALIFORNIA OR ITS OFFICERS OR AGENTS SHALL NOT BE RESPONSIBLE FOR THE ACCURACY OR COMPLETENESS OF SCANNED COPIES OF THIS PLAN SHEET.

TO ACCOMPANY PLANS DATED 07-21-14

2010 REVISED STANDARD PLAN RSP A77Q2

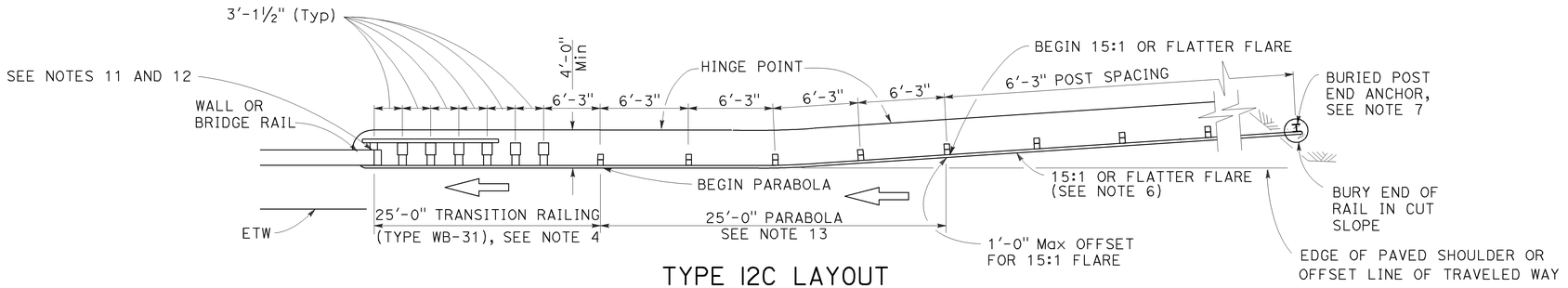

TYPE 12C LAYOUT

(MGS installation at structure approach with a
Buried end anchor treatment at traffic approach end of railing)
See Notes 8 and 9

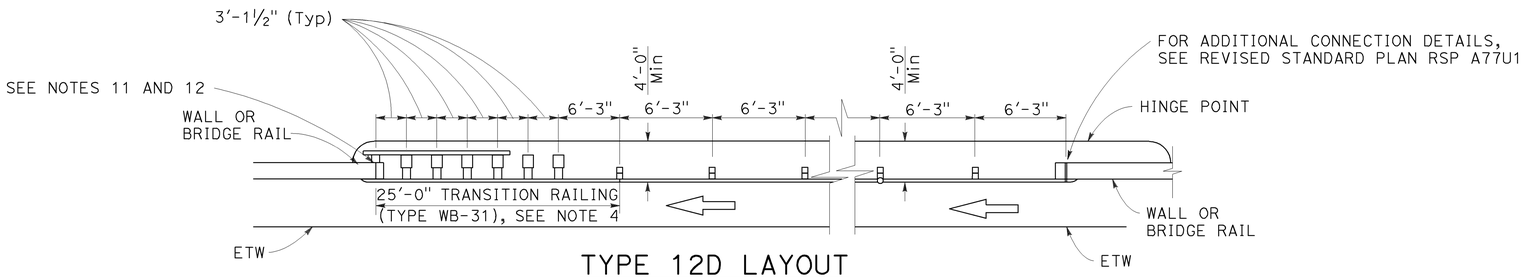

TYPE 12D LAYOUT

(Continuous MGS installation between structures)
See Notes 5 and 9

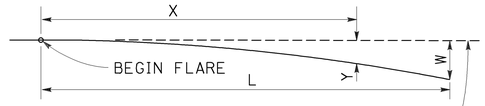

BASE LINE (EDGE OF PAVED SHOULDER OR OFFSET LINE OF EDGE OF TRAVELED WAY)

$$Y = \frac{WX^2}{L^2}$$

Y = OFFSET FROM BASE LINE
W = MAXIMUM OFFSET
X = DISTANCE ALONG BASE LINE
L = LENGTH OF FLARE

PARABOLIC FLARE OFFSETS

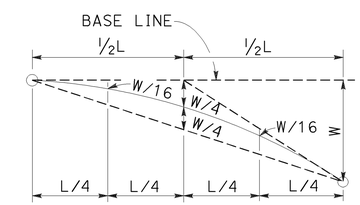

TYPICAL PARABOLIC LAYOUT

NOTES:

1. Line post, blocks and hardware to be used are shown on Revised Standard Plans RSP A77L1, RSP A77L2, RSP A77M1, RSP A77N1 and RSP A77N2.
2. MGS post spacing to be 6'-3" center to center, except as otherwise noted.
3. Except as noted, line posts are 6" x 8" x 6'-0" m wood with 6" x 12" x 1'-2" wood blocks. W6 x 8.5 or W6 x 9 steel posts, 6'-0" in length, with 6" x 12" x 1'-2" notched wood blocks or plastic blocks may be used for 6" x 8" x 6'-0" wood posts with 6" x 12" x 1'-2" wood blocks where applicable and when specified.
4. For Transition Railing (Type WB-31) details for Types 12C and 12D Layouts, see Revised Standard Plan RSP A77U4.
5. Type 12D layout is typically used where continous MGS is recommended between structures.
6. The 15:1 or flatter flare for Type 12C Layout is based on the edge of the paved shoulder or offset line of edge of the traveled way. The length of MGS with the 15:1 or flatter flare is based on site conditions and should be a length equal to multiples of 12'-6".
7. For details of the buried post end anchor used with Type 12C Layout, see Revised Standard Plan RSP A77T2.
8. Where placement of dike is required with MGS installations, see Revised Standard Plan RSP A77N4 for dike positioning details.
9. Type 12C Layout is typically used:
   a. To the right of approaching traffic, at the end of the structure, on two-lane conventional highway where the roadbed width across the structure is less than 40 feet.
   b. To the left of approaching traffic, at each of a structure, on two-lane conventional highway where the roadbed width across the structure is less than 40 feet.
   c. To the right of approaching traffic at the end of each structure on multilane freeways or expressways with separate adjacent or parallel bridges.
   d. To the right of approaching traffic at the end of the structure on multilane freeways or expressways with decked median on the bridge.
10. See Revised Standard Plan RSP A77Q3 for typical layout used left of approaching traffic at the ends of each structure on multilane freeways or expressways with separate adjacent or parallel bridges.
11. For additional details of typical connections to bridge rail, see Connection Detail AA on Revised Standard Plans RSP A77U1 and RSP A77U2 and Connection Detail FF on Revised Standard Plans RSP A77V1 and RSP A77V2.
12. For additional details of a typical connection to walls or abutments, see Revised Standard Plan RSP A77U3.
13. For typical flare offsets for 25'-0" length parabola with maximum offset of 1'-0", see Revised Standard Plan RSP A77P1.

STATE OF CALIFORNIA
DEPARTMENT OF TRANSPORTATION

MIDWEST GUARDRAIL SYSTEM TYPICAL LAYOUTS FOR STRUCTURE APPROACH AND BETWEEN STRUCTURES

NO SCALE

RSP A77Q2 DATED JULY 19, 2013 SUPPLEMENTS THE STANDARD PLANS BOOK DATED 2010.

REVISED STANDARD PLAN RSP A77Q2

7-8-13

Dist	COUNTY	ROUTE	POST MILES TOTAL PROJECT	SHEET No.	TOTAL SHEETS
11	SD	5	R29.1/R30.5	766	1012

Randell D. Hiatt
REGISTERED CIVIL ENGINEER

July 19, 2013
PLANS APPROVAL DATE

REGISTERED PROFESSIONAL ENGINEER — Randell D. Hiatt — No. C50200 — Exp. 6-30-15 — CIVIL — STATE OF CALIFORNIA

THE STATE OF CALIFORNIA OR ITS OFFICERS OR AGENTS SHALL NOT BE RESPONSIBLE FOR THE ACCURACY OR COMPLETENESS OF SCANNED COPIES OF THIS PLAN SHEET.

TO ACCOMPANY PLANS DATED 07-21-14

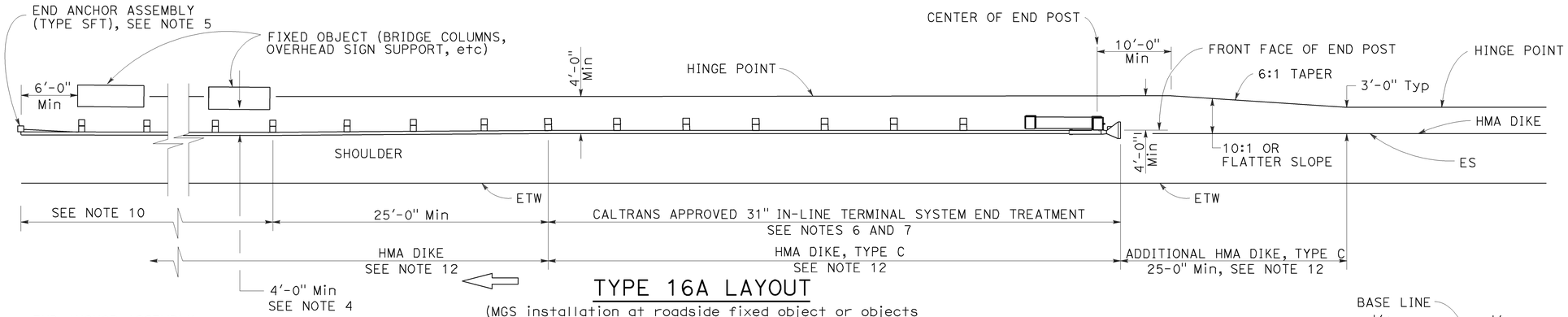

TYPE 16A LAYOUT

(MGS installation at roadside fixed object or objects with 31" in-line end treatment at traffic approach end of railing)
See Notes 11 and 12

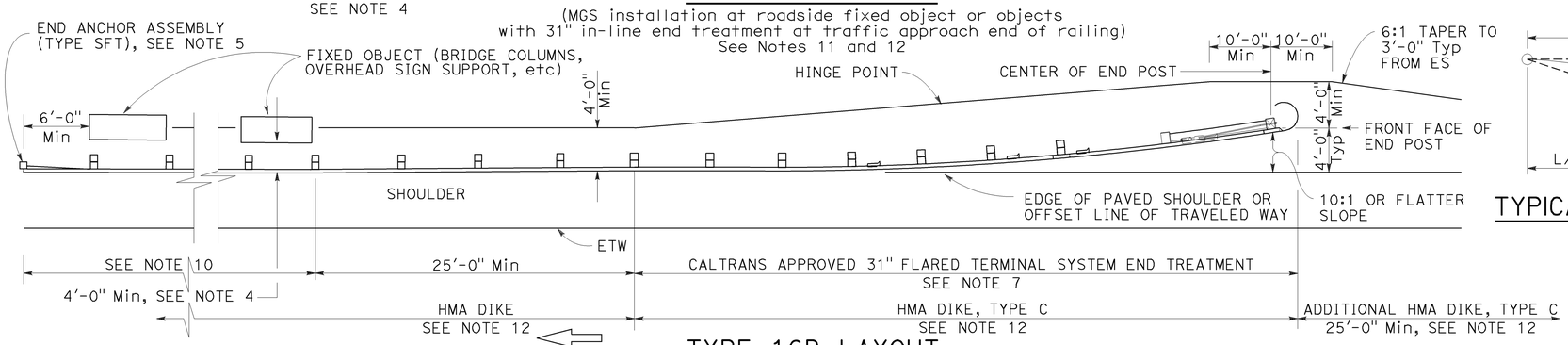

TYPE 16B LAYOUT

(MGS installation at roadside fixed object or objects with 31' flared end treatment at traffic approach end of railing)
See Notes 11 and 12

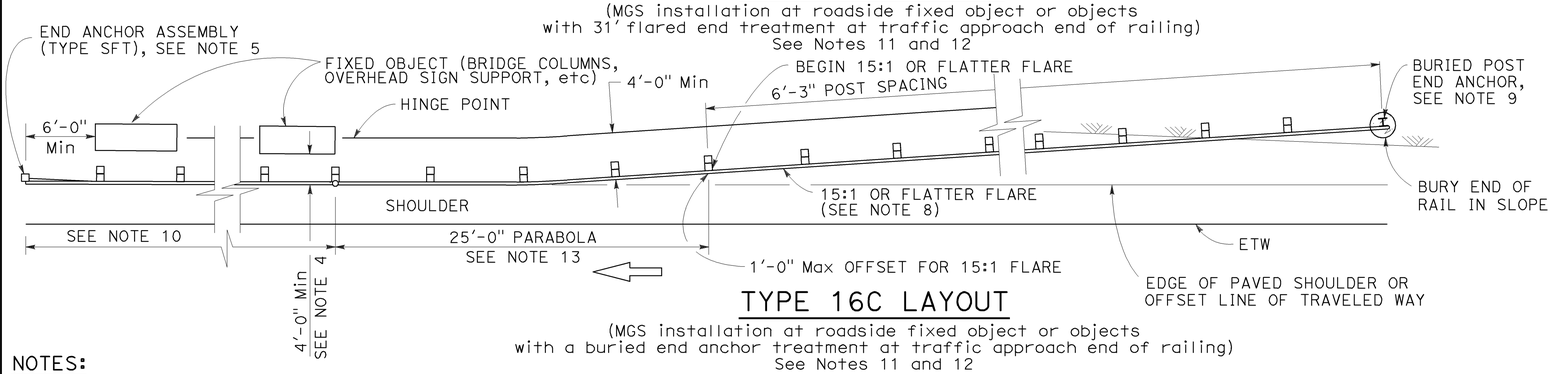

TYPE 16C LAYOUT

(MGS installation at roadside fixed object or objects with a buried end anchor treatment at traffic approach end of railing)
See Notes 11 and 12

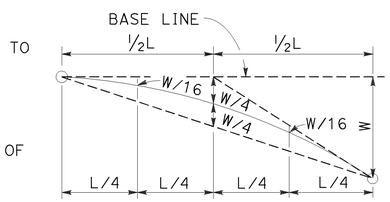

TYPICAL PARABOLIC LAYOUT

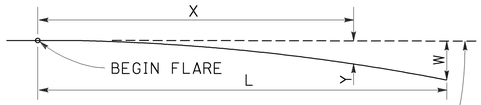

BASE LINE (EDGE OF PAVED SHOULDER OR OFFSET LINE OF EDGE OF TRAVELED WAY)

$$Y = \frac{WX^2}{L^2}$$

Y = OFFSET FROM BASE LINE
W = MAXIMUM OFFSET
X = DISTANCE ALONG BASE LINE
L = LENGTH OF FLARE

PARABOLIC FLARE OFFSETS

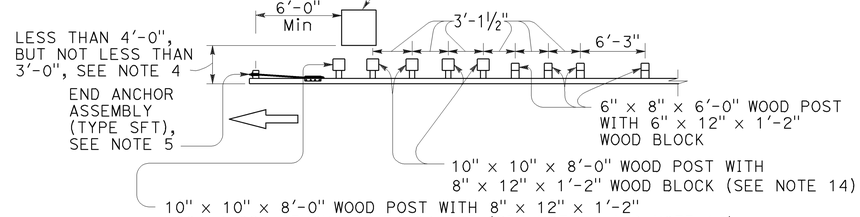

NOTE A: For a series of fixed objects (bridge columns, overhead sign supports, etc.) additional 10" x 10" x 8'-0" wood post with 8" x 12" x 1'-2" wood blocks at 3'-1½" center to center spacing are to be used between fixed objects.

STRENGTHENED MIDWEST GUARDRAIL SYSTEM SECTIONS FOR FIXED OBJECT

Use strengthened MGS sections with Types 16A, 16B or 16C layouts where minimum clearance between the face of the railing and fixed object(s) is less than 4'-0", but not less than 3'-0". See Note 4

NOTES:

1. Line post, blocks and hardware to be used are shown on Revised Standard Plans RSP A77L1, RSP A77L2, RSP A77M1, RSP A77N1 and RSP A77N2.
2. MGS post spacing to be 6'-3" center to center, except as otherwise noted.
3. Except as noted, line posts are 6" x 8" x 6'-0" wood with 6" x 12" x 1'-2" wood blocks. W6 x 8.5 or W6 x 9 steel posts, 6'-0" in length, with 6" x 12" x 1'-2" notched wood blocks or notched recycled plastic blocks may be used for 6" x 8" x 6'-0" wood line posts with 6" x 12" x 1'-2" wood blocks where applicable and when specified.
4. A 4'-0" minimum clearance is required between the face of the railing and the face of a fixed object located directly behind MGS sections with post spacing of 6'-3". Construct MGS as shown in the detail "Strengthened Midwest Guardrail System Sections for Fixed Object" on this plan, where the clearance between the face of the railing and the face of a fixed object is less than 4'-0", but not less than 3'-0". Where the clearance is less than 3'-0", a concrete wall or barrier should be constructed to shield the fixed object(s).
5. For End Anchor Assembly (Type SFT) details, see Revised Standard Plan RSP A77S1.
6. 31" in-line terminal system end treatments are used where site conditions will not accommodate a 31" flared end treatment.
7. The type of 31" terminal system to be used will be shown on the Project Plans.
8. The 15:1 or flatter flare used with Type 16C Layout is based on the edge of the paved shoulder or offset line of edge of the traveled way. The length of MGS within the 15:1 or flatter flare is based on site conditions and should be a length equal to multiples of 12'-6".
9. For details of the Buried Post End Anchor used with Type 16C Layout, see Revised Standard Plan RSP A77T2.
10. As site conditions dictate, construct additional MGS to shield fixed object(s). Additional MGS length equal to multiples of 12'-6". Post spacing at 6'-3" except as specified in Note 4.
11. Layout Types 16A, 16B or 16C are typically used where MGS is recommended to shield roadside fixed object(s) and a crashworthy 31" end treatment is required for only one direction of traffic.
12. Where placement of dike is required with MGS, see Revised Standard Plan RSP A77N4 for dike positioning details.
13. For typical flare offsets for 25'-0" length parabola with maximum offset of 1'-0", see Revised Standard Plan RSP A77P1.
14. W6 x 15 steel post, 8'-0" in length, with 8" x 12" x 1'-2" notched wood block or notched recycled plastic blocks may be used in place of the 10" x 10" x 8'-0" wood post with 8" x 12" x 1'-2" wood block shown in the detail "Strengthened Midwest Guardrail System Sections for Fixed Object".

STATE OF CALIFORNIA
DEPARTMENT OF TRANSPORTATION

MIDWEST GUARDRAIL SYSTEM TYPICAL LAYOUTS FOR ROADSIDE FIXED OBJECTS

NO SCALE

RSP A77R3 DATED JULY 19, 2013 SUPPLEMENTS THE STANDARD PLANS BOOK DATED 2010.

REVISED STANDARD PLAN RSP A77R3

2010 REVISED STANDARD PLAN RSP A77R3

6-20-13

Dist	COUNTY	ROUTE	POST MILES TOTAL PROJECT	SHEET No.	TOTAL SHEETS
11	SD	5	R29.1/R30.5	767	1012

Randell D. Hiatt
REGISTERED CIVIL ENGINEER

July 19, 2013
PLANS APPROVAL DATE

REGISTERED PROFESSIONAL ENGINEER
Randell D. Hiatt
No. C50200
Exp. 6-30-15
CIVIL
STATE OF CALIFORNIA

THE STATE OF CALIFORNIA OR ITS OFFICERS OR AGENTS SHALL NOT BE RESPONSIBLE FOR THE ACCURACY OR COMPLETENESS OF SCANNED COPIES OF THIS PLAN SHEET.

TO ACCOMPANY PLANS DATED 07-21-14

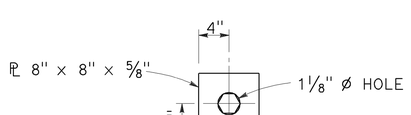

DETAIL "A"
CABLE CONNECTION
END PLATE

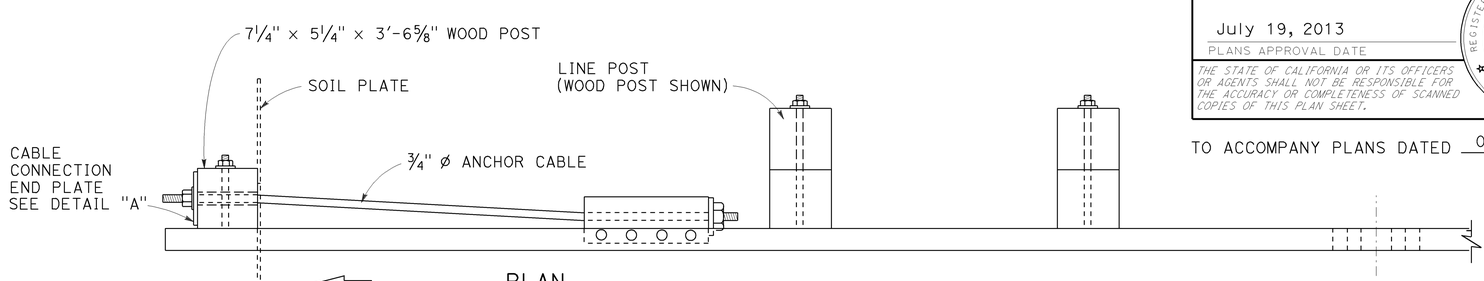

PLAN

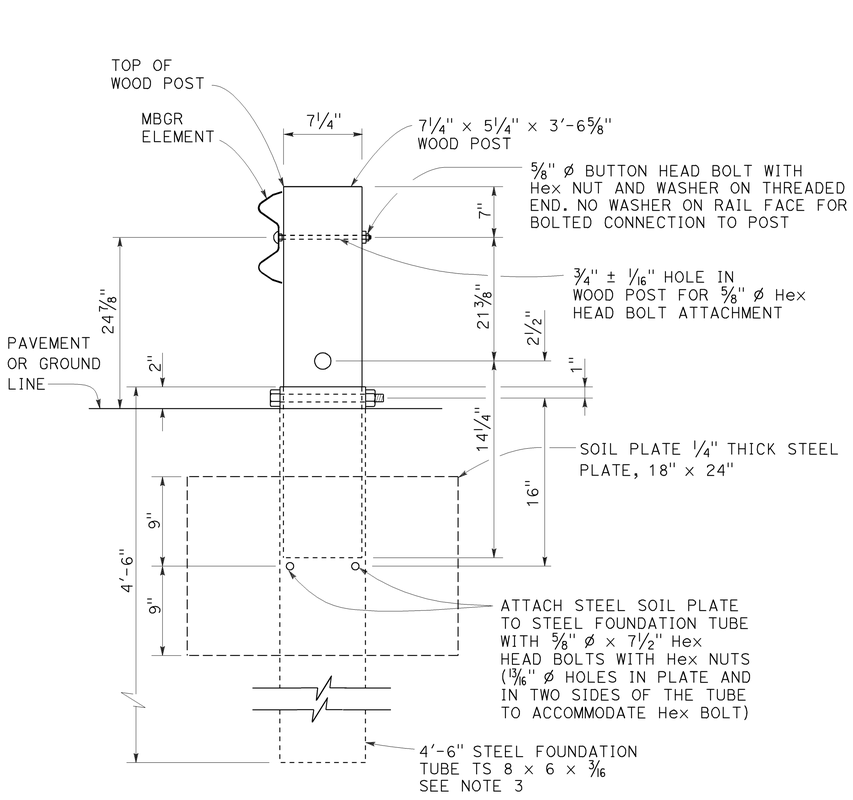

SECTION A-A

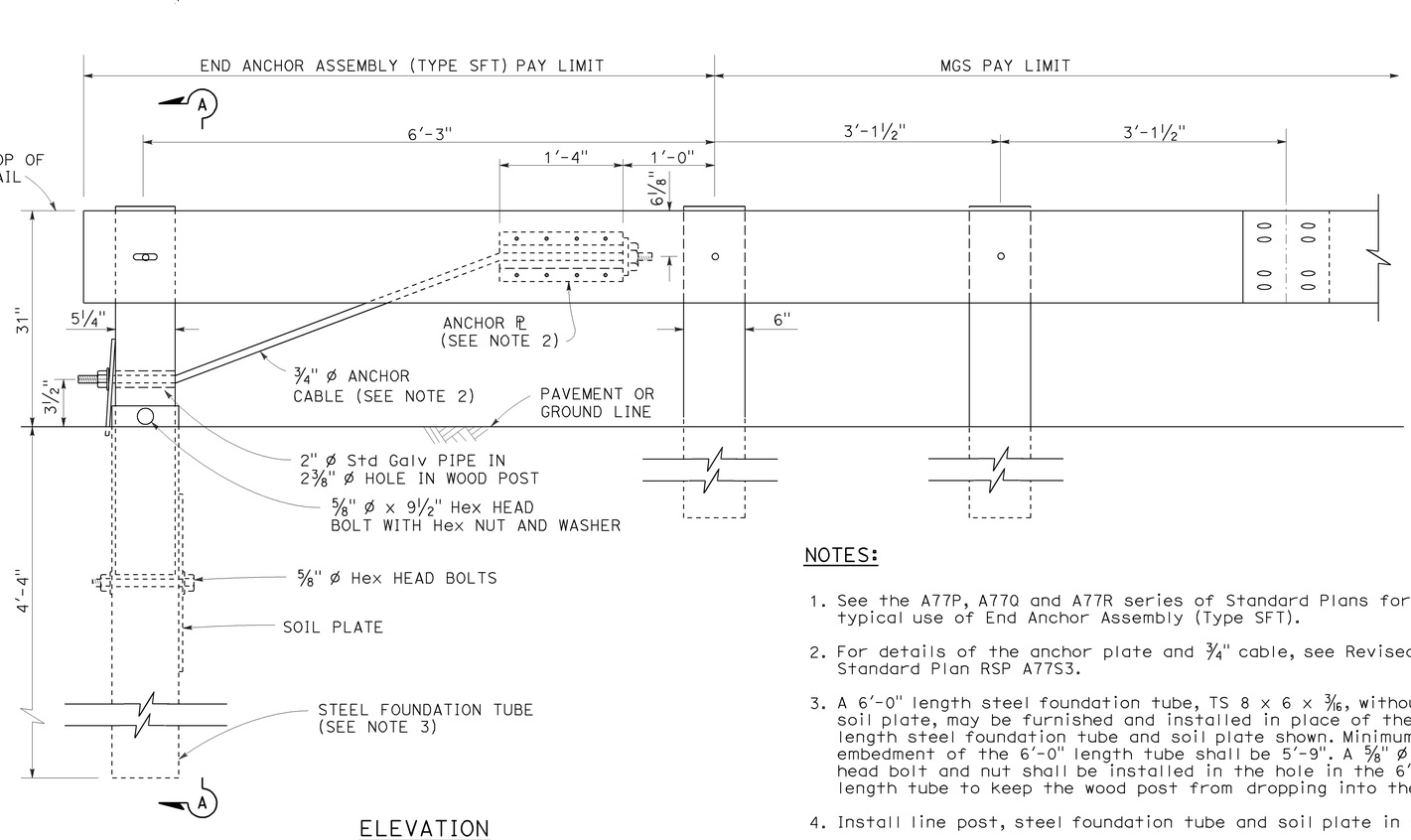

ELEVATION

END ANCHOR
ASSEMBLY (TYPE SFT)
See Note 1

NOTES:

1. See the A77P, A77Q and A77R series of Standard Plans for typical use of End Anchor Assembly (Type SFT).
2. For details of the anchor plate and 3/4" cable, see Revised Standard Plan RSP A77S3.
3. A 6'-0" length steel foundation tube, TS 8 x 6 x 3/16, without a soil plate, may be furnished and installed in place of the 4'-6" length steel foundation tube and soil plate shown. Minimum embedment of the 6'-0" length tube shall be 5'-9". A 5/8" ø Hex head bolt and nut shall be installed in the hole in the 6'-0" length tube to keep the wood post from dropping into the tube.
4. Install line post, steel foundation tube and soil plate in soil.

STATE OF CALIFORNIA
DEPARTMENT OF TRANSPORTATION

MIDWEST GUARDRAIL SYSTEM
END ANCHOR ASSEMBLY
(TYPE SFT)

NO SCALE

RSP A77S1 DATED JULY 19, 2013 SUPPLEMENTS THE STANDARD PLANS BOOK DATED 2010.

REVISED STANDARD PLAN RSP A77S1

2010 REVISED STANDARD PLAN RSP A77S1

7-3-13

Dist	COUNTY	ROUTE	POST MILES TOTAL PROJECT	SHEET No.	TOTAL SHEETS
11	SD	5	R29.1/R30.5	768	1012

Randell D. Hiatt
REGISTERED CIVIL ENGINEER

July 19, 2013
PLANS APPROVAL DATE

REGISTERED PROFESSIONAL ENGINEER
Randell D. Hiatt
No. C50200
Exp. 6-30-15
CIVIL
STATE OF CALIFORNIA

THE STATE OF CALIFORNIA OR ITS OFFICERS OR AGENTS SHALL NOT BE RESPONSIBLE FOR THE ACCURACY OR COMPLETENESS OF SCANNED COPIES OF THIS PLAN SHEET.

TO ACCOMPANY PLANS DATED 07-21-14

NOTE:

See Revised Standard Plans RSP A77S1, RSP A77S2 and RSP A77T1 for typical use of anchor cable and anchor plate.

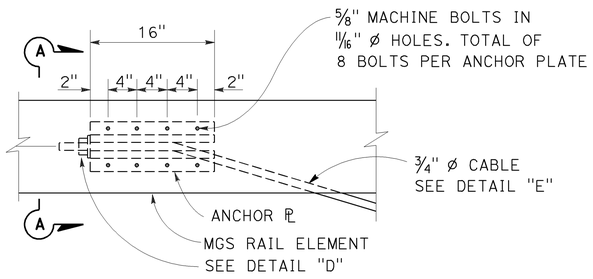

ANCHOR PLATE DETAIL
(MGS shown, TBB similar)

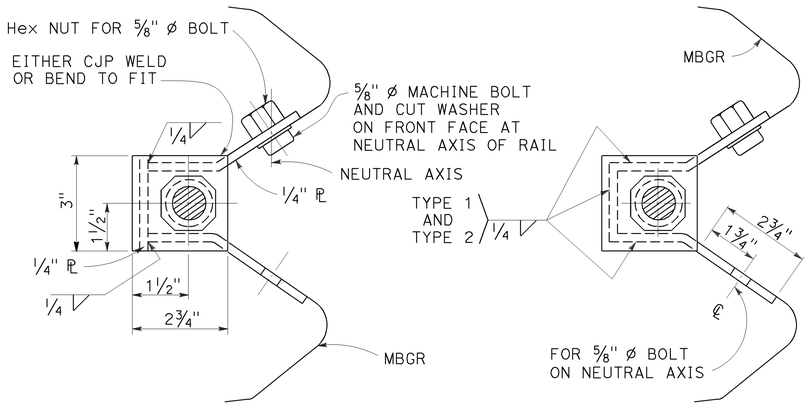

NOTE:

Dimensioning applies to both types.

SECTION A-A
(ALTERNATIVE TYPE 1)

SECTION A-A
(ALTERNATIVE TYPE 2)

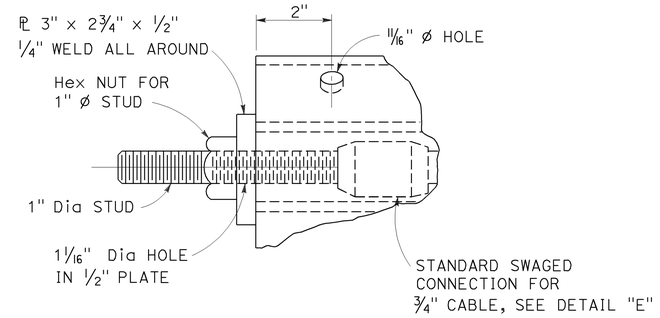

DETAIL "D"

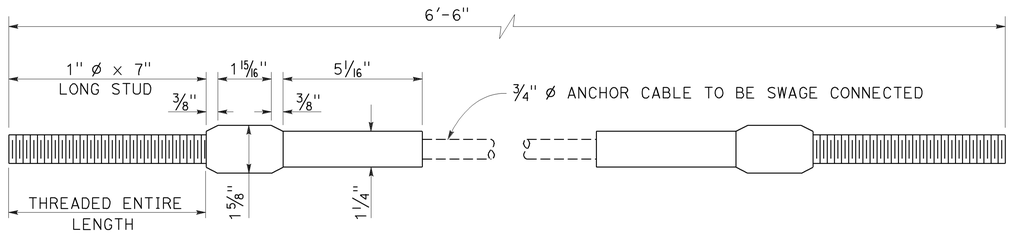

ANCHOR CABLE WITH SWAGED FITTING AND STUD
DETAIL "E"

STATE OF CALIFORNIA
DEPARTMENT OF TRANSPORTATION

METAL RAILING ANCHOR CABLE AND ANCHOR PLATE DETAILS

NO SCALE

RSP A77S3 DATED JULY 19, 2013 SUPPLEMENTS THE STANDARD PLANS BOOK DATED 2010.

REVISED STANDARD PLAN RSP A77S3

2010 REVISED STANDARD PLAN RSP A77S3

7-3-13

Dist	COUNTY	ROUTE	POST MILES TOTAL PROJECT	SHEET No.	TOTAL SHEETS
11	SD	5	R29.1/R30.5	769	1012

Randell D. Hiatt
REGISTERED CIVIL ENGINEER

July 19, 2013
PLANS APPROVAL DATE

REGISTERED PROFESSIONAL ENGINEER
Randell D. Hiatt
No. C50200
Exp. 6-30-15
CIVIL
STATE OF CALIFORNIA

THE STATE OF CALIFORNIA OR ITS OFFICERS OR AGENTS SHALL NOT BE RESPONSIBLE FOR THE ACCURACY OR COMPLETENESS OF SCANNED COPIES OF THIS PLAN SHEET.

TO ACCOMPANY PLANS DATED 07-21-14

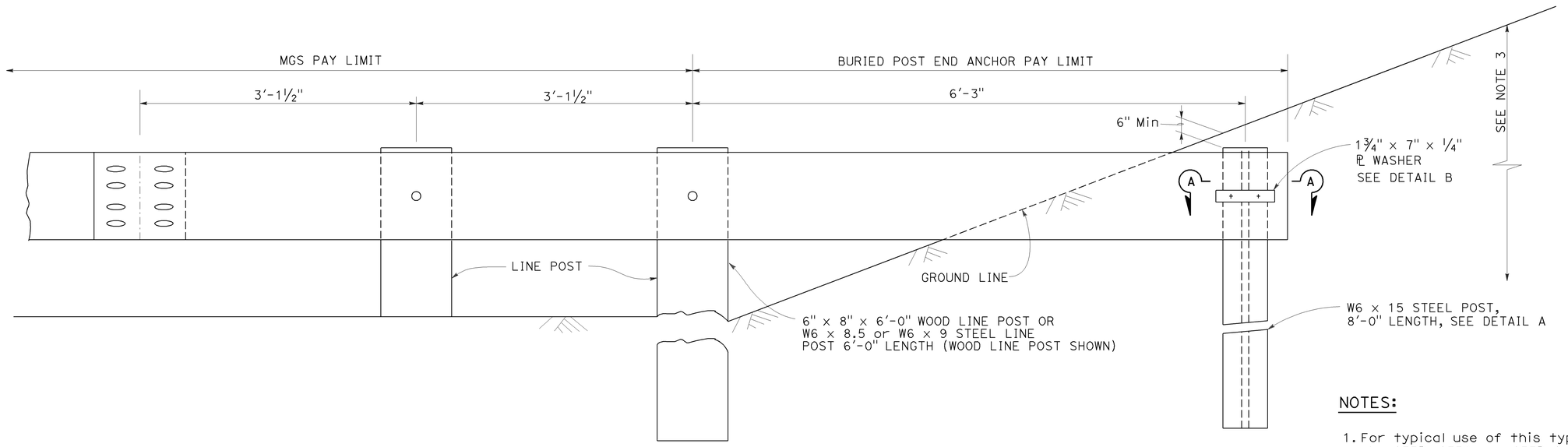

BURIED POST END ANCHOR

See Note 3

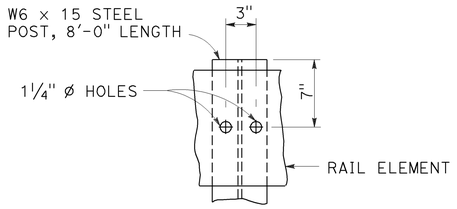

DETAIL A

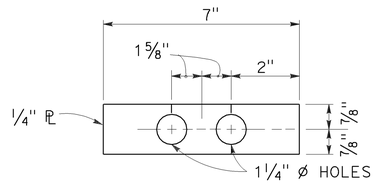

DETAIL B

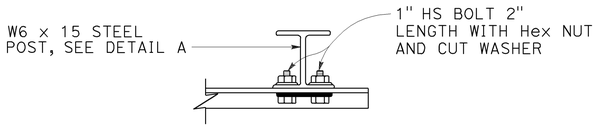

SECTION A-A

NOTES:

1. For typical use of this type of end anchor with MGS see the A77P, A77Q and A77R Series of the Standard Plans.
2. Holes excavation in the slope to construct the buried post end anchor shall be backfilled with selected earth, placed in layers approximately 1'-0" thick. Each layer shall be moistened and thoroughly compacted.
3. The buried post end anchor shall only be constructed at those locations where the slope perpendicular to the roadway is non-traversable.

STATE OF CALIFORNIA
DEPARTMENT OF TRANSPORTATION

MIDWEST GUARDRAIL SYSTEM
BURIED POST END ANCHOR

NO SCALE

RSP A77T2 DATED JULY 19, 2013 SUPPLEMENTS THE STANDARD PLANS BOOK DATED 2010.

REVISED STANDARD PLAN RSP A77T2

Dist	COUNTY	ROUTE	POST MILES TOTAL PROJECT	SHEET No.	TOTAL SHEETS
11	SD	5	R29.1/R30.5	770	1012

Randell D. Hiatt
REGISTERED CIVIL ENGINEER

July 19, 2013
PLANS APPROVAL DATE

REGISTERED PROFESSIONAL ENGINEER
Randell D. Hiatt
No. C50200
Exp. 6-30-15
CIVIL
STATE OF CALIFORNIA

THE STATE OF CALIFORNIA OR ITS OFFICERS OR AGENTS SHALL NOT BE RESPONSIBLE FOR THE ACCURACY OR COMPLETENESS OF SCANNED COPIES OF THIS PLAN SHEET.

TO ACCOMPANY PLANS DATED 07-21-14

2010 REVISED STANDARD PLAN RSP A77U3

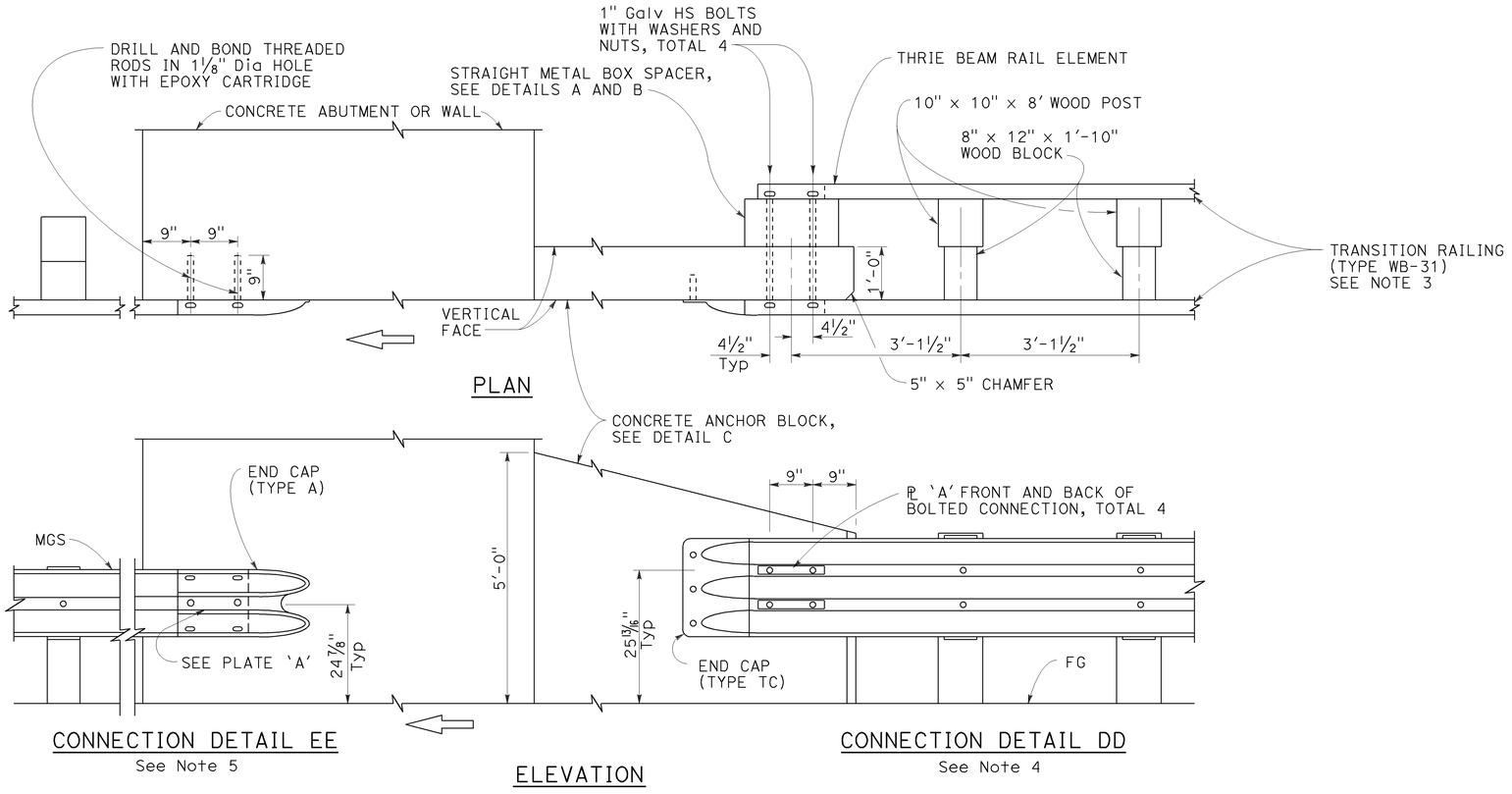

MIDWEST GUARDRAIL SYSTEM CONNECTION TO ABUTMENT OR WALL

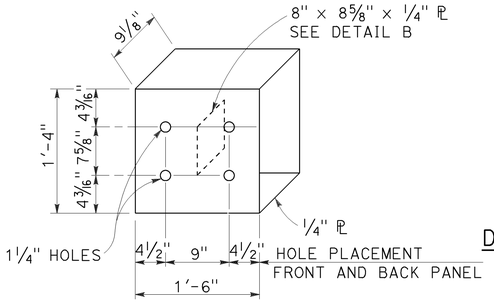

DETAIL A

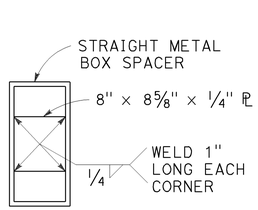

DETAIL B

STRAIGHT METAL BOX SPACER

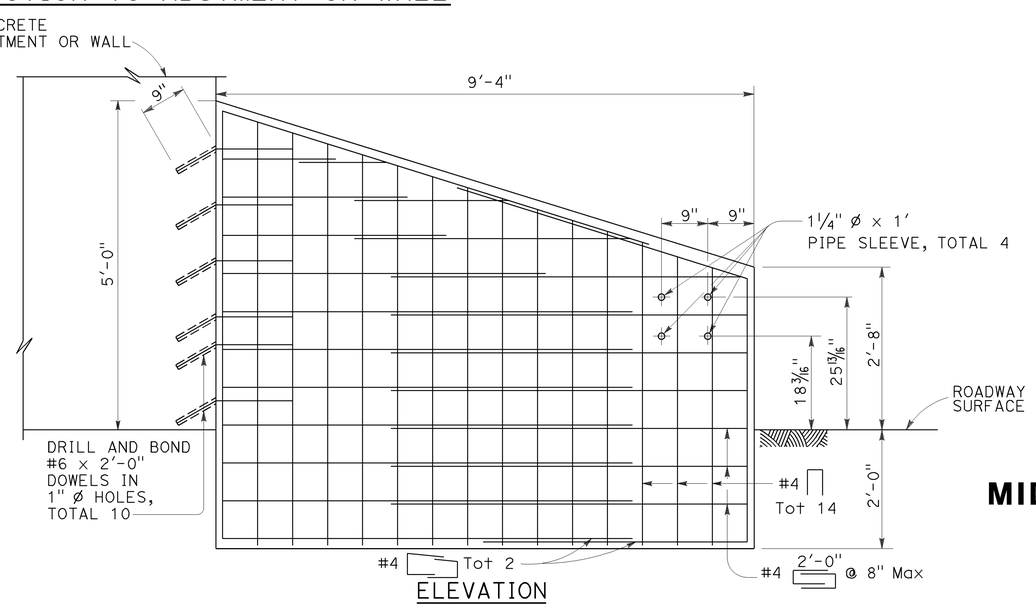

ELEVATION

ANCHOR BLOCK FOR TRANSITION RAILING CONNECTION

DETAIL C

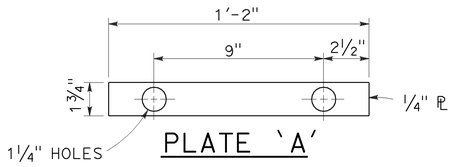

PLATE 'A'

NOTES:

1. These connection details apply to abutments and walls.
2. Additional details of posts, blocks and hardware are shown on Revised Standard Plans RSP A77M1, RSP A77N1 and RSP A77N2.
3. For additional details of Transition Railing (Type WB-31), see Revised Standard Plan RSP A77U4. Transition Railing (Type WB-31) transitions the 12 gauge MGS railing section to a heavier gage nested thrie beam railingsection which is connected to the concrete anchor block.
4. For typical use of Connection Details DD, see Layout Types 12A and 12B on Revised Standard Plan RSP A77Q1 and Layout Types 12C and 12D on Revised Standard Plan RSP A77Q2.
5. For typical use of Connection Detail EE, see Layout Type 12D on Revised Standard Plan RSP A77Q2 and Layout Type 12DD on Revised Standard Plan RSP A77Q5.

STATE OF CALIFORNIA
DEPARTMENT OF TRANSPORTATION

MIDWEST GUARDRAIL SYSTEM CONNECTIONS TO ABUTMENTS AND WALLS

NO SCALE

RSP A77U3 DATED JULY 19, 2013 SUPPLEMENTS THE STANDARD PLANS BOOK DATED 2010.

REVISED STANDARD PLAN RSP A77U3

7-8-13

Dist	COUNTY	ROUTE	POST MILES TOTAL PROJECT	SHEET No.	TOTAL SHEETS
11	SD	5	R29.1/R30.5	771	1012

Randell D. Hiatt
REGISTERED CIVIL ENGINEER

July 19, 2013
PLANS APPROVAL DATE

REGISTERED PROFESSIONAL ENGINEER — Randell D. Hiatt — No. C50200 — Exp. 6-30-15 — CIVIL — STATE OF CALIFORNIA

THE STATE OF CALIFORNIA OR ITS OFFICERS OR AGENTS SHALL NOT BE RESPONSIBLE FOR THE ACCURACY OR COMPLETENESS OF SCANNED COPIES OF THIS PLAN SHEET.

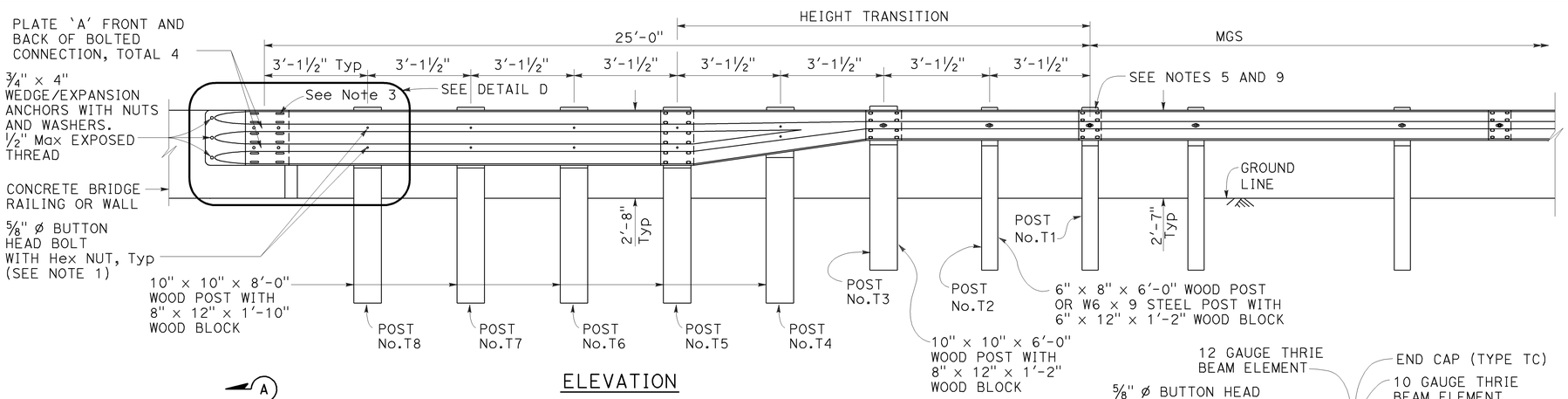

ELEVATION

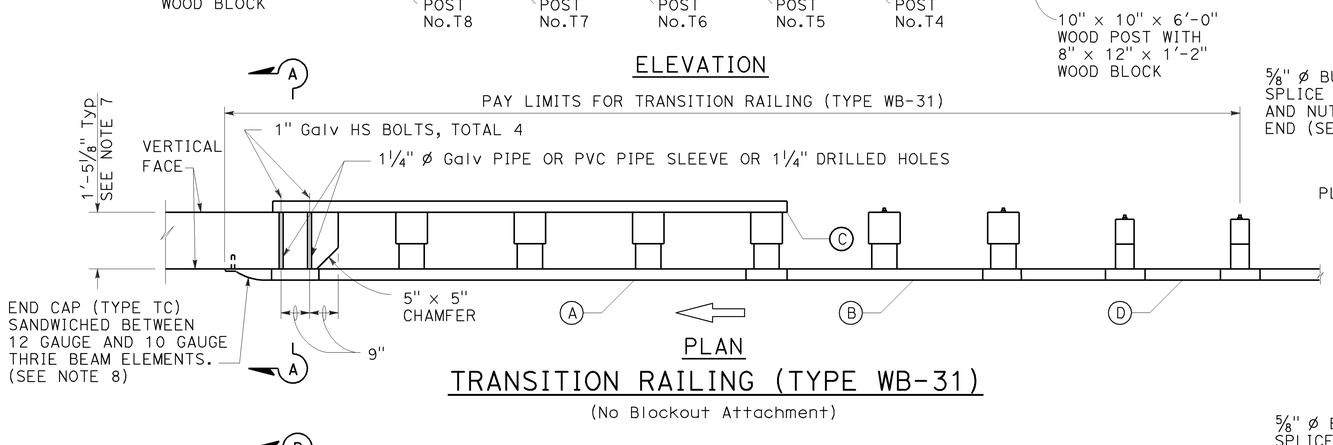

PLAN

TRANSITION RAILING (TYPE WB-31)

(No Blockout Attachment)

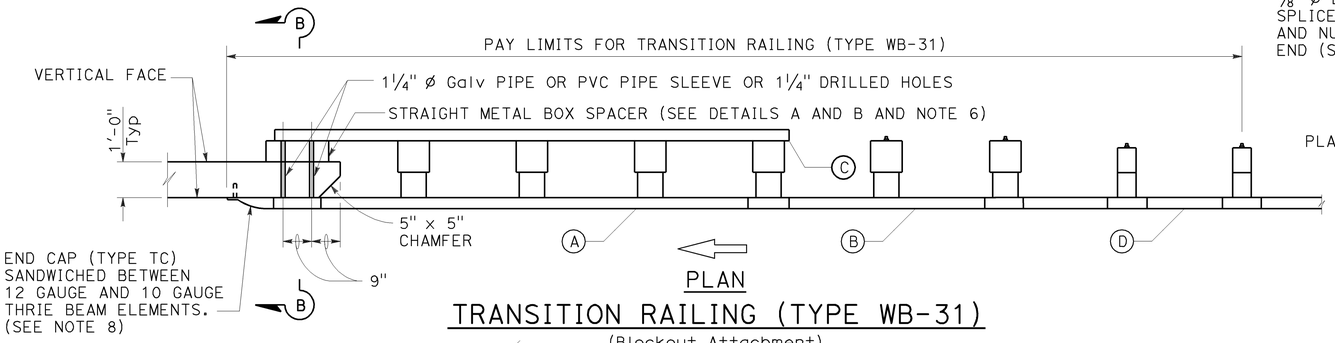

PLAN

TRANSITION RAILING (TYPE WB-31)

(Blockout Attachment)

LEGEND:

- (A) NESTED THRIE BEAM ELEMENTS (ONE 12 GAUGE ELEMENT NESTED OVER ONE 12 GAUGE ELEMENT).
- (B) ONE ASYMMETRICAL 10 GAUGE "W" BEAM TO THRIE BEAM ELEMENT.
- (C) ONE 12 GAUGE THRIE BEAM ELEMENT.
- (D) ONE 10 GAUGE "W" BEAM RAIL ELEMENT (7'-3½"LENGTH)

10 GAUGE = 0.138" THICK
12 GAUGE = 0.108" THICK

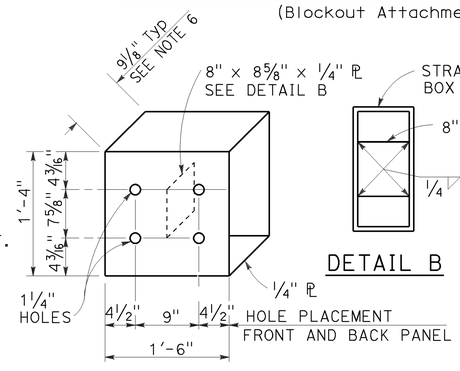

DETAIL A

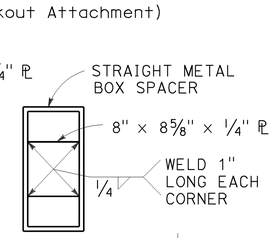

DETAIL B

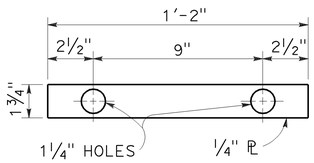

DETAIL C

STRAIGHT METAL BOX SPACER

PLATE 'A'

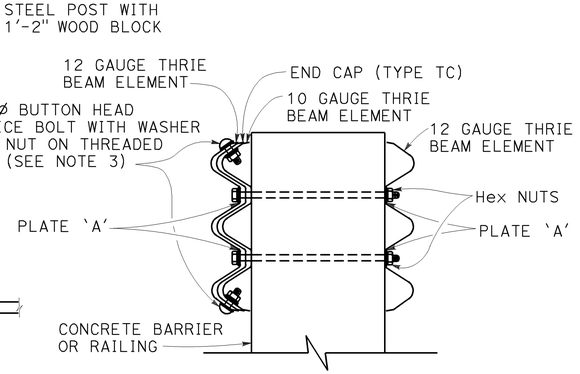

SECTION A-A

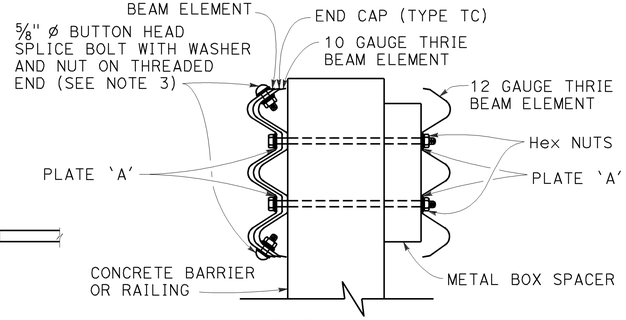

SECTION B-B

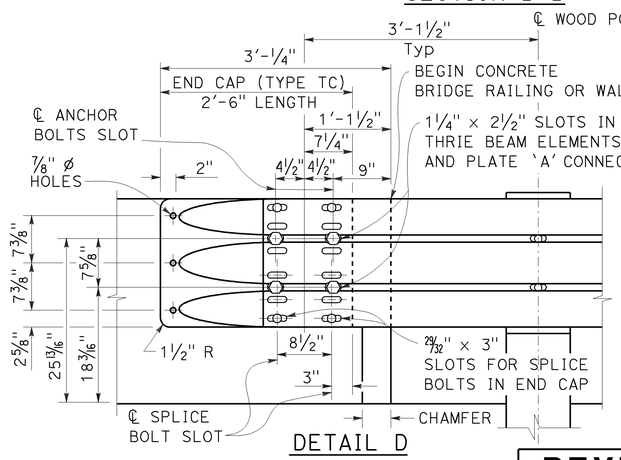

DETAIL D

NOTES: TO ACCOMPANY PLANS DATED 07-21-14

1. Use ⅝" ø Button head bolts and hex nuts for connections to posts. No washer on rail face for bolted connections to post.
2. The nested rail elements, end cap, and 'W' beam to thrie beam element may be spliced together prior to bolting the elements to the wood post and concrete barrier or railing.
3. Exterior splice bolt holes for rail element splices at Post No. T5 and the connection to the concrete barrier or railing shall be the standard 29/32" x 1⅛" slot size. Interior splice bolt holes at these locations may be increased up to 1¼" ø. Only the top 4 and the bottom 4 splice bolts with washers and nuts are required for rail splices at Post No. T5 and the connection to the concrete barrier or railing.
4. The top elevation of Posts No. T2 through No. T7 shall not project more than 1" above the top elevation of the rail element.
5. Typically, the railing connected to Transition Railing (Type WB-31) will be either standard railing section of MGS with height transition ratio of 150:1 or a Caltrans approved 31" end treatment attached to Post No. T1.
6. The depth of the metal box spacer varies from the 9⅛" to 1½" and is dependent on the width of the concrete railing or wall. The combined dimension for the depth of the metal box spacer plus the width of railing or wall is typically 21⅛". Where the space between the backside of the concrete railing or wall and the rear thrie beam element is less than 1½", metal plates similar to Plate 'A' are to be used as spacers.
7. Where the width of the concrete railing or wall is greater than 17⅛", wood blocks are to be used to fill the space created between the backside of Posts No. T4 through No. T7 and the rear thrie beam element. These wood blocks shall be 8" in width and 1'-2" in length. The dimension between the front thrie beam element and the rear thrie beam element is to match the width of the concrete railing or wall.
8. End cap may be installed over 12 gauge and 10 gauge thrie beam elements where transition railing is installed on the departure end of bridge railing.
9. Conform standard railing section height to 31" at Post No. T1 using height transition ratio of 150:1.

STATE OF CALIFORNIA
DEPARTMENT OF TRANSPORTATION

MIDWEST GUARDRAIL SYSTEM TRANSITION RAILING (TYPE WB-31)

NO SCALE

RSP A77U4 DATED JULY 19, 2013 SUPPLEMENTS THE STANDARD PLANS BOOK DATED 2010.

REVISED STANDARD PLAN RSP A77U4

2010 REVISED STANDARD PLAN RSP A77U4

7-8-13

Dist	COUNTY	ROUTE	POST MILES TOTAL PROJECT	SHEET No.	TOTAL SHEETS
11	SD	5	R29.1/R30.5	772	1012

Glenn DeCou
REGISTERED CIVIL ENGINEER

October 19, 2012
PLANS APPROVAL DATE

REGISTERED PROFESSIONAL ENGINEER — Glenn DeCou — No. C34547 — Exp. 9-30-13 — CIVIL — STATE OF CALIFORNIA

THE STATE OF CALIFORNIA OR ITS OFFICERS OR AGENTS SHALL NOT BE RESPONSIBLE FOR THE ACCURACY OR COMPLETENESS OF SCANNED COPIES OF THIS PLAN SHEET.

TO ACCOMPANY PLANS DATED 07-21-14

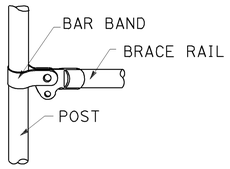

BRACE RAIL

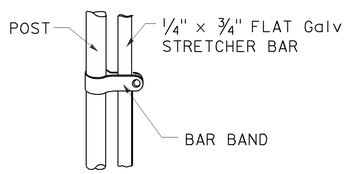

STRETCHER BAR

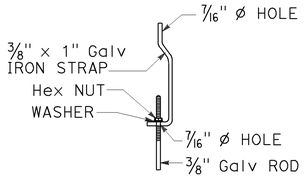

TRUSS TIGHTENER

NOTES:

1. All material for abutment connection to be galvanized.
2. The chain link fabric shall be replaced by barbed wire strands at 12" maximum centers between the double posts.
3. When the width of the culvert makes it necessary to anchor a post to the top of the culvert, a cast iron shoe or other device approved by the Engineer shall be used.
4. Fencing over stream and around headwall may also use Barbed Wire or Wire Mesh fencing with either wood post or steel post installation.
5. See Standard Plan A85 for Chain Link fence dimensions. See Standard Plan A86 for Barbed Wire and Wire Mesh fence dimensions and for wood post and steel post installation.

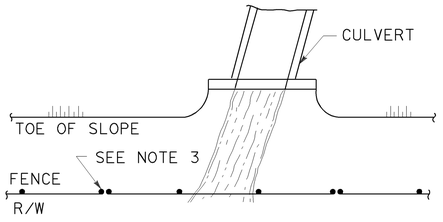

PLAN

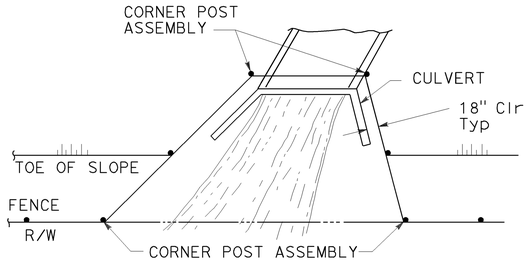

PLAN

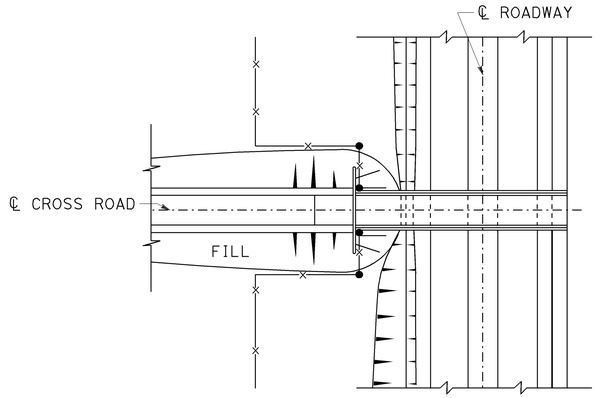

PLAN OF ROADWAY - OVERCROSSING

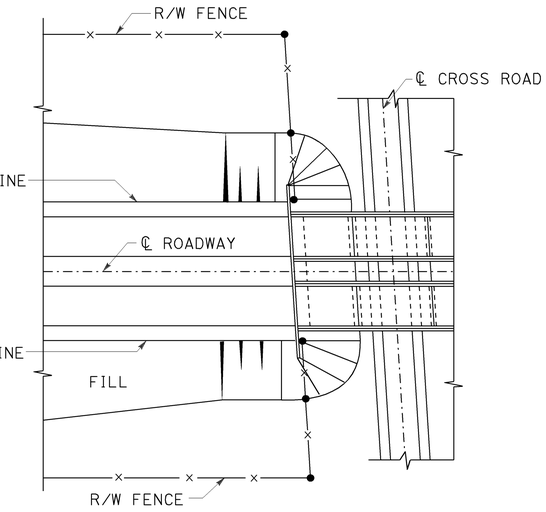

PLAN OF ROADWAY - UNDERCROSSING

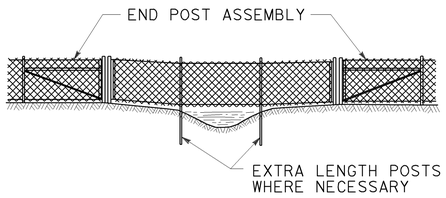

ELEVATION

INSTALLATION OVER STREAM

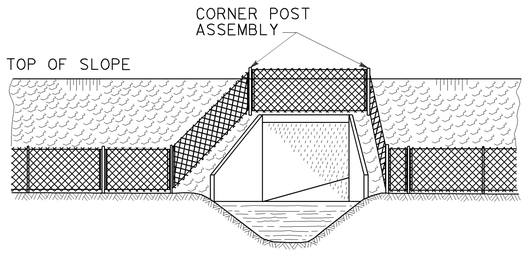

ELEVATION

INSTALLATION AROUND HEADWALL

See Note 4

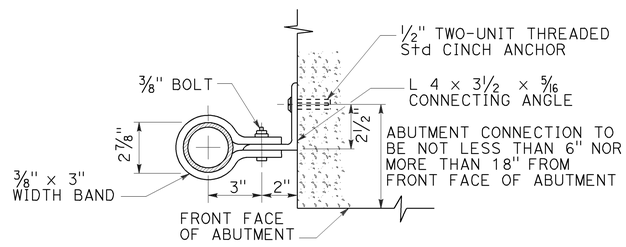

ABUTMENT CONNECTION

TYPICAL INSTALLATION AT BRIDGES

STATE OF CALIFORNIA
DEPARTMENT OF TRANSPORTATION

CHAIN LINK FENCE DETAILS

NO SCALE

RSP A85B DATED OCTOBER 19, 2012 SUPERSEDES STANDARD PLAN A85B DATED MAY 20, 2011 - PAGE 114 OF THE STANDARD PLANS BOOK DATED 2010.

REVISED STANDARD PLAN RSP A85B

2010 REVISED STANDARD PLAN RSP A85B

7-19-12

Dist	COUNTY	ROUTE	POST MILES TOTAL PROJECT	SHEET No.	TOTAL SHEETS
11	SD	5	R29.1/R30.5	773	1012

REGISTERED CIVIL ENGINEER

July 19, 2013
PLANS APPROVAL DATE

REGISTERED PROFESSIONAL ENGINEER — Michael Janzen — No. 44788 — Exp. 03-31-14 — CIVIL — STATE OF CALIFORNIA

THE STATE OF CALIFORNIA OR ITS OFFICERS OR AGENTS SHALL NOT BE RESPONSIBLE FOR THE ACCURACY OR COMPLETENESS OF SCANNED COPIES OF THIS PLAN SHEET.

TO ACCOMPANY PLANS DATED 07-21-14

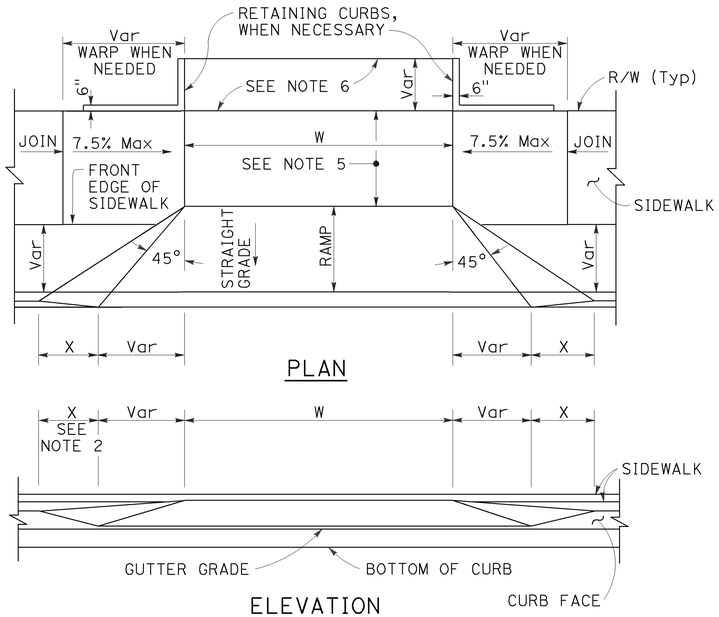

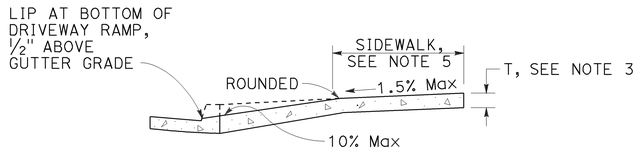

CASE A

Typical driveway, sidewalk not depressed

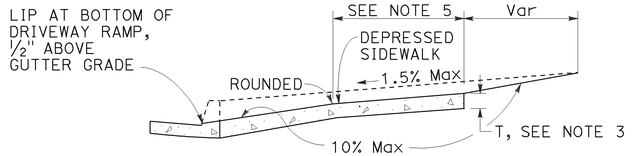

CASE B

Driveway with depressed sidewalk

SECTIONS

TABLE A

CURB TYPE	DIMENSIONS			
	"H1"	"H2"	"W1"	"W2"
A1-6	1'-2"	6"	7½"	1½"
A1-8	1'-4"	8"	8"	2"
A2-6	1'-0"	6"	2'-7½"	1½"
A2-8	1'-2"	8"	2'-8"	2"
A3-6	6"	5"	7¼"	1¼"
A3-8	8"	7"	7¾"	1¾"
B1-4	1'-0"	4"	7½"	2½"
B1-6	1'-2"	6"	9"	4"
B2-4	10"	4"	2'-7½"	2½"
B2-6	1'-0"	6"	2'-9"	4"
B3-4	4"	3"	7"	2"
B3-6	6"	5"	8½"	3½"
D-4	10"	4"	1'-6"	1'-1"
D-6	1'-0"	6"	2'-2"	1'-9"

CURB QUANTITIES

TYPE	CUBIC YARDS PER LINEAR FOOT
A1-6	0.02585
A1-8	0.03084
A2-6	0.05903
A2-8	0.06379
A3-6	0.01036
A3-8	0.01435
B1-4	0.02185
B1-6	0.02930
B2-4	0.05515
B2-6	0.06171
B3-4	0.00641
B3-6	0.01074
B4	0.05709
D-4	0.04083
D-6	0.06804
E	0.06661

DRIVEWAYS

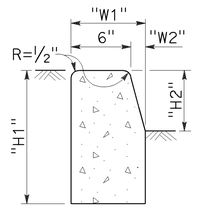

TYPE A1 CURBS

See Table A

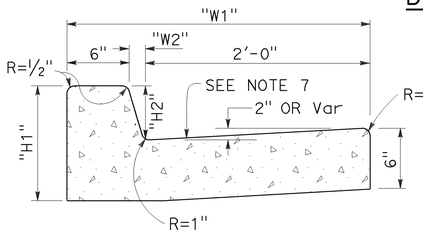

TYPE A2 CURBS

See Table A

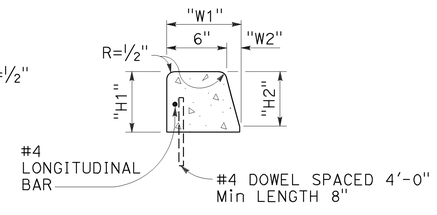

TYPE A3 CURBS

Superimposed on existing pavement
See Table A

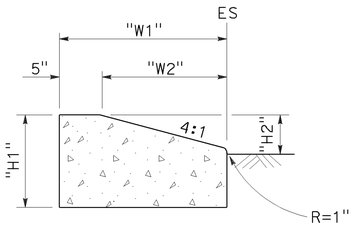

TYPE D CURBS

See Table A

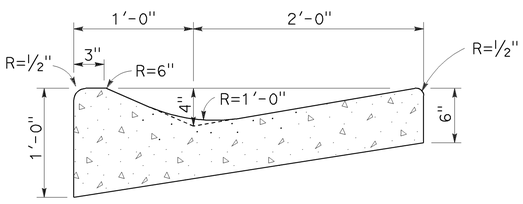

TYPE E CURB

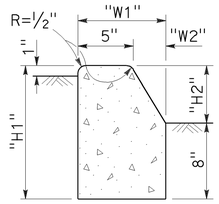

TYPE B1 CURBS

See Table A

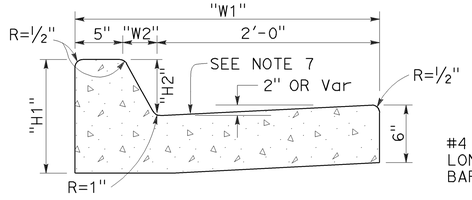

TYPE B2 CURBS

See Table A

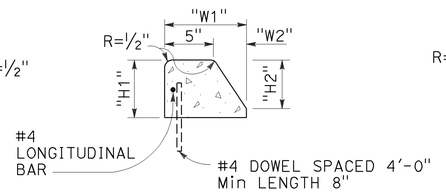

TYPE B3 CURBS

Superimposed on existing pavement
See Table A

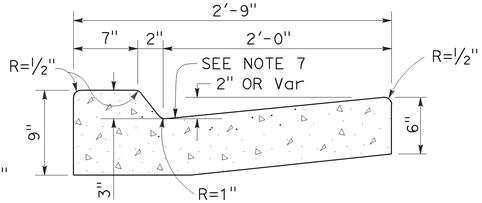

TYPE B4 CURBS

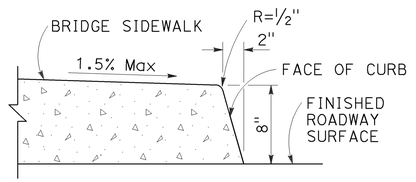

TYPE H CURB

On Bridges

CURBS

NOTES:

1. Case A driveway section typically applies.
2. X=3'-0" except for curb heights over 10" where 4:1 slopes shall be used on curb slope.
3. Sidewalk and ramp thickness "T" at driveway shall be 4" for residental and 6" for commercial.
4. Difference in slope of the driveway ramp and the slope of a line between the gutter and a point on the roadway 5'-0" from gutter line shall not exceed 15%. Reduce driveway ramp slope, not gutter slope, where required.
5. Minimum width of clear passageway for sidewalk shall be 4'-2".
6. Retaining curbs and acquisition of construction easement may be necessary for narrow sidewalks or curb heights in excess of 6".
7. Across the pedestrian route at curb ramp locations, the gutter pan slope shall not exceed 1" of depth for each 2'-0" of width.

STATE OF CALIFORNIA
DEPARTMENT OF TRANSPORTATION

CURBS AND DRIVEWAYS

NO SCALE

RSP A87A DATED JULY 19, 2013 SUPERSEDES STANDARD PLAN A87A
DATED MAY 20, 2011 - PAGE 119 OF THE STANDARD PLANS BOOK DATED 2010.

REVISED STANDARD PLAN RSP A87A

2010 REVISED STANDARD PLAN RSP A87A

7-8-13

Dist	COUNTY	ROUTE	POST MILES TOTAL PROJECT	SHEET No.	TOTAL SHEETS
11	SD	5	R29.1/R30.5	774	1012

REGISTERED CIVIL ENGINEER

July 19, 2013
PLANS APPROVAL DATE

REGISTERED PROFESSIONAL ENGINEER
Michael Janzen
No. 44788
Exp. 03-31-14
CIVIL
STATE OF CALIFORNIA

THE STATE OF CALIFORNIA OR ITS OFFICERS OR AGENTS SHALL NOT BE RESPONSIBLE FOR THE ACCURACY OR COMPLETENESS OF SCANNED COPIES OF THIS PLAN SHEET.

TO ACCOMPANY PLANS DATED 07-21-14

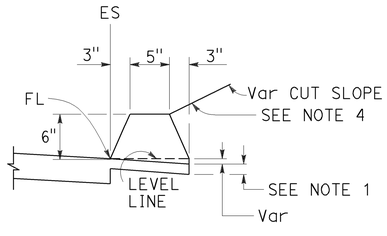

TYPE A
See Note 3

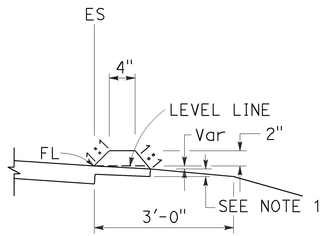

TYPE C

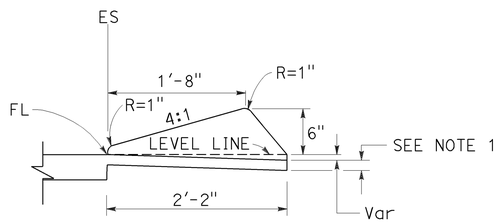

TYPE D

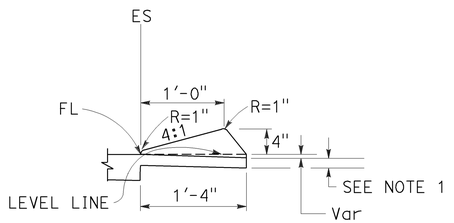

TYPE E

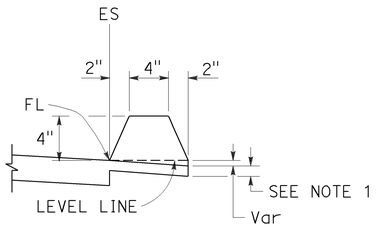

TYPE F
See Note 5

DIKES

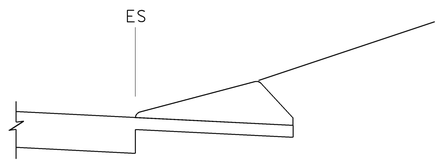

CASE C-1
Cut Slope

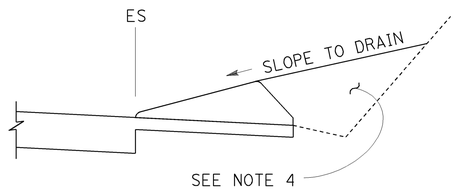

CASE C-2
Cut Slope

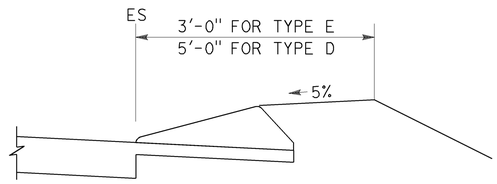

CASE F

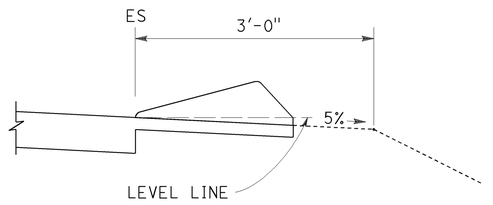

CASE R
See Note 2

TYPE D AND E BACKFILL DETAILS

NOTES:

1. For HMA shoulders only, extend top layer of HMA placed on the shoulder under dike with no joint at the ES. For projects with OGFC shoulders, do not extend OGFC under dike. See project plans for modified dike detail.
2. Case R applies to retrofit only projects where restrictive conditions do not provide enough width for Case F backfill.
3. Type A dike only to be used where restrictive slope conditions do not provide enough width to use Type D or Type E dike.
4. Fill and compact with excavated material to top of dike.
5. Use Type F dike, where dike is required with guard railing installations. See Revised Standard Plan RSP A77N4 for dike positioning details.

DIKE QUANTITIES

TYPE	CUBIC YARDS PER LINEAR FOOT
A	0.0135
C	0.0038
D	0.0293
E	0.0130
F	0.0066

Quantities based on 5% cross slope.

STATE OF CALIFORNIA
DEPARTMENT OF TRANSPORTATION

HOT MIX ASPHALT DIKES

NO SCALE

RSP A87B DATED JULY 19, 2013 SUPERSEDES STANDARD PLAN A87B
DATED MAY 20, 2011 - PAGE 120 OF THE STANDARD PLANS BOOK DATED 2010.

REVISED STANDARD PLAN RSP A87B

2010 REVISED STANDARD PLAN RSP A87B

6-27-13

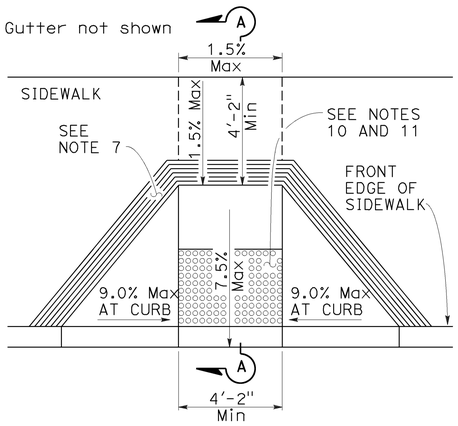

CASE A

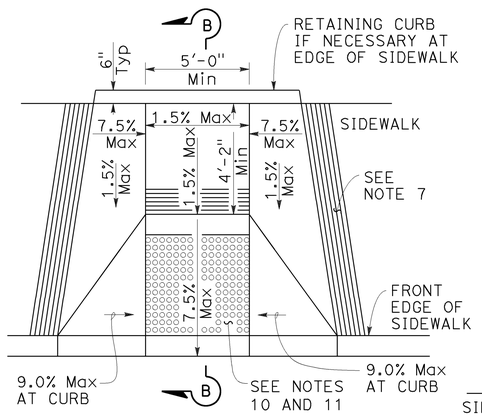

CASE B

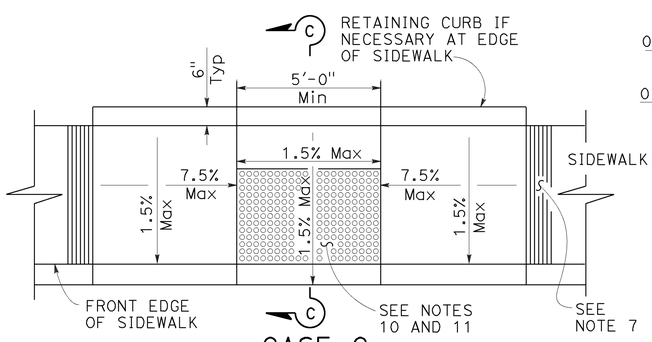

CASE C

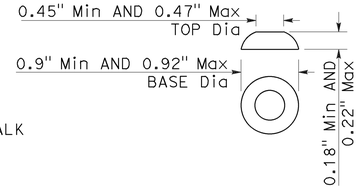

RAISED TRUNCATED DOME

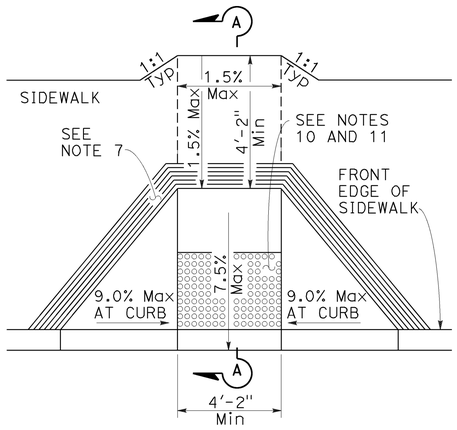

CASE D

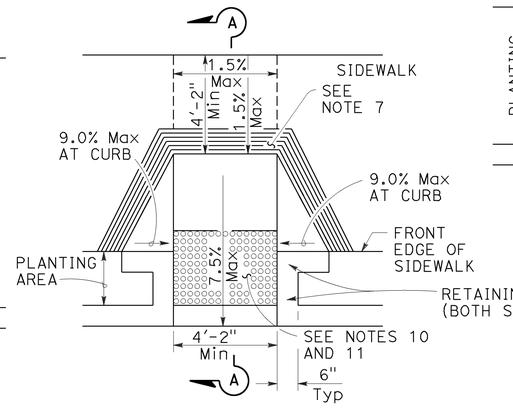

CASE E

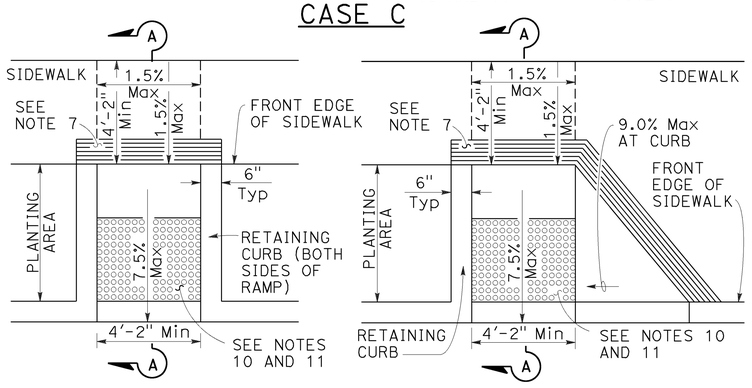

CASE F

CASE G

See Note 4

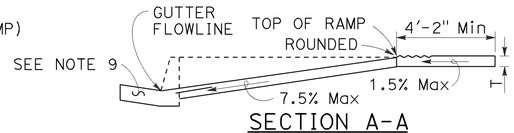

SECTION A-A

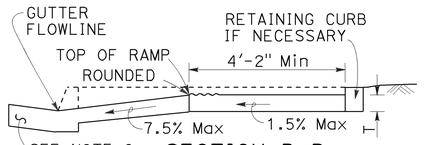

SECTION B-B

Depress entire sidewalk as required

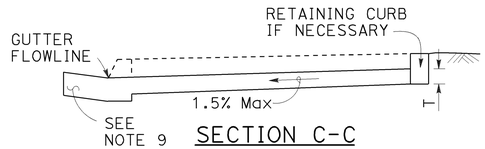

SECTION C-C

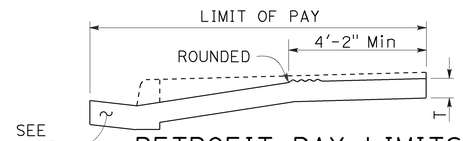

RETROFIT PAY LIMITS

Existing curb and sidewalk

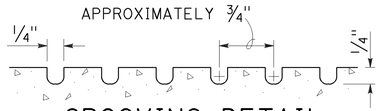

GROOVING DETAIL

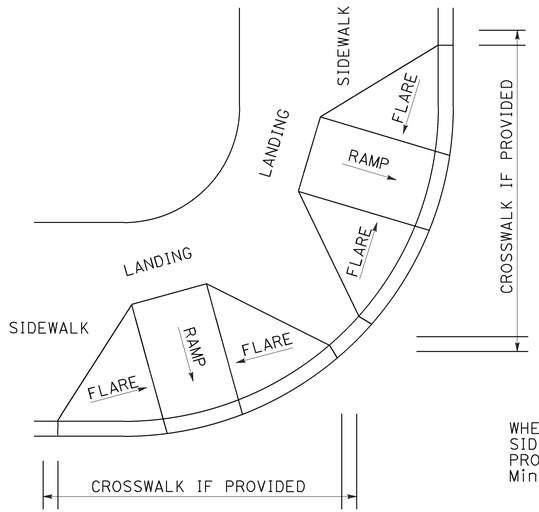

DETAIL A

TYPICAL TWO-RAMP CORNER INSTALLATION

See Note 1

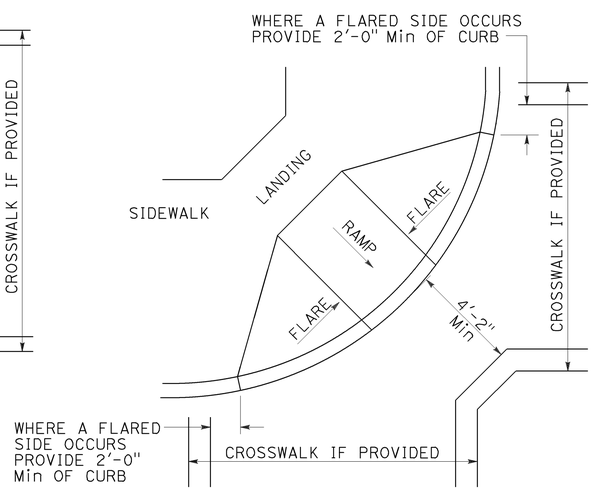

DETAIL B

TYPICAL ONE-RAMP CORNER INSTALLATION

See Notes 1 and 3

Dist	COUNTY	ROUTE	POST MILES TOTAL PROJECT	SHEET No.	TOTAL SHEETS
11	SD	5	R29.1/R30.5	775	1012

REGISTERED CIVIL ENGINEER

March 21, 2014

PLANS APPROVAL DATE

REGISTERED PROFESSIONAL ENGINEER — Hector David Cordova — No. C41957 — Exp. 3-31-14 — CIVIL — STATE OF CALIFORNIA

THE STATE OF CALIFORNIA OR ITS OFFICERS OR AGENTS SHALL NOT BE RESPONSIBLE FOR THE ACCURACY OR COMPLETENESS OF SCANNED COPIES OF THIS PLAN SHEET.

TO ACCOMPANY PLANS DATED 07-21-14

NOTES:

1. As site conditions dictate, Case A through Case G curb ramps may be used for corner installations similar to those shown in Detail A and Detail B. The case of curb ramps used in Detail A do not have to be the same. Case A through Case G curb ramps also may be used at mid block locations, as site conditions dictate.
2. If distance from curb to back of sidewalk is too short to accommodate ramp and 4'-2" platform (landing) as shown in Case A, the sidewalk may be depressed longitudinally as in Case B, or C or may be widened as in Case D.
3. When ramp is located in center of curb return, crosswalk configuration must be similar to that shown for Detail B.
4. As site conditions dictate, the retaining curb side and the flared side of the Case G ramp shall be constructed in reversed position.
5. If located on a curve, the sides of the ramp need not be parallel, but the minimum width of the ramp shall be 4'-2".
6. Side slope of ramp flares vary uniformly from a maximum of 9.0% at curb to conform with longitudinal sidewalk slope adjacent to top of the ramp, except in Case C and Case F.
7. The curb ramp shall be outlined, as shown, with a 1'-0" wide border with 1/4" grooves approximately 3/4" on center. See grooving detail.
8. Transitions from ramps and landing to walks, gutters or streets shall be flush (no lip) and free of abrupt changes.
9. Counter slopes of adjoining gutters and road surfaces immediately adjacent to and within 24 inches of the curb ramp shall not be steeper than 1:20 (5.0%). Gutter pan slope shall not exceed 1" of depth for each 2'-0" of width.
10. Curb ramps shall have a detectable warning surface that extends the full width and 3'-0" depth of the ramp. A 4'-0" wide detectable warning surface may be used on a 4'-2" wide curb ramp. Detectable Warning Surfaces shall conform to the requirements in the Standard Specifications.
11. The edge of the detectable warning surface nearest the street shall be between 6" and 8" from the gutter flowline.
12. Sidewalk and ramp thickness, "T", shall be 3½" minimum.
13. Utility pull boxes, manholes, vaults and all other utility facilities within the boundaries of the curb ramp will be relocated or adjusted to grade by the owner prior to, or in conjunction with, curb ramp construction.
14. Detectable warning surface may have to be cut to allow removal of utility covers while maintaining full detectable warning width and depth.

RAISED TRUNCATED DOME PATTERN (IN-LINE)

DETECTABLE WARNING SURFACE

See Note 10

STATE OF CALIFORNIA
DEPARTMENT OF TRANSPORTATION

CURB RAMP DETAILS

NO SCALE

RSP A88A DATED MARCH 21, 2014 SUPERSEDES RSP A88A DATED JULY 19, 2013 AND STANDARD PLAN A88A DATED MAY 20, 2011 - PAGE 121 OF THE STANDARD PLANS BOOK DATED 2010.

REVISED STANDARD PLAN RSP A88A

2010 REVISED STANDARD PLAN RSP A88A

2-25-14

Dist	COUNTY	ROUTE	POST MILES TOTAL PROJECT	SHEET No.	TOTAL SHEETS
11	SD	5	R29.1/R30.5	776	1012

William K. Farnbach
REGISTERED CIVIL ENGINEER

July 19, 2013
PLANS APPROVAL DATE

REGISTERED PROFESSIONAL ENGINEER — William K. Farnbach — No. C49042 — Exp. 9-30-14 — CIVIL — STATE OF CALIFORNIA

THE STATE OF CALIFORNIA OR ITS OFFICERS OR AGENTS SHALL NOT BE RESPONSIBLE FOR THE ACCURACY OR COMPLETENESS OF SCANNED COPIES OF THIS PLAN SHEET.

TO ACCOMPANY PLANS DATED 07-21-14

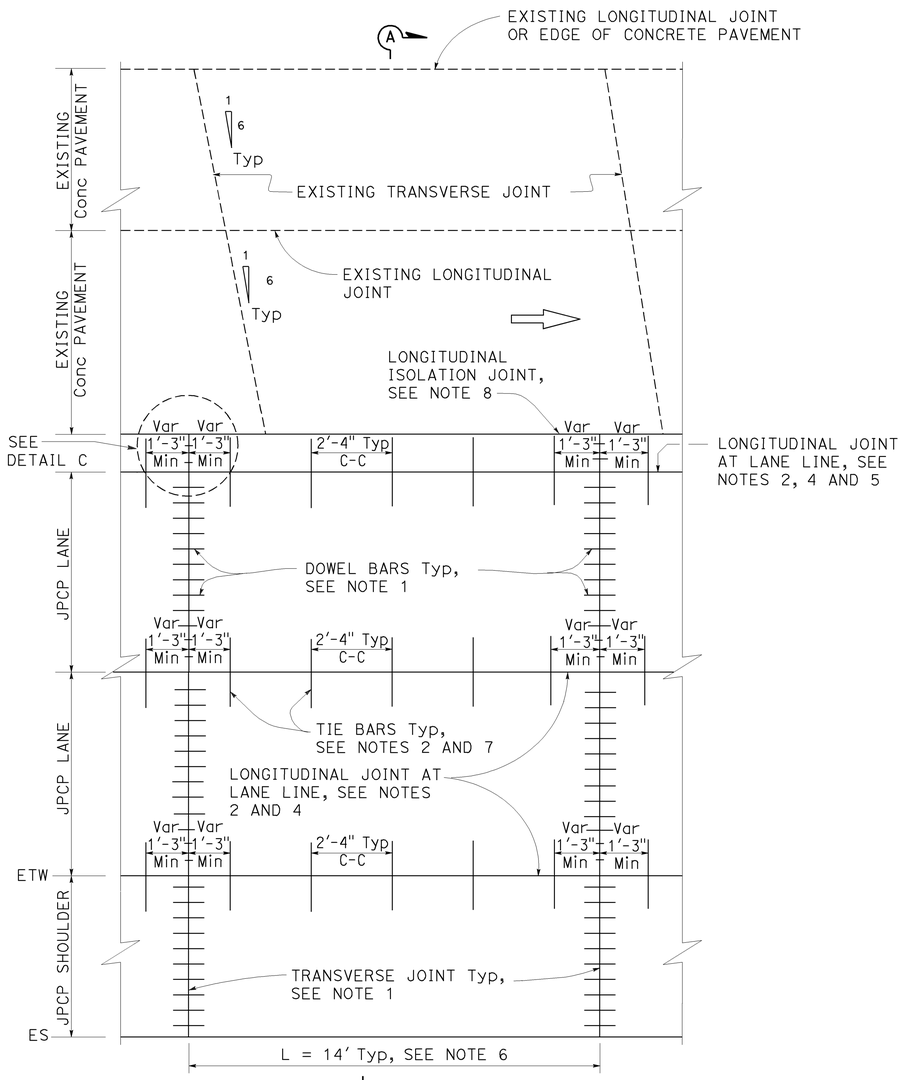

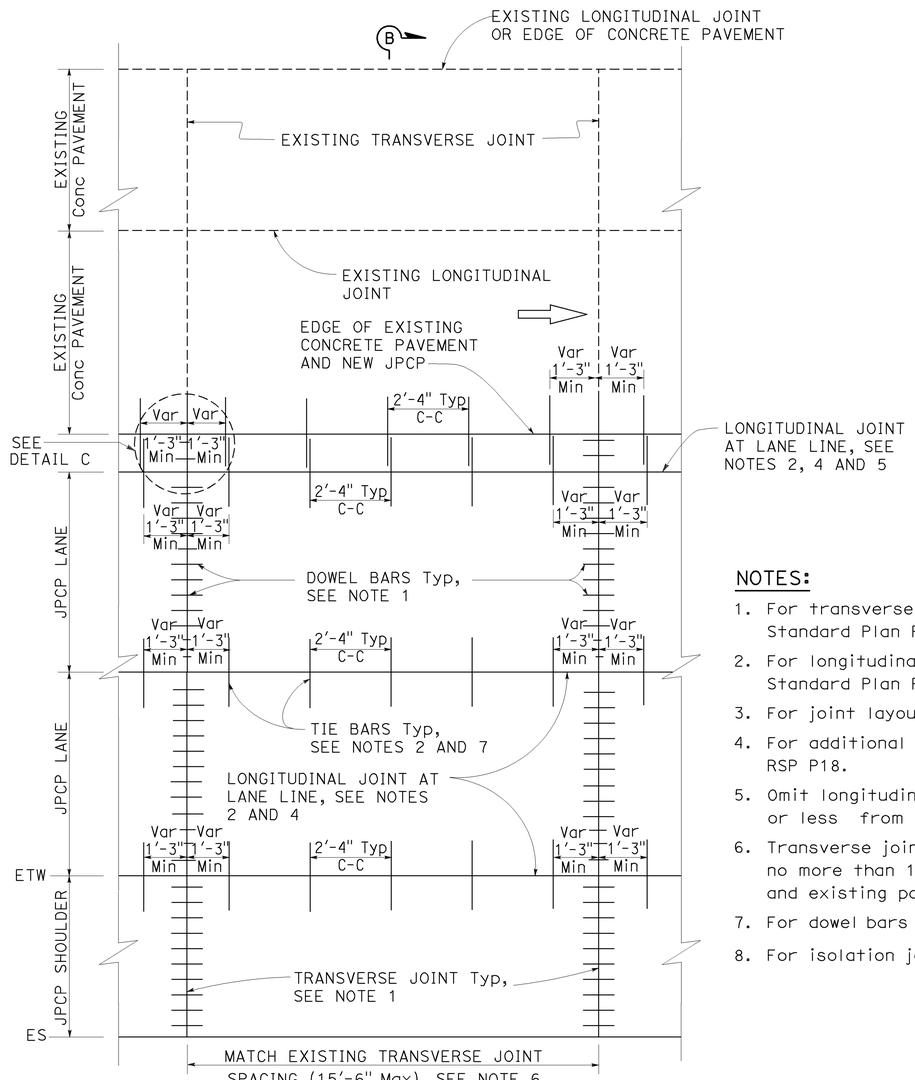

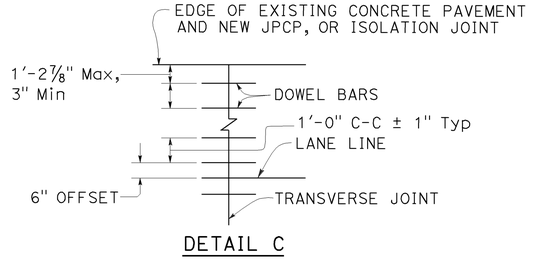

DETAIL C

NOTES:

1. For transverse joint and dowel bar details not shown, see Revised Standard Plan RSP P10.
2. For longitudinal joint and tie bar details not shown, see Revised Standard Plan RSP P15.
3. For joint layout at intersections, see Project Plans.
4. For additional longitudinal joint details, see Revised Standard Plan RSP P18.
5. Omit longitudinal joint when edge of new concrete pavement is 3'-3" or less from JPCP lane line.
6. Transverse joint spacing may be adjusted to no less than 10' and no more than 15'-6" to conform to bridges, change in pavement type and existing pavement.
7. For dowel bars at longitudinal joint. see Revised Standard Plan RSP P18.
8. For isolation joints, see Detail A on Revised Standard Plan RSP P18.

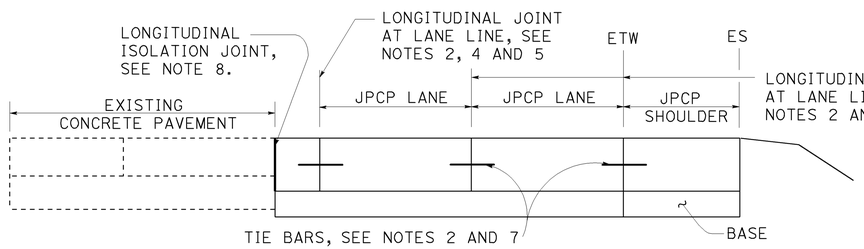

SECTION A-A

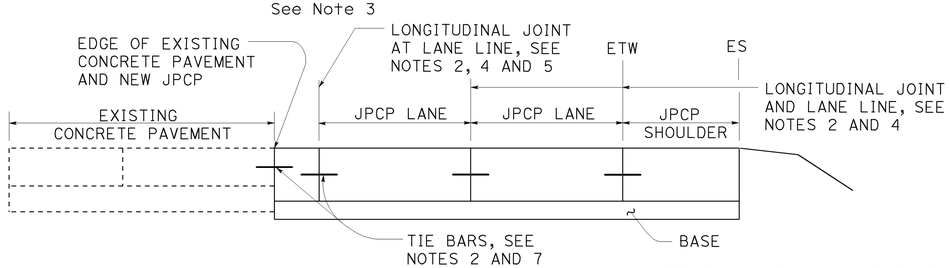

SECTION B-B

STATE OF CALIFORNIA
DEPARTMENT OF TRANSPORTATION

JOINTED PLAIN CONCRETE PAVEMENT LANE & SHOULDER ADDITION OR REPLACEMENT

NO SCALE

RSP P3A DATED JULY 19, 2013 SUPPLEMENTS THE STANDARD PLANS BOOK DATED 2010.

REVISED STANDARD PLAN RSP P3A

2010 REVISED STANDARD PLAN RSP P3A

5-31-13

Dist	COUNTY	ROUTE	POST MILES TOTAL PROJECT	SHEET No.	TOTAL SHEETS
11	SD	5	R29.1/R30.5	777	1012

William K. Farnbach
REGISTERED CIVIL ENGINEER

July 19, 2013
PLANS APPROVAL DATE

REGISTERED PROFESSIONAL ENGINEER — William K. Farnbach — No. C49042 — Exp. 9-30-14 CIVIL — STATE OF CALIFORNIA

THE STATE OF CALIFORNIA OR ITS OFFICERS OR AGENTS SHALL NOT BE RESPONSIBLE FOR THE ACCURACY OR COMPLETENESS OF SCANNED COPIES OF THIS PLAN SHEET.

TO ACCOMPANY PLANS DATED 07-21-14

2010 REVISED STANDARD PLAN RSP P3B

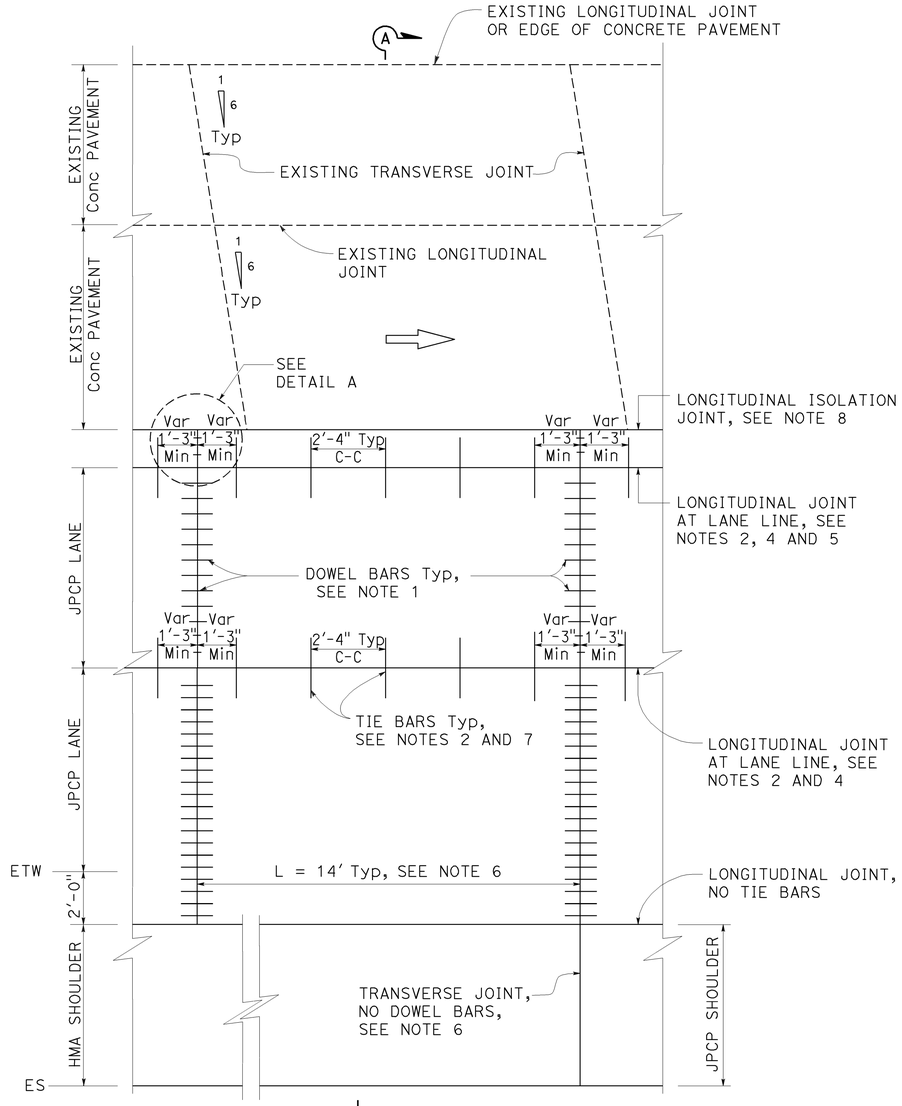

A PLAN

ISOLATED

See Note 3

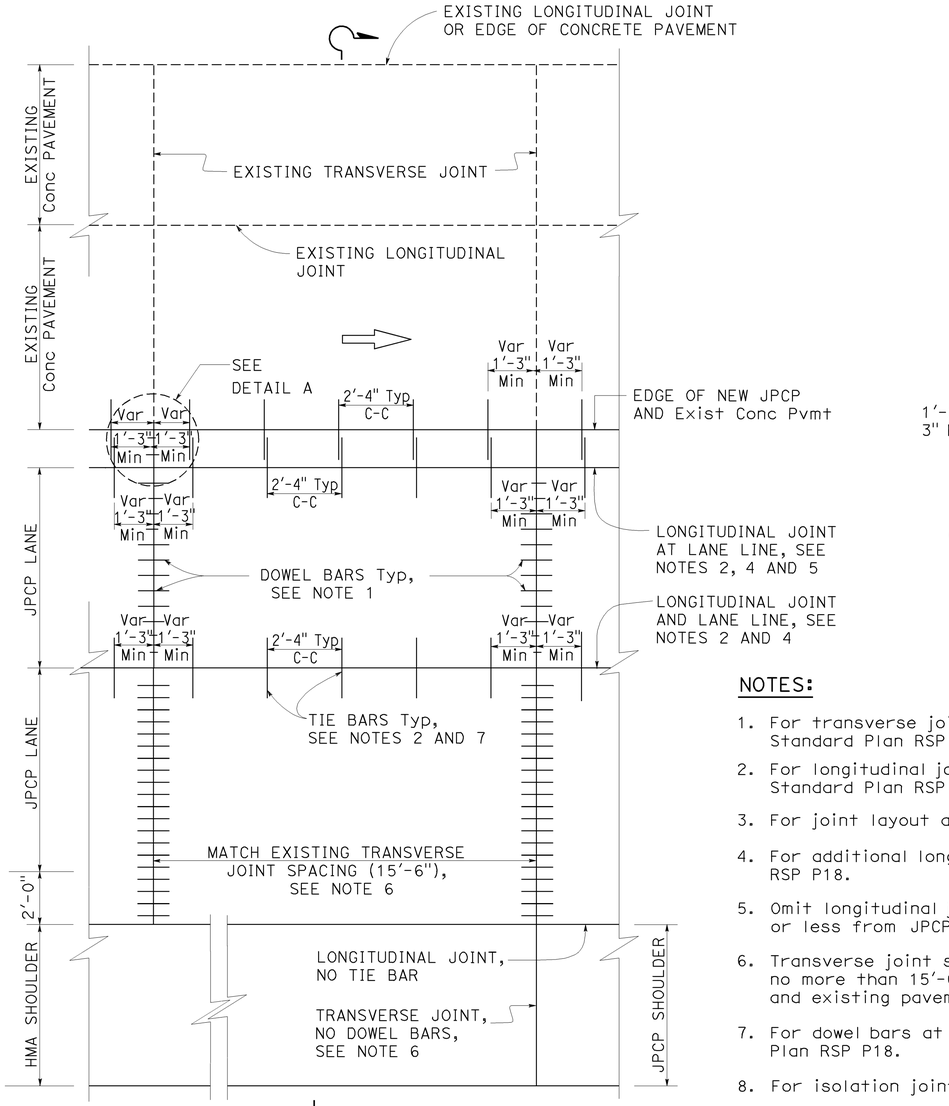

B PLAN

TIED

See Note 3

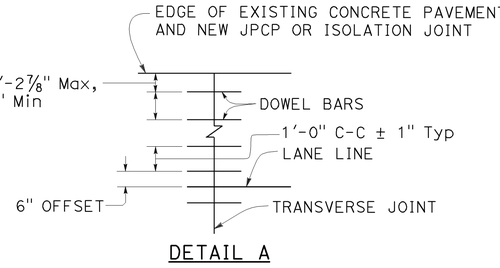

DETAIL A

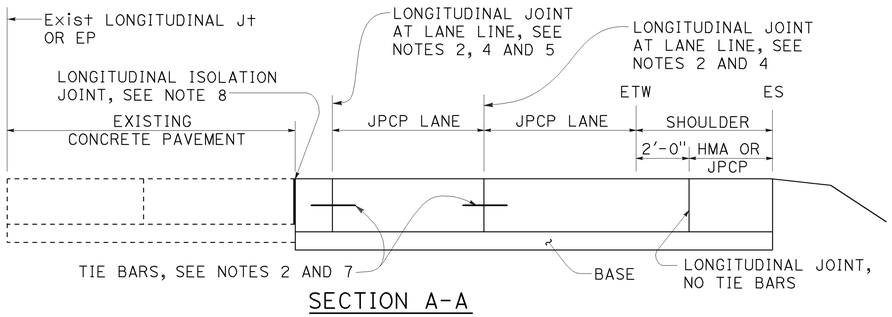

SECTION A-A

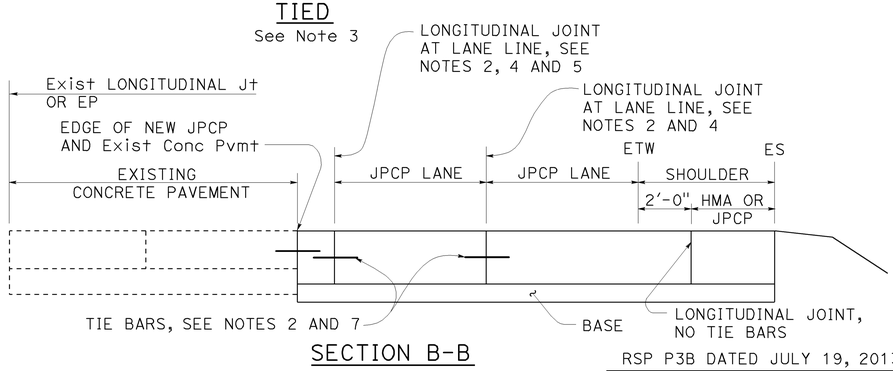

SECTION B-B

NOTES:

1. For transverse joint and dowel bar details not shown, see Revised Standard Plan RSP P10.
2. For longitudinal joint and tie bar details not shown, see Revised Standard Plan RSP P15.
3. For joint layout at intersections, see Project Plans.
4. For additional longitudinal joint details, see Revised Standard Plan RSP P18.
5. Omit longitudinal joint when edge of new concrete pavement is 3'-3" or less from JPCP lane line.
6. Transverse joint spacing may be adjusted to no less than 10' and no more than 15'-6" to conform to bridges, change in pavement type and existing pavement.
7. For dowel bars at longitudinal joint. see Revised Standard Plan RSP P18.
8. For isolation joints, see Detail A on Revised Standard Plan RSP P18.

STATE OF CALIFORNIA
DEPARTMENT OF TRANSPORTATION

JOINTED PLAIN CONCRETE PAVEMENT (WIDENED LANE) LANE AND SHOULDER ADDITION OR REPLACEMENT

NO SCALE

RSP P3B DATED JULY 19, 2013 SUPPLEMENTS THE STANDARD PLANS BOOK DATED 2010.

REVISED STANDARD PLAN RSP P3B

5-31-13

Dist	COUNTY	ROUTE	POST MILES TOTAL PROJECT	SHEET No.	TOTAL SHEETS
11	SD	5	R29.1/R30.5	778	1012

William K. Farnbach
REGISTERED CIVIL ENGINEER

July 19, 2013
PLANS APPROVAL DATE

REGISTERED PROFESSIONAL ENGINEER — William K. Farnbach — No. C49042 — Exp. 9-30-14 — CIVIL — STATE OF CALIFORNIA

THE STATE OF CALIFORNIA OR ITS OFFICERS OR AGENTS SHALL NOT BE RESPONSIBLE FOR THE ACCURACY OR COMPLETENESS OF SCANNED COPIES OF THIS PLAN SHEET.

TO ACCOMPANY PLANS DATED 07-21-14

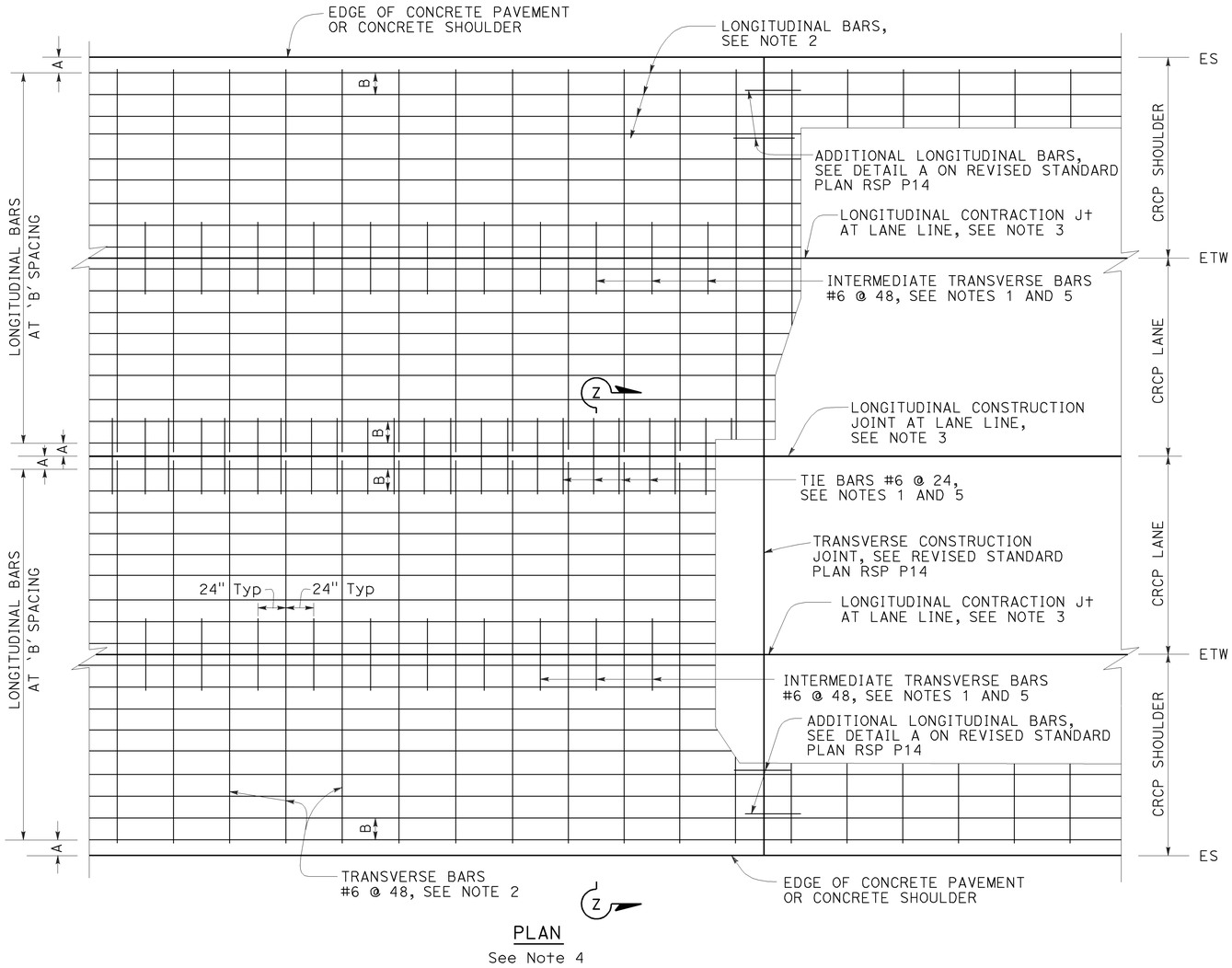

PLAN
See Note 4

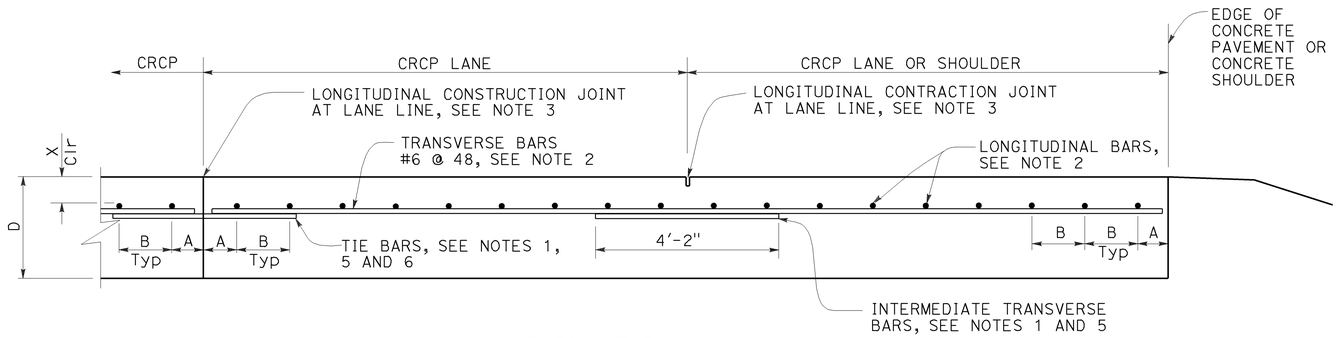

SECTION Z-Z

TABLE No. 1 LONGITUDINAL BAR REINFORCEMENT

SLAB THICKNESS AND BAR SIZE		FIRST SPACING AT EDGE OR JOINT	REGULAR BARS	ADDITIONAL BARS AT TRANSVERSE CONSTRUCTION JOINT	Clr
D	BAR SIZE	SPACING A	SPACING B	SPACING 2 x B	X
.75′	#6	3" TO 4"	8.0"	16"	4"
.80′	#6	3" TO 4"	7.5"	15"	4"
.85′	#6	3" TO 4"	7.0"	14"	4"
.90′	#6	3" TO 4"	6.5"	13"	4"
.95′	#6	3" TO 4"	6.25"	12.5"	4"
1.00′	#6	3" TO 4"	6.0"	12"	5"
1.05′	#6	3" TO 4"	5.75"	11.5"	5"
1.10′	#6	3" TO 4"	5.5"	11"	5.5"

NOTES:

1. Place transverse tie bars and intermediate transvese bars parallel to and in the same plane as transverse bars.
2. The length of lap splices for bar reinforcement must be at least 25".
3. For longitudinal contraction and construction joint details, see Revised Standard Plan RSP P16.
4. For curved lane layout see Revised Standard Plan RSP P16.
5. For tie bar and intermediate transverse bar details see Revised Standard Plan RSP P16.

STATE OF CALIFORNIA
DEPARTMENT OF TRANSPORTATION

CONTINUOUSLY REINFORCED CONCRETE PAVEMENT

NO SCALE

RSP P4 DATED JULY 19, 2013 SUPERSEDES RSP P4 DATED APRIL 20, 2012 AND STANDARD PLAN P4 DATED MAY 20, 2011 - PAGE 128 OF THE STANDARD PLANS BOOK DATED 2010.

REVISED STANDARD PLAN RSP P4

2010 REVISED STANDARD PLAN RSP P4

5-31-13

Dist	COUNTY	ROUTE	POST MILES TOTAL PROJECT	SHEET No.	TOTAL SHEETS
11	SD	5	R29.1/R30.5	779	1012

William K. Farnbach
REGISTERED CIVIL ENGINEER

July 19, 2013
PLANS APPROVAL DATE

REGISTERED PROFESSIONAL ENGINEER — William K. Farnbach — No. C49042 — Exp. 9-30-14 — CIVIL — STATE OF CALIFORNIA

THE STATE OF CALIFORNIA OR ITS OFFICERS OR AGENTS SHALL NOT BE RESPONSIBLE FOR THE ACCURACY OR COMPLETENESS OF SCANNED COPIES OF THIS PLAN SHEET.

TO ACCOMPANY PLANS DATED 07-21-14

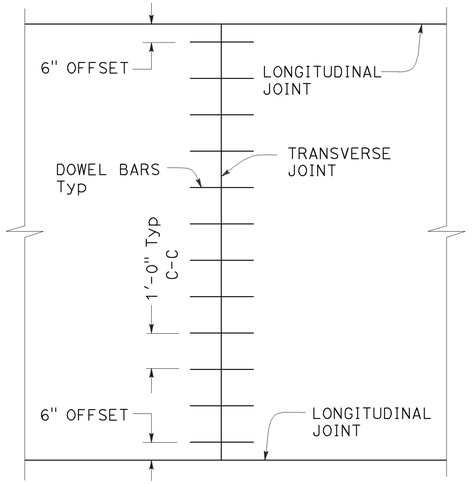

TRANSVERSE JOINT DOWEL BAR LAYOUT

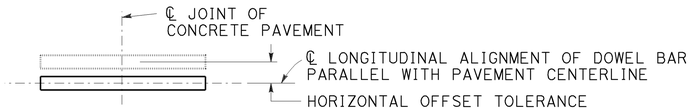

PLAN

HORIZONTAL OFFSET TOLERANCE

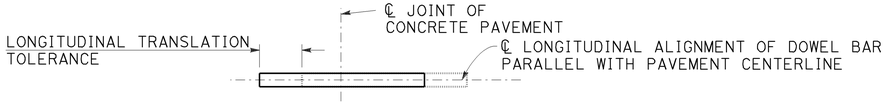

PLAN

LONGITUDINAL TRANSLATION TOLERANCE

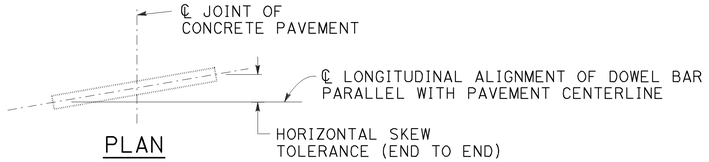

PLAN

HORIZONTAL SKEW TOLERANCE

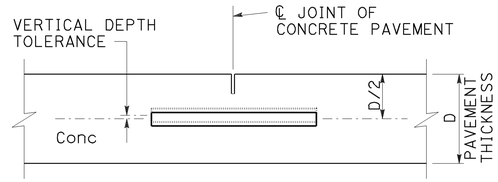

ELEVATION

VERTICAL DEPTH TOLERANCE

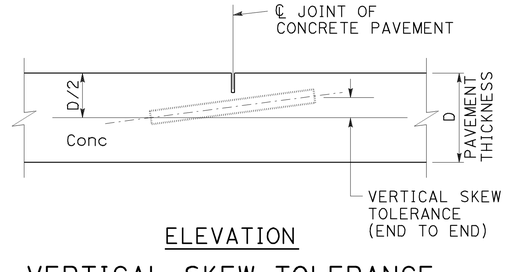

ELEVATION

VERTICAL SKEW TOLERANCE

NOTES:

1. See Revised Standard Plan RSP P1 for typical dowel bar placement and locations.
2. Where fresh concrete pavement is placed against new concrete or existing concrete pavement, rounding the corner of the existing concrete pavement is not required.
3. May also use ¾" Dia dowel bars 2'-4" ± ¼" in length. Center the length of dowel bars at the centerline of longitudinal joint.

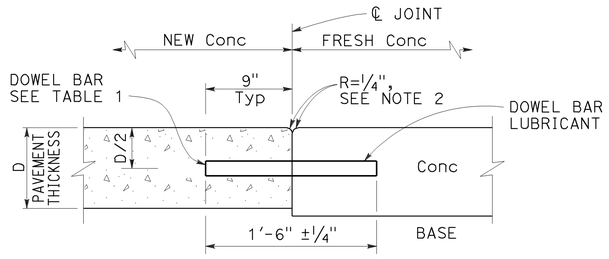

TRANSVERSE CONSTRUCTION JOINT DETAIL

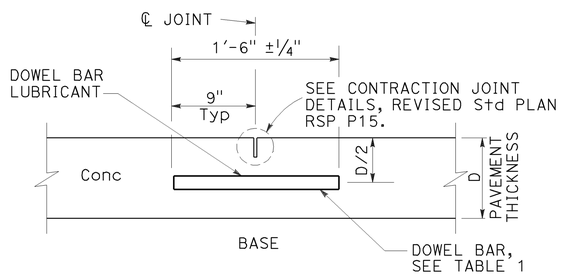

TRANSVERSE CONTRACTION JOINT

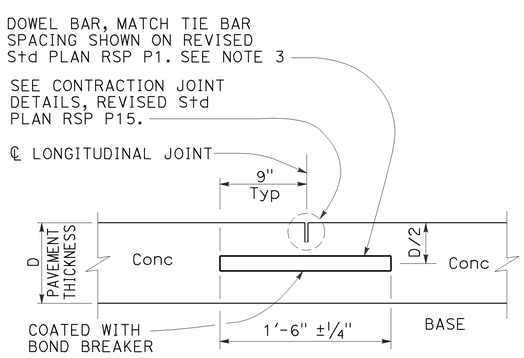

LONGITUDINAL CONTRACTION JOINT WITH DOWEL BARS

See Revised Std Plan RSP P18

TABLE 1

DOWEL BAR DIAMETER TABLE			
PAVEMENT THICKNESS	0.65'	> 0.65' - 0.85'	> 0.85'
MINIMUM DOWEL * BAR DIAMETER	1"	1¼"	1½"

* The drilled hole diameter must be ⅛" to 3/16" larger than the bar diameter.

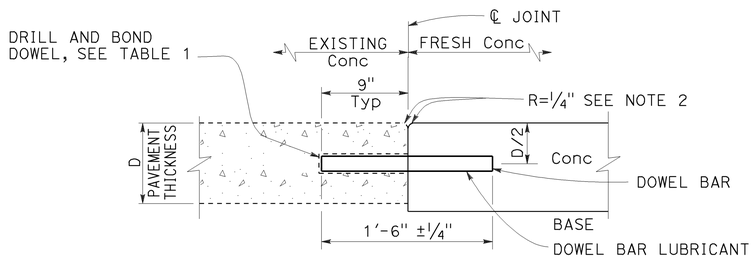

TRANSVERSE CONSTRUCTION JOINT FOR EXISTING CONCRETE PAVEMENT

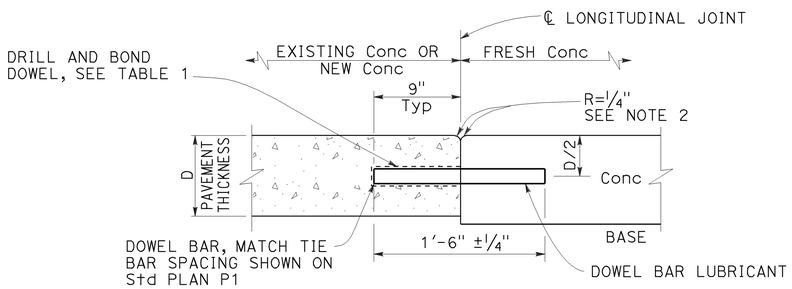

LONGITUDINAL CONSTRUCTION JOINT WITH DOWEL BARS

See Revised Std Plan RSP P18

STATE OF CALIFORNIA
DEPARTMENT OF TRANSPORTATION

CONCRETE PAVEMENT DOWEL BAR DETAILS

NO SCALE

RSP P10 DATED JULY 19, 2013 SUPERSEDES RSP P10 DATED APRIL 20, 2012 AND STANDARD PLAN P10 DATED MAY 20, 2011 - PAGE 131 OF THE STANDARD PLANS BOOK DATED 2010.

REVISED STANDARD PLAN RSP P10

2010 REVISED STANDARD PLAN RSP P10

5-31-13

Dist	COUNTY	ROUTE	POST MILES TOTAL PROJECT	SHEET No.	TOTAL SHEETS
11	SD	5	R29.1/R30.5	780	1012

William K. Farnbach
REGISTERED CIVIL ENGINEER

July 19, 2013
PLANS APPROVAL DATE

REGISTERED PROFESSIONAL ENGINEER — William K. Farnbach — No. C49042 — Exp. 9-30-14 — CIVIL — STATE OF CALIFORNIA

THE STATE OF CALIFORNIA OR ITS OFFICERS OR AGENTS SHALL NOT BE RESPONSIBLE FOR THE ACCURACY OR COMPLETENESS OF SCANNED COPIES OF THIS PLAN SHEET.

TO ACCOMPANY PLANS DATED 07-21-14

2010 REVISED STANDARD PLAN RSP P12

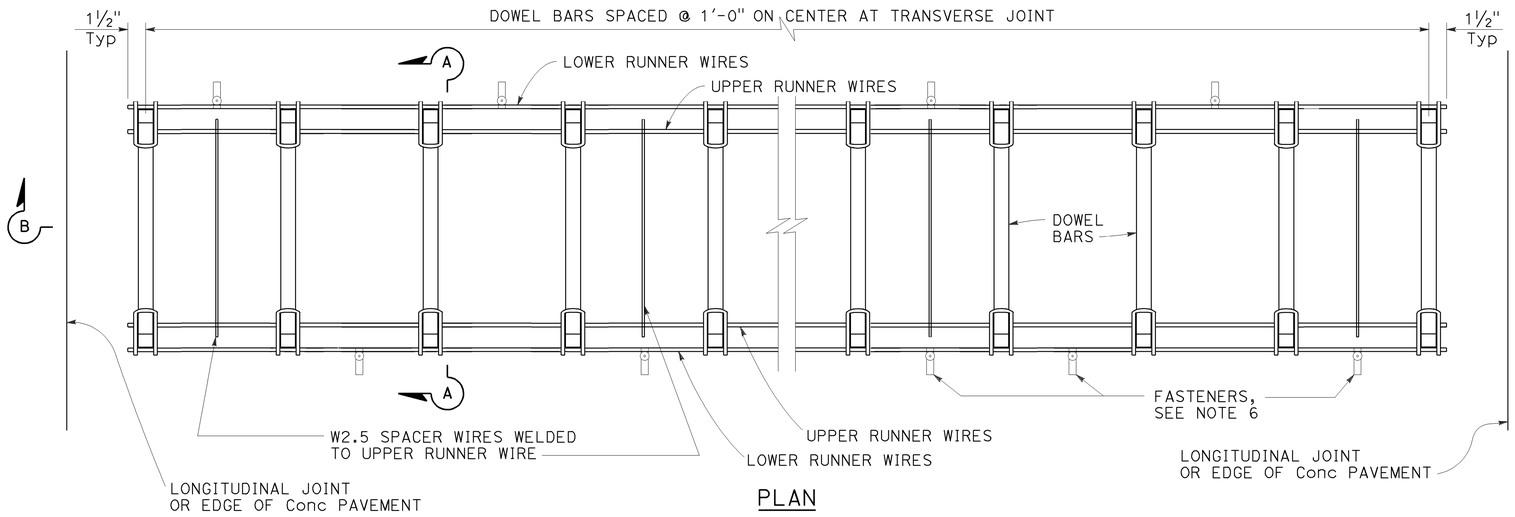

PLAN

DOWEL BAR BASKET (TRANSVERSE JOINT)

See Note 1

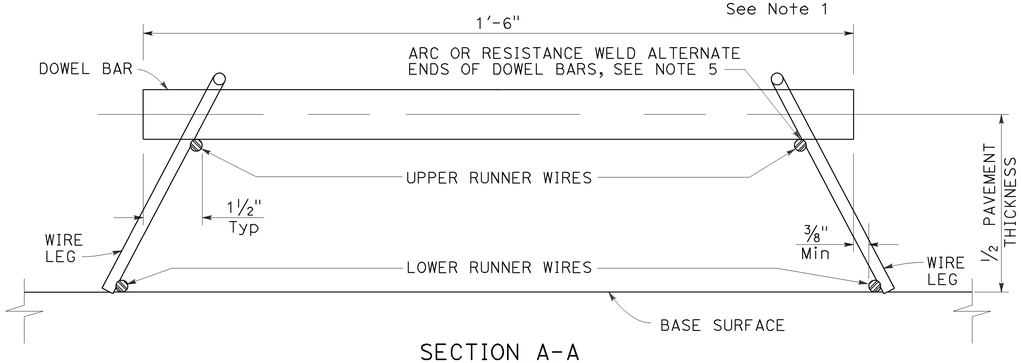

SECTION A-A

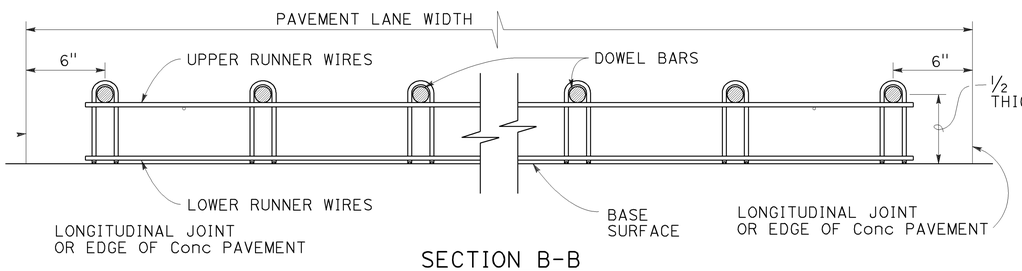

SECTION B-B

See Note 1

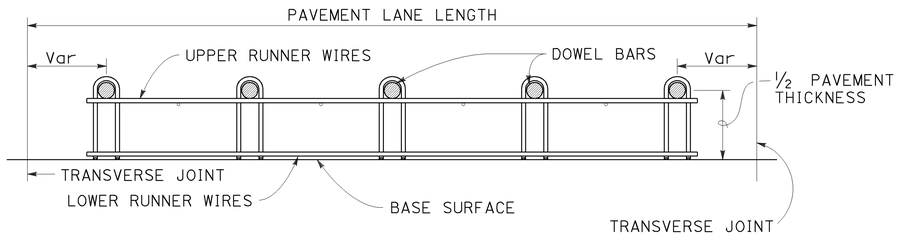

SECTION C-C

See Notes 1 and 4

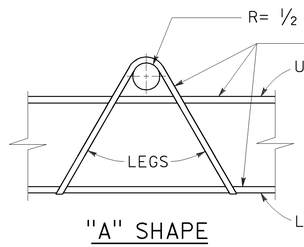

"A" SHAPE

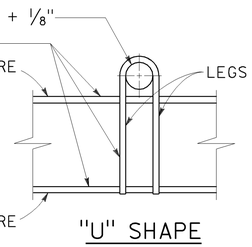

"U" SHAPE

ASSEMBLY FRAME DETAILS

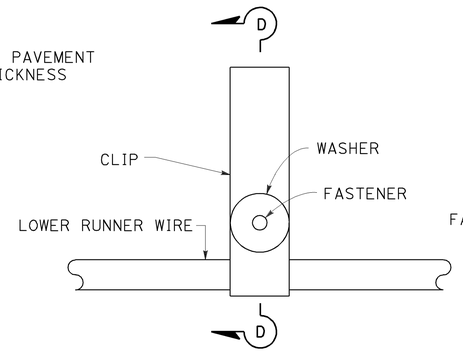

PLAN

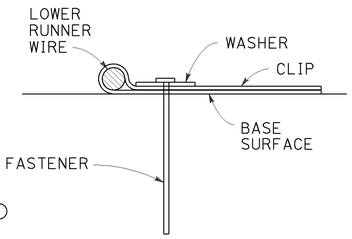

SECTION D-D

FASTENER DETAIL

See Note 6

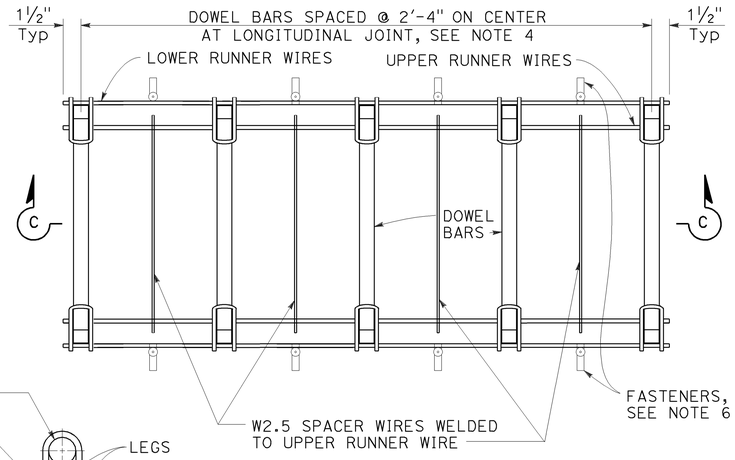

PLAN

DOWEL BAR BASKET (LONGITUDINAL JOINT)

See Note 1

NOTES:

1. "U" frame shape assembly shown. Use either "U" frame shape or "A" frame shape.
2. Wire sizes shown are the minimum required.
3. All wire intersections must be resistance welded.
4. Use tie bar spacing for longitudinal dowel bar locations. See Revised Standard Plans RSP P1, RSP P2, RSP P3A, and RSP P3B for tie bar requirements.
5. Weld may be at the top or bottom of the dowel bar.
6. Use anchor pins where soil or granular base is used. See Revised Standard Plan RSP P17 for Anchor Pin Detail.

STATE OF CALIFORNIA
DEPARTMENT OF TRANSPORTATION

CONCRETE PAVEMENT DOWEL BAR BASKET DETAILS

NO SCALE

RSP P12 DATED JULY 19, 2013 SUPERSEDES STANDARD PLAN P12
DATED MAY 20, 2011 - PAGE 132 OF THE STANDARD PLANS BOOK DATED 2010.

REVISED STANDARD PLAN RSP P12

5-31-13

Dist	COUNTY	ROUTE	POST MILES TOTAL PROJECT	SHEET No.	TOTAL SHEETS
11	SD	5	R29.1/R30.5	781	1012

William K. Farnbach
REGISTERED CIVIL ENGINEER

July 19, 2013
PLANS APPROVAL DATE

REGISTERED PROFESSIONAL ENGINEER — William K. Farnbach — No. C49042 — Exp. 9-30-14 — CIVIL — STATE OF CALIFORNIA

THE STATE OF CALIFORNIA OR ITS OFFICERS OR AGENTS SHALL NOT BE RESPONSIBLE FOR THE ACCURACY OR COMPLETENESS OF SCANNED COPIES OF THIS PLAN SHEET.

TO ACCOMPANY PLANS DATED 07-21-14

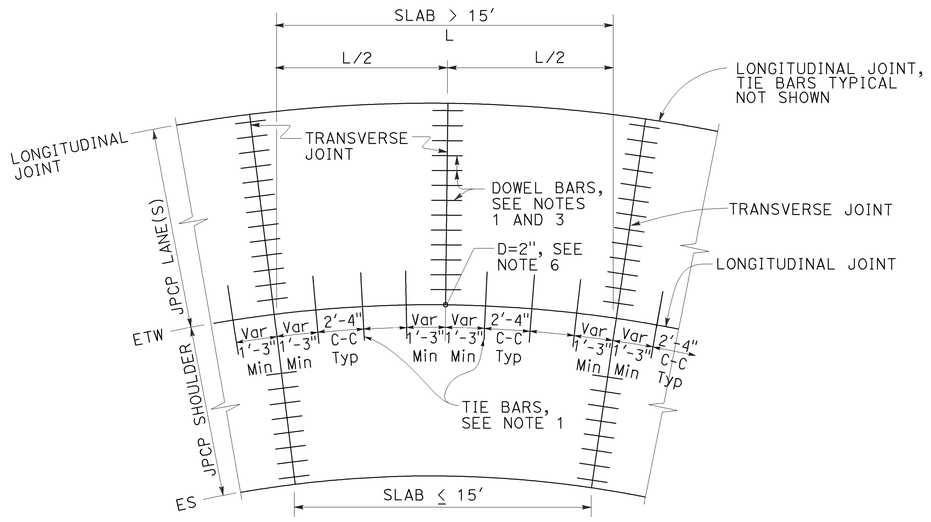

TIE BAR LAYOUT IN CURVED LANES

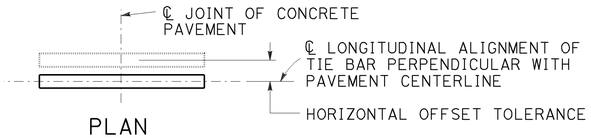

PLAN

HORIZONTAL OFFSET TOLERANCE

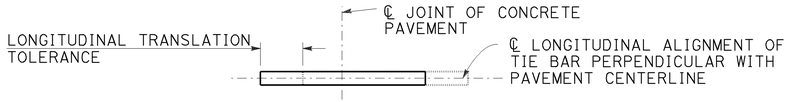

PLAN

LONGITUDINAL TRANSLATION TOLERANCE

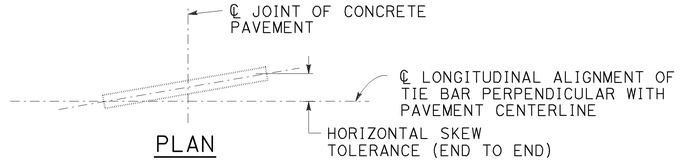

PLAN

HORIZONTAL SKEW TOLERANCE

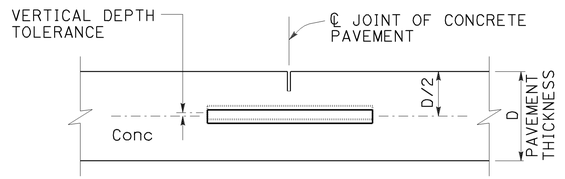

ELEVATION

VERTICAL DEPTH TOLERANCE

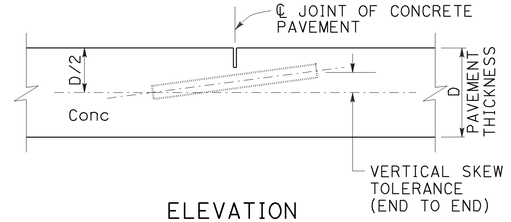

ELEVATION

VERTICAL SKEW TOLERANCE

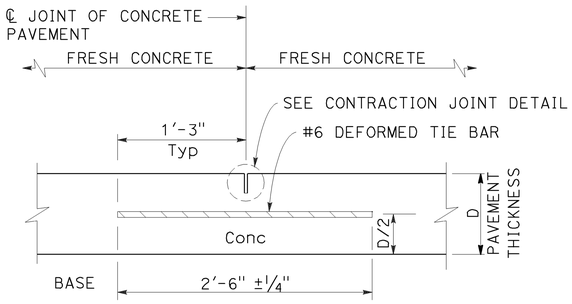

LONGITUDINAL CONTRACTION JOINT

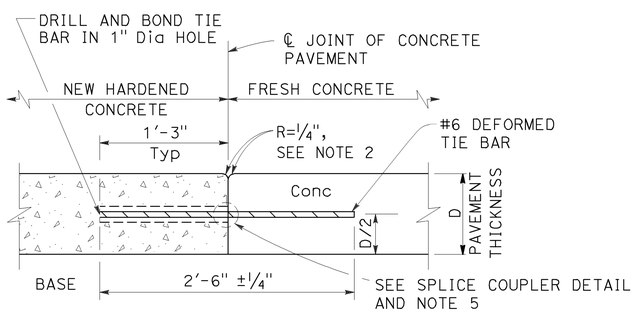

LONGITUDINAL CONSTRUCTION JOINT

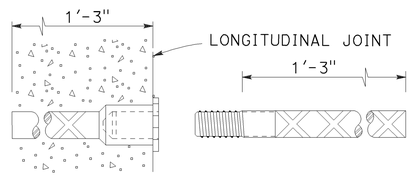

ALTERNATIVE SPLICE COUPLER

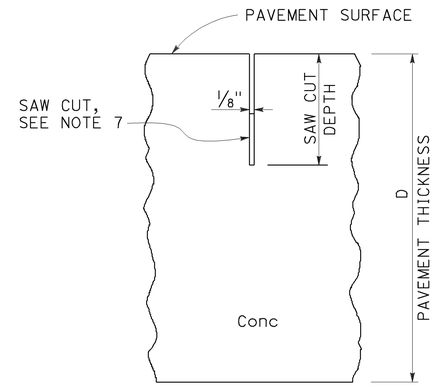

CONTRACTION JOINT DETAIL

NOTES:

1. See Revised Standard Plan RSP P1 for typical dowel bar and tie bar placement and locations.
2. Where new pavement is placed against existing concrete pavement, rounding the corner is not required.
3. For dowel bar sizes, See Revised Standard Plan RSP P10.
4. Tie bar details apply to inside widenings.
5. Use either drill and bond or splice couplers.
6. Full depth drilled hole. Fill hole with filler material.
7. The bottom of the saw cut must be at least 0.5" clear of any dowel bar, tie bar and bar reinforcement.

STATE OF CALIFORNIA
DEPARTMENT OF TRANSPORTATION

CONCRETE PAVEMENT-TIE BAR DETAILS

NO SCALE

RSP P15 DATED JULY 19, 2013 SUPPLEMENTS THE STANDARD PLANS BOOK DATED 2010.

REVISED STANDARD PLAN RSP P15

2010 REVISED STANDARD PLAN RSP P15

5-31-13

Dist	COUNTY	ROUTE	POST MILES TOTAL PROJECT	SHEET No.	TOTAL SHEETS
11	SD	5	R29.1/R30.5	782	1012

William K. Farnbach
REGISTERED CIVIL ENGINEER

July 19, 2013
PLANS APPROVAL DATE

REGISTERED PROFESSIONAL ENGINEER — William K. Farnbach — No. C49042 — Exp. 9-30-14 — CIVIL — STATE OF CALIFORNIA

THE STATE OF CALIFORNIA OR ITS OFFICERS OR AGENTS SHALL NOT BE RESPONSIBLE FOR THE ACCURACY OR COMPLETENESS OF SCANNED COPIES OF THIS PLAN SHEET.

TO ACCOMPANY PLANS DATED 07-21-14

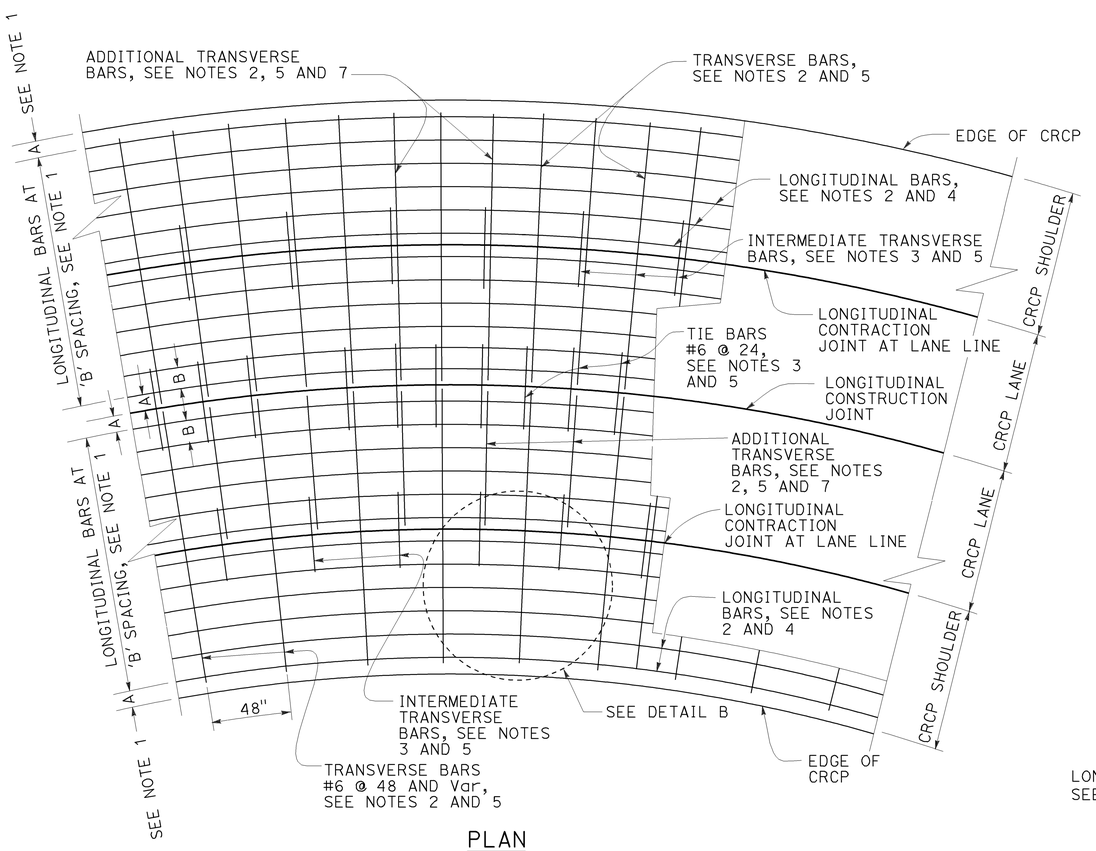

PLAN

CURVED LANES

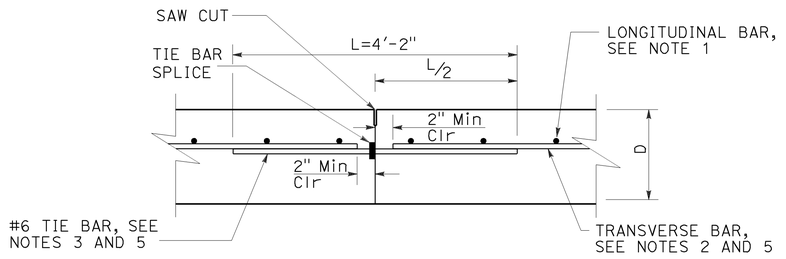

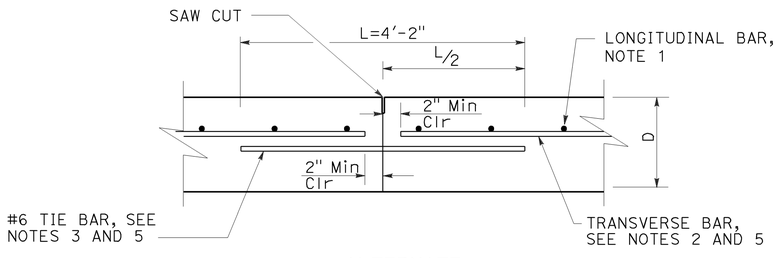

ALTERNATE

LONGITUDINAL CONSTRUCTION JOINT

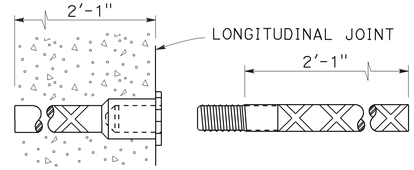

TIE BAR SPLICE COUPLER DETAIL

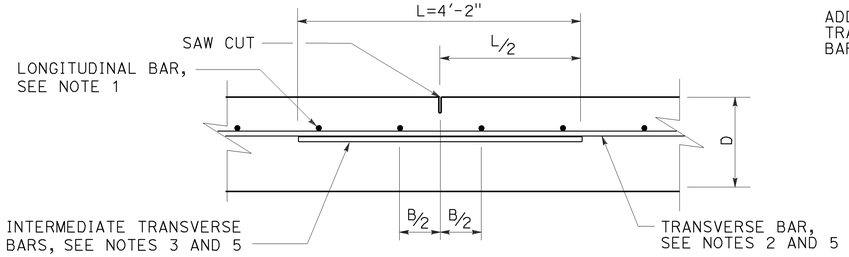

LONGITUDINAL CONTRACTION JOINT

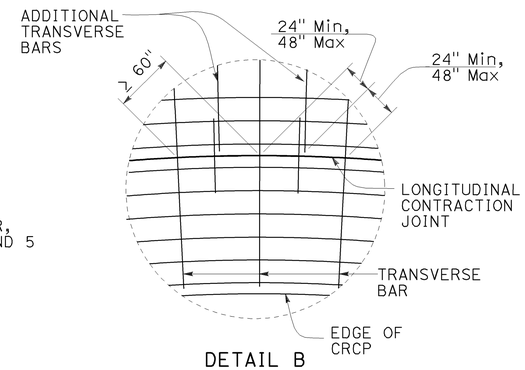

DETAIL B

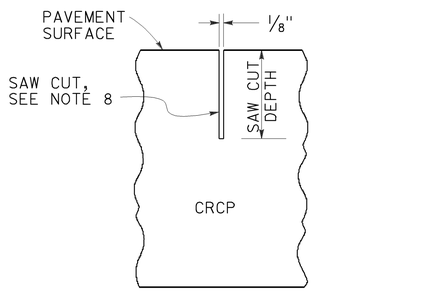

CONTRACTION JOINT SAW CUT DETAIL

NOTES:

1. For longitudinal bar spacing and clearances, see Table 1 on Revised Standard Plan RSP P4.
2. The length of lap splices for bar reinforcement must be at least 25".
3. Place tie bars and intermediate transverse bars parallel to and in the same plane as the transverse bars.
4. Place longitudinal bars parallel to roadway curvature.
5. Place transverse bars, additional transverse bars, tie bars and intermediate transverse bars perpendicular to the pavement curvature.
6. For additional longitudinal bars detail, see Detail A on Revised Standard Plans RSP P14.
7. Place additional transverse bars where required, see Detail B.
8. The bottom of the saw cut must be at least 0.5" clear of any dowel bar, tie bar and bar reinforcement.

ABBREVIATION:

D = Thickness of CRCP

STATE OF CALIFORNIA
DEPARTMENT OF TRANSPORTATION

CONTINUOUSLY REINFORCED CONCRETE PAVEMENT TIE BARS AND JOINT DETAILS

NO SCALE

RSP P16 DATED JULY 19, 2013 SUPPLEMENTS THE STANDARD PLANS BOOK DATED 2010.

REVISED STANDARD PLAN RSP P16

2010 REVISED STANDARD PLAN RSP P16

5-31-13

Dist	COUNTY	ROUTE	POST MILES TOTAL PROJECT	SHEET No.	TOTAL SHEETS
11	SD	5	R29.1/R30.5	783	1012

William K. Farnbach
REGISTERED CIVIL ENGINEER

July 19, 2013
PLANS APPROVAL DATE

REGISTERED PROFESSIONAL ENGINEER — William K. Farnbach — No. C49042 — Exp. 9-30-14 — CIVIL — STATE OF CALIFORNIA

THE STATE OF CALIFORNIA OR ITS OFFICERS OR AGENTS SHALL NOT BE RESPONSIBLE FOR THE ACCURACY OR COMPLETENESS OF SCANNED COPIES OF THIS PLAN SHEET.

TO ACCOMPANY PLANS DATED 07-21-14

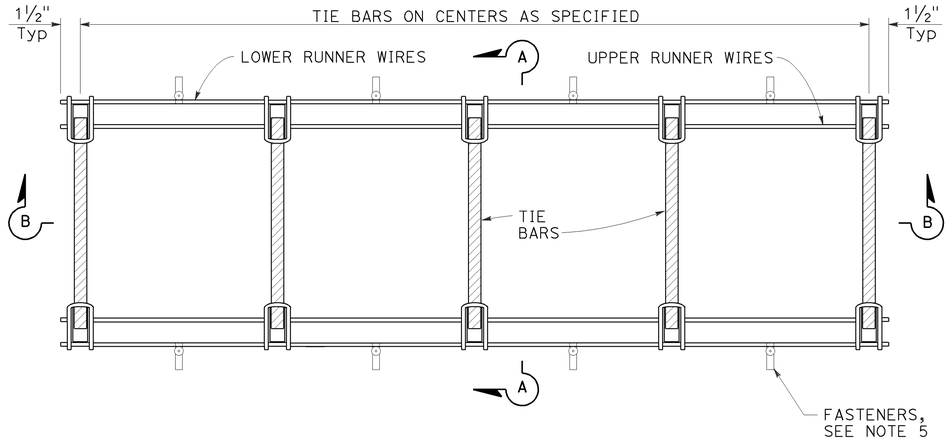

PLAN

TIE BAR BASKET

(Tie bars at longitudinal joint)
See Note 1

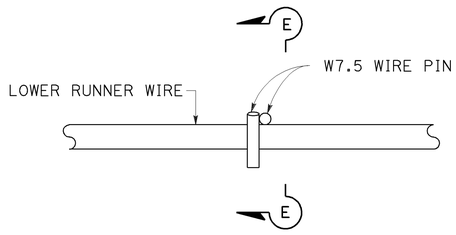

PLAN

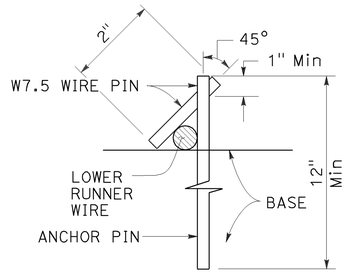

SECTION E-E

ANCHOR PIN DETAIL

See Note 5

NOTES:

1. "U" frame shape assembly shown. Use either "U" frame shape or "A" frame shape.
2. Wire sizes shown are the minimum required.
3. All wire intersections must be resistance welded.
4. Weld may be at top or bottom of tie bars.
5. Use anchor pins where soil or granular base is used.

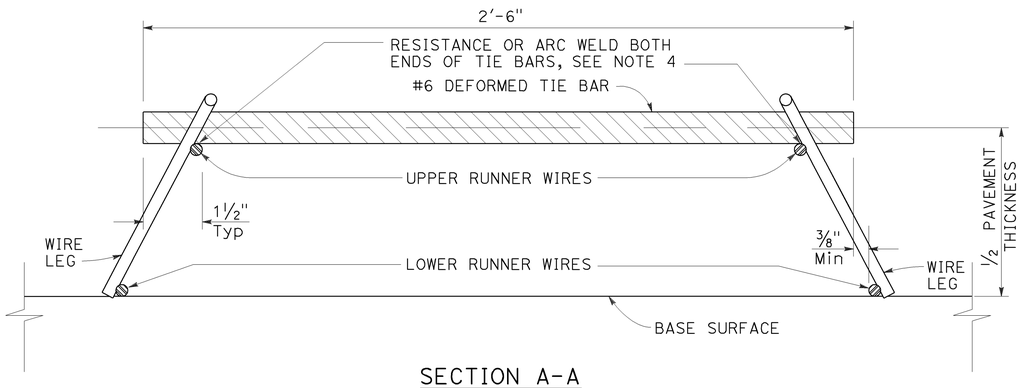

SECTION A-A

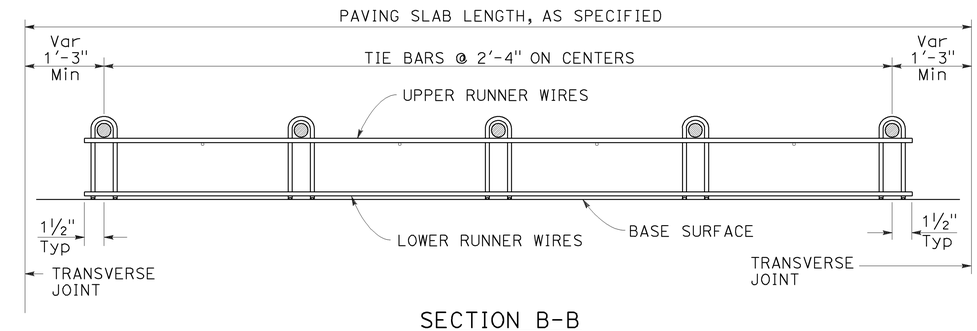

SECTION B-B

See Note 1

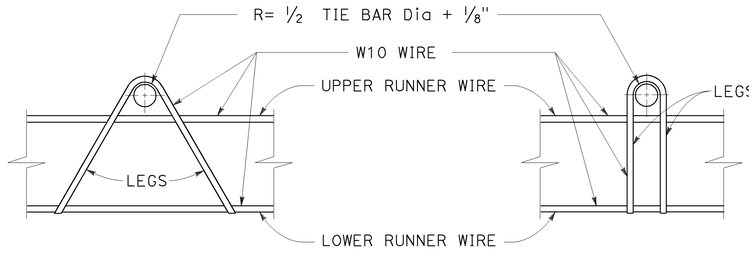

"A" SHAPE

"U" SHAPE

ASSEMBLY FRAME DETAILS

See Note 1

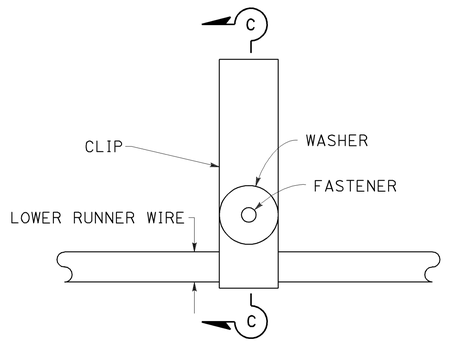

PLAN

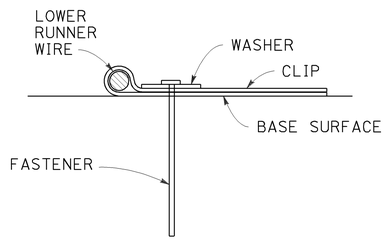

SECTION C-C

FASTENER DETAIL

STATE OF CALIFORNIA
DEPARTMENT OF TRANSPORTATION

CONCRETE PAVEMENT TIE BAR BASKET DETAILS

NO SCALE

RSP P17 DATED JULY 19, 2013 SUPERSEDES STANDARD PLAN P17
DATED MAY 20, 2011 - PAGE 134 OF THE STANDARD PLANS BOOK DATED 2010.

REVISED STANDARD PLAN RSP P17

2010 REVISED STANDARD PLAN RSP P17

5-31-13

Dist	COUNTY	ROUTE	POST MILES TOTAL PROJECT	SHEET No.	TOTAL SHEETS
11	SD	5	R29.1/R30.5	784	1012

William K. Farnbach
REGISTERED CIVIL ENGINEER

July 19, 2013
PLANS APPROVAL DATE

REGISTERED PROFESSIONAL ENGINEER — William K. Farnbach — No. C49042 — Exp. 9-30-14 — CIVIL — STATE OF CALIFORNIA

THE STATE OF CALIFORNIA OR ITS OFFICERS OR AGENTS SHALL NOT BE RESPONSIBLE FOR THE ACCURACY OR COMPLETENESS OF SCANNED COPIES OF THIS PLAN SHEET.

TO ACCOMPANY PLANS DATED 07-21-14

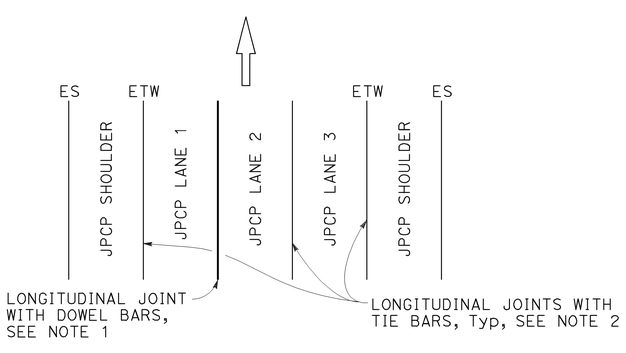

3 LANES WITH CONCRETE SHOULDERS
PLAN

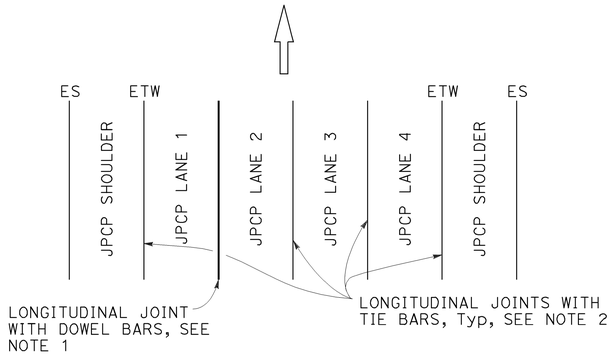

4 LANES WITH CONCRETE SHOULDERS
PLAN

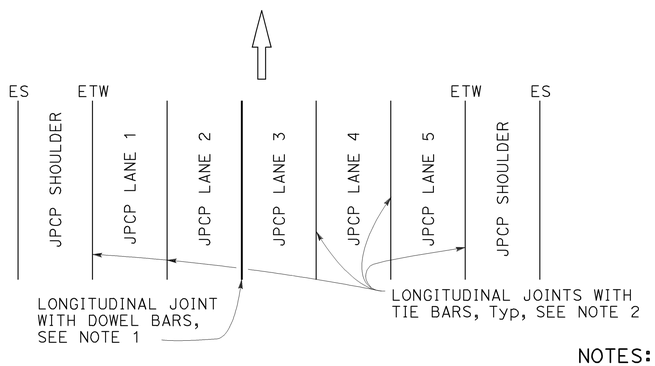

5 LANES WITH CONCRETE SHOULDERS
PLAN

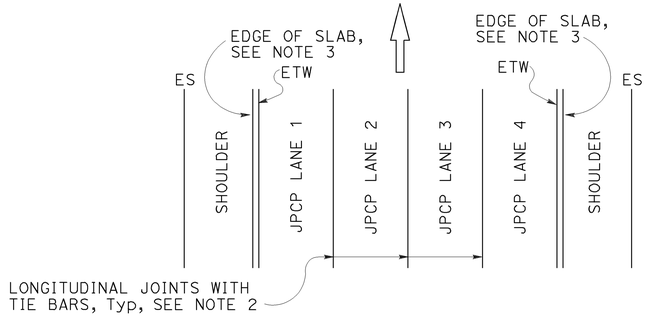

4 LANES OR LESS WITH AC SHOULDERS
PLAN

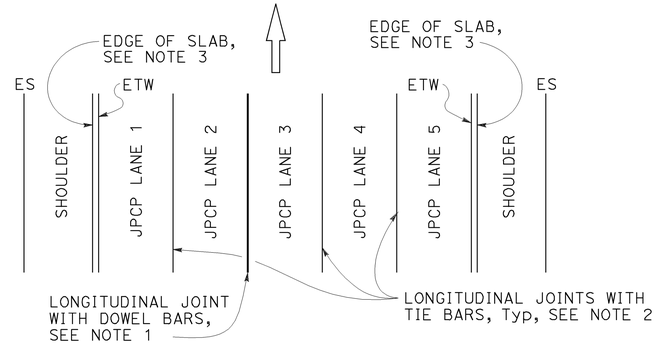

5 LANES WITH AC SHOULDERS
PLAN

NEW CONSTRUCTION
Location of Longitudinal Joints
For JPCP

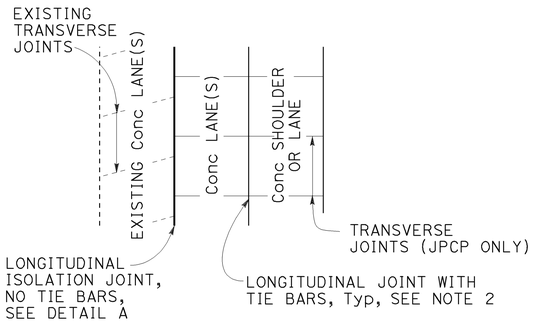

CASE 1
PLAN
Transverse Joints do not align between new and existing.

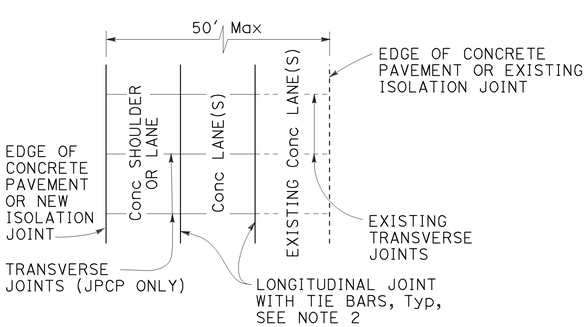

CASE 2
PLAN
Transverse Joints align between new and existing.
(For JPCP only)

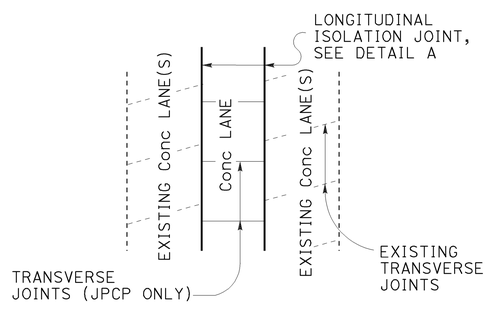

CASE 3 (INTERIOR LANE REPLACEMENT)
PLAN
Transverse Joints do not align between new and existing.

LANE/SHOULDER ADDITION OR RECONSTRUCTION
For JPCP and CRCP

NOTES:

1. See Revised Standard Plan RSP P10 for longitudinal joint with dowel bars.
2. See Revised Standard Plan RSP P15 for longitudinal joint with tie bars.
3. S= Reservoir depth.
   S= 7/8" ± 1/16" for asphalt rubber seals
   S= 9/16" ± 1/16" for silicone seals
   Preformed compression seals must be 13/16" wide and S= 1 11/16" ± 1/16"

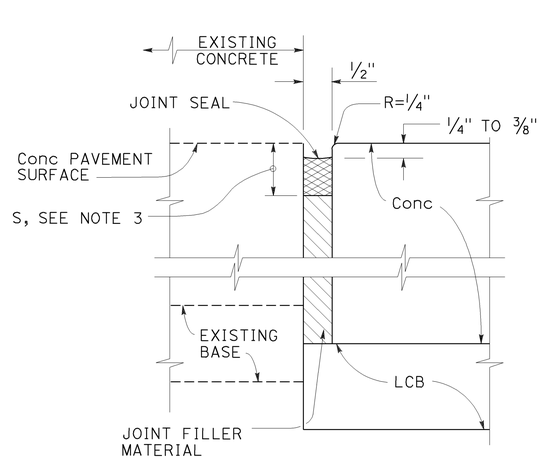

DETAIL "A"
ISOLATION JOINT

STATE OF CALIFORNIA
DEPARTMENT OF TRANSPORTATION

CONCRETE PAVEMENT LANE SCHEMATICS AND ISOLATION JOINT DETAIL

NO SCALE

RSP P18 DATED JULY 19, 2013 SUPERSEDES RSP P18 DATED APRIL 20, 2012 AND STANDARD PLAN P18 DATED MAY 20, 2011 - PAGE 135 OF THE STANDARD PLANS BOOK DATED 2010.

REVISED STANDARD PLAN RSP P18

2010 REVISED STANDARD PLAN RSP P18

5-31-13

Dist	COUNTY	ROUTE	POST MILES TOTAL PROJECT	SHEET No.	TOTAL SHEETS
11	SD	5	R29.1/R30.5	785	1012

William K. Farnbach
REGISTERED CIVIL ENGINEER

July 19, 2013
PLANS APPROVAL DATE

REGISTERED PROFESSIONAL ENGINEER
William K. Farnbach
No. C49042
Exp. 9-30-14
CIVIL
STATE OF CALIFORNIA

THE STATE OF CALIFORNIA OR ITS OFFICERS OR AGENTS SHALL NOT BE RESPONSIBLE FOR THE ACCURACY OR COMPLETENESS OF SCANNED COPIES OF THIS PLAN SHEET.

TO ACCOMPANY PLANS DATED 07-21-14

2010 REVISED STANDARD PLAN RSP P20

NOTES:

1. Details do not apply to isolation joints and longitudinal construction joints.
2. Tie bars, dowel bars, and bar reinforcement are not shown.
3. Depths are measured from the final concrete pavement surface elevation after any grinding.

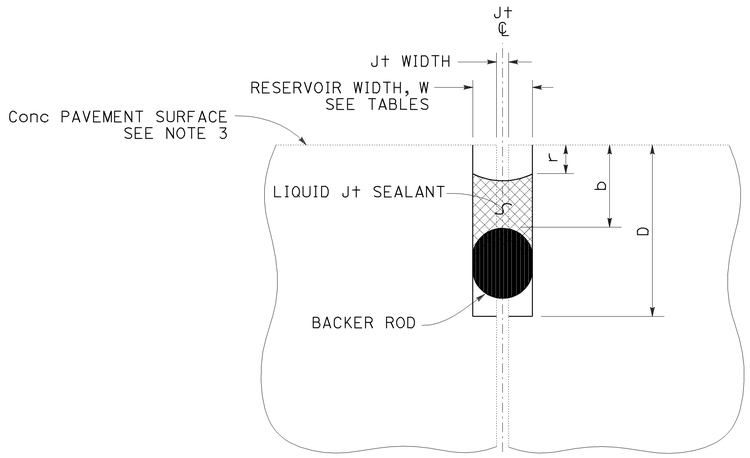

LIQUID JOINT SEALANT

RESERVOIR WIDTH W ±1/16"	LIQUID JOINT SEALANT DIMENSIONS					
	BACKER ROD NOMINAL Dia *	DEPTHS (ASPHALT RUBBER) **		DEPTHS (SILICONE)		
		RESERVOIR D ± 1/4"	BACKER ROD b ± 1/16"	RESERVOIR D ± 1/4"	BACKER ROD b ± 1/16"	RECESS r ± 1/16"
1/4"	3/8"	1 3/4"	7/8"	1 3/8"	1/2"	1/4"
3/8"	1/2"	1 7/8"	7/8"	1 1/2"	1/2"	1/4"
1/2"	3/4"	2"	7/8"	1 3/4"	9/16"	5/16"
5/8"	7/8"	2 1/4"	1"	2"	5/8"	5/16"
3/4"	1"	2 3/4"	1 1/8"	2 1/4"	3/4"	3/8"
7/8"	1 1/4"	3"	1 1/4"	2 1/2"	13/16"	3/8"
1"	1 1/2"	3 1/4"	1 3/8"	2 5/8"	7/8"	3/8"
1 1/8"	1 1/2"	3 1/2"	1 1/2"	2 13/16"	1"	1/2"

* Larger diameter backer rods may be substituted according to manufacturer recommendations if reservoir depth is increased equivalently.

** Asphalt rubber sealant recess depth "r" varies from 1/4" to 3/8"

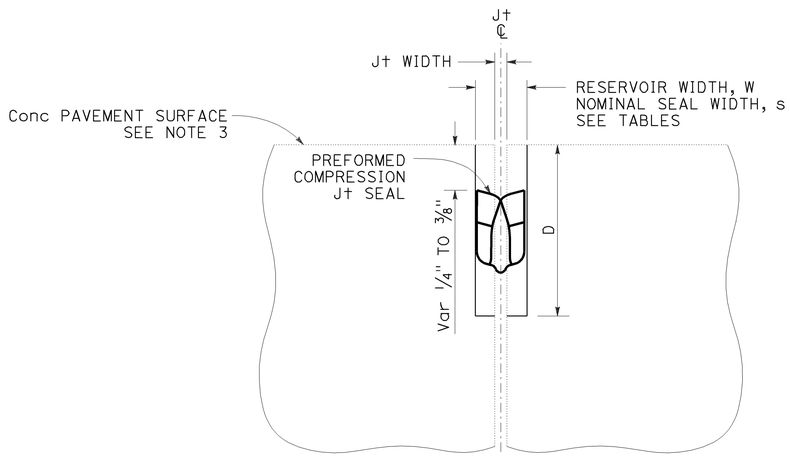

PREFORMED COMPRESSION JOINT SEAL

RESERVOIR WIDTH W ±1/16"	PREFORMED COMPRESSION JOINT SEAL DIMENSIONS	
	NOMINAL SEAL WIDTH s	RESERVOIR DEPTH D ± 1/4"
1/4"	7/16"	1 1/4"
3/8"	11/16"	1 7/16"
1/2"	13/16"	1 11/16"
5/8"	1"	1 7/8"
3/4"	1 1/4"	2 1/8"
7/8"	1 5/8"	2 5/8"
1"	1 5/8"	2 5/8"
1 1/8"	2"	2 7/8"

Const SEASON	Min RESERVOIR WIDTH * W ± 1/16"
WINTER	1/4"
SPRING	3/8"
SUMMER	
FALL	

* Minimum reservoir width for replace joint seal = existing joint width + 1/8"

STATE OF CALIFORNIA
DEPARTMENT OF TRANSPORTATION

JOINT SEALS

NO SCALE

RSP P20 DATED JULY 19, 2013 SUPERSEDES STANDARD PLAN P20
DATED MAY 20, 2011 - PAGE 136 OF THE STANDARD PLANS BOOK DATED 2010.

REVISED STANDARD PLAN RSP P20

6-17-13

Dist	COUNTY	ROUTE	POST MILES TOTAL PROJECT	SHEET No.	TOTAL SHEETS
11	SD	5	R29.1/R30.5	786	1012

William K. Farnbach
REGISTERED CIVIL ENGINEER

July 19, 2013
PLANS APPROVAL DATE

REGISTERED PROFESSIONAL ENGINEER — William K. Farnbach — No. C49042 — Exp. 9-30-14 — CIVIL — STATE OF CALIFORNIA

THE STATE OF CALIFORNIA OR ITS OFFICERS OR AGENTS SHALL NOT BE RESPONSIBLE FOR THE ACCURACY OR COMPLETENESS OF SCANNED COPIES OF THIS PLAN SHEET.

TO ACCOMPANY PLANS DATED 07-21-14

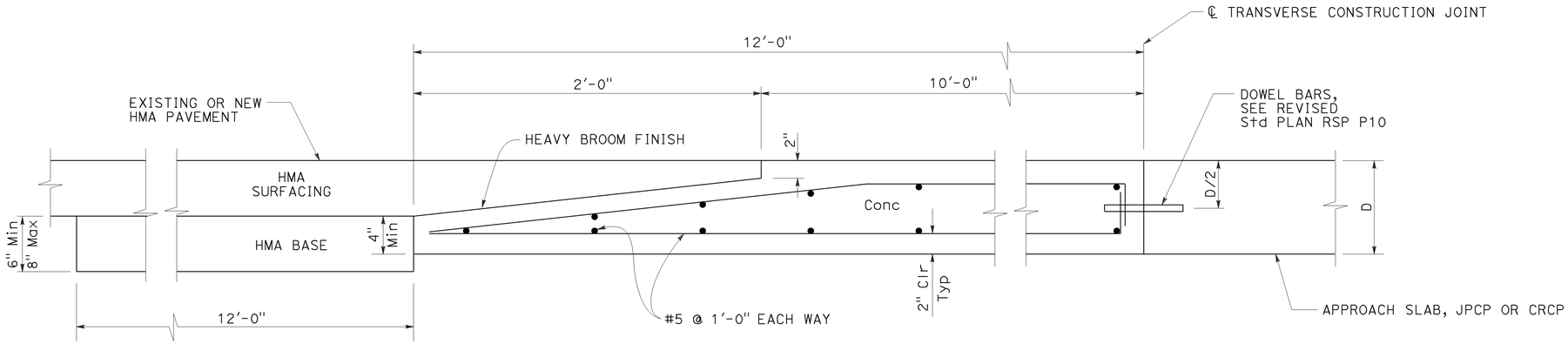

ELEVATION

CONCRETE PAVEMENT TRANSITION PANEL

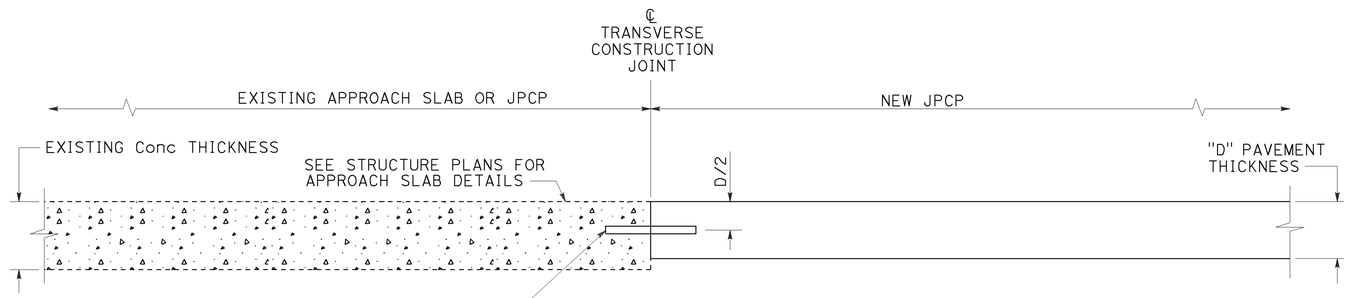

ELEVATION

TERMINAL JOINT TYPE 1

For Exist JPCP or Approach Slab

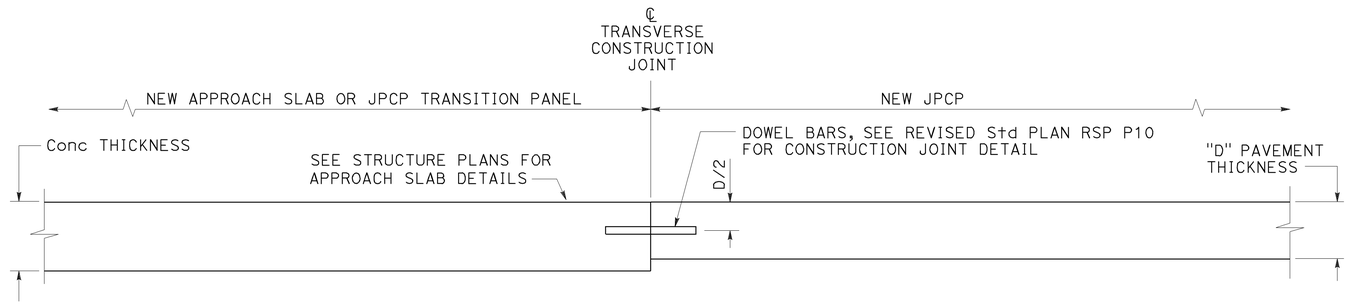

ELEVATION

TERMINAL JOINT TYPE 2

For JPCP Transition Panel or Approach Slab

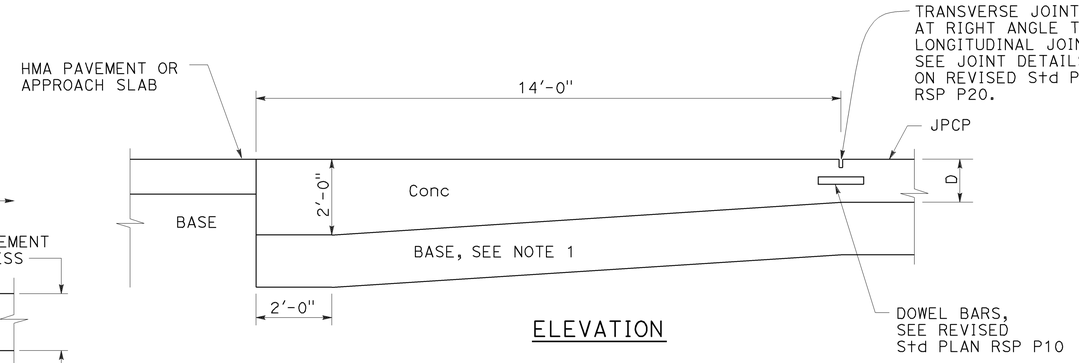

ELEVATION

PAVEMENT END ANCHOR

For HMA Pvmt or Approach Slab

NOTE:

1. Maintain same base thickness as JPCP.

STATE OF CALIFORNIA
DEPARTMENT OF TRANSPORTATION

CONCRETE PAVEMENT-END PANEL PAVEMENT TRANSITIONS

NO SCALE

RSP P30 DATED JULY 19, 2013 SUPERSEDES RSP P30 DATED APRIL 20, 2012 AND STANDARD PLAN P30 DATED MAY 20, 2011 - PAGE 137 OF THE STANDARD PLANS BOOK DATED 2010.

REVISED STANDARD PLAN RSP P30

2010 REVISED STANDARD PLAN RSP P30

3-26-13

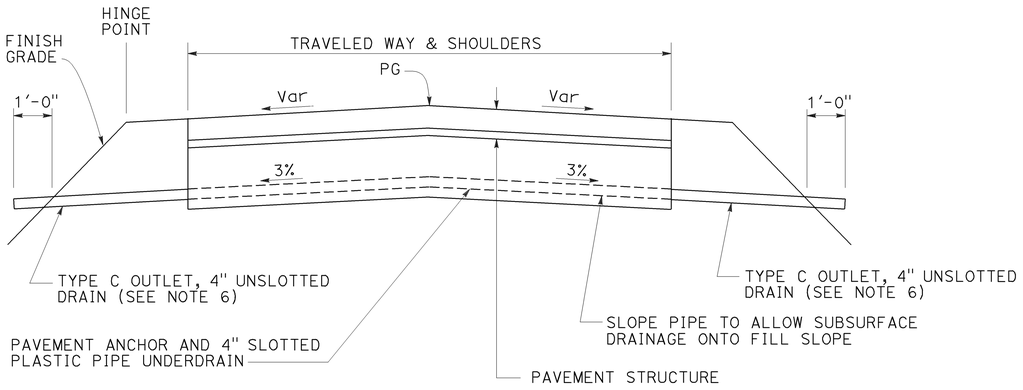

PAVEMENT ANCHOR PROFILE

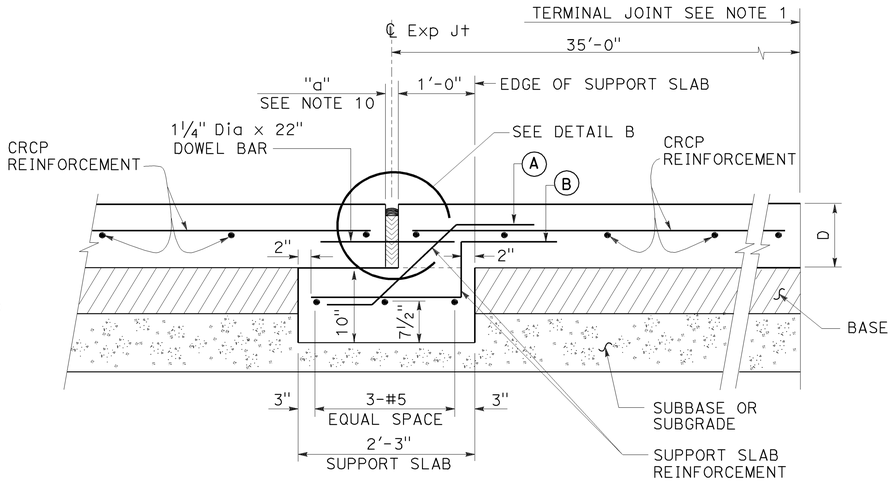

EXPANSION JOINT TYPE AN

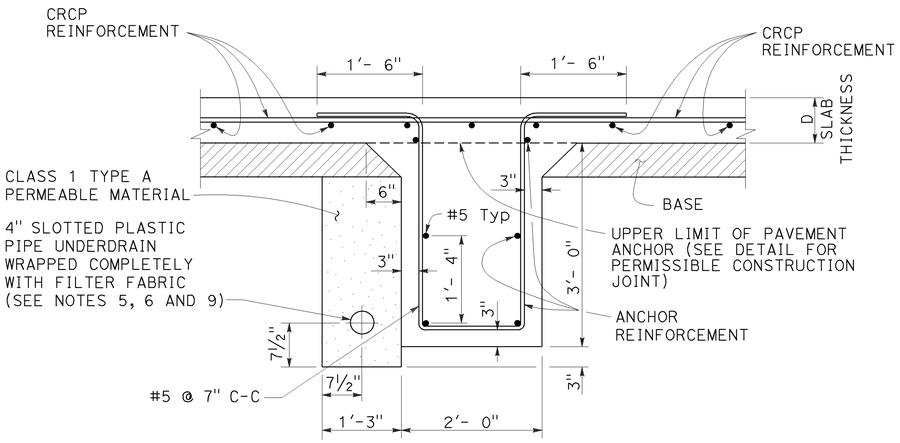

PAVEMENT ANCHOR

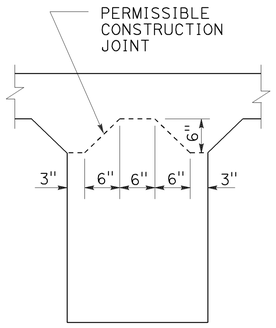

PAVEMENT ANCHOR DETAIL SHOWING PERMISSIBLE CONSTRUCTION JOINT

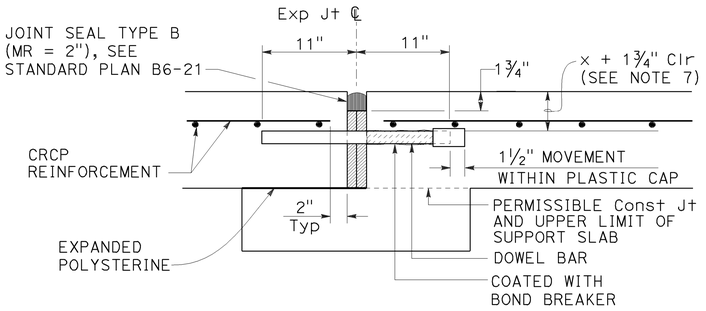

DETAIL B

(For layout, tolerances, and other details not shown, see Revised Standard Plan RSP P10.)

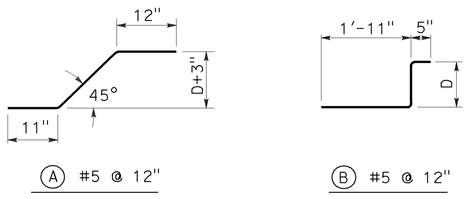

REINFORCEMENT DETAIL

NOTES:

1. For the locations of the terminal joints, expansion joints and pavement anchors, see project plans.
2. The CRCP shall continue across the pavement anchor and expansion joints as shown.
3. Details of reinforcement, tie bars, and longitudinal joints (and if necessary, transverse construction joints) are shown on Revised Standard Plan RSP P4.
4. Transverse construction joints are not allowed within 20'-0" of the pavement anchor.
5. When placing pipe through concrete barrier, use 4" unslotted plastic pipe wrapped completely with 5/16" polystyrene.
6. See Standard Plan D99B for details not shown.
7. See Revised Standard Plan RSP P4 for "x".
8. D = thickness of CRCP
9. Place the 4" Slotted Plastic Pipe on the high side of the longitudinal grade.
10. See Standard Plan B6-21 for "a".

Dist	COUNTY	ROUTE	POST MILES TOTAL PROJECT	SHEET No.	TOTAL SHEETS
11	SD	5	R29.1/R30.5	787	1012

Florante E. Bautista
REGISTERED CIVIL ENGINEER

April 20, 2012
PLANS APPROVAL DATE

REGISTERED PROFESSIONAL ENGINEER — Florante E. Bautista — No. C54859 — Exp. 6-30-12 — CIVIL — STATE OF CALIFORNIA

THE STATE OF CALIFORNIA OR ITS OFFICERS OR AGENTS SHALL NOT BE RESPONSIBLE FOR THE ACCURACY OR COMPLETENESS OF SCANNED COPIES OF THIS PLAN SHEET.

TO ACCOMPANY PLANS DATED 07-21-14

STATE OF CALIFORNIA
DEPARTMENT OF TRANSPORTATION

CONTINUOUSLY REINFORCED CONCRETE PAVEMENT- EXPANSION JOINT AND ANCHOR DETAILS

NO SCALE

RSP P31B DATED APRIL 20, 2012 SUPERSEDES STANDARD PLAN P31B DATED MAY 20, 2011 - PAGE 139 OF THE STANDARD PLANS BOOK DATED 2010.

REVISED STANDARD PLAN RSP P31B

2010 REVISED STANDARD PLAN RSP P31B

2-22-12

TO ACCOMPANY PLANS DATED 07-21-14

Dist	COUNTY	ROUTE	POST MILES TOTAL PROJECT	SHEET No.	TOTAL SHEETS
11	SD	5	R29.1/R30.5	788	1012

Glenn DeCou
REGISTERED CIVIL ENGINEER

October 19, 2012
PLANS APPROVAL DATE

REGISTERED PROFESSIONAL ENGINEER — Glenn DeCou — No. C34547 — Exp. 9-30-13 — CIVIL — STATE OF CALIFORNIA

THE STATE OF CALIFORNIA OR ITS OFFICERS OR AGENTS SHALL NOT BE RESPONSIBLE FOR THE ACCURACY OR COMPLETENESS OF SCANNED COPIES OF THIS PLAN SHEET.

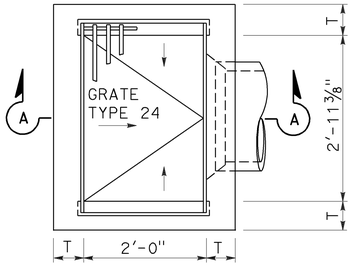

TYPE G1

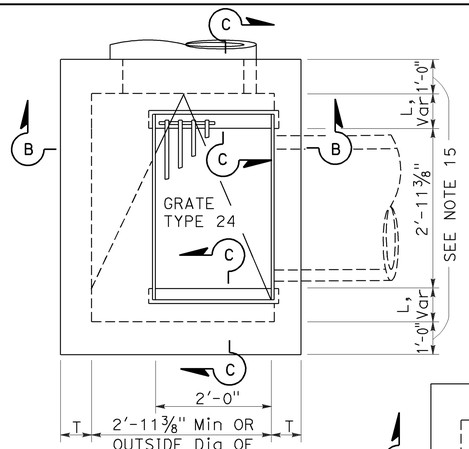

TYPE G2

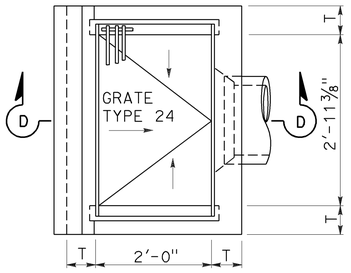

TYPE G3

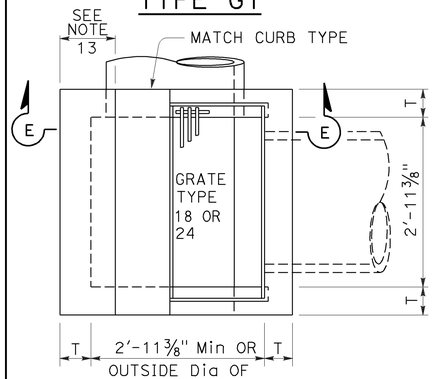

TYPE G4

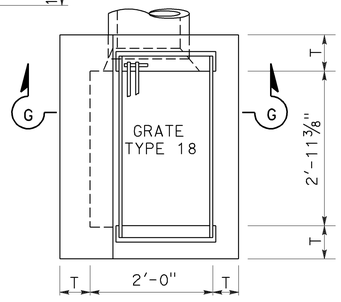

TYPE G6

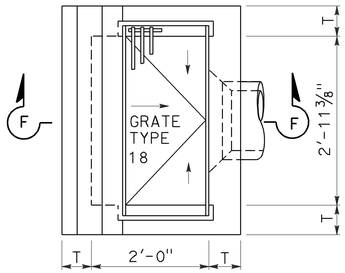

TYPE G5

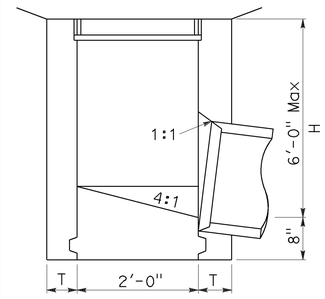

SECTION A-A

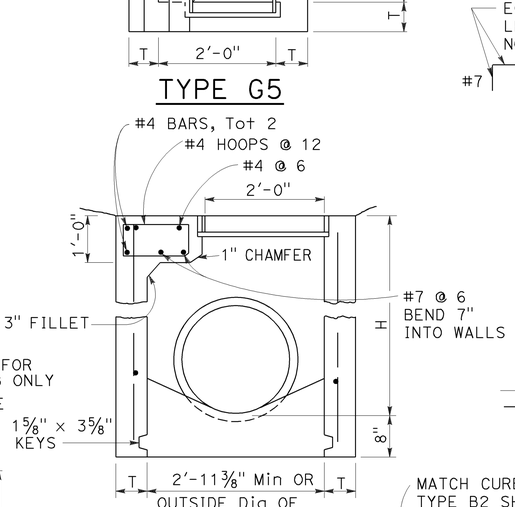

SECTION B-B

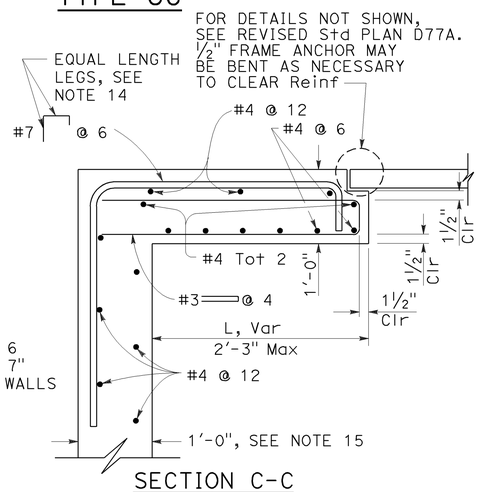

SECTION C-C

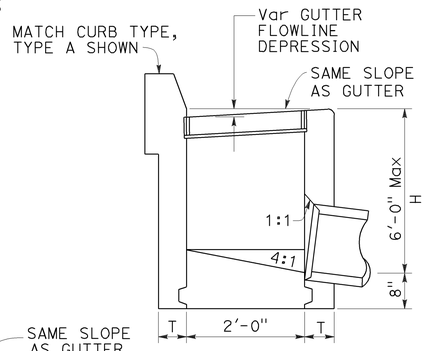

SECTION D-D

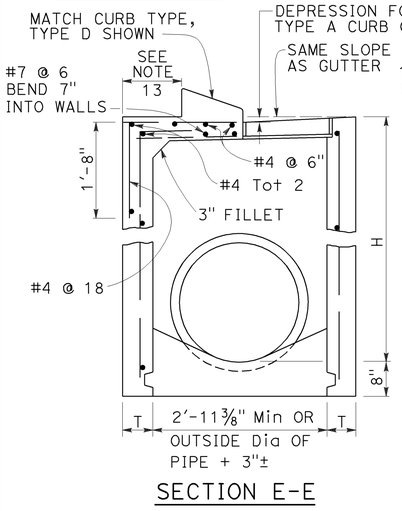

SECTION E-E

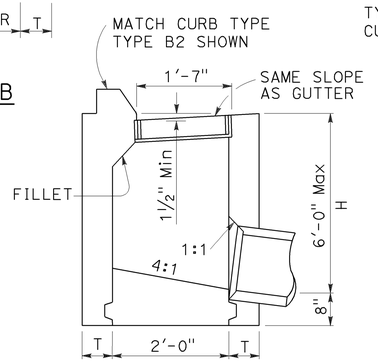

SECTION F-F

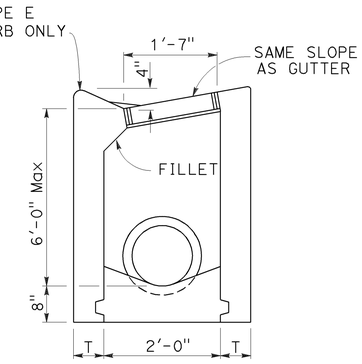

SECTION G-G

NOTES:

1. "H" is the difference in elevation between the outlet pipe flow line and the normal gutter grade line undepressed.
2. For "T" wall thickness, see Table A below.
3. Wall reinforcing not required when "H" is 8'-0" or less and the unsupported width or length is 7'-0" or less. Walls exceeding these limits shall be reinforced with #4 bars @ 1'-6" ± centers placed 1½" clear to inside of box unless otherwise shown.
4. Inlet bottom reinforcing not required. See Standard Plan D74C for alternative reinforced bottom and alternative half round bottom.
5. Steps-None required where "H" is less than 2'-6". Where "H" is 2'-6" or more, install steps with lowest rung 1'-0" above the floor and highest rung not more than 6" below top of inlet. The distance between steps shall not exceed 1'-0" and shall be uniform throughout the length of the wall. Place steps in the wall without an opening. Steps inserts may be substituted for the bar steps. Step inserts shall comply with State Industrial Safety requirements. See Standard Plan D74C for step details.
6. Details shown apply to both metal and concrete pipe.
7. Pipe(s) can be placed in any wall.
8. Curb section shall match adjacent curb.
9. Basin floors shall have wood trowel finish and a minimum slope of 12:3 from all directions toward outlet pipe.
10. Set inlet so that grate bars are parallel to direction of principal surface flow.
11. See Revised Standard Plans D77A and D77B for grate and frame details and weights of miscellaneous iron and steel.
12. See Standard Plan D78A for gutter depression details.
13. This dimenison will vary with different grates, curbs types, box width and wall thickness.
14. Bar may be rotated as necessary to clear opening. Where "L" is 6" or less, bar may be omitted.
15. Where "L" is 6" or less, wall thickness shall be as shown in Table A.
16. Cast-in-place inlets to be formed around all pipes/stubs intersecting the inlet, and concrete poured in one continuous operation. Precast inlets shall have mortared connections conforming to details for Type GCP Inlet shown on Standard Plan D75B. See Standard Specifications for mortar composition.

TABLE A

TYPE	CONCRETE QUANTITIES			
	H=3'-0" TO 8'-0" (T=6")		H=8'-1" TO 20'-0" (T=8")	
	H=3'-0" (CY)	ADDITIONAL PCC PER FOOT (CY)	H=8'-1" (CY)	ADDITIONAL PCC PER FOOT (CY)
G-1	0.95	0.220	See Note A	SEE NOTE A
G-2*	1.31	0.255	3.50	0.357
G-3	1.03	0.220	See Note A	SEE NOTE A
G-4* (TYPE 24)	1.27	0.255	3.48	0.357
G-4* (TYPE 18)	1.30	0.255	3.50	0.357
G-5	1.02	0.220	SEE NOTE A	SEE NOTE A
G-6	1.04	0.220	SEE NOTE A	SEE NOTE A

TABLE BASED ON 8" FLOOR SLAB. NO DEDUCTIONS ARE TO BE MADE TO THESE QUANTITIES BECAUSE OF PIPE OPENINGS, DIFFERENT FLOOR ALTERNATIVES OR DIFFERENT CURB TYPES. * QUANTITIES FOR TYPE G-2 AND G-4 INLETS BASED ON THE MINIMUM INTERIOR DIMENSIONS.

NOTE A:

Maximum allowable height 6'-0".

STATE OF CALIFORNIA
DEPARTMENT OF TRANSPORTATION

DRAINAGE INLETS

NO SCALE

RSP D73 DATED OCTOBER 19, 2012 SUPERSEDES STANDARD PLAN D73 DATED MAY 20, 2011 - PAGE 156 OF THE STANDARD PLANS BOOK DATED 2010.

REVISED STANDARD PLAN RSP D73

2010 REVISED STANDARD PLAN RSP D73

7-19-12

Dist	COUNTY	ROUTE	POST MILES TOTAL PROJECT	SHEET No.	TOTAL SHEETS
11	SD	5	R29.1/R30.5	789	1012

Raymond Don Tsztoo
REGISTERED CIVIL ENGINEER

April 19, 2013
PLANS APPROVAL DATE

Raymond Don Tsztoo No. C37332 Exp. 6-30-14 CIVIL — REGISTERED PROFESSIONAL ENGINEER — STATE OF CALIFORNIA

THE STATE OF CALIFORNIA OR ITS OFFICERS OR AGENTS SHALL NOT BE RESPONSIBLE FOR THE ACCURACY OR COMPLETENESS OF SCANNED COPIES OF THIS PLAN SHEET.

TO ACCOMPANY PLANS DATED 07-21-14

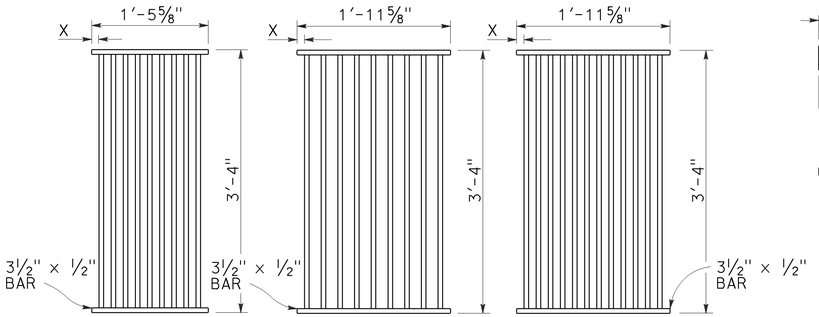

TYPE 18-9

1⅜" Clear spacing. Use within the roadbed on highways where bicycles and pedestrians are excluded.

TYPE 24-9

2" Clear spacing. Use in locations off the roadbed on all types of highways.

TYPE 24-12

1⅜" Clear spacing. Use within the roadbed on highways where bicycles and pedestrians are excluded.

RECTANGULAR GRATE DETAILS

(See table below)

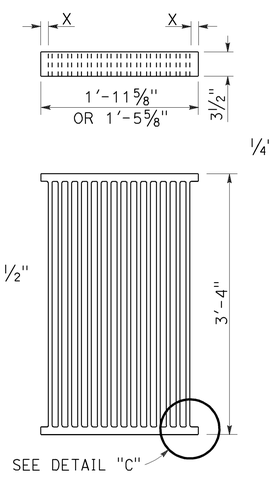

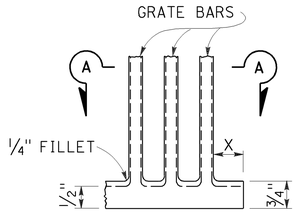

DETAIL "C"

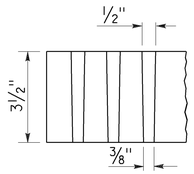

SECTION A-A

ALTERNATIVE CAST DUCTILE IRON GRATE OR CAST CARBON STEEL GRATE

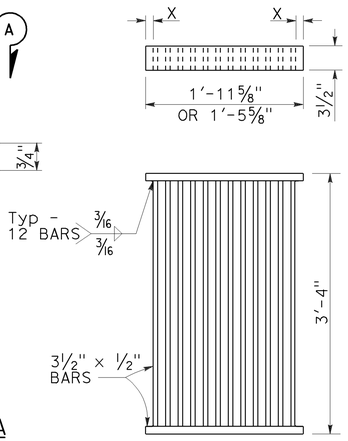

ALTERNATIVE WELDED GRATE

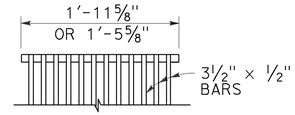

CAST END BLOCK

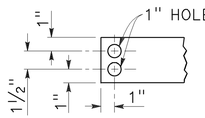

END OF BAR

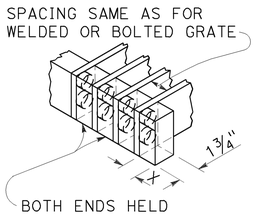

ALTERNATIVE CAST DUCTILE IRON OR CAST CARBON STEEL END BLOCK GRATE

NOTES:

1. Grate type numbers refer to approximate width of grate in inches and number of bars, respectively.
2. Contractor has the option of using cast ductile iron, cast carbon steel, welded, bolted, or cast end block grate.
3. Rounded top of bars optional on all grates.
4. Pipe inlets with a grate shall be placed so that bars parallel direction of principle surface flow.
5. Complete joint penetration butt welds may be substituted for the fillet welds on all anchors.
6. Standard square, hexagon, round or equivalent headed anchors may be substituted for the right angle hooks on the anchors shown on this plan.
7. Grate and frame weights are based on welded grates (weights of face angles, steps, protection bars, etc. are not included).
8. Connect chain to grate and frame only at locations shown on the plans. When chain is required, do not use cast ductile iron grates.

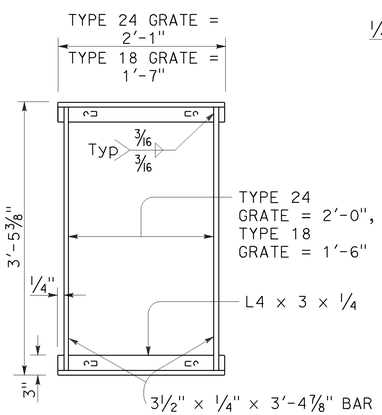

TYPICAL FRAME

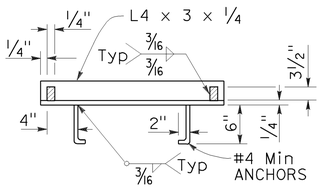

CROSS SECTION

(Thru frame)

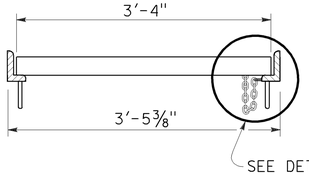

LONGITUDINAL SECTION

(Thru frame and grate)

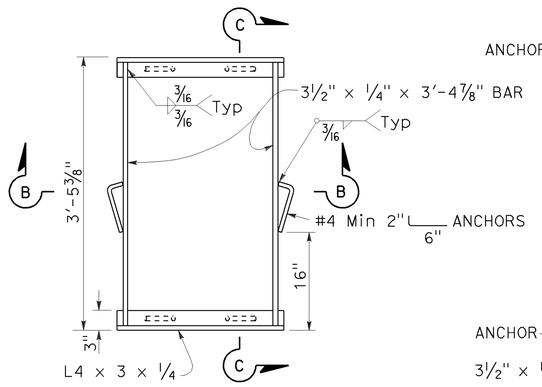

TYPICAL FRAME

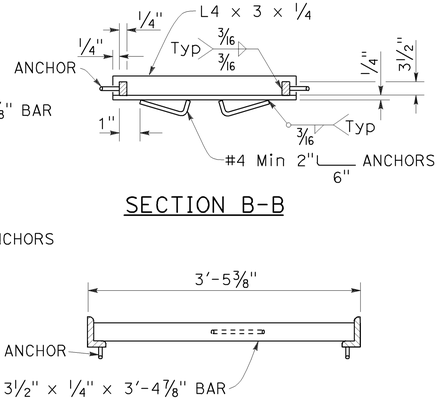

SECTION B-B

SECTION C-C

ALTERNATIVE ANCHOR FOR RECTANGULAR FRAME

(For details not shown, See Rectangular Frame Details)

RECTANGULAR FRAME DETAILS

(For all rectangular grates)

GRATE BAR SPACING TABLE

TYPE	No. OF BARS	CLEAR BAR SPACING	X
18-9	9	1⅜"	1 1⁄16"
24-9	9	2"	1 9⁄16"
24-12	12	1⅜"	1¼"

INLET TYPE	COVER TYPE	WEIGHT LB
OS	PLATE	174
OL-7	PLATE	170
OL-10	PLATE	170
OL-14	PLATE	170
OL-21	PLATE	170
OCP	PLATE	112
OCPI	PLATE	112
OCPI	REDWOOD	42
OMP	PLATE	177
OMPI	PLATE	177

BASIS FOR Misc IRON & STEEL FINAL PAY WEIGHTS FOR DRAINAGE INLETS

(See Note 7)

INLET TYPE	GRATE TYPE	No. OF GRATES	WEIGHT LB
GDO	24-12	2	634
GOL-7	24-12	1	326
GOL-10	24-12	1	326
GO,G1,G2,G3,G4 (TYPE 24)	24-9	1	263
	24-12	1	326
G4 (TYPE 18),G5,G6	18-9	1	249
GT1	18-9	2	498
GT2	18-9	2	498
GT3	24-12	2	652
GT4	24-12	2	652
TRASH RACK			22
GRATE CHAIN			3

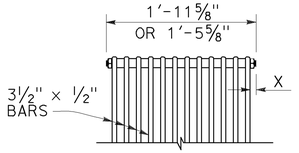

BOLTED END BLOCK

BOLTING DETAIL

ALTERNATIVE BOLTED GRATE

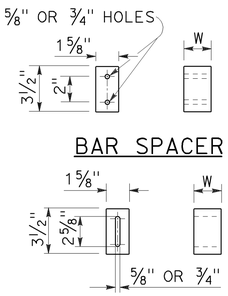

ALTERNATIVE SPACER

W = 1⅜" or 2"

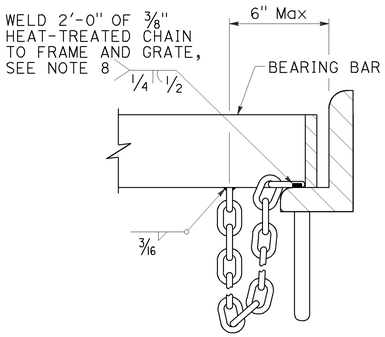

DETAIL "D"

(Steel grates only)

STATE OF CALIFORNIA
DEPARTMENT OF TRANSPORTATION

GRATE DETAILS No. 1

NO SCALE

RSP D77A DATED APRIL 19, 2013 SUPERSEDES RSP D77A DATED JULY 20, 2012 AND STANDARD PLAN D77A DATED MAY 20, 2011 - PAGE 164 OF THE STANDARD PLANS BOOK DATED 2010.

REVISED STANDARD PLAN RSP D77A

2010 REVISED STANDARD PLAN RSP D77A

4-4-13

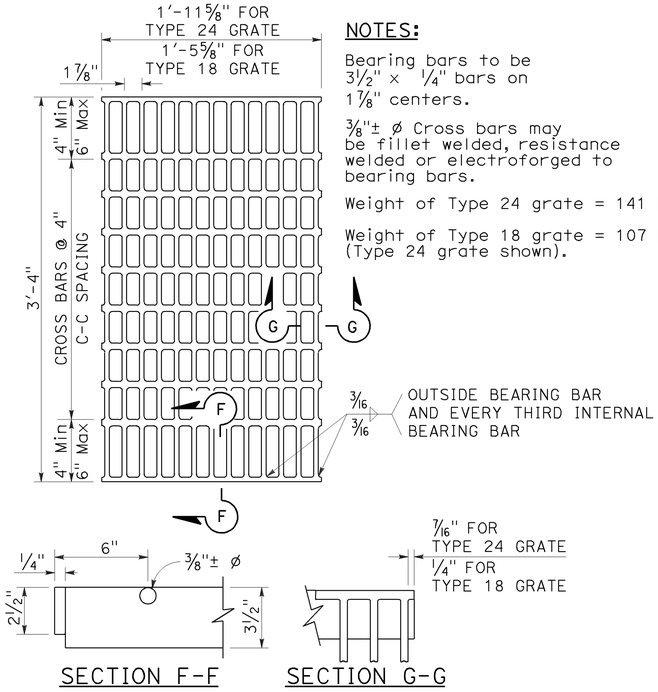

SECTION F-F SECTION G-G

NOTES:

Bearing bars to be 3½" × ¼" bars on 1⅞" centers.

⅜"± ø Cross bars may be fillet welded, resistance welded or electroforged to bearing bars.

Weight of Type 24 grate = 141 LBS.

Weight of Type 18 grate = 107 LBS. (Type 24 grate shown).

TYPE 18-10 AND 24-13 GRATE

(Welded Steel)

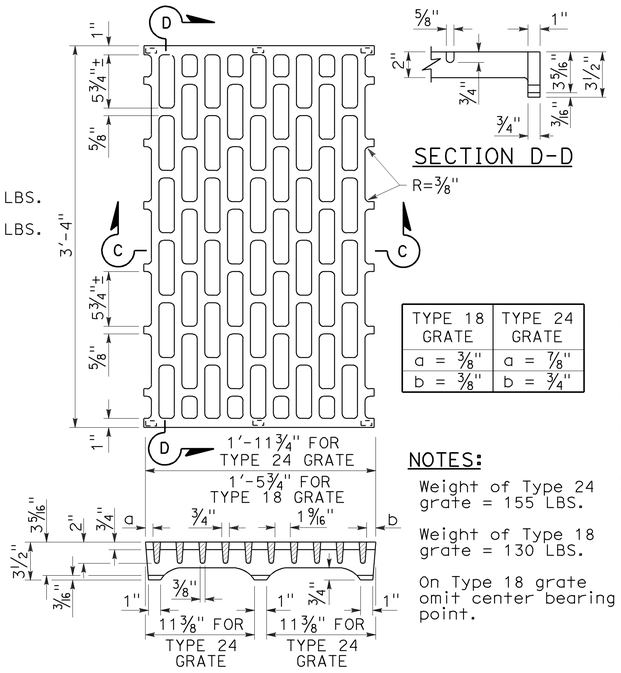

SECTION C-C

TYPE 18 GRATE	TYPE 24 GRATE
a = ⅜"	a = ⅞"
b = ⅜"	b = ¾"

SECTION D-D

NOTES:

Weight of Type 24 grate = 155 LBS.

Weight of Type 18 grate = 130 LBS.

On Type 18 grate omit center bearing point.

TYPE 18-8C AND 24-10C GRATE

(Cast ductile iron)

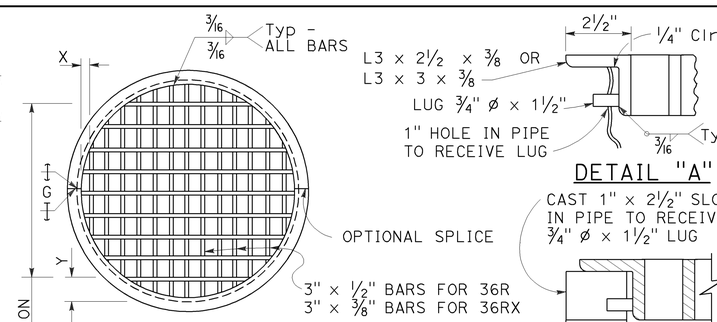

DETAIL "A"

DETAIL "B"

TYPE 36R AND 36RX GRATE DETAILS

⅜"± ø Cross bars may be fillet welded, resistance welded or electroforged to bearing bars.

CROSS BAR DETAIL TYPE 36RX GRATE (WELDED STEEL)

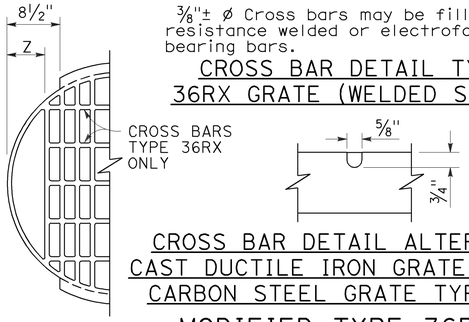

CROSS BAR DETAIL ALTERNATIVE CAST DUCTILE IRON GRATE OR CAST CARBON STEEL GRATE TYPE 36RX

MODIFIED TYPE 36R AND 36RX GRATE FOR ODI INLET

NOTES:

1. When alternative grates are allowed - Final pay based on alternative with the lesser weight.
2. Use frame shown on Standard Plan D74A, D74B or RSP D77A as appropriate.
3. When Type 24-10S, 24-12X or 24-13 grates are used with GDO Inlets, a ¼" × 3½" × 3'-4⅞" steel bar shall be welded across the center of inlet frame to separate the individual grates.
4. See Revised Standard Plan RSP D77A for connecting chain to welded grate and frame. When chain is required, do not use cast ductile iron grate.

GRATE BAR SPACING TABLE

TYPE	No. OF BARS	CLEAR BAR SPACING	X	Y		Z
				4" SPACING	6" SPACING	
36R	13	2"	2⅛"	-	-	-
36RX (STEEL)	15	2"	9/16"	3¾"	5¾"	-
36RX (CAST)	13	2"	2⅛"	3¾"	5¾"	-
36R Mod	12	2"	2⅛"	-	-	5"
36RX Mod (STEEL)	13	2"	9/16"	3¾"	5¾"	5 11/16"
36RX Mod (CAST)	12	2"	2⅛"	3¾"	5¾"	5"

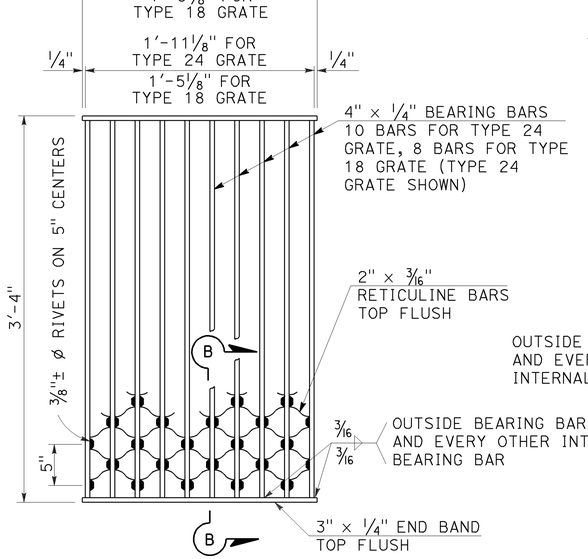

SECTION B-B

NOTES:

Weight of Type 24 grate = 182 LBS.
Weight of Type 18 grate = 145 LBS.

TYPE 18-8S AND 24-10S GRATE

(Welded Steel) Reticuline type

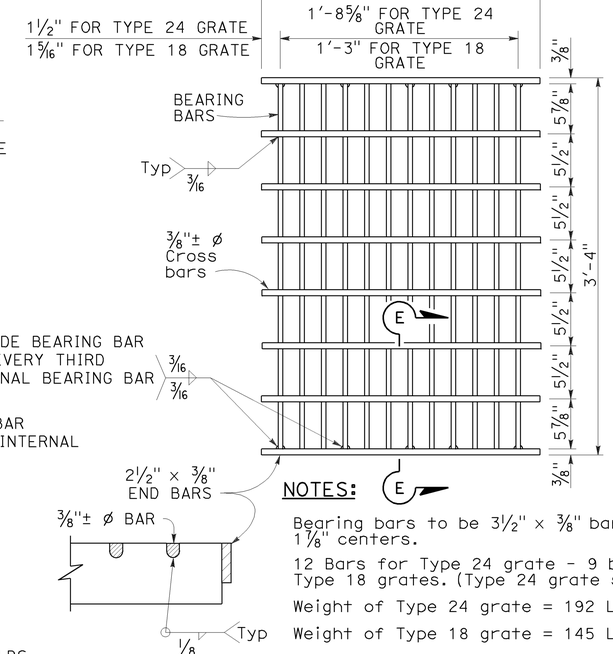

SECTION E-E

NOTES:

Bearing bars to be 3½" × ⅜" bars on 1⅛" centers.

12 Bars for Type 24 grate - 9 bars for Type 18 grates. (Type 24 grate shown).

Weight of Type 24 grate = 192 LBS.

Weight of Type 18 grate = 145 LBS.

⅜"± ø Cross bars may be fillet welded, resistance welded or electroforged to bearing bars.

TYPE 18-9X AND 24-12X GRATE

(Welded Steel)

TO ACCOMPANY PLANS DATED 07-21-14

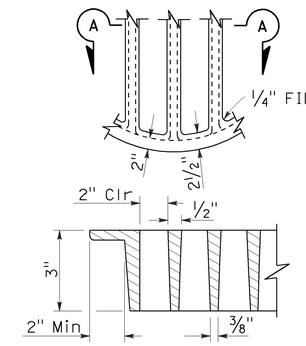

SECTION A-A

ALTERNATIVE CAST DUCTILE IRON GRATE OR CAST CARBON STEEL GRATE TYPE 36R AND 36RX

BASIS FOR Misc IRON AND STEEL FINAL PAY WEIGHTS FOR DRAINAGE INLETS

INLET TYPE	GRATE TYPE	No. OF GRATES	WEIGHT LB
GDO (SEE NOTE 4)	24-10C	2	391
	24-10S	2	456
	24-12X	2	473
	24-13	2	374
G0,G0L,G1,G2, G3,G4 (TYPE 24)	24-10C	1	202
	24-10S	1	229
	24-12X	1	239
	24-13	1	188
G4 (TYPE 18) G5,G6	18-8S	1	187
	18-9X	1	187
	18-10	1	149
GT1,GT2	18-8S	2	374
	18-9X	2	374
	18-10	2	298
GT3,GT4	24-10C	2	404
	24-10S	2	458
	24-12X	2	478
	24-13	2	376
ODI	36RX (Mod)	1	196
GMP,GCP,GCPI	36RX	1	215
ODI	36R (Mod)	1	220
GMP,GCP,GCPI	36R	1	236
TRASH RACK			22
GRATE CHAIN			3

STATE OF CALIFORNIA
DEPARTMENT OF TRANSPORTATION

GRATE DETAILS No. 2

NO SCALE

RSP D77B DATED APRIL 19, 2013 SUPERSEDES RSP D77B DATED JULY 20, 2012 AND STANDARD PLAN D77B DATED MAY 20, 2011 - PAGE 165 OF THE STANDARD PLANS BOOK DATED 2010.

REVISED STANDARD PLAN RSP D77B

Dist	COUNTY	ROUTE	POST MILES TOTAL PROJECT	SHEET No.	TOTAL SHEETS
11	SD	5	R29.1/R30.5	790	1012

Raymond Don Tsztoo
REGISTERED CIVIL ENGINEER

April 19, 2013
PLANS APPROVAL DATE

REGISTERED PROFESSIONAL ENGINEER
Raymond Don Tsztoo
No. C37332
Exp. 6-30-14
CIVIL
STATE OF CALIFORNIA

THE STATE OF CALIFORNIA OR ITS OFFICERS OR AGENTS SHALL NOT BE RESPONSIBLE FOR THE ACCURACY OR COMPLETENESS OF SCANNED COPIES OF THIS PLAN SHEET.

2010 REVISED STANDARD PLAN RSP D77B

4-4-13

Dist	COUNTY	ROUTE	POST MILES TOTAL PROJECT	SHEET No.	TOTAL SHEETS
11	SD	5	R29.1/R30.5	791	1012

Gregory A. Balzer
LICENSED LANDSCAPE ARCHITECT

July 19, 2013
PLANS APPROVAL DATE

LICENSED LANDSCAPE ARCHITECT Gregory A. Balzer 2015 STATE OF CALIFORNIA
10 Renewal Date 2-28-15
Renewal Date 7-19-13
Date

THE STATE OF CALIFORNIA OR ITS OFFICERS OR AGENTS SHALL NOT BE RESPONSIBLE FOR THE ACCURACY OR COMPLETENESS OF SCANNED COPIES OF THIS PLAN SHEET.

TO ACCOMPANY PLANS DATED 07-21-14

A

AB	AGGREGATE BASE
ABS	ACRYLONITRILE-BUTADIENE-STYRENE
AC	ASPHALT CONCRETE
ACC	ARMOR-CLAD CONDUCTORS
Adj	ADJACENT/ADJUSTABLE
AIC	AUXILIARY IRRIGATION CONTROLLER
Alt	ALTERNATIVE
AMEND	AMENDMENT
ARV	AIR RELEASE VALVE
AUTO	AUTOMATIC
AUX	AUXILIARY
AVB	ATMOSPHERIC VACUUM BREAKER

B

B&B	BALLED AND BURLAPPED
B/B	BRASS/BRONZE
B/B/PL	BRASS/BRONZE/PLASTIC
B/PL	BRASS/PLASTIC
BFM	BONDED FIBER MATRIX
Bit Ctd	BITUMINOUS COATED
BP	BOOSTER PUMP
BPA	BACKFLOW PREVENTER ASSEMBLY
BPE	BACKFLOW PREVENTER ENCLOSURE
BV	BALL VALVE

C

C	CONDUIT
CAP	CORRUGATED ALUMINUM PIPE
CARV	COMBINATION AIR RELEASE VALVE
CB	COUPLING BAND
CCA	CAM COUPLER ASSEMBLY
CEC	CONTROLLER ENCLOSURE CABINET
CHDPE	CORRUGATED HIGH DENSITY POLYETHYLENE
CL	CHAIN LINK
CNC	CONTROL AND NEUTRAL CONDUCTORS
Conc	CONCRETE
CP	COPPER PIPE
CS	COMPOST SOCK
CSP	CORRUGATED STEEL PIPE
CST	CENTER STRIP
CV	CHECK VALVE

D

Dia	DIAMETER
DIP	DUCTILE IRON PIPE
DIT	DRIP IRRIGATION TUBING
DG	DECOMPOSED GRANITE
DN	DIAMETER NOMINAL
DVA	DRIP VALVE ASSEMBLY

E

EC	EROSION CONTROL
ECTC	EROSION CONTROL TECHNOLOGY COUNCIL
Elect	ELECTRIC/ELECTRICAL
Elev	ELEVATION
ELL	ELBOW
ENCL	ENCLOSURE
EP	EDGE OF PAVEMENT
ES	EDGE OF SHOULDER
EST	END STRIP
ESTB	ESTABLISHMENT
ETW	EDGE OF TRAVELED WAY

F

F	FULL CIRCLE
F/P	FULL/PART CIRCLE
FCV	FLOW CONTROL VALVE
FERT	FERTILIZER
FG	FINISHED GRADE
FH	FLEXIBLE HOSE
FIPT	FEMALE IRON PIPE THREAD
FIS	FERTILIZER INJECTOR SYSTEM
FL	FLOW LINE
FR	FIBER ROLL
FS	FLOW SENSOR
FSC	FLOW SENSOR CABLE
FV	FLUSH VALVE

G

Galv	GALVANIZED
GARV	GARDEN VALVE
GARVA	GARDEN VALVE ASSEMBLY
GM	GRAVEL MULCH
GPH	GALLONS PER HOUR
GPM	GALLONS PER MINUTE
GSP	GALVANIZED STEEL PIPE
GV	GATE VALVE

H

H	HALF CIRCLE
HDPE	HIGH DENSITY POLYETHYLENE
HP	HORSEPOWER/HINGE POINT
HPL	HIGH PRESSURE LINE
Hwy	HIGHWAY

I

IC	IRRIGATION CONTROLLER
ICC	IRRIGATION CONTROLLER(S) IN CONTROLLER ENCLOSURE CABINET
ID	INSIDE DIAMETER
IFS	IRRIGATION FILTRATION SYSTEM
IPS	IRON PIPE SIZE
IPT	IRON PIPE THREAD
Irr	IRRIGATION

L

L	LENGTH

M

Max	MAXIMUM
MBGR	METAL BEAM GUARD RAILING
MCV	MANUAL CONTROL VALVE
MIC	MASTER IRRIGATION CONTROLLER
Min	MINIMUM
MIPT	MALE IRON PIPE THREAD
Misc	MISCELLANEOUS
Mtl	MATERIAL
MVP	MAINTENANCE VEHICLE PULLOUT

N

NCN	NO COMMON NAME
NL	NOZZLE LINE
No.	NUMBER
NPT	NATIONAL PIPE THREAD

O

O/C	ON CENTER
OD	OUTSIDE DIAMETER
OL	OVERLAP

P

P	PART CIRCLE
PB	PULL BOX
PCC	PORTLAND CEMENT CONCRETE
PE	POLYETHYLENE
Pkt	PACKET
PL	PLASTIC
PLS	PURE LIVE SEED
PLT	PLANT/PLANTING
PLT ESTB	PLANT ESTABLISHMENT
PM	POST MILE
PR	PRESSURE RATED
PRLV	PRESSURE RELIEF VALVE
PRV	PRESSURE REGULATING VALVE
PVC	POLYVINYL CHLORIDE
Pvmt	PAVEMENT

Q

Q	QUARTER CIRCLE
QCV	QUICK COUPLING VALVE

NOTE:
For additional abbreviations, see Standard Plans A10A and A10B.

R

R	RADIUS
RCP	REINFORCED CONCRETE PIPE
RCV	REMOTE CONTROL VALVE
RCVM	REMOTE CONTROL VALVE (MASTER)
RCVMF	REMOTE CONTROL VALVE (MASTER) W/FLOW SENSOR
RCVP	REMOTE CONTROL VALVE W/PRESSURE REGULATOR
RCW	RECYCLED WATER
RECP	ROLLED EROSION CONTROL PRODUCT
REQ	REQUIRED
RICS	REMOTE IRRIGATION CONTROL SYSTEM
R/W	RIGHT OF WAY

S

S	SLIP
SCH	SCHEDULE
SF	STATE-FURNISHED
Shld	SHOULDER
Sq	SQUARE
SST	SIDE STRIP
Sta	STATION
Std	STANDARD
SW	SIDEWALK/SOUND WALL

T

T	THIRD CIRCLE/THREAD
TLS	TRUCK LOADING STANDPIPE
TQ	THREE QUARTER CIRCLE
TRM	TURF REINFORCEMENT MAT
TT	TWO-THIRDS CIRCLE
TWSA	TREE WELL SPRINKLER ASSEMBLY
Typ	TYPICAL

U

UG	UNDERGROUND

W

W	WIDTH
W/	WITH
WM	WATER METER
WS	WYE STRAINER
WSA	WYE STRAINER ASSEMBLY
WSP	WELDED STEEL PIPE
WWM	WELDED WIRE MESH

STATE OF CALIFORNIA
DEPARTMENT OF TRANSPORTATION

LANDSCAPE AND EROSION CONTROL ABBREVIATIONS

NO SCALE

RSP H1 DATED JULY 19, 2013 SUPERSEDES STANDARD PLAN H1
DATED MAY 20, 2011 - PAGE 218 OF THE STANDARD PLANS BOOK DATED 2010.

REVISED STANDARD PLAN RSP H1

2010 REVISED STANDARD PLAN RSP H1

6-28-13

Dist	COUNTY	ROUTE	POST MILES TOTAL PROJECT	SHEET No.	TOTAL SHEETS
11	SD	5	R29.1/R30.5	792	1012

Gregory A. Balzer
LICENSED LANDSCAPE ARCHITECT

JULY 19, 2013
PLANS APPROVAL DATE

LICENSED LANDSCAPE ARCHITECT
Gregory A. Balzer 2576
Signature
2-28-15
Renewal Date
7-19-13
Date
STATE OF CALIFORNIA

THE STATE OF CALIFORNIA OR ITS OFFICERS OR AGENTS SHALL NOT BE RESPONSIBLE FOR THE ACCURACY OR COMPLETENESS OF SCANNED COPIES OF THIS PLAN SHEET.

TO ACCOMPANY PLANS DATED 07-21-14

EXISTING	NEW	ITEM DESCRIPTION
		WATER METER (WM)
		BACKFLOW PREVENTER ASSEMBLY (BPA)
		BACKFLOW PREVENTER ENCLOSURE (BPE)
		BOOSTER PUMP (BP)
		TRUCK LOADING STANDPIPE (TLS)
FS	FS	FLOW SENSOR (FS)
		MASTER IRRIGATION CONTROLLER (MIC)
		AUXILIARY IRRIGATION CONTROLLER (AIC)
		IRRIGATION CONTROLLER (IC) IRRIGATION CONTROLLER (IC) (BATTERY) IRRIGATION CONTROLLER (IC) (SOLAR) IRRIGATION CONTROLLER (IC) (TWO WIRE) IRRIGATION CONTROLLER(S) IN CONTROLLER ENCLOSURE CABINET (ICC)
acc	ACC	ARMOR-CLAD CONDUCTORS (ACC)
cnc	CNC	CONTROL AND NEUTRAL CONDUCTORS (CNC)
		IRRIGATION CONDUIT
		EXTEND IRRIGATION CROSSOVER
dip	DIP	DUCTILE IRON PIPE (SUPPLY LINE) (MAIN) (DIP)
		GALVANIZED STEEL PIPE (SUPPLY LINE) (MAIN) (GSP)
		GALVANIZED STEEL PIPE (SUPPLY LINE) (LATERAL) (GSP)
		PLASTIC PIPE (SUPPLY LINE) (MAIN)
		PLASTIC PIPE (SUPPLY LINE) (LATERAL)
cp	CP	COPPER PIPE (SUPPLY LINE)
dit	DIT	DRIP IRRIGATION TUBING
		REMOTE CONTROL VALVE (RCV) REMOTE CONTROL VALVE (MASTER) (RCVM) REMOTE CONTROL VALVE (MASTER) W/FLOW METER (RCVMF)
P	P	REMOTE CONTROL VALVE W/PRESSURE REGULATOR (RCVP)
		EXISTING MANUAL CONTROL VALVE (MCV)
		DRIP VALVE ASSEMBLY (DVA)
		WYE STRAINER ASSEMBLY (WSA)

EXISTING	NEW	ITEM DESCRIPTION
		GATE VALVE (GV)
		BALL VALVE (BV)
		QUICK COUPLING VALVE (QCV)
		CAM COUPLER ASSEMBLY (CCA)
		GARDEN VALVE ASSEMBLY (GARVA)
		PRESSURE REGULATING VALVE (PRV)
		PRESSURE RELIEF VALVE (PRLV)
		FLOW CONTROL VALVE (FCV)
		COMBINATION AIR RELEASE VALVE (CARV)
		CHECK VALVE (CV)
		FLUSH VALVE (FV)
		EXISTING NOZZLE LINE W/TURNING UNION
		EXISTING IRRIGATION SYSTEM
		EXISTING IRRIGATION SYSTEM TO BE REMOVED
		CHAIN LINK GATE
		QUICK COUPLING VALVE W/SPRINKLER PROTECTOR
3	3	SPRINKLER W/SPRINKLER PROTECTOR
	C	CONNECT TO EXISTING SYSTEM
		CAP
		CAP EXISTING
	\\\FR\\\	FIBER ROLL
	\\\CS\\\	COMPOST SOCK

RCV SIZE
IRRIGATION CONTROLLER
CONTROLLER STATION
VALVE IN PARALLEL (IF APPLICABLE)
GPM
QUANTITY OF SPRINKLERS (WHEN SHOWN)

* 2½"-A-2b-40-60

VALVE CODE

* VALVE CODES FOR EXISTING VALVES ARE SHOWN IN A DASHED ENCLOSURE.

STATE OF CALIFORNIA
DEPARTMENT OF TRANSPORTATION

LANDSCAPE AND EROSION CONTROL SYMBOLS

NO SCALE

RSP H2 DATED JULY 19, 2013 SUPERSEDES STANDARD PLAN H2
DATED MAY 20, 2011 - PAGE 219 OF THE STANDARD PLANS BOOK DATED 2010.

REVISED STANDARD PLAN RSP H2

2010 REVISED STANDARD PLAN RSP H2

6-28-13

Dist	COUNTY	ROUTE	POST MILES TOTAL PROJECT	SHEET No.	TOTAL SHEETS
11	SD	5	R29.1/R30.5	793	1012

Gregory A Balzer
LICENSED LANDSCAPE ARCHITECT

July 19, 2013
PLANS APPROVAL DATE

LICENSED LANDSCAPE ARCHITECT
Gregory A. Balzer 2515
09-30-14
Renewal Date
2-28-15
Renewal Date
7-19-13
Date
STATE OF CALIFORNIA

THE STATE OF CALIFORNIA OR ITS OFFICERS OR AGENTS SHALL NOT BE RESPONSIBLE FOR THE ACCURACY OR COMPLETENESS OF SCANNED COPIES OF THIS PLAN SHEET.

TO ACCOMPANY PLANS DATED 07-21-14

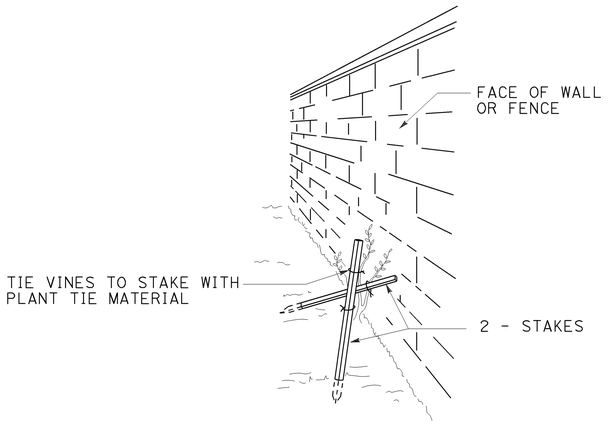

PERSPECTIVE
VINE STAKING

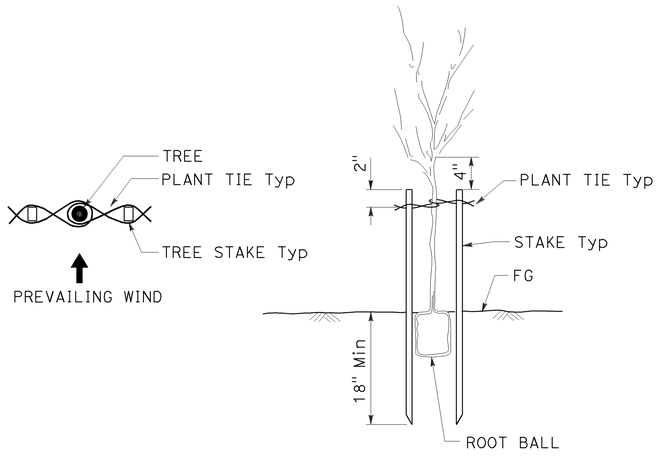

TREE STAKING

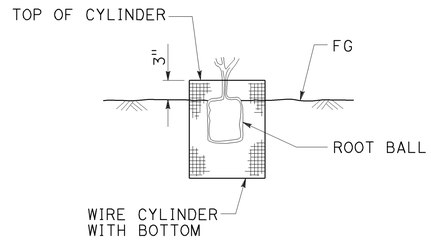

SECTION
ROOT PROTECTOR

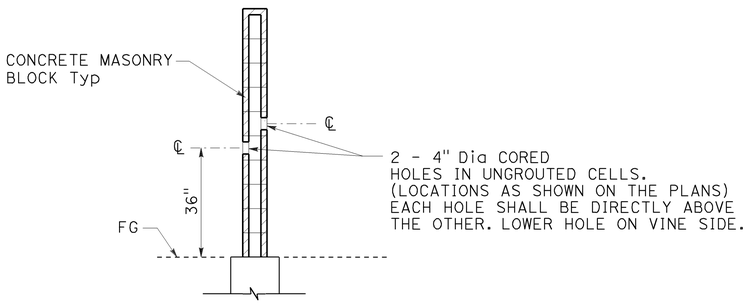

SECTION
CORE HOLE (VINE)

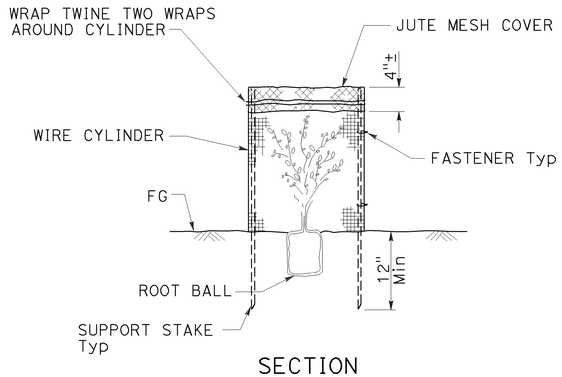

SECTION
FOLIAGE PROTECTOR

STATE OF CALIFORNIA
DEPARTMENT OF TRANSPORTATION

LANDSCAPE DETAILS

NO SCALE

RSP H4 DATED JULY 19, 2013 SUPERSEDES STANDARD PLAN H4
DATED MAY 20, 2011 - PAGE 221 OF THE STANDARD PLANS BOOK DATED 2010.

REVISED STANDARD PLAN RSP H4

2010 REVISED STANDARD PLAN RSP H4

6-28-13

Dist	COUNTY	ROUTE	POST MILES TOTAL PROJECT	SHEET No.	TOTAL SHEETS
11	SD	5	R29.1/R30.5	794	1012

LICENSED LANDSCAPE ARCHITECT

July 19, 2013
PLANS APPROVAL DATE

THE STATE OF CALIFORNIA OR ITS OFFICERS OR AGENTS SHALL NOT BE RESPONSIBLE FOR THE ACCURACY OR COMPLETENESS OF SCANNED COPIES OF THIS PLAN SHEET.

LICENSED LANDSCAPE ARCHITECT — Gregory A. Balzer 2516 — 10-31-14 Renewal Date — 2-28-15 Renewal Date — 7-19-13 Date — STATE OF CALIFORNIA

TO ACCOMPANY PLANS DATED 07-21-14

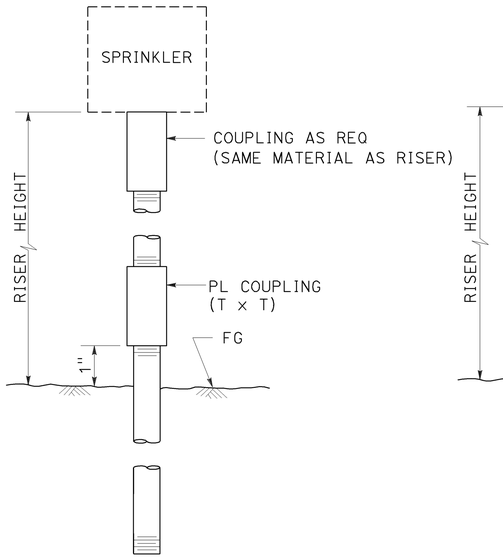

ELEVATION

RISER SPRINKLER ASSEMBLY TYPE I

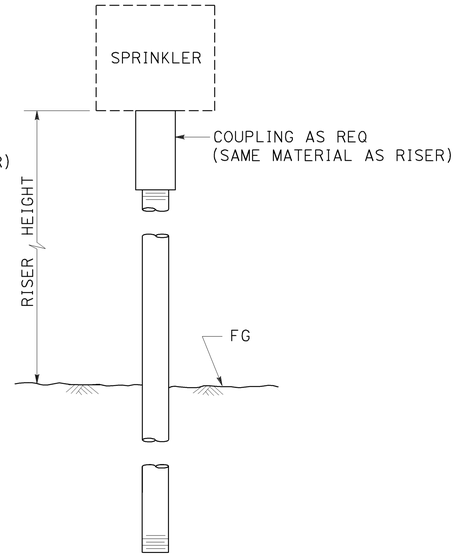

ELEVATION

RISER SPRINKLER ASSEMBLY TYPE II

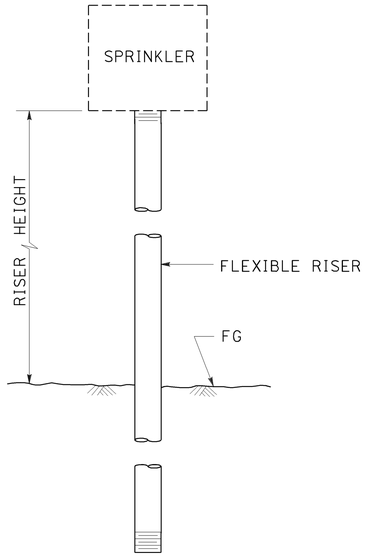

ELEVATION

RISER SPRINKLER ASSEMBLY TYPE III

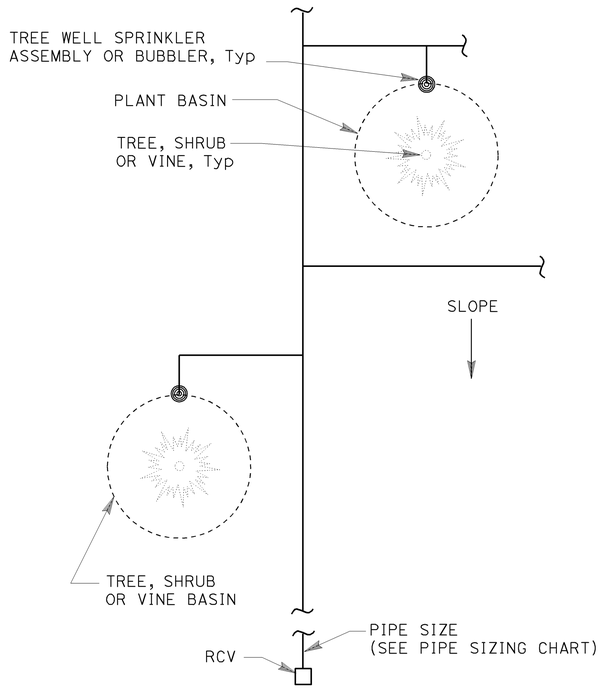

PLAN

NOTES:

1. Install tree well sprinkler assembly on up-hill side of plant when on slope.
2. Install bubbler within basin.

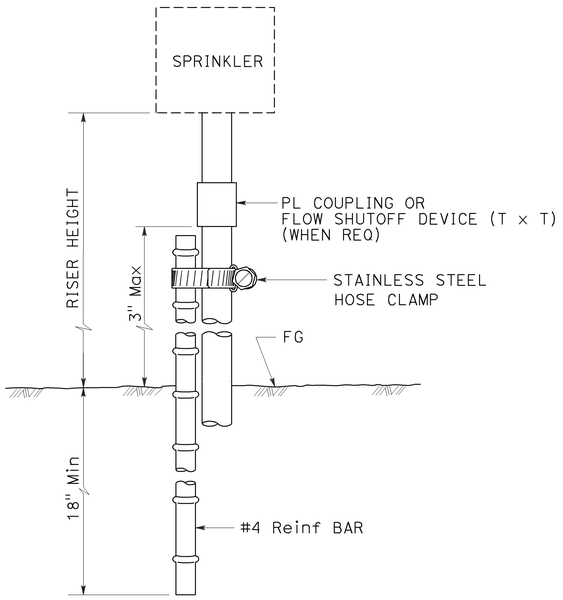

ELEVATION

RISER SPRINKLER ASSEMBLY TYPE IV

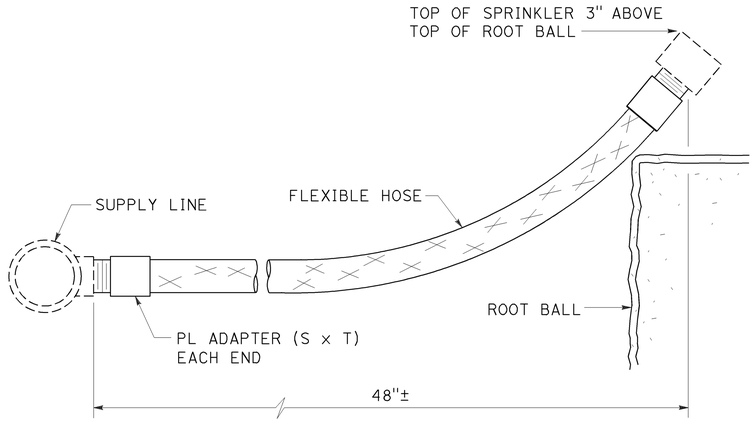

ELEVATION

RISER SPRINKLER ASSEMBLY TYPE V

PLAN

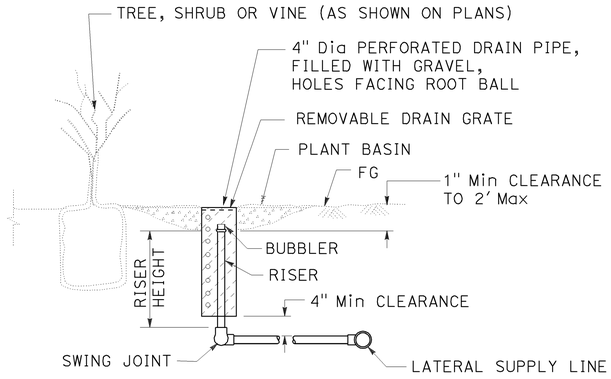

SECTION

TREE WELL SPRINKLER ASSEMBLY

STATE OF CALIFORNIA
DEPARTMENT OF TRANSPORTATION

LANDSCAPE DETAILS

NO SCALE

RSP H5 DATED JULY 19, 2013 SUPERSEDES STANDARD PLAN H5
DATED MAY 20, 2011 - PAGE 222 OF THE STANDARD PLANS BOOK DATED 2010.

REVISED STANDARD PLAN RSP H5

2010 REVISED STANDARD PLAN RSP H5

6-28-13

Dist	COUNTY	ROUTE	POST MILES TOTAL PROJECT	SHEET No.	TOTAL SHEETS
11	SD	5	R29.1/R30.5	795	1012

Gregory A. Balzer
LICENSED LANDSCAPE ARCHITECT

July 19, 2013
PLANS APPROVAL DATE

LICENSED LANDSCAPE ARCHITECT
Gregory A. Balzer 2576
Signature
2-28-15
Renewal Date
7-19-13
Date
STATE OF CALIFORNIA

THE STATE OF CALIFORNIA OR ITS OFFICERS OR AGENTS SHALL NOT BE RESPONSIBLE FOR THE ACCURACY OR COMPLETENESS OF SCANNED COPIES OF THIS PLAN SHEET.

TO ACCOMPANY PLANS DATED 07-21-14

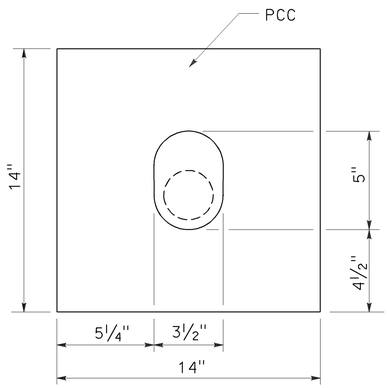

PLAN

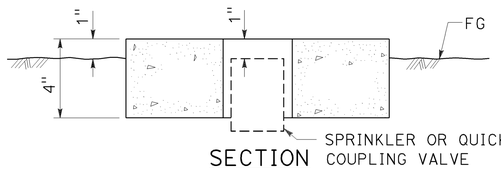

SECTION
SPRINKLER PROTECTOR TYPE I

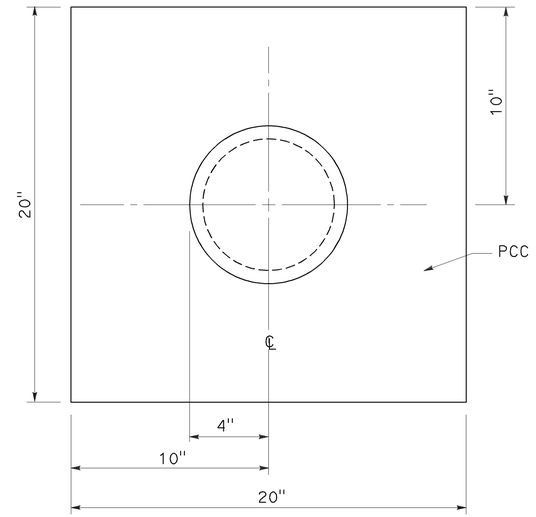

PLAN

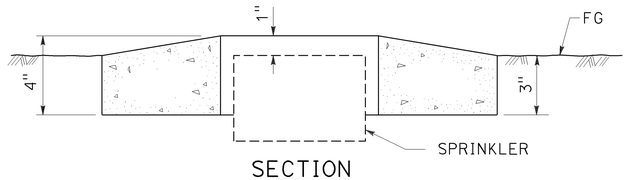

SECTION
SPRINKLER PROTECTOR TYPE II

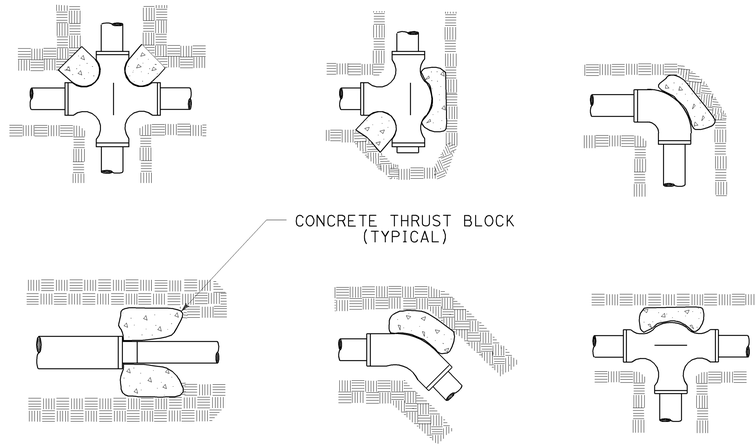

TYPICAL THRUST BLOCKS

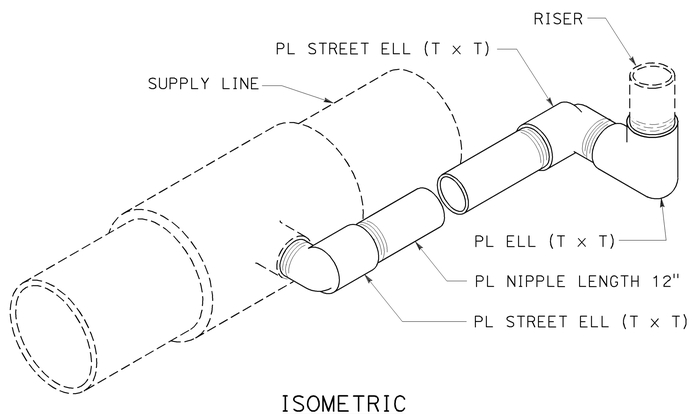

ISOMETRIC
POP-UP SPRINKLER ASSEMBLY TYPE I

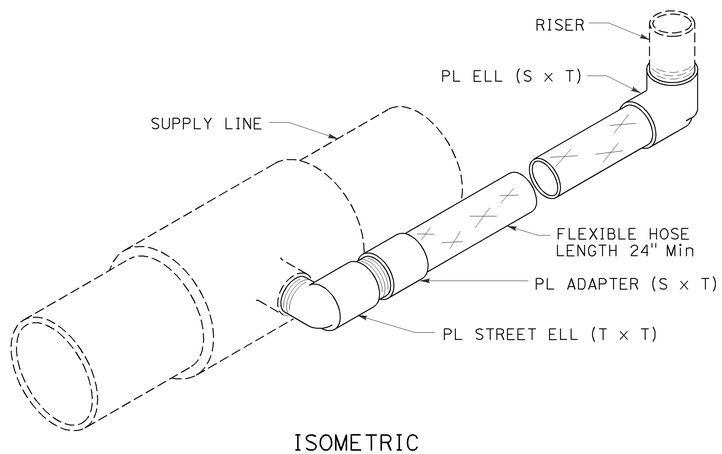

ISOMETRIC
POP-UP SPRINKLER ASSEMBLY TYPE II

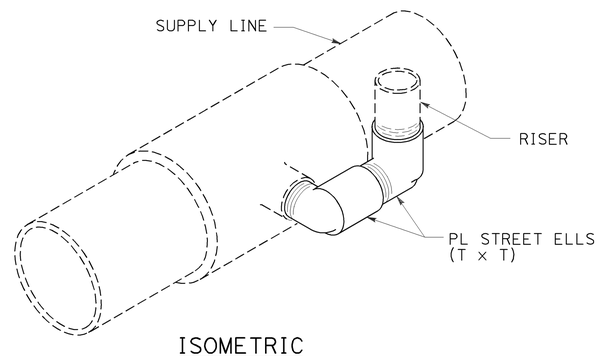

ISOMETRIC
POP-UP SPRINKLER ASSEMBLY TYPE III

STATE OF CALIFORNIA
DEPARTMENT OF TRANSPORTATION

LANDSCAPE DETAILS

NO SCALE

RSP H6 DATED JULY 19, 2013 SUPERSEDES STANDARD PLAN H6
DATED MAY 20, 2011 - PAGE 223 OF THE STANDARD PLANS BOOK DATED 2010.

REVISED STANDARD PLAN RSP H6

2010 REVISED STANDARD PLAN RSP H6

6-28-13

Dist	COUNTY	ROUTE	POST MILES TOTAL PROJECT	SHEET No.	TOTAL SHEETS
11	SD	5	R29.1/R30.5	796	1012

Gregory A Balzer
LICENSED LANDSCAPE ARCHITECT

July 19, 2013
PLANS APPROVAL DATE

LICENSED LANDSCAPE ARCHITECT
Gregory A. Balzer 2576
Signature
2-28-15
Renewal Date
7-19-13
Date
STATE OF CALIFORNIA

THE STATE OF CALIFORNIA OR ITS OFFICERS OR AGENTS SHALL NOT BE RESPONSIBLE FOR THE ACCURACY OR COMPLETENESS OF SCANNED COPIES OF THIS PLAN SHEET.

TO ACCOMPANY PLANS DATED 07-21-14

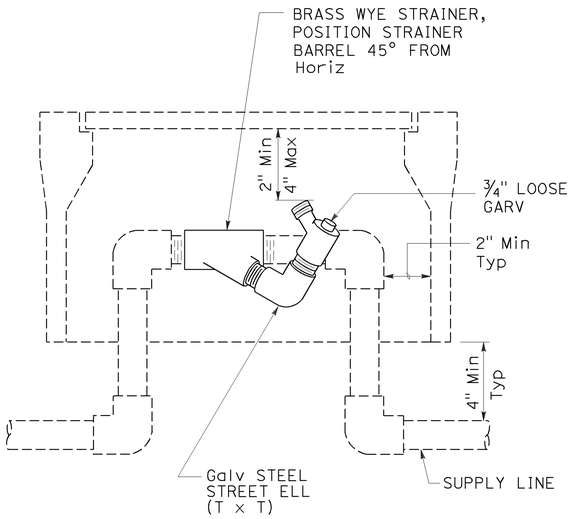

ELEVATION
WYE STRAINER ASSEMBLY

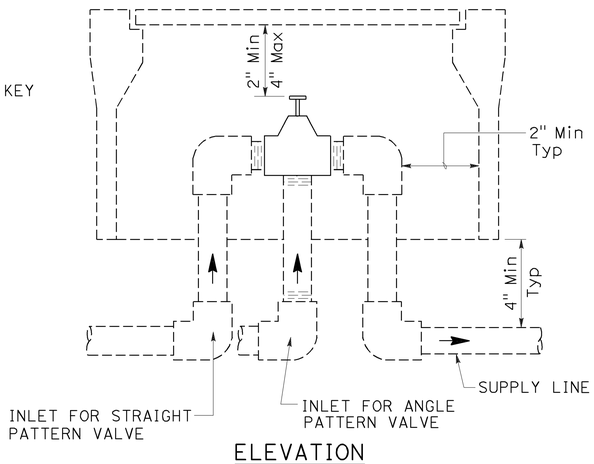

ELEVATION
VALVE

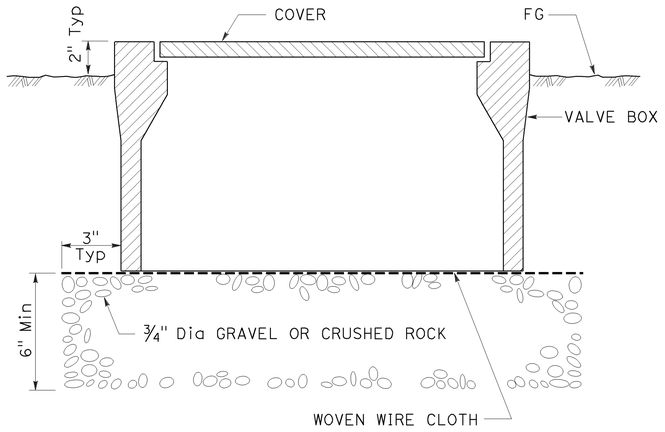

SECTION
VALVE BOX

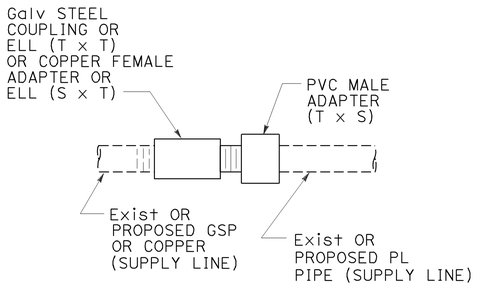

GALVANIZED OR COPPER PIPE
CONNECTION TO PLASTIC PIPE

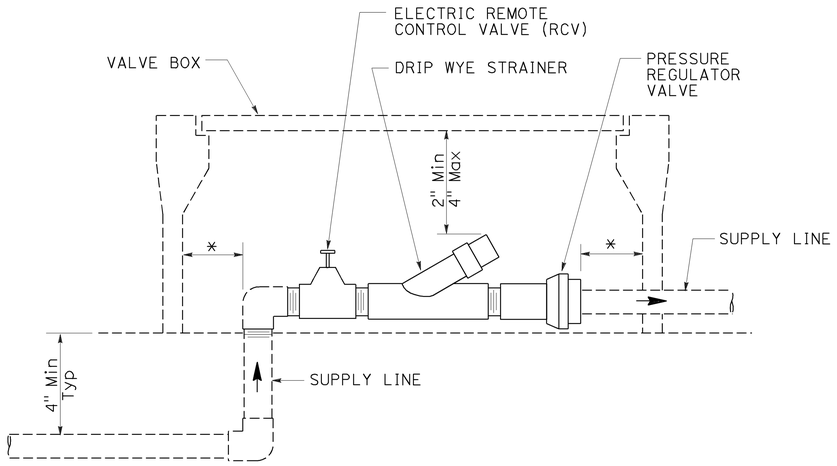

* 2" CLEARANCE ON ALL SIDES

ELEVATION
DRIP VALVE ASSEMBLY

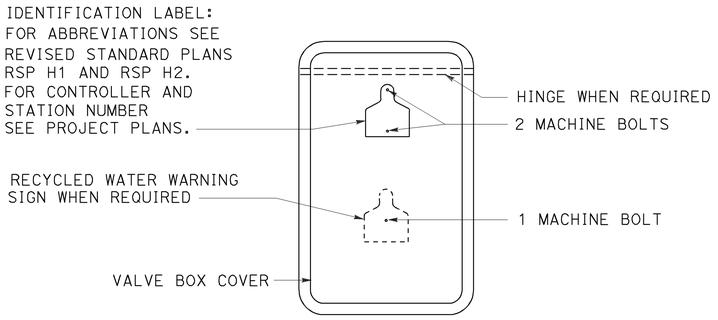

PLAN

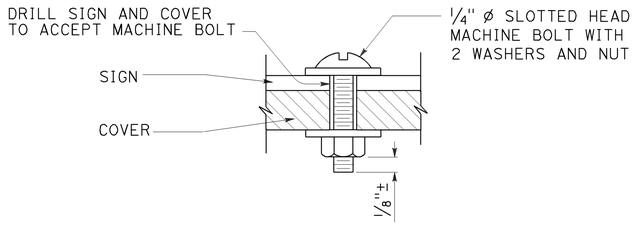

SECTION
VALVE BOX IDENTIFICATION

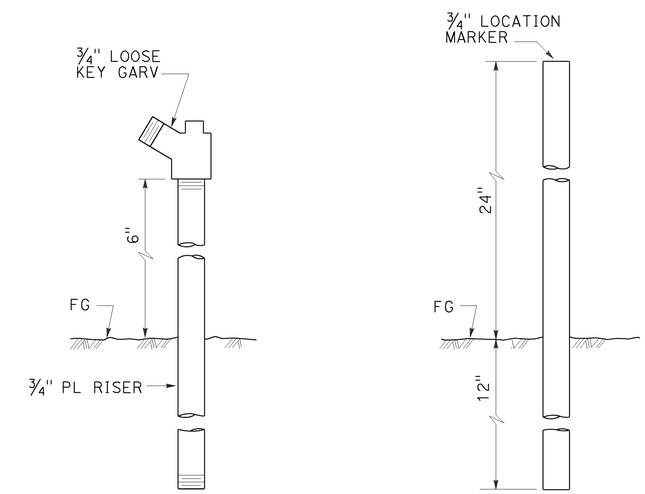

ELEVATION
GARDEN VALVE ASSEMBLY

ELEVATION
LOCATION MARKER

GARDEN VALVE ASSEMBLY

STATE OF CALIFORNIA
DEPARTMENT OF TRANSPORTATION

LANDSCAPE DETAILS

NO SCALE

RSP H7 DATED JULY 19, 2013 SUPERSEDES STANDARD PLAN H7
DATED MAY 20, 2011 - PAGE 224 OF THE STANDARD PLANS BOOK DATED 2010.

REVISED STANDARD PLAN RSP H7

2010 REVISED STANDARD PLAN RSP H7

6-20-13

Dist	COUNTY	ROUTE	POST MILES TOTAL PROJECT	SHEET No.	TOTAL SHEETS
11	SD	5	R29.1/R30.5	797	1012

Gregory A. Balzer
LICENSED LANDSCAPE ARCHITECT

July 19, 2013
PLANS APPROVAL DATE

LICENSED LANDSCAPE ARCHITECT
Gregory A. Balzer 2576
Signature
2-28-15
Renewal Date
7-19-13
Date
STATE OF CALIFORNIA

THE STATE OF CALIFORNIA OR ITS OFFICERS OR AGENTS SHALL NOT BE RESPONSIBLE FOR THE ACCURACY OR COMPLETENESS OF SCANNED COPIES OF THIS PLAN SHEET.

TO ACCOMPANY PLANS DATED 07-21-14

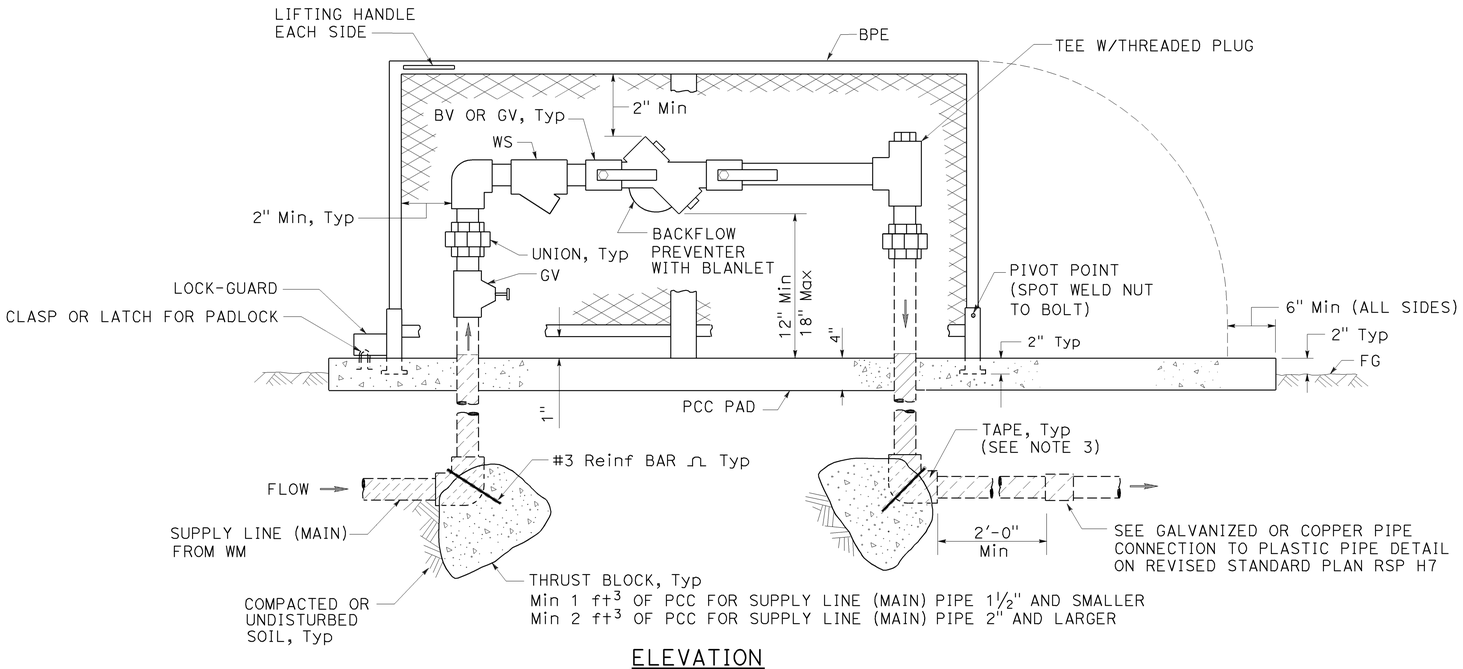

ELEVATION

BACKFLOW PREVENTER ASSEMBLY

IN ONE PIECE ENCLOSURE

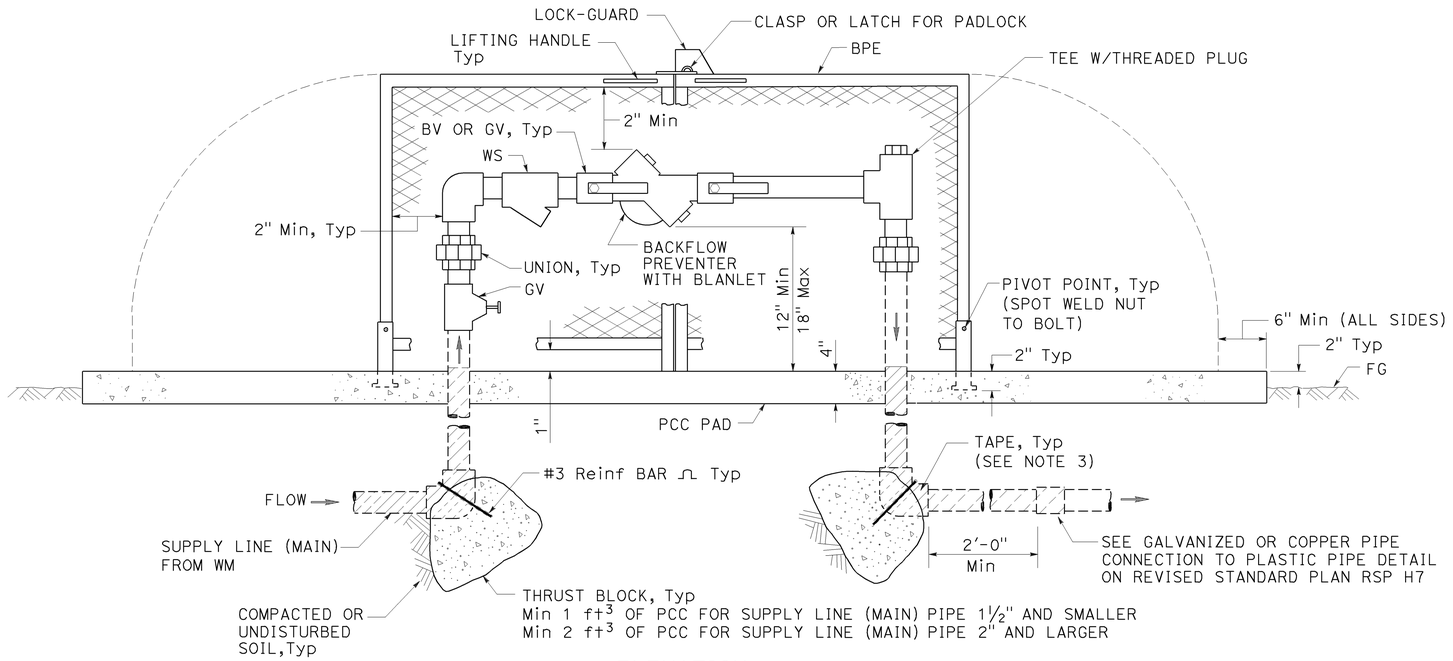

ELEVATION

BACKFLOW PREVENTER ASSEMBLY

IN TWO PIECE ENCLOSURE

NOTES:

1. Wye strainer and fittings must be the same size as the backflow preventer shown on the plans.
2. Backflow preventer assembly manifold pipe must be the same pipe as the supply line (main) pipe to be installed from the water meter to the backflow preventer assembly.
3. All metal in contact with soil and Portland Cement Concrete must be wrapped with 2" wide plastic backed adhesive polyethylene tape 20 mil thick with ½" overlap.

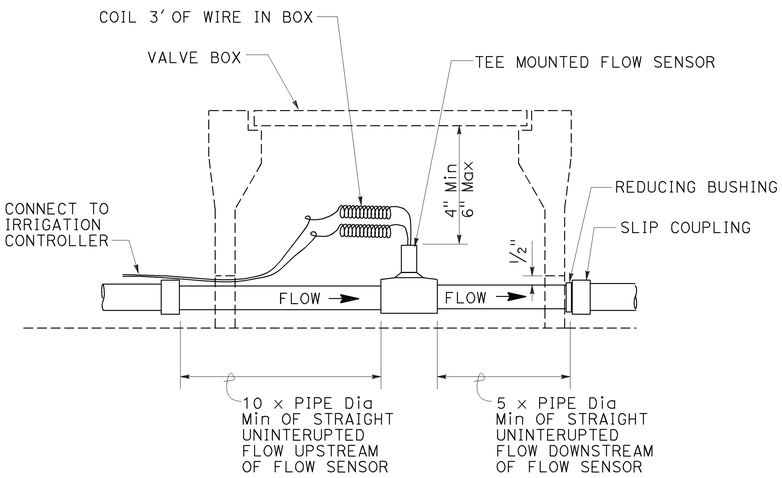

SECTION

FLOW SENSOR

STATE OF CALIFORNIA
DEPARTMENT OF TRANSPORTATION

LANDSCAPE DETAILS

NO SCALE

RSP H8 DATED JULY 19, 2013 SUPERSEDES STANDARD PLAN H8
DATED MAY 20, 2011 - PAGE 225 OF THE STANDARD PLANS BOOK DATED 2010.

REVISED STANDARD PLAN RSP H8

2010 REVISED STANDARD PLAN RSP H8

Dist	COUNTY	ROUTE	POST MILES TOTAL PROJECT	SHEET No.	TOTAL SHEETS
11	SD	5	R29.1/R30.5	798	1012

Gregory A. Balzer
LICENSED LANDSCAPE ARCHITECT

July 19, 2013
PLANS APPROVAL DATE

THE STATE OF CALIFORNIA OR ITS OFFICERS OR AGENTS SHALL NOT BE RESPONSIBLE FOR THE ACCURACY OR COMPLETENESS OF SCANNED COPIES OF THIS PLAN SHEET.

LICENSED LANDSCAPE ARCHITECT
Gregory A. Balzer 2515
10
2-28-15
Renewal Date
7-19-13
Date
STATE OF CALIFORNIA

TO ACCOMPANY PLANS DATED 07-21-14

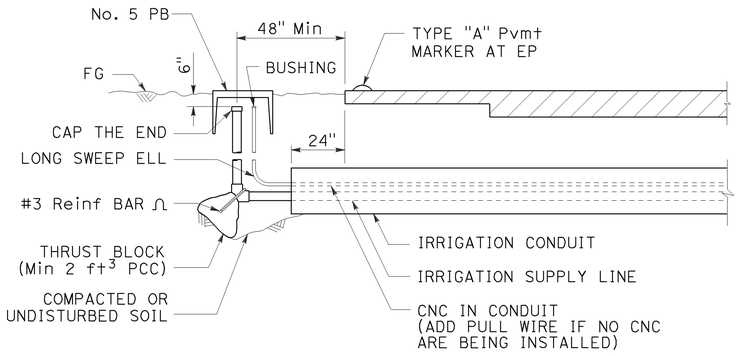

SECTION

IRRIGATION CONDUIT

UNDER TRAVELED WAY

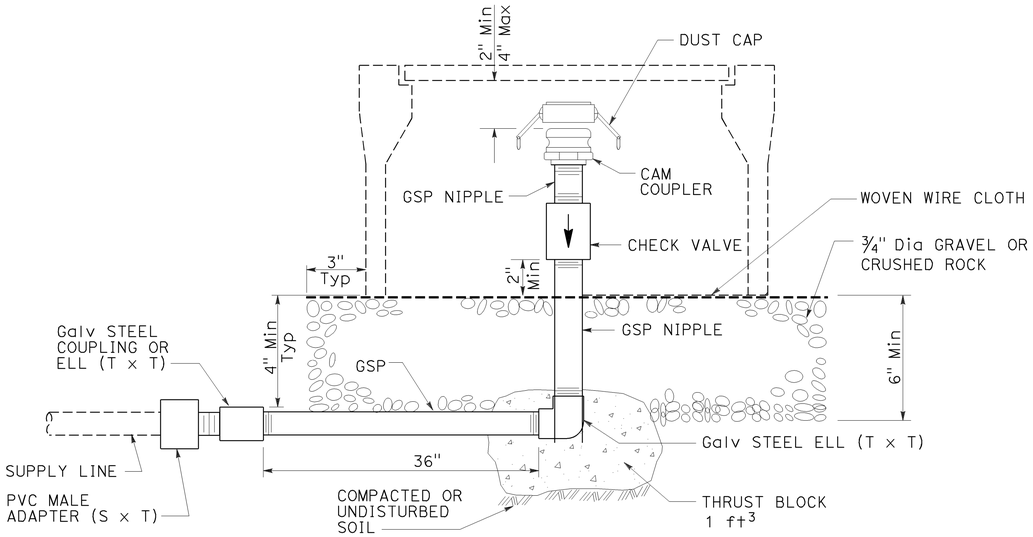

ELEVATION

CAM COUPLER ASSEMBLY

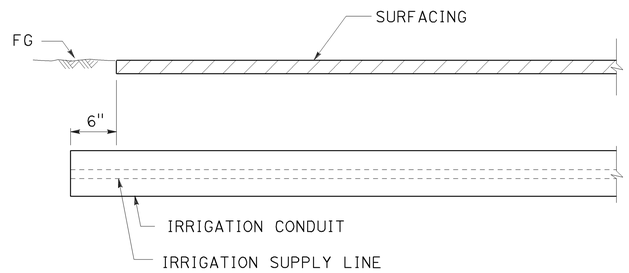

SECTION

IRRIGATION CONDUIT

UNDER SIDEWALKS, DRIVEWAYS AND PATHS

STATE OF CALIFORNIA
DEPARTMENT OF TRANSPORTATION

LANDSCAPE DETAILS

NO SCALE

RSP H9 DATED JULY 19, 2013 SUPERSEDES STANDARD PLAN H9
DATED MAY 20, 2011 - PAGE 226 OF THE STANDARD PLANS BOOK DATED 2010.

REVISED STANDARD PLAN RSP H9

2010 REVISED STANDARD PLAN RSP H9

6-28-13

Dist	COUNTY	ROUTE	POST MILES TOTAL PROJECT	SHEET No.	TOTAL SHEETS
11	SD	5	R29.1/R30.5	799	1012

Gregory A. Balzer
LICENSED LANDSCAPE ARCHITECT

July 19, 2013
PLANS APPROVAL DATE

THE STATE OF CALIFORNIA OR ITS OFFICERS OR AGENTS SHALL NOT BE RESPONSIBLE FOR THE ACCURACY OR COMPLETENESS OF SCANNED COPIES OF THIS PLAN SHEET.

LICENSED LANDSCAPE ARCHITECT — Gregory A. Balzer 2576 — 10-31-14 Date — 2-28-15 Renewal Date — 7-19-13 Date — STATE OF CALIFORNIA

TO ACCOMPANY PLANS DATED 07-21-14

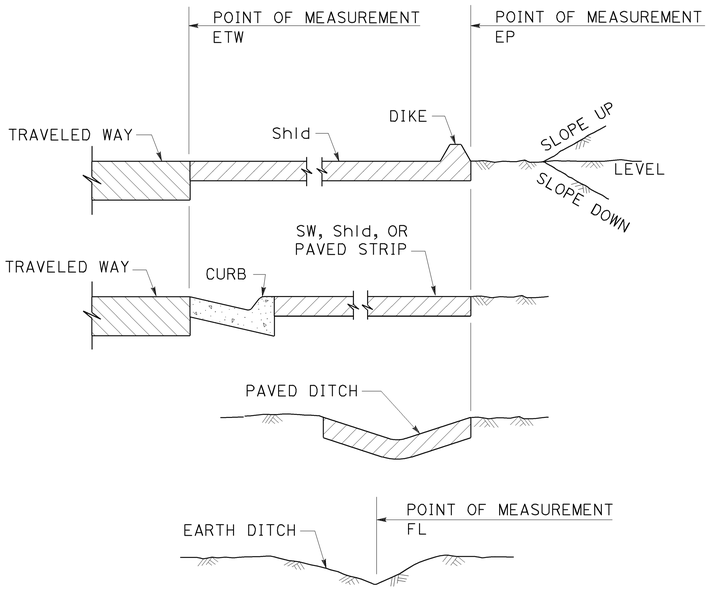

SECTION

POINTS OF MEASUREMENT

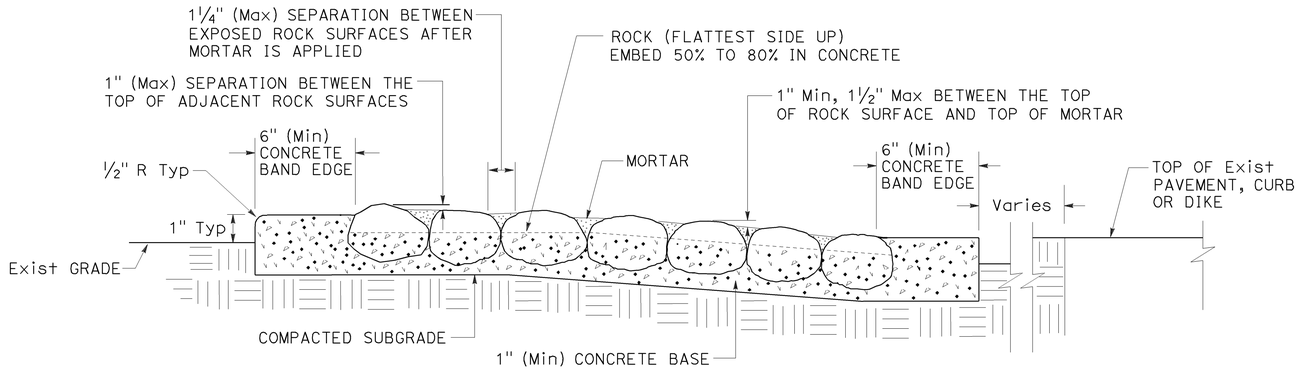

SECTION

ROCK BLANKET

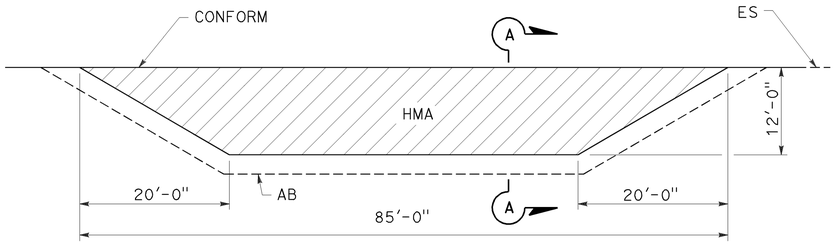

PLAN

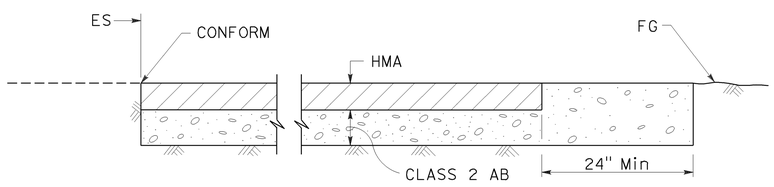

SECTION A-A

MAINTENANCE VEHICLE PULLOUT

STATE OF CALIFORNIA
DEPARTMENT OF TRANSPORTATION

LANDSCAPE DETAILS

NO SCALE

RSP H9A DATED JULY 19, 2013 SUPPLEMENTS THE STANDARD PLANS BOOK DATED 2010.

REVISED STANDARD PLAN RSP H9A

2010 REVISED STANDARD PLAN RSP H9A

6-21-13

Dist	COUNTY	ROUTE	POST MILES TOTAL PROJECT	SHEET No.	TOTAL SHEETS
11	SD	5	R29.1/R30.5	800	1012

REGISTERED CIVIL ENGINEER

July 19, 2013
PLANS APPROVAL DATE

REGISTERED PROFESSIONAL ENGINEER
Gurinderpal Bhullar
No. C48815
Exp. 9-30-14
CIVIL
STATE OF CALIFORNIA

THE STATE OF CALIFORNIA OR ITS OFFICERS OR AGENTS SHALL NOT BE RESPONSIBLE FOR THE ACCURACY OR COMPLETENESS OF SCANNED COPIES OF THIS PLAN SHEET.

TO ACCOMPANY PLANS DATED 07-21-14

TABLE 1

TAPER LENGTH CRITERIA AND CHANNELIZING DEVICE SPACING

SPEED (S)	MINIMUM TAPER LENGTH * FOR WIDTH OF OFFSET 12 FEET (W)				MAXIMUM CHANNELIZING DEVICE SPACING		
					X	Y	Z **
	TANGENT 2L	MERGING L	SHIFTING L/2	SHOULDER L/3	TAPER	TANGENT	CONFLICT
mph	ft	ft	ft	ft	ft	ft	ft
20	160	80	40	27	20	40	10
25	250	125	63	42	25	50	12
30	360	180	90	60	30	60	15
35	490	245	123	82	35	70	17
40	640	320	160	107	40	80	20
45	1080	540	270	180	45	90	22
50	1200	600	300	200	50	100	25
55	1320	660	330	220	55	110	27
60	1440	720	360	240	60	120	30
65	1560	780	390	260	65	130	32
70	1680	840	420	280	70	140	35

* - For other offsets, use the following merging taper length formula for L:
For speed of 40 mph or less, $L = WS^2/60$
For speed of 45 mph or more, $L = WS$

Where: L = Taper length in feet
W = Width of offset in feet
S = Posted speed limit, off-peak 85th-percentile speed prior to work starting, or the anticipated operating speed in mph

** - Use for taper and tangent sections where there are no pavement markings or where there is a conflict between existing pavement markings and channelizers (CA).

TABLE 2

LONGITUDINAL BUFFER SPACE AND FLAGGER STATION SPACING

SPEED *	Min D **	DOWNGRADE Min D ***		
		-3%	-6%	-9%
mph	ft	ft	ft	ft
20	115	116	120	126
25	155	158	165	173
30	200	205	215	227
35	250	257	271	287
40	305	315	333	354
45	360	378	400	427
50	425	446	474	507
55	495	520	553	593
60	570	598	638	686
65	645	682	728	785
70	730	771	825	891

* - Speed is posted speed limit, off-peak 85th-percentile speed prior to work starting, or the anticipated operating speed in mph

** - Longitudinal buffer space or flagger station spacing

*** - Use on sustained downgrade steeper than -3 percent and longer than 1 mile.

TABLE 3

ADVANCE WARNING SIGN SPACING

ROAD TYPE	DISTANCE BETWEEN SIGNS *		
	A	B	C
	ft	ft	ft
URBAN - 25 mph OR LESS	100	100	100
URBAN - MORE THAN 25 mph TO 40 mph	250	250	250
URBAN - MORE THAN 40 mph	350	350	350
RURAL	500	500	500
EXPRESSWAY / FREEWAY	1000	1500	2640

* - The distances are approximate, are intended for guidance purposes only, and should be applied with engineering judgment. These distances should be adjusted by the Engineer for field conditions, if necessary, by increasing or decreasing the recommmended distances.

2010 REVISED STANDARD PLAN RSP T9

STATE OF CALIFORNIA
DEPARTMENT OF TRANSPORTATION

TRAFFIC CONTROL SYSTEM TABLES FOR LANE AND RAMP CLOSURES

NO SCALE

RSP T9 DATED JULY 19, 2013 SUPERSEDES RSP T9 DATED APRIL 19, 2013 THAT SUPPLEMENTS THE STANDARD PLANS BOOK DATED 2010.

REVISED STANDARD PLAN RSP T9

4-30-13