Dist	COUNTY	ROUTE	POST MILES TOTAL PROJECT	SHEET No.	TOTAL SHEETS
08	SBd	15	177.3/181.1	201	710

Michael M. Babich
LICENSED LANDSCAPE ARCHITECT

2-25-13
PLANS APPROVAL DATE

LICENSED LANDSCAPE ARCHITECT M. M. BABICH 4021 Signature 1-31-14 Renewal Date 12-14-12 Date STATE OF CALIFORNIA

THE STATE OF CALIFORNIA OR ITS OFFICERS OR AGENTS SHALL NOT BE RESPONSIBLE FOR THE ACCURACY OR COMPLETENESS OF SCANNED COPIES OF THIS PLAN SHEET.

SPRINKLER SCHEDULE

SYMBOL	TYPE	DESCRIPTION	SPRAY PATTERN	OPERATING PRESSURE (PSI)	PRESSURE COMPENSATING	PLUS/MINUS 5% ② DISCHARGE GALLONS PER MINUTE (GPM)	DISCHARGE GALLONS PER HOUR (GPH)	RADIUS (Ft)	WIDTH x LENGTH (Ft)	MATERIAL	NOZZLE SIZE (INCH)	INLET CONNECTION (NPT INCH)	POSITIVE-LOCKING ADJ ARC STOP	BACKSPLASH PREVENTER	DIFFUSER PIN	DISTANCE CONTROL FLAP	ADJ DISCHARGE	RISER TYPE	RISER MATERIAL PLASTIC	RISER MATERIAL GALVANIZED	RISER SIZE (IPS INCH)	RISER HEIGHT (INCH)	RISER FLOW SHUTOFF DEVICE	⑤ SWING JOINT (TYPE)	RISER SUPPORT	SPRINKLER PROTECTOR (TYPE)	REMARKS
●	C-2	BUBBLER	—	20-90	X	.25	—	—	—	PL	—	½"	—	—	—	—	—	=	X	—	½"	6"	—	-	—	—	

X IN BOX DENOTES REQUIREMENT

APPLICABLE WHEN CIRCLED BELOW:

1 - See Special Provisions.
2 - If a pressure compensating device is specified, the discharge and radii shown reflect its use.
3 - Arc Stop shall be fitted with a nut and bolt.
4 - Vinyl-coated cast iron housing.
5 - Swing Joints required adjacent to shoulders, curbs, sidewalks, and dikes.
6 - Unless otherwise shown on plans.
7 See Details

ABBREVIATIONS

F — full circle
P — part circle
F/P — full/part circle
Q — quarter circle
T — third circle
H — half circle
TT — two third circle
TQ — three quarter circle
CST — center strip
SST — side strip
EST — end strip
Ft — feet/foot
GPM — gallons per minute
GPH — gallons per hour
Adj — adjustable
PL — plastic
B/B — brass/bronze
B/PL — brass/plastic
B/B/PL — brass/bronze/plastic
NPT — national pipe thread
IPS — iron pipe size
PSI — pounds per square inch

SPRINKLER SCHEDULE
LD-3

STATE OF CALIFORNIA - DEPARTMENT OF TRANSPORTATION
Caltrans LANDSCAPE ARCHITECTURE

SENIOR LANDSCAPE ARCHITECT: RAY DESSELLE
CALCULATED-DESIGNED BY: MICHAEL M. BABICH
CHECKED BY: MARIA I. ARIAS
REVISED BY
DATE REVISED

LAST REVISION 12-14-12
DATE PLOTTED => 26-FEB-2013
TIME PLOTTED => 09:40

Dist	COUNTY	ROUTE	POST MILES TOTAL PROJECT	SHEET No.	TOTAL SHEETS
08	SBd	15	177.3/181.1	202	710

Michael M. Babich
LICENSED LANDSCAPE ARCHITECT

2-25-13
PLANS APPROVAL DATE

LICENSED LANDSCAPE ARCHITECT
M. M. BABICH 4021
Michael M. Babich
Signature
1-31-14
Renewal Date
12-14-12
Date
STATE OF CALIFORNIA

THE STATE OF CALIFORNIA OR ITS OFFICERS OR AGENTS SHALL NOT BE RESPONSIBLE FOR THE ACCURACY OR COMPLETENESS OF SCANNED COPIES OF THIS PLAN SHEET.

NOTE:

1. DIMENSIONS ARE SHOWN IN FEET AND INCHES

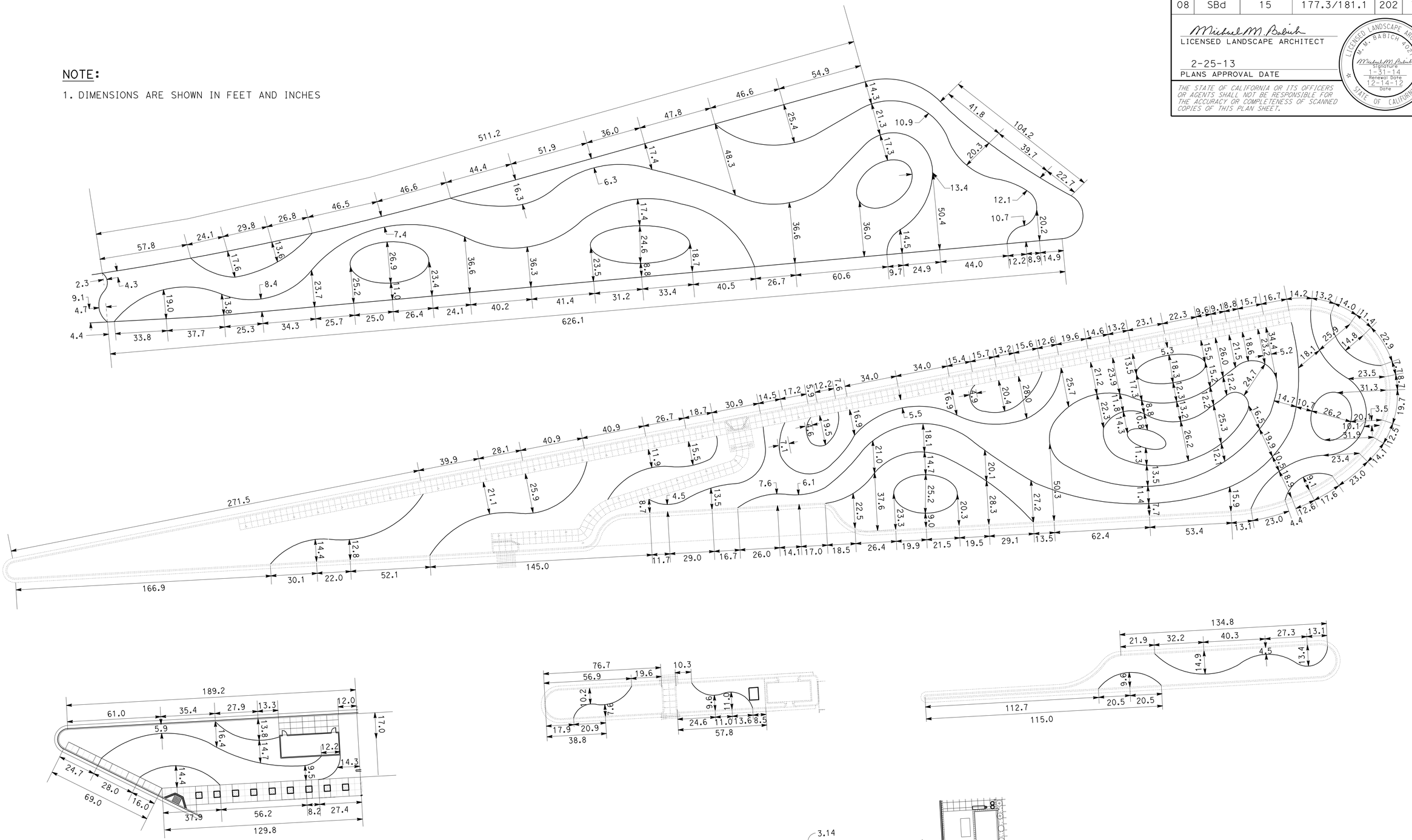

LANDSCAPE DETAILS

NO SCALE

LD-4

STATE OF CALIFORNIA - DEPARTMENT OF TRANSPORTATION
Caltrans® LANDSCAPE ARCHITECTURE

SENIOR LANDSCAPE ARCHITECT: RAY DESSELLE

CALCULATED-DESIGNED BY: MICHAEL M. BABICH
CHECKED BY: MARIA I. ARIAS

REVISED BY
DATE REVISED

LAST REVISION 12-14-12
DATE PLOTTED => 26-FEB-2013
TIME PLOTTED => 09:40

Dist	COUNTY	ROUTE	POST MILES TOTAL PROJECT	SHEET No.	TOTAL SHEETS
08	SBd	15	177.3/181.1	203	710

Michael M. Babich
LICENSED LANDSCAPE ARCHITECT

2-25-13
PLANS APPROVAL DATE

LICENSED LANDSCAPE ARCHITECT
M. M. BABICH 4021
Michael M. Babich
Signature
1-31-14
Renewal Date
12-14-12
Date
STATE OF CALIFORNIA

THE STATE OF CALIFORNIA OR ITS OFFICERS OR AGENTS SHALL NOT BE RESPONSIBLE FOR THE ACCURACY OR COMPLETENESS OF SCANNED COPIES OF THIS PLAN SHEET.

IRRIGATION CROSSOVERS

LOCATION	SIDE		CONDUIT TYPE (1)		(N) WATER LINE CROSSOVER	(N) SPRINKLER CONTROL CROSSOVER
IRRIGATION SHEET No.	L†	R†	SIZE (INCH) 12 LENGTH (LF)		SIZE (INCH)	SIZE (INCH)
IP-2	-	-	110	-	3	2
IP-3	-	-	280	-	3	2
IP-4	-	-	120	-	3	2
IP-7	-	-	40	-	3	2
IP-8	-	-	110	-	3	2
IP-9	-	-	90	-	3	2
TOTAL			750			

(N) - NOT A SEPARATE PAY ITEM FOR INFORMATION ONLY
X - DENOTES REQUIREMENT

CONDUIT TYPE:
(APPLICABLE WHEN CIRCLED BELOW AND SHOWN UNDER THE 'CONDUIT TYPE' COLUMN HEADING)

(1) BITUMINOUS COATED CORRUGATED STEEL PIPE (0.064 INCH THICK)
2 CORRUGATED STEEL PIPE (0.064 INCH THICK)
3 CORRUGATED HIGH DENSITY POLYETHYLENE PIPE
4 ALTERNATIVE CONDUIT
5 WELDED STEEL PIPE

IRRIGATION SLEEVE

LOCATION	SIDE		SLEEVE TYPE (1)		(N) WATER LINE CROSSOVER	(N) SPRINKLER CONTROL CROSSOVER
IRRIGATION SHEET No.	L†	R†	SIZE (INCH) 12 LENGTH (LF)		SIZE (INCH)	SIZE (INCH)
IP-2	-	-	120	-	-	-
IP-3	-	-	400	-	-	-
IP-4	-	-	500	-	-	-
IP-5	-	-	130	-	-	-
IP-6	-	-	120	-	-	-
IP-7	-	-	30	-	-	-
IP-8	-	-	30	-	-	-
IP-9	-	-	90	-	-	-
TOTAL			1420			

(N) - NOT A SEPARATE PAY ITEM FOR INFORMATION ONLY
X - DENOTES REQUIREMENT

SLEEVE TYPE:
(APPLICABLE WHEN CIRCLED BELOW AND SHOWN UNDER THE 'SLEEVE TYPE' COLUMN HEADING)

(1) BITUMINOUS COATED CORRUGATED STEEL PIPE (0.064 INCH THICK)

IRRIGATION CROSSOVER AND IRRIGATION SLEEVE QUANTITY TABLES

LD-5

REVISED BY | DATE REVISED
MICHAEL M. BABICH | MARIA I. ARIAS
CALCULATED-DESIGNED BY | CHECKED BY
SENIOR LANDSCAPE ARCHITECT | RAY DESSELLE
STATE OF CALIFORNIA - DEPARTMENT OF TRANSPORTATION
Caltrans LANDSCAPE ARCHITECTURE

LAST REVISION 12-14-12 | DATE PLOTTED => 26-FEB-2013 | TIME PLOTTED => 09:40

Dist	COUNTY	ROUTE	POST MILES TOTAL PROJECT	SHEET No.	TOTAL SHEETS
08	SBd	15	177.3/181.1	204	710

REGISTERED ELECTRICAL ENGINEER 12-14-12 DATE

2-25-13
PLANS APPROVAL DATE

REGISTERED PROFESSIONAL ENGINEER JAIME ESTRADA No. E18351 Exp. 6-30-14 ELECTRICAL STATE OF CALIFORNIA

THE STATE OF CALIFORNIA OR ITS OFFICERS OR AGENTS SHALL NOT BE RESPONSIBLE FOR THE ACCURACY OR COMPLETENESS OF SCANNED COPIES OF THIS PLAN SHEET.

NOTE:

FOR ACCURATE RIGHT OF WAY DATA, CONTACT RIGHT OF WAY ENGINEERING AT THE DISTRICT OFFICE.

GENERAL NOTES:

1. LOCATION OF UTILITY FACILITIES SHOWN ON THIS PLAN IS APPROXIMATE AND SHALL BE VERIFIED BY THE CONTRACTOR PRIOR TO CONSTRUCTION.
2. ALL CONDUIT RUNS SHALL USE LONG RADIUS SWEEPS AS PER SERVING UTILITY COMPANY.

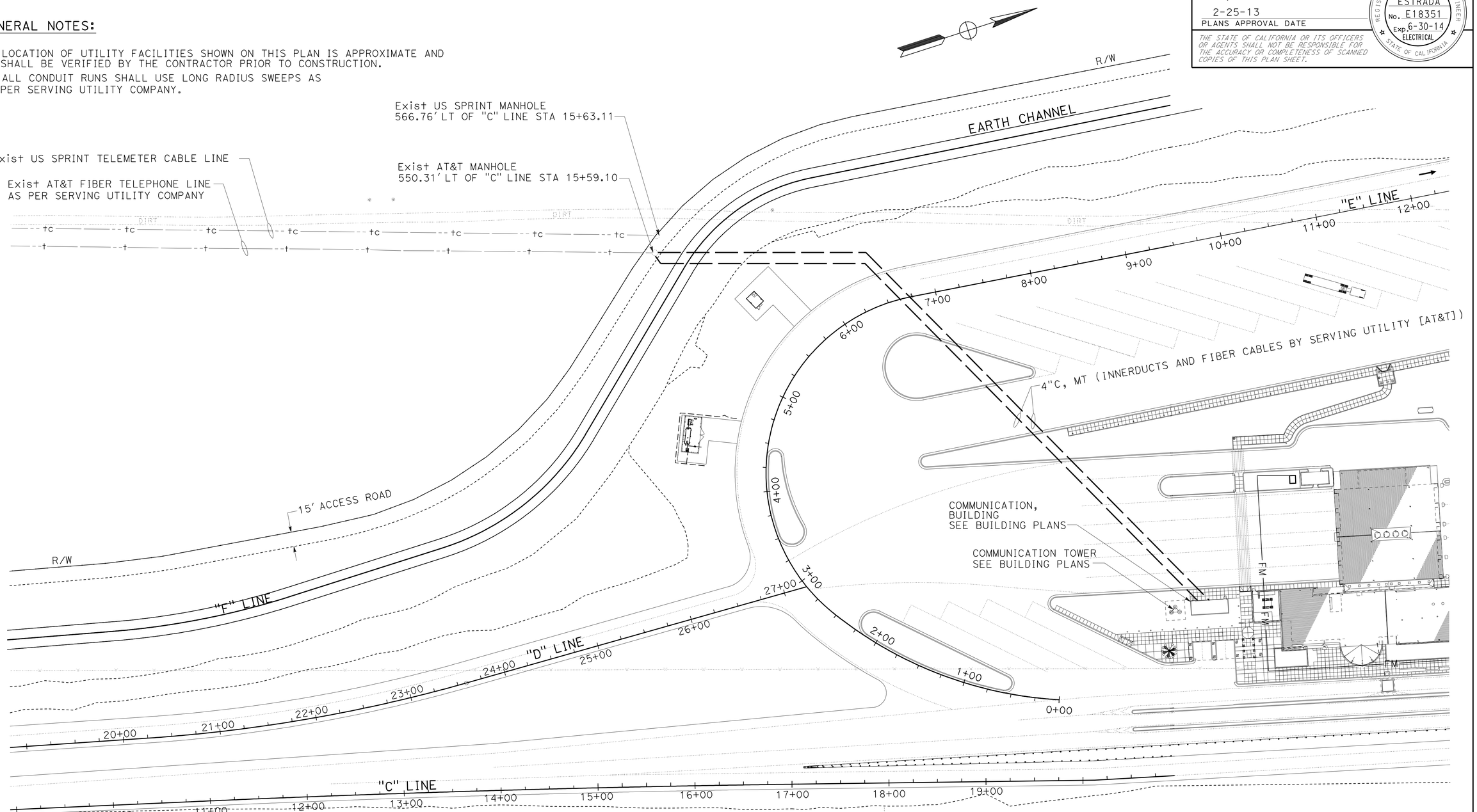

COMMUNICATION CONDUIT

SCALE: 1" = 50'

E-1

APPROVED FOR ELECTRICAL WORK ONLY

STATE OF CALIFORNIA - DEPARTMENT OF TRANSPORTATION
Caltrans® ELECTRICAL DESIGN B

FUNCTIONAL SUPERVISOR: FERDINAND DE LA CRUZ

CALCULATED-DESIGNED BY: ED CIESLIK
CHECKED BY: JAIME ESTRADA

REVISED BY
DATE REVISED

LAST REVISION 12-14-12
DATE PLOTTED => 26-FEB-2013
TIME PLOTTED => 09:40

Dist	COUNTY	ROUTE	POST MILES TOTAL PROJECT	SHEET No.	TOTAL SHEETS
08	SBd	15	177.3/181.1	205	710

REGISTERED ELECTRICAL ENGINEER 12-14-12 DATE

2-25-13
PLANS APPROVAL DATE

REGISTERED PROFESSIONAL ENGINEER JAIME ESTRADA No. E18351 Exp. 6-30-14 ELECTRICAL STATE OF CALIFORNIA

THE STATE OF CALIFORNIA OR ITS OFFICERS OR AGENTS SHALL NOT BE RESPONSIBLE FOR THE ACCURACY OR COMPLETENESS OF SCANNED COPIES OF THIS PLAN SHEET.

NOTE:

FOR ACCURATE RIGHT OF WAY DATA, CONTACT RIGHT OF WAY ENGINEERING AT THE DISTRICT OFFICE.

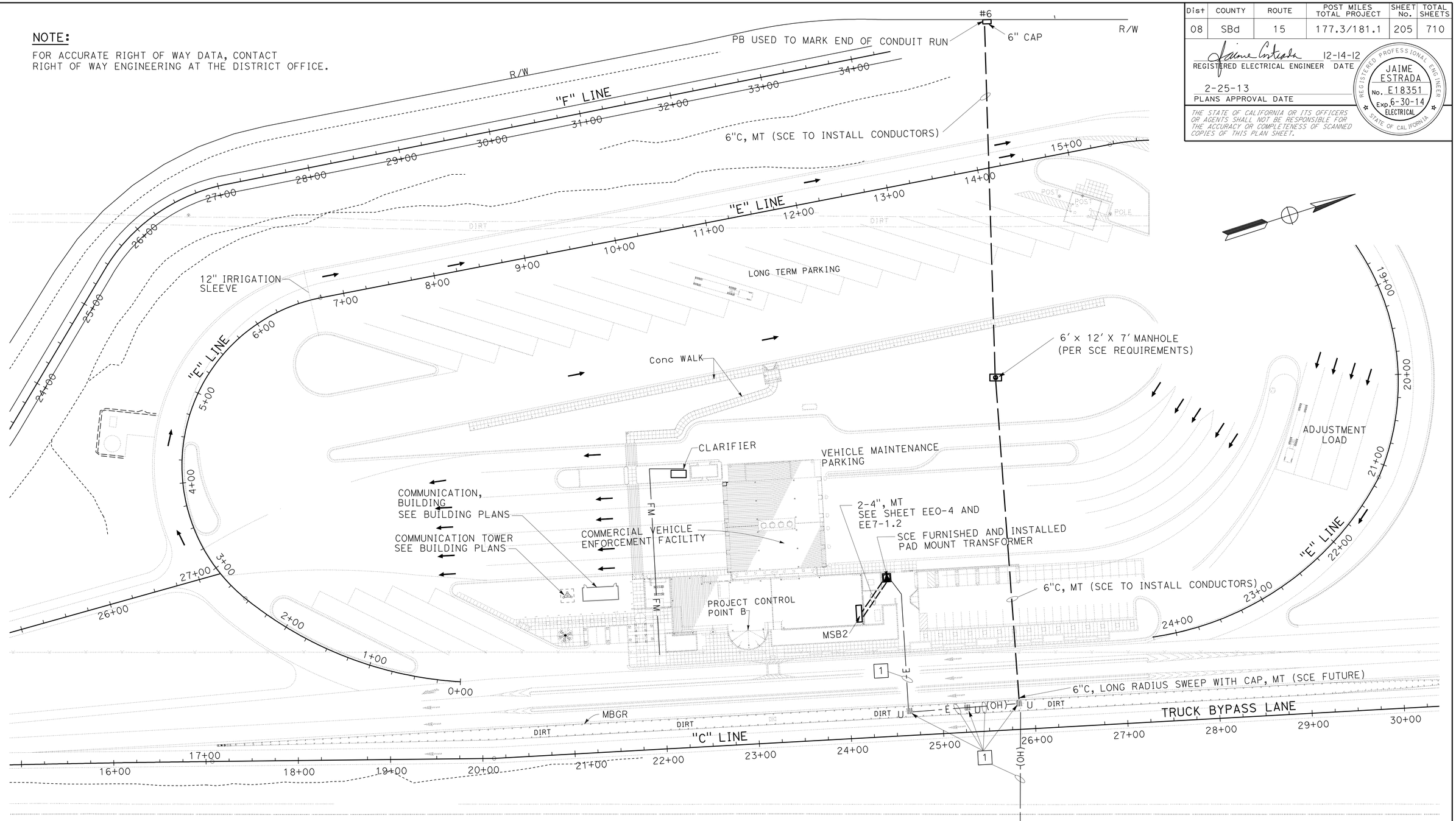

PROJECT NOTE THIS SHEET ONLY:

1 THE DESIGN AND INSTALLATION OF THE SERVICE FEED BY SOUTHERN CALIFORNIA EDISON (SCE) INCLUDING EQUIPMENT IS SHOWN AS INFORMATION ONLY TO COORDINATE WITH OTHER FUNCTIONAL UNITS DURING DESIGN THRU CONSTRUCTION.

APPROVED FOR ELECTRICAL WORK ONLY

LIGHTING AND SIGN ILLUMINATION

SCALE: 1" = 50'

E-2

STATE OF CALIFORNIA - DEPARTMENT OF TRANSPORTATION
Caltrans® ELECTRICAL DESIGN B

FUNCTIONAL SUPERVISOR: FERDINAND DE LA CRUZ
CALCULATED-DESIGNED BY: ED CIESLIK
CHECKED BY: JAIME ESTRADA
REVISED BY / DATE REVISED

LAST REVISION 12-14-12
DATE PLOTTED => 26-FEB-2013
TIME PLOTTED => 09:41

Dist	COUNTY	ROUTE	POST MILES TOTAL PROJECT	SHEET No.	TOTAL SHEETS
08	SBd	15	177.3/181.1	206	710

REGISTERED ELECTRICAL ENGINEER 12-14-12 DATE

2-25-13
PLANS APPROVAL DATE

REGISTERED PROFESSIONAL ENGINEER
JAIME ESTRADA
No. E18351
Exp. 6-30-14
ELECTRICAL
STATE OF CALIFORNIA

THE STATE OF CALIFORNIA OR ITS OFFICERS OR AGENTS SHALL NOT BE RESPONSIBLE FOR THE ACCURACY OR COMPLETENESS OF SCANNED COPIES OF THIS PLAN SHEET.

PROJECT NOTES-THIS SHEET ONLY:

1. NOT A PAY ITEM. FOR CONDUIT, CONDUCTOR AND PULL BOX INFORMATION, SEE SHEET EE0-1.
2. INSTALL SIGN ILLUMINATION EQUIPMENT PER ES-15C, DETAIL NUMBER 2.
3. INSTALL SIGN DISCONNECT PER ES-15C, DETAIL NUMBER 3.

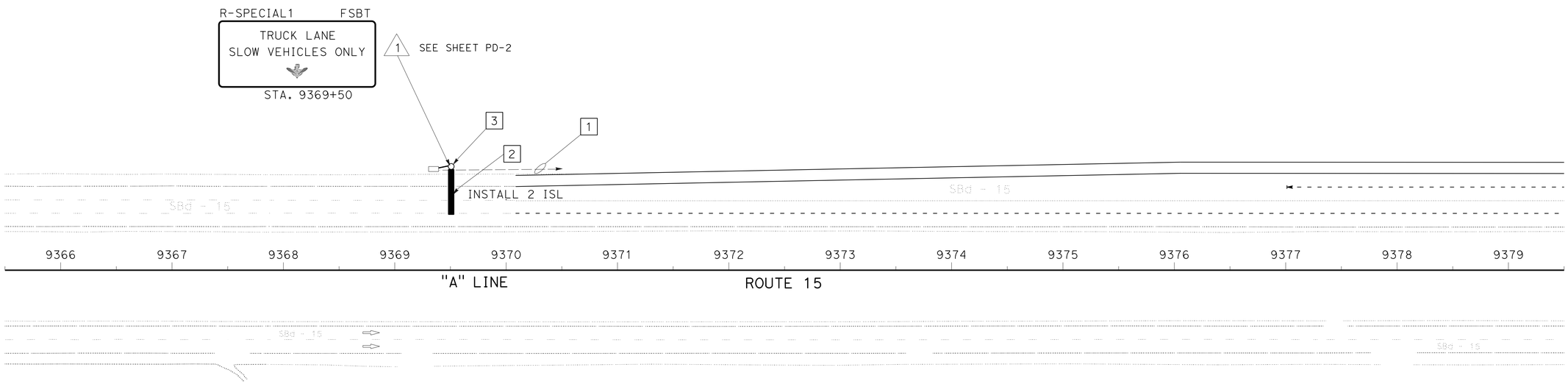

LIGHTING AND SIGN ILLUMINATION

SCALE: 1" = 50'

E-3

APPROVED FOR ELECTRICAL WORK ONLY

STATE OF CALIFORNIA - DEPARTMENT OF TRANSPORTATION
Caltrans® ELECTRICAL DESIGN B

FUNCTIONAL SUPERVISOR: FERDINAND DE LA CRUZ
CALCULATED-DESIGNED BY: ED CIESLIK
CHECKED BY: JAIME ESTRADA
REVISED BY
DATE REVISED

LAST REVISION 12-14-12 | DATE PLOTTED => 14-MAY-2013 | TIME PLOTTED => 06:28

Dist	COUNTY	ROUTE	POST MILES TOTAL PROJECT	SHEET No.	TOTAL SHEETS
08	SBd	15	177.3/181.1	207	710

REGISTERED ELECTRICAL ENGINEER 12-14-12 DATE

2-25-13
PLANS APPROVAL DATE

REGISTERED PROFESSIONAL ENGINEER
JAIME ESTRADA
No. E18351
Exp. 6-30-14
ELECTRICAL
STATE OF CALIFORNIA

THE STATE OF CALIFORNIA OR ITS OFFICERS OR AGENTS SHALL NOT BE RESPONSIBLE FOR THE ACCURACY OR COMPLETENESS OF SCANNED COPIES OF THIS PLAN SHEET.

PROJECT NOTES-THIS SHEET ONLY:

1. NOT A PAY ITEM. FOR CONDUIT, CONDUCTOR AND PULL BOX INFORMATION, SEE SHEET EE0-6.
2. INSTALL SIGN ILLUMINATION EQUIPMENT PER ES-15C, DETAIL NUMBER 2.
3. INSTALL SIGN DISCONNECT PER ES-15C, DETAIL NUMBER 3.

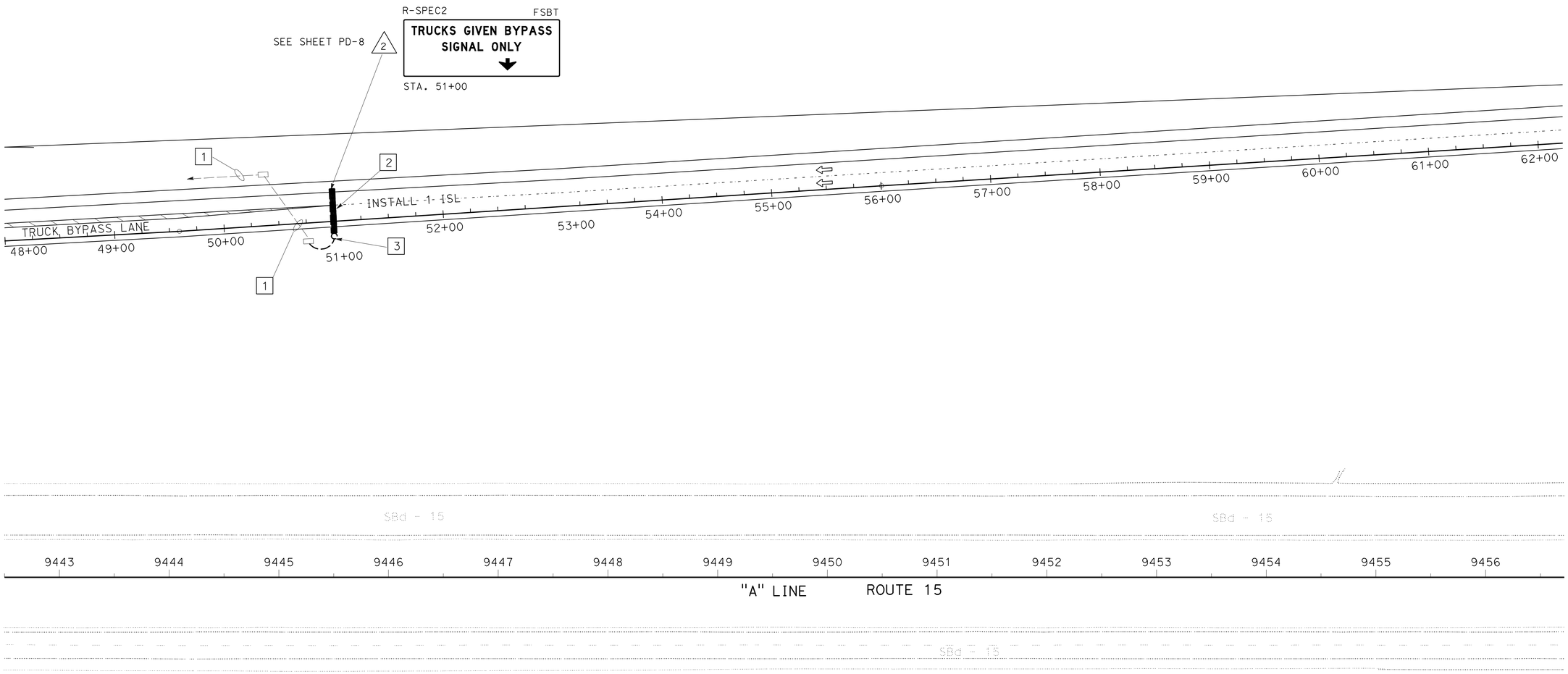

LIGHTING AND SIGN ILLUMINATION

SCALE: 1" = 50'

E-4

APPROVED FOR ELECTRICAL WORK ONLY

STATE OF CALIFORNIA - DEPARTMENT OF TRANSPORTATION
Caltrans® ELECTRICAL DESIGN B

FUNCTIONAL SUPERVISOR: FERDINAND DE LA CRUZ
CALCULATED-DESIGNED BY: ED CIESLIK
CHECKED BY: JAIME ESTRADA
REVISED BY
DATE REVISED

LAST REVISION 12-14-12
DATE PLOTTED => 26-FEB-2013
TIME PLOTTED => 09:41

Dist	COUNTY	ROUTE	POST MILES TOTAL PROJECT	SHEET No.	TOTAL SHEETS
08	SBd	15	177.3/181.1	208	710

REGISTERED ELECTRICAL ENGINEER 12-14-12 DATE

2-25-13
PLANS APPROVAL DATE

REGISTERED PROFESSIONAL ENGINEER
JAIME ESTRADA
No. E18351
Exp. 6-30-14
ELECTRICAL
STATE OF CALIFORNIA

THE STATE OF CALIFORNIA OR ITS OFFICERS OR AGENTS SHALL NOT BE RESPONSIBLE FOR THE ACCURACY OR COMPLETENESS OF SCANNED COPIES OF THIS PLAN SHEET.

PROJECT NOTES SHEETS E-5 AND E-6:

1. INSTALL SIGN DISCONNECT PER ES-15C, DETAIL NUMBER 2.
2. INSTALL SIGN DISCONNECT PER ES-15C, DETAIL NUMBER 3.

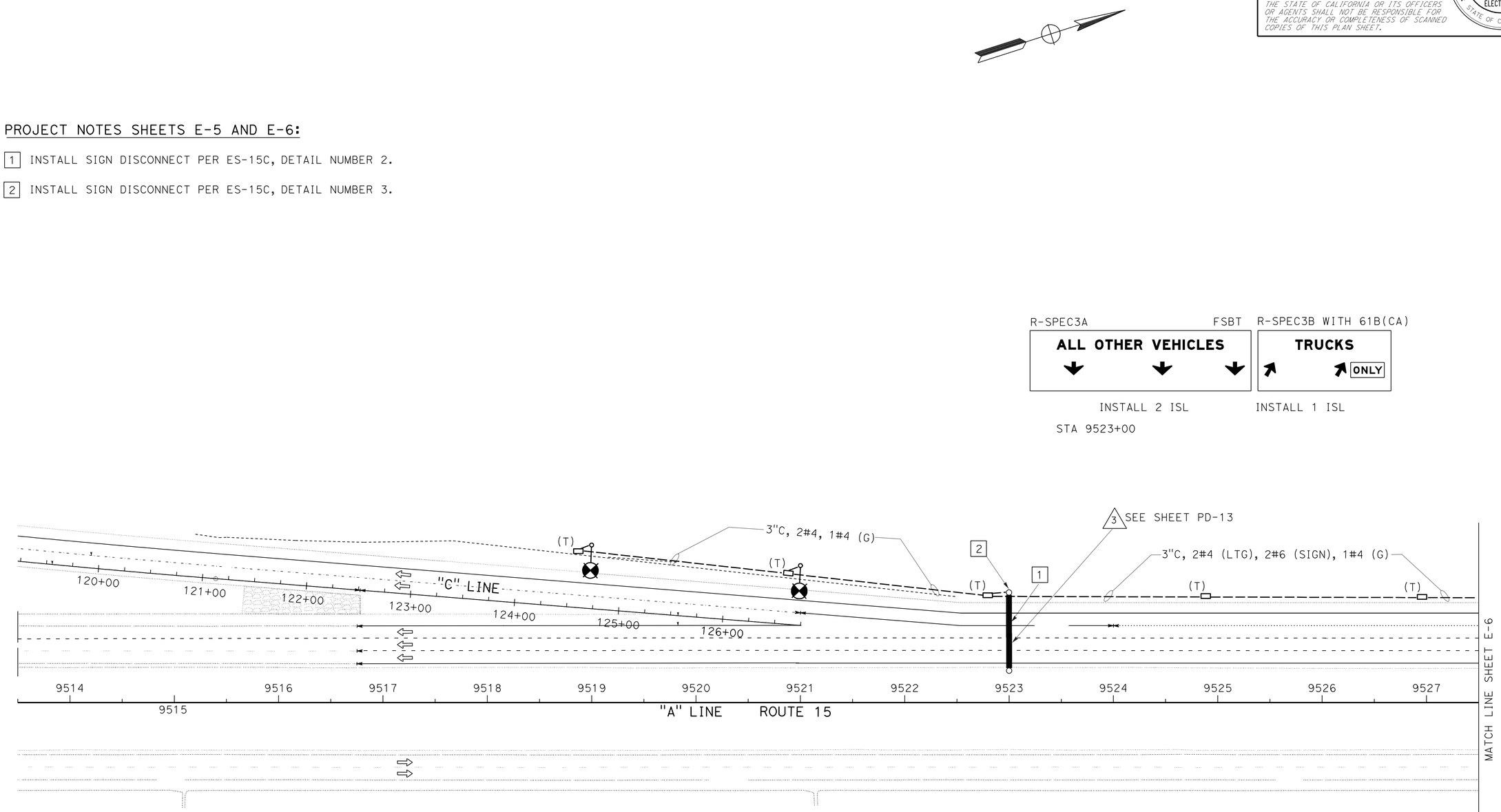

LIGHTING AND SIGN ILLUMINATION

SCALE: 1" = 50'

E-5

APPROVED FOR ELECTRICAL WORK ONLY

STATE OF CALIFORNIA - DEPARTMENT OF TRANSPORTATION
Caltrans ELECTRICAL DESIGN B

FUNCTIONAL SUPERVISOR: FERDINAND DE LA CRUZ
CALCULATED-DESIGNED BY: ED CIESLIK
CHECKED BY: JAIME ESTRADA
REVISED BY
DATE REVISED

LAST REVISION 12-14-12
DATE PLOTTED => 26-FEB-2013
TIME PLOTTED => 09:41

Dist	COUNTY	ROUTE	POST MILES TOTAL PROJECT	SHEET No.	TOTAL SHEETS
08	SBd	15	177.3/181.1	209	710

REGISTERED ELECTRICAL ENGINEER 12-14-12 DATE

2-25-13
PLANS APPROVAL DATE

REGISTERED PROFESSIONAL ENGINEER
JAIME ESTRADA
No. E18351
Exp. 6-30-14
ELECTRICAL
STATE OF CALIFORNIA

THE STATE OF CALIFORNIA OR ITS OFFICERS OR AGENTS SHALL NOT BE RESPONSIBLE FOR THE ACCURACY OR COMPLETENESS OF SCANNED COPIES OF THIS PLAN SHEET.

R-SPEC4 WITH W61B(CA) FSBT

WELCOME TO CALIFORNIA

CARS & BUSES	TRUCKS
↓ ↓ ↓	↓ ↓ ONLY
INSTALL 2 ISL	INSTALL 1 ISL

STA 9531+00

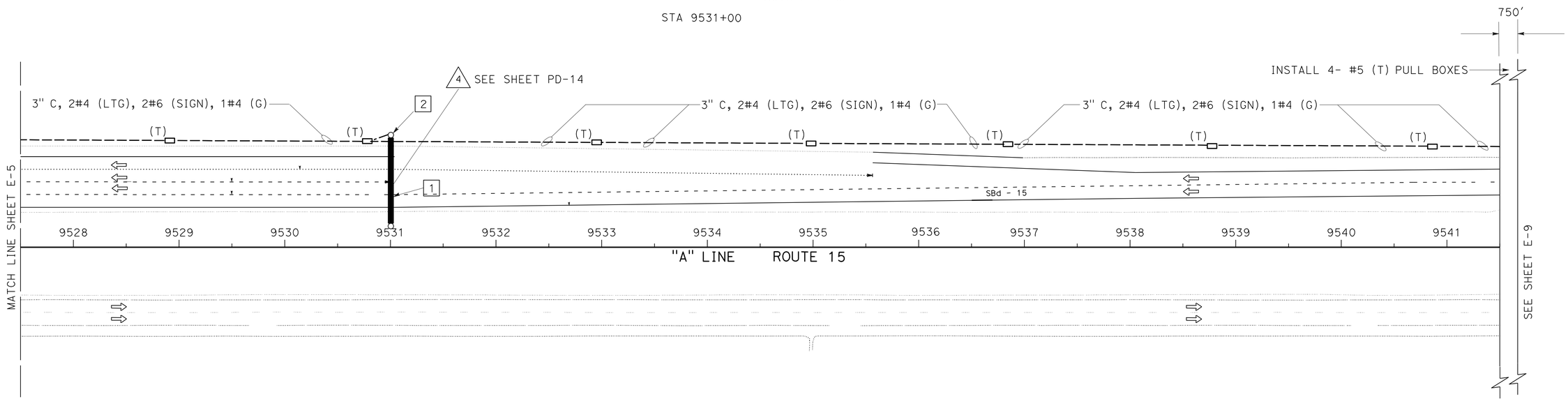

LIGHTING AND SIGN ILLUMINATION

SCALE: 1" = 50'

E-6

APPROVED FOR ELECTRICAL WORK ONLY

STATE OF CALIFORNIA - DEPARTMENT OF TRANSPORTATION
Caltrans® **ELECTRICAL DESIGN B**

FUNCTIONAL SUPERVISOR: FERDINAND DE LA CRUZ
CALCULATED-DESIGNED BY: ED CIESLIK
CHECKED BY: JAIME ESTRADA
REVISED BY
DATE REVISED

LAST REVISION 12-14-12 | DATE PLOTTED => 26-FEB-2013 | TIME PLOTTED => 09:41

Dist	COUNTY	ROUTE	POST MILES TOTAL PROJECT	SHEET No.	TOTAL SHEETS
08	SBd	15	177.3/181.1	210	710

REGISTERED ELECTRICAL ENGINEER 12-14-12 DATE

2-25-13
PLANS APPROVAL DATE

REGISTERED PROFESSIONAL ENGINEER JAIME ESTRADA No. E18351 Exp. 6-30-14 ELECTRICAL STATE OF CALIFORNIA

THE STATE OF CALIFORNIA OR ITS OFFICERS OR AGENTS SHALL NOT BE RESPONSIBLE FOR THE ACCURACY OR COMPLETENESS OF SCANNED COPIES OF THIS PLAN SHEET.

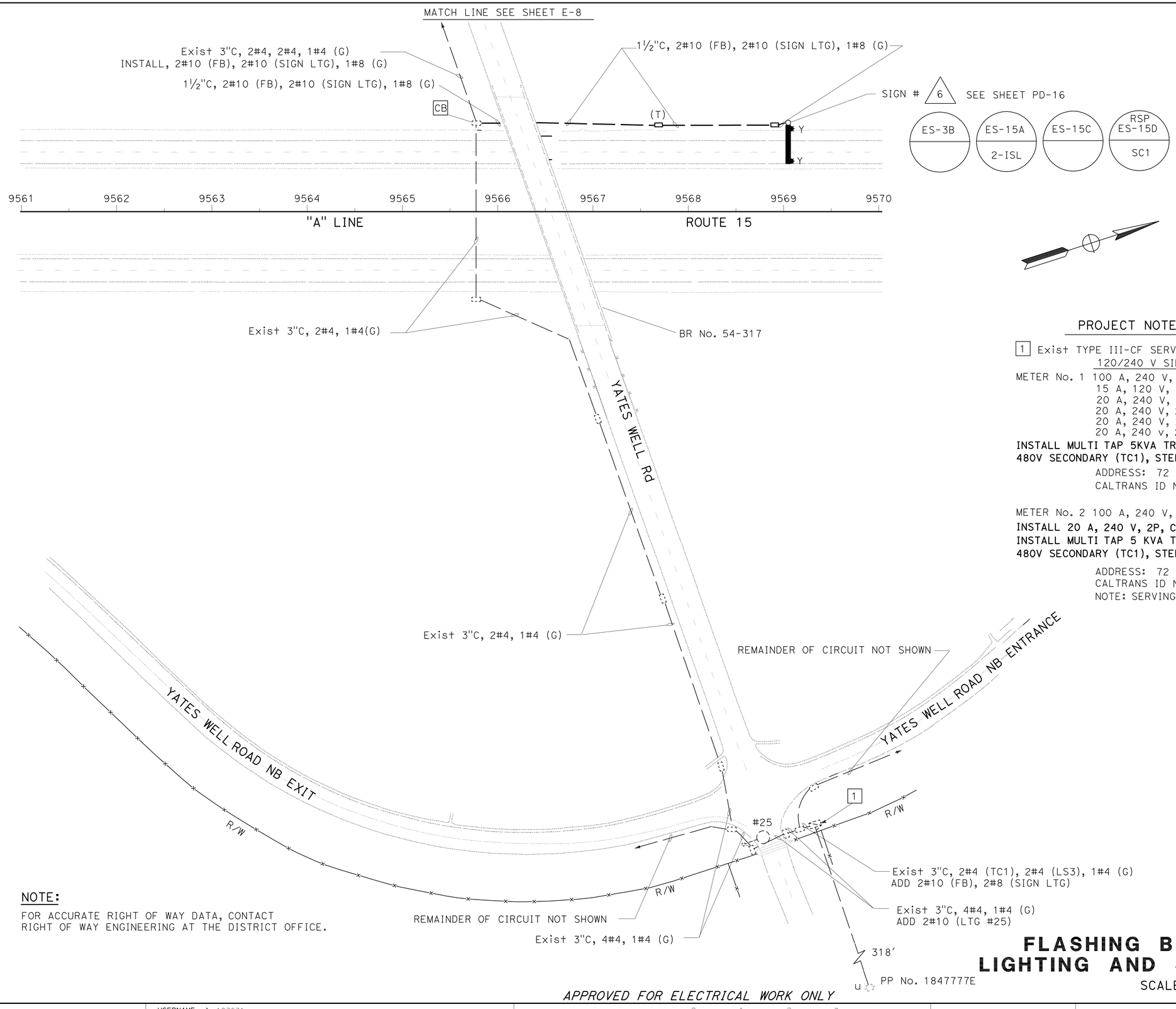

PROJECT NOTES (THIS SHEET ONLY)

1 Exist TYPE III-CF SERVICE EQUIPMENT ENCLOSURE
120/240 V SINGLE PHASE

METER No. 1 100 A, 240 V, 2P, CB MAIN BREAKER (LS-3)
15 A, 120 V, 1P, CB LIGHTING CONTROL
20 A, 240 V, 2P, CB LIGHTING
20 A, 240 V, 2P, CB LIGHTING
20 A, 240 V, 2P, CB LIGHTING
20 A, 240 v, 2P, (XFORMER PRIMARY)

INSTALL MULTI TAP 5KVA TRANSFORMER 240V PRIMARY TO 480V SECONDARY (TC1), STEP UP, INSIDE SERVICE ENCLOSURE.

ADDRESS: 72 YATES WELL ROAD LS3, NIPTON, CA.
CALTRANS ID No.: 0854015181650L

METER No. 2 100 A, 240 V, 2P, CB, MAIN BREAKER (TC-1)
INSTALL 20 A, 240 V, 2P, CB LIGHTING (XFMR PRIMARY)
INSTALL MULTI TAP 5 KVA TRANSFORMER 240V PRIMARY TO 480V SECONDARY (TC1), STEP UP, INSIDE SERVICE ENCLOSURE.

ADDRESS: 72 YATES WELL ROAD TC3, NIPTON, CA.
CALTRANS ID No.: 0854015181650F
NOTE: SERVING UTILITY TO INSTALL METER No. 2

NOTE:
FOR ACCURATE RIGHT OF WAY DATA, CONTACT RIGHT OF WAY ENGINEERING AT THE DISTRICT OFFICE.

APPROVED FOR ELECTRICAL WORK ONLY

FLASHING BEACON SYSTEM LIGHTING AND SIGN ILLUMINATION

SCALE: 1" = 50'

E-7

STATE OF CALIFORNIA - DEPARTMENT OF TRANSPORTATION
Caltrans ELECTRICAL DESIGN B

FUNCTIONAL SUPERVISOR: FERDINAND DE LA CRUZ
CALCULATED-DESIGNED BY: ED CIESLIK
CHECKED BY: JAIME ESTRADA
REVISED BY
DATE REVISED

LAST REVISION 12-14-12 | DATE PLOTTED => 26-FEB-2013 | TIME PLOTTED => 09:41

Dist	COUNTY	ROUTE	POST MILES TOTAL PROJECT	SHEET No.	TOTAL SHEETS
08	SBd	15	177.3/181.1	211	710

REGISTERED ELECTRICAL ENGINEER 12-14-12 DATE

2-25-13
PLANS APPROVAL DATE

REGISTERED PROFESSIONAL ENGINEER JAIME ESTRADA No. E18351 Exp. 6-30-14 ELECTRICAL STATE OF CALIFORNIA

THE STATE OF CALIFORNIA OR ITS OFFICERS OR AGENTS SHALL NOT BE RESPONSIBLE FOR THE ACCURACY OR COMPLETENESS OF SCANNED COPIES OF THIS PLAN SHEET.

NOTE:

FOR ACCURATE RIGHT OF WAY DATA, CONTACT RIGHT OF WAY ENGINEERING AT THE DISTRICT OFFICE.

PROJECT NOTES-THIS SHEET ONLY:

1 TYPE III-CF SERVICE EQUIPMENT ENCLOSURE
METER 1: BLANK SOCKET-CONNECTED TO XFMR (TC-1)
50 A, 240 V, 2P, CB, MAIN
20 A, 120 V, 1P, CB,FLASHING BEACON
INSTALL 480 V PRIMARY TO 240 V SECONDARY STEP DOWN, 5 KVA MOUNTED INSIDE THE SERVICE ENCLOSURE, CONNECTED TO TC-1 METER SOCKET.

METER 2: BLANK SOCKET-CONNECTED TO SFMR (LS-3)
50 A, 240 V, 2P, CB, MAIN
15 A, 120 V, 1P, CB, LIGHTING CONTROL
30 A, 240 V, 2P, LIGHTING (S.B. EXIT)
30 A, 240 V, 2P, LIGHTING (N.B. EXIT)
15 A, 1P, TEST SWITCH, SIGN ILLUMINATION TEST SWITCH
15 A, 120 V, 1P, CB, SIGN ILLUMINATION CONTROL
30 A, 240 V, 2P, SIGN ILLUMINATION
30 A, 2PNO, CONTACTOR, SIGN ILLUMINATION

INSTALL 480 V PRIMARY TO 240 V SECONDARY STEP DOWN, 5 KVA MULTI TAP TRANSFORMER MOUNTED INSIDE THE SERVICE ENCLOSURE, CONNECTED TO LS-3 METER SOCKET.

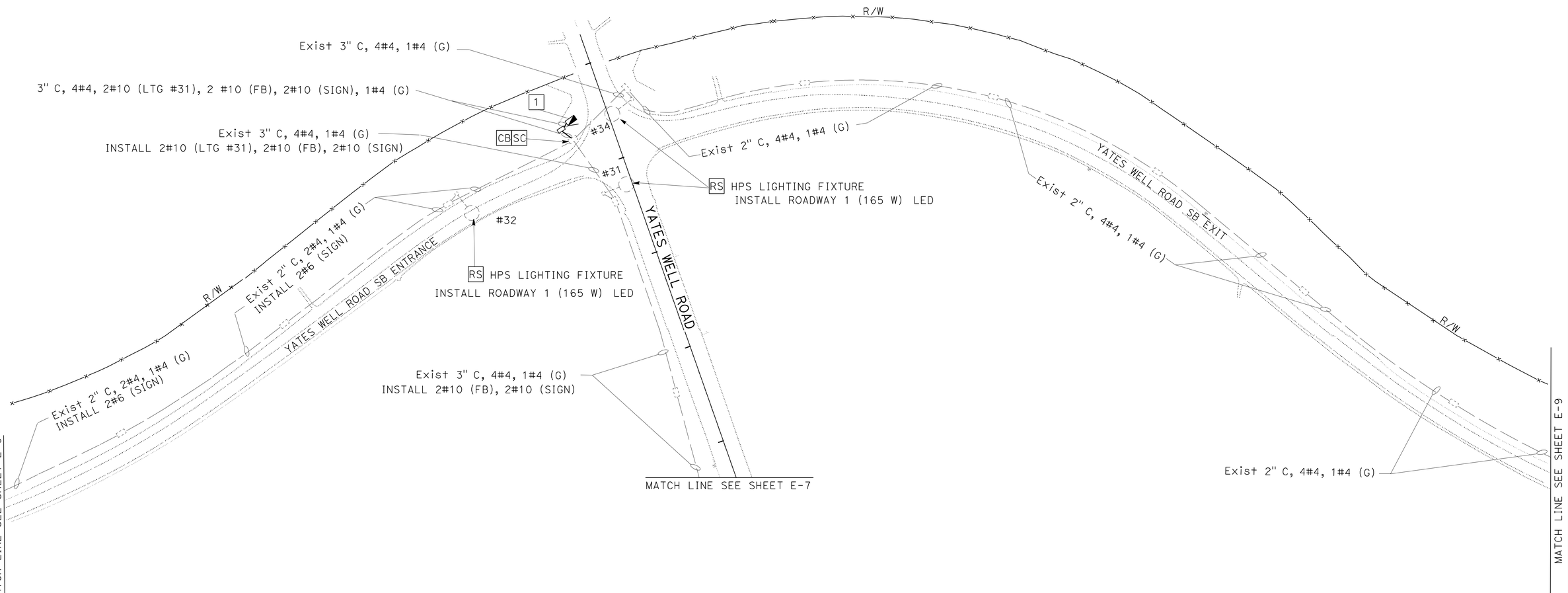

FLASHING BEACON SYSTEM
MODIFY LIGHTING

SCALE: 1" = 50'

E-8

APPROVED FOR ELECTRICAL WORK ONLY

STATE OF CALIFORNIA - DEPARTMENT OF TRANSPORTATION
Caltrans ELECTRICAL DESIGN B

FUNCTIONAL SUPERVISOR: FERDINAND DE LA CRUZ
CALCULATED-DESIGNED BY: ED CIESLIK
CHECKED BY: JAIME ESTRADA
REVISED BY
DATE REVISED

LAST REVISION 12-14-12
DATE PLOTTED => 26-FEB-2013
TIME PLOTTED => 09:41

Dist	COUNTY	ROUTE	POST MILES TOTAL PROJECT	SHEET No.	TOTAL SHEETS
08	SBd	15	177.3/181.1	212	710

REGISTERED ELECTRICAL ENGINEER 12-14-12 DATE

2-25-13
PLANS APPROVAL DATE

REGISTERED PROFESSIONAL ENGINEER JAIME ESTRADA No. E18351 Exp. 6-30-14 ELECTRICAL STATE OF CALIFORNIA

THE STATE OF CALIFORNIA OR ITS OFFICERS OR AGENTS SHALL NOT BE RESPONSIBLE FOR THE ACCURACY OR COMPLETENESS OF SCANNED COPIES OF THIS PLAN SHEET.

NOTE:

FOR ACCURATE RIGHT OF WAY DATA, CONTACT
RIGHT OF WAY ENGINEERING AT THE DISTRICT OFFICE.

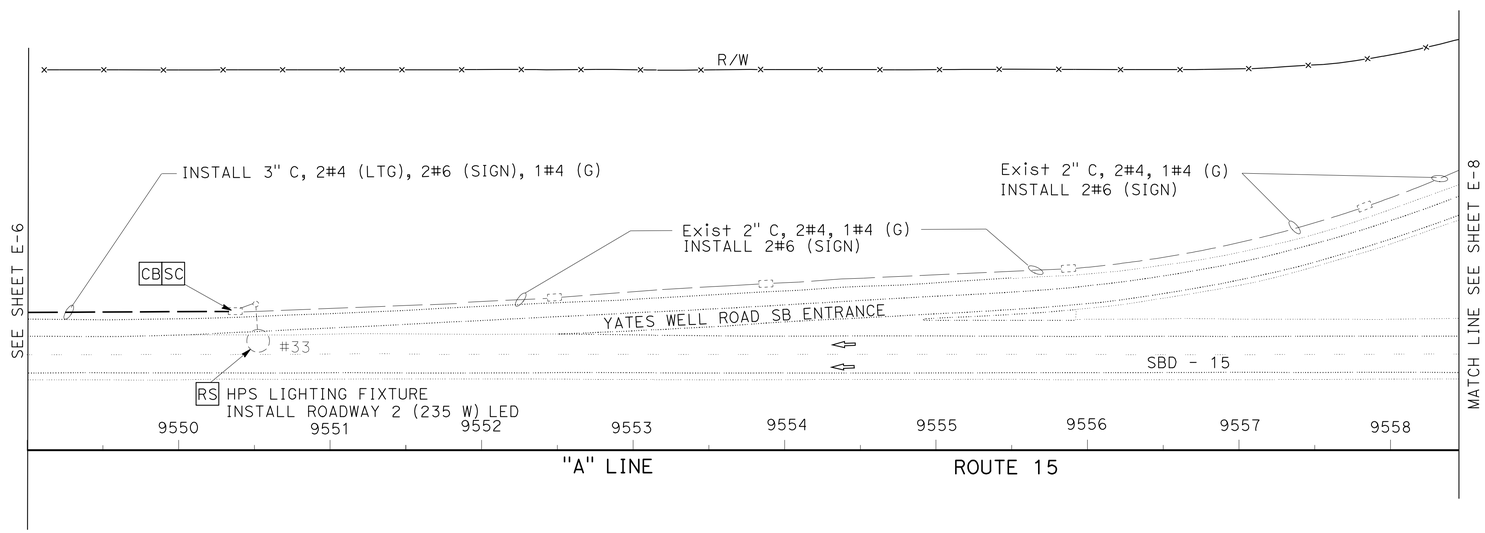

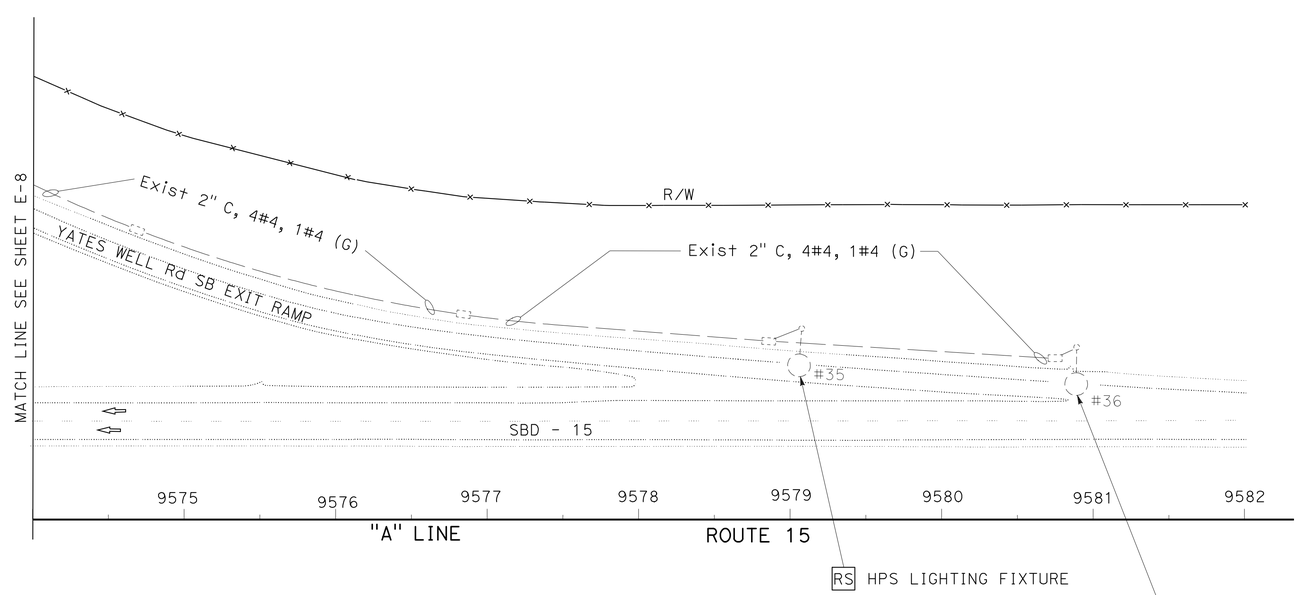

MODIFY LIGHTING

SCALE: 1" = 50'

E-9

APPROVED FOR ELECTRICAL WORK ONLY

STATE OF CALIFORNIA - DEPARTMENT OF TRANSPORTATION
Caltrans® **ELECTRICAL DESIGN B**

FUNCTIONAL SUPERVISOR: FERDINAND DE LA CRUZ

CALCULATED-DESIGNED BY: ED CIESLIK
CHECKED BY: JAIME ESTRADA

REVISED BY
DATE REVISED

LAST REVISION 12-14-12
DATE PLOTTED => 26-FEB-2013
TIME PLOTTED => 09:41

Dist	COUNTY	ROUTE	POST MILES TOTAL PROJECT	SHEET No.	TOTAL SHEETS
08	SBd	15	177.3/181.1	213	710

REGISTERED ELECTRICAL ENGINEER 12-14-12 DATE

2-25-13
PLANS APPROVAL DATE

REGISTERED PROFESSIONAL ENGINEER JAIME ESTRADA No. E18351 Exp. 6-30-14 ELECTRICAL STATE OF CALIFORNIA

THE STATE OF CALIFORNIA OR ITS OFFICERS OR AGENTS SHALL NOT BE RESPONSIBLE FOR THE ACCURACY OR COMPLETENESS OF SCANNED COPIES OF THIS PLAN SHEET.

NOTE:

FOR ACCURATE RIGHT OF WAY DATA, CONTACT
RIGHT OF WAY ENGINEERING AT THE DISTRICT OFFICE.

PROJECT NOTE-THIS SHEET ONLY:

1. EXISTING WVDS (WIRELESS VEHICLE DETECTION STATION) SHALL BE PROTECTED IN PLACE.

LEGEND-THIS SHEET ONLY:

EXISTING SENSYS VEHICLE SENSOR NODE

EXISTING SOLAR POWERED WVDS

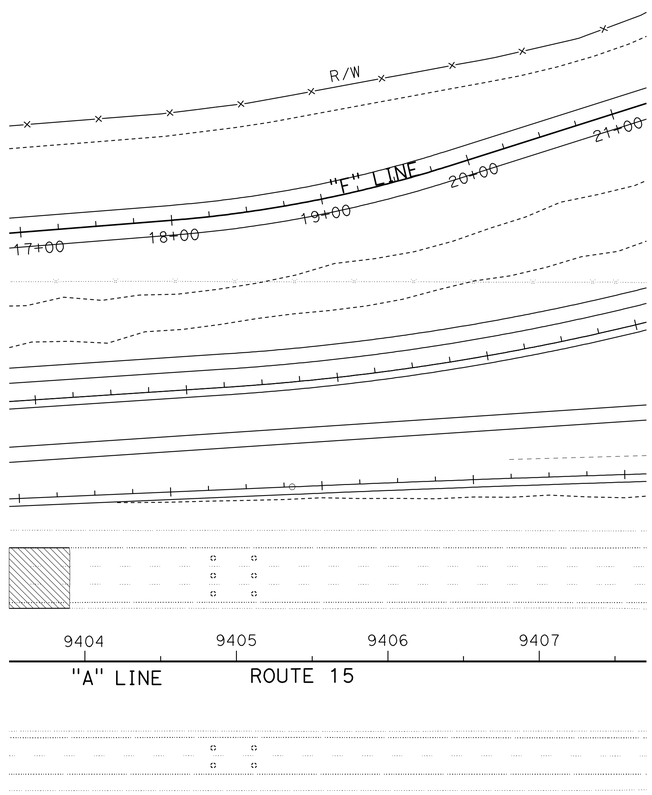

LOCATION 1

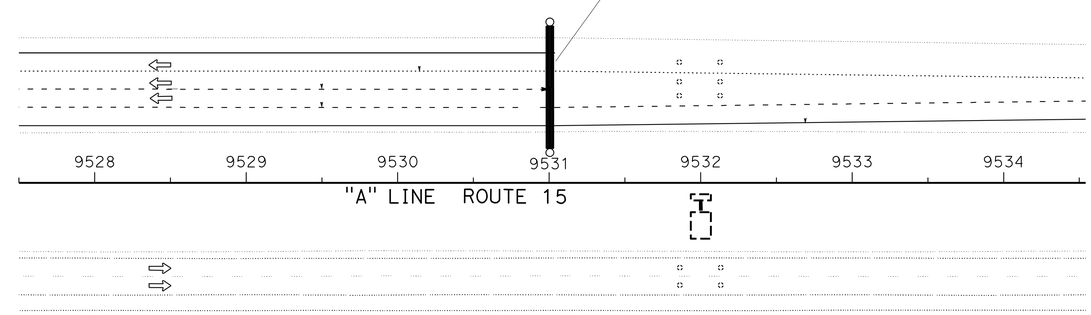

LOCATION 2

MAINTAINING EXISTING TRAFFIC MANAGEMENT SYSTEM ELEMENTS DURING CONSTRUCTION

SCALE: 1" = 50'

E-10

APPROVED FOR ELECTRICAL WORK ONLY

STATE OF CALIFORNIA - DEPARTMENT OF TRANSPORTATION
Caltrans® ELECTRICAL DESIGN B

FUNCTIONAL SUPERVISOR: FERDINAND DE LA CRUZ
CALCULATED-DESIGNED BY: ED CIESLIK
CHECKED BY: JAIME ESTRADA
REVISED BY
DATE REVISED

LAST REVISION 12-14-12 | DATE PLOTTED => 26-FEB-2013 | TIME PLOTTED => 09:41

DIST	COUNTY	ROUTE	POST MILES TOTAL PROJECT	SHEET No	TOTAL SHEETS
08	SBd	15	177.3/181.1	214	710

REGISTERED CIVIL ENGINEER 4/21/11 DATE

2-25-13
PLANS APPROVAL DATE

The State of California or its officers or agents shall not be responsible for the accuracy or completeness of electronic copies of this plan sheet.

REGISTERED PROFESSIONAL ENGINEER LISA M. McCUTCHEON No. C70121 Exp. 9/30/14 CIVIL STATE OF CALIFORNIA

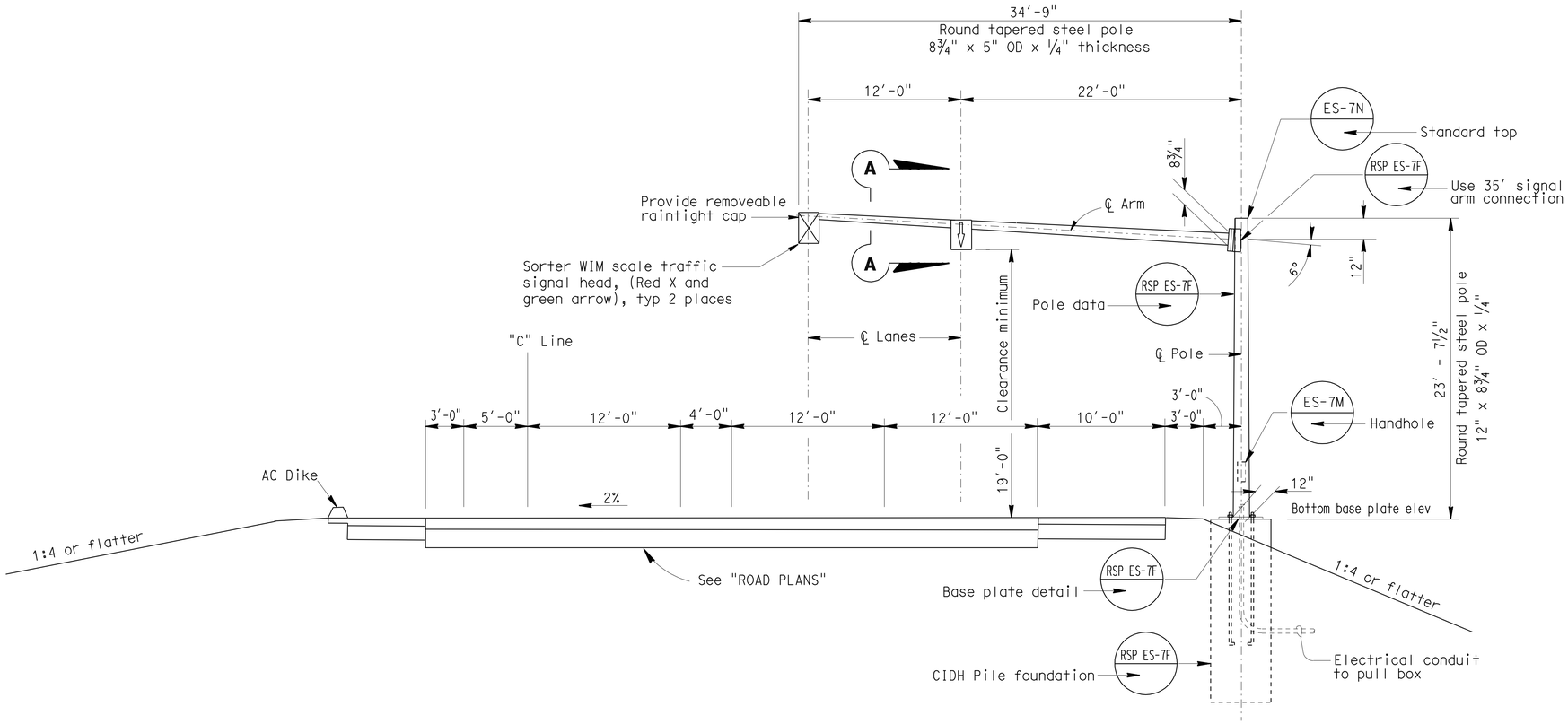

ELEVATION

NO SCALE

STA 39 + 77.00 ("C" Line)

Signal standard 24-4-100, modify as shown.

NOTES:

1. Round tapered steel pole shall have a maximum taper of 0.1375 in/ft.
2. Minimum yield strength of tube is 40 ksi.
3. For details not shown, see 2006 STANDARD PLANS.
4. For pole location, see sheet EEO-5.
5. The Contractor shall verify all controlling field dimensions before ordering or fabricating any material.
6. Bolt holes inside signal to be pre-drilled with ⅜" diameter holes.

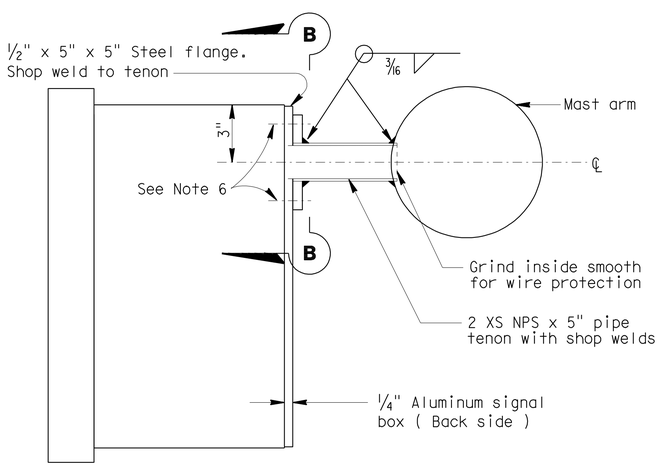

SECTION A-A

NO SCALE

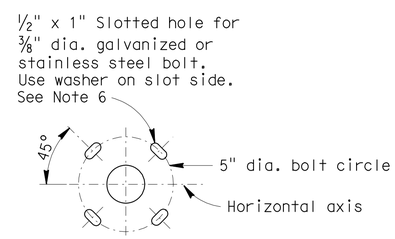

SECTION B-B

NO SCALE

SES-1

DESIGN	BY T.VUONG / K.LEE	CHECKED LISA McCUTCHEON	
DETAILS	BY R.YEE	CHECKED LISA McCUTCHEON	
QUANTITIES	BY LISA McCUTCHEON	CHECKED	

STATE OF CALIFORNIA
DEPARTMENT OF TRANSPORTATION

DIVISION OF ENGINEERING SERVICES
STRUCTURE DESIGN
SPECIAL DESIGN BRANCH

BRIDGE NO. 54-1216J
POST MILE 177.3/181.1

MOUNTAIN PASS JPOE-STAGE 1
WIM SORTER SCALE TRAFFIC SIGNAL POLE DETAILS

STRUCTURES DESIGN SPECIAL DESIGN SHEET (ENGLISH) (REV. 10-25-05)

ORIGINAL SCALE IN INCHES FOR REDUCED PLANS 0 1 2 3

UNIT 3619
PROJECT NUMBER & PHASE 08000006281

DISREGARD PRINTS BEARING EARLIER REVISION DATES

REVISION DATES: ~~4/21/11~~ 11/30/12

SHEET OF

FILE => 836850uh001.dgn
spec_des_br_prj/08-368501/08_368501_s1.dgn

USERNAME => s124496 DATE PLOTTED => 27-FEB-2013 TIME PLOTTED => 10:39

DIST	COUNTY	ROUTE	POST MILES TOTAL PROJECT	SHEET No	TOTAL SHEETS
08	SBd	15	177.3/181.1	215	710

REGISTERED CIVIL ENGINEER 4/21/11 DATE

2-25-13
PLANS APPROVAL DATE

REGISTERED PROFESSIONAL ENGINEER LISA M. McCUTCHEON No. C70121 Exp. 9/30/14 CIVIL STATE OF CALIFORNIA

The State of California or its officers or agents shall not be responsible for the accuracy or completeness of electronic copies of this plan sheet.

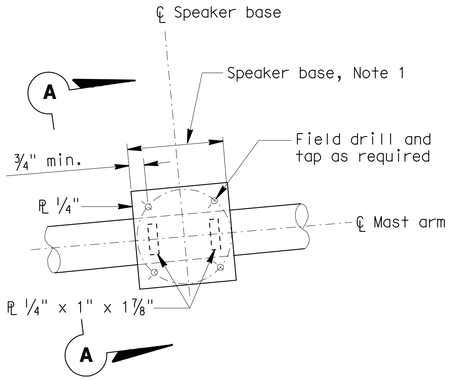

SPEAKER MOUNTING DETAIL

NO SCALE

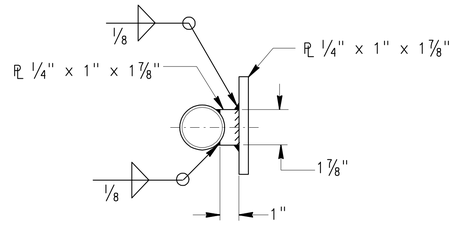

SECTION A-A

NO SCALE

NOTES:

1. For details not shown, see 2006 STANDARD PLANS.
2. For speaker pole location, see sheet EEO-13.
3. Minimum yield for poles is 40 ksi.
4. Round tapered steel pole shall have a minimum taper of 0.1375 in/ft.
5. Speaker mounting details are shown for example. Modify details to accept speaker.
6. Drill and weld ¾" dia. coupling, suitable for pulling wire.
7. The Contractor shall verify all controlling field dimensions before ordering or fabricating any material.

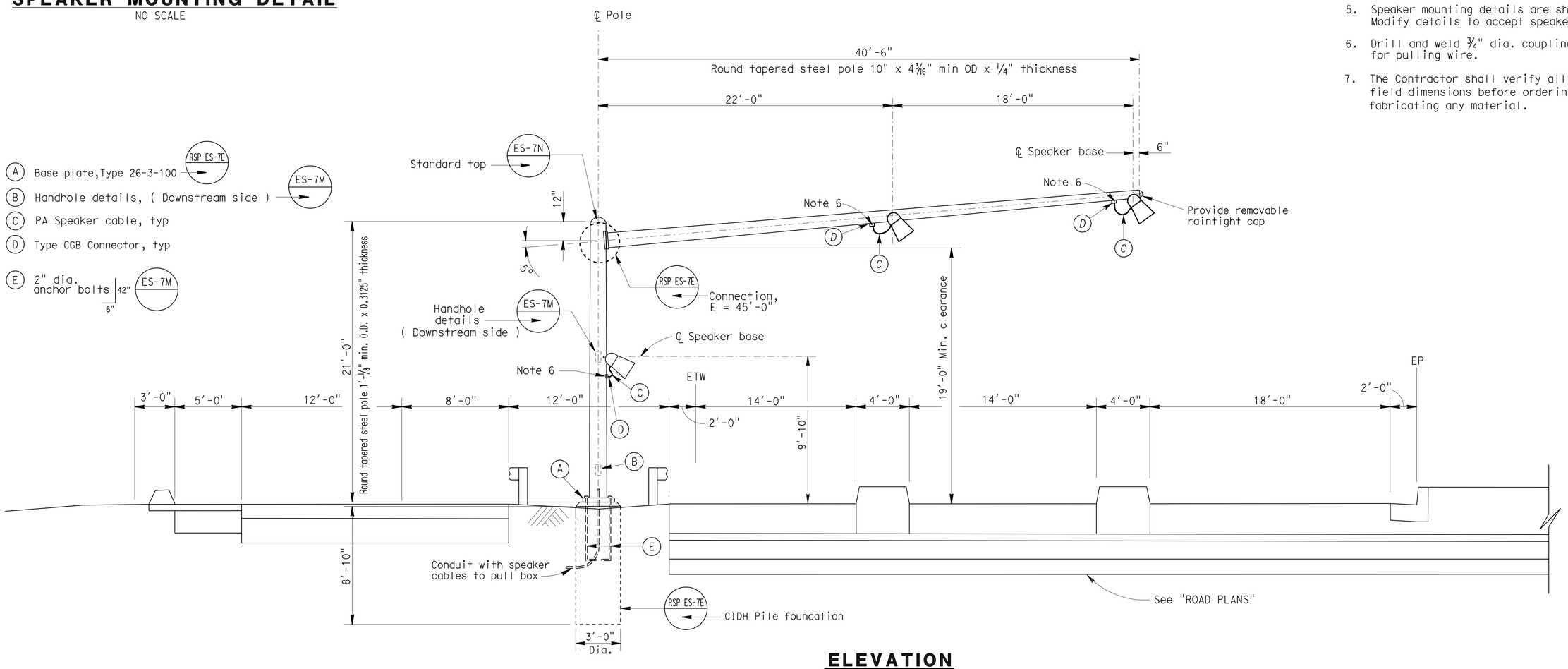

ELEVATION

NO SCALE

STA 22 + 79.00 ("C" Line) and
STA 22 + 29.00 ("C" Line)

SES-2

DESIGN	BY T.VUONG / K.LEE	CHECKED LISA McCUTCHEON	STATE OF CALIFORNIA DEPARTMENT OF TRANSPORTATION
DETAILS	BY R.YEE	CHECKED LISA McCUTCHEON	
QUANTITIES	BY LISA McCUTCHEON	CHECKED	

DIVISION OF ENGINEERING SERVICES STRUCTURE DESIGN
SPECIAL DESIGN BRANCH

BRIDGE NO. 54-1216J
POST MILE 177.3/181.1

MOUNTAIN PASS JPOE-STAGE 1
SPEAKER POLE DETAILS

STRUCTURES DESIGN SPECIAL DESIGN SHEET (ENGLISH) (REV. 10-25-05)

ORIGINAL SCALE IN INCHES FOR REDUCED PLANS 0 1 2 3

UNIT 3619
PROJECT NUMBER & PHASE 08000006281

DISREGARD PRINTS BEARING EARLIER REVISION DATES

REVISION DATES 4/21/11 11/30/12

SHEET OF

FILE => 836850uh002.dgn

spec_des_br_prj/2008sd/08_368501_s8.dgn

USERNAME => s124496 DATE PLOTTED => 27-FEB-2013 TIME PLOTTED => 10:39

DIST	COUNTY	ROUTE	POST MILES TOTAL PROJECT	SHEET No	TOTAL SHEETS
08	SBd	15	177.3/181.1	216	710

REGISTERED CIVIL ENGINEER 4/21/11 DATE

2-25-13
PLANS APPROVAL DATE

The State of California or its officers or agents shall not be responsible for the accuracy or completeness of electronic copies of this plan sheet.

REGISTERED PROFESSIONAL ENGINEER LISA M. McCUTCHEON No. C70121 Exp. 9/30/14 CIVIL STATE OF CALIFORNIA

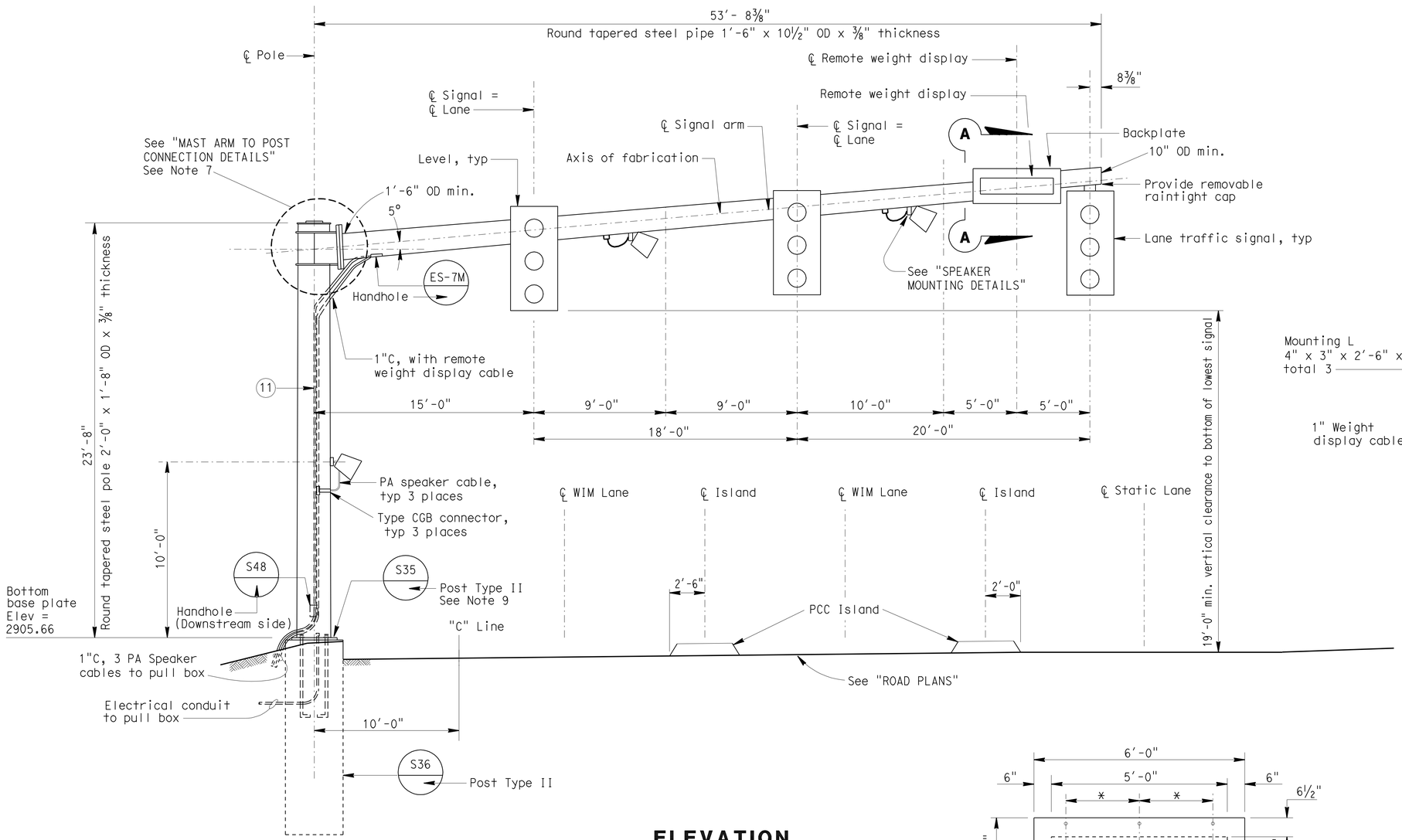

ELEVATION

NO SCALE

STA 21 + 29.00 ("C" Line)

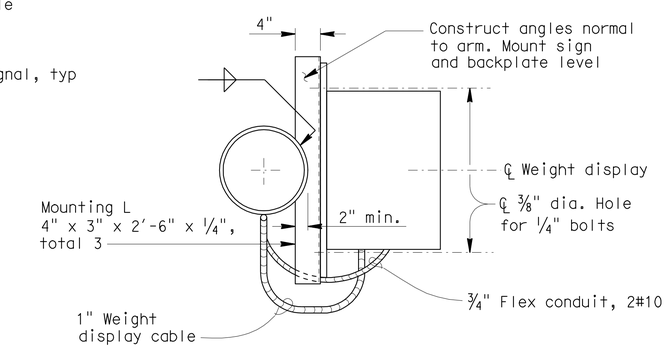

SECTION A-A

NO SCALE

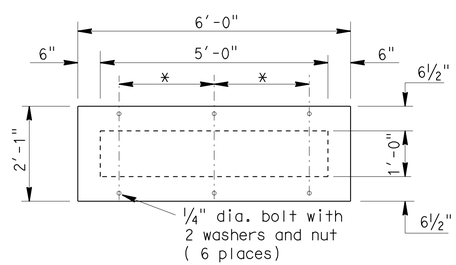

BACKPLATE (WEIGHT DISPLAY)

NO SCALE

* Space as required to fit weight display

NOTES:

1. Remote weight display to be centered on backplate as shown. Both backplate and weight display to be secured to mounting angles.
2. Conduits with remote weight display cable and with PA cables shall be surface mounted to back side of pole and surface run under signal arm. Attach conduits to pole and signal arm with stainless steel straps.
3. For location of Signal and Weight Display Pole, see "ROAD PLANS".
4. For details not shown, see 2006 STANDARD PLANS.
5. Min yield strength of tube is 40 ksi.
6. Round tapered steel pole and signal arm shall have a maximum taper of 0.1375 in/ft.
7. Rake the pole shaft by adjusting levelling nuts for dead load deflection.
8. Drill and weld ¾" dia. coupling, suitable for pulling wires.
9. Grind gussets to conform to tapered post prior to welding.
10. The Contractor shall verify all controlling field dimensions before ordering or fabricating any material.
11. Install conduits on the back side of the pole away from the traffic.

SES-3

	BY	CHECKED
DESIGN	T.VUONG / K.LEE	LISA McCUTCHEON
DETAILS	R.YEE	LISA McCUTCHEON
QUANTITIES	LISA McCUTCHEON	

STATE OF CALIFORNIA
DEPARTMENT OF TRANSPORTATION

DIVISION OF ENGINEERING SERVICES
STRUCTURE DESIGN
SPECIAL DESIGN BRANCH

BRIDGE NO. 54-1216J
POST MILE 177.3/181.1

MOUNTAIN PASS JPOE-STAGE 1
TRAFFIC SIGNALS AND REMOTE WEIGHT DISPLAY POLE

STRUCTURES DESIGN SPECIAL DESIGN SHEET (ENGLISH) (REV. 10-25-05)

ORIGINAL SCALE IN INCHES FOR REDUCED PLANS 0 1 2 3

UNIT 3619
PROJECT NUMBER & PHASE 08000006281

DISREGARD PRINTS BEARING EARLIER REVISION DATES

REVISION DATES 4/21/11 11/30/12

SHEET OF

FILE => 836850uh003.dgn
spec_des_br_prj/08-368501/08_368501_s9.dgn

USERNAME => s124496 DATE PLOTTED => 27-FEB-2013 TIME PLOTTED => 10:39

DIST	COUNTY	ROUTE	POST MILES TOTAL PROJECT	SHEET No	TOTAL SHEETS
08	SBd	15	177.3/181.1	217	710

REGISTERED CIVIL ENGINEER 4/21/11 DATE

2-25-13
PLANS APPROVAL DATE

The State of California or its officers or agents shall not be responsible for the accuracy or completeness of electronic copies of this plan sheet.

REGISTERED PROFESSIONAL ENGINEER LISA M. McCUTCHEON No. C70121 Exp. 9/30/14 CIVIL STATE OF CALIFORNIA

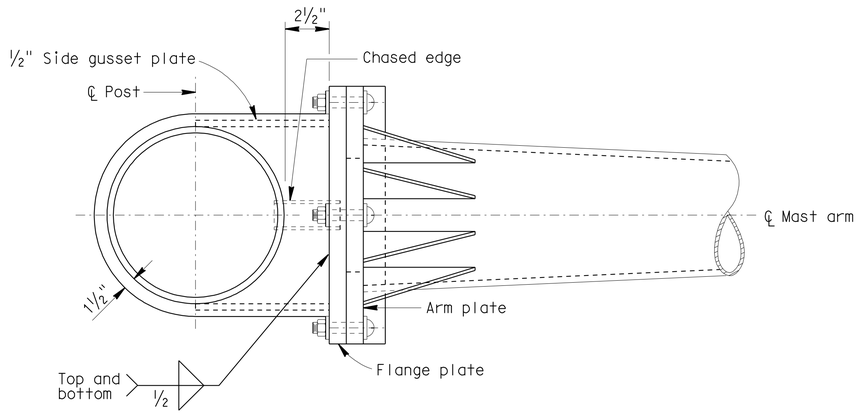

PLAN VIEW
NO SCALE

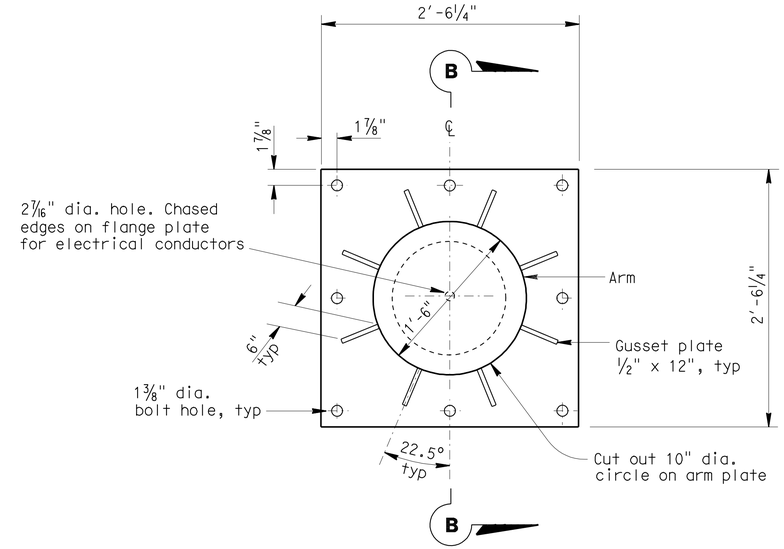

MAST ARM/FLANGE PLATE DETAIL
NO SCALE

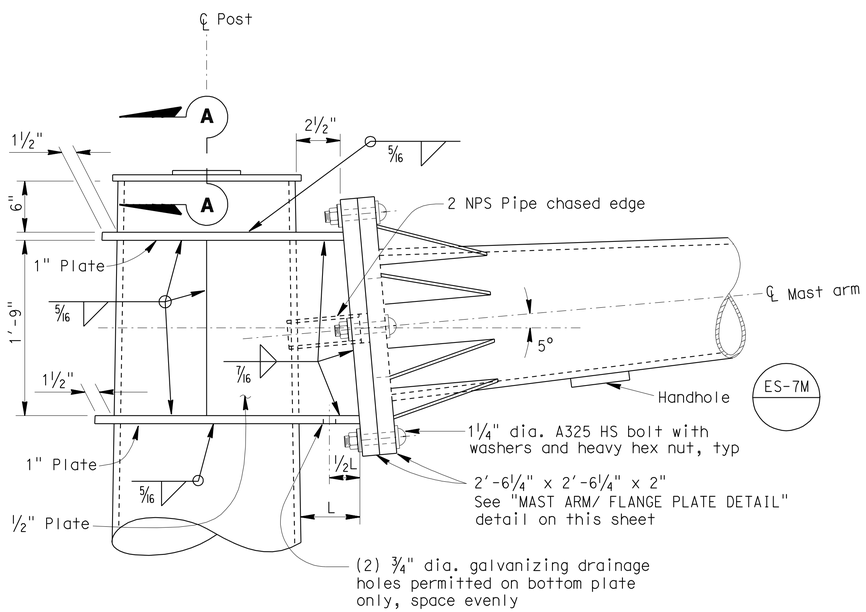

ELEVATION
NO SCALE

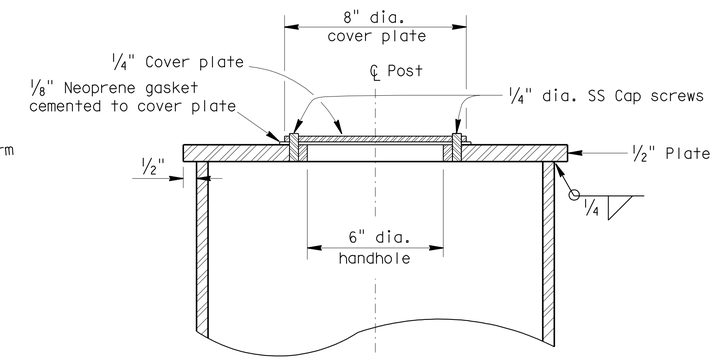

SECTION A-A
NO SCALE

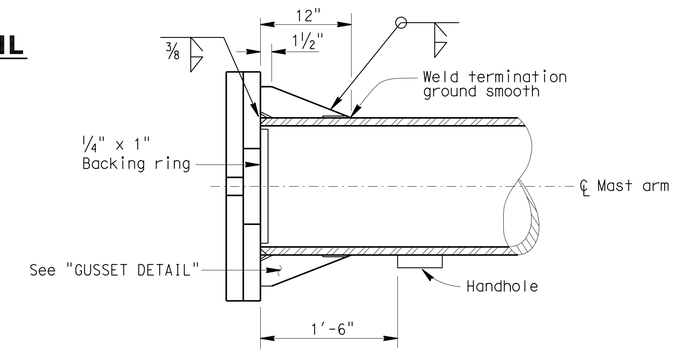

SECTION B-B
NO SCALE

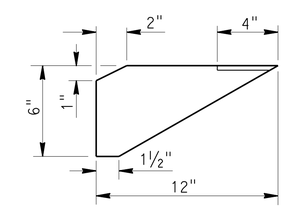

GUSSET DETAIL
NO SCALE

NOTES:

A. For details not shown, see 2006 STANDARD PLANS.

B. The Contractor shall verify all controlling field dimensions before ordering or fabricating any material.

SES-4

DESIGN	BY T.VUONG / K.LEE	CHECKED LISA McCUTCHEON	STATE OF CALIFORNIA DEPARTMENT OF TRANSPORTATION
DETAILS	BY R.YEE	CHECKED LISA McCUTCHEON	
QUANTITIES	BY LISA McCUTCHEON	CHECKED	

DIVISION OF ENGINEERING SERVICES STRUCTURE DESIGN
SPECIAL DESIGN BRANCH

BRIDGE NO. 54-1216J
POST MILE 177.3/181.1

MOUNTAIN PASS JPOE-STAGE 1
MAST ARM TO POST CONNECTION DETAILS

STRUCTURES DESIGN SPECIAL DESIGN SHEET (ENGLISH) (REV. 10-25-05)

ORIGINAL SCALE IN INCHES FOR REDUCED PLANS 0 1 2 3

UNIT 3619
PROJECT NUMBER & PHASE 08000006281

DISREGARD PRINTS BEARING EARLIER REVISION DATES 4/21/11 11/30/12

REVISION DATES | SHEET | OF

FILE => 836850uh004.dgn
spec_des_br_prj/08-368501/08_368501_s10.dgn

USERNAME => s124196 DATE PLOTTED => 27-FEB-2013 TIME PLOTTED => 10:33

DIST	COUNTY	ROUTE	POST MILES TOTAL PROJECT	SHEET No	TOTAL SHEETS
08	SBd	15	177.3/181.1	218	710

REGISTERED CIVIL ENGINEER 4/21/11 DATE

2-25-13
PLANS APPROVAL DATE

REGISTERED PROFESSIONAL ENGINEER LISA M. McCUTCHEON No. C70121 Exp. 9/30/14 CIVIL STATE OF CALIFORNIA

The State of California or its officers or agents shall not be responsible for the accuracy or completeness of electronic copies of this plan sheet.

NOTES:

1. For details not shown, see 2006 STANDARD PLAN and Electrical sheets.
2. The Contractor shall verify all controlling field dimensions before ordering or fabricating any material.
3. Drill and weld 3/4" coupling suitable for pulling wires.

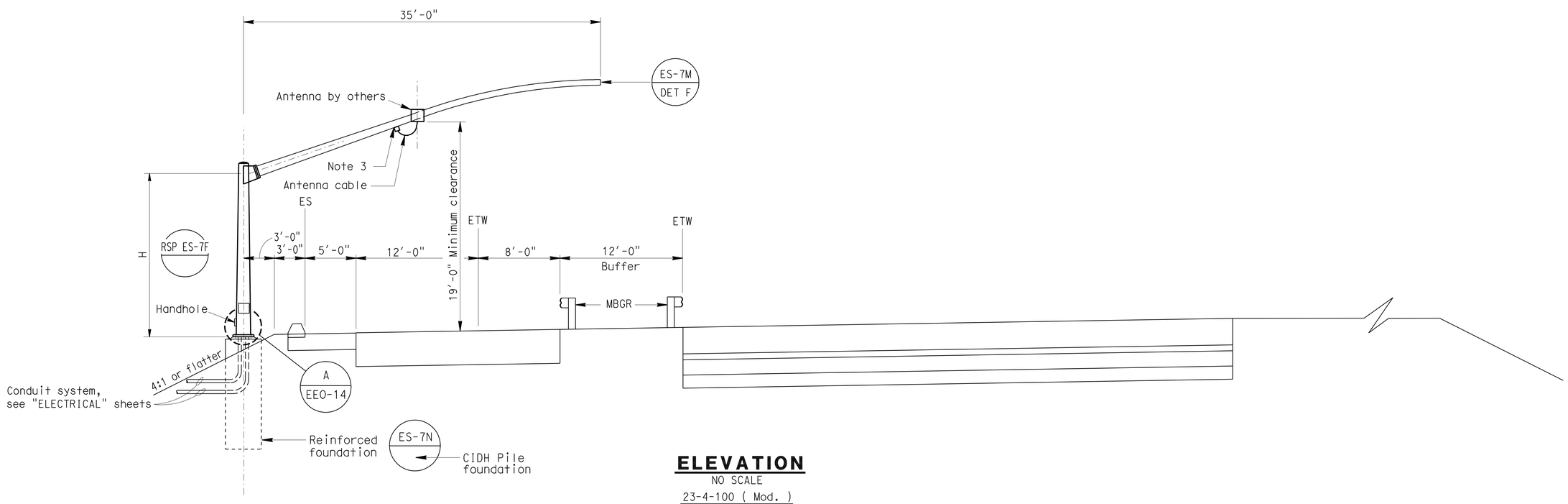

ELEVATION

NO SCALE

23-4-100 (Mod.)

Compliance pole shown

Advance and ICN Poles similar.

SES-5

DESIGN	BY LISA McCUTCHEON	CHECKED LISA McCUTCHEON	
DETAILS	BY R. YEE	CHECKED LISA McCUTCHEON	
QUANTITIES	BY LISA McCUTCHEON	CHECKED	

STATE OF CALIFORNIA
DEPARTMENT OF TRANSPORTATION

DIVISION OF ENGINEERING SERVICES
STRUCTURE DESIGN
SPECIAL DESIGN BRANCH

BRIDGE NO. 54-1216J
POST MILE 177.3/181.1

MOUNTAIN PASS JPOE-STAGE 1
WEIGH STATION BYPASS POLE

STRUCTURES DESIGN SPECIAL DESIGN SHEET (ENGLISH) (REV. 10-25-05)

ORIGINAL SCALE IN INCHES FOR REDUCED PLANS 0 1 2 3

UNIT 3619
PROJECT NUMBER & PHASE 08000006281

DISREGARD PRINTS BEARING EARLIER REVISION DATES 4/21/11 11/30/12

REVISION DATES SHEET OF

FILE =>spec_des_br_prj/2008sd/08_368501_s13.dgn 836850uh005.dgn

USERNAME => s124496 DATE PLOTTED => 27-FEB-2013 TIME PLOTTED => 10:40

DIST	COUNTY	ROUTE	POST MILES TOTAL PROJECT	SHEET NO.	TOTAL SHEETS
08	SBd	15	177.3/181.1	219	710

REGISTERED CIVIL ENGINEER

April 20, 2012
PLANS APPROVAL DATE

REGISTERED PROFESSIONAL ENGINEER
Roberta L. McLaughlin
No. C40375
Exp. 3-31-13
CIVIL
STATE OF CALIFORNIA

The State of California or its officers or agents shall not be responsible for the accuracy or completeness of electronic copies of this plan sheet.

To accompany plans dated 2-25-13

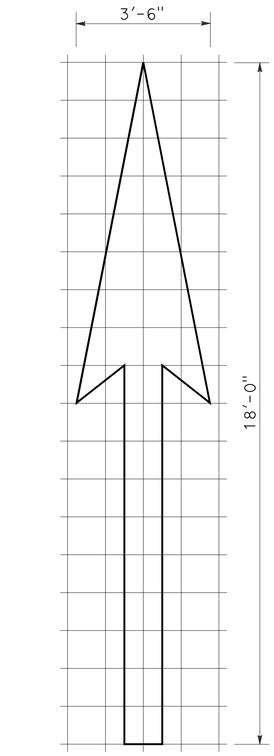

A=25 sq ft

TYPE I 18'-0" ARROW

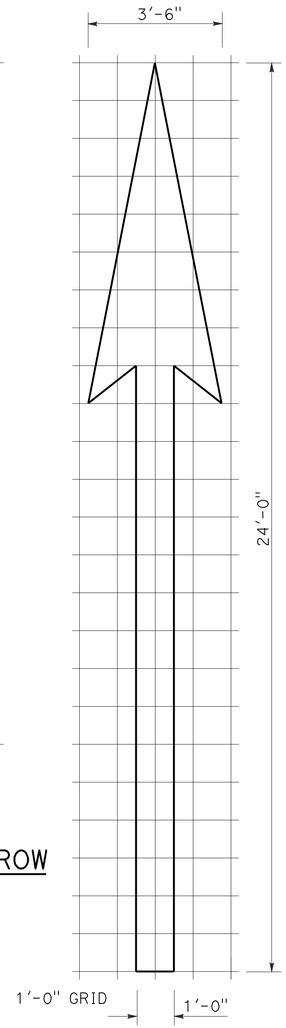

A=31 sq ft

TYPE I 24'-0" ARROW

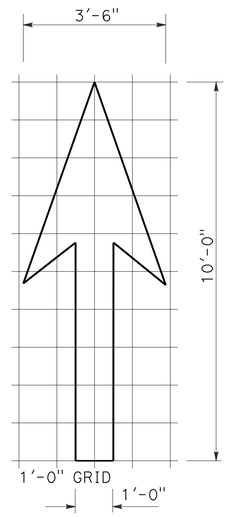

A=14 sq ft

TYPE I 10'-0" ARROW

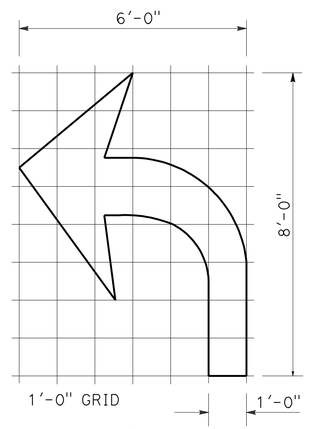

A=15 sq ft

TYPE IV (L) ARROW

(FOR TYPE IV (R) ARROW, USE MIRROR IMAGE)

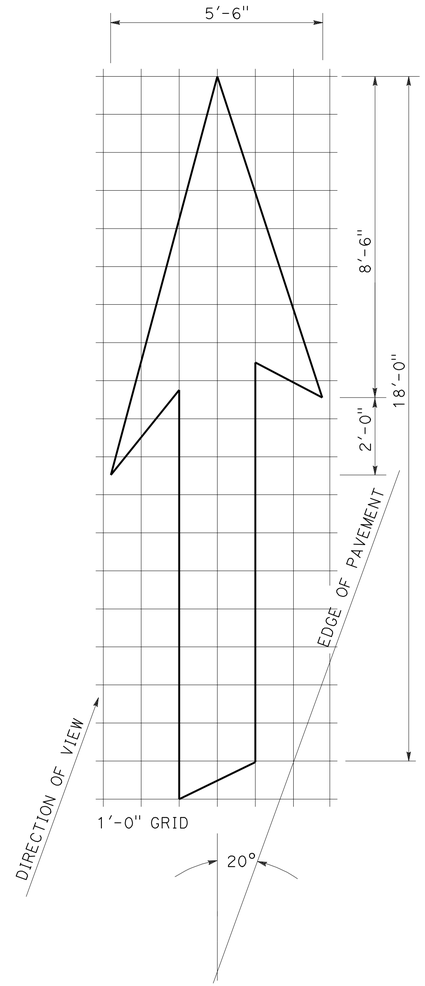

A=42 sq ft

TYPE VI ARROW

RIGHT LANE DROP ARROW (FOR LEFT LANE, USE MIRROR IMAGE)

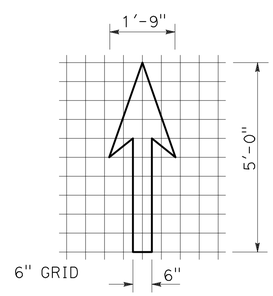

A=3.5 sq ft

BIKE LANE ARROW

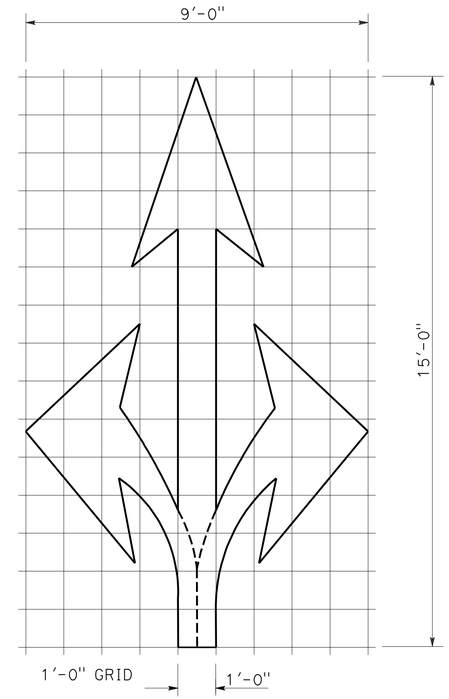

A=36 sq ft

TYPE VIII ARROW

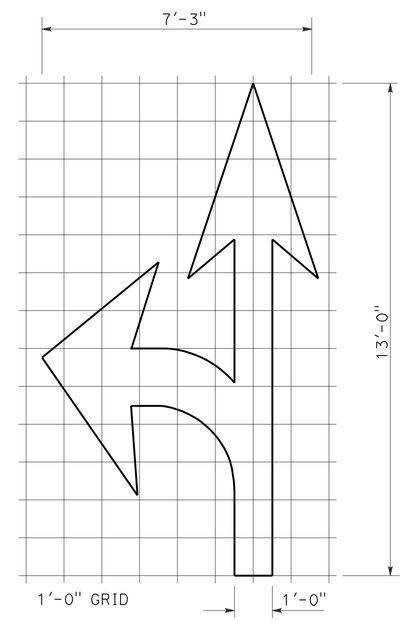

A=27 sq ft

TYPE VII (L) ARROW

(FOR TYPE VII (R) ARROW, USE MIRROR IMAGE)

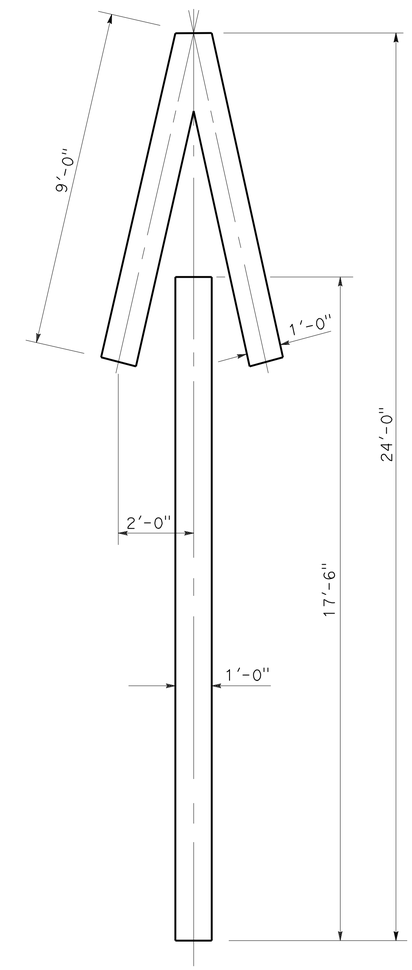

A=33 sq ft

TYPE V ARROW

NOTE:

MINOR VARIATIONS IN DIMENSIONS MAY BE ACCEPTED BY THE ENGINEER.

STATE OF CALIFORNIA
DEPARTMENT OF TRANSPORTATION

PAVEMENT MARKINGS ARROWS

NO SCALE

RSP A24A DATED APRIL 20, 2012 SUPERSEDES STANDARD PLAN A24A DATED MAY 1, 2006 - PAGE 9 OF THE STANDARD PLANS BOOK DATED MAY 2006.

REVISED STANDARD PLAN RSP A24A

2006 REVISED STANDARD PLAN RSP A24A

3-14-12

DIST	COUNTY	ROUTE	POST MILES TOTAL PROJECT	SHEET NO.	TOTAL SHEETS
08	SBd	15	177.3/181.1	220	710

REGISTERED CIVIL ENGINEER

June 6, 2008
PLANS APPROVAL DATE

REGISTERED PROFESSIONAL ENGINEER
Donald E. Howe
No. C46402
Exp. 3-31-09
CIVIL
STATE OF CALIFORNIA

The State of California or its officers or agents shall not be responsible for the accuracy or completeness of electronic copies of this plan sheet.

To accompany plans dated 2-25-13

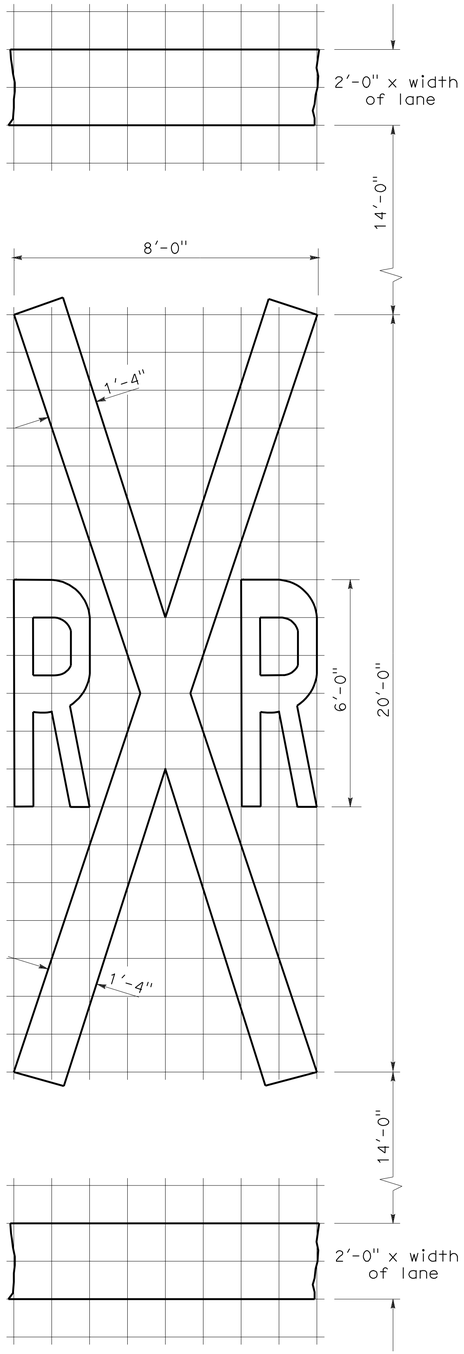

1'-0" GRID
A=70 sq ft ✳

RAILROAD CROSSING SYMBOL

✳70 sq ft DOES NOT INCLUDE THE 2'-0" x VARIABLE WIDTH TRANSVERSE LINES.

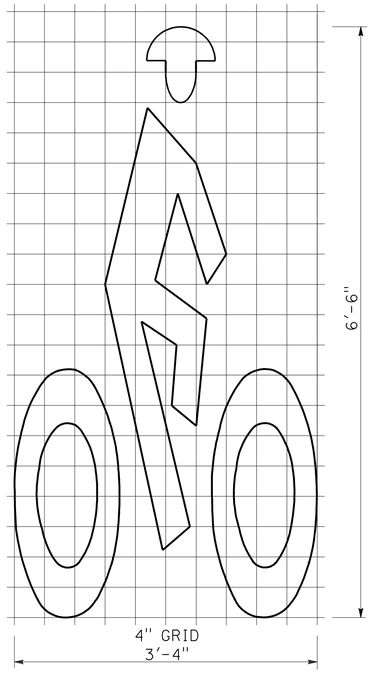

A=7 sq ft

BIKE LANE SYMBOL

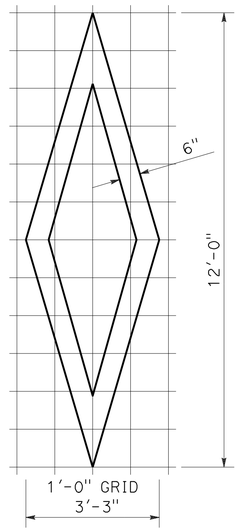

A=11 sq ft

DIAMOND SYMBOL

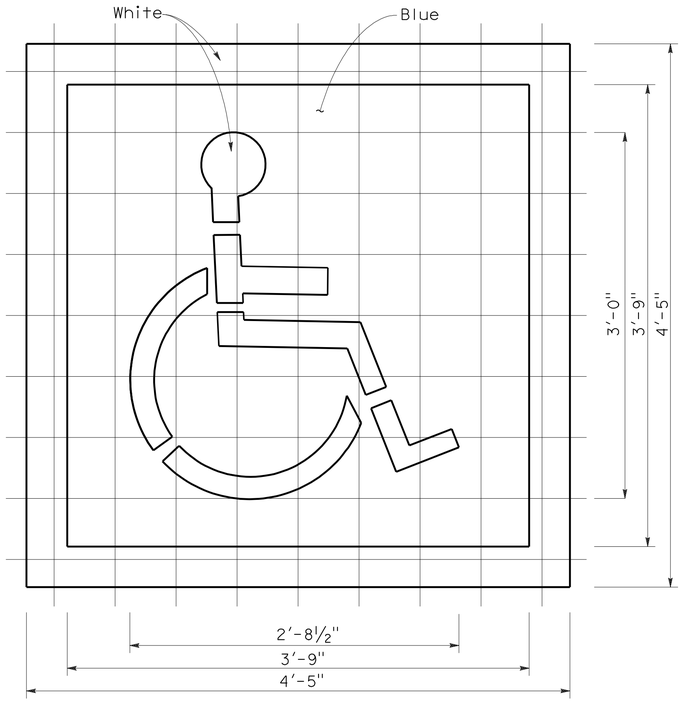

6" GRID
A (White) =9 sq ft
A (Blue) =14 sq ft

INTERNATIONAL SYMBOL OF ACCESSIBILITY MARKING

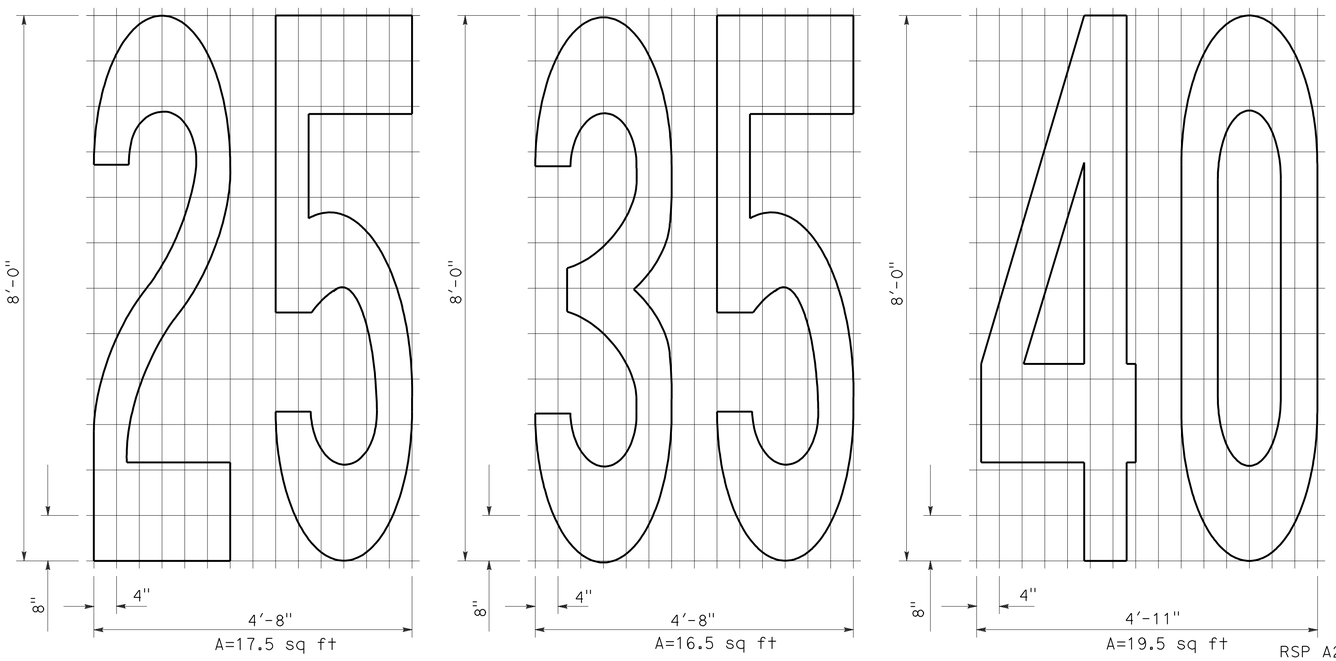

A=17.5 sq ft A=16.5 sq ft A=19.5 sq ft

NUMERALS

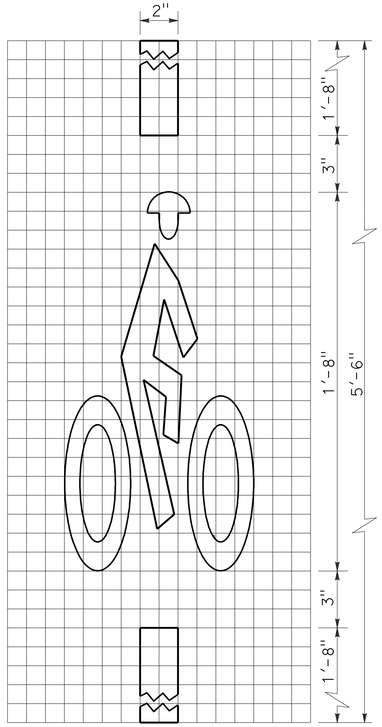

1" GRID
10"
A=2 sq ft

BICYCLE LOOP DETECTOR SYMBOL

NOTE:

1. Minor variations in dimensions may be accepted by the Engineer.

STATE OF CALIFORNIA
DEPARTMENT OF TRANSPORTATION

PAVEMENT MARKINGS SYMBOLS AND NUMERALS

NO SCALE

RSP A24C DATED JUNE 6, 2008 SUPERSEDES STANDARD PLAN A24C DATED MAY 1, 2006 - PAGE 11 OF THE STANDARD PLANS BOOK DATED MAY 2006.

REVISED STANDARD PLAN RSP A24C

2006 REVISED STANDARD PLAN RSP A24C

5-27-08

DIST	COUNTY	ROUTE	POST MILES TOTAL PROJECT	SHEET NO.	TOTAL SHEETS
08	SBd	15	177.3/181.1	221	710

Roberta L. McLaughlin
REGISTERED CIVIL ENGINEER

July 20, 2012
PLANS APPROVAL DATE

REGISTERED PROFESSIONAL ENGINEER
Roberta L. McLaughlin
No. C40375
Exp. 3-31-13
CIVIL
STATE OF CALIFORNIA

The State of California or its officers or agents shall not be responsible for the accuracy or completeness of electronic copies of this plan sheet.

To accompany plans dated 2-25-13

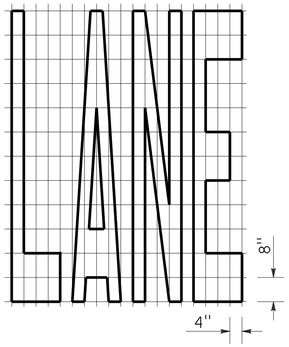

A=24 ft^2

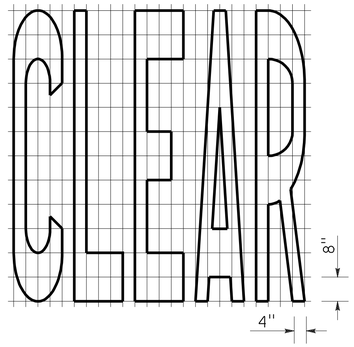

A=27 ft^2

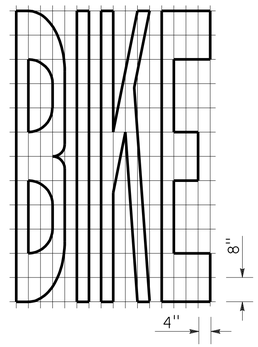

A=21 ft^2

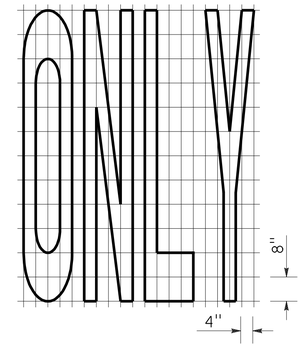

A=22 ft^2

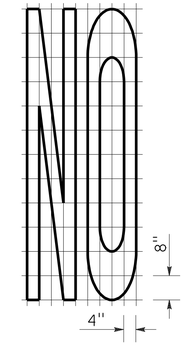

A=14 ft^2

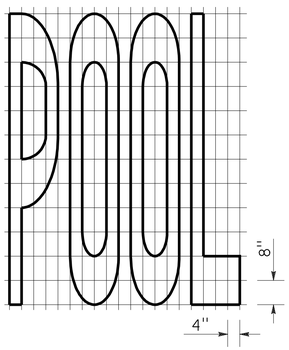

A=23 ft^2

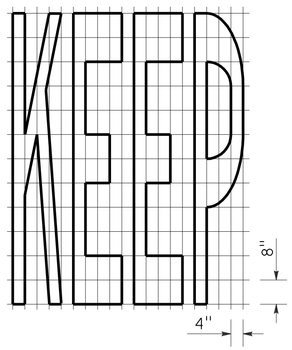

A=24 ft^2

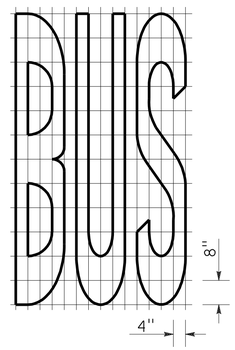

A=20 ft^2

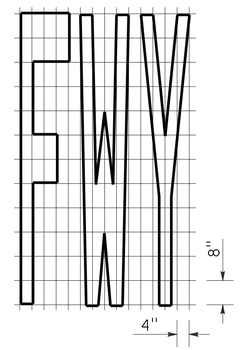

A=16 ft^2

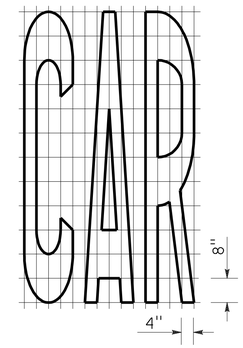

A=17 ft^2

WORD MARKINGS			
ITEM	ft^2	ITEM	ft^2
LANE	24	NO	14
POOL	23	BIKE	21
CAR	17	BUS	20
CLEAR	27	ONLY	22
KEEP	24	FWY	16

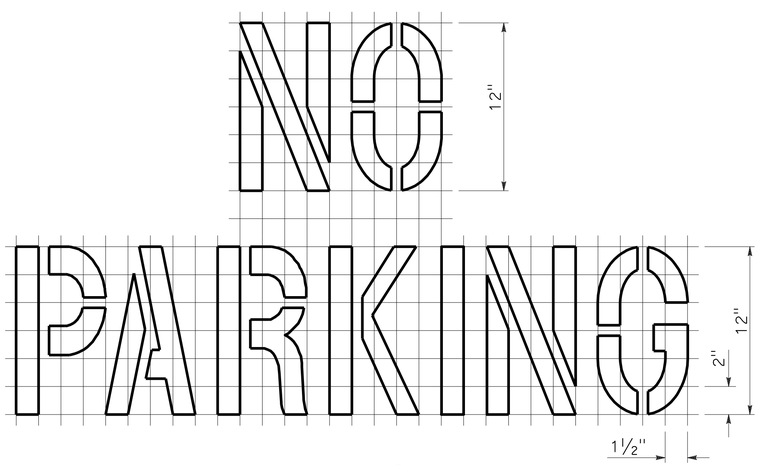

A=2 ft^2

See Notes 6 and 7

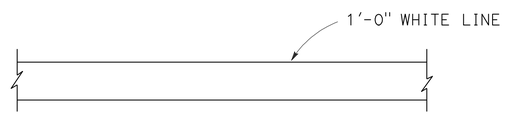

LIMIT LINE (STOP LINE)

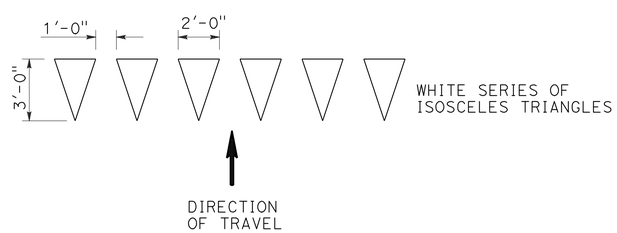

YIELD LINE

1. If a message consists of more than one word, it should read "UP", i.e., the first word should be nearest the driver.
2. The space between words should be at least four times the height of the characters for low speed roads, but not more than ten times the height of the characters. The space may be reduced appropriately where there is limited space because of local conditions.
3. Minor variations in dimensions may be accepted by the Engineer.
4. Portions of a letter, number or symbol may be separated by connecting segments not to exceed 2" in width.
5. The words "NO PARKING" pavement marking is to be used for parking facilities. For typical locations of markings, see Standard Plans A90A and A90B.
6. The words "NO PARKING", shall be painted in white letters no less than 1'-0" high on a contrasting background and located so that it is visible to traffic enforcement officials.

STATE OF CALIFORNIA
DEPARTMENT OF TRANSPORTATION

PAVEMENT MARKINGS WORDS, LIMIT AND YIELD LINES

NO SCALE

RSP A24E DATED JULY 20, 2012 SUPERSEDES STANDARD PLAN A24E
DATED MAY 1, 2006 - PAGE 13 OF THE STANDARD PLANS BOOK DATED MAY 2006.

REVISED STANDARD PLAN RSP A24E

2006 REVISED STANDARD PLAN RSP A24E

6-12-12

DIST	COUNTY	ROUTE	POST MILES TOTAL PROJECT	SHEET NO.	TOTAL SHEETS
08	SBd	15	177.3/181.1	222	710

REGISTERED CIVIL ENGINEER

November 17, 2006
PLANS APPROVAL DATE

REGISTERED PROFESSIONAL ENGINEER Dallas Forester No. C37765 Exp. 12-31-06 CIVIL STATE OF CALIFORNIA

The State of California or its officers or agents shall not be responsible for the accuracy or completeness of electronic copies of this plan sheet.

To accompany plans dated 2-25-13

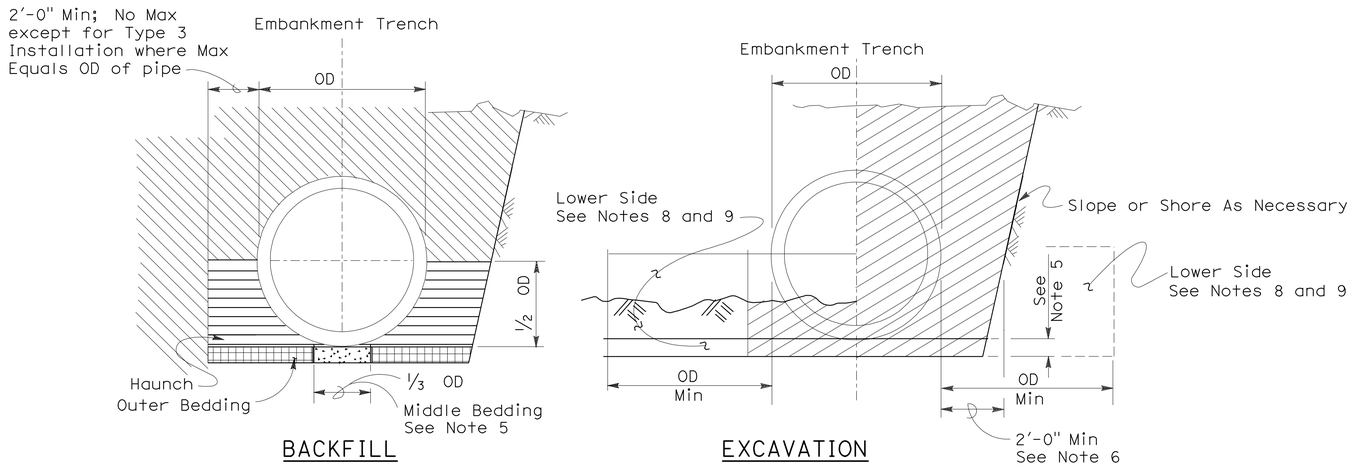

Roadway Embankment

Structure Backfill (Culvert) See Note 6

Structure Backfill (Culvert) See Note 6

Loose Backfill

Excavation Structure (Culvert)

TYPE 1 INSTALLATION:

The haunch and outer bedding shall be compacted to a minimum 90 percent relative compaction. In addition, the minimum sand equivalent in these areas shall be 30 and the maximum percentage passing the 75 μm sieve size shall be 12.

TYPE 2 INSTALLATION:

The haunch and outer bedding shall be compacted to a minimum 90 percent relative compaction. In addition, the minimum sand equivalent in these areas shall be 25.

TYPE 3 INSTALLATION:

The haunch and outer bedding shall be compacted to a minimum 85 percent relative compaction. 90 percent relative compaction will be required where the fill over the pipe is less than 4'-0" or 1/2 OD.

INSTALLATION TYPE 1

MINIMUM CLASS AND D-LOAD	COVER	
	108" Dia AND SMALLER	OVER 108" Dia
Class II 1000D	14.9'	12.9'
Class III 1350D	15.0' - 20.9'	13.0' - 18.9'
Class III Special 1700D	21.0' - 26.9'	19.0' - 24.9'
Class IV 2000D	27.0' - 31.9'	25.0' - 29.9'
Class IV Special 2500D	32.0' - 40.9'	30.0' - 38.9'
Class V 3000D	41.0' - 49.9'	39.0' - 46.9'
Class V Special 3600D	50.0' - 59.0'	47.0' - 58.0'

INSTALLATION TYPE 2

MINIMUM CLASS AND D-LOAD	COVER
Class II 1000D	9.9'
Class III 1350D	10.0'- 14.9'
Class III Special 1700D	15.0' - 19.9'
Class IV 2000D	20.0' - 24.9'
Class IV Special 2500D	25.0' - 31.9'
Class V 3000D	32.0' - 38.9'
Class V Special 3600D	39.0' - 47.0'

INSTALLATION TYPE 3

MINIMUM CLASS AND D-LOAD	COVER	
	48" Dia AND SMALLER	OVER 48" Dia
Class II 1000D	7.9'	5.9'
Class III 1350D	8.0' - 10.9'	6.0' - 8.9'
Class III Special 1700D	11.0' - 14.9'	9.0' - 12.9'
Class IV 2000D	15.0' - 17.9'	13.0' - 15.9'
Class IV Special 2500D	18.0' - 21.9'	16.0' - 19.9'
Class V 3000D	22.0' - 26.9'	20.0' - 24.9'
Class V Special 3600D	30.0' - 33.0'	25.0' - 31.0'

NOTES:

1. Unless otherwise shown on the plans or specified in the special provision, the Contractor shall have the option of selecting the class of RCP and the type of installation to be used, provided the height of cover does not exceed the value shown for the RCP selected.
   Example: 24" RCP culvert with maximum cover of 19'-0" the options are:
   a) Class III or stronger with Installation Type 1.
   b) Class III Special or stronger with Installation Type 2.
   c) Class IV Special or stronger with Installation Type 3.
   Cover is defined as the maximum vertical distance from top of the pipe to finished grade within the length of any given culvert.
2. The class of RCP and Installation Type selected shall be the same throughout the length of any given culvert.
3. The "length of any culvert" is defined as the culvert between:
   a) Successive drainage structure (inlets, junction boxes, headwalls, etc.).
   b) A drainage structure and the inlet or outlet end of the culvert.
   c) The inlet and outlet end of the culvert when there are no intervening drainage structures.
4. Oval and arch shaped RCP shall not be used.
5. 1/25 OD Min, not less than 3".
6. Slurry cement backfill may be substituted for backfill in the outer bedding and haunch areas. If slurry is used the outer and middle beddings shall be omitted. Prior to installation the soil under the middle 1/3 of the outside diameter of the pipe shall be softened by scarifying or other means to a minimum depth of 1/25 OD, but not less than 3". Where slurry cement backfill is used clear distance to trench wall may be reduced as set forth in Section 19-3.062 of the Standard Specifications.
7. Backfill shall be placed full width of excavation except where dimensions are shown for backfill width or thickness. Dimensions shown are minimums.
8. Lower side shall be suitable material as determined by the Engineer. Otherwise it shall be considered unsuitable as set forth in Section 19-2.02 of the Standard Specifications. See Note 9.
9. Where the pipe is placed in a trench, if the trench walls are sloped at 5 vertical to 1 horizontal or steeper for at least 90 percent of the trench height or up to not less than 12" from the grading plane, the firmness of the soil in the lower side need not be considered.
10. Non-reinforced precast concrete pipe sizes 3'-0" or smaller may be placed under installation Types 1, 2 or 3.

STATE OF CALIFORNIA
DEPARTMENT OF TRANSPORTATION

EXCAVATION AND BACKFILL CONCRETE PIPE CULVERTS

NO SCALE

RSP A62DA DATED NOVEMBER 17, 2006 SUPERSEDES STANDARD PLAN A62DA DATED MAY 1, 2006 - PAGE 20 OF THE STANDARD PLANS BOOK DATED MAY 2006.

REVISED STANDARD PLAN RSP A62DA

2006 REVISED STANDARD PLAN RSP A62DA

10-26-06

Dist	COUNTY	ROUTE	POST MILES TOTAL PROJECT	SHEET No.	TOTAL SHEETS
08	SBd	15	177.3/181.1	223	710

Randell D. Hiatt
REGISTERED CIVIL ENGINEER

May 20, 2011
PLANS APPROVAL DATE

REGISTERED PROFESSIONAL ENGINEER
Randell D. Hiatt
No. C50200
Exp. 6-30-11
CIVIL
STATE OF CALIFORNIA

The State of California or its officers or agents shall not be responsible for the accuracy or completeness of electronic copies of this plan sheet.

To accompany plans dated 2-25-13

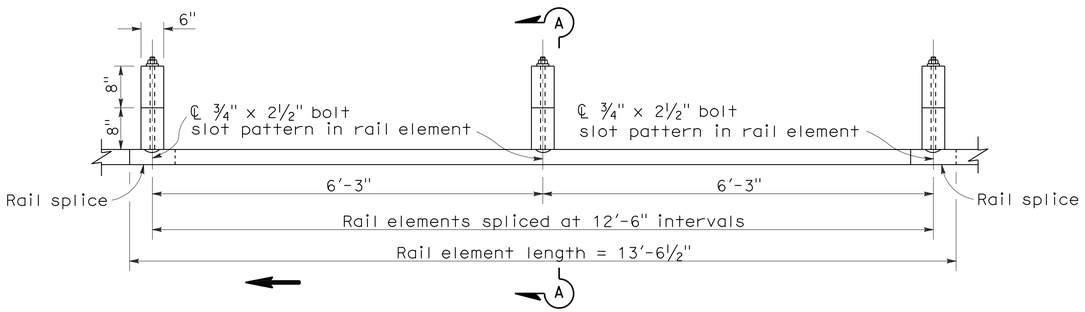

PLAN

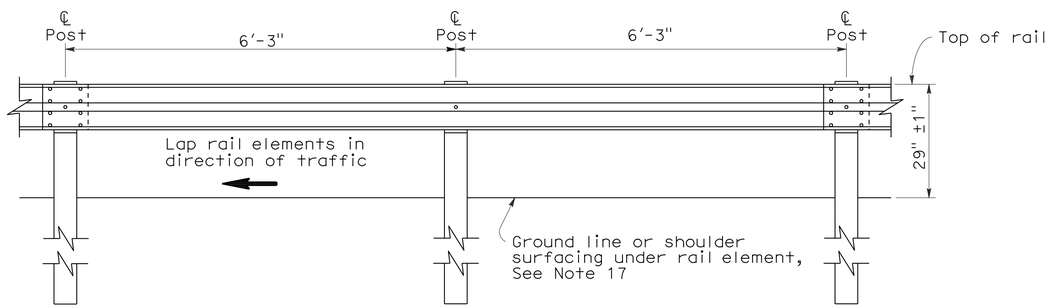

ELEVATION

METAL BEAM GUARD RAILING WITH WOOD POST AND BLOCKS

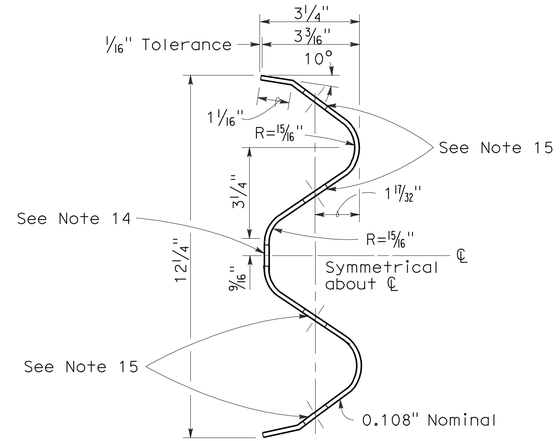

SECTION THRU RAIL ELEMENT

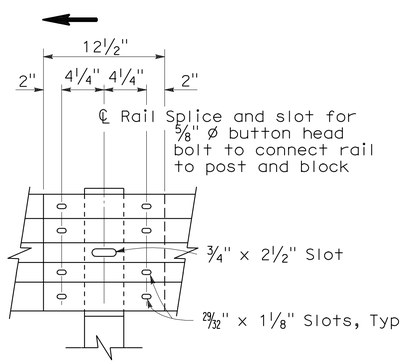

ELEVATION

RAIL ELEMENT SPLICE DETAIL

a) Connect the over lapped end of the rail elements with ⅝" ø x 1⅜" button head oval shoulder splice bolts inserted into the 29⁄32" x 1⅛" slots and bolted together with ⅝" ø recessed hex nuts. Recess of hex nut points toward rail element. A total of 8 bolts and nuts are to be used at each rail splice connection.

b) The ends of the rail elements are to be overlapped in the direction of traffic (see details).

c) Where end cap is to be attached to the end of a rail element, a total of 4 of the above described splice bolts and nuts are to be used.

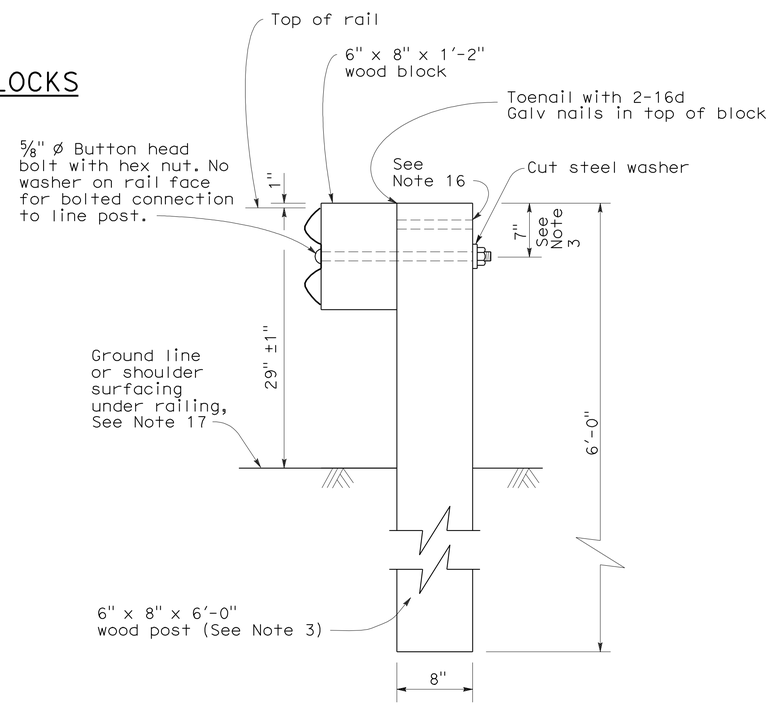

SECTION A-A

TYPICAL WOOD LINE POST INSTALLATION

See Note 4

NOTES:

1. For details of steel post installations, see Standard Plan A77A2.
2. For details of standard hardware used to construct guard railing, see Standard Plan A77B1.
3. For details of wood posts and wood blocks used to construct guard railing, see Standard Plan A77C1.
4. For additional installation details, see Standard Plan A77C3.
5. Guard railing post spacing to be 6'-3" center to center, except as otherwise noted.
6. For guard railing typical layouts, see the A77E, A77F and A77G Series of Standard Plans.
7. For terminal system end treatment details, see the A77L Series of Standard Plans. To connect railing to terminal system end treatment, transition the top of railing height at a ratio of 120:1 to terminal system end treatment height plus one 12'-6" standard railing section at the transitioned height for a horizontal connection to the end treatment.
8. For guard railing end anchor details, see Standard Plans A77H1 and A77I2.
9. For details of guard railing transition to bridge railing, see Standard Plan A77J4.
10. For additional details of guard railing connection to bridge railings, see Standard Plans A77J1, A77J2 and A77K1.
11. For guard railing connection details to abutments and walls, see Standard Plan A77J3.
12. Direction of adjacent traffic indicated by ➡.
13. For typical guard railing delineation and dike positioning details, see Standard Plan A77C4.
14. Slotted hole for bolted connection of rail element to block and post. See "Section Thru Rail Element".
15. Slotted holes for splice bolts to overlap ends of rail element. See "Section Thru Rail Element".
16. Additional hole in uppermost portion of line post is for potential future adjustments of railing height. See Standard Plan A77C1.
17. Install posts in soil.

STATE OF CALIFORNIA
DEPARTMENT OF TRANSPORTATION

METAL BEAM GUARD RAILING STANDARD RAILING SECTION (WOOD POST WITH WOOD BLOCK)

NO SCALE

RSP A77A1 DATED MAY 20, 2011 SUPERSEDES STANDARD PLAN A77A1 DATED MAY 1, 2006 - PAGE 41 OF THE STANDARD PLANS BOOK DATED MAY 2006.

REVISED STANDARD PLAN RSP A77A1

2006 REVISED STANDARD PLAN RSP A77A1

3-10-11

DIST	COUNTY	ROUTE	POST MILES TOTAL PROJECT	SHEET NO.	TOTAL SHEETS
08	SBd	15	177.3/181.1	224	710

Randell D. Hiatt
REGISTERED CIVIL ENGINEER

June 6, 2008
PLANS APPROVAL DATE

REGISTERED PROFESSIONAL ENGINEER
Randell D. Hiatt
No. C50200
Exp. 6-30-09
CIVIL
STATE OF CALIFORNIA

The State of California or its officers or agents shall not be responsible for the accuracy or completeness of electronic copies of this plan sheet.

To accompany plans dated 2-25-13

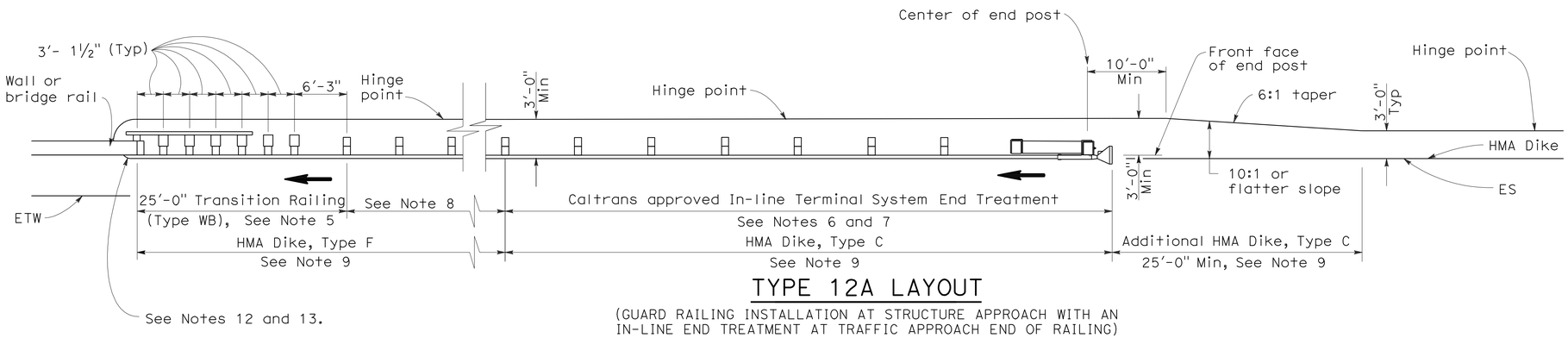

TYPE 12A LAYOUT

(GUARD RAILING INSTALLATION AT STRUCTURE APPROACH WITH AN IN-LINE END TREATMENT AT TRAFFIC APPROACH END OF RAILING)
See Notes 10

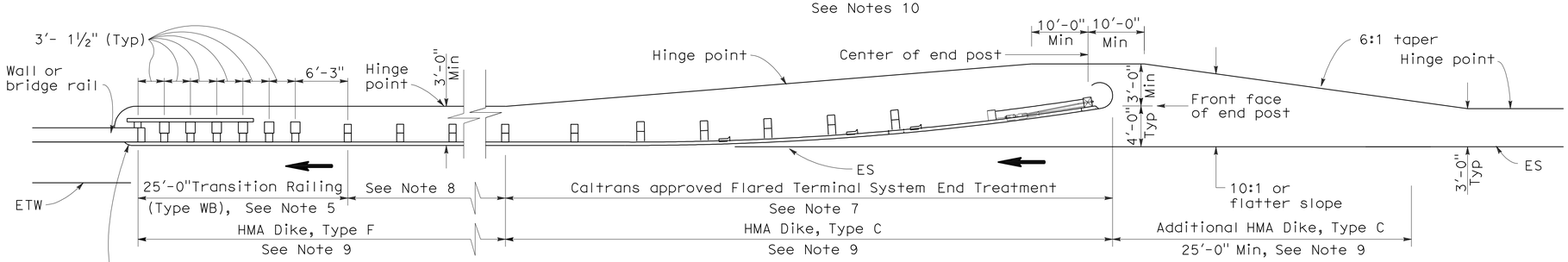

TYPE 12B LAYOUT

(GUARD RAILING INSTALLATION AT STRUCTURE APPROACH WITH A FLARED END TREATMENT AT TRAFFIC APPROACH END OF RAILING)
See Notes 10

NOTES:

1. Line post, blocks and hardware to be used are shown on Standard Plans A77A1, A77A2, A77B1, A77C1 and A77C2.
2. Guard rail post spacing to be 6'-3" center to center, except as otherwise noted.
3. Except as noted, line posts are 6" x 8" x 6'-0" wood with 6" x 8" x 1'-2" wood blocks. W6 x 9 steel posts, 6'-0" in length, with 6" x 8" x 1'-2" notched wood blocks or plastic blocks may be used for 6" x 8" x 6'-0" wood posts with 6" x 8" x 1'-2" wood blocks where applicable and when specified.
4. Direction of adjacent traffic indicated by ➡.
5. For Transition Railing (Type WB) details for Types 12A and 12B Layouts, see Standard Plan A77J4.
6. In-line Terminal System End Treatments are used where site conditions will not accommodate a flared end treatment.
7. The type of terminal system end treatment to be used will be shown on the Project Plans.
8. Dependent on site conditions (embankment height, side slopes, or other fixed objects), it may be advisable to construct additional guard railing (a length equal to multiples of 12'-6" with 6'-3" post spacing) between the transition railing and end treatment.
9. Where placement of dike is required with guard railing installations, see Revised Standard Plan RSP A77C4 for dike positioning details.
10. Type 12A or Type 12B Layouts are typically used:
    a. To the right of approaching traffic, at the end of a structure, on two-lane conventional highway where the roadbed width across the structure is less than 40 feet.
    b. To the left of approaching traffic, at the end of a structure, on two-lane conventional highway where the roadbed width across the structure is less than 40 feet.
    c. To the right of approaching traffic at the end of each structure on multilane freeways or expressways with separate adjacent or parallel bridges.
    d. To the right of approaching traffic at the end of the structure on multilane freeways or expressways with decked median on the bridge.
11. See Revised Standard Plan RSP A77F3 for typical layout used left of approaching traffic at the ends of each structure on multilane freeways or expressways with separate adjacent or parallel bridges.
12. For additional details of typical connections to bridge rail, see Connection Detail AA on Revised Standard Plans RSP A77J1 and RSP A77J2 and Connection Detail FF on Standard Plans A77K1 and A77K2.
13. For additional details of a typical connection to walls or abutments, see Standard Plan A77J3.

STATE OF CALIFORNIA
DEPARTMENT OF TRANSPORTATION

METAL BEAM GUARD RAILING TYPICAL LAYOUTS FOR STRUCTURE APPROACH

NO SCALE

RSP A77F1 DATED JUNE 6, 2008 SUPERSEDES STANDARD PLAN A77F1
DATED MAY 1, 2006 - PAGE 54 OF THE STANDARD PLANS BOOK DATED MAY 2006.

REVISED STANDARD PLAN RSP A77F1

2006 REVISED STANDARD PLAN RSP A77F1

12-10-07

DIST	COUNTY	ROUTE	POST MILES TOTAL PROJECT	SHEET NO.	TOTAL SHEETS
08	SBd	15	177.3/181.1	225	710

Randell D. Hiatt
REGISTERED CIVIL ENGINEER

June 6, 2008
PLANS APPROVAL DATE

REGISTERED PROFESSIONAL ENGINEER
Randell D. Hiatt
No. C50200
Exp. 6-30-09
CIVIL
STATE OF CALIFORNIA

The State of California or its officers or agents shall not be responsible for the accuracy or completeness of electronic copies of this plan sheet.

To accompany plans dated 2-25-13

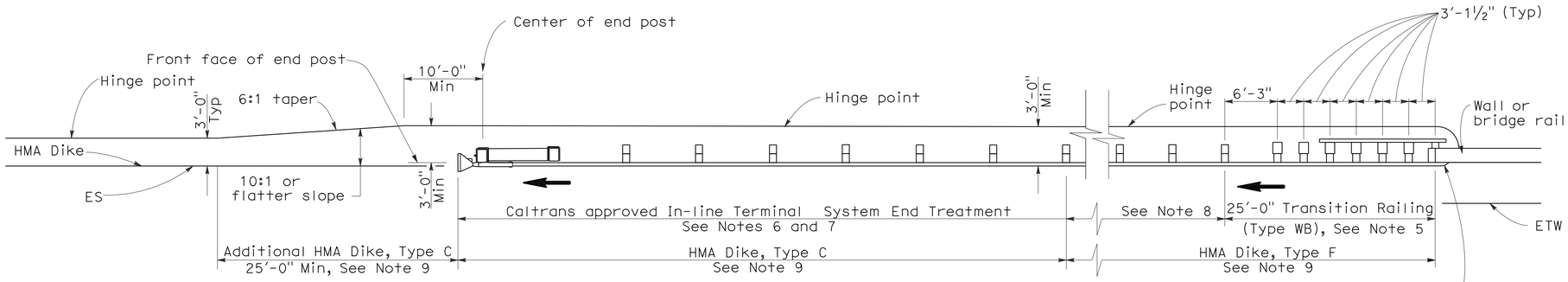

TYPE 12AA LAYOUT

(GUARD RAILING INSTALLATION AT STRUCTURE DEPARTURE WITH AN IN-LINE END TREATMENT AT TRAILING END OF RAILING)
See Notes 9 and 10

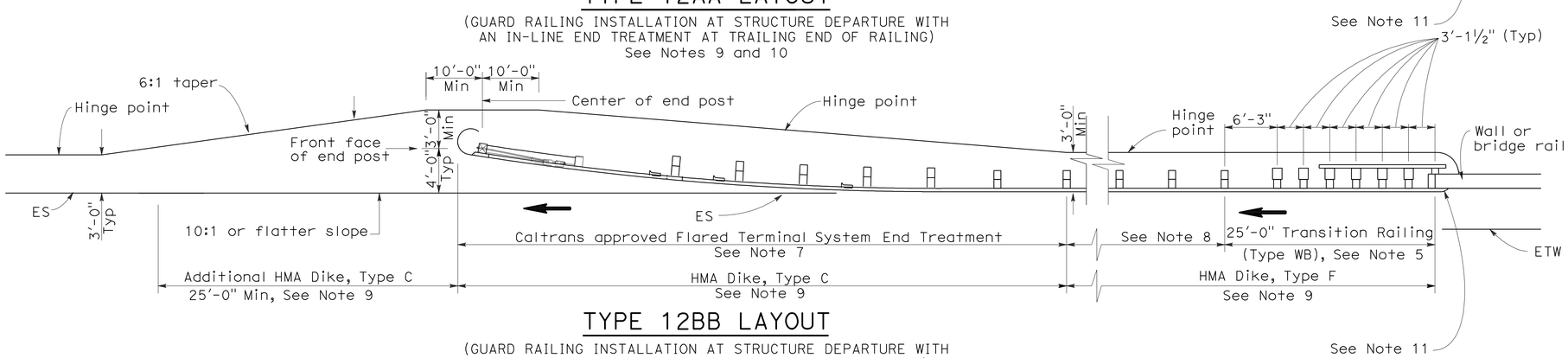

TYPE 12BB LAYOUT

(GUARD RAILING INSTALLATION AT STRUCTURE DEPARTURE WITH A FLARED END TREATMENT AT TRAILING END OF RAILING)
See Notes 9 and 10

NOTES:

1. Line post, blocks and hardware to be used are shown on Standard Plans A77A1, A77A2, A77B1, A77C1 and A77C2.
2. Guard rail post spacing to be 6'-3" center to center, except as otherwise noted.
3. Except as noted, line posts are 6" x 8" x 6'-0" wood with 6" x 8" x 1'-2" wood blocks. W6 x 9 steel posts, 6'-0" in length, with 6" x 8" x 1-2" notched wood blocks or notched recycled plastic blocks may be used for 6" x 8" x 6'-0" wood posts with 6" x 8" x 1'-2" wood blocks where applicable and when specified.
4. Direction of adjacent traffic indicated by ⟶.
5. For Transition Railing (Type WB) details for Types 12AA and 12BB Layouts, see Standard Plan A77J4.
6. In-line Terminal System Treatments are used where site conditions will not accommodate a flared end treatment.
7. The type of terminal system to be used will be shown on the Project Plans.
8. Dependent on site conditions (embankment height, side slopes, other fixed objects), it may be advisable to construct additional guard railing (a length equal to multiples of 12'-6" with 6'-3" post spacing) between the transition railing and end treatments.
9. Where placement of dike is required with guard railing installations, see Revised Standard Plan RSP A77C4 for dike positioning details.
10. Type 12AA or Type 12BB Layouts are typically used to the right of traffic departing a structure on two-way conventional highways where the roadbed width across the structure is less than 40 feet.
11. For additional details of typical connections to bridge rail, see Connection Detail CC on Revised Standard Plan RSP A77J2 and Connection Detail HH on Standard Plans A77k2.

STATE OF CALIFORNIA
DEPARTMENT OF TRANSPORTATION

METAL BEAM GUARD RAILING TYPICAL LAYOUTS FOR STRUCTURE DEPARTURE

NO SCALE

RSP A77F4 DATED JUNE 6, 2008 SUPERSEDES STANDARD PLAN A77F4
DATED MAY 1, 2006 - PAGE 57 OF THE STANDARD PLANS BOOK DATED MAY 2006.

REVISED STANDARD PLAN RSP A77F4

2006 REVISED STANDARD PLAN RSP A77F4

12-10-07

Dist	COUNTY	ROUTE	POST MILES TOTAL PROJECT	SHEET No.	TOTAL SHEETS
08	SBd	15	177.3/181.1	226	710

Randell D. Hiatt
REGISTERED CIVIL ENGINEER

May 20, 2011
PLANS APPROVAL DATE

REGISTERED PROFESSIONAL ENGINEER Randell D. Hiatt No. C50200 Exp. 6-30-11 CIVIL STATE OF CALIFORNIA

To accompany plans dated 2-25-13

The State of California or its officers or agents shall not be responsible for the accuracy or completeness of electronic copies of this plan sheet.

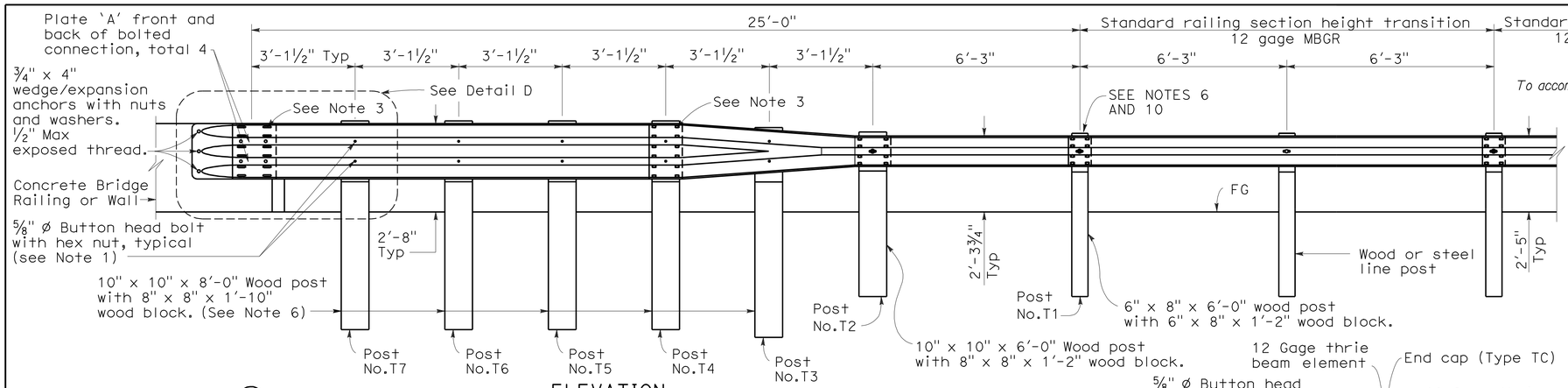

ELEVATION

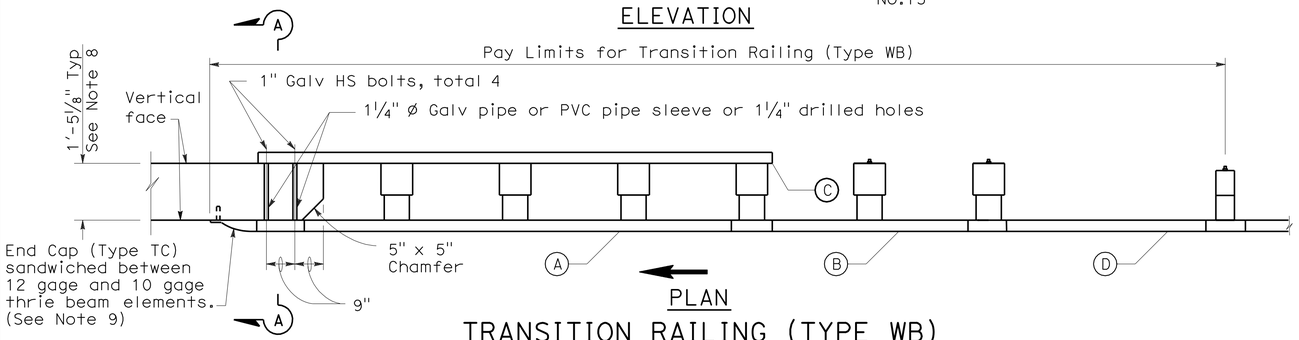

PLAN

TRANSITION RAILING (TYPE WB)

(No Blockout Attachment)

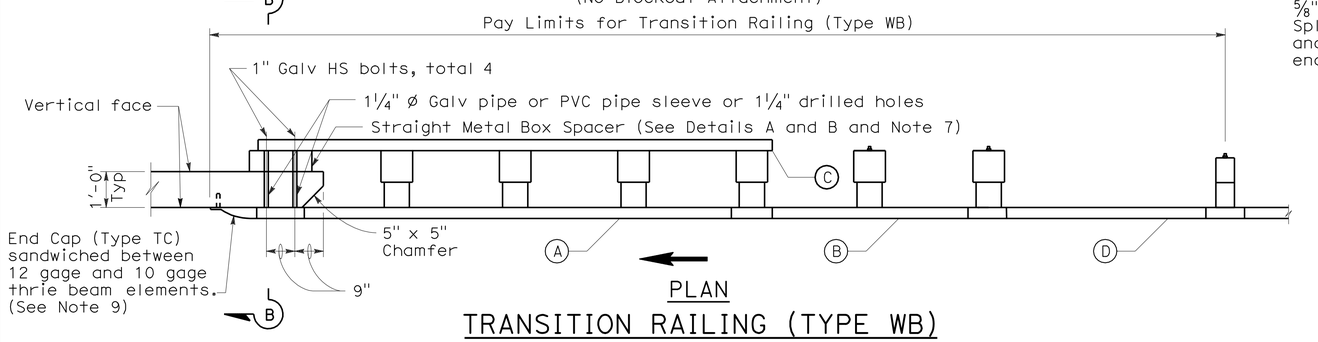

PLAN

TRANSITION RAILING (TYPE WB)

(Blockout Attachment)

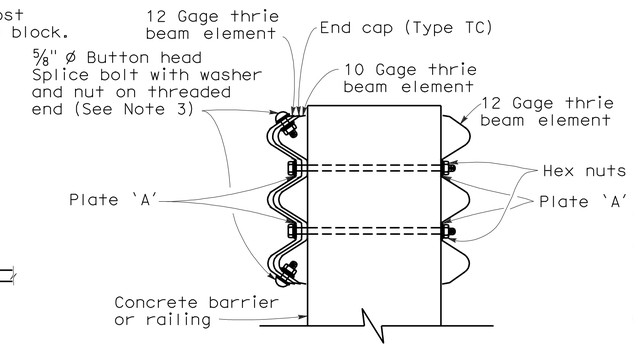

SECTION A-A

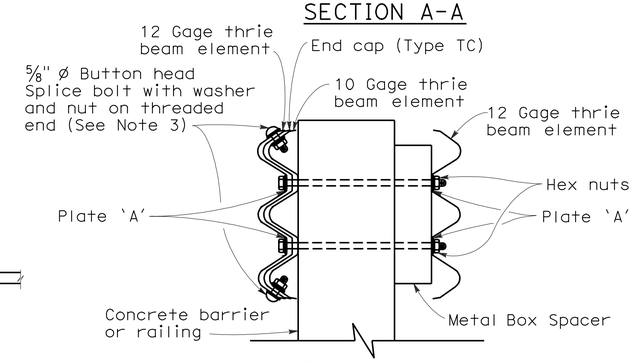

SECTION B-B

NOTES:

1. Use ⅝" ø Button head bolts and hex nuts for connections to posts. No washer on rail face for bolted connections to post.
2. The nested rail elements, end cap, and 'W' beam to thrie beam element may be spliced together prior to bolting the elements to the wood post and concrete barrier or railing.
3. Exterior splice bolt holes for rail element splices at Post No. T4 and the connection to the concrete barrier or railing shall be the standard 29/32" x 1⅛" slot size. Interior splice bolt holes at these locations may be increased up to 1¼" ø. Only the top 2 and the bottom 2 splice bolts with washers and nuts are required for rail splices at Post No. T4 and the connection to the concrete barrier or railing.
4. Direction of adjacent traffic indicated by ➡.
5. The top elevation of Posts No. T2 through No. T7 shall not project more than 1" above the top elevation of the rail element.
6. Typically, the railing connected to Transition Railing (Type WB) will be either standard railing section of metal beam guard railing with height transition ratio of 120:1 or an approved Caltrans end treatment attached to Post No. T1.
7. The depth of the metal box spacer varies from the 5⅛" to 1½" and is dependent on the width of the concrete railing or wall. The combined dimension for the depth of the metal box spacer plus the width of railing or wall is typically 17⅛". Where the space between the backside of the concrete railing or wall and the rear thrie beam element is less than 1½", metal plates similar to Plate 'A' are to be used as spacers.
8. Where the width of the concrete railing or wall is greater than 17⅛", wood blocks are to be used to fill the space created between the backside of Posts No. T4 through No. T7 and the rear thrie beam element. These wood blocks shall be 8" in width and 1'-2" in length. The dimension between the front thrie beam element and the rear thrie beam element is to match the width of the concrete railing or wall.
9. End cap may be installed over 12 gage and 10 gage thrie beam elements where transition railing is installed on the departure end of bridge railing.
10. Conform standard railing section height to 2'-3¾" at Post No. T1 using height transition ratio of 120:1.

LEGEND

(A) Nested thrie beam elements (one 12 gage element nested over one 10 gage element).

(B) One 10 gage "W" beam to thrie beam element.

(C) One 12 gage thrie beam element.

(D) One 10 gage "W" beam rail element (7'-3½" length)

10 gage = 0.135" thick

12 gage = 0.108" thick

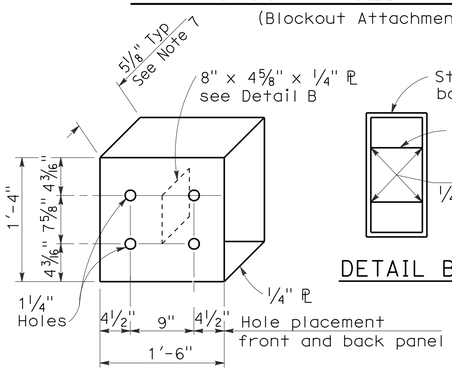

DETAIL A

STRAIGHT METAL BOX SPACER

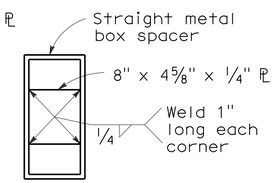

DETAIL B

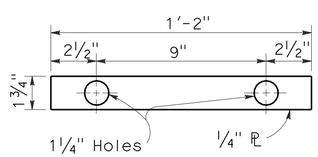

DETAIL C

PLATE 'A'

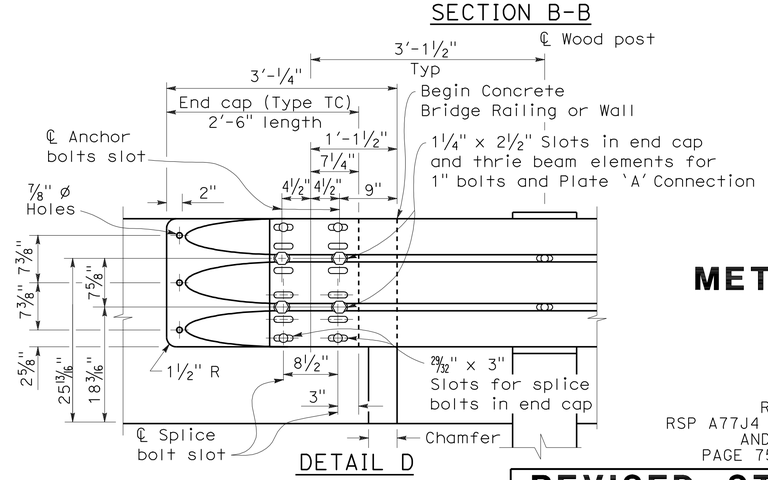

DETAIL D

STATE OF CALIFORNIA
DEPARTMENT OF TRANSPORTATION

METAL BEAM GUARD RAILING TRANSITION RAILING (TYPE WB)

NO SCALE

RSP A77J4 DATED MAY 20, 2011 SUPERSEDES
RSP A77J4 DATED JUNE 5, 2009, RSP A77J4 DATED JUNE 6, 2008
AND STANDARD PLAN A77J4 DATED MAY 1, 2006 -
PAGE 75 OF THE STANDARD PLANS BOOK DATED MAY 2006.

REVISED STANDARD PLAN RSP A77J4

2006 REVISED STANDARD PLAN RSP A77J4

5-14-09

DIST	COUNTY	ROUTE	POST MILES TOTAL PROJECT	SHEET NO.	TOTAL SHEETS
08	SBd	15	177.3/181.1	227	710

Glenn DeCou
REGISTERED CIVIL ENGINEER

June 5, 2009
PLANS APPROVAL DATE

REGISTERED PROFESSIONAL ENGINEER Glenn DeCou No. C34547 Exp. 9-30-09 CIVIL STATE OF CALIFORNIA

The State of California or its officers or agents shall not be responsible for the accuracy or completeness of electronic copies of this plan sheet.

To accompany plans dated 2-25-13

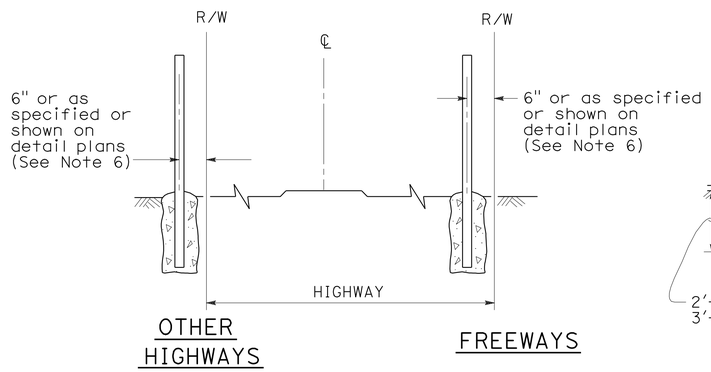

FENCE LOCATION

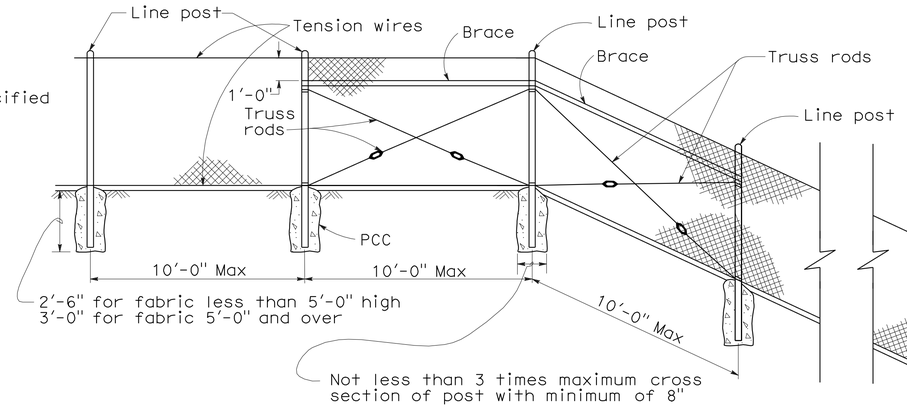

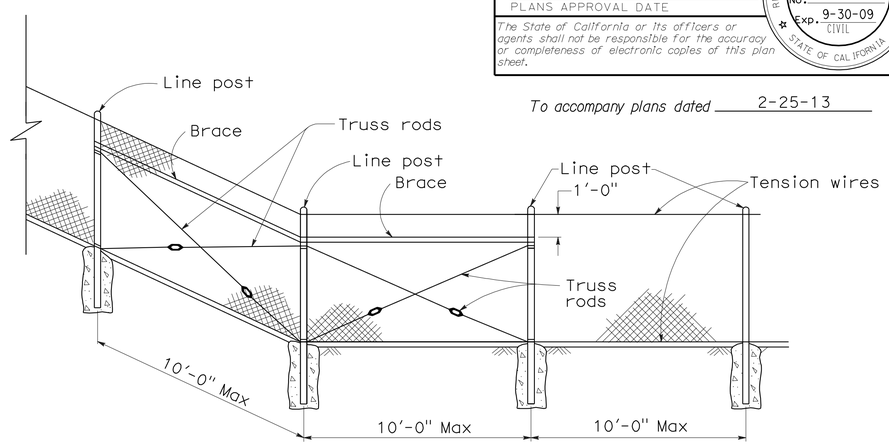

CHAIN LINK FENCE ON SHARP BREAK IN GRADE

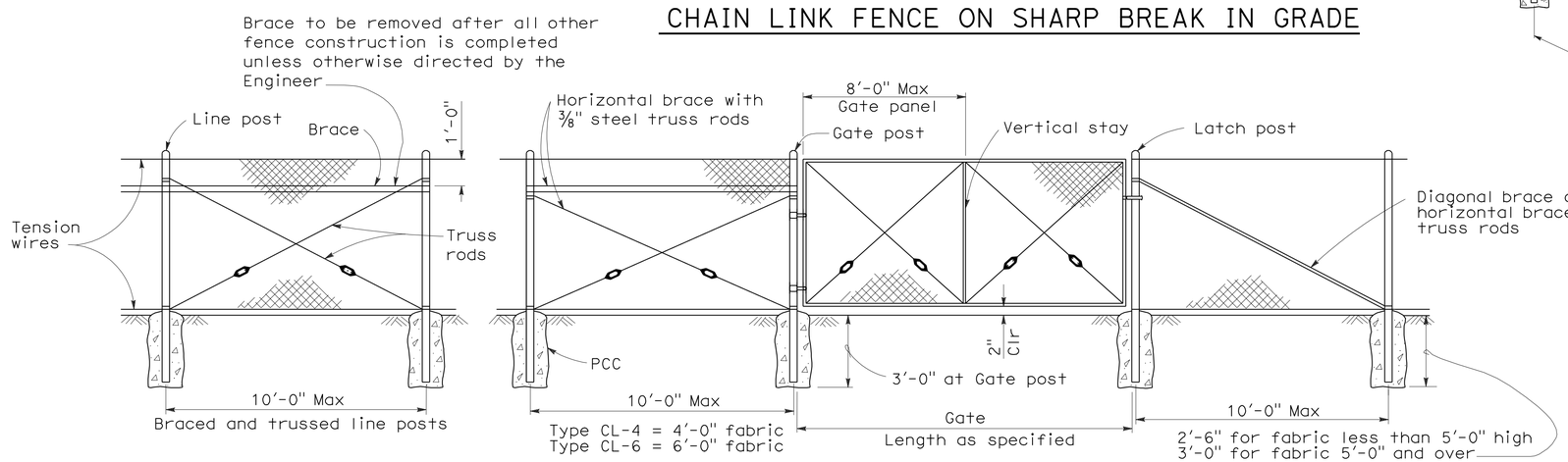

CHAIN LINK GATE INSTALLATION

GATE POST			
FENCE HEIGHT	GATE WIDTHS	NOMINAL ID	WEIGHT PER FOOT
6'-0" and Less	Up thru 6'-0"	2½"	4.95 LB
	Over 6'-0" thru 12'-0"	4"	10.79 LB
	Over 12'-0" thru 18'-0"	5"	14.62 LB
	Over 18'-0" to 24'-0" Max	6"	18.97 LB
Over 6'-0"	Up thru 6'-0"	3"	7.58 LB
	Over 6'-0" thru 12'-0"	5"	14.62 LB
	Over 12'-0" thru 18'-0"	6"	18.97 LB
	Over 18'-0" to 24'-0" Max	8"	28.55 LB

Above post dimensions and weights are minimums. Larger sizes may be used on approval of the Engineer.

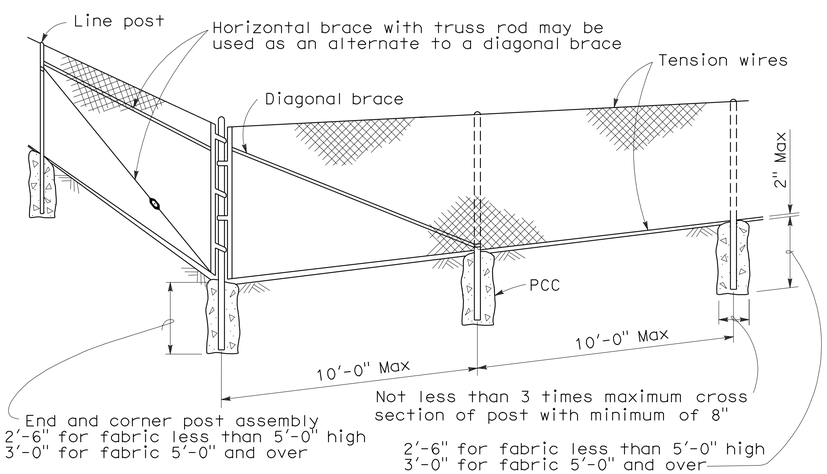

CORNER POST

NOTES:

1. The below table shows examples of post and brace sections which may comply with the Specifications.
2. Sections shown in the tables must also comply with the strength requirements and other provisions of the Specifications.
3. Other sections which comply with the strength requirements and other provisions of the Specifications may be used on approval of the Engineer.
4. Options exercised shall be uniform on any one project.
5. Dimensions shown are nominal.
6. Offset to be 2'-0" at monument locations, measured at right angles to R/W lines. Taper to achieve offset to be at least 20'-0" long.

TYPICAL MEMBER DIMENSIONS (See Notes)											
FENCE HEIGHT	LINE POSTS			END, LATCH & CORNER POSTS				BRACES			
	ROUND ID	H	ROLL FORMED	ROUND ID	ROLL FORMED			ROUND ID	H	ROLL FORMED	
6' & less	1½"	1⅞" × 1⅝"	1⅞" × 1⅝"	2"	3½" × 3½"	2" × 1¾"		1¼"	1½" × 1 5/16"	1⅝" × 1¼"	1¾" × 1¼"
Over 6'	2"	2¼" × 2"	2" × 1¾"	2½"	3½" × 3½"	2½" × 2½"		1¼"	1½" × 1 5/16"	1⅝" × 1¼"	1¾" × 1¼"

STATE OF CALIFORNIA
DEPARTMENT OF TRANSPORTATION

CHAIN LINK FENCE

NO SCALE

RSP A85 DATED JUNE 5, 2009 SUPERSEDES STANDARD PLAN A85
DATED MAY 1, 2006 - PAGE 111 OF THE STANDARD PLANS BOOK DATED MAY 2006.

REVISED STANDARD PLAN RSP A85

2006 REVISED STANDARD PLAN RSP A85

5-7-09

DIST	COUNTY	ROUTE	POST MILES TOTAL PROJECT	SHEET NO.	TOTAL SHEETS
08	SBd	15	177.3/181.1	228	710

REGISTERED CIVIL ENGINEER

November 17, 2006
PLANS APPROVAL DATE

REGISTERED PROFESSIONAL ENGINEER
Michael Janzen
No. 44788
Exp. 03-31-08
CIVIL
STATE OF CALIFORNIA

The State of California or its officers or agents shall not be responsible for the accuracy or completeness of electronic copies of this plan sheet.

To accompany plans dated 2-25-13

2006 REVISED STANDARD PLAN RSP A87A

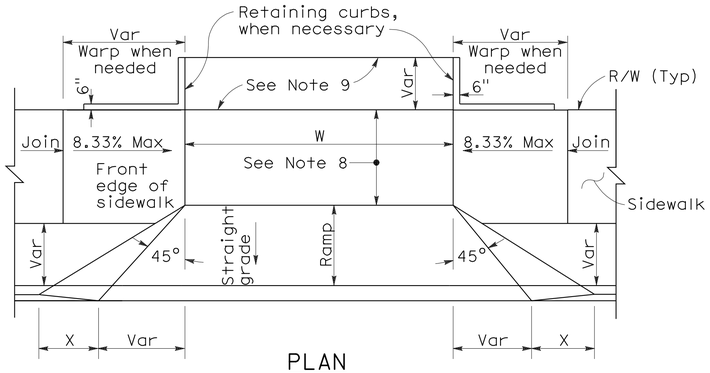

PLAN

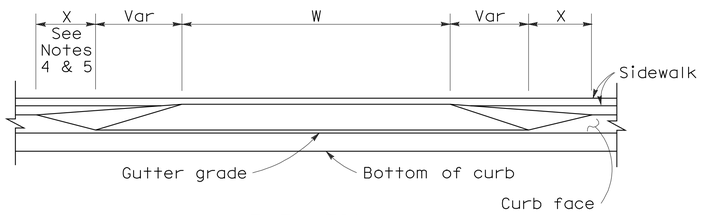

ELEVATION

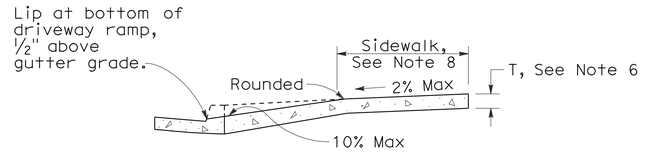

CASE A

Typical driveway, sidewalk not depressed

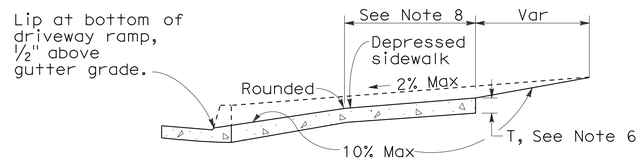

CASE B

Driveway with depressed sidewalk

SECTIONS

DRIVEWAYS

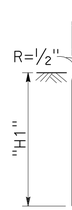

TYPE A1 CURBS

See Table A

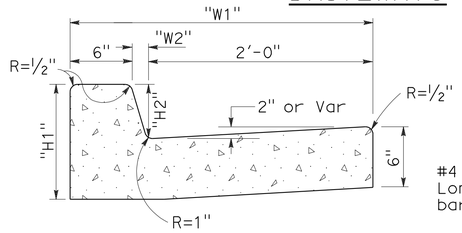

TYPE A2 CURBS

See Table A

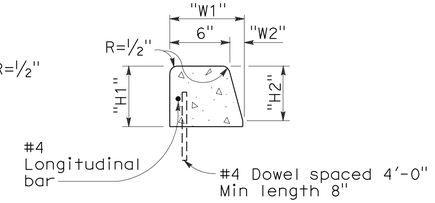

TYPE A3 CURBS

Superimposed on existing pavement
See Table A

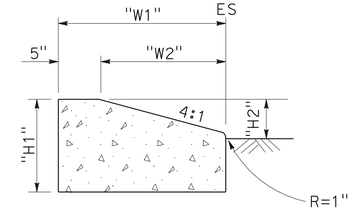

TYPE D CURBS

See Table A

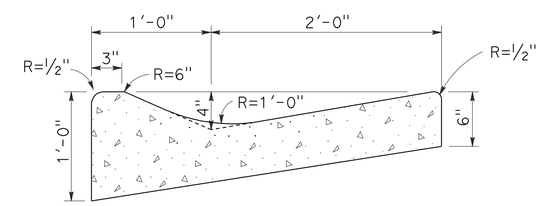

TYPE E CURB

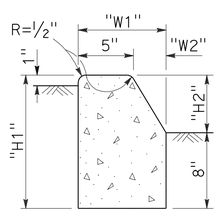

TYPE B1 CURBS

See Table A

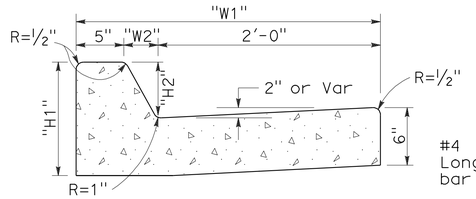

TYPE B2 CURBS

See Table A

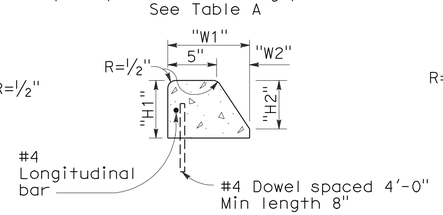

TYPE B3 CURBS

Superimposed on existing pavement
See Table A

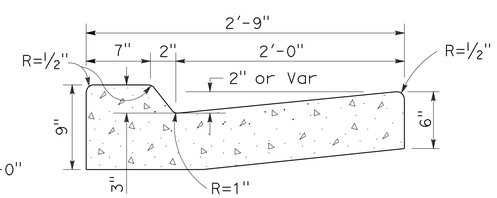

TYPE B4 CURBS

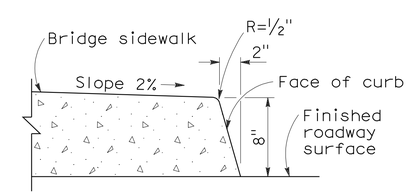

TYPE H CURB

On Bridges

CURBS

CURB QUANTITIES

TYPE	CUBIC YARDS PER LINEAR FOOT
A1-6	0.02585
A1-8	0.03084
A2-6	0.05903
A2-8	0.06379
A3-6	0.01036
A3-8	0.01435
B1-4	0.02185
B1-6	0.02930
B2-4	0.05515
B2-6	0.06171
B3-4	0.00641
B3-6	0.01074
B4	0.05709
D-4	0.04083
D-6	0.06804
E	0.06661

TABLE A

CURB TYPE	DIMENSIONS "H1"	"H2"	"W1"	"W2"
A1-6	1'-2"	6"	7½"	1½"
A1-8	1'-4"	8"	8"	2"
A2-6	1'-0"	6"	2'-7½"	1½"
A2-8	1'-2"	8"	2'-8"	2"
A3-6	6"	5"	7¼"	1¼"
A3-8	8"	7"	7¾"	1¾"
B1-4	1'-0"	4"	7½"	2½"
B1-6	1'-2"	6"	9"	4"
B2-4	10"	4"	2'-7½"	2½"
B2-6	1'-0"	6"	2'-9"	4"
B3-4	4"	3"	7"	2"
B3-6	6"	5"	8½"	3½"
D-4	10"	4"	1'-6"	1'-1"
D-6	1'-0"	6"	2'-2"	1'-8"

NOTES:

1. Case A driveway section typically applies.
2. Use Case B driveway section when ramp slopes would exceed 10% in Case A.
3. Use Case B driveway section when sidewalk cross slope would exceed 2% in Case A.
4. X=3'-0" except for curb heights over 10" where 4:1 slopes shall be used on curb slope.
5. X is a variable when sidewalk is located where wheelchairs may traverse the surface. Slopes shall not exceed 8.33%.
6. Sidewalk and ramp thickness "T" at driveway shall be 4" for residental and 6" for commercial.
7. Difference in slope of the driveway ramp and the slope of a line between the gutter and a point on the roadway 5'-0" from gutter line shall not exceed 15%. Reduce driveway ramp slope, not gutter slope, where required.
8. Minimum width of clear passageway for sidewalk shall be 4'-0".
9. Retaining curbs and acquisition of construction easement may be necessary for narrow sidewalks or curb heights in excess of 6".
10. Across the pedestrian route at curb ramp locations, the gutter pan slope shall not exceed 1" of depth for each 2'-0" of width.

STATE OF CALIFORNIA
DEPARTMENT OF TRANSPORTATION

CURBS AND DRIVEWAYS

NO SCALE

RSP A87A DATED NOVEMBER 17, 2006 SUPERSEDES STANDARD PLAN A87A DATED MAY 1, 2006 - PAGE 113 OF THE STANDARD PLANS BOOK DATED MAY 2006.

REVISED STANDARD PLAN RSP A87A

10-25-06

DIST	COUNTY	ROUTE	POST MILES TOTAL PROJECT	SHEET NO.	TOTAL SHEETS
08	SBd	15	177.3/181.1	229	710

REGISTERED CIVIL ENGINEER

September 1, 2006
PLANS APPROVAL DATE

REGISTERED PROFESSIONAL ENGINEER
Hector David Cordova
No. C41957
Exp. 3-31-08
CIVIL
STATE OF CALIFORNIA

The State of California or its officers or agents shall not be responsible for the accuracy or completeness of electronic copies of this plan sheet.

To accompany plans dated 2-25-13

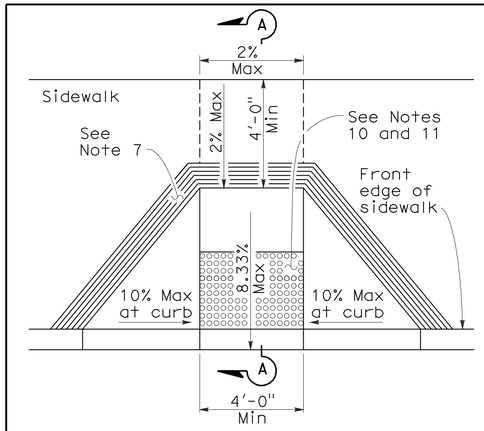

CASE A

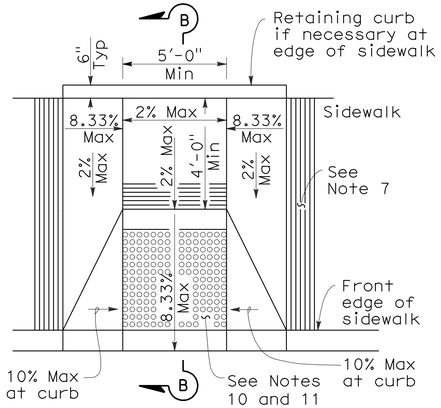

CASE B

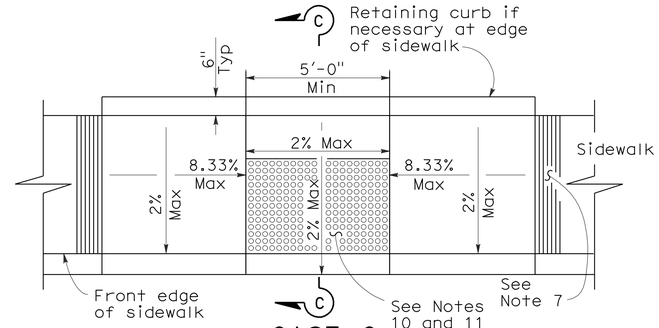

CASE C

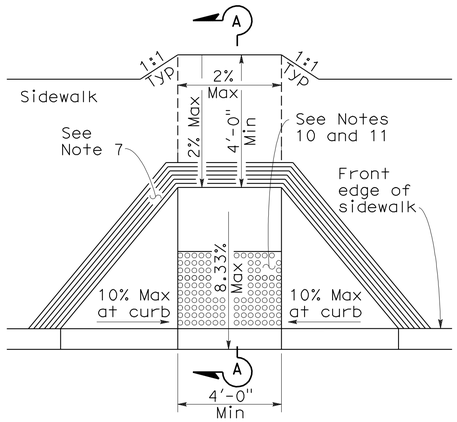

CASE D

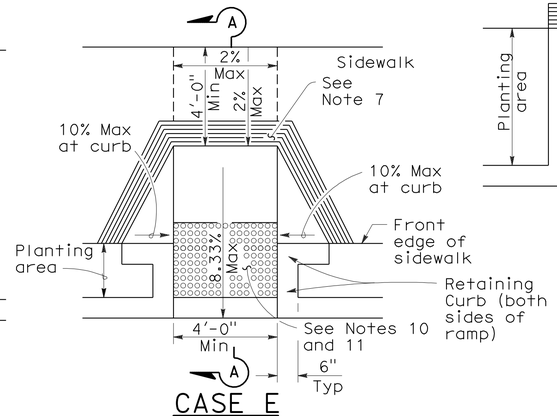

CASE E

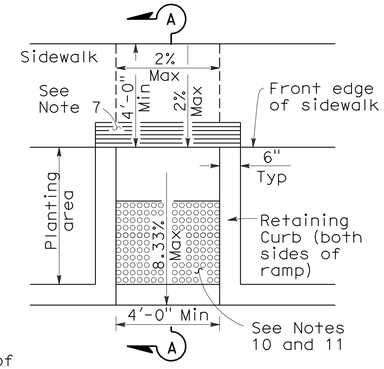

CASE F

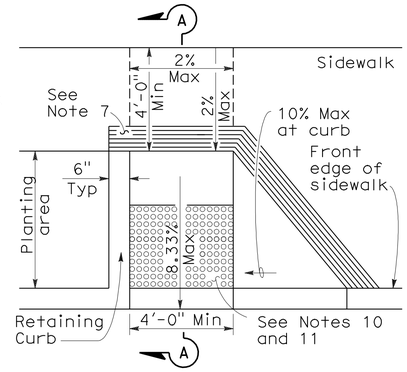

CASE G
See Note 4

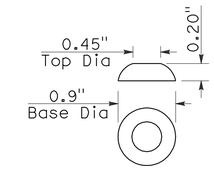

RAISED TRUNCATED DOME

SECTION A-A

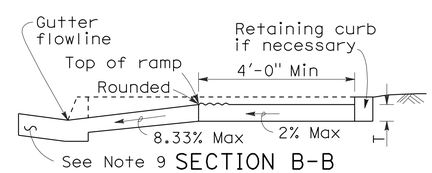

SECTION B-B
Depress entire sidewalk as required

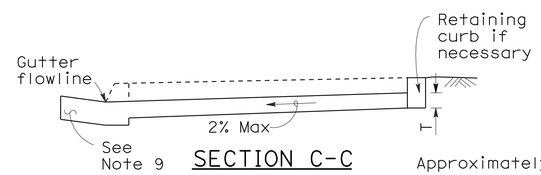

SECTION C-C

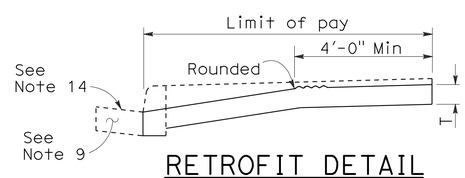

RETROFIT DETAIL
Existing curb and sidewalk

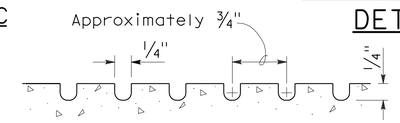

GROOVING DETAIL

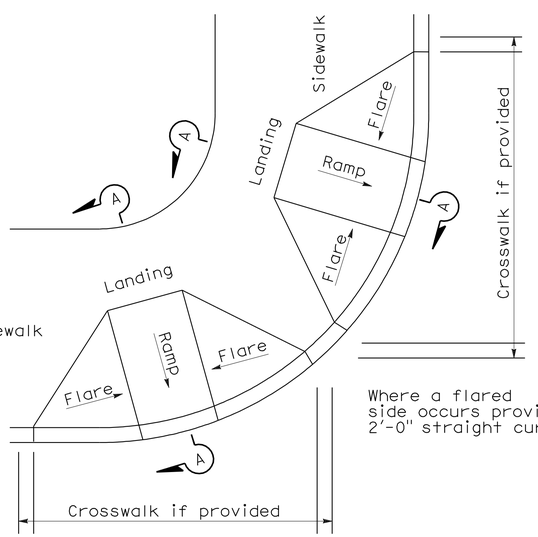

DETAIL A
TYPICAL TWO-RAMP CORNER INSTALLATION
See Note 1

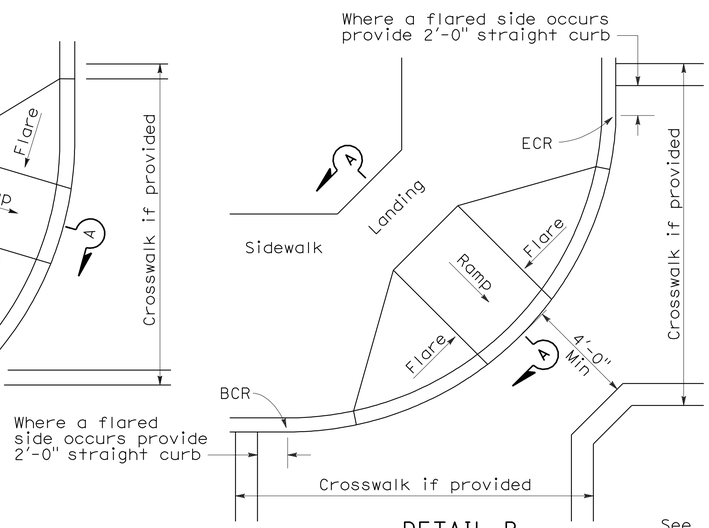

DETAIL B
TYPICAL ONE-RAMP CORNER INSTALLATION
See Notes 1 and 3

NOTES:

1. As site conditions dictate, Case A through Case G curb ramps may be used for corner installations similar to those shown in Detail A and Detail B. The case of curb ramps used in Detail A do not have to be the same. Case A through Case G curb ramps also may be used at mid block locations, as site conditions dictate.
2. If distance from curb to back of sidewalk is too short to accommodate ramp and 4'-0" platform (landing) as shown in Case A, the sidewalk may be depressed longitudinally as in Case B, or C or may be widened as in Case D.
3. When ramp is located in center of curb return, crosswalk configuration must be similar to that shown for Detail B.
4. As site conditions dictate, the retaining curb side and the flared side of the Case G ramp shall be constructed in reversed position.
5. If located on a curve, the sides of the ramp need not be parallel, but the minimum width of the ramp shall be 4'-0".
6. Side slope of ramp flares vary uniformly from a maximum of 10% at curb to conform with longitudinal sidewalk slope adjacent to top of the ramp, except in Case C and Case F.
7. The curb ramp shall be outlined, as shown, with a 1'-0" wide border with 1/4" grooves approximately 3/4" on center. See grooving detail.
8. Transitions from ramps and landing to walks, gutters or streets shall be flush and free of abrupt changes.
9. Maximum slopes of adjoining gutters, the road surface immediately adjacent to the curb ramp or accessible route shall not exceed 5 percent within 4'-0" of the top and bottom of the curb ramp.
10. Curb ramps shall have a detectable warning surface that extends the full width and 3'-0" depth of the ramp. Detectable Warning Surfaces shall conform to the details on this plan and the requirements in the Special Provisions.
11. The edge of the detectable warning surface nearest the street shall be between 6" and 8" from the gutter flowline.
12. Sidewalk and ramp thickness, "T", shall be 3 1/2" minimum.
13. Utility pull boxes, manholes, vaults and all other utility facilities within the boundaries of the curb ramp will be relocated or adjusted to grade by the owner prior to, or in conjunction with, curb ramp construction.
14. For retrofit conditions, removal and replacement of curb apron will be at the Contractor's option, unless otherwise shown on project plans.

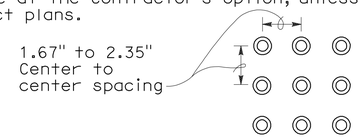

RAISED TRUNCATED DOME PATTERN (IN-LINE)
DETECTABLE WARNING SURFACE
See Note 10

STATE OF CALIFORNIA
DEPARTMENT OF TRANSPORTATION

CURB RAMP DETAILS

NO SCALE

RSP A88A DATED SEPTEMBER 1, 2006 SUPERSEDES STANDARD PLAN A88A DATED MAY 1, 2006 - PAGE 115 OF THE STANDARD PLANS BOOK DATED MAY 2006.

REVISED STANDARD PLAN RSP A88A

2006 REVISED STANDARD PLAN RSP A88A

8-3-06

DIST	COUNTY	ROUTE	POST MILES TOTAL PROJECT	SHEET NO.	TOTAL SHEETS
08	SBd	15	177.3/181.1	230	710

REGISTERED CIVIL ENGINEER

June 15, 2007
PLANS APPROVAL DATE

REGISTERED PROFESSIONAL ENGINEER Glenn DeCou No. C34547 Exp. 9-30-07 CIVIL STATE OF CALIFORNIA

The State of California or its officers or agents shall not be responsible for the accuracy or completeness of electronic copies of this plan sheet.

To accompany plans dated 2-25-13

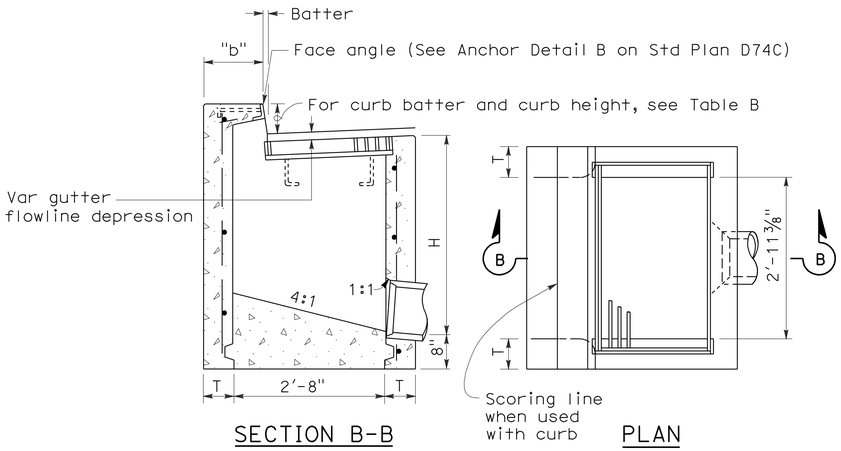

TYPE GO

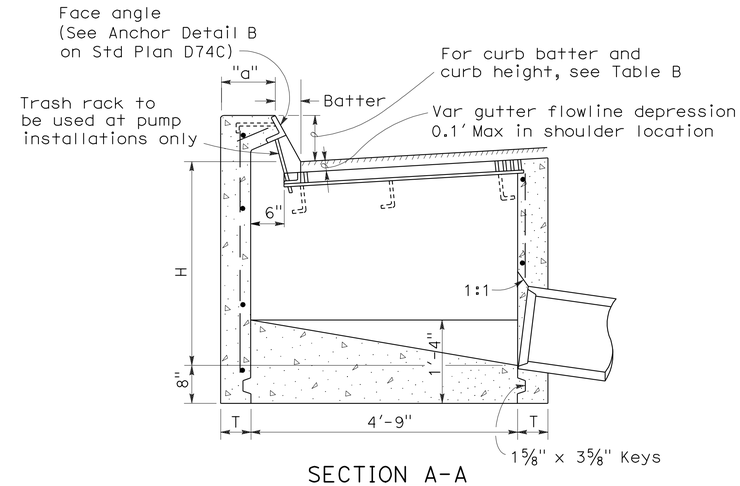

SECTION A-A

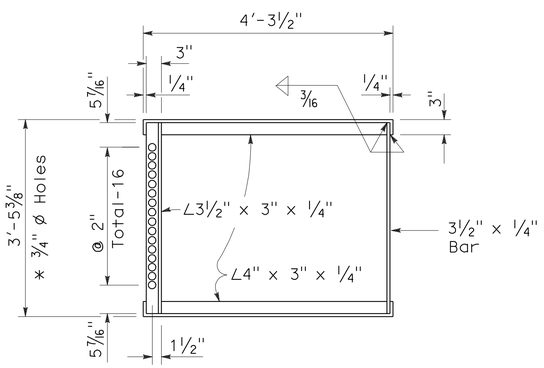

GRATE FRAME FOR TYPE GDO INLET

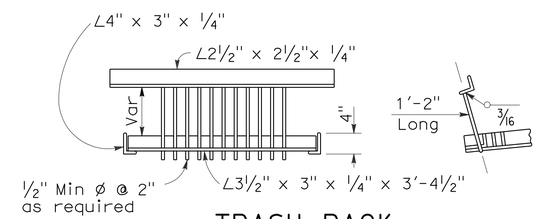

TRASH RACK

(For use with pump installation)

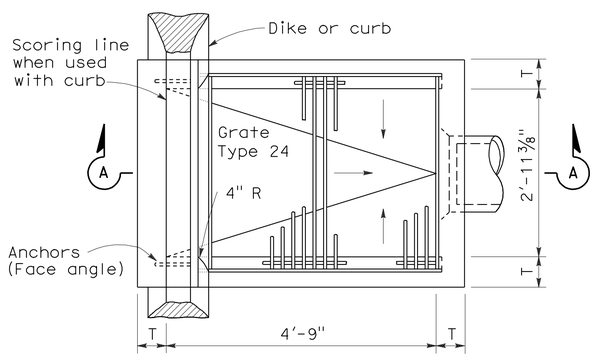

PLAN

TYPE GDO

TABLE A

CONCRETE QUANTITIES				
	H=3'-0" TO 8'-0" (T=6")		H=8'-1" TO 20'-0" (T=8")	
TYPE	H=3'-0" (CY)	ADDITIONAL PCC PER FOOT (CY)	H=8'-1" (CY)	ADDITIONAL PCC PER FOOT (CY)
GO	1.24	0.245	3.39	0.346
GDO	1.62	0.322	4.36	0.446

Table based on 8" floor slab, no deduction for pipe openings, and curb type giving highest quantity of concrete. No deductions or adjustments are to be made to these quantities because of pipe openings, different floor alternatives or different curb type.

TABLE B

CURB TYPE	NORMAL CURB HEIGHT	CURB BATTER	"a" DIMENSION	"b" DIMENSION
A1-6	6"	1 1/2"	T+7 1/2"	T+6 1/2"
A1-8	8"	2"	T+7"	T+6"
B1-6	6"	4"	T+5"	T+4"
Type A Dike	6"	3"	T+6"	T+5"

NOTES:

1. "H" is the difference in elevation between the outlet pipe flow line and the normal gutter grade line undepressed.
2. For "T" wall thickness, see Table A below.
3. Wall reinforcing not required when "H" is 8'-0" or less and the unsupported width or length is 7'-0" or less. Walls exceeding these limits shall be reinforced with #4 @ 18"± centers placed 1 1/2" clear to inside of box unless otherwise shown.
4. Inlet bottom reinforcing not required. See Standard Plan D74C for alternative reinforced bottom.
5. Steps - None required where "H" is less than 2'-6" Where "H" is 2'-6" or more, install steps with lowest rung 1'-0" above the floor and highest rung not more than 6" below top of inlet. The distance between steps shall not exceed 1'-0" and shall be uniform throughout the length of the wall. Place steps in the wall without an opening. Step inserts may be substituted for the bar steps. Step Inserts shall comply with State Industrial Safety requirements. See Standard Plan D74C for step details.
6. When shown on the project plans, place a 3/4" plain round protection bar horizontally across the length of the opening and bend back 4" into the inlet wall on each side.
7. Pipe(s) can be placed in any wall.
8. Curb section shall match adjacent curb.
9. Basin floors shall have wood trowel finish and shall slope toward the outlet pipe as shown.
10. Galvanizing - See Standard Specifications or Special Provisions.
11. See Standard Plan D77A and D77B for grate and frame details and weights of miscellaneous iron and Steel.
12. See Standard Plan D78A for gutter depression details.
13. Full penetration butt welds may be substituted for the fillet welds on all anchors.
14. Standard square, hexagon, round or equivalent headed anchors may be substituted for the right angle hooks on the anchors shown on this plan.
15. Cast-in-place or precast alternative is optional with contractor. See Standard Specifications.
16. Cast-in-place inlets to be formed around all pipes/stubs intersecing the inlet and concrete poured in one continuous operation. Precast inlets shall have mortared pipe connections conforming to details for Type GCP inlets on Standard Plan D75B. See Standard Specifications for mortar composition.

STATE OF CALIFORNIA
DEPARTMENT OF TRANSPORTATION

DRAINAGE INLETS

NO SCALE

RSP D74B DATED JUNE 15, 2007 SUPERSEDES STANDARD PLAN D74B DATED MAY 1, 2006 - PAGE 150 OF THE STANDARD PLANS BOOK DATED MAY 2006.

REVISED STANDARD PLAN RSP D74B

2006 REVISED STANDARD PLAN RSP D74B

4-16-07

DIST	COUNTY	ROUTE	POST MILES TOTAL PROJECT	SHEET NO.	TOTAL SHEETS
08	SBd	15	177.3/181.1	231	710

LICENSED LANDSCAPE ARCHITECT

June 5, 2009
PLANS APPROVAL DATE

LICENSED LANDSCAPE ARCHITECT
Gregory A. Balzer 2016
10 (Renewal)
2-28-11
(Renewal) Date
5-14-09
Date
STATE OF CALIFORNIA

The State of California or its officers or agents shall not be responsible for the accuracy or completeness of electronic copies of this plan sheet.

To accompany plans dated 2-25-13

A

AB	aggregate base
ABS	acrylonitrile-butadiene-styrene
AC	asphalt concrete
Adj	adjacent/adjustable
AIC	auxiliary irrigation controller
Alt	alternative
AMEND	amendment
ARV	air release valve
AUTO	automatic
AUX	auxiliary
AVB	atmospheric vacuum breaker

B

B&B	balled and burlapped
B/B	brass/bronze
B/B/PL	brass/bronze/plastic
B/PL	brass/plastic
BFM	bonded fiber matrix
Bit Ctd	bituminous coated
BP	booster pump
BPA	backflow preventer assembly
BPAE	backflow preventer assembly in enclosure
BPE	backflow preventer enclosure
BV	ball valve

C

CAP	corrugated aluminum pipe
CARV	combination air release valve
CCA	cam coupler assembly
CEC	controller enclosure cabinet
CHDPE	corrugated high density polyethylene
CL	chain link
CNC	control and neutral conductors
Conc	concrete
Cond	conduit
CSP	corrugated steel pipe
CST	center strip
CV	check valve

D

Dia	diameter
DIP	ductile iron pipe
DN	diameter nominal

E

EA	each
Elect	electric/electrical
Elev	elevation
ENCL	enclosure
EP	edge of pavement
ES	edge of shoulder
EST	end strip
ESTB	establishment
ETW	edge of traveled way

F

F	full circle
F/P	full/part circle
FAU	filter assembly unit
FCV	flow control valve
FERT	fertilizer
FG	finished grade
FIPT	female iron pipe thread
FIS	fertilizer injector system
FL	flow line
FM	flow monitor
FS	flow sensor
Ft	foot/feet
FV	flush valve

G

GAL	Gallon(s)
Galv	galvanized
GARV	garden valve
GPH	gallons per hour
GPM	gallons per minute
GSP	galvanized steel pipe
GV	gate valve

H

H	half circle
HB	hose bib
HDPE	high density polyethylene
HP	horsepower/hinge point
HPL	high pressure line
Hwy	highway

I

IC	irrigation controller
ICC	irrigation controller(s) in controller enclosure cabinet
ID	inside diameter
In	inches
IFS	irrigation filtration system
IPS	iron pipe size
IPT	iron pipe thread
Irr	irrigation

L

L	length
LF	linear foot

M

Max	maximum
MBGR	metal beam guard railing
MCV	manual control valve
MIC	master irrigation controller
Min	minimum
MIPT	male iron pipe thread
Misc	miscellaneous
Mtl	material
MVP	maintenance vehicle pullout

N

NCN	no common name
NL	nozzle line
No.	number
NPT	national pipe thread

O

O/C	on center
OD	outside diameter
Oz	ounce

P

P	part circle
PB	pull box
PCC	portland cement concrete
PE	polyethylene
Pkt	packet
PL	plastic
PLT	plant/planting
PLT ESTB	plant establishment
PM	post mile
PR	pressure rated
PRLV	pressure relief valve
PSFM	polymer stabilized fiber matrix
PSI	pounds per square inch
PRV	pressure reducing valve
PVC	polyvinyl chloride
Pvmt	pavement

Q

Q	quarter circle
QCV	quick coupling valve

R

R	radius
RCP	reinforced concrete pipe
RCV	remote control valve
RCVM	remote control valve (master)
RCVMF	remote control valve (master) w/ flow meter
RCW	recycled/reclaimed water
RECP	rolled erosion control product
REQ	required
R/W	right of way

S

S	slip
SCC	sprinkler control conduit
SCH	schedule
SF	state-furnished
Shld	shoulder
SQFT	square foot/feet
SQYD	square yard(s)
SST	side strip
Sta	station
Std	standard
SW	sidewalk/sound wall

T

T	third circle/thread
TLS	truck loading standpipe
TQ	three quarter circle
TRM	turf reinforcement mat
TRVD	traveled
TT	two third circle
Typ	typical

U

UG	underground

V

VAU	valve assembly unit

W

W	width
W/	with
WM	water meter
WS	wye strainer
WSP	welded steel pipe
WWM	welded wire mesh

NOTE:

FOR ADDITIONAL ABBREVIATIONS, SEE STANDARD PLANS A10A AND A10B.

STATE OF CALIFORNIA
DEPARTMENT OF TRANSPORTATION

PLANTING AND IRRIGATION ABBREVIATIONS

NO SCALE

RSP H1 DATED JUNE 5, 2009 SUPERSEDES STANDARD PLAN H1 DATED MAY 1, 2006 - PAGE 201 OF THE STANDARD PLANS BOOK DATED MAY 2006.

REVISED STANDARD PLAN RSP H1

2006 REVISED STANDARD PLAN RSP H1

5-28-09

DIST	COUNTY	ROUTE	POST MILES TOTAL PROJECT	SHEET NO.	TOTAL SHEETS
08	SBd	15	177.3/181.1	232	710

LICENSED LANDSCAPE ARCHITECT

June 5, 2009
PLANS APPROVAL DATE

LICENSED LANDSCAPE ARCHITECT
Gregory A. Balzer 2016
10 Expiration
2-28-11
Renewal Date
5-14-09
Date
STATE OF CALIFORNIA

The State of California or its officers or agents shall not be responsible for the accuracy or completeness of electronic copies of this plan sheet.

To accompany plans dated 2-25-13

2006 REVISED STANDARD PLAN RSP H2

EXISTING	PROPOSED	ITEM DESCRIPTION
		WATER METER (WM)
		BACKFLOW PREVENTER ASSEMBLY (BPA)
		BACKFLOW PREVENTER ASSEMBLY IN ENCLOSURE (BPAE)
		BACKFLOW PREVENTER ENCLOSURE (BPE)
		BOOSTER PUMP (BP)
		TRUCK LOADING STANDPIPE (TLS)
FS	FS	FLOW SENSOR (FS)
X	X	MASTER IRRIGATION CONTROLLER (MIC)
		AUXILIARY IRRIGATION CONTROLLER (AIC)
		IRRIGATION CONTROLLER (IC)/ IRRIGATION CONTROLLER (IC) (BATTERY) IRRIGATION CONTROLLER (IC) (SOLAR)
		IRRIGATION CONTROLLER(S) IN CONTROLLER ENCLOSURE CABINET (ICC)
		CONTROL AND NEUTRAL CONDUCTORS (CNC)
SCC	SCC	SPRINKLER CONTROL CONDUIT (SCC)
		IRRIGATION CROSSOVER
		EXTEND IRRIGATION CROSSOVER
		IRRIGATION SLEEVE
dip	DIP	DUCTILE IRON PIPE (SUPPLY LINE) (MAIN) (DIP)
		GALVANIZED STEEL PIPE (SUPPLY LINE) (MAIN) (GSP)
		GALVANIZED STEEL PIPE (SUPPLY LINE) (LATERAL) (GSP)
		PLASTIC PIPE (PR 200) (SUPPLY LINE) (MAIN)
		PLASTIC PIPE (PR 200) (SUPPLY LINE) (LATERAL)
		PLASTIC PIPE (IRRIGATION LINE)
		REMOTE CONTROL VALVE (RCV) REMOTE CONTROL VALVE (MASTER) (RCVM) REMOTE CONTROL VALVE (MASTER) W/FLOW METER (RCVMF)
		MANUAL CONTROL VALVE (MCV)
		VALVE ASSEMBLY UNIT (VAU)
		WYE STRAINER (WS)
		FILTER ASSEMBLY UNIT (FAU)
		GATE VALVE (GV)
		BALL VALVE (BV)

EXISTING	PROPOSED	ITEM DESCRIPTION
		QUICK COUPLING VALVE (QCV)
		CAM COUPLER ASSEMBLY (CCA)
		PRESSURE REDUCING VALVE (PRV)
		PRESSURE RELIEF VALVE (PRLV)
		FLOW CONTROL VALVE (FCV)
		COMBINATION AIR RELEASE VALVE (CARV)
		CHECK VALVE (CV)
		FLUSH VALVE (FV)
		NOZZLE LINE W/TURNING UNION
		IRRIGATION SYSTEM
		IRRIGATION SYSTEM TO BE REMOVED
		CHAIN LINK GATE
		QUICK COUPLING VALVE W/SPRINKLER PROTECTOR
3	3	SPRINKLER W/SPRINKLER PROTECTOR
	C	CONNECT TO EXISTING SYSTEM
		CAP
		CAP EXISTING

VALVE CODE

RCV SIZE
IRRIGATION CONTROLLER
CONTROLLER STATION
VALVE IN PARALLEL (IF APPLICABLE)
GPM
QUANTITY OF SPRINKLERS (WHEN SHOWN)

* 2½"-A-2b-40 -60

MCV SIZE
VALVE NUMBER
GPM
QUANTITY OF TYPE SPRINKLERS (WHEN SHOWN)

* 2"-3-30 -50

* VALVE CODES FOR EXISTING VALVES ARE SHOWN IN A DASHED ENCLOSURE.

STATE OF CALIFORNIA
DEPARTMENT OF TRANSPORTATION

PLANTING AND IRRIGATION SYMBOLS

NO SCALE

RSP H2 DATED JUNE 5, 2009 SUPERSEDES RSP H2 DATED MARCH 7, 2008 AND STANDARD PLAN H2 DATED MAY 1, 2006 - PAGE 202 OF THE STANDARD PLANS BOOK DATED MAY 2006.

REVISED STANDARD PLAN RSP H2

5-11-09

DIST	COUNTY	ROUTE	POST MILES TOTAL PROJECT	SHEET NO.	TOTAL SHEETS
08	SBd	15	177.3/181.1	233	710

LICENSED LANDSCAPE ARCHITECT

June 5, 2009
PLANS APPROVAL DATE

Gregory A. Balzer 2016
10 Expiration
2-28-11
Renewal Date
5-14-09
Date
LICENSED LANDSCAPE ARCHITECT
STATE OF CALIFORNIA

The State of California or its officers or agents shall not be responsible for the accuracy or completeness of electronic copies of this plan sheet.

To accompany plans dated 2-25-13

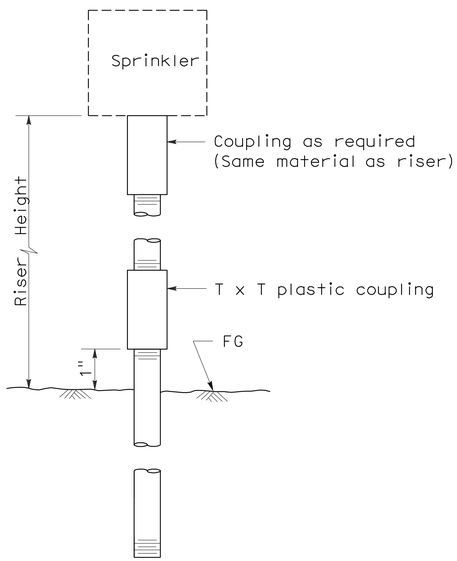

ELEVATION
RISER TYPE I

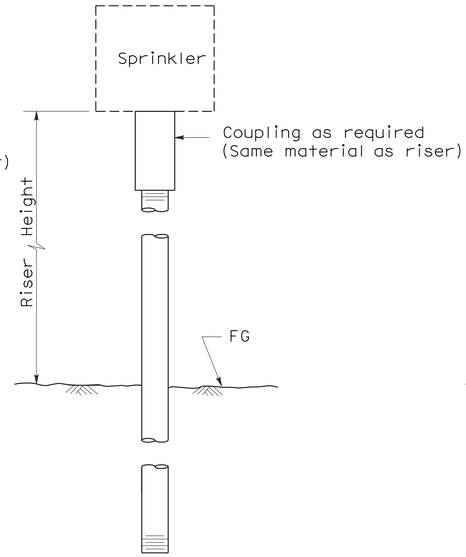

ELEVATION
RISER TYPE II

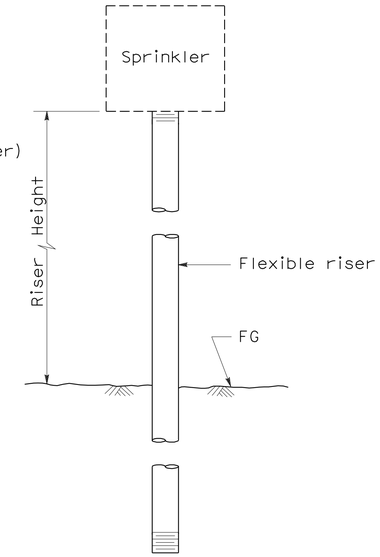

ELEVATION
RISER TYPE III

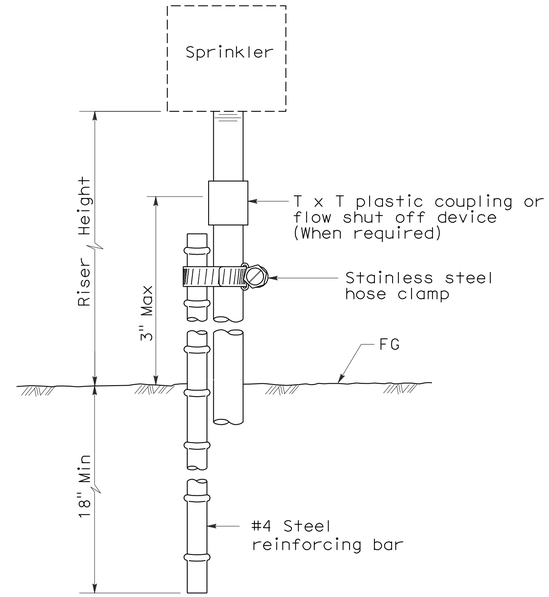

ELEVATION
RISER TYPE IV

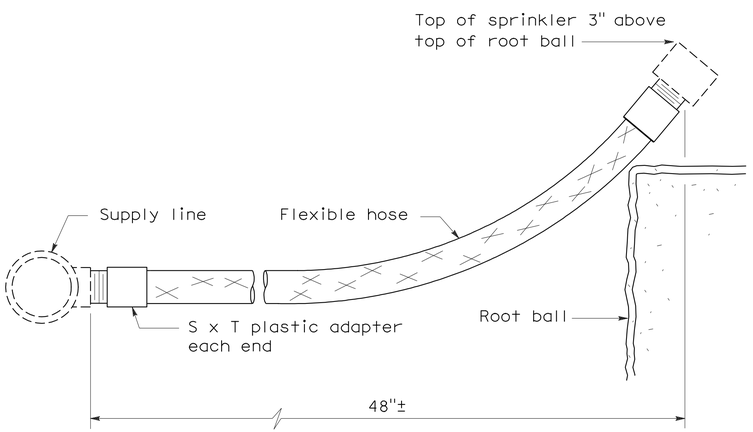

ELEVATION
RISER TYPE V

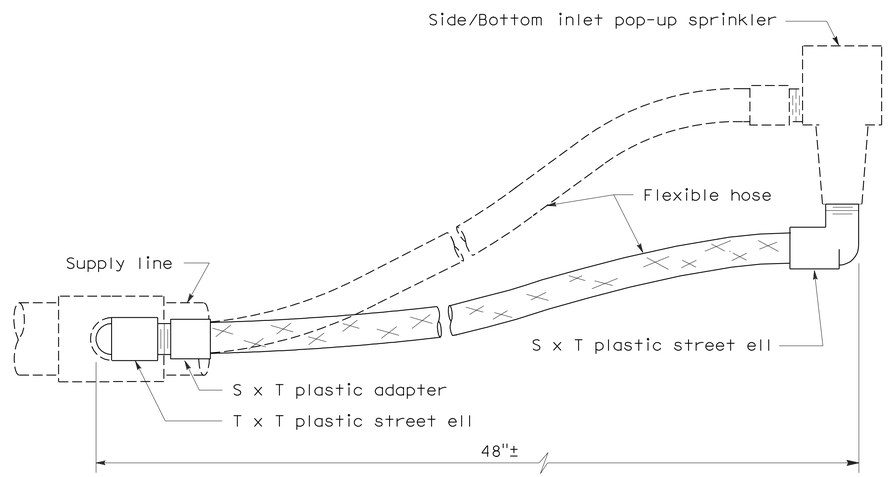

ELEVATION
RISER TYPE VI

STATE OF CALIFORNIA
DEPARTMENT OF TRANSPORTATION

PLANTING AND IRRIGATION DETAILS

NO SCALE

RSP H5 DATED JUNE 5, 2009 SUPERSEDES STANDARD PLAN H5
DATED MAY 1, 2006 - PAGE 205 OF THE STANDARD PLANS BOOK DATED MAY 2006.

REVISED STANDARD PLAN RSP H5

2006 REVISED STANDARD PLAN RSP H5

5-28-09

DIST	COUNTY	ROUTE	POST MILES TOTAL PROJECT	SHEET NO.	TOTAL SHEETS
08	SBd	15	177.3/181.1	234	710

LICENSED LANDSCAPE ARCHITECT

June 5, 2009
PLANS APPROVAL DATE

The State of California or its officers or agents shall not be responsible for the accuracy or completeness of electronic copies of this plan sheet.

LICENSED LANDSCAPE ARCHITECT Gregory A. Balzer 2016 STATE OF CALIFORNIA
9-10-09 Renewal Date
2-28-11 Renewal Date
5-14-09 Date

To accompany plans dated 2-25-13

2006 REVISED STANDARD PLAN RSP H7

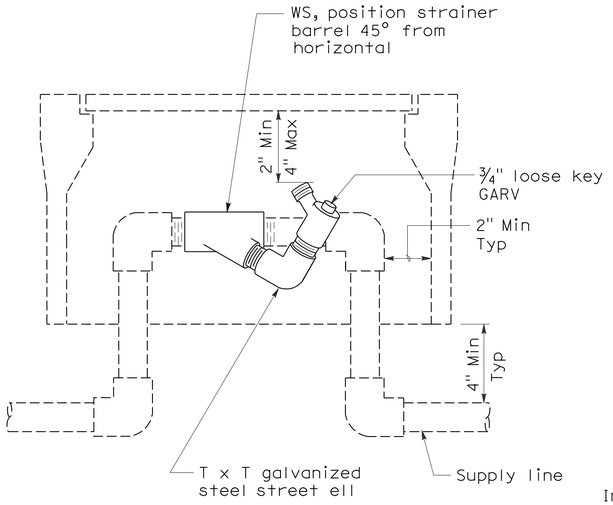

ELEVATION
WYE STRAINER

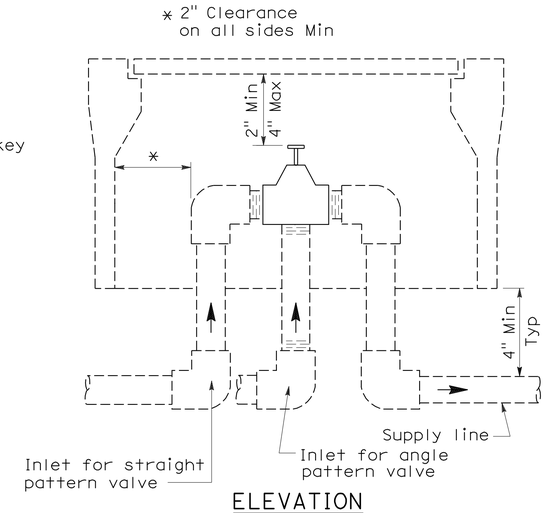

ELEVATION
VALVE

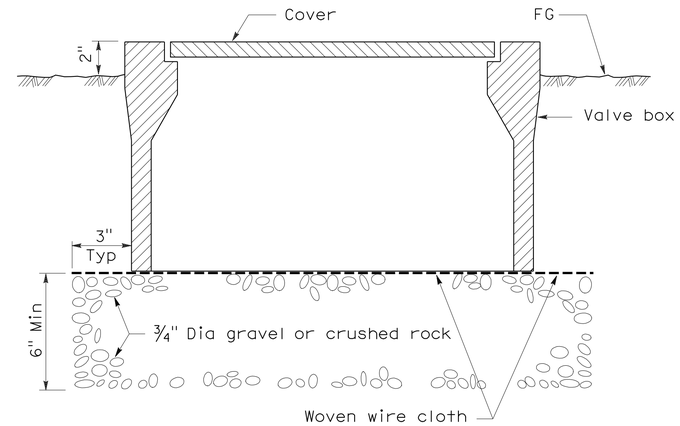

SECTION
VALVE BOX

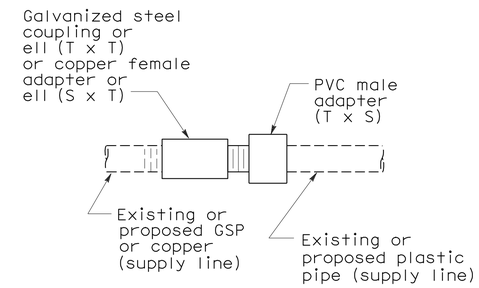

PLAN
GALVANIZED OR COPPER PIPE CONNECTION TO PLASTIC PIPE

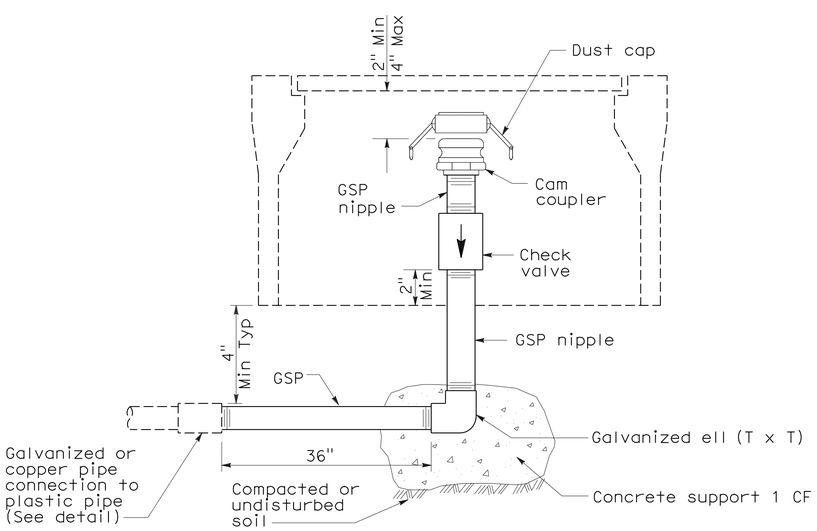

ELEVATION
CAM COUPLER ASSEMBLY

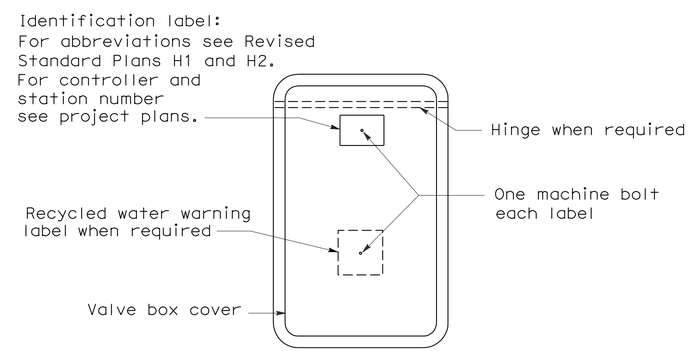

PLAN

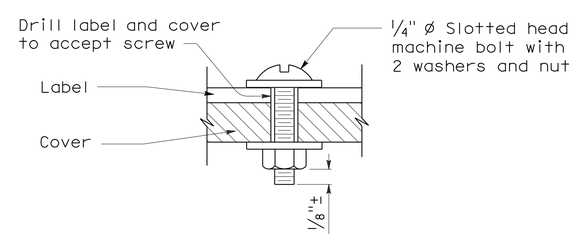

SECTION
VALVE BOX IDENTIFICATION

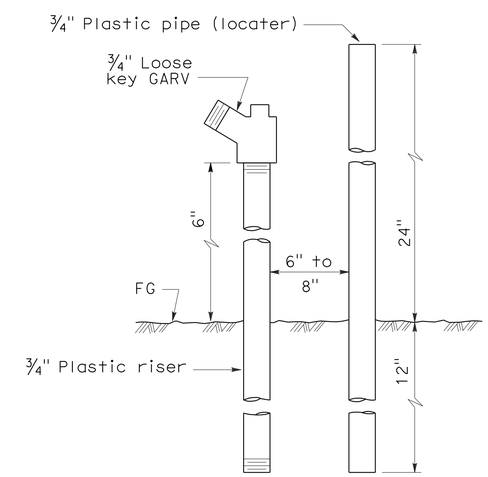

ELEVATION
FLUSH VALVE

STATE OF CALIFORNIA
DEPARTMENT OF TRANSPORTATION

PLANTING AND IRRIGATION DETAILS

NO SCALE

RSP H7 DATED JUNE 5, 2009 SUPERSEDES STANDARD PLAN H7
DATED MAY 1, 2006 - PAGE 207 OF THE STANDARD PLANS BOOK DATED MAY 2006.

REVISED STANDARD PLAN RSP H7

5-28-09

DIST	COUNTY	ROUTE	POST MILES TOTAL PROJECT	SHEET NO.	TOTAL SHEETS
08	SBd	15	177.3/181.1	235	710

Randell D. Hiatt
REGISTERED CIVIL ENGINEER

June 6, 2008
PLANS APPROVAL DATE

REGISTERED PROFESSIONAL ENGINEER
Randell D. Hiatt
No. C50200
Exp. 6-30-09
CIVIL
STATE OF CALIFORNIA

The State of California or its officers or agents shall not be responsible for the accuracy or completeness of electronic copies of this plan sheet.

To accompany plans dated 2-25-13

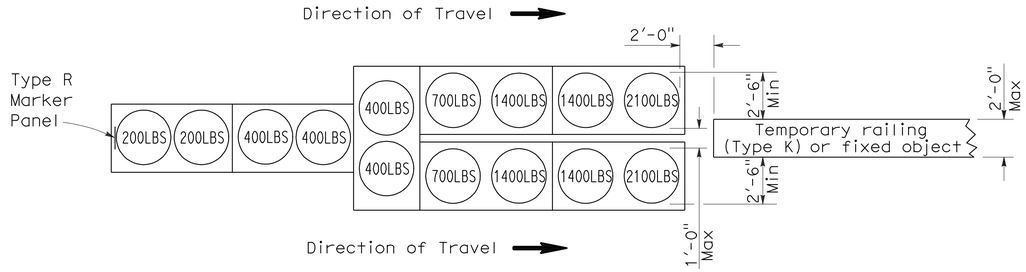

ARRAY 'TU14'

Approach speed 45 mph or more

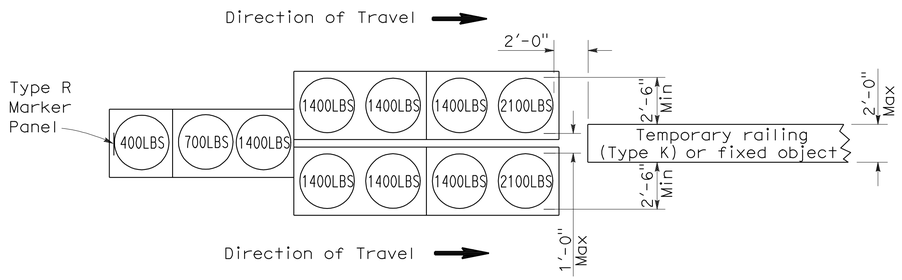

ARRAY 'TU11'

Approach speed less than 45 mph

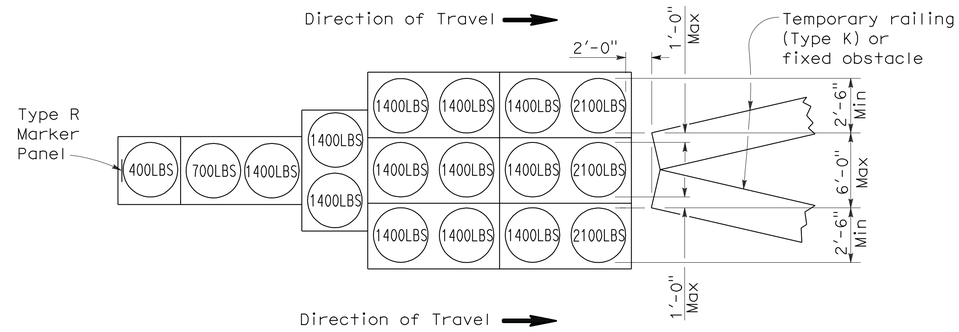

ARRAY 'TU17'

Approach speed less than 45 mph

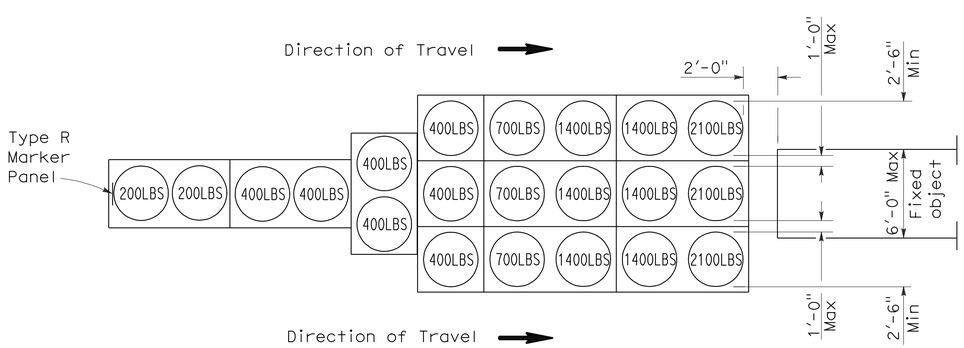

ARRAY 'TU21'

Approach speed 45 mph or more

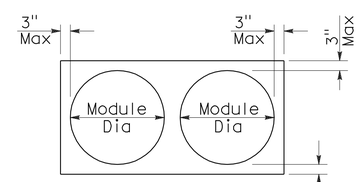

PLAN

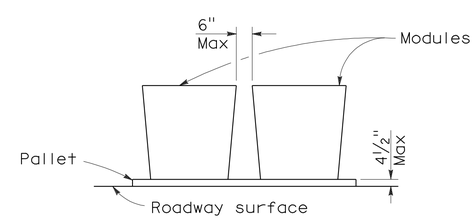

ELEVATION

CRASH CUSHION PALLET DETAIL

See Note 7

NOTES:

1. (XXX) Indicates sand filled module location and weight of sand in pounds for each module. Module spacing is based on the greater diameter of the module.
2. All sand weights are nominal.
3. Temporary crash cushion arrays shall not encroach on the traveled way.
4. Place the top of Type R marker panel 1" below the module lid.
5. Refer to Standard Plan A73B for marker details.
6. Approach speeds indicated conform to NCHRP 350 Report criteria.
7. Use of pallets is optional.

STATE OF CALIFORNIA
DEPARTMENT OF TRANSPORTATION

TEMPORARY CRASH CUSHION, SAND FILLED (UNIDIRECTIONAL)

NO SCALE

RSP T1A DATED JUNE 6, 2008 SUPERSEDES STANDARD PLAN T1A
DATED MAY 1, 2006 - PAGE 211 OF THE STANDARD PLANS BOOK DATED MAY 2006.

REVISED STANDARD PLAN RSP T1A

2006 REVISED STANDARD PLAN RSP T1A

5-15-08

DIST	COUNTY	ROUTE	POST MILES TOTAL PROJECT	SHEET NO.	TOTAL SHEETS
08	SBd	15	177.3/181.1	236	710

Randell D. Hiatt
REGISTERED CIVIL ENGINEER

June 6, 2008
PLANS APPROVAL DATE

REGISTERED PROFESSIONAL ENGINEER
Randell D. Hiatt
No. C50200
Exp. 6-30-09
CIVIL
STATE OF CALIFORNIA

The State of California or its officers or agents shall not be responsible for the accuracy or completeness of electronic copies of this plan sheet.

To accompany plans dated 2-25-13

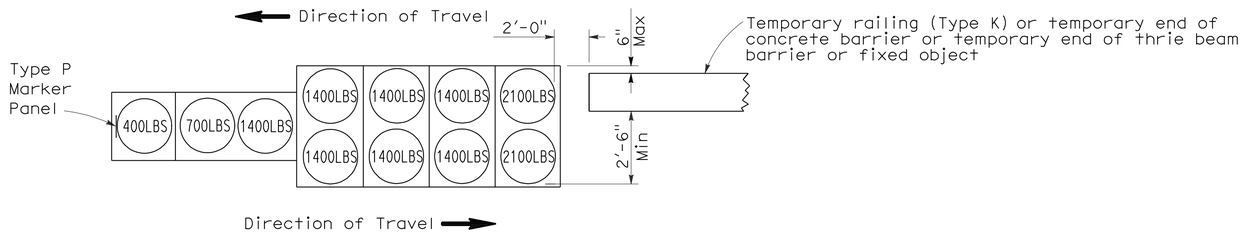

ARRAY 'TB11'

Approach speed less than 45 mph

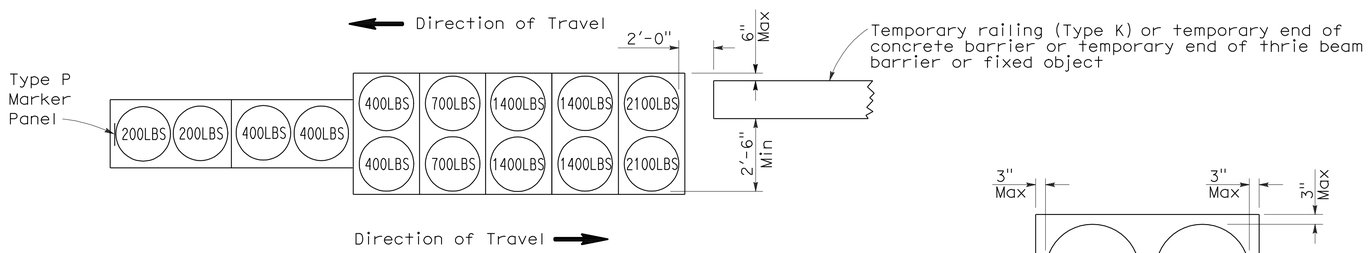

ARRAY 'TB14'

Approach speed 45 mph or more

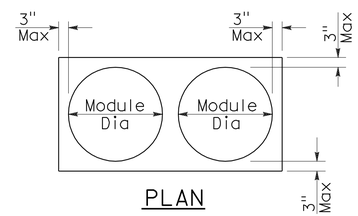

PLAN

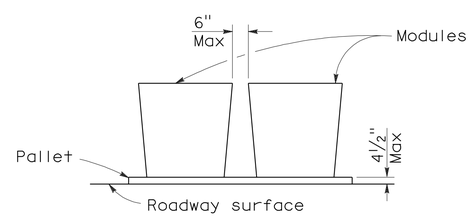

ELEVATION

CRASH CUSHION PALLET DETAIL

See Note 7

NOTES:

1. (XXX) Indicates sand filled module location and weight of sand in pounds for each module. Module spacing is based on the greater diameter of the module.
2. All sand weights are nominal.
3. Temporary crash cushion arrays shall not encroach on the traveled way.
4. Place the Type P marker panel so that the bottom of the panel rests upon the pallet.
5. Refer to Standard Plan A73B for marker details.
6. Approach speeds indicated conform to NCHRP 350 Report criteria.
7. Use of pallets is optional.

STATE OF CALIFORNIA
DEPARTMENT OF TRANSPORTATION

TEMPORARY CRASH CUSHION, SAND FILLED (BIDIRECTIONAL)

NO SCALE

RSP T1B DATED JUNE 6, 2008 SUPERSEDES STANDARD PLAN T1B
DATED MAY 1, 2006 - PAGE 212 OF THE STANDARD PLANS BOOK DATED MAY 2006.

REVISED STANDARD PLAN RSP T1B

2006 REVISED STANDARD PLAN RSP T1B

DIST	COUNTY	ROUTE	POST MILES TOTAL PROJECT	SHEET NO.	TOTAL SHEETS
08	SBd	15	177.3/181.1	237	710

Randell D. Hiatt
REGISTERED CIVIL ENGINEER

June 6, 2008
PLANS APPROVAL DATE

REGISTERED PROFESSIONAL ENGINEER
Randell D. Hiatt
No. C50200
Exp. 6-30-09
CIVIL
STATE OF CALIFORNIA

The State of California or its officers or agents shall not be responsible for the accuracy or completeness of electronic copies of this plan sheet.

To accompany plans dated 2-25-13

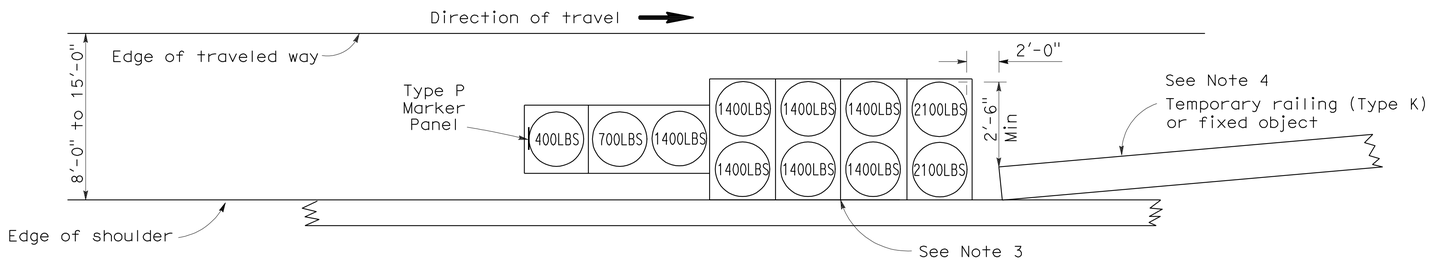

ARRAY 'TS11'

Approach speed less than 45 mph
See Note 9

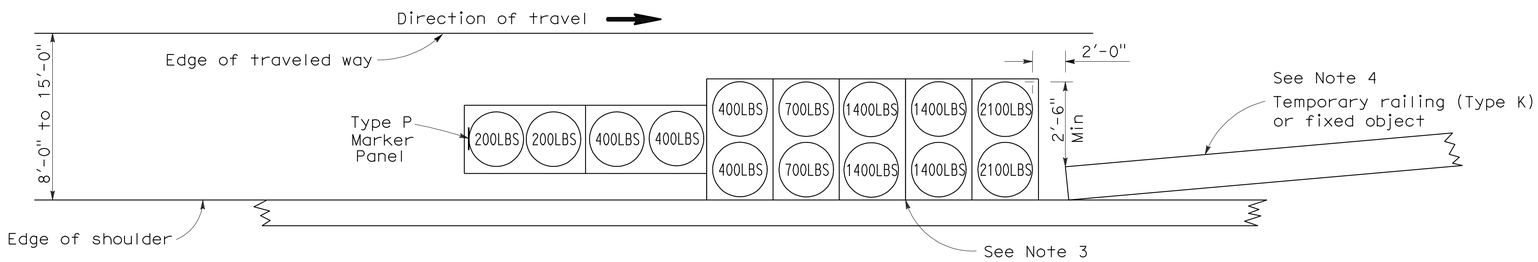

ARRAY 'TS14'

Approach speed 45 mph or more
See Note 9

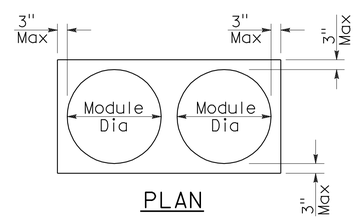

PLAN

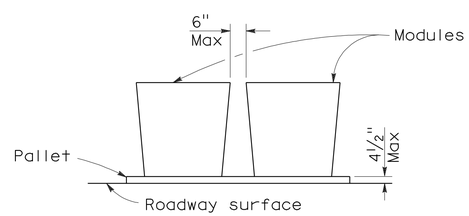

ELEVATION

CRASH CUSHION PALLET DETAIL

See Note 11

NOTES:

1. (XXX) Indicates sand filled module location and weight of sand in pounds for each module. Module spacing is based on the greater diameter of the module.
2. All sand weights are nominal.
3. The temporary crash cushion arrays shown on this plan shall be used only in locations where there will be traffic on one side of the temporary crash cushion array.
4. If the fixed object or approach end of the temporary railing is less than 15'-0" from the edge of traveled way, a temporary crash cushion is required in a construction or work zone.
5. Temporary crash cushion arrays shall not encroach on the traveled way.
6. Arrays for median shoulders shall conform to details shown on this plan for outside shoulders.
7. Place the Type P marker panel so that the bottom of the panel rests upon the pallet and faces traffic.
8. Refer to Standard Plan A73B for marker details.
9. For shoulder widths less than 8'-0", appropriate approved crash cushion protection, other than sand filled modules, shall be provided at fixed objects and at approach ends of temporary railing. The specific type of crash cushion shall be as shown on the project plans or as specified in the Special Provisions, or if not shown on the project plans or specified in the Special Provisions, shall be as approved by the Engineer.
10. Approach speeds indicated conform to NCHRP 350 Report criteria.
11. Use of pallets is optional.

STATE OF CALIFORNIA
DEPARTMENT OF TRANSPORTATION

TEMPORARY CRASH CUSHION, SAND FILLED (SHOULDER INSTALLATIONS)

NO SCALE

RSP T2 DATED JUNE 6, 2008 SUPERSEDES STANDARD PLAN T2
DATED MAY 1, 2006 - PAGE 213 OF THE STANDARD PLANS BOOK DATED MAY 2006.

REVISED STANDARD PLAN RSP T2

2006 REVISED STANDARD PLAN RSP T2

5-15-08

Dist	COUNTY	ROUTE	POST MILES TOTAL PROJECT	SHEET No.	TOTAL SHEETS
08	SBd	15	177.3/181.1	238	710

Randell D. Hiatt
REGISTERED CIVIL ENGINEER

May 20, 2011
PLANS APPROVAL DATE

REGISTERED PROFESSIONAL ENGINEER
Randell D. Hiatt
No. C50200
Exp. 6-30-11
CIVIL
STATE OF CALIFORNIA

The State of California or its officers or agents shall not be responsible for the accuracy or completeness of electronic copies of this plan sheet.

To accompany plans dated 2-25-13

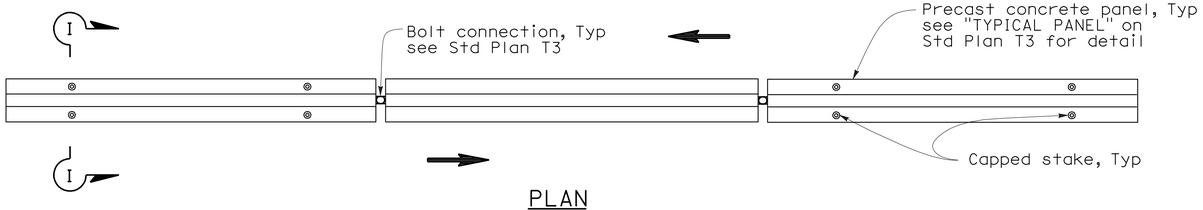

PLAN

RAILING STAKING CONFIGURATION FOR TWO-WAY TRAFFIC

See Note 1

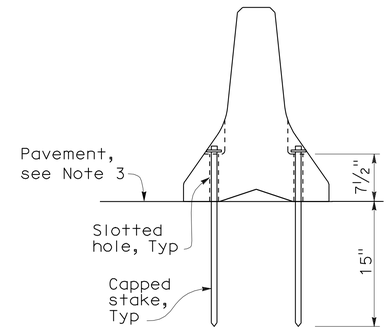

SECTION I-I

NOTES:

1. Where Type K Temporary Railing is placed as a temporary or long term barrier in two-way traffic on highways with less than 24" from the edge of traveled way, use four capped stakes per every other panel with end panels staked.
2. Where Type K Temporary Railing is placed 3" to 24" from the edge of an excavation on highways, use two capped stakes per panel along the traffic side.
3. Staked Type K Temporary Railing must be supported by at least 4" thick concrete, hot mix asphalt or existing asphalt concrete pavement.
4. The minimum yield strength for the washer must be 60,000 psi.
5. Direction of adjacent traffic indicated by ⟹.

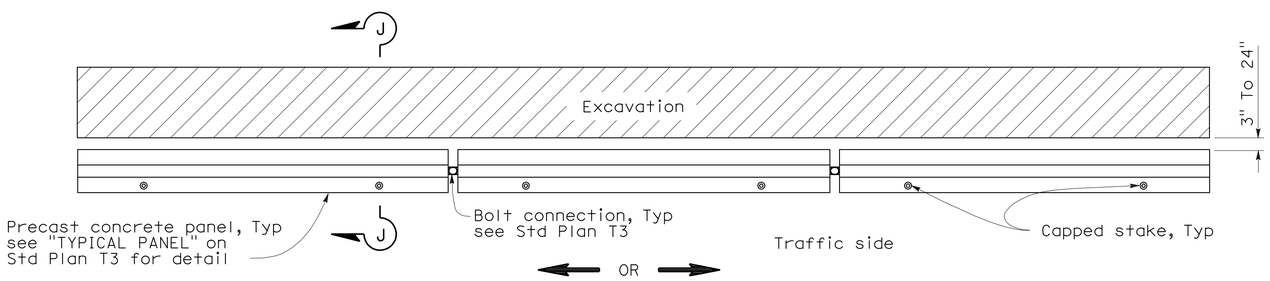

PLAN

RAILING STAKING CONFIGURATION ADJACENT TO AN EXCAVATION

See Note 2

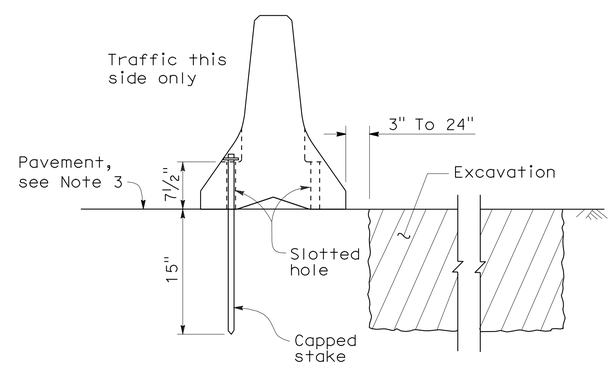

SECTION J-J

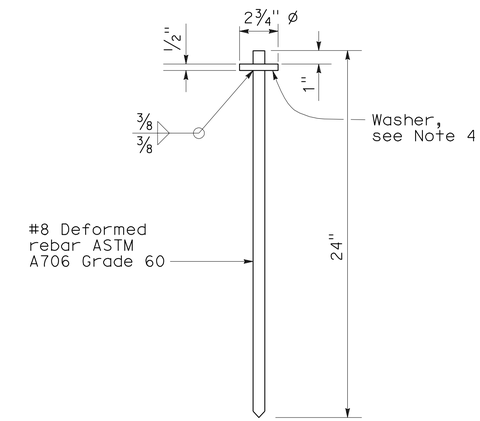

CAPPED STAKE DETAIL

STATE OF CALIFORNIA
DEPARTMENT OF TRANSPORTATION

TEMPORARY RAILING (TYPE K)

NO SCALE

NSP T3A DATED MAY 20, 2011 SUPPLEMENTS THE STANDARD PLANS BOOK DATED MAY 2006.

NEW STANDARD PLAN NSP T3A

2006 NEW STANDARD PLAN NSP T3A

DIST	COUNTY	ROUTE	POST MILES TOTAL PROJECT	SHEET NO.	TOTAL SHEETS
08	SBd	15	177.3/181.1	239	710

REGISTERED CIVIL ENGINEER

November 17, 2006
PLANS APPROVAL DATE

REGISTERED PROFESSIONAL ENGINEER
Greg W. Edwards
No. C36386
Exp. 6-30-08
CIVIL
STATE OF CALIFORNIA

The State of California or its officers or agents shall not be responsible for the accuracy or completeness of electronic copies of this plan sheet.

To accompany plans dated 2-25-13

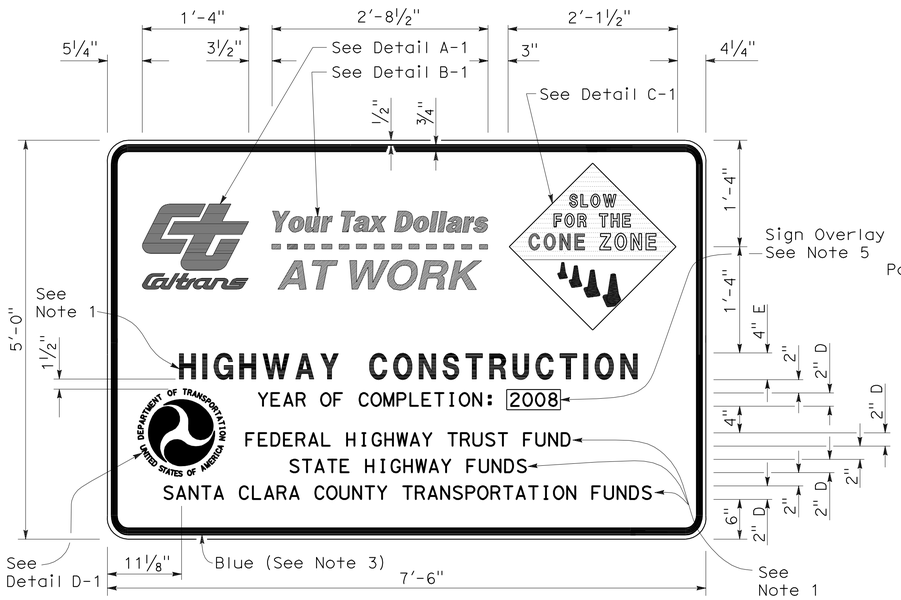

TYPE 1

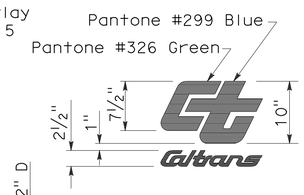

DETAIL A-1

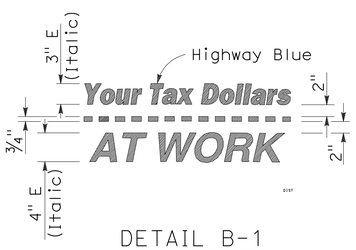

DETAIL B-1
(See Note 3)

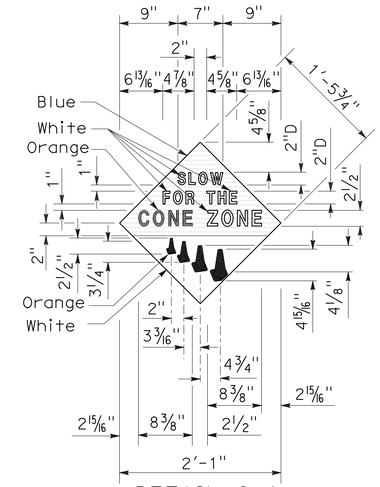

DETAIL C-1
(See Note 4)

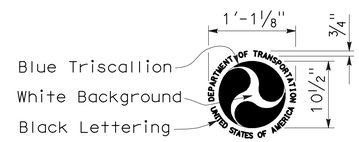

DETAIL D-1
(See Note 6)

NOTES:

1. The sign messages shown for type of project and fund types are examples only. See the Special Provisions for the applicable type of project and fund type messages to be used.
2. Except as otherwise shown, the legend of sign shall be black on a white background (non-reflective).
3. The border of the signs and details "B-1" and "B-2" shall be blue (non-reflective).
4. The diamond in details "C-1" and "C-2" shall be blue for the background of message, " SLOW FOR THE CONE ZONE", and white background for the orange cones. The color and type of font for the "SLOW FOR THE CONE ZONE" message shall be: "SLOW" white D; "FOR THE" white D; "CONE" orange Arial font; "ZONE" white Arial font.
5. Year of completion of project construction shown on the overlay is an example only. See the Special Provisions.
6. Use when the Project involves Federal Highway Trust Fund.

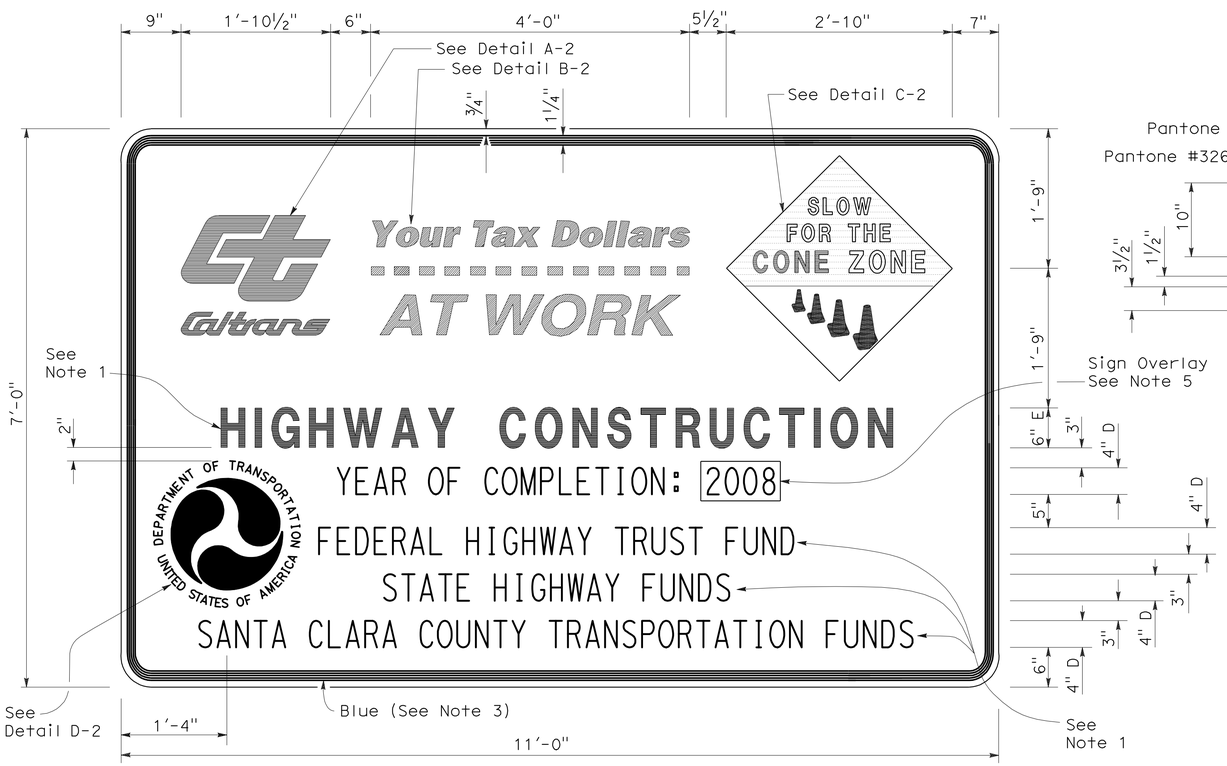

TYPE 2

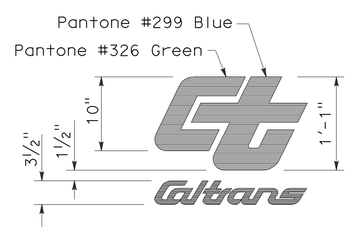

DETAIL A-2

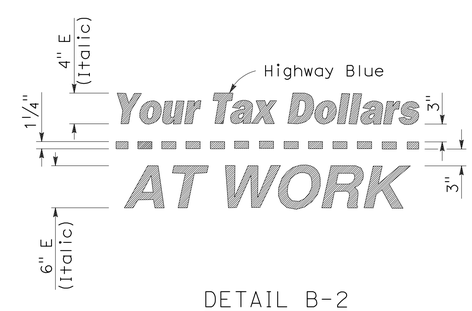

DETAIL B-2
(See Note 3)

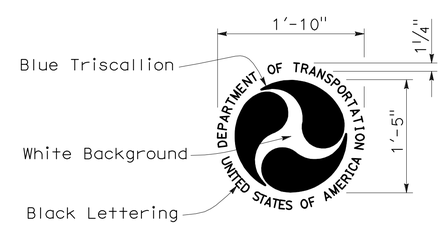

DETAIL D-2
(See Note 6)

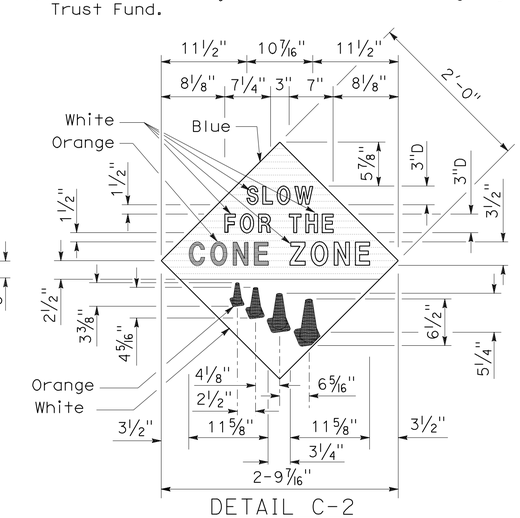

DETAIL C-2
(See Note 4)

STATE OF CALIFORNIA
DEPARTMENT OF TRANSPORTATION

CONSTRUCTION PROJECT FUNDING IDENTIFICATION SIGNS

NO SCALE

RSP T7 DATED NOVEMBER 17, 2006 SUPERSEDES STANDARD PLAN T7
DATED MAY 1, 2006 - PAGE 217 OF THE STANDARD PLANS BOOK DATED MAY 2006.

REVISED STANDARD PLAN RSP T7

2006 REVISED STANDARD PLAN RSP T7

9-7-06

DIST	COUNTY	ROUTE	POST MILES TOTAL PROJECT	SHEET NO.	TOTAL SHEETS
08	SBd	15	177.3/181.1	240	710

REGISTERED CIVIL ENGINEER

October 5, 2007
PLANS APPROVAL DATE

REGISTERED PROFESSIONAL ENGINEER Efthymios Delis No. C51434 Exp. 6-30-08 CIVIL STATE OF CALIFORNIA

The State of California or its officers or agents shall not be responsible for the accuracy or completeness of electronic copies of this plan sheet.

To accompany plans dated 2-25-13

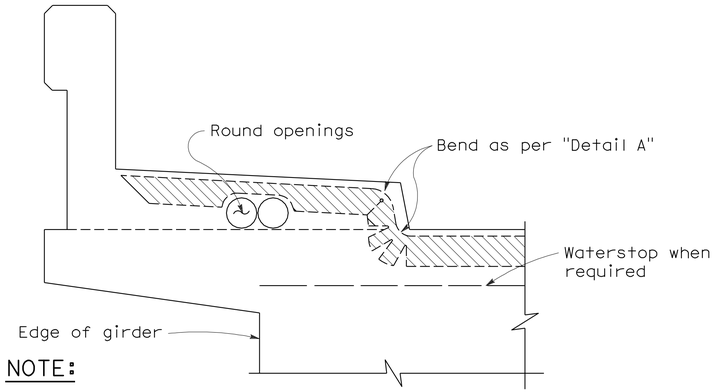

NOTE:

Type "B" seal shown. Type "A" seals to comform to the general path of seal shown, cuts for bending not required. Bend Type "A" seals 3" up into curb or barrier rail on only the low end of the seal.

CONCRETE BARRIER AND SIDEWALK

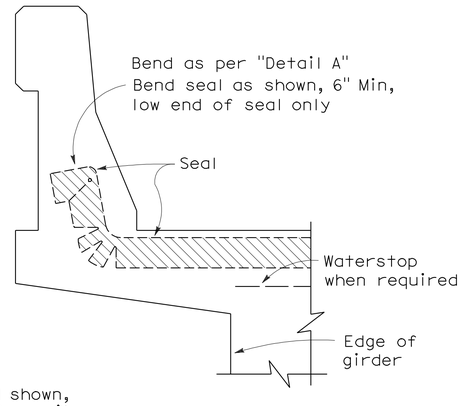

CONCRETE BARRIER

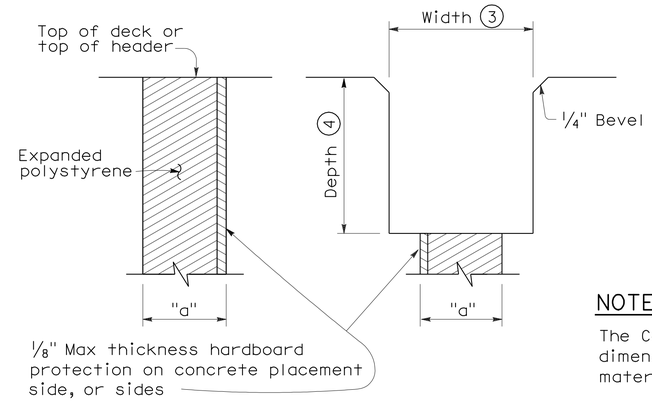

FORMING DETAIL SAWCUT DETAIL

NOTE:

The Contractor shall verify all controlling field dimensions before ordering or fabricatiing any material.

JOINT SEALS DETAILS

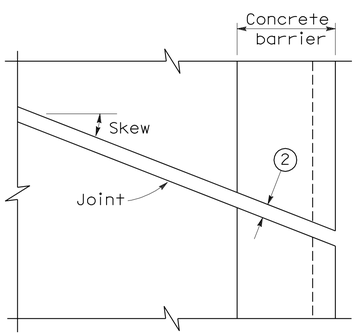

PLAN OF JOINT (SKEW ≤ 20°)

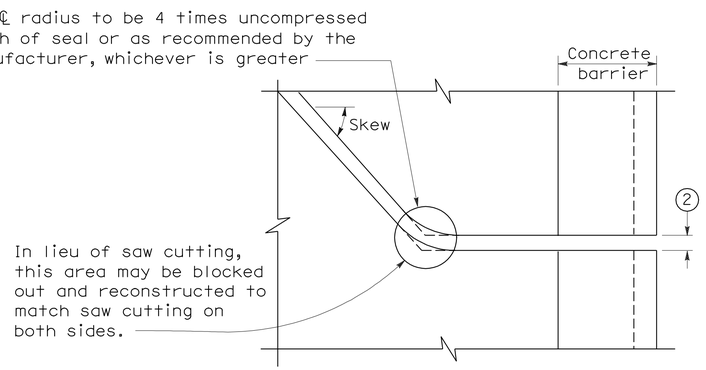

PLAN OF JOINT (SKEW > 20°)

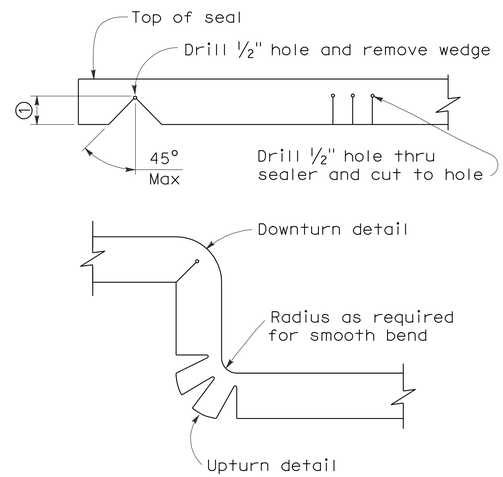

DETAIL A

NOTES:

1. Make smooth cuts from the bottom of seal to 1½" clear of top leaving at least one complete cell between the top of the cut and top of the seal. When necessary cut back of seal to clear conduit and round openings.
2. Opening in barrier to match width of sawn deck joint.
3. Sawcut groove widths shall be as ordered by the Engineer.
4. Depth of sawcut: Type A - Depth to be 2" minimum.
   Type B - Depth to be equal to or greater than the depth of seal measured along the contact surface, when compressed to minimum width position (W_2) plus dimensions shown.
5. MR (movement rating) as shown on other plan sheets.
6. Other depths must be approved by the Engineer.

DIMENSIONS "a" OF JOINT REQUIRED

Movement Rating (MR) (5)	Bridge Type	"a" Dimension Deck Concrete Placed		
		Winter	Fall-Spring	Summer
2"	All except CIP/PS	1½"	1¼"	¾"
	CIP/PS	1¼"	1"	½"
1½"	All except CIP/PS	1¼"	1"	½"
	CIP/PS	1"	¾"	½"
1"	All except CIP/PS	1"	¾"	½"
	CIP/PS	¾"	½"	½"
½"	All except CIP/PS	¾"	¾"	½"
	CIP/PS	½"	½"	½"

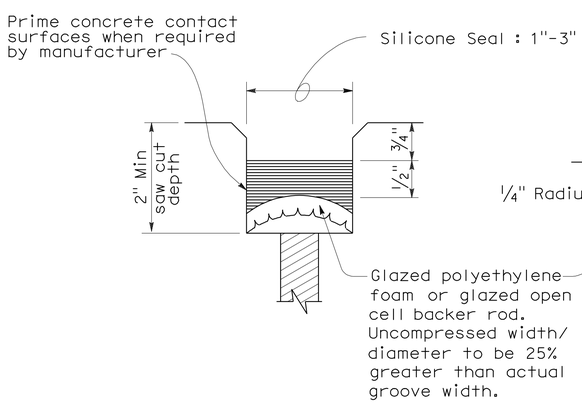

TYPE A SEAL

Movement rating : Silicone = 1" Max

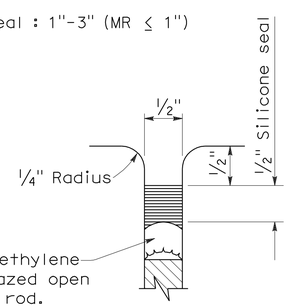

TYPE AL SEAL

Longitudinal joints only

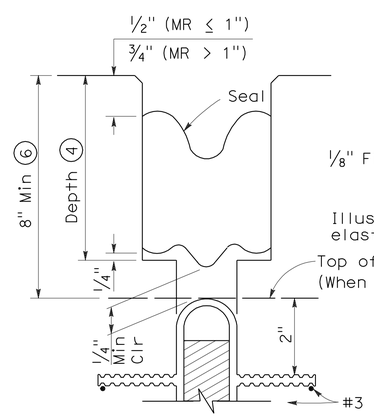

TYPE B JOINT SEAL
IN MINIMUM WIDTH POSITION (W_2)

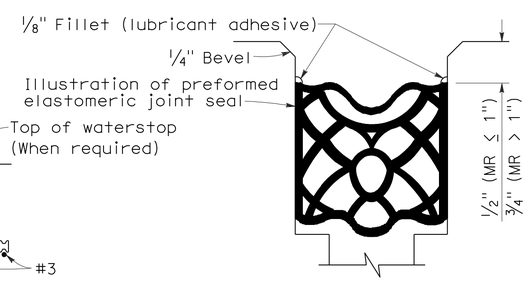

TYPE B SEAL

Movement Rating ≤ 2"

STATE OF CALIFORNIA
DEPARTMENT OF TRANSPORTATION

JOINT SEALS (MAXIMUM MOVEMENT RATING = 2")

NO SCALE

RSP B6-21 DATED OCTOBER 5, 2007 SUPERSEDES STANDARD PLAN B6-21 DATED MAY 1, 2006 - PAGE 258 OF THE STANDARD PLANS BOOK DATED MAY 2006.

REVISED STANDARD PLAN RSP B6-21

2006 REVISED STANDARD PLAN RSP B6-21

5-8-07

DIST	COUNTY	ROUTE	POST MILES TOTAL PROJECT	SHEET NO.	TOTAL SHEETS
08	SBd	15	177.3/181.1	241	710

REGISTERED ELECTRICAL ENGINEER

October 5, 2007
PLANS APPROVAL DATE

REGISTERED PROFESSIONAL ENGINEER
Jeffery G. McRae
No. E14512
Exp. 6-30-08
ELECTRICAL
STATE OF CALIFORNIA

The State of California or its officers or agents shall not be responsible for the accuracy or completeness of electronic copies of this plan sheet.

To accompany plans dated 2-25-13

ELECTROLIERS

STANDARD TYPES
15, 15D
15 STRUCTURE
21, 21D STRUCTURE
30
31
32
35
36-20A

High mast light pole

Double Arm lighting standard

Existing electrolier

Electrolier foundation (Future installation)

NOTES:

1. Luminaires shall be 310 W HPS when installed on Type 21, 21D, 30, 31, 32, 35 and 36-20A Standards, unless otherwise specified. Luminaires shall be 200 W HPS when installed on other type standards or poles, unless otherwise specified.
2. Luminaires shall be the cutoff type, ANSI Type Ⅲ medium cutoff lighting distribution, unless otherwise specified.
3. Variations noted adjacent to symbol on project plans.

Electrolier (see project notes or project plans)

Luminaire on wood pole

STANDARD NOTES:

- AB — Abandon. If applied to conduit, remove conductors.
- BC — Install pull box in existing conduit run.
- BP — Pedestrian barricade, type as indicated on plan.
- CB — Install conduit into existing pull box.
- CC — Connect new and existing conduit. Remove existing conductors and install conductors as indicated.
- CF — Conduit to remain for future use. Remove conductors. Install pull wire or rope.
- DH — Detector handhole.
- FA — Foundation to be abandoned.
- IS — Install sign on signal mast arm.
- NS — No slip base on standard.
- PEC — Photoelectric control.
- PEU — Photoelectric unit.
- RC — Equipment or material to be removed and become the property of the Contractor.
- RE — Remove electrolier, fuses and ballast. Tape ends of conductors.
- RL — Relocate equipment.
- RR — Remove and reuse equipment.
- RS — Remove and salvage equipment.
- SC — Splice new to existing conductors.
- SD — Service disconnect.
- SF — Standard to remain for future use. Remove luminaire, pole conductors, fuses and ballast.
- TSP — Telephone service point.

ABBREVIATIONS AND EQUIPMENT DESIGNATIONS

PROPOSED	EXISTING	
BBS	bbs	Battery backup system
BC	bc	Bolt circle
C	C	Conduit
CCTV	cctv	Closed circuit television
CKT	ckt	Circuit
CMS	cms	Changeable message sign
DLC	dlc	Loop detector lead-in cable
EMS	ems	Extinguishable message sign
EVC	evc	Emergency vehicle cable
EVD	evd	Emergency vehicle detector
FB	fb	Flashing beacon
FBCA	fbca	Flashing beacon control assembly
FBS	fbs	Flashing beacon with slip base
FO	fo	Fiber optic
G	G	Ground (Equipment Grounding Conductor)
GFCI	GFCI	Ground fault circuit interrupt
HAR	har	Highway advisory radio
HEX	hex	Hexagonal
HPS	hps	High pressure sodium
IISNS	iisns	Internally illuminated street name sign
ISL	isl	Induction sign lighting
LED	led	Light emitting diode
LMA	lma	Luminaire mast arm
LPS	lps	Low pressure sodium
LTG	ltg	Lighting
LUM	lum	Luminaire
MAT	mat	Mast arm mounting vehicle signal faces, top attachment
MAS	mas	Mast arm mounting vehicle signal faces, side attachment
MAS-4A	mas-4A	Mast arm mounting vehicle signal faces, side attachment - 4 signal section
MAS-4B	mas-4B	
MAS-4C	mas-4C	
MAS-5A	mas-5A	Mast arm mounting vehicle signal faces, side attachment - 5 signal section
MAS-5B	mas-5B	
MC	mc	Mercury contactor
M/M	m/m	Multiple to multiple transformer
MT	mt	Conduit with pull wire or rope only
MTG	mtg	Mounting
	mv	Mercury vapor lighting fixture
N	N	Neutral (Grounded Conductor)
NC	NC	Normally closed
NO	NO	Normally open
PB	pb	Pull box
PEC	pec	Photoelectric control (Type Ⅰ, Ⅱ, Ⅲ, Ⅳ or Ⅴ as shown)
PED	ped	Pedestrian
PEU	peu	Photoelectric unit
PPB	ppb	Pedestrian push button
RL		Relocated equipment
RM	rm	Ramp metering
SB	sb	Slip base
SIC	sic	Signal interconnect cable
SIG	sig	Signal
SMA	sma	Signal mast arm
SNS	sns	Street name sign
SP	sp	Service point
TDC	tdc	Telephone demarcation cabinet
TMS	tms	Traffic monitoring station
TOS	tos	Traffic Operations System
VEH	veh	Vehicle
XFMR	xfmr	Transformer
COMM	comm	Communication
RWIS	rwis	Roadway weather information system

SOFFIT AND WALL MOUNTED LUMINAIRES

Pendant, 70 W HPS unless otherwise specified.

Flush, 70 W HPS unless otherwise specified.

Wall surface, 70 W HPS unless otherwise specified.

Existing soffit or wall luminaire to remain unmodified.

Existing soffit or wall luminaire to be modified as specified.

NOTE:

Arrow indicates "street side" of luminaire.

STATE OF CALIFORNIA
DEPARTMENT OF TRANSPORTATION

ELECTRICAL SYSTEMS (SYMBOLS AND ABBREVIATIONS)

NO SCALE

RSP ES-1A DATED OCTOBER 5, 2007 SUPERSEDES STANDARD PLAN ES-1A DATED MAY 1, 2006 - PAGE 400 OF THE STANDARD PLANS BOOK DATED MAY 2006.

REVISED STANDARD PLAN RSP ES-1A

2006 REVISED STANDARD PLAN RSP ES-1A

DIST	COUNTY	ROUTE	POST MILES TOTAL PROJECT	SHEET NO.	TOTAL SHEETS
08	SBd	15	177.3/181.1	242	710

REGISTERED ELECTRICAL ENGINEER

October 5, 2007
PLANS APPROVAL DATE

REGISTERED PROFESSIONAL ENGINEER
Jeffery G. McRae
No. E14512
Exp. 6-30-08
ELECTRICAL
STATE OF CALIFORNIA

The State of California or its officers or agents shall not be responsible for the accuracy or completeness of electronic copies of this plan sheet.

To accompany plans dated 2-25-13

CONDUIT

PROPOSED	EXISTING	
		Lighting Conduit, unless otherwise indicated or noted
		Traffic signal conduit
C	c	Communication conduit
T	t	Telephone conduit
F	f	Fire alarm conduit
FO	fo	Fiber optic conduit
		Conduit termination (RSP ES-9A C)
R	r	Conduit riser in/on structure or service pole

SERVICE EQUIPMENT

PROPOSED	EXISTING	
OH	oh	Overhead lines
U	U	Wood pole "U" indicates utility owned
		Pole guy with anchor
		Utility transformer - ground mounted
III		Service equipment enclosure type
		Service equipment enclosure door indicates front of enclosure
T	t	Telephone demarcation cabinet

POLE-MOUNTED SERVICE DESIGNATION

Type of installation

TYPE H SERVICE - 28'-10" ← Pole height above grade

ILLUMINATED OVERHEAD SIGN

PROPOSED	EXISTING	
		Overhead sign - Single post
		Overhead sign - Two post
		Overhead sign - Mounted on structure
		Overhead sign with electrolier

SIGNAL EQUIPMENT

PROPOSED	EXISTING	
		Pedestrian signal face
		Pedestrian push button post
		Pedestrian barricade
		Vehicle signal face (with backplate, 3-Section: red, yellow and green)
		Vehicle signal face with angle visors
PV	PV	Modifications of basic symbols: "L" indicates all non-arrow sections louvered "LG" indicates louvered green section only "PV" indicates 12" programmed visibility sections "8" indicates all 8" sections (only when specified)
		Type 15TS and Vehicle signal face
		Vehicle signal face with red, yellow and green left arrow sections
		Vehicle signal face with red and yellow sections and up green arrow
		Vehicle signal face (5 Section) with red, yellow and green sections and yellow and green right arrows
		Type 1 Standard and attached vehicle signal faces
		Standard with signal mast arm only and attached vehicle signal faces and internally illuminated street name sign
		Type 33 Standard, Left-turn vehicle signal face and sign
		Standard with luminaire and signal mast arms and attached vehicle signal faces
		Cantilever flashing beacon Type 9 Frame, with a sign unless otherwise specified or indicated
		Type 15-FBS Standard with two vehicle signal face sections with lens, backplate and visor with a sign
R	Y	Flashing beacon. One vehicle signal face section with lens, backplate and visor. "R" indicates red indication, "Y" indicates yellow indication
		Controller assembly. Door indicates front of cabinet

SIGNAL EQUIPMENT Cont

PROPOSED	EXISTING	
		Guard post
		Type 1 Standard with "Meter On" sign
		Emergency Vehicle detector

NOTES:

1. All signal sections shall be 12" unless shown otherwise.
2. Signal heads shall be provided with backplates unless shown otherwise.
3. Signal indication shall be LED.

STATE OF CALIFORNIA
DEPARTMENT OF TRANSPORTATION

ELECTRICAL SYSTEMS (SYMBOLS AND ABBREVIATIONS)

NO SCALE

RSP ES-1B DATED OCTOBER 5, 2007 SUPERCEDES STANDARD PLAN ES-1B DATED MAY 1, 2006 - PAGE 401 OF THE STANDARD PLANS BOOK DATED MAY 2006.

REVISED STANDARD PLAN RSP ES-1B

2006 REVISED STANDARD PLAN RSP ES-1B

DIST	COUNTY	ROUTE	POST MILES TOTAL PROJECT	SHEET NO.	TOTAL SHEETS
08	SBd	15	177.3/181.1	243	710

REGISTERED ELECTRICAL ENGINEER

October 5, 2007
PLANS APPROVAL DATE

REGISTERED PROFESSIONAL ENGINEER
Jeffery G. McRae
No. E14512
Exp. 6-30-08
ELECTRICAL
STATE OF CALIFORNIA

The State of California or its officers or agents shall not be responsible for the accuracy or completeness of electronic copies of this plan sheet.

To accompany plans dated 2-25-13

EQUIPMENT IDENTIFICATION

ILLUMINATED SIGN IDENTIFICATION NUMBER:

Sign No. 12345 — Sign number - Place on post or structure

10 ISL SCI 1.0

- 1.0 — Transformer rating (kVA)
- SCI — Lighting control type
- ISL — Number and type of fixtures

Do NOT place on standard or structure

ELECTROLIER OR EQUIPMENT IDENTIFICATION NUMBER:

12345 - 15'-0"

- 15'-0" — Mast arm length, if shown. Do not place on standard or structure.
- 12345 — Equipment number - Place on standard or structure. Existing equipment numbers are shown in parenthesis

CONDUIT AND CONDUCTOR IDENTIFICATION:

1½"C, 2#10, 15#14, 2 DLC

- 2#10, 15#14, 2 DLC — Number and size of conductors and cables
- 1½"C — Size of conduit in inches

Ø1, Ø2, Ø2P, etc.	Traffic phase identification for signal faces, detectors and phase diagrams
1 2 3	Project note numbers
A B C	Equipment description, installation or item numbers
1 2 3	Conduit run numbers

SIGNAL AND LIGHTING STANDARD (TYPICAL DESIGNATION):

19A - 3 - 100

- 100 — Wind velocity = 100 mph
- 3 — Case 3 arm loading
- 19A — Standard type
- Standard Plan sheet number
- Detail number or letter

MISCELLANEOUS EQUIPMENT

PROPOSED	EXISTING	
CMS	cms	Changeable message sign
		Closed circuit television camera
		Highway advisory radio pole and antenna
EMS	ems	Extinguishable message sign
M V	m v	Detection device M = Microwave sensor V = Video image sensor

WIRING DIAGRAM LEGEND

P	Pole
CB	Circuit breaker
A	Ampere
V	Volt
M	Metered
UM	Unmetered
NB	Neutral bus
GB	Ground bus
G	Equipment grounding conductor
N	Grounded conductor (Neutral)

- External conductor
- Conductor or bus
- Tie point
- Contactor coil
- Contactor, Contact NO
- Terminal blocks
- Contactor, Contact NC
- Enclosure bond
- Grounding electrode
- Circuit breaker
- Receptacle

PULL BOXES

PROPOSED EXISTING

Pull box-No. 5 unless otherwise indicated or noted.

3 — 9A(21)

Pull box-Additional designations or descriptions

3 = No. 3½ pull box
5 = No. 5 pull box
6 = No. 6 pull box
7 = No. 7 (Ceiling pull box)
8 = No. 8 (Pendant soffit pull box)
9 = No. 9 pull box
9A = No. 9A pull box

(C) = Communications pull box
(E) = Pull box with extension
(S) = Sprinkler control pull box
(21) = Anchor bolts and conduit for future installation of Type 21 Standard
(T) = Traffic pull box

VEHICLE DETECTORS

5 J 9 U

- U — U = Upper, L = Lower
- 9 — Slot number in input file
- J — Input file (I or J)
- 5 — Phase

PROPOSED	EXISTING	
		Type A detector loop. Outline of sawcut shown.
		Type B detector loop. Outline of sawcut shown.
		Type C detector loop. Outline of sawcut shown.
		Type D detector loop. Outline of sawcut shown.
		Type E detector loop. Outline of sawcut shown.
		Type Q detector loop. Outline of sawcut shown.
		Magnetic detector
DH	dh	Detector handhole
		Microwave or video detection zone

STATE OF CALIFORNIA
DEPARTMENT OF TRANSPORTATION

ELECTRICAL SYSTEMS (SYMBOLS AND ABBREVIATIONS)

NO SCALE

RSP ES-1C DATED OCTOBER 5, 2007 SUPERCEDES STANDARD PLAN ES-1C DATED MAY 1, 2006 - PAGE 402 OF THE STANDARD PLANS BOOK DATED MAY 2006.

REVISED STANDARD PLAN RSP ES-1C

2006 REVISED STANDARD PLAN RSP ES-1C

DIST	COUNTY	ROUTE	POST MILES TOTAL PROJECT	SHEET NO.	TOTAL SHEETS
08	SBd	15	177.3/181.1	244	710

REGISTERED ELECTRICAL ENGINEER

October 5, 2007
PLANS APPROVAL DATE

REGISTERED PROFESSIONAL ENGINEER
Jeffery G. McRae
No. E14512
Exp. 6-30-08
ELECTRICAL
STATE OF CALIFORNIA

The State of California or its officers or agents shall not be responsible for the accuracy or completeness of electronic copies of this plan sheet.

To accompany plans dated 2-25-13

2006 REVISED STANDARD PLAN RSP ES-2C

NOTES-TYPE III SERVICE EQUIPMENT ENCLOSURES:

1. Service equipment enclosure and metering equipment shall meet the requirements of the service utility. The meter area shall have a sealable, lockable, weathertight cover that can be removed without the use of tools.

2. Service equipment enclosures shall be factory wired and conform to NEMA standards.

3. Dimensions of service equipment enclosures shall meet the requirements of the service utility.

4. The dead front panels on Type III service equipment enclosures shall have a continuous stainless steel or aluminum piano hinge. The panel in front of the breakers shall be secured with a latch or captive screws. No live parts shall be mounted on the dead front panel.

5. The exterior door shall have provisions for padlocking. The padlock hole shall be a minimum diameter of 7/16".

6. Enclosures housing transformers of more than one kVA shall have effective screened ventilation louver of not less than 50 square inches. Screen shall be stainless steel No. 304, with a No. 10 size mesh. Framed screen shall be secured with at least four bolts.

7. Fasteners on the exterior of the enclosure shall be vandal-resistant and shall not be removable from the exterior. Exterior screws, nuts, bolts and washers shall be stainless steel.

8. Landing lugs for incoming service conductors shall be compatible with either copper or aluminum conductors sized to suit the conductors shown on the plan. Landing lugs shall be copper or tin-plated aluminum. Neutral bus shall be rated for 125 A and be suitable for copper or aluminum conductors unless otherwise specified. The terminal shall include but not be limited to:

   a) Incoming terminals (landing lugs)
   b) Neutral lugs
   c) Solid neutral terminal strip

9. At least 6 standard single pole circuit breaker spaces, 3/4" nominal, shall be provided for branch circuits. Circuit breaker interiors shall be copper. Interiors of enclosure shall accept plug-in or cable-in/cable-out circuit breakers.

10. Control wiring shall be 600 V, 14 stranded machine tool wire. Where subject to flexing, 19 strand wire shall be used.

11. Main bus shall be rated for 125 A and shall be tin-plated copper.

12. A plastic laminated wiring diagram shall be provided with brass mounting eyelets and attached to the inside of the enclosure and the wiring diagram shall be affixed to the interior with a UL or ETL approved method.

13. An engraved phenolic nameplate on the dead front panel indicating the function of each circuit or device shall be installed with stainless steel rivets or stainless steel screws:

    a) Adjacent to the breaker or device with character size a minimum of 1/8".

    b) At the top of the exterior door panel indicating State system number, voltage level and number of phases with character size a minimum of 3/16".

14. The plan shows the approximate location of devices within the enclosure. Components may be rearranged, however, the "working" clearances within the service equipment enclosure shall be maintained.

15. In unpaved areas a raised portland cement concrete pad 2'-0" x 4" x width of foundation shall be constructed in front of new service equipment enclosure installation. Pad shall be set to elevation of foundation.

16. Foundation shall extend 2" minimum beyond edge of service equipment enclosure.

17. Internal bus, where shown, is typical only. Alternative design of proposed service equipment enclosure shall be submitted to the Engineer for approval.

18. Plug-in circuit breakers may be mounted in the vertical or horizontal position. Cable-in/cable-out circuit breakers shall be mounted in the vertical position.

19. Type III-AF and Type III-BF service equipment enclosures shall have the meter viewing windows located on the front side of the service equipment enclosures.

20. Type III-AR and Type III-BR service equipment enclosures shall be similarly constructed as Type III-AF and Type III-BF respectively, except the meter viewing windows shall be located on the back side of the service equipment enclosures.

21. Minimum clearance shall be required for front and back of service equipment enclosure per National Electrical Code, Article 110.26, "Spaces About Electric Equipment (600 Volts, Nominal, or Less)."

STATE OF CALIFORNIA
DEPARTMENT OF TRANSPORTATION

ELECTRICAL SYSTEMS (SERVICE EQUIPMENT NOTES TYPE III SERIES)

NO SCALE

RSP ES-2C DATED OCTOBER 5, 2007 SUPERCEDES STANDARD PLAN ES-2C DATED MAY 1, 2006 - PAGE 405 OF THE STANDARD PLANS BOOK DATED MAY 2006.

REVISED STANDARD PLAN RSP ES-2C

DIST	COUNTY	ROUTE	POST MILES TOTAL PROJECT	SHEET NO.	TOTAL SHEETS
08	SBd	15	177.3/181.1	245	710

REGISTERED ELECTRICAL ENGINEER

October 5, 2007
PLANS APPROVAL DATE

REGISTERED PROFESSIONAL ENGINEER Jeffery G. McRae No. E14512 Exp. 6-30-08 ELECTRICAL STATE OF CALIFORNIA

The State of California or its officers or agents shall not be responsible for the accuracy or completeness of electronic copies of this plan sheet.

To accompany plans dated 2-25-13

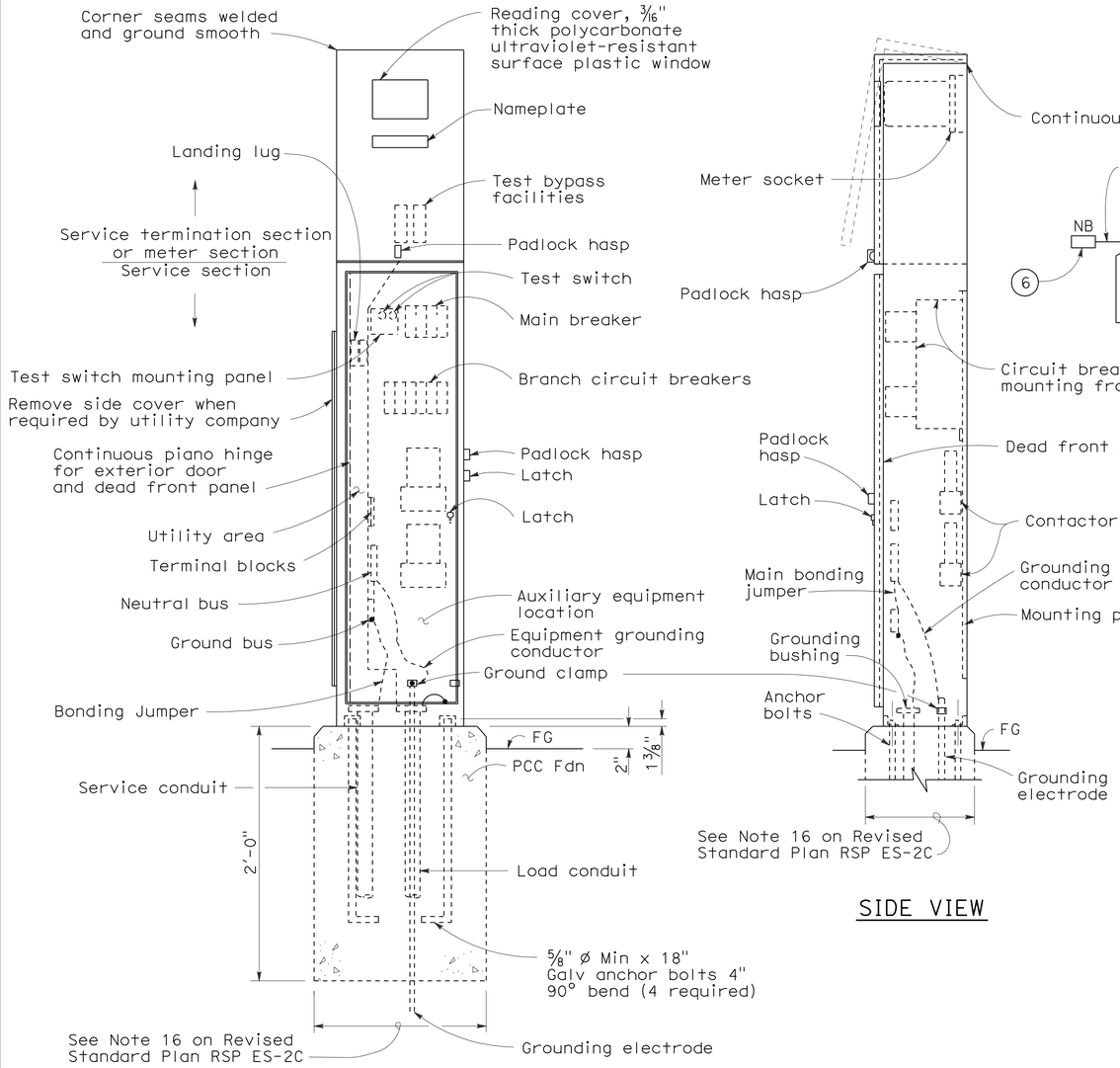

FRONT VIEW

SIDE VIEW

TYPE III-AF SERVICE EQUIPMENT ENCLOSURE (TYPICAL)

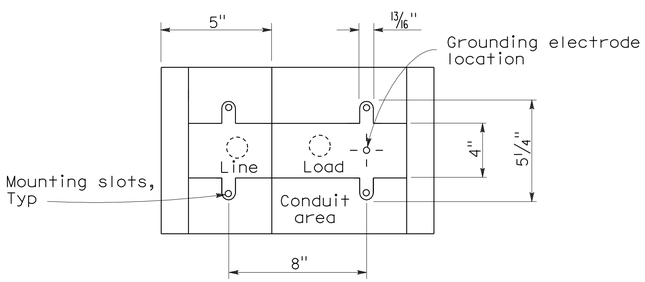

BASE FOR TYPE III-A SERVICE EQUIPMENT ENCLOSURE

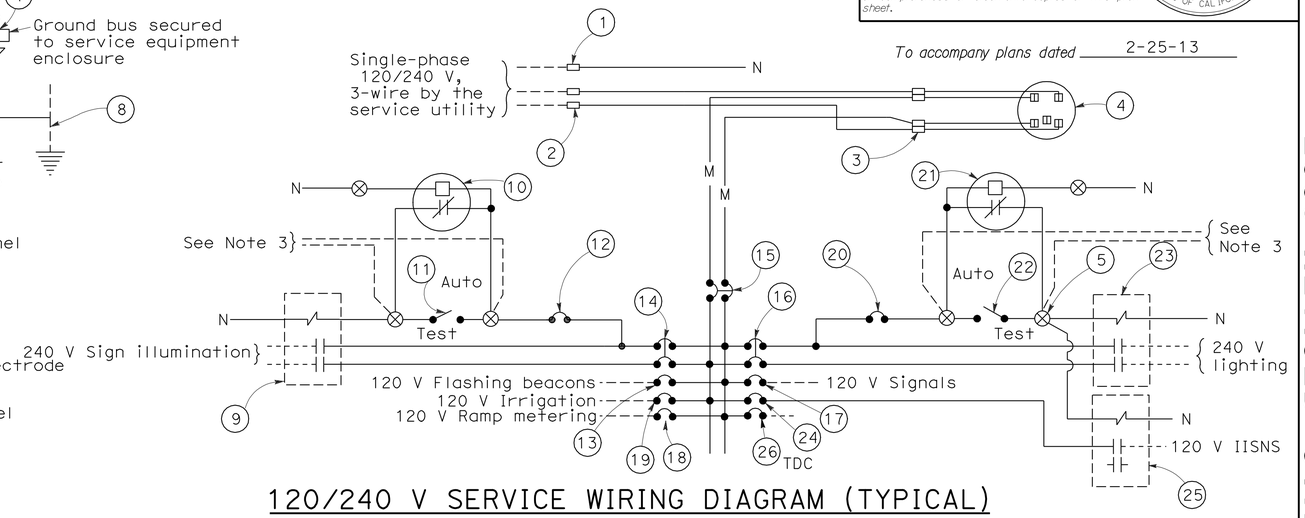

120/240 V SERVICE WIRING DIAGRAM (TYPICAL)

TYPE III-A SERVICE (120/240 V) EQUIPMENT LEGEND

ITEM No.	COMPONENT	NAME PLATE DESCRIPTION	ITEM No.	COMPONENT	NAME PLATE DESCRIPTION
1	Neutral lug		14	30 A, 240 V, 2P, CB	Sign Illumination
2	Landing lug (Note 6)		15	100 A, 240 V, 2P, CB	Main Breaker
3	Test bypass facility		16	30 A, 240 V, 2P, CB	Lighting
4	Meter socket and support		17	50 A, 120 V, 1P, CB	Signals
5	Terminal blocks		18	30 A, 120 V, 1P, CB	Ramp Metering
6	Neutral bus		19	20 A, 120 V, 1P, CB	Irrigation
7	Ground bus		20	15 A, 120 V, 1P, CB	Lighting Control
8	Grounding electrode		21	Photoelectric unit (Note 7)	
9	30 A, 2PNO Contactor	Sign Illumination	22	15 A, 1P, Test switch	Lighting Test Switch
10	Photoelectric unit (Note 7)		23	60 A, 2PNO Contactor	Lighting
11	15 A, 1P, Test switch	Sign Illumination Test Switch	24	15 A, 120 V, 1P, CB	IISNS
12	15 A, 120 V, 1P, CB	Sign Illumination Control	25	30 A, 2PNO Contactor	IISNS
13	15 A, 120 V, 1P, CB	Flashing Beacon	26	20 A, 120 V, 1P, CB	Telephone Demarcation Cabinet

NOTES: (FOR SERVICE EQUIPMENT ENCLOSURE)

1. Voltage ratings of service equipment shall conform to the service voltages indicated on the plans.
2. Unless otherwise indicated on the plans, service equipment items shall be provided for each service equipment enclosure as shown.
3. Connect to remote test switch mounted on lighting standards, sign post or structure when required.
4. Items No. 1 and 6 shall be isolated from the service equipment enclosure.
5. Meter sockets shall be 5 clip type.
6. The landing lug shall be suitable for multiple conductors.
7. Type V photoelectric control shall be used unless otherwise indicated on the plans.

STATE OF CALIFORNIA
DEPARTMENT OF TRANSPORTATION

ELECTRICAL SYSTEMS (SERVICE EQUIPMENT AND TYPICAL WIRING DIAGRAM, TYPE III-A SERIES)

NO SCALE

RSP ES-2D DATED OCTOBER 5, 2007 SUPERCEDES STANDARD PLAN ES-2D DATED MAY 1, 2006 - PAGE 406 OF THE STANDARD PLANS BOOK DATED MAY 2006.

REVISED STANDARD PLAN RSP ES-2D

2006 REVISED STANDARD PLAN RSP ES-2D

DIST	COUNTY	ROUTE	POST MILES TOTAL PROJECT	SHEET NO.	TOTAL SHEETS
08	SBd	15	177.3/181.1	246	710

REGISTERED ELECTRICAL ENGINEER

October 5, 2007
PLANS APPROVAL DATE

REGISTERED PROFESSIONAL ENGINEER Jeffery G. McRae No. E14512 Exp. 6-30-08 ELECTRICAL STATE OF CALIFORNIA

The State of California or its officers or agents shall not be responsible for the accuracy or completeness of electronic copies of this plan sheet.

To accompany plans dated 2-25-13

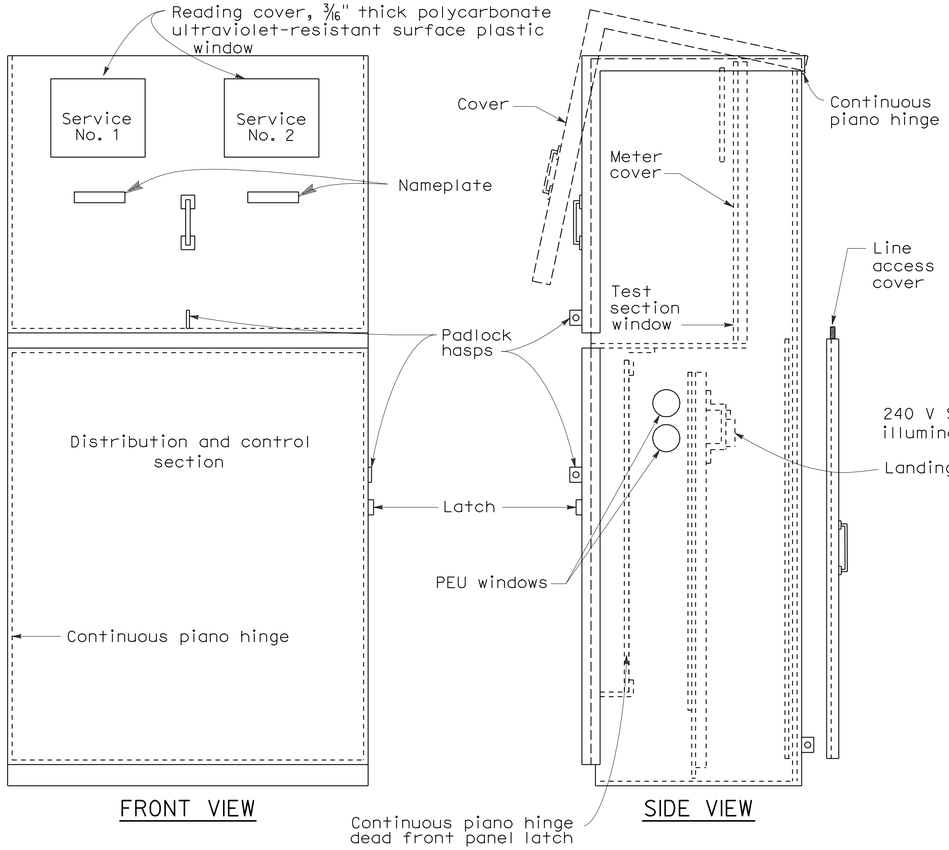

FRONT VIEW

SIDE VIEW

TYPE III-CF SERVICE EQUIPMENT ENCLOSURE WITH PROVISIONS FOR TWO 100 A METERS (TYPICAL)

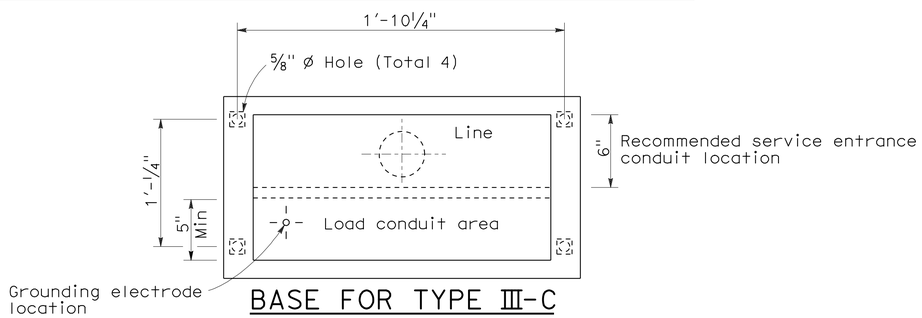

BASE FOR TYPE III-C SERVICE EQUIPMENT ENCLOSURE

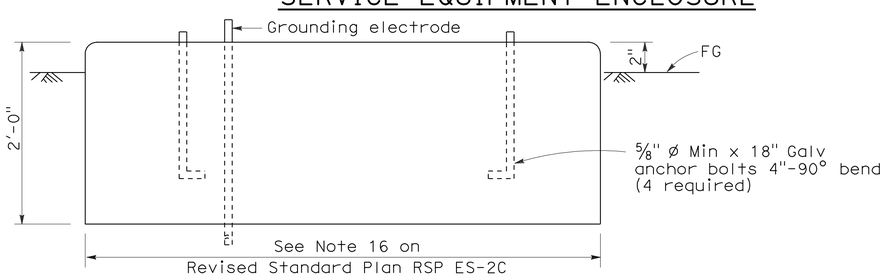

FOUNDATION DETAIL

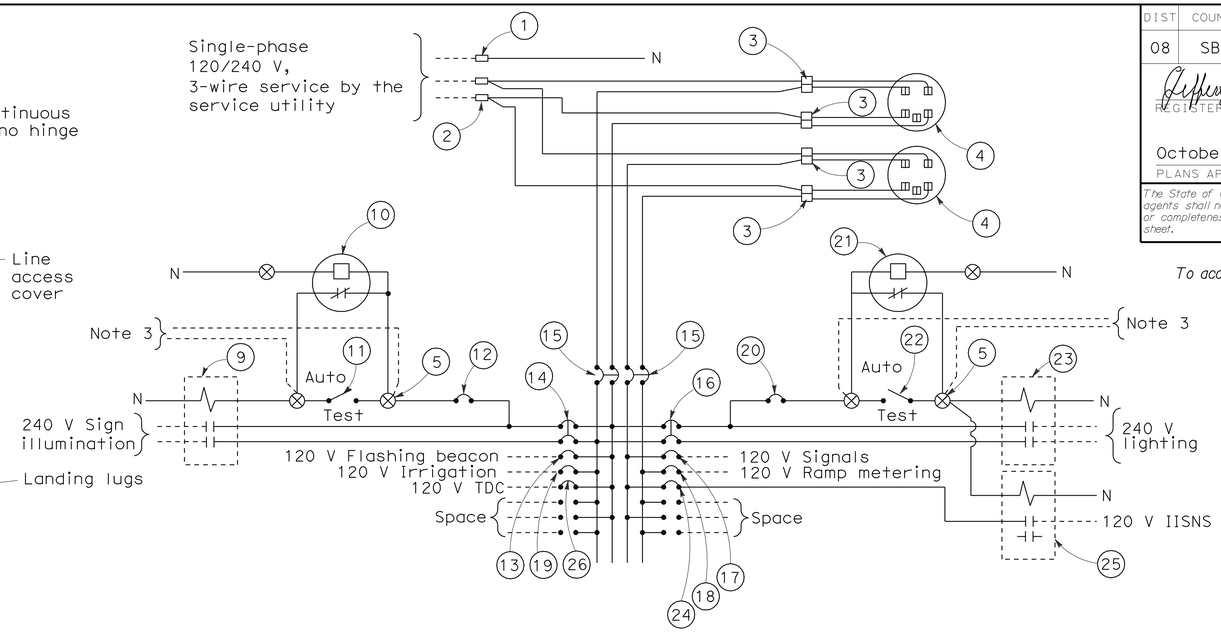

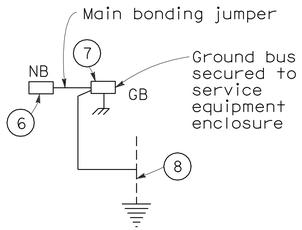

120/240 V SERVICE WIRING DIAGRAM (TYPICAL)

TYPE III-C SERVICE (120/240 V) EQUIPMENT LEGEND

ITEM No.	COMPONENT	NAME PLATE DESCRIPTION	ITEM No.	COMPONENT	NAME PLATE DESCRIPTION
1	Neutral lug		14	30 A, 240 V, 2P, CB	Sign Illumination
2	Landing lug (Note 6)		15	100 A, 240 V, 2P, CB	Main Breaker
3	Test bypass facility		16	30 A, 240 V, 2P, CB	Lighting
4	Meter socket and support		17	50 A, 120 V, 1P, CB	Signals
5	Terminal blocks		18	30 A, 120 V, 1P, CB	Ramp Metering
6	Neutral bus		19	20 A, 120 V, 1P, CB	Irrigation
7	Ground bus		20	15 A, 120 V, 1P, CB	Lighting Control
8	Grounding electrode		21	Photoelectric unit (Note 7)	
9	30 A, 2PNO, Contactor	Sign Illumination	22	15 A, 1P, Test switch	Lighting Control
10	Photoelectric unit (Note 7)		23	60 A, 2PNO Contactor	Lighting
11	15 A, 1P, Test switch	Sign Illumination Test Switch	24	15 A, 120 V, 1P, CB	IISNS
12	15 A, 120 V, 1P, CB	Sign Illumination Control	25	30 A, 2PNO Contactor	IISNS
13	15 A, 120 V, 1P, CB	Flashing Beacon	26	20 A, 120 V, 1P, CB	Telephone Demarcation Cabinet

NOTES: (FOR SERVICE EQUIPMENT ENCLOSURE)

1. Voltage ratings of service equipment shall conform to the service voltages indicated on the plans.
2. Unless otherwise indicated on the plans, service equipment items shall be provided for each service equipment enclosure as shown.
3. Connect to remote test switch mounted on lighting standards, sign post or structure when required.
4. Items No. 1 and 6 shall be isolated from the service equipment enclosure.
5. Meter sockets shall be 5 clip type.
6. The landing lug shall be suitable for multiple conductors.
7. Type V photoelectric control shall be used unless otherwise indicated on the plans.

STATE OF CALIFORNIA
DEPARTMENT OF TRANSPORTATION

ELECTRICAL SYSTEMS (SERVICE EQUIPMENT AND TYPICAL WIRING DIAGRAM TYPE III-C SERIES)

NO SCALE

RSP ES-2F DATED OCTOBER 5, 2007 SUPERCEDES STANDARD PLAN ES-2F DATED MAY 1, 2006 - PAGE 408 OF THE STANDARD PLANS BOOK DATED MAY 2006.

REVISED STANDARD PLAN RSP ES-2F

2006 REVISED STANDARD PLAN RSP ES-2F

8-17-07

DIST	COUNTY	ROUTE	POST MILES TOTAL PROJECT	SHEET NO.	TOTAL SHEETS
08	SBd	15	177.3/181.1	247	710

REGISTERED ELECTRICAL ENGINEER

June 6, 2008
PLANS APPROVAL DATE

REGISTERED PROFESSIONAL ENGINEER
Jeffery G. McRae
No. E14512
Exp. 6-30-10
ELECTRICAL
STATE OF CALIFORNIA

The State of California or its officers or agents shall not be responsible for the accuracy or completeness of electronic copies of this plan sheet.

To accompany plans dated 2-25-13

VISORS

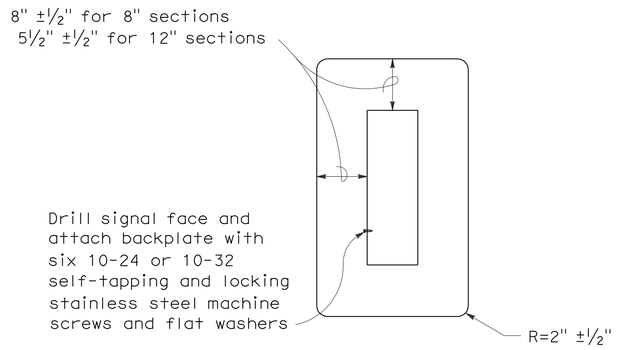

8" AND 12" SECTIONS

BACKPLATE

1/16" minimum thickness
3001-14 aluminum, or plastic when specified

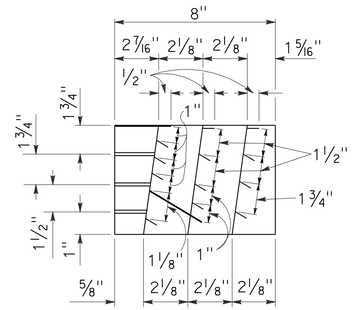

SECTION A-A

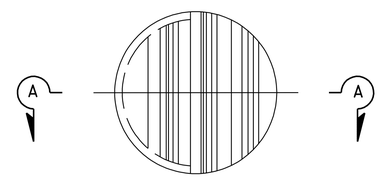

FRONT VIEW

DIRECTIONAL LOUVER

Directional louvers shall be oriented as directed by the Engineer and secured in place with one plated brass machine screw and nut.

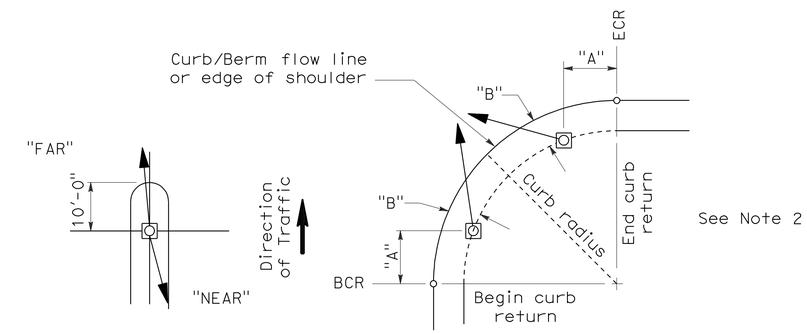

NOTES:

1. Typical signal pole placement unless dimensioned on plans.
2. For "A" and "B" dimensions, see Pole Schedule, or as directed by the Engineer.

SIGNAL STANDARD PLACEMENT DIMENSIONS AND EQUIPMENT LOCATIONS

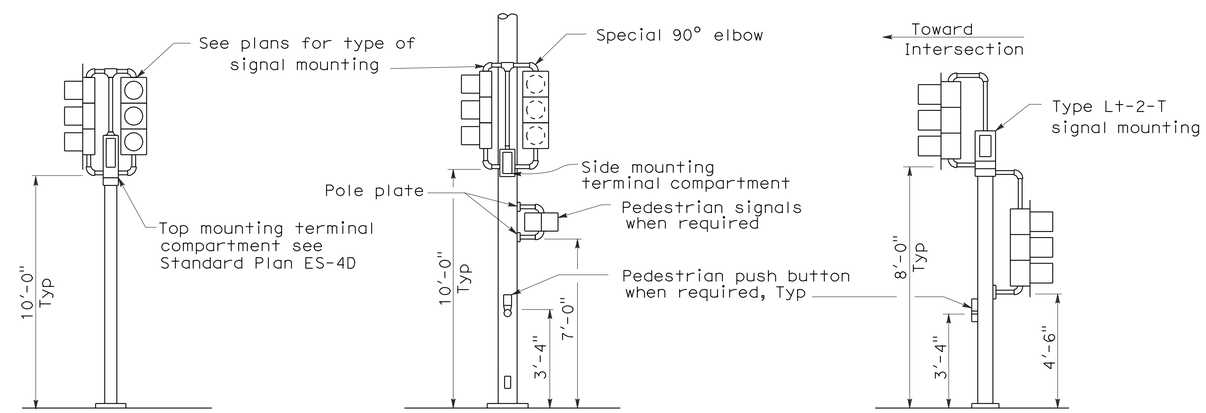

TOP MOUNTED SIGNALS (TV)

Type 1-A, 1-B, 1-C and 1-D standard as indicated on the plans

SIDE MOUNTED SIGNALS (SV AND SP)

Normally used on standards with luminaire or signal mast arm

LEFT TURN LANE SIGNAL

Type 1-A, 1-B, 1-C and 1-D standard as indicated on plans

TYPICAL SIGNAL INSTALLATIONS

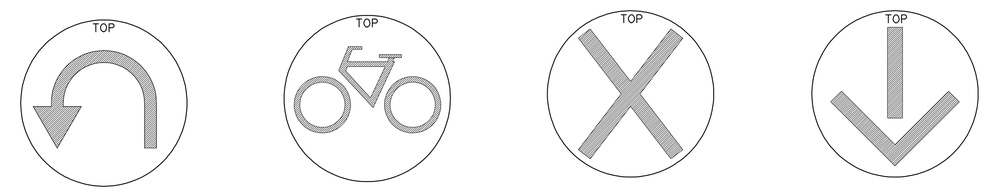

U-TURN SIGNAL FACE | BICYCLE SIGNAL FACE | LANE CONTROL SIGNAL FACE | LANE CONTROL SIGNAL FACE

STATE OF CALIFORNIA
DEPARTMENT OF TRANSPORTATION

ELECTRICAL SYSTEMS (SIGNAL HEADS AND MOUNTINGS)

NO SCALE

RSP ES-4C DATED JUNE 6, 2008 SUPERSEDES STANDARD PLAN ES-4C DATED MAY 1, 2006 - PAGE 420 OF THE STANDARD PLANS BOOK DATED MAY 2006.

REVISED STANDARD PLAN RSP ES-4C

2006 REVISED STANDARD PLAN RSP ES-4C

5-19-08

DIST	COUNTY	ROUTE	POST MILES TOTAL PROJECT	SHEET NO.	TOTAL SHEETS
08	SBd	15	177.3/181.1	248	710

REGISTERED ELECTRICAL ENGINEER

June 6, 2008
PLANS APPROVAL DATE

REGISTERED PROFESSIONAL ENGINEER Jeffery G. McRae No. E14512 Exp. 6-30-10 ELECTRICAL STATE OF CALIFORNIA

The State of California or its officers or agents shall not be responsible for the accuracy or completeness of electronic copies of this plan sheet.

To accompany plans dated 2-25-13

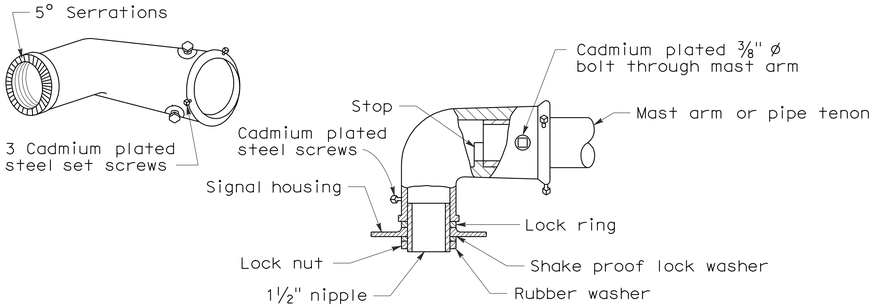

MAST ARM MOUNTING - TYPE "MAT"

For 2 NPS pipe, see Note 1.

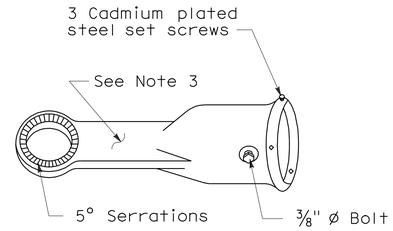

MAST ARM MOUNTING - TYPE "MAS"

For 2 NPS pipe. See Note 1.

SIGNAL SLIP FITTERS

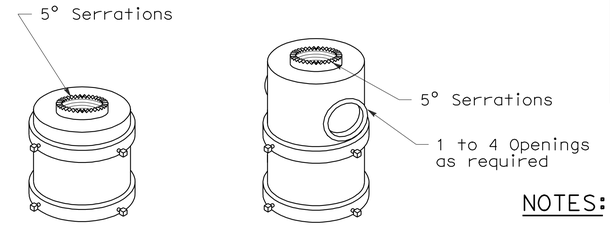

For one mounting For mulitiple mountings

TOP MOUNTINGS

For 4 NPS pipe, see Note 2.

NOTES:

1. After mast arm signal has been plumbed and secured, drill 7/16" hole through mast arm tenon in line with slip fitter hole. Place a cadmium plated ⅜" ø galvanized bolt with washer under bolt head through hole and secure with washer, nut, and locknut. Seal openings between mast arm mountings and mast arm with mastic.
2. (a) Threaded top mounted slip fitter openings shall be 1½ NPS.

   (b) Serrations in fittings shall match those on bottom of signal heads or in lock ring.

   (c) Top opening shall be offset when backplate is used.
3. Wireway shall have a cross section area of 0.95 square inch minimum. Minimum width of ½".

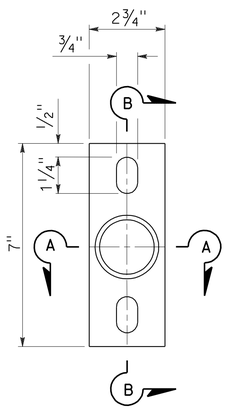

POLE PLATE

For side mountings

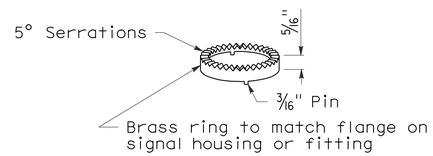

LOCK RING

Use where locking ring is not integral with signal housing or fitting.

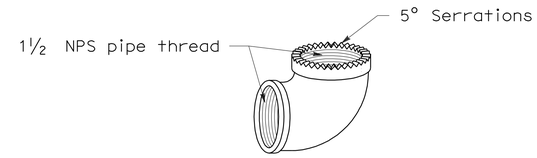

SPECIAL 90° ELBOW

One for each signal head, except those with special slip fitter mounting

MISCELLANEOUS MOUNTING HARDWARE

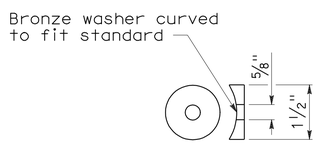

DETAIL "C"

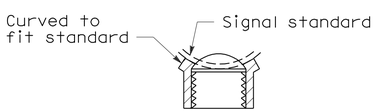

SECTION A-A

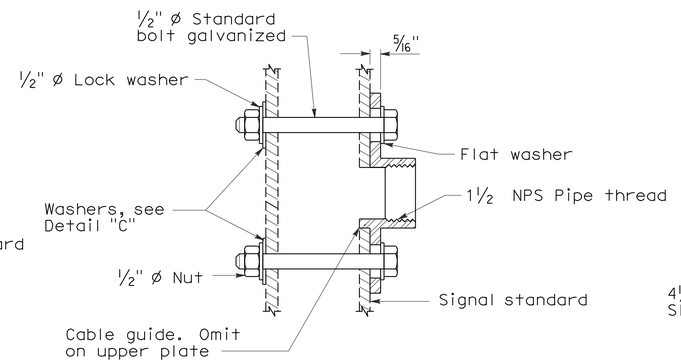

SECTION B-B

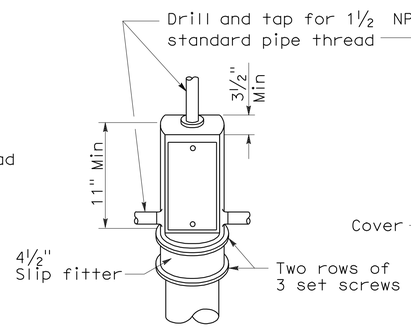

TOP MOUNTING

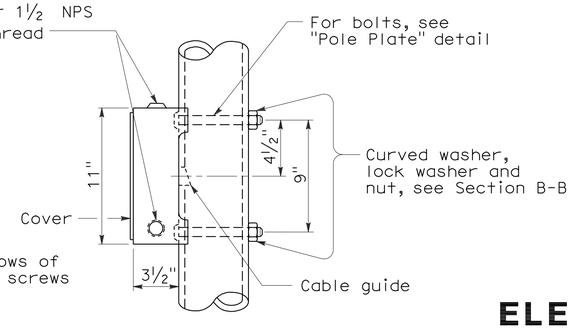

SIDE MOUNTING

TERMINAL COMPARTMENTS

STATE OF CALIFORNIA
DEPARTMENT OF TRANSPORTATION

ELECTRICAL SYSTEMS (SIGNAL HEADS AND MOUNTINGS)

NO SCALE

RSP ES-4D DATED June 6, 2008 SUPERSEDES STANDARD PLAN ES-4D
DATED MAY 1, 2006 - PAGE 421 OF THE STANDARD PLANS BOOK DATED MAY 2006.

REVISED STANDARD PLAN RSP ES-4D

2006 REVISED STANDARD PLAN RSP ES-4D

5-19-08

DIST	COUNTY	ROUTE	POST MILES TOTAL PROJECT	SHEET NO.	TOTAL SHEETS
08	SBd	15	177.3/181.1	249	710

REGISTERED ELECTRICAL ENGINEER

October 5, 2007
PLANS APPROVAL DATE

REGISTERED PROFESSIONAL ENGINEER Jeffery G. McRae No. E14512 Exp. 6-30-08 ELECTRICAL STATE OF CALIFORNIA

The State of California or its officers or agents shall not be responsible for the accuracy or completeness of electronic copies of this plan sheet.

To accompany plans dated 2-25-13

LOOP INSTALLATION PROCEDURE

1. Loops shall be centered in lanes.
2. Saw slots in pavement for loop conductors as shown in details.
3. Distance between side of loop and a lead-in saw cut from adjacent detectors shall be 2'-0" minimum. Distance between lead-in saw cuts shall be 6" minimum.
4. Bottom of saw slot shall be smooth with no sharp edges.
5. Slots shall be washed until clean, blown out and thoroughly dried before installing loop conductors.
6. Adjacent loops on the same sensor unit channel shall be wound in opposite directions.
7. Identify and tag loop circuit pairs in the pull box with loop number, start (S) and finish (F) of conductor. Identify and tag lead-in-cable with sensor number and phase.
8. Install loop conductor in slot using a 3/16" to 1/4" thick wood paddle. Hold loop conductors with wood paddles (at the bottom of the sawed slot) during sealant placement.
9. No more than 2 twisted pairs shall be installed in one sawed slot.
10. Allow additional 5'-0" of slack length of conductor for the lead-in run to pull box.
11. The additional length of each conductor for each loop shall be twisted together into a pair (6 turns per 3'-4" minimum) before being placed in the slot and conduit leading to pull box.
12. Test each loop circuit for continuity, circuit resistance and insulation resistance at the pull box before filling slots.
13. Fill slots as shown in details.
14. Splice loop conductors to lead-in-cable. Splices shall be soldered.
15. End of lead-in-cable and Type 2 loop conductor shall be waterproofed prior to installing in conduit to prevent moisture from entering the cable.
16. Lead-in-cable shall not be spliced between the pull box and the controller cabinet terminals.
17. Test each loop circuit for continuity, circuit resistance and insulation resistance at the controller cabinet location.
18. Where loop conductors are not to be spliced to a lead-in-cable, the ends of the conductors shall be taped and waterproofed with electrical insulating coating.

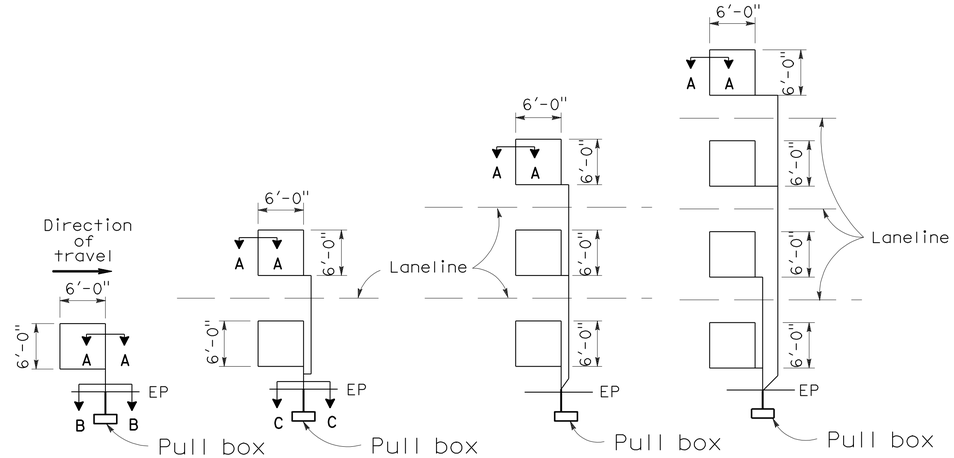

TYPE 1A INSTALLATION | TYPE 2A INSTALLATION | TYPE 3A INSTALLATION | TYPE 4A INSTALLATION

SAWCUT DETAILS

(Type A loop detector configurations illustrated)

1. 1A thru 4A = 1 Type A loop configuration in each lane.
2. 1B thru 4B = 1 Type B loop configuration in each lane.
3. 1C = 1 Type C loop configuration entering lanes as required.
4. 1D thru 4D = 1 Type D loop configuration in each lane.
5. 1E thru 4E = 1 Type E loop configuration in each lane.
6. 1Q thru 4Q = 1 Type Q loop configuration in each lane. (Use Type A, B, C, D, E or Q loop detector configurations only when specified or shown on plans)

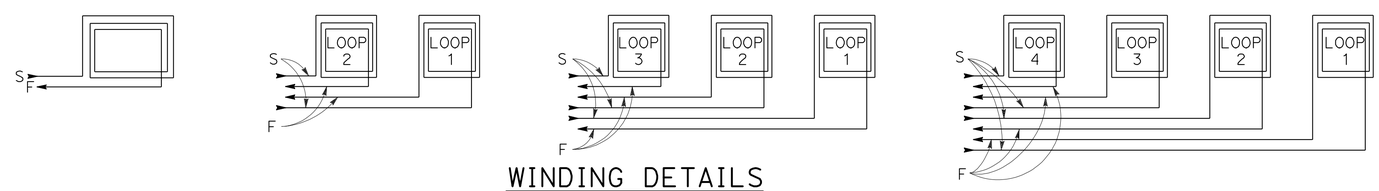

WINDING DETAILS

See Notes 6 and 7

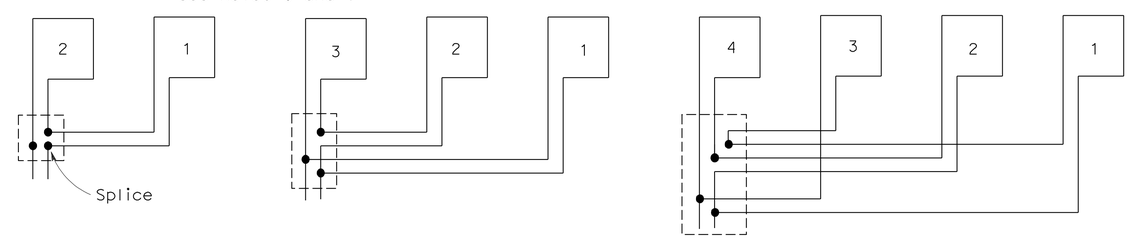

TYPICAL LOOP CONNECTIONS

(Dashed lines represent the pull box)

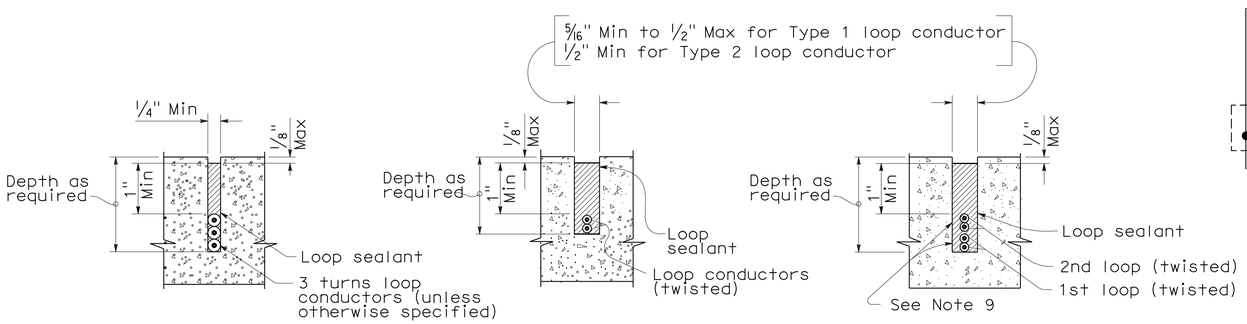

SECTION A-A | SECTION B-B | SECTION C-C

SLOT DETAILS - TYPE 1 AND TYPE 2 LOOP CONDUCTOR

STATE OF CALIFORNIA
DEPARTMENT OF TRANSPORTATION

ELECTRICAL SYSTEMS (DETECTORS)

NO SCALE

RSP ES-5A DATED OCTOBER 5, 2007 SUPERCEDES STANDARD PLAN ES-5A DATED MAY 1, 2006 - PAGE 423 OF THE STANDARD PLANS BOOK DATED MAY 2006.

REVISED STANDARD PLAN RSP ES-5A

2006 REVISED STANDARD PLAN RSP ES-5A

DIST	COUNTY	ROUTE	POST MILES TOTAL PROJECT	SHEET NO.	TOTAL SHEETS
08	SBd	15	177.3/181.1	250	710

REGISTERED CIVIL ENGINEER

January 18, 2008
PLANS APPROVAL DATE

REGISTERED PROFESSIONAL ENGINEER
Stanley P. Johnson
No. C57793
Exp. 03-31-08
CIVIL
STATE OF CALIFORNIA

The State of California or its officers or agents shall not be responsible for the accuracy or completeness of electronic copies of this plan sheet.

To accompany plans dated 2-25-13

LUMINAIRE ARM DATA

PROJECTED LENGTH	THICKNESS	MINIMUM OD @ POLE	MOUNTING HEIGHT
* 6'-0"	0.1196"	3¼"	36'-9"±
8'-0"		3½"	37'-3"±
10'-0"		3¾"	38'-0"±
12'-0"		3¾"	39'-0"±
15'-0"		4¼"	39'-6"±
** 20'-0"	0.1793"	5"	37'-0"±

* Type 30 - arm length 6'-0" - 15'-0" maximum
** Type 31 - arm lengths 20'-0"

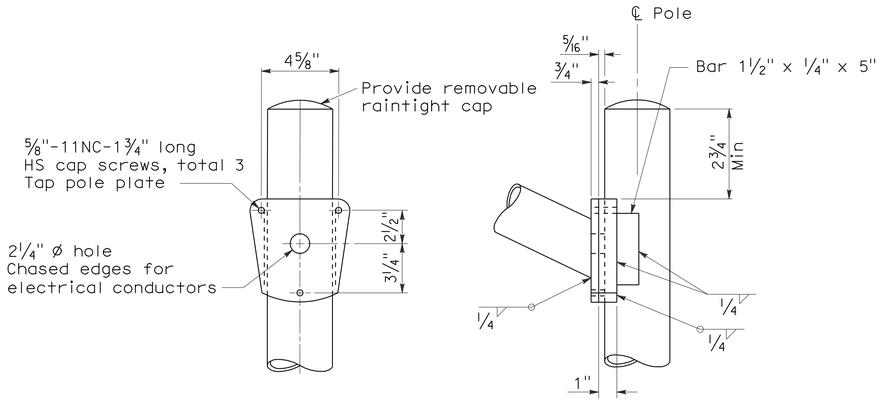

DETAIL A - TYPE 30

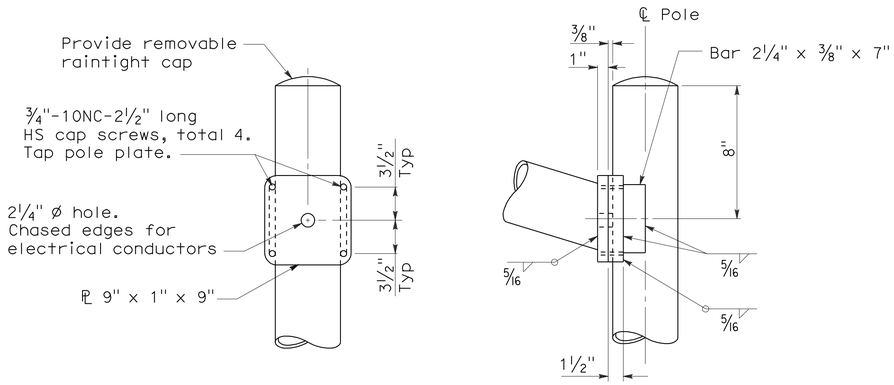

DETAIL A - TYPE 31

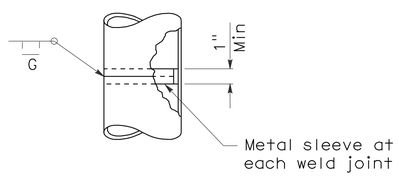

POLE SPLICE

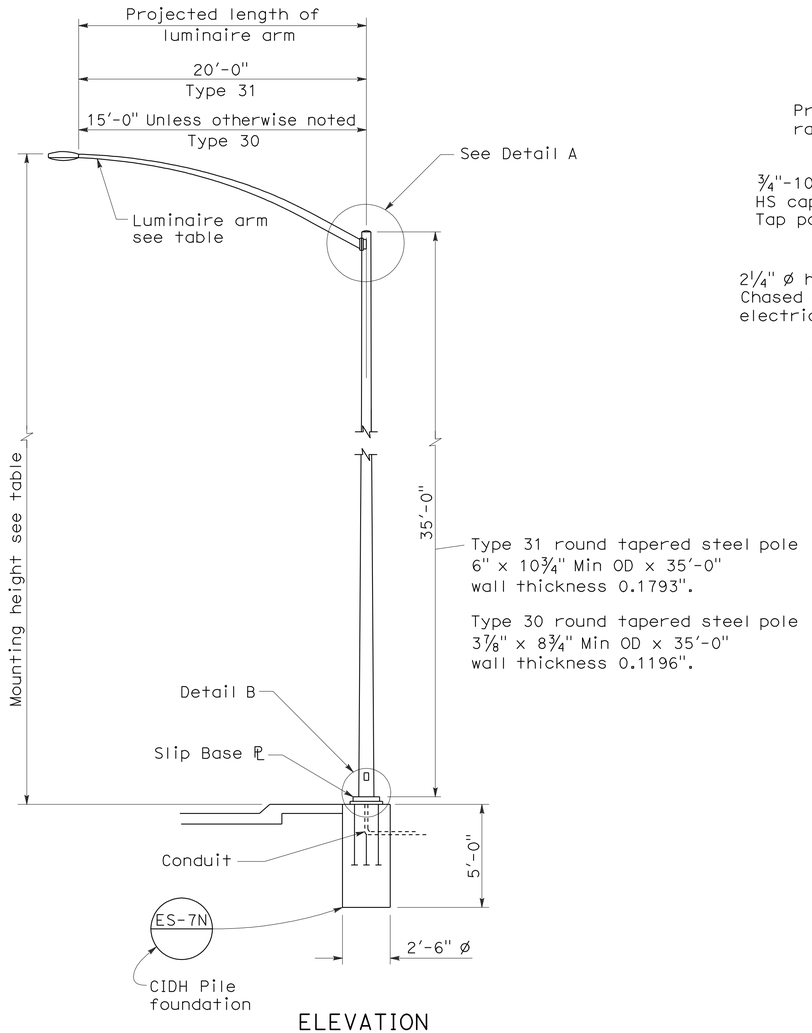

ELEVATION

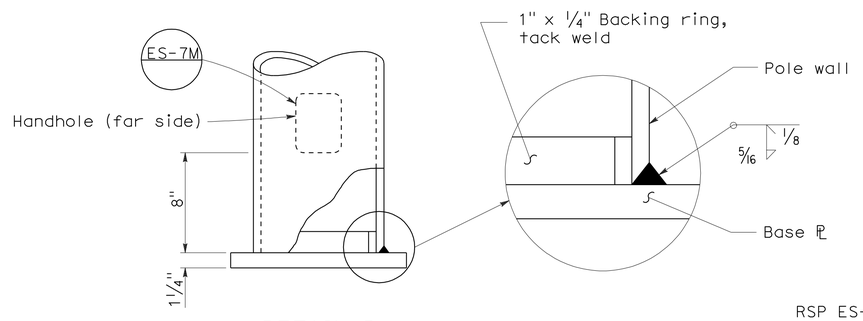

DETAIL B

NOTES:

1. Sheet steel shall have a minimum yield of 48,000 psi.
2. For slip base details see Standard Plan ES-6F.
3. For Type 30 fixed base use Type 15 base plate, and foundation shown on Revised Standard Plan RSP ES-6A. Use 1¼" Dia x 3'-6" x 4" anchor bolts.
4. For Type 31 fixed base use Type 32 base plate, anchor bolts and foundation on Standard Plan ES-6G.
5. Handhole shall be located on downstream side of traffic unless noted otherwise on plans.
6. For additional general notes refer to Standard Plan ES-7M.

STATE OF CALIFORNIA
DEPARTMENT OF TRANSPORTATION

ELECTRICAL SYSTEMS (LIGHTING STANDARD TYPES 30 AND 31)

NO SCALE

RSP ES-6E DATED JANUARY 18, 2008 SUPERCEDES STANDARD PLAN ES-6E DATED MAY 1, 2006 - PAGE 430 OF THE STANDARD PLANS BOOK DATED MAY 2006.

REVISED STANDARD PLAN RSP ES-6E

2006 REVISED STANDARD PLAN RSP ES-6E

11-19-07

DIST	COUNTY	ROUTE	POST MILES TOTAL PROJECT	SHEET NO.	TOTAL SHEETS
08	SBd	15	177.3/181.1	251	710

REGISTERED ELECTRICAL ENGINEER

January 20, 2012
PLANS APPROVAL DATE

REGISTERED PROFESSIONAL ENGINEER Jeffery G. McRae No. E14512 Exp. 6-30-12 ELECTRICAL STATE OF CALIFORNIA

The State of California or its officers or agents shall not be responsible for the accuracy or completeness of electronic copies of this plan sheet.

To accompany plans dated 2-25-13

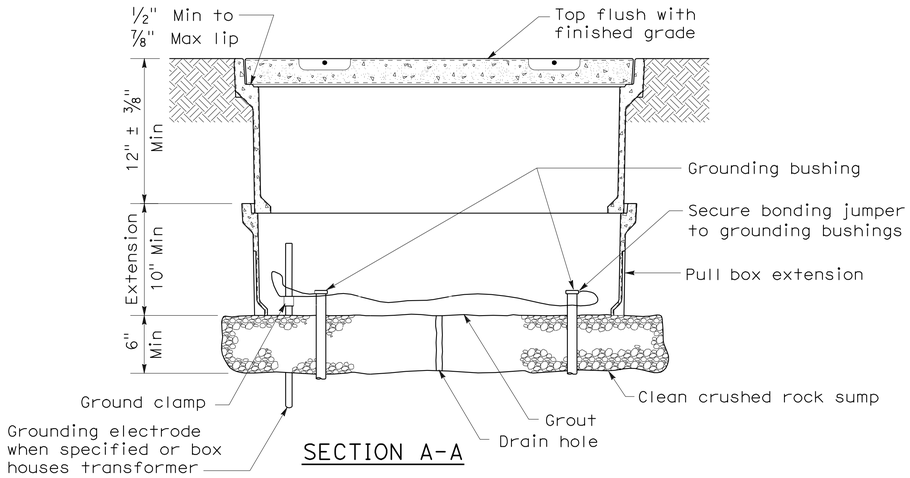

SECTION A-A

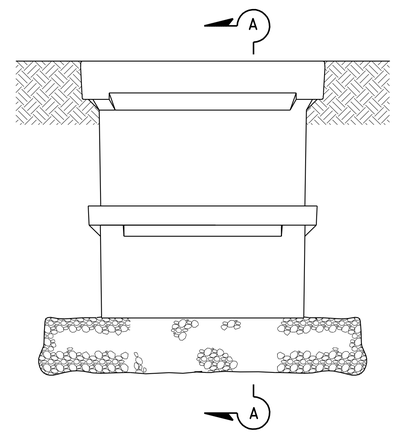

SIDE VIEW

INSTALLATION DETAILS

DETAIL A

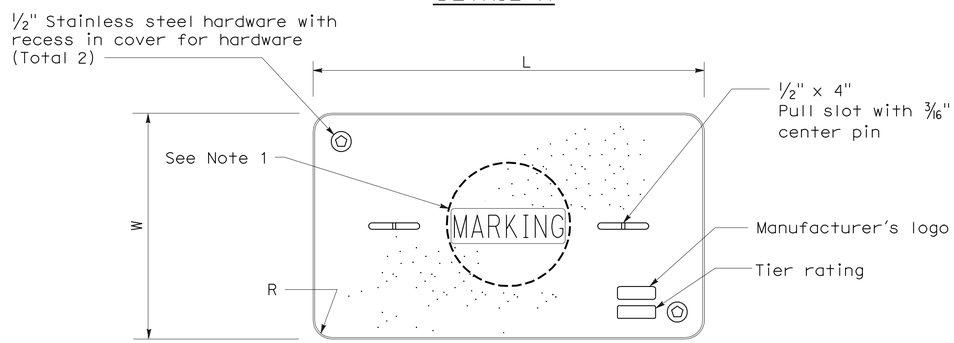

COVER TOP VIEW

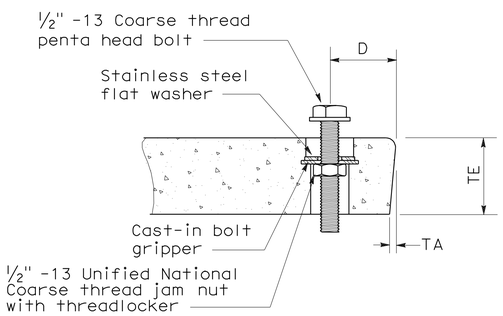

TYPICAL COVER CAPTIVE BOLT

(Or similar)

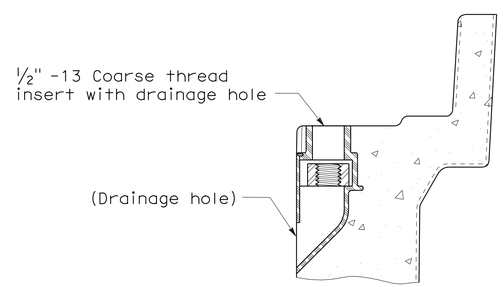

TYPICAL THREADED INSERT

(Or similar)

DIMENSION TABLE										
PULL BOX	PULL BOX			COVER						
	Minimum Depth Box	Minimum Depth Extension	Maximum Weight	L	W	R	TE	TA	D	Maximum Weight
No. 3 1/2	12"	N/A	40 lb	1' - 3 3/8"	10 1/8"	1 3/8"	2"	1/8"	1 3/4"	30 lb
No. 5	12"	10"	55 lb	1' - 11 1/4"	1' - 1 3/4"	1 3/8"	2"	1/8"	1 3/4"	60 lb
No. 6	12"	10"	70 lb	2' - 6 1/2"	1' - 5 1/2"	1 3/8"	2"	1/8"	2"	85 lb

NOTES ON PULL BOXES:

1. Pull box covers must be marked as follows: "SERVICE" Service circuits between service point and service disconnect; "SPRINKLER-CONTROL" sprinkler control circuits, 50 V or less; "CALTRANS" on all pull boxes, except pull boxes marked "SPRINKLER-CONTROL"; and "TELEPHONE" Telephone service;

   A) No. 3 1/2 pull box.
      1) "SIGNAL" - Traffic signal circuits with or without street or sign lighting circuits.
      2) "ST LIGHTING" - Street or sign lighting circuits where voltage is under 600 V.

   B) No. 5, 6, 9 or 9A pull box.
      1) "TRAFFIC SIGNAL" - Traffic signal circuits with or without street or sign lighting circuits.
      2) "STREET LIGHTING" - Street or sign lighting circuits where voltage is under 600 V.
      3) "STREET LIGHTING-HIGH VOLTAGE" - Street or sign lighting circuits where voltage is above 600 V.
      4) "IRRIGATION" - Circuits to irrigation controller 120 V or more.
      5) "RAMP METER" - Ramp meter circuits.
      6) "COUNT STATION" - Count or speed monitor circuits.
      7) "COMMUNICATIONS" - Communication circuits.
      8) "TOS COMMUNICATIONS" - TOS communication line.
      9) "TOS POWER" -TOS power.
      10) "TDC POWER" - Telephone demarcation cabinet power.
      11) "CCTV" - Closed circuit television circuits.
      12) "TMS" - Traffic monitoring station circuits.
      13) "CMS" - Changeable message sign circuits.
      14) "HAR" - Highway advisory radio circuits.

2. The nominal dimensions of the opening in which the cover sets must be the same as the cover dimensions (L and W) plus 1/8" or greater.

3. Covers and boxes must be interchangeable with California Standard. When interchanged with a standard, the top surfaces must be flush within 1/8". Top outside radius of covers and pull boxes must have a 1/8" radius.

4. Pull box extension may be another pull box as long as the bottom edge of the pull box can fit into the cover opening.

STATE OF CALIFORNIA
DEPARTMENT OF TRANSPORTATION

ELECTRICAL SYSTEMS (PULL BOX)

NO SCALE

NSP ES-8A DATED JANUARY 20, 2012 SUPPLEMENTS THE STANDARD PLANS BOOK DATED MAY 2006.

NEW STANDARD PLAN NSP ES-8A

2006 NEW STANDARD PLAN NSP ES-8A

9-28-11

DIST	COUNTY	ROUTE	POST MILES TOTAL PROJECT	SHEET NO.	TOTAL SHEETS
08	SBd	15	177.3/181.1	252	710

REGISTERED ELECTRICAL ENGINEER

January 20, 2012
PLANS APPROVAL DATE

REGISTERED PROFESSIONAL ENGINEER Jeffery G. McRae No. E14512 Exp. 6-30-12 ELECTRICAL STATE OF CALIFORNIA

The State of California or its officers or agents shall not be responsible for the accuracy or completeness of electronic copies of this plan sheet.

To accompany plans dated 2-25-13

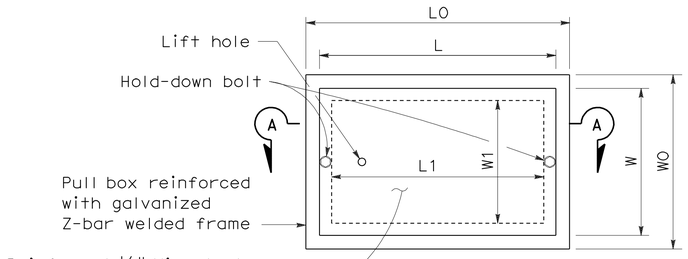

TOP VIEW

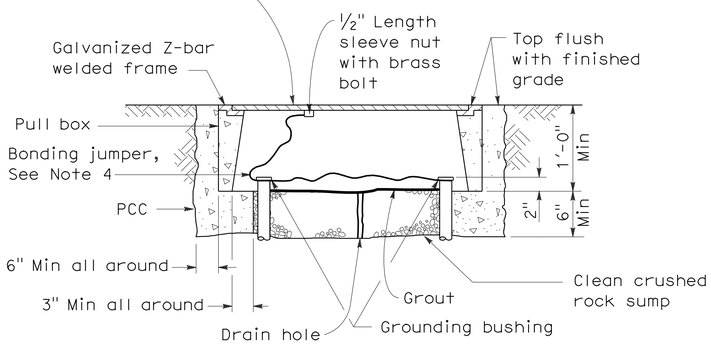

SECTION A-A

No. 3½(T), No. 5(T) AND No. 6(T) TRAFFIC PULL BOX

NOTES ON PULL BOXES:

1. Traffic pull box shall be provided with steel cover and special concrete footing. Steel cover shall have embossed non-skid pattern.
2. Steel reinforcing shall be as regularly used in the standard products of the respective manufacturer.
3. Pull box covers must be marked as follows: "SERVICE" Service circuits between service point and service disconnect; "SPRINKLER-CONTROL" Sprinkler control circuits, 50 V or less; "CALTRANS" On all pull boxes, except pull boxes marked "SPRINKLER-CONTROL"; and "TELEPHONE" Telephone service.
   A) No. 3½(T) pull box.
      1) "SIGNAL" - Traffic signal circuits with or without street or sign lighting circuits.
      2) "ST LIGHTING" - Street or sign lighting circuits where voltage is under 600 V.
   B) No. 5(T) or 6(T) pull box.
      1) "TRAFFIC SIGNAL" - Traffic signal circuits with or without street or sign lighting circuits.
      2) "STREET LIGHTING" - Street or sign lighting circuits where voltage is under 600 V.
      3) "STREET LIGHTING-HIGH VOLTAGE" - Street or sign lighting circuits where voltage is above 600 V.
      4) "IRRIGATION" - Circuits to irrigation controller 120 V or more.
      5) "RAMP METER" - Ramp meter circuits.
      6) "COUNT STATION" - Count or speed monitor circuits.
      7) "COMMUNICATION" - Communication circuits.
      8) "TOS COMMUNICATIONS" - TOS communications line.
      9) "TOS POWER" - TOS power.
      10) "TDC POWER" - Telephone demarcation cabinet power.
      11) "CCTV" - Closed circuit television circuits.
      12) "TMS" - Traffic monitoring station circuits.
      13) "CMS" - Changeable message sign circuits.
      14) "HAR" - Highway advisory radio circuits.
4. Bonding jumper for metal covers shall be 3' long, minimum.
5. The nominal dimensions of the opening in which the cover sets must be the same as the cover dimensions except the length and width dimensions shall be ⅛" greater.
6. Covers and boxes must be interchangeable with California standard male and female gages. When interchanged with a standard male or female gage, the top surfaces must be flush within ⅛".

DIMENSION TABLE

PULL BOX	BOX						COVER				
	Minimum * Thickness	Minimum Depth Box and Extension	WO	LO	L1	W1	L **	W **	R	Edge Thickness	Edge Taper
No. 3½(T)	1½"	1'-0"	1'-5"± 1"	1'-8⅞"±	1'-2½"±	10⅝"± 1"	1'-8"±	1'-1¾"±	0"	½"	None
No. 5(T)	1¾"	1'-0"	1'-11½"± 1"	2'-5½"±	1'-7"±	1'-1"± 1"	2'-3"±	1'-4"±	0"	½"	None
No. 6(T)	2"	1'-0"	2'-6"± 1"	2'-11½"±	1'-11½"±	1'-5"± 1"	2'-9"±	1'-8"±	0"	½"	None

* Excluding conduit web ** Top dimension

STATE OF CALIFORNIA
DEPARTMENT OF TRANSPORTATION

ELECTRICAL SYSTEMS (TRAFFIC RATED PULL BOX)

NO SCALE

NSP ES-8B DATED JANUARY 20, 2012 SUPPLEMENTS THE STANDARD PLANS BOOK DATED MAY 2006.

NEW STANDARD PLAN NSP ES-8B

2006 NEW STANDARD PLAN NSP ES-8B

9-28-11

DIST	COUNTY	ROUTE	POST MILES TOTAL PROJECT	SHEET NO.	TOTAL SHEETS
08	SBd	15	177.3/181.1	253	710

REGISTERED ELECTRICAL ENGINEER

July 20, 2012
PLANS APPROVAL DATE

REGISTERED PROFESSIONAL ENGINEER
Jeffery G. McRae
No. E14512
Exp. 6-30-14
ELECTRICAL
STATE OF CALIFORNIA

The State of California or its officers or agents shall not be responsible for the accuracy or completeness of electronic copies of this plan sheet.

To accompany plans dated 2-25-13

ISOFOOTCANDLE CURVE - MINIMUM

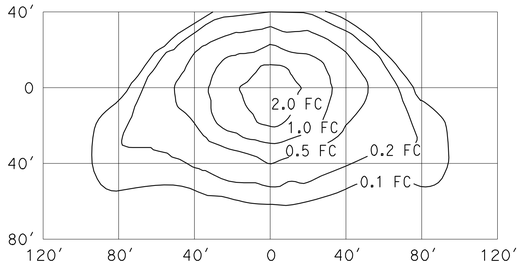

TYPE III MEDIUM CUTOFF

Cutoff Luminaire
34′ Mounting Height
Lamp operated at 22,000 lm
200-W high pressure sodium lamp
ANSI Designation S66

ISOFOOTCANDLE CURVE - MINIMUM

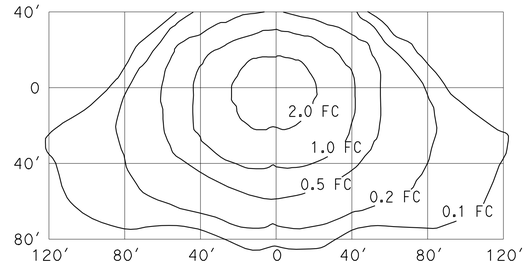

TYPE III MEDIUM CUTOFF

Cutoff Luminaire
40′ Mounting Height
Lamp operated at 37,000 lm
310-W high pressure sodium lamp
ANSI Designation S67

ISOFOOTCANDLE CURVE - MINIMUM

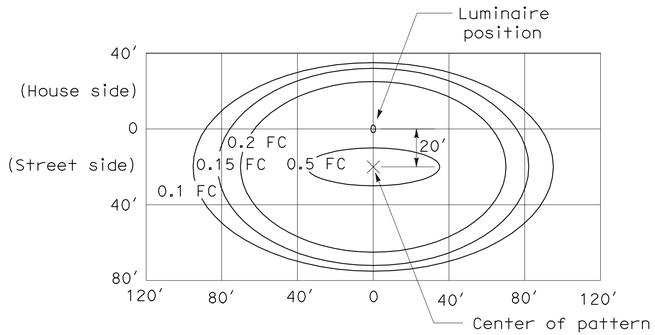

LED LUMINAIRE ROADWAY 1

200-W HPS Equivalent at 34′ Mounting Height

ISOFOOTCANDLE CURVE - MINIMUM

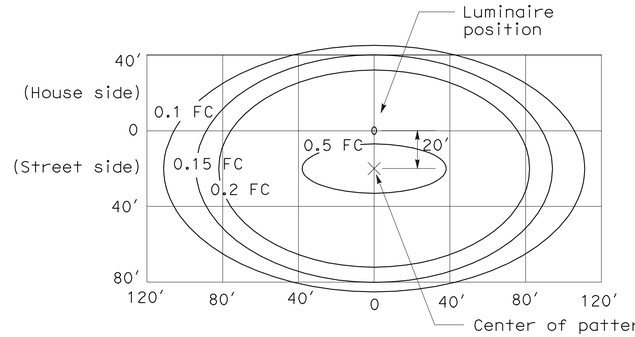

LED LUMINAIRE ROADWAY 2

310-W HPS Equivalent at 40′ Mounting Height

ISOFOOTCANDLE CURVE - MINIMUM

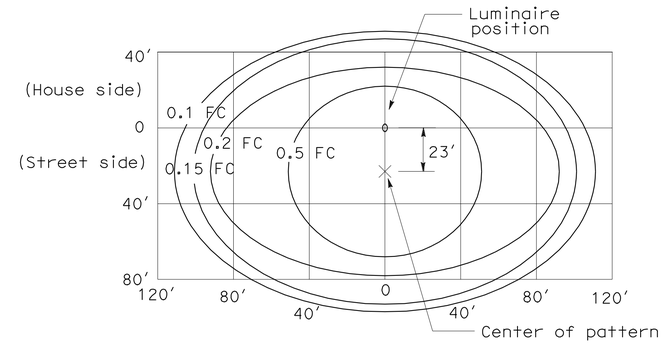

LED LUMINAIRE ROADWAY 4

400-W HPS Equivalent at 40′ Mounting Height

ISOFOOTCANDLE CURVE - MINIMUM

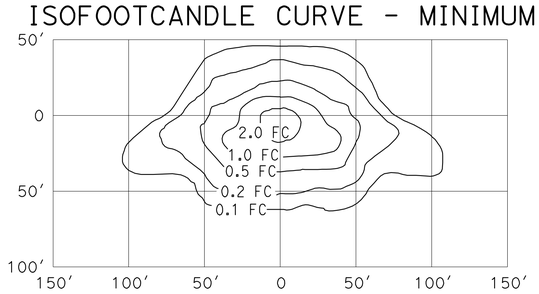

TYPE III MEDIUM CUTOFF

Cutoff Luminaire
30′ Mounting Height
Lamp operated at 16,000 lm
150-W high pressure sodium lamp
ANSI Designation S55

ISOFOOTCANDLE CURVE - MINIMUM

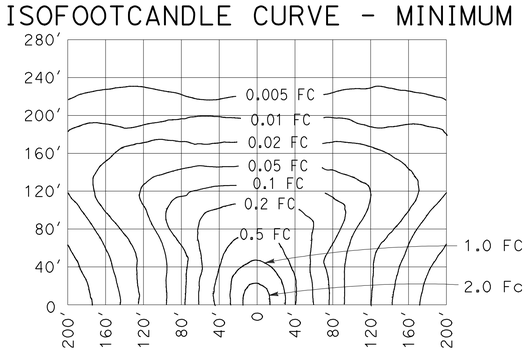

LOW PRESSURE SODIUM LUMINAIRE

40′ Mounting Height
Lamp operated at 33,000 lm
180-W low pressure sodium lamp

STATE OF CALIFORNIA
DEPARTMENT OF TRANSPORTATION

ELECTRICAL SYSTEMS (ISOFOOTCANDLE DIAGRAMS)

NO SCALE

NSP ES-10A DATED JULY 20, 2012 SUPPLEMENTS THE STANDARD PLANS BOOK DATED MAY 2006.

NEW STANDARD PLAN NSP ES-10A

2006 NEW STANDARD PLAN NSP ES-10A

2-16-12

DIST	COUNTY	ROUTE	POST MILES TOTAL PROJECT	SHEET NO.	TOTAL SHEETS
08	SBd	15	177.3/181.1	254	710

REGISTERED ELECTRICAL ENGINEER

July 20, 2012
PLANS APPROVAL DATE

REGISTERED PROFESSIONAL ENGINEER
Jeffery G. McRae
No. E14512
Exp. 6-30-14
ELECTRICAL
STATE OF CALIFORNIA

The State of California or its officers or agents shall not be responsible for the accuracy or completeness of electronic copies of this plan sheet.

To accompany plans dated 2-25-13

ISOFOOTCANDLE CURVE - MINIMUM

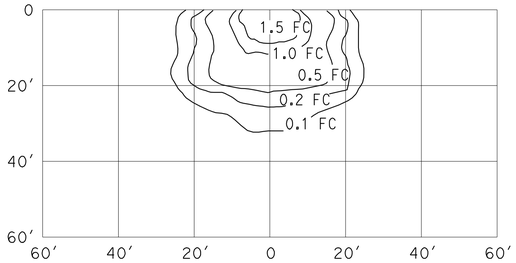

WALL LUMINAIRE
15′ Mounting Height
Lamp operated at 5,800 lm
70-W high pressure sodium lamp
ANSI Designation S62

ISOFOOTCANDLE CURVE - MINIMUM

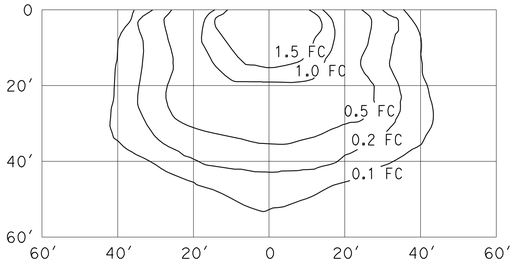

WALL LUMINAIRE
15′ Mounting Height
Lamp operated at 9,500 lm
100-W high pressure sodium lamp
ANSI Designation S54

ISOFOOTCANDLE CURVE - MINIMUM

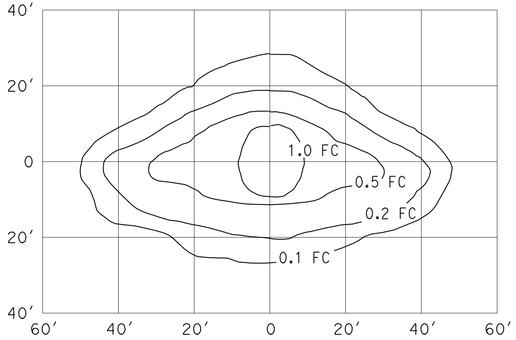

PENDANT SOFFIT LUMINAIRE
TYPE III SHORT
17′ Mounting Height
Lamp operated at 5,800 lm
70-W high pressure sodium lamp
ANSI Designation S62

ISOFOOTCANDLE CURVE - MINIMUM

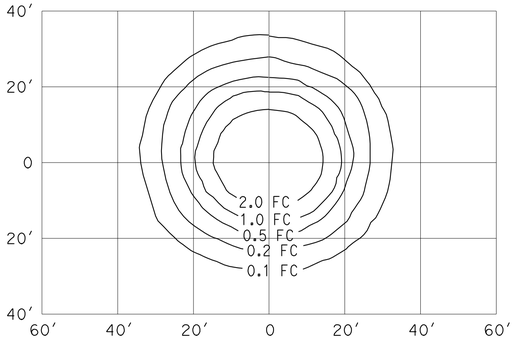

PENDANT SOFFIT LUMINAIRE
17′ Mounting Height
Lamp operated at 5,800 lm
70-W high pressure sodium lamp
ANSI Designation S62

ISOFOOTCANDLE CURVE - MINIMUM

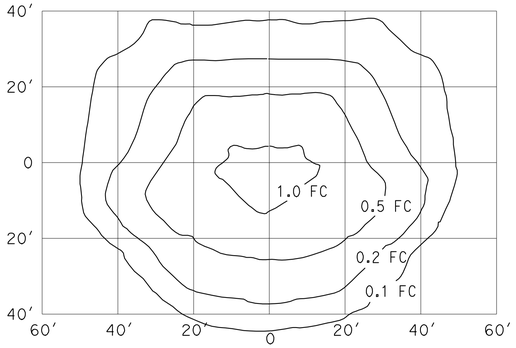

FLUSH SOFFIT LUMINAIRE
17′ Mounting Height
Lamp operated at 5,800 lm
70-W high pressure sodium lamp
ANSI Designation S62

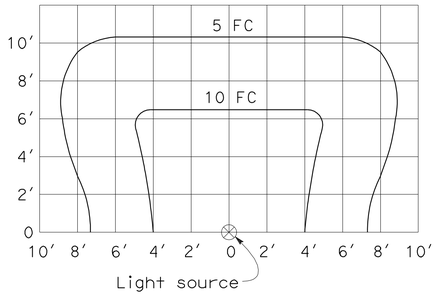

SIGN LIGHTING FIXTURE
ISOFOOTCANDLE DIAGRAM

NOTES:

1. Curves represent the minimum footcandle (FC) of initial illumination on a 10′-0" x 20′-0" panel.
2. The FC shown are with the fixture attached to the light fixture mounting channel which places the center of the source 4′-8" in front of panel and 1′-0" below the bottom edge.
3. Applicable lamp: 85-W fluorescent phosphor coated induction lamp.

STATE OF CALIFORNIA
DEPARTMENT OF TRANSPORTATION

ELECTRICAL SYSTEMS (ISOFOOTCANDLE DIAGRAMS)

NO SCALE

NSP ES-10B DATED JULY 20, 2012 SUPPLEMENTS THE STANDARD PLANS BOOK DATED MAY 2006.

NEW STANDARD PLAN NSP ES-10B

2006 NEW STANDARD PLAN NSP ES-10B

DIST	COUNTY	ROUTE	POST MILES TOTAL PROJECT	SHEET NO.	TOTAL SHEETS
08	SBd	15	177.3/181.1	255	710

REGISTERED ELECTRICAL ENGINEER

October 5, 2007
PLANS APPROVAL DATE

REGISTERED PROFESSIONAL ENGINEER Jeffery G. McRae No. E14512 Exp. 6-30-08 ELECTRICAL STATE OF CALIFORNIA

The State of California or its officers or agents shall not be responsible for the accuracy or completeness of electronic copies of this plan sheet.

To accompany plans dated 2-25-13

2006 REVISED STANDARD PLAN RSP ES-15D

NOTES: (FOR LIGHTING AND SIGN ILLUMINATION CONTROL)

1. The ballast voltages of lighting fixtures and luminaires shall match line service voltages.
2. Voltage rating of photoelectric controls shall conform to the service voltage indicated on the plans.
3. Terminal strip shall be provided for wiring to fixtures.
4. Type SC1A, SC2A, SC3A controls are similar to Types SC1, SC2 and SC3 controls respectively except test switch and wiring are not required.

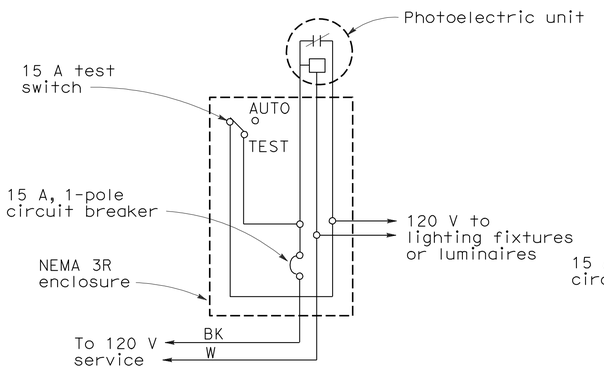

TYPE LC1 CONTROL

For 120 V unswitched circuit with no more than 800 W load.

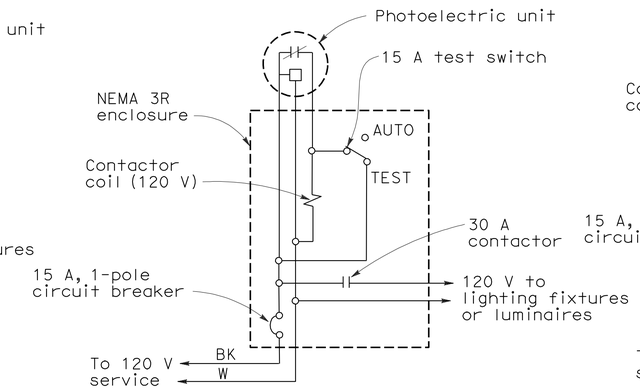

TYPE LC2 CONTROL

For 120 V unswitched circuit

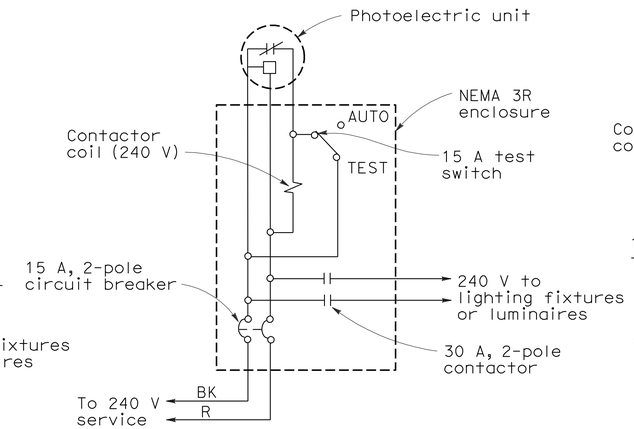

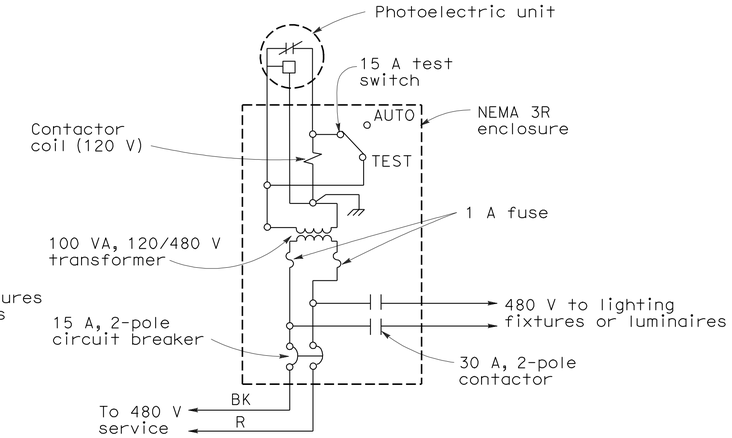

TYPE LC3 CONTROL

For 240 V and 480 V unswitched circuits

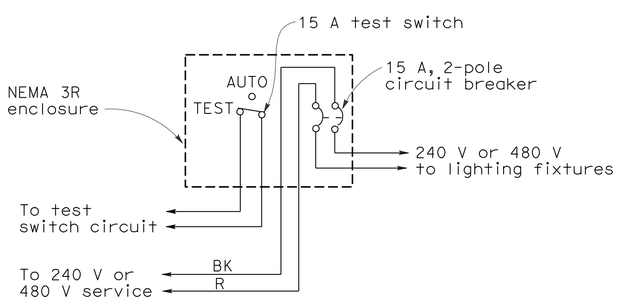

TYPE SC1 CONTROL

For 240 V or 480 V switched circuit, see Note 4 for Type SC1A

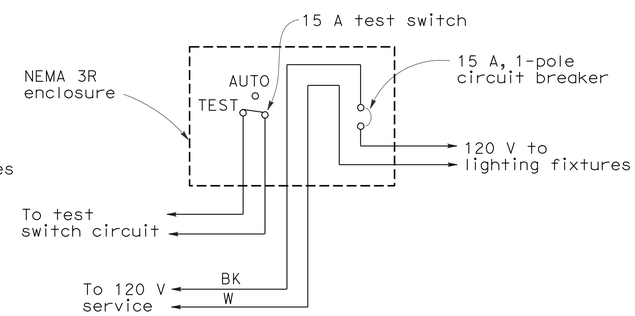

TYPE SC2 CONTROL

For 120 V switched circuit, see Note 4 for Type SC2A

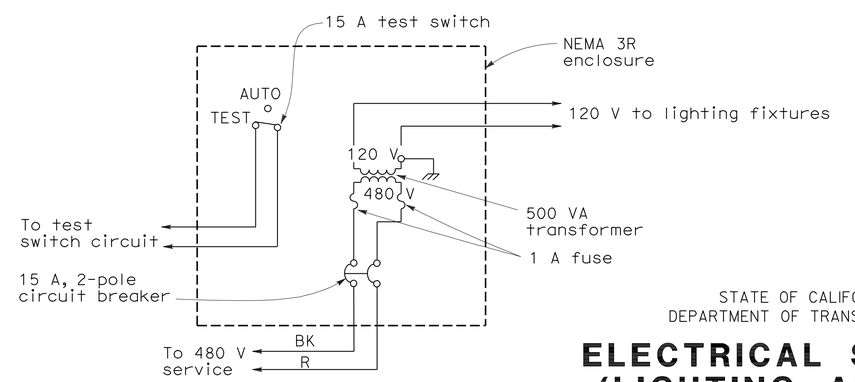

TYPE SC3 CONTROL

For 480 V switched sign circuit, see Note 4 for Type SC3A

STATE OF CALIFORNIA
DEPARTMENT OF TRANSPORTATION

ELECTRICAL SYSTEMS (LIGHTING AND SIGN ILLUMINATION CONTROL)

NO SCALE

RSP ES-15D DATED OCTOBER 5, 2007 SUPERCEDES STANDARD PLAN ES-15D DATED MAY 1, 2006 - PAGE 472 OF THE STANDARD PLANS BOOK DATED MAY 2006.

REVISED STANDARD PLAN RSP ES-15D

9-10-07

DIST	COUNTY	ROUTE	POST MILES TOTAL PROJECT	SHEET No	TOTAL SHEETS
08	SBd	15	177.3/181.1	256	710

REGISTERED CIVIL ENGINEER — DATE 1-15-13

2-25-13
PLANS APPROVAL DATE

REGISTERED PROFESSIONAL ENGINEER — LARRY WU — No. C057035 — Exp. 6-30-13 — CIVIL — STATE OF CALIFORNIA

The State of California or its officers or agents shall not be responsible for the accuracy or completeness of electronic copies of this plan sheet.

INDEX TO PLANS

Sheet No.	Title
1.	GENERAL PLAN
2.	DECK CONTOURS
3.	FOUNDATION PLAN
4.	ABUTMENT 1 DETAILS
5.	ABUTMENT 5 DETAILS
6.	BENT DETAILS
7.	TYPICAL SECTION
8.	SLAB REINFORCEMENT
9.	SLAB REINFORCEMENT DETAILS
10.	STRUCTURE APPROACH TYPE N(30D)
11.	STRUCTURE APPROACH DRAINAGE DETAILS
12.	LOG OF TEST BORINGS (1 of 2)
13.	LOG OF TEST BORINGS (2 of 2)

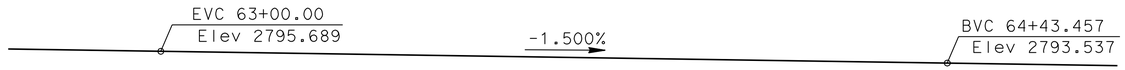

PROFILE GRADE

No Scale

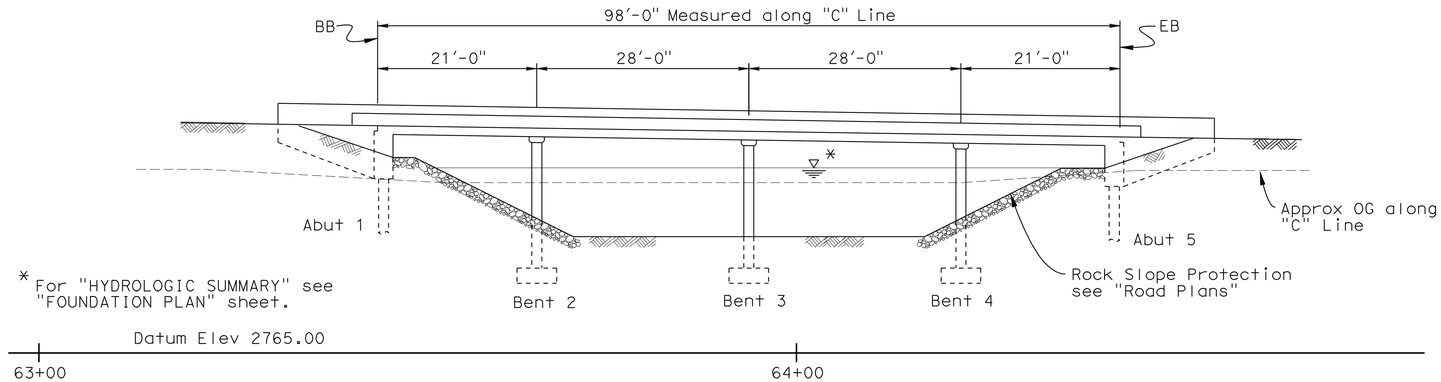

ELEVATION

1"=10'-0"

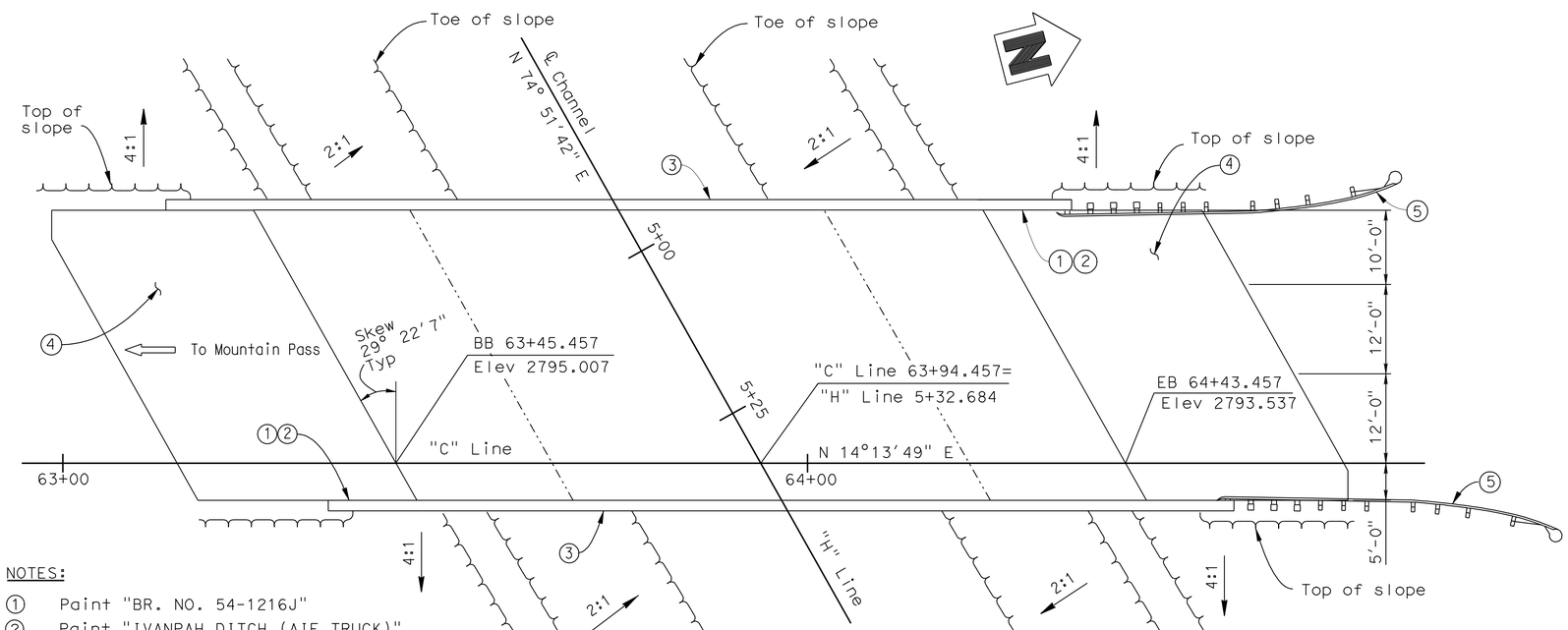

PLAN

1"=10'-0"

NOTES:

1. Paint "BR. NO. 54-1216J"
2. Paint "IVANPAH DITCH (AIF TRUCK)"
3. Concrete Barrier Type 732
4. Approach Slab Type N(30D)
5. MBGR, see "Road Plans"
6. Electrical Conduits, see "Road Plans"

For General Notes, See "Deck Contours" sheet

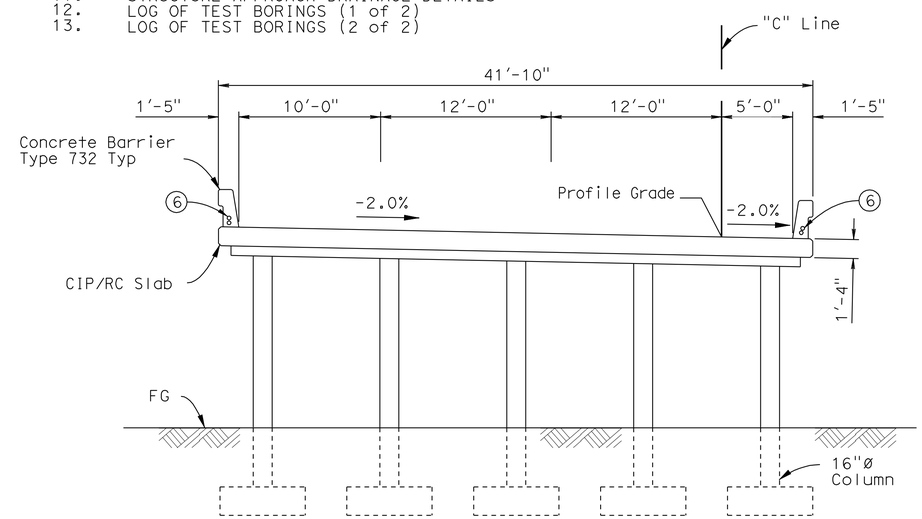

TYPICAL SECTION

3/16"=1'-0"

STANDARD PLANS DATED MAY 2006

A10A	ACRONYMS AND ABBREVIATIONS (A-L)
A10B	ACRONYMS AND ABBREVIATIONS (M-Z)
A62C	LIMITS OF PAYMENT FOR EXCAVTION AND BACKFILL - BRIDGE
B0-1	BRIDGE DETAILS
B2-3	16" AND 24" CAST-IN-DRILLED-HOLE CONCRETE PILE
RSP B6-21	JOINT SEALS (MAXIMUM MOVEMENT RATING = 2")
B11-55	CONCRETE BARRIER TYPE 732

STANDARD PLAN SHEET NO.

DETAIL NO.

QUANTITIES

STRUCTURE EXCAVATION (BRIDGE)	369	CY
STRUCTURE BACKFILL (BRIDGE)	245	CY
16" CAST-IN-DRILLED-HOLE CONCRETE PILING	297	LF
STRUCTURAL CONCRETE, BRIDGE FOOTING	40	CY
STRUCTURAL CONCRETE, BRIDGE	284	CY
STRUCTURAL CONCRETE, APPROACH SLAB (TYPE N)	118	CY
JOINT SEAL (MR1/2")	96	LF
BAR REINFORCING STEEL (BRIDGE)	73,500	LB
CONCRETE BARRIER (TYPE 732)	249	LF

DANIEL T. ADAMS
DESIGN ENGINEER

	BY	CHECKED		
DESIGN	L.Wu	D. Azzam	LOAD & RESISTANCE FACTOR DESIGN	LIVE LOADING: HL93 W/"LOW-BOY"; PERMIT DESIGN VEHICLE
DETAILS	D.Wooten	D. Azzam	LAYOUT: L.Wu	CHECKED: D. Azzam
QUANTITIES	D. Azzam	F. Chen	SPECIFICATIONS: J.Strootman	PLANS AND SPECS COMPARED: L.Wu

STATE OF CALIFORNIA
DEPARTMENT OF TRANSPORTATION

DIVISION OF ENGINEERING SERVICES
STRUCTURE DESIGN
DESIGN BRANCH 10

CU 08
EA 368501

BRIDGE NO. 54-1216J
POST MILE 179.39

IVANPAH DITCH (AIF TRUCK)
GENERAL PLAN

STRUCTURES DESIGN GENERAL PLAN SHEET (ENGLISH) (REV. 10/25/05)

ORIGINAL SCALE IN INCHES FOR REDUCED PLANS 0 1 2 3

DISREGARD PRINTS BEARING EARLIER REVISION DATES

REVISION DATES: 6-06-07, 11-21-07, 3-26-08, 12-23-08, 1-15-13

SHEET 1 OF 13

FILE => 541216jagp01.dgn

STRUCTURES DESIGN GENERAL PLAN SHEET (ENGLISH) (REV.07-24-06)

USERNAME => s135318 DATE PLOTTED => 26-FEB-2013 TIME PLOTTED => 09:01

DIST	COUNTY	ROUTE	POST MILES TOTAL PROJECT	SHEET No	TOTAL SHEETS
08	SBd	15	177.3/181.1	257	710

REGISTERED CIVIL ENGINEER 1-15-13 DATE

2-25-13
PLANS APPROVAL DATE

REGISTERED PROFESSIONAL ENGINEER LARRY WU No. C057035 Exp. 6-30-13 CIVIL STATE OF CALIFORNIA

The State of California or its officers or agents shall not be responsible for the accuracy or completeness of electronic copies of this plan sheet.

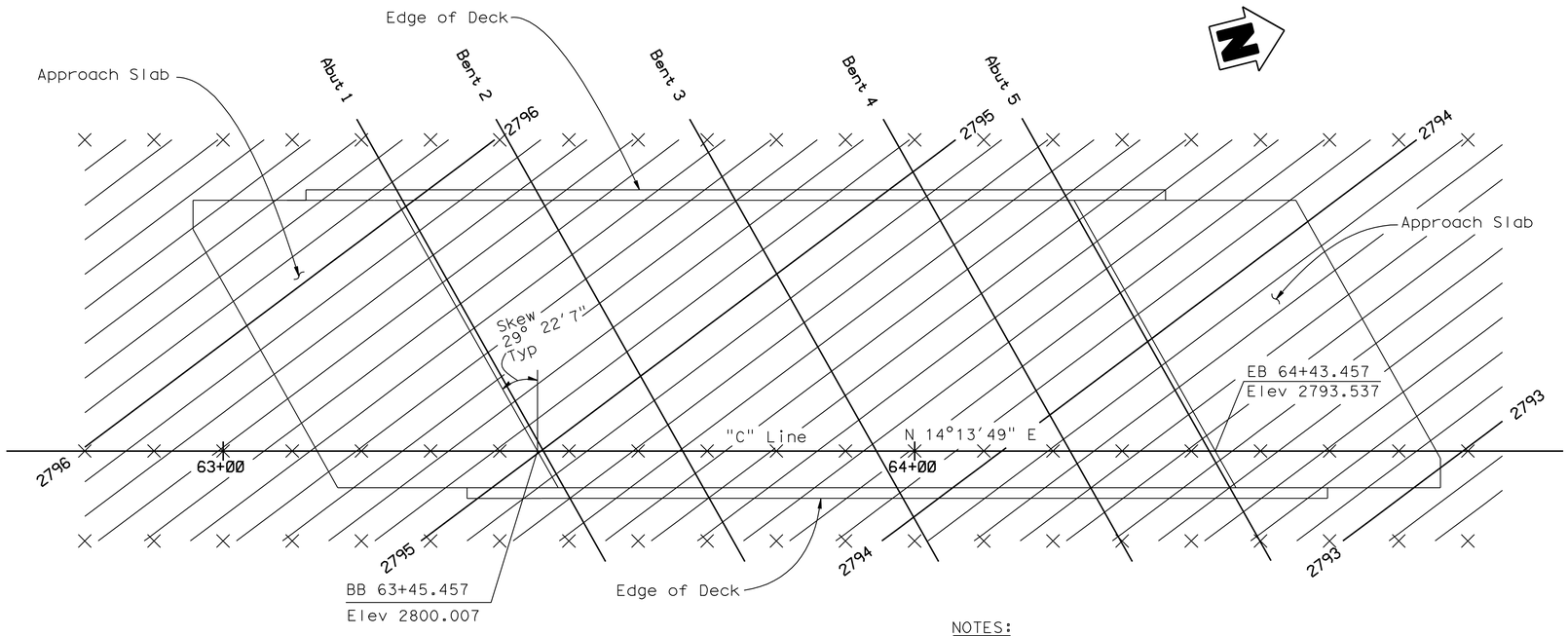

PLAN

3/32"=1'-0"

NOTES:

1. X - 10' intervals along station line.
2. Contour interval = 0.1'.
3. Contours do not include camber.

GENERAL NOTES
LOAD AND RESISTANCE FACTOR DESIGN

DESIGN: AASHTO LRFD BRIDGE DESIGN SPECIFICATIONS, 3rd Edition with 2006 Interims and CALTRANS Amendments, V3.06.01.

SEISMIC DESIGN: Caltrans Seismic Design Criteria (SDC) Version 1.4, July, 2006

DEAD LOAD: Includes 35 Psf for future wearing surface.

LIVE LOADING: HL93 and alternative and permit design load.

SEISMIC LOADING: CALTRANS SDC ARS Curve : Figure B.5 (Soil Profile Type C) Spectrum Peak Rock Acceleration = 0.4 g, 20% increase due to fault proximity.

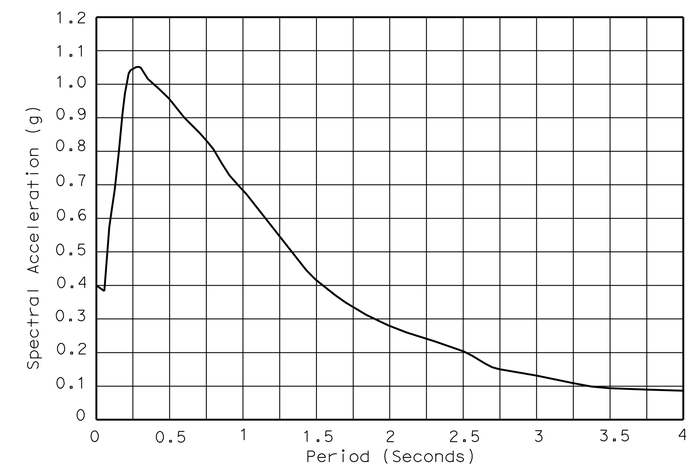

Modified CALTRANS SDC ARS Curve:
Type C Soil Profile, Magnitude Mw=7.0, 5% Damping

REINFORCED CONCRETE:
f_y = 60 ksi
f'_c = 3600 psi
n = 8

PILE DATA TABLE (B2-3)

LOCATION	PILE TYPE	DESIGN LOADING	NOMINAL RESISTANCE		DESIGN TIP	SPECIFIED TIP
			COMPRESSION	TENSION	ELEVATION (ft)	ELEVATION (ft)
Abut 1	16" CIDH	90 kips	180 kips	0 kips	2763.0 (1)(2)	2763.0
Abut 5	16" CIDH	90 kips	180 kips	0 kips	2763.0 (1)(2)	2763.0

NOTE: Design Tip Elevation is controlled by the following demands:
(1) Compression; (2) Scour to elevation 2777.03 ft @

SPREAD FOOTING DATA TABLE

Support Location	Load and Resistance Factor Design (LRFD)		
	Service Net Permissible Contact Stress (Settlement) (ksf)	**Strength** Factored Gross Nominal Bearing Resistance ϕ_b=0.45 (ksf)	**Extreme Event** Factored Gross Nominal Bearing Resistance ϕ_b=1.00 (ksf)
Bent 2	N/A*	6.5	14.4
Bent 3	N/A*	6.5	14.4
Bent 4	N/A*	6.5	14.4

Note: N/A* due to bottom of footing on very dense alluvium

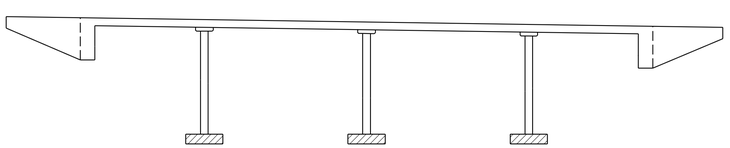

Structural Concrete, Bridge.

Structural Concrete, Bridge Footing

CONCRETE STRENGTH AND TYPE LIMITS

No Scale

	BY	CHECKED
DESIGN	L. Wu	D. Azzam
DETAILS	Y. Tang	D. Azzam
QUANTITIES	D. Azzam	F. Chen

STATE OF CALIFORNIA
DEPARTMENT OF TRANSPORTATION

DIVISION OF ENGINEERING SERVICES
STRUCTURE DESIGN
DESIGN BRANCH 10

BRIDGE NO. 54-1216J
POST MILE 179.39

IVANPAH DITCH (AIF TRUCK)
DECK CONTOURS

STRUCTURES DESIGN DETAIL SHEET (ENGLISH) (REV. 10/25/05)

ORIGINAL SCALE IN INCHES FOR REDUCED PLANS 0 1 2 3

CU 08
EA 368501

DISREGARD PRINTS BEARING EARLIER REVISION DATES → 10-28-07 11-24-07 4-14-08 1-15-13

REVISION DATES

SHEET 2 OF 13

FILE => 541216jddc02.dgn

USERNAME => s135318 DATE PLOTTED => 26-FEB-2013 TIME PLOTTED => 09:01

DIST	COUNTY	ROUTE	POST MILES TOTAL PROJECT	SHEET No	TOTAL SHEETS
08	SBd	15	177.3/181.1	258	710

REGISTERED CIVIL ENGINEER — DATE 1-15-13

2-25-13
PLANS APPROVAL DATE

REGISTERED PROFESSIONAL ENGINEER — LRRAY WU — No. C057035 — Exp. 6-30-13 — CIVIL — STATE OF CALIFORNIA

The State of California or its officers or agents shall not be responsible for the accuracy or completeness of electronic copies of this plan sheet.

HYDROLOGIC SUMMARY

DRAINAGE AREA: _____ SQUARE MILES

	DESIGN FLOOD	BASE FLOOD	OVERTOPPING FLOOD
FREQUENCY (YEARS)	50	100	
DISCHARGE (CUBIC FEET PER SECOND)	4478	5477	
WATER SURFACE ELEV. AT BRIDGE	2785.23	2785.69	

FLOOD PLAIN DATA ARE BASED UPON INFORMATION AVAILABLE WHEN THE PLANS WERE PREPARED AND ARE SHOWN TO MEET FEDERAL REQUIREMENTS. THE ACCURACY OF SAID INFORMATION IS NOT WARRANTED BY THE STATE AND INTERESTED OR AFFECTED PARTIES SHOULD MAKE THEIR OWN INVESTIGATIONS.

SURVEY CONTROL

PHHV 66 (Not Shown)
Fnd C-Nail Set in Target
81.324 Rt. ℄ Rte 15
Sta. 9472+08.887
N 2 384 018.123
E 7 326 468.174
Elev. = 2754.624

PRHV 1794 (Not Shown)
Fnd 1" IP @ SE Abut
92.153' Rt. ℄ Rte 15
Sta.9460+41.637
N 2 382 903.533
E 7 326 121.361
Elev. = 2778.466

NOTE:
Indicates bottom of footing elevation

PRELIMINARY INVESTIGATION SECTION

SCALE	VERT.DATUM NGVD 29	PHOTOGRAMMETRY AS OF:			
1":20'	HORZ.DATUM NAD 83	SURVEYED	BY H. Reader 02/02	CHECKED	BY L. Manabo 02/02
ALIGNMENT TIES DIST. TRAV. SHEETS		DRAFTED	BY M. Sadaghiani 10/07	CHECKED	BY L. Manabo 10/07

DESIGN	BY L. Wu	CHECKED	D. Azzam
DETAILS	BY Y. Tang	CHECKED	D. Azzam
QUANTITIES	BY D. Azzam	CHECKED	F. Chen

STATE OF CALIFORNIA
DEPARTMENT OF TRANSPORTATION

DIVISION OF ENGINEERING SERVICES
STRUCTURE DESIGN
DESIGN BRANCH

BRIDGE NO. 54-1216J
POST MILE 179.39

IVANPAH DITCH (AIF TRUCK)
FOUNDATION PLAN

STRUCTURES FOUNDATION PLAN SHEET (ENGLISH) (REV. 10/25/05)

ORIGINAL SCALE IN INCHES FOR REDUCED PLANS 0 1 2 3

CU 08
EA 368501

DISREGARD PRINTS BEARING EARLIER REVISION DATES — REVISION DATES 10/24/07 10/30/07 4-1-08

SHEET 3 OF 13

FILE => 541216jefdp103.dgn

USERNAME => s135318 DATE PLOTTED => 26-FEB-2013 TIME PLOTTED => 09:01

DIST	COUNTY	ROUTE	POST MILES TOTAL PROJECT	SHEET No	TOTAL SHEETS
08	SBd	15	177.3/181.1	259	710

REGISTERED CIVIL ENGINEER — DATE 1-15-13

2-25-13
PLANS APPROVAL DATE

REGISTERED PROFESSIONAL ENGINEER — LARRY WU — No. C057035 — Exp. 6-30-13 — CIVIL — STATE OF CALIFORNIA

The State of California or its officers or agents shall not be responsible for the accuracy or completeness of electronic copies of this plan sheet.

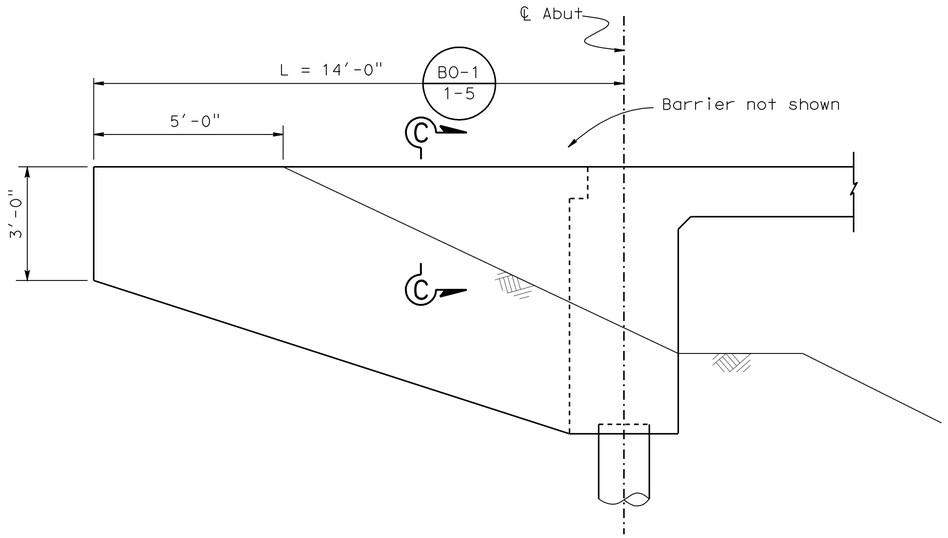

WINGWALL ELEVATION

½" = 1'-0"

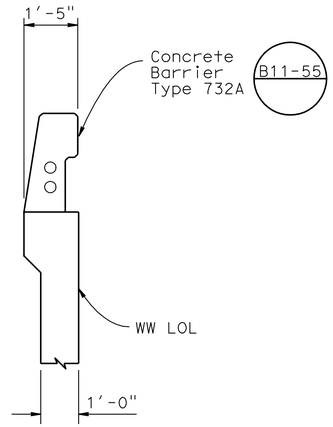

SECTION C-C

½" = 1'-0"

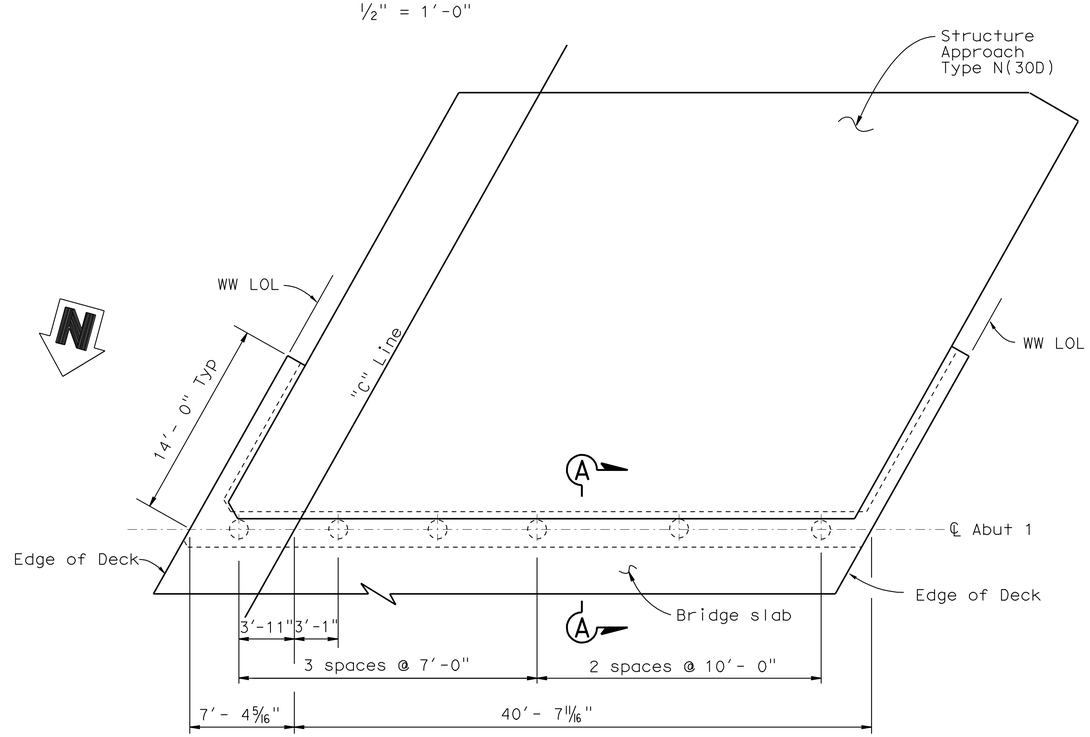

PLAN

3/16"=1'-0"

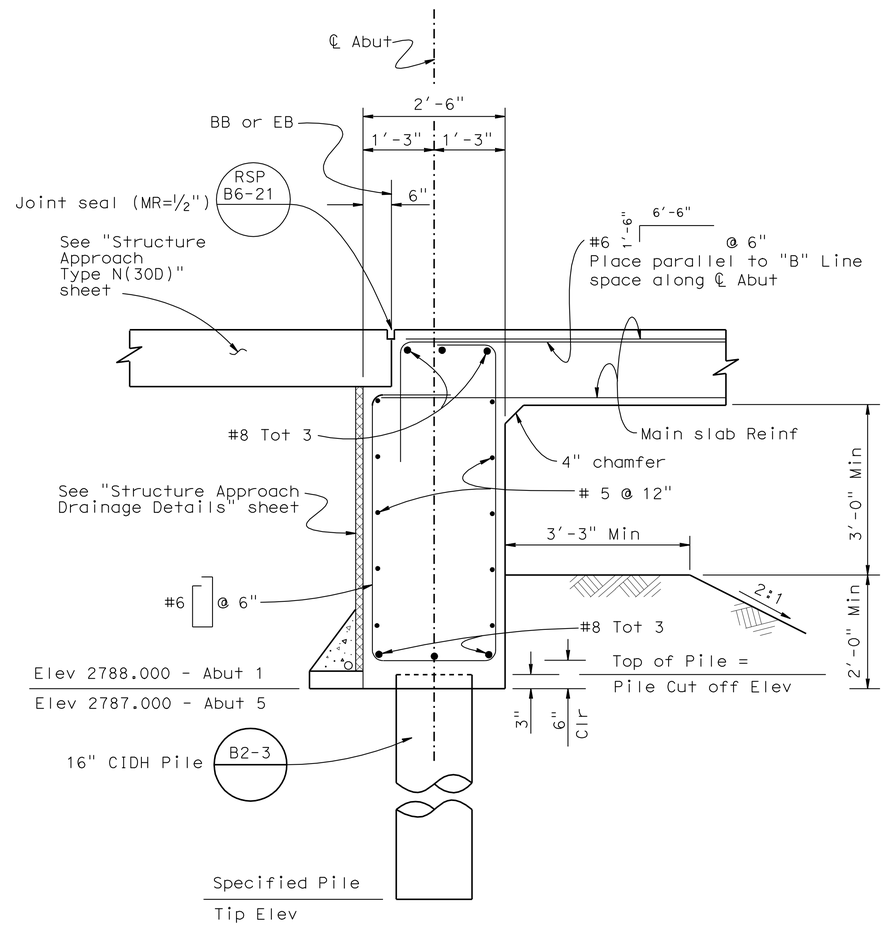

SECTION A-A

3/4"=1'-0"

DESIGN	BY L. Wu	CHECKED D. Azzam	
DETAILS	BY Y. Tang	CHECKED D. Azzam	
QUANTITIES	BY D. Azzam	CHECKED F. Chen	

STATE OF CALIFORNIA
DEPARTMENT OF TRANSPORTATION

DIVISION OF ENGINEERING SERVICES
STRUCTURE DESIGN
DESIGN BRANCH 10

BRIDGE NO. 54-1216J
POST MILE 179.39

IVANPAH DITCH (AIF TRUCK)
ABUTMENT 1 DETAILS

STRUCTURES DESIGN DETAIL SHEET (ENGLISH) (REV. 10/25/05)

ORIGINAL SCALE IN INCHES FOR REDUCED PLANS 0 1 2 3

CU 08
EA 368501

DISREGARD PRINTS BEARING EARLIER REVISION DATES

REVISION DATES: 10-23-07 11-21-07 3-26-08 1-15-13

SHEET 4 OF 13

FILE => 541216jfadt104.dgn

USERNAME => s135318 DATE PLOTTED => 26-FEB-2013 TIME PLOTTED => 09:02

DIST	COUNTY	ROUTE	POST MILES TOTAL PROJECT	SHEET No	TOTAL SHEETS
08	SBd	15	177.3/181.1	260	710

REGISTERED CIVIL ENGINEER — DATE 1-15-13

2-25-13
PLANS APPROVAL DATE

REGISTERED PROFESSIONAL ENGINEER — LARRY WU — No. C057035 — Exp. 6-30-13 — CIVIL — STATE OF CALIFORNIA

The State of California or its officers or agents shall not be responsible for the accuracy or completeness of electronic copies of this plan sheet.

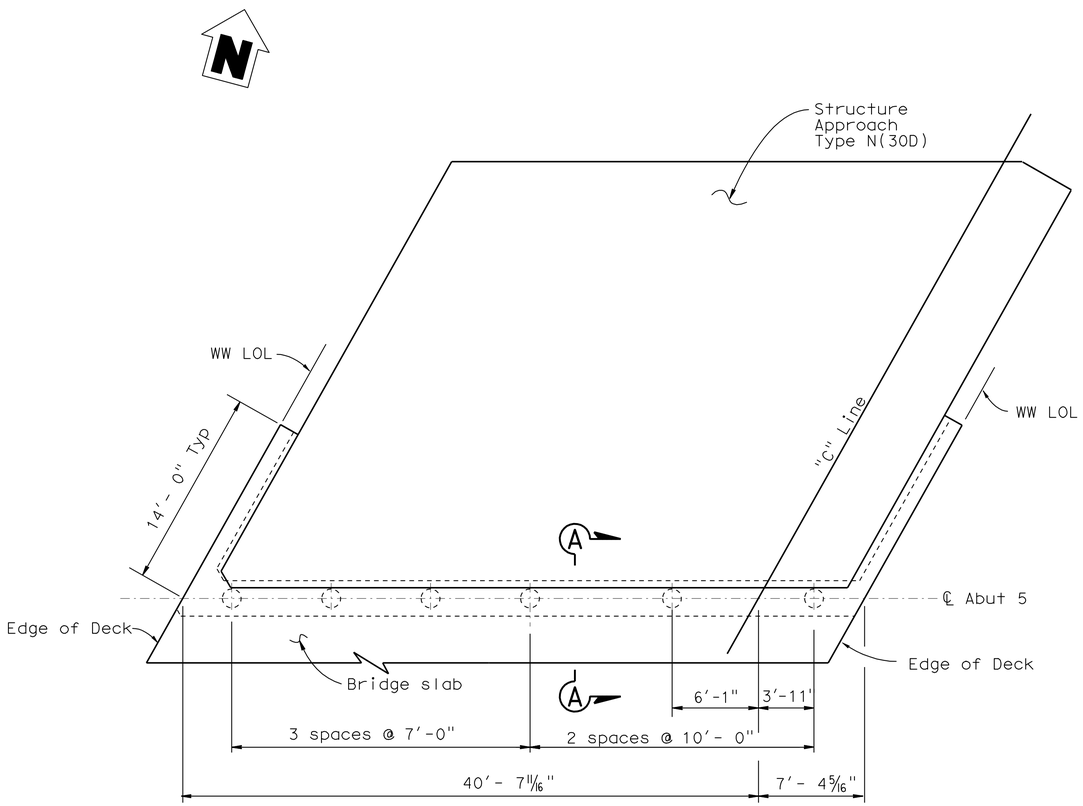

PLAN
3/16"=1'-0"

NOTE: For Wiingwall details & section A-A, see "ABUTMENT 1 DETAILS" sheet

	BY	CHECKED
DESIGN	L. Wu	D. Azzam
DETAILS	Y. Tang	D. Azzam
QUANTITIES	L. Wu	F. Chen

STATE OF CALIFORNIA
DEPARTMENT OF TRANSPORTATION

DIVISION OF ENGINEERING SERVICES
STRUCTURE DESIGN
DESIGN BRANCH 10

BRIDGE NO. 54-1216J
POST MILE 179.39

IVANPAH DITCH (AIF TRUCK)
ABUTMENT 5 DETAILS

STRUCTURES DESIGN DETAIL SHEET (ENGLISH) (REV. 10/25/05)

ORIGINAL SCALE IN INCHES FOR REDUCED PLANS 0 1 2 3

CU 08
EA 368501

DISREGARD PRINTS BEARING EARLIER REVISION DATES

REVISION DATES: 4-2-08 1-15-13

SHEET 5 OF 13

FILE => 541216jfadt205.dgn

USERNAME => s135318 DATE PLOTTED => 26-FEB-2013 TIME PLOTTED => 09:02

DIST	COUNTY	ROUTE	POST MILES TOTAL PROJECT	SHEET No	TOTAL SHEETS
08	SBd	15	177.3/181.1	261	710

REGISTERED CIVIL ENGINEER — DATE 1-15-13

2-25-13
PLANS APPROVAL DATE

REGISTERED PROFESSIONAL ENGINEER — LARRY WU — No. C057035 — Exp. 6-30-13 — CIVIL — STATE OF CALIFORNIA

The State of California or its officers or agents shall not be responsible for the accuracy or completeness of electronic copies of this plan sheet.

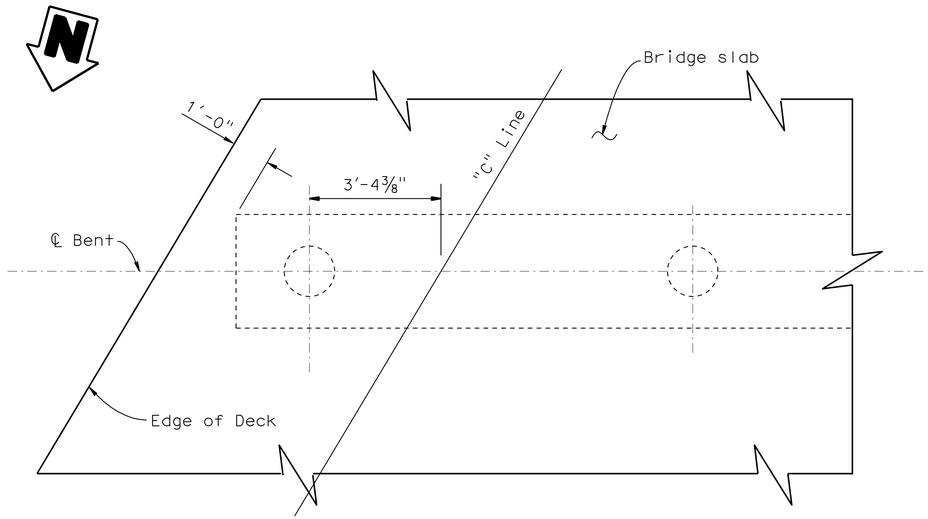

PART PLAN-BENT

1/2" =1'-0"

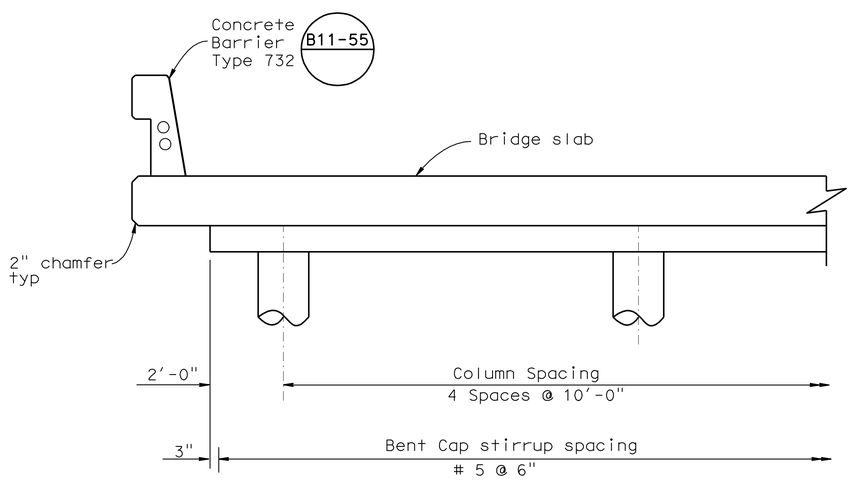

PART ELEVATION-BENT

1/2" =1'-0"

Note: Bent 2 Shown. Bents 3 & 4 Similer

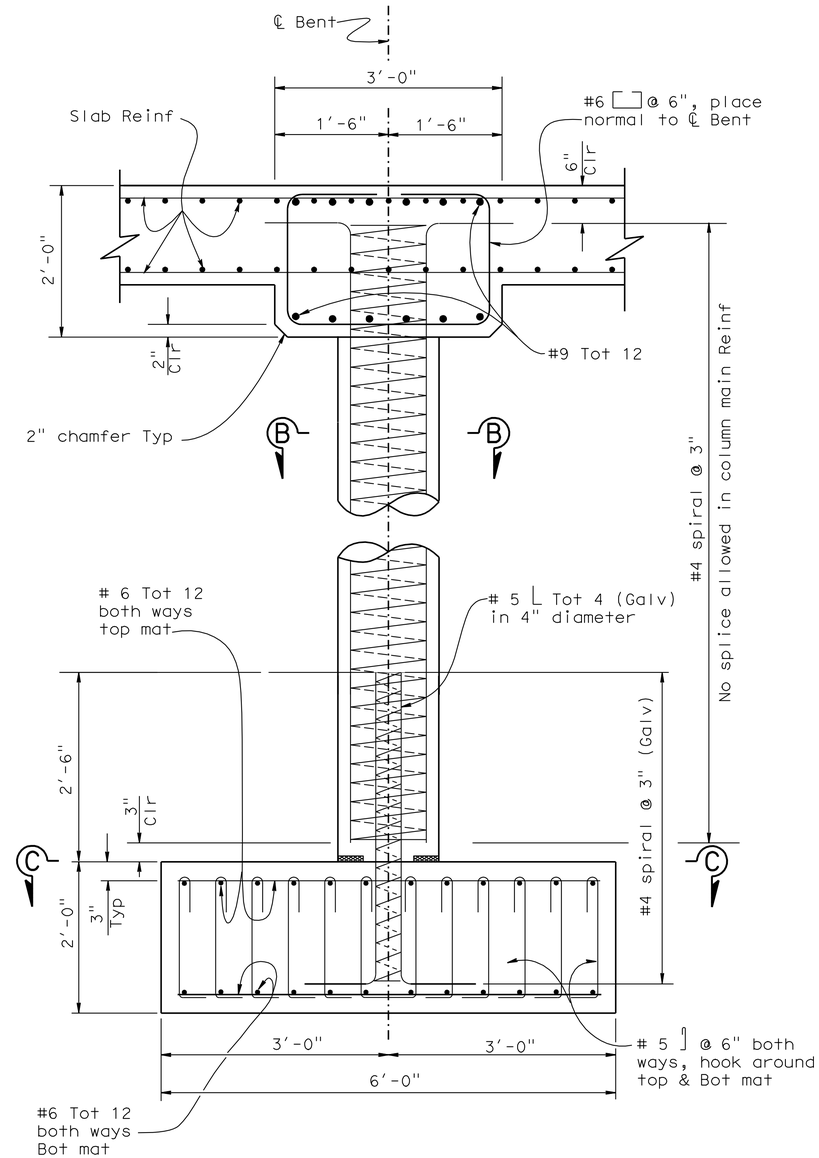

COLUMN ELEVATION

1" = 1'-0"

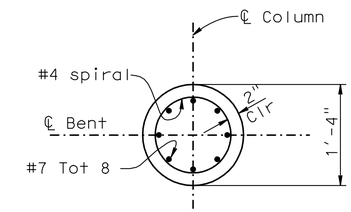

SECTION B-B

1" = 1"-0"

NOTES:

1. For Section C-C , see "TYPICAL SECTION" sheet.
2. Bent 2 Shown, Bents 3 & 4 Similar.

DESIGN	BY L Wu.	CHECKED D. Azzam	
DETAILS	BY Y. Tang	CHECKED D. Azzam	
QUANTITIES	BY D. Azzam	CHECKED F. Chen	

STATE OF CALIFORNIA
DEPARTMENT OF TRANSPORTATION

DIVISION OF ENGINEERING SERVICES
STRUCTURE DESIGN
DESIGN BRANCH 10

BRIDGE NO. 54-1216J
POST MILE 179.39

IVAPAH DITCH (AIF TRUCK)
BENT DETAILS

STRUCTURES DESIGN DETAIL SHEET (ENGLISH) (REV. 10/25/05)

ORIGINAL SCALE IN INCHES FOR REDUCED PLANS 0 1 2 3

CU 08
EA 368501

DISREGARD PRINTS BEARING EARLIER REVISION DATES

REVISION DATES: 10-24-07 11-21-07 3-29-08 6-11-08 1-15-13

SHEET 6 OF 13

FILE => 541216jhbdt06.dgn

USERNAME => s135318 DATE PLOTTED => 26-FEB-2013 TIME PLOTTED => 03:02

DIST	COUNTY	ROUTE	POST MILES TOTAL PROJECT	SHEET No	TOTAL SHEETS
08	SBd	15	177.3/181.1	262	710

REGISTERED CIVIL ENGINEER — DATE 1-15-13

2-25-13
PLANS APPROVAL DATE

REGISTERED PROFESSIONAL ENGINEER — LARRY WU — No. C057035 — Exp. 6-30-13 — CIVIL — STATE OF CALIFORNIA

The State of California or its officers or agents shall not be responsible for the accuracy or completeness of electronic copies of this plan sheet.

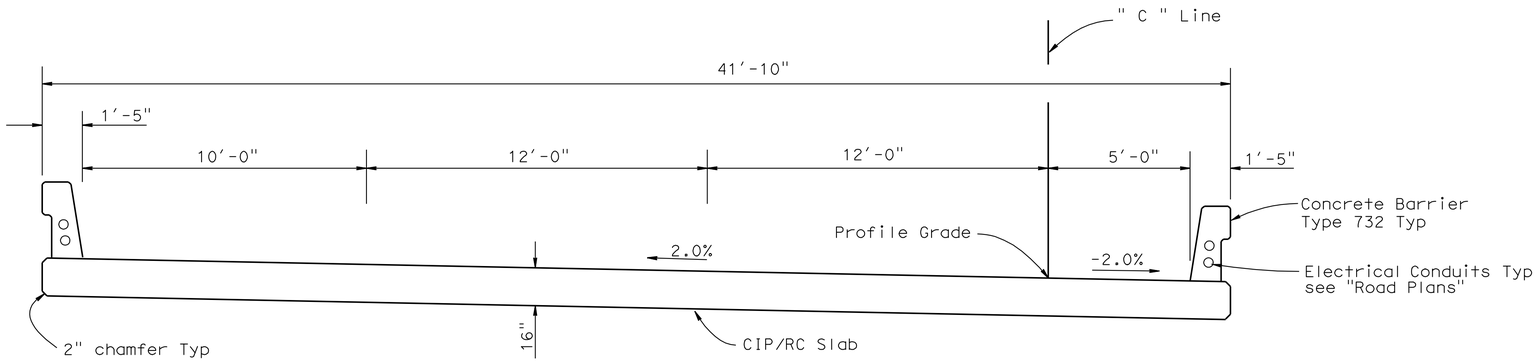

TYPICAL SECTION

3/8" = 1'-0"

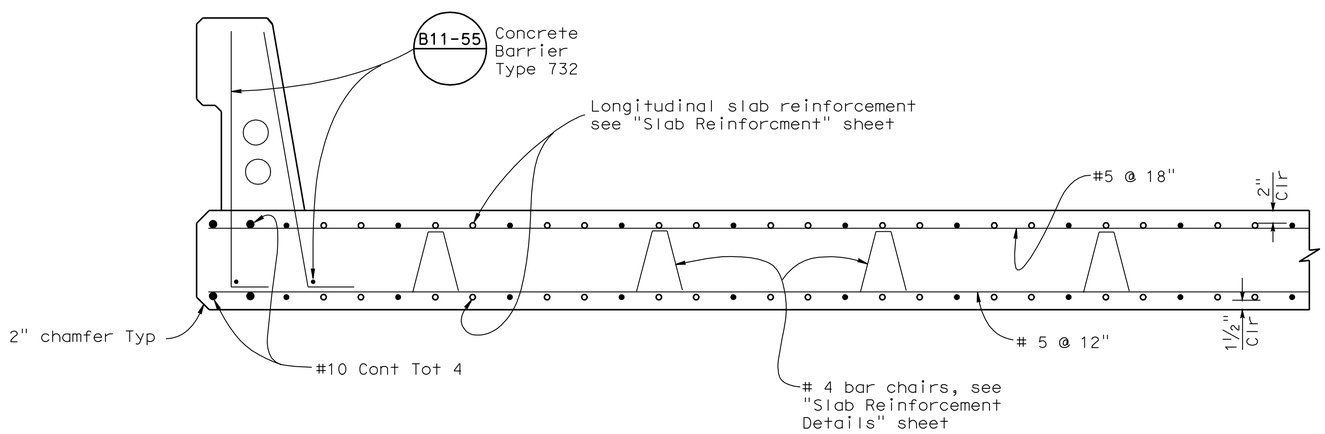

PART TYPICAL SECTION

1" = 1'-0"

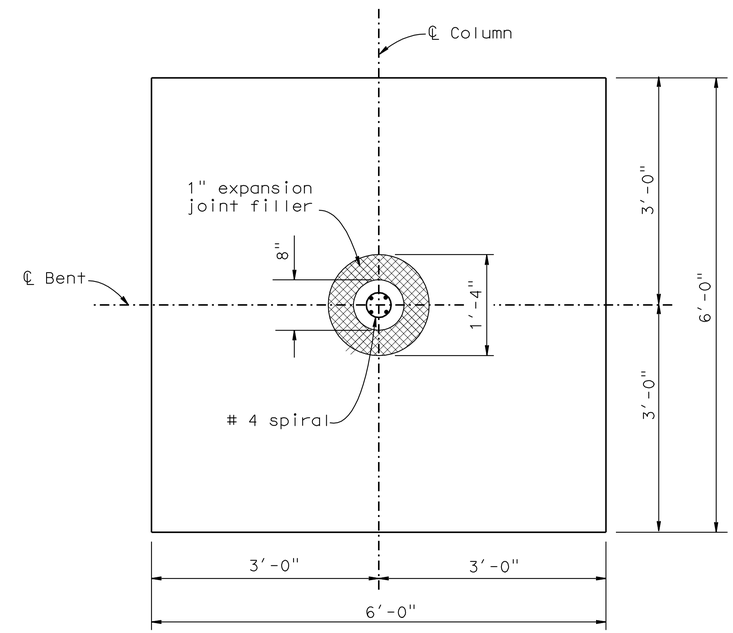

SECTION C-C

1" = 1'-0"

NOTE:

For location of "SECTION C -C " see " COLUMN ELEVATION " on "BENT DETAILS" sheet.

	BY	CHECKED
DESIGN	L. Wu	D. Azzam
DETAILS	Y. Tang	D. Azzam
QUANTITIES	D. Azzam	F. Chen

STATE OF CALIFORNIA
DEPARTMENT OF TRANSPORTATION

DIVISION OF ENGINEERING SERVICES
STRUCTURE DESIGN
DESIGN BRANCH 10

BRIDGE NO. 54-1216J
POST MILE 179.39

IVANPAH CITCH (AIF TRUCK)
TYPICAL SECTION

STRUCTURES DESIGN DETAIL SHEET (ENGLISH) (REV. 10/25/05)

ORIGINAL SCALE IN INCHES FOR REDUCED PLANS 0 1 2 3

CU 08
EA 368501

DISREGARD PRINTS BEARING EARLIER REVISION DATES — REVISION DATES: 10-26-07, 11-24-07, 3-24-08, 1-13-13

SHEET 7 OF 13

FILE => 541216jkts07.dgn

USERNAME => s135318 DATE PLOTTED => 26-FEB-2013 TIME PLOTTED => 09:02

DIST	COUNTY	ROUTE	POST MILES TOTAL PROJECT	SHEET No	TOTAL SHEETS
08	SBd	15	177.3/181.1	263	710

REGISTERED CIVIL ENGINEER — DATE 1-15-13

2-25-13
PLANS APPROVAL DATE

REGISTERED PROFESSIONAL ENGINEER — LARRY WU — No. C057035 — Exp. 6-30-13 — CIVIL — STATE OF CALIFORNIA

The State of California or its officers or agents shall not be responsible for the accuracy or completeness of electronic copies of this plan sheet.

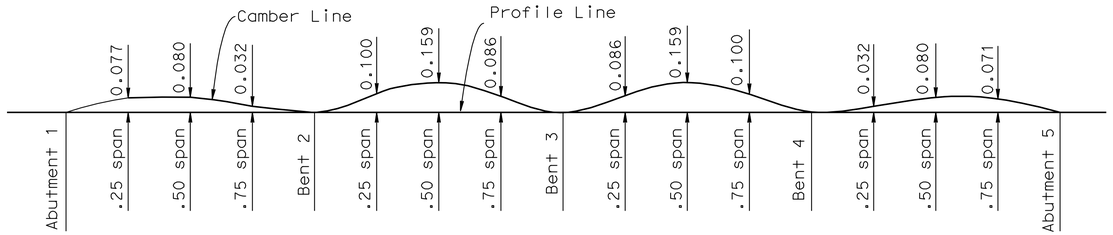

Note: Camber shown does not include allowance for falsework settlement, Camber values are shown in inches

CAMBER DIAGRAM

no scale

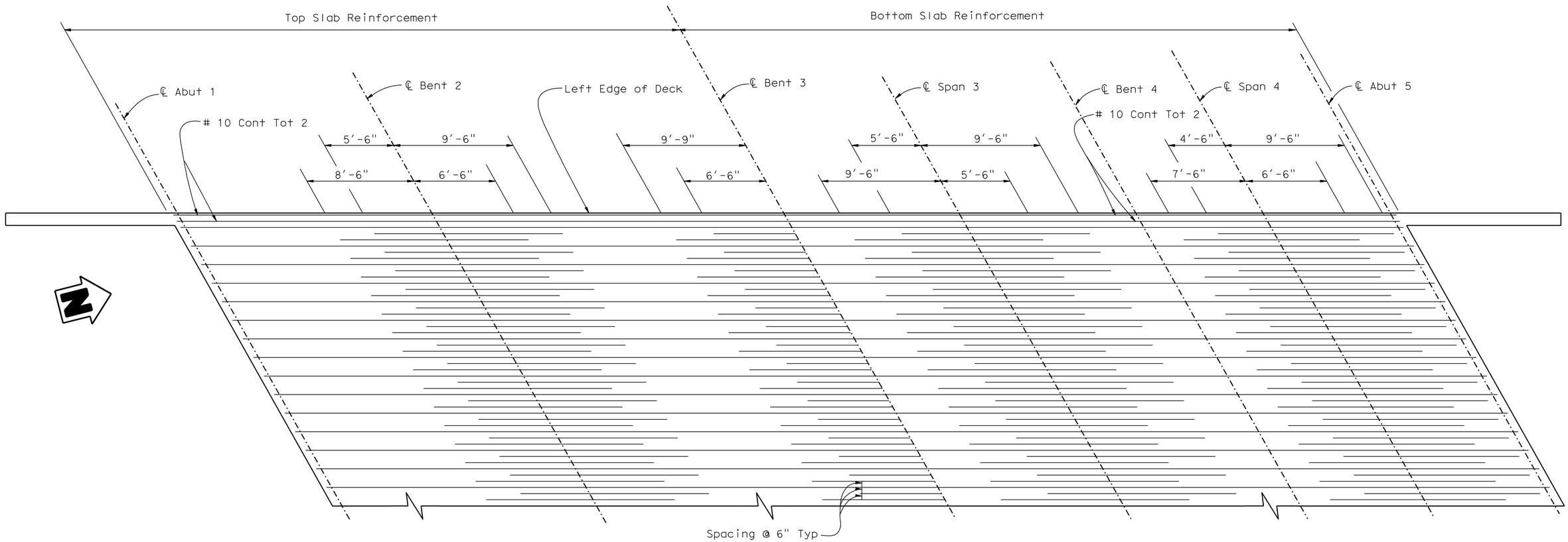

NOTES:

1. All reinforcement symmetrical (staggered) about Bent 3.
2. All reinforcement #7 unless otherwise noted.
3. No lap splices allowed in top & bottom reinforcement.

PART PLAN - SLAB REINFORCEMENT

1/4" = 1'-0"

	BY	CHECKED
DESIGN	L. Wu	D. Azzam
DETAILS	Y. Tang	D. Azzam
QUANTITIES	D. Azzam	F. Chen

STATE OF CALIFORNIA
DEPARTMENT OF TRANSPORTATION

DIVISION OF ENGINEERING SERVICES
STRUCTURE DESIGN
DESIGN BRANCH 10

BRIDGE NO. 54-1216J
POST MILE 179.39

IVANPAH DITCH (AIF TRUCK)
SLAB REINFORCEMENT

STRUCTURES DESIGN DETAIL SHEET (ENGLISH) (REV. 10/25/05)

ORIGINAL SCALE IN INCHES FOR REDUCED PLANS 0 1 2 3

CU 08
EA 368501

DISREGARD PRINTS BEARING EARLIER REVISION DATES

REVISION DATES: 10-26-07 11-26-07 4-3-08 1-15-13

SHEET 8 OF 13

FILE => 541216joslbrf08f.dgn

USERNAME => s135318 DATE PLOTTED => 26-FEB-2013 TIME PLOTTED => 09:02

RELEASED 11-20-97

DIST.	COUNTY	ROUTE	POST MILES TOTAL PROJECT	SHEET NO.	TOTAL SHEETS
08	SBd	15	177.3/181.1	264	710

REGISTERED ENGINEER - CIVIL 1-15-13

REGISTERED PROFESSIONAL ENGINEER LARRY WU No. C057035 Exp. 6-30-13 CIVIL STATE OF CALIFORNIA

2-25-13
PLANS APPROVAL DATE

The State of California or its officers or agents shall not be responsible for the accuracy or completeness of electronic copies of this plan sheet.

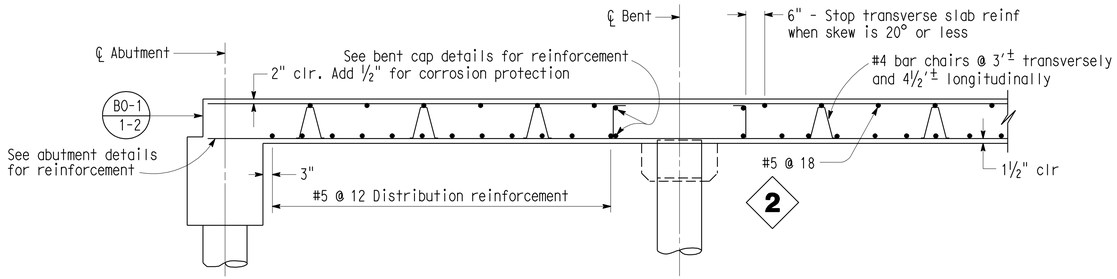

LONGITUDINAL SECTION

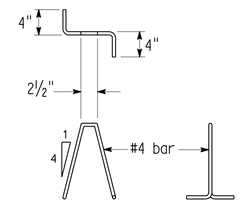

BAR CHAIR DETAIL

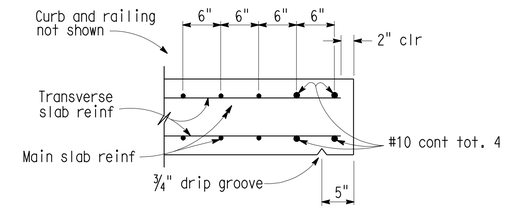

EDGE OF SLAB DETAILS

BAR SPLICE LENGTH								
Bar size	#4	#5	#6	#7	#8	#9	#10	#11
All bars, except top bars in spans over 24'	23"	28"	34"	39"	45"	68"	76"	85"
Top bars in spans over 24'	23"	28"	34"	53"	60"	77"	97"	120"

Reinforcement notes:

Splices in top main bars to be located near center of span.
Splices in bottom main bars to be located near bent.
Spacing of all transverse bars is measured along ℄ roadway.
Skew 0° to 20°: Place all transverse bars parallel to bent.
Skew over 20°: Place transverse slab bars perpendicular to ℄ bridge. See details at right and below.

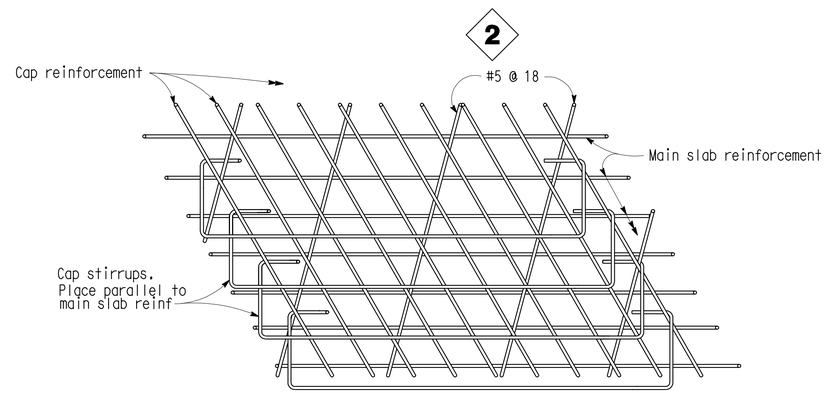

TOP SLAB REINFORCEMENT AT BENT

Note: View for main span over 24'.
Bar placement similar for spans under 24'

1

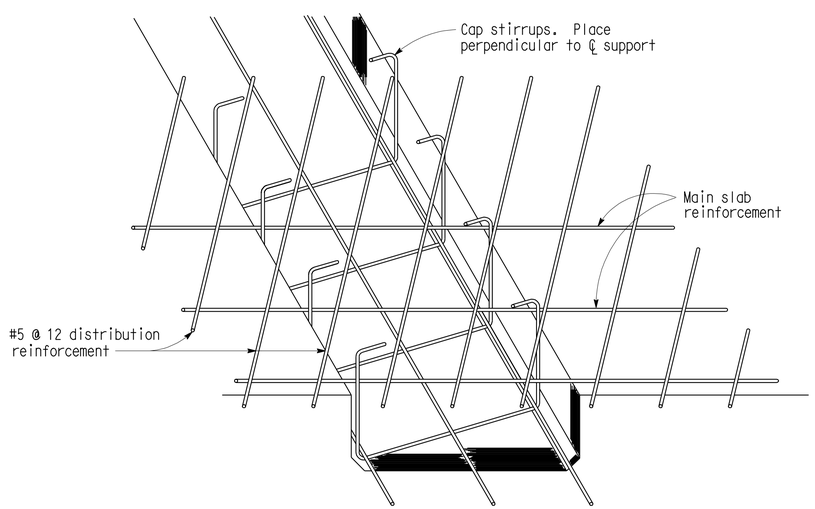

DROPPED CAP

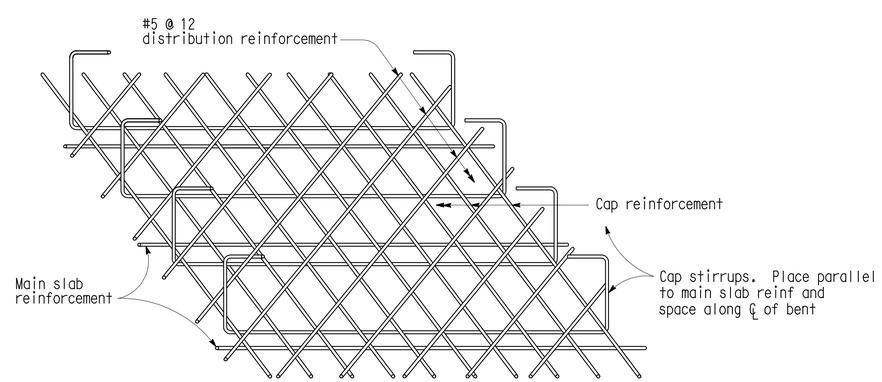

FLUSH CAP

BOTTOM SLAB REINFORCEMENT AT BENT

STANDARD DRAWING

FILE NO. XS 12-55	DESIGN BY L.Y. LEE	CHECKED T. FARNAN	APPROVAL RECOMMENDED BY
DESIGN DATE 8/86	DETAILS BY R. YEE	CHECKED T. FARNAN	DESIGN SUPERVISOR
	SUBMITTED BY R.S. WATANABE		

DS OSD 2147A (CADD 7/97)

1 Deleted General Notes
2 Revised Details

STATE OF CALIFORNIA DEPARTMENT OF TRANSPORTATION

DIVISION OF STRUCTURES STRUCTURE DESIGN 10

BRIDGE NO. 54-1216J
POST MILE 179.39

IVANPAH DITCH (AIF TRUCK)
SLAB REINFORCEMENT DETAILS

ORIGINAL SCALE IN INCHES FOR REDUCED PLANS 0 1 2 3

CU 08
EA 368501

DISREGARD PRINTS BEARING EARLIER REVISION DATES

REVISION DATES (PRELIMINARY STAGE ONLY) 10-16-07 1-15-13

SHEET 9 OF 13

USERNAME => s135318 DATE PLOTTED => 26-FEB-2013 TIME PLOTTED => 09:02
FILE => 541216joslbrfdt09.dgn
XS1255.DGN VI=1

RELEASED 11-10-97

DIST.	COUNTY	ROUTE	POST MILES TOTAL PROJECT	SHEET NO.	TOTAL SHEETS
08	SBd	15	177.3/181.1	265	710

REGISTERED ENGINEER - CIVIL 1-15-13

REGISTERED PROFESSIONAL ENGINEER LARRY WU No. C057035 Exp. 6-30-13 CIVIL STATE OF CALIFORNIA

2-25-13
PLANS APPROVAL DATE

The State of California or its officers or agents shall not be responsible for the accuracy or completeness of electronic copies of this plan sheet.

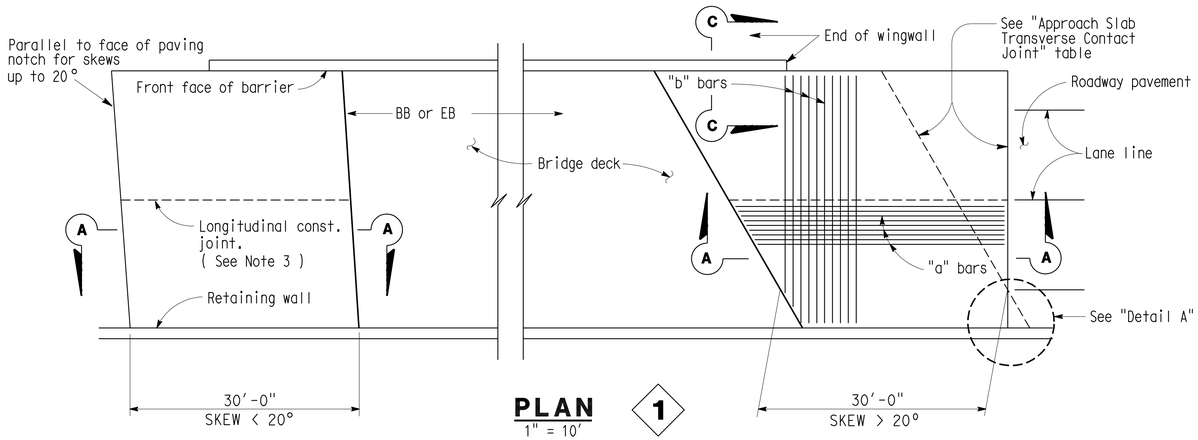

PLAN 1
1" = 10'

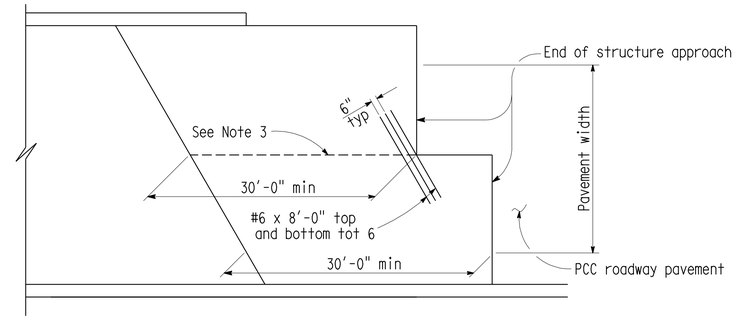

STRUCTURE APPROACH - END STAGGER DETAIL
No Scale

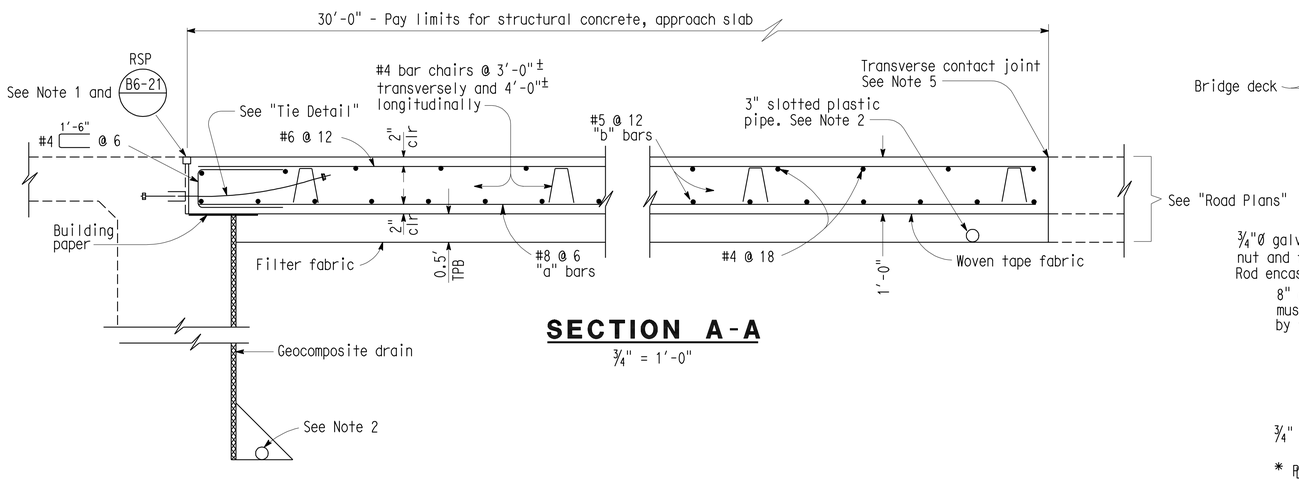

SECTION A-A
¾" = 1'-0"

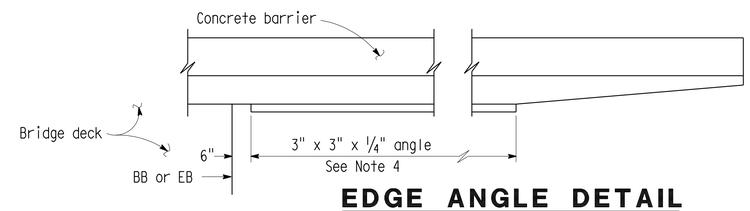

EDGE ANGLE DETAIL
½" = 1'-0"

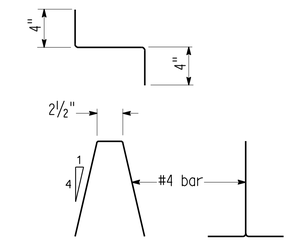

BAR CHAIR DETAIL
1½" = 1'-0"

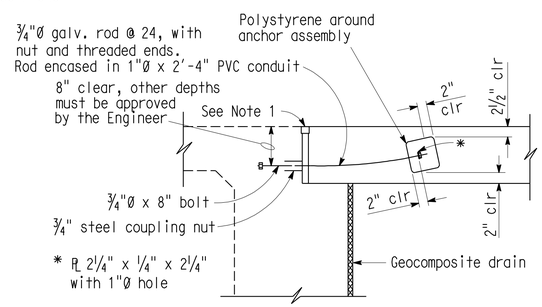

TIE DETAIL
¾" = 1'-0"

APPROACH SLAB TRANSVERSE CONTACT JOINT		
APPROACH SKEW	WITH AC ROADWAY PAVEMENT	WITH PCC ROADWAY PAVEMENT
< 20°	Parallel to face of paving notch	Parallel to face of paving notch
20° - 45°	Parallel to face of P N use (Detail A)	Stagger lines 24' to 36' apart
> 45°	Parallel to face of P N use (Detail A)	Stagger at each lane line

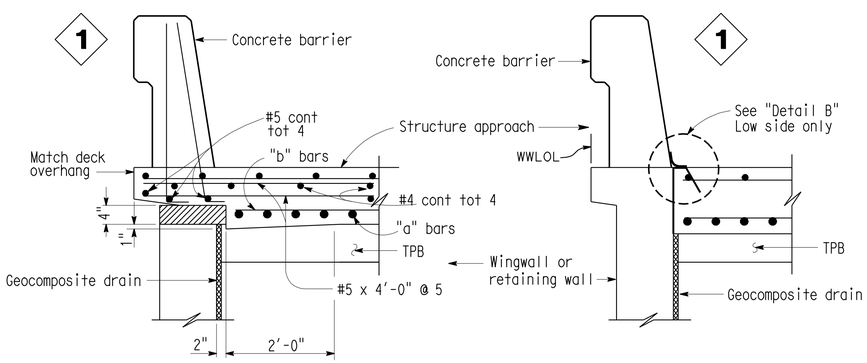

TYPE E-1 TYPE E-2

SECTION C-C
¾" = 1'-0"
(Type E-1 to be used, unless otherwise shown on plans)

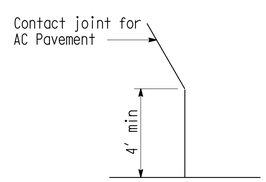

DETAIL A
No Scale

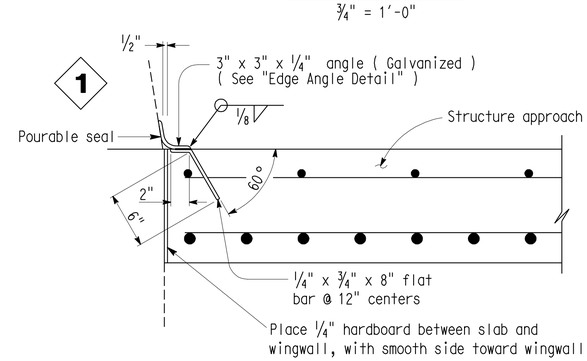

DETAIL B
1½" = 1'-0"

NOTES:

1. For details not noted or shown, see Structure Plans.
2. For drainage details, see "Structure Approach Drainage Details" sheet.
3. Longitudinal construction joints,when permitted by the Engineer, shall be located on lane lines.
4. End angle at beginning of barrier transition, end of wingwall or end of structure approach, as applicable
5. For transverse contact joint with new PCC paving, refer to Standard Plan A35-A.
6. At the contractor's option, approach slab transverse reinforcement may be placed parallel to paving notch. Spacing of transverse reinforcement is measured along ℄ roadway.

Polystyrene to be removed.

STANDARD DRAWING

FILE NO. XS 22-24	DESIGN	BY M. TRAFFALIS	CHECKED E. THORKILDSEN	APPROVAL RECOMMENDED BY
DESIGN DATE 8/92	DETAILS	BY R. YEE	CHECKED E. THORKILDSEN	DESIGN SUPERVISOR
	SUBMITTED BY M. HA			

1 Revised details

STATE OF CALIFORNIA DEPARTMENT OF TRANSPORTATION

DIVISION OF STRUCTURES STRUCTURE DESIGN 10

BRIDGE NO. 56-1216J
POST MILE 179.39

IVANPAH DITCH (AIF TRUCK)
STRUCTURE APPROACH TYPE N(30D)

DS OSD 2147A (CADD 7/97)

ORIGINAL SCALE IN INCHES FOR REDUCED PLANS 0 1 2 3

CU 08
EA 368501

DISREGARD PRINTS BEARING EARLIER REVISION DATES 10-26-07 1-13-13

REVISION DATES (PRELIMINARY STAGE ONLY)

SHEET 10 OF 13

FILE => 541216jssa10.dgn

XS2224.DGN VI=I

USERNAME => s135318 DATE PLOTTED => 26-FEB-2013 TIME PLOTTED => 09:03

RELEASED 11-4-97

DIST.	COUNTY	ROUTE	POST MILES TOTAL PROJECT	SHEET NO.	TOTAL SHEETS
08	SBd	15	177.3/181.1	266	710

REGISTERED ENGINEER - CIVIL 1-15-13

REGISTERED PROFESSIONAL ENGINEER LARRY WU No. C057035 Exp. 6-30-13 CIVIL STATE OF CALIFORNIA

2-25-13
PLANS APPROVAL DATE

The State of California or its officers or agents shall not be responsible for the accuracy or completeness of electronic copies of this plan sheet.

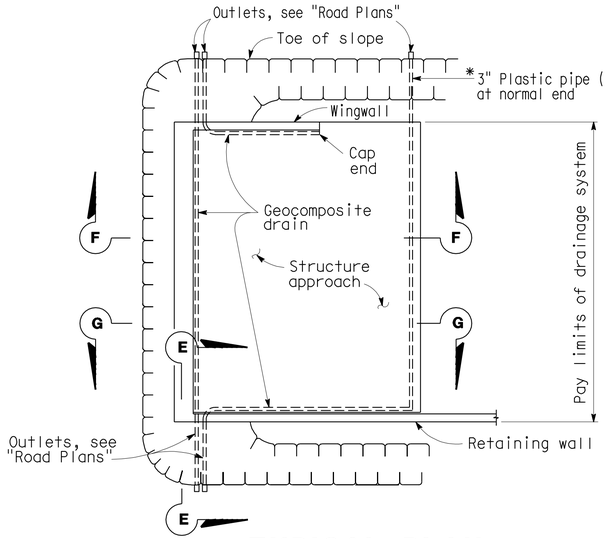

TYPICAL PLAN
1" = 10'

* For pipe layout at staggered end, see "Detail B."

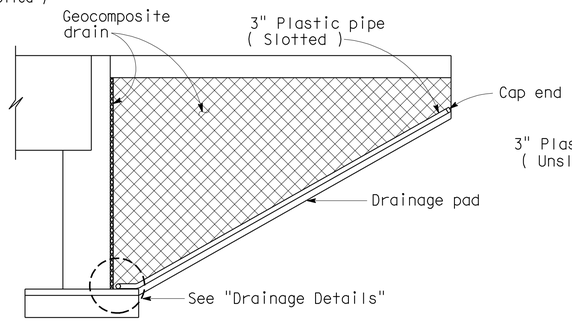

CANTILEVER WINGWALL
SECTION F-F
1/4" = 1'-0"

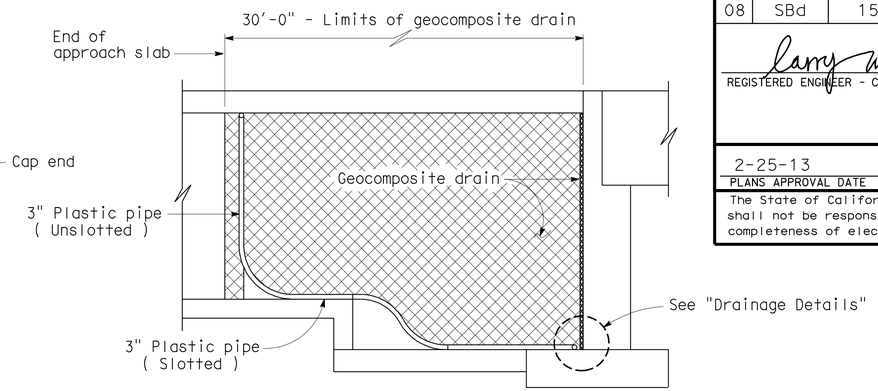

RETAINING WALL WINGWALL
SECTION G-G
1/4" = 1'-0"

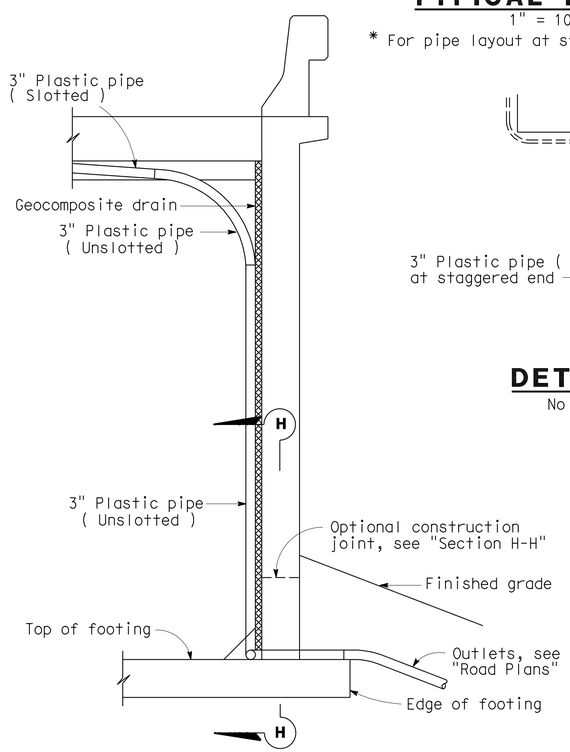

SECTION E-E
1/2" = 1'-0"

Note: Bends and junctions in 3" plastic pipe are 30" radius min.

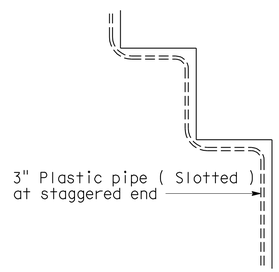

DETAIL B
No Scale

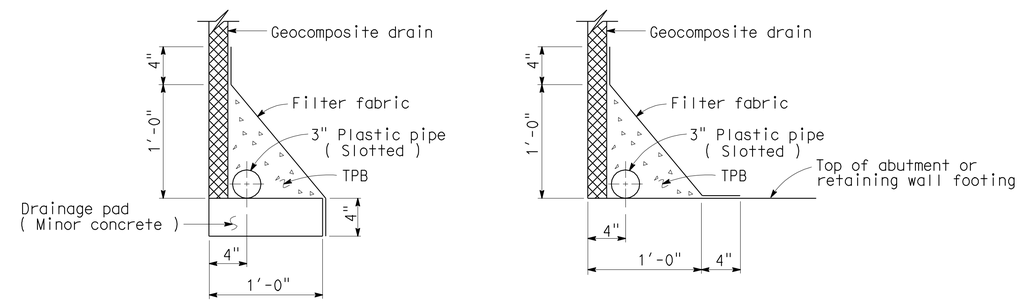

WITHOUT FOOTING WITH FOOTING

DRAINAGE DETAILS
1 1/2" = 1'-0"

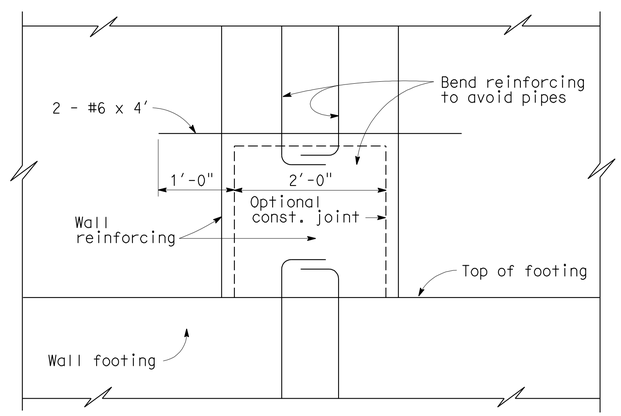

SECTION H-H
1" = 1'-0"

STANDARD DRAWING				
FILE NO. XS 22-17	DESIGN	BY M. TRAFFALIS	CHECKED E. THORKILDSEN	APPROVAL RECOMMENDED BY
DESIGN DATE 8/92	DETAILS	BY R. YEE	CHECKED E. THORKILDSEN	DESIGN SUPERVISOR
	SUBMITTED BY M. HA			

STATE OF CALIFORNIA DEPARTMENT OF TRANSPORTATION

DIVISION OF STRUCTURES STRUCTURE DESIGN 10

BRIDGE NO. 54-1216J
POST MILE 179.39

IVANPAH DITCH (AIF TRUCK)
STRUCTURE APPROACH DRAINAGE DETAILS

DS OSD 2147A (CADD 7/97)

ORIGINAL SCALE IN INCHES FOR REDUCED PLANS 0 1 2 3

CU 08
EA 368501

DISREGARD PRINTS BEARING EARLIER REVISION DATES → 10-26-07 1-15-13

REVISION DATES (PRELIMINARY STAGE ONLY)

SHEET 11 OF 13

FILE => 541216jssadd11.dgn

XS22I7.DGN V|=|

USERNAME => s135318 DATE PLOTTED => 26-FEB-2013 TIME PLOTTED => 09:03

DIST	COUNTY	ROUTE	POST MILES TOTAL PROJECT	SHEET No	TOTAL SHEETS
08	SBd	15	177.3/181.1	267	710

CERTIFIED ENGINEERING GEOLOGIST 7-28-08

2-25-13
PLANS APPROVAL DATE

PROFESSIONAL GEOLOGIST Faramarz Gerami No. 2340 Exp. 4-30-09 CERTIFIED ENGINEERING GEOLOGIST STATE OF CALIFORNIA

The State of California or its officers or agents shall not be responsible for the accuracy or completeness of electronic copies of this plan sheet.

BENCH MARK

SURVEY CONTROL

PHHV 66

Fnd C-Nail Set in Target
81.324 Rt. ℄ Rte 15
Sta. 9472+08.887
N 2 384 018.123
E 7 326 468.174
Elev. = 2754.624

PRHV 1794

Fnd 1" IP @ SE about
92.153′ Rt. ℄ Rte 15
Sta.9460+41.637
N 2 382 903.533
E 7 326 121.361
Elev. = 2778.466

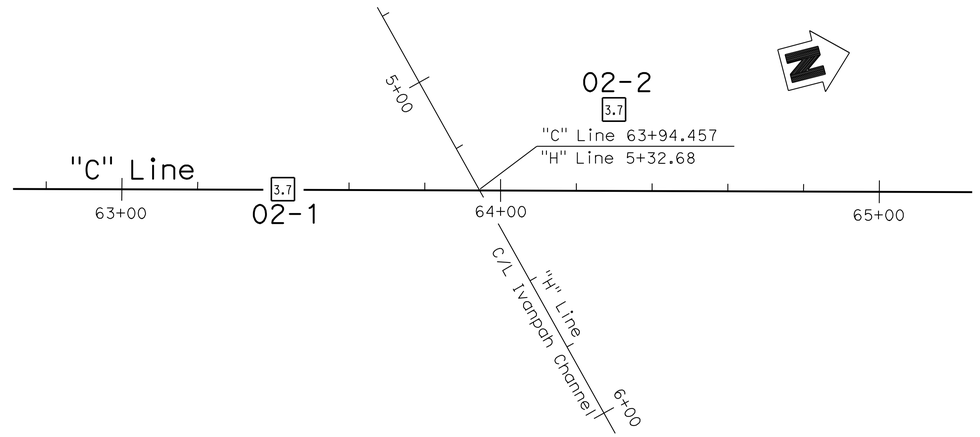

PLAN
1" = 20′

Notes:

1. E= Blow count for 1′ penetration extrapolated from blow count for less than 1′ penetration (typically due to change in material or hard driving).
2. CME automatic hammer was used to advance the sampler using a 140 lb hammer with a 30" drop.
3. No ground water encountered during field investigation.

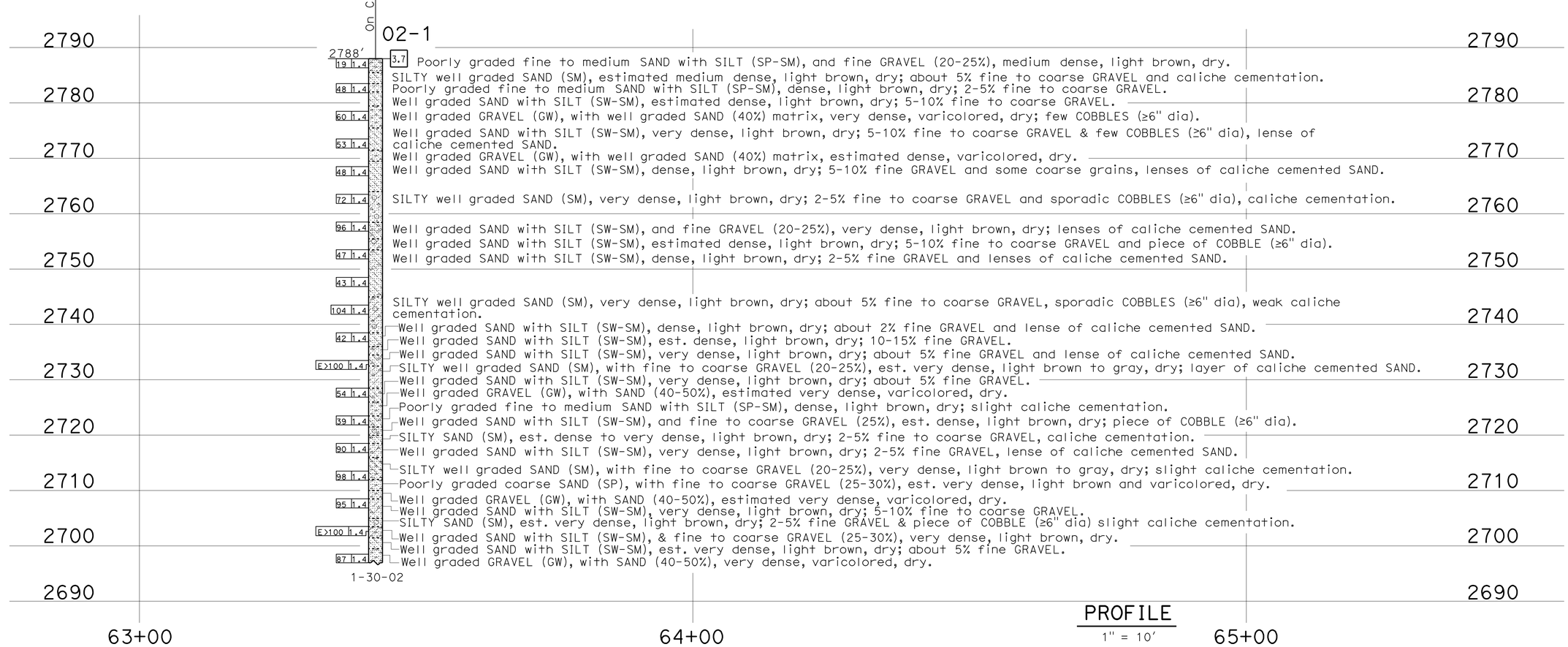

PROFILE
1" = 10′

LEGEND OF BORING OPERATIONS

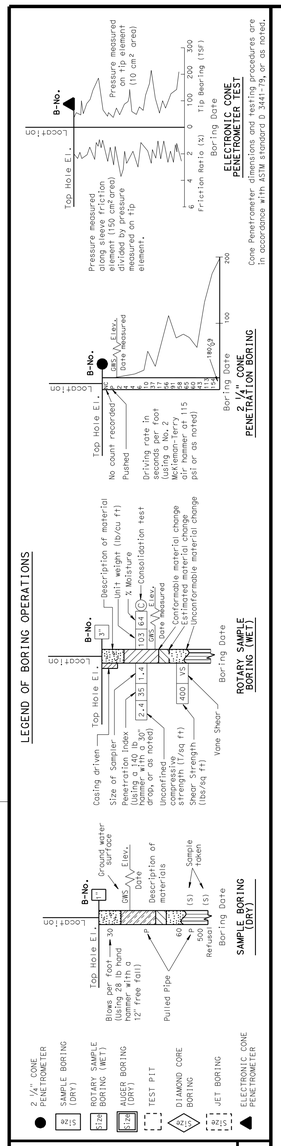

LEGEND OF EARTH MATERIALS

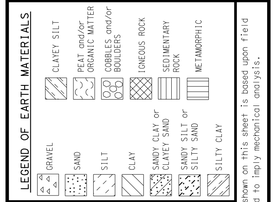

CONSISTENCY CLASSIFICATION FOR SOILS

According to the Standard Penetration Test

SPT N-Value (Blows/ foot)	Granular	SPT N-Value (Blows/ foot)	Cohesive
0-4	Very Loose	<2	Very Soft
5-10	Loose	2-4	Soft
11-30	Medium Dense	5-8	Medium stiff
31-50	Dense	9-15	Stiff
>50	Very Dense	16-30	Very Stiff
		31-60	Hard
		>60	Very Hard

NOTE: Classification of earth material as shown on this sheet is based upon field inspection and is not to be construed to imply mechanical analysis.

ENGINEERING SERVICES	GEOTECHNICAL SERVICES
DRAWN BY	I. G-Remmen, W. Tang
CHECKED BY	F. Gerami

FIELD INVESTIGATION BY: F. Gerami

STATE OF CALIFORNIA DEPARTMENT OF TRANSPORTATION

DIVISION OF ENGINEERING SERVICES STRUCTURE DESIGN DESIGN BRANCH

BRIDGE NO. 54-1216J
POST MILE 179.39

IVANPAH DITCH (AIF TRUCK)

LOG OF TEST BORINGS 1 OF 2

CU 08
EA 368501

ORIGINAL SCALE IN INCHES FOR REDUCED PLANS 0 1 2 3

DISREGARD PRINTS BEARING EARLIER REVISION DATES

REVISION DATES (PRELIMINARY STAGE ONLY) 07-09-08

SHEET 12 OF 13

OGS LOG OF TEST BORINGS SHEET (ENGLISH) (REV. 5/25/07)

FILE => 541216jzltb1of2.dgn

USERNAME => s135318 DATE PLOTTED => 26-FEB-2013 TIME PLOTTED => 03:03

DIST	COUNTY	ROUTE	POST MILES TOTAL PROJECT	SHEET No	TOTAL SHEETS
08	SBd	15	177.3/181.1	268	710

F. Gerami 7-28-08
CERTIFIED ENGINEERING GEOLOGIST

2-25-13
PLANS APPROVAL DATE

PROFESSIONAL GEOLOGIST Fgramarz Gerami No. 2340 Exp. 4-30-09 CERTIFIED ENGINEERING GEOLOGIST STATE OF CALIFORNIA

The State of California or its officers or agents shall not be responsible for the accuracy or completeness of electronic copies of this plan sheet.

FOR PLAN VIEW, SEE
"LOG OF TEST BORINGS 1 OF 2"

PROFILE
1" = 10'

LEGEND OF BORING OPERATIONS

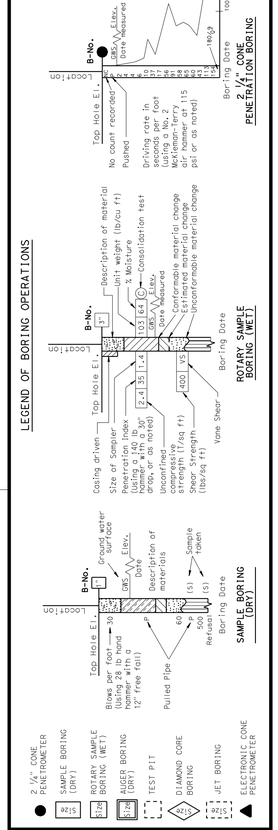

LEGEND OF EARTH MATERIALS

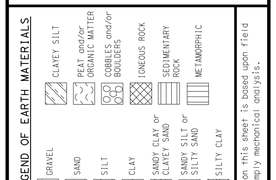

CONSISTENCY CLASSIFICATION FOR SOILS
According to the Standard Penetration Test

SPT N-Value (Blows/ Foot)	Granular	SPT N-Value (Blows/ Foot)	Cohesive
0-4	Very Loose	<2	Very Soft
5-10	Loose	2-4	Soft
11-30	Medium Dense	5-8	Medium stiff
31-50	Dense	9-15	Stiff
>50	Very Dense	16-30	Very Stiff
		31-60	Hard
		>60	Very Hard

NOTE: Classification of earth material as shown on this sheet is based upon field inspection and is not to be construed to imply mechanical analysis.

ENGINEERING SERVICES	GEOTECHNICAL SERVICES
DRAWN BY	I. G-Remmen , W. Tang
CHECKED BY	F. Gerami

FIELD INVESTIGATION BY: F. Gerami

STATE OF CALIFORNIA
DEPARTMENT OF TRANSPORTATION

DIVISION OF ENGINEERING SERVICES
STRUCTURE DESIGN
DESIGN BRANCH

CU 08
EA 368501

BRIDGE NO. 54-1216J
POST MILE 179.39

IVANPAH DITCH (AIF TRUCK)
LOG OF TEST BORINGS 2 OF 2

DISREGARD PRINTS BEARING EARLIER REVISION DATES
REVISION DATES (PRELIMINARY STAGE ONLY): 07-09-08
SHEET 13 OF 13

OGS LOG OF TEST BORINGS SHEET (ENGLISH) (REV. 5/25/07)

ORIGINAL SCALE IN INCHES FOR REDUCED PLANS 0 1 2 3

FILE => 541216jzltb2of2.dgn

USERNAME => s135318 DATE PLOTTED => 26-FEB-2013 TIME PLOTTED => 09:03

ACCESSIBILITY DESIGN APPROVAL STAMP DOT / DES / OTA	CALIFORNIA STATE FIRE MARSHAL APPROVED	DIST.	COUNTY	ROUTE	POST MILES TOTAL PROJECT	SHEET NO.	TOTAL SHEETS
08-368501 DISTRICT - EA	Approval of this plan does not authorize or approve any omission or deviation from applicable regulations. Final approval is subject to field inspection. One set of approved plans shall be available on the project site at all times.	08	SBd	15	177.3/181.1	269	710
Reviewed by: Y.A. WANG	Reviewed by: G. ANDERSEN	DOUG LOWE 12-12-12					
Date: 03-30-09	Approval date: 01-20-2011	LICENSED ARCHITECT			DATE		
		2-25-13					
		PLANS APPROVAL DATE					

LICENSED ARCHITECT DOUG LOWE No. C-15341 Exp. 06-30-13 STATE OF CALIFORNIA

The State of California or its officers or agents shall not be responsible for the accuracy or completeness of electronic copies of this plan sheet.

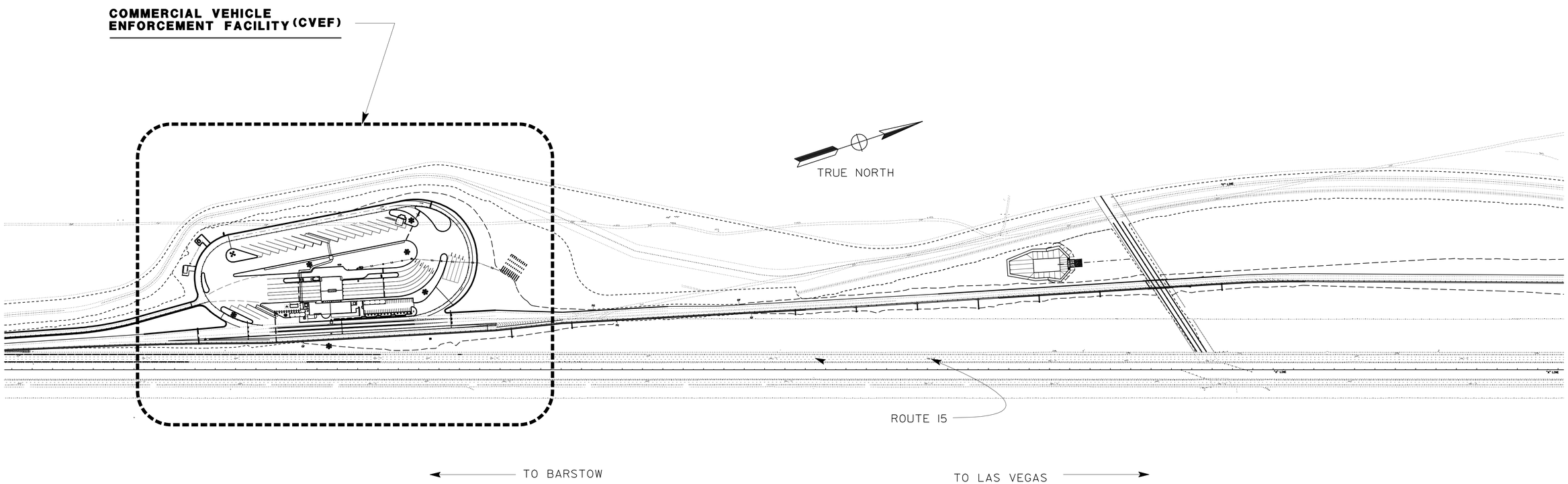

OVERALL SITE PLAN

NOT TO SCALE

PLAN NORTH

R.E. Travis DESIGN SUPERVISOR; DOUG LOWE DESIGN ARCHITECT	DESIGNERS: DOUG LOWE; DRAWN BY: C.NAKAHARA, J.CABERA, A.ALMAW, F.KIOUMEHR B. BROWN, C. SANCHEZ, A CHUNG, C. BOYER	CHECKED BY: STRUCTURAL REVIEW:	SHEET LEGEND A-1 ARCHITECTURAL ST-1 STRUCTURAL M-1 MECHANICAL EE-1 ELECTRICAL P-1 WATER SUPPLY SS-1 SANITARY	STATE OF CALIFORNIA DEPARTMENT OF TRANSPORTATION	DIVISION OF ENGINEERING SERVICES ARCHITECTURAL AND STRUCTURAL DESIGN	BRIDGE NO. 54-1216J; POST MILE 177.3/181.1	MOUNTAIN PASS JPOE; PROJECT GENERAL PLAN; SHEET GP

a0_00_00Gp.dgn
DS OSD Imperial Rev. 11/98 26-FEB-2013 09:04

ORIGINAL SCALE IN INCHES FOR REDUCED PLANS 0 1 2 3

UNIT 3584
PROJECT NUMBER & PHASE 08000006281
EA 368501

DISREGARD PRINTS BEARING EARLIER REVISION DATES → 11-01-10 11-30-12

REVISION DATES (PRELIMINARY STAGE ONLY) SHEET X OF X

26-FEB-2013 09:04
a0_00_00Gp.dgn

INDEX TO PLANS

DIST.	COUNTY	ROUTE	POST MILES TOTAL PROJECT	SHEET NO.	TOTAL SHEETS
08	SBd	15	177.3/181.1	270	710

DOUG LOWE 12-12-12
LICENSED ARCHITECT DATE

LICENSED ARCHITECT DOUG LOWE No. C-15341 Exp. 06-30-13 STATE OF CALIFORNIA

2-25-13
PLANS APPROVAL DATE

The State of California or its officers or agents shall not be responsible for the accuracy or completeness of electronic copies of this plan sheet.

ACCESSIBILITY DESIGN APPROVAL STAMP DOT / DES / OTA
08-368501
DISTRICT - EA
Reviewed by: Y.A. WANG
Date: 03-30-09

CALIFORNIA STATE FIRE MARSHAL APPROVED
Approval of this plan does not authorize or approve any omission or deviation from applicable regulations. Final approval is subject to field inspection. One set of approved plans shall be available on the project site at all times.
Reviewed by: G. ANDERSEN
Approval date: 01-20-2011

ARCHITECTURAL

GP	GENERAL PLAN
A0-0.1	INDEX OF DRAWINGS 1
A0-0.2	INDEX OF DRAWINGS 2
A0-0.3	INDEX OF DRAWINGS 3
A0-1	ARCHITECTURAL ABBREVIATIONS, SYMBOLS
A0-1.1	GENERAL NOTES
A0-2.3	CODE ANALYSIS: CVEF DATA, SITE
A0-2.4	CODE ANALYSIS: CVEF EXITING - OFFICE WING, SOUTH
A0-2.5	CODE ANALYSIS: CVEF EXITING - OFFICE WING, NORTH
A0-2.6	CODE ANALYSIS: CVEF EXITING - INSPECTION AREA WING
A0-3.1	ACCESSIBILITY STANDARD DETAILS
A0-3.2	ACCESSIBILITY STANDARD DETAILS
A0-3.3	ACCESSIBILITY STANDARD DETAILS
A0-3.4	ACCESSIBILITY STANDARD DETAILS
A0-3.5	ACCESSIBILITY STANDARD DETAILS
A0-3.6	ACCESSIBLE TRUCK PARKING

CVEF

A7-0.1	SITE PLAN, CVEF
A7-0.2	FINISH SCHEDULE 1
A7-0.3	FINISH SCHEDULE 2
A7-0.4	FINISH SCHEDULE 3
A7-0.5	FINISH SCHEDULE 4
A7-0.6	FINISH SCHEDULE 5
A7-0.7	FINISH SCHEDULE - SIGNAGE
A7-0.8	DOOR SCHEDULE 1
A7-0.9	DOOR SCHEDULE 2
A7-0.10	CURTAIN WALL SYSTEM SCHEDULE 1
A7-0.11	CURTAIN WALL SYSTEM SCHEDULE 2
A7-0.12	CURTAIN WALL SYSTEM AND WINDOW SCHEDULES
A7-0.13	LOUVER SCHEDULE
A7-0.16	CONCRETE WALK PLAN
A7-0.17	PAVING PLAN 1
A7-0.18	PAVING PLAN 2
A7-0.18.1	PAVING PLAN 3
A7-0.19	LANDSCAPE FURNITURE 1
A7-0.20	LANDSCAPE FURNITURE 2
A7-0.21	LANDSCAPE AREA WALL DETAILS
A7-0.22	CONCRETE WALL BARRIER PLAN - ELEVATION
A7-0.23	CONCRETE WALL BARRIER DETAILS
A7-0.24	TRASH BIN ENCLOSURE

ARCH, continued

A7-1	FLOOR PLAN
A7-2	MASONRY WALL PLAN
A7-2.1	CMU WALL TYPES AND CAP TYPES
A7-3	ENLARGED OFFICE PLAN
A7-3.1	ENLARGED OFFICE PLAN
A7-4	ENLARGED INSPECTION AREA PLAN
A7-5	PARTIAL WINDOW PLAN 1
A7-6	PARTIAL WINDOW PLAN 2
A7-7	ENLARGED RESTROOM AREA
A7-8	OBSERVATION ROOM PLAN
A7-9	REFLECTED CEILING PLAN OFFICE
A7-10	REFLECTED CEILING PLAN INSPECTION AREA
A7-11	ROOF PLAN
A7-12	EXTERIOR ELEVATIONS 1
A7-13	EXTERIOR ELEVATIONS 2
A7-14	EXTERIOR ELEVATIONS 3
A7-15	BUILDING SECTIONS 1
A7-16	BUILDING SECTIONS 2
A7-17	BUILDING SECTIONS 3
A7-18	BUILDING SECTIONS 4
A7-19	WALL SECTIONS 1
A7-20	WALL SECTIONS 2
A7-21	WALL SECTIONS 3
A7-22	WALL SECTIONS 4
A7-22.1	WALL SECTIONS 5
A7-23	METAL ROOF AND SIDING DETAILS 1
A7-24	METAL ROOF AND SIDING DETAILS 2
A7-25	METAL ROOF AND SIDING DETAILS 3
A7-26	METAL ROOF AND SIDING DETAILS 4
A7-27	METAL ROOF AND SIDING DETAILS 5
A7-28	METAL ROOF AND SIDING DETAILS 6
A7-29	METAL ROOF AND SIDING DETAILS 7
A7-30	METAL ROOF AND SIDING DETAILS 8
A7-31	METAL ROOF AND SIDING DETAILS 9
A7-32	METAL ROOF AND SIDING DETAILS 10
A7-32.1	METAL ROOF AND SIDING DETAILS 11
A7-33	RAIN GUTTER DETAILS
A7-34	ROOF PENETRATION DETAILS
A7-35	ROOF SCUPPER DETAILS 1
A7-36	ROOF SCUPPER DETAILS 2
A7-38	MISCELLANEOUS DETAILS
A7-39	WALL DETAILS 1
A7-40	WALL DETAILS 2
A7-41	WALL DETAILS 3
A7-42	WALL DETAILS 4
A7-42.1	FABRICATED STEEL SIGN
A7-43	DOOR DETAILS 1
A7-44	DOOR DETAILS 2
A7-45	DOOR DETAILS 3
A7-46	GATE DETAILS
A7-47	CURTAIN WALL DETAILS 1
A7-48	CURTAIN WALL DETAILS 2
A7-49	CURTAIN WALL DETAILS 3
A7-50	CURTAIN WALL DETAILS 4
A7-51	WINDOW DETAILS 5
A7-52	WINDOW DETAILS 6
A7-53	WINDOW DETAILS 7
A7-53.1	WINDOW DETAILS 8
A7-53.2	1-HOUR DETAILS-ELECTRICAL ROOM
A7-53.3	1-HOUR DETAILS

ARCH, continued

A7-54	INTERIOR ELEVATIONS 1
A7-55	INTERIOR ELEVATIONS 2
A7-56	INTERIOR ELEVATIONS 3
A7-56.1	INTERIOR ELEVATIONS 3.1
A7-57	INTERIOR ELEVATIONS 4
A7-57.1	INTERIOR ELEVATIONS 4.1
A7-58	INTERIOR ELEVATIONS 5
A7-59	INTERIOR ELEVATIONS 6
A7-60	INTERIOR ELEVATIONS 7
A7-61	INTERIOR ELEVATIONS 8
A7-62	INTERIOR ELEVATIONS 9
A7-63	INTERIOR ELEVATIONS 10
A7-64	INTERIOR ELEVATONS 11
A7-65	INTERIOR ELEVATIONS 12
A7-66	INTERIOR ELEVATIONS 13
A7-67	INTERIOR ELEVATIONS 14
A7-67.1	CERAMIC TILE DETAILS
A7-68	CASEWORK FLOOR PLAN 1
A7-69	CASEWORK FLOOR PLAN 2
A7-70	CASEWORK 1
A7-71	CASEWORK 1
A7-72	CASEWORK 1
A7-73	CASEWORK 1
A7-74	CASEWORK 1
A7-75	CASEWORK 2
A7-76	CASEWORK 3, 4
A7-77	CASEWORK 4
A7-78	CASEWORK 3, 4, 5
A7-79	CASEWORK 6
A7-80	CASEWORK 7
A7-81	CASEWORK 8
A7-82	CASEWORK 9
A7-83	CASEWORK 10
A7-84	CASEWORK 11
A7-85	CASEWORK 12, 13
A7-86	CASEWORK 14
A7-86.1	CASEWORK 15
A7-87	CASEWORK 16, 17
A7-88	CASEWORK 16, 17
A7-89	CASEWORK 19
A7-90	CASEWORK 20
A7-91	CASEWORK 21
A7-92	CASEWORK 22
A7-93	LOUVER DETAILS
A7-94	PRECAST CONCRETE DETAILS AND RELOCATABLE WALL
A7-95	INSPECTION PIT
A7-95.1	INSPECTION PIT DETAILS
A7-96	LADDER
A7-97	INSPECTION AREA OFFICE CANOPY
A7-98	INSPECTION AREA OFFICE DETAILS
A8-1	CANOPY PLANS
A8-2	CANOPY ELEVATIONS
A9-1	AIR RESOURCE BOARD SITE PLAN
A9-2	AIR RESOURCE BOARD CANOPY
A9-3	AIR RESOURCE BOARD CANOPY DETAILS
A10-1	FIRE PUMP AND WELL HOUSE
A10-2	FIRE PUMP AND WELL HOUSE
A11-1	COMMUNICATION BUILDING
A11-2	COMMUNICATION BUILDING
A12-1	WATER SUPPLY SYSTEM

DESIGN	BY D. LOWE	CHECKED C.FAUST	
DETAILS	BY B. BROWN	CHECKED C.FAUST	
QUANTITIES	BY	CHECKED	

STATE OF CALIFORNIA
DEPARTMENT OF TRANSPORTATION

DIVISION OF ENGINEERING SERVICES
ARCHITECTURAL AND STRUCTURAL DESIGN

BRIDGE NO. 54-1216J
POST MILE 177.3/181.1

MOUNTAIN PASS JPOE
PROJECT
INDEX OF DRAWINGS 1

SHEET **A0-0.1**

a0_00_01index1_.dgn
DS OSD Imperial Rev. 11/98 14-MAY-2013 06:43

ORIGINAL SCALE IN INCHES FOR REDUCED PLANS 0 1 2 3

UNIT 3584
PROJECT NUMBER & PHASE 08000006281
EA 368501

DISREGARD PRINTS BEARING EARLIER REVISION DATES → 11-01-10 11-30-12

REVISION DATES (PRELIMINARY STAGE ONLY) SHEET OF

14-MAY-2013 06:43
a0_00_01index1_.dgn

STRUCTURAL

CVEF

ST-0B	STRUCTURAL PLAN
ST-1	LEGEND
ST-1A	WOOD FRAMING STANDARD NOTES
ST-1B	WOOD FRAMING STANDARD DETAILS
ST-2	CONCRETE STANDARD
ST-3	CONCRETE MASONRY UNIT STANDARD
ST-4A	CONCRETE MASONRY UNIT DETAILS
ST-4B	CONCRETE MASONRY UNIT DETAILS
ST-4C	CMU CORNER LAYOUT AND DETAILS
ST-4D	CONCRETE MASONRY UNIT DETAILS
ST-5A	COLD FORM STEEL USEFUL INFORMATION AND DETAILS
ST-5B	COLD FORM STEEL WALL AND CEILING DETAILS
ST-5C	COLD FORM STEEL CEILING OPENING DETAILS
ST-5D	COLD FORM STEEL STUD WALL DETAILS
ST-5E	COLD FORM STEEL STUD WALL DETAILS
ST-5F	COLD FORM STEEL CEILING JOIST TO WALL CONNECTIONS
ST-5G	COLD FORM STEEL CEILING JOIST TO WALL DETAILS
ST-5H	COLD FORM STEEL FRAMING DETAILS
ST-6A	STRUCTURAL EXCAVATION LIMITS
ST-6B	STRUCTURAL EXCAVATION LIMITS
ST-6E	STRUCTURAL EXCAVATION AND BACKFILL DETAILS

CVEF - CHP OFFICE

ST7-0A	DESIGN CRITERIA AND DETAIL NOTES
ST7-0B	DESIGN CRITERIA AND DETAIL NOTES
ST7-1	MASONRY WALL PLAN INDEX
ST7-2	PARTIAL FOOTING PLAN A
ST7-3	PARTIAL FOOTING PLAN B
ST7-4	PARTIAL FOOTING PLAN C
ST7-5	PARTIAL MASONRY WALL PLAN A
ST7-6	PARTIAL MASONRY WALL PLAN B
ST7-7	PARTIAL MASONRY WALL PLAN C
ST7-8	ROOF FRAMING PLAN INDEX
ST7-9	PARTIAL ROOF FRAMING PLAN A
ST7-10	PARTIAL ROOF FRAMING PLAN B
ST7-11	PARTIAL ROOF FRAMING PLAN C
ST7-12	OBSERVATION ROOM FRAMING PLAN
ST7-13	CEILING FRAMING PLAN
ST7-14	BUILDING SECTION
ST7-15	PARTIAL LONGITUDINAL BUILDING SECTION A
ST7-16	PARTIAL LONGITUDINAL BUILDING SECTION A
ST7-17	PARTIAL LONGITUDINAL BUILDING SECTION B
ST7-18	PARTIAL LONGITUDINAL BUILDING SECTION B
ST7-19	LONGITUDINAL BUILDING SECTION
ST7-20	PARTIAL BUILDING SECTION
ST7-21	PARTIAL INTERIOR FRAMING ELEVATION
ST7-22	BRACED FRAME ELEVATION
ST7-23	BUILDING SECTION
ST7-24	PARTIAL BUILDING SECTION
ST7-25	OBSERVATION ROOM SECTION
ST7-26	BRACED FRAME ELEVATION
ST7-27	BRACED FRAME ELEVATION
ST7-28	BRACED FRAME ELEVATION
ST7-29	PARTIAL BUILDING SECTION
ST7-30	PARTIAL BUILDING SECTION
ST7-31	FOOTING INTERSECTION LAYOUTS
ST7-32	FOOTING DETAILS

CVEF - CHP OFFICE, continued

ST7-33	FOOTING DETAILS
ST7-34	FOOTING DETAILS
ST7-35	FOOTING DETAILS
ST7-36	FOOTING DETAILS
ST7-37	HSS COLUMN BASE DETAILS
ST7-38	BRACED FRAME CORNER DETAILS
ST7-39	BRACED FRAME CORNER DETAILS
ST7-40	BRACED FRAME DETAILS
ST7-41	BRACED FRAME DETAILS
ST7-42	BRACED FRAME DETAILS
ST7-43	BRACED FRAME DETAILS
ST7-44	BRACED FRAME DETAILS
ST7-45	BRACED FRAME DETAILS
ST7-46	FRAMING DETAILS
ST7-47	FRAMING DETAILS
ST7-48	FRAMING DETAILS
ST7-49	FRAMING DETAILS
ST7-50	OBSERVATION ROOM FRAMING DETAILS
ST7-51	OBSERVATION ROOM FRAMING DETAILS
ST7-52	GUTTER SUPPORT DETAILS
ST7-53	ROOF CONNECTION DETAILS
ST7-54	ROOF CONNECTION DETAILS
ST7-55	ROOF CONNECTION DETAILS
ST7-56	ROOF CONNECTION DETAILS
ST7-57	ROOF CONNECTION DETAILS
ST7-58	ROOF CONNECTION DETAILS
ST7-59	ROOF CONNECTION DETAILS
ST7-60	ROOF CONNECTION DETAILS
ST7-61	ROOF CONNECTION DETAILS
ST7-62	ROOF CONNECTION DETAILS
ST7-63	ROOF CONNECTION DETAILS
ST7-64	ROOF CONNECTION DETAILS
ST7-65	ROOF CONNECTION DETAILS
ST7-66	ROOF CONNECTION DETAILS
ST7-67	ROOF CONNECTION DETAILS
ST7-68	ROOF CONNECTION DETAILS
ST7-69	WALL FRAMING DETAILS
ST7-70	WALL FRAMING DETAILS
ST7-71	WALL FRAMING DETAILS
ST7-72	BRACE FRAME PLATE DETAILS
ST7-73	BRACE FRAME PLATE DETAILS
ST7-74	FRAMING DETAILS
ST7-75	CMU WALL ENCLOSURE DETAILS
ST7-76	CMU WALL LAYOUT AND ELEVATION
ST7-77	CMU WALL DETAILS
ST7-78	WATER WELL HOUSE FOUNDATION
ST7-79	WATER SUPPLY SYSTEM FOUNDATION

CVEF - TRUCK INSPECTION BUILDING

ST7-80	FOUNDATION PLAN
ST7-81	ROOF FRAMING PLAN
ST7-82	BUILDING SECTION
ST7-83	FRAME ELEVATION 1
ST7-84	FRAME ELEVATION 2
ST7-85	FRAME ELEVATION 3
ST7-86	FRAME ELEVATION 4
ST7-87	FOOTING DETAILS 1
ST7-88	FOOTING DETAILS 2
ST7-89	FOOTING DETAILS 3
ST7-90	CONCRETE COLUMN DETAILS
ST7-91	PARTIAL BUILDING SECTION 1

CVEF - TRUCK INSPECTION BUILDING, continued

ST7-92	PARTIAL BUILDING SECTION 2
ST7-93	PARTIAL BUILDING SECTION 3
ST7-94	PARTIAL BUILDING SECTION 4
ST7-95	FRAME/COLUMN CONNECTION DETAILS 1
ST7-96	FRAME/COLUMN CONNECTION DETAILS 2
ST7-97	ROOF FRAMING DETAILS 1
ST7-98	ROOF FRAMING DETAILS 2
ST7-99	STEEL FRAMING DETAILS 1
ST7-100	STEEL FRAMING DETAILS 2
ST7-101	CAGED LADDER SUPPORT PLAN, ELEVATION AND SECTION
ST7-101.1	CAGED LADDER SUPPORT PLATFORM GUARDRAIL DETAILS
ST7-101.2	CAGED LADDER SUPPORT PLATFORM FRAMING DETAILS
ST7-102	MECHANICAL WELL DETAILS
ST7-103	OFFICE DETAILS
ST7-104	BASE PLATE DETAILS
ST7-105	INSPECTION PIT PLAN AND SECTIONS
ST7-106	INSPECTION PIT PLAN AND SECTIONS
ST7-107	INSPECTION PIT SECTIONS AND DETAILS 2
ST7-108	INSPECTION PIT SECTIONS AND DETAILS 3
ST7-109	INSPECTION PIT DETAILS 1
ST7-110	INSPECTION PIT DETAILS 2
ST7-111	STATIC SCALE PIT DETAILS 1
ST7-112	STATIC SCALE PIT DETAILS 2
ST7-113	STATIC SCALE PIT DETAILS 3
ST7-114	STATIC SCALE PIT DETAILS 4
ST7-115	MISCELLANEOUS FRAMING DETAILS
ST7-116	TRASH ENCLOSURE DETAILS
ST7-117	INSPECTION BUILDING FASCIA FRAMING
ST7-118	INSPECTION PIT SECTION AND COVER DETAILS
ST7-119	INSPECTION PIT SECTION AND COVER DETAILS

AIR RESOURCE BOARD CANOPY

ST9-0	DESIGN CRITERIA AND DETAIL NOTES
ST9-1	FOUNDATION PLAN
ST9-2	FOUNDATION DETAILS

MISCELLANEOUS DETAILS

ST10-1	MISCELLANEOUS DETAILS
ST10-2	PRECAST BUILDING FOOTING

LOGS OF TEST BORINGS

COMMERCIAL VEHICLE INSPECTION FACILITY

LOG OF TEST BORINGS 1 OF 3
LOG OF TEST BORINGS 2 OF 3
LOG OF TEST BORINGS 3 OF 3

DIST.	COUNTY	ROUTE	POST MILES TOTAL PROJECT	SHEET NO.	TOTAL SHEETS
08	SBd	15	177.3/181.1	271	710

DOUG LOWE 12-12-12
LICENSED ARCHITECT DATE

LICENSED ARCHITECT DOUG LOWE No. C-15341 Exp. 06-30-13 STATE OF CALIFORNIA

2-25-13
PLANS APPROVAL DATE

The State of California or its officers or agents shall not be responsible for the accuracy or completeness of electronic copies of this plan sheet.

ACCESSIBILITY DESIGN APPROVAL STAMP DOT / DES / OTA
08-368501
DISTRICT - EA
Reviewed by: Y.A. WANG
Date: 03-30-09

CALIFORNIA STATE FIRE MARSHAL APPROVED
Approval of this plan does not authorize or approve any omission or deviation from applicable regulations. Final approval is subject to field inspection. One set of approved plans shall be available on the project site at all times.
Reviewed by: G. ANDERSEN
Approval date: 01-20-2011

DESIGN	BY D. LOWE	CHECKED C.FAUST	
DETAILS	BY B.BROWN	CHECKED C.FAUST	
QUANTITIES	BY	CHECKED	

STATE OF CALIFORNIA
DEPARTMENT OF TRANSPORTATION

DIVISION OF ENGINEERING SERVICES
ARCHITECTURAL AND STRUCTURAL DESIGN

BRIDGE NO. 54-1216J
POST MILE 177.3/181.1

MOUNTAIN PASS JPOE
PROJECT INDEX OF DRAWINGS 2

SHEET **A0-0.2**

a0_00_02index2_.dgn
DS OSD Imperial Rev. 11/98 26-FEB-2013 09:57

ORIGINAL SCALE IN INCHES FOR REDUCED PLANS 0 1 2 3

UNIT 3584
PROJECT NUMBER & PHASE 08000006281
EA 368501

DISREGARD PRINTS BEARING EARLIER REVISION DATES
REVISION DATES (PRELIMINARY STAGE ONLY) 11-01-10 11-30-12
SHEET OF

26-FEB-2013 09:57
a0_00_02index2_.dgn

DIST.	COUNTY	ROUTE	POST MILES TOTAL PROJECT	SHEET NO.	TOTAL SHEETS
08	SBd	15	177.3/181.1	272	710

DOUG LOWE 12-12-12
LICENSED ARCHITECT DATE

LICENSED ARCHITECT DOUG LOWE No. C-15341 Exp. 06-30-13 STATE OF CALIFORNIA

2-25-13
PLANS APPROVAL DATE

The State of California or its officers or agents shall not be responsible for the accuracy or completeness of electronic copies of this plan sheet.

ACCESSIBILITY DESIGN APPROVAL STAMP
DOT / DES / OTA
08-368501
DISTRICT - EA
Reviewed by: Y.A. WANG
Date: 03-30-09

CALIFORNIA STATE FIRE MARSHAL APPROVED
Approval of this plan does not authorize or approve any omission or deviation from applicable regulations. Final approval is subject to field inspection. One set of approved plans shall be available on the project site at all times.
Reviewed by: G. ANDERSEN
Approval date: 01-20-2011

MECHANICAL

M0-1 MECHANICAL ABBREVIATIONS AND LEGEND

CVEF

M7-0.0 CERTIFICATE OF COMPLIANCE FORMS
M7-0.1 MECHANICAL SITE PLAN
M7-1.1 HVAC PLAN NO. 1
M7-1.2 HVAC PLAN NO. 2
M7-1.3 HVAC - EQUIPMENT SCHEDULE
M7-1.4 HVAC PLAN NO. 3
M7-1.5 MECHANICAL PLAN NO. 1
M7-1.6 MECHANICAL PLAN NO. 2
M7-1.7 MECHANICAL PLAN NO. 3
M7-1.8 DOMESTIC WATER NO. 1
M7-1.9 DOMESTIC WATER NO. 2
M7-1.10 SANITARY SEWER NO. 1
M7-1.11 SANITARY SEWER NO. 2

M8-3.1 MECHANICAL DETAILS NO. 1
M8-3.2 MECHANICAL DETAILS NO. 2
M8-3.3 LPG TANK AND DETAILS
M8-3.4 INSPECTION PIT SUPPLY FAN
M8-3.5 STATIC SCALE SUMP PUMP DETAILS
M8-3.6 MECHANICAL DETAILS NO. 3
M8-3.7 INSPECTION PIT SUPPLY AIR SYSTEM
M8-3.8 GENERATOR DETAILS

FIRE PROTECTION PLAN

CVEF

FS-1 FIRE PROTECTION PLAN
FS-3 FIRE PUMP AND WELL HOUSE PLAN
FS-4 DETAILS 1
FS-5 PARTIAL PLANS
FS-7 DETAILS 2
FS-8 SFM ALTERNATE METHOD OF DESIGN 1
FS-9 SFM ALTERNATE METHOD OF DESIGN 2

ELECTRICAL

SITE PLAN

EE0-0.1 LEGEND
EE0-0.2 ABBREVIATIONS
EE0-0.3 OUTDOOR LIGHTING CERTIFICATE OF COMPLIANCE FORMS
EE0-1 SITE PLAN 1
EE0-2 SITE PLAN 2
EE0-3 SITE PLAN 3
EE0-4 COMMERCIAL VEHICLE ENFORCEMENT FACILITY
EE0-5 SITE PLAN 4
EE0-6 SITE PLAN 5
EE0-7 SITE PLAN 6

ELEC, continued

EE0-13 ENLARGED PLAN
EE0-14 WSB AND SORTER WIM SCALES ENLARGED PLAN
EE0-15 RADIATION DETECTION CONTROL PANELS PLAN
EE0-16 CONDUIT AND CONDUCTOR SCHEDULE 1
EE0-17 CONDUIT AND CONDUCTOR SCHEDULE 2
EE0-18 RADIATION DETECTION CONTROL PANEL DETAILS
EE0-19 RADIATION DETECTION SYSTEM INTERCONNECTION DIAGRAM

EE0-20 SWIM CAMERA AND ILLUMINATOR DETAILS
EE0-21 LANE CHANGEABLE MESSAGE SIGN MESSAGES
EE0-22 VMSS AND SWIM SYSTEMS INTERCONNECTION DIAGRAM
EE0-23 SWIM CONTROL CABINET
EE0-24 ARB/HIGH MAST LIGHT CONTROL SERVICE PEDESTAL
EE0-25 HIGH MAST LIGHT SCHEMATIC DIAGRAM
EE0-26 CVEF DOMESTIC WATER SUPPLY SYSTEM CONTROL PANEL
EE0-27 CVEF DOMESTIC WATER SUPPLY SYSTEM SCHEMATIC DIAGRAM
EE0-28 CLARIFIER CONTROL PANEL
EE0-29 CLARIFIER SCHEMATIC DIAGRAM

EE0-30 PROGRAMMABLE LOGIC CONTROLLER
EE0-31 CONTROL CONSOLE
EE0-32 COMMUNICATIONS TOWER DETAILS
EE0-33 CCTV CAMERA POLE DETAILS
EE0-34 PUBLIC ADDRESS AND CCTV SYSTEMS

CVEF

EE7-0.1 CERTIFICATE OF COMPLIANCE FORMS
EE7-1.1 OFFICE AREA POWER PLAN 1
EE7-1.2 OFFICE AREA POWER PLAN 2
EE7-1.3 OFFICE AREA LIGHTING PLAN 1
EE7-1.4 OFFICE AREA LIGHTING PLAN 2
EE7-1.5 OFFICE AREA COMMUNICATION PLAN 1
EE7-1.6 OFFICE AREA COMMUNICATION PLAN 2
EE7-1.7 OFFICE AREA FIRE ALARM PLAN
EE7-1.8 OFFICE AREA INTRUSION ALARM PLAN
EE7-1.9 OFFICE AREA INTRUSION ALARM SCHEDULE

EE7-2.1 INSPECTION AREA POWER PLAN 1
EE7-2.2 INSPECTION AREA POWER PLAN 2
EE7-2.3 INSPECTION AREA LIGHTING PLAN
EE7-2.4 INSPECTION PIT POWER PLAN
EE7-2.5 INSPECTION PIT LIGHTING PLAN
EE7-2.6 INSPECTION AREA COMMUNICATION PLAN
EE7-2.7 INSPECTION AREA FIRE ALARM PLAN
EE7-2.8 INSPECTION AREA INTRUSION ALARM PLAN
EE7-2.9 INSPECTION AREA INTRUSION ALARM SCHEDULE
EE7-2.10 CANOPY 1, FLAG POLE, PLANTERS, LANDSCAPING LIGHTING PLAN
EE7-2.11 CANOPY 2, SIGN, PLANTERS, LANDSCAPING LIGHTING PLAN

ELEC, continued

CVEF, continued

EE7-3.1 OBSERVATION ROOM ENLARGED PLAN
EE7-3.2 OBSERVATION ROOM ELEVATION
EE7-3.3 OPEN OFFICES ENLARGED PLAN
EE7-3.4 WATER TREATMENT ROOM ENLARGED PLAN
EE7-3.5 INSPECTION OFFICE ENLARGED PLAN

EE7-4.1 ELECTRICAL ROOM DETAILS
EE7-4.2 MECHANICAL ROOM DETAILS
EE7-4.3 LIGHTING DETAILS
EE7-4.4 COMMUNICATION DETAILS

EE7-5.1 SCHEMATIC DIAGRAM 1
EE7-5.2 SCHEMATIC DIAGRAM 2
EE7-5.3 SCHEMATIC DIAGRAM 3
EE7-5.4 SCHEMATIC DIAGRAM 4

EE7-6.1 INSPECTOR'S CONTROL STATION DETAILS 1
EE7-6.2 INSPECTOR'S CONTROL STATION DETAILS 2
EE7-6.3 INSPECTION AREAS MISCELLANEOUS DETAILS 1
EE7-6.4 INSPECTION AREAS MISCELLANEOUS DETAILS 2

EE7-7.1 POWER DISTRIBUTION DIAGRAM 1
EE7-7.2 POWER DISTRIBUTION DIAGRAM 2
EE7-7.3 PANEL KEY
EE7-7.4 PANEL SCHEDULE 1
EE7-7.5 PANEL SCHEDULE 2
EE7-7.6 PANEL SCHEDULE 3
EE7-7.7 SWITCHBOARD DETAILS

EE7-8.1 BUILDING WATER CONTROL SYSTEM
EE7-8.2 BUILDING WATER CONTROL PANEL DETAILS

COMMON SHEETS

EE8-1 LIGHTING FIXTURES SCHEDULE 1
EE8-2 LIGHTING FIXTURES SCHEDULE 2
EE8-3 SERVICE AND GROUNDING DETAILS
EE8-4 INDOOR LIGHTING SCHEMATIC DIAGRAMS

FIRE PUMP AND WELL HOUSE

EE10-1 POWER AND LIGHTING PLAN
EE10-2 PANEL SCHEDULE AND DETAILS

CVEF COMMUNICATION HUB

EE11-1 POWER AND LIGHTING PLAN
EE11-2 PANEL SCHEDULE AND DETAILS

WATER SUPPLY

SITE PLAN

W0-0 NOTES, LEGENDS & ABBREVIATIONS
W0-1 CVEF WATER SYSTEM SITE PLAN

CVEF

W7-1 CVEF WATER SUPPLY SYSTEM PLAN
W7-2 CVEF WATER TREATMENT SYSTEM PLAN
W7-3 CVEF DOMESTIC WATER WELL DETAILS
W7-4 HORIZONTAL WATER PRESSURE TANK DETAILS
W7-5 VERTICAL PRESSURE TANK, STORAGE TANK AND DETAILS

W7-6 PUMPS, CHLORINATION EQUIPMENT AND DETAILS
W7-7 WATER PIPE AND WATER SYSTEM DETAILS

WASTE WATER

SITE PLAN

SS0-0 NOTES, LEGENDS & ABBREVIATIONS
SS0-1 CVEF SEWER SYSTEM SITE PLAN

CVEF

SS7-1 CVEF SEPTIC TANK
SS7-2 CLARIFIER (HOLDING TANK)
SS7-3 LEACH FIELD, MONITOR WELL, PIPE DETAILS
SS7-4 CLEANOUT AND DETAILS

DESIGN	BY D. LOWE	CHECKED C.FAUST	
DETAILS	BY B.BROWN	CHECKED C.FAUST	
QUANTITIES	BY	CHECKED	

STATE OF CALIFORNIA DEPARTMENT OF TRANSPORTATION

DIVISION OF ENGINEERING SERVICES ARCHITECTURAL AND STRUCTURAL DESIGN

BRIDGE NO. 54-1216J
POST MILE 177.3/181.1

MOUNTAIN PASS JPOE
PROJECT
INDEX OF DRAWINGS 3

SHEET A0-0.3

ORIGINAL SCALE IN INCHES FOR REDUCED PLANS 0 1 2 3

UNIT 3584
PROJECT NUMBER & PHASE 08000006281
EA 368501

DISREGARD PRINTS BEARING EARLIER REVISION DATES
REVISION DATES (PRELIMINARY STAGE ONLY) 11-01-10 11-30-12
SHEET OF

a0_00_03index3_.dgn
DS OSD Imperial Rev. 11/98 14-MAY-2013 06:43

14-MAY-2013 06:43
a0_00_03index3_.dgn

ARCHITECTURAL ABBREVIATIONS

&	AND
∟	ANGLE
℄	CENTER LINE
∅	DIAMETER OR ROUND
□	SQUARE
d	PENNY
°	DEGREE
A/C	AIR CONDITIONING
AB	ANCHOR BOLT
ABV	ABOVE
AC	ASPHALT CONCRETE
ACC	ACCESSIBLE
ACOUS	ACOUSTICAL
ADJ	ADJUSTABLE
AG	AGRICULTURAL
ALT	ALTERNATE
ALUM	ALUMINUM
APA	AMERICAN PLYWOOD ASSOCIATION
ARB	AIR RESOURCES BOARD
ARCH	ARCHITECTURAL, ARCHITECT
ASPH	ASPHALT
BD	BOARD
BIT	BITUMINOUS
BLDG	BUILDING
BLK	BLOCK
BLKG	BLOCKING
BM	BEAM
BN	BOUNDARY NAILING
BOT	BOTTOM
BR	BRIDGE
BTM	BOTTOM
BTWN	BETWEEN
BUR	BUILT-UP ROOFING
CCTV	CLOSED CIRCUIT TV
CJ	CONTROL JOINT
CL	CHAIN LINK
CAB	CABINET
CB	CATCH BASIN
CEM	CEMENT
CER	CERAMIC
CFS	COLD FORMED STEEL
CH	CLOTHES HOOK
CIDH	CAST IN DRILLED HOLE
CIP	CAST IN PLACE
CKBD	CHALKBOARD
CLG	CEILING
CMU	CONCRETE MASONRY UNIT
CLO	CLOSET
CLR	CLEAR
COL	COLUMN
CONC	CONCRETE
CONN	CONNECTION
CONST	CONSTRUCTION
CONT	CONTINUOUS
CORR	CORRIDOR
CPT	CARPET
CT	CERAMIC TILE
CTR	CENTER
CTSK	COUNTERSUNK
CVEF	COMMERCIAL VEHICLE ENFORCEMENT FACILITY
CY	CUBIC YARD
D	DEPTH
DBL	DOUBLE
DEPT	DEPARTMENT
DET	DETAIL
DF	DOUGLAS FIR
DIA	DIAMETER
DIM	DIMENSION
DN	DOWN
DP	DEEP
DR	DOOR
DS	DOWNSPOUT
DWG	DRAWING
DWR	DRAWER
(E)	EXISTING
E	EAST
EA	EACH
EEWS	EMERGENCY EYE WASH & SHOWER
EF	EXHAUST FAN
EHD	ELECTRIC HAND DRYER
EIFS	EXTERIOR INSULATION FINISHING SYSTEM
EJ	EXPANSION JOINT
EL	ELEVATION (HEIGHT)
ELEC	ELECTRICAL
ELEV	ELEVATION (VIEW)
ELVR	ELEVATOR
EMER	EMERGENCY
EMT	EMERGENCY MEDICAL TECHNICIAN
ENCL	ENCLOSURE
EP	EDGE OF PAVEMENT
EQ	EQUAL
EPB	ELECTRICAL PANEL BOARD
EQUIP	EQUIPMENT
ESCL	ESCALATOR
ETW	EDGE OF TRAVEL WAY
EWC	ELECTRIC WATER COOLER
EW/FD	EYE WASH/ SHOWER W/ FLOOR DRAIN
EXP	EXPANSION
EXPO	EXPOSED, EXPOSURE
EXT	EXTERIOR
EXTR	EXTRUDED
FD	FLOOR DRAIN
FDN	FOUNDATION
FE	FIRE EXTINGUISHER
FEC	FIRE EXTINGUISHER CABINET
FF	FINISH FLOOR
FG	FINISH GRADE
FH	FIRE HYDRANT
FHC	FIRE HOSE CABINET
FHMS	FLATHEAD METAL SCREW
FHWS	FLATHEAD WOOD SCREW
FIN	FINISH
FJ	FLOOR JOIST
FLASH	FLASHING
FLR	FLOOR
FLUOR	FLUORESCENT
FOC	FACE OF CONCRETE
FOF	FACE OF FINISH
FOM	FACE OF MASONRY
FOS	FACE OF STUD
FRMG	FRAMING
FRPP	FIBERGLASS REINFORCED PLASTIC PANEL
FT	FEET, FOOT
FTG	FOOTING
FURR	FURRING
FWY	FREEWAY
GA	GAUGE
GAL	GALLON
GALV	GALVANIZED
GB	GRAB BAR
GI	GALVANIZED IRON
GL	GLASS
GLM	GLUE LAMINATED MEMBER
GLZ	GLAZING
GR	GRADE
GSM	GALVANIZED SHEET METAL
GYP	GYPSUM
GYP SHTG	GYPSUM SHEATHING
GYPBD/ GYP BD	GYPSUM BOARD GYPSUM BOARD
HB	HOSE BIB
HC	HOLLOW CORE
HD	HEAD, HOLD DOWN
HDR	HEADER
HDWD	HARDWOOD
HDWR	HARDWARE
HEX	HEXAGONAL
HF	HEMLOCK-FIR
HGR	HANGER
HM	HOLLOW METAL
HMA	HOT MIX ASPHALT
HORIZ	HORIZONTAL
HP	HIGH POINT
HR	HOUR
HSB	HIGH STRENGTH BOLT
HSS	HOLLOW STRUCT SECTION
HT	HEIGHT
HVAC	VENTILATING, HEATING, AIR CONDITIONING
HWY	HIGHWAY
ID	INSIDE DIAMETER
IDF	INTERMEDIATE DISTRIBUTION FRAME
IN	INCH
INFO	INFORMATION
INSUL	INSULATION
INT	INTERIOR
IT	INFORMATION TECHNOLOGY
ISA	INTERNATIONAL SYMBOL OF ACCESSIBILITY
JAN	JANITOR
JB	JUNCTION BOX
JH	JOIST HANGER
JPOE	JOINT PORT OF ENTRY
JST	JOIST
JT	JOINT
KIT	KITCHEN
L	LENGTH
LAB	LABORATORY
LAV	LAVATORY
LBF	POUNDS FORCE
LBS	POUNDS
LF	LINEAR FEET
LKR	LOCKER
LLV	LONG LEG VERTICAL
LOL	LAYOUT LINE
LPG	LIQUIFIED PETROLEUM GAS
LS	LAG SCREW
LVR	LOUVER
M	METER
MAINT	MAINTENANCE
MDF	MAIN DISTRIBUTION FRAME
MAT	MATERIAL
MAX	MAXIMUM
MB	MACHINE BOLT
MBR	MEMBER
MECH	MECHANICAL
MEMB	MEMBRANE
MET	METAL
MTL	METAL
MF	METAL FRAME
MFR	MANUFACTURER
MH	MAN HOLE
MIN	MINIMUM
MIR	MIRROR
MISC	MISCELLANEOUS
MIW	MALLEABLE IRON WASHER
MKBD	MARKER BOARD
MO	MASONRY OPENING
MTD	MOUNTED
MUL	MULLION
N	NORTH
ND	NAPKIN DISPOSAL
NIC	NOT IN CONTRACT
NO	NUMBER
NOM	NOMINAL
NTS	NOT TO SCALE
OA	OVER ALL
OBSC	OBSCURE
OC	ON CENTER
OCC	OCCUPANTS, OCCUPANCY
OD	OUTSIDE DIAMETER
OFF	OFFICE
OFD	OVERFLOW DRAIN
OG	ORIGINAL GROUND
OH	OPPOSITE HAND
OHD	OVERHEAD
OHWS	OVALHEAD WOOD SCREW
OP	OPERATIONS
OPNG	OPENING
OPP	OPPOSITE
OPT	OPTION, OPTIONAL
P	PITCH
PB	POST BASE
PC	POST CAP
PCC	PORTLAND CEMENT CONCRETE
PDF	POWDER DRIVEN FASTENERS
PH	PHILLIPS HEAD
PL	PLATE
PLAM	PLASTIC LAMINATE
PLAS	PLASTER
PLYWD	PLYWOOD
PMF	PRESSED METAL FRAME
POT	PATH OF TRAVEL
PR	PAIR
PRTN	PARTITION
PT	POINT
PTD	PAPER TOWEL DISPENSER
PTD/R	PAPER TOWEL DISPENSER /RECEPTACLE
PVC	POLYVINYL CHLORIDE
PWB	PREFABRICATED WOOD I BEAM
PREFAB	PREFABRICATED
QT	QUARRY TILE
(R)	RELOCATED
R	RADIUS, RISER
R/W	RIGHT OF WAY
RD	ROOF DRAIN
RDWD	REDWOOD
REF	REFERENCE
REFG	REFRIGERATOR
REINF	REINFORCED(ING)
RFEC	RECESSED FIRE EXTINGUISHER CABINET
REQ	REQUIRED
RFG	ROOFING
RFSWN	ROUGHSAWN
RH	ROUND HEAD
RHWS	ROUND HEAD WOOD SCREWS
RJ	ROOF JOIST
RM	ROOM
RO	ROUGH OPENING
RSWN	RESAWN
RTE	ROUTE
RW	RETAINING WALL
RWL	RAINWATER LEADER
S	SOUTH
SC	SOLID CORE
SCHED	SCHEDULE
SD	SOAP DISPENSER
SDST	SELF DRILLING SELF TAPPING
SF	SQUARE FEET/STORE FRONT
SH	SHELF
SHWR	SHOWER
SHT	SHEET
SHTG	SHEATHING
SIM	SIMILAR
SL	SCORE LINE
SMS	SHEET METAL SCREW
SOHD	SECTIONAL OVERHEAD DOOR
SPEC	SPECIFICATION
SPS	STRUCTURAL PLYWOOD SHEATHING
SQ	SQUARE
SRRA	SAFETY ROADSIDE REST AREA
SS	SERVICE SINK
SST	STAINLESS STEEL
STA	STATION
STAG	STAGGER
STD	STANDARD
STL	STEEL
STOR	STORAGE
STRUC	STRUCTURAL
SUSP	SUSPENDED
SWIM	SLOW-WEIGH-IN-MOTION
T	TREAD
T&G	TONGUE & GROOVE
TB	TOLL BOOTH
TC	TOP OF CONCRETE
TEL	TELEPHONE
TEMP	TEMPERED
TER	TERRAZZO
THK	THICK
THLD	THRESHOLD
TJ	TOOLED JOINT
TKBD	TACKBOARD
TN	TOE NAIL
TNVM	TAMPON/NAPKIN VENDING MACHINE
TOC	TOP OF CURB OR CONCRETE
TOP	TOP OF PAVEMENT
TOS	TOE OF SLOPE
TOT	TOTAL
TR	TRASH RECEPTACLE
TOW	TOP OF WALL
TS	TUBE STEEL
TSCD	TOILET SEAT COVER DISPENSER
TTD	TOILET TISSUE DISPENSER
TTY	TELETYPEWRITER
TYP	TYPICAL
UNF	UNFINISHED
UON	UNLESS OTHERWISE NOTED
UR	URINAL
VAR	VARIES
VCT	VINYL COMPOSITION TILE
VEH	VEHICLE
VERT	VERTICAL
VEST	VESTIBULE
VR	VENT RISER
VMSS	VARIABLE MESSAGE SIGN SYSTEM
VTR	VENT THRU ROOF
W	WEST
W/	WITH
W/O	WITHOUT
WC	WATER CLOSET
WD	WOOD
WDW	WINDOW
WF	WIDE FLANGE
WH	WATER HEATER
WIM	WEIGH IN MOTION
WO	WOMEN
WP	WORKING POINT
WR	WATER RESISTANT
WSB	WEIGH STATION BYPASS
WSCT	WAINSCOT
WT	WEIGHT
WTPR	WATERPROOFING
WWF	WELDED WIRE FABRIC
YD	YARD

DIST.	COUNTY	ROUTE	POST MILES TOTAL PROJECT	SHEET NO.	TOTAL SHEETS
08	SBd	15	177.3/181.1	273	710

DOUG LOWE 12-12-12
LICENSED ARCHITECT DATE

LICENSED ARCHITECT DOUG LOWE No. C-15341 Exp. 06-30-13 STATE OF CALIFORNIA

2-25-13
PLANS APPROVAL DATE

The State of California or its officers or agents shall not be responsible for the accuracy or completeness of electronic copies of this plan sheet.

ACCESSIBILITY DESIGN APPROVAL STAMP DOT / DES / OTA
08-368501
DISTRICT - EA
Reviewed by: Y.A. WANG
Date: 03-30-09

CALIFORNIA STATE FIRE MARSHAL APPROVED
Approval of this plan does not authorize or approve any omission or deviation from applicable regulations. Final approval is subject to field inspection. One set of approved plans shall be available on the project site at all times.
Reviewed by: G. ANDERSEN
Approval date: 01-20-2011

SYMBOLS

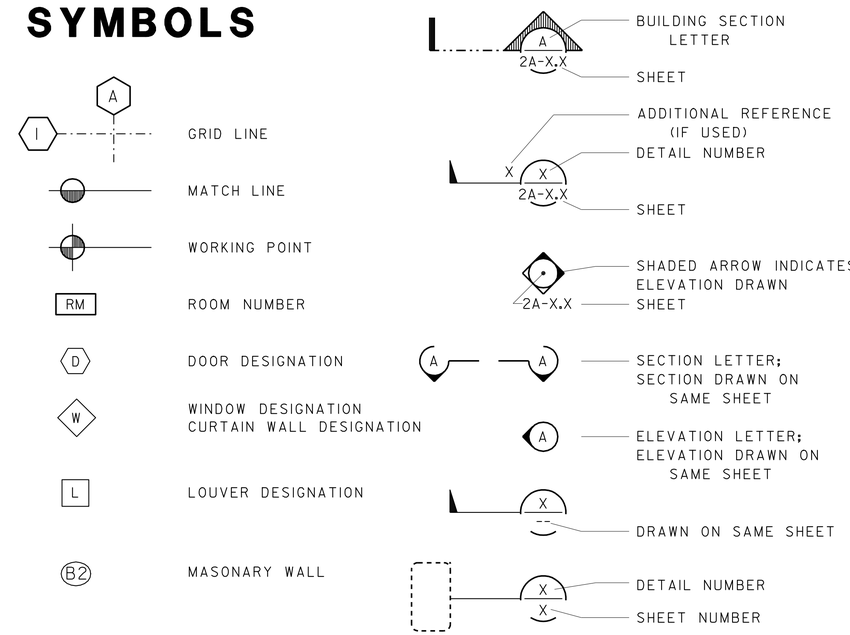

DESIGN	BY D. LOWE	CHECKED C.FAUST	
DETAILS	BY B. BROWN	CHECKED C.FAUST	
QUANTITIES	BY	CHECKED	

STATE OF CALIFORNIA
DEPARTMENT OF TRANSPORTATION

DIVISION OF ENGINEERING SERVICES
ARCHITECTURAL AND STRUCTURAL DESIGN

BRIDGE NO. 54-1216J
POST MILE 177.3/181.1

MOUNTAIN PASS JPOE
PROJECT
ARCHITECTURAL ABBREVIATIONS SYMBOLS

SHEET **A0-1**

ORIGINAL SCALE IN INCHES FOR REDUCED PLANS 0 1 2 3

UNIT 3584
PROJECT NUMBER & PHASE 08000006281

DISREGARD PRINTS BEARING EARLIER REVISION DATES
REVISION DATES (PRELIMINARY STAGE ONLY) 11-01-10 11-30-12
SHEET OF

a0_01gen_abv.dgn
DS OSD Imperial Rev. 11/98 26-FEB-2013 09:57

EA 368501

26-FEB-2013 09:57
a0_01gen_abv.dgn

DIST.	COUNTY	ROUTE	POST MILES TOTAL PROJECT	SHEET NO.	TOTAL SHEETS
08	SBd	15	177.3/181.1	274	710

DOUG LOWE 12-12-12
LICENSED ARCHITECT DATE

LICENSED ARCHITECT DOUG LOWE No. C-15341 Exp. 06-30-13 STATE OF CALIFORNIA

2-25-13
PLANS APPROVAL DATE

The State of California or its officers or agents shall not be responsible for the accuracy or completeness of electronic copies of this plan sheet.

ACCESSIBILITY DESIGN APPROVAL STAMP DOT / DES / OTA
08-368501
DISTRICT - EA
Reviewed by: Y.A. WANG
Date: 03-30-09

CALIFORNIA STATE FIRE MARSHAL APPROVED
Approval of this plan does not authorize or approve any omission or deviation from applicable regulations. Final approval is subject to field inspection. One set of approved plans shall be available on the project site at all times.
Reviewed by: G. ANDERSEN
Approval date: 01-20-2011

ACCESSIBILITY STANDARD NOTES

1. POT INDICATED AT SITE PLAN SHALL BE THE MOST PRACTICAL DIRECT ROUTE AMONG BUILDINGS AND FACILITIES. EXACT LOCATIONS OF POTS SHALL BE DETERMINED BY THE FIELD ENGINEER.

2. POTS SURFACE SHALL BE FIRM, STABLE, SLIP RESISTANT, W/O LOOSE GRAVEL, SAND CHIPS, ETC. ANY PLANTER/ GRATE/COVER IN OR ADJACENT TO POSTS SHALL REQUIRE EDGE PROTECTION OF MIN. 6" HIGH CURB IF LEVEL CHANGE BETWEEN POT AND PLANTER/GRATE/ COVER EXCEEDS 4".

3. IF ANY EXTERIOR POTS ARE LESS THAN 60" WIDE, THEN PASSING SPACE AT LEAST 60" X 60" SHALL BE LOCATED AT REASONABLE INTERVALS NOT TO EXCEED 200'.

4. EXTERIOR POTS, SHALL BE MIN. 48" WIDE. SEE "AISLES" BELOW FOR INTERIOR POT WIDTH. ALL POTS SHALL HAVE MIN. 80" HEAD CLEARANCE, MAX. 5% SLOPE IN THE DIRECTION HEAD CLEARANCE, MAX. 5% SLOPE IN THE DIRECTION OF TRAVEL, MAX. 2% CROSS SLOPE , MAX. ½" LEVEL CHANGE MAX. 2% CROSS SLOPE, MAX. ½" LEVEL CHANGE W/MAX 1:2 SLOPE, AND LEVEL CHANGE NOT EXCEEDING ¼" MAY BE VERTICAL ANY LEVEL CHANGE EXCEEDING ½" SHALL BE ACCOMODATED BY CODE-COMPLIANT CURB RAMP, AND ANY SLOPE IN THE DIRECTION OF TRAVEL EXCEEDING 5% SHALL BE ACCOMODATED BY CODE COMPLIANT RAMP.

5. CONCRETE SLAB AT SHADED AREAS AT AIS SITE INDICATED ON SHEET A1-0.1 SHALL BE MAX. 2% SLOPE IN ANY DIRECTION. NO SPECIFIC PATH OF TRAVEL NEEDS TO BE IDENTIFIED WITHIN THESE AREAS.

6. ALL PAVED PEDESTRIAN AREAS AROUND CVEF BLDG. ON SHEET A7-0.16 SHALL BE MAX. 2% SLOPE IN ANY DIRECTIONS. NO SPECIFIC PATH OF TRAVEL NEEDS TO BE IDENTIFIED WITHIN THESE AREAS.

7. ALL DOORS SHALL HAVE CLEAR LEVEL AREAS ON BOTH SIDES OF DOORS W/MAX. 2% SLOPE IN ANY DIRECTION. EXTERIOR CLEAR LEVEL AREAS SHALL BE MIN. 60" X 60" IN THE DIRECTION OF DOOR SWING (INCLUDING MIN.24" PAST DOOR STRIKE EDGE), AND MIN. 48" X 48" OPPOSITE DOOR SWING (INCLUDING MIN. 12" PAST DOOR STRIKE EDGE IF DOOR HAS BOTH A LATCH AND A CLOSER). INTERIOR CLEAR LEVEL AREAS SHALL BE MIN. 60" X 54" WIDE IN THE DIRECTION OF DOOR SWING (INCLUDING MIN. 18" PAST DOOR STRIKE EDGE), AND MIN. 48" X 48" OPPOSITE DOOR SWING INCLUDING MIN. 12" PAST DOOR STRIKE EDGE IF DOOR HAS BOTH A LATCH AND A CLOSER.

8. LEVEL CHANGE AT DOORWAYS, INCLUDING THRESHOLD THICKNESS, SHALL BE MAX. ½" W/MAX. 1:2 SLOPE AND LEVEL CHANGE NOT EXCEEDING ¼" MAY BE VERTICAL.

9. AISLES FORMED BY EQUIPMENT / STORED MATERIALS / WALLS AT ANY ROOMS SHALL BE MIN. 36" WIDE IF SERVING ONE SIDE, AND MIN. 44" WIDE IF SERVING BOTH SIDES.

GENERAL NOTES

1. THE CONTRACTOR SHALL VERIFY ALL CONTROLLING DIMENSIONS AND FIELD CONDITIONS BEFORE ORDERING OR FABRICATING ANY MATERIALS OR ASSEMBLIES.

2. THE CONTRACTOR SHALL NOTIFY THE ENGINEER IN WRITING OF ANY DISCREPENCIES BETWEEN THESE PLANS AND ACTUAL MEASUREMENTS OR FIELD CONDITIONS.

DIST.	COUNTY	ROUTE	POST MILES TOTAL PROJECT	SHEET NO.	TOTAL SHEETS
08	SBd	15	177.3/181.1	275	710

DOUG LOWE 12-12-12
LICENSED ARCHITECT DATE

LICENSED ARCHITECT DOUG LOWE No. C-15341 Exp. 06-30-13 STATE OF CALIFORNIA

2-25-13
PLANS APPROVAL DATE

The State of California or its officers or agents shall not be responsible for the accuracy or completeness of electronic copies of this plan sheet.

ACCESSIBILITY DESIGN APPROVAL STAMP DOT / DES / OTA
08-368501
DISTRICT - EA
Reviewed by: Y.A. WANG
Date: 03-30-09

CALIFORNIA STATE FIRE MARSHAL APPROVED
Approval of this plan does not authorize or approve any omission or deviation from applicable regulations. Final approval is subject to field inspection. One set of approved plans shall be available on the project site at all times.
Reviewed by: G. ANDERSEN
Approval date: 01-20-2011

CODE ANALYSIS

APPLICABLE CODES INCLUDE:

2007 CALIFORNIA BUILDING CODE
2007 CALIFORNIA MECHANICAL CODE
2007 CALIFORNIA PLUMBING CODE
2007 CALIFORNIA ELECTRICAL CODE
2007 CALIFORNIA FIRE CODE
2007 CALIFORNIA ENERGY CODE AND
CURRENT EDITION OF AMERICANS
WITH DISABILITIES ACT

BUILDING ANALYSIS

COMMERCIAL VEHICLE ENFORCEMENT FACILITY (CVEF)

BUILDING 7, CVEF OFFICE

NOTE THIS CVEF BUILDING CODE ANALYSIS INCLUDES
ALSO COURTYARD SHADE CANOPY LISTED BELOW
AS "BUILDING 8 - CANOPY 3"

BUILDING OCCUPANCY CLASSIFICATION: B AND S-1 NONSEPARATED

CONSTRUCTION TYPE: TYPE VB (PER CBC TABLE 503);
1 STORY: OFFICE/INSPECTION AREA BLDG HT 41 FT;
AUTOMATIC FIRE SUPPRESSION SYSTEM: ENTIRE BUILDING, YES

BUILDING FLOOR AREA PER OCCUPANCY
OFFICE WING: 11,854 SF + 196 SF OF COURTYARD SHADE CANOPY
INSPECTION AREA: 11,232 SF
TOTAL: 23,282 SF
(BUILDING ROOFED AREA: 26.500 SF TOTAL)

BUILDING SEPARATION YARDS: 3 + PARTIAL YARDS > 30 FT,
(750 FT OPEN PERIMETER/770 FT TOTAL PERIMETER
LESS 0.25) x 30 FT OPEN YARD/30 = (0.97 - 0.25) x 1 =
0.72 ALLOWABLE INCREASE

ALLOWABLE AREA CALCULATIONS:
9,000 SF ALLOWED FOR B OCCUPANCY, 2 STORY
9,000 SF ALLOWED FOR S-1 OCCUPANCY, 1 STORY
MOST RESTRICTIVE OCCUPANCY: S-1
9,000 SF x 1.72 FOR OPEN YARDS = 15,480 SF
15,480 SF x 2 FOR SPRINKLER SYSTEM = 30,960 SF
30,960 SF > 23,282 SF, THUS 23,282 SF, 1 STORY = OK

NET FLOOR AREA CALCULATIONS:
A) INSPECTION AREA: 11,242 SF, S-1 OCCUPANCY WING
B) OFFICE WING: 10,706 SF, B OCCUPANCY WING

OCCUPANCY LOAD CALCULATIONS:
1) CVEF INSPECTION AREA S-1 OCCUPANCY INCLUDES:
A) ROOM 041 OFFICE W/ 120 SF @ 100 = 2 OCC
B) ROOM 042 PARTS AND SUPPLY W/ 290 SF @ 300 = 1 OCC
C) RM 043 VEHICLE MAINTENANCE SHOP W/ 540 SF @ 100 = 6 OCC
D) ROOM 040 INSPECTION AREA W/ 10,292 SF @ 100 = 103 OCC
TOTAL INSPECTION AREA = 112 OCCUPANT LOAD

2) CVEF OFFICE WING B OCCUPANCY INCLUDES:
A) RM 036 MULTIPURPOSE W/ 884 SF, A-3 OCC @ 15 SF = 59 OCC;
HOWEVER ROOM 036 TO BE SIGNED "49 OCCUPANTS MAXIMUM"
B) RM 034 BREAKROOM W/ 270 SF @ 15 = 18 OCC
C) COURTYARD NEAR RM 036 W/ 175 SF @ 15 = 12 OCC
D) RM 033 COURTYARD W/ 118 SF @ 15 = 8
E) RM 025 AIR RESOURCE BOARD STORAGE W/ 215 SF, S-1
@ 300 SF = 1 OCC
F) RM 029 EMT STORAGE W/ 250, S-1 @ 300 SF = 1 OCC
G) RM 030 UNIFORM STORAGE W/ 210 SF, S-1 @ 500 SF = 1 OCC
H) RM 021 WATER TREATMENT EQUIP W/ 630 SF, @ 300 = 3 OCC
J) RM 026 MECHANICAL EQUIP W/ 430 SF, @ 300 = 2 OCC
K) RM 027 ELECTRICAL EQUIP W/ 400 SF, @300 = 2 OCC
L) UNROOFED AREA AT TRANSFORMER AND ELEC CLOSET,
W/ 800 SF COMBINED @ 300 SF = 4 OCC
M) ROOMS 014 AND 017, COMBINED, LOCKERS W/ 600 SF,
@ 50 = 12 TOTAL OCC
N) ROOM 004 LOBBY W/ 700 SF, @ 5 = 140 OCC; NOTE RM 004
= 700 SF WHICH IS < 750 SF, THUS LOBBY = ACCESSORY OCC
(PER 508.3.1 EXCEPTION 1)
P) ROOM 001 VESTIBULE W/ BENCH @ 18"/OCC = 12 OCC
SUBTOTAL = 265 OCC
Q) REMAINING OFFICE RMS, B OCC @ 100 = 27 OCC
TOTAL OFFICE WING = 292 OCCUPANT LOAD
THUS CVEF BUILDING = 404 OCCUPANT LOAD

CVEF BUILDINGS continued

BUILDING 7, OFFICE, continued

NUMBER OF EXITS REQUIRED: 2
NUMBER OF EXITS PROVIDED: 12

CORRIDORS WITH > 30 OCCUPANT LOAD REQUIRING
1-HOUR FIRE BARRIER: NONE

MAXIMUM ALLOWABLE TRAVEL DISTANCE: 250 FT
ACTUAL DISTANCE < 200 FT

EXIT LOCATIONS:
MORE THAN ONE-THIRD THE DIAGONAL DISTANCE CONDITION MET,
AND NO DEAD ENDS > 20 FT, THUS EXIT LOCATIONS OK

EXIT AND CORRIDOR WIDTH:
44-INCH MINIMUM CORRIDOR WIDTH, AND
36-INCH DOORS WITH 33-INCH CLEAR OPENING, THUS WIDTHS OK

BUILDING 8, CVEF CANOPY 1, FOR EMPLOYEE VEHICLES

BUILDING OCCUPANCY CLASSIFICATION: U

CONSTRUCTION TYPE: TYPE VB
FIRE SUPPRESSION: NONE

BUILDING FLOOR AREA: 2,350 SF, OPEN CANOPY,
NO ENCLOSURE, 1 STORY 11 FT HT

BUILDING SEPARATION YARDS: 3 OPEN YARDS > 30 FT

ALLOWABLE AREA CALCULATIONS:
5,500 SF AND 1 STORY ALLOWED FOR U OCCUPANCY
THUS 2,350 SF AND 1 STORY OK

BUILDING 8, CVEF CANOPY 2, FOR PURSUIT VEHICLES

BUILDING OCCUPANCY CLASSIFICATION: U

CONSTRUCTION TYPE: TYPE VB
FIRE SUPPRESSION: NONE

BUILDING FLOOR AREA: 1,577 SF, OPEN CANOPY,
NO ENCLOSURE, 1 STORY 11 FT HT

BUILDING SEPARATION YARDS: 3 OPEN YARDS > 30 FT

ALLOWABLE AREA CALCULATIONS:
5,500 SF AND 1 STORY ALLOWED FOR U OCCUPANCY
THUS 1,577 SF AND 1 STORY OK

BUILDING 8, CVEF CANOPY 3, FOR COURTYARD SHADE

INCLUDED IN "BUILDING 7, CVEF" CODE ANALYSIS ABOVE

BUILDING FLOOR AREA: 196 SF OPEN CANOPY

BUILDING 8, CVEF CANOPY 4 FOR PEDESTRIAN SHADE

BUILDING OCCUPANCY CLASSIFICATION: U

CONSTRUCTION TYPE: TYPE VB
FIRE SUPPRESSION: NONE

BUILDING FLOOR AREA: 324 SF, OPEN CANOPY,
NO ENCLOSURE, 1 STORY 12 FT HT

BUILDING SEPARATION YARDS: 4 OPEN YARDS > 30 FT

ALLOWABLE AREA CALCULATIONS:
5,500 SF AND 1 STORY ALLOWED FOR U OCCUPANCY
THUS 324 SF AND 1 STORY OK

CVEF BUILDINGS continued

BUILDING 9, CANOPY FOR AIR RESOURCE BOARD

BUILDING OCCUPANCY CLASSIFICATION: U

CONSTRUCTION TYPE: TYPE VB
FIRE SUPPRESSION: NONE

BUILDING FLOOR AREA: 1,024 SF, OPEN CANOPY,
NO ENCLOSURE, 1 STORY 17 FT HT

BUILDING SEPARATION YARDS: 4 OPEN YARDS > 30 FT

ALLOWABLE AREA CALCULATIONS:
5,500 SF AND 1 STORY ALLOWED FOR U OCCUPANCY
THUS 1,024 SF AND 1 STORY OK

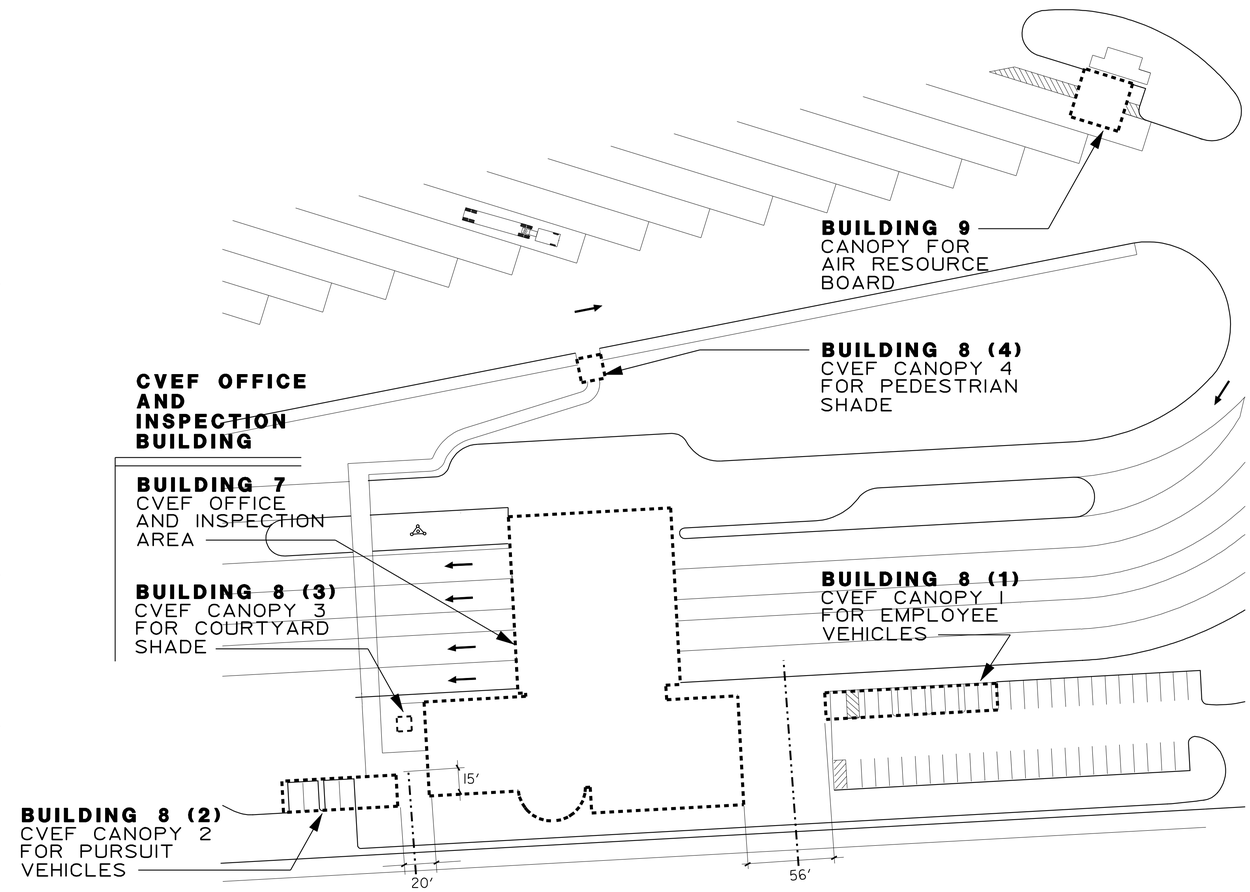

PARTIAL SITE: COMMERCIAL VEHICLE INSPECTION FACILITY

NO SCALE

N

DESIGN	BY D. LOWE	CHECKED C.FAUST	
DETAILS	BY B. BROWN	CHECKED C.FAUST	
QUANTITIES	BY	CHECKED	

STATE OF CALIFORNIA DEPARTMENT OF TRANSPORTATION

DIVISION OF ENGINEERING SERVICES ARCHITECTURAL AND STRUCTURAL DESIGN

BRIDGE NO. 54-1216J
POST MILE 177.3/181.1

PROJECT: MOUNTAIN PASS JPOE
CODE ANALYSIS: CVEF DATA, SITE

SHEET A0-2.3

a0_02_03cvef_code.dgn
DS OSD Imperial Rev. 11/98 26-FEB-2013 09:57

ORIGINAL SCALE IN INCHES FOR REDUCED PLANS 0 1 2 3

UNIT 3584
PROJECT NUMBER & PHASE 08000006281
EA 368501

DISREGARD PRINTS BEARING EARLIER REVISION DATES → 11-01-10 11-30-12

REVISION DATES (PRELIMINARY STAGE ONLY) SHEET OF

26-FEB-2013 09:57
a0_02_03cvef_code.dgn

DIST.	COUNTY	ROUTE	POST MILES TOTAL PROJECT	SHEET NO.	TOTAL SHEETS
08	SBd	15	177.3/181.1	276	710

DOUG LOWE 12-12-12
LICENSED ARCHITECT DATE

LICENSED ARCHITECT DOUG LOWE No. C-15341 Exp. 06-30-13 STATE OF CALIFORNIA

2-25-13
PLANS APPROVAL DATE

The State of California or its officers or agents shall not be responsible for the accuracy or completeness of electronic copies of this plan sheet.

ACCESSIBILITY DESIGN APPROVAL STAMP DOT / DES / OTA
08-368501
DISTRICT - EA
Reviewed by: Y.A. WANG
Date: 03-30-09

CALIFORNIA STATE FIRE MARSHAL APPROVED
Approval of this plan does not authorize or approve any omission or deviation from applicable regulations. Final approval is subject to field inspection. One set of approved plans shall be available on the project site at all times.
Reviewed by: G. ANDERSEN
Approval date: 01-20-2011

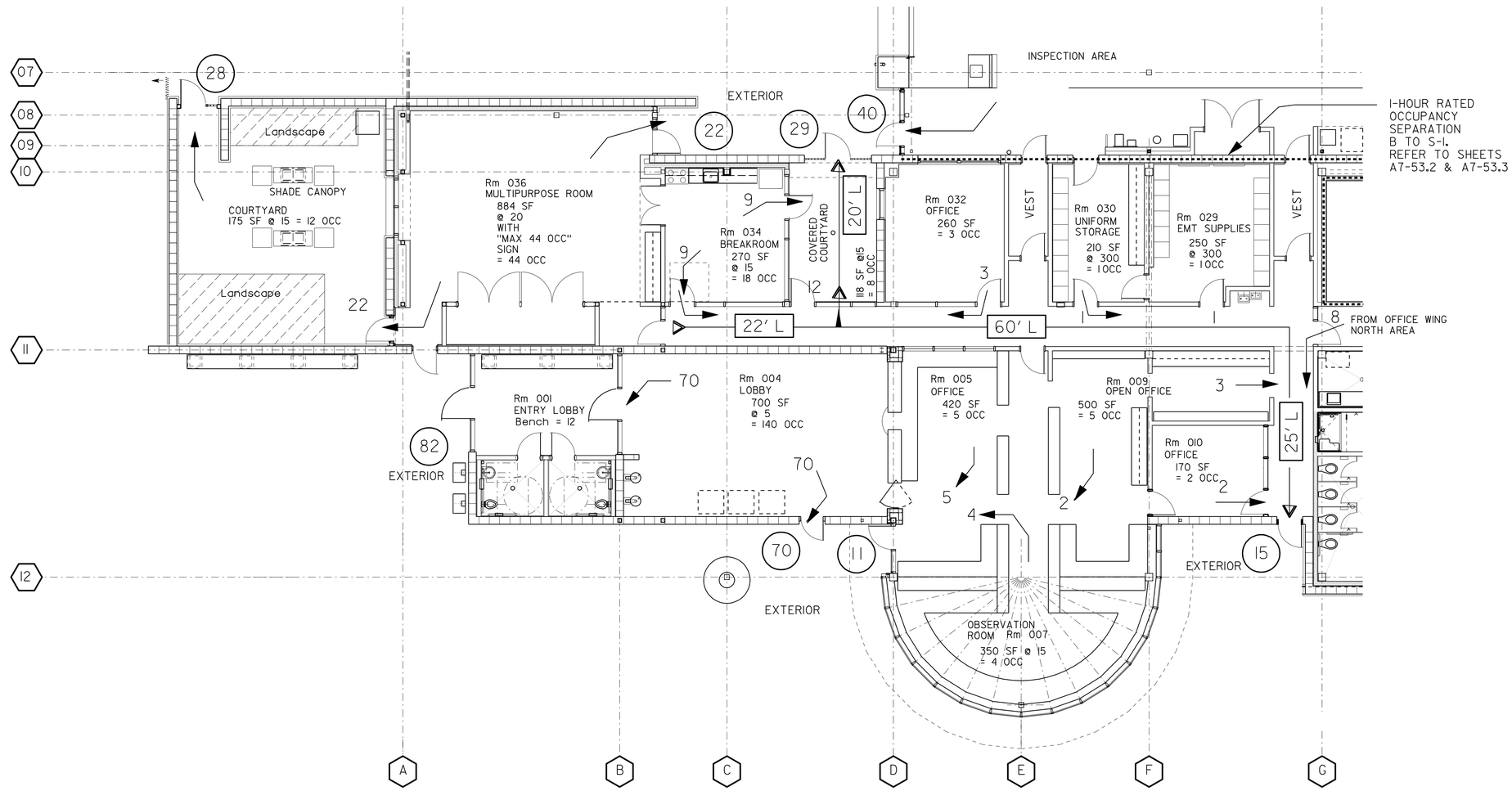

NOTES:

1. OCCUPANCY FOR EACH SPACE IS B OCCUPANCY, AT 100 SQ FT PER OCCUPANT, UNLESS OTHERWISE NOTED.

2. NUMBERS AT DOORWAYS ARE EXITING OCCUPANTS. NUMBERS IN CIRCLES ARE TOTALS ACCUMULATED ALONG HALLWAYS OR OUTSIDE EXTERIOR DOORS.

3. NUMBERS IN RECTANGLES ARE INDICATING LENGTHS OF HALLWAY. LENGTHS ARE FROM CENTER OF HALL JUNCTION TO CENTER OF EXTERIOR DOOR, ETC.

WALL TYPE
1-HOUR RATED WALL
REFER TO SHEET A7-53.2 & A7-53.3

PARTIAL BUILDING No. 1:
CVEF OFFICE BUILDING EXITING, OFFICE WING SOUTH

SCALE 1/8" = 1'-0"

DESIGN	BY D. LOWE	CHECKED C.FAUST	
DETAILS	BY B. BROWN	CHECKED C.FAUST	
QUANTITIES	BY	CHECKED	

STATE OF CALIFORNIA
DEPARTMENT OF TRANSPORTATION

DIVISION OF ENGINEERING SERVICES
ARCHITECTURAL AND STRUCTURAL DESIGN

BRIDGE NO. 54-1216J
POST MILE 177.3/181.1

MOUNTAIN PASS JPOE
PROJECT: CODE ANALYSIS: CVEF EXITING
OFFICE WING, SOUTH

SHEET **A0-2.4**

a0_02_04cvef_exitg.dgn
DS OSD Imperial Rev. 11/98 26-FEB-2013 09:57

ORIGINAL SCALE IN INCHES FOR REDUCED PLANS 0 1 2 3

UNIT 3584
PROJECT NUMBER & PHASE 08000006281
EA 368501

DISREGARD PRINTS BEARING EARLIER REVISION DATES → 11-01-10 11-30-12

REVISION DATES (PRELIMINARY STAGE ONLY) SHEET OF

26-FEB-2013 09:57
a0_02_04cvef_exitg.dgn

DIST.	COUNTY	ROUTE	POST MILES TOTAL PROJECT	SHEET NO.	TOTAL SHEETS
08	SBd	15	177.3/181.1	277	710

DOUG LOWE 12-12-12
LICENSED ARCHITECT DATE

LICENSED ARCHITECT DOUG LOWE No. C-15341 Exp. 06-30-13 STATE OF CALIFORNIA

2-25-13
PLANS APPROVAL DATE

The State of California or its officers or agents shall not be responsible for the accuracy or completeness of electronic copies of this plan sheet.

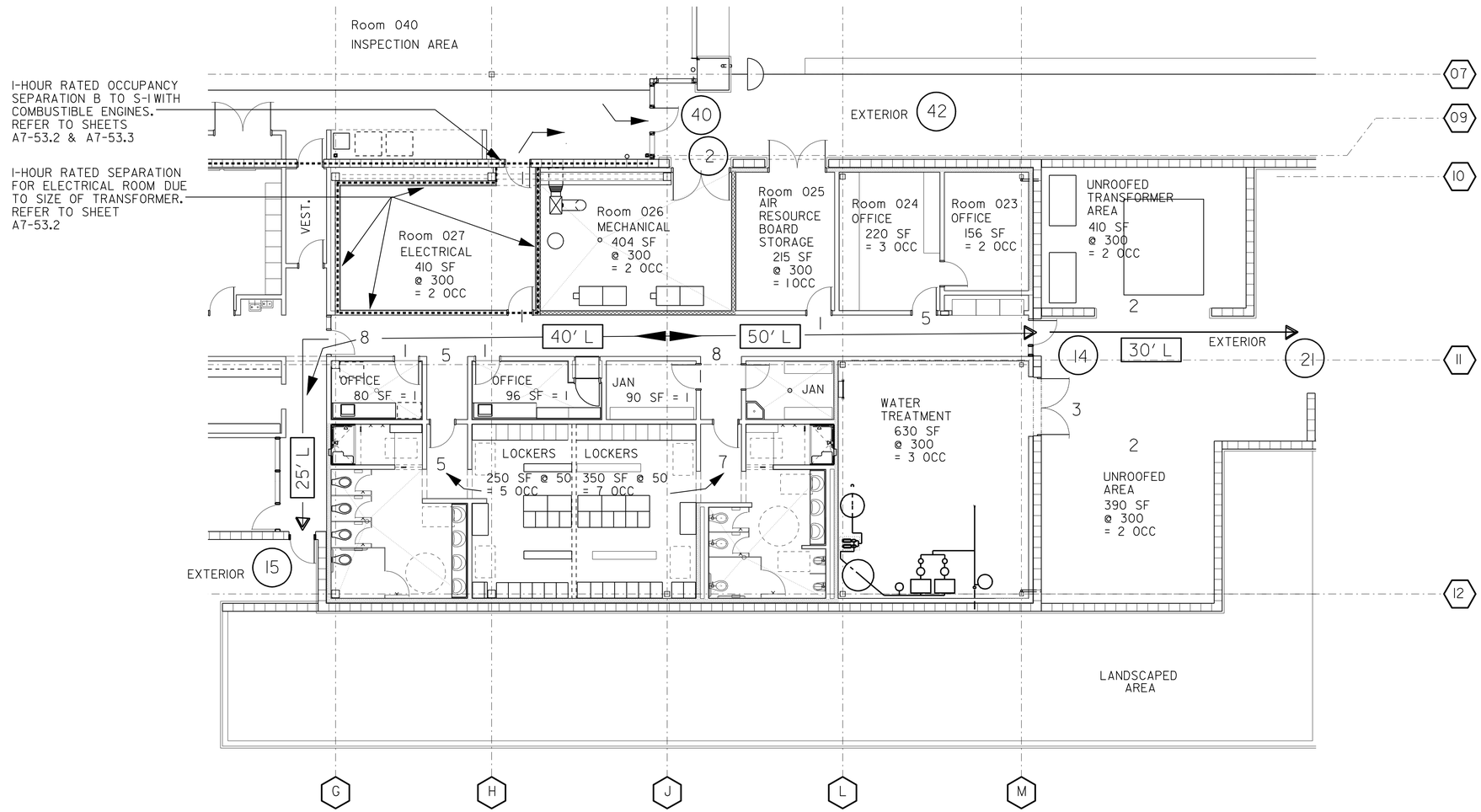

ACCESSIBILITY DESIGN APPROVAL STAMP
DOT / DES / OTA
08-368501
DISTRICT - EA
Reviewed by: Y.A. WANG
Date: 03-30-09

CALIFORNIA STATE FIRE MARSHAL APPROVED
Approval of this plan does not authorize or approve any omission or deviation from applicable regulations. Final approval is subject to field inspection. One set of approved plans shall be available on the project site at all times.
Reviewed by: G. ANDERSEN
Approval date: 01-20-2011

NOTES:

1. OCCUPANCY FOR EACH SPACE IS B OCCUPANCY, AT 100 SQ FT PER OCCUPANT, UNLESS OTHERWISE NOTED.

2. NUMBERS AT DOORWAYS ARE EXITING OCCUPANTS. NUMBERS IN CIRCLES ARE TOTALS ACCUMULATED ALONG HALLWAYS OR OUTSIDE EXTERIOR DOORS.

3. NUMBERS IN RECTANGLES ARE INDICATING LENGTHS OF HALLWAY. LENGTHS ARE FROM CENTER OF HALL JUNCTION TO CENTER OF EXTERIOR DOOR, ETC.

WALL TYPE
1-HOUR RATED WALL
REFER TO SHEET A7-53.2 & A7-53.3

PARTIAL BUILDING No. 1:
CVEF OFFICE BUILDING EXITING, OFFICE WING NORTH

SCALE 1/8" = 1'-0"

DESIGN	BY D. LOWE	CHECKED C.FAUST	
DETAILS	BY B. BROWN	CHECKED C.FAUST	
QUANTITIES	BY	CHECKED	

STATE OF CALIFORNIA
DEPARTMENT OF TRANSPORTATION

DIVISION OF ENGINEERING SERVICES
ARCHITECTURAL AND STRUCTURAL DESIGN

BRIDGE NO. 54-1216J
POST MILE 177.3/181.1

MOUNTAIN PASS JPOE
PROJECT: CODE ANALYSIS: CVEF EXITING
OFFICE WING, NORTH

SHEET A0-2.5

a0_02_05cvef_exitg.dgn
DS OSD Imperial Rev. 11/98 26-FEB-2013 09:57

ORIGINAL SCALE IN INCHES FOR REDUCED PLANS 0 1 2 3

UNIT 3584
PROJECT NUMBER & PHASE 08000006281
EA 368501

DISREGARD PRINTS BEARING EARLIER REVISION DATES → 11-01-10 11-30-12

REVISION DATES (PRELIMINARY STAGE ONLY) SHEET OF

26-FEB-2013 09:57
a0_02_05cvef_exitg.dgn

DIST.	COUNTY	ROUTE	POST MILES TOTAL PROJECT	SHEET NO.	TOTAL SHEETS
08	SBd	15	177.3/181.1	278	710

DOUG LOWE 12-12-12
LICENSED ARCHITECT DATE

LICENSED ARCHITECT DOUG LOWE No. C-15341 Exp. 06-30-13 STATE OF CALIFORNIA

2-25-13
PLANS APPROVAL DATE

The State of California or its officers or agents shall not be responsible for the accuracy or completeness of electronic copies of this plan sheet.

ACCESSIBILITY DESIGN APPROVAL STAMP DOT / DES / OTA
08-368501
DISTRICT - EA
Reviewed by: Y.A. WANG
Date: 03-30-09

CALIFORNIA STATE FIRE MARSHAL APPROVED
Approval of this plan does not authorize or approve any omission or deviation from applicable regulations. Final approval is subject to field inspection. One set of approved plans shall be available on the project site at all times.
Reviewed by: G. ANDERSEN
Approval date: 01-20-2011

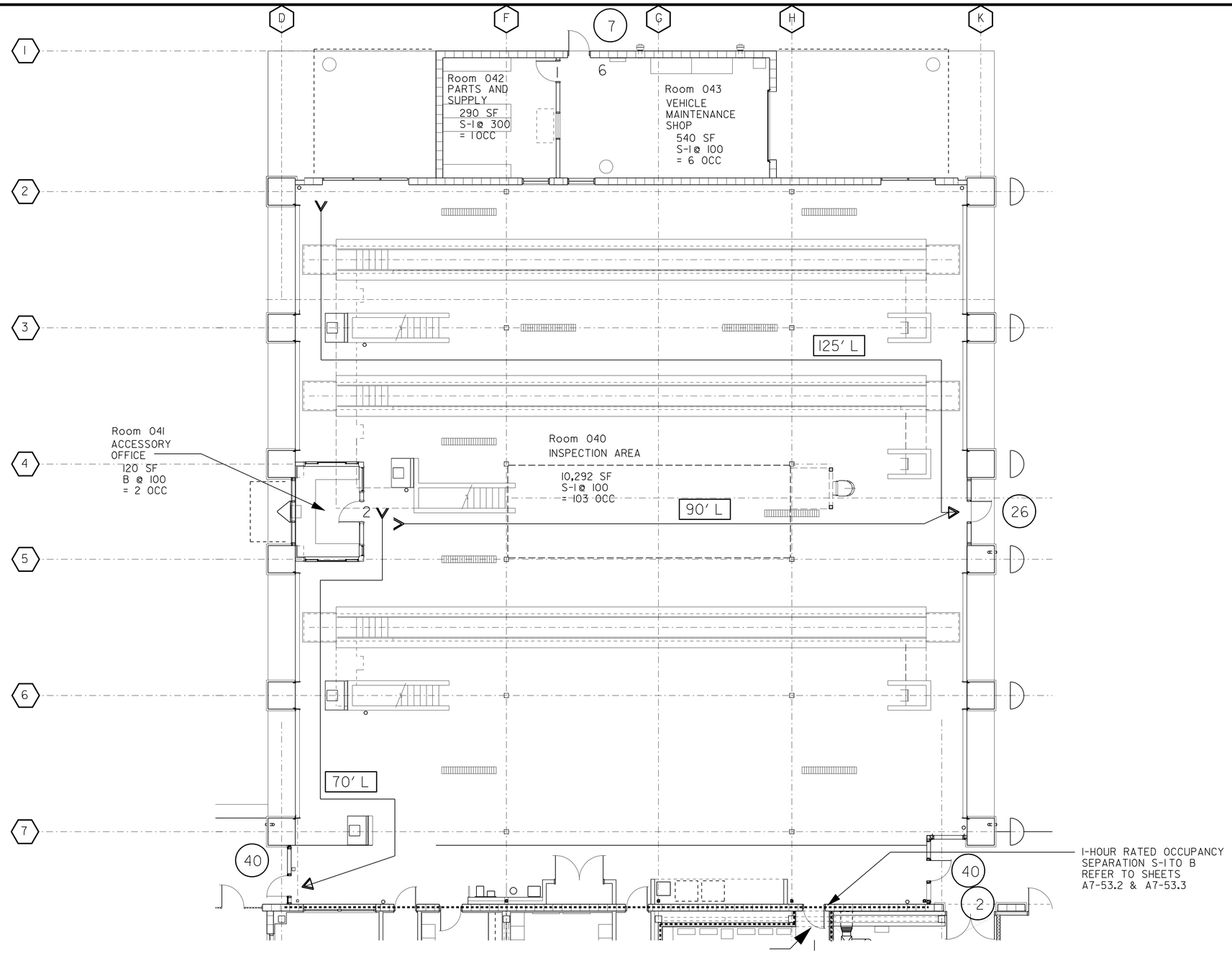

NOTES:

1. OCCUPANCY FOR EACH SPACE IS B OCCUPANCY, AT 100 SQ FT PER OCCUPANT, UNLESS OTHERWISE NOTED.

2. NUMBERS AT DOORWAYS ARE EXITING OCCUPANTS. NUMBERS IN CIRCLES ARE TOTALS ACCUMULATED ALONG HALLWAYS OR OUTSIDE EXTERIOR DOORS.

3. NUMBERS IN RECTANGLES ARE INDICATING LENGTHS OF HALLWAY OR TRAVEL DISTANCE IN LARGE ROOM. LENGTHS ARE FROM CENTER OF HALL JUNCTION TO CENTER OF EXIT DOOR, OR EDGE OF LARGE ROOM TO EXIT DOOR.

WALL TYPE
1-HOUR RATED WALL
REFER TO SHEET
A7-53.2 & A7-53.3

PARTIAL BUILDING No. 1:
CVEF OFFICE BUILDING EXITING, TRUCK INSPECTION WING

SCALE 1/8" = 1'-0"

DESIGN	BY D. LOWE	CHECKED C.FAUST	
DETAILS	BY B. BROWN	CHECKED C.FAUST	
QUANTITIES	BY	CHECKED	

STATE OF CALIFORNIA DEPARTMENT OF TRANSPORTATION

DIVISION OF ENGINEERING SERVICES ARCHITECTURAL AND STRUCTURAL DESIGN

BRIDGE NO. 54-1216J
POST MILE 177.3/181.1

PROJECT: MOUNTAIN PASS JPOE
CODE ANALYSIS: CVEF EXITING INSPECTION AREA WING

SHEET A0-2.6

a0_02_06cvef_exitg.dgn
DS OSD Imperial Rev. 11/98 26-FEB-2013 09:58

ORIGINAL SCALE IN INCHES FOR REDUCED PLANS 0 1 2 3

UNIT 3584
PROJECT NUMBER & PHASE 08000006281
EA 368501

DISREGARD PRINTS BEARING EARLIER REVISION DATES
REVISION DATES (PRELIMINARY STAGE ONLY) 11-01-10 11-30-12
SHEET OF

26-FEB-2013 09:58
a0_02_06cvef_exitg.dgn

DIST.	COUNTY	ROUTE	POST MILES TOTAL PROJECT	SHEET NO.	TOTAL SHEETS
08	SBd	15	177.3/181.1	279	710

LICENSED ARCHITECT — 05-18-12 DATE

LICENSED ARCHITECT Y.A. WANG No. C14891 Exp. 11-30-13 STATE OF CALIFORNIA

2-25-13
PLANS APPROVAL DATE

The State of California or its officers or agents shall not be responsible for the accuracy or completeness of scanned copies of this plan sheet.

ACCESSIBILITY DESIGN APPROVAL STAMP DOT / DES / OTA
08-368501
DISTRICT - EA
Reviewed by: Y.A. WANG
Date: 03-30-09

CALIFORNIA STATE FIRE MARSHAL APPROVED
Approval of this plan does not authorize or approve any omission or deviation from applicable regulations. Final approval is subject to field inspection. One set of approved plans shall be available on the project site at all times.
Reviewed by: G. ANDERSEN
Approval date: 01-20-2011

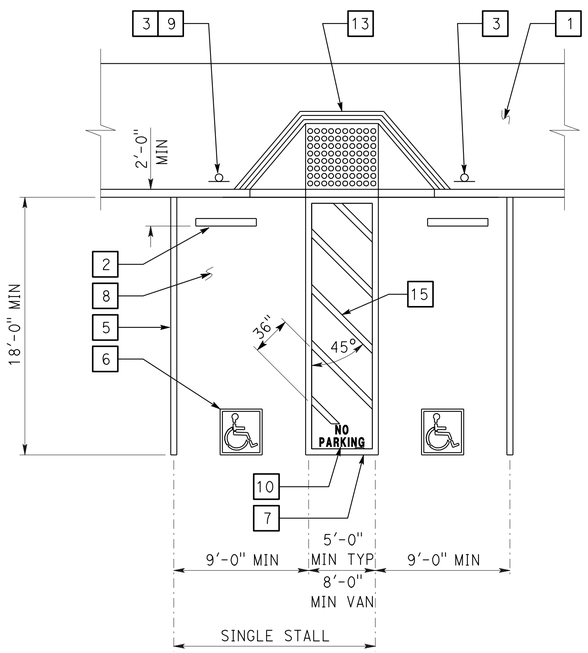

1 ACCESSIBLE PARKING STALL

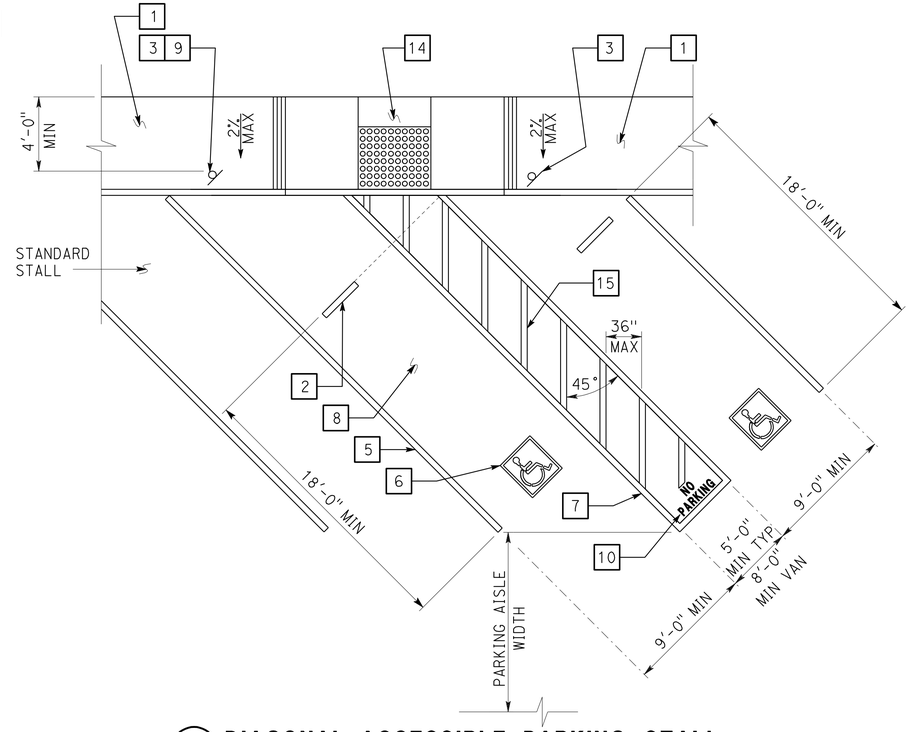

2 DIAGONAL ACCESSIBLE PARKING STALL

See plan for any variation of diagonal parking. Angle of parking stalls shall either match the existing angle or be indicated on plans.

KEYED NOTE LEGEND FOR DETAILS 1 & 2

1. Concrete walkway (where occurs). See plans for width, layout (may vary), finish, joints and elevations.
2. Parking bumper (away from access aisle). See Specifications.
3. Accessible parking space signage. See Detail 1 on sheet A0-3.2.
4. 1' wide grooved border on level surface typ at ramp perimeter. See Detail 3 on this sheet.
5. 4" wide white parking stall designation stripe. See site plan(s) for additional stall striping. See specifications for painting.
6. Accessible parking surface identification painted on pavement. See Detail 6 on sheet A0-3.2.
7. 4" wide blue border designating non-parking access aisle to curb ramp.
8. Maximum slope on parking stall and access aisle to be 2%.
9. Van accessible signage. See Detail 2 on sheet A0-3.2. Access aisle shall be on passenger side only.
10. "NO PARKING" in min 12" high white letters to be placed within access aisle to curb ramp. See Detail 7 on sheet A0-3.2.
11. Level landing -2% max slope w/36" deep detectable warning surface adjoining access aisle or vehicular way. See Detail 6 on this sheet.
12. Detectable warning surface to extend full width and min 36" deep from front edge of sidewalk. See Detail 6 on this sheet.
13. Curb ramp. See Detail 4 on this sheet. Also see plans for width and layout (may vary).
14. Curb ramp. See Detail 5 on this sheet. Also see plans for width and layout (may vary).
15. 4" wide white hatched lines to contrast with asphalt surface. Use blue hatched lines for light-color concrete surface.

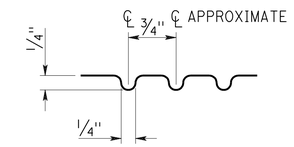

3 GROOVE DETAIL

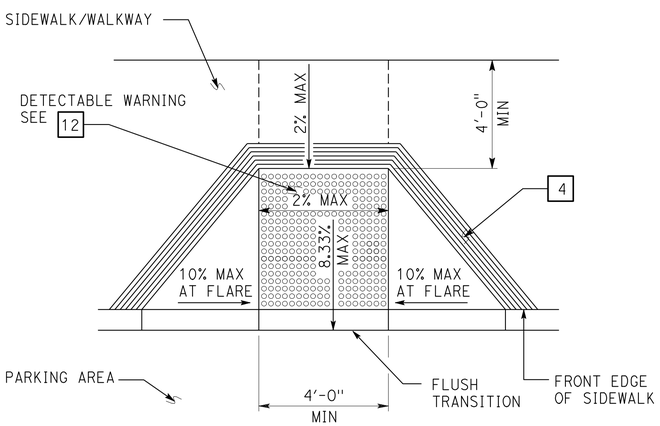

4 PERPENDICULAR CURB RAMP

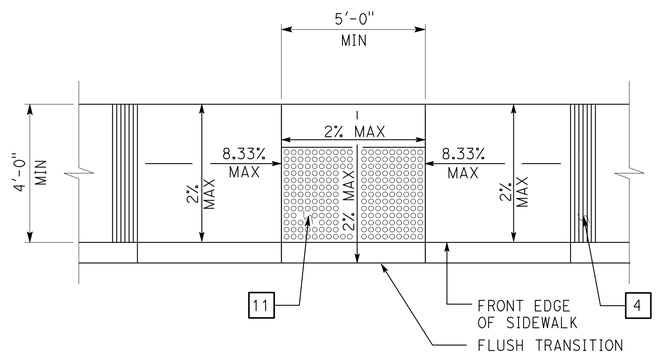

5 PARALLEL CURB RAMP

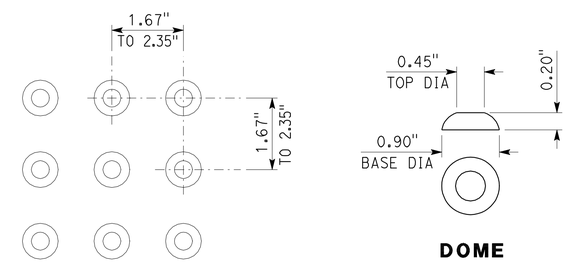

6 DETECTABLE WARNING SURFACE - TRUNCATED DOMES

Dome dimensions are nominal, which may be within ±0.05" for dome spacing, and ±0.02" for dome size.

DETAILS

No scale unless otherwise noted

NOTE: SPECIFIC DETAILS OR NOTES ON OTHER SHEETS SHALL PREVAIL OVER STANDARD DETAILS AND NOTES ON THIS SHEET

STANDARD DRAWING

FILE NO. __-__-_	DESIGN	BY D. Alsey	CHECKED Y. A. Wang	APPROVED R E Travis
DRAWING DATE 05-12	DETAILS	BY D. Good	CHECKED Y. A. Wang	DESIGN SUPERVISOR
	SUBMITTED BY Y.A. Wang			

STATE OF CALIFORNIA DEPARTMENT OF TRANSPORTATION

DIVISION OF ENGINEERING SERVICES ARCHITECTURAL AND STRUCTURAL DESIGN

BRIDGE NO. 54-1216J
POST MILE 177.3/181.1

MOUNTAIN PASS JPOE
ACCESSIBILITY — ACCESSIBILITY STANDARD DETAILS

SHEET A0-3.1

a0_03a_i.dgn
TAEMWW imperial Rev. 7/10 26-FEB-2013 09:58

ORIGINAL SCALE IN INCHES FOR REDUCED PLANS 0 1 2 3

UNIT 3584
PROJECT NUMBER & PHASE 08000006281
EA 368501

DISREGARD PRINTS BEARING EARLIER REVISION DATES
REVISION DATES (PRELIMINARY STAGE ONLY) - 07 — SHEET — OF

26-FEB-2013 09:58
a0_03a_i.dgn

DIST.	COUNTY	ROUTE	POST MILES TOTAL PROJECT	SHEET NO.	TOTAL SHEETS
08	SBd	15	177.3/181.1	280	710

LICENSED ARCHITECT — 05-18-12 DATE

LICENSED ARCHITECT Y.A. WANG No. C14891 Exp. 11-30-13 STATE OF CALIFORNIA

2-25-13
PLANS APPROVAL DATE

The State of California or its officers or agents shall not be responsible for the accuracy or completeness of scanned copies of this plan sheet.

ACCESSIBILITY DESIGN APPROVAL STAMP DOT / DES / OTA
08-368501
DISTRICT - EA
Reviewed by: Y.A. WANG
Date: 03-30-09

CALIFORNIA STATE FIRE MARSHAL APPROVED
Approval of this plan does not authorize or approve any omission or deviation from applicable regulations. Final approval is subject to field inspection. One set of approved plans shall be available on the project site at all times.
Reviewed by: G. ANDERSEN
Approval date: 01-20-2011

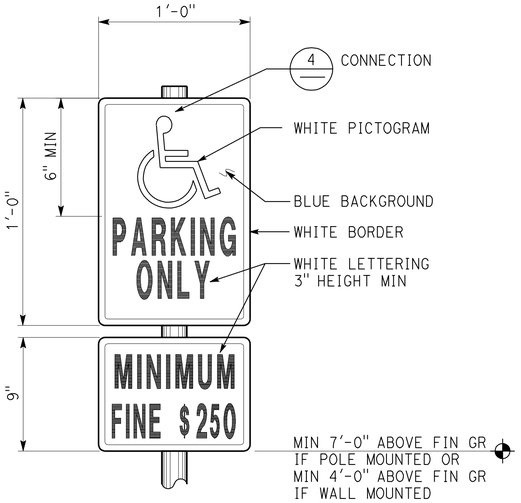

1 ACCESSIBLE PARKING SIGN

Refer to Site Plan for locations.
Combo sign may be used.

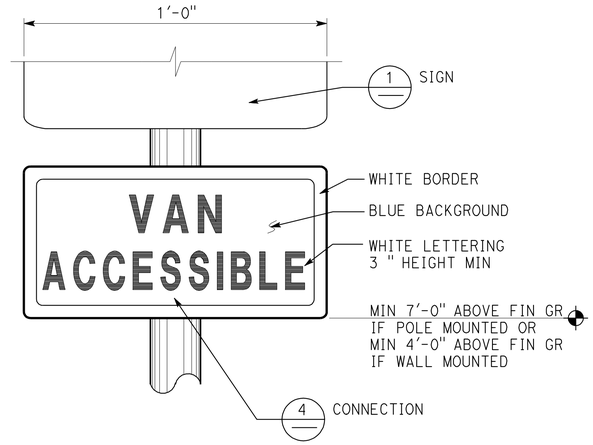

2 ACCESSIBLE VAN PARKING SIGN

Refer to Site Plan for locations.
Van accessible combo sign and separate fine plaque may be used.

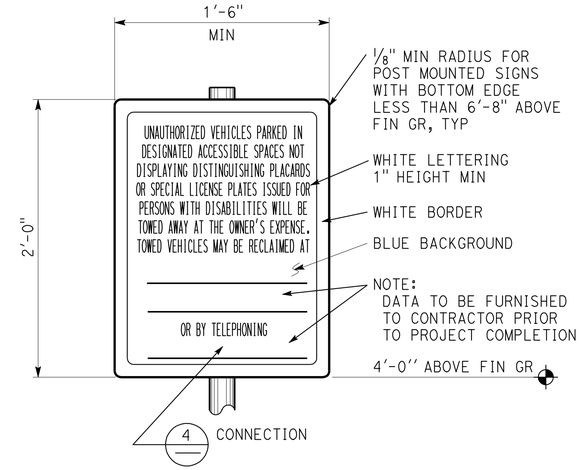

3 UNAUTHORIZED VEHICLES PARKING SIGN

Refer to Site Plan for locations.
Colors may vary.

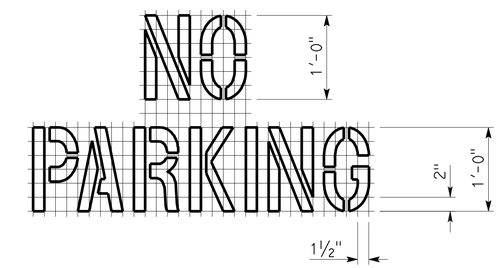

7 ACCESS AISLE PAVEMENT MARKING

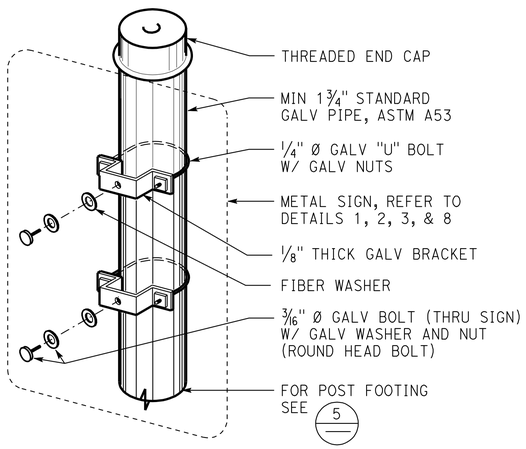

4 SIGN CONNECTION

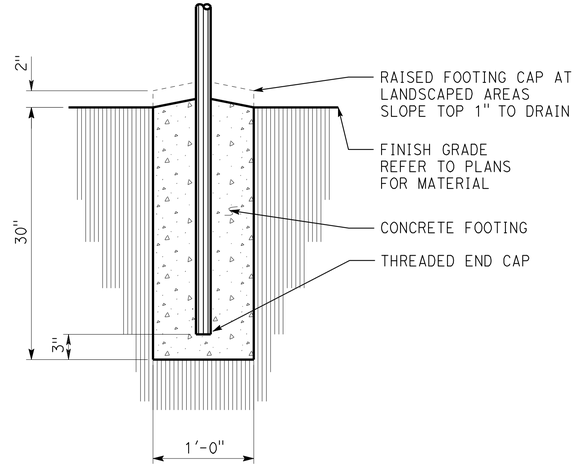

5 SIGN POST FOOTING

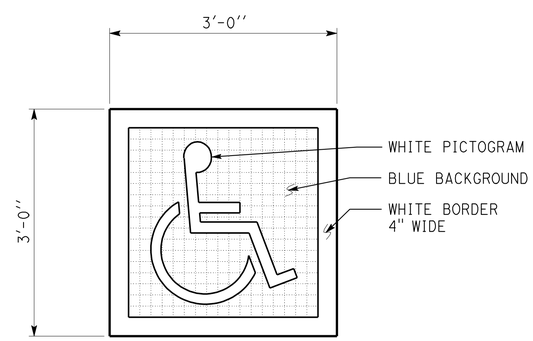

6 ACCESSIBLE PARKING SURFACE IDENTIFICATION

Refer to Details 1 and 2 on sheet A0-3.1 for locations.

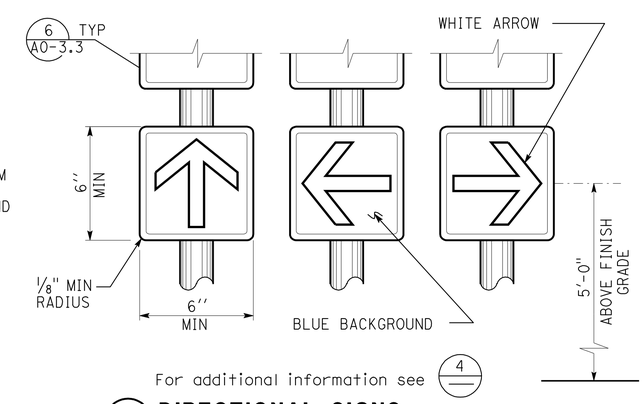

8 DIRECTIONAL SIGNS

Refer to Site Plan or General Plan for locations.
Wall or door mounted signs may be used.
Combo sign may be used.
Colors may vary.

DETAILS

No scale unless otherwise noted

NOTE: SPECIFIC DETAILS OR NOTES ON OTHER SHEETS SHALL PREVAIL OVER STANDARD DETAILS AND NOTES ON THIS SHEET

STANDARD DRAWING
FILE NO. __-__-__
DRAWING DATE 05-12
DESIGN BY D. Alsey CHECKED Y. A. Wang
DETAILS BY D. Good CHECKED Y. A. Wang
SUBMITTED BY Y.A. Wang
APPROVED R.E. Travis DESIGN SUPERVISOR

STATE OF CALIFORNIA DEPARTMENT OF TRANSPORTATION

DIVISION OF ENGINEERING SERVICES ARCHITECTURAL AND STRUCTURAL DESIGN

BRIDGE NO. 54-1216J
POST MILE 177.3/181.1

MOUNTAIN PASS JPOE
ACCESSIBILITY — ACCESSIBILITY STANDARD DETAILS

SHEET A0-3.2

a0_03b_i.dgn
TAEMWW imperial Rev. 7/10 26-FEB-2013 09:58

ORIGINAL SCALE IN INCHES FOR REDUCED PLANS 0 1 2 3

UNIT 3584
PROJECT NUMBER & PHASE 08000006281
EA 368501

DISREGARD PRINTS BEARING EARLIER REVISION DATES
REVISION DATES (PRELIMINARY STAGE ONLY) - 07
SHEET OF

26-FEB-2013 09:58
a0_03b_i.dgn

DIST.	COUNTY	ROUTE	POST MILES TOTAL PROJECT	SHEET NO.	TOTAL SHEETS
08	SBd	15	177.3/181.1	281	710

LICENSED ARCHITECT — 05-18-12 DATE

LICENSED ARCHITECT Y.A. WANG No. C14891 Exp. 11-30-13 STATE OF CALIFORNIA

2-25-13
PLANS APPROVAL DATE

The State of California or its officers or agents shall not be responsible for the accuracy or completeness of scanned copies of this plan sheet.

ACCESSIBILITY DESIGN APPROVAL STAMP DOT / DES / OTA
08-368501
DISTRICT - EA
Reviewed by: Y.A. WANG
Date: 03-30-09

CALIFORNIA STATE FIRE MARSHAL APPROVED
Approval of this plan does not authorize or approve any omission or deviation from applicable regulations. Final approval is subject to field inspection. One set of approved plans shall be available on the project site at all times.
Reviewed by: G. ANDERSEN
Approval date: 01-20-2011

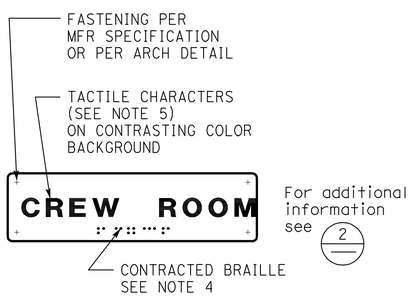

1 ROOM IDENTIFICATION SIGN

Install per Detail 5.
Text varies.
See plans, ext elevations, or door schedule for locations and text.
See Detail 7 for text mounting heights.

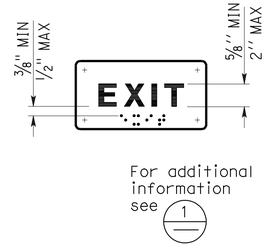

2 INTERIOR EXIT SIGN

Install per Detail 5.
Text may vary.
See plans, or door schedule for locations and text.
See Detail 7 for text mounting heights.

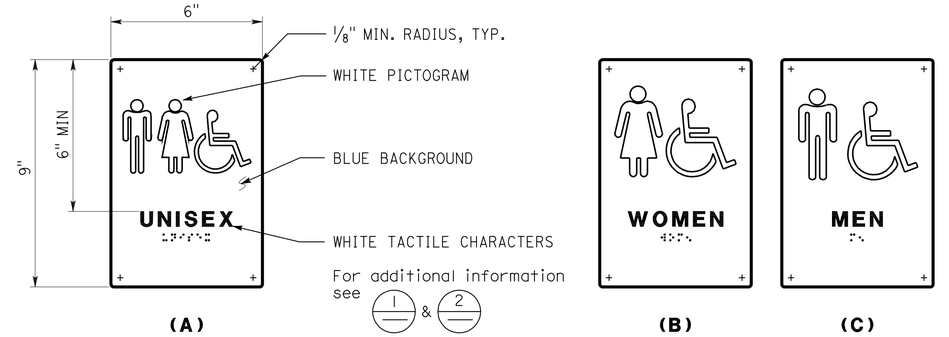

3 RESTROOM/SHOWER ROOM SIGNS

Install per Detail 5.
See Detail 7 for text mounting height.

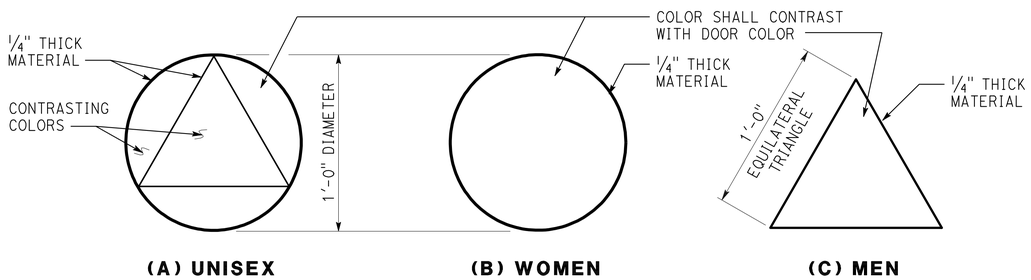

4 RESTROOM/SHOWER ROOM IDENTIFICATION SYMBOLS

Install per Detail 5.
Any pictogram and text are not required.

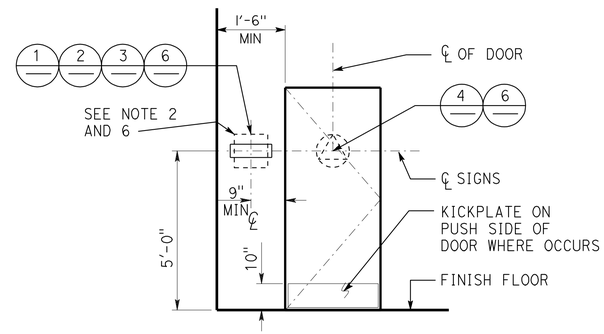

5 SIGN LOCATIONS

Refer to signage notes for additional information.

SIGNAGE NOTES:

1. Locate room identification signs, exit signs, and restroom signs on wall adjacent to door on latch side. If wall space is not available on latch side, locate on nearest adjacent wall. Locate sign to the right of right hand door at double doors with two active leafs.
2. Refer to specifications for sign material and other color selection. Except Detail 6, sign colors may vary from details.
3. See door schedule for text and sign location, UON.
4. Contracted braille: dots shall be 1/10" OC in each cell with 2/10" space between cells measured from the second column of dots in the first cell to the first column of dots in the second cell. Dots shall be raised a minimum of 1/40" above the background. Dots shall be domed or rounded.
5. Tactile characters shall be uppercase san serif raised 1/32" min with a width to height ratio between 3:5 and 1:1 and a stroke width to height ratio between 1:5 and 1:10.
6. Provide 18"x18" min clear floor space in front of and centered on the sign.

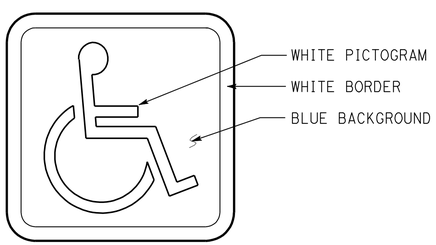

6 INTERNATIONAL SYMBOL OF ACCESSIBILITY SIGN

Install per Detail 5.
See plans, elevations, or schedule for sign locations.
Decal may be used.

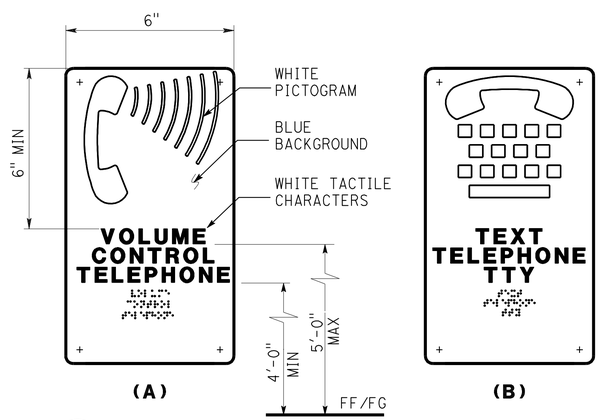

7 TELEPHONE SIGNS

Text may vary.
See plans or exterior elevations for sign locations and mounting heights.

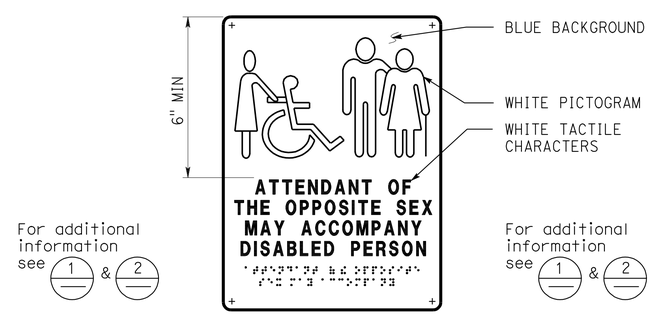

8 RESTROOM ACCOMPANY SIGN

See plans or elevations for locations.
See Detail 7 for text mounting heights.

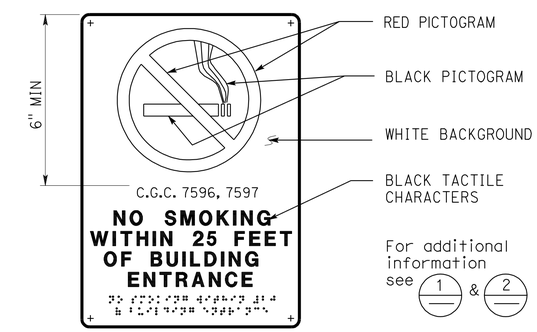

9 NO SMOKING SIGN

See plans or ext elevations for locations.
See Detail 7 for text mounting heights.

DETAILS

No scale unless otherwise noted

NOTE: SPECIFIC DETAILS OR NOTES ON OTHER SHEETS SHALL PREVAIL OVER STANDARD DETAILS AND NOTES ON THIS SHEET

STANDARD DRAWING
FILE NO. __-__-__ | DESIGN BY D. Alsey | CHECKED Y. A. Wang | APPROVED R E Travis DESIGN SUPERVISOR
DRAWING DATE 05-12 | DETAILS BY D. Good | CHECKED Y. A. Wang
SUBMITTED BY Y.A. Wang

STATE OF CALIFORNIA DEPARTMENT OF TRANSPORTATION

DIVISION OF ENGINEERING SERVICES ARCHITECTURAL AND STRUCTURAL DESIGN

BRIDGE NO. 54-1216J
POST MILE 177.3/181.1

MOUNTAIN PASS JPOE
ACCESSIBILITY — ACCESSIBILITY STANDARD DETAILS

SHEET A0-3.3

a0_03c_i.dgn
TAEMWW imperial Rev. 7/10 26-FEB-2013 09:58

ORIGINAL SCALE IN INCHES FOR REDUCED PLANS 0 1 2 3

UNIT 3584
PROJECT NUMBER & PHASE 08000006281
EA 368501

DISREGARD PRINTS BEARING EARLIER REVISION DATES
REVISION DATES (PRELIMINARY STAGE ONLY) - 07 | SHEET | OF

26-FEB-2013 09:58
a0_03c_i.dgn

DIST.	COUNTY	ROUTE	POST MILES TOTAL PROJECT	SHEET NO.	TOTAL SHEETS
08	SBd	15	177.3/181.1	282	710

LICENSED ARCHITECT — DATE 05-18-12

LICENSED ARCHITECT Y.A. WANG No. C14891 Exp. 11-30-13 STATE OF CALIFORNIA

2-25-13
PLANS APPROVAL DATE

The State of California or its officers or agents shall not be responsible for the accuracy or completeness of scanned copies of this plan sheet.

ACCESSIBILITY DESIGN APPROVAL STAMP DOT / DES / OTA
08-368501
DISTRICT - EA
Reviewed by: Y.A. WANG
Date: 03-30-09

CALIFORNIA STATE FIRE MARSHAL APPROVED
Approval of this plan does not authorize or approve any omission or deviation from applicable regulations. Final approval is subject to field inspection. One set of approved plans shall be available on the project site at all times.
Reviewed by: G. ANDERSEN
Approval date: 01-20-2011

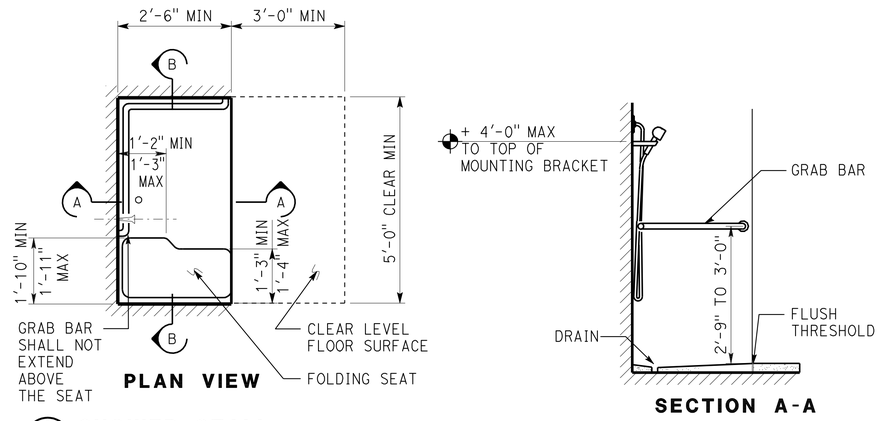

PLAN VIEW

SECTION A-A

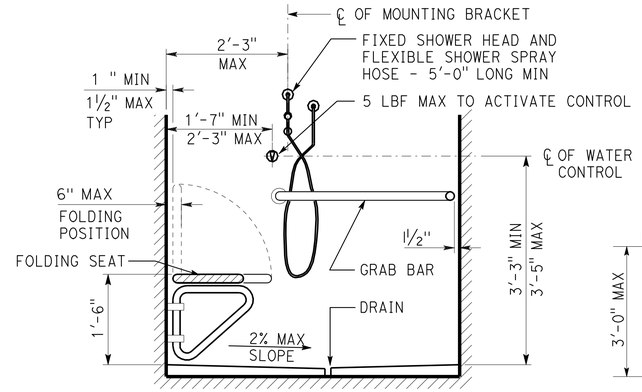

SECTION B-B

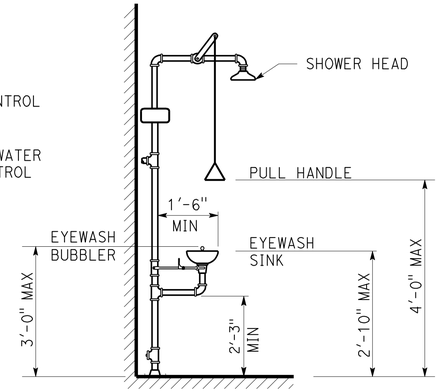

1 SHOWER STALL

Optional standard shower head may be added to wall opposite shower seat. Locate water diverter per water control.

2 EMERGENCY EYEWASH/ SHOWER

Foot pedal may be added to operate equipment

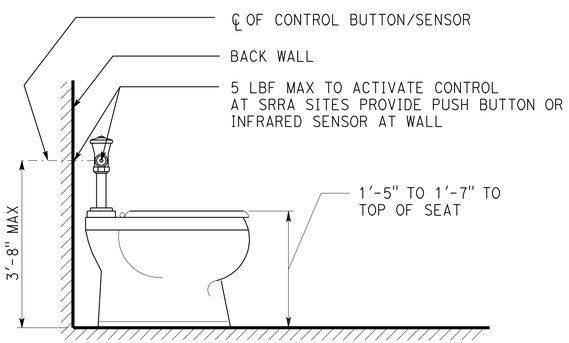

3 WATER CLOSET

See Spec for fixture type

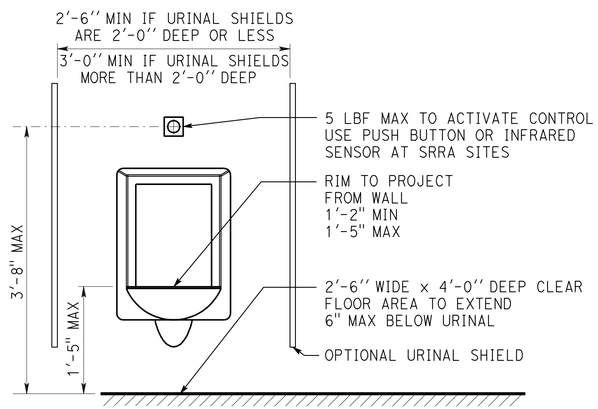

4 URINAL

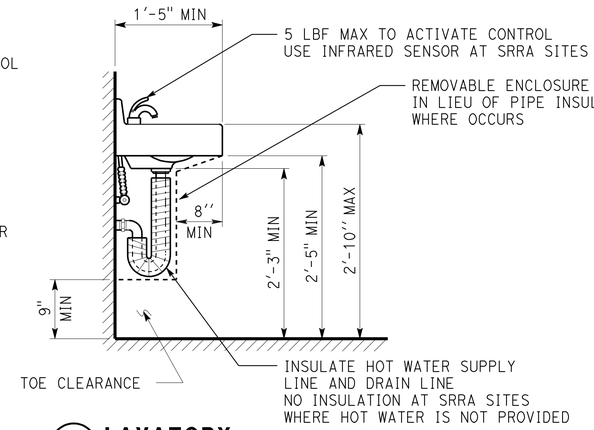

5 LAVATORY

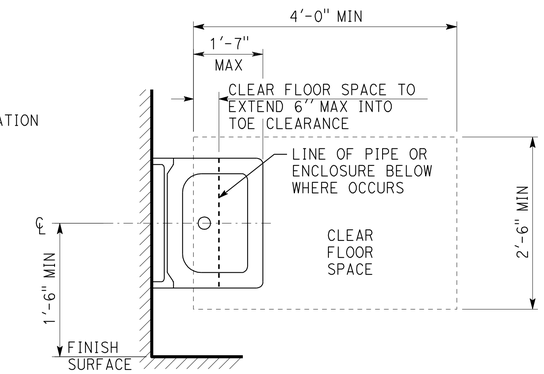

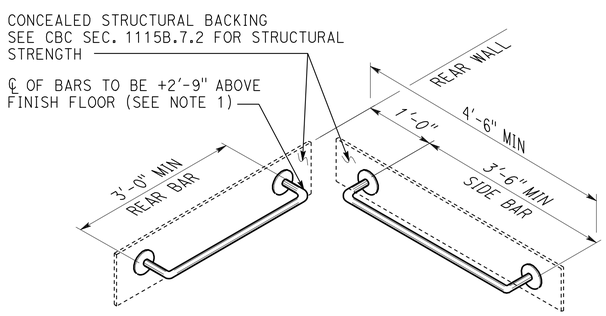

6 GRAB BARS/ WATER CLOSET

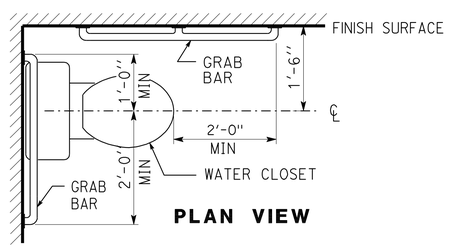

PLAN VIEW

Grab bar note:
1. If tank type toilet is used, top of rear bar may be set to 3'-0" max above finish floor. Side bar to remain as shown.
2. Grab bars to be 1 ¼" To 1 ½" diameter with clear space of 1 ½" to smooth wall surface.

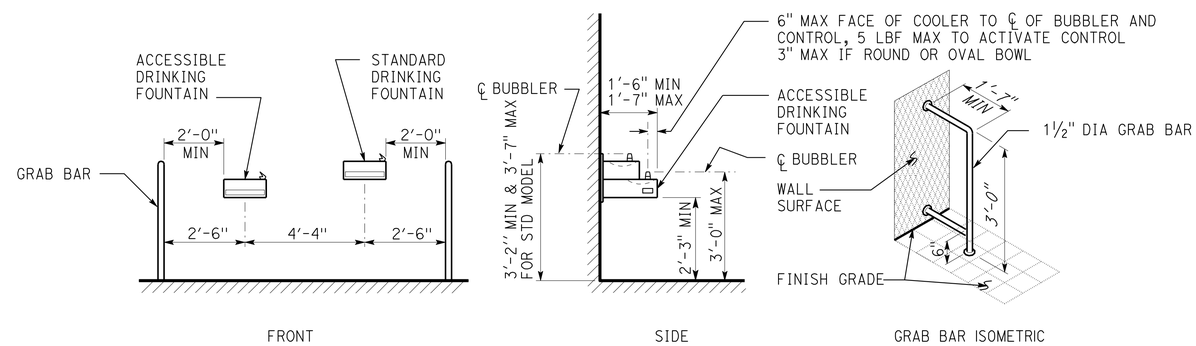

7 ELECTRIC WATER COOLER

In lieu of grab bars, other types of wing walls may be used. Dimensions at front elevation may vary - see plan.

DETAILS

No scale unless otherwise noted

NOTE: SPECIFIC DETAILS OR NOTES ON OTHER SHEETS SHALL PREVAIL OVER STANDARD DETAILS AND NOTES ON THIS SHEET

STANDARD DRAWING				
FILE NO. __-__-_	DESIGN	BY D. Alsey	CHECKED Y. A. Wang	APPROVED R E Travis DESIGN SUPERVISOR
DRAWING DATE 05-12	DETAILS	BY D. Good	CHECKED Y. A. Wang	
	SUBMITTED BY Y.A. Wang			

STATE OF CALIFORNIA DEPARTMENT OF TRANSPORTATION

DIVISION OF ENGINEERING SERVICES ARCHITECTURAL AND STRUCTURAL DESIGN

BRIDGE NO. 54-1216J
POST MILE 177.3/181.1

MOUNTAIN PASS JPOE

ACCESSIBILITY — ACCESSIBILITY STANDARD DETAILS

SHEET A0-3.4

a0_03d_i.dgn
TAEMWW imperial Rev. 7/10 26-FEB-2013 09:58

ORIGINAL SCALE IN INCHES FOR REDUCED PLANS 0 1 2 3

UNIT 3584
PROJECT NUMBER & PHASE 08000006281
EA 368501

DISREGARD PRINTS BEARING EARLIER REVISION DATES → - -07

REVISION DATES (PRELIMINARY STAGE ONLY) SHEET OF

26-FEB-2013 09:58
a0_03d_i.dgn

DIST.	COUNTY	ROUTE	POST MILES TOTAL PROJECT	SHEET NO.	TOTAL SHEETS
08	SBd	15	177.3/181.1	283	710

LICENSED ARCHITECT — DATE 05-18-12

LICENSED ARCHITECT Y.A. WANG No. C14891 Exp. 11-30-13 STATE OF CALIFORNIA

2-25-13
PLANS APPROVAL DATE

The State of California or its officers or agents shall not be responsible for the accuracy or completeness of scanned copies of this plan sheet.

ACCESSIBILITY DESIGN APPROVAL STAMP DOT / DES / OTA
08-368501
DISTRICT - EA
Reviewed by: Y.A. WANG
Date: 03-30-09

CALIFORNIA STATE FIRE MARSHAL APPROVED
Approval of this plan does not authorize or approve any omission or deviation from applicable regulations. Final approval is subject to field inspection. One set of approved plans shall be available on the project site at all times.
Reviewed by: G. ANDERSEN
Approval date: 01-20-2011

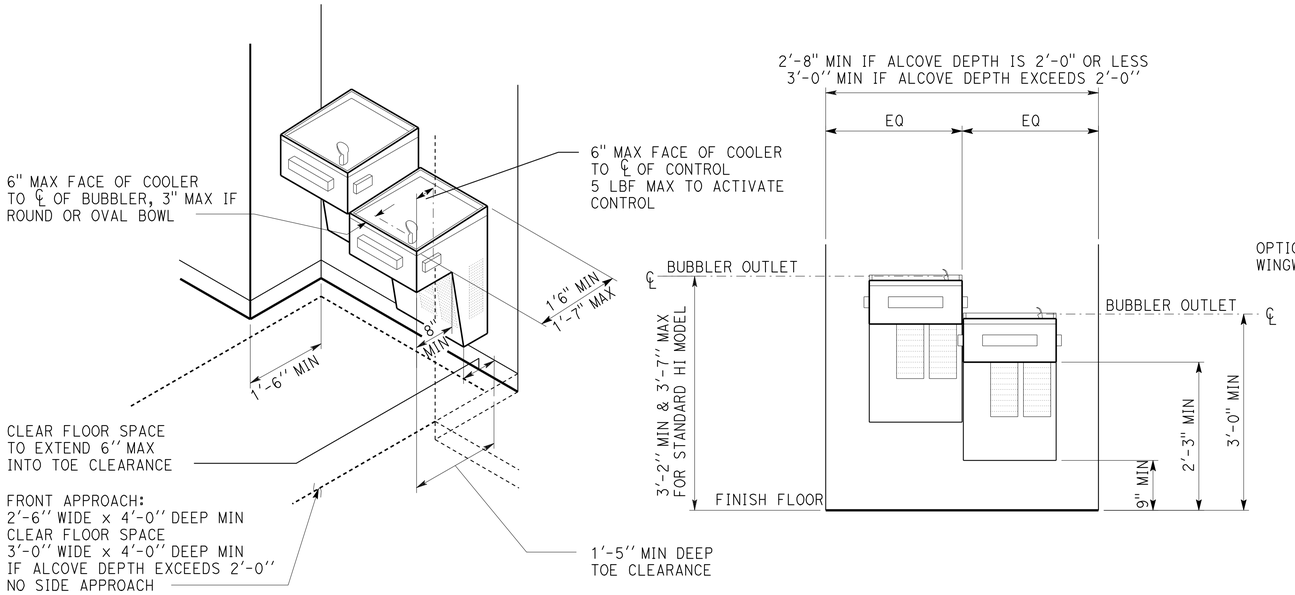

1 ELECTRIC WATER COOLER AT ALCOVE

Fixture type may vary.
Width of alcove may vary.
Two fixtures with separate mounting heights may be installed at separate locations.

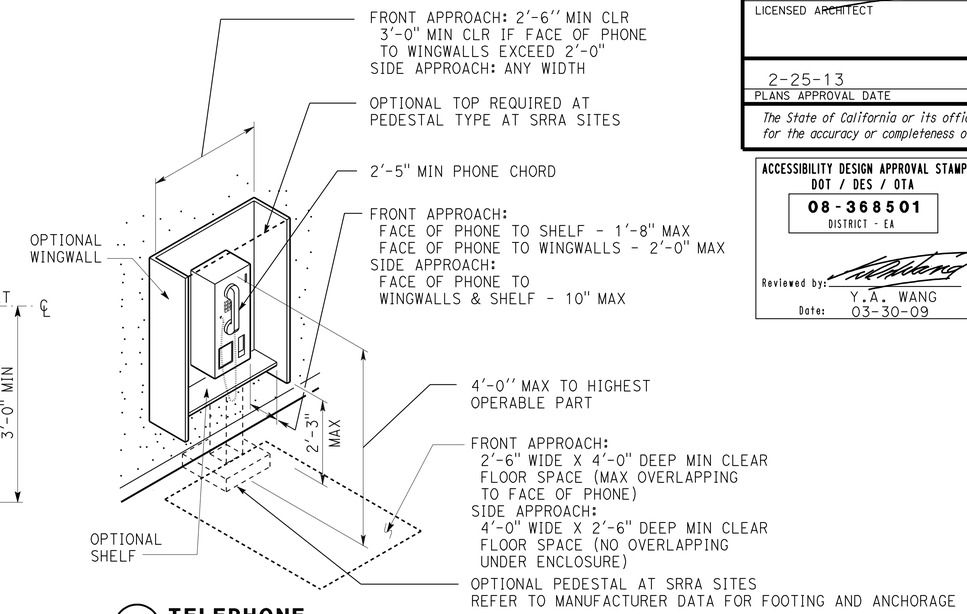

2 TELEPHONE

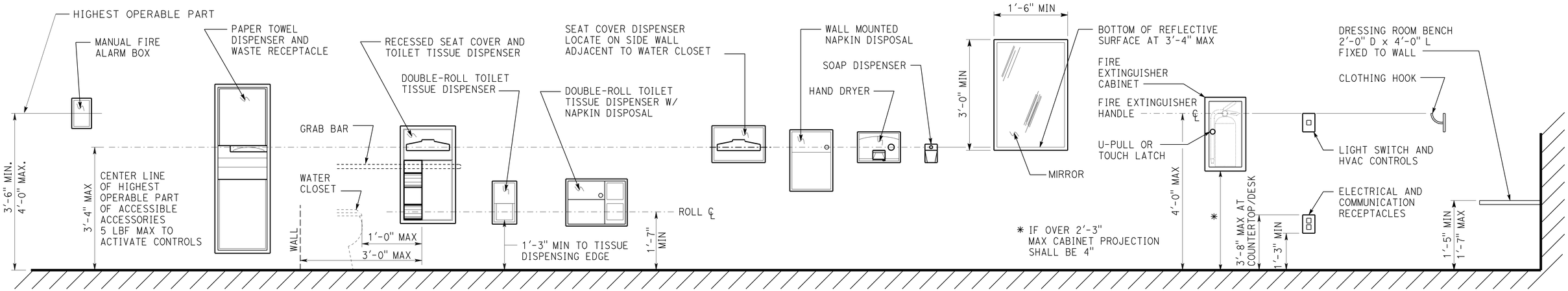

3 ACCESSORIES

DETAILS

No scale unless otherwise noted

NOTE: SPECIFIC DETAILS OR NOTES ON OTHER SHEETS SHALL PREVAIL OVER STANDARD DETAILS AND NOTES ON THIS SHEET

STANDARD DRAWING
FILE NO. __-__-__ | DESIGN BY D. Alsey | CHECKED Y. A. Wang | APPROVED R E Travis
DRAWING DATE 05-12 | DETAILS BY D. Good | CHECKED Y. A. Wang | DESIGN SUPERVISOR
SUBMITTED BY Y.A. Wang

STATE OF CALIFORNIA DEPARTMENT OF TRANSPORTATION

DIVISION OF ENGINEERING SERVICES ARCHITECTURAL AND STRUCTURAL DESIGN

BRIDGE NO. 54-1216J
POST MILE 177.3/181.1

MOUNTAIN PASS JPOE
ACCESSIBILITY — ACCESSIBILITY STANDARD DETAILS

SHEET A0-3.5

a0_03e_i.dgn
TAEMWW imperial Rev. 7/10 26-FEB-2013 09:59

ORIGINAL SCALE IN INCHES FOR REDUCED PLANS 0 1 2 3

UNIT 3584
PROJECT NUMBER & PHASE 08000006281
EA 368501

DISREGARD PRINTS BEARING EARLIER REVISION DATES
REVISION DATES (PRELIMINARY STAGE ONLY) - 07 | SHEET | OF

26-FEB-2013 09:59
a0_03e_i.dgn

DIST.	COUNTY	ROUTE	POST MILES TOTAL PROJECT	SHEET NO.	TOTAL SHEETS
08	SBd	15	177.3/181.1	284	710

DOUG LOWE 11-30-12
LICENSED ARCHITECT DATE

LICENSED ARCHITECT DOUG LOWE No. C-15341 Exp. 06-30-13 STATE OF CALIFORNIA

2-25-13
PLANS APPROVAL DATE

The State of California or its officers or agents shall not be responsible for the accuracy or completeness of electronic copies of this plan sheet.

ACCESSIBILITY DESIGN APPROVAL STAMP
DOT / DES / OTA
08-368501
DISTRICT - EA
Reviewed by: Y.A. WANG
Date: * 03-30-09

CALIFORNIA STATE FIRE MARSHAL APPROVED
Approval of this plan does not authorize or approve any omission or deviation from applicable regulations. Final approval is subject to field inspection. One set of approved plans shall be available on the project site at all times.
Reviewed by: G. ANDERSEN
Approval date: 01-20-2011

* Originally Approval 4/02/09,
Updated Approval 03/01/10

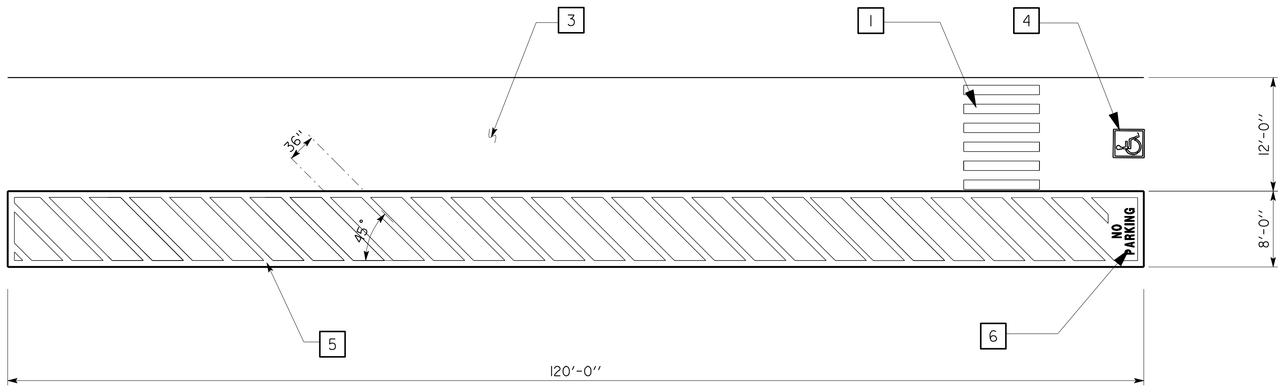

1 TRUCK ACCESSIBLE PARKING STALL
SCALE: 1/8" = 1'-0"

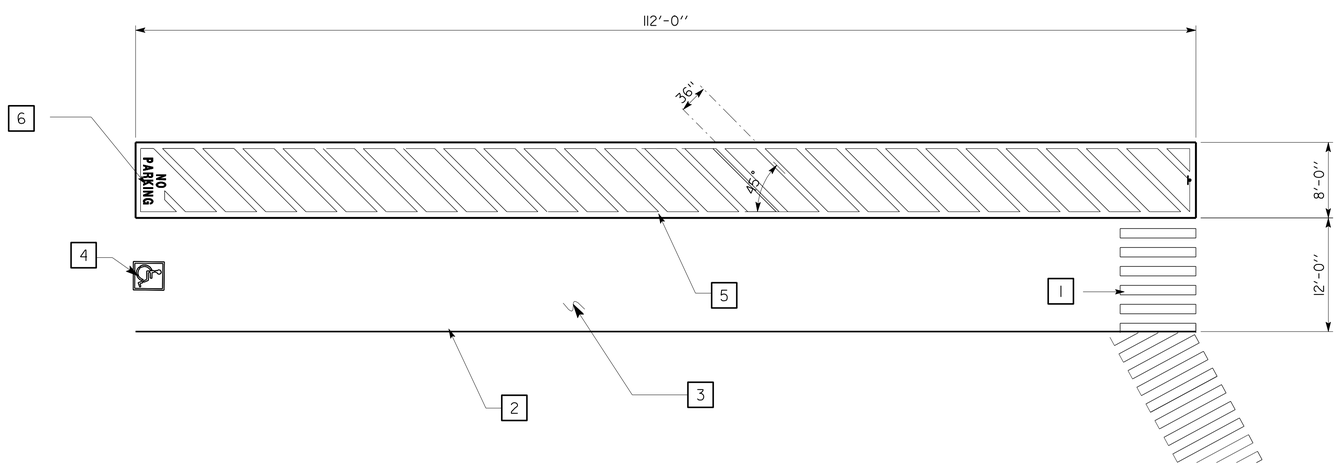

2 TRUCK ACCESSIBLE PARKING STALL
SCALE: 1/8" = 1'-0"

KEYED NOTE LEGEND FOR DETAILS

1. PEDESTRIAN CROSSWALK DELINEATION PER SITE PLAN ARRANGEMENT
2. 4" WIDE WHITE PARKING STALL BORDER STRIPE. SEE SITE PLAN(S) FOR ADDITIONAL STALL STRIPING. SEE SPECIFICATIONS FOR PAINTING.
3. MAXIMUM SLOPE ON PARKING STALL PAVED AREA TO BE 2%.
4. INTERNATIONAL SYMBOL OF ACCESSIBILITY PAINTED ON PAVEMENT. SEE DETAIL 6 ON SHEET A0-3.2.
5. 4" WIDE WHITE STRIPING DESIGNATION FOR NON-PARKING ACCESS AISLE
6. "NO PARKING" IN MINIMUM 12" HIGH WHITE LETTERS TO BE PLACED WITHIN ACCESS AISLE SEE DETAIL 7 ON SHEET A0-3.2.

DESIGN	BY DOUG LOWE	CHECKED	
DETAILS	BY	CHECKED	
QUANTITIES	BY	CHECKED	

STATE OF CALIFORNIA
DEPARTMENT OF TRANSPORTATION

DIVISION OF ENGINEERING SERVICES
ARCHITECTURAL AND STRUCTURAL DESIGN

BRIDGE NO. 54-1216J
POST MILE 177.3/181.1

MOUNTAIN PASS JPOE
ACCESSIBILITY — ACCESSIBLE TRUCK PARKING

SHEET **A0-3.6**

a0_03f_i.dgn
DS OSD Imperial Rev. 11/98 26-FEB-2013 09:59

ORIGINAL SCALE IN INCHES FOR REDUCED PLANS 0 1 2 3

UNIT 3584
PROJECT NUMBER & PHASE 08000006281
EA 368501

DISREGARD PRINTS BEARING EARLIER REVISION DATES → 11-01-10 11-30-12

REVISION DATES (PRELIMINARY STAGE ONLY) SHEET OF

26-FEB-2013 09:59
a0_03f_i.dgn

LEGEND

ACCESSIBLE PATH OF TRAVEL

ACCESSIBILITY DESIGN APPROVAL STAMP DOT / DES / OTA
08-368501
DISTRICT - EA
Reviewed by: Y.A. WANG
Date: 03-30-09

CALIFORNIA STATE FIRE MARSHAL APPROVED
Approval of this plan does not authorize or approve any omission or deviation from applicable regulations. Final approval is subject to field inspection. One set of approved plans shall be available on the project site at all times.
Reviewed by: G. ANDERSEN
Approval date: 01-20-2011

DIST.	COUNTY	ROUTE	POST MILES TOTAL PROJECT	SHEET NO.	TOTAL SHEETS
08	SBd	15	177.3/181.1	285	710

DOUG LOWE 12-12-12
DATE

LICENSED ARCHITECT DOUG LOWE No. C-15341 Exp. 06-30-13 STATE OF CALIFORNIA

2-25-13
PLANS APPROVAL DATE

The State of California or its officers or agents shall not be responsible for the accuracy or completeness of electronic copies of this plan sheet.

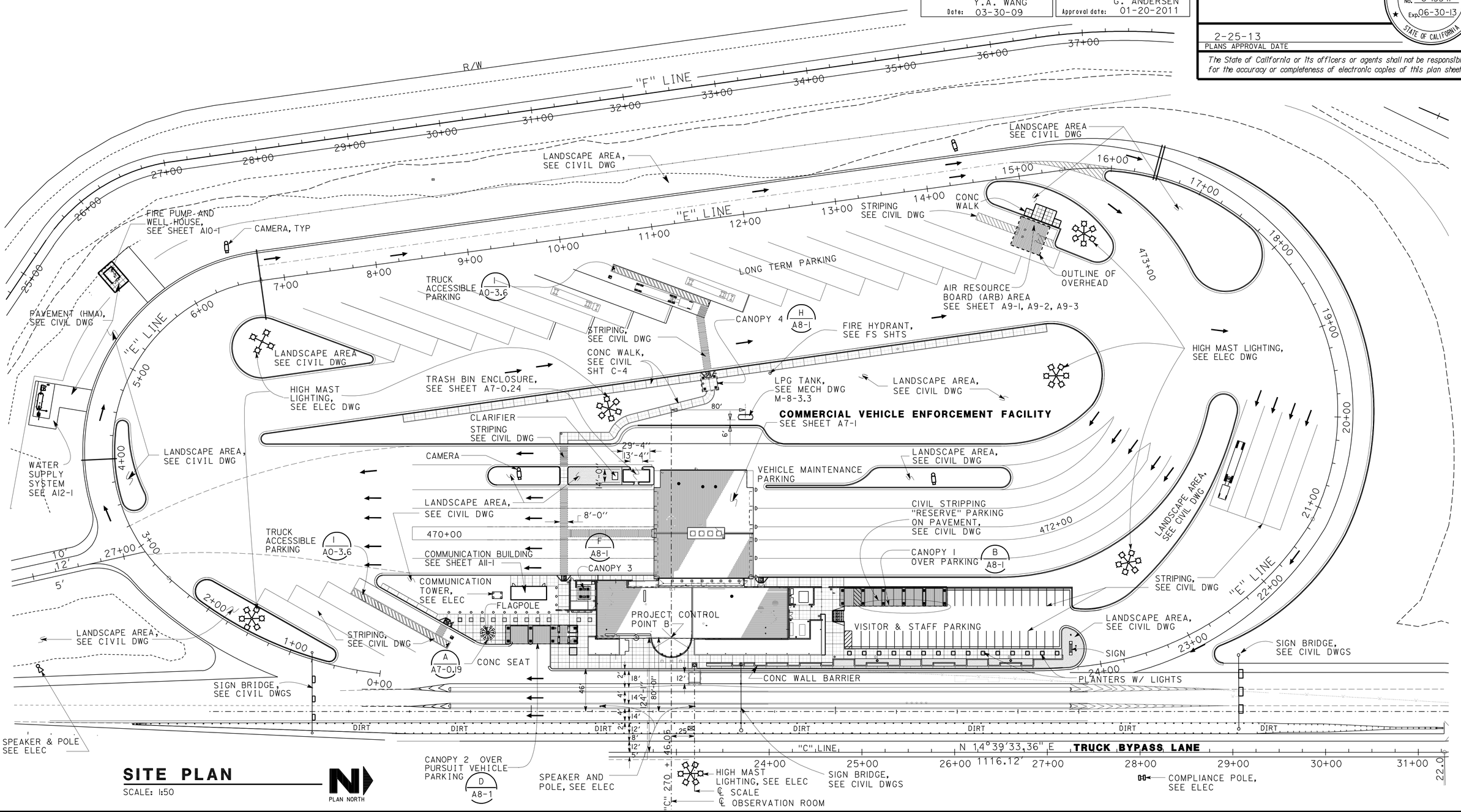

SITE PLAN

SCALE: 1:50

PLAN NORTH

DESIGN	BY D.LOWE	CHECKED C.FAUST	
DETAILS	BY C.BOYER	CHECKED C.FAUST	
QUANTITIES	BY	CHECKED	

STATE OF CALIFORNIA
DEPARTMENT OF TRANSPORTATION

DIVISION OF ENGINEERING SERVICES
ARCHITECTURAL AND STRUCTURAL DESIGN

BRIDGE NO.	MOUNTAIN PASS JPOE	SHEET
54-1216J		A7-0.1
POST MILE 177.3/181.1	CVEF — SITE PLAN, CVEF	

a7_0_01site.dgn
DS OSD Imperial Rev. 11/98 26-FEB-2013 09:59

ORIGINAL SCALE IN INCHES FOR REDUCED PLANS 0 1 2 3

UNIT 3584
PROJECT NUMBER & PHASE 08000006281

DISREGARD PRINTS BEARING EARLIER REVISION DATES → 11-01-10 11-30-12

REVISION DATES (PRELIMINARY STAGE ONLY) SHEET X OF X

EA 368501

26-FEB-2013 09:59 a7_0_01site.dgn

FINISH SCHEDULE

NOTE: FINISH TYPES LISTING CONTINUED ON SHEET A7-0.4

ROOM NUMBER	ROOM NAME	FLOOR: CONCRETE	FLOOR: CERAMIC TILE	FLOOR: RUBBER TILE	FLOOR: CARPET	BASE: RESILLIENT BASE, 6" TYP	BASE: CERAMIC TILE COVED BASE	BASE: NONE	BASE: STAINLESS STEEL BASE	WALLS NORTH: CMU	WALLS NORTH: CERAMIC TILE	WALLS NORTH: GYPSUM BOARD	WALLS NORTH: WALL COVERING OVER GYP BD	WALLS NORTH: GYP BD (MANPROOF WALL)	WALLS NORTH: PLYWOOD	WALLS EAST: CMU	WALLS EAST: CERAMIC TILE	WALLS EAST: GYPSUM BOARD	WALLS EAST: WALL COVERING OVER GYP BD	WALLS EAST: GYP BD (MANPROOF WALL)	WALLS EAST: FRP	WALLS EAST: PLYWOOD	WALLS SOUTH: CMU	WALLS SOUTH: CERAMIC TILE	WALLS SOUTH: GYPSUM BOARD	WALLS SOUTH: WALL COVERING OVER GYP BD	WALLS SOUTH: GYP BD (MANPROOF WALL)	WALLS SOUTH: FRP	WALLS SOUTH: PLYWOOD	WALLS WEST: CMU	WALLS WEST: CERAMIC TILE	WALLS WEST: GYPSUM BOARD	WALLS WEST: WALL COVERING OVER GYP BD	WALLS WEST: GYP BD (MANPROOF WALL)	WALLS WEST: PLYWOOD	MISC: STEEL STRUCTURE	MISC: EXPOSED MECH & ELECT	MISC: PLASTIC LAMINATE	MISC: SPECIAL SURFACE	MISC: LIGHTING FIXTURES	CEILING: ACOUSTIC LINEAR PANEL	CEILING: EXTERIOR LINEAR PANEL	CEILING: SUSPENDED CEILING	CEILING: GYPSUM BOARD	CEILING: GYP BD (MANPROOF CLG)	CEILING: EXPOSED DECKING	CEILING: FINISHED INSULATION BOARD	APPROXIMATE CEILING HEIGHT	REMARKS, SPECIAL CONDITIONS
	OFFICE BUILDING																																																
001	ENTRY LOBBY		F-3					B-4		W-1		W-4						W-4					W-1		W-4					W-1		W-4							M6	C-1							VARIES	
002	WOMEN		F-3				B-2				W-2						W-2							W-2							W-2								M7				C-5				9'-0"	
003	MEN		F-3				B-2				W-2						W-2							W-2							W-2								M9				C-5				9'-0"	
004	LOBBY		F-3					B-4	B-5			W-4				W-1		W-4					W-1			W-5				W-1		W-4					M2	P1	M5	M6	C-1							VARIES	6
005	HALLWAY			F-8		B-6		B-4					W-5			W-1			W-5							W-5							W-5						P12		M8				C-5				8'-0"	
005A	HALLWAY			F-8		B-6							W-5			W-1			W-5							W-5														MI3			C-4					9'-0"	
005B	HALLWAY			F-8		B-6							W-5						W-5							W-5														M8				C-5				8'-0"	
005C	HALLWAY			F-8		B-6							W-5						W-5							W-5														M8				C-5				8'-0"	
005D	HALLWAY			F-8		B-6							W-5													W-5							W-5							M8				C-5				8'-0"	
005E	HALLWAY			F-8		B-6							W-5													W-5							W-5							M8				C-5				8'-0"	
005F	HALLWAY			F-8		B-6			B-5				W-5													W-5												P14		M8			C-4					11'-6"	
005G	HALLWAY			F-8		B-6		B-4					W-5			W-1										W-5							W-5						P12		M8				C-5				VARIES	
006	OPEN OFFICE				F-5				B-5	W-1		W-4						W-4							W-4							W-4				MI		P13	M5	MI3			C-4					11'-6"	
007	OBSERVATION				F-6	B-1			B-5																							W-4						P4		M7			C-3					8'-2"	14
008	CLERICAL				F-5	B-1			B-5	W-1		W-4						W-4							W-4							W-4				MI		P2		MI3			C-4					11'-6"	
009	CLERICAL STORAGE & WORK AREA				F-5	B-1						W-4													W-4							W-4						P2		MI2			C-4					11'-6"	
009A	CLERICAL STORAGE & WORK AREA				F-5	B-1						W-4						W-4							W-4							W-4						P4		MII			C-4					9'-0"	
010	LIEUTENANT OFFICE				F-5	B-1						W-4				W-1									W-4							W-4					M2			MI3			C-4					9'-0"	
011	ARMORY			F-7		B-1								W-6						W-6	W-7						W-6	W-7						W-6		MI		P7	M4	MII					C-8			9'-0"	
012	SHOWER 1		F-4				B-3				W-3						W-3						W-3							W-3										MII				C-5				9'-0"	
013	STAFF WOMEN		F-4				B-3				W-3	W-4					W-3						W-3	W-4						W-3					MI		P6		M9				C-5				11'-9"	
014	WOMEN LOCKER			F-9		B-6						W-4						W-4							W-4							W-4				MI				MII				C-5				11'-9"	
015	EVIDENCE			F-7		B-1								W-6						W-6	W-7						W-6	W-7						W-6				P7	M4	MII					C-8			9'-0"	
016	JANITOR 1			F-7		B-1						W-4						W-4							W-4							W-4								MII				C-5				9'-0"	
017	MEN LOCKER			F-9		B-6						W-4						W-4							W-4							W-4				MI				MII				C-5				11'-9"	
018	STAFF MEN		F-4				B-3				W-3	W-4					W-3						W-3	W-4						W-3	W-4						P6		M9				C-5				11'-9"	
019	SHOWER 2		F-4				B-3				W-3						W-3						W-3							W-3										MII				C-5				9'-0"	
020	JANITOR 2			F-7		B-1						W-4						W-4			W-7				W-4			W-7				W-4								MII				C-5				9'-0"	
021	WATER TREATMENT	F-1				B-1						W-4						W-4							W-4							W-4				MI	M2			MII						C-6	C-7	VARIES	
023	SERGEANT OFFICE A			F-7		B-1						W-4						W-4							W-4							W-4				MI				MII						C-6	C-7	VARIES	
024	ROAD CREW OFFICE			F-7		B-1						W-4						W-4							W-4							W-4						P9		MII				C-5				11'-9"	
025	AIR RESOURCE BOARD STORAGE	F-1				B-1						W-4						W-4							W-4							W-4								MII				C-5				11'-9"	
026	MECHANICAL	F-1				B-1									W-9			W-4							W-4									W-9		M2			MII				C-5				11'-9"	
027	ELECTRICAL	F-1				B-1									W-9							W-9							W-9					W-9		M2			MII				C-5				9'-0"	
028	VESTIBULE 2			F-7		B-1							W-5						W-5							W-5				W-1			W-5							MII				C-5				8'-0"	

DIST.	COUNTY	ROUTE	POST MILES TOTAL PROJECT	SHEET NO.	TOTAL SHEETS
08	SBd	15	177.3/181.1	286	710

DOUG LOWE 12-12-12
LICENSED ARCHITECT DATE

LICENSED ARCHITECT DOUG LOWE No. C-15341 Exp. 06-30-13 STATE OF CALIFORNIA

2-25-13
PLANS APPROVAL DATE

The State of California or its officers or agents shall not be responsible for the accuracy or completeness of electronic copies of this plan sheet.

ACCESSIBILITY DESIGN APPROVAL STAMP
DOT / DES / OTA
08-368501
DISTRICT - EA
Reviewed by: Y.A. WANG
Date: 03-30-09

CALIFORNIA STATE FIRE MARSHAL APPROVED
Approval of this plan does not authorize or approve any omission or deviation from applicable regulations. Final approval is subject to field inspection. One set of approved plans shall be available on the project site at all times.
Reviewed by: G. ANDERSEN
Approval date: 01-20-2011

FINISH SCHEDULE GENERAL NOTES

1 EXPOSED PIPE AND ELECTRICAL CONDUIT SHALL BE PAINTED TO MATCH ADJACENT SURFACES UON.

2 STRUCTURAL STEEL SHALL INCLUDE ALL PRIMARY AND SECONDARY FRAMING MEMBERS.

3 THE COLOR AND FINISH OF ANY MATERIAL NOT LISTED WILL BE SELECTED BY THE ENGINEER FROM MANUFACTURERS STANDARD PALETTE.

4 COLOR AND FINISH OF ALL LIGHTING FIXTURES NOT SPECIFIED HEREIN TO BE SELECTED BY THE ENGINEER FROM MANUFACTURERS STANDARD PALETTE.

5 WHERE FLOOR MATERIAL CHANGE OCCURS FROM ONE ROOM TO ANOTHER, USE DTL 12/ A7-2.01 UON. FOR FLOOR MATERIAL CHANGE LOCATION BETWEEN ROOMS 004, 005F, 006 AND 008, SEE DTL A/ A7-0.5 AND USE METAL EDGE STRIP PER DTL 12/ A7-2.01.

6 BASE AT CASEWORK TO BE RUBBER B-1 UON; SEE SPECIFIC LISTING IN FINISH SCHEDULE 3 FOR STAINLESS STEEL BASE WITH CASEWORK 1 THROUGH 6. ALL BASE AT CASEWORK TO BE PER CASEWORK DWGS.

REGARDING "REMARKS, SPECIAL CONDITIONS"

1 SUBMIT STANDARD COLOR/MATERIALS PALETTE TO ENGINEER

2 IN TRAINING ROOM 036: 'TACKBOARD' AND 'WRITEBOARD' WALLS TO HEIGHT OF 8'-0", OVER GYP BOARD, WITH GYP BOARD CONTINUING ABOVE PER WALL TYPE W-4. IN BREAKROOM 034: SIZE OF TACK BOARD PER INT ELEV.

3 LINEAR METAL CEILING ABOVE COURT, ROOM 033; 'WALLS' ARE EXTERIOR MATERIALS, TO MATCH BLDG EXTERIOR.

4 EXTERIOR METAL SIDING HIGH ABOVE WALKWAY, RM 037.

5 SHOWN IN INTERIOR ELEVATIONS AND SEE WALL W - 5.

6 SPECIAL SIGNAGE FOR 'SEAL OF CALIFORNIA'

7 ALL METAL PERSONNEL DOORS, EXTERIOR AND INTERIOR, UON.

8 ONLY PERSONNEL DOORS SPECIFIED: DOORS # 36, 40, 44, 47, 48, 55; PATTERN TO BE "RANDOM" BY FORMS + SURFACES.

9 ALL INTERIOR METAL PERSONNEL DOOR FRAMES, UON.

10 ALL INTERIOR WINDOW AND CURTAIN WALLS FRAMES AND GLAZING, UON.

11 SEE EXT SCH FOR SKYLIGHT CURB.

12 SEE EXT LIGHT FIXTURE COLOR

13 UNO; SEE SPECIFICATIONS

14 NO WALL FINISH SHOWN; ONLY CURTAIN WALL AND CASEWORK

15 CONCRETE FLOORS AND WALLS OF INSPECTION AREA PITS TO HAVE HARDENER AND SEALER.

16 FOR OFFICE PARAPET WALL CAP, OFFICE ROOF AND PARAPET WALL ON ROOF SIDE, SEE MISCELLANEOUS, SPECIAL SURFACE.

17 TOP AND BOTTOM OF SOFFIT TO BE PAINTED W - 4

DESIGN	BY D.LOWE	CHECKED C.FAUST	
DETAILS	BY BARBARA BROWN CB	CHECKED C.FAUST	
QUANTITIES	BY	CHECKED	

STATE OF CALIFORNIA
DEPARTMENT OF TRANSPORTATION

DIVISION OF ENGINEERING SERVICES
ARCHITECTURAL AND STRUCTURAL DESIGN

UNIT 3584
PROJECT NUMBER & PHASE 08000006281

BRIDGE NO. 54-1216J
POST MILE 177.3/181.1

MOUNTAIN PASS JPOE
CVEF
FINISH SCHEDULE 1

SHEET A7-0.2

DISREGARD PRINTS BEARING EARLIER REVISION DATES → 11-01-10 11-30-12
REVISION DATES (PRELIMINARY STAGE ONLY) SHEET X OF X

ORIGINAL SCALE IN INCHES FOR REDUCED PLANS 0 1 2 3

a7_0_02finsche1.dgn
DS OSD Imperial Rev. 11/98 26-FEB-2013 09:59

EA 368501

26-FEB-2013 09:59 a7_0_02finsche1.dgn

FINISH SCHEDULE

ROOM NUMBER	ROOM NAME	FLOOR				BASE				WALLS NORTH						WALLS EAST								WALLS SOUTH								WALLS WEST								MISC					CEILING							APPROXIMATE CEILING HEIGHT	REMARKS, SPECIAL CONDITIONS
		CONCRETE	CERAMIC TILE	RUBBER TILE	CARPET	RESILIENT BASE	CERAMIC TILE COVED BASE	NONE	STAINLESS STEEL BASE	CMU	CERAMIC TILE	GYPSUM BOARD	WALL COVERING OVER GYP BD	GYP BD (MANPROOF WALL)	PLYWOOD	CMU	CERAMIC TILE	GYPSUM BOARD	WALL COVERING OVER GYP BD	GYP BD (MANPROOF WALL)	FRP	PLYWOOD	CMU	CERAMIC TILE	GYPSUM BOARD	WALL COVERING OVER GYP BD	GYP BD (MANPROOF WALL)	FRP	PLYWOOD	CMU	CERAMIC TILE	GYPSUM BOARD	WALL COVERING OVER GYP BD	GYP BD (MANPROOF WALL)	PLYWOOD	STEEL STRUCTURE	EXPOSED MECH & ELECT	PLASTIC LAMINATE	SPECIAL SURFACE	LIGHTING FIXTURES	ACOUSTIC LINEAR PANEL	EXTERIOR LINEAR PANEL	SUSPENDED CEILING	GYPSUM BOARD	GYP BD (MANPROOF CLG)	EXPOSED DECKING	FINISHED INSULATION BOARD		
	OFFICE BUILDING																																																			
029	EMERGENCY MEDICAL TECHNICIAN			F-7		B-1						W-4						W-4							W-4							W-4								MI1				C-5				9'-0"	
030	UNIFORM			F-7		B-1						W-4						W-4							W-4							W-4								MI1				C-5				9'-0"	
031	VESTIBULE 3			F-7		B-1							W-5						W-5							W-5				W-1									MI1				C-5				8'-0"	
032	SERGEANT OFFICE B				F-5	B-1						W-4						W-4							W-4							W-4								MI3				C-5				9'-0"	
033	COURT	F-2								W-1						W-1							W-1							W-1							M2			-		C-2						VARIES	3, 12
034	BREAK ROOM			F10		B-1		B-4				W-4						W-4							W10							W-4						M3	P10		MI0	C-1			C-5				VARIES	
035	STORAGE 1			F-7		B-1						W-4						W-4							W-4							W-4								MI1				C-5				8'-0"	
036	MULTI-PURPOSE			F11		B-1		B-4				W-4						W-11							W-4							W-4				MI	M3	P10		MI0	C-1			C-5				VARIES	2, 17
037	WALKWAY	F-1				B-1				W-1						W-1					W-7		W-1													MI				MI2						C-6		VARIES	
038	STORAGE 2	F-1				B-1				W-1		W-4						-							W-4							W-4								MI1				C-5				9'-0"	
039	STORAGE 3	F-1				B-1						W-4				W-1									W-4											MI	M2			MI1				C-5				9'-0"	
040	INSPECTION AREA	F-1						B-4	B-5			W-4						W-4							W-4				W-8	W-1						MI	M2	P8	MI4	MI2						C-6	C-7	VARIES	4,15,16
041	OFFICE	F-1				B-1						W-4						W-4							W-4							W-4						M2	P9		MI3			C-3					9'-0"	
042	PARTS AND SUPPLY	F-1				* B-1		B-4				W-4				W-1							W-1							W-1									MI1				C-5				9'-0"	* BASE ON NORTH WALL ONLY
043	VEHICLE MAINTENANCE SHOP	F-1				* B-1		B-4		W-1						W-1									W-4					W-1							M2			MI1						C-6		VARIES	* BASE ON SOUTH WALL ONLY
044	TRANFORMER AREA	F-1						B-4		W-1						W-1							W-1							W-1							M2			-								- -	12
045	EXTERIOR GENERATOR AREA	F-1						B-4		W-1						W-1							W-1																	-								- -	12
046	ELECTRICAL CLOSET	F-1				B-1									W-8							W-8							W-8						W-8	MI				MI1				C-5				8'-0"	

COLOR SCHEDULE: INTERIOR

ITEM	FINISH	FEDERAL STANDARD COLOR 595	COLOR	REMARKS
LOCKERS, IN RMS 014, 017	STD FINISH	-- --	BLACK	
TACK BOARD COVERING	RAKU VINYL	# 27769 (60%), # 13578 (%40)	OYSTER SHELL	
WRITE BOARD	PRE-MFR		LOW GLOSS WHITE	
CORNER GUARDS	MATTE FINISH	-- --	-- --	5
TOILET PARTITIONS	-- --	-- --	STAINLESS STEEL	
METAL SHELVES	-- --	-- --	-- --	1
MET PERSONNEL DOOR	-- --	-- --	STAINLESS STEEL	8
MET PERSONNEL DOOR	SEMI-GLOSS PAINT	# 26314	QUAKER GREY	7
PERSONNEL DR FRAME	SEMI-GLOSS PAINT	# 26314	QUAKER GREY	9
DOOR & FRAMES # 51-54	SEMI-GLOSS PAINT	# 26314	QUAKER GREY	
INTERIOR WINDOW FRAME	CLEAR ANODIZED	-	ALUMINUM	10
INTERIOR GLAZING	MFR	-	CLEAR	10

COLOR SCHEDULE: INTERIOR

ITEM	FINISH	FEDERAL STANDARD COLOR 595	COLOR	REMARKS
LADDER CAGE	SEMI-GLOSS PAINT	# 26314	QUAKER GREY	
GUARDRAIL	SEMI-GLOSS PAINT	# 13591	HIGHLIGHT	
SKYLIGHT INNER CURB	SEMI-GLOSS PAINT	# 36650	SWISS WHITE	
LOCKER RM BENCH	BIRCH STAIN	-- --	DARK STAIN	
SHOWER STALL	FACTORY	-- --	WHITE	
TOILET ACCESSORIES	-- --	-- --	STAINLESS STEEL	
DRINKING FOUNTAIN	-- --	-- --	STAINLESS STEEL	
WORK BENCH	-- --	-- --	-- --	
LOCKERS, IN RM 029	-- --	-- --	-- --	
BINS, IN RMS 029, 030	-- --	-- --	-- --	
RACKS, IN RMS 030	MFR STD	-	STD GREY, W/ TUBING	

DIST.	COUNTY	ROUTE	POST MILES TOTAL PROJECT	SHEET NO.	TOTAL SHEETS
08	SBd	15	177.3/181.1	287	710

DOUG LOWE 12-12-12
LICENSED ARCHITECT DATE

LICENSED ARCHITECT DOUG LOWE No. C-15341 Exp. 06-30-13 STATE OF CALIFORNIA

2-25-13
PLANS APPROVAL DATE

The State of California or its officers or agents shall not be responsible for the accuracy or completeness of electronic copies of this plan sheet.

ACCESSIBILITY DESIGN APPROVAL STAMP DOT / DES / OTA
08-368501
DISTRICT - EA
Reviewed by: Y.A. WANG
Date: 03-30-09

CALIFORNIA STATE FIRE MARSHAL APPROVED
Approval of this plan does not authorize or approve any omission or deviation from applicable regulations. Final approval is subject to field inspection. One set of approved plans shall be available on the project site at all times.
Reviewed by: G. ANDERSEN
Approval date: 01-20-2011

NOTES:

1. FOR "REMARKS, SPECIAL CONDITIONS" IN FINISH SCHED, AND "REMARKS" IN COLOR SCHED, SEE NOTES ON SHEET A7-0.2

DESIGN	BY D.LOWE	CHECKED C.FAUST	
DETAILS	BY BARBARA BROWN CB	CHECKED C.FAUST	
QUANTITIES	BY	CHECKED	

STATE OF CALIFORNIA
DEPARTMENT OF TRANSPORTATION

DIVISION OF ENGINEERING SERVICES
ARCHITECTURAL AND STRUCTURAL DESIGN

BRIDGE NO. 54-1216J
POST MILE 177.3/181.1
CVEF

MOUNTAIN PASS JPOE
FINISH SCHEDULE 2

SHEET A7-0.3

a7_0_03finsche2.dgn
DS OSD Imperial Rev. 11/98 26-FEB-2013 09:59

ORIGINAL SCALE IN INCHES FOR REDUCED PLANS 0 1 2 3

UNIT 3584
PROJECT NUMBER & PHASE 08000006281
EA 368501

DISREGARD PRINTS BEARING EARLIER REVISION DATES → 11-04-10 11-30-12

REVISION DATES (PRELIMINARY STAGE ONLY) SHEET X OF X

26-FEB-2013 09:59
a7_0_03finsche2.dgn

DIST.	COUNTY	ROUTE	POST MILES TOTAL PROJECT	SHEET NO.	TOTAL SHEETS
08	SBd	15	177.3/181.1	288	710

DOUG LOWE 12-12-12
LICENSED ARCHITECT DATE

LICENSED ARCHITECT DOUG LOWE No. C-15341 Exp. 06-30-13 STATE OF CALIFORNIA

2-25-13
PLANS APPROVAL DATE

The State of California or its officers or agents shall not be responsible for the accuracy or completeness of electronic copies of this plan sheet.

ACCESSIBILITY DESIGN APPROVAL STAMP DOT / DES / OTA
08-368501
DISTRICT - EA
Reviewed by: Y.A. WANG
Date: 03-30-09

CALIFORNIA STATE FIRE MARSHAL APPROVED
Approval of this plan does not authorize or approve any omission or deviation from applicable regulations. Final approval is subject to field inspection. One set of approved plans shall be available on the project site at all times.
Reviewed by: G. ANDERSEN
Approval date: 01-20-2011

GENERAL FLOOR FINISH NOTES

1. WHERE COLOR NUMBERS ARE LISTED BELOW, SEE FEDEERAL STANDARD COLORS 595; THESE ARE LISTED FOR PAINT AS WELL AS OTHER MATERIALS AS A GUIDE. WHERE COLORS ARE NOT LISTED, COLORS SHALL BE SELECTED BY THE ENGINEER FROM THE APPROVED MANUFACTURER'S COLOR PALETTE FOR CORRESPONDING PRODUCT SPECIFICATION.

2. ALL CERAMIC TILES ARE THROUGHBODY COLOR, WITH COLOR CONSISTENT THROUGHOUT EACH TILE. TILES TO BE UNPOLISHED MATTE, NON-GLAZED, WITH SELF SHEEN, WHEREIN SURFACE TILE CELLS ARE FUSED FOR PERMANENT FINISH.

3. RUBBER FLOOR TILES, 18" X 18", ARE TO BE SIMPLY SMOOTH PROFILE, WITH FLECKED COLOR DESIGN, TO MEET FIRM, STABLE, SLIP RESISTANT REQUIREMENTS; THICKNESS TO BE 1/8 INCH.

4. CARPET TO BE 24 INCH SQ TILES OF NYLON TEXTURED LOOP, 1/8 INCH HEIGHT, WITH FLAME RESISTANCE ASTM E-648.

FINISHES

FLOOR

F - 1 CONCRETE W/ HARDENER AND SEALER.

F - 2 COLORED CONCRETE WITH HARDENER AND SEALER; COLOR # 30315, "EARTHEN"; SCORE PER PLANS.

F - 3 PORCELAIN CERAMIC TILE, 1'-6" x 1'-6"; COLOR # 30215 MOTTLED WITH # 30227, LAVA BROWN; STAGGER JOINTS PER DETAIL D/A7-0.5, W/ TILE PATTERN CONTINUOUS IN RMS 001, 002, 003, AND 004. USE GROUT G - 1.

F - 4 PORCELAIN CERAMIC TILE, 3"x 3"; COLOR # 30215, CAMPING OUT. USE GROUT G - 2.

F - 5 CARPET (SEE NOTE 4 ABOVE), COLORS 50% #35177, 20% # 25193, 10% # 30215, 10% # 35526, 10% # 36650, "ALL STAR MEDITERANEAN."

F - 6 CARPET (SEE NOTE 4 ABOVE), COLORS 50% # 35048, 20% # 15065, 10% # 25042, 10% # 30215, 10% # 25440, "ALL STAR LAPIS."

F - 7 RUBBER TILES (SEE NOTE 3 ABOVE), COLOR TO BE # 35164 (WITH FLECKS OF 25051 AND 36642), OCEAN DREAM.

F - 8 RUBBER TILES (SEE NOTE 3 ABOVE), SEE PLAN A, SHT A7-0.5; FIELD COLOR # 35164(WITH FLECKS OF 25051 AND 36642), OCEAN DREAM; EDGE STRIPE COLOR # 36306 (FLECKS OF 20095 AND 36642), CLAY TAUPE; ACCENT SQ COLOR # 36280 (WITH FLECKS OF 36521 AND 26132), GRANITE GRAY.

F - 9 RUBBER TILES (SEE NOTE 3 ABOVE), SEE PLAN A, SHT A7-0.5; FIELD COLOR # 36306 (FLECKS OF 20095 AND 36642), CLAY TAUPE; ACCENT COLOR # 35164(WITH FLECKS OF 25051 AND 36642), OCEAN DREAM

F - 10 RUBBER TILES (SEE NOTE 3 ABOVE), SEE PLAN A, SHT A7-0.5; FIELD COLOR # 35164(WITH FLECKS OF 25051 AND 36642), OCEAN DREAM; ACCENT COLOR # 36306 (FLECKS OF 20095 AND 36642), CLAY TAUPE.

F - 11 RUBBER TILES (SEE NOTE 3 ABOVE), SEE PLAN A, SHT A7-0.5; FIELD COLOR # 35164(WITH FLECKS OF 25051 AND 36642), OCEAN DREAM; ACCENT COLOR # 36306 (FLECKS OF 20095 AND 36642), CLAY TAUPE.

BASE

B - 1 RUBBER COVE BASE, 6" HIGH; COLOR # 20040, THUNDER

B - 2 COVED PORCELAIN CERAMIC TILE, 3" x 3"; COLOR # 20040, NIGHT NIGHT. USE GROUT G - 1.

B - 3 COVED PORCELAIN CERAMIC TILE, 3" x 3", SEE ELEV PATTERN B ON SHT A7-0.5: COLOR # 10091, CABOOSE. USE GROUT G - 2.

B - 4 NONE: CONDITION A: RUBBER FLOORING TO HAVE CLEAN STRAIGHT LINE TIGHT AGAINST CURTAIN WALL. CONDITION B: CARPET TO HAVE HEMMED EDGE TIGHT AGAINST CURTAIN WALL SYSTEM.

B - 5 STAINLESS STEEL BASE, 6" H, 20 GAUGE, TEXTURE FINISH "SANDSTONE", PATTERN "NONE".

B - 6 RUBBER COVE BASE, 6" HIGH; COLOR # 10091, CHERRYWOOD

FINISHES CONTINUED

WALLS

W - 1 CONCRETE MASONRY UNITS, SEALED

W - 2 PORCELAIN CERAMIC TILES, 3"x3". COLOR # 20040, NIGHT NIGHT; USE GROUT G - 1.

W - 3 PORCELAIN CERAMIC TILES, 3"x 3"; - SEE TYP ELEVATION PATTERN B ON SHEET A7-0.5; FIELD COLOR # 36440, SLINKY; LOWER EDGE COLOR #10091, CABOOSE; ACCENT COLOR 1# 25189, BLUE SUEDE SHOES ; ACCENT COLOR 2 # 10091, CABOOSE; USE GROUT G - 2.

W - 4 GYPSUM BOARD, PAINT COLOR # 36650, SWISS WHITE.

W - 5 VINYL WALL COVERING: PATTERN AND COLOR # 20266 (WITH 10% LINE PATTERN OF # 20227), "CHAI TEA". CORNER GUARDS, WHERE SHOWN ON INTERIOR ELEVATIONS, TO BE SURFACE MOUNTED, 3 INCH WIDE, 3'-6" HIGH UON, COLOR # 20040 CHARCOAL; USE END CAPS.

W - 6 GYPSUM BOARD 'MANPROOF WALL': GYPSUM BOARD OVER 3/4" THICK PLYWOOD OVER EXPANDED METAL MESH. SEE DETAILS C & D, SHT A7-7. PAINT GYP BOARD PER W-4 ABOVE.

W - 7 FIBER REINFORCED PANELS (FRP), SMOOTH GLOSS FINISH, OVER CEMENTITIOUS BACKER BOARD (IN 'MANPROOF WALL' WHERE OCCURS); COLOR # 36373, PEARL GRAY.

W - 8 PLYWOOD PANEL, 1/2" THICK, PAINTED. MUD SCREW HOLES AND PANEL JOINTS AS NECESSARY PRIOR TO PAINTING; PAINT COLOR # 36373, VALIANT GREY.

W - 9 PLYWOOD PANEL, 3/4" THICK, PAINTED. MUD SCREW HOLES AND PANEL JOINTS AS NECESSARY PRIOR TO PAINTING; PAINT COLOR # 36373, VALIANT GREY.

W - 10 GYPSUM BOARD, PAINT COLOR # 10091, OLD REDWOOD.

W - 11 GYPSUM BOARD, PAINT COLOR # 36650, SWISS WHITE. USE CORNER GUARDS, SHOWN ON INTERIOR ELEVATIONS, SURFACE MOUNTED, 2" WIDE, 7'-6" HIGH, COLOR # 20040, CHARCOAL; USE TOP CAPS.

CEILING

C - 1 ACOUSTIC LINEAR PANEL, "I" PATTERN, UNPERFORATED, WITH OPEN REVEAL AND WITH POLY-WRAPPED ACOUSTICAL MATERIAL TO MEET .65 NRC, IN PLENUM; FINISH TO BE BRUSHED ALUMINUM.

C - 2 EXTERIOR LINEAR PANEL, "II" PATTERN, UNPERFORATED, WITH REVEAL CLOSURE; FINISH TO BE BRUSHED ALUMINUM.

C - 3 SUSPENDED ACOUSTIC CEILING, 2'-0" x 2'-0": TILE TEXTURE MEDIUM; EDGE CUT VERTICAL; SUSPENSION SYSTEM I" PROFILE; COLOR OF BOTH TO BE CHARCOAL.

C - 4 SUSPENDED ACOUSTIC CEILING, 2'-0" x 4'-0": TEXTURE MEDIUM; EDGE CUT VERTICAL; FACE CUT TO BE 4 BY 4 PATTERN; PATTERN TO BE RUN EAST/WEST; SUSPENSION SYSTEM TO BE I" PROFILE; COLOR OF BOTH TO BE WHITE.

C - 5 GYPSUM BOARD, PAINT COLOR # 36650, SWISS WHITE.

C - 6 EXPOSED DECKING, PAINT COLOR # 36650, SWISS WHITE. STEEL STRUCTURE AND EXPOSED MECH & ELECT ITEMS, PAINT PER M-1 AND M-2.

C - 7 FINISHED INSULATION BOARD.

C - 8 GYPSUM BOARD 'MANPROOF CEILING': GYP BD OVER 3/4" THICK PLYWOOD OVER EXPANDED METAL MESH. SEE DETAILS C & D, SHT A7-7. PAINT GYP BD PER C - 5 ABOVE.

FINISHES CONTINUED

MISCELLANEOUS: PLASTIC LAMINATES

P - 1 PLAM FOR CASEWORK 1, SEE SHT A7-70 - A7-74: ITEMS INVOLVE FIELD 1 AND FIELD 3, AS WELL AS ACCENT 1 AND ACCENT 2. FOR CASEWORK 1, SEE ALSO M - 5. FOR CASEWORK 1, ALL BASE TO BE SS, B-5.

P - 2 PLAM FOR CASEWORK 2, 3, 5, 6, 8 AND 9, SEE SHT A7-75 - A7-82: ITEMS INVOLVE FIELD 3 AND ACCENT 1 AND ACCENT 3. FOR CASEWORK 2 & 3, BASE TO BE SS, B-5. FOR CASEWORK 4, 5, & 6, BASE TO BE SS, B-5 WHERE SHOWN.

P - 3 PLAM FOR CASEWORK 10, SEE SHT A7-83: ITEMS INVOLVE FIELD 3 AND ACCENT 1.

P - 4 PLAM FOR CASEWORK 7, SEE SHT A7-80: ITEM INVOLVES ONLY FIELD 3.

P - 5 PLAM FOR CASEWORK 4, SEE SHT A7-77 - A7-78: ITEM INVOLVES FIELD 3. USE CASEWORK EDGE E - 3.

P - 6 PLAM FOR CASEWORK 14 AND 15, SEE SHT A7-85 AND A7-86.1: ITEM INVOLVES FIELD 1. USE CASEWORK EDGE E - 2 WHERE SHOWN.

P - 7 PLAM FOR CASEWORK 11, 13 AND 12, SEE SHT A7-84 - A7-86: ITEM INVOLVES FIELD 1. FOR CASEWORK 11 AND 13 SEE ALSO M - 4.

P - 8 PLAM FOR CASEWORK 22, FOUR IDENTICAL UNITS, SEE SHT A7-92: 4 UNIT ITEMS INVOLVE FIELD 1. USE CASEWORK EDGES E - 1 AND E - 2 WHERE SHOWN FOR CASEWORK 22, ALL BASE TO BE SS, B-5.

P - 9 PLAM FOR CASEWORK 16, 17, AND 21, SEE SHT A7-87, A7-88 AND A7-91: ITEM INVOLVES FIELD 1 AND ACCENT 4. USE EDGE E - 2 WHERE SHOWN ON DWGS.

P - 10 PLAM FOR CASEWORK 19 AND 20 SEE SHT A7-89 AND 90: ITEM INVOLVES FIELD 1 AND ACCENT 2 AND 3. USE CASEWORK EDGE E - 2 WHERE SHOWN ON DWGS.

P - 11 not used

P - 12 FOR CASEWORK 8, MAIL SLOTS, SEE P-3; FOR CASEWORK 12, EVIDENCE LOCKERS, SEE P-7; FOR OPEN OFFICE, SEE P-1.

P - 13 FOR CASEWORK 1, SEE P - 1; FOR CASEWORK 2 OR 3, SEE P - 2.

P - 14 FOR CASEWORK 5 OR 6, SEE P - 2; FOR CASEWORK 1, SEE P - 1; FOR CASEWORK 2, SEE P - 2.

GROUT

G - 1 EPOXY GROUT SYSTEM: CHARCOAL GREY

G - 2 EPOXY GROUT SYSTEM: MID GREY

CASEWORK EDGES

E - 1 EDGE: PROFILE TO BE T-EDGE 3/4 " L; COLOR TO BE GREY, UON.

E - 2 EDGE: PROFILE TO BE T-EDGE 1 1/2" L; COLOR TO BE GREY, UON.

E - 3 EDGE: PROFILE TO BE T-EDGE 1 1/8" L; COLOR TO BE GREY, UON.

FINISHES CONTINUED

MISCELLANEOUS: GENERAL

M - 1 STEEL STRUCTURE PAINT PER SPECIFICATIONS, COLOR # 26314, QUAKER GREY.

M - 2 EXPOSED MECH & ELECT ITEMS (INCLUDING EXPOSED ELECT CONDUIT) TO BE PAINTED PER SPECIFICATIONS, COLOR # 15180, CADET BLUE.

M - 3 EXPOSED MECH & ELECT TO BE PAINTED PER M-2, BUT COLOR TO MATCH ADJACENT WALL.

M - 4 SPECIAL COUNTERTOP FOR CASEWORK 11 AND 13, SEE SHEETS A7-84 AND A7-86: LABORATORY SOLID 1 INCH THICK COUNTERTOP; COLOR # 10032, BLACK.

M - 5 SPECIAL COUNTERTOP FOR CASEWORK 1, SEE SHT A7-70 - A7-74: SOLID SURFACE COLOR # 30252 (WITH FLECKS OF 30040 AND 36650), "SHALE, F"

M - 6 PENDANT FIXTURES TO BE BRUSHED ALUMINUM; AND WALL-MOUNTED FIXTURES MATTE FINISH METALLIC SILVER.

M - 7 RECESSED FIXTURES MATTE FINISH BLACK.

M - 8 RECESSED FIXTURES MATTE FINISH WHITE.

M - 9 FIXTURES MATTE FINISH TO BE METALLIC SILVER.

M - 10 PENDANT FIXTURES MATTE FINISH TO BE TITANIUM SILVER; AND WALL-MOUNTED FIXTURES (WHERE OCCURING) TO BE SAME.

M - 11 FIXTURES TO HAVE WHITE FINISH.

M - 12 PENDANT FIXTURES COLOR # 10091, OLD REDWOOD; WALL-MOUNTED FIXTURES TO BE BLACK, UON; RECESSED FIXTURES MATTE FINISH WHITE; AND PIT FIXTURES TO BE WHITE.

M - 13 LAY-IN FLUORESCENT FIXTURES, WHITE FINISH

M - 14 WOOD CAP AND MINERAL BOARD ROOF AND PARAPET TO BE PAINT # 10091, OLD REDWOOD

DESIGN	BY D.LOWE	CHECKED C.FAUST	
DETAILS	BY DON CHOW CB	CHECKED C.FAUST	
QUANTITIES	BY	CHECKED	

STATE OF CALIFORNIA
DEPARTMENT OF TRANSPORTATION

DIVISION OF ENGINEERING SERVICES
ARCHITECTURAL AND STRUCTURAL DESIGN

BRIDGE NO. 54-1216J
POST MILE 177.3/181.1

MOUNTAIN PASS JPOE
CVEF
FINISH SCHEDULE 3

SHEET A7-0.4

a7_0_04finsche3.dgn
DS OSD Imperial Rev. 11/98 14-MAY-2013 06:43

ORIGINAL SCALE IN INCHES FOR REDUCED PLANS 0 1 2 3

UNIT 3584
PROJECT NUMBER & PHASE 08000006281
EA 368501

DISREGARD PRINTS BEARING EARLIER REVISION DATES → 11-01-10 11-30-12

REVISION DATES (PRELIMINARY STAGE ONLY) SHEET X OF X

14-MAY-2013 06:43
a7_0_04finsche3.dgn

DIST.	COUNTY	ROUTE	POST MILES TOTAL PROJECT	SHEET NO.	TOTAL SHEETS
08	SBd	15	177.3/181.1	289	710

DOUG LOWE 12-12-12
LICENSED ARCHITECT DATE

LICENSED ARCHITECT DOUG LOWE No. C-15341 Exp. 06-30-13 STATE OF CALIFORNIA

2-25-13
PLANS APPROVAL DATE

The State of California or its officers or agents shall not be responsible for the accuracy or completeness of electronic copies of this plan sheet.

ACCESSIBILITY DESIGN APPROVAL STAMP DOT / DES / OTA
08-368501
DISTRICT - EA
Reviewed by: Y.A. WANG
Date: 03-30-09

CALIFORNIA STATE FIRE MARSHAL APPROVED
Approval of this plan does not authorize or approve any omission or deviation from applicable regulations. Final approval is subject to field inspection. One set of approved plans shall be available on the project site at all times.
Reviewed by: G. ANDERSEN
Approval date: 01-20-2011

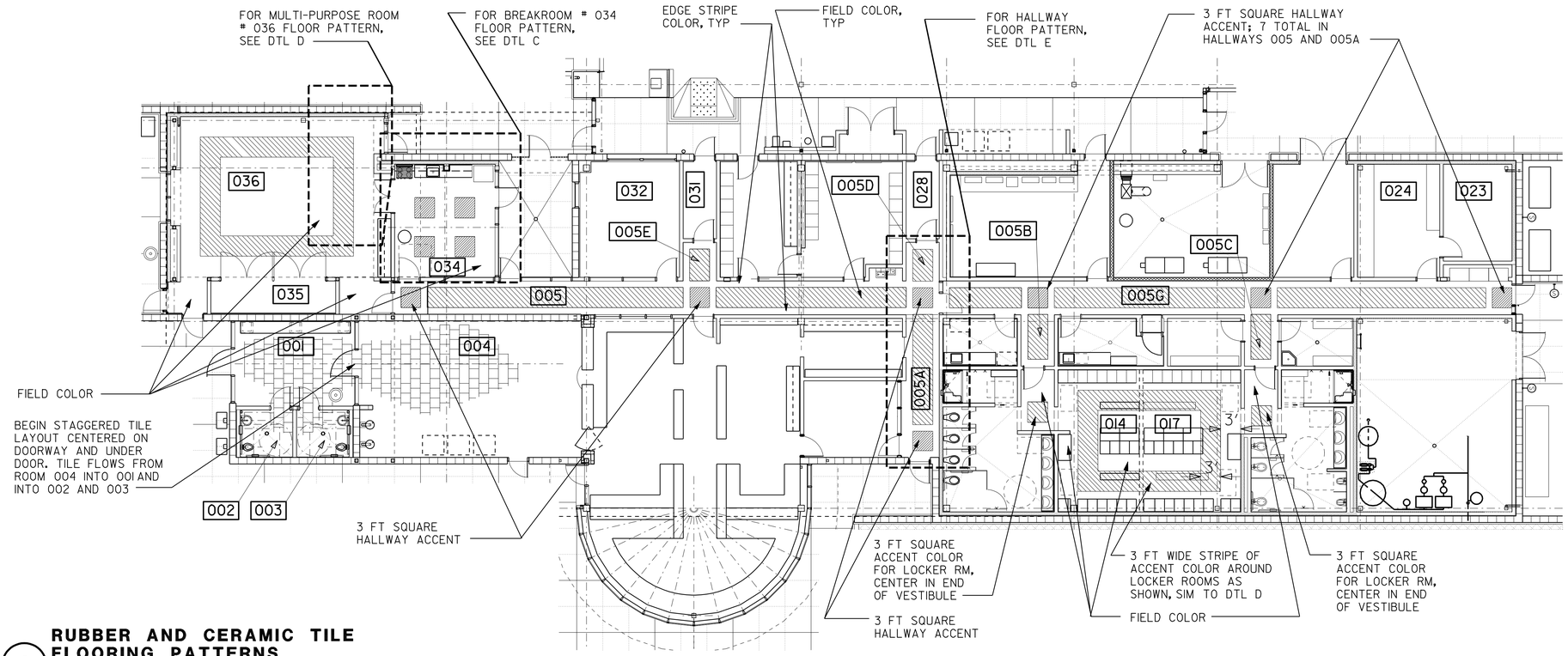

A RUBBER AND CERAMIC TILE FLOORING PATTERNS

SCALE 1" = 10'-0"

SHOWER, RMS 012 AND 019:
PROVIDE FIELD COLOR, LOWER EDGE COLOR, AND ACCENT COLORS 1 AND 2 IN LOWER BAND ONLY (NO UPPER BAND).

STAFF RESTROOMS, RMS 013 AND 018:
PROVIDE FIELD COLOR, LOWER EDGE COLOR, AND ACCENT COLORS 1 AND 2 IN BOTH LOWER AND UPPER BAND.

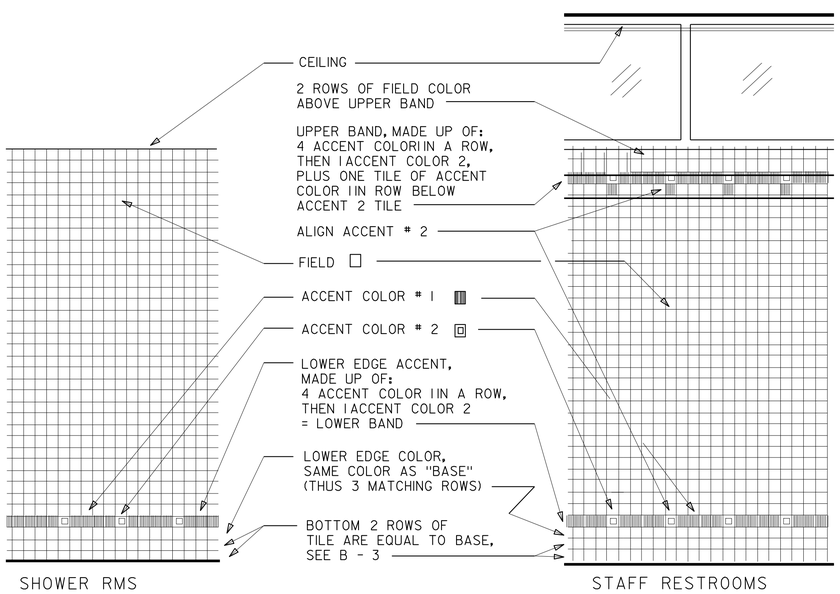

B CERAMIC WALL TILE PATTERNS

NOT TO SCALE

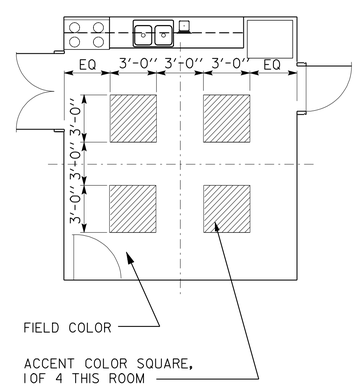

C ROOM 034 FLOORING

NOT TO SCALE

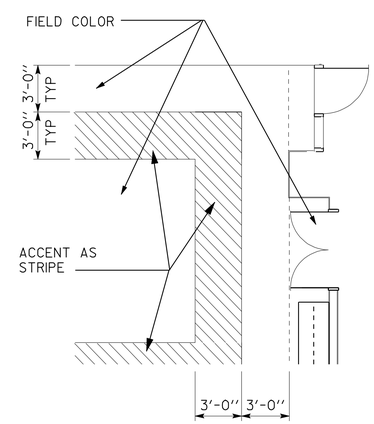

D ROOM 036 FLOORING

NOT TO SCALE

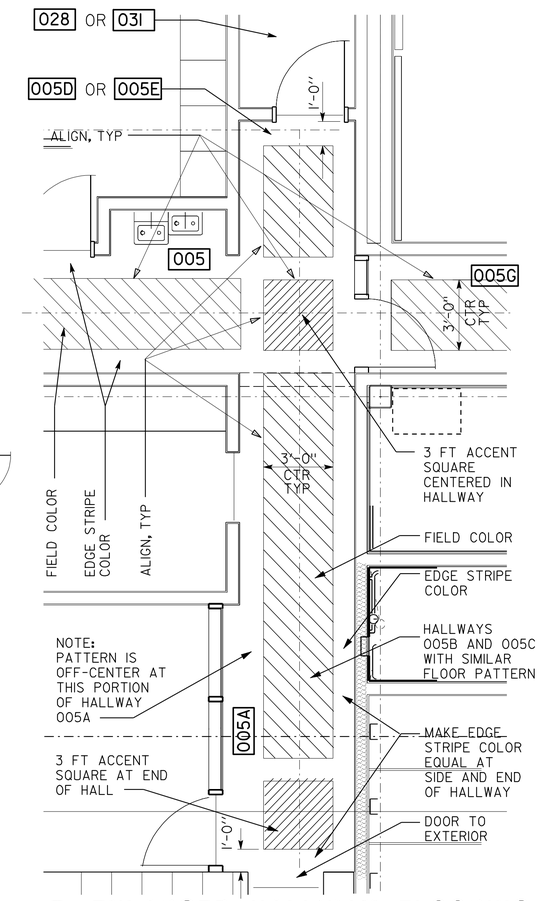

E ENLARGED HALLWAY FLOORING

NOT TO SCALE

DESIGN	BY D.LOWE	CHECKED C.FAUST	
DETAILS	BY	CHECKED C.FAUST	
QUANTITIES	BY	CHECKED	

STATE OF CALIFORNIA
DEPARTMENT OF TRANSPORTATION

DIVISION OF ENGINEERING SERVICES
ARCHITECTURAL AND STRUCTURAL DESIGN

BRIDGE NO. 54-1216J
POST MILE 177.3/181.1

MOUNTAIN PASS JPOE
CVEF
FINISH SCHEDULE 4

SHEET A7-0.5

a7_0_05finsche4.dgn
DS OSD Imperial Rev. 11/98 26-FEB-2013 09:59

ORIGINAL SCALE IN INCHES FOR REDUCED PLANS 0 1 2 3

UNIT 3584
PROJECT NUMBER & PHASE 08000006281
EA 368501

DISREGARD PRINTS BEARING EARLIER REVISION DATES → 11-01-10 11-30-12

REVISION DATES (PRELIMINARY STAGE ONLY) SHEET X OF X

26-FEB-2013 09:59
a7_0_05finsche4.dgn

EXTERIOR COLOR AND FINISH SCHEDEDULE

ITEM	FINISH	FEDERAL STANDARD COLOR 595	COLOR	NOTES
STONE VENEER	STONE VENEER RANDOM TIGHT FITTING STACK	SEE NOTE 14	SO. LEDGESTONE	14
CMU, MEDIUM WT	SPLIT FACE	30117	SIENNA BROWN	
CMU, MEDIUM WT	PRECISION FACE	30117	SIENNA BROWN	
SPECIAL METAL PANEL	PVDF COATING	20318	DARK CHAMPAGNE METALLIC	5
METAL PANEL	PVDF COATING	26420	CASTLE GREY	7
METAL PANELS, NUMERALS	PVDF COATING	27040	BLACK	
METAL PANEL FASCIA	PVDF COATING	20140	SAGE BROWN	
METAL ROOFING	PVDF COATING	20140	SAGE BROWN	
SUN SHADE	PVDF COATING	20040	BROWN	
METAL SIDING	PVDF COATING	20140	SAGE BROWN	
RIDGE, EAVE, MISC FLASHING	PVDF COATING	20140	SAGE BROWN	
SIDING TRIM, GUTTER	PVDF COATING	20140	SAGE BROWN	
CONCRETE COLUMN	SEALED	-- --	-- --	
EXTERIOR PERSONNEL DOOR	SEMI-GLOSS PAINT	34098	GATEWAY	
EXTERIOR HM DOOR TRIM	SEMI-GLOSS PAINT	26120	OXFORD INN	
TELESCOPING DOOR	SEMI-GLOSS PAINT	34098	GATEWAY	
TELESCOPING DR FRAME, TRIM	SEMI-GLOSS PAINT	26120	OXFORD INN	
ROLL-UP DOOR	SEMI-GLOSS PAINT	34098	GATEWAY	
ROLL-UP DOOR FRAME, TRIM	SEMI-GLOSS PAINT	26120	OXFORD INN	
CURTAIN WALL FRAME	PVDF COATING	20318	DARK CHAMPAGNE METALLIC	3
CURTAIN WALL GLAZING	GLASS	-- --	BULLET RESISTANT CLEAR	3
CURTAIN WALL FRAME	PVDF COATING	20040	BROWN	4
CURTAIN WALL GLAZING	GLASS	TINT	SOLARCOOL STARPHIRE	4
CURTAIN WALL GLAZING	GLASS	-- --	CLEAR	12
-- --	-- --	-- --	-- --	
LOUVER	SEMI-GLOSS PAINT	26120	OXFORD INN	
SCREEN	SEMI-GLOSS PAINT	26120	OXFORD INN	
HINGED GRATING SCREEN	SEMI-GLOSS PAINT	26120	OXFORD INN	
MECH EQUIP & PLATFORM	STD MFR COLOR, FINISH	-- --	-- --	9
SKYLIGHT EXT CURB	MFR	MFR PRE-FINISH	WHITE	
CONC BENCH TOP/SEAT	SEALED	-- --	UNCOLORED CONCRETE	
CONC BENCH BASE/ LEGS	STONE VENEER RANDOM TIGHT FITTING STACK	SEE NOT 14	SO. LEDGESTONE	
COLORED CONC WALK	SEALED	30315	EARTHEN	1
CANOPY (SEE NOTE 2)	PVDF COATING	20140	SAGE BROWN	2
CANOPY FASCIA	PVDF COATING	20140	SAGE BROWN	
CANOPY COLUMNS	SPLIT FACE, MEDIUM WT	30117	SIENNA BROWN	11
COURTYARD TRELLIS TOP	SEMI-GLOSS PAINT	26120	OXFORD INN	
COURTYARD TRELLIS COL(S)	SPLIT FACE, MEDIUM WT	30017	SIENNA BROWN	
TRASH BIN WALLS	SPLIT FACE, MEDIUM WT	30117	SIENNA BROWN	

ITEM	FINISH	FEDERAL STANDARD COLOR 595	COLOR	NOTES
CONCRETE BOLLARD	SEALED	-- --	-- --	
PRECAST CONC BOLLARD, UON	SEALED	-- --	-- --	
LIGHTING FIXTURES	MFR FINISH	-- --	BLACK	8
BOX LIGHTING FIXTURES	POWDER-COATING	20318	CHAMPAGNE	10
COLLAPSIBLE BOLLARDS	MRF FINISH	27040	BLACK	
EXTERIOR SIGNAGE	-- --	-- --	-- --	13

DIST.	COUNTY	ROUTE	POST MILES TOTAL PROJECT	SHEET NO.	TOTAL SHEETS
08	SBd	15	177.3/181.1	290	710

DOUG LOWE 12-12-12
LICENSED ARCHITECT DATE

LICENSED ARCHITECT DOUG LOWE No. C-15341 Exp. 06-30-13 STATE OF CALIFORNIA

2-25-13
PLANS APPROVAL DATE

The State of California or its officers or agents shall not be responsible for the accuracy or completeness of electronic copies of this plan sheet.

ACCESSIBILITY DESIGN APPROVAL STAMP DOT / DES / OTA
08-368501
DISTRICT - EA
Reviewed by: Y.A. WANG
Date: 03-30-09

CALIFORNIA STATE FIRE MARSHAL APPROVED
Approval of this plan does not authorize or approve any omission or deviation from applicable regulations. Final approval is subject to field inspection. One set of approved plans shall be available on the project site at all times.
Reviewed by: G. ANDERSEN
Approval date: 01-20-2011

EXTERIOR COLOR AND FINISH NOTES

REFER TO NUMBERS IN "NOTES" COLUMN IN EXTERIOR SCHEDEDULE

1 EXTERIOR CONC WALK COLOR TO MATCH INTERIOR COLORED CONC FLOOR COLOR.

2 CANOPY REFERS TO CARPORT CANOPY AND AIR RESOURCES BOARD CANOPY TOP, BOTTOM, FRAMING AND ALL EXPOSED PARTS (EXCEPT FASCIA)

3 FOR CURTAIN WALL (TOTAL FRAME) AT OBSERVATION ROOM 007 ONLY

4 FOR ALL EXTERIOR CURTAIN WALL, UON

5 AT BULLET RESISTANT WALL SYSTEM AND SPECIAL COLUMN AT GRID C-12

6 SEE INTERIOR COLOR SCHED FOR INNER SIDING FOR SKYLIGHTS

7 PANELS ABOVE TELESCOPING DOORS, & A PART OF WDW TYPES T, TI, U

8 WALL-MOUNTED AND SOFFIT-RECESSED FIXTURES,UON.

9 INCLUDES LOUVER LOCATED IN COURT 033.

10 ONLY FOR BOX LIGHTS, LOCATED TO EAST OF RM 007, TOTAL 3

11 COLUMN TOP CONC BAND TO BE SEALED UNCOLORED

12 PER WINDOW SCHEDULES

13 FOR SIGNAGE LETTERING FINISHES AND COLORS, SEE SIGN SCHED

14 INDIVIDUAL STONE COLOR MIX OF:
30233 RED BROWN
30040 BROWN
30206 RED BROWN
30475 BROWN
30480 BROWN

DESIGN	BY D.LOWE	CHECKED C.FAUST	
DETAILS	BY BARBARA BROWN CB	CHECKED C.FAUST	
QUANTITIES	BY	CHECKED	

STATE OF CALIFORNIA
DEPARTMENT OF TRANSPORTATION

DIVISION OF ENGINEERING SERVICES
ARCHITECTURAL AND STRUCTURAL DESIGN

BRIDGE NO. 54-1216J
POST MILE 177.3/181.1

MOUNTAIN PASS JPOE
CVEF
FINISH SCHEDEDULE 5

SHEET A7-0.6

a7_0_06finsche5.dgn
DS OSD Imperial Rev. 11/98 26-FEB-2013 10:00

ORIGINAL SCALE IN INCHES FOR REDUCED PLANS 0 1 2 3

UNIT 3584
PROJECT NUMBER & PHASE 08000006281
EA 368501

DISREGARD PRINTS BEARING EARLIER REVISION DATES → 11-01-10 11-30-12

REVISION DATES (PRELIMINARY STAGE ONLY) SHEET X OF X

26-FEB-2013 10:00
a7_0_06finsche5.dgn

SIGN SCHEDULE

SEE ALSO SHEET A0-3.3 AND DOOR SCHEDULE FOR ACCESSIBILITY SIGNAGE

SIGN TYPE	TOTAL OF THIS TYPE	BRIEF DESCRIPTION	LOCATION	SIZE	MATERIAL	DETAIL	NOTES
A	1	"CHP" LOGO (FOR CA HIGHWAY PATROL)	EXTERIOR, EAST WALL OF BUILDING	8'-0" HIGH	FABRICATED STEEL SIGN	1/A7-42.1	"CHP" IN LOGO FORMAT. STAINLESS STEEL FINISH; PAINT REVEAL BLACK. FINISH: 3 COAT 70% PDVF
B	1	DIRECTIONAL SIGNAGE TO ENTRY	EXTERIOR, NORTH SCREEN WALL	EACH LETTER 6" HIGH	CAST ALUMINUM	2/A7-0.7	PUBLIC ENTRY IN HELVETICA MEDIUM, PLUS ARROW AS SHOWN IN DETAIL. LETTERS AND ARROW TO HAVE 3" DEPTH, 1" STANDOFF FROM WALL
C	19	SIGN ON DOOR	EXTERIOR SIDE OF DOORS # 2, 5, 6, 9, 10, 11, 12, 15, 19, 24, 27, 29, 33, 53, 55, 56, 58, 59, 60	EACH LETTER 1½" HIGH	WHITE VINYL DIE-CUT LETTERS	-	"AUTHORIZED PERSONNEL ONLY" IN HELVETICA MEDIUM
D	4	LARGE NUMERAL ABOVE TELESCOPING DOOR	NORTH EXTERIOR, ABOVE DOORS 13, 14, 16, 17	EACH NUMBER 2'-6" HIGH	METAL PANEL	3/A7-0.7	"1", "2", "3", "4", ALL IN HELVETICA BOLD
E	1	CA SEAL, IN FULL DETAIL AND COLOR	INTERIOR, NORTH WALL OF LOBBY 004	6'-0" DIAMETER	VINYL FILM SIGN	4/A7-0.7	
G	1	A "NO STORAGE" SIGN	INTERIOR: ON EXTERIOR OF ROOM 041 NORTH WALL	EACH LETTER 1" HIGH	PLASTIC	-	"NO STORAGE ALLOWED ON TOP OF CEILING FRAMING" IN HELVETICA MEDIUM
H	1	A "NO STORAGE" SIGN	INTERIOR: ON EXTERIOR OF ROOM 035 NORTH WALL	EACH LETTER 1" HIGH	PLASTIC	-	"NO STORAGE ALLOWED ON TOP OF SOFFIT FRAMING" IN HELVETICA MEDIUM
J	1	SIGN ON BAYS OFFICE GLAZING	EXTERIOR: ON WINDOW TYPE U	EACH LETTER 3" HIGH	WHITE VINYL DIE CUT	5/A7-0.7	"OFFICE" IN HELVETICA MEDIUM, WITH ADHESIVE BACKING
K	1	ENTRY MONUMENT SIGN	NEAR NE DRIVE ENTRY	EACH LETTER 6" HIGH	CAST ALUMINUM	6/A7-0.7	"Mountain Pass Inspection Facility" IN HELVETICA MEDIUM, CAPITAL AND SMALL LETTERS, 6" HIGH, 3 INCHS DEPTH, WITH 1" STANDOFF FROM WALL
L	1	CHP NAME IN LOBBY	ABOVE LOBBY DESK, BELOW CA SEAL	EACH LETTER 6" HIGH	CAST ALUMINUM	4/A7-0.7	"California Highway Patrol", IN HELVETICA MEDIUM, CAPITAL AND SMALL LETTERS, 6" HIGH, 3 INCHS DEPTH, 1 INCH STANDOFF FROM WALL
M	4	"DO NOT ENTER" SIGN	SOUTH EXTERIOR, ABOVE DOORS 20, 21, 22, 23	3'-0" DIA CIRCLE	METAL PANEL SIGN	7/A7-0.7	

DIST.	COUNTY	ROUTE	POST MILES TOTAL PROJECT	SHEET NO.	TOTAL SHEETS
08	SBd	15	177.3/181.1	291	710

DOUG LOWE 12-12-12
LICENSED ARCHITECT DATE

LICENSED ARCHITECT DOUG LOWE No. C-15341 Exp. 06-30-13 STATE OF CALIFORNIA

2-25-13
PLANS APPROVAL DATE

The State of California or its officers or agents shall not be responsible for the accuracy or completeness of electronic copies of this plan sheet.

ACCESSIBILITY DESIGN APPROVAL STAMP DOT / DES / OTA
08-368501
DISTRICT - EA
Reviewed by: Y.A. WANG
Date: 03-30-09

CALIFORNIA STATE FIRE MARSHAL APPROVED
Approval of this plan does not authorize or approve any omission or deviation from applicable regulations. Final approval is subject to field inspection. One set of approved plans shall be available on the project site at all times.
Reviewed by: G. ANDERSEN
Approval date: 01-20-2011

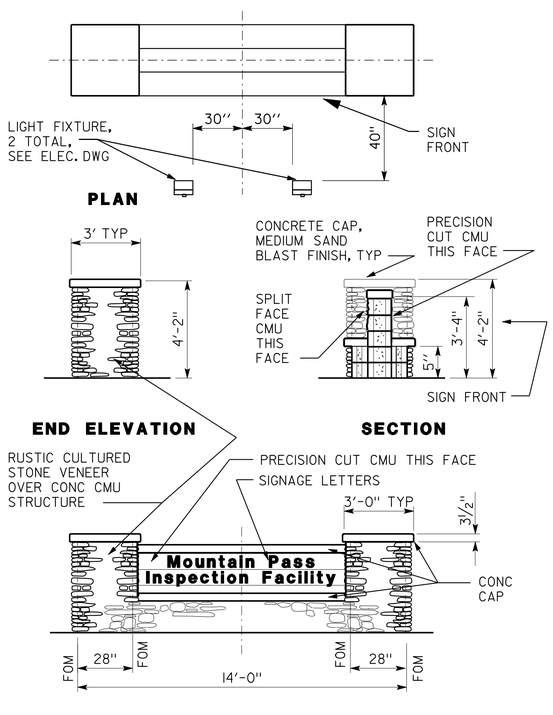

6 **SIGN TYPE K**
SCALE 1/32" = 1'-0"

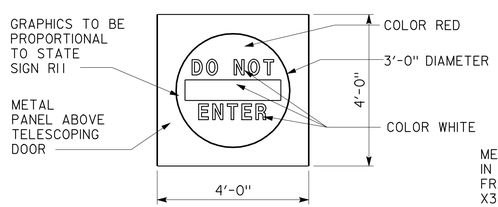

7 **SIGN TYPE M**
SCALE 1-1/2" = 1'-0"

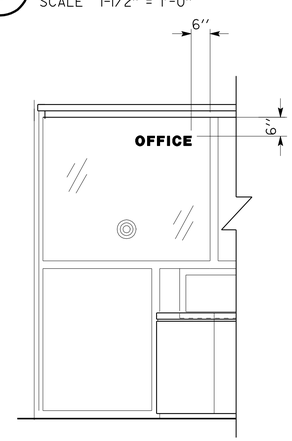

5 **SIGN TYPE J**
SCALE 1-1/2" = 1'-0"

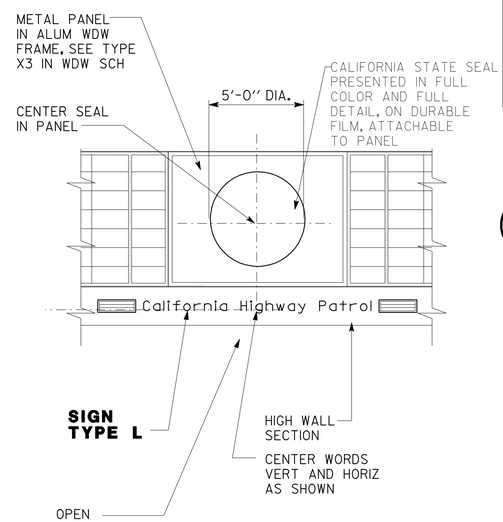

4 **SIGN TYPES E AND L**
SCALE 1/4" = 1'-0"

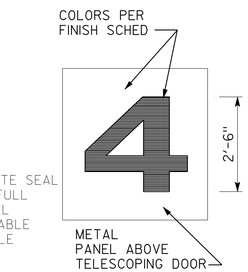

3 **SIGN TYPE D**
SCALE 1-1/2" = 1'-0"

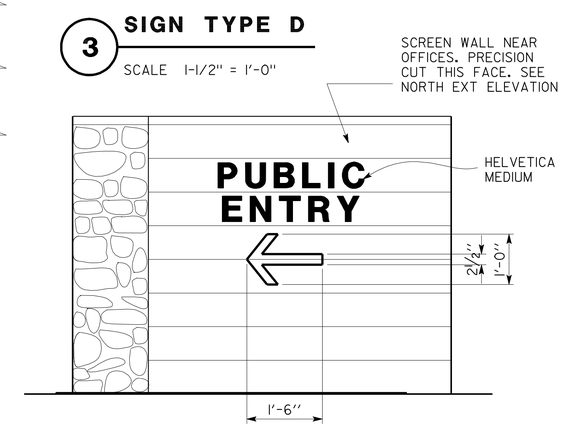

2 **SIGN TYPE B**
SCALE 1-1/2" = 1'-0"

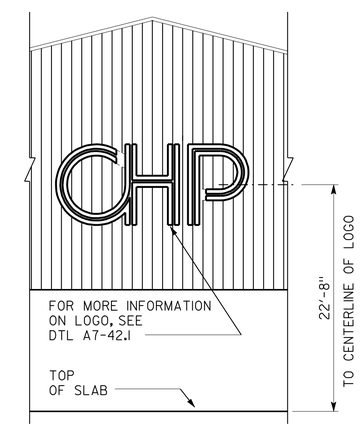

1 **SIGN TYPE A**
NOT TO SCALE

DESIGN	BY D.LOWE	CHECKED C.FAUST	
DETAILS	BY BARBARA BROWN CB	CHECKED C.FAUST	
QUANTITIES	BY	CHECKED	

STATE OF CALIFORNIA DEPARTMENT OF TRANSPORTATION

DIVISION OF ENGINEERING SERVICES ARCHITECTURAL AND STRUCTURAL DESIGN

BRIDGE NO. 54-1216J
POST MILE 177.3/181.1

MOUNTAIN PASS JPOE
CVEF
FINISH SCHEDULE - SIGNAGE

SHEET A7-0.7

a7_0_07schesigns.dgn
DS OSD Imperial Rev. 11/98 26-FEB-2013 09:03

ORIGINAL SCALE IN INCHES FOR REDUCED PLANS 0 1 2 3

UNIT 3584
PROJECT NUMBER & PHASE 08000006281
EA 368501

DISREGARD PRINTS BEARING EARLIER REVISION DATES → 11-01-10 11-30-12

REVISION DATES (PRELIMINARY STAGE ONLY) SHEET X OF X

26-FEB-2013 09:03
a7_0_07schesigns.dgn

DOOR SCHEDULE

No.	DOOR TYPE	DOOR OPENING WIDTH	DOOR OPENING HEIGHT	DOOR THICK	DOOR MTL	DOOR FINISH	FRAME TYPE	FRAME MTL	FRAME WIDTH	FRAME FINISH	LABEL	DETAILS HEAD	DETAILS JAMB	DETAILS THRESHOLD	HDWR GROUP	SIGN	NOTES
1	E	4'-0"	8'-0"	1¾"	ALUM/ GLASS	PRE FINISH	A	ALUM		PRE FINISH		REFER TO SHEET A7-0.10 FOR CURTAIN WALL DETAILS			1	SIGN TYPES 2 & 6/A0-3.3	LOBBY ENTRY RM 001S
2	E	3'-0"	7'-9½"	1¾"	ALUM/ GLASS	PRE FINISH	B	ALUM		PRE FINISH		REFER TO SHEET A7-0.10 FOR CURTAIN WALL DETAILS			3	SIGN TYPE C, SHT A7-0.7 2 & 6/A0-3.3	OBSERVATION RM 007 S
5	O	7'-0"	7'-0"	1¾"	HOLLOW METAL	PAINT	PMF	STEEL		PAINT		12/A7-44	13/A7-44	10/A7-43	5	SIGN TYPE C, SHT A7-0.7	WATER TREATMT RM 021N
6	E	3'-0"	7'-0"	1¾"	ALUM/ GLASS	PRE FINISH	J	ALUM		PRE FINISH		REFER TO SHEET A7-0.10 FOR CURTAIN WALL DETAILS			3	SIGN TYPE C, SHT A7-0.7 2 & 6/A0-3.3	HALL RM 005G N
7	S	3'-0"	7'-0"	1¾"	HOLLOW METAL	PAINT	PMF	STEEL		PAINT		11/A7-43	12/A7-43	3/A7-45	8	SIGN TYPE 2 & 6/A0-3.3	AIR RESOURCE RM 025 E
8	S	3'-0"	7'-0"	1¾"	HOLLOW METAL	PAINT	PMF	STEEL		PAINT		11/A7-43	12/A7-43	1/A7-45	10		ROAD CREW RM 024 N
9	E	3'-0"	7'-0"	1¾"	ALUM/ GLASS	PRE FINISH	EXTR	ALUM		PRE FINISH		4/A7-47	13A/A7-47	5/A7-47	3	SIGN TYPE C, SHT A7-0.7 2 & 6/A0-3.3	HALL RM 005A E
10	G	7'-0"	9'-0"	1¾"	ALUM	PRE FINISH	W4	ALUM		PRE FINISH		REFER TO SHEET A7-0.11 FOR CURTAIN WALL DETAILS			5	SIGN TYPE C, SHT A7-0.7 2 & 6/A0-3.3	AIR RESOURCE RM 025 W
11	G	7'-0"	9'-0"	1¾"	ALUM	PRE FINISH	W4	ALUM		PRE FINISH		REFER TO SHEET A7-0.11 FOR CURTAIN WALL DETAILS			5	SIGN TYPE C, SHT A7-0.7 2 & 6/A0-3.3	MECHANICAL RM 026 W
12	D	3'-0"	8'-0"	1¾"	ALUM	PRE FINISH	T1	ALUM		PRE FINISH		REFER TO SHEET A7-0.11 FOR CURTAIN WALL DETAILS			3	SIGN TYPE C, SHT A7-0.7 2 & 6/A0-3.3	WALKWAY RM 037 N
13	A	16'-0"	16'-0"	--	STEEL	PAINT	RUBBER ROLL-UP	STEEL		PAINT		3/A7-30	6/A7-43	7/A7-43	--	SIGN TYPE D, SHT A7-0.7	INSPECTION BAY RM 040 N
14	A	16'-0"	16'-0"	--	STEEL	PAINT	RUBBER ROLL-UP	STEEL		PAINT		3/A7-30	6/A7-43	7/A7-43	--	SIGN TYPE D, SHT A7-0.7	INSPECTION BAY RM 040 N
15	D	3'-0"	8'-0"	1¾"	ALUM	PRE FINISH	U1	ALUM		PRE FINISH		REFER TO SHEET A7-0.11 FOR CURTAIN WALL DETAILS			3	SIGN TYPE C, SHT A7-0.7 2 & 6/A0-3.3	INSPECTION BAY RM 040 N
16	A	16'-0"	16'-0"	--	STEEL	PAINT	RUBBER ROLL-UP	STEEL		PAINT		3/A7-30	6/A7-43	7/A7-43	--	SIGN TYPE D, SHT A7-0.7	INSPECTION BAY RM 040 N
17	A	16'-0"	16'-0"	--	STEEL	PAINT	RUBBER ROLL-UP	STEEL		PAINT		3/A7-30	6/A7-43	7/A7-43	--	SIGN TYPE D, SHT A7-0.7	INSPECTION BAY RM 040 N
18	B	10'-0"	12'-0"	1¾"	STEEL	PAINT	ROLL-UP	STEEL		PAINT		1/A7-43	2/A7-43	3/A7-43	--		VEHICLE MAINT RM 043 N
19	S	3'-0"	7'-0"	1¾"	HOLLOW METAL	PAINT	PMF	STEEL		PAINT		8/A7-43	9/A7-43	10/A7-43	21	SIGN TYPE C, SHT A7-0.7 2 & 6/A0-3.3	VEHICLE MAINT RM 043 W
20	A	16'-0"	16'-0"	--	STEEL	PAINT	RUBBER ROLL-UP	STEEL		PAINT		3/A7-30	6/A7-43	7/A7-43	--	SIGN TYPE M, SHT A7-0.7	INSPECTION BAY RM 040 S
21	A	16'-0"	16'-0"	--	STEEL	PAINT	RUBBER ROLL-UP	STEEL		PAINT		3/A7-30	6/A7-43	7/A7-43	--	SIGN TYPE M, SHT A7-0.7	INSPECTION BAY RM 040 S
22	A	16'-0"	16'-0"	--	STEEL	PAINT	RUBBER ROLL-UP	STEEL		PAINT		3/A7-30	6/A7-43	7/A7-43	--	SIGN TYPE M, SHT A7-0.7	INSPECTION BAY RM 040 S
23	A	16'-0"	16'-0"	--	STEEL	PAINT	RUBBER ROLL-UP	STEEL		PAINT		3/A7-30	6/A7-43	7/A7-43	--	SIGN TYPE M, SHT A7-0.7	INSPECTION BAY RM 040 S
24	D	3'-0"	8'-0"	1¾"	ALUM	PRE FINISH	T	ALUM		PRE FINISH		REFER TO SHEET A7-0.11 FOR CURTAIN WALL DETAILS			3	SIGN TYPE C, SHT A7-0.7 2 & 6/A0-3.3	WALKWAY RM 037 S
25	GATE U	8'-8"	8'-8"	--	STEEL	PAINT	GATE	STEEL		PAINT		--	4/A7-46	--	15		COURT RM 033 W
26	E	3'-0"	7'-9½"	1¾"	ALUM/ GLASS	PRE FINISH	P	ALUM		PRE FINISH		REFER TO SHEET A7-0.10 FOR CURTAIN WALL DETAILS			2	2 & 6/A0-3.3	BREAKROOM RM 034 N
27	D	3'-0"	7'-9½"	1¾"	ALUM/ GLASS	PRE FINISH	R	ALUM		PRE FINISH		REFER TO SHEET A7-0.10 FOR CURTAIN WALL DETAILS			23	SIGN TYPE C, SHT A7-0.7 2 & 6/A0-3.3	MULTIPURPOSE EXT RM 036 N
28	GATE V	5'-8"	6'-0"	--	STEEL	PAINT	GATE	STEEL		PAINT		--	1/A7-46	--	24		SOUTHWEST
29	D	3'-0"	7'-9½"	1¾"	ALUM/ GLASS	PRE FINISH	R1	ALUM		PRE FINISH		REFER TO SHEET A7-0.11 FOR CURTAIN WALL DETAILS			23	SIGN TYPE C, SHT A7-0.7 2 & 6/A0-3.3	MULTIPURPOSE EXT RM 036 S
30	J1	3'-0"	7'-0"	1¾"	SST	PRE FINISH	PMF	STEEL		PRE FINISH		3/A7-44	4/A7-44	1/A7-45	12	SIGN TYPES 3B & 4B, SHT A0-3.3	WOMEN RESTROOM RM 002 W
31	J1	3'-0"	7'-0"	1¾"	SST	PRE FINISH	PMF	STEEL		PRE FINISH		3/A7-44	4/A7-44	1/A7-45	12	SIGN TYPES 3C & 4C, SHT A0-3.3	MEN RESTROOM RM 003 W
32	E	4'-0"	8'-0"	1¾"	ALUM/ GLASS	PRE FINISH	O	ALUM		PRE FINISH		REFER TO SHEET A7-0.10 FOR CURTAIN WALL DETAILS			22		LOBBY RM 004 S
33	E	3'-0"	7'-0"	1¾"	ALUM/ GLASS	PRE FINISH	EXTR	ALUM		PRE FINISH		4/A7-47	9/A7-44	5/A7-47	2	SIGN TYPE C, SHT A7-0.7 2 & 6/A0-3.3	MULTIPURPOSE RM 036 E
34	E	3'-0"	7'-0"	1¾"	ALUM/ GLASS	PRE FINISH	F	ALUM		PRE FINISH		REFER TO SHEET A7-0.10 FOR CURTAIN WALL DETAILS			6		LIEUTENANT RM 010 W
35	S	3'-0"	7'-0"	1¾"	HOLLOW METAL	PAINT	PMF	STEEL		PAINT		13/A7-43	12/A7-43	4/A7-45	8		ARMORY RM 011 W
36	F	3'-0"	7'-0"	1¾"	SST	PRE FINISH	PMF	STEEL		PRE FINISH		11/A7-43	14/A7-43	1/A7-45	11	SIGN TYPES 3B & 4B, SHT A0-3.3	WOMEN LOCKERS RM 014 W
37	S	3'-0"	7'-0"	1¾"	HOLLOW METAL	PAINT	PMF	STEEL		PAINT		13/A7-43	14/A7-43	1/A7-45	8		EVIDENCE RM 015 W

DOOR TYPES

NO SCALE

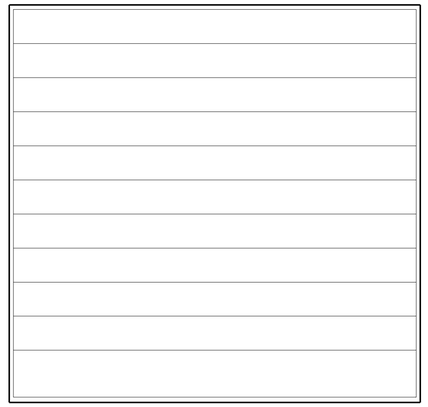

TYPE (A) RAPID ROLL-UP DOOR

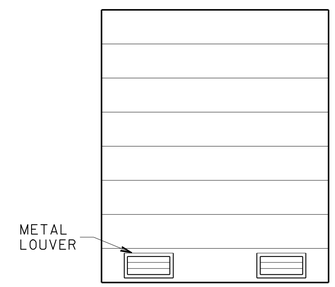

TYPE (B) ROLL-UP STEEL DOOR

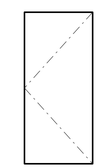

TYPE (C) ALUMINUM

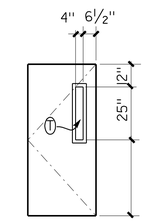

TYPE (D) ALUMINUM

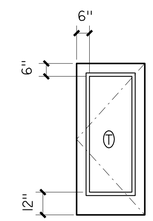

TYPE (E) ALUMINUM

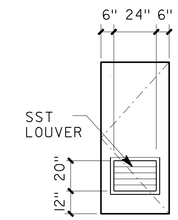

TYPE (F) STAINLESS STEEL

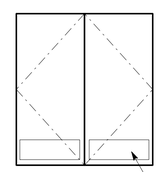

TYPE (G) ALUMINUM

KICK PLATE

NOT USED

TYPE (H) ALUMINUM

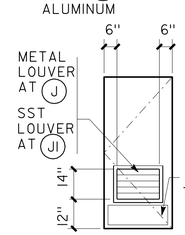

TYPE (J) HOLLOW METAL
TYPE (J1) STAINLESS STEEL

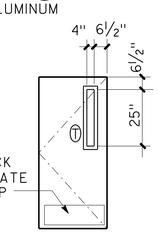

TYPE (K) HOLLOW METAL
TYPE (K1) STAINLESS STEEL

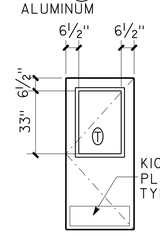

TYPE (L) STAINLESS STEEL

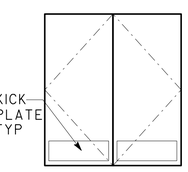

TYPE (M) HOLLOW METAL

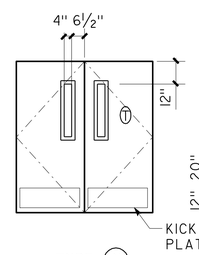

TYPE (N) HOLLOW METAL

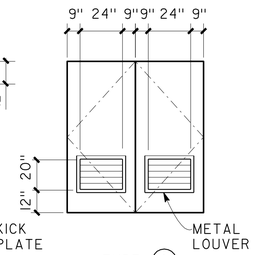

TYPE (O) HOLLOW METAL

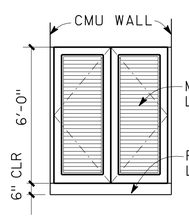

TYPE (P) HOLLOW METAL

TYPE (R) PREFABRICATED ACCESS PANEL

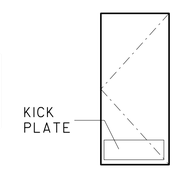

TYPE (S) HOLLOW METAL
TYPE (S1) STAINLESS STEEL

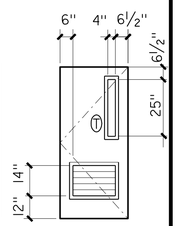

TYPE (T) STAINLESS STEEL

DOOR NOTES

1. (T) = TEMPERED GLASS
2. ALL EXT ALUM DOORS TO HAVE A DOOR TOP PER (4 / A7-0.9)
3. PUSH PLATES TO BE INSTALLED ON PUSH SIDE OF DOORS

DIST.	COUNTY	ROUTE	POST MILES TOTAL PROJECT	SHEET NO.	TOTAL SHEETS
08	SBd	15	177.3/181.1	292	710

DOUG LOWE 12-12-12
LICENSED ARCHITECT DATE

LICENSED ARCHITECT DOUG LOWE No. C-15341 Exp. 06-30-13 STATE OF CALIFORNIA

2-25-13
PLANS APPROVAL DATE

The State of California or its officers or agents shall not be responsible for the accuracy or completeness of electronic copies of this plan sheet.

ACCESSIBILITY DESIGN APPROVAL STAMP DOT / DES / OTA
08-368501
DISTRICT - EA
Reviewed by: Y.A. WANG
Date: 03-30-09

CALIFORNIA STATE FIRE MARSHAL APPROVED
Approval of this plan does not authorize or approve any omission or deviation from applicable regulations. Final approval is subject to field inspection. One set of approved plans shall be available on the project site at all times.
Reviewed by: G. ANDERSEN
Approval date: 01-20-2011

DESIGN	BY D.LOWE	CHECKED C.FAUST	
DETAILS	BY C. NAKAHARA	CHECKED C.FAUST	
QUANTITIES	BY	CHECKED	

STATE OF CALIFORNIA
DEPARTMENT OF TRANSPORTATION

DIVISION OF ENGINEERING SERVICES
ARCHITECTURAL AND STRUCTURAL DESIGN

UNIT 3584
PROJECT NUMBER & PHASE 08000006281
EA 368501

BRIDGE NO. 54-1216J
POST MILE 177.3/181.1

CVEF

MOUNTAIN PASS JPOE

DOOR SCHEDULE I

SHEET A7-0.8

DISREGARD PRINTS BEARING EARLIER REVISION DATES → 11-01-10 11-30-12

REVISION DATES (PRELIMINARY STAGE ONLY) SHEET X OF X

ORIGINAL SCALE IN INCHES FOR REDUCED PLANS 0 1 2 3

a7_0_08fdrsche1.dgn
DS OSD Imperial Rev. 11/98 26-FEB-2013 09:03

26-FEB-2013 09:03
a7_0_08fdrsche1.dgn

DOOR SCHEDULE

No.	DOOR TYPE	DOOR OPENING WIDTH	DOOR OPENING HEIGHT	DOOR THICK	DOOR MTL	DOOR FINISH	FRAME TYPE	FRAME MTL	FRAME WIDTH	FRAME FINISH	LABEL	DETAILS HEAD	DETAILS JAMB	DETAILS THRESHOLD	HDWR GROUP	SIGN	NOTES
38	S	3'-0"	7'-0"	1¾"	HOLLOW METAL	PAINT	PMF	STEEL		PAINT		15/A7-43	12/A7-43	1/A7-45	10		EVIDENCE CAB RM 015 W
39	J1	3'-0"	7'-0"	1¾"	SST	PRE FINISH	PMF	STEEL		PRE FINISH		11/A7-43	12/A7-43	1/A7-45	10		JANITOR RM 016 N
40	F	3'-0"	7'-0"	1¾"	SST	PRE FINISH	PMF	STEEL		PRE FINISH		11/A7-43	12/A7-43	4/A7-45	11	SIGN TYPE 3C & 4C, SHT A0-3.3	MEN LOCKERS RM 017 W
41	J1	3'-0"	7'-0"	1¾"	SST	PRE FINISH	PMF	STEEL		PRE FINISH		11/A7-43	12/A7-43	1/A7-45	10		JANITOR 2 RM 020 S
42	S	3'-0"	7'-0"	1¾"	STEEL	PAINT	PMF	STEEL		PAINT		11/A7-43	12/A7-43	1/A7-45	8		ROAD CREW RM 024 E
43	S	3'-0"	7'-0"	1¾"	HOLLOW METAL	PAINT	PMF	STEEL		PAINT	1-HR	4/A7-53.3	5/A7-53.3	4/A7-53.2	10		ELECTRICAL RM 027 E
44	T	3'-0"	7'-0"	1¾"	SST	PRE FINISH	PMF	STEEL		PRE FINISH		11/A7-43	12/A7-43	1/A7-45	9		VEST 2 RM 028 E
45	S	3'-0"	7'-0"	1¾"	HOLLOW METAL	PAINT	PMF	STEEL		PAINT		11/A7-43	12/A7-43	1/A7-45	10		EMERG TECH RM 029 E
45A	S	3'-0"	7'-0"	1¾"	HOLLOW METAL	PAINT	PMF	STEEL		PAINT		11/A7-43	12/A7-43	1/A7-45	10		EMERG TECH RM 029 S
46	S	3'-0"	7'-0"	1¾"	HOLLOW METAL	PAINT	PMF	STEEL		PAINT		11/A7-43	12/A7-43	1/A7-45	10		UNIFORM RM 030 E
47	T	3'-0"	7'-0"	1¾"	SST	PRE FINISH	PMF	STEEL		PRE FINISH		11/A7-43	12/A7-43	1/A7-45	9		VEST 3 RM 031 E
48	E	3'-0"	7'-9½"	1¾"	ALUM/ GLASS	PRE FINISH	C	ALUM		PRE FINISH		REFER TO SHEET A7-0.10 FOR CURTAIN WALL DETAILS			6		SERGEANT B RM 032 E
49	E	3'-0"	7'-9½"	1¾"	ALUM/ GLASS	PRE FINISH	M	ALUM		PRE FINISH		REFER TO SHEET A7-0.10 FOR CURTAIN WALL DETAILS			7		BREAK RM 034 E
50	E	3'-0"	7'-9½"	1¾"	ALUM/ GLASS	PRE FINISH	G	ALUM		PRE FINISH		REFER TO SHEET A7-0.10 FOR CURTAIN WALL DETAILS			7		HALL RM 005 S
51	M	8'-0"	8'-0"	1¾"	HOLLOW METAL	PAINT	PMF	STEEL		PAINT		11/A7-43	12A/A7-43	1/A7-45	14	DRAW PMF COMMON JAMB, DOUBLE LOADED	MULITIPURPOSE RM 036 E
51A	M	8'-0"	8'-0"	1¾"	HOLLOW METAL	PAINT	PMF	STEEL		PAINT		11/A7-43	12A/A7-47	1/A7-45	14		MULTIPURPOSE RM 036 E
52	E	3'-0"	7'-9½"	1¾"	ALUM/ GLASS	PRE FINISH	N	ALUM		PRE FINISH		REFER TO SHEET A7-0.10 FOR CURTAIN WALL DETAILS			2	2 & 6/A0-3.3	COURTYARD RM 033 E
53	E	3'-0"	7'-9½"	1¾"	ALUM/ GLASS	PRE FINISH	EXTR	ALUM		PRE FINISH		4/A7-47	4/A7-47	5/A7-47	1	SIGN TYPE C,SHT A7-0.7 2 & 6/A0-3.3	LOBBY RM 004 E
54	N	5'-0"	7'-9½"	1¾"	HOLLOW METAL	PAINT	PMF	STEEL		PAINT		10/A7-45	11/A7-45	1/A7-45	13		MULTIPURPOSE RM 036 N
55	K1	3'-0"	7'-0"	1¾"	SST	PRE FINISH	PMF	STEEL		PRE FINISH	1-HR	4/A7-53.3	5/A7-53.3	2/A7-53.2	8	SIGN TYPE C,SHT A7-0.7	VEST 3 RM 031 W
56	S	3'-0"	7'-0"	1¾"	HOLLOW METAL	PAINT	PMF	STEEL		PAINT	1-HR	4/A7-53.3	5/A7-53.3	2/A7-53.2	8	SIGN TYPE C,SHT A7-0.7	UNIFORM RM 030 W
57	M	7'-0"	7'-0"	1¾"	HOLLOW METAL	PAINT	PMF	STEEL		PAINT		11/A7-43	12/A7-43	1/A7-45	19		STORAGE 2 RM 038 W
58	K1	3'-0"	7'-0"	1¾"	SST	PRE FINISH	PMF	STEEL		PRE FINISH	1-HR	4/A7-53.3	5/A7-53.3	2/A7-53.2	8	SIGN TYPE C,SHT A7-0.7	VEST 2 RM 028 E
59	S	3'-0"	7'-0"	1¾"	HOLLOW METAL	PAINT	PMF	STEEL		PAINT	1-HR	1/A7-53.2	1A/A7-53.2	2/A7-53.2	8	SIGN TYPE C,SHT A7-0.7	ELEC RM 027 W
60	L	3'-0"	7'-0"	1¾"	SST	PRE FINISH	PMF	STEEL		PRE FINISH		1/A7-44	2/A7-44	1/A7-45	3	SIGN TYPE C,SHT A7-0.7	BAY OFFICE RM 041 N
61	R	3'-0"	4'-0"	¾"	INSULATED ALUM	PAINT	EXTR	ALUM		PAINT		11/A7-44	8/A7-44	11A/A7-44	-		WATER TREATMENT ATTIC ACCESS RM 021 S
62	S	3'-0"	5'-0"	1¾"	HOLLOW METAL	PAINT	PMF	STEEL		PAINT		5/A7-44	6/A7-44	7/A7-44	16		MECH WELL ABOVE INSPECTION
63	L	3'-0"	7'-0"	1¾"	HOLLOW METAL	PAINT	PMF	STEEL		PAINT		11/A7-43	12/A7-43	1/A7-45	8		PARTS SUPPLY RM 042 N
64	R	3'-0"	4'-0"	¾"	INSULATED ALUM	PRE FINISH	EXTR	ALUM		PRE FINISH		11/A7-44	8/A7-44	11A/A7-44	-		VEH MAINT SHOP ATTIC ACCESS RM 043 S
65	L	3'-0"	7'-0"	1¾"	HOLLOW METAL	PAINT	PMF	STEEL		PAINT		11/A7-43	12/A7-43	2/A7-45	9		HALL RM 005 W
66	E	3'-0"	7'-0"	1¾"	ALUM/ GLASS	PAINT	PMF	ALUM		PAINT		4/A7-47	13/A7-47	1/A7-45	6		LIEUTENANT RM 010 S
67	E	3'-0"	7'-9½"	1¾"	ALUM/ GLASS	PAINT	G	ALUM		PAINT		REFER TO SHEET A7-0.10 FOR CURTAIN WALL DETAILS			7		HALL RM 005G S
68	S	3'-0"	7'-0"	1¾"	HOLLOW METAL	PAINT	PMF	STEEL		PAINT		8 SIM/A7-43	9 SIM/A7-43	10 SIM/A7-43	18	SIGN PER 1/A0-3.3, INSTALLED ON DOOR	COMMUNICATIONS ROOM
69	S	3'-0"	7'-0"	1¾"	HOLLOW METAL	PAINT	PMF	STEEL		PAINT		8 SIM/A7-43	9 SIM/A7-43	10 SIM/A7-43	18	SIGN PER 1/A0-3.3, INSTALLED ON DOOR	COMMUNICATIONS ROOM

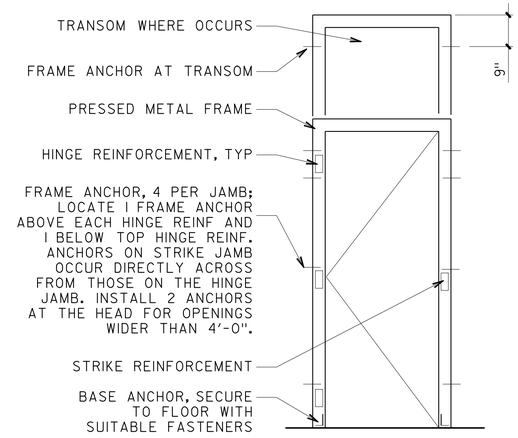

1 DOOR FRAME ANCHORAGE

NOT TO SCALE

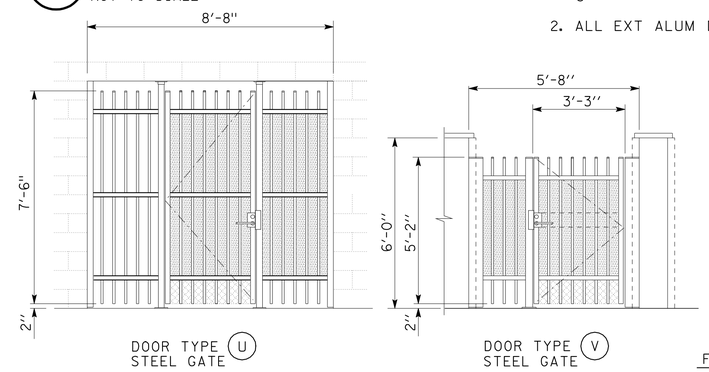

2 GATE TYPES

SEE GATE DETAILS ON SHEET A7-46

SCALE : ⅜" = 1'-0"

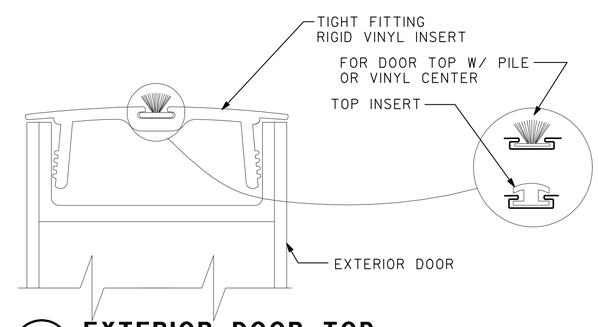

4 EXTERIOR DOOR TOP

NOT TO SCALE

DIST.	COUNTY	ROUTE	POST MILES TOTAL PROJECT	SHEET NO.	TOTAL SHEETS
08	SBd	15	177.3/181.1	293	710

DOUG LOWE 12-12-12

LICENSED ARCHITECT DATE

LICENSED ARCHITECT DOUG LOWE No. C-15341 Exp. 06-30-13 STATE OF CALIFORNIA

2-25-13

PLANS APPROVAL DATE

The State of California or its officers or agents shall not be responsible for the accuracy or completeness of electronic copies of this plan sheet.

ACCESSIBILITY DESIGN APPROVAL STAMP DOT / DES / OTA

08-368501

DISTRICT - EA

Reviewed by: Y.A. WANG

Date: 03-30-09

CALIFORNIA STATE FIRE MARSHAL APPROVED

Approval of this plan does not authorize or approve any omission or deviation from applicable regulations. Final approval is subject to field inspection. One set of approved plans shall be available on the project site at all times.

Reviewed by: G. ANDERSEN

Approval date: 01-20-2011

DOOR NOTES

Ⓣ = TEMPERED GLASS

2. ALL EXT ALUM DOORS TO HAVE A DOOR TOP PER 4/--

FIRE RATED ASSEMBLY NOTES:

1. ALL RATED DOORS ARE TO BE POSITIVE LATCHING AND SELF-CLOSING (2007 CBC SECTIONS 715.4.7 & 715.4.7.1)

2. "LABEL" SHALL MEAN "FIRE ASSEMBLY" AS DEFINED IN 2007 CBC SECTIONS 715.4.5

3. FIRE DOORS AND FIRE WINDOWS SHALL HAVE AN APPROVED LABEL OR LISTING MARK INDICATING THE FIRE-PROTECTION RATING, WHICH IS PERMANENTLY AFFIXED AT THE FACTORY WHERE FABRICATION AND ASSEMBLY ARE DONE (2007 CBC SECTIONS 715.4.5.1 & 715.4.6.3.1)

4. ALL 20-MINUTE RATED ASSEMBLIES SHALL BE PROVIDED WITH APPROVED GASKETING MATERIAL SO INSTALLED TO PROVIDE A SEAL WHERE THE DOOR MEETS THE STOP ON BOTH SIDES AND ACROSS THE TOP. THE DOOR AND FRAME SHALL BEAR AN APPROVED LABEL OR OTHER IDENTIFICATION SHOWING THE RATING THEREOF, FOLLOWED BY THE LETTER "S". (2007 CBC SECTION 715.4.5.3)

5. FIRE-RATED DOOR FRAMES SHALL BE INSTALLED STRICTLY PER MANUFACTURERS PRINTED INSTRUCTIONS. MANUFACTURERS PRINTED INSTRUCTIONS SHALL BE MADE AVAILABLE TO THE INSPECTING AUTHORITIES. (2007 CBC SECTION 715.4 & NFPA 80)

6. HOLD OPEN IS NOT ALLOWED ON A FIRE-RATED DOOR ASSEMBLY

DESIGN	BY D.LOWE	CHECKED C.FAUST	
DETAILS	BY C. NAKAHARA	CHECKED C.FAUST	
QUANTITIES	BY	CHECKED	

STATE OF CALIFORNIA DEPARTMENT OF TRANSPORTATION

DIVISION OF ENGINEERING SERVICES ARCHITECTURAL AND STRUCTURAL DESIGN

BRIDGE NO. 54-1216J

POST MILE 177.3/181.1

MOUNTAIN PASS JPOE

CVEF

DOOR SCHEDULE 2

SHEET A7-0.9

a7_0_09fdrsche2.dgn

DS OSD Imperial Rev. 11/98 26-FEB-2013 09:04

ORIGINAL SCALE IN INCHES FOR REDUCED PLANS 0 1 2 3

UNIT 3584

PROJECT NUMBER & PHASE 08000006281

EA 368501

DISREGARD PRINTS BEARING EARLIER REVISION DATES

REVISION DATES (PRELIMINARY STAGE ONLY) 11-01-10 11-30-12

SHEET X OF X

26-FEB-2013 09:04

a7_0_09fdrsche2.dgn

DIST.	COUNTY	ROUTE	POST MILES TOTAL PROJECT	SHEET NO.	TOTAL SHEETS
08	SBd	15	177.3/181.1	294	710

DOUG LOWE 12-12-12
LICENSED ARCHITECT DATE

LICENSED ARCHITECT DOUG LOWE No. C-15341 Exp. 06-30-13 STATE OF CALIFORNIA

2-25-13
PLANS APPROVAL DATE

The State of California or its officers or agents shall not be responsible for the accuracy or completeness of electronic copies of this plan sheet.

NOTE: 1 VERIFY FRAME OPENINGS IN FIELD

NOTE: 2 REFER TO DOOR SCHEDULE FOR DOOR TYPES AND SIZES

(T) = TEMPERED GLASS

(B) = BULLET RESISTANT GLASS, LOW-E

ACCESSIBILITY DESIGN APPROVAL STAMP DOT / DES / OTA
08-368501
DISTRICT - EA
Reviewed by: Y.A. WANG
Date: 03-30-09

CALIFORNIA STATE FIRE MARSHAL APPROVED
Approval of this plan does not authorize or approve any omission or deviation from applicable regulations. Final approval is subject to field inspection. One set of approved plans shall be available on the project site at all times.
Reviewed by: G. ANDERSEN
Approval date: 01-20-2011

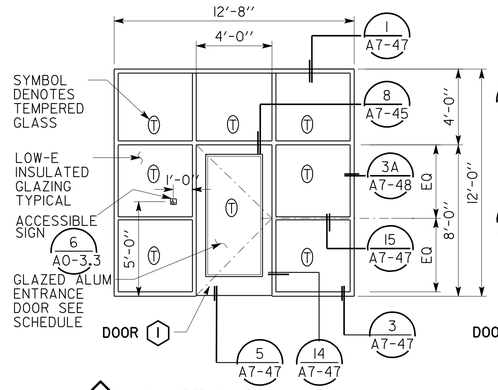

A INSULATED GLAZING

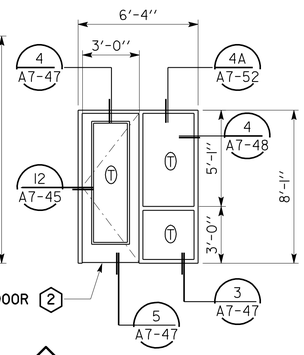

B INSULATED GLAZING

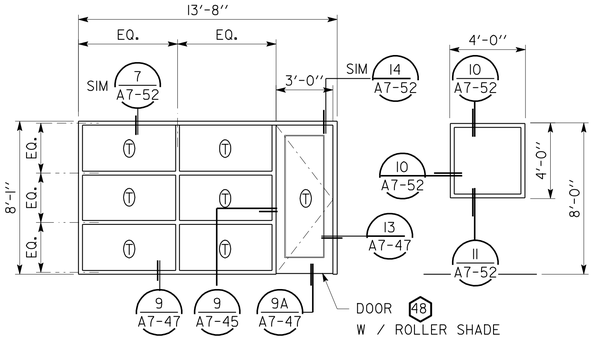

C 1/4" CLEAR SINGLE GLAZING W / VERTICAL LOUVER BLINDS

D INSULATED GLAZING, INTERIOR

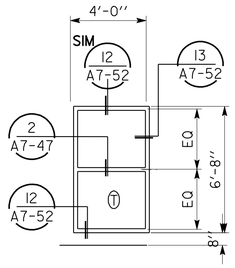

D2 INSULATED GLAZING

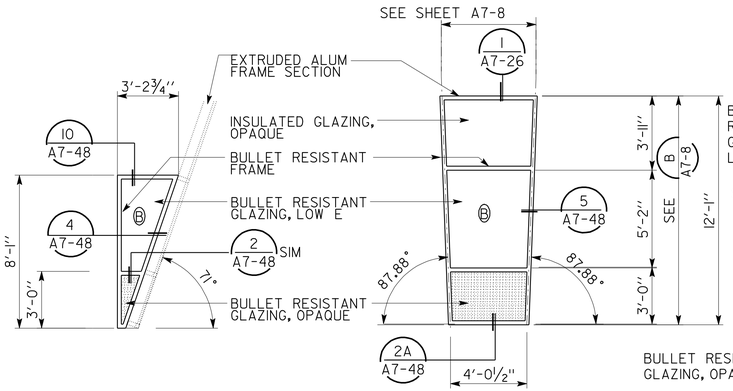

E1 BULLET RESISTANT WALL SYSTEM

E SLOPED BULLET RESISTANT WALL SYSTEM TOTAL 14 REQUIRED

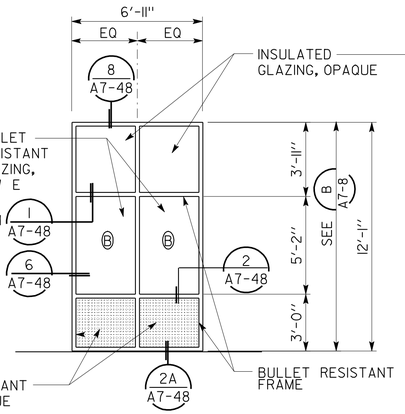

E2 BULLET RESISTANT WALL SYSTEM

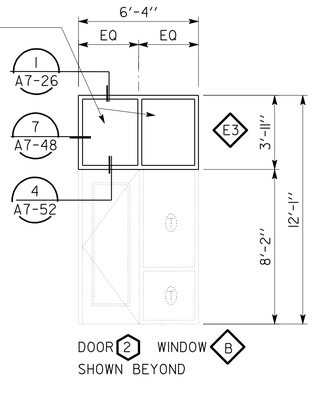

E3 BULLET RESISTANT WALL SYSTEM

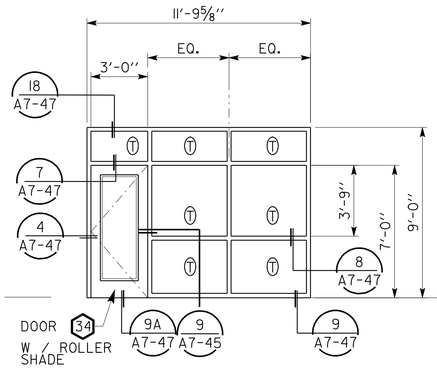

F 1/4" CLEAR SINGLE GLAZING W / VERTICAL LOUVER BLINDS

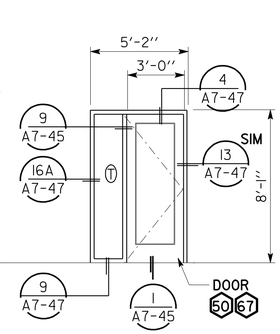

G 1/4" CLEAR SINGLE GLAZING

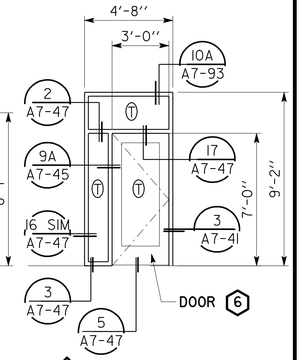

J INSULATED GLAZING

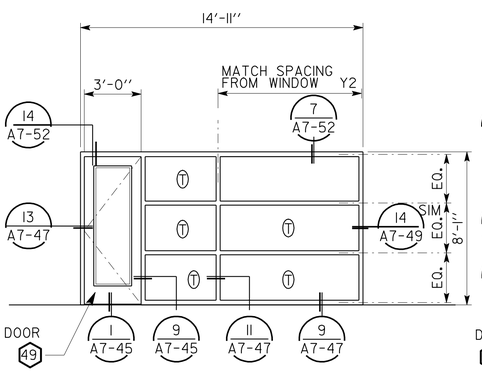

M 1/4" CLEAR SINGLE GLAZING

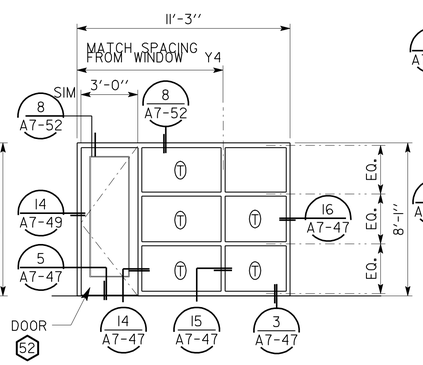

N INSULATED GLAZING, INTERIOR

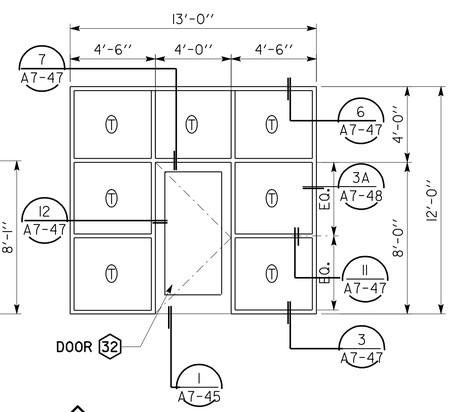

O 1/4" CLEAR SINGLE GLAZING

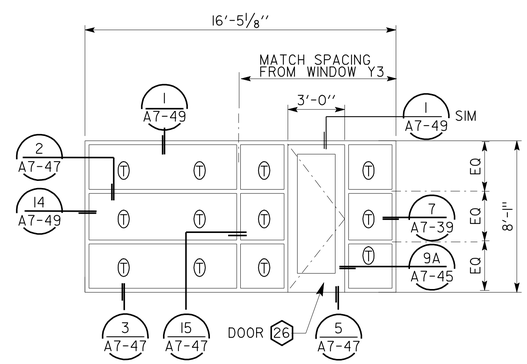

P INSULATED GLAZING, INTERIOR

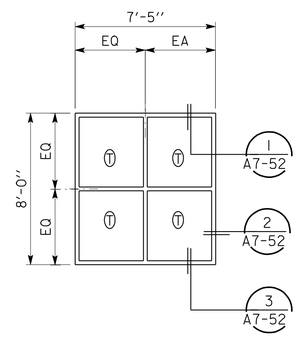

Q INSULATED GLAZING W / AUDIO VISUAL VENETIAN BLINDS

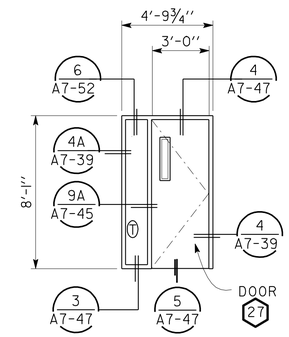

R INSULATED GLAZING

CURTAIN WALL SYSTEM

SCALE: 1/4"=1'-0"

DESIGN	BY DOUG LOWE	CHECKED	
DETAILS	BY DOUG LOWE, CB	CHECKED	
QUANTITIES	BY	CHECKED	

STATE OF CALIFORNIA
DEPARTMENT OF TRANSPORTATION

DIVISION OF ENGINEERING SERVICES
ARCHITECTURAL AND STRUCTURAL DESIGN

BRIDGE NO. 54-1216J
POST MILE 177.3/181.1

MOUNTAIN PASS JPOE
CVEF
CURTAIN WALL SYSTEM SCHEDULE I

SHEET A7-0.10

A7_0_10 ctr wl sys sch-1.dgn
DS OSD Imperial Rev. 11/98 26-FEB-2013 09:04

ORIGINAL SCALE IN INCHES FOR REDUCED PLANS 0 1 2 3

UNIT 3584
PROJECT NUMBER & PHASE 08000006281
EA 368501

DISREGARD PRINTS BEARING EARLIER REVISION DATES → 11-01-10 11-30-12

REVISION DATES (PRELIMINARY STAGE ONLY) SHEET X OF X

26-FEB-2013 09:04
A7_0_10 ctr wl sys sch-1.dgn

DIST.	COUNTY	ROUTE	POST MILES TOTAL PROJECT	SHEET NO.	TOTAL SHEETS
08	SBd	15	177.3/181.1	295	710

DOUG LOWE 12-12-12
LICENSED ARCHITECT DATE

LICENSED ARCHITECT DOUG LOWE No. C-15341 Exp. 06-30-13 STATE OF CALIFORNIA

2-25-13
PLANS APPROVAL DATE

The State of California or its officers or agents shall not be responsible for the accuracy or completeness of electronic copies of this plan sheet.

ACCESSIBILITY DESIGN APPROVAL STAMP DOT / DES / OTA
08-368501
DISTRICT - EA
Reviewed by: Y.A. WANG
Date: 03-30-09

CALIFORNIA STATE FIRE MARSHAL APPROVED
Approval of this plan does not authorize or approve any omission or deviation from applicable regulations. Final approval is subject to field inspection. One set of approved plans shall be available on the project site at all times.
Reviewed by: G. ANDERSEN
Approval date: 01-20-2011

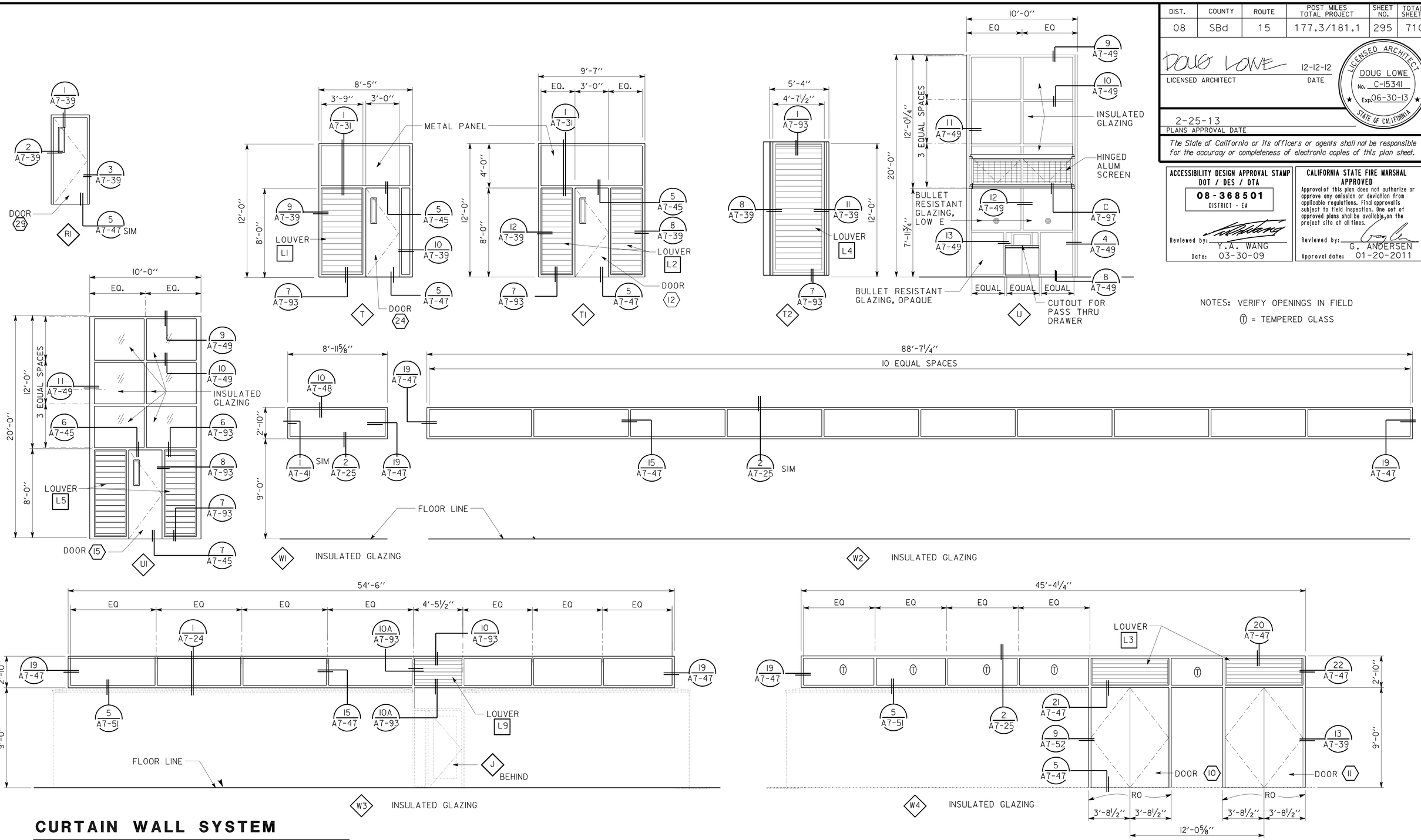

NOTES: VERIFY OPENINGS IN FIELD
Ⓣ = TEMPERED GLASS

CURTAIN WALL SYSTEM

SCALE 1/4" = 1'-0"

DESIGN	BY D.LOWE	CHECKED C.FAUST	
DETAILS	BY D.LOWE	CHECKED C.FAUST	
QUANTITIES	BY	CHECKED	

STATE OF CALIFORNIA DEPARTMENT OF TRANSPORTATION

DIVISION OF ENGINEERING SERVICES ARCHITECTURAL AND STRUCTURAL DESIGN

BRIDGE NO. 54-1216J
POST MILE 177.3/181.1

MOUNTAIN PASS JPOE

CVEF — CURTAIN WALL SYSTEM SCHEDULE 2

SHEET A7-0.11

a7_0_11 ctr wl sys sch-2.dgn
DS OSD Imperial Rev. 11/98 26-FEB-2013 09:04

ORIGINAL SCALE IN INCHES FOR REDUCED PLANS 0 1 2 3

UNIT 3584
PROJECT NUMBER & PHASE 08000006281
EA 368501

DISREGARD PRINTS BEARING EARLIER REVISION DATES → 11-01-10 11-30-12

REVISION DATES (PRELIMINARY STAGE ONLY) SHEET X OF X

26-FEB-2013 09:04
a7_0_11 ctr wl sys sch-2.dgn

DIST.	COUNTY	ROUTE	POST MILES TOTAL PROJECT	SHEET NO.	TOTAL SHEETS
08	SBd	15	177.3/181.1	296	710

DOUG LOWE 12-12-12
LICENSED ARCHITECT DATE

LICENSED ARCHITECT DOUG LOWE No. C-15341 Exp. 06-30-13 STATE OF CALIFORNIA

2-25-13
PLANS APPROVAL DATE

The State of California or its officers or agents shall not be responsible for the accuracy or completeness of electronic copies of this plan sheet.

ACCESSIBILITY DESIGN APPROVAL STAMP DOT / DES / OTA
08-368501
DISTRICT - EA
Reviewed by: Y.A. WANG
Date: 03-30-09

CALIFORNIA STATE FIRE MARSHAL APPROVED
Approval of this plan does not authorize or approve any omission or deviation from applicable regulations. Final approval is subject to field inspection. One set of approved plans shall be available on the project site at all times.
Reviewed by: G. ANDERSEN
Approval date: 01-20-2011

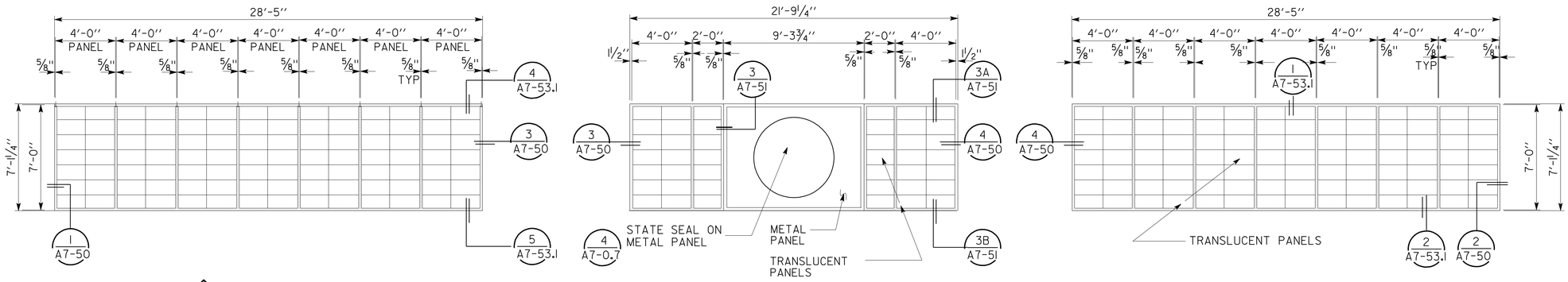

X4 TRANSLUCENT PANELS

X3 TRANSLUCENT PANELS

X2 TRANSLUCENT PANELS

TRANSLUCENT PANEL FRAME TYPES

SCALE: ¼"= 1'-0"

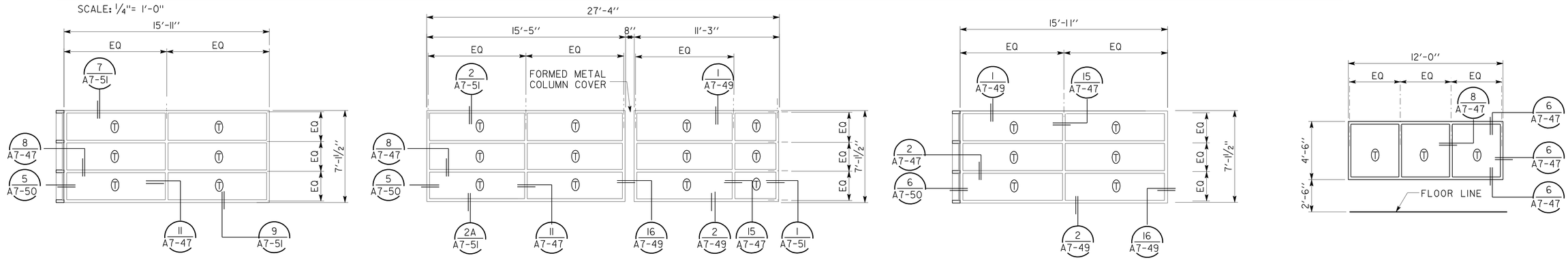

Y1 ¼" CLEAR SINGLE GLAZING

Y2 ¼" OPAQUE SINGLE GLAZING

Y4 1" INSULATED OPAQUE GLAZING

Y3 1" INSULATED CLEAR GLAZING

Y5 ¼" INSULATED CLEAR GLAZING

CURTAIN WALL SYSTEM FRAME TYPES

SCALE: ¼"= 1'-0"

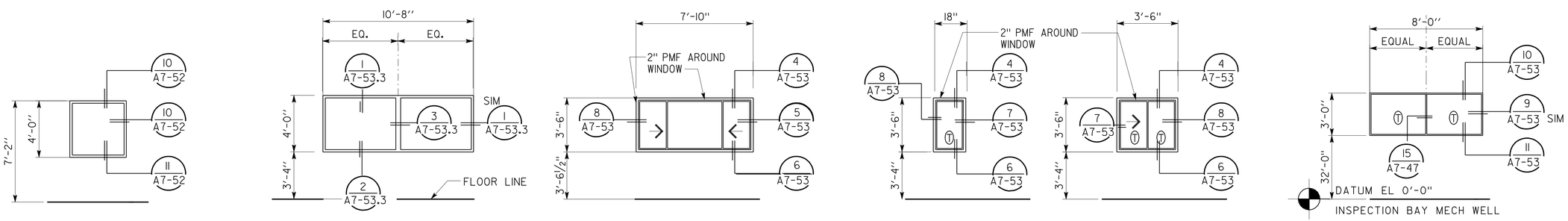

DI 1" CLEAR SINGLE GLAZING

S 1-HR FIRE RATED GLAZING

V 1" INSULATED GLAZING HORIZONTAL SLIDING

V1 1" INSULATED GLAZING

V2 1" INSULATED GLAZING HORIZONTAL SLIDING

Z 1" LOW-E LAMINATED GLAZING

WINDOW FRAME TYPES

SCALE: ¼"= 1'-0"

NOTE: VERIFY OPENINGS IN FIELD

Ⓣ = TEMPERED GLASS

DESIGN	BY D.LOWE	CHECKED C.FAUST	
DETAILS	BY D.LOWE	CHECKED C.FAUST	
QUANTITIES	BY	CHECKED	

STATE OF CALIFORNIA DEPARTMENT OF TRANSPORTATION

DIVISION OF ENGINEERING SERVICES ARCHITECTURAL AND STRUCTURAL DESIGN

BRIDGE NO. 54-1216J
POST MILE 177.3/181.1

MOUNTAIN PASS JPOE

CVEF — CURTAIN WALL SYSTEM AND WINDOW SCHEDULES

SHEET A7-0.12

a7_0_12wnsch3.dgn
DS OSD Imperial Rev. 11/98 26-FEB-2013 09:04

ORIGINAL SCALE IN INCHES FOR REDUCED PLANS 0 1 2 3

UNIT 3584
PROJECT NUMBER & PHASE 08000006281
EA 368501

DISREGARD PRINTS BEARING EARLIER REVISION DATES → 11-01-10 11-30-12

REVISION DATES (PRELIMINARY STAGE ONLY) SHEET X OF X

26-FEB-2013 09:04
a7_0_12wnsch3.dgn

DIST.	COUNTY	ROUTE	POST MILES TOTAL PROJECT	SHEET NO.	TOTAL SHEETS
08	SBd	15	177.3/181.1	297	710

DOUG LOWE 12-12-12
LICENSED ARCHITECT DATE

LICENSED ARCHITECT DOUG LOWE No. C-15341 Exp. 06-30-13 STATE OF CALIFORNIA

2-25-13
PLANS APPROVAL DATE

The State of California or its officers or agents shall not be responsible for the accuracy or completeness of electronic copies of this plan sheet.

ACCESSIBILITY DESIGN APPROVAL STAMP DOT / DES / OTA
08-368501
DISTRICT - EA
Reviewed by: Y.A. WANG
Date: 03-30-09

CALIFORNIA STATE FIRE MARSHAL APPROVED
Approval of this plan does not authorize or approve any omission or deviation from applicable regulations. Final approval is subject to field inspection. One set of approved plans shall be available on the project site at all times.
Reviewed by: G. ANDERSEN
Approval date: 01-20-2011

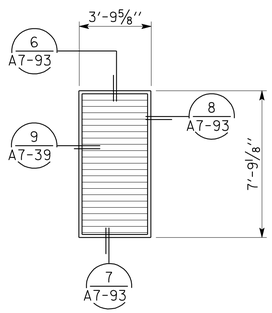

ALUMINUM
DOUBLE DRAINABLE
OPERATING LOUVER
L1

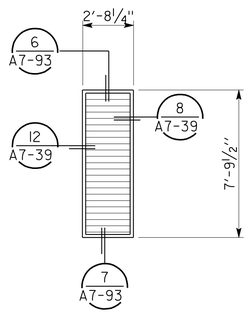

ALUMINUM
DOUBLE DRAINABLE
OPERATING LOUVER
L2

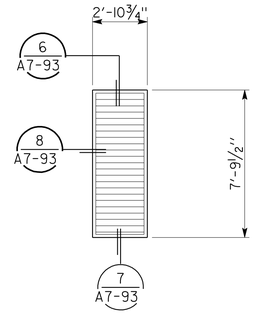

ALUMINUM
DOUBLE DRAINABLE
OPERATING LOUVER
L5

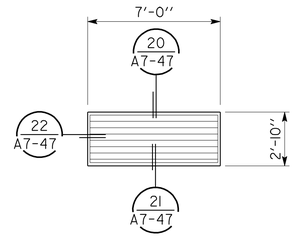

ALUMINUM
DOUBLE DRAINABLE LOUVER
L3

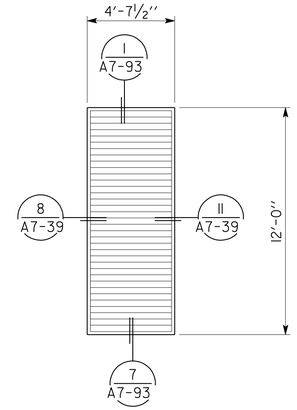

ALUMINUM
DOUBLE DRAINABLE OPERATING LOUVER
L4

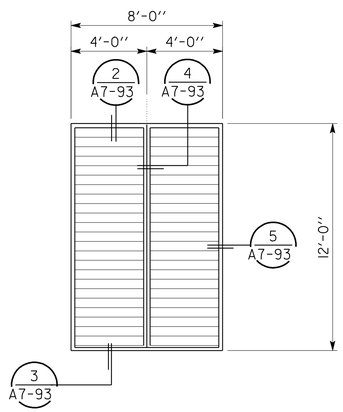

ALUMINUM
DOUBLE DRAINABLE OPERATING LOUVER
L6

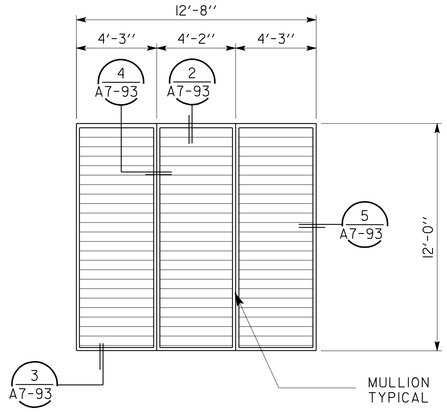

ALUMINUM
DOUBLE DRAINABLE OPERATING LOUVER
L7

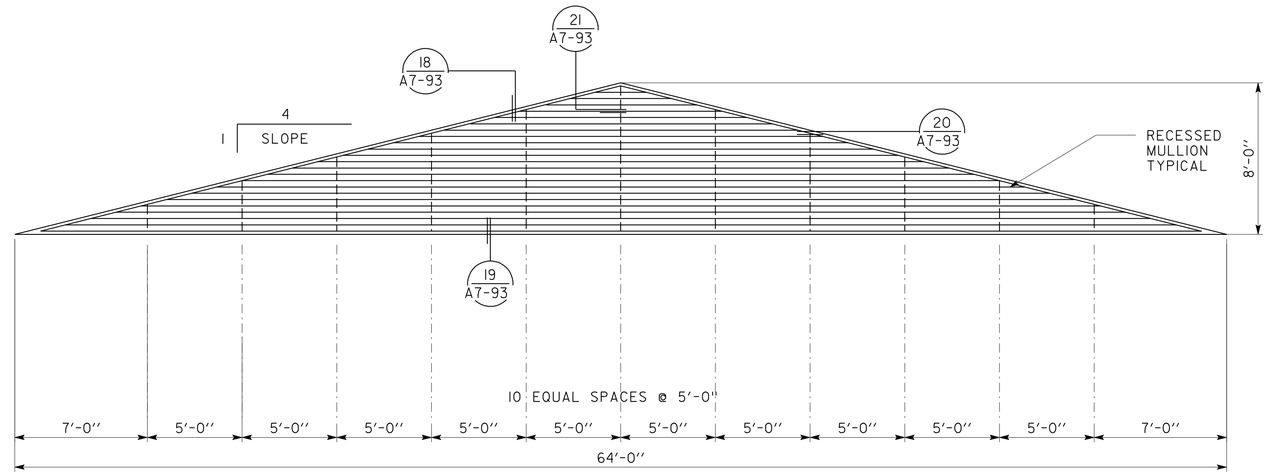

ALUMINUM
DOUBLE DRAINABLE RECESSED LOUVER
L8

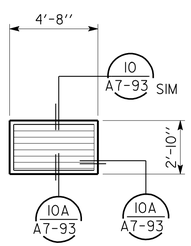

ALUMINUM
DOUBLE DRAINABLE LOUVER
L9

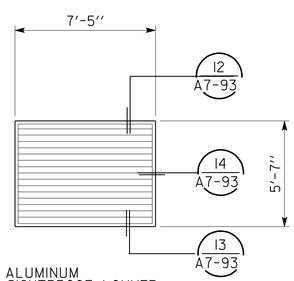

ALUMINUM
SIGHTPROOF LOUVER
L10

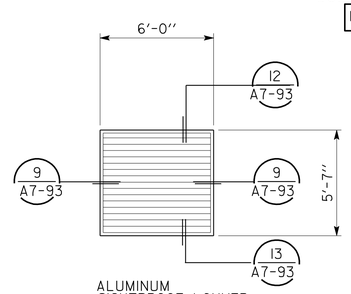

ALUMINUM
SIGHTPROOF LOUVER
L11 SEE A A7-18 B A7-18

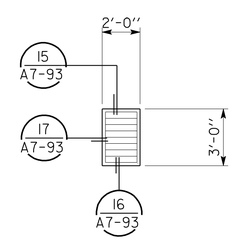

ALUMINUM
DOUBLE DRAINABLE LOUVER
L12

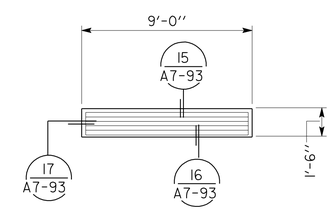

ALUMINUM
DOUBLE DRAINABLE LOUVER
L13

ALL LOUVERS SHALL BE FLUROPOLYMER FINISH- SEE FINISH SCHEDULE FOR COLOR

VERIFY OPENING SIZES IN FIELD

LOUVER TYPES

SCALE: 1/4"=1'-0"

DESIGN	BY D.LOWE	CHECKED C.FAUST	
DETAILS	BY CB	CHECKED C.FAUST	
QUANTITIES	BY	CHECKED	

STATE OF CALIFORNIA
DEPARTMENT OF TRANSPORTATION

DIVISION OF ENGINEERING SERVICES
ARCHITECTURAL AND STRUCTURAL DESIGN

BRIDGE NO. 54-1216J
POST MILE 177.3/181.1

MOUNTAIN PASS JPOE
CVEF
LOUVER SCHEDULE

SHEET **A7-0.13**

a7_0_131louvr.dgn
DS OSD Imperial Rev. 11/98 26-FEB-2013 09:04

ORIGINAL SCALE IN INCHES FOR REDUCED PLANS 0 1 2 3

UNIT 3584
PROJECT NUMBER & PHASE 08000006281
EA 368501

DISREGARD PRINTS BEARING EARLIER REVISION DATES

REVISION DATES (PRELIMINARY STAGE ONLY) 11-01-10 11-30-12

SHEET X OF X

26-FEB-2013 09:04
a7_0_131louvr.dgn

DIST.	COUNTY	ROUTE	POST MILES TOTAL PROJECT	SHEET NO.	TOTAL SHEETS
08	SBd	15	177.3/181.1	298	710

ACCESSIBILITY DESIGN APPROVAL STAMP
DOT / DES / OTA
08-368501
DISTRICT - EA
Reviewed by: Y.A. WANG
Date: 03-30-09

CALIFORNIA STATE FIRE MARSHAL APPROVED
Approval of this plan does not authorize or approve any omission or deviation from applicable regulations. Final approval is subject to field inspection. One set of approved plans shall be available on the project site at all times.
Reviewed by: G. ANDERSEN
Approval date: 01-20-2011

DOUG LOWE 12-12-12
LICENSED ARCHITECT DATE

LICENSED ARCHITECT
DOUG LOWE
No. C-15341
Exp. 06-30-13
STATE OF CALIFORNIA

2-25-13
PLANS APPROVAL DATE

The State of California or its officers or agents shall not be responsible for the accuracy or completeness of electronic copies of this plan sheet.

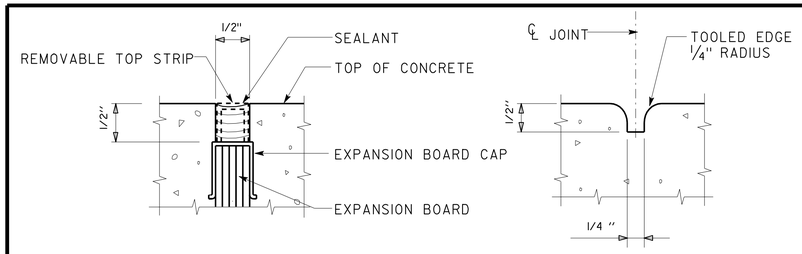

1 EXPANSION JOINT
NO SCALE

2 SCORED JOINT
NO SCALE

LEGEND
ACCESSIBLE PATH OF TRAVEL

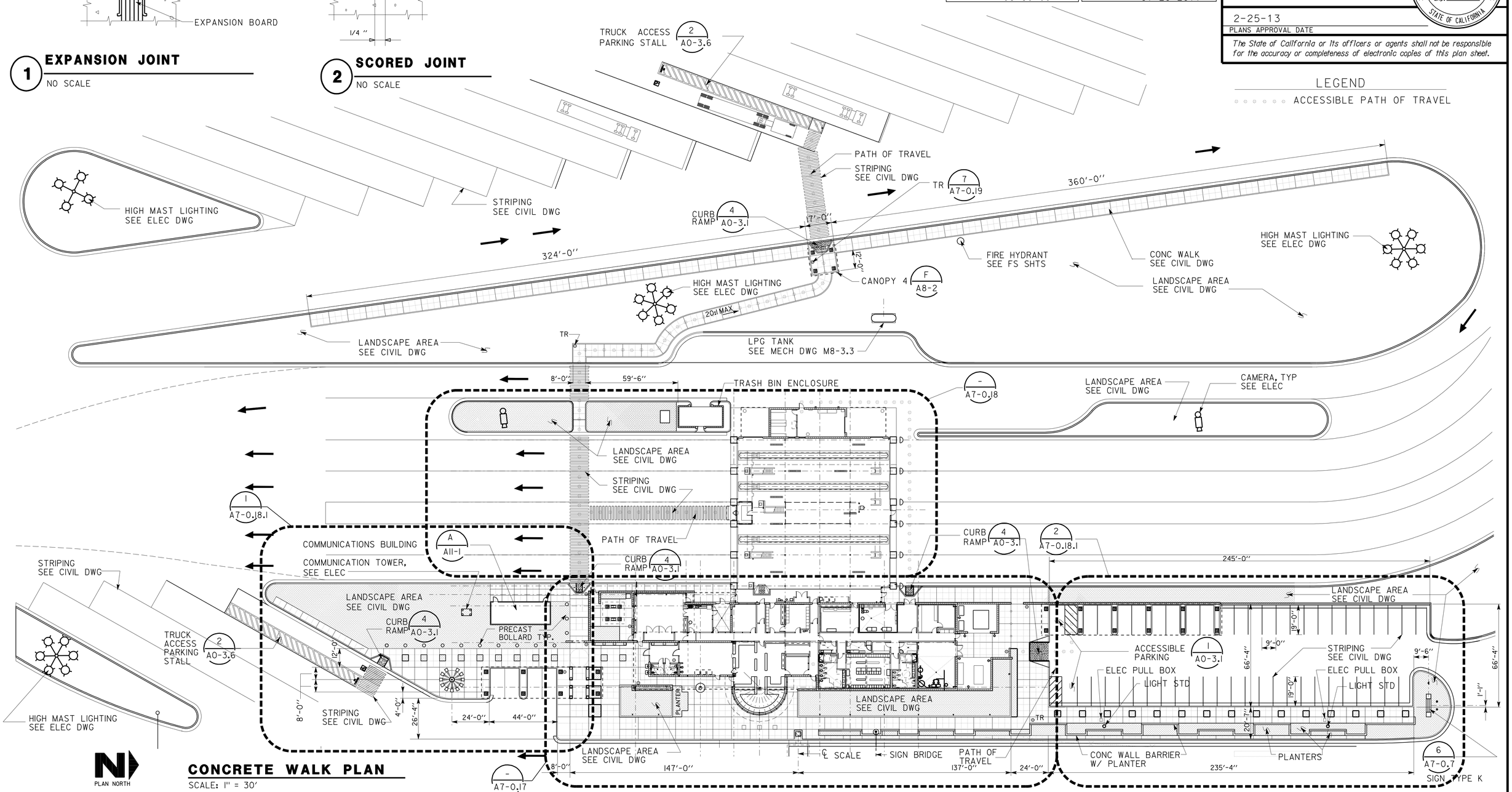

CONCRETE WALK PLAN
SCALE: 1" = 30'

DESIGN	BY D.LOWE	CHECKED C.FAUST	
DETAILS	BY D.LOWE, CB	CHECKED C.FAUST	
QUANTITIES	BY	CHECKED	

STATE OF CALIFORNIA
DEPARTMENT OF TRANSPORTATION

DIVISION OF ENGINEERING SERVICES
ARCHITECTURAL AND STRUCTURAL DESIGN

BRIDGE NO. 54-1216J
POST MILE 177.3/181.1

MOUNTAIN PASS JPOE
CVEF
CONCRETE WALK PLAN

SHEET A7-0.16

a7_0_16concretewalkplan.dgn
DS_OSD Imperial Rev. 11/98 26-FEB-2013 09:04

ORIGINAL SCALE IN INCHES FOR REDUCED PLANS 0 1 2 3

UNIT 3584
PROJECT NUMBER & PHASE 08000006281
EA 368501

DISREGARD PRINTS BEARING EARLIER REVISION DATES
REVISION DATES (PRELIMINARY STAGE ONLY) 11-01-10 11-30-12
SHEET X OF X

26-FEB-2013 09:04
a7_0_16concretewalkplan.dgn

DIST.	COUNTY	ROUTE	POST MILES TOTAL PROJECT	SHEET NO.	TOTAL SHEETS
08	SBd	15	177.3/181.1	299	710

DOUG LOWE 12-12-12
LICENSED ARCHITECT DATE

LICENSED ARCHITECT DOUG LOWE No. C-15341 Exp. 06-30-13 STATE OF CALIFORNIA

2-25-13
PLANS APPROVAL DATE

The State of California or its officers or agents shall not be responsible for the accuracy or completeness of electronic copies of this plan sheet.

ACCESSIBILITY DESIGN APPROVAL STAMP DOT / DES / OTA
08-368501
DISTRICT - EA
Reviewed by: Y.A. WANG
Date: 03-30-09

CALIFORNIA STATE FIRE MARSHAL APPROVED
Approval of this plan does not authorize or approve any omission or deviation from applicable regulations. Final approval is subject to field inspection. One set of approved plans shall be available on the project site at all times.
Reviewed by: G. ANDERSEN
Approval date: 01-20-2011

NOTE: ALL SIDEWALKS SHALL HAVE MAXIMUM 2% SLOPE.

FLOOR ELEVATION 0.0 = 2908.378

FOR LANDSCAPE AREAS, SEE CIVIL DWGS

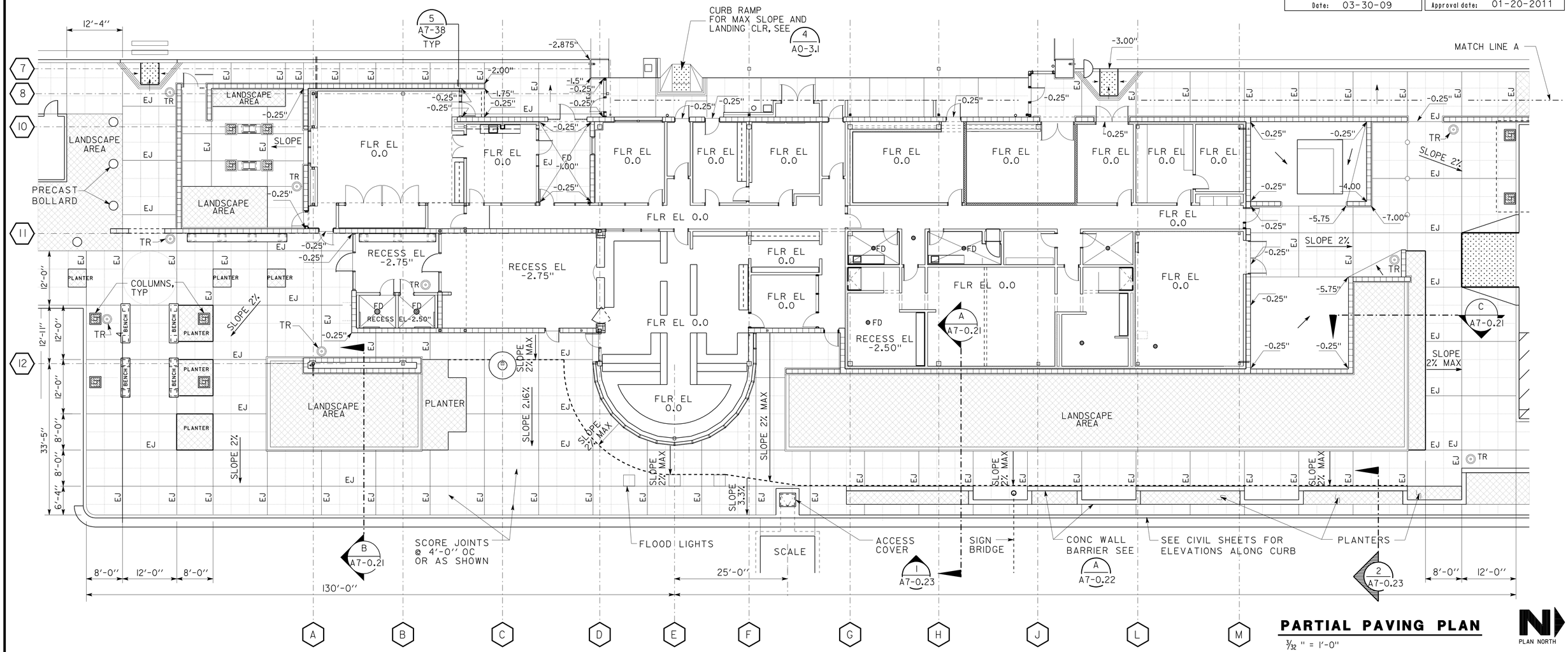

PARTIAL PAVING PLAN

3/32" = 1'-0"

DESIGN	BY D.LOWE	CHECKED C.FAUST	
DETAILS	BY D.LOWE C.NAKAHARA	CHECKED C.FAUST	
QUANTITIES	BY	CHECKED	

STATE OF CALIFORNIA
DEPARTMENT OF TRANSPORTATION

DIVISION OF ENGINEERING SERVICES
ARCHITECTURAL AND STRUCTURAL DESIGN

UNIT 3584
PROJECT NUMBER & PHASE 08000006281

BRIDGE NO. 54-1216J
POST MILE 177.3/181.1

CVEF

MOUNTAIN PASS JPOE

PAVING PLAN I

SHEET A7-0.17

DISREGARD PRINTS BEARING EARLIER REVISION DATES → 11-04-10 11-30-12

REVISION DATES (PRELIMINARY STAGE ONLY) SHEET X OF X

ORIGINAL SCALE IN INCHES FOR REDUCED PLANS 0 1 2 3

a7_0_17pavingplan1.dgn
DS OSD Imperial Rev. 11/98 26-FEB-2013 09:05

EA 368501

26-FEB-2013 09:05
a7_0_17pavingplan1.dgn

DIST.	COUNTY	ROUTE	POST MILES TOTAL PROJECT	SHEET NO.	TOTAL SHEETS
08	SBd	15	177.3/181.1	300	710

DOUG LOWE 12-12-12
LICENSED ARCHITECT DATE

LICENSED ARCHITECT DOUG LOWE No. C-15341 Exp. 06-30-13 STATE OF CALIFORNIA

2-25-13
PLANS APPROVAL DATE

The State of California or its officers or agents shall not be responsible for the accuracy or completeness of electronic copies of this plan sheet.

ACCESSIBILITY DESIGN APPROVAL STAMP DOT / DES / OTA
08-368501
DISTRICT - EA
Reviewed by: Y.A. WANG
Date: 03-30-09

CALIFORNIA STATE FIRE MARSHAL APPROVED
Approval of this plan does not authorize or approve any omission or deviation from applicable regulations. Final approval is subject to field inspection. One set of approved plans shall be available on the project site at all times.
Reviewed by: G. ANDERSEN
Approval date: 01-20-2011

NOTE: ALL SIDEWALKS SHALL HAVE MAXIMUM 2% SLOPE.

FLOOR ELEVATION 0.0 = 2907.878

FOR LANDSCAPE AREAS, SEE CIVIL DWGS

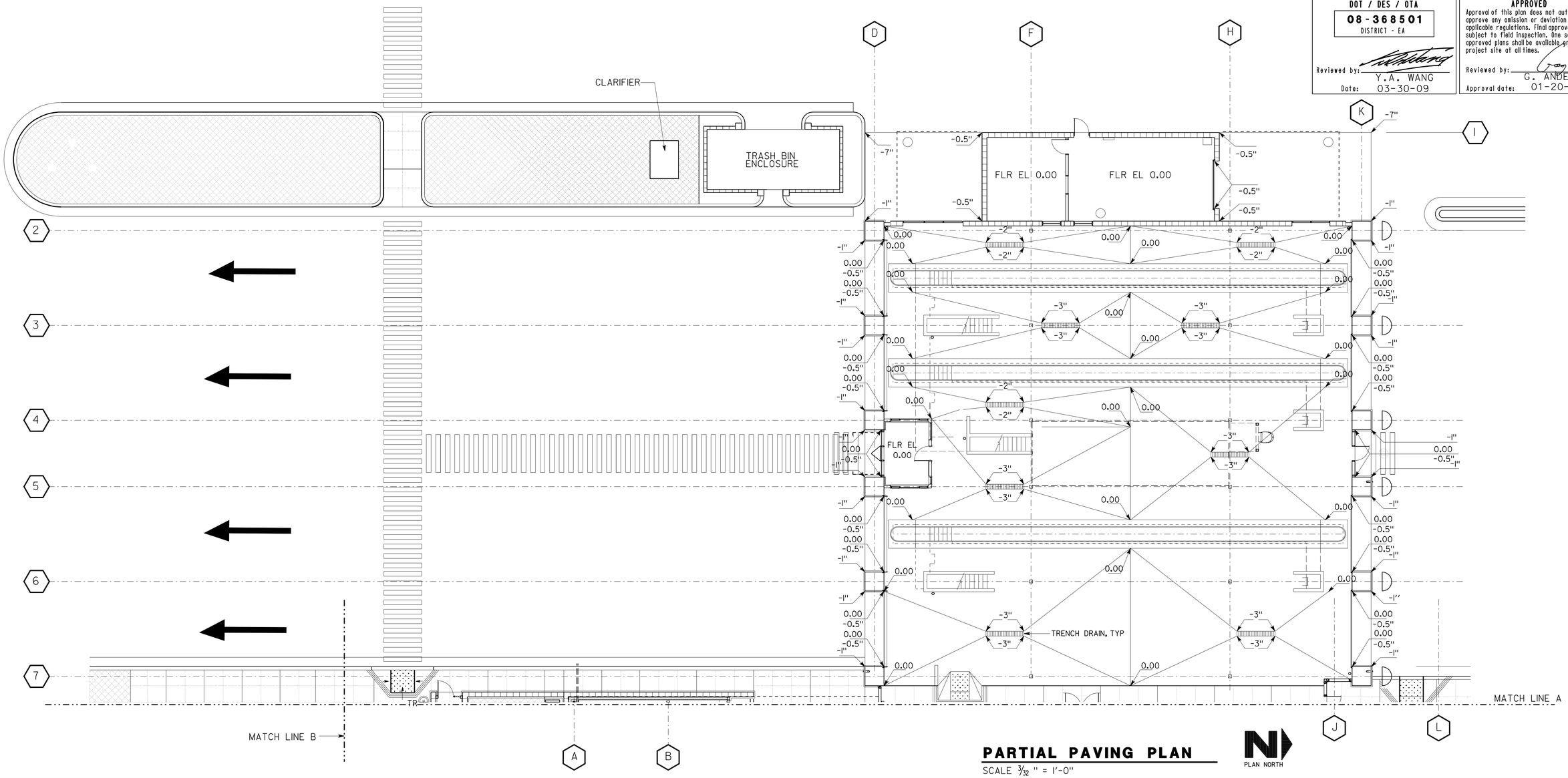

PARTIAL PAVING PLAN

SCALE 3/32" = 1'-0"

DESIGN	BY D.LOWE	CHECKED C.FAUST	
DETAILS	BY D.LOWE C.NAKAHARA	CHECKED C.FAUST	
QUANTITIES	BY	CHECKED	

STATE OF CALIFORNIA
DEPARTMENT OF TRANSPORTATION

DIVISION OF ENGINEERING SERVICES
ARCHITECTURAL AND STRUCTURAL DESIGN

BRIDGE NO. 54-1216J
POST MILE 177.3/181.1

MOUNTAIN PASS JPOE
CVEF
PAVING PLAN 2

SHEET **A7-0.18**

a7_0_18_00pavingplan2.dgn
DS OSD Imperial Rev. 11/98 26-FEB-2013 09:05

ORIGINAL SCALE IN INCHES FOR REDUCED PLANS 0 1 2 3

UNIT 3584
PROJECT NUMBER & PHASE 08000006281
EA 368501

DISREGARD PRINTS BEARING EARLIER REVISION DATES → 11-01-10 11-30-12

REVISION DATES (PRELIMINARY STAGE ONLY) SHEET X OF X

26-FEB-2013 09:05
a7_0_18_00pavingplan2.dgn