Dist	COUNTY	ROUTE	KILOMETER POST TOTAL PROJECT	SHEET No.	TOTAL SHEETS
07	LA	405	39.7/41.5	101	439

REGISTERED CIVIL ENGINEER 7/23/09 DATE

6-7-10
PLANS APPROVAL DATE

REGISTERED PROFESSIONAL ENGINEER JOCELYN C CHIANG No. C62742 Exp. 6-30-10 CIVIL STATE OF CALIFORNIA

THE STATE OF CALIFORNIA OR ITS OFFICERS OR AGENTS SHALL NOT BE RESPONSIBLE FOR THE ACCURACY OR COMPLETENESS OF ELECTRONIC COPIES OF THIS PLAN SHEET.

Caltrans Metric

NOTES:

1. LANE CLOSURES SHALL NOT BE PLACED ON CREST VERTICAL CURVES OR ON HORIZONTAL CURVES.
2. PCMS SHALL BE ACTIVATED PRIOR TO TRAFFIC CONTROL ACTIVITIES ON THE HOV LANE.
3. A MINIMUM SIGHT DISTANCE OF 450 METERS SHALL BE PROVIDED IN ADVANCE OF PCMS.
4. VEHICLE-MOUNTED SIGN PANELS SHALL BE TYPE III OR IV RETROREFLECTORIZED SHEETING, BLACK ON WHITE OR BLACK ON ORANGE WITH 200 MILLIMETERS MINIMUM SERIES D LETTERS PER CALTRANS SIGN SPECIFICATIONS.
5. PLACE PCMS ON THE MEDIAN SHOULDER WHERE SUFFICIENT ROOM (SUCH AS CHP ENFORCEMENT AREAS) EXISTS.

LEGEND

V1, V2	SHADOW VEHICLE
V3	WORK/APPLICATION VEHICLE
	PORTABLE CHANGEABLE MESSAGE SIGN (PCMS)
	DIRECTION OF TRAVEL
	HOV LANE

ABBREVIATIONS

FAS	FLASHING ARROW SIGN
IAV	IMPACT ATTENUATOR VEHICLE
CMS	CHANGEABLE MESSAGE SIGN
(CA)	CALIFORNIA CODE
PCMS	PORTABLE CHANGEABLE MESSAGE SIGN
HOV	HIGH OCCUPANCY VEHICLE
m	METER

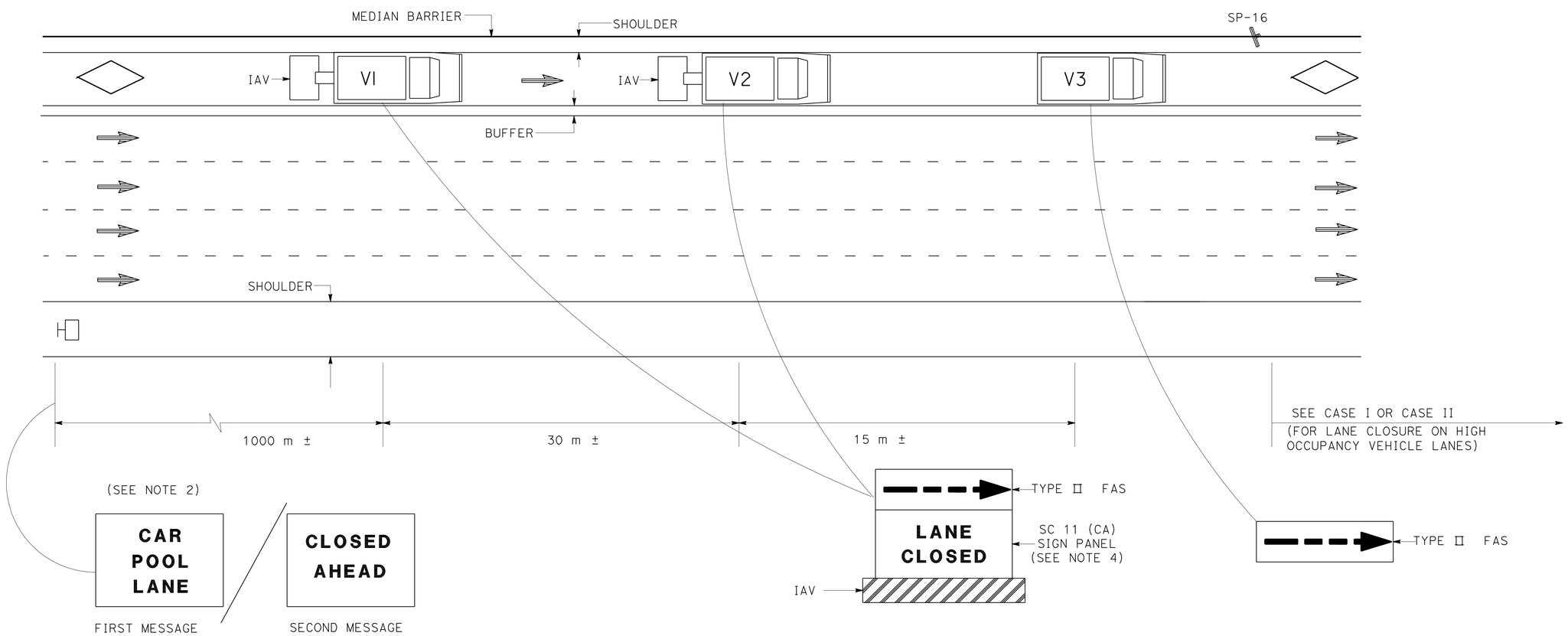

PCMS/TRUCK MOUNTED CMS
(SEE NOTE 5)

TRAFFIC HANDLING DETAILS
TRAFFIC CONTROL SYSTEM
FOR HIGH OCCUPANCY VEHICLE LANES WITH MEDIAN SHOULDERS LESS THAN 2.4 m

NO SCALE

THD-3

FUNCTIONAL SUPERVISOR	ALBERT K YU	JC	7/08
CALCULATED-DESIGNED BY	ALBERT K YU	REVISED BY	DATE REVISED
CHECKED BY	JOCELYN C CHIANG		

STATE OF CALIFORNIA - DEPARTMENT OF TRANSPORTATION
Caltrans DTM

LAST REVISION 00-00-00 | DATE PLOTTED => 07-JUN-2010 | TIME PLOTTED => 13:46

Dist	COUNTY	ROUTE	KILOMETER POST TOTAL PROJECT	SHEET No.	TOTAL SHEETS
07	LA	405	39.7/41.5	102	439

REGISTERED CIVIL ENGINEER 7/23/09 DATE

6-7-10
PLANS APPROVAL DATE

REGISTERED PROFESSIONAL ENGINEER JOCELYN C CHIANG No. C62742 Exp. 6-30-10 CIVIL STATE OF CALIFORNIA

THE STATE OF CALIFORNIA OR ITS OFFICERS OR AGENTS SHALL NOT BE RESPONSIBLE FOR THE ACCURACY OR COMPLETENESS OF ELECTRONIC COPIES OF THIS PLAN SHEET.

Caltrans Metric

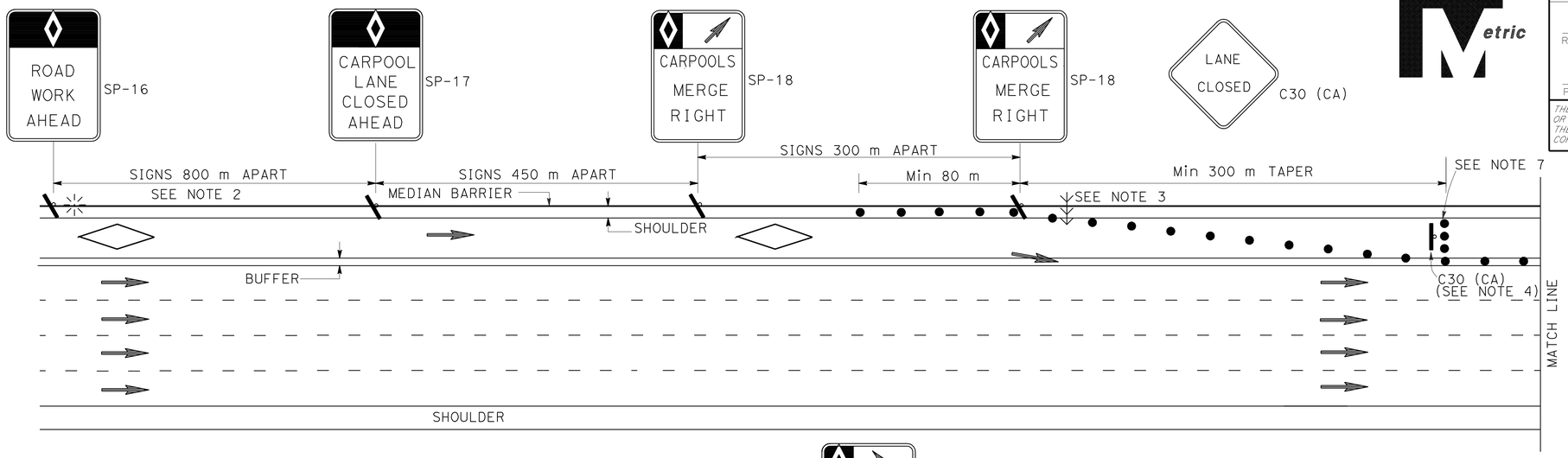

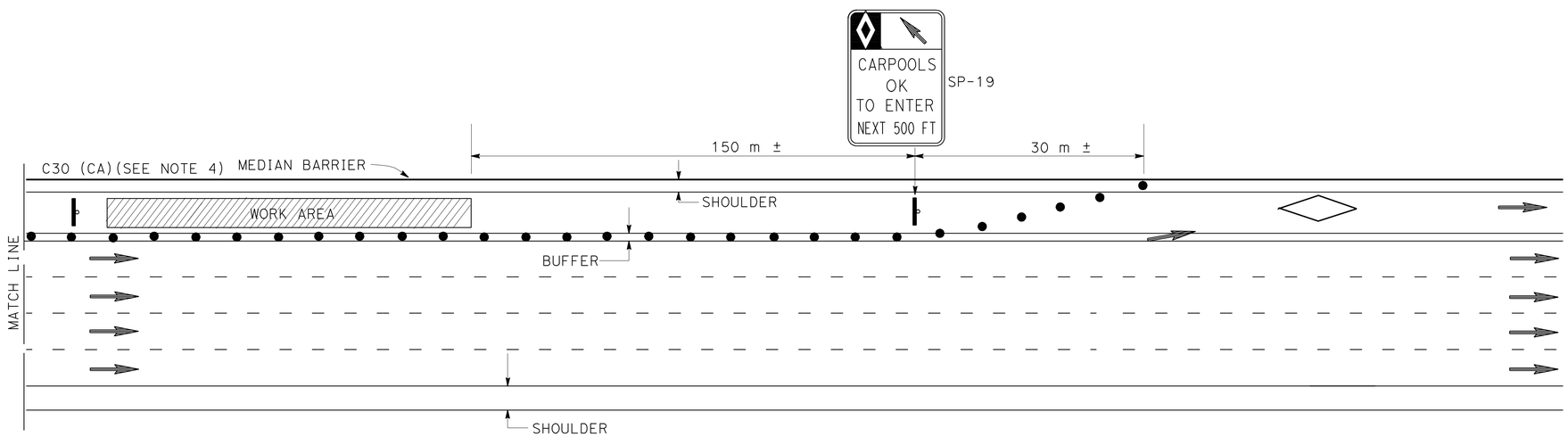

ABBREVIATIONS

(CA)	CALIFORNIA CODE
HOV	HIGH OCCUPANCY VEHICLE
m	METER

NOTES: FOR CASE I AND CASE II

1. AT LEAST ONE PERSON SHALL BE ASSIGNED TO FULL TIME MAINTENANCE OF TRAFFIC CONTROL DEVICES ON NIGHT LANE CLOSURES OR DAY-TIME CLOSURES EXCEEDING 1.6 KILOMETERS IN LENGTH, INCLUDING TAPERS.
2. ADVANCE WARNING SIGN INSTALLATIONS SHALL BE EQUIPPED WITH FLAGS FOR DAYTIME CLOSURES. TYPE B HIGH INTENSITY FLASHING WARNING LIGHTS SHALL BE USED ON SP-16 SIGNS DURING NIGHT LANE CLOSURES. FLAGS AND WARNING LIGHTS SHALL BE ATTACHED TO SIGNS AS APPROVED BY THE ENGINEER.
3. THE FLASHING ARROW SIGN SHALL BE TYPE I.
4. PLACE C30 (CA) SIGNS EVERY 600 METERS THROUGHOUT THE LENGTH OF LANE CLOSURE.
5. A MINIMUM 450 METERS OF SIGHT DISTANCE SHALL BE PROVIDED WHERE POSSIBLE FOR VEHICLES APPROACHING THE FLASHING ARROW SIGN. LANE CLOSURES SHALL NOT BE PLACED ON CREST VERTICAL CURVE OR ON A HORIZONTAL CURVES.
6. PORTABLE DELINEATORS PLACED AT ONE-HALF THE SPACING INDICATED FOR TRAFFIC CONES MAY BE USED INSTEAD OF CONES FOR DAYTIME CLOSURES.
7. A MINIMUM OF 3 CONES SHALL BE PLACED TRANSVERSELY ACROSS CLOSED LANES WHERE TAPERS END AND EVERY 600 METERS. TWO TYPE II BARRICADES MAY BE USED INSTEAD OF 3 CONES. THE ALIGNMENT OF CONES OR BARRICADES MAY BE SHIFTED FROM THE TRANSVERSE ALIGNMENT TO PROVIDE ACCESS TO WORK.
8. IF AN INGRESS/EGRESS AREA IS WITHIN 1.6 KILOMETERS UPSTREAM OR DOWNSTREAM OF THE WORK AREA, LANE CLOSURES SHALL BE EXTENDED TO THAT AREA AS SHOWN IN CASE II.
9. SIGNS SP-16, 17, 18, AND 19 MAY BE OVERLAID ON EXISTING CARPOOL SIGNS IN MEDIANS AS APPROVED BY THE ENGINEER.
10. SIGNS SP-16, 17, 18, AND C30 (CA) SHALL BE BLACK ON ORANGE BACKGROUND. SIGN SP-19 SHALL BE BLACK ON WHITE BACKGROUND. DIAMONDS ON SIGNS SHALL BE WHITE.
11. FOR CLOSURE OF LANE(S) ADJACENT TO HOV LANES, SEE CASE II.
12. THE MAXIMUM SPACING BETWEEN CONES SHALL BE APPROXIMATELY 15 METERS IN TAPERS AND 30 METERS ON TANGENTS.

LEGEND

- CONE
- FLASHING BEACON
- HOV LANE
- FLASHING ARROW SIGN
- PORTABLE SIGN
- DIRECTION OF TRAVEL

SIGN PANEL
SIZE (MIN)

SP-16	900 mm X 1350 mm
SP-17	900 mm X 1350 mm
SP-18	900 mm X 1200 mm
SP-19	900 mm X 1500 mm
C30 (CA)	762 mm X 762 mm
G20-2	1200 mm X 600 mm

TRAFFIC HANDLING DETAILS
TRAFFIC CONTROL SYSTEM
FOR HIGH OCCUPANCY VEHICLE LANES AT NON-INGRESS/EGRESS AREAS
CASE I

NO SCALE

THD-4

CALCULATED-DESIGNED BY	JC	7/08	
CHECKED BY	JC	4/07	
REVISED BY	DATE REVISED		
FUNCTIONAL SUPERVISOR	ALBERT K YU		
	JOCELYN C CHIANG		
	ALBERT K YU		

STATE OF CALIFORNIA - DEPARTMENT OF TRANSPORTATION
Caltrans DTM

LAST REVISION 00-00-00 | DATE PLOTTED => 07-JUN-2010 | TIME PLOTTED => 13:46

Dist	COUNTY	ROUTE	KILOMETER POST TOTAL PROJECT	SHEET No.	TOTAL SHEETS
07	LA	405	39.7/41.5	103	439

REGISTERED CIVIL ENGINEER 7/23/09 DATE

6-7-10
PLANS APPROVAL DATE

REGISTERED PROFESSIONAL ENGINEER JOCELYN C CHIANG No. C62742 Exp. 6-30-10 CIVIL STATE OF CALIFORNIA

THE STATE OF CALIFORNIA OR ITS OFFICERS OR AGENTS SHALL NOT BE RESPONSIBLE FOR THE ACCURACY OR COMPLETENESS OF ELECTRONIC COPIES OF THIS PLAN SHEET.

Caltrans Metric

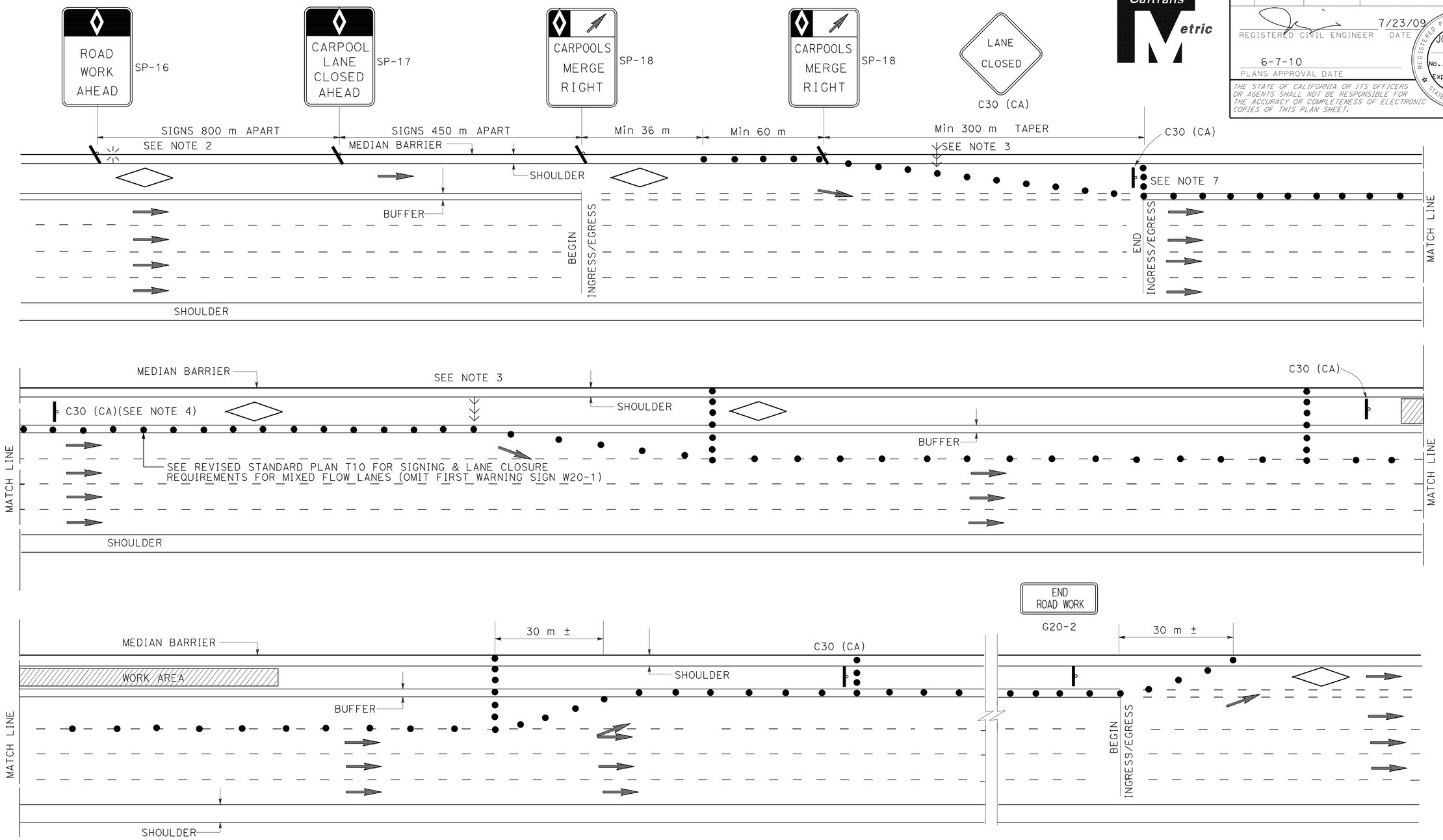

NOTES:

1. SEE CASE I FOR NOTES, LEGENDS AND ABBREVIATIONS FOR THIS SHEET.
2. CLOSURES OF ONE MIXED FLOW TRAFFIC LANE ADJACENT TO HOV LANE SHOWN. MULTIPLE MIXED FLOW LANE CLOSURES ARE SIMILAR.

TRAFFIC HANDLING DETAILS
TRAFFIC CONTROL SYSTEM
FOR HIGH OCCUPANCY
VEHICLE LANES AND ADJACENT FREEWAY LANES
BETWEEN INGRESS/EGRESS AREAS
CASE II

NO SCALE

THD-5

JC	7/08		
JC	4/07		
REVISED BY	DATE REVISED		
ALBERT K YU	JOCELYN C CHIANG		
CALCULATED-DESIGNED BY	CHECKED BY		
FUNCTIONAL SUPERVISOR	ALBERT K YU		
STATE OF CALIFORNIA - DEPARTMENT OF TRANSPORTATION	DTM		

LAST REVISION 00-00-00 DATE PLOTTED => 07-JUN-2010 TIME PLOTTED => 13:46

Dist	COUNTY	ROUTE	KILOMETER POST TOTAL PROJECT	SHEET No.	TOTAL SHEETS
07	LA	405	39.7/41.5	104	439

REGISTERED CIVIL ENGINEER 7/23/09 DATE

6-7-10
PLANS APPROVAL DATE

REGISTERED PROFESSIONAL ENGINEER JOCELYN C CHIANG No. C62742 Exp. 6-30-10 CIVIL STATE OF CALIFORNIA

THE STATE OF CALIFORNIA OR ITS OFFICERS OR AGENTS SHALL NOT BE RESPONSIBLE FOR THE ACCURACY OR COMPLETENESS OF ELECTRONIC COPIES OF THIS PLAN SHEET.

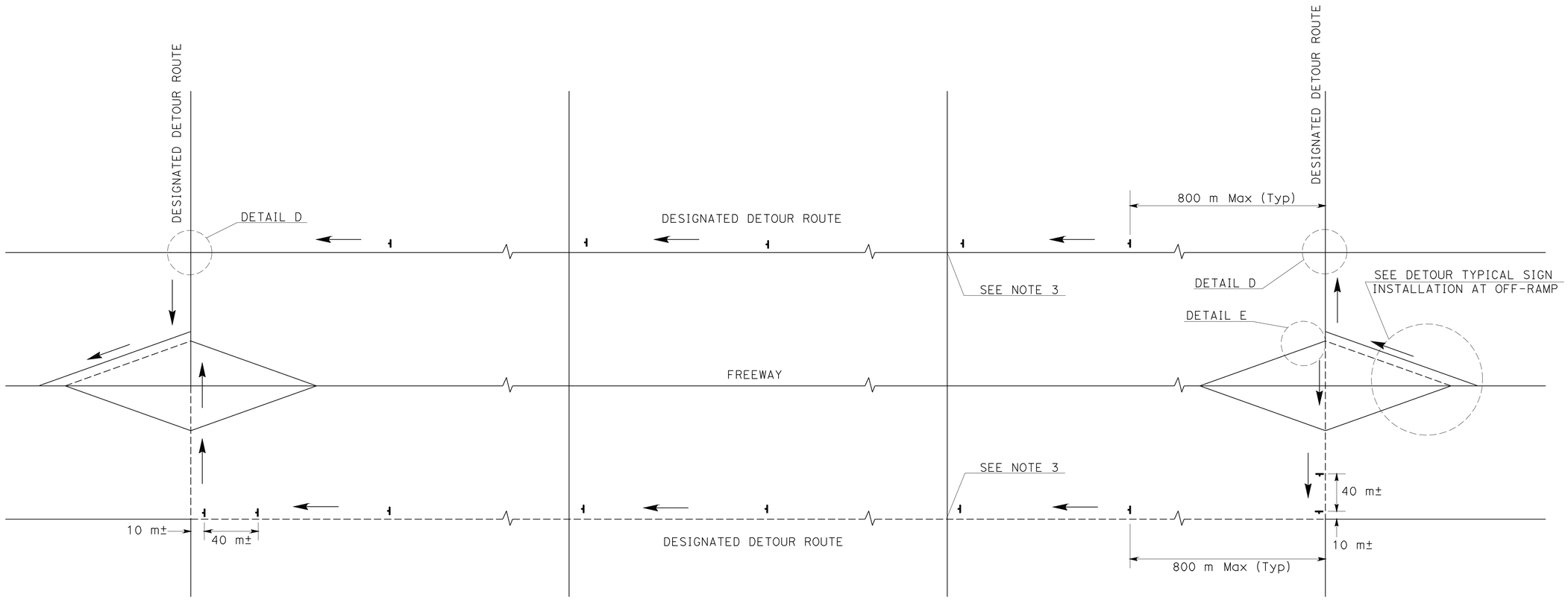

TYPICAL DETOUR SIGN INSTALLATION ALONG DESIGNATED DETOUR ROUTE

LEGEND

- SIGN SP-2
- AND/OR — DESIGNATED DETOUR ROUTE
- DIRECTION OF TRAVEL

ABBREVIATION

m METER

NOTES:

1. SP-2 SIGNS SHALL NOT BE INSTALLED ON BARRICADES EXCEPT AS OTHERWISE SHOWN.
2. SIGN LOCATIONS ARE APPROXIMATE. EXACT LOCATIONS WILL BE DETERMINED BY THE ENGINEER.
3. SP-2 SIGNS SHALL BE POSTED AT SIGNALIZED INTERSECTIONS ALONG THE DESIGNATED DETOUR ROUTE OR 800 METERS MAXIMUM APART.

TRAFFIC HANDLING DETAILS
TRAFFIC CONTROL SYSTEM
FOR DETOUR SIGN INSTALLATION ALONG DESIGNATED DETOUR ROUTE
SHEET 1 OF 2
NO SCALE

THD-6

JC	7/08		
JC	4/07	REVISED BY	DATE REVISED
ALBERT K YU	JOCELYN C CHIANG	CALCULATED-DESIGNED BY	CHECKED BY
FUNCTIONAL SUPERVISOR	ALBERT K YU		

STATE OF CALIFORNIA - DEPARTMENT OF TRANSPORTATION
Caltrans DTM

LAST REVISION 00-00-00 DATE PLOTTED => 07-JUN-2010 TIME PLOTTED => 13:46

Dist	COUNTY	ROUTE	KILOMETER POST TOTAL PROJECT	SHEET No.	TOTAL SHEETS
07	LA	405	39.7/41.5	105	439

REGISTERED CIVIL ENGINEER 7/23/09 DATE

6-7-10
PLANS APPROVAL DATE

REGISTERED PROFESSIONAL ENGINEER JOCELYN C CHIANG No. C62742 Exp. 6-30-10 CIVIL STATE OF CALIFORNIA

THE STATE OF CALIFORNIA OR ITS OFFICERS OR AGENTS SHALL NOT BE RESPONSIBLE FOR THE ACCURACY OR COMPLETENESS OF ELECTRONIC COPIES OF THIS PLAN SHEET.

Caltrans Metric

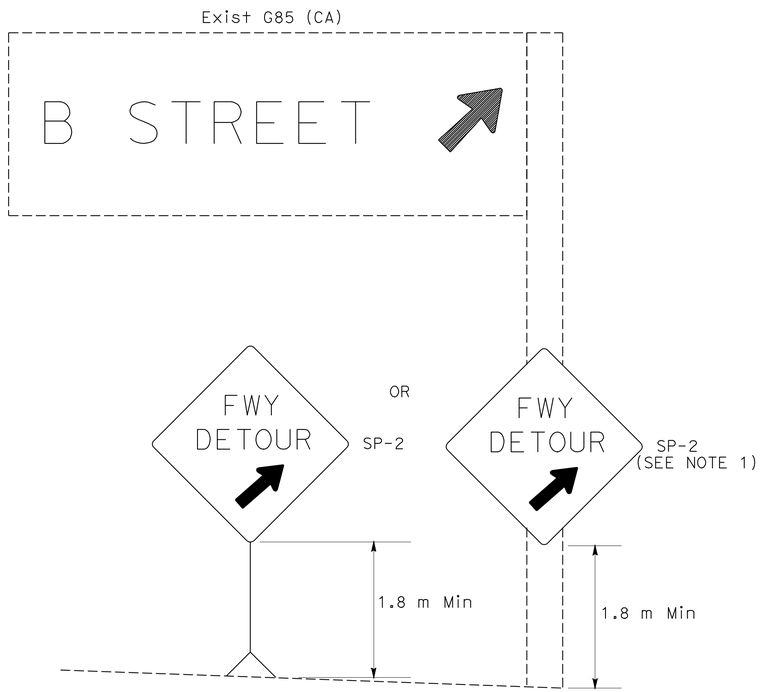

DETAIL A (SEE NOTE 2)

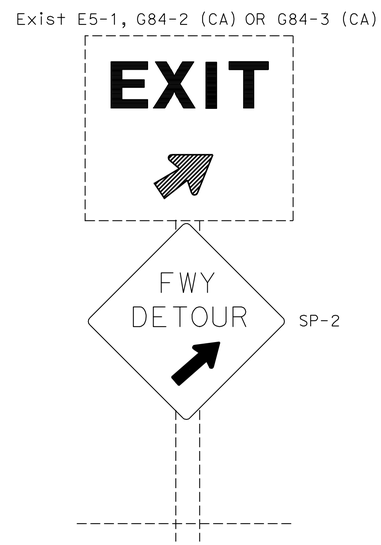

DETAIL B (SEE NOTE 2)

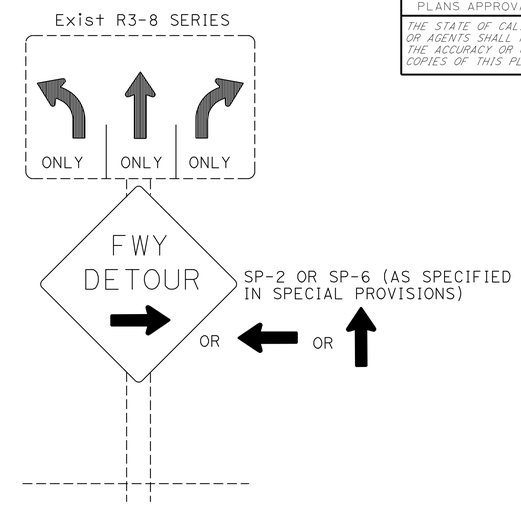

DETAIL C (SEE NOTE 3)

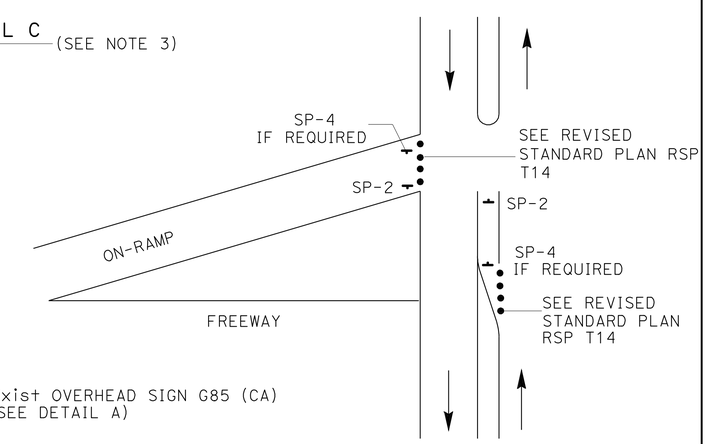

DETAIL E

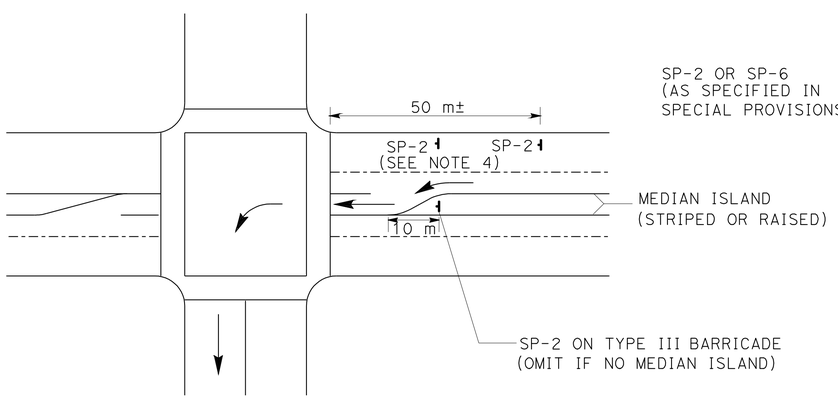

DETAIL D

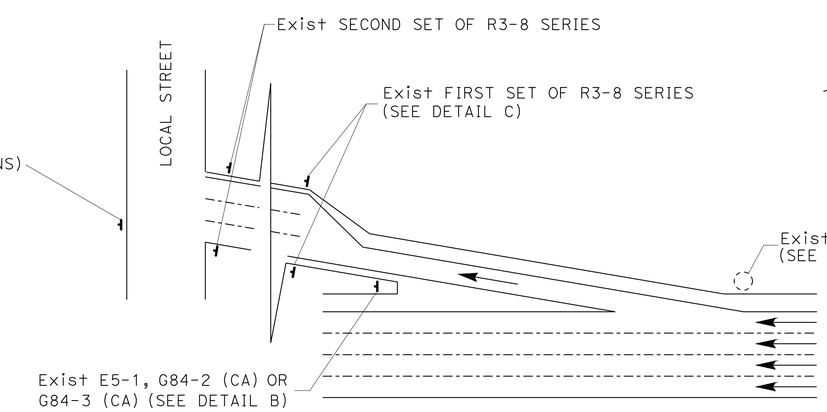

TYPICAL DETOUR SIGN INSTALLATION AT OFF-RAMP

NOTES:

1. SP-2 MAY BE STRAPPED ON EXISTING ELECTROLIER SIGNAL POSTS OR SIGN POSTS.
2. OMIT DETAIL A AND DETAIL B FOR FULL FREEWAY CLOSURES.
3. SEE TRAFFIC HANDLING DETAILS PLAN-TRAFFIC CONTROL SYSTEM FOR RAMP CLOSURES, DETOUR SIGNS AND MISCELLANEOUS DETAILS SHEET 2 OF 2 FOR SP-6.
4. OMIT IF MEDIAN ISLAND EXIST.

ABBREVIATIONS

(CA)	CALIFORNIA CODE
m	METER

LEGEND

- CONE
- PORTABLE SIGN
- DIRECTION OF TRAVEL
- EXISTING OVERHEAD SIGN

TRAFFIC HANDLING DETAILS
TRAFFIC CONTROL SYSTEM
FOR DETOUR SIGN INSTALLATION ALONG DESIGNATED DETOUR ROUTE
SHEET 2 OF 2

NO SCALE

THD-7

JC	JC	JC
7/08	1/08	4/07

REVISED BY / DATE REVISED

ALBERT K YU / JOCELYN C CHIANG

CALCULATED-DESIGNED BY / CHECKED BY

FUNCTIONAL SUPERVISOR: ALBERT K YU

STATE OF CALIFORNIA - DEPARTMENT OF TRANSPORTATION

Caltrans DTM

LAST REVISION 00-00-00 | DATE PLOTTED => 07-JUN-2010 | TIME PLOTTED => 13:46

Dist	COUNTY	ROUTE	KILOMETER POST TOTAL PROJECT	SHEET No.	TOTAL SHEETS
07	LA	405	39.7/41.5	106	439

Caltrans Metric

REGISTERED CIVIL ENGINEER 10-12-09 DATE

6-7-10
PLANS APPROVAL DATE

REGISTERED PROFESSIONAL ENGINEER NGIM NANCY PE No. 58161 Exp. 6-30-10 CIVIL STATE OF CALIFORNIA

THE STATE OF CALIFORNIA OR ITS OFFICERS OR AGENTS SHALL NOT BE RESPONSIBLE FOR THE ACCURACY OR COMPLETENESS OF ELECTRONIC COPIES OF THIS PLAN SHEET.

REMOVE PAVEMENT DELINEATION

SHEET NUMBER	REMOVE PAVEMENT MARKER					REMOVE THERMOPLASTIC TRAFFIC STRIPE														REMOVE YELLOW THERMOPLASTIC TRAFFIC STRIPE (HAZARDOUS WASTE)				REMOVE PAINTED TRAFFIC STRIPE	REMOVE THERMOPLASTIC PAVEMENT MARKING	
	NON-REFLECTIVE	RETROREFLECTIVE				100 mm SOLID WHITE				100 mm BROKEN WHITE				200 mm BROKEN WHITE	200 mm SOLID WHITE					100 mm SOLID YELLOW						
	TYPE A	TYPE C	TYPE G	TYPE H	TYPE HR	Det B	Det 27B	0.3 mm BUFFER	0.3 mm BUFFER (Mod)	Det 8	Det 9	Det 13M	Det 14M	Det A	Det 36	Det 36A	Det 37	Det 38A	Det 38B	0.3 mm BUFFER	0.3 mm BUFFER (Mod)	Det 21	Det 25A		DESCRIPTION	m^2
	EA	EA	EA	EA	EA	m	m	m	m	m	m	m	m	m	m	m	m	m	m	m	m	m	m	m		
SC-1	287		101	104			421	205		23		263		35		71				410			350		1-CAR POOL LANE, 1-DIAMOND	6.97
SC-2	258		82	129			233	315				236					16			630			315		2-DIAMOND	2.04
SC-3	164		85	82			147	199				150					40			399			199			
SC-5						40	131			103								49				493				
SC-6						60				42								52								
SC-8			30			30					129											576				
SC-10			12				317									86										
SC-11	284	2	104	140	2		346	338	8			254	6				71			676	16		346			
SC-12	295	15	148	138	10		568	324	36			243	27		79		72			648	72		360			
SC-13	568	29	164	244			385	562				413	107		134		3		106	1123			661			
SC-16	8		5	4																				58		
SC-17	332		168	101			148				29								43					1682		
SC-18			4												31											
SC-19	250		113	50			228				53	229			278								364			
SUB TOTAL	2446	46	1016	992	12	130	2924	1943	44	168	211	1788	140	35	522	157	202	101	149	3886	88	1069	2595	1740		
TOTAL	4512					8514														7638				1740	9.01	

TRAFFIC HANDLING QUANTITIES

THQ-1

STATE OF CALIFORNIA - DEPARTMENT OF TRANSPORTATION
Caltrans OFFICE OF DESIGN A

FUNCTIONAL SUPERVISOR: NGIM NANCY PE
CALCULATED-DESIGNED BY: ANDREW LY
CHECKED BY: NGIM NANCY PE
REVISED BY / DATE REVISED

LAST REVISION 00-00-00
DATE PLOTTED => 07-JUN-2010
TIME PLOTTED => 13:47

Dist	COUNTY	ROUTE	KILOMETER POST TOTAL PROJECT	SHEET No.	TOTAL SHEETS
07	LA	405	39.7/41.5	107	439

Caltrans Metric

REGISTERED CIVIL ENGINEER 10-12-09 DATE

6-7-10
PLANS APPROVAL DATE

REGISTERED PROFESSIONAL ENGINEER NGIM NANCY PE No. 58161 Exp. 6-30-10 CIVIL STATE OF CALIFORNIA

THE STATE OF CALIFORNIA OR ITS OFFICERS OR AGENTS SHALL NOT BE RESPONSIBLE FOR THE ACCURACY OR COMPLETENESS OF ELECTRONIC COPIES OF THIS PLAN SHEET.

TRAFFIC HANDLING QUANTITIES

SHEET NUMBER	TEMPORARY PAVEMENT MARKER					TEMPORARY TRAFFIC STRIPE (PAINT)																										
	NON-REFLECTIVE	RETROREFLECTIVE				100 mm SOLID WHITE				100 mm BROKEN WHITE					200 mm BROKEN WHITE	200 mm SOLID WHITE					100 mm SOLID YELLOW					TEMPORARY PAVEMENT MARKINGS (PAINT)		TEMPORARY CRASH CUSHION MODULE	TEMPORARY CRASH CUSHION (TYPE ADIEM 350)	CHANNELIZER (SURFACE MOUNTED)	TEMPORARY RAILING (TYPE K)	RELOCATE TEMPORARY RAILING (TYPE K)	TEMPORARY TERMINAL SECTION (TYPE K)
	TYPE A	TYPE C	TYPE G	TYPE H	TYPE HR	Det B	Det 27B	0.3 mm BUFFER	0.3 mm BUFFER (Mod)	Det 8	Det 9	Det 13M	Det 14M	Det 40	Det A	Det 36	Det 36A	Det 37	Det 37B	Det 38B	0.3 mm BUFFER	0.3 mm BUFFER (Mod)	Det 21	Det 24	Det 25A	DIAGONAL 300 mm YELLOW	CHEVRON 300 mm YELLOW						
	EA	EA	EA	EA	EA	m	m	m	m	m	m	m	m	m	m	m	m	m	m	m	m	m	m	m	m	m^2	m^2	EA	EA	EA	m	m	EA
SC-1	72		99	104			402	205		31		1050			145		52				410				350			14		14	62.33		
SC-2	258		74	129			302	315				945					69	13			630				315					12	224.24		
SC-3	164		85	82			147	199				598						199			399				199					24	237.49		2
SC-4																														16			
SC-5						30	302			218				60										263		20.97		22	2	35	170.8		
SC-6			44			15				17				48		147			99					36		1.86	6.36						
SC-7						15	105			61				112										81				11		4	109.8		
SC-8			30			15	132				441			21									576			6.15		11	2	10	329.4		
SC-9																													1	8	97.6		
SC-10			6	4			317			19							45								31			14		15	216.68		
SC-11	284	2	104	140	2		355	338	8			1014	24					161			676	16			346						355		
SC-12	295	15	137	138	10		360	324	36			972	108					360			648	72			360						360		
SC-13	568	29	161	244			334	562				1652	428			116		17		106	1123				661					25	474.35		2
SC-14			37	3			375										75	123							23			14		18		204.25	
SC-15			29				134											134														134.48	
SC-16	8		27	32			326	10				29				162				10	20				215			14		12		264.93	
SC-17	278		130	102			312	216			100	1016				151				120	432				317					5		155.75	
SC-18				23												172												21		17		84.4	
SC-19	321		95	70			352					1174				106									513							360.9	
SUB TOTAL	2248	46	1058	1071	12	75	4255	2169	44	346	541	8450	560	241	145	854	241	1007	99	236	4338	88	576	380	3330	28.98	6.36	121	5	215	2637.69	1204.71	4
TOTAL	4435					27975																				35.34		121	5	215	2637.69	1204.71	4

TRAFFIC HANDLING QUANTITIES
THQ-2

STATE OF CALIFORNIA - DEPARTMENT OF TRANSPORTATION
Caltrans OFFICE OF DESIGN A

FUNCTIONAL SUPERVISOR: NGIM NANCY PE
CALCULATED-DESIGNED BY: ANDREW LY
CHECKED BY: NGIM NANCY PE
REVISED BY / DATE REVISED

LAST REVISION 00-00-00 DATE PLOTTED => 07-JUN-2010 TIME PLOTTED => 13:47

Dist	COUNTY	ROUTE	KILOMETER POST TOTAL PROJECT	SHEET No.	TOTAL SHEETS
07	LA	405	39.7/41.5	108	439

REGISTERED CIVIL ENGINEER 12/10/09 DATE

6-7-10
PLANS APPROVAL DATE

REGISTERED PROFESSIONAL ENGINEER SIDDA REDDY PEDABALLI No. C73622 Exp 12/31/10 CIVIL STATE OF CALIFORNIA

THE STATE OF CALIFORNIA OR ITS OFFICERS OR AGENTS SHALL NOT BE RESPONSIBLE FOR THE ACCURACY OR COMPLETENESS OF ELECTRONIC COPIES OF THIS PLAN SHEET.

Caltrans Metric

NOTES:

1. CHEVRON AND DIAGONAL MARKINGS SHALL BE APPLIED AT A 45 DEGREE ANGLE FROM THE ETW.
2. LIMIT LINES, CROSSWALKS, CHEVRONS AND DIAGONALS SHALL BE 300 mm SOLID WHITE, UNLESS OTHERWISE NOTED.
3. FOR COMPLETE RIGHT OF WAY AND ACCURATE ACCESS DATA, SEE RIGHT OF WAY RECORD MAPS AT DISTRICT OFFICE.

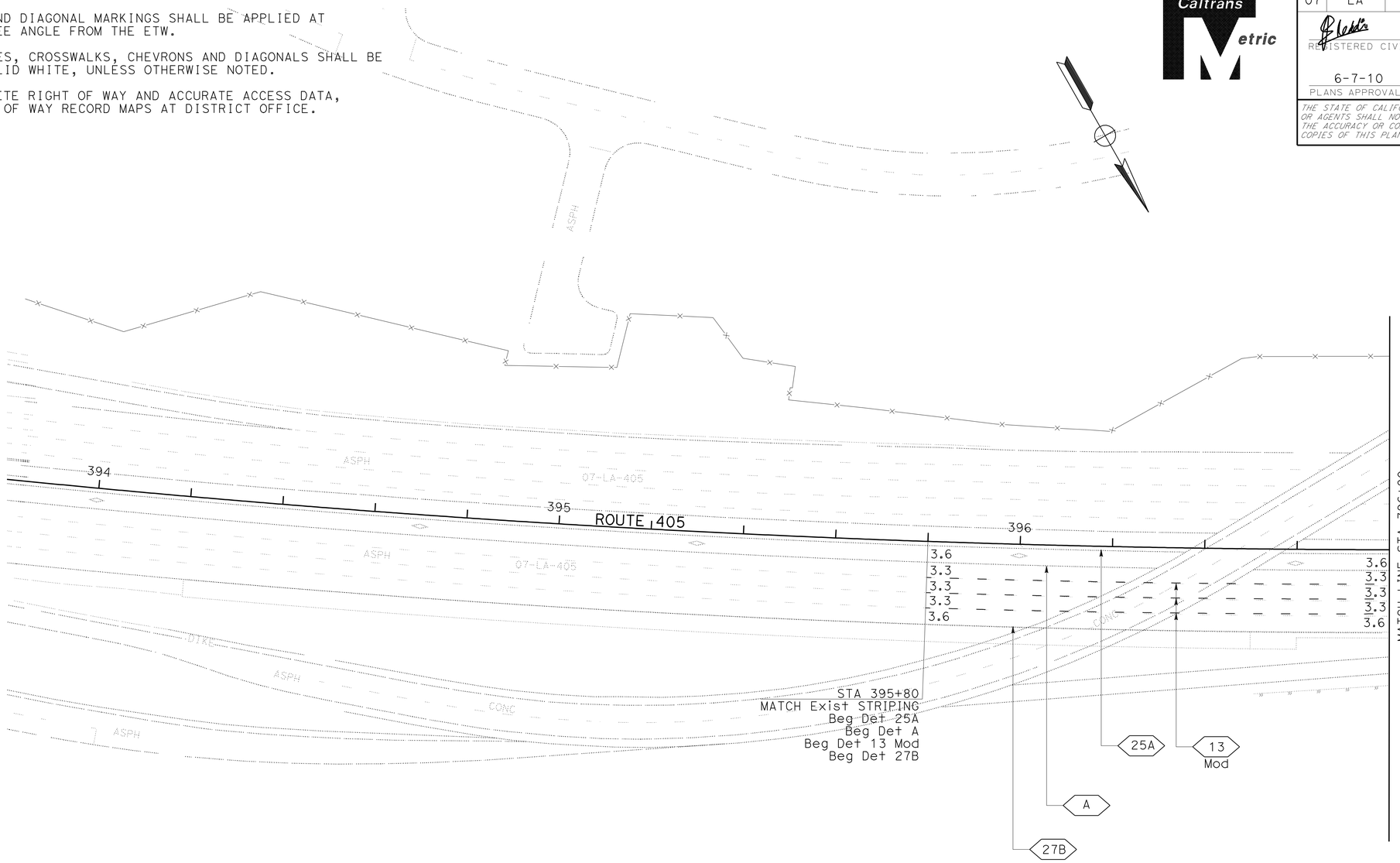

LEGEND

No.	TRAFFIC STRIPING DETAIL NUMBER PER CALTRANS STANDARD PLANS
	CHANGE IN PAVEMENT DELINEATION DETAILS
Y	YIELD
A	AHEAD

ALL DIMENSIONS ARE IN METERS UNLESS OTHERWISE SHOWN

PAVEMENT DELINEATION PLAN

SCALE 1:500

PD-1

THIS PLAN ACCURATE FOR PAVEMENT DELINEATION WORK ONLY.

STATE OF CALIFORNIA - DEPARTMENT OF TRANSPORTATION
Caltrans TRAFFIC DESIGN

FUNCTIONAL SUPERVISOR: MOHAMMED CHOWDHURY
CALCULATED-DESIGNED BY: SULIASTI SUTANTO
CHECKED BY: SIDDA REDDY PEDABALLI
REVISED BY / DATE REVISED

LAST REVISION 00-00-00 | DATE PLOTTED => 07-JUN-2010 | TIME PLOTTED => 13:47

Dist	COUNTY	ROUTE	KILOMETER POST TOTAL PROJECT	SHEET No.	TOTAL SHEETS
07	LA	405	39.7/41.5	109	439

REGISTERED CIVIL ENGINEER 12/10/09 DATE

6-7-10
PLANS APPROVAL DATE

REGISTERED PROFESSIONAL ENGINEER SIDDA REDDY PEDABALLI No. C73622 Exp 12/31/10 CIVIL STATE OF CALIFORNIA

THE STATE OF CALIFORNIA OR ITS OFFICERS OR AGENTS SHALL NOT BE RESPONSIBLE FOR THE ACCURACY OR COMPLETENESS OF ELECTRONIC COPIES OF THIS PLAN SHEET.

Caltrans Metric

NOTES:

1. FOR COMPLETE RIGHT OF WAY AND ACCURATE ACCESS DATA, SEE RIGHT OF WAY RECORD MAPS AT DISTRICT OFFICE

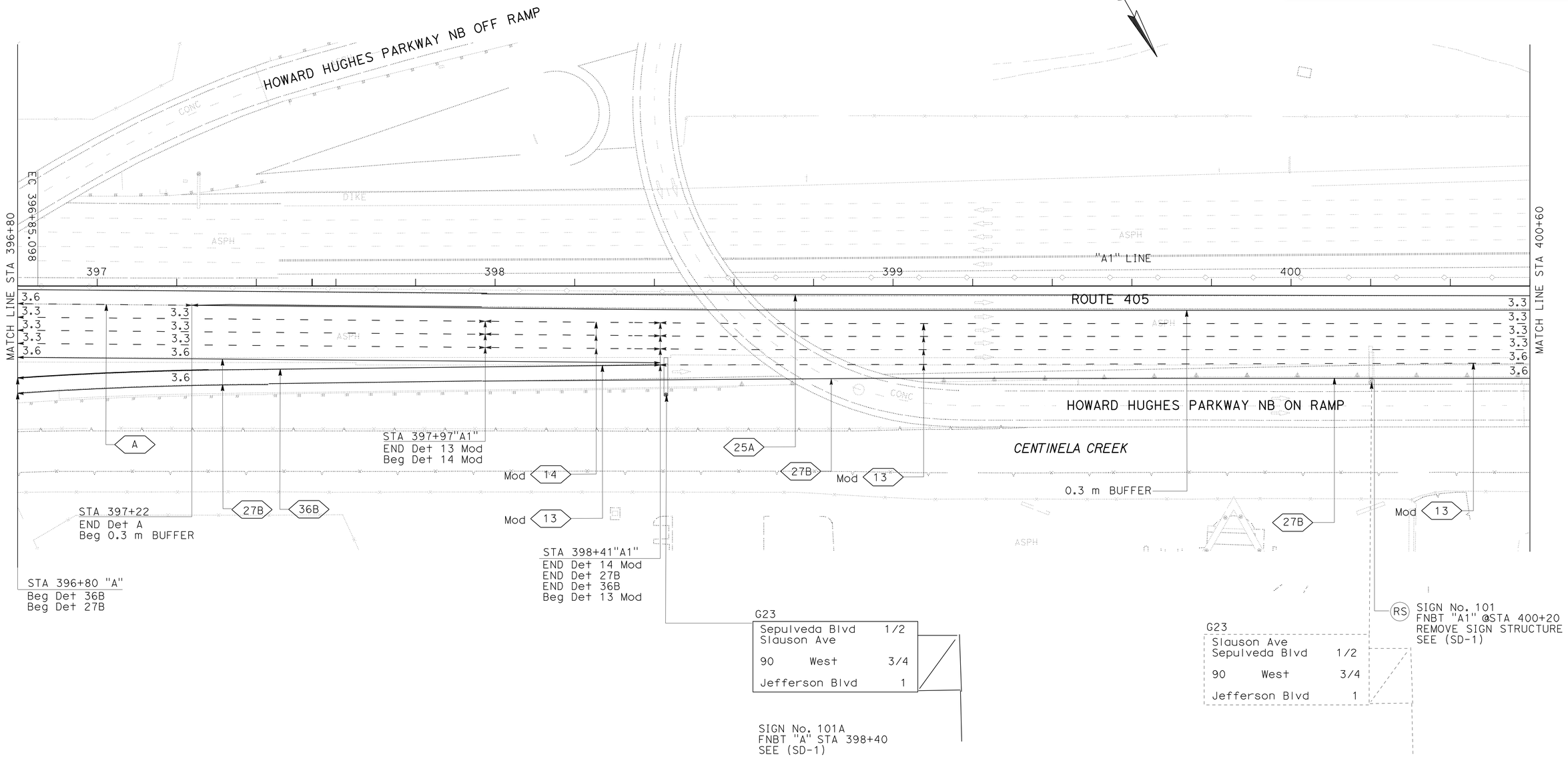

ALL DIMENSIONS ARE IN METERS UNLESS OTHERWISE SHOWN

PAVEMENT DELINEATION PLAN

SCALE 1:500

PD-2

THIS PLAN ACCURATE FOR PAVEMENT DELINEATION WORK ONLY.

STATE OF CALIFORNIA - DEPARTMENT OF TRANSPORTATION
Caltrans TRAFFIC DESIGN

FUNCTIONAL SUPERVISOR MOHAMMED CHOWDHURY
CALCULATED-DESIGNED BY FRANCISCO MARTINEZ
CHECKED BY SIDDA REDDY PEDABALLI
REVISED BY
DATE REVISED

LAST REVISION 00-00-00
DATE PLOTTED => 07-JUN-2010
TIME PLOTTED => 13:47

Dist	COUNTY	ROUTE	KILOMETER POST TOTAL PROJECT	SHEET No.	TOTAL SHEETS
07	LA	405	39.7/41.5	110	439

REGISTERED CIVIL ENGINEER 12/10/09 DATE

PLANS APPROVAL DATE 6-7-10

REGISTERED PROFESSIONAL ENGINEER SIDDA REDDY PEDABALLI No. C73622 Exp 12/31/10 CIVIL STATE OF CALIFORNIA

THE STATE OF CALIFORNIA OR ITS OFFICERS OR AGENTS SHALL NOT BE RESPONSIBLE FOR THE ACCURACY OR COMPLETENESS OF ELECTRONIC COPIES OF THIS PLAN SHEET.

Caltrans Metric

NOTES:

1. FOR COMPLETE RIGHT OF WAY AND ACCURATE ACCESS DATA, SEE RIGHT OF WAY RECORD MAPS AT DISTRICT OFFICE.

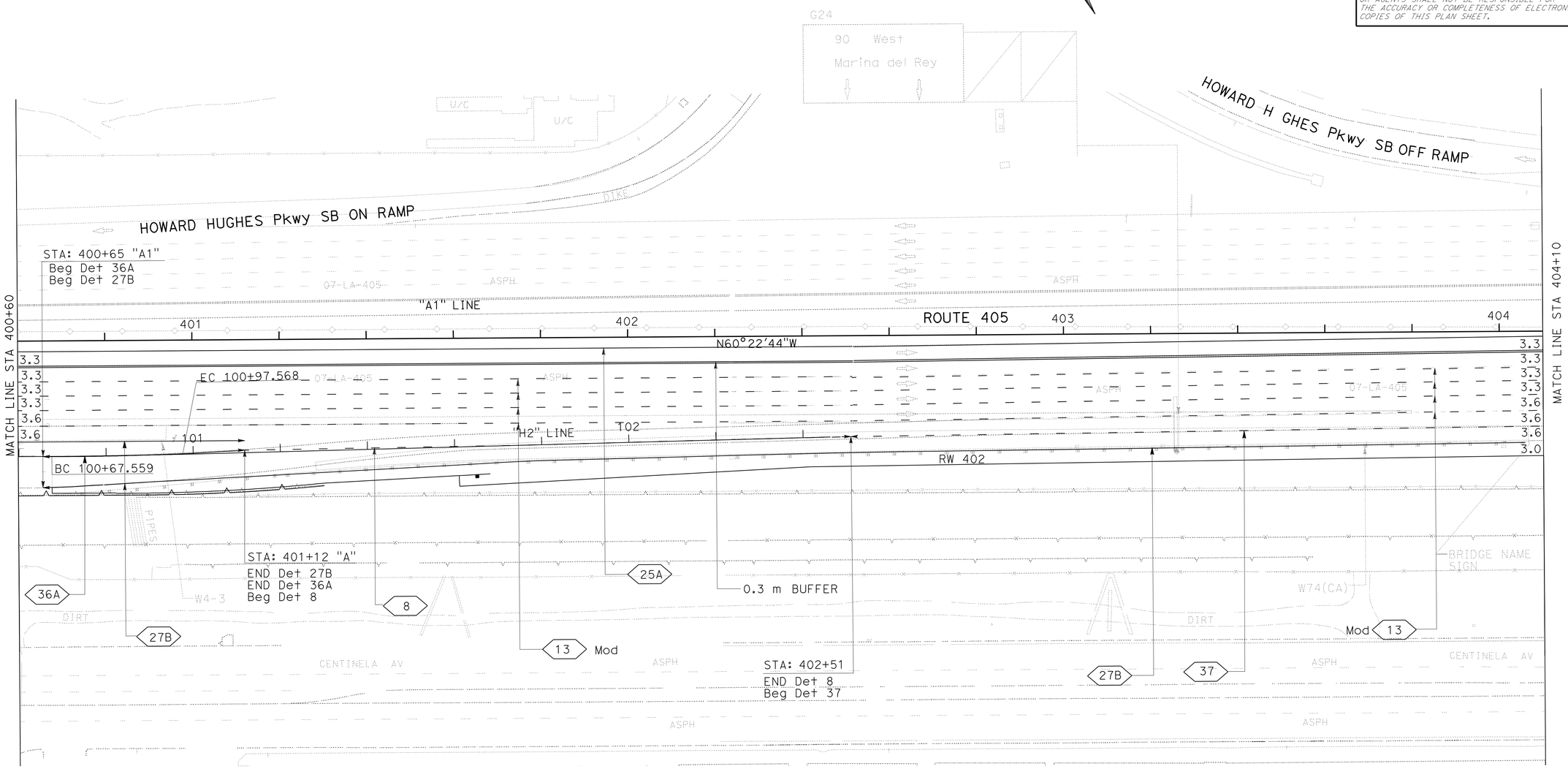

ALL DIMENSIONS ARE IN METERS UNLESS OTHERWISE SHOWN

PAVEMENT DELINEATION PLAN

SCALE 1:500

THIS PLAN ACCURATE FOR PAVEMENT DELINEATION WORK ONLY.

PD-3

STATE OF CALIFORNIA - DEPARTMENT OF TRANSPORTATION

Caltrans **TRAFFIC DESIGN**

FUNCTIONAL SUPERVISOR: MOHAMMED CHOWDHURY

CALCULATED-DESIGNED BY: FRANCISCO MARTINEZ

CHECKED BY: SIDDA REDDY PEDABALLI

REVISED BY | DATE REVISED

LAST REVISION 00-00-00 | DATE PLOTTED => 07-JUN-2010 | TIME PLOTTED => 13:48

Dist	COUNTY	ROUTE	KILOMETER POST TOTAL PROJECT	SHEET No.	TOTAL SHEETS
07	LA	405	39.7/41.5	111	439

REGISTERED CIVIL ENGINEER 12/10/09 DATE

6-7-10
PLANS APPROVAL DATE

REGISTERED PROFESSIONAL ENGINEER SIDDA REDDY PEDABALLI No. C73622 Exp 12/31/10 CIVIL STATE OF CALIFORNIA

THE STATE OF CALIFORNIA OR ITS OFFICERS OR AGENTS SHALL NOT BE RESPONSIBLE FOR THE ACCURACY OR COMPLETENESS OF ELECTRONIC COPIES OF THIS PLAN SHEET.

Caltrans Metric

NOTES:

1. FOR COMPLETE RIGHT OF WAY AND ACCURATE ACCESS DATA, SEE RIGHT OF WAY RECORD MAPS AT DISTRICT OFFICE.

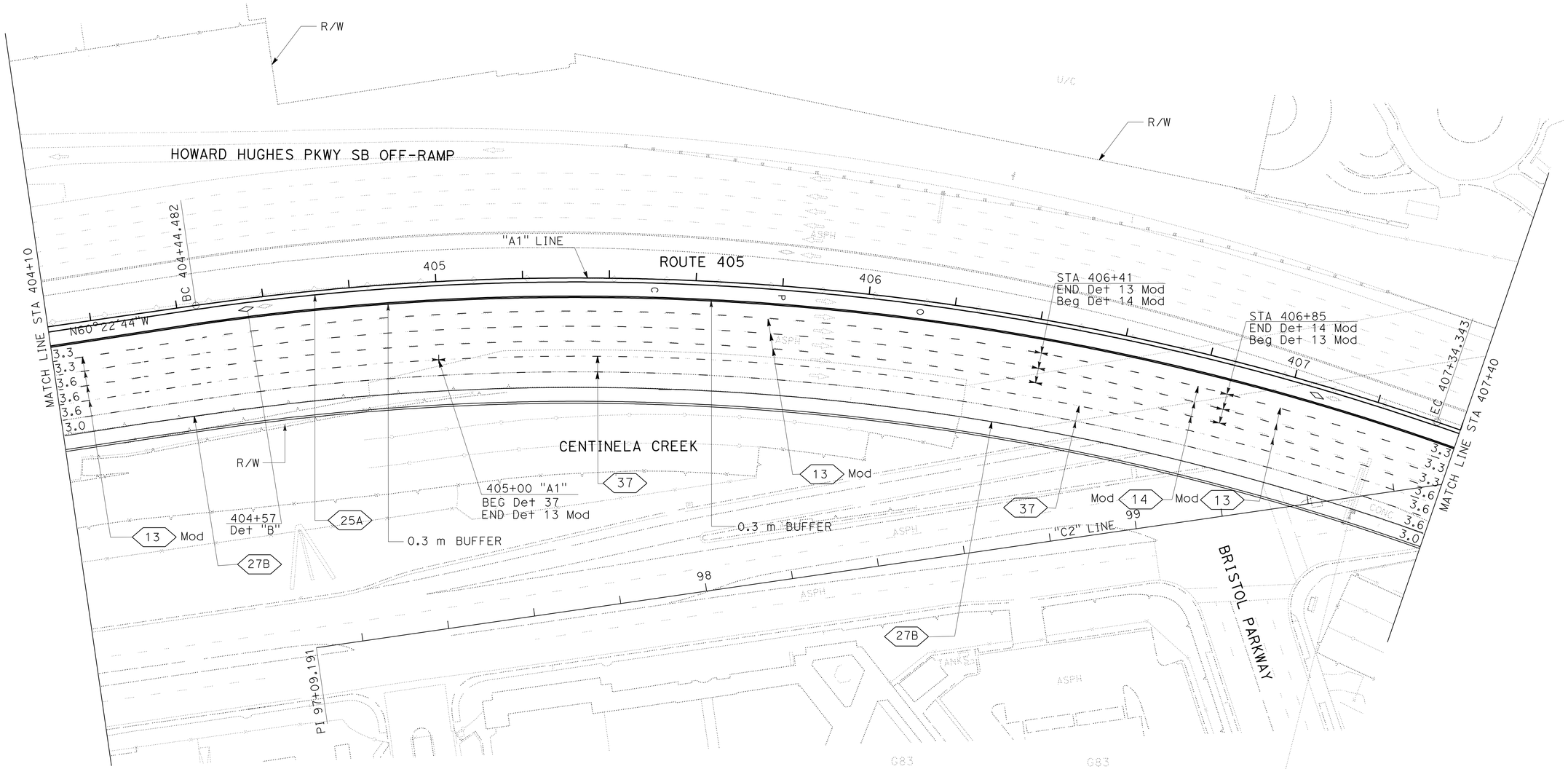

ALL DIMENSIONS ARE IN METERS UNLESS OTHERWISE SHOWN

PAVEMENT DELINEATION PLAN

SCALE 1:500

THIS PLAN ACCURATE FOR PAVEMENT DELINEATION WORK ONLY.

PD-4

STATE OF CALIFORNIA - DEPARTMENT OF TRANSPORTATION
Caltrans
TRAFFIC DESIGN

FUNCTIONAL SUPERVISOR: MOHAMMED CHOWDHURY
CALCULATED-DESIGNED BY: FRANCISCO MARTINEZ
CHECKED BY: SIDDA REDDY PEDABALLI
REVISED BY
DATE REVISED

LAST REVISION 00-00-00
DATE PLOTTED => 07-JUN-2010
TIME PLOTTED => 13:48

Dist	COUNTY	ROUTE	KILOMETER POST TOTAL PROJECT	SHEET No.	TOTAL SHEETS
07	LA	405	39.7/41.5	112	439

REGISTERED CIVIL ENGINEER 12/10/09 DATE

6-7-10
PLANS APPROVAL DATE

REGISTERED PROFESSIONAL ENGINEER SIDDA REDDY PEDABALLI No. C73622 Exp 12/31/10 CIVIL STATE OF CALIFORNIA

THE STATE OF CALIFORNIA OR ITS OFFICERS OR AGENTS SHALL NOT BE RESPONSIBLE FOR THE ACCURACY OR COMPLETENESS OF ELECTRONIC COPIES OF THIS PLAN SHEET.

Caltrans Metric

NOTES:

1. FOR COMPLETE RIGHT OF WAY AND ACCURATE ACCESS DATA, SEE RIGHT OF WAY RECORD MAPS AT DISTRICT OFFICE

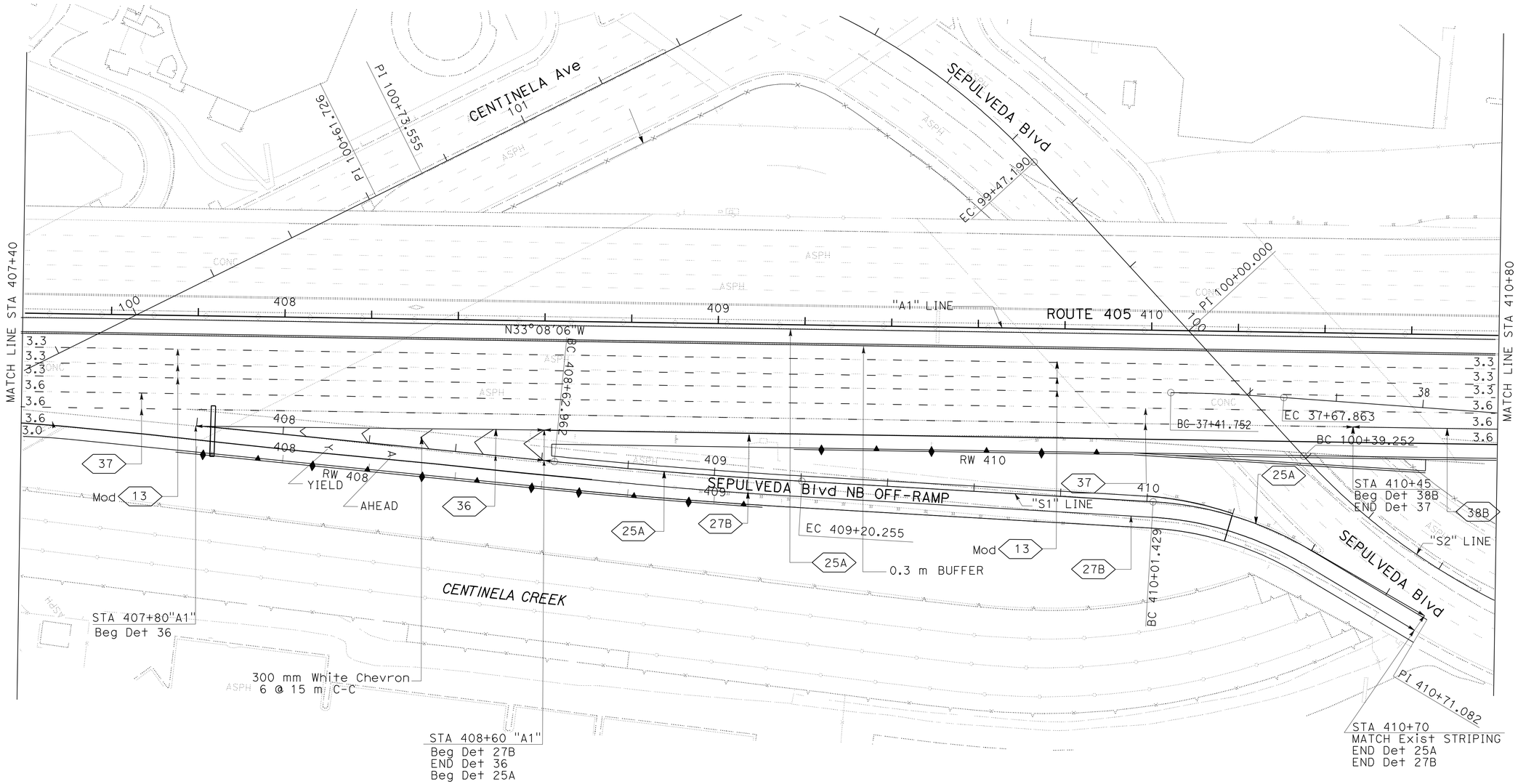

ALL DIMENSIONS ARE IN METERS UNLESS OTHERWISE SHOWN

PAVEMENT DELINEATION PLAN

SCALE 1:500

THIS PLAN ACCURATE FOR PAVEMENT DELINEATION WORK ONLY.

PD-5

REVISED BY	DATE REVISED

CALCULATED-DESIGNED BY: FRANCISCO MARTINEZ
CHECKED BY: SIDDA REDDY PEDABALLI

FUNCTIONAL SUPERVISOR: MOHAMMED CHOWDHURY

STATE OF CALIFORNIA - DEPARTMENT OF TRANSPORTATION
Caltrans TRAFFIC DESIGN

LAST REVISION 00-00-00 | DATE PLOTTED => 07-JUN-2010 | TIME PLOTTED => 13:48

Dist	COUNTY	ROUTE	KILOMETER POST TOTAL PROJECT	SHEET No.	TOTAL SHEETS
07	LA	405	39.7/41.5	113	439

REGISTERED CIVIL ENGINEER 12/10/09 DATE

6-7-10
PLANS APPROVAL DATE

REGISTERED PROFESSIONAL ENGINEER SIDDA REDDY PEDABALLI No. C73622 Exp 12/31/10 CIVIL STATE OF CALIFORNIA

THE STATE OF CALIFORNIA OR ITS OFFICERS OR AGENTS SHALL NOT BE RESPONSIBLE FOR THE ACCURACY OR COMPLETENESS OF ELECTRONIC COPIES OF THIS PLAN SHEET.

Caltrans Metric

NOTES:

1. FOR COMPLETE RIGHT OF WAY AND ACCURATE ACCESS DATA, SEE RIGHT OF WAY RECORD MAPS AT DISTRICT OFFICE

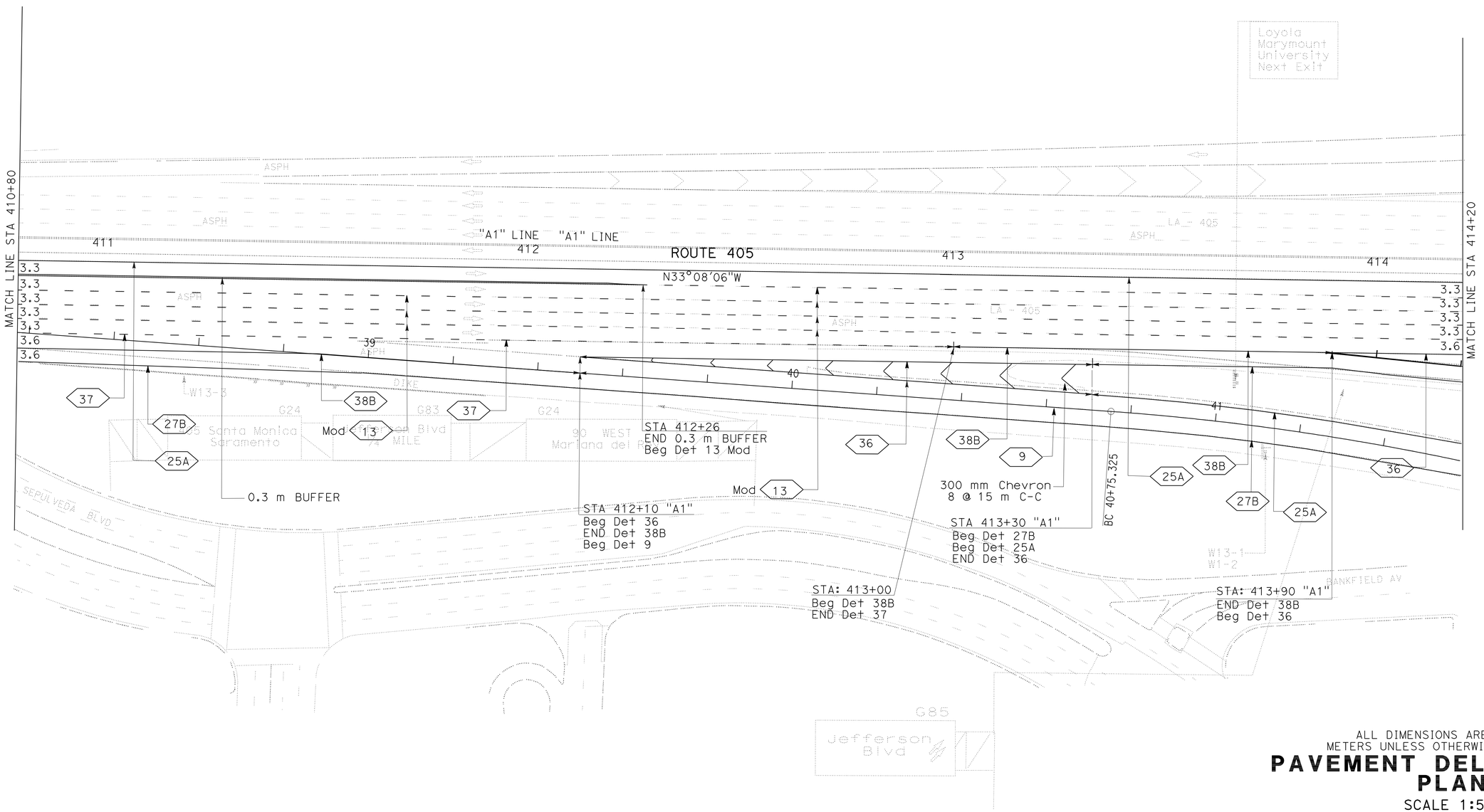

ALL DIMENSIONS ARE IN METERS UNLESS OTHERWISE SHOWN

PAVEMENT DELINEATION PLAN

SCALE 1:500

PD-6

THIS PLAN ACCURATE FOR PAVEMENT DELINEATION WORK ONLY.

STATE OF CALIFORNIA - DEPARTMENT OF TRANSPORTATION
Caltrans TRAFFIC DESIGN

FUNCTIONAL SUPERVISOR: MOHAMMED CHOWDHURY
CALCULATED-DESIGNED BY: FRANCISCO MARTINEZ
CHECKED BY: SIDDA REDDY PEDABALLI
REVISED BY / DATE REVISED

LAST REVISION 00-00-00 | DATE PLOTTED => 07-JUN-2010 | TIME PLOTTED => 13:48

Dist	COUNTY	ROUTE	KILOMETER POST TOTAL PROJECT	SHEET No.	TOTAL SHEETS
07	LA	405	39.7/41.5	114	439

REGISTERED CIVIL ENGINEER 12/10/09 DATE

6-7-10
PLANS APPROVAL DATE

REGISTERED PROFESSIONAL ENGINEER SIDDA REDDY PEDABALLI No. C73622 Exp 12/31/10 CIVIL STATE OF CALIFORNIA

THE STATE OF CALIFORNIA OR ITS OFFICERS OR AGENTS SHALL NOT BE RESPONSIBLE FOR THE ACCURACY OR COMPLETENESS OF ELECTRONIC COPIES OF THIS PLAN SHEET.

Caltrans Metric

NOTE:

1. FOR COMPLETE RIGHT OF WAY AND ACCURATE ACCESS DATA, SEE RIGHT OF WAY RECORD MAPS AT DISTRICT OFFICE.

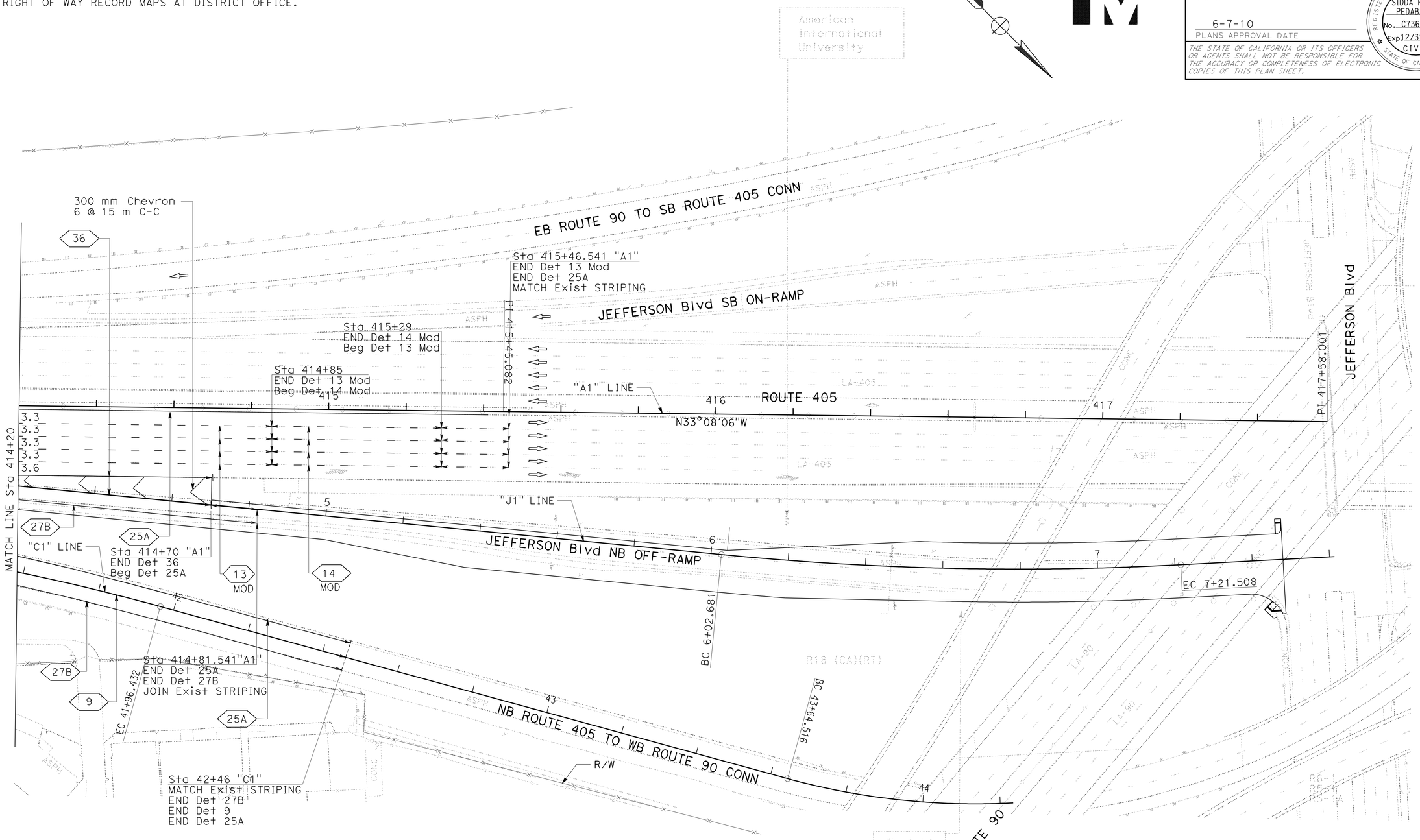

ALL DIMENSIONS ARE IN METERS UNLESS OTHERWISE SHOWN

PAVEMENT DELINEATION PLAN

SCALE 1:500

PD-7

STATE OF CALIFORNIA - DEPARTMENT OF TRANSPORTATION
Caltrans
TRAFFIC DESIGN

FUNCTIONAL SUPERVISOR: MOHAMMED CHOWDHURY
CALCULATED-DESIGNED BY: FRANCISCO MARTINEZ
CHECKED BY: SIDDA REDDY PEDABALLI
REVISED BY
DATE REVISED

LAST REVISION 00-00-00
DATE PLOTTED => 07-JUN-2010
TIME PLOTTED => 14:16

BORDER LAST REVISED 3/1/2007
RELATIVE BORDER SCALE IS IN MILLIMETERS 0 20 40 60 80
USERNAME => trmartin
DGN FILE => 724130na007.dgn
CU 07870
EA 241301

Dist	COUNTY	ROUTE	KILOMETER POST TOTAL PROJECT	SHEET No.	TOTAL SHEETS
07	LA	405	39.7/41.5	115	439

REGISTERED CIVIL ENGINEER 12/10/09 DATE

6-7-10
PLANS APPROVAL DATE

REGISTERED PROFESSIONAL ENGINEER SIDDA REDDY PEDABALLI No. C73622 Exp 12/31/10 CIVIL STATE OF CALIFORNIA

THE STATE OF CALIFORNIA OR ITS OFFICERS OR AGENTS SHALL NOT BE RESPONSIBLE FOR THE ACCURACY OR COMPLETENESS OF ELECTRONIC COPIES OF THIS PLAN SHEET.

Caltrans Metric

NOTE:

1. FOR COMPLETE RIGHT OF WAY AND ACCURATE ACCESS DATA, SEE RIGHT OF WAY RECORD MAPS AT DISTRICT OFFICE.

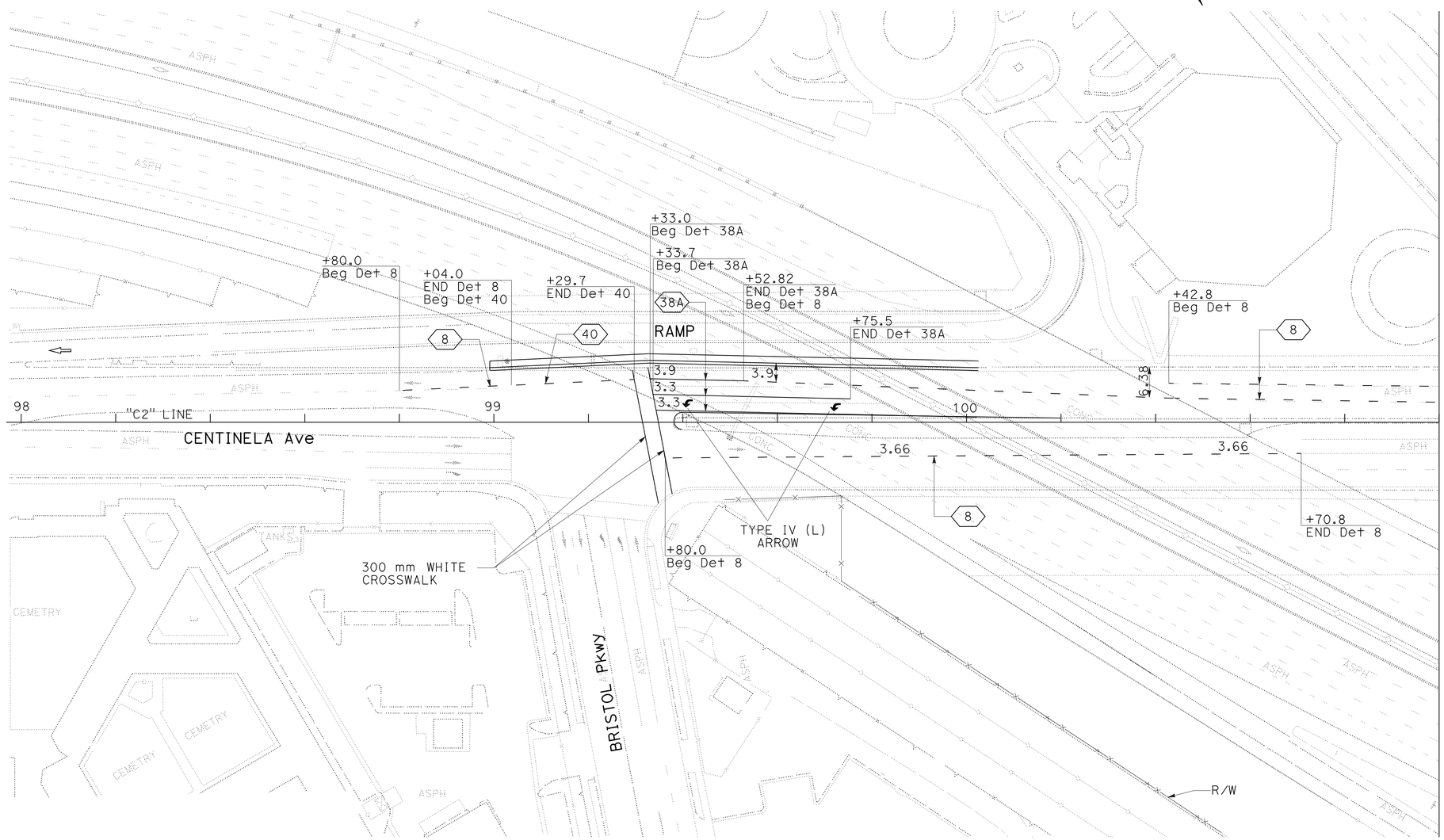

ALL DIMENSIONS ARE IN METERS UNLESS OTHERWISE SHOWN

PAVEMENT DELINEATION PLAN

SCALE 1:500

THIS PLAN ACCURATE FOR PAVEMENT DELINEATION WORK ONLY.

PD-8

STATE OF CALIFORNIA - DEPARTMENT OF TRANSPORTATION
Caltrans **TRAFFIC DESIGN**

FUNCTIONAL SUPERVISOR: MOHAMMED CHOWDHURY
CALCULATED-DESIGNED BY: SIDDAREDDY PEDABALI
CHECKED BY
REVISED BY
DATE REVISED

LAST REVISION 00-00-00
DATE PLOTTED => 07-JUN-2010
TIME PLOTTED => 14:16

Dist	COUNTY	ROUTE	KILOMETER POST TOTAL PROJECT	SHEET No.	TOTAL SHEETS
07	LA	405	39.7/41.5	116	439

REGISTERED CIVIL ENGINEER 12/10/09 DATE

6-7-10
PLANS APPROVAL DATE

REGISTERED PROFESSIONAL ENGINEER SIDDA REDDY PEDABALLI No. C73622 Exp 12/31/10 CIVIL STATE OF CALIFORNIA

THE STATE OF CALIFORNIA OR ITS OFFICERS OR AGENTS SHALL NOT BE RESPONSIBLE FOR THE ACCURACY OR COMPLETENESS OF ELECTRONIC COPIES OF THIS PLAN SHEET.

Caltrans Metric

NOTE:

1. FOR COMPLETE RIGHT OF WAY AND ACCURATE ACCESS DATA, SEE RIGHT OF WAY RECORD MAPS AT DISTRICT OFFICE

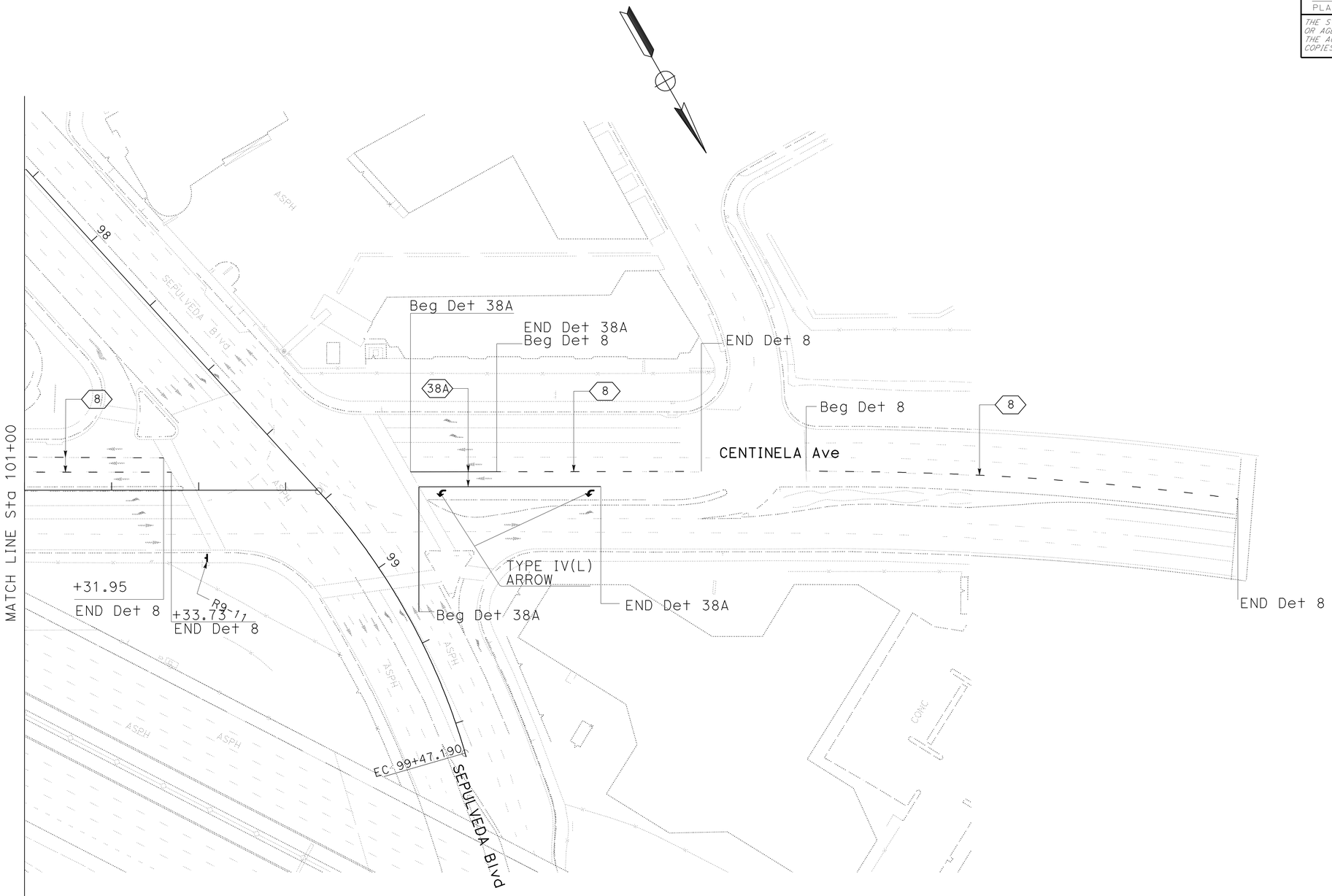

ALL DIMENSIONS ARE IN METERS UNLESS OTHERWISE SHOWN

PAVEMENT DELINEATION PLAN

SCALE 1:500

THIS PLAN ACCURATE FOR PAVEMENT DELINEATION WORK ONLY.

PD-9

STATE OF CALIFORNIA - DEPARTMENT OF TRANSPORTATION
Caltrans TRAFFIC DESIGN

FUNCTIONAL SUPERVISOR: MOHAMMED CHOWDHURY

CALCULATED-DESIGNED BY: SIDDAREDDY PEDABALI
CHECKED BY

REVISED BY
DATE REVISED

LAST REVISION 00-00-00
DATE PLOTTED => 07-JUN-2010
TIME PLOTTED => 14:16

Dist	COUNTY	ROUTE	KILOMETER POST TOTAL PROJECT	SHEET No.	TOTAL SHEETS
07	LA	405	39.7/41.5	117	439

REGISTERED CIVIL ENGINEER 12/10/09 DATE

6-7-10
PLANS APPROVAL DATE

REGISTERED PROFESSIONAL ENGINEER SIDDA REDDY PEDABALLI No. C73622 Exp 12/31/10 CIVIL STATE OF CALIFORNIA

THE STATE OF CALIFORNIA OR ITS OFFICERS OR AGENTS SHALL NOT BE RESPONSIBLE FOR THE ACCURACY OR COMPLETENESS OF ELECTRONIC COPIES OF THIS PLAN SHEET.

Caltrans Metric

NOTE:

1. FOR COMPLETE RIGHT OF WAY AND ACCURATE ACCESS DATA, SEE RIGHT OF WAY RECORD MAPS AT DISTRICT OFFICE.

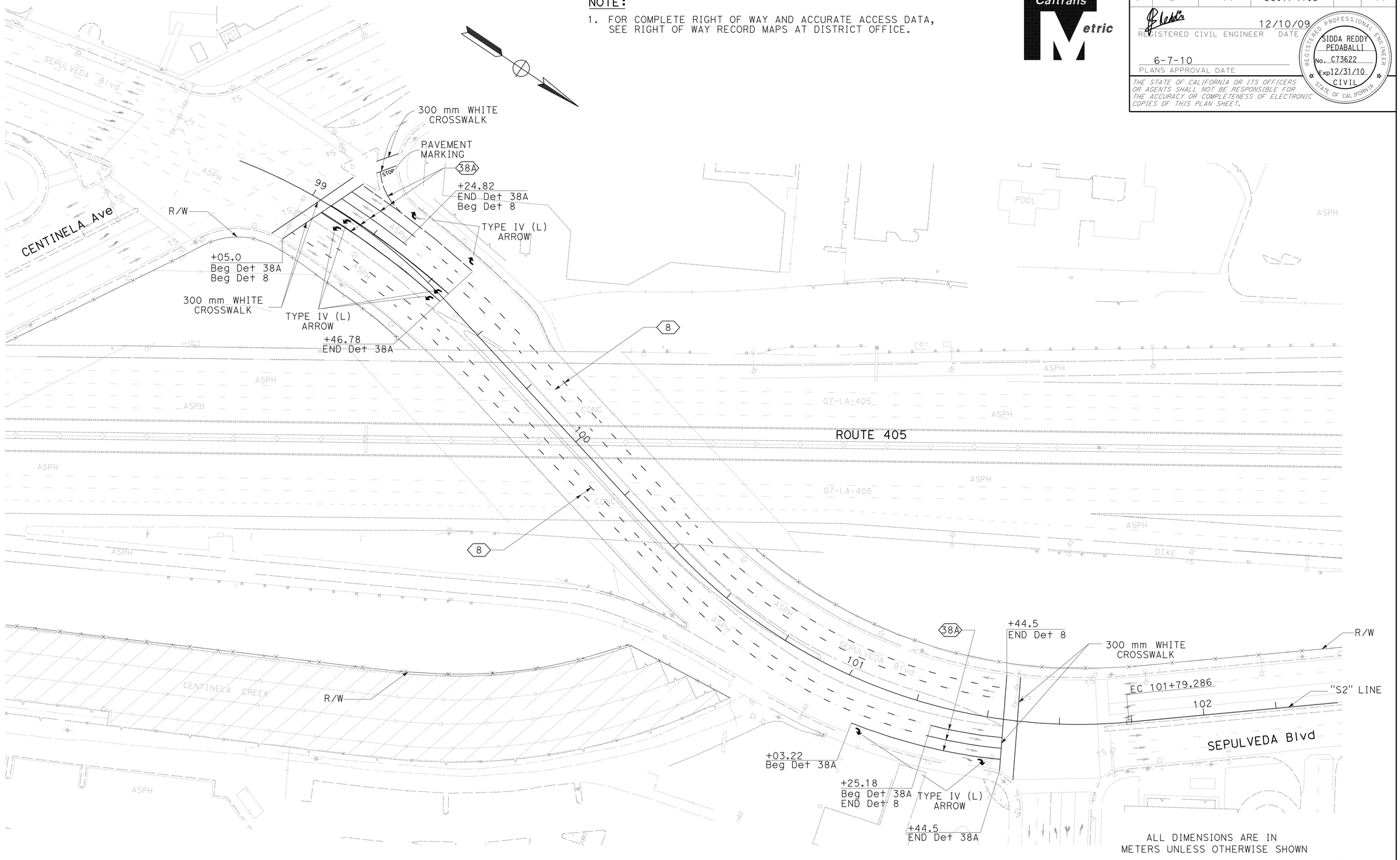

ALL DIMENSIONS ARE IN METERS UNLESS OTHERWISE SHOWN

PAVEMENT DELINEATION PLAN

SCALE 1:500

THIS PLAN ACCURATE FOR PAVEMENT DELINEATION WORK ONLY.

PD-10

STATE OF CALIFORNIA - DEPARTMENT OF TRANSPORTATION
Caltrans
TRAFFIC DESIGN

FUNCTIONAL SUPERVISOR: MOHAMMED CHOWDHURY

CALCULATED-DESIGNED BY: SIDDAREDDY PEDABALI
CHECKED BY

REVISED BY | DATE REVISED

LAST REVISION 00-00-00 | DATE PLOTTED => 07-JUN-2010 | TIME PLOTTED => 14:17

BORDER LAST REVISED 3/1/2007

RELATIVE BORDER SCALE IS IN MILLIMETERS 0 20 40 60 80

USERNAME => trmartin
DGN FILE => 724130na010.dgn

CU 07870

EA 241301

Dist	COUNTY	ROUTE	KILOMETER POST TOTAL PROJECT	SHEET No.	TOTAL SHEETS
07	LA	405	39.7/41.5	118	439

REGISTERED CIVIL ENGINEER 12/10/09 DATE

6-7-10
PLANS APPROVAL DATE

REGISTERED PROFESSIONAL ENGINEER SIDDA REDDY PEDABALLI No. C73622 Exp 12/31/10 CIVIL STATE OF CALIFORNIA

THE STATE OF CALIFORNIA OR ITS OFFICERS OR AGENTS SHALL NOT BE RESPONSIBLE FOR THE ACCURACY OR COMPLETENESS OF ELECTRONIC COPIES OF THIS PLAN SHEET.

Caltrans Metric

NOTES:

1. INSTALL PAVEMENT MARKER TYPE A BEFORE STRIPING, DETAIL 13 AND 14 (Mod).
2. USE TYPE HR RED-YELLOW RETROREFLECTIVE MARKERS ON BUFFER STRIPES AT THE SEGMENT WITHIN LIMITS OF DETAIL 14 (Mod).

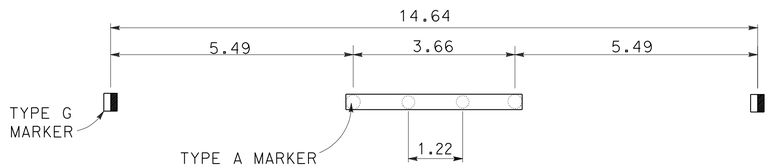

DETAIL 13 (Mod)

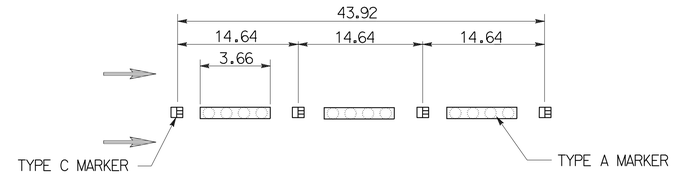

DETAIL 14 (Mod)

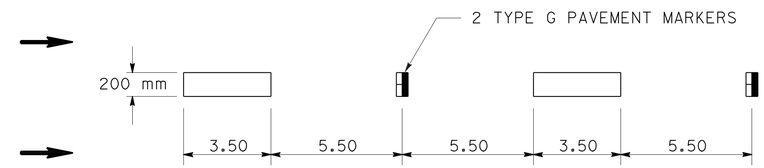

DETAIL A

INGRESS/EGRESS STRIPING DETAIL

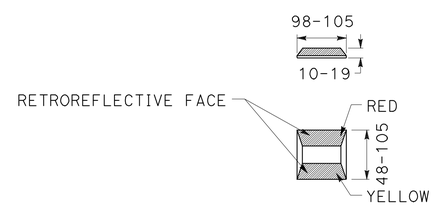

TYPE HR

RED-YELLOW RETROREFLECTIVE MARKER

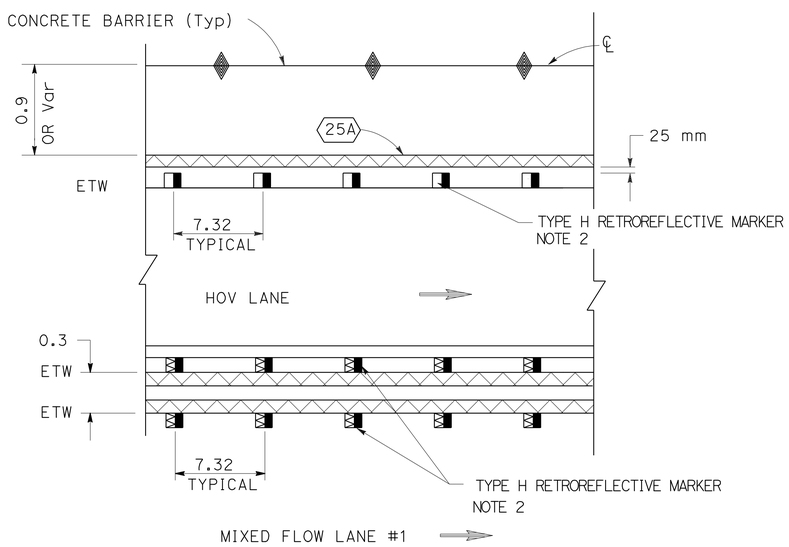

BUFFER STRIPING DETAIL
BUFFER WIDTH-0.3 m (Mod)

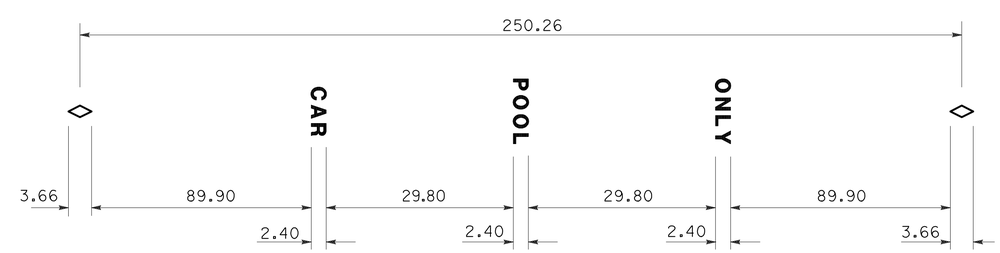

DETAIL "B"

LANE MARKING

ALL DIMENSIONS ARE IN METERS UNLESS OTHERWISE SHOWN

PAVEMENT DELINEATION DETAILS

NO SCALE

PDD-1

STATE OF CALIFORNIA - DEPARTMENT OF TRANSPORTATION
Caltrans **TRAFFIC DESIGN**

FUNCTIONAL SUPERVISOR: MOHAMMED CHOWDHURY
CALCULATED-DESIGNED BY: FRANCISCO MARTINEZ
CHECKED BY: SIDDA REDDY PEDABALLI
REVISED BY / DATE REVISED

LAST REVISION 00-00-00 | DATE PLOTTED => 07-JUN-2010 | TIME PLOTTED => 14:17

Dist	COUNTY	ROUTE	KILOMETER POST TOTAL PROJECT	SHEET No.	TOTAL SHEETS
07	LA	405	39.7/41.5	119	439

REGISTERED CIVIL ENGINEER 12/10/09 DATE

6-7-10
PLANS APPROVAL DATE

REGISTERED PROFESSIONAL ENGINEER SIDDA REDDY PEDABALLI No. C73622 Exp 12/31/10 CIVIL STATE OF CALIFORNIA

THE STATE OF CALIFORNIA OR ITS OFFICERS OR AGENTS SHALL NOT BE RESPONSIBLE FOR THE ACCURACY OR COMPLETENESS OF ELECTRONIC COPIES OF THIS PLAN SHEET.

Caltrans Metric

NOTE:

1. SEE STAGE CONSTRUCTION PLANS FOR ADDITIONAL QUANTITIES.

PAVEMENT DELINEATION QUANTITIES

SHEET No.	LOCATION (ROUTE 405)	THERMOPLASTIC TRAFFIC STRIPE																PAVEMENT MARKER					THERMOPLASTIC PAVEMENT MARKING				
		100 mm BROKEN				200 mm SOLID					200 mm BROKEN		100 mm SOLID					RETRO-REFLECTIVE				NON-REFLECTIVE					
		Det 8	Det 9	Det 13 (Mod)	Det 14 (Mod)	Det 36	Det 36A	Det 36B	Det 38A	Det 38B	Det 37	Det A	0.3 m BUFFER**		Det 27B	Det 25A	Det 40										
		100 mm BROKEN (5.18 m - 2.14 m)	100 mm BROKEN (5.18 m - 2.14 m)	100 mm BROKEN (10.98 m-3.66 m)	100 mm BROKEN (10.98 m - 3.66 m)	200 mm SOLID	200 mm SOLID	200 mm SOLID	200 mm SOLID	200 mm SOLID	200 mm (BROKEN 3.66 m - 0.92 m)	200 mm (BROKEN 11.00 m - 3.50 m)	100 mm DOUBLE SOLID YELLOW	100 mm SOLID WHITE	100 mm SOLID	100 mm SOLID	100 mm SOLID	TYPE C	TYPE G	TYPE H	TYPE HR	TYPE A	DIAMOND	ARROW	CHEVRON OR DIAGONAL	WORDS	CROSSWALK
		m	m	m	m	m	m	m	m	m	m	m	m	m	m	m	m	EA	EA	EA	EA	EA	m^2	m^2	m^2	m^2	m^2
PD-1	395+80 TO 396+80			300								100			100	100			34	7		82					
PD-2	396+80 TO 400+60			1212	132			156				37	676	338	531	375		10	110	150	12	375					
PD-3	400+60 TO 404+10	139		1400			47				159		700	350	408	350		35	110	150		390					
PD-4	404+10 TO 407+40			948	132						570		660	330	330	330		140	70	140	12	300	2.04			5.76	
PD-5	407+40 TO 410+80			1020		160				35	645		680	340	547	550		145	100	175		285			8.25	5.11	
PD-6	410+80 TO 414+20		208	1134		300				221	220		292	146	400	410		49	200	100		315			11.00		
PD-7	414+20 TO 415+46.541		88	248	132	100									150	226		9	31	15		104			8.25		
PD-8	98+80 TO 101+00 (CENTINELA Ave)	319							62								26							2.78			17
PD-9	101+00 TO 104+00 (CENTINELA Ave)	262							62															2.78			
PD-10	99+05 TO 101+45 (SEPULVEDA Blvd)	1064							82															11.12		2.04	38
TOTAL		2080		6658		1225					1594	137	9345					1804				1851	114.13				

** OR 0.3 m BUFFER (Mod)

STATE OF CALIFORNIA - DEPARTMENT OF TRANSPORTATION
Caltrans TRAFFIC DESIGN

FUNCTIONAL SUPERVISOR: MOHAMMED CHOWDHURY
CALCULATED-DESIGNED BY: FRANCISCO MARTINEZ
CHECKED BY: SIDDA REDDY PEDABALLI
REVISED BY
DATE REVISED

PAVEMENT DELINEATION QUANTITIES

PDQ-1

LAST REVISION 00-00-00
DATE PLOTTED => 07-JUN-2010
TIME PLOTTED => 14:34

Dist	COUNTY	ROUTE	KILOMETER POST TOTAL PROJECT	SHEET No.	TOTAL SHEETS
07	LA	405	39.7/41.5	120	439

REGISTERED CIVIL ENGINEER 12/10/09 DATE

6-7-10
PLANS APPROVAL DATE

REGISTERED PROFESSIONAL ENGINEER SIDDA REDDY PEDABALLI No. C73622 Exp. 12/31/10 CIVIL STATE OF CALIFORNIA

THE STATE OF CALIFORNIA OR ITS OFFICERS OR AGENTS SHALL NOT BE RESPONSIBLE FOR THE ACCURACY OR COMPLETENESS OF ELECTRONIC COPIES OF THIS PLAN SHEET.

Caltrans Metric

NOTE:

1. FOR COMPLETE RIGHT OF WAY AND ACCURATE ACCESS DATA, SEE RIGHT OF WAY RECORD MAPS AT DISTRICT OFFICE.

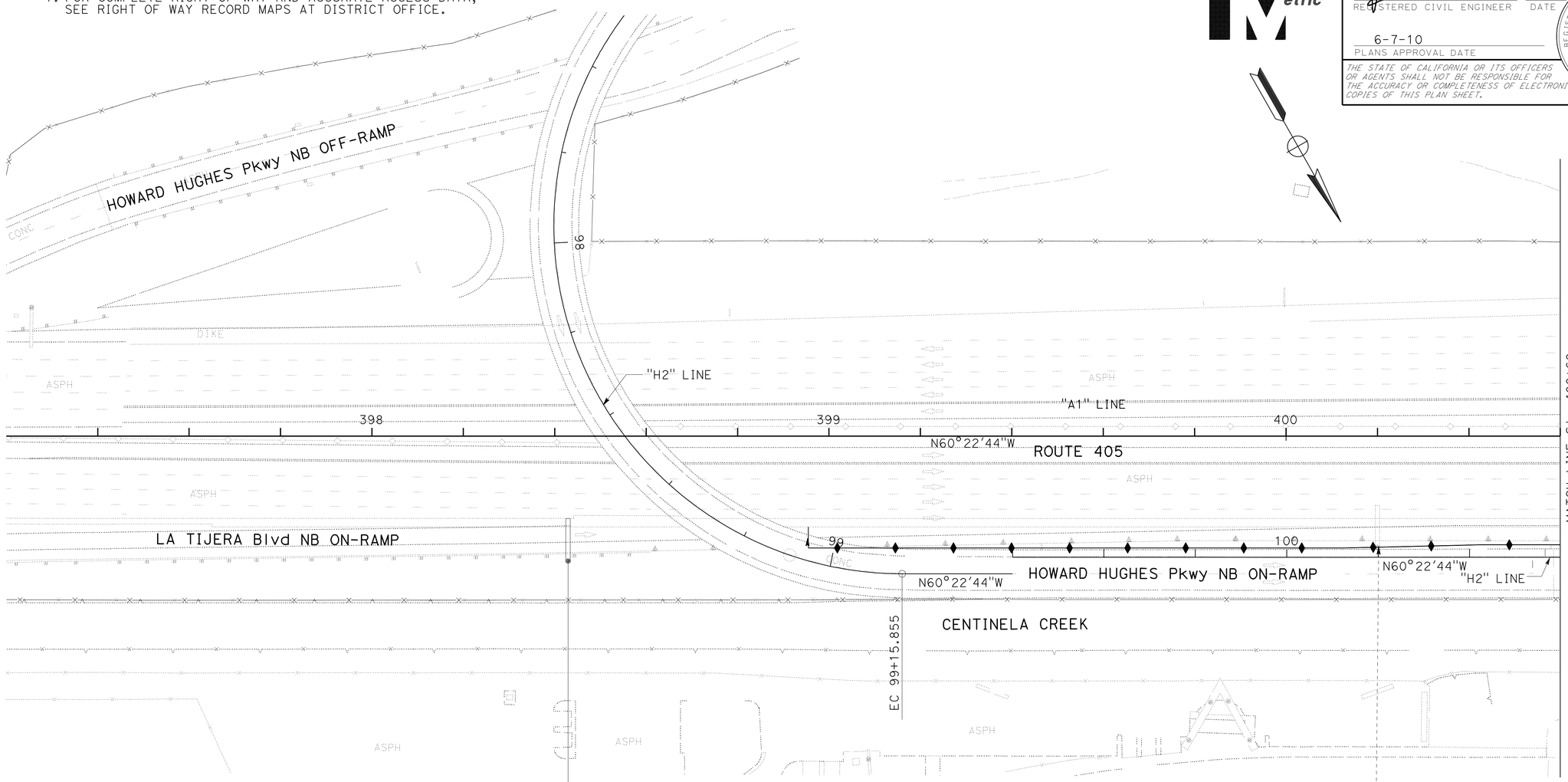

G23

Sepulveda Blvd Slauson Ave		1/2
90	West	3/4
Jefferson Blvd		1

SIGN No. 1A
FNBT "A" Sta 398+40
SEE (SD-1)

G23

Slauson Ave Sepulveda Blvd		1/2
90	West	3/4
Jefferson Blvd		1

(RS) SIGN No. 1B
FNBT "A1" @ Sta 400+20
REMOVE SIGN STRUCTURE
SEE (SD-1)

LEGEND:

(1) INSTALL ROADSIDE SIGN
(RL) RELOCATE SIGN STRUCTURE
(RS) REMOVE SIGN STRUCTURE
(RR) REMOVE ROADSIDE SIGN

ALL DIMENSIONS ARE IN METERS UNLESS OTHERWISE SHOWN

SIGN PLAN

SCALE 1:500

S-1

THIS PLAN ACCURATE FOR SIGN WORK ONLY.

STATE OF CALIFORNIA - DEPARTMENT OF TRANSPORTATION
Caltrans TRAFFIC DESIGN

FUNCTIONAL SUPERVISOR MOHAMMED CHOWDHURY
CALCULATED-DESIGNED BY FRANCISCO MARTINEZ
CHECKED BY SIDDA REDDY PEDABALLI
REVISED BY
DATE REVISED

LAST REVISION 00-00-00 DATE PLOTTED => 07-JUN-2010 TIME PLOTTED => 14:17

Dist	COUNTY	ROUTE	KILOMETER POST TOTAL PROJECT	SHEET No.	TOTAL SHEETS
07	LA	405	39.7/41.5	121	439

REGISTERED CIVIL ENGINEER 12/10/09 DATE

6-7-10
PLANS APPROVAL DATE

REGISTERED PROFESSIONAL ENGINEER SIDDA REDDY PEDABALLI No. C73622 Exp 12/31/10 CIVIL STATE OF CALIFORNIA

THE STATE OF CALIFORNIA OR ITS OFFICERS OR AGENTS SHALL NOT BE RESPONSIBLE FOR THE ACCURACY OR COMPLETENESS OF ELECTRONIC COPIES OF THIS PLAN SHEET.

Caltrans Metric

NOTE:

1. FOR COMPLETE RIGHT OF WAY AND ACCURATE ACCESS DATA, SEE RIGHT OF WAY RECORD MAPS AT DISTRICT OFFICE.

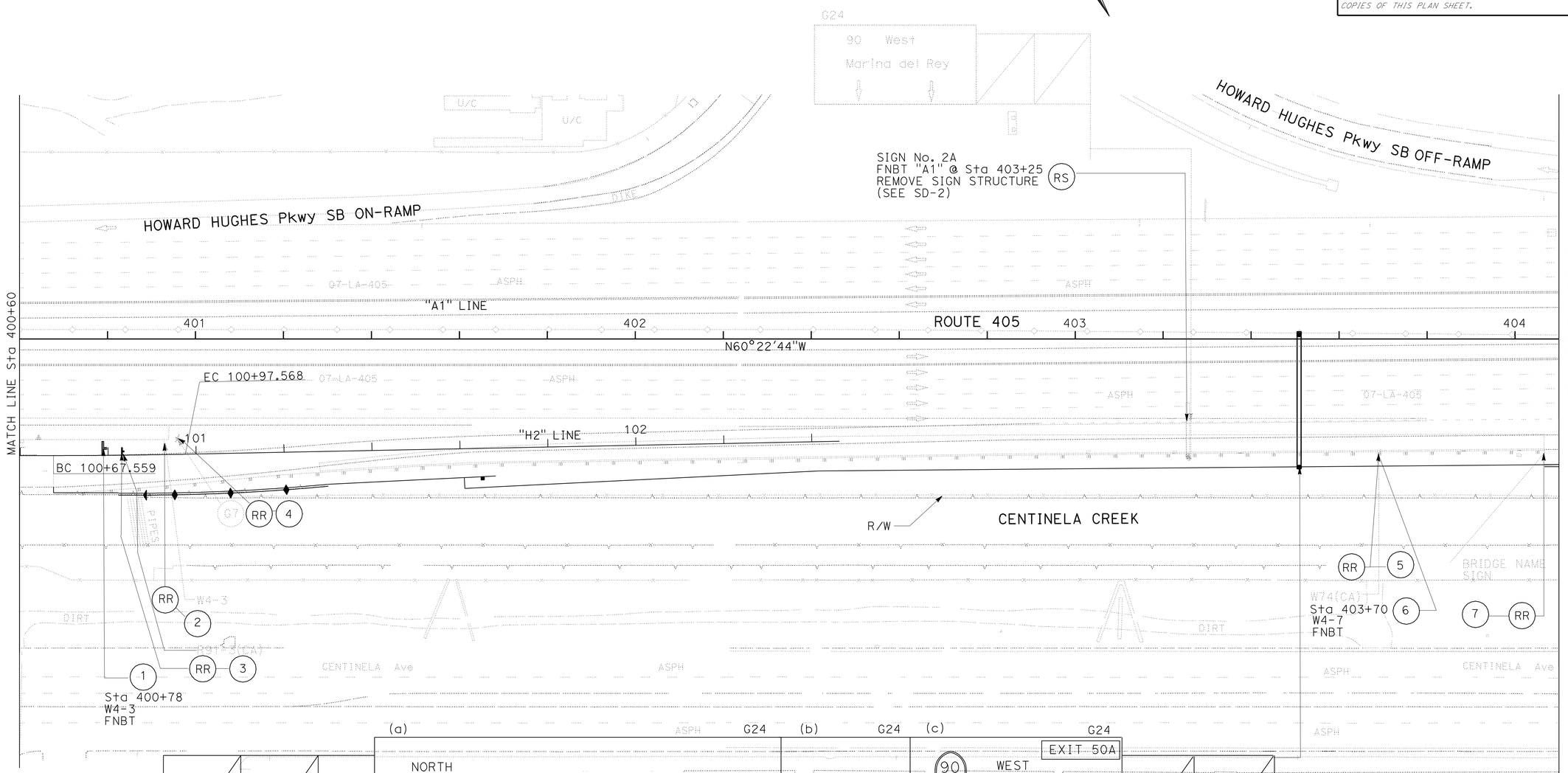

SIGN No. 2B
FNBT "A1" @ Sta 403+51

1. FURNISH AND INSTALL SIGN STRUCTURE (TRUSS), INCLUDING REMOVABLE SIGN PANEL FRAME.
2. INSTALL FORMED SIGN PANEL (a), (b) AND (C).
3. WALKWAY AND ILLUMINATION REQUIRED SEE (SD-2).

THIS PLAN ACCURATE FOR SIGN WORK ONLY.

ALL DIMENSIONS ARE IN METERS UNLESS OTHERWISE SHOWN

SIGN PLAN

SCALE 1:500

S-2

REVISED BY	DATE REVISED

FRANCISCO MARTINEZ
CALCULATED-DESIGNED BY
SIDDA REDDY PEDABALLI
CHECKED BY

FUNCTIONAL SUPERVISOR
MOHAMMED CHOWDHURY

STATE OF CALIFORNIA - DEPARTMENT OF TRANSPORTATION
Caltrans
TRAFFIC DESIGN

LAST REVISION 00-00-00
DATE PLOTTED => 07-JUN-2010
TIME PLOTTED => 14:34

Dist	COUNTY	ROUTE	KILOMETER POST TOTAL PROJECT	SHEET No.	TOTAL SHEETS
07	LA	405	39.7/41.5	122	439

REGISTERED CIVIL ENGINEER 12/10/09 DATE

6-7-10
PLANS APPROVAL DATE

REGISTERED PROFESSIONAL ENGINEER SIDDA REDDY PEDABALLI No. C73622 Exp. 12/31/10 CIVIL STATE OF CALIFORNIA

THE STATE OF CALIFORNIA OR ITS OFFICERS OR AGENTS SHALL NOT BE RESPONSIBLE FOR THE ACCURACY OR COMPLETENESS OF ELECTRONIC COPIES OF THIS PLAN SHEET.

Caltrans Metric

NOTE:

1. FOR COMPLETE RIGHT OF WAY AND ACCURATE ACCESS DATA, SEE RIGHT OF WAY RECORD MAPS AT DISTRICT OFFICE.

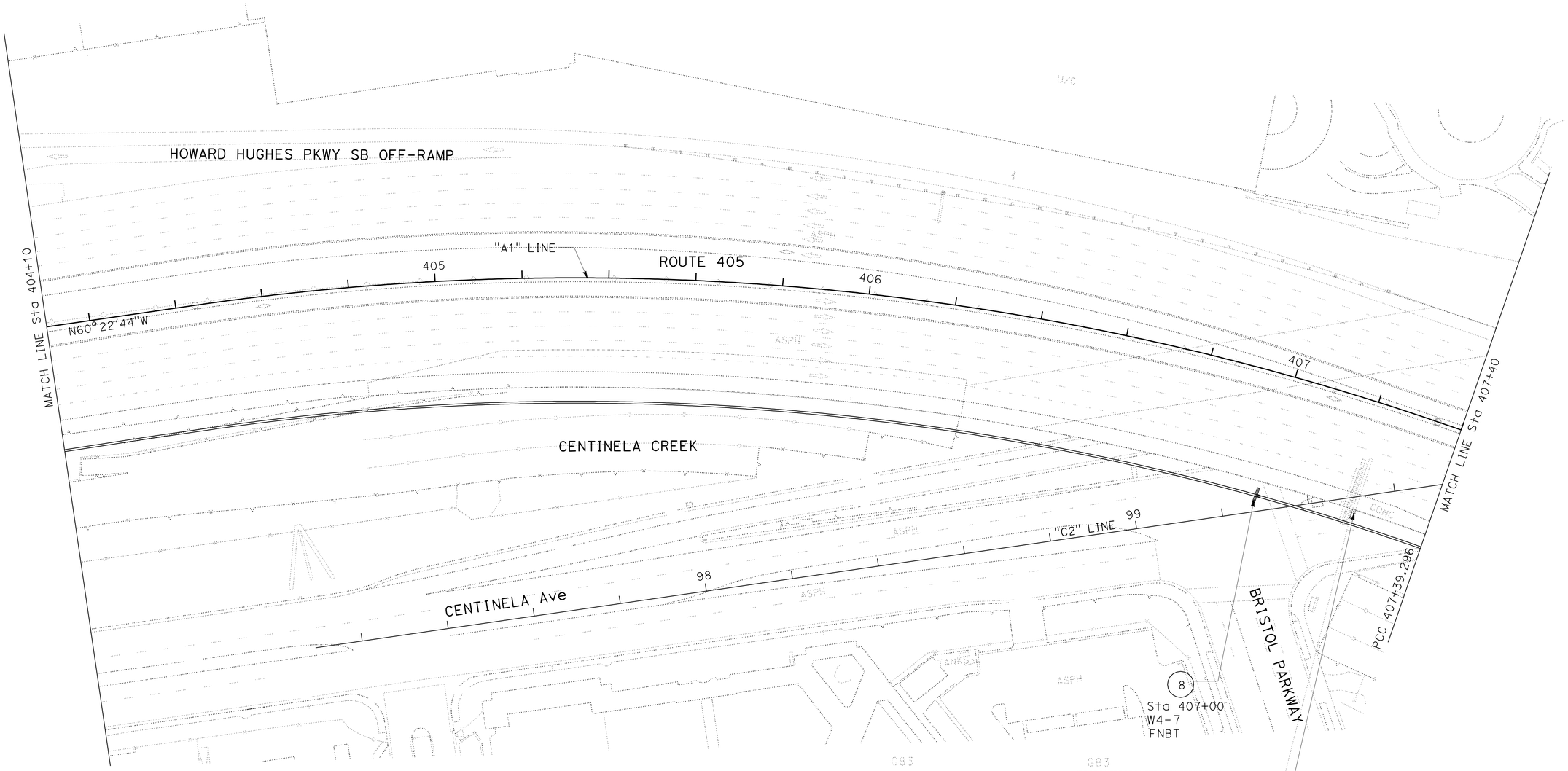

SIGN No. 3A
FNBT Sta 407+20
REMOVE SIGN STRUCTURE (RS)
SEE SD-1

ALL DIMENSIONS ARE IN METERS UNLESS OTHERWISE SHOWN

SIGN PLAN

SCALE 1:500

S-3

THIS PLAN ACCURATE FOR SIGN WORK ONLY.

STATE OF CALIFORNIA - DEPARTMENT OF TRANSPORTATION
Caltrans **TRAFFIC DESIGN**

FUNCTIONAL SUPERVISOR: MOHAMMED CHOWDHURY
CALCULATED-DESIGNED BY: FRANCISCO MARTINEZ
CHECKED BY: SIDDA REDDY PEDABALLI
REVISED BY / DATE REVISED

LAST REVISION 00-00-00
DATE PLOTTED => 07-JUN-2010
TIME PLOTTED => 14:34

Dist	COUNTY	ROUTE	KILOMETER POST TOTAL PROJECT	SHEET No.	TOTAL SHEETS
07	LA	405	39.7/41.5	123	439

REGISTERED CIVIL ENGINEER DATE 12/10/09

PLANS APPROVAL DATE 6-7-10

REGISTERED PROFESSIONAL ENGINEER SIDDA REDDY PEDABALLI No. C73622 Exp 12/31/10 CIVIL STATE OF CALIFORNIA

THE STATE OF CALIFORNIA OR ITS OFFICERS OR AGENTS SHALL NOT BE RESPONSIBLE FOR THE ACCURACY OR COMPLETENESS OF ELECTRONIC COPIES OF THIS PLAN SHEET.

Caltrans Metric

NOTE:

1. FOR COMPLETE RIGHT OF WAY AND ACCURATE ACCESS DATA, SEE RIGHT OF WAY RECORD MAPS AT DISTRICT OFFICE.

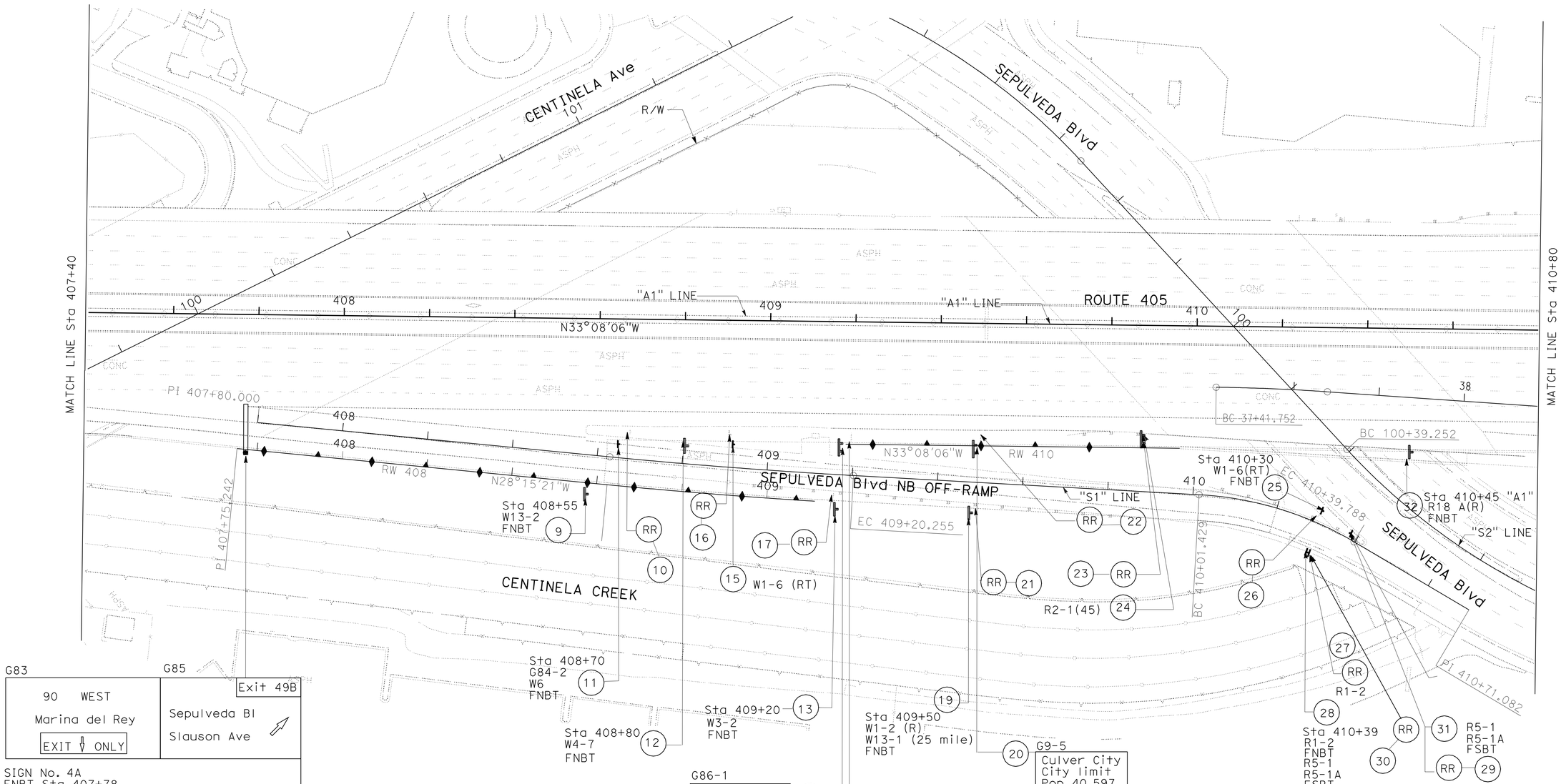

ALL DIMENSIONS ARE IN METERS UNLESS OTHERWISE SHOWN

SIGN PLAN

SCALE 1:500

S-4

THIS PLAN ACCURATE FOR SIGN WORK ONLY.

STATE OF CALIFORNIA - DEPARTMENT OF TRANSPORTATION

Caltrans

TRAFFIC DESIGN

FUNCTIONAL SUPERVISOR: MOHAMMED CHOWDHURY

CALCULATED-DESIGNED BY: FRANCISCO MARTINEZ

CHECKED BY: SIDDA REDDY PEDABALLI

REVISED BY | DATE REVISED

LAST REVISION 00-00-00

DATE PLOTTED => 07-JUN-2010

TIME PLOTTED => 14:40

Dist	COUNTY	ROUTE	KILOMETER POST TOTAL PROJECT	SHEET No.	TOTAL SHEETS
07	LA	405	39.7/41.5	124	439

REGISTERED CIVIL ENGINEER DATE 12/10/09

PLANS APPROVAL DATE 6-7-10

REGISTERED PROFESSIONAL ENGINEER SIDDA REDDY PEDABALLI No. C73622 Exp 12/31/10 CIVIL STATE OF CALIFORNIA

THE STATE OF CALIFORNIA OR ITS OFFICERS OR AGENTS SHALL NOT BE RESPONSIBLE FOR THE ACCURACY OR COMPLETENESS OF ELECTRONIC COPIES OF THIS PLAN SHEET.

Caltrans Metric

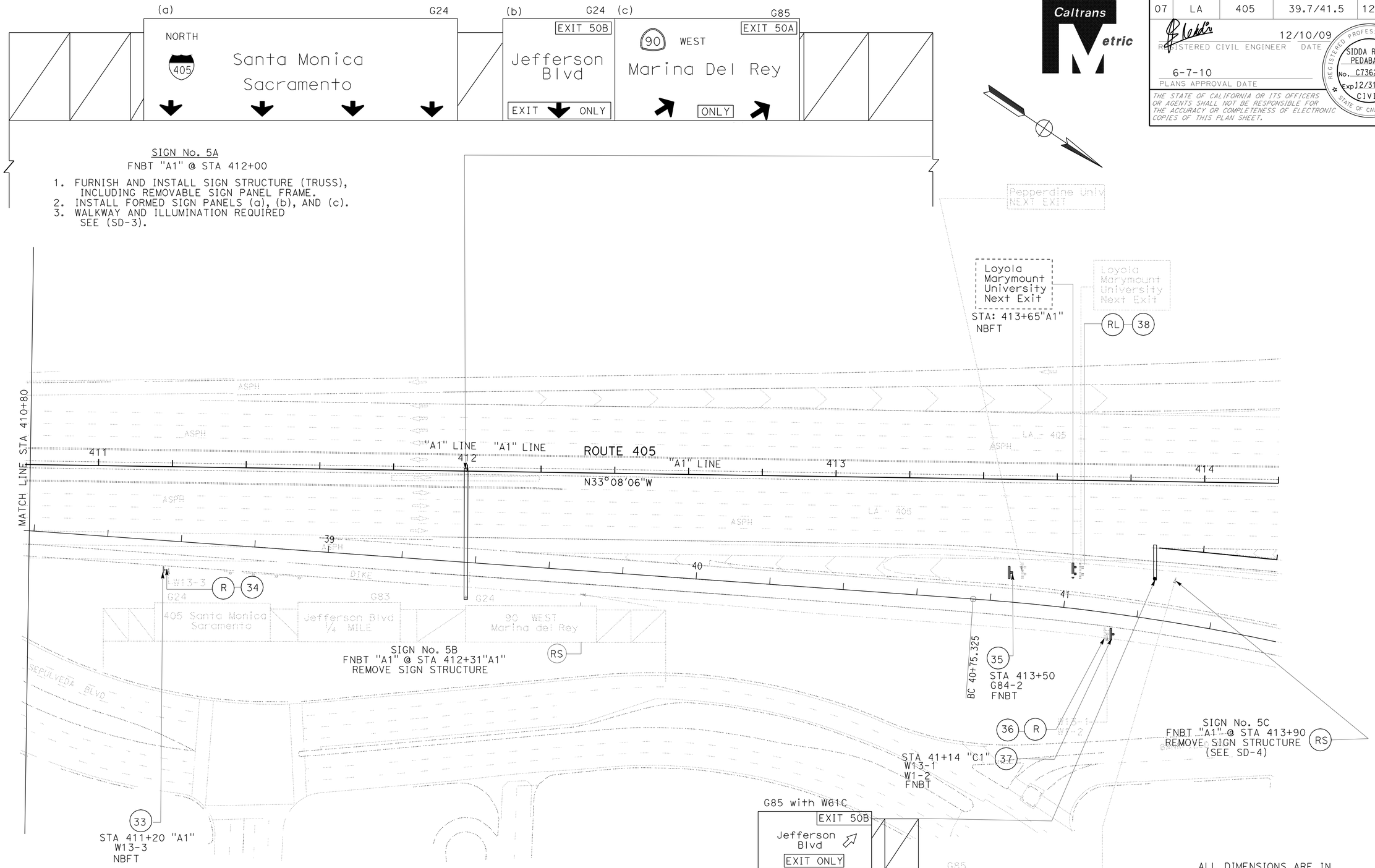

SIGN No. 5A
FNBT "A1" @ STA 412+00

1. FURNISH AND INSTALL SIGN STRUCTURE (TRUSS), INCLUDING REMOVABLE SIGN PANEL FRAME.
2. INSTALL FORMED SIGN PANELS (a), (b), AND (c).
3. WALKWAY AND ILLUMINATION REQUIRED SEE (SD-3).

ALL DIMENSIONS ARE IN METERS UNLESS OTHERWISE SHOWN

SIGN PLAN

SCALE 1:500

NOTE:

FOR COMPLETE RIGHT OF WAY AND ACCURATE ACCESS DATA, SEE RIGHT OF WAY RECORD MAPS AT DISTRICT OFFICE.

THIS PLAN ACCURATE FOR SIGN WORK ONLY.

S-5

REVISED BY	DATE REVISED

FRANCISCO MARTINEZ
SIDDA REDDY PEDABALLI
CALCULATED-DESIGNED BY
CHECKED BY
FUNCTIONAL SUPERVISOR
MOHAMMED CHOWDHURY

STATE OF CALIFORNIA - DEPARTMENT OF TRANSPORTATION
Caltrans
TRAFFIC DESIGN

LAST REVISION 00-00-00
DATE PLOTTED => 07-JUN-2010
TIME PLOTTED => 15:01

Dist	COUNTY	ROUTE	KILOMETER POST TOTAL PROJECT	SHEET No.	TOTAL SHEETS
07	LA	405	39.7/41.5	125	439

REGISTERED CIVIL ENGINEER 12/10/09 DATE

6-7-10
PLANS APPROVAL DATE

REGISTERED PROFESSIONAL ENGINEER SIDDA REDDY PEDABALLI No. C73622 Exp 12/31/10 CIVIL STATE OF CALIFORNIA

THE STATE OF CALIFORNIA OR ITS OFFICERS OR AGENTS SHALL NOT BE RESPONSIBLE FOR THE ACCURACY OR COMPLETENESS OF ELECTRONIC COPIES OF THIS PLAN SHEET.

Caltrans Metric

NOTES:

1. INCORPORATED WITH RETAINING WALL STRUCTURE.
2. A MINIMUM CLEARANCE OF 5.70 m SHALL BE MAINTAINED AT ALL LOCATIONS BETWEEN THE ROAD SURFACE AND BOTTOM OF THE SIGN PANEL.

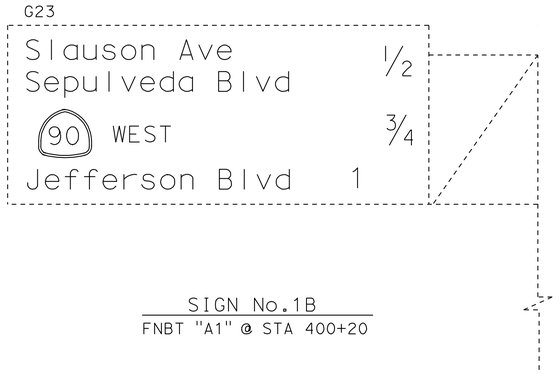

SIGN No.1B
FNBT "A1" @ STA 400+20

1. REMOVE SIGN STRUCTURE (TRUSS) INCLUDING REMOVABLE SIGN PANEL FRAME.

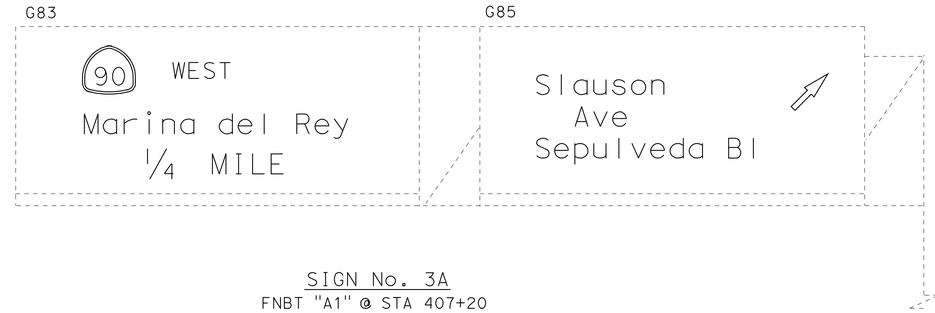

SIGN No. 3A
FNBT "A1" @ STA 407+20

1. REMOVE SIGN STRUCTURE (TRUSS), INCLUDING REMOVABLE SIGN PANEL FRAME.

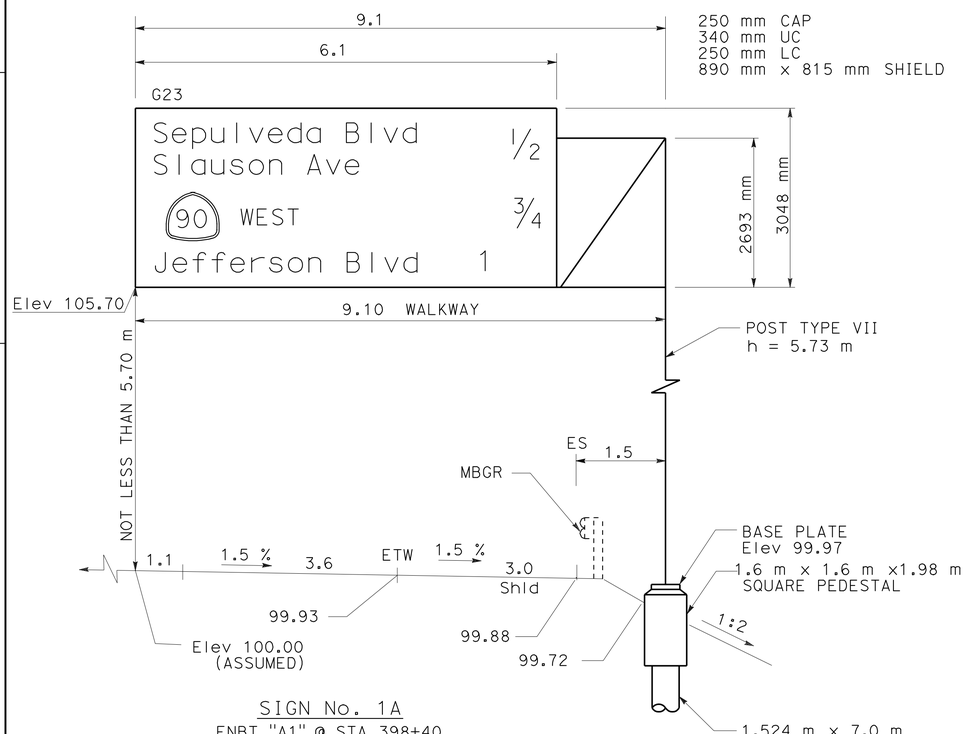

SIGN No. 1A
FNBT "A1" @ STA 398+40

1. FURNISH AND INSTALL SIGN STRUCTURE (TRUSS), INCLUDING REMOVABLE SIGN PANEL FRAME.
2. INSTALL FORMED SIGN PANEL.
3. CONTINOUS WALKWAY AND ILLUMINATION REQUIRED.

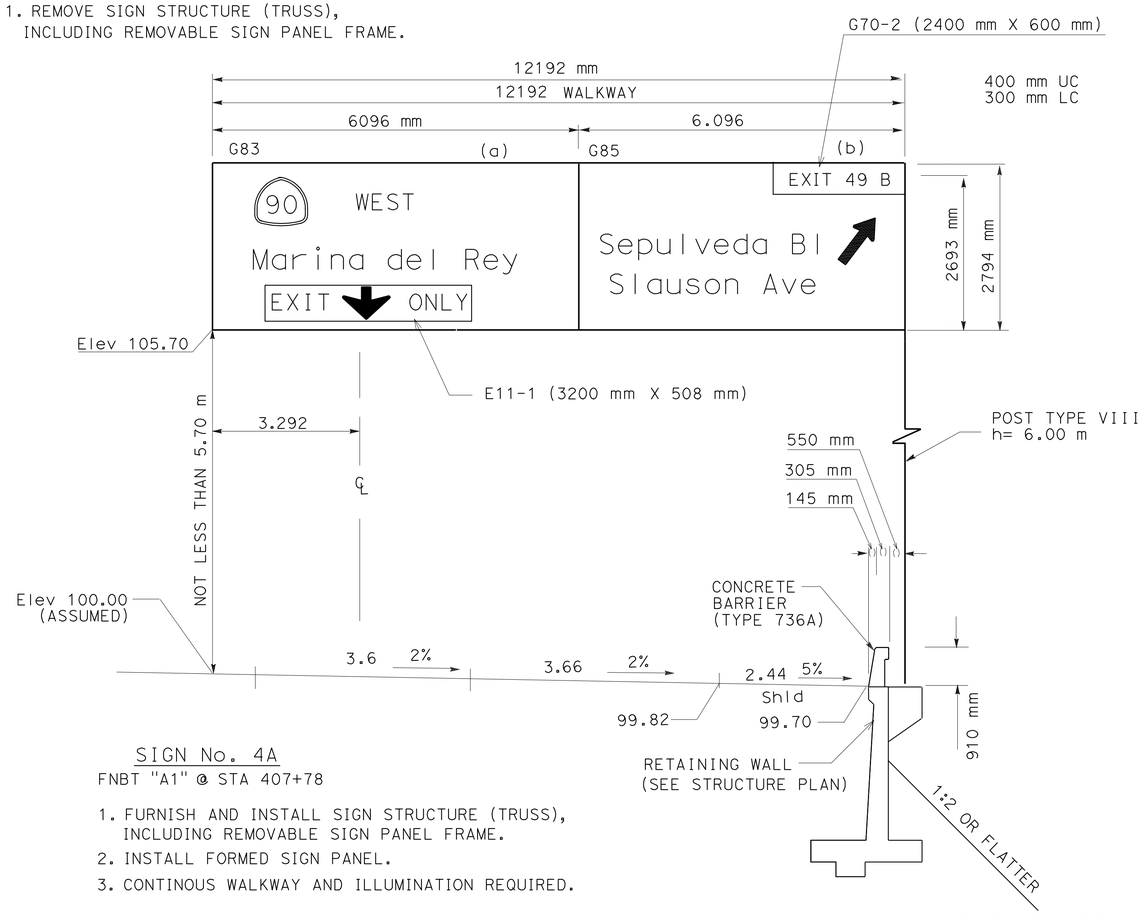

SIGN No. 4A
FNBT "A1" @ STA 407+78

1. FURNISH AND INSTALL SIGN STRUCTURE (TRUSS), INCLUDING REMOVABLE SIGN PANEL FRAME.
2. INSTALL FORMED SIGN PANEL.
3. CONTINOUS WALKWAY AND ILLUMINATION REQUIRED.

ALL DIMENSIONS ARE IN METERS UNLESS OTHERWISE SHOWN

SIGN DETAILS

NO SCALE

SD-1

REVISED BY	DATE REVISED

FRANCISCO MARTINEZ
SIDDA REDDY PEDABALLI
CALCULATED-DESIGNED BY
CHECKED BY
FUNCTIONAL SUPERVISOR
MOHAMMED CHOWDHURY

STATE OF CALIFORNIA - DEPARTMENT OF TRANSPORTATION
Caltrans
TRAFFIC DESIGN

LAST REVISION 00-00-00
DATE PLOTTED => 07-JUN-2010
TIME PLOTTED => 15:01

Dist	COUNTY	ROUTE	KILOMETER POST TOTAL PROJECT	SHEET No.	TOTAL SHEETS
07	LA	405	39.7/41.5	126	439

REGISTERED CIVIL ENGINEER 12/10/09 DATE

6-7-10
PLANS APPROVAL DATE

REGISTERED PROFESSIONAL ENGINEER SIDDA REDDY PEDABALLI No. C73622 Exp 12/31/10 CIVIL STATE OF CALIFORNIA

THE STATE OF CALIFORNIA OR ITS OFFICERS OR AGENTS SHALL NOT BE RESPONSIBLE FOR THE ACCURACY OR COMPLETENESS OF ELECTRONIC COPIES OF THIS PLAN SHEET.

Caltrans Metric

SIGN No. 2A
FNBT "A1" @ STA 403+25
1. REMOVE SIGN STRUCTURE (TRUSS).

300 mm CAP
400 mm UC
300 mm LC
915 mm X 915 mm STATE SHIELD
1145 mm X 965 mm INTERSTATE SHIELD

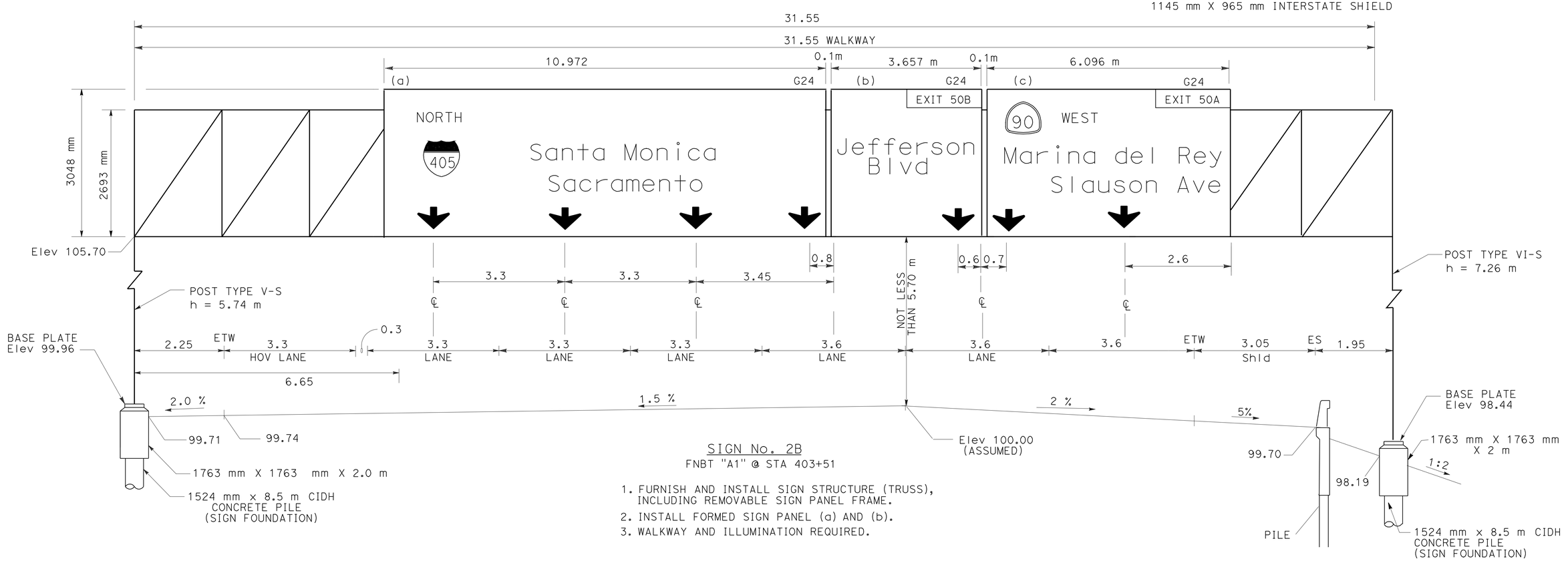

SIGN No. 2B
FNBT "A1" @ STA 403+51

1. FURNISH AND INSTALL SIGN STRUCTURE (TRUSS), INCLUDING REMOVABLE SIGN PANEL FRAME.
2. INSTALL FORMED SIGN PANEL (a) AND (b).
3. WALKWAY AND ILLUMINATION REQUIRED.

ALL DIMENSIONS ARE IN METERS UNLESS OTHERWISE SHOWN

SIGN DETAILS

NO SCALE

SD-2

REVISED BY	DATE REVISED

FRANCISCO MARTINEZ — SIDDA REDDY PEDABALLI — CALCULATED-DESIGNED BY — CHECKED BY

FUNCTIONAL SUPERVISOR: MOHAMMED CHOWDHURY

STATE OF CALIFORNIA - DEPARTMENT OF TRANSPORTATION
Caltrans **TRAFFIC DESIGN**

LAST REVISION 00-00-00 | DATE PLOTTED => 07-JUN-2010 | TIME PLOTTED => 15:01

Dist	COUNTY	ROUTE	KILOMETER POST TOTAL PROJECT	SHEET No.	TOTAL SHEETS
07	LA	405	39.7/41.5	127	439

REGISTERED CIVIL ENGINEER 12/10/09 DATE

6-7-10
PLANS APPROVAL DATE

REGISTERED PROFESSIONAL ENGINEER SIDDA REDDY PEDABALLI No. C73622 Exp 12/31/10 CIVIL STATE OF CALIFORNIA

THE STATE OF CALIFORNIA OR ITS OFFICERS OR AGENTS SHALL NOT BE RESPONSIBLE FOR THE ACCURACY OR COMPLETENESS OF ELECTRONIC COPIES OF THIS PLAN SHEET.

Caltrans Metric

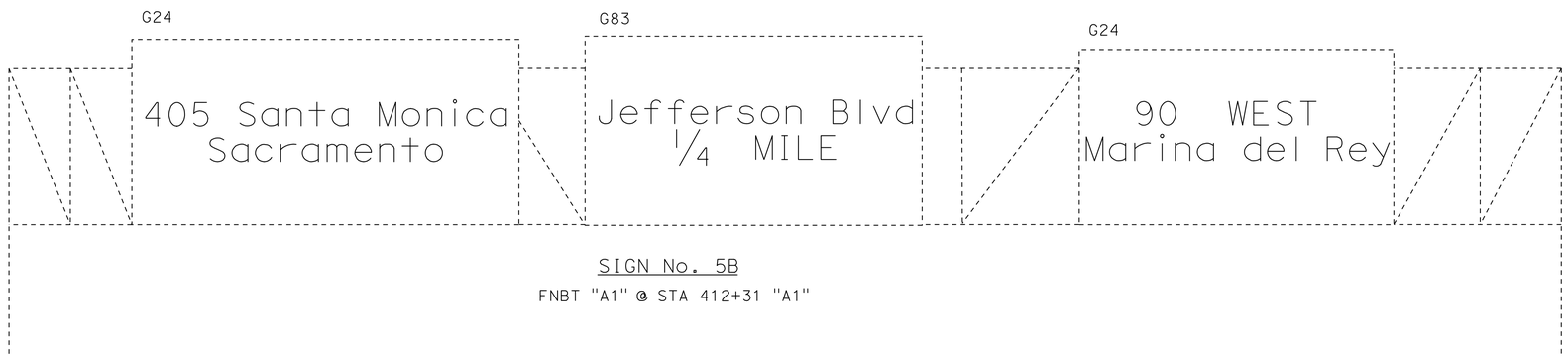

SIGN No. 5B

FNBT "A1" @ STA 412+31 "A1"

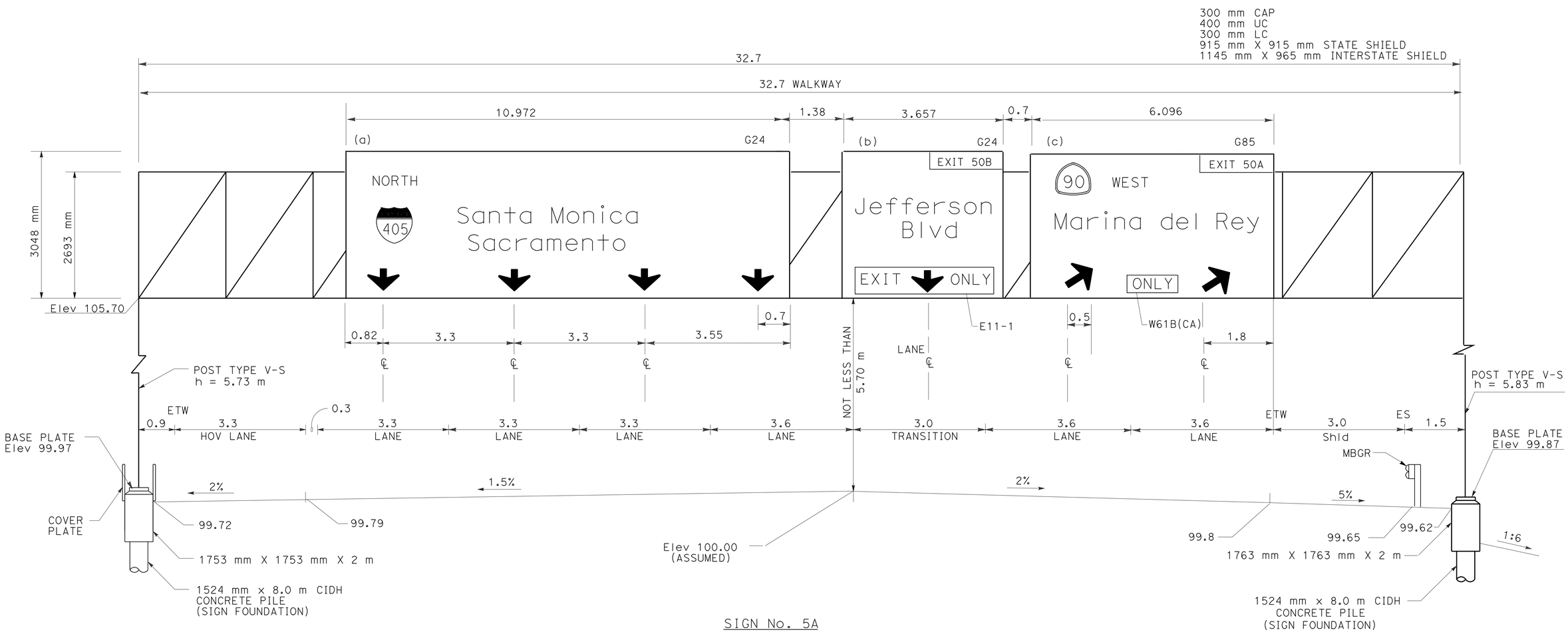

SIGN No. 5A

FNBT "A1" @ STA 412+00

1. FURNISH AND INSTALL SIGN STRUCTURE (TRUSS), INCLUDING REMOVABLE SIGN PANEL FRAME.
2. INSTALL FORMED SIGN PANELS (a), (b), AND (c).
3. WALKWAY AND ILLUMINATION REQUIRED.

ALL DIMENSIONS ARE IN METERS UNLESS OTHERWISE SHOWN

SIGN DETAILS

NO SCALE

SD-3

REVISED BY	DATE REVISED

FRANCISCO MARTINEZ
SIDDA REDDY PEDABALLI
CALCULATED-DESIGNED BY
CHECKED BY
FUNCTIONAL SUPERVISOR
MOHAMMED CHOWDHURY

STATE OF CALIFORNIA - DEPARTMENT OF TRANSPORTATION
Caltrans
TRAFFIC DESIGN

LAST REVISION 00-00-00
DATE PLOTTED => 07-JUN-2010
TIME PLOTTED => 15:01

Dist	COUNTY	ROUTE	KILOMETER POST TOTAL PROJECT	SHEET No.	TOTAL SHEETS
07	LA	405	39.7/41.5	128	439

REGISTERED CIVIL ENGINEER 12/10/09 DATE

6-7-10
PLANS APPROVAL DATE

REGISTERED PROFESSIONAL ENGINEER SIDDA REDDY PEDABALLI No. C73622 Exp 12/31/10 CIVIL STATE OF CALIFORNIA

THE STATE OF CALIFORNIA OR ITS OFFICERS OR AGENTS SHALL NOT BE RESPONSIBLE FOR THE ACCURACY OR COMPLETENESS OF ELECTRONIC COPIES OF THIS PLAN SHEET.

Caltrans Metric

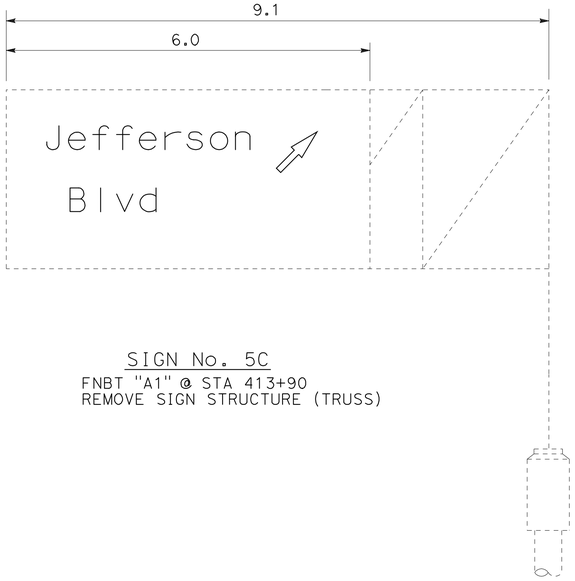

SIGN No. 5C
FNBT "A1" @ STA 413+90
REMOVE SIGN STRUCTURE (TRUSS)

SIGN No. 0401
FNBT "A1" @ STA 409+20
1. FURNISH AND INSTALL TWO POST ROADSIDE SIGN.

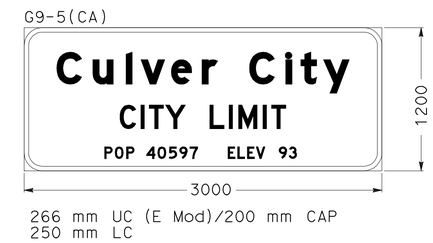

SIGN No. 0402
FNBT "A1" @ STA 409+55
FURNISH AND INSTALL TWO POST ROADSIDE SIGN

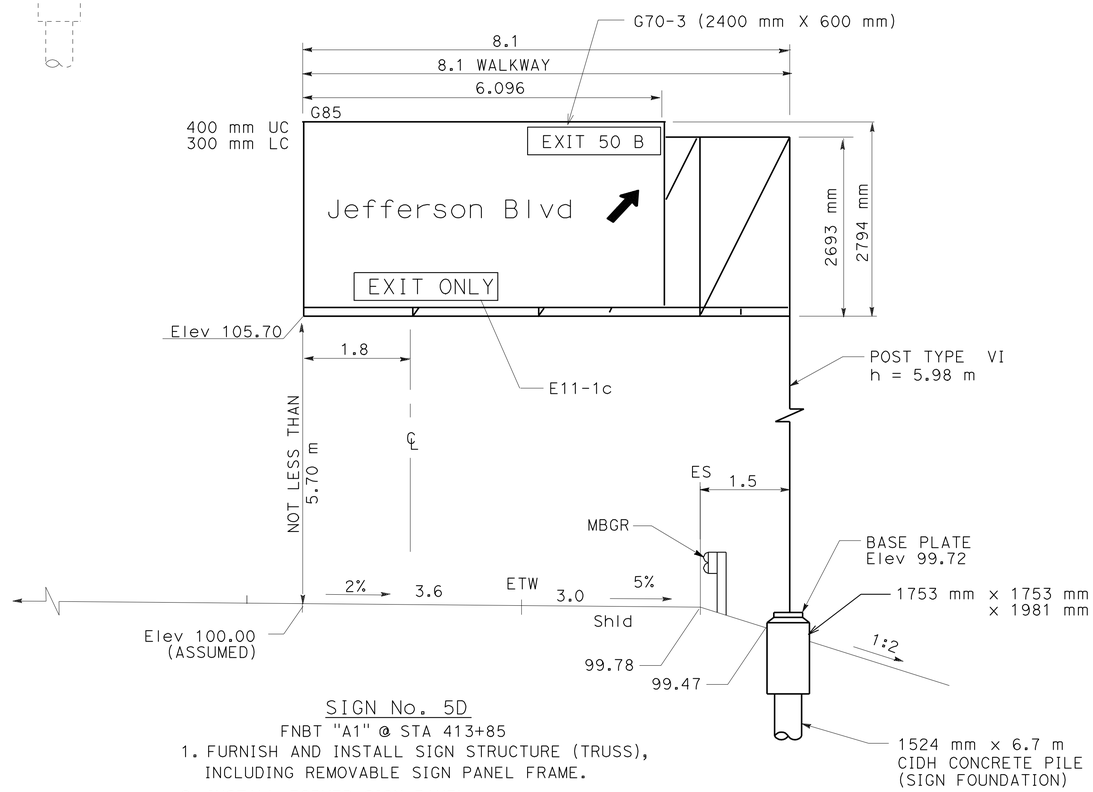

SIGN No. 5D
FNBT "A1" @ STA 413+85
1. FURNISH AND INSTALL SIGN STRUCTURE (TRUSS), INCLUDING REMOVABLE SIGN PANEL FRAME.
2. INSTALL FORMED SIGN PANEL.
3. CONTINOUS WALKWAY AND ILLUMINATION REQUIRED.

ALL DIMENTIONS ARE IN METERS UNLESS OTHERWISE SHOWN

SIGN DETAILS

NO SCALE

SD-4

STATE OF CALIFORNIA - DEPARTMENT OF TRANSPORTATION
Caltrans **TRAFFIC DESIGN**

FUNCTIONAL SUPERVISOR: MOHAMMED CHOWDHURY
CALCULATED-DESIGNED BY: FRANCISCO MARTINEZ
CHECKED BY: SIDDA REDDY PEDABALLI
REVISED BY / DATE REVISED

LAST REVISION 00-00-00 | DATE PLOTTED => 07-JUN-2010 | TIME PLOTTED => 15:01

Dist	COUNTY	ROUTE	KILOMETER POST TOTAL PROJECT	SHEET No.	TOTAL SHEETS
07	LA	405	39.7/41.5	129	439

REGISTERED CIVIL ENGINEER 12/10/09 DATE

6-7-10
PLANS APPROVAL DATE

REGISTERED PROFESSIONAL ENGINEER SIDDA REDDY PEDABALLI No. C73622 Exp 12/31/10 CIVIL STATE OF CALIFORNIA

THE STATE OF CALIFORNIA OR ITS OFFICERS OR AGENTS SHALL NOT BE RESPONSIBLE FOR THE ACCURACY OR COMPLETENESS OF ELECTRONIC COPIES OF THIS PLAN SHEET.

Caltrans Metric

NOTE:
THE DIRECTION OF THE ARROW SHALL BE SAME THAT OF THE EXIT DIRECTION IN THE FIELD.

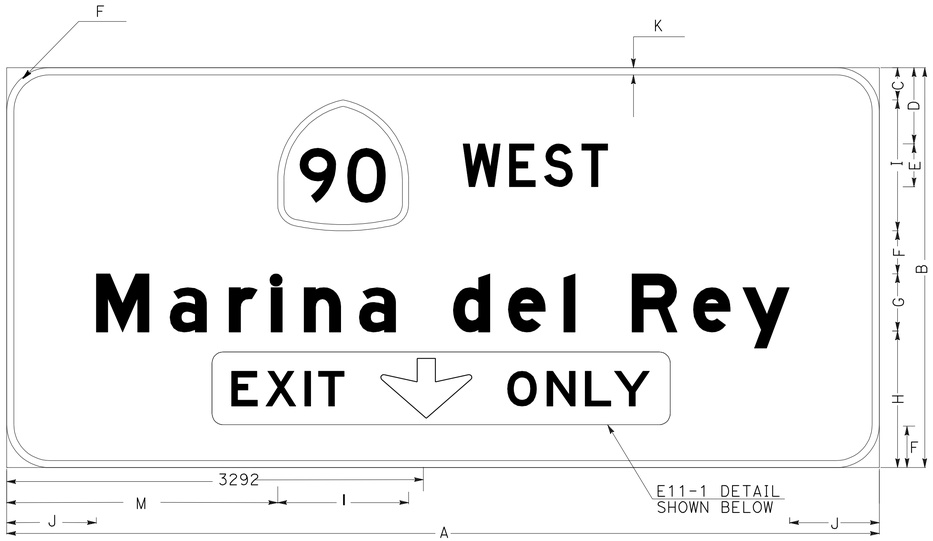

G83-2(CA)

A	B	C	D	E	F	G	H	I	J	K	L	M
6096	2794	224	532	300D	300	400E(M)	955	915	626	50	146	1893

NOTE:
250 mm NUMERICAL FOR SHIELD.

SIGN No. 4A

G85-11(CA)

A	B	C	D	E	F	G	H	I	J	K
6096	2794	1344	1538	350	300	400E(M)	712	544	482	50

SIGN No. 4A

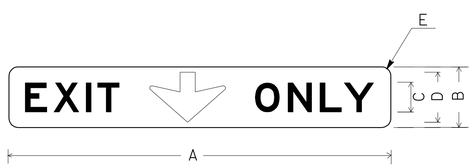

E11-1

A	B	C	D	E
3200	508	250E	420	75

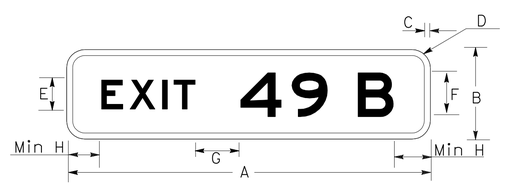

G70-3(CA)

A	B	C	D	E	F	G	H
2400	600	50	150	200E	300E	200	160

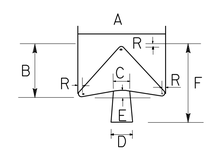

	A	B	C	D	E	F	R
SINGLE LINE	565	432	137	157	44	635	25
DOUBLE LINE	565	432	137	157	44	889	25

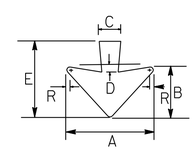

	A	B	C	D	E	F
ARROW 1	610	305	127	51	419	19
ARROW 2	813	406	165	76	559	25

VERTICAL DOWN ARROW

ALL DIMENSIONS ARE IN MILLIMETERS UNLESS OTHERWISE SHOWN

SIGN DETAILS

NO SCALE

SD-5

STATE OF CALIFORNIA - DEPARTMENT OF TRANSPORTATION
Caltrans
TRAFFIC DESIGN

FUNCTIONAL SUPERVISOR: MOHAMMED CHOWDHURY
CALCULATED-DESIGNED BY: FRANCISCO MARTINEZ
CHECKED BY: SIDDA REDDY PEDABALLI
REVISED BY
DATE REVISED

LAST REVISION 00-00-00
DATE PLOTTED => 07-JUN-2010
TIME PLOTTED => 15:01

Dist	COUNTY	ROUTE	KILOMETER POST TOTAL PROJECT	SHEET No.	TOTAL SHEETS
07	LA	405	39.7/41.5	130	439

REGISTERED CIVIL ENGINEER 12/10/09 DATE

6-7-10
PLANS APPROVAL DATE

REGISTERED PROFESSIONAL ENGINEER SIDDA REDDY PEDABALLI No. C73622 Exp 12/31/10 CIVIL STATE OF CALIFORNIA

THE STATE OF CALIFORNIA OR ITS OFFICERS OR AGENTS SHALL NOT BE RESPONSIBLE FOR THE ACCURACY OR COMPLETENESS OF ELECTRONIC COPIES OF THIS PLAN SHEET.

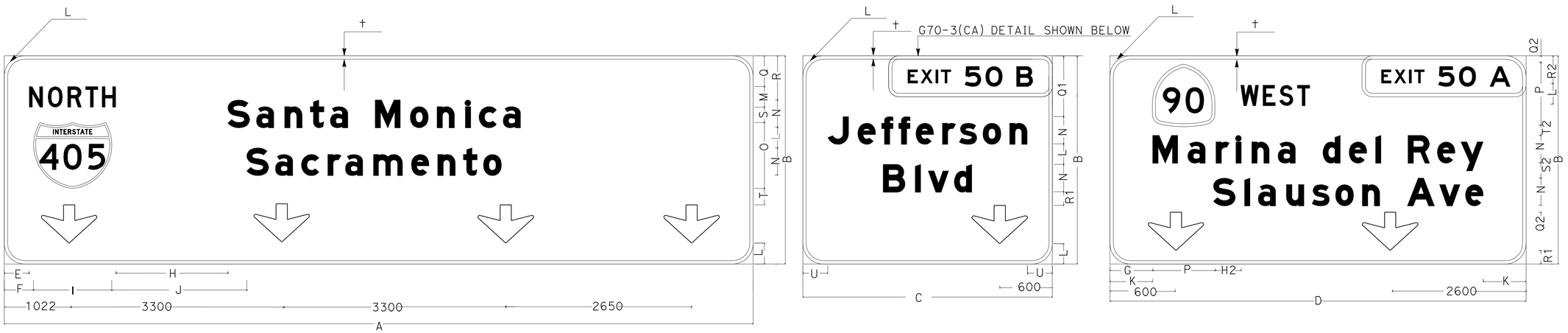

G24-6(CA) G24-6(CA) G24-6(CA)

SIGN No. 2B

A	B	C	D	E	F	G	H	I	J	K	L	M	N	O	P	Q	R	S	T	U	†
10972	3048	3657	6096	400	465	626	1601	1145	1944	626	300	300D	400E(M)	965	915	459	550	225	240	366	50

Q1	R1
890	200

H2	Q2	R2	S2	T2
380	100	407	225	150

ALL DIMENSIONS ARE IN MILLIMETERS UNLESS OTHERWISE SHOWN

SIGN DETAILS

NO SCALE

SD-6

STATE OF CALIFORNIA - DEPARTMENT OF TRANSPORTATION
Caltrans TRAFFIC DESIGN

FUNCTIONAL SUPERVISOR MOHAMMED CHOWDHURY

CALCULATED-DESIGNED BY FRANCISCO MARTINEZ
CHECKED BY SIDDA REDDY PEDABALLI

REVISED BY DATE REVISED

LAST REVISION 00-00-00 DATE PLOTTED => 07-JUN-2010 TIME PLOTTED => 1501

Dist	COUNTY	ROUTE	KILOMETER POST TOTAL PROJECT	SHEET No.	TOTAL SHEETS
07	LA	405	39.7/41.5	131	439

REGISTERED CIVIL ENGINEER 12/10/09 DATE

6-7-10
PLANS APPROVAL DATE

REGISTERED PROFESSIONAL ENGINEER SIDDA REDDY PEDABALLI No. C73622 Exp 12/31/10 CIVIL STATE OF CALIFORNIA

THE STATE OF CALIFORNIA OR ITS OFFICERS OR AGENTS SHALL NOT BE RESPONSIBLE FOR THE ACCURACY OR COMPLETENESS OF ELECTRONIC COPIES OF THIS PLAN SHEET.

Caltrans Metric

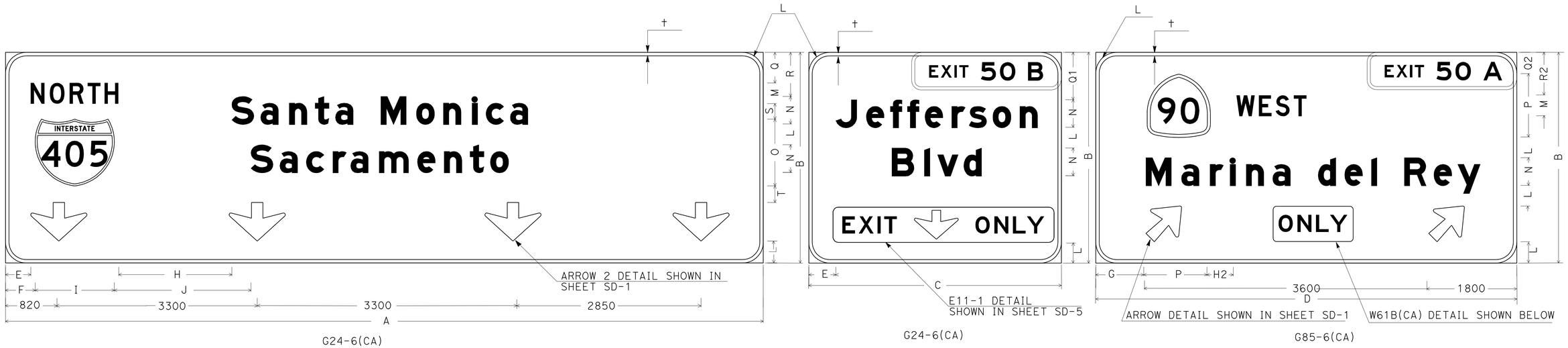

SIGN No. 5A

A	B	C	D	E	F	G	H	I	J	K	L	M	N	O	P	Q	R	S	T	†
10972	3048	3657	6096	400	465	626	1601	1145	1944	726	300	300D	400E(M)	965	915	459	550	225	240	50

Q1
684

Q2	R2
316	616

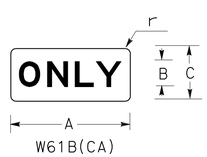

A	B	C	r
1118	508	250E	75

ALL DIMENSIONS ARE IN MILLIMETERS UNLESS OTHERWISE SHOWN

SIGN DETAILS

NO SCALE

SD-7

STATE OF CALIFORNIA - DEPARTMENT OF TRANSPORTATION
Caltrans
TRAFFIC DESIGN

FUNCTIONAL SUPERVISOR: MOHAMMED CHOWDHURY
CALCULATED-DESIGNED BY: FRANCISCO MARTINEZ
CHECKED BY: SIDDA REDDY PEDABALLI
REVISED BY
DATE REVISED

LAST REVISION 00-00-00
DATE PLOTTED => 07-JUN-2010
TIME PLOTTED => 15:01

Dist	COUNTY	ROUTE	KILOMETER POST TOTAL PROJECT	SHEET No.	TOTAL SHEETS
07	LA	405	39.7/41.5	132	439

REGISTERED CIVIL ENGINEER 12/10/09 DATE

6-7-10
PLANS APPROVAL DATE

REGISTERED PROFESSIONAL ENGINEER SIDDA REDDY PEDABALLI No. C73622 Exp 12/31/10 CIVIL STATE OF CALIFORNIA

THE STATE OF CALIFORNIA OR ITS OFFICERS OR AGENTS SHALL NOT BE RESPONSIBLE FOR THE ACCURACY OR COMPLETENESS OF ELECTRONIC COPIES OF THIS PLAN SHEET.

Caltrans Metric

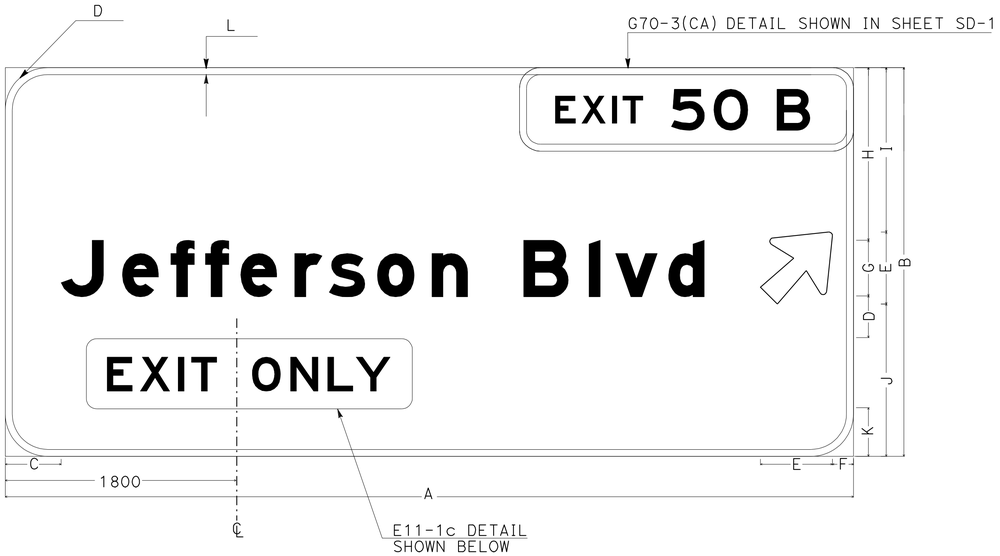

G85-11(CA)

SIGN No. 5D

A	B	C	D	E	F	G	H	I	J	K	L
6096	2794	400	300	516	152	400E(M)	1240	1182	1096	350	50

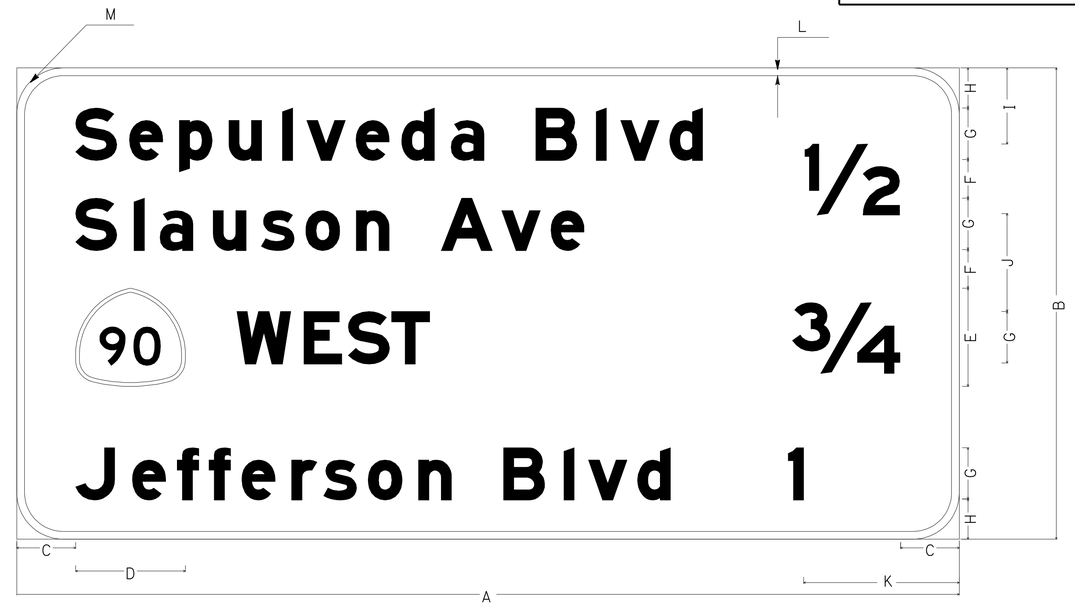

G23-5(CA)

SIGN No. 1A

A	B	C	D	E	F	G	H	I	J	K	L	M
6096	3048	380	710	635	250	333E(M)	259	492	634	907	50	300

NOTE:
250 mm NUMERICAL FOR SHIELD.

E11-1c

A	B	C	D
2134	508	250E	75

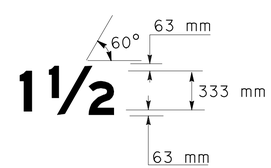

NOTE:
WHOLE NUMBERS ARE 333 mm UPPER CASE.
FRACTION NUMBERS ARE 250 mm LOWER CASE.

ALL DIMENSIONS ARE IN MILLIMETERS UNLESS OTHERWISE SHOWN

SIGN DETAILS

NO SCALE

SD-8

STATE OF CALIFORNIA - DEPARTMENT OF TRANSPORTATION
Caltrans TRAFFIC DESIGN

FUNCTIONAL SUPERVISOR MOHAMMED CHOWDHURY
CALCULATED-DESIGNED BY FRANCISCO MARTINEZ
CHECKED BY SIDDA REDDY PEDABALLI
REVISED BY
DATE REVISED

LAST REVISION 00-00-00 DATE PLOTTED => 07-JUN-2010 TIME PLOTTED => 15:01

Dist	COUNTY	ROUTE	KILOMETER POST TOTAL PROJECT	SHEET No.	TOTAL SHEETS
07	LA	405	39.7/41.5	133	439

REGISTERED CIVIL ENGINEER 12/10/09 DATE

6-7-10
PLANS APPROVAL DATE

REGISTERED PROFESSIONAL ENGINEER SIDDA REDDY PEDABALLI No. C73622 Exp.12/31/10 CIVIL STATE OF CALIFORNIA

THE STATE OF CALIFORNIA OR ITS OFFICERS OR AGENTS SHALL NOT BE RESPONSIBLE FOR THE ACCURACY OR COMPLETENESS OF ELECTRONIC COPIES OF THIS PLAN SHEET.

Caltrans Metric

NOTE: FOR PIPE SIZE, SEE "SIGN ANCHORAGE CHART".

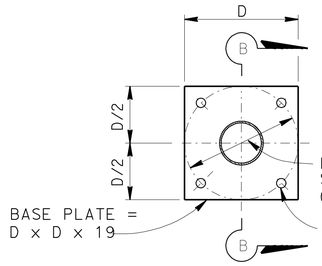

VIEW A-A

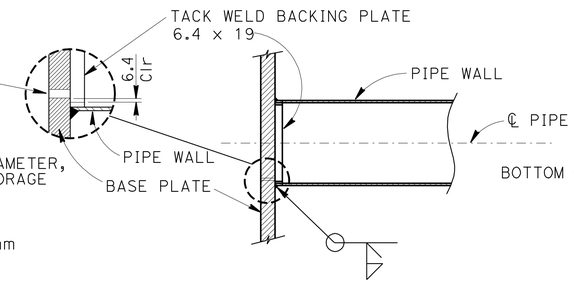

SECTION B-B

BASE PLATE DETAILS

NO SCALE

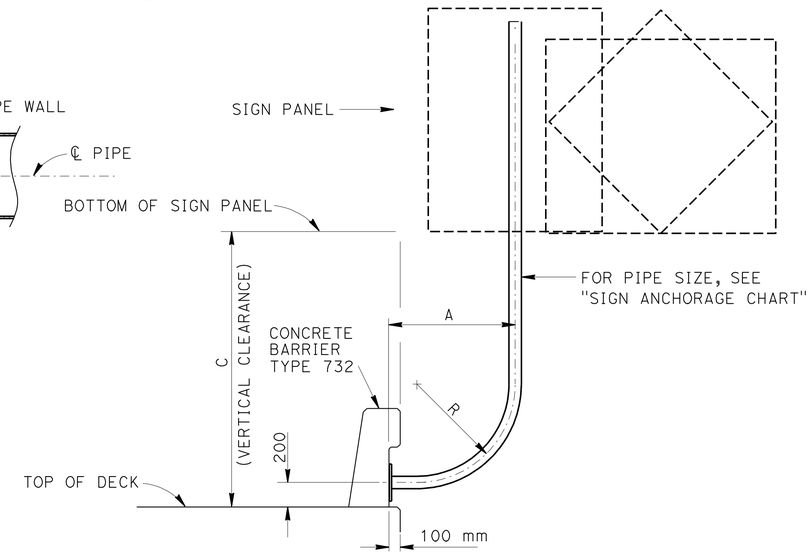

TYPE 732

NO SCALE

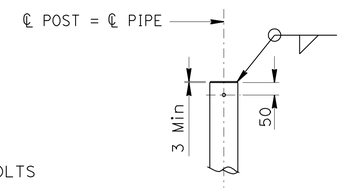

TOP OF POST DETAIL

NOTES:

1. FOR SIGN LOCATIONS, SEE "SIGN PLANS".
2. BOLTS SHALL HAVE A WASHER UNDER THE NUT. BOLTS THROUGH POST SHALL BE 12 mm DIAMETER BOLTS THROUGH SIGN PANEL AND BACK BRACE SHALL BE 12 mm DIAMETER. REAM HOLES IN SIGN AS REQUIRED.
3. STEEL SHALL BE GALVANIZED AFTER FABRICATION.
4. WASHER ASSEMBLY CONSISTS OF TWO OVERSIZE WASHERS, TWO FIBER WASHERS, NUT AND JAM NUT.

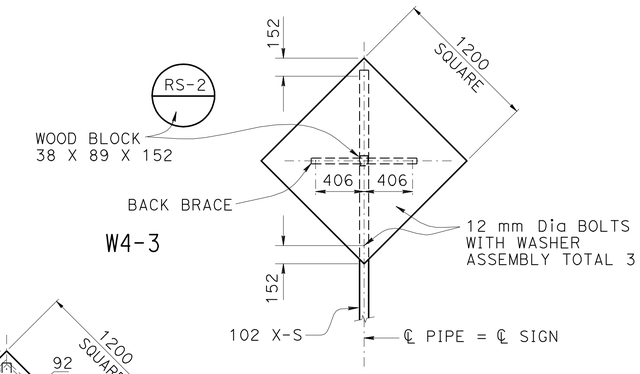

SIGN 1

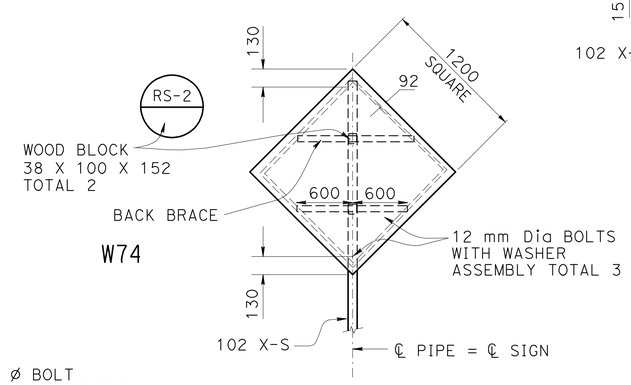

SIGN 2

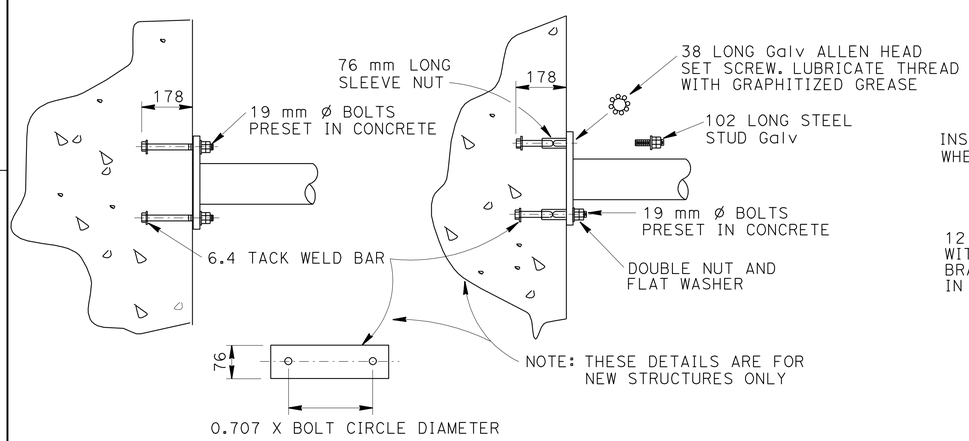

ALTERNATIVE CIP BOLT ANCHORAGE

NO SCALE

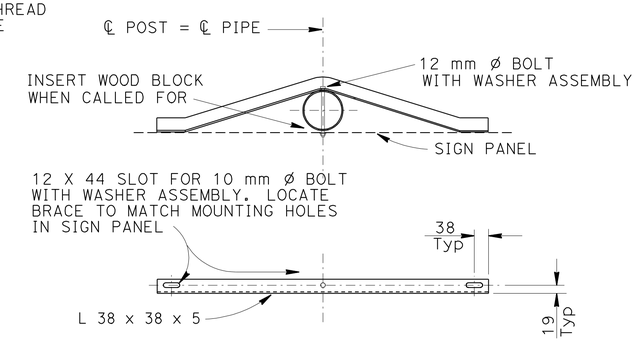

BACK BRACE DETAILS

NO SCALE

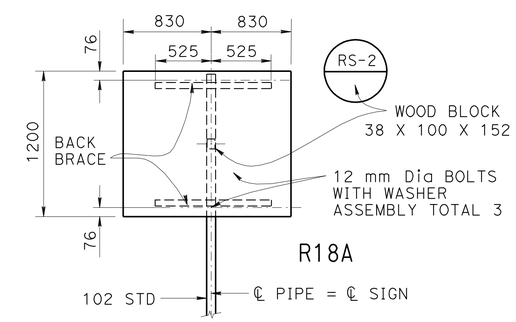

SIGN 3

SIGN ANCHORAGE CHART

SHEET No.	SIGN NUMBER	STATION	ORIENTATION	A (mm)	C (mm)	R (mm)	D (mm)	BOLT CIRCLE DIAMETER (mm)	PIPE SIZE
S-2	1	400+78	FNBT	962	2130	508	305	305	4 NPS
S-3	2	407+00	FNBT	1160	2130	635	305	305	5 NPS
S-4	3	410+45	FNBT	930	2130	508	305	305	4 NPS

ALL DIMENSIONS ARE IN MILLIMETERS UNLESS OTHERWISE SHOWN

BARRIER MOUNTED SIGNS SIGN CONNECTION DETAILS

NO SCALE

SD-9

STATE OF CALIFORNIA - DEPARTMENT OF TRANSPORTATION
Caltrans
TRAFFIC DESIGN

FUNCTIONAL SUPERVISOR: MOHAMMED CHOWDHURY
CALCULATED-DESIGNED BY: FRANCISCO MARTINEZ
CHECKED BY: SIDDA REDDY PEDABALLI
REVISED BY
DATE REVISED

LAST REVISION 00-00-00
DATE PLOTTED => 07-JUN-2010
TIME PLOTTED => 15:01

Dist	COUNTY	ROUTE	KILOMETER POST TOTAL PROJECT	SHEET No.	TOTAL SHEETS
07	LA	405	39.7/41.5	134	439

REGISTERED CIVIL ENGINEER 12/10/09 DATE

6-7-10
PLANS APPROVAL DATE

REGISTERED PROFESSIONAL ENGINEER SIDDA REDDY PEDABALLI No. C73622 Exp 12/31/10 CIVIL STATE OF CALIFORNIA

THE STATE OF CALIFORNIA OR ITS OFFICERS OR AGENTS SHALL NOT BE RESPONSIBLE FOR THE ACCURACY OR COMPLETENESS OF ELECTRONIC COPIES OF THIS PLAN SHEET.

Caltrans Metric

NOTE:

OVERHEAD SIGN PANELS ARE FORMED PANELS UNLESS OTHERWISE NOTED.

SUMMARY OF OVERHEAD SIGNS

SHEET No.	SIGN No.	STATION AND DIRECTION	SIGN CODE	PANEL SIZE (mm X mm)	SIGN STRUCTURE (TRUSS) INCLUDING WALKWAY FURNISH KG	SIGN STRUCTURE (TRUSS) INCLUDING WALKWAY INSTALL KG	1524 mm CIDH CONCRETE PILE (SIGN FOUNDATION) m	REMOVE SIGN STRUCTURE EA	REMARKS
SD-1	1A	398+40 FNBT	G23-5(CA)	6096 X 3048	7870	7870	7.0		
	4A	407+78 FNBT	G83-2(CA)	6096 X 2794	10320	10320			
	4A	407+78 FNBT	G85-11(CA)	6096 X 2794					
	1B	400+20 FNBT	G23					1	
	3A	407+20 FNBT	G83/G85					1	
SD-2	2B	403+51 FNBT	G24-6(CA)	10972 X 3048	24950	24950	17.0		
	2B	403+51 FNBT	G24-6(CA)	3657 X 3048					
	2B	403+51 FNBT	G24-6(CA)	6095 X 3048					
	2A	403+25 FNBT	G24					1	
SD-3	5A	412+00 FNBT	G24-6(CA)	10972 X 3048	21520	21520	16.0		
	5A	412+00 FNBT	G24-6(CA)	3657 X 3048					
	5A	412+00 FNBT	G85-6(CA)	6096 X 3048					
	5B	412+31 FNBT	G24/G83					1	
SD-4	5D	413+85 FNBT	G85-11(CA)	6096 X 2794	6780	6780	6.7		
	5D	413+90 FNBT	G85					1	
			TOTAL		71440	71440	46.7	5	

SIGN QUANTITIES

SQ-1

STATE OF CALIFORNIA - DEPARTMENT OF TRANSPORTATION
Caltrans TRAFFIC DESIGN

FUNCTIONAL SUPERVISOR: MOHAMMED CHOWDHURY
CALCULATED-DESIGNED BY: FRANCISCO MARTINEZ
CHECKED BY: SIDDA REDDY PEDABALLI
REVISED BY / DATE REVISED

LAST REVISION 00-00-00 | DATE PLOTTED => 07-JUN-2010 | TIME PLOTTED => 1502

Dist	COUNTY	ROUTE	KILOMETER POST TOTAL PROJECT	SHEET No.	TOTAL SHEETS
07	LA	405	39.7/41.5	135	439

REGISTERED CIVIL ENGINEER 12/10/09 DATE

6-7-10
PLANS APPROVAL DATE

REGISTERED PROFESSIONAL ENGINEER SIDDA REDDY PEDABALLI No. C73622 Exp 12/31/10 CIVIL STATE OF CALIFORNIA

THE STATE OF CALIFORNIA OR ITS OFFICERS OR AGENTS SHALL NOT BE RESPONSIBLE FOR THE ACCURACY OR COMPLETENESS OF ELECTRONIC COPIES OF THIS PLAN SHEET.

Caltrans Metric

CONTRACTOR FURNISHED OVERHEAD SIGN PANELS

MATERIAL SUMMARY

SHEET No.	SIGN CODE	SIGN NO.	SIGN SIZE L X D (mm x mm)	SIGN AREA (m^2)	SINGLE FACED	DOUBLE FACED	BACKGROUND			LEGEND			GRAFFITI FILM		OVERHEAD			REMARKS
							NON REFLECTIVE	SHEETING COLOR	RETROREFLECTIVE ASTM TYPE	SHEETING COLOR	RETROREFLECTIVE ASTM TYPE	NON REFLECTIVE	STANDARD	PREMIUM	LAMINATED (25.4 mm TYPE A)	FORMED W/O RSPF	FORMED WITH RSPF	
SD5	G83-2(CA)	4A	6096 X 2794	17.03	X			GREEN	IV	WHITE	IV			X			X	Marina del Rey/ 90 WEST/ EXIT ONLY
SD5	G85-11(CA)	4A	6096 X 2794	17.03	X			GREEN	IV	WHITE	IV			X			X	Sepulveda Bl/ Slauson Ave
SD6	G24-6(CA)	2B	10972 X 3048	33.44	X			GREEN	IV	WHITE	IV			X			X	Santa Monica/ Sacramento/405 NORTH
SD6	G24-6(CA)	2B	3657 X 3048	11.15	X			GREEN	IV	WHITE	IV			X			X	Jefferson Blvd/ EXIT 50B
SD6	G24-6(CA)	2B	6096 X 3048	18.58	X			GREEN	IV	WHITE	IV			X			X	Jefferson Blvd/ EXIT ONLY
SD7	G24-6(CA)	5A	10972 X 3048	33.44	X			GREEN	IV	WHITE	IV			X			X	Santa Monica/ Sacramento/405 NORTH
SD7	G24-6(CA)	5A	3657 X 3048	11.15	X			GREEN	IV	WHITE	IV			X			X	Jefferson Blvd/ EXIT ONLY
SD7	G85-6(CA)	5A	6096 X 3048	18.58	X			GREEN	IV	WHITE	IV			X			X	Marina del Rey/ 90 WEST
SD8	G85-11(CA)	5D	6096 X 2794	17.03	X			GREEN	IV	WHITE	IV			X			X	Jefferson Blvd/ EXIT 50 B
SD8	G23-5(CA)	1A	6096 X 3048	18.58	X			GREEN	IV	WHITE	IV			X			X	Slauson Ave/ Sepulveda Blvd ½
Total				196.01														

SIGN QUANTITIES

SQ-2

STATE OF CALIFORNIA - DEPARTMENT OF TRANSPORTATION
Caltrans TRAFFIC DESIGN

FUNCTIONAL SUPERVISOR: MOHAMMED CHOWDHURY
CALCULATED-DESIGNED BY: FRANCISCO MARTINEZ
CHECKED BY: SIDDA REDDY PEDABALLI
REVISED BY
DATE REVISED

LAST REVISION 00-00-00
DATE PLOTTED => 07-JUN-2010
TIME PLOTTED => 15:02

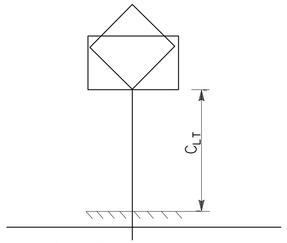

TYPICAL POST HEIGHT DETAIL

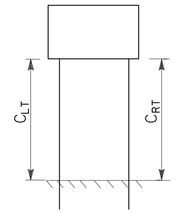

TYPICAL POST HEIGHT DETAIL

NOTES:

1. SEE SD-9 FOR ROADSIDE SIGNS MOUNTING DETAILS ON CONCRETE BARRIER.
2. SEE RS1-4 AND S93-95 OF STANDARD PLANS FOR INSTALLATION DETAILS AND FRAMING DETAILS RESPECTIVELY.

Caltrans Metric

Dist	COUNTY	ROUTE	KILOMETER POST TOTAL PROJECT	SHEET No.	TOTAL SHEETS
07	LA	405	39.7/41.5	136	439

REGISTERED CIVIL ENGINEER 12/10/09 DATE

6-7-10
PLANS APPROVAL DATE

REGISTERED PROFESSIONAL ENGINEER SIDDA REDDY PEDABALLI No. C73622 Exp 12/31/10 CIVIL STATE OF CALIFORNIA

THE STATE OF CALIFORNIA OR ITS OFFICERS OR AGENTS SHALL NOT BE RESPONSIBLE FOR THE ACCURACY OR COMPLETENESS OF ELECTRONIC COPIES OF THIS PLAN SHEET.

ROADSIDE SIGN QUANTITIES

SHEET NO.	LOCATION	SIGN CODE	SIGN FACING MATERIAL: PANEL SIZE (m)	PANEL NUMBER	SIGN AREA m2	SINGLE FACED	BACKGROUND: SHEETING COLOR	BACKGROUND: RETRO-REFLECTIVE ASTM TYPE	LEGEND: SHEETING COLOR	LEGEND: RETRO-REFLECTIVE ASTM TYPE	GRAFFITI FILM: PREMIUM	SIGN PANEL SUBSTRATE MATERIAL (m^2) ROAD SIGN SINGLE-SHEET: UNFRAMED ALUMINUM (mm) 1.6	UNFRAMED ALUMINUM (mm) 2.0	FRAMED ALUMINUM (mm) 1.6	FRAMED ALUMINUM (mm) 2.0	POST DATA: SIZE (mm) X (mm)	LENGTH (m) L+	LENGTH (m) R+	TOTAL LENGTH (m) L+	TOTAL LENGTH (m) R+	REMOVE	RELOCATE	ROAD SIGN INSTALL: METAL (BARRIER MOUNTED SIGN) KG	WOOD POST: ONE POST EA	WOOD POST: TWO POST EA	REMARKS
S-2	1	W4-3R	1.22 X 1.22	1	1.49	X	Y	III	B		X		1.49										60			CONCRETE BARRIER MOUNTED SIGN
	2	W4-3R																			1					
	3	R91-3(CA)																			1					
	4	W-74(CA)(LT)																			1					
	5	W-74(CA)(LT)																			1					
	6	W4-7	1.50 X 1.50	1	2.25	X	Y	III	B		X			2.25		89 X 140	2.9	3.1	4.3	4.5					1	
	7	BRIDGE NAME SIGN																			1					
S-3	8	W4-7	1.50 X 1.50	1	2.25	X	Y	III	B		X			2.25									60			BRIDGE RAILING MOUNTED SIGN
S-4	9	W13-2	1.20 X 1.50	1	1.8	X	Y	III	B		X		1.80			140 X 140	2.9		4.4					1		40 MPH
	10	G84-2(CA)																			1					
	11	G84-2(CA)	1.37 X 1.22		1.67	X	G	III	W	III	X		1.67			140 X 140	2.7		4.2					1		EXIT 49B
	12	W4-7	1.50 X1.50	1	2.25	X	Y	III	B		X			2.25		89 X 140	2.9	3.1	4.3	4.5					1	
	13	W3-2	0.91 X 0.91	1	0.83	X	Y	VII	B/R	VII	X	0.83				89 X 140	2.6		4.0					1		
	14	G86-1(CA)	2.40 X 1.67	1	4.02	X	G	III	W	IV	X				4.02	140 X184	2.9	3.1	4.7	4.9					1	WEST LA COLLEGE SECOND EXIT
	15 25	W1-6(RT)	1.22 X 0.60	2	1.46	X	Y	III	B		X		1.46			89 X 140	2.4		3.8					2		
	24	R2-1	1.22 X 1.52	1	1.85	X	W	III	B		X		1.85			140 X 140	2.7		4.2					1		45 MPH
	16 26	W1-6(RT)																			2					
	17	W3-2																			1					
	18	G86-1																			1					
	19	W1-2(R)	1.22 X 1.22	1	1.49	X	Y	III	B		X		1.49			140 X 140	2.7		4.2					1		
	19	W13-1	0.76 X 0.76	1	0.58	X	Y	III	B		X		0.58													MOUNTED ON W1-2 SIGN
	20	G9-5	3.00 X 1.20	1	3.6	X	G	III	W	IV	X				3.60	140 X 140	2.6	3.4	4.1	4.9					1	CULVER CITY, POP:40597, ELEV:93
	21	W1-2																			1					
	22	G9-5																			1					
	23	R2-1																			1					
	29 30	R5-1																			2					
	27 29	R1-2																			2					
	28	R1-2	0.94 X 0.94	1	0.88	X	W	VII	R	VII	X	0.88				89 X 140	2.6		4.0					1		
	28 31	R5-1A	1.10 X 0.76	2	1.67	X	R	VII	W	VII	X	1.67														MOUNTED ON R5-1 SIGN
	28 31	R5-1	1.22 X 1.22	2	2.98	X	Y	III	B	VII	X		2.98			140 X 140	2.7		4.2					2		
	29 30	R5-1A																			2					
	32	R18A(R)	1.67 X 1.20	1	2.04	X	W	III	B		X			2.04		140 X 140	2.7		4.2				60			BARRIER MOUNTED SIGN
S-5	33	W13-3	1.22 X 1.52	1	1.85	X	Y	III	B		X		1.85			140 X 140	2.7		4.2					1		
	34	W13-3																			1					
SUBTOTAL				20	34.96							3.38	15.17	8.79	7.62		38.0	12.7	58.8	18.8	20		180	11	4	

LEGEND: B, BLACK Y, YELLOW R, RED W, WHITE G, GREEN

SIGN QUANTITIES

SQ-3

STATE OF CALIFORNIA - DEPARTMENT OF TRANSPORTATION
Caltrans TRAFFIC DESIGN

FUNCTIONAL SUPERVISOR: MOHAMMED CHOWDHURY
CALCULATED-DESIGNED BY: FRANCISCO MARTINEZ
CHECKED BY: SIDDA REDDY PEDABALLI
REVISED BY / DATE REVISED

LAST REVISION 00-00-00
DATE PLOTTED => 07-JUN-2010
TIME PLOTTED => 15:02

Dist	COUNTY	ROUTE	KILOMETER POST TOTAL PROJECT	SHEET No.	TOTAL SHEETS
07	LA	405	39.7/41.5	137	439

REGISTERED CIVIL ENGINEER 12/10/09 DATE

6-7-10
PLANS APPROVAL DATE

REGISTERED PROFESSIONAL ENGINEER SIDDA REDDY PEDABALLI No. C73622 Exp 12/31/10 CIVIL STATE OF CALIFORNIA

THE STATE OF CALIFORNIA OR ITS OFFICERS OR AGENTS SHALL NOT BE RESPONSIBLE FOR THE ACCURACY OR COMPLETENESS OF ELECTRONIC COPIES OF THIS PLAN SHEET.

Caltrans Metric

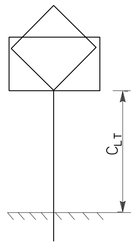

TYPICAL POST HEIGHT DETAIL

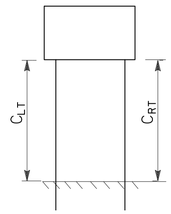

TYPICAL POST HEIGHT DETAIL

ROADSIDE SIGN QUANTITIES

SHEET No.	LOCATION	SIGN CODE	PANEL SIZE (m X m)	SIGN FACING MATERIAL: PANEL NUMBER	SIGN AREA m^2	SINGLE FACED	BACKROUND: SHEETING COLOR	BACKROUND: RETRO-REFLECTIVE ASTM TYPE	LEGEND: SHEETING COLOR	LEGEND: RETRO-REFLECTIVE ASTM TYPE	GRAFFITI FILM: PREMIUM	SIGN PANEL SUBSTRATE MATERIAL (m^2) ROAD SIGN SINGLE SHEET: UNFRAMED ALUMINUM (mm) 1.6	UNFRAMED ALUMINUM (mm) 2.0	FRAMED ALUMINUM (mm) 1.6	FRAMED ALUMINUM (mm) 2.0	POST DATA: SIZE (mm X mm)	LENGTH (m) L+	LENGTH (m) R+	TOTAL LENGTH (m) L+	TOTAL LENGTH (m) R+	REMOVE	RELOCATE	ROAD SIGN INSTALL: METAL (BARRIER MOUNTED SIGN) KG	WOOD POST: ONE POST EA	WOOD POST: TWO POST EA	REMARKS
S-5	35	G84-2	1.37 X 1.22	1	1.67	X	G	III	W	IV	X		1.67			140 X 140	2.7		4.2					1		EXIT 50B
	36	W1-2																			1					
	36	W13-1																			1					
	37	W1-2	1.22 X 1.22	1	1.49	X	Y	III	B		X		1.49			140 X 140	2.7		4.2					1		
	37	W13-1	0.76 X 0.76	1	0.58	X	Y	III	B		X	0.58														MOUNTED ON W1-2 SIGN
	38	G86-3																				1				LOYOLA MARYMOUNT UNIVERSITY NEXT EXIT
	SUBTOTAL			3	3.74							0.58	3.16				5.40		8.4		2	1		2		
	SUBTOTAL FROM SQ-3			20	34.96							3.38	15.17	8.79	7.62		38.0	12.7	58.8	18.8	20		180	11	4	
	SUBTOTAL FROM SQ-4			3	3.74							0.58	3.16				5.40		8.4		2	1		2		
	TOTAL			23	38.70							3.96	18.33	8.79	7.62		43.4	12.7	67.2	18.8	22	1	180	13	4	

LEGEND: B- BLACK, Y,- YELLOW, R- RED, W- WHITE, G- GREEN

SIGN QUANTITIES

SQ-4

REVISED BY | DATE REVISED

FRANCISCO MARTINEZ | SIDDA REDDY PEDABALLI

CALCULATED-DESIGNED BY | CHECKED BY

FUNCTIONAL SUPERVISOR: MOHAMMED CHOWDHURY

STATE OF CALIFORNIA - DEPARTMENT OF TRANSPORTATION

Caltrans TRAFFIC DESIGN

LAST REVISION 00-00-00 | DATE PLOTTED => 07-JUN-2010 | TIME PLOTTED => 15:02

Dist	COUNTY	ROUTE	KILOMETER POST TOTAL PROJECT	SHEET No.	TOTAL SHEETS
07	LA	405	39.7/41.5	138	439

Caltrans Metric

REGISTERED CIVIL ENGINEER 10-12-09 DATE

6-7-10
PLANS APPROVAL DATE

REGISTERED PROFESSIONAL ENGINEER NGIM NANCY PE No. 58161 Exp. 6-30-08 CIVIL STATE OF CALIFORNIA

THE STATE OF CALIFORNIA OR ITS OFFICERS OR AGENTS SHALL NOT BE RESPONSIBLE FOR THE ACCURACY OR COMPLETENESS OF ELECTRONIC COPIES OF THIS PLAN SHEET.

REMOVAL QUANTITIES

SHEET No.	ALIGNMENT	LOCATION	REMOVE CONCRETE CURB	REMOVE MBGR	REMOVE AC DIKE	REMOVE CONCRETE BARRIER	REMOVE CHAIN LINK FENCE	COLD PLANE ASPHALT CONCRETE PAVEMENT
			m	m	m	m	m	m^2
L-1	"A1"	STA 397+30.000 TO 400+70.000				171.81		19.38
L-2	"A1"	STA 400+70.000 TO 404+10.000		332.45	10.44	61.04		1042.32
L-3	"A1"	STA 404+10.000 TO 407+50.000					83.99	
L-4	"A1"	STA 407+50.000 TO 411+10.000						
	"S1"	STA 407+80.000 TO 410+71.082	7.60	86.94				
L-5	"A1"	STA 411+10.000 TO 414+70.000	129.23			75.94		
	"C1"	STA 38+47.269 TO 42+09.750	64.36	45.46	82.91			
C-21	"S2"	STA 99+35.078 TO 100+73.841						
	"C2"	STA 98+79.658 TO 101+18.969						
C-25	"C2"	STA 98+88.762 TO 100+31.467	187.53					
TOTAL			388.72	464.85	93.35	308.79	83.99	1061.70

ROADWAY QUANTITIES

SHEET No.	ALIGNMENT	LOCATION	PLACE HMA DIKE (TYPE C)	PLACE HMA DIKE (TYPE D)	PLACE HMA DIKE (TYPE E)	PLACE HMA DIKE (TYPE F)	CRASH CUSHION (REACT 9SCBS)	CRASH CUSHION (TYPE CAT)	CRASH CUSHION (TYPE CAT) BACKUP	MINOR CONCRETE (CURB RAMP)	CONCRETE BARRIER (TYPE 60C)	CONCRETE BARRIER (TYPE 60E)	CONCRETE BARRIER (TYPE 60W)	CONCRETE BARRIER (TYPE 736B)	SLOPE PAVING (CONCRETE)	MINOR CONCRETE (STAMPED CONCRETE)	MINOR CONCRETE (CURB, GUTTER, SIDEWALK, & DRIVEWAY)	CLASS 4 AGGREGATE SUBBASE	CLASS 2 AGGREGATE BASE	CLASS 3 AGGREGATE BASE	LEAN CONCRETE BASE	HOT MIX ASPHALT (TYPE B)	METAL BEAM GUARD RAILING	ROADWAY EXCAVATION	RECONSTRUCT CHAIN LINK FENCE	ROADWAY EXCAVATION (TYPE Z-2) (ADL)	CONCRETE PAVEMENT	SEAL PAVEMENT JOINT	SEAL LONGITUDINAL ISOLATION JOINT	ALTERNATIVE IN-LINE TERMINAL SYSTEM
			m	m	m	m	EA	EA	EA	m^3	m	m	m	m	m^2	m^2	m^3	m^3	m^3	m^3	m^3	TONNE	m	m^3	m	m^3	m^3	m	m	EA
L-1	"A1"	STA 397+30.000 TO 400+70.000									15.50			159.01						166.18	115.94	2.33		495.20		146.78	220.30	155.21	174.51	
L-2	"A1"	STA 400+70.000 TO 404+10.000		20.00							10.00	27.01	34.03		1599.51					442.38	308.64	134.00		1093.37		602.45	586.42	135.06	30.00	
L-3	"A1"	STA 404+10.000 TO 407+50.000													273.78					18.77	13.09			57.26	83.99		24.88			
L-4	"A1"	STA 407+50.000 TO 411+10.000			85.14		1									250				287.52	200.60	5.52		749.28		376.67	381.13	102.82		
	"S1"	STA 407+80.000 TO 410+71.082			30.72	78.46														566.11	305.39	643.05	78.46	1036.89			75.55			
L-5	"A1"	STA 411+10.000 TO 414+70.000			99.12			1	1			26.77	49.17			200				302.18	252.98	6.43	51.18	994.59		207.63	400.56	66.79	300.37	
	"C1"	STA 38+47.269 TO 42+09.750	46.06			36.79																	36.79							1
C-21	"S2"	STA 99+35.078 TO 100+73.841													2323.70															
	"C2"	STA 98+79.658 TO 101+18.969													4130.81															
C-25	"C2"	STA 98+88.762 TO 100+31.467								2.30							35.00	24.00	50.33			34.58		224.32						
TOTAL			46.06	20.00	214.98	115.25	1	1	1	2.30	25.50	53.78	83.20	159.01	8327.80	450	35.00	24.00	50.33	1783.14	1196.64	825.91	166.43	4650.91	83.99	1333.53	1688.84	459.88	504.88	1

SUMMARY OF QUANTITIES
Q-1

STATE OF CALIFORNIA - DEPARTMENT OF TRANSPORTATION
Caltrans OFFICE OF DESIGN A

FUNCTIONAL SUPERVISOR: NGIM NANCY PE
CALCULATED-DESIGNED BY
CHECKED BY
REVISED BY: ANDREW LY
DATE REVISED: NGIM NANCY PE

LAST REVISION 00-00-00
DATE PLOTTED => 07-JUN-2010
TIME PLOTTED => 15:02

Dist	COUNTY	ROUTE	KILOMETER POST TOTAL PROJECT	SHEET No.	TOTAL SHEETS
07	LA	405	39.7/41.5	139	439

LICENSED LANDSCAPE ARCHITECT

6-7-10
PLANS APPROVAL DATE

LICENSED LANDSCAPE ARCHITECT GENE KIMMEL NO. 5104 Signature 10-31-10 Renewal date 10-12-09 Date STATE OF CALIFORNIA

THE STATE OF CALIFORNIA OR ITS OFFICERS OR AGENTS SHALL NOT BE RESPONSIBLE FOR THE ACCURACY OR COMPLETENESS OF ELECTRONIC COPIES OF THIS PLAN SHEET.

Caltrans Metric

ABBREVIATIONS

AMEND — AMENDMENT
B & B — BALLED AND BURLAPPED
DIA — DIAMETER
EA — EACH
g — GRAM
GSRD — GROSS SOLIDS REMOVAL DEVICE
kg — KILOGRAM
m — METER
m^2 — SQUARE METER
m^3 — CUBIC METER
MAX — MAXIMUM
MIN — MINIMUM
mm — MILLIMETER
No — NUMBER
Pkt — PACKET
PLT ESTB — PLANT ESTABLISHMENT
PVMT — PAVEMENT
R/W — RIGHT OF WAY
SF — STATE FURNISHED
TRVD — TRAVELED

PLANT LIST AND PLANTING SPECIFICATIONS

PLANT GROUP	PLANT No.	SYMBOL	BOTANICAL NAME	COMMON NAME	SIZE	QUANTITY EACH	HOLE SIZE (mm) DIA	HOLE SIZE (mm) DEPTH	BASIN TYPE	IRON SULFATE	SOIL AMEND	COMMERCIAL FERTILIZER (1) PLANTING	COMMERCIAL FERTILIZER (1) PLT ESTB	BASIN MULCH (1)	STAKING	PLANTING LIMITS MINIMUM DISTANCE (m) FROM TRVD WAY	PVMT	FENCE	WALL	PAVED DITCH	EARTH DITCH	ON CENTER (m)	REMARKS
A	1		ACACIA REDOLENS 'LOW BOY'	PROSTRATE ACACIA	No. 1	81	(2)		I	-	-	115 g	115 g	0.06 m^3	-	-	6	6	6	6	7	(4)	SHRUB
	2		PARTHENOCISSUS TRICUSPIDATA	BOSTON IVY	No. 1	27	(2)		III	-	-	115 g	115 g	0.06 m^3	(6)	-	-	-	-	4	4.5	3	VINE
B	3		BAUHINIA GALPINII	RED ORCHID BUSH	No. 5	18	(2)		I	-	-	115 g	115 g	0.06 m^3	-	-	5	5	1	5	6	4.5	SHRUB
F	4		HEDERA CANARIENSIS	ALGERIAN IVY	IN FLATS	58,400	-		-	-	-	45 g/m^2	45 g/m^2	-	-	-	2	2	2	2	2.5	0.3	GROUNDCOVER
H	5		CARPOBROTUS EDULIS	HOTTENTOT FIG	CUTTING	6300	(8)		-	-	-	45 g/m^2	45 g/m^2	-	-	-	2	2	2	2	2.5	0.5	GROUNDCOVER
U	6		EUCALYPTUS NICHOLII	NICHOL'S PEPPERMINT	No. 15	14	(2)		I	-	-	230 g	230 g	0.2 m^3	(6)	8	-	4.5	4.5	4.5	5	(4)	TREE
	7		EUCALYPTUS SIDEROXYLON	PINK IRONBARK	No. 15	14	(2)		I	-	-	230 g	230 g	0.2 m^3	(6)	9	-	4.5	4.5	4.5	5	(4)	TREE

APPLICABLE WHEN CIRCLED:

(1) - QUANTITIES SHOWN ARE "PER PLANT" UNLESS SHOWN AS m^2 APPLICATION RATES.
(2) - SUFFICIENT TO RECEIVE ROOT BALL.
3 - DOES NOT APPLY TO MULCH AREAS.
(4) - AS SHOWN ON PLANS.
5 - UNLESS OTHERWISE SHOWN ON PLANS.
(6) - REQUIRED.
7 - SEE SPECIAL PROVISIONS.
(8) - SEE STANDARD SPECIFICATIONS.

LEGEND

MULCH

MAINTAIN Exist PLANTED AREAS

NOTE:

UNDERLINED PORTIONS OF BOTANICAL NAME INDICATE ABBREVIATIONS USED ON PLANTING PLANS.

PLANT LIST

PL-1

REVISED BY | DATE REVISED
GENE KIMMEL | JENNIFER TAIRA
CALCULATED-DESIGNED BY | CHECKED BY
SENIOR LANDSCAPE ARCHITECT | JENNIFER TAIRA
STATE OF CALIFORNIA - DEPARTMENT OF TRANSPORTATION
Caltrans LANDSCAPE ARCHITECTURE

LAST REVISION 00-00-00 | DATE PLOTTED => 07-JUN-2010 | TIME PLOTTED => 15:02

Dist	COUNTY	ROUTE	KILOMETER POST TOTAL PROJECT	SHEET No.	TOTAL SHEETS
07	LA	405	39.7/41.5	140	439

LICENSED LANDSCAPE ARCHITECT

6-7-10
PLANS APPROVAL DATE

LICENSED LANDSCAPE ARCHITECT GENE KIMMEL NO. 5104 Signature 10-31-10 Renewal Date 10-12-09 Date STATE OF CALIFORNIA

THE STATE OF CALIFORNIA OR ITS OFFICERS OR AGENTS SHALL NOT BE RESPONSIBLE FOR THE ACCURACY OR COMPLETENESS OF ELECTRONIC COPIES OF THIS PLAN SHEET.

NOTE:
FOR ACCURATE RIGHT OF WAY AND ACCESS DATA,
CONTACT RIGHT OF WAY ENGINEERING AT THE DISTRICT OFFICE.

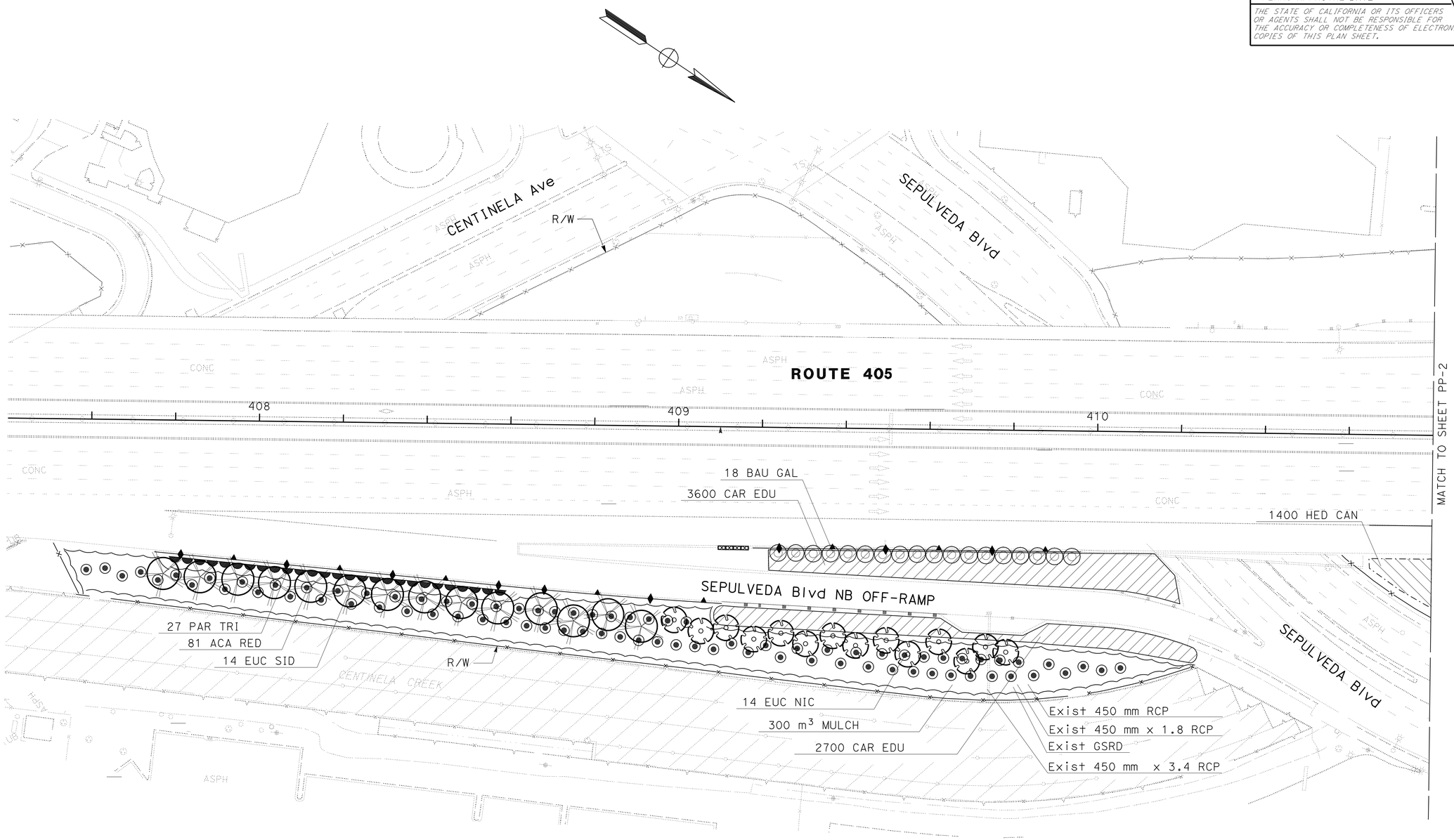

ALL DIMENSIONS ARE IN METERS
UNLESS OTHERWISE SHOWN

PLANTING PLAN

SCALE 1:500

PP-1

THIS PLAN IS ACCURATE FOR LANDSCAPE WORK ONLY.

REVISED BY	DATE REVISED

GENE KIMMEL — CALCULATED-DESIGNED BY
JENNIFER TAIRA — CHECKED BY
SENIOR LANDSCAPE ARCHITECT
JENNIFER TAIRA

STATE OF CALIFORNIA - DEPARTMENT OF TRANSPORTATION
Caltrans LANDSCAPE ARCHITECTURE

LAST REVISION 00-00-00 DATE PLOTTED => 07-JUN-2010 TIME PLOTTED => 1502

Dist	COUNTY	ROUTE	KILOMETER POST TOTAL PROJECT	SHEET No.	TOTAL SHEETS
07	LA	405	39.7/41.5	141	439

LICENSED LANDSCAPE ARCHITECT

6-7-10
PLANS APPROVAL DATE

LICENSED LANDSCAPE ARCHITECT GENE KIMMEL NO. 5104 Signature 10-31-10 Renewal Date 10-12-09 Date STATE OF CALIFORNIA

THE STATE OF CALIFORNIA OR ITS OFFICERS OR AGENTS SHALL NOT BE RESPONSIBLE FOR THE ACCURACY OR COMPLETENESS OF ELECTRONIC COPIES OF THIS PLAN SHEET.

Caltrans Metric

NOTE: FOR ACCURATE RIGHT OF WAY AND ACCESS DATA, CONTACT RIGHT OF WAY ENGINEERING AT THE DISTRICT OFFICE.

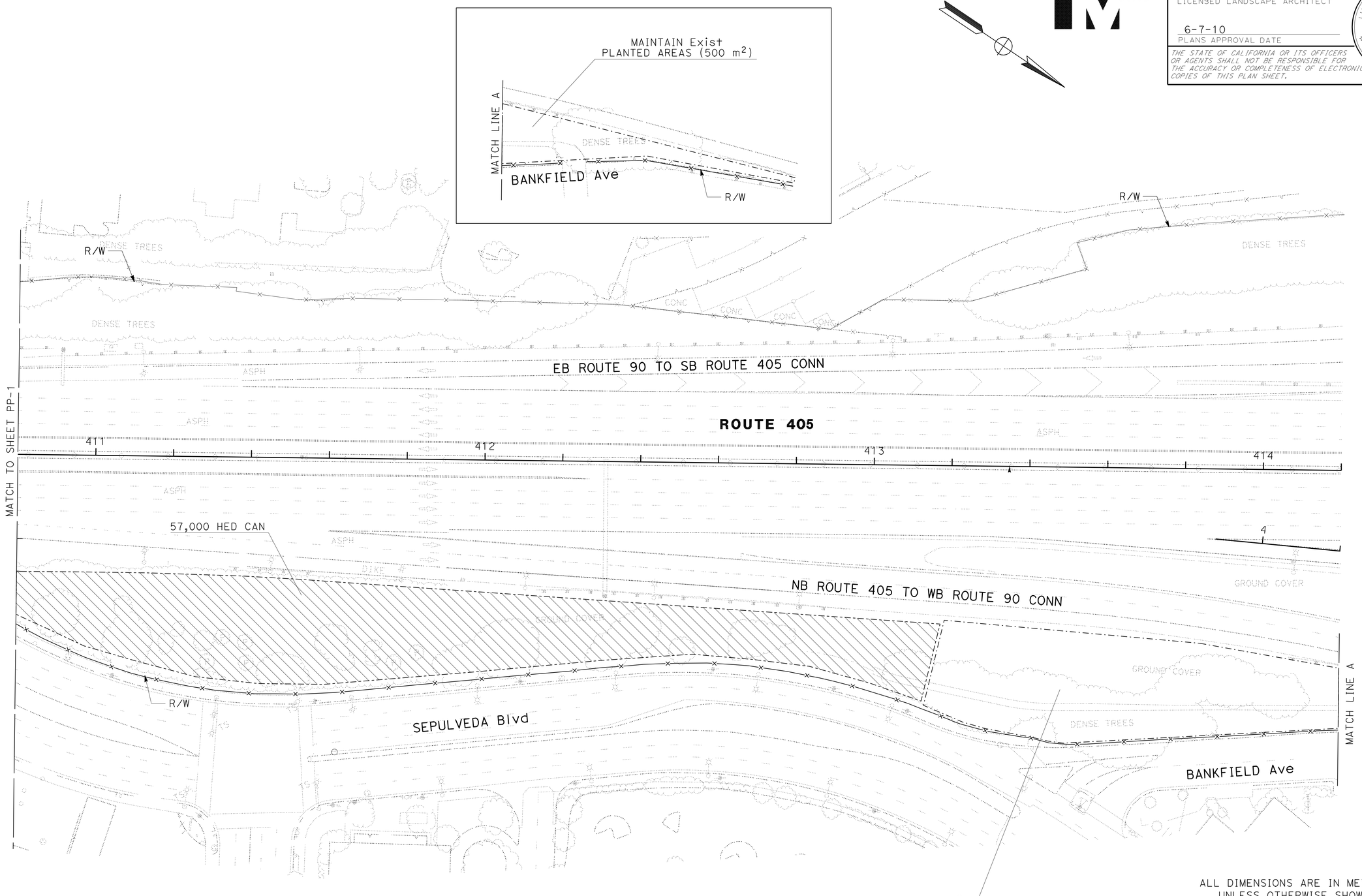

ALL DIMENSIONS ARE IN METERS UNLESS OTHERWISE SHOWN

PLANTING PLAN

SCALE 1:500

PP-2

THIS PLAN IS ACCURATE FOR LANDSCAPE WORK ONLY.

STATE OF CALIFORNIA - DEPARTMENT OF TRANSPORTATION
Caltrans LANDSCAPE ARCHITECTURE

SENIOR LANDSCAPE ARCHITECT: JENNIFER TAIRA

CALCULATED-DESIGNED BY: GENE KIMMEL
CHECKED BY: JENNIFER TAIRA

REVISED BY
DATE REVISED

LAST REVISION 00-00-00
DATE PLOTTED => 08-JUN-2010
TIME PLOTTED => 07:58

Dist	COUNTY	ROUTE	KILOMETER POST TOTAL PROJECT	SHEET No.	TOTAL SHEETS
07	LA	405	39.7/41.5	142	439

LICENSED LANDSCAPE ARCHITECT

6-7-10
PLANS APPROVAL DATE

LICENSED LANDSCAPE ARCHITECT GENE KIMMEL No. 5105 Signature 10-31-10 Renewal date 10-12-09 Date STATE OF CALIFORNIA

THE STATE OF CALIFORNIA OR ITS OFFICERS OR AGENTS SHALL NOT BE RESPONSIBLE FOR THE ACCURACY OR COMPLETENESS OF ELECTRONIC COPIES OF THIS PLAN SHEET.

NOTES: FOR ACCURATE RIGHT OF WAY AND ACCESS DATA, CONTACT RIGHT OF WAY ENGINEERING AT THE DISTRICT OFFICE.

ALL IRRIGATION EQUIPMENT SIZES ARE IN MILLIMETERS (DIAMETER NOMINAL) UNLESS OTHERWISE SHOWN.

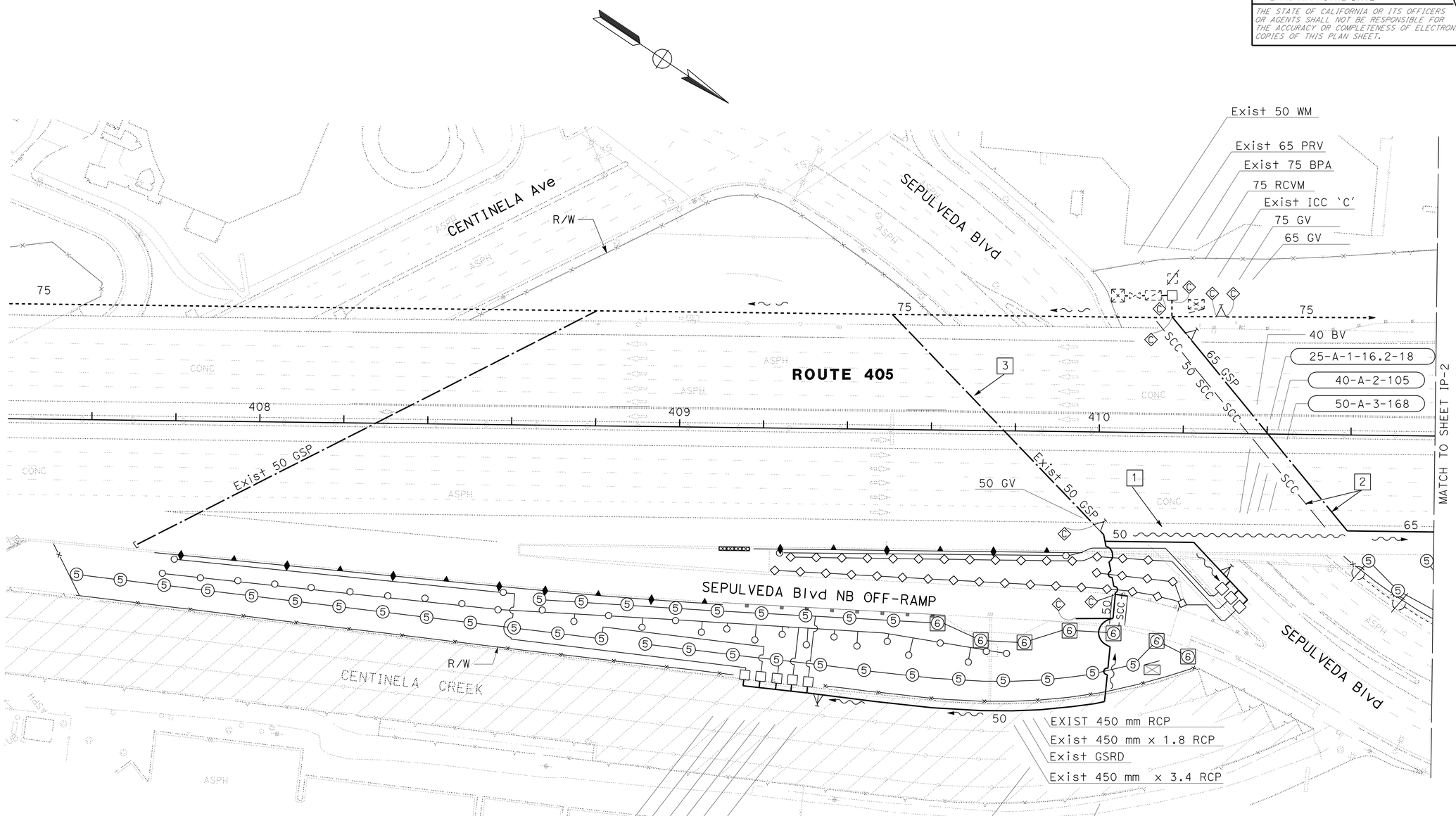

1 USE 1 OF 4 Exist 78c INSIDE CONCRETE BARRIER.

2 INSTALL GSP AND SCC ON TOP OF SLOPE PAVING AND SECURE WITH PIPE ANCHOR TYPE 1 AT 2.5 m ON CENTER. LOCATE AT TOP OF SLOPE AGAINST BRIDGE ABUTMENT TO MINIMIZE VISIBILITY FROM STREET.

3 EXISTING GSP ON TOP OF NEW SLOPE PAVING. SECURE WITH PIPE ANCHOR TYPE 1 AT 2.5 m ON CENTER. LOCATE AT TOP OF SLOPE AGAINST BRIDGE ABUTMENT TO MINIMIZE VISIBILITY FROM STREET.

THIS PLAN IS ACCURATE FOR IRRIGATION WORK ONLY.

ALL DIMENSIONS ARE IN METERS UNLESS OTHERWISE SHOWN

IRRIGATION PLAN

SCALE 1:500

IP-1

REVISED BY	
DATE REVISED	
GENE KIMMEL	
JENNIFER TAIRA	
CALCULATED-DESIGNED BY	
CHECKED BY	
SENIOR LANDSCAPE ARCHITECT	
JENNIFER TAIRA	

STATE OF CALIFORNIA - DEPARTMENT OF TRANSPORTATION
Caltrans LANDSCAPE ARCHITECTURE

LAST REVISION 00-00-00 DATE PLOTTED => 08-JUN-2010 TIME PLOTTED => 07:58

Dist	COUNTY	ROUTE	KILOMETER POST TOTAL PROJECT	SHEET No.	TOTAL SHEETS
07	LA	405	39.7/41.5	143	439

LICENSED LANDSCAPE ARCHITECT

6-7-10
PLANS APPROVAL DATE

LICENSED LANDSCAPE ARCHITECT GENE KIMMEL NO. 5104 Signature 10-31-10 Renewal Date 10-12-09 Date STATE OF CALIFORNIA

THE STATE OF CALIFORNIA OR ITS OFFICERS OR AGENTS SHALL NOT BE RESPONSIBLE FOR THE ACCURACY OR COMPLETENESS OF ELECTRONIC COPIES OF THIS PLAN SHEET.

Caltrans Metric

NOTES: FOR ACCURATE RIGHT OF WAY AND ACCESS DATA, CONTACT RIGHT OF WAY ENGINEERING AT THE DISTRICT OFFICE.

ALL IRRIGATION EQUIPMENT SIZES ARE IN MILLIMETERS (DIAMETER NOMINAL) UNLESS OTHERWISE SHOWN.

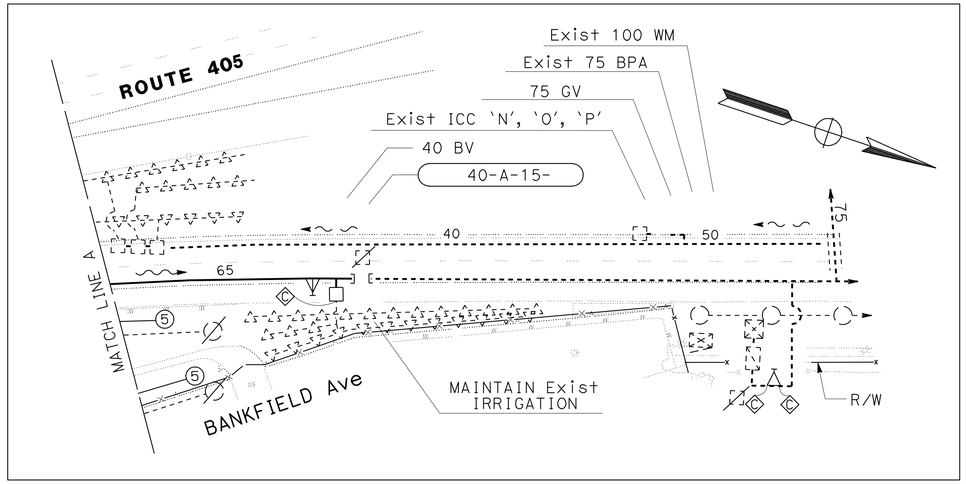

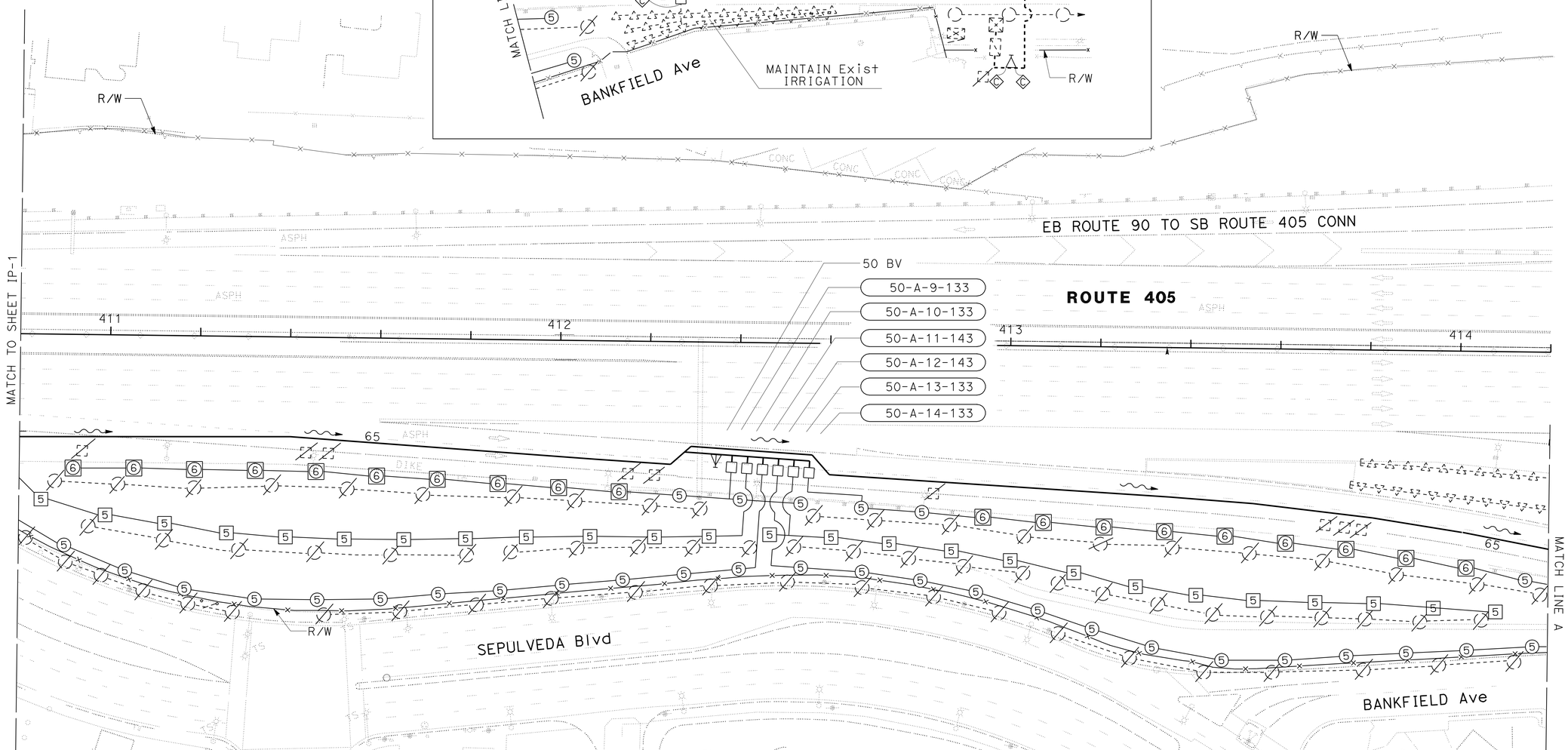

ALL DIMENSIONS ARE IN METERS UNLESS OTHERWISE SHOWN

IRRIGATION PLAN

SCALE 1:500

IP-2

THIS PLAN IS ACCURATE FOR IRRIGATION WORK ONLY.

STATE OF CALIFORNIA - DEPARTMENT OF TRANSPORTATION
Caltrans LANDSCAPE ARCHITECTURE

SENIOR LANDSCAPE ARCHITECT: JENNIFER TAIRA
CALCULATED-DESIGNED BY: GENE KIMMEL
CHECKED BY: JENNIFER TAIRA
REVISED BY / DATE REVISED

LAST REVISION 00-00-00 | DATE PLOTTED => 08-JUN-2010 | TIME PLOTTED => 07:59

Dist	COUNTY	ROUTE	KILOMETER POST TOTAL PROJECT	SHEET No.	TOTAL SHEETS
07	LA	405	39.7/41.5	144	439

Caltrans Metric

LICENSED LANDSCAPE ARCHITECT

6-7-10
PLANS APPROVAL DATE

LICENSED LANDSCAPE ARCHITECT GENE KIMMEL NO. 5104 Signature 10-31-10 Renewal Date 10-12-09 Date STATE OF CALIFORNIA

THE STATE OF CALIFORNIA OR ITS OFFICERS OR AGENTS SHALL NOT BE RESPONSIBLE FOR THE ACCURACY OR COMPLETENESS OF ELECTRONIC COPIES OF THIS PLAN SHEET.

SPRINKLER SCHEDULE

SYMBOL	TYPE	DESCRIPTION	SPRAY PATTERN	OPERATING PRESSURE (KILOPASCAL)	PRESSURE COMPENSATING	PLUS / MINUS 5% (2) DISCHARGE LITERS PER SECOND L/s	LITERS PER MINUTE L/min	LITERS PER HOUR L/h	(6) RADIUS (IN METERS)(m)	WIDTH x LENGTH (IN METERS)(m)	MATERIAL	NOZZLE SIZE IN MILLIMETERS (mm)	INLET CONNECTION (NPT) (DN IN MILLIMETERS)(mm)	POSITIVE-LOCKING ADJ ARC STOP	BACKSPLASH PREVENTER	DIFFUSER PIN	DISTANCE CONTROL FLAP	ADJ DISCHARGE	RISER TYPE	RISER MATERIAL PLASTIC	RISER MATERIAL GALVANIZED	RISER SIZE (IPS) (IN MILLIMETERS)(mm)	RISER HEIGHT (IN MILLIMETERS)(mm)	RISER FLOW SHUTOFF DEVICE	SWING JOINT (TYPE)	RISER SUPPORT	SPRINKLER PROTECTOR (TYPE)	REMARKS
(5) [5]	A-5	GEAR DRIVEN	P/F	352	—	—	10.2	—	10.5-13.5	—	PL	—	20	—	—	—	—	X	IV	—	X	—	450	X	I	—	—	
[6]	A-6	GEAR DRIVEN	P	352	—	—	10.2	—	10.5-13.5	—	PL	—	20	—	—	—	—	X	VI	—	—	—	—	—	—	—	II	300 mm POP-UP
◇	B-5	ROTARY NOZZLE	H/F	310	—	—	7.0/14.8	—	6.0	—	PL	—	15	—	—	—	—	X	(5)	(5)	(5)	—	300	(5)	I	—	—	
◇	B-5	ROTARY NOZZLE	Q	310	—	—	3.5	—	6.0	—	PL	—	15	—	—	—	—	X	(5)	(5)	(5)	—	300	(5)	I	—	—	
○	C-2	FLOOD BUBBLER	—	140-620	X	—	0.9/1.8	—	—	—	PL	—	15	—	—	—	—	—	V	X	—	—	—	—	—	—	—	(7)

X IN BOX DENOTES REQUIREMENT

APPLICABLE WHEN CIRCLED BELOW:

1 - See Special Provisions.
(2) - If a pressure compensating device is specified, the discharge and radii shown reflect its use.
3 - Arc Stop shall be fitted with a nut and bolt.
4 - Vinyl-coated cast iron housing.
(5) - Type IV Galvanized riser with flow shutoff device required adjacent to shoulders, curbs, sidewalks and dikes. Type II plastic riser without flow shutoff device required in all other locations.
(6) - Unless otherwise shown on plans.
(7) - One 0.9 L/Min bubbler per plant for plant No. 2 and 3. One 1.8 L/Min bubbler per plant for plant No. 6 and 7.

ABBREVIATIONS

ADJ — adjustable
B/B — brass/bronze
B/B/PL — brass/bronze/plastic
B/PL — brass/plastic
CST — center strip
DN — diameter nominal
EST — end strip
F — full circle
F/P — full/part circle
H — half circle
IPS — iron pipe size
kPa — kilopascal
L/h — liters per hour
L/min — liters per minute
L/s — liters per second
m — meters
mm — millimeters
MPR — matched precipitation rate
NPT — national pipe thread
P — part circle
PL — plastic
Q — quarter circle
SST — side strip
T — third circle
TQ — three quarter circle
TT — two thirds circle

IRRIGATION CROSSOVERS

LOCATION LINE	STATION	SIDE R+	SIDE L+	CONDUIT TYPE (3) SIZE (mm) DN 250 LENGTH (m)		(N) WATER LINE CROSSOVER SIZE (mm) DN	(N) SPRINKLER CONTROL CROSSOVER SIZE (mm) DN
"S1" SEPULVEDA Blvd NB OFF-RAMP	410+04	-	-	10.0		50	75
TOTAL				10.0			

(N) - NOT A SEPARATE PAY ITEM FOR INFORMATION ONLY
DN - DIAMETER NOMINAL
X - DENOTES REQUIREMENT

CONDUIT TYPE
(Applicable when circled below and shown under the 'CONDUIT TYPE' column heading)

1 BITUMINOUS COATED CORRUGATED STEEL PIPE (1.626 mm THICK)
2 CORRUGATED STEEL PIPE (1.626 mm THICK)
(3) CORRUGATED HIGH DENSITY POLYETHYLENE PIPE
4 ALTERNATIVE CONDUIT

IRRIGATION LEGEND

EXISTING	PROPOSED	ITEM DESCRIPTION
		CONTROL AND NEUTRAL CONDUCTORS
		REMOVE IRRIGATION FACILITY (TYP.)

SPRINKLER (A-5 & A-6) SIZING CHART

NUMBER OF SPRINKLERS	SIZE OF PIPE
Sprinkler=10.2 L/min	
1---2	20 mm
3---4	25 mm
5---6	32 mm
7---8	40 mm
9---14	50 mm

SPRINKLER (B-5) SIZING CHART

NUMBER OF SPRINKLERS	SIZE OF PIPE
Sprinkler=14.8 L/min (F)	
1---2	20 mm
3---4	25 mm
5---7	32 mm
8---10	40 mm
11---15	50 mm
Sprinkler=7.0, 3.5 L/min (H, Q)	
1---5	20 mm
6---9	25 mm
10---14	32 mm
15---19	40 mm
20---30	50 mm

SPRINKLER (C-2) SIZING CHART

NUMBER OF SPRINKLERS	SIZE OF PIPE
Sprinkler=0.9 L/min	
1---40	20 mm
41---64	25 mm
65---104	32 mm
105---144	40 mm
145---220	50 mm
Sprinkler=1.8 L/min	
1---20	20 mm
21---32	25 mm
33---52	32 mm
53---72	40 mm
73---110	50 mm

LANDSCAPE DETAILS
LD-1

REVISED BY | DATE REVISED
GENE KIMMEL | JENNIFER TAIRA
CALCULATED-DESIGNED BY | CHECKED BY
SENIOR LANDSCAPE ARCHITECT | JENNIFER TAIRA
STATE OF CALIFORNIA - DEPARTMENT OF TRANSPORTATION
Caltrans LANDSCAPE ARCHITECTURE

LAST REVISION 00-00-00 | DATE PLOTTED => 10-JUN-2010 | TIME PLOTTED => 08:37

Dist	COUNTY	ROUTE	KILOMETER POST TOTAL PROJECT	SHEET No.	TOTAL SHEETS
07	LA	405	39.7/41.5	145	439

Caltrans Metric

Ohannes O Anserlian 12/10/09
REGISTERED ELECTRICAL ENGINEER

6-7-10
PLANS APPROVAL DATE

REGISTERED PROFESSIONAL ENGINEER OHANNES ANSERLIAN No. E16682 Exp. 6/30/10 ELECTRICAL STATE OF CALIFORNIA

THE STATE OF CALIFORNIA OR ITS OFFICERS OR AGENTS SHALL NOT BE RESPONSIBLE FOR THE ACCURACY OR COMPLETENESS OF ELECTRONIC COPIES OF THIS PLAN SHEET.

GENERAL NOTES: (SHEETS E-1 TO E-8)

1. RC CONDUCTORS FROM SIGN STRUCTURES THAT ARE TO BE MODIFIED. INSTALL 2#10, 1#8G CONDUCTORS FROM THE PULL BOX ADJACENT TO EACH MODIFIED SIGN TO THE LIGHTING FIXTURES.

PROJECT NOTES: (SHEETS E-1 TO E-8)

1 EXISTING 41C, 2#4, 2#6. RC 2#6 CONDUCTORS. INSTALL 2#4, 1#8G CONDUCTORS.

2 RC CONDUCTORS, INSTALL 2#4, 1#8G IN EXISTING CONDUIT.

3 INSTALL 53C, 2#4, 1#8G.

4 INSTALL 53C, 2#6, 1#8G.

5 RC CONDUCTORS, INSTALL 2#6, 1#8G IN EXISTING CONDUIT.

6 INSTALL 53C, 4#6, 1#8G.

7 RC CONDUCTORS, INSTALL 4#6, 1#8G IN EXISTING CONDUIT.

8 RC CONDUCTORS, INSTALL 6#6, 1#8G IN EXISTING CONDUIT.

9 RC CONDUCTORS, INSTALL 8#6, 1#8G IN EXISTING CONDUIT.

10 RC SIGN LIGHTING EQUIPMENT.

11 INSTALL 78C, TYPE 3, MT. TYPE H SERVICE AS PER UTILITY REQUIREMENTS. CONDUCTORS BY UTILITY COMPANY.

12 THE CONDUIT SHALL BE TYPE 4, SIZE 53.

13 EXISTING POWER POLE TO BE REMOVED AND REPLACED BY SOUTHERN CALIFORNIA EDISON WITH NEW POWER POLE APPROXIMATELY 12.2 m EAST OF THE EXISTING LOCATION.

14 RC TYPE "E" AND TYPE "F" SERVICE COMPLETE.

15 EXISTING 78C, RC CONDUCTORS, CONDUCTORS TO BE INSTALLED BY SERVING UTILITY COMPANY.

WIRING DIAGRAM LEGEND: (SHEETS E-9 TO E-14)

- INSTALL 310 W HPS LAMP AND INTEGRAL BALLAST
- INSTALL 200 W HPS LAMP AND INTEGRAL BALLAST
- INSTALL 85 W INDUCTIVE SIGN LIGHTING (ISL) LAMP AND INTEGRAL BALLAST
- INSTALL No. 6 CONDUCTOR, UNLESS OTHERWISE NOTED
- EXISTING LAMP AND BALLAST
- EXISTING LAMP AND BALLAST TO BE REMOVED
- RC EXISTING SIGN LAMP AND BALLAST.
- EXISTING CONDUCTOR TO BE REMOVED
- EXISTING CONDUCTOR
- SPLICE CONDUCTOR
- EXISTING SPLICE

THIS PLAN ACCURATE FOR ELECTRICAL WORK ONLY.

MODIFY LIGHTING AND SIGN ILLUMINATION

NO SCALE

E-1

STATE OF CALIFORNIA - DEPARTMENT OF TRANSPORTATION
Caltrans TRAFFIC DESIGN

FUNCTIONAL SUPERVISOR: YEFIM ZABEZHINSKY
CALCULATED-DESIGNED BY: MICHAEL MARVI
CHECKED BY: OHANNES ANSERLIAN
REVISED BY / DATE REVISED

LAST REVISION 00-00-00 | DATE PLOTTED => 08-JUN-2010 | TIME PLOTTED => 06:06

NOTE:FOR ACCURATE RIGHT OF WAY ACCESS DATA, CONTACT RIGHT OF WAY ENGINEERING AT THE DISTRICT OFFICE.

Dist	COUNTY	ROUTE	KILOMETER POST TOTAL PROJECT	SHEET No.	TOTAL SHEETS
07	LA	405	39.7/41.5	146	439

Ohannes O Anserlian 12/10/09
REGISTERED ELECTRICAL ENGINEER

6-7-10
PLANS APPROVAL DATE

REGISTERED PROFESSIONAL ENGINEER OHANNES ANSERLIAN No. E16682 Exp. 6/30/10 ELECTRICAL STATE OF CALIFORNIA

THE STATE OF CALIFORNIA OR ITS OFFICERS OR AGENTS SHALL NOT BE RESPONSIBLE FOR THE ACCURACY OR COMPLETENESS OF ELECTRONIC COPIES OF THIS PLAN SHEET.

EXISTING TYPE III-BF SERVICE EQUIPMENT ENCLOSURE WITH:

1-100 A, 2 POLE, 120/240 V MAIN
2-30 A, 1 POLE, 120 V IRRIGATION
1-30 A, 2 POLE, 240 V SIGN LIGHTING
1-30 A, 1 POLE, 120 V RAMP CONTROLLER 196
2-30 A, 1 POLE, 120 V DATA NODE CCTV
1-30 A,1 POLE, 120 V FOR RAMP CONTROLLER
1-40 A, 2 POLE, 240 V FWY LIGHTING
1-30 A, 2 POLE, 240 V FWY SIGN

ADD 1-30 A, 2 POLE, 240 V FWY LIGHTING

ID No. 07-53-405-0-40.708 KP
ADDRESS: 6080 1/2 HOWARD HUGHES PARKWAY

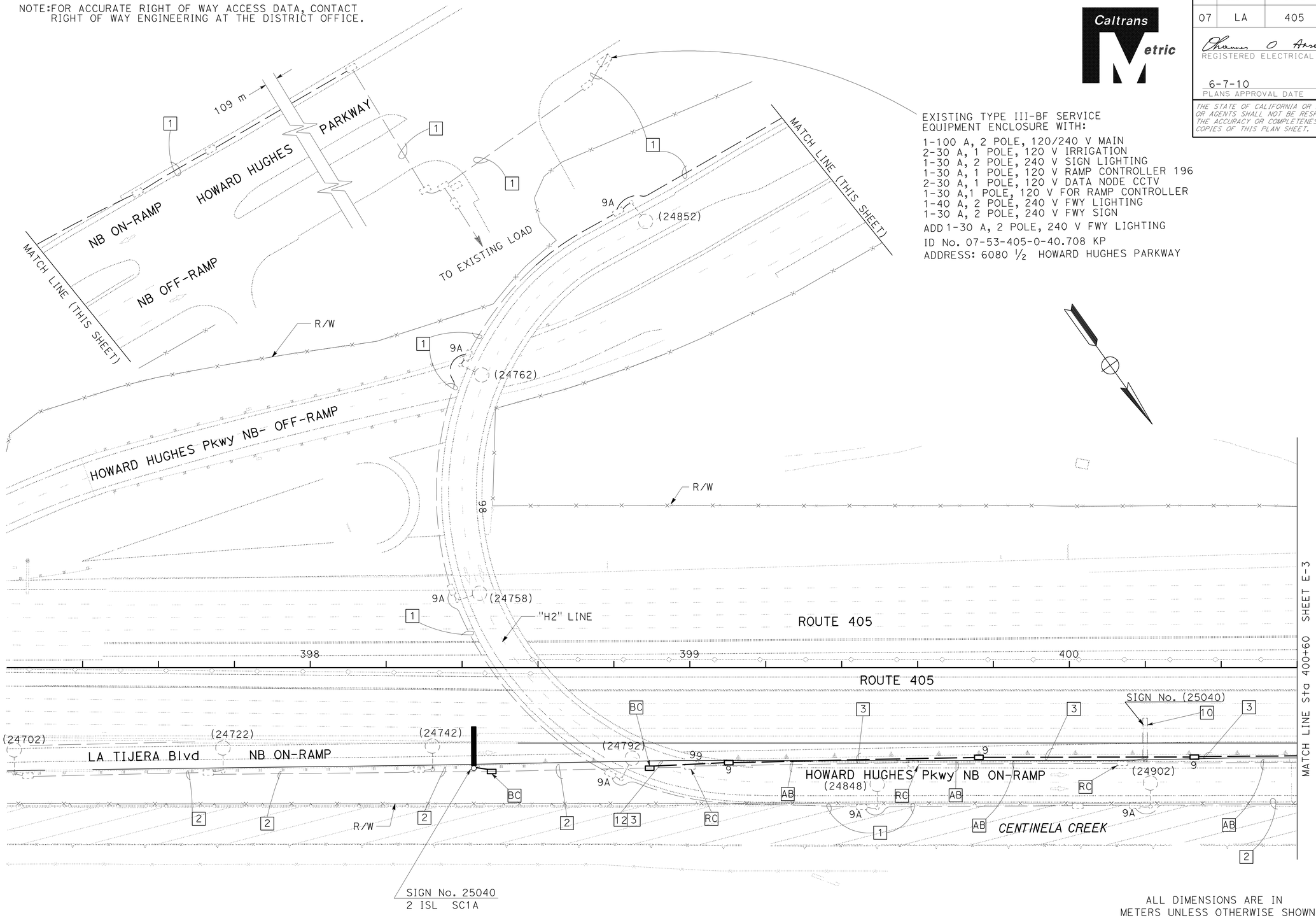

ALL DIMENSIONS ARE IN METERS UNLESS OTHERWISE SHOWN

MODIFY LIGHTING AND SIGN ILLUMINATION

SCALE 1:500

E-2

FOR WIRING DIAGRAM SEE SHEETS E-9, E-10.
FOR LEGEND, GENERAL NOTES AND PROJECT NOTES SEE SHEET E-1.

THIS PLAN IS ACCURATE FOR ELECTRICAL WORK ONLY.

STATE OF CALIFORNIA - DEPARTMENT OF TRANSPORTATION
Caltrans
TRAFFIC DESIGN

FUNCTIONAL SUPERVISOR: YEFIM ZABEZHINSKY
CALCULATED-DESIGNED BY: MICHAEL MARVI
CHECKED BY: OHANNES ANSERLIAN
REVISED BY / DATE REVISED

LAST REVISION 00-00-00
DATE PLOTTED => 08-JUN-2010
TIME PLOTTED => 07:59

NOTE: FOR ACCURATE RIGHT OF WAY ACCESS DATA, CONTACT
RIGHT OF WAY ENGINEERING AT THE DISTRICT OFFICE.

Dist	COUNTY	ROUTE	KILOMETER POST TOTAL PROJECT	SHEET No.	TOTAL SHEETS
07	LA	405	39.7/41.5	147	439

Ohannes O Anserlian 12/10/09
REGISTERED ELECTRICAL ENGINEER

6-7-10
PLANS APPROVAL DATE

REGISTERED PROFESSIONAL ENGINEER OHANNES ANSERLIAN No. E16682 Exp. 6/30/10 ELECTRICAL STATE OF CALIFORNIA

THE STATE OF CALIFORNIA OR ITS OFFICERS OR AGENTS SHALL NOT BE RESPONSIBLE FOR THE ACCURACY OR COMPLETENESS OF ELECTRONIC COPIES OF THIS PLAN SHEET.

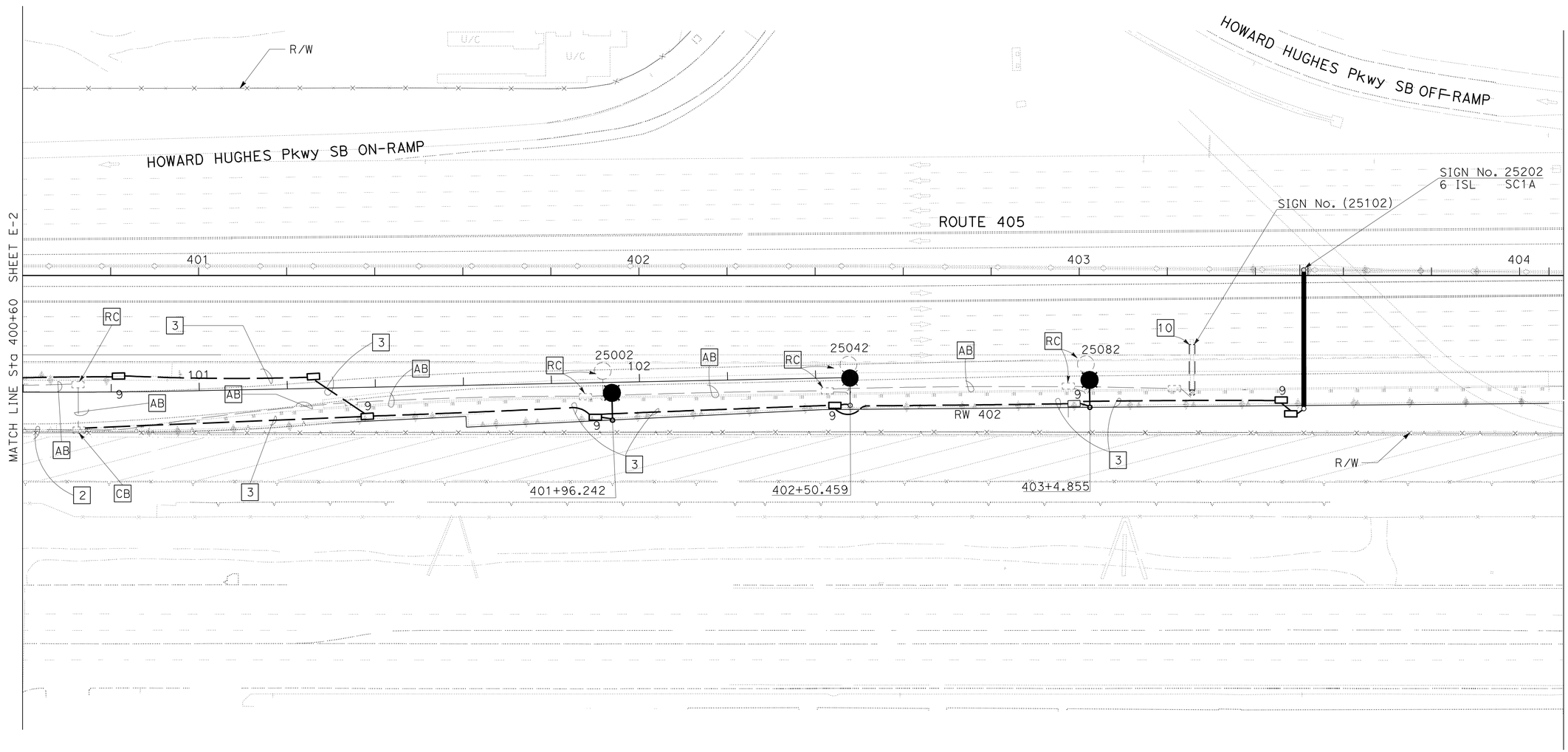

ALL DIMENSIONS ARE IN
METERS UNLESS OTHERWISE SHOWN

MODIFY
LIGHTING AND SIGN ILLUMINATION

SCALE 1:500

E-3

FOR WIRING DIAGRAM SEE SHEETS E-9, E-10.
FOR LEGEND, GENERAL NOTES AND PROJECT NOTES SEE SHEET E-1.

THIS PLAN IS ACCURATE FOR ELECTRICAL WORK ONLY.

STATE OF CALIFORNIA - DEPARTMENT OF TRANSPORTATION
Caltrans
TRAFFIC DESIGN

FUNCTIONAL SUPERVISOR: YEFIM ZABEZHINSKY
CALCULATED-DESIGNED BY: MICHAEL MARVI
CHECKED BY: OHANNES ANSERLIAN
REVISED BY
DATE REVISED

LAST REVISION 00-00-00
DATE PLOTTED => 08-JUN-2010
TIME PLOTTED => 07:59

NOTE:FOR ACCURATE RIGHT OF WAY ACCESS DATA, CONTACT
RIGHT OF WAY ENGINEERING AT THE DISTRICT OFFICE.

Dist	COUNTY	ROUTE	KILOMETER POST TOTAL PROJECT	SHEET No.	TOTAL SHEETS
07	LA	405	39.7/41.5	148	439

Ohannes O Anserlian 12/10/09
REGISTERED ELECTRICAL ENGINEER

6-7-10
PLANS APPROVAL DATE

REGISTERED PROFESSIONAL ENGINEER OHANNES ANSERLIAN No. E16682 Exp. 6/30/10 ELECTRICAL STATE OF CALIFORNIA

THE STATE OF CALIFORNIA OR ITS OFFICERS OR AGENTS SHALL NOT BE RESPONSIBLE FOR THE ACCURACY OR COMPLETENESS OF ELECTRONIC COPIES OF THIS PLAN SHEET.

EXISTING 120/240 V METERED, DUAL METER,
TYPE III-CF SERVICE EQUIPMENT ENCLOSURE WITH EXISTING:

1-30 A, 2 POLE, 240 V FOR SIGN LIGHTING
1-30 A, 2 POLE, 240 V FOR FWY LIGHTING
1-15 A, 1 POLE, 120 V FOR SPRINKLER
1-20 A, 1 POLE, 120 V FOR LIGHTING CONTROL
ADD 15 A, 1 POLE, 120 V FOR NEW IRRIGATION CONTROL
METER 1, ID No. 07-53-405-0-040. 708 KP,
METER 2, ID No. 07-53-405-0-040, 706 KP,
ADDRESS: 6050 1/2 CENTINELA Ave
ADDRESS: 6050 3/4 CENTINELA Ave

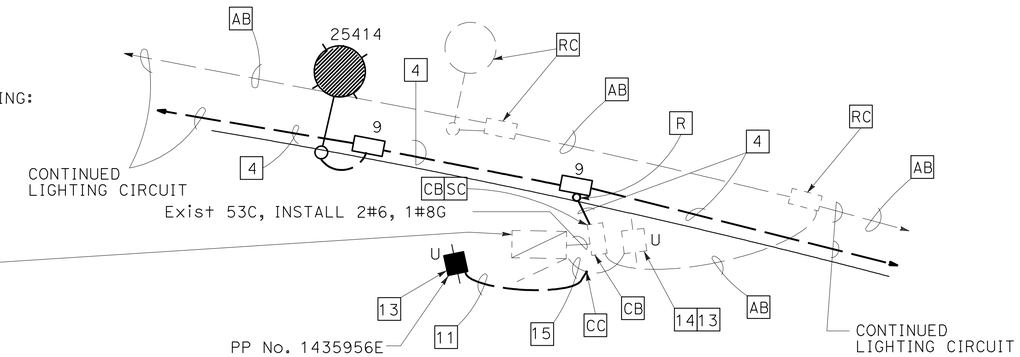

DETAIL "A"

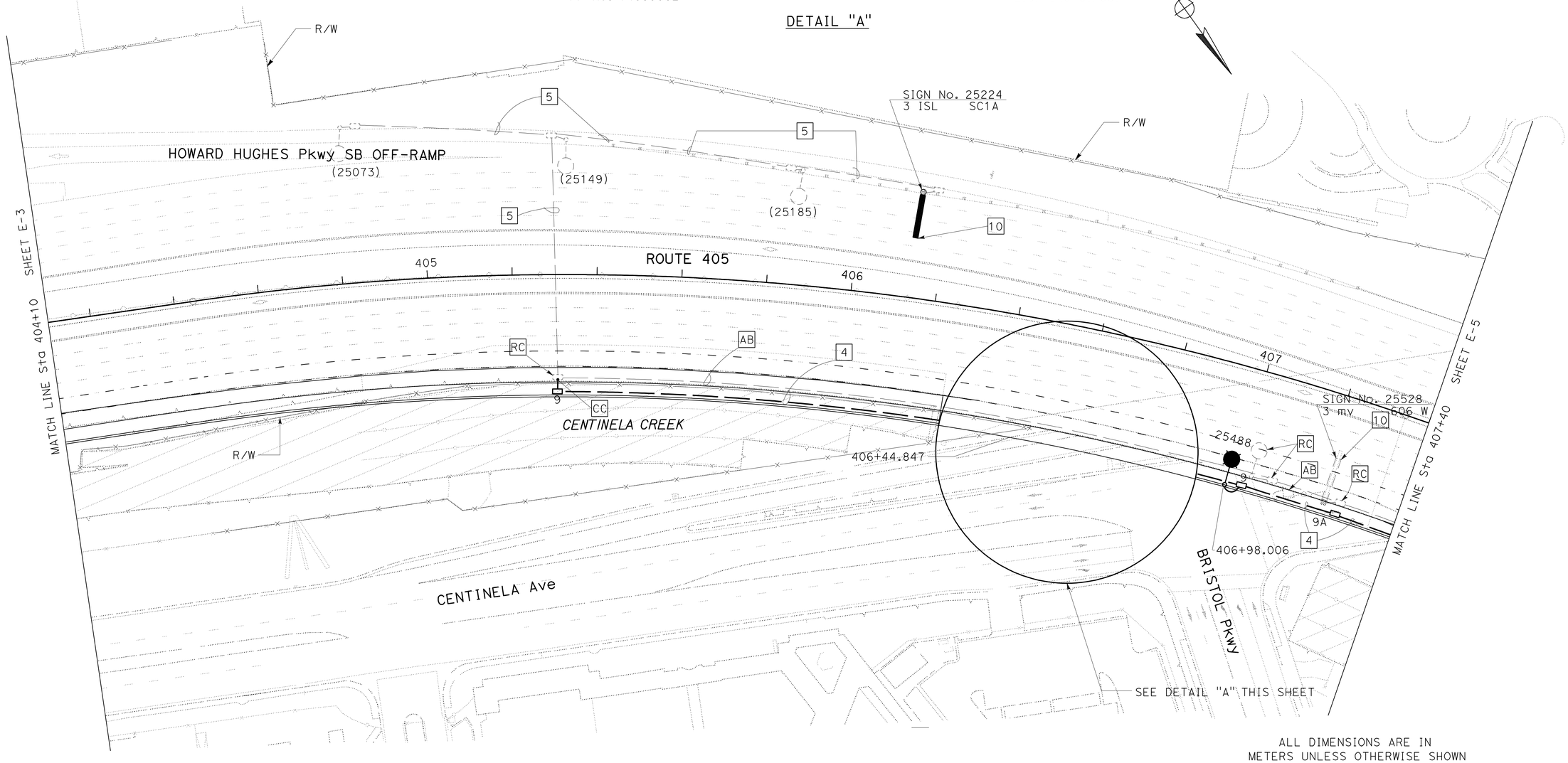

ALL DIMENSIONS ARE IN
METERS UNLESS OTHERWISE SHOWN

MODIFY
LIGHTING AND SIGN ILLUMINATION

SCALE 1:500

E-4

FOR WIRING DIAGRAM SEE SHEETS E-11, E-12.
FOR LEGEND, GENERAL NOTES AND PROJECT NOTES SEE SHEET E-1.
THIS PLAN IS ACCURATE FOR ELECTRICAL WORK ONLY.

REVISED BY	DATE REVISED

CALCULATED-DESIGNED BY: MICHAEL MARVI
CHECKED BY: OHANNES ANSERLIAN
FUNCTIONAL SUPERVISOR: YEFIM ZABEZHINSKY

STATE OF CALIFORNIA - DEPARTMENT OF TRANSPORTATION
Caltrans
TRAFFIC DESIGN

LAST REVISION 00-00-00
DATE PLOTTED => 08-JUN-2010
TIME PLOTTED => 07:59

NOTE:FOR ACCURATE RIGHT OF WAY ACCESS DATA, CONTACT RIGHT OF WAY ENGINEERING AT THE DISTRICT OFFICE.

Dist	COUNTY	ROUTE	KILOMETER POST TOTAL PROJECT	SHEET No.	TOTAL SHEETS
07	LA	405	39.7/41.5	149	439

Ohannes O Anserlian 12/10/09
REGISTERED ELECTRICAL ENGINEER

6-7-10
PLANS APPROVAL DATE

REGISTERED PROFESSIONAL ENGINEER OHANNES ANSERLIAN No. E16682 Exp. 6/30/10 ELECTRICAL STATE OF CALIFORNIA

THE STATE OF CALIFORNIA OR ITS OFFICERS OR AGENTS SHALL NOT BE RESPONSIBLE FOR THE ACCURACY OR COMPLETENESS OF ELECTRONIC COPIES OF THIS PLAN SHEET.

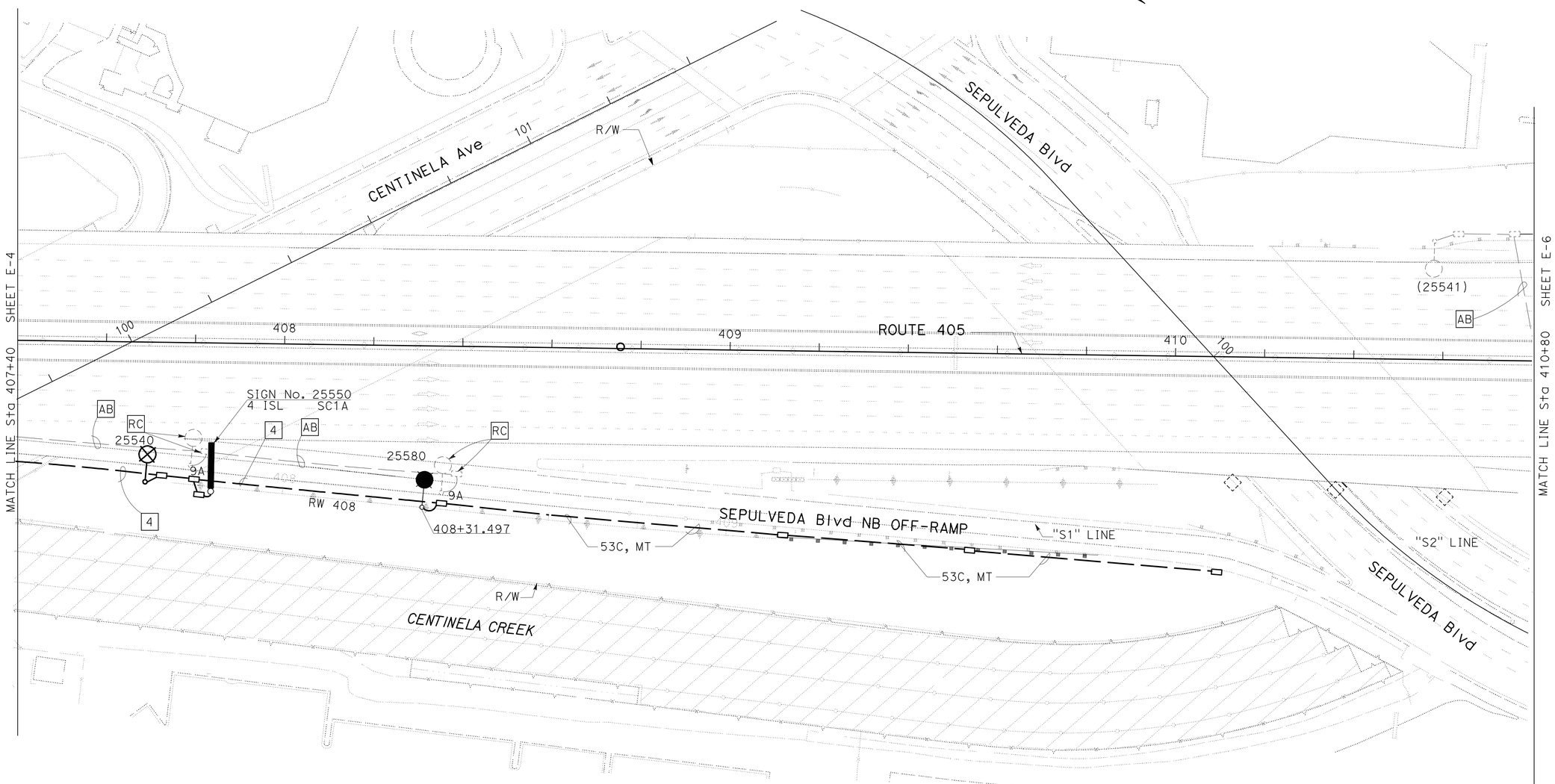

FOR WIRING DIAGRAM SEE SHEETS E-11, E-12, E-13, E-14.
FOR LEGEND, GENERAL NOTES AND PROJECT NOTES SEE SHEET E-1.

THIS PLAN IS ACCURATE FOR ELECTRICAL WORK ONLY.

ALL DIMENSIONS ARE IN METERS UNLESS OTHERWISE SHOWN

MODIFY LIGHTING AND SIGN ILLUMINATION

SCALE 1:500

E-5

REVISED BY	
DATE REVISED	
CALCULATED-DESIGNED BY	MICHAEL MARVI
CHECKED BY	OHANNES ANSERLIAN
FUNCTIONAL SUPERVISOR	YEFIM ZABEZHINSKY

STATE OF CALIFORNIA - DEPARTMENT OF TRANSPORTATION
Caltrans
TRAFFIC DESIGN

LAST REVISION 00-00-00 | DATE PLOTTED => 08-JUN-2010 | TIME PLOTTED => 07:59

NOTE:FOR ACCURATE RIGHT OF WAY ACCESS DATA, CONTACT
RIGHT OF WAY ENGINEERING AT THE DISTRICT OFFICE.

Dist	COUNTY	ROUTE	KILOMETER POST TOTAL PROJECT	SHEET No.	TOTAL SHEETS
07	LA	405	39.7/41.5	150	439

Caltrans Metric

12/10/09
REGISTERED ELECTRICAL ENGINEER

6-7-10
PLANS APPROVAL DATE

REGISTERED PROFESSIONAL ENGINEER
OHANNES ANSERLIAN
No. E16682
Exp. 6/30/10
ELECTRICAL
STATE OF CALIFORNIA

THE STATE OF CALIFORNIA OR ITS OFFICERS OR AGENTS SHALL NOT BE RESPONSIBLE FOR THE ACCURACY OR COMPLETENESS OF ELECTRONIC COPIES OF THIS PLAN SHEET.

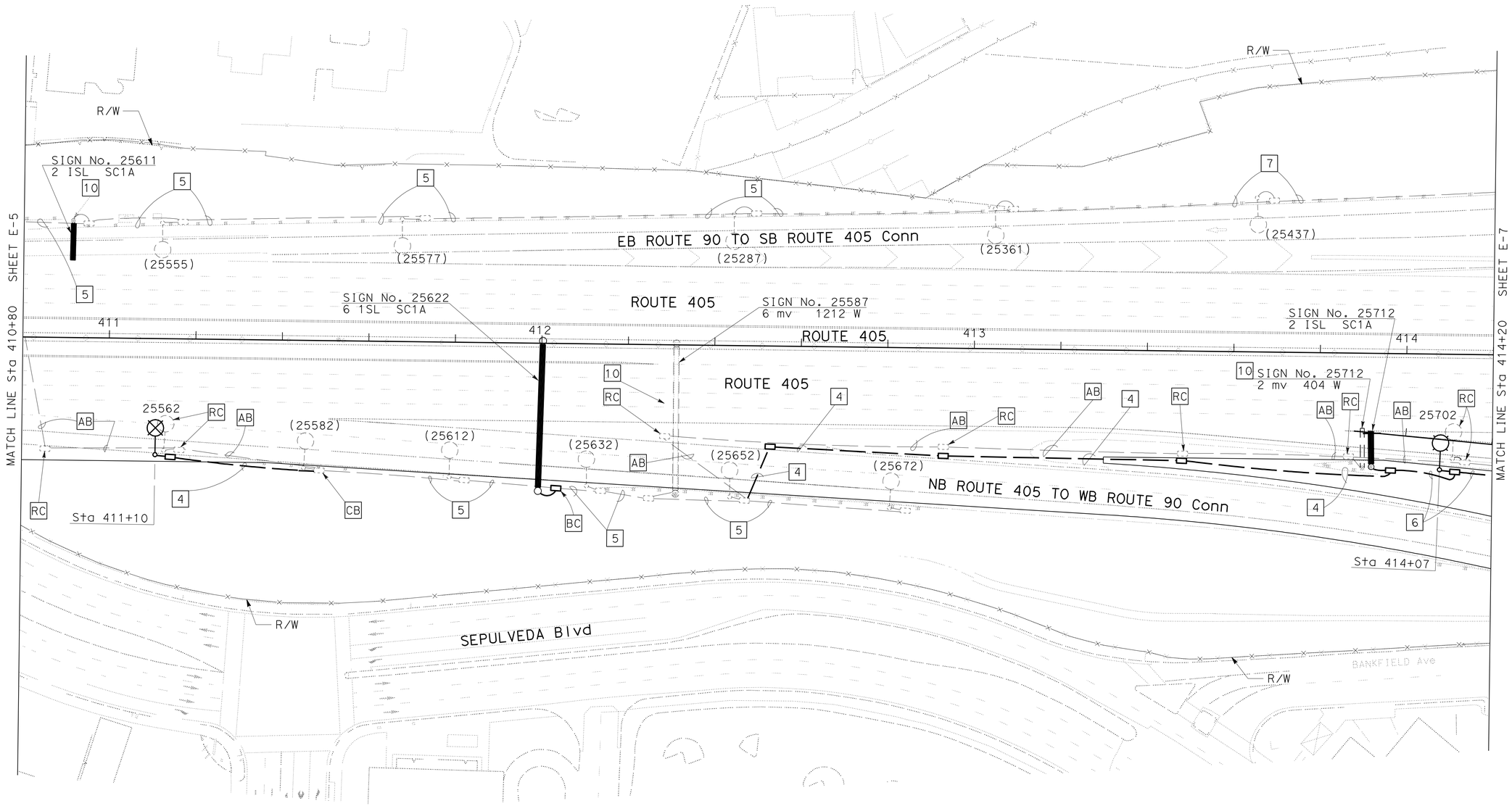

ALL DIMENSIONS ARE IN
METERS UNLESS OTHERWISE SHOWN

MODIFY
LIGHTING AND SIGN ILLUMINATION

SCALE 1:500

E-6

FOR WIRING DIAGRAM SEE SHEETS E-13, E-14.
FOR LEGEND, GENERAL NOTES AND PROJECT NOTES SEE SHEET E-1.

THIS PLAN IS ACCURATE FOR ELECTRICAL WORK ONLY.

STATE OF CALIFORNIA - DEPARTMENT OF TRANSPORTATION
Caltrans
TRAFFIC DESIGN

FUNCTIONAL SUPERVISOR: YEFIM ZABEZHINSKY
CALCULATED-DESIGNED BY: MICHAEL MARVI
CHECKED BY: OHANNES ANSERLIAN
REVISED BY / DATE REVISED

LAST REVISION 00-00-00
DATE PLOTTED => 08-JUN-2010
TIME PLOTTED => 07:59

NOTE: FOR ACCURATE RIGHT OF WAY ACCESS DATA, CONTACT RIGHT OF WAY ENGINEERING AT THE DISTRICT OFFICE.

Dist	COUNTY	ROUTE	KILOMETER POST TOTAL PROJECT	SHEET No.	TOTAL SHEETS
07	LA	405	39.7/41.5	151	439

Johannes O Anserlian 12/10/09
REGISTERED ELECTRICAL ENGINEER

6-7-10
PLANS APPROVAL DATE

REGISTERED PROFESSIONAL ENGINEER OHANNES ANSERLIAN No. E16682 Exp. 6/30/10 ELECTRICAL STATE OF CALIFORNIA

THE STATE OF CALIFORNIA OR ITS OFFICERS OR AGENTS SHALL NOT BE RESPONSIBLE FOR THE ACCURACY OR COMPLETENESS OF ELECTRONIC COPIES OF THIS PLAN SHEET.

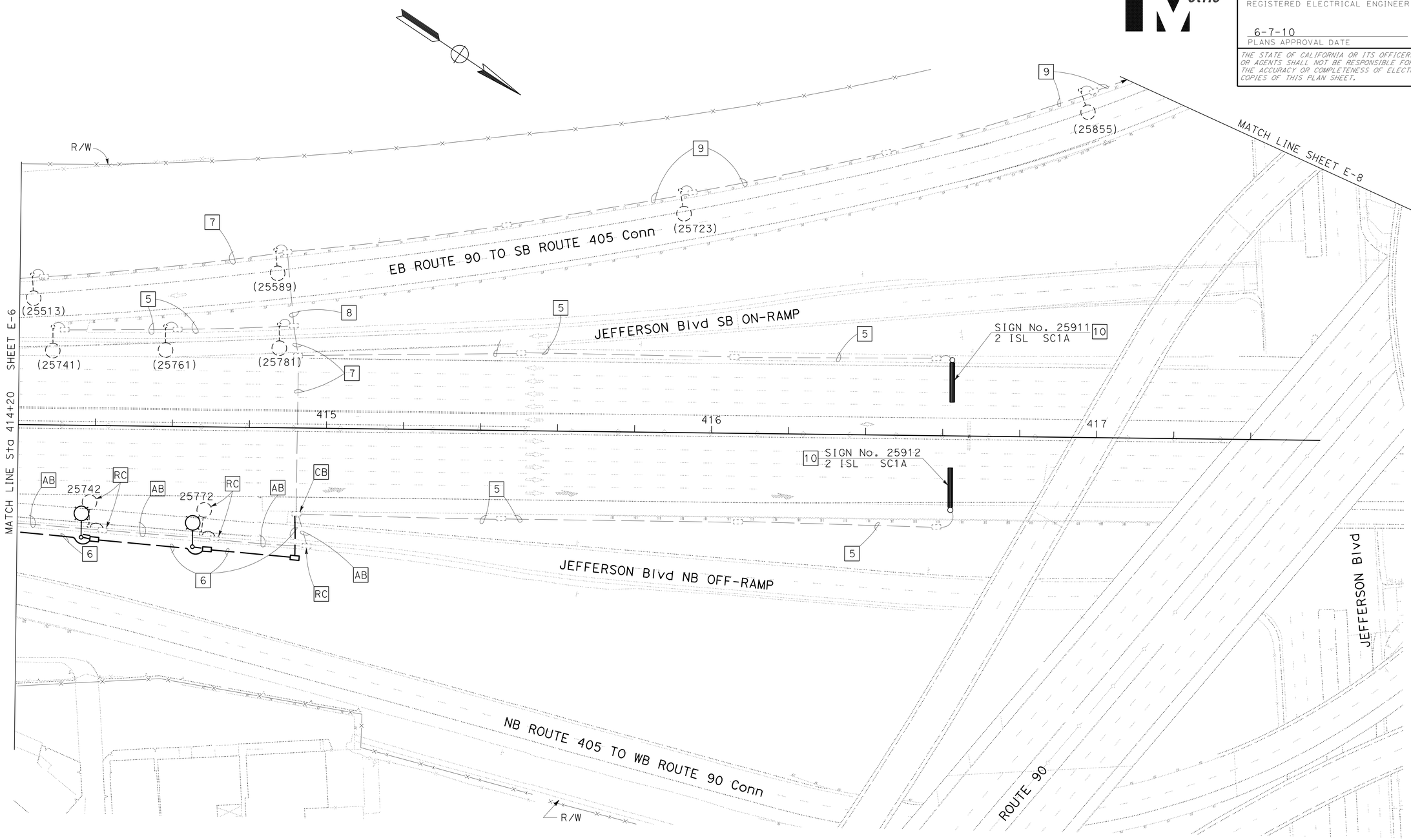

ALL DIMENSIONS ARE IN METERS UNLESS OTHERWISE SHOWN

MODIFY LIGHTING AND SIGN ILLUMINATION

SCALE 1:500

FOR WIRING DIAGRAM SEE SHEETS E-13, E-14.
FOR LEGEND, GENERAL NOTES AND PROJECT NOTES SEE SHEET E-1.

THIS PLAN IS ACCURATE FOR ELECTRICAL WORK ONLY.

E-7

STATE OF CALIFORNIA - DEPARTMENT OF TRANSPORTATION
Caltrans
TRAFFIC DESIGN

FUNCTIONAL SUPERVISOR: YEFIM ZABEZHINSKY
CALCULATED-DESIGNED BY: MICHAEL MARVI
CHECKED BY: OHANNES ANSERLIAN
REVISED BY
DATE REVISED

LAST REVISION 00-00-00
DATE PLOTTED => 08-JUN-2010
TIME PLOTTED => 07:59

NOTE:FOR ACCURATE RIGHT OF WAY ACCESS DATA, CONTACT
RIGHT OF WAY ENGINEERING AT THE DISTRICT OFFICE.

Dist	COUNTY	ROUTE	KILOMETER POST TOTAL PROJECT	SHEET No.	TOTAL SHEETS
07	LA	405	39.7/41.5	152	439

Ohannes O Anserlian 12/10/09
REGISTERED ELECTRICAL ENGINEER

6-7-10
PLANS APPROVAL DATE

REGISTERED PROFESSIONAL ENGINEER
OHANNES ANSERLIAN
No. E16682
Exp. 6/30/10
ELECTRICAL
STATE OF CALIFORNIA

THE STATE OF CALIFORNIA OR ITS OFFICERS OR AGENTS SHALL NOT BE RESPONSIBLE FOR THE ACCURACY OR COMPLETENESS OF ELECTRONIC COPIES OF THIS PLAN SHEET.

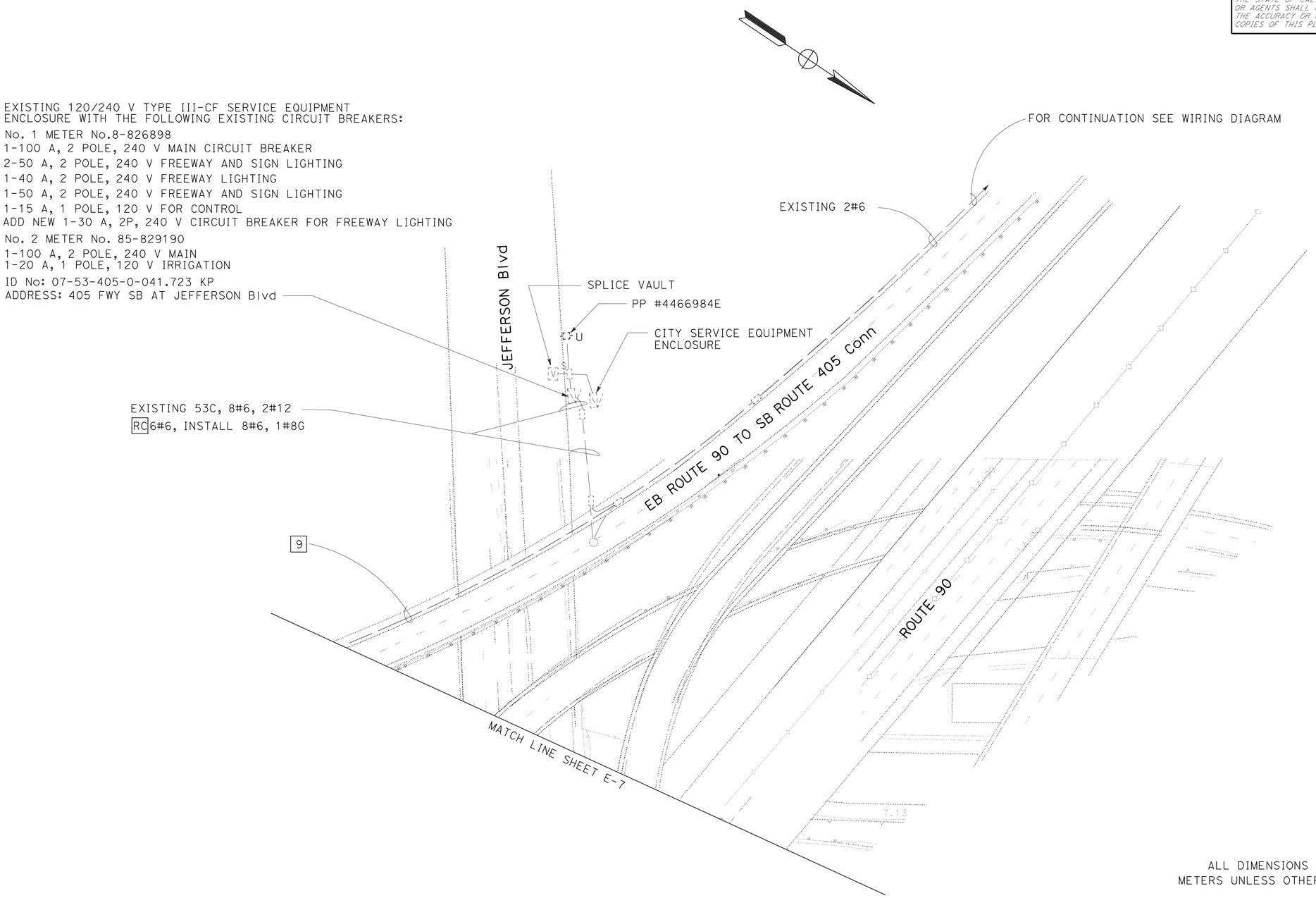

ALL DIMENSIONS ARE IN
METERS UNLESS OTHERWISE SHOWN

MODIFY
LIGHTING AND SIGN ILLUMINATION

SCALE 1:500

E-8

FOR WIRING DIAGRAM SEE SHEETS E-13. E-14.
FOR LEGEND, GENERAL NOTES AND PROJECT NOTES SEE SHEET E-1.

THIS PLAN IS ACCURATE FOR ELECTRICAL WORK ONLY.

STATE OF CALIFORNIA - DEPARTMENT OF TRANSPORTATION
Caltrans
TRAFFIC DESIGN

FUNCTIONAL SUPERVISOR: YEFIM ZABEZHINSKY
CALCULATED-DESIGNED BY: MICHAEL MARVI
CHECKED BY: OHANNES ANSERLIAN
REVISED BY
DATE REVISED

LAST REVISION 00-00-00
DATE PLOTTED => 09-JUN-2010
TIME PLOTTED => 14:07

Dist	COUNTY	ROUTE	KILOMETER POST TOTAL PROJECT	SHEET No.	TOTAL SHEETS
07	LA	405	39.7/41.5	153	439

Caltrans Metric

Ohannes O Anserlian 12/10/09
REGISTERED ELECTRICAL ENGINEER

6-7-10
PLANS APPROVAL DATE

REGISTERED PROFESSIONAL ENGINEER OHANNES ANSERLIAN No. E16682 Exp. 6/30/10 ELECTRICAL STATE OF CALIFORNIA

THE STATE OF CALIFORNIA OR ITS OFFICERS OR AGENTS SHALL NOT BE RESPONSIBLE FOR THE ACCURACY OR COMPLETENESS OF ELECTRONIC COPIES OF THIS PLAN SHEET.

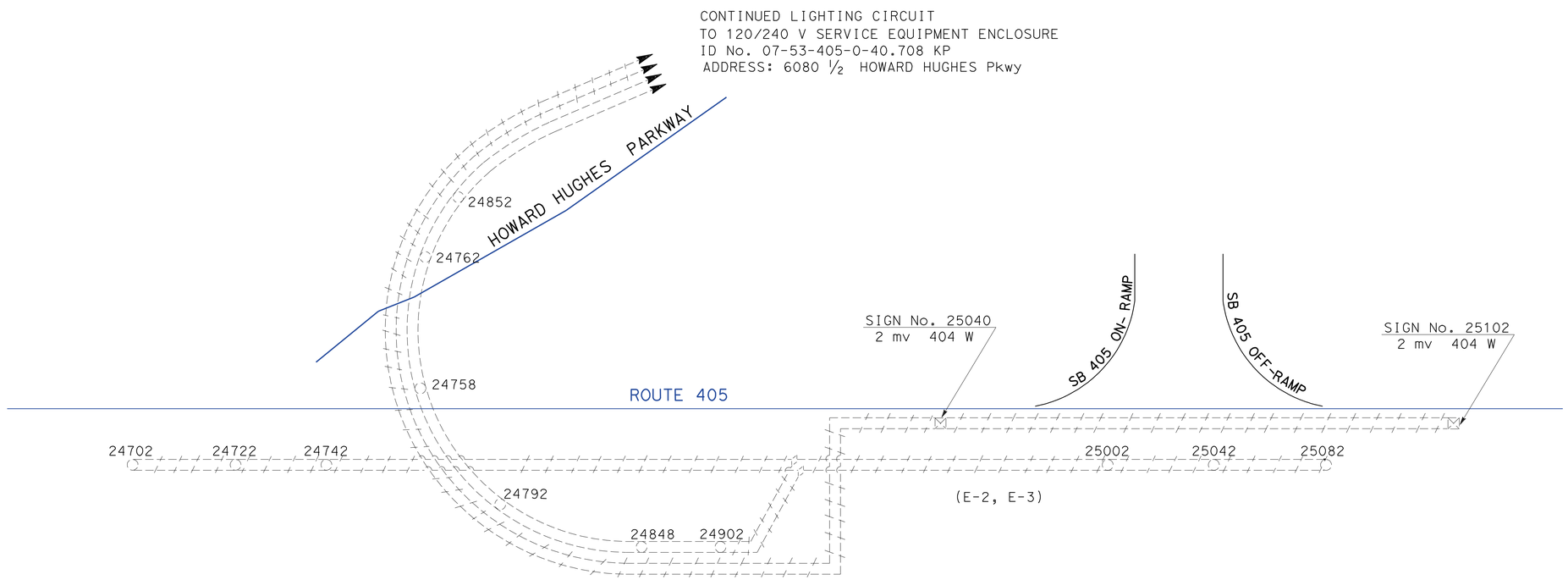

FOR LEGEND, GENERAL NOTES AND PROJECT NOTES SEE SHEET E-1.

THIS PLAN IS ACCURATE FOR ELECTRICAL WORK ONLY.

MODIFY LIGHTING AND SIGN ILLUMINATION (WIRING DIAGRAM)

NO SCALE

E-9

STATE OF CALIFORNIA - DEPARTMENT OF TRANSPORTATION
Caltrans **TRAFFIC DESIGN**

FUNCTIONAL SUPERVISOR: YEFIM ZABEZHINSKY
CALCULATED-DESIGNED BY: MICHAEL MARVI
CHECKED BY: OHANNES ANSERLIAN
REVISED BY
DATE REVISED

LAST REVISION 00-00-00 | DATE PLOTTED => 08-JUN-2010 | TIME PLOTTED => 08:00

Dist	COUNTY	ROUTE	KILOMETER POST TOTAL PROJECT	SHEET No.	TOTAL SHEETS
07	LA	405	39.7/41.5	154	439

Caltrans Metric

Ohannes O Anserlian 12/10/09
REGISTERED ELECTRICAL ENGINEER

6-7-10
PLANS APPROVAL DATE

REGISTERED PROFESSIONAL ENGINEER
OHANNES ANSERLIAN
No. E16682
Exp. 6/30/10
ELECTRICAL
STATE OF CALIFORNIA

THE STATE OF CALIFORNIA OR ITS OFFICERS OR AGENTS SHALL NOT BE RESPONSIBLE FOR THE ACCURACY OR COMPLETENESS OF ELECTRONIC COPIES OF THIS PLAN SHEET.

CONTINUED LIGHTING CIRCUIT
TO 120/240 V SERVICE EQUIPMENT ENCLOSURE
ID No. 07-53-405-0-40.708 KP
LOCATION: 6080 1/2 HOWARD HUGHES Pkwy

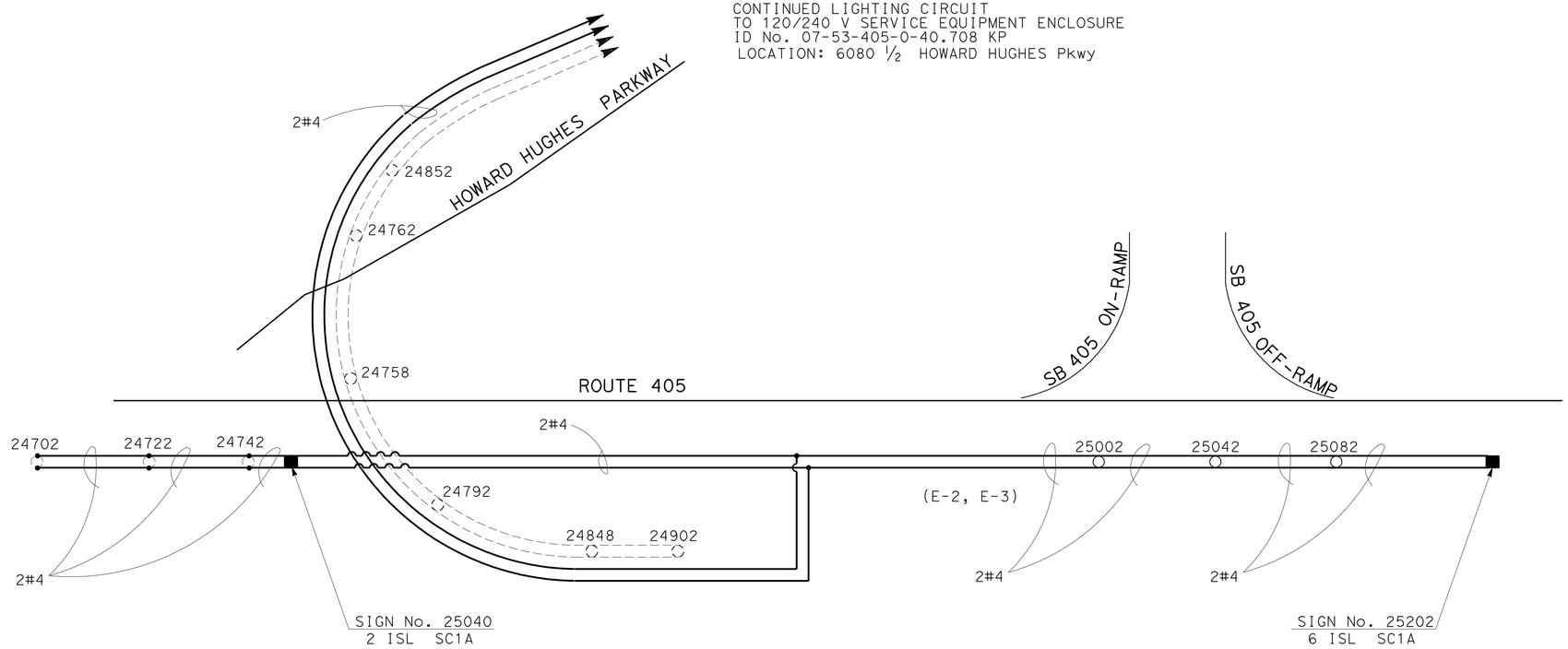

FOR LEGEND, GENERAL NOTES AND PROJECT NOTES SEE SHEET E-1.

THIS PLAN IS ACCURATE FOR ELECTRICAL WORK ONLY.

MODIFY
LIGHTING AND SIGN ILLUMINATION
(WIRING DIAGRAM)

NO SCALE

E-10

STATE OF CALIFORNIA - DEPARTMENT OF TRANSPORTATION
Caltrans
TRAFFIC DESIGN

FUNCTIONAL SUPERVISOR: YEFIM ZABEZHINSKY
CALCULATED-DESIGNED BY: MICHAEL MARVI
CHECKED BY: OHANNES ANSERLIAN
REVISED BY
DATE REVISED

LAST REVISION 00-00-00
DATE PLOTTED => 08-JUN-2010
TIME PLOTTED => 08:00

Dist	COUNTY	ROUTE	KILOMETER POST TOTAL PROJECT	SHEET No.	TOTAL SHEETS
07	LA	405	39.7/41.5	155	439

Ohannes O Anserlian 12/10/09
REGISTERED ELECTRICAL ENGINEER

6-7-10
PLANS APPROVAL DATE

REGISTERED PROFESSIONAL ENGINEER
OHANNES ANSERLIAN
No. E16682
Exp. 6/30/10
ELECTRICAL
STATE OF CALIFORNIA

THE STATE OF CALIFORNIA OR ITS OFFICERS OR AGENTS SHALL NOT BE RESPONSIBLE FOR THE ACCURACY OR COMPLETENESS OF ELECTRONIC COPIES OF THIS PLAN SHEET.

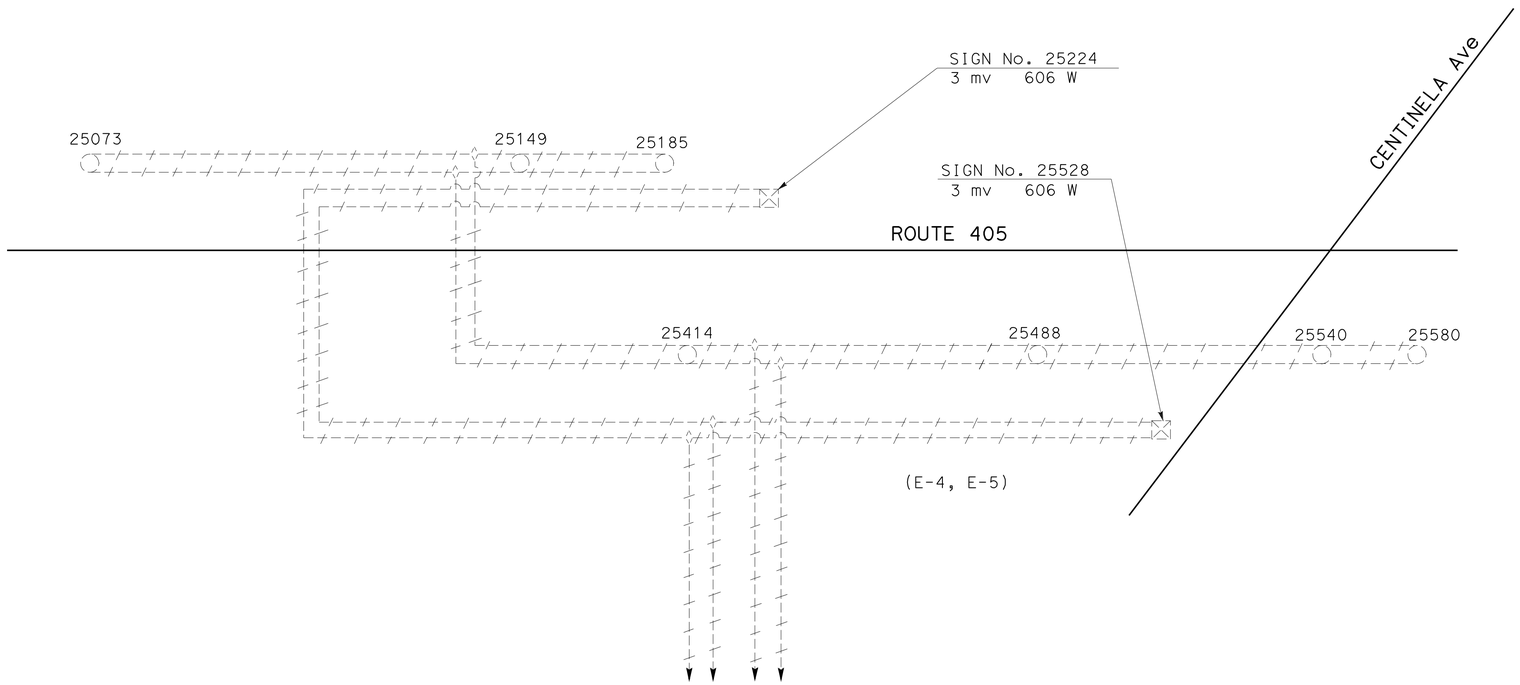

EXISTING 120/240 V TYPE III-CF SERVICE EQUIPMENT ENCLOSURE
ID No. 07-53-405-0-040.708 AND 07-53-405-0-040.706 KP
ADDRESS: 60501 1/2 CENTINELA Ave
ADDRESS: 6050 3/4 CENTINELA Ave

FOR LEGEND, GENERAL NOTES AND PROJECT NOTES SEE SHEET E-1.

THIS PLAN IS ACCURATE FOR ELECTRICAL WORK ONLY.

MODIFY LIGHTING AND SIGN ILLUMINATION
(WIRING DIAGRAM)

NO SCALE

E-11

STATE OF CALIFORNIA - DEPARTMENT OF TRANSPORTATION
Caltrans
TRAFFIC DESIGN

FUNCTIONAL SUPERVISOR: YEFIM ZABEZHINSKY
CALCULATED-DESIGNED BY: MICHAEL MARVI
CHECKED BY: OHANNES ANSERLIAN
REVISED BY
DATE REVISED

LAST REVISION 00-00-00 | DATE PLOTTED => 08-JUN-2010 | TIME PLOTTED => 08:00

Dist	COUNTY	ROUTE	KILOMETER POST TOTAL PROJECT	SHEET No.	TOTAL SHEETS
07	LA	405	39.7/41.5	156	439

Caltrans Metric

Ohannes O Anserlian 12/10/09
REGISTERED ELECTRICAL ENGINEER

6-7-10
PLANS APPROVAL DATE

REGISTERED PROFESSIONAL ENGINEER
OHANNES ANSERLIAN
No. E16682
Exp. 6/30/10
ELECTRICAL
STATE OF CALIFORNIA

THE STATE OF CALIFORNIA OR ITS OFFICERS OR AGENTS SHALL NOT BE RESPONSIBLE FOR THE ACCURACY OR COMPLETENESS OF ELECTRONIC COPIES OF THIS PLAN SHEET.

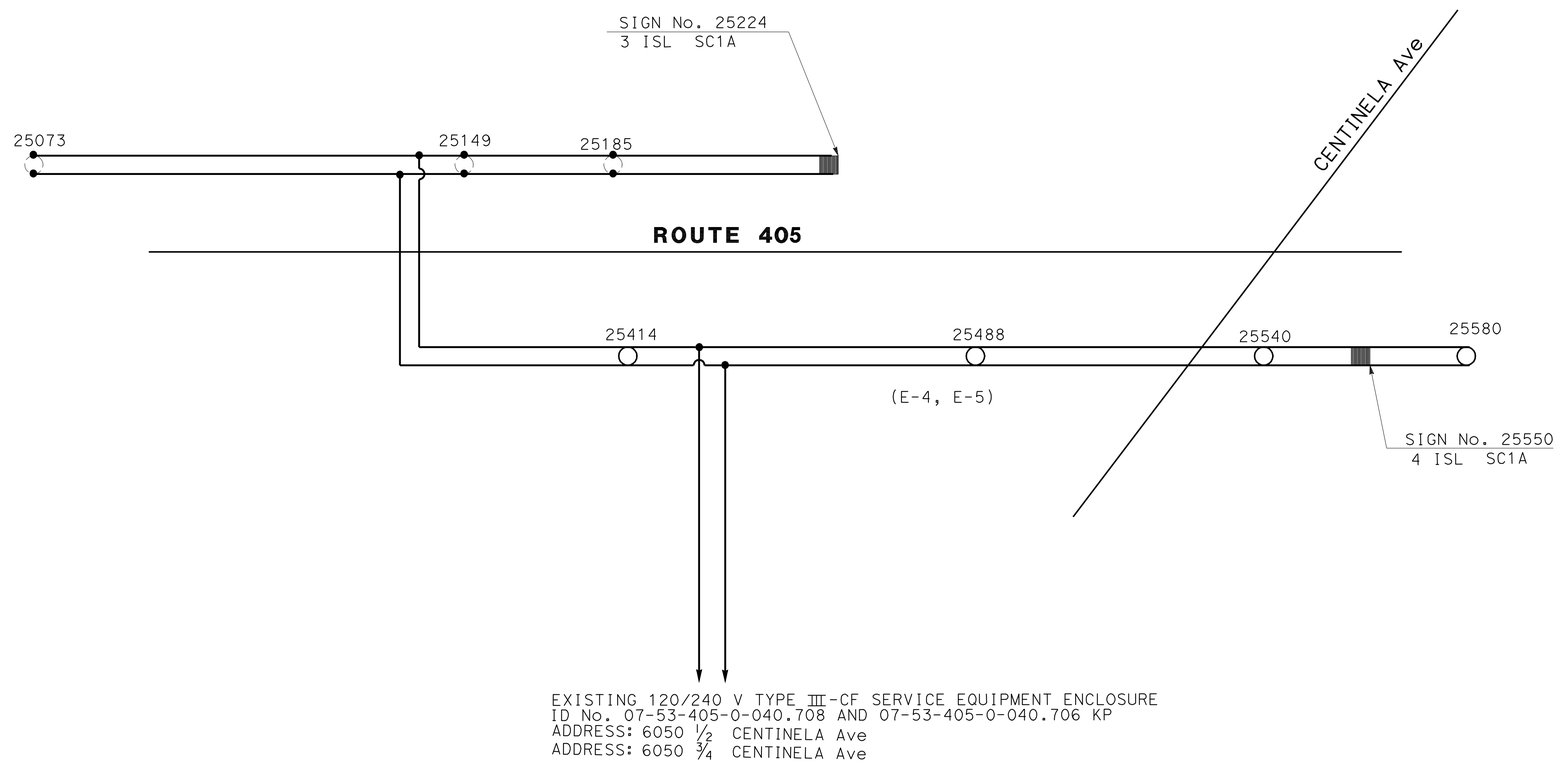

FOR LEGEND, GENERAL NOTES AND PROJECT NOTES SEE SHEET E-1.

THIS PLAN IS ACCURATE FOR ELECTRICAL WORK ONLY.

MODIFY
LIGHTING AND SIGN ILLUMINATION
(WIRING DIAGRAM)

NO SCALE

E-12

STATE OF CALIFORNIA - DEPARTMENT OF TRANSPORTATION
Caltrans **TRAFFIC DESIGN**

FUNCTIONAL SUPERVISOR: YEFIM ZABEZHINSKY
CALCULATED-DESIGNED BY: MICHAEL MARVI
CHECKED BY: OHANNES ANSERLIAN
REVISED BY
DATE REVISED

LAST REVISION 00-00-00
DATE PLOTTED => 08-JUN-2010
TIME PLOTTED => 08:00

Dist	COUNTY	ROUTE	KILOMETER POST TOTAL PROJECT	SHEET No.	TOTAL SHEETS
07	LA	405	39.7/41.5	157	439

Ohannes O Anserlian 12/10/09
REGISTERED ELECTRICAL ENGINEER

6-7-10
PLANS APPROVAL DATE

REGISTERED PROFESSIONAL ENGINEER OHANNES ANSERLIAN No. E16682 Exp. 6/30/10 ELECTRICAL STATE OF CALIFORNIA

THE STATE OF CALIFORNIA OR ITS OFFICERS OR AGENTS SHALL NOT BE RESPONSIBLE FOR THE ACCURACY OR COMPLETENESS OF ELECTRONIC COPIES OF THIS PLAN SHEET.

Caltrans Metric

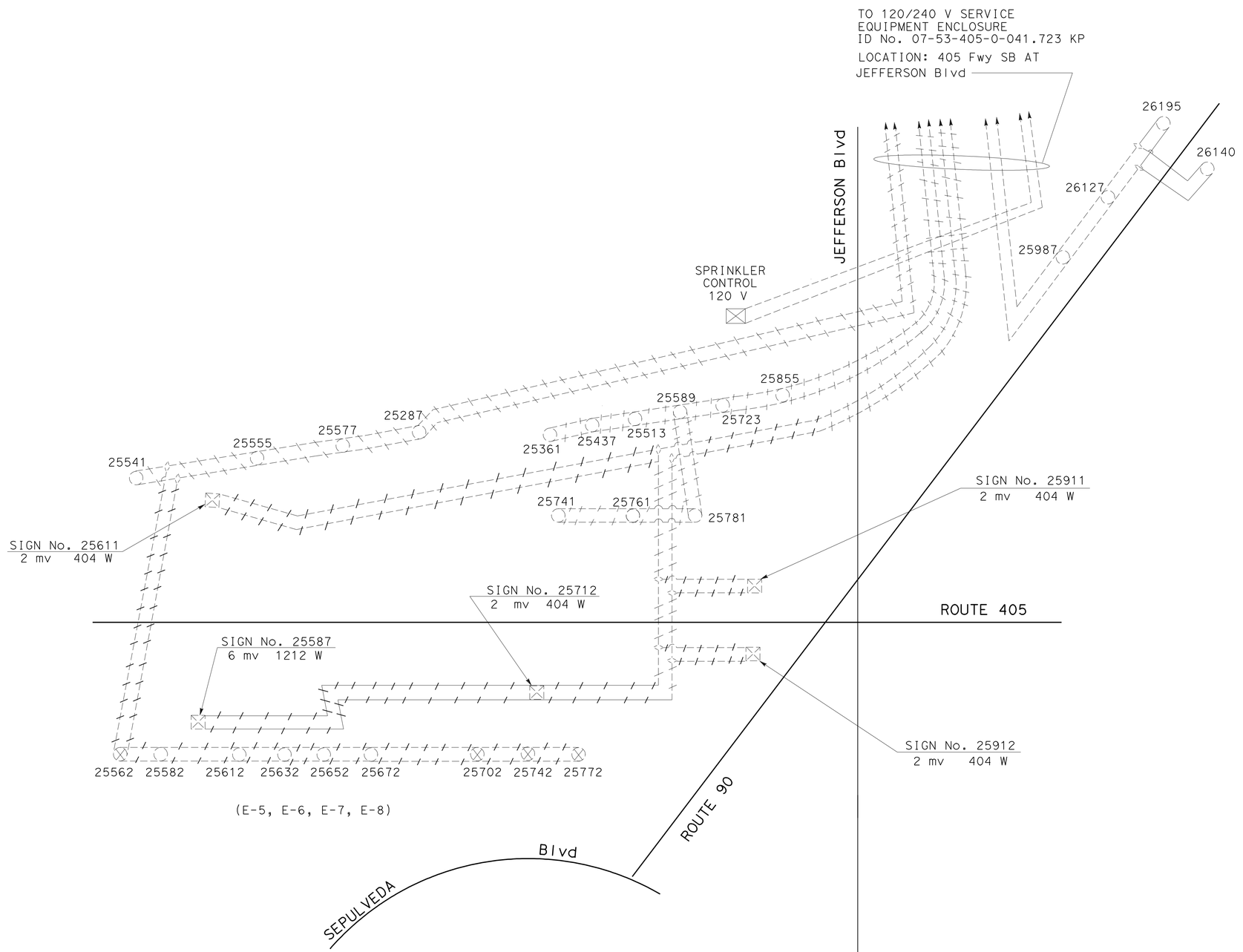

MODIFY
LIGHTING AND SIGN ILLUMINATION
(WIRING DIAGRAM)

NO SCALE

E-13

FOR LEGEND, GENERAL NOTES AND PROJECT NOTES SEE SHEET E-1.

THIS PLAN IS ACCURATE FOR ELECTRICAL WORK ONLY.

STATE OF CALIFORNIA - DEPARTMENT OF TRANSPORTATION
Caltrans **TRAFFIC DESIGN**

FUNCTIONAL SUPERVISOR: YEFIM ZABEZHINSKY

CALCULATED-DESIGNED BY: MICHAEL MARVI
CHECKED BY: OHANNES ANSERLIAN

REVISED BY
DATE REVISED

LAST REVISION 00-00-00
DATE PLOTTED => 08-JUN-2010
TIME PLOTTED => 08:00

Dist	COUNTY	ROUTE	KILOMETER POST TOTAL PROJECT	SHEET No.	TOTAL SHEETS
07	LA	405	39.7/41.5	158	439

Caltrans Metric

Ohannes O Anserlian 12/10/09
REGISTERED ELECTRICAL ENGINEER

6-7-10
PLANS APPROVAL DATE

REGISTERED PROFESSIONAL ENGINEER OHANNES ANSERLIAN No. E16682 Exp. 6/30/10 ELECTRICAL STATE OF CALIFORNIA

THE STATE OF CALIFORNIA OR ITS OFFICERS OR AGENTS SHALL NOT BE RESPONSIBLE FOR THE ACCURACY OR COMPLETENESS OF ELECTRONIC COPIES OF THIS PLAN SHEET.

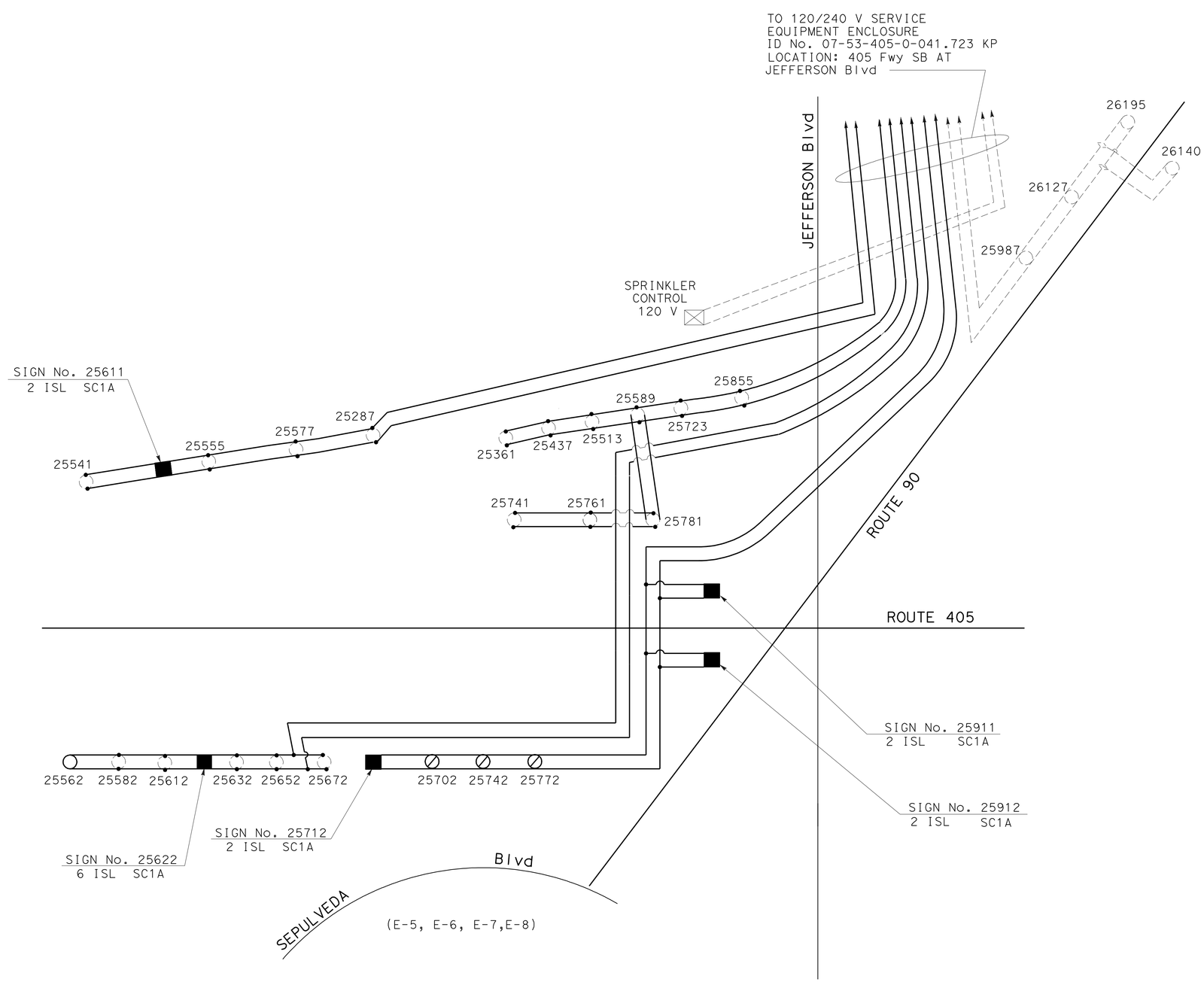

MODIFY
LIGHTING AND SIGN ILLUMINATION
(WIRING DIAGRAM)

NO SCALE

E-14

FOR LEGEND, GENERAL NOTES AND PROJECT NOTES SEE SHEET E-1.

THIS PLAN IS ACCURATE FOR ELECTRICAL WORK ONLY.

STATE OF CALIFORNIA - DEPARTMENT OF TRANSPORTATION
Caltrans
TRAFFIC DESIGN

FUNCTIONAL SUPERVISOR: YEFIM ZABEZHINSKY
CALCULATED-DESIGNED BY: MICHAEL MARVI
CHECKED BY: OHANNES ANSERLIAN
REVISED BY
DATE REVISED

LAST REVISION 00-00-00
DATE PLOTTED => 08-JUN-2010
TIME PLOTTED => 08:00

NOTE:FOR ACCURATE RIGHT OF WAY ACCESS DATA, CONTACT
RIGHT OF WAY ENGINEERING AT THE DISTRICT OFFICE.

Dist	COUNTY	ROUTE	KILOMETER POST TOTAL PROJECT	SHEET No.	TOTAL SHEETS
07	LA	405	39.7/41.5	159	439

Caltrans Metric

Ohannes O Anserlian 12/10/09
REGISTERED ELECTRICAL ENGINEER

6-7-10
PLANS APPROVAL DATE

REGISTERED PROFESSIONAL ENGINEER OHANNES ANSERLIAN No. E16682 Exp. 6/30/10 ELECTRICAL STATE OF CALIFORNIA

THE STATE OF CALIFORNIA OR ITS OFFICERS OR AGENTS SHALL NOT BE RESPONSIBLE FOR THE ACCURACY OR COMPLETENESS OF ELECTRONIC COPIES OF THIS PLAN SHEET.

PROJECT NOTES: (SHEETS E-15 TO E-16)

1. INSTALL 41C RISER, 2#6, 1#8G.
2. INSTALL 12.2 m WOOD POLE WITH 4.6 m LUMINAIRE MAST ARMAND 310 W HPS. FOR DETAILS SEE SHEET E-17.
3. INSTALL 2#6, 1#8G OVERHEAD CONDUCTORS WITH 6 m MINIMUM CLEARANCE.

LEGEND:

G — PORTABLE GENERATOR.

TEMPORARY LIGHTING

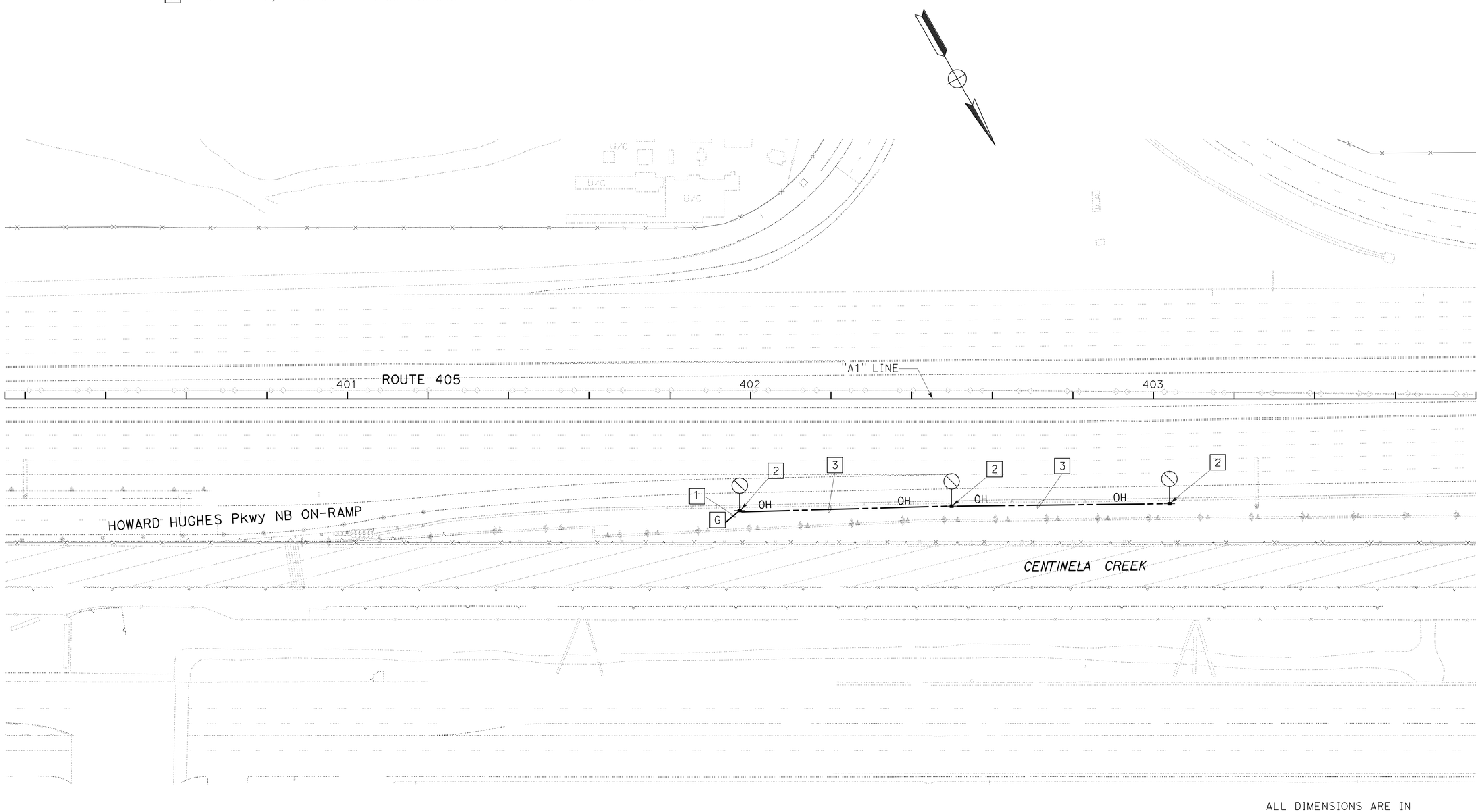

ALL DIMENSIONS ARE IN
METERS UNLESS OTHERWISE SHOWN

LIGHTING (TEMPORARY)
(STAGE 2 AND STAGE 3)

SCALE 1:500

THIS PLAN IS ACCURATE FOR ELECTRICAL WORK ONLY.

E-15

STATE OF CALIFORNIA - DEPARTMENT OF TRANSPORTATION
Caltrans
TRAFFIC DESIGN

FUNCTIONAL SUPERVISOR: YEFIM ZABEZHINSKY
CALCULATED-DESIGNED BY: MICHAEL MARVI
CHECKED BY: OHANNES ANSERLIAN
REVISED BY
DATE REVISED

LAST REVISION 00-00-00
DATE PLOTTED => 08-JUN-2010
TIME PLOTTED => 08:00

NOTE:FOR ACCURATE RIGHT OF WAY ACCESS DATA, CONTACT
RIGHT OF WAY ENGINEERING AT THE DISTRICT OFFICE.

Dist	COUNTY	ROUTE	KILOMETER POST TOTAL PROJECT	SHEET No.	TOTAL SHEETS
07	LA	405	39.7/41.5	160	439

Ohannes O Anserlian 12/10/09
REGISTERED ELECTRICAL ENGINEER

6-7-10
PLANS APPROVAL DATE

REGISTERED PROFESSIONAL ENGINEER
OHANNES ANSERLIAN
No. E16682
Exp. 6/30/10
ELECTRICAL
STATE OF CALIFORNIA

THE STATE OF CALIFORNIA OR ITS OFFICERS OR AGENTS SHALL NOT BE RESPONSIBLE FOR THE ACCURACY OR COMPLETENESS OF ELECTRONIC COPIES OF THIS PLAN SHEET.

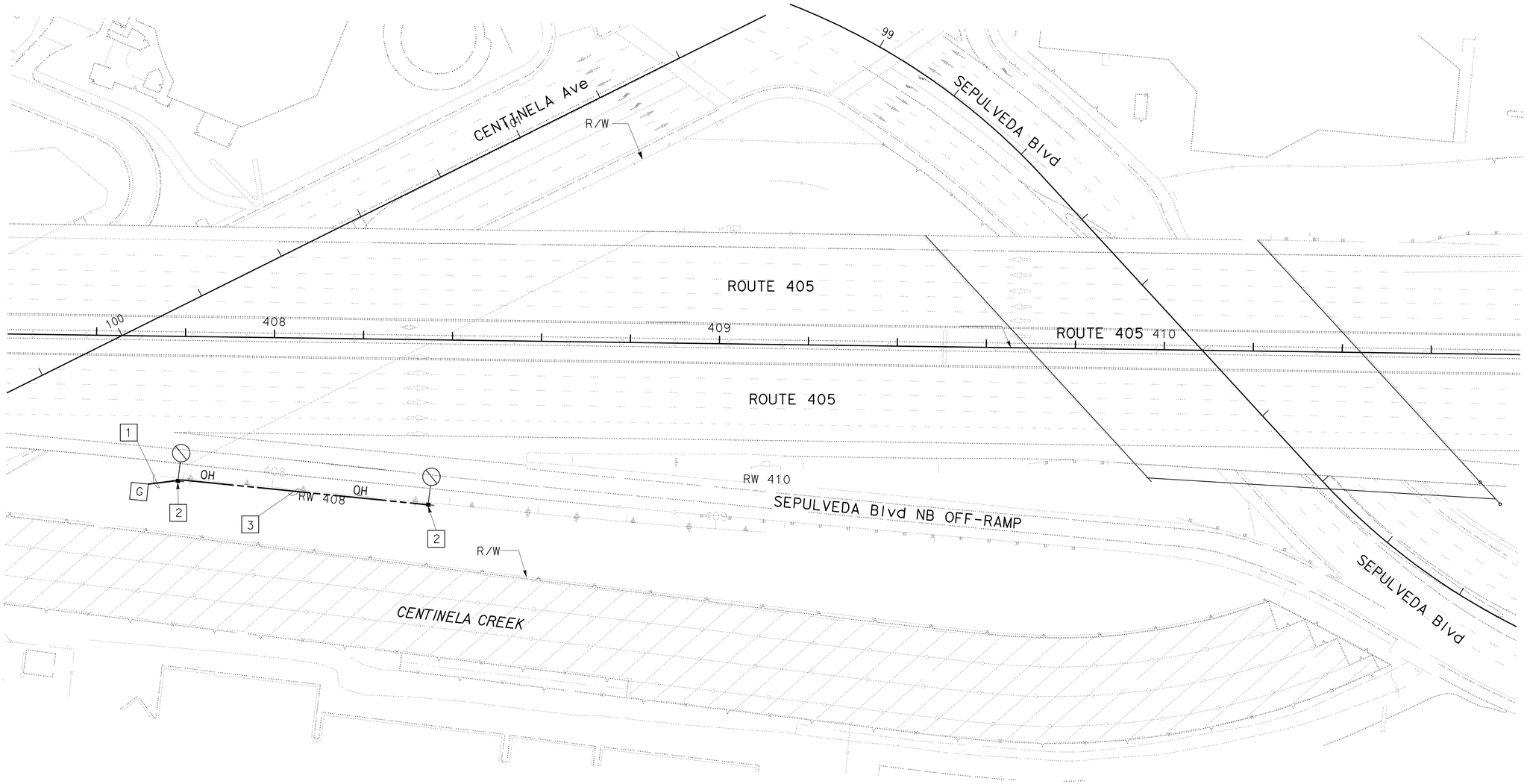

ALL DIMENSIONS ARE IN
METERS UNLESS OTHERWISE SHOWN

LIGHTING (TEMPORARY)
(STAGE 3)

SCALE 1:500

FOR LEGEND, AND PROJECT NOTES SEE SHEET E-15.
THIS PLAN IS ACCURATE FOR ELECTRICAL WORK ONLY.

E-16

REVISED BY	DATE REVISED

CALCULATED-DESIGNED BY: MICHAEL MARVI
CHECKED BY: OHANNES ANSERLIAN

FUNCTIONAL SUPERVISOR: YEFIM ZABEZHINSKY

STATE OF CALIFORNIA - DEPARTMENT OF TRANSPORTATION
Caltrans
TRAFFIC DESIGN

LAST REVISION 00-00-00
DATE PLOTTED => 06-JUN-2010
TIME PLOTTED => 08:00

Dist	COUNTY	ROUTE	KILOMETER POST TOTAL PROJECT	SHEET No.	TOTAL SHEETS
07	LA	405	39.7/41.5	161	439

Caltrans Metric

12/10/09
REGISTERED ELECTRICAL ENGINEER

6-7-10
PLANS APPROVAL DATE

REGISTERED PROFESSIONAL ENGINEER OHANNES ANSERLIAN No. E16682 Exp. 6/30/10 ELECTRICAL STATE OF CALIFORNIA

THE STATE OF CALIFORNIA OR ITS OFFICERS OR AGENTS SHALL NOT BE RESPONSIBLE FOR THE ACCURACY OR COMPLETENESS OF ELECTRONIC COPIES OF THIS PLAN SHEET.

NOTES: (THIS SHEET)

1. TEMPORARY WOOD POLES SHALL BE USED FOR EITHER OVERHEAD CONDUCTORS OR LUMINAIRES WITH MAST ARMS.
2. ALL OVERHEAD CABLE SHALL BE SLACK SPANNED WITH 6.1 m MINIMUM OVERHEAD CLEARANCE.
3. NO SPARE CONDUCTORS REQUIRED EXCEPT AS NOTED.
4. MULTI-CONDUCTOR OR SINGLE CONDUCTOR CABLE MAY BE USED.
5. POLES SHALL BE GUYED OR RAKED WHERE NECESSARY.
6. COLOR CODING ON MULTI-CONDUCTOR CABLE NEED NOT CONFORM TO THE STANDARD SPECIFICATIONS REQUIREMENT.
7. LUMINAIRE SHALL HAVE INTEGRAL BALLAST.

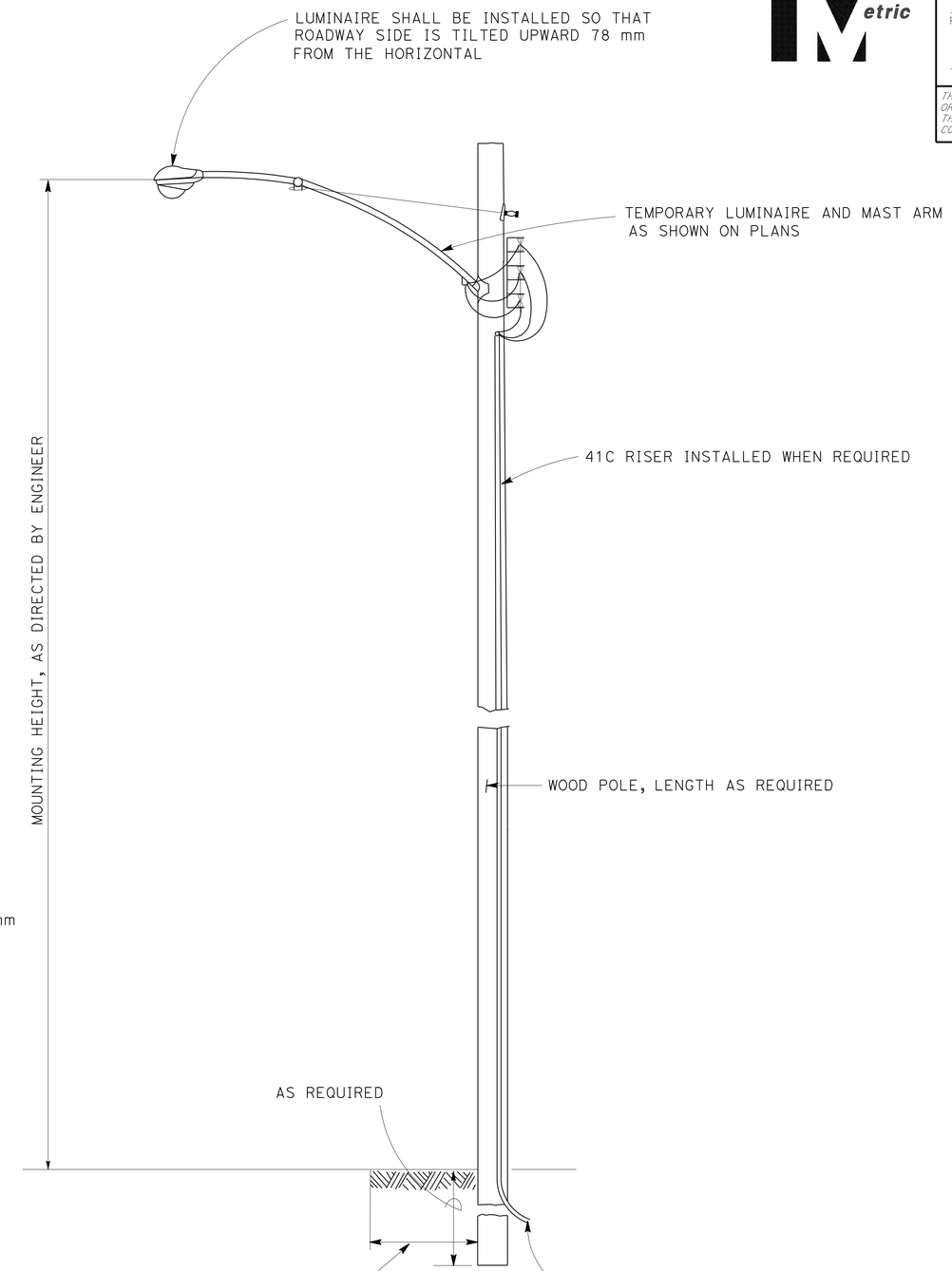

TEMPORARY LIGHTING
WOOD POLE

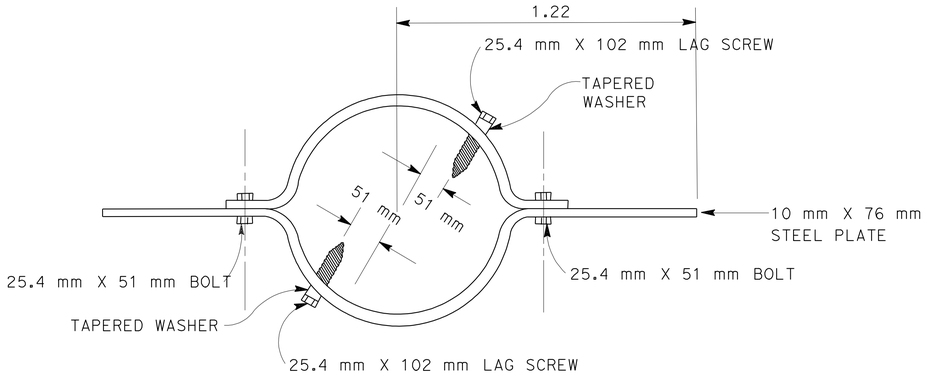

WIND ANCHOR

TO BE INSTALLED PERPENDICULAR TO MAST ARMS AND 0.61 m Min BELOW TOP OF THE POLE

ALL DIMENSIONS ARE IN METERS UNLESS OTHERWISE SHOWN

LIGHTING (TEMPORARY)
(WOOD POLE INSTALLATION DETAILS)

NO SCALE

E-17

NOTE: THIS PLAN IS ACCURATE FOR ELECTRICAL WORK ONLY.

STATE OF CALIFORNIA - DEPARTMENT OF TRANSPORTATION
Caltrans
TRAFFIC DESIGN

FUNCTIONAL SUPERVISOR: YEFIM ZABEZHINSKY
CALCULATED-DESIGNED BY: MICHAEL MARVI
CHECKED BY: OHANNES ANSERLIAN
REVISED BY
DATE REVISED

LAST REVISION 00-00-00
DATE PLOTTED => 08-JUN-2010
TIME PLOTTED => 06:07

Dist	COUNTY	ROUTE	KILOMETER POST TOTAL PROJECT	SHEET No.	TOTAL SHEETS
07	LA	405	39.7/41.5	162	439

12/10/09
REGISTERED ELECTRICAL ENGINEER

6-7-10
PLANS APPROVAL DATE

REGISTERED PROFESSIONAL ENGINEER OHANNES ANSERLIAN No. E16682 Exp. 6/30/10 ELECTRICAL STATE OF CALIFORNIA

THE STATE OF CALIFORNIA OR ITS OFFICERS OR AGENTS SHALL NOT BE RESPONSIBLE FOR THE ACCURACY OR COMPLETENESS OF ELECTRONIC COPIES OF THIS PLAN SHEET.

NOTE:FOR ACCURATE RIGHT OF WAY ACCESS DATA, CONTACT RIGHT OF WAY ENGINEERING AT THE DISTRICT OFFICE.

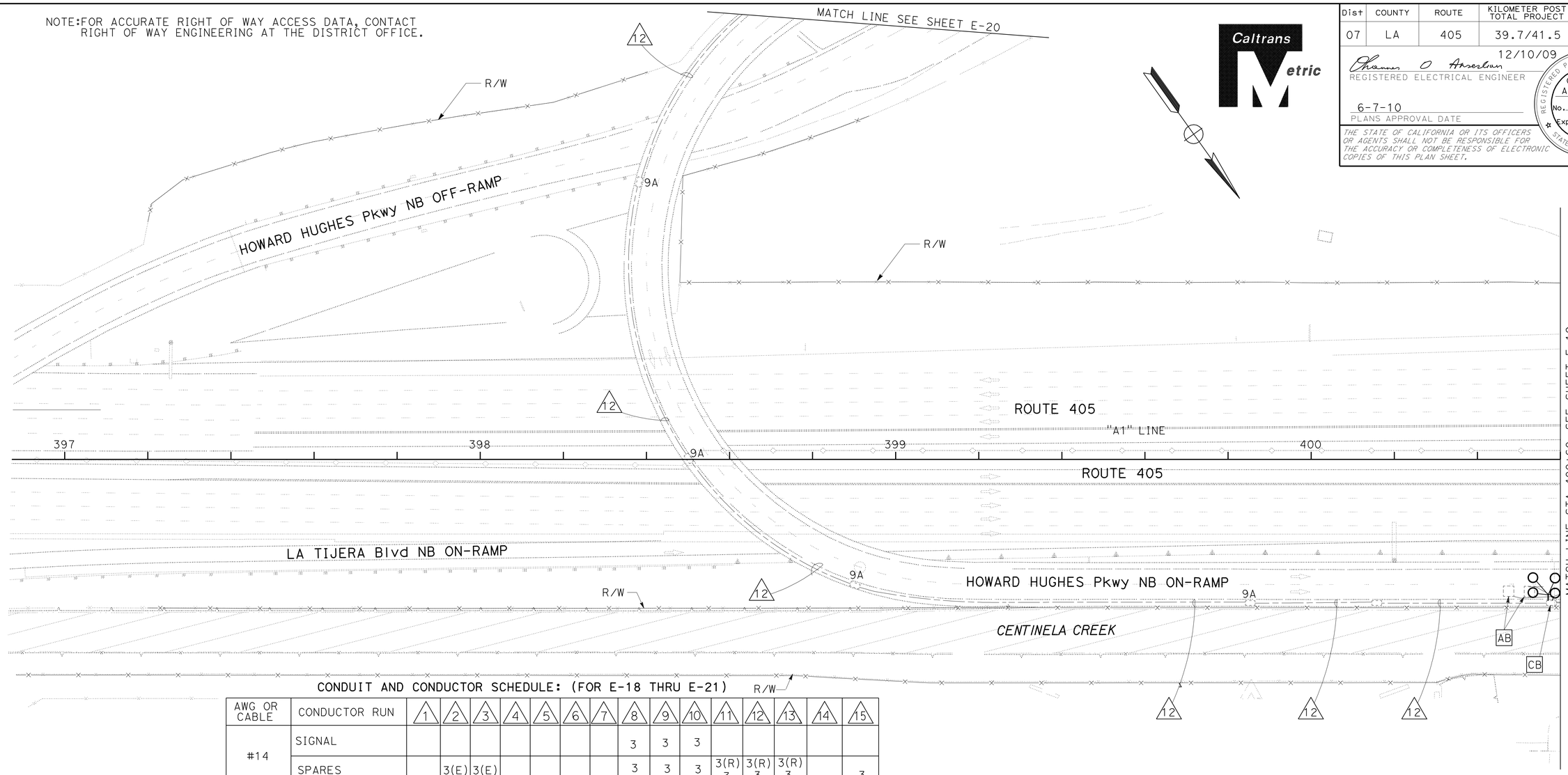

CONDUIT AND CONDUCTOR SCHEDULE: (FOR E-18 THRU E-21)

AWG OR CABLE	CONDUCTOR RUN	1	2	3	4	5	6	7	8	9	10	11	12	13	14	15
#14	SIGNAL								3	3	3					
	SPARES		3(E)	3(E)					3	3	3	3(R) 3	3(R) 3	3(R) 3		3
#10	SIGNAL COMMON								1	1	1					
	"METER ON"		2(E)	2(E)					2	2	2	2(R) 2	2(R) 2	2(R) 2		2
#4	SIGNAL SERVICE	2(R) 2(E) 2	2(E)	2(E)					2	2	2	2(R) 2	2(R) 2	2(R) 2		2
#8 EQUIPMENT GROUNDING CONDUCTOR		1	1	1					1	1	1	1	1	1		1
DLC	COUNT				2(E)				1	1						
	DEMAND								2	2	2	1(R) 2				2
	PASSAGE								2	2	2	2(R) 2				
	QUEUE			2(E)					2	2	2	2(R) 2	2(R) 2			2
	I-405 LOOP DET.				5(E)	5(E)	2(E)	4	4							
4#22	TWISTED PAIR CABLE	1(R)	1(R)	1(R)	1(R) 1	1(R) 1	1(R) 1	1	1						1	
CONDUIT SIZE		53	63	63	78	63	63	53	2-78	53	53	53	53	53	53	78
		(E)	(E)	(E)	(E)	(E)	(E)					(E)	(E)	(E)		

(E) EXISTING

(R) RC EXISTING CONDUCTORS

THIS PLAN IS ACCURATE FOR ELECTRICAL WORK ONLY.

ALL DIMENSIONS ARE IN METERS UNLESS OTHERWISE SHOWN.

MODIFY RAMP METERING SYSTEM

SCALE 1:500

E-18

STATE OF CALIFORNIA - DEPARTMENT OF TRANSPORTATION
Caltrans
TRAFFIC DESIGN

FUNCTIONAL SUPERVISOR: YEFIM ZABEZHINSKY
CALCULATED-DESIGNED BY: OHANNES ANSERLIAN
CHECKED BY: YEFIM ZABEZHINSKY
REVISED BY
DATE REVISED

LAST REVISION 00-00-00
DATE PLOTTED => 09-JUN-2010
TIME PLOTTED => 14:07

NOTE:FOR ACCURATE RIGHT OF WAY ACCESS DATA, CONTACT RIGHT OF WAY ENGINEERING AT THE DISTRICT OFFICE.

Dist	COUNTY	ROUTE	KILOMETER POST TOTAL PROJECT	SHEET No.	TOTAL SHEETS
07	LA	405	39.7/41.5	163	439

Caltrans Metric

Ohannes O Anserlian 12/10/09
REGISTERED ELECTRICAL ENGINEER

6-7-10
PLANS APPROVAL DATE

REGISTERED PROFESSIONAL ENGINEER OHANNES ANSERLIAN No. E16682 Exp. 6/30/10 ELECTRICAL STATE OF CALIFORNIA

THE STATE OF CALIFORNIA OR ITS OFFICERS OR AGENTS SHALL NOT BE RESPONSIBLE FOR THE ACCURACY OR COMPLETENESS OF ELECTRONIC COPIES OF THIS PLAN SHEET.

PROJECT NOTES:(THIS SHEET)

1. INSTALL MODIFIED TYPE 1 RAMP METERING SIGNAL STANDARD ON TOP OF THE RETAINING WALL WITH UPPER AND LOWER SIGNAL HEADS AND RED STATUS LIGHT FOR ENFORCEMENT. SEE DETAIL 'A' ON SHEET E-20.

2. RL EXISTING CONTROLLER FROM Sta 400+65 TO Sta 401+75.

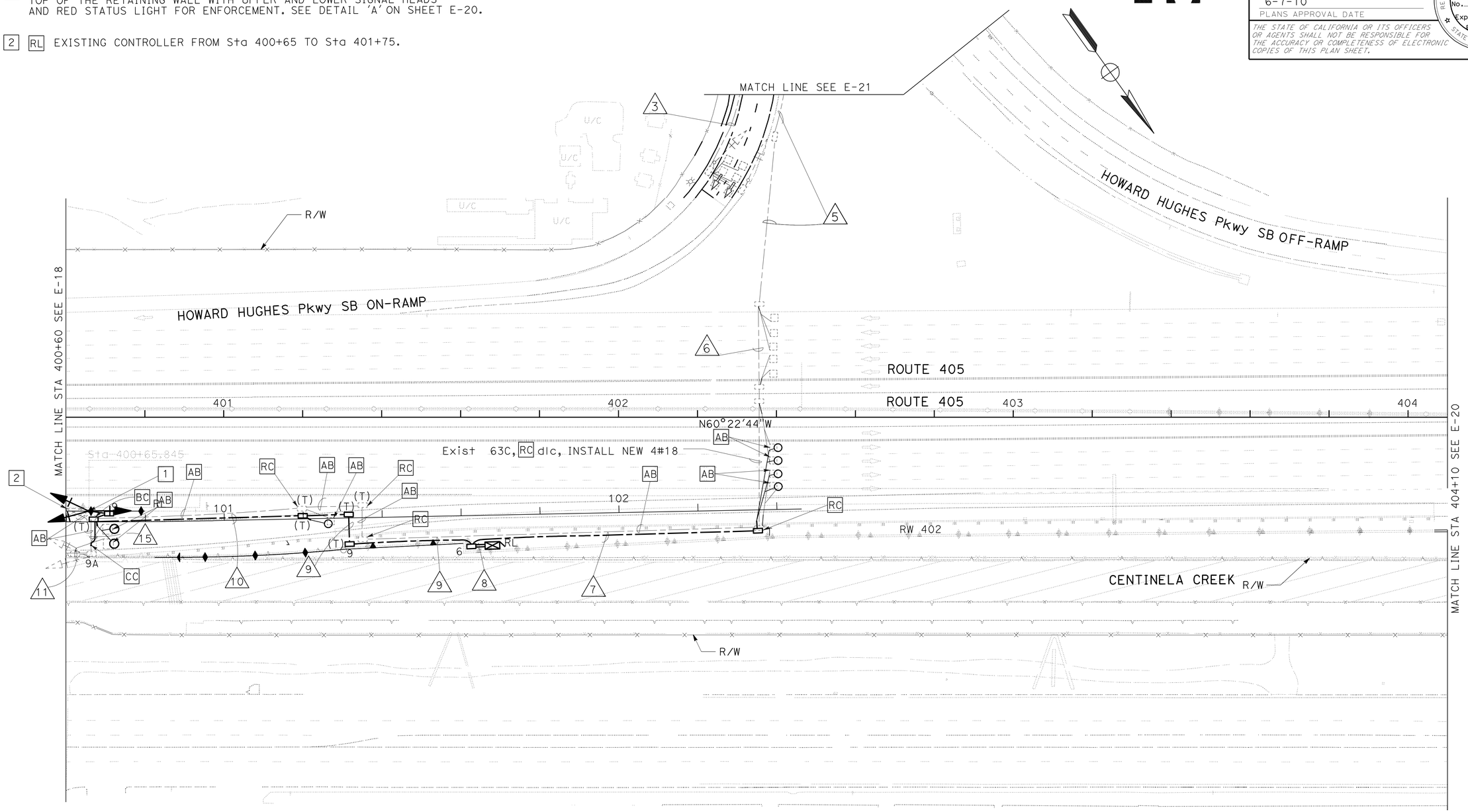

SEE E-18 FOR CONDUCTOR AND CONDUIT SCHEDULE.
THIS PLAN IS ACCURATE FOR ELECTRICAL WORK ONLY.

ALL DIMENSIONS ARE IN METERS UNLESS OTHERWISE SHOWN

MODIFY RAMP METERING SYSTEM

SCALE 1:500

E-19

STATE OF CALIFORNIA - DEPARTMENT OF TRANSPORTATION
Caltrans
TRAFFIC DESIGN

FUNCTIONAL SUPERVISOR: YEFIM ZABEZHINSKY
CALCULATED-DESIGNED BY: OHANNES ANSERLIAN
CHECKED BY: YEFIM ZABEZHINSKY
REVISED BY
DATE REVISED

LAST REVISION 00-00-00
DATE PLOTTED => 08-JUN-2010
TIME PLOTTED => 0547

NOTE:FOR ACCURATE RIGHT OF WAY ACCESS DATA, CONTACT
RIGHT OF WAY ENGINEERING AT THE DISTRICT OFFICE.

Dist	COUNTY	ROUTE	KILOMETER POST TOTAL PROJECT	SHEET No.	TOTAL SHEETS
07	LA	405	39.7/41.5	164	439

Ohannes O Anserlian 12/10/09
REGISTERED ELECTRICAL ENGINEER

6-7-10
PLANS APPROVAL DATE

REGISTERED PROFESSIONAL ENGINEER OHANNES ANSERLIAN No. E16682 Exp. 6/30/10 ELECTRICAL STATE OF CALIFORNIA

THE STATE OF CALIFORNIA OR ITS OFFICERS OR AGENTS SHALL NOT BE RESPONSIBLE FOR THE ACCURACY OR COMPLETENESS OF ELECTRONIC COPIES OF THIS PLAN SHEET.

Caltrans Metric

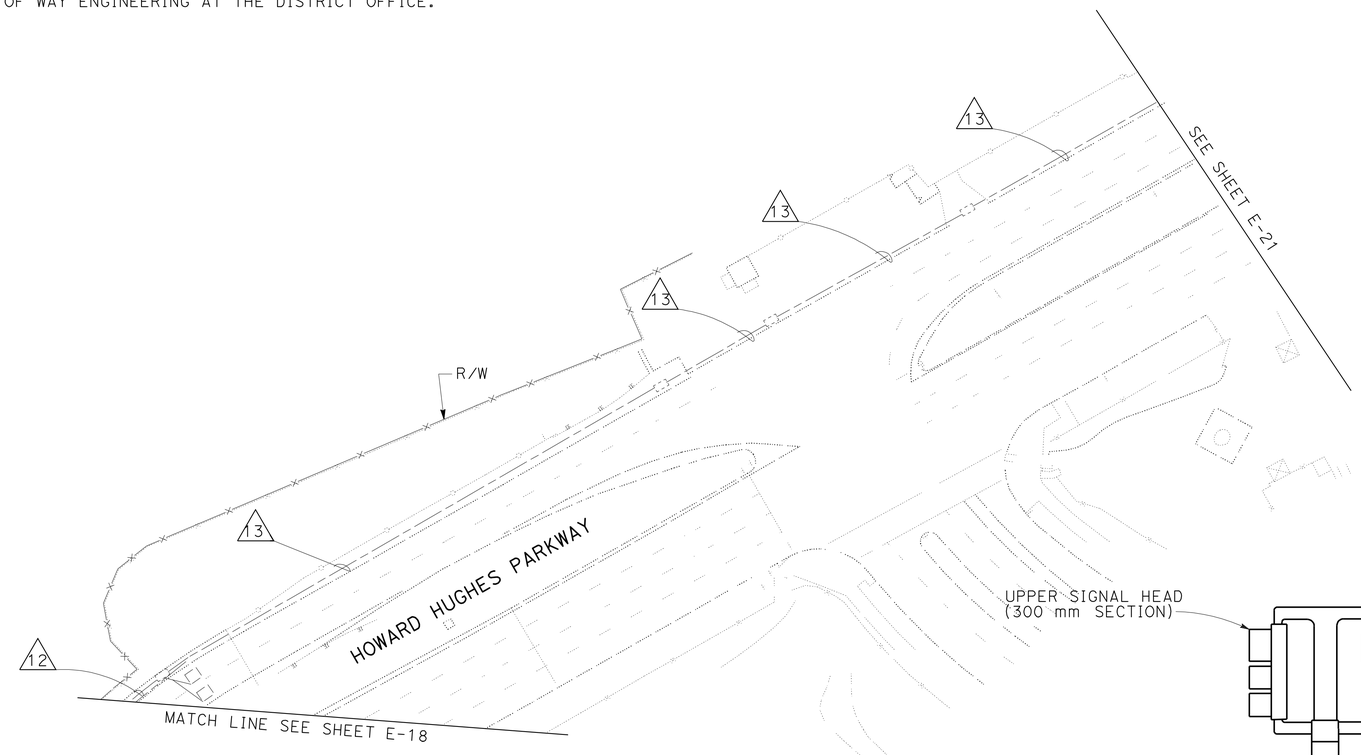

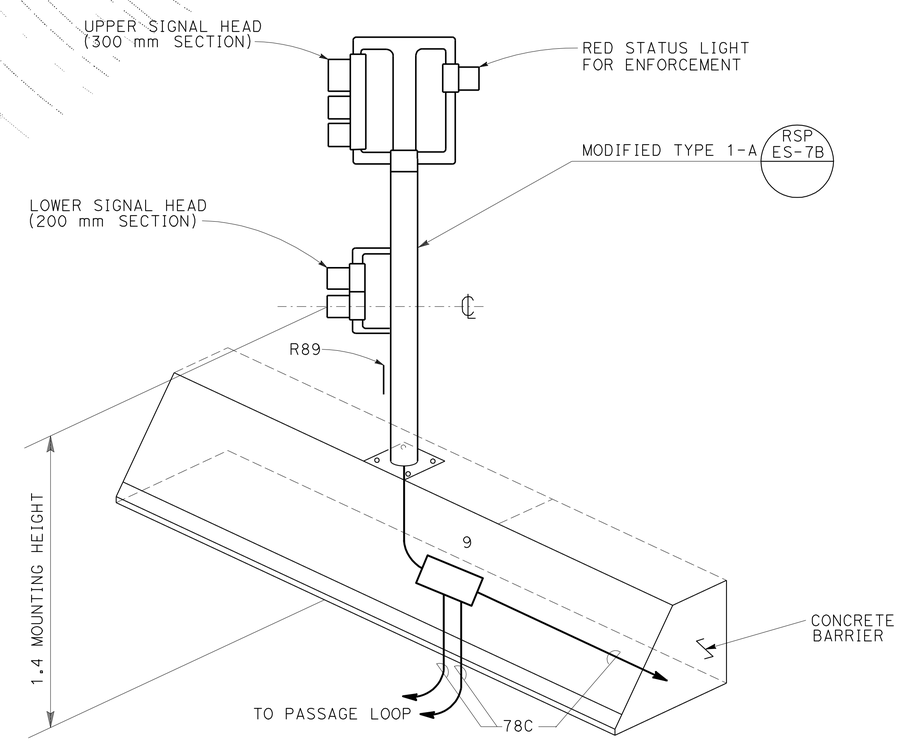

DETAIL 'A'

ALL DIMENSIONS ARE IN
METERS UNLESS OTHERWISE SHOWN.

SEE E-18 FOR CONDUCTOR AND CONDUIT SCHEDULE.
THIS PLAN IS ACCURATE FOR ELECTRICAL WORK ONLY.

MODIFY RAMP METERING SYSTEM

SCALE 1:500

E-20

FUNCTIONAL SUPERVISOR	YEFIM ZABEZHINSKY
CALCULATED-DESIGNED BY	OHANNES ANSERLIAN
CHECKED BY	YEFIM ZABEZHINSKY
REVISED BY	
DATE REVISED	

STATE OF CALIFORNIA - DEPARTMENT OF TRANSPORTATION
Caltrans **TRAFFIC DESIGN**

LAST REVISION 00-00-00 | DATE PLOTTED => 08-JUN-2010 | TIME PLOTTED => 0551

NOTE:FOR ACCURATE RIGHT OF WAY ACCESS DATA, CONTACT
RIGHT OF WAY ENGINEERING AT THE DISTRICT OFFICE.

Dist	COUNTY	ROUTE	KILOMETER POST TOTAL PROJECT	SHEET No.	TOTAL SHEETS
07	LA	405	39.7/41.5	165	439

Caltrans Metric

12/10/09
REGISTERED ELECTRICAL ENGINEER

6-7-10
PLANS APPROVAL DATE

REGISTERED PROFESSIONAL ENGINEER
OHANNES ANSERLIAN
No. E16682
Exp. 6/30/10
ELECTRICAL
STATE OF CALIFORNIA

THE STATE OF CALIFORNIA OR ITS OFFICERS OR AGENTS SHALL NOT BE RESPONSIBLE FOR THE ACCURACY OR COMPLETENESS OF ELECTRONIC COPIES OF THIS PLAN SHEET.

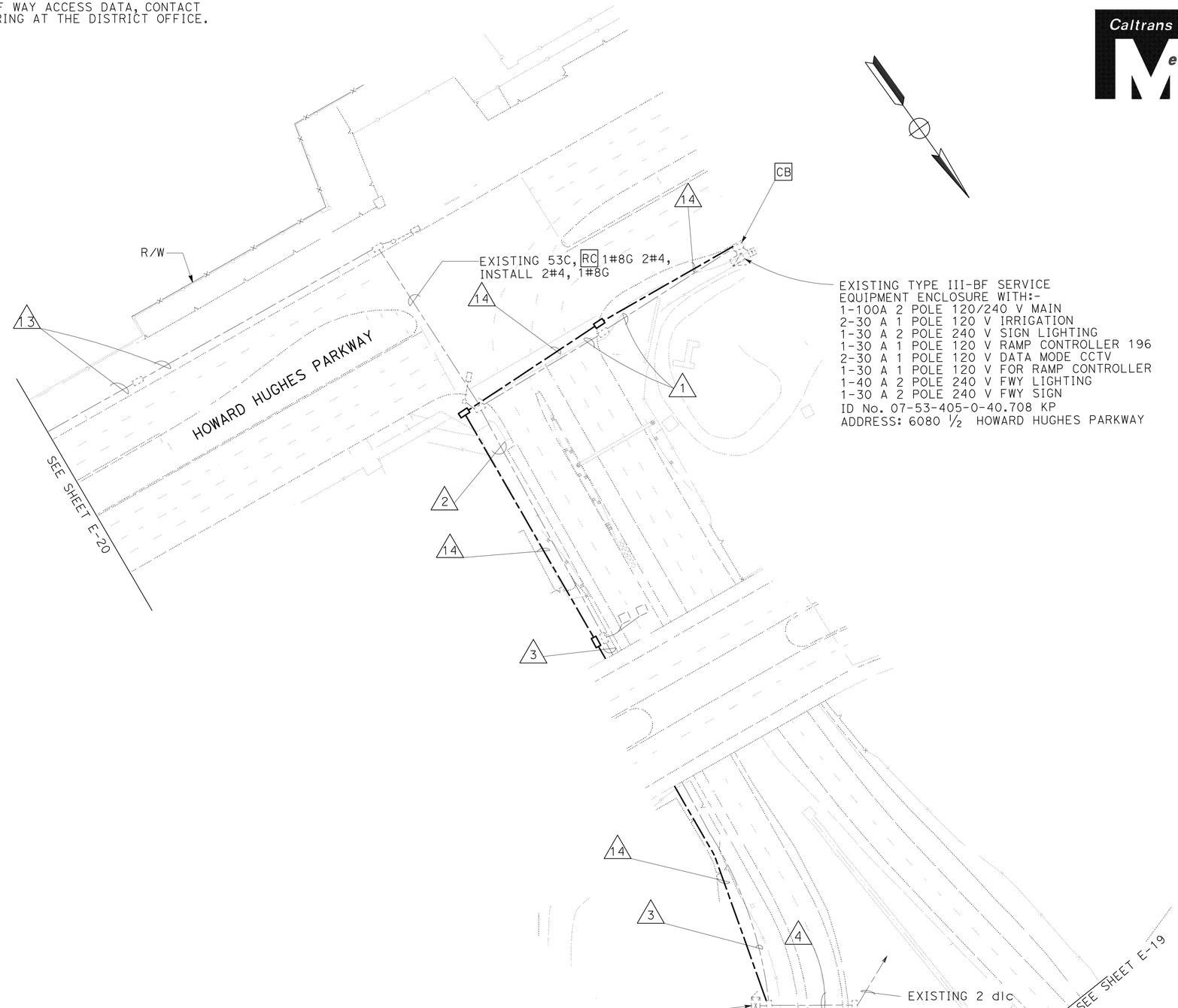

ALL DIMENSIONS ARE IN
METERS UNLESS OTHERWISE SHOWN

MODIFY RAMP METERING SYSTEM

SCALE 1:500

SEE E-18 FOR CONDUCTOR AND CONDUIT SCHEDULE.
THIS PLAN IS ACCURATE FOR ELECTRICAL WORK ONLY.

E-21

REVISED BY	OHANNES ANSERLIAN
DATE REVISED	YEFIM ZABEZHINSKY
CALCULATED-DESIGNED BY	
CHECKED BY	
FUNCTIONAL SUPERVISOR	YEFIM ZABEZHINSKY

STATE OF CALIFORNIA - DEPARTMENT OF TRANSPORTATION
Caltrans **TRAFFIC DESIGN**

LAST REVISION 00-00-00 DATE PLOTTED => 08-JUN-2010 TIME PLOTTED => 05:47

NOTE:FOR ACCURATE RIGHT OF WAY ACCESS DATA, CONTACT RIGHT OF WAY ENGINEERING AT THE DISTRICT OFFICE.

PROJECT NOTE: (SHEETS E-22 AND E-23)

1 SEE SHEETS E-4 AND E-5 FOR INSTALLATION.

Dist	COUNTY	ROUTE	KILOMETER POST TOTAL PROJECT	SHEET No.	TOTAL SHEETS
07	LA	405	39.7/41.5	166	439

Ohannes O Anserlian 12/10/09
REGISTERED ELECTRICAL ENGINEER

6-7-10
PLANS APPROVAL DATE

REGISTERED PROFESSIONAL ENGINEER OHANNES ANSERLIAN No. E16682 Exp. 6/30/10 ELECTRICAL STATE OF CALIFORNIA

THE STATE OF CALIFORNIA OR ITS OFFICERS OR AGENTS SHALL NOT BE RESPONSIBLE FOR THE ACCURACY OR COMPLETENESS OF ELECTRONIC COPIES OF THIS PLAN SHEET.

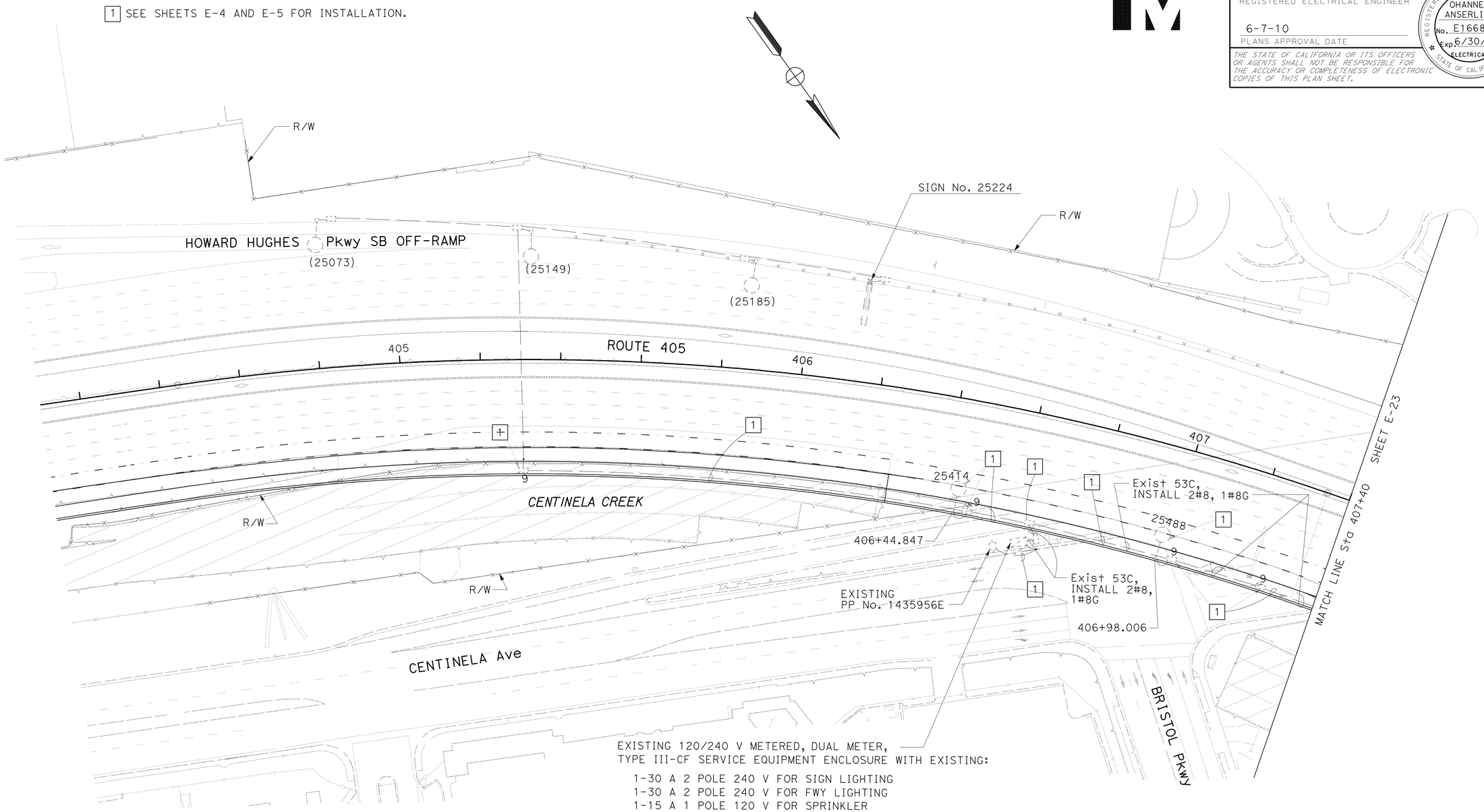

EXISTING 120/240 V METERED, DUAL METER, TYPE III-CF SERVICE EQUIPMENT ENCLOSURE WITH EXISTING:

1-30 A 2 POLE 240 V FOR SIGN LIGHTING
1-30 A 2 POLE 240 V FOR FWY LIGHTING
1-15 A 1 POLE 120 V FOR SPRINKLER
1-20 A 1 POLE 120 V FOR LIGHTING CONTROL
1-15 A 1 POLE 120 V FOR IRRIGATION CONTROL

METER 1, ID No. 07-53-405-0-040. 708 KP,

METER 2, ID No. 07-53-405-0-040, 706 KP,

ADDRESS: 6050 1/2 CENTINELA Ave
ADDRESS: 6050 3/4 CENTINELA Ave

ALL DIMENSIONS ARE IN METERS UNLESS OTHERWISE SHOWN

ELECTRIC SERVICE (IRRIGATION)

SCALE 1:500

E-22

FOR LEGEND, GENERAL NOTES AND PROJECT NOTES SEE SHEET E-1

STATE OF CALIFORNIA - DEPARTMENT OF TRANSPORTATION
Caltrans
TRAFFIC DESIGN

FUNCTIONAL SUPERVISOR: YEFIM ZABEZHINSKY
CALCULATED-DESIGNED BY: MICHAEL MARVI
CHECKED BY: OHANNES ANSERLIAN
REVISED BY
DATE REVISED

LAST REVISION 00-00-00
DATE PLOTTED => 08-JUN-2010
TIME PLOTTED => 05:54

NOTE: FOR ACCURATE RIGHT OF WAY ACCESS DATA, CONTACT RIGHT OF WAY ENGINEERING AT THE DISTRICT OFFICE.

Dist	COUNTY	ROUTE	KILOMETER POST TOTAL PROJECT	SHEET No.	TOTAL SHEETS
07	LA	405	39.7/41.5	167	439

Caltrans Metric

Ohannes O Anserlian 12/10/09
REGISTERED ELECTRICAL ENGINEER

6-7-10
PLANS APPROVAL DATE

REGISTERED PROFESSIONAL ENGINEER OHANNES ANSERLIAN No. E16682 Exp. 6/30/10 ELECTRICAL STATE OF CALIFORNIA

THE STATE OF CALIFORNIA OR ITS OFFICERS OR AGENTS SHALL NOT BE RESPONSIBLE FOR THE ACCURACY OR COMPLETENESS OF ELECTRONIC COPIES OF THIS PLAN SHEET.

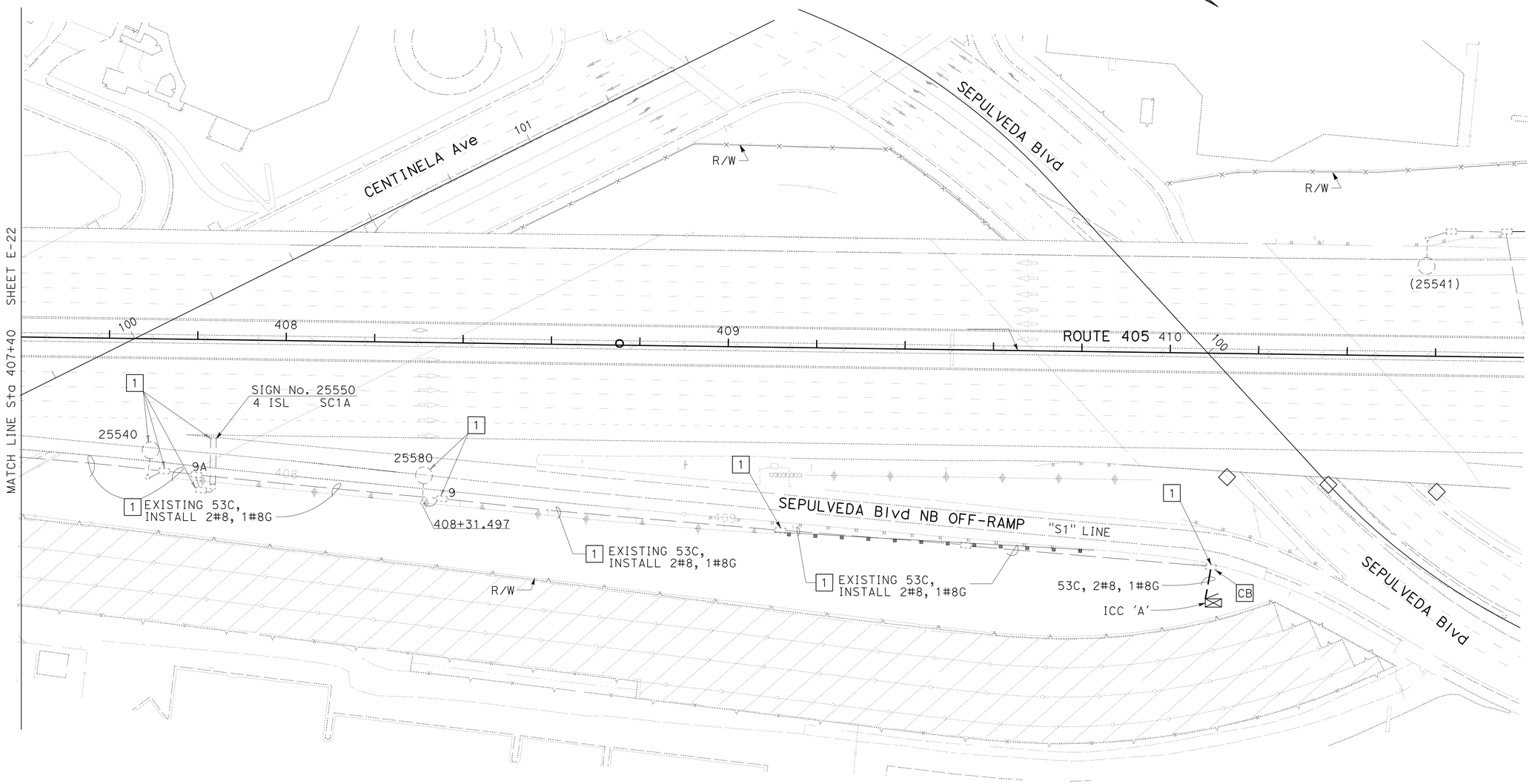

ALL DIMENSIONS ARE IN METERS UNLESS OTHERWISE SHOWN

ELECTRIC SERVICE (IRRIGATION)

SCALE 1:500

E-23

FOR LEGEND, GENERAL NOTES AND PROJECT NOTES SEE SHEETS E-1 AND E-23.

THIS PLAN IS ACCURATE FOR ELECTRICAL WORK ONLY.

STATE OF CALIFORNIA - DEPARTMENT OF TRANSPORTATION
Caltrans
TRAFFIC DESIGN

FUNCTIONAL SUPERVISOR: YEFIM ZABEZHINSKY

CALCULATED-DESIGNED BY: MICHAEL MARVI
CHECKED BY: OHANNES ANSERLIAN

REVISED BY
DATE REVISED

LAST REVISION 00-00-00
DATE PLOTTED => 08-JUN-2010
TIME PLOTTED => 05:48

NOTE: FOR ACCURATE RIGHT OF WAY ACCESS DATA, CONTACT RIGHT OF WAY ENGINEERING AT THE DISTRICT OFFICE.

Dist	COUNTY	ROUTE	KILOMETER POST TOTAL PROJECT	SHEET No.	TOTAL SHEETS
07	LA	405	39.7/41.5	168	439

Ohannes O Anserlian 12/10/09
REGISTERED ELECTRICAL ENGINEER

6-7-10
PLANS APPROVAL DATE

REGISTERED PROFESSIONAL ENGINEER OHANNES ANSERLIAN No. E16682 Exp. 6/30/10 ELECTRICAL STATE OF CALIFORNIA

THE STATE OF CALIFORNIA OR ITS OFFICERS OR AGENTS SHALL NOT BE RESPONSIBLE FOR THE ACCURACY OR COMPLETENESS OF ELECTRONIC COPIES OF THIS PLAN SHEET.

Caltrans Metric

EXISTING PHASE DIAGRAM

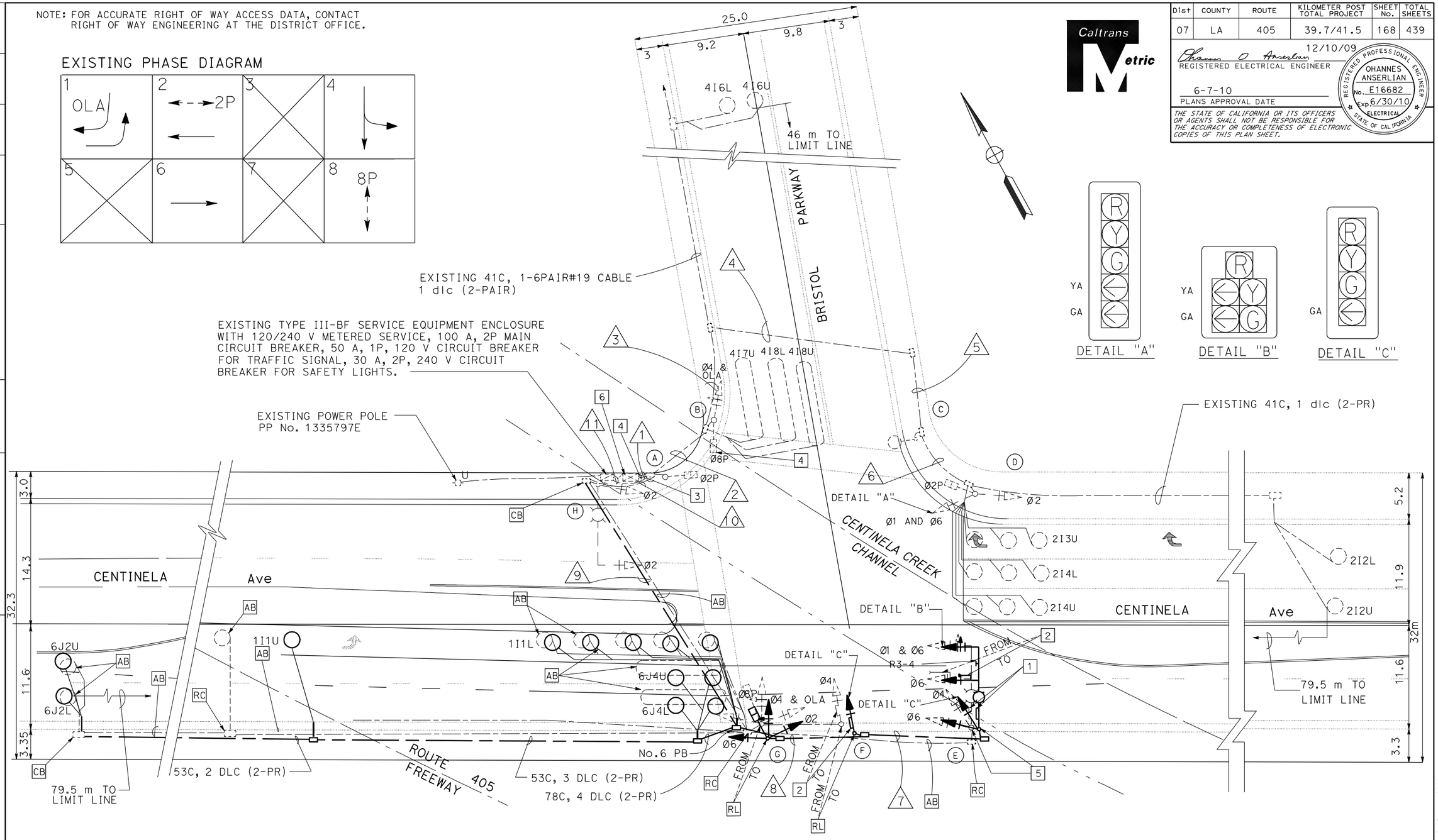

ALL DIMENSIONS ARE IN METERS UNLESS OTHERWISE SHOWN

FOR PROJECT NOTES, CONDUCTOR AND CONDUIT SCHEDULE, POLE AND EQUIPMENT SCHEDULE SEE SHEET E-25.
THIS PLAN IS ACCURATE FOR ELECTRICAL WORK ONLY.

MODIFY SIGNAL AND LIGHTING

SCALE 1:200

E-24

STATE OF CALIFORNIA - DEPARTMENT OF TRANSPORTATION
Caltrans
TRAFFIC DESIGN

FUNCTIONAL SUPERVISOR: YEFIM ZABEZHINSKY
CALCULATED-DESIGNED BY: OHANNES ANSERLIAN
CHECKED BY: YEFIM ZABEZHINSKY
REVISED BY
DATE REVISED

LAST REVISION 00-00-00
DATE PLOTTED => 07-JUN-2010
TIME PLOTTED => 14:47

Dist	COUNTY	ROUTE	KILOMETER POST TOTAL PROJECT	SHEET No.	TOTAL SHEETS
07	LA	405	39.7/41.5	169	439

Caltrans Metric

12/10/09
REGISTERED ELECTRICAL ENGINEER

6-7-10
PLANS APPROVAL DATE

REGISTERED PROFESSIONAL ENGINEER OHANNES ANSERLIAN No. E16682 Exp. 6/30/10 ELECTRICAL STATE OF CALIFORNIA

THE STATE OF CALIFORNIA OR ITS OFFICERS OR AGENTS SHALL NOT BE RESPONSIBLE FOR THE ACCURACY OR COMPLETENESS OF ELECTRONIC COPIES OF THIS PLAN SHEET.

EXISTING CONDUCTOR AND CONDUIT SCHEDULE

AWG OR CABLE	CONDUCTOR RUN	CONDUCTOR RUN NUMBER AND SIZE										
		1	2	3	4	5	6	7	8	9	10	11
28-CONDUCTOR	CABLE	1+1(N)	1	1	1	1	1	2(N)	2(N)	2(N)	2(N)	
#8	LUMINAIRE		2	2	2	2		2(N)	2(N)	2(N)	2(N)	
#6	SIGNAL SERVICE	2										2
EVP SHIELDED	CABLE	3(N)						1(N)	2(N)	2(N)	3(N)	
DLC	Ø1 DETECTOR (2-PR)	1(N)								1(N)	1(N)	
	Ø2 DETECTOR (2-PR)	3	3	3	3	3	3					
	Ø3 DETECTOR (2-PR)											
	Ø4 DETECTOR (2-PR)	3	3	1								
	Ø5 DETECTOR (2-PR)											
	Ø6 DETECTOR (2-PR)	2 (N)								2(N)	2(N)	
	TOTAL	10	6	4	3	3	3			3(N)	3(N)	
#19	CABLE (6PR)	1	1	1								
CONDUIT SIZE		2-78	78	78	63	53	53	53(N)	53(N)	53(N)	53	53

PROJECT NOTES: (FOR SHEET E-24)

1 RL REFLECTORIZED STREET NAME SIGN.

2 RL EMERGENCY VEHICLE PREEMPTION (EVP) DETECTOR.

3 RC CONDUCTORS.

4 RC PHASE 1 dlc's, EXISTING PHASE 6 dlc's AND EXISTING EVP SHIELDED CABLE.

5 RL R9-3a AND R96A (CA) SIGNS FROM EXISTING POLE TO NEW POLE.

6 INSTALL EXTERNAL CABINET, BATTERIES, AND STATE-FURNISHED BBS COMPONENTS.

EXISTING POLE AND EQUIPMENT SCHEDULE

No.	STANDARD			VEH SIG MTG		PED SIGNAL	PPB		HPS LUMINAIRE	SPECIAL REQUIREMENTS
	Type	SMA	LMA	Mast Arm	Pole	MTG	Ø	ARROW		
A	1-A	—	—	—	—	TP-1	8	←	—	—
B	1-A	—	—	—	TV-1-T	SP-1-CS	2	→	—	—
C	15	—	2.4 m	—	—	—	2	←	250 W	—
D	1-A	—	—	—	TV-2-T	SP-1-CS	—	—	—	—
E	19-3-161(N)	9.1 m(N)	3.7 m(N)	2MAS(N)	SV-2-TA(N)	—	—	—	400 W(N)	BRISTOL(R)
F	1-A (R)	—	—	—	TV-1-T(R)	—	—	—	—	—
G	1-A (R)	—	—	—	TV-3-TA(R)	SP-1-CS(R)	—	—	—	—
H	19-2-113	9.1 m	3.7 m	MAS	SV-1-T	—	—	—	400 W	BRISTOL

(R) = RELOCATE
(N) = NEW
CS = CLAMSHEL MOUNTING HARDWARE

PROJECT NOTES: (FOR SHEET E-24)

1. FROM THE SIGNAL STANDARD TO ADJACENT PULL BOX, 12 CONDUCTOR SIGNAL CABLE SHALL BE USED.

MODIFY SIGNAL AND LIGHTING

NO SCALE

E-25

THIS PLAN IS ACCURATE FOR ELECTRICAL WORK ONLY

STATE OF CALIFORNIA - DEPARTMENT OF TRANSPORTATION
Caltrans TRAFFIC DESIGN

FUNCTIONAL SUPERVISOR: YEFIM ZABEZHINSKY
CALCULATED-DESIGNED BY: MICHAEL MARVI
CHECKED BY: OHANNES ANSERLIAN
REVISED BY / DATE REVISED

LAST REVISION 00-00-00 | DATE PLOTTED => 07-JUN-2010 | TIME PLOTTED => 14:44

NOTE: FOR ACCURATE RIGHT OF WAY ACCESS DATA, CONTACT RIGHT OF WAY ENGINEERING AT THE DISTRICT OFFICE.

LIGHTING LEGEND: (THIS SHEET)

EXISTING CITY STREET ELECTROLIER TO REMAIN UNLESS OTHERWISE NOTED.

NEW CITY STREET ELECTROLIER, 150 WATT.

PROJECT NOTES: (THIS SHEET)

1 RS EXISTING CITY STREET LIGHTING POLE.
INSTALL NEW CITY STREET LIGHTING POLE ON A NEW FOUNDATION IN THE SAME LOCATION. SEE E-27 FOR DETAIL.

Dist	COUNTY	ROUTE	KILOMETER POST TOTAL PROJECT	SHEET No.	TOTAL SHEETS
07	LA	405	39.7/41.5	170	439

Ohannes O Anserlian 12/10/09
REGISTERED ELECTRICAL ENGINEER

6-7-10
PLANS APPROVAL DATE

REGISTERED PROFESSIONAL ENGINEER OHANNES ANSERLIAN No. E16682 Exp. 6/30/08 ELECTRICAL STATE OF CALIFORNIA

THE STATE OF CALIFORNIA OR ITS OFFICERS OR AGENTS SHALL NOT BE RESPONSIBLE FOR THE ACCURACY OR COMPLETENESS OF ELECTRONIC COPIES OF THIS PLAN SHEET.

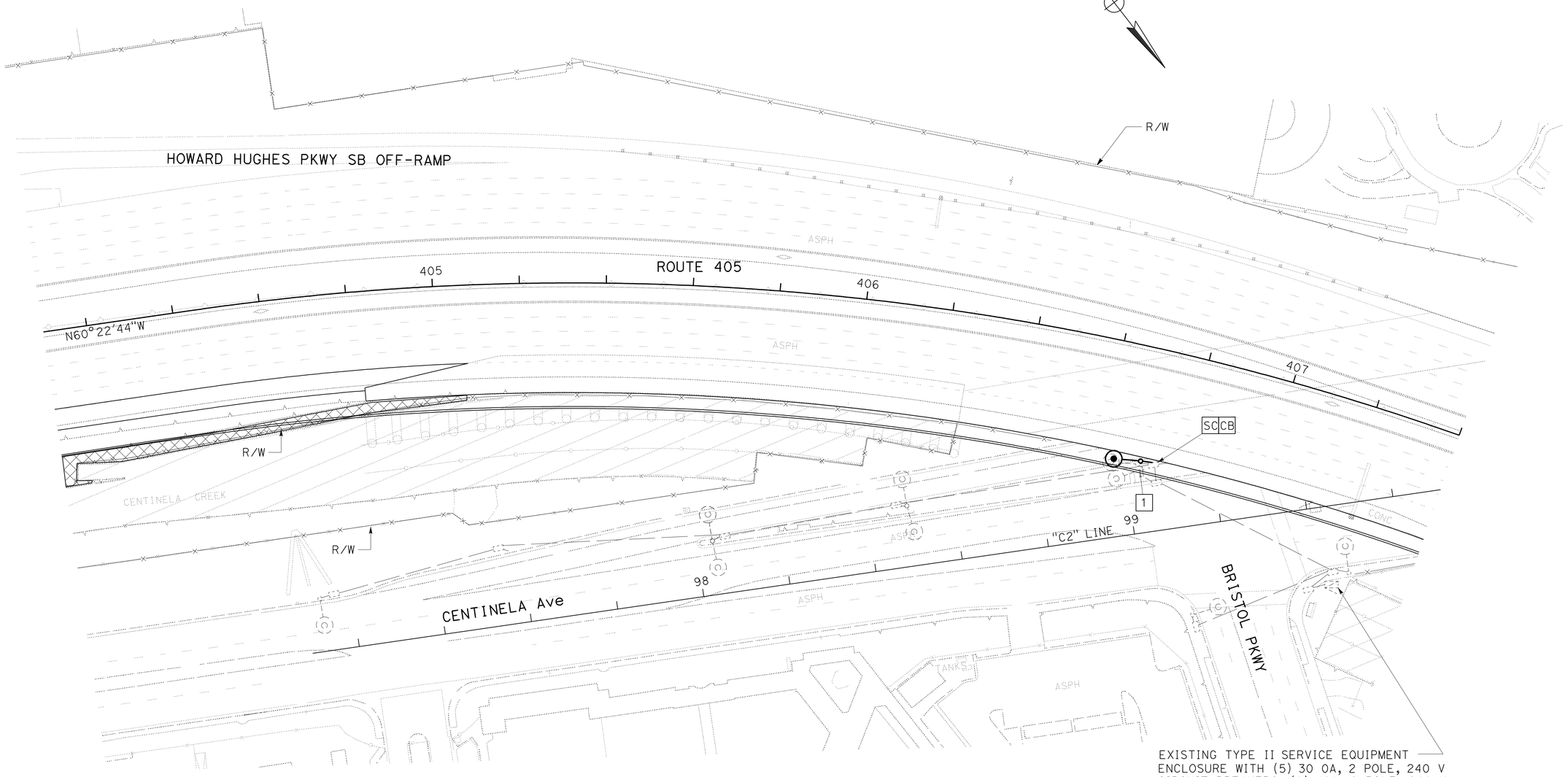

EXISTING TYPE II SERVICE EQUIPMENT ENCLOSURE WITH (5) 30 OA, 2 POLE, 240 V CIRCUIT BREAKERS, (1) 40A, 2 POLE, 240 V CIRCUIT BREAKER AND (1) 15 A, 1 POLE, 240 V CIRCUIT BREAKER.

ALL DIMENSIONS ARE IN METERS UNLESS OTHERWISE SHOWN

MODIFY LIGHTING (CITY)

SCALE 1:500

E-26

STATE OF CALIFORNIA - DEPARTMENT OF TRANSPORTATION
Caltrans **TRAFFIC DESIGN**

FUNCTIONAL SUPERVISOR: YEFIM ZABEZHINSKY
CALCULATED-DESIGNED BY: MICHAEL MARVI
CHECKED BY: OHANNES ANSERLIAN
REVISED BY / DATE REVISED

LAST REVISION 00-00-00 | DATE PLOTTED => 07-JUN-2010 | TIME PLOTTED => 14:44

DIST	COUNTY	ROUTE	KILOMETER POST TOTAL PROJECT	SHEET No	TOTAL SHEETS
07	LA	405	39.7/41.5	171	439

Caltrans Metric

Ohannes O Anserlian 12/10/09
REGISTERED ELECTRICAL ENGINEER

6-7-10
PLANS APPROVAL DATE

REGISTERED PROFESSIONAL ENGINEER OHANNES ANSERLIAN No. E16682 Exp 6/30/10 ELECTRICAL STATE OF CALIFORNIA

The State of California or its officers or agents shall not be responsible for the accuracy or completeness of electronic copies of this plan sheet.

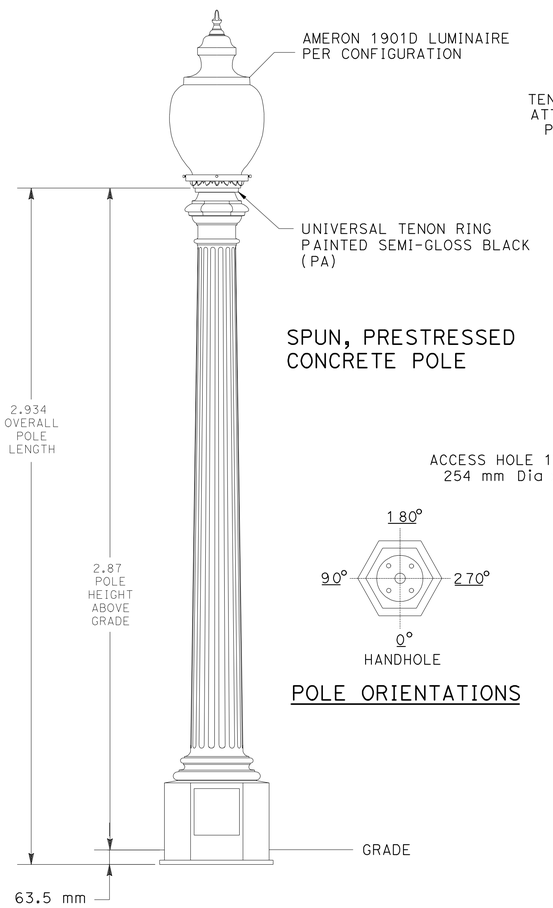

SPUN, PRESTRESSED CONCRETE POLE

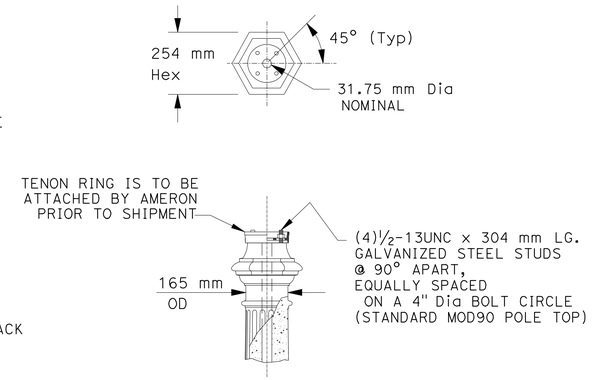

TOP DETAIL

POLE ORIENTATIONS

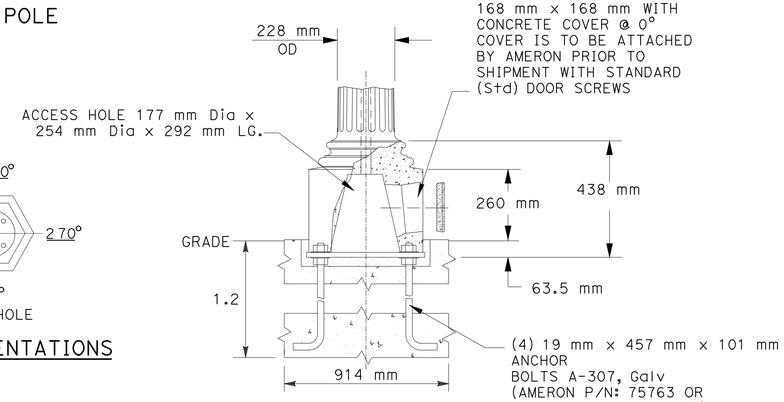

BASE DETAIL

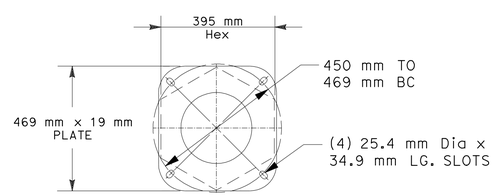

REV.	DATE	DESCRIPTION	DRN.	APPR.
A	03/01	ADDED CONCRETE DOOR	G.C.	
B	03/01	CHANGED TO MIX (34I)	M.L.	
C	03/05	TENON PAINT WAS (P1), NOW (PA)	M.L.	
D	04/08	UPDATED FOR ORACLE	L.P.	

"F" LEVEL CONFIG CODES		
OPTION CLASS	ENTRY	INFO.
COATING	I	
HH COVER	43479M34	
DOOR SCRS	STD	

"P" LEVEL CONFIG CODES		
OPTION CLASS	ENTRY	INFO.
MIX	34	
FINISH	3	
BASEPLATE	45318	
POLE TOP CON.	MOD90	

TRADITIONAL CONCRETE POLE

POLE DESIG-NATION	POLE HEIGHT ABOVE GRADE	OVERALL POLE LENGTH	BOLT CIRCLE	BASE O.D.	ULTIMATE G.L. MOMENT (ft. lbs.)	WEIGHT (lbs.)
22CT10	1.5 m-2.7 m	2.934m	457 mm	395 mm	16,200	540

( ) POLES REQUIRED, EACH WITH CAST ALUMINUM TENON RING, 7"O.D. x 1-3/4" LG; (P/N: 46087PA) & 1901 LUMINAIRE PER CONFIGURATION REQUIREMENTS.

NOTES :

1. MIX (343I): BLACK & WHITE DARK MATRIX, EXPOSED AGGREGATE FINISH, WITH AMERSHIELD ANTI-GRAFFITI COATING.
2. ASTM C-150 TYPE III GRAY CEMENT.
3. f'c @ 28 DAYS = 6,000 PSI, USING SPUN CYLINDER TEST.
4. f'c @ 28 DAYS = 5,000 PSI, USING ASTM C-31 CYLINDER TEST.
5. POLES MANUFACTURED PER ASTM C-1089-06 SPECIFICATIONS.
6. PROTECTIVE COAT EXPOSED P.C. WIRES AT POLE ENDS.
7. BASEPLATE FULLY PRESTRESSED WITH (8) 5/16" Dia A-416 PRESTRESSING CABLES.

APPROVED BY **DATE**

Ameron **POLE PRODUCTS DIVISION**

CITY OF CULVER CITY STANDARDS -- CULVER CITY, CA
22CT10 POLE WITH TENON & 1901D LUMINAIRE

THIS DOCUMENT CONTAINS INFORMATION WHICH IS PROPRIETARY TO AMERON. IT SHALL NOT BE REPRODUCED, USED OR DISCLOSED TO ANYONE WITHOUT THE PRIOR WRITTEN PERMISSION OF AMERON.

DRAWN: G.C.	04/97	SCALE	DWG. NO.	REV
CHK'D:		NTS	SK040297	D

ALL DIMENSIONS ARE IN METERS UNLESS OTHERWISE SHOWN

MODIFY LIGHTING (CITY)
(STANDARD DETAILS)
NO SCALE

E-27

THIS PLAN IS ACCURATE FOR ELECTRICAL WORK ONLY.

STATE OF CALIFORNIA - DEPARTMENT OF TRANSPORTATION
Caltrans **TRAFFIC DESIGN**

PROJECT ENGINEER YEFIM ZABEZHINSKY

CALCULATED/DESIGNED BY OHANNES ANSERLIAN DATE REVISED BY
CHECKED BY YEFIM ZABEZHINSKY DATE REVISED

LAST REVISION 00-00-00 DATE PLOTTED => 07-JUN-2010 TIME PLOTTED => 14:44

RELATIVE BORDER SCALE IS IN MILLIMETERS 0 20 40 60 80

USERNAME => trmnguye
DGN FILE => 724130ua027.dgn

CU 07382 EA 241301

Dist	COUNTY	ROUTE	KILOMETER POST TOTAL PROJECT	SHEET No.	TOTAL SHEETS
07	LA	405	39.7/41.5	172	439

Caltrans Metric

Jacqueline C Tan 1/6/10
REGISTERED ELECTRICAL ENGINEER DATE

6-7-10
PLANS APPROVAL DATE

REGISTERED PROFESSIONAL ENGINEER JACQUELINE C. TAN No. E015611 Exp. 12/31/11 ELECTRICAL STATE OF CALIFORNIA

THE STATE OF CALIFORNIA OR ITS OFFICERS OR AGENTS SHALL NOT BE RESPONSIBLE FOR THE ACCURACY OR COMPLETENESS OF ELECTRONIC COPIES OF THIS PLAN SHEET.

ABBREVIATIONS: (SHEETS E-28 THROUGH E-32)

12SMFO - 12 SINGLEMODE FIBER OPTIC CABLE
24SMFO - 24 SINGLEMODE FIBER OPTIC CABLE
48SMFO - 48 SINGLEMODE FIBER OPTIC CABLE
6P22 - 6-PAIR 22 CABLE
75P22 - 75-PAIR 22 CABLE

GENERAL NOTES: (SHEETS E-28 THROUGH E-32)

1. BEFORE REMOVING OR MODIFYING ANY EXISTING ELECTRICAL FACILITIES, THE CONTRACTOR SHALL PROVIDE 72 HOUR ADVANCE WRITTEN NOTICE TO THE ENGINEER AND ALL AGENCIES CONCERNED.
2. UNLESS OTHERWISE NOTED, ALL COMMUNICATION CONDUIT BENDS SHALL BE 1.3 m RADIUS FACTORY BENDS.
3. COMMUNICATION CONDUIT SHALL BE CENTERED IN THE PAVED SHOULDER OR AS SHOWN ON PLANS OR AS DIRECTED BY THE ENGINEER.
4. CONDUITS INSTALLED ACROSS FREEWAYS AND RAMPS SHALL BE BY DIRECTIONAL JACKING METHOD, UNLESS OTHERWISE DIRECTED BY THE ENGINEER. CONDUITS INSTALLED ALONG FREEWAYS AND RAMPS ON AC, CONCRETE PAVEMENT AND SOIL, SHALL BE BY OPEN TRENCH METHOD UNLESS OTHER WISE DIRECTED BY THE ENGINEER. NO HAND JACKING IS ALLOWED.
5. PULL BOXES SHALL BE INSTALLED IN UNPAVED AREA UNLESS NOTED OTHERWISE.

LEGEND: (SHEETS E-28 THROUGH E-32)

S EXISTING SPLICE VAULT WITH SPLICE CLOSURE

MODIFY COMMUNICATION SYSTEM
(LEGENDS AND NOTES)

E-28

REVISED BY	HT
DATE REVISED	8-09
HENRY TRINH	
JACQUELINE C. TAN	
CALCULATED-DESIGNED BY	
CHECKED BY	
FUNCTIONAL SUPERVISOR	
JACQUELINE C. TAN	

STATE OF CALIFORNIA - DEPARTMENT OF TRANSPORTATION
Caltrans OFFICE OF ITS

LAST REVISION 08-17-09 DATE PLOTTED => 07-JUN-2010 TIME PLOTTED => 14:44

Dist	COUNTY	ROUTE	KILOMETER POST TOTAL PROJECT	SHEET No.	TOTAL SHEETS
07	LA	405	39.7/41.5	173	439

REGISTERED ELECTRICAL ENGINEER 1/6/10 DATE

6-7-10
PLANS APPROVAL DATE

REGISTERED PROFESSIONAL ENGINEER JACQUELINE C. TAN No. E015611 Exp. 12/31/11 ELECTRICAL STATE OF CALIFORNIA

THE STATE OF CALIFORNIA OR ITS OFFICERS OR AGENTS SHALL NOT BE RESPONSIBLE FOR THE ACCURACY OR COMPLETENESS OF ELECTRONIC COPIES OF THIS PLAN SHEET.

Caltrans Metric

FOR ACCURATE RIGHT OF WAY AND ACCESS DATA,
CONTACT RIGHT OF WAY ENGINEERING AT THE DISTRICT OFFICE.

PROJECT NOTES: (THIS SHEET ONLY)

1. INSTALL 2-78C, MT, INSIDE CONCRETE BARRIER. SEE STRUCTURAL PLANS FOR DETAILS.
2. INSTALL CONDUIT(S) IN SOIL AREA. SEE SHEET E-34 FOR DETAILS.
3. JACK CONDUIT(S) UNDERNEATH ROADWAY. SEE SHEET E-35 FOR DETAILS.

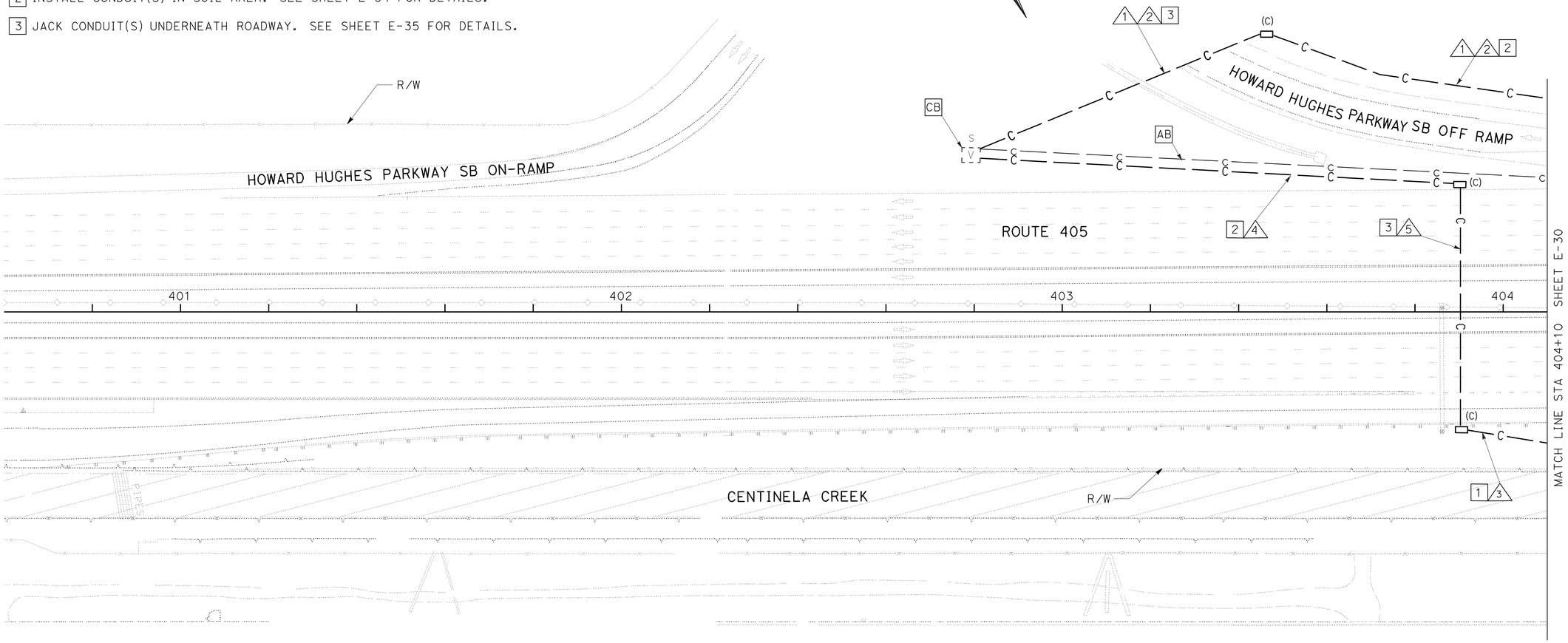

CONDUIT AND CONDUCTOR SCHEDULE (THIS SHEET ONLY)														
CONDUCTOR TYPE	FUNCTION	RUN												
		1			2	3	4				5			
6P22 CABLE	VOICE/DATA													
75P22 CABLE	VOICE/DATA	1												
12SMFO CABLE	VIDEO DISTRIBUTION		1											
24SMFO CABLE	HUB TO TMC		1											
48SMFO CABLE	SONET/CCTV TRUNK			1										
INNERDUCT (SIZE 25)		1	1	1	3		1	1	1	1	1	1	1	1
CONDUIT SIZE		103			103	2-78	103				103			

ALL DIMENSIONS ARE IN
METERS UNLESS OTHERWISE SHOWN

MODIFY COMMUNICATION SYSTEM

SCALE 1:500

THIS PLAN IS ACCURATE FOR ELECTRICAL WORK ONLY.
FOR LENGENDS AND GENERAL NOTES, SEE SHEET E-28.

E-29

STATE OF CALIFORNIA - DEPARTMENT OF TRANSPORTATION
Caltrans OFFICE OF ITS

FUNCTIONAL SUPERVISOR JACQUELINE C. TAN
CALCULATED-DESIGNED BY HENRY TRINH
CHECKED BY JACQUELINE C. TAN
REVISED BY HT
DATE REVISED 11-09

LAST REVISION DATE PLOTTED => 07-JUN-2010
TIME PLOTTED => 14:44
08-12-09

Dist	COUNTY	ROUTE	KILOMETER POST TOTAL PROJECT	SHEET No.	TOTAL SHEETS
07	LA	405	39.7/41.5	174	439

Jacqueline C Tan 1/6/10
REGISTERED ELECTRICAL ENGINEER DATE

6-7-10
PLANS APPROVAL DATE

REGISTERED PROFESSIONAL ENGINEER JACQUELINE C. TAN No. E015611 Exp 12/31/11 ELECTRICAL STATE OF CALIFORNIA

THE STATE OF CALIFORNIA OR ITS OFFICERS OR AGENTS SHALL NOT BE RESPONSIBLE FOR THE ACCURACY OR COMPLETENESS OF ELECTRONIC COPIES OF THIS PLAN SHEET.

Caltrans Metric

FOR ACCURATE RIGHT OF WAY AND ACCESS DATA,
CONTACT RIGHT OF WAY ENGINEERING AT THE DISTRICT OFFICE.

CONDUIT AND CONDUCTOR SCHEDULE (THIS SHEET ONLY)

CONDUCTOR TYPE	FUNCTION	RUN 1			RUN 2	RUN 3
75P22 CABLE	COMMUNICATION DATA	1				
12SMFO CABLE	VIDEO DISTRIBUTION		1			
24SMFO CABLE	HUB TO TMC		1			
48SMFO CABLE	SONET/CCTV TRUNK			1		
INNERDUCT (SIZE 25)		1	1	1	3	
CONDUIT SIZE		103			103	2-78

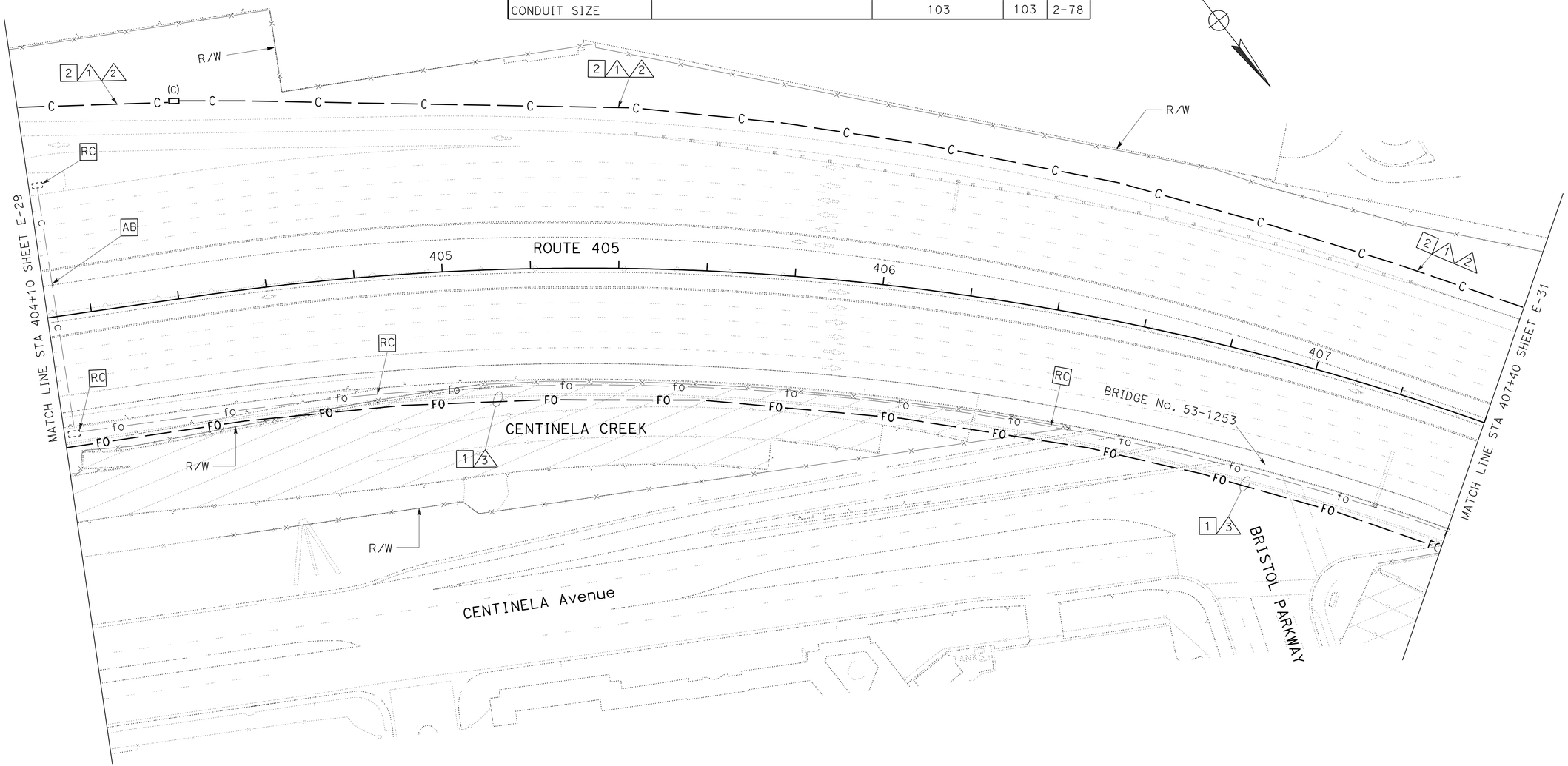

PROJECT NOTES: (THIS SHEET ONLY)

1. INSTALL 2-78C, MT, INSIDE CONCRETE BARRIER. SEE STRUCTURAL PLANS FOR DETAILS.
2. INSTALL CONDUIT(S) IN SOIL AREA. SEE SHEET E-34 FOR DETAILS.

ALL DIMENSIONS ARE IN METERS UNLESS OTHERWISE SHOWN

MODIFY COMMUNICATION SYSTEM

SCALE 1:500

THIS PLAN IS ACCURATE FOR ELECTRICAL WORK ONLY.
FOR LEGENDS AND GENERAL NOTES, SEE SHEET E-28.

E-30

STATE OF CALIFORNIA - DEPARTMENT OF TRANSPORTATION
Caltrans OFFICE OF ITS

FUNCTIONAL SUPERVISOR: JACQUELINE C. TAN
CALCULATED-DESIGNED BY: HENRY TRINH
CHECKED BY: JACQUELINE C. TAN
REVISED BY: HT
DATE REVISED: 11-09

LAST REVISION 08-12-09
DATE PLOTTED => 08-JUN-2010
TIME PLOTTED => 08:06

FOR ACCURATE RIGHT OF WAY AND ACCESS DATA,
CONTACT RIGHT OF WAY ENGINEERING AT THE DISTRICT OFFICE.

CONDUCTOR TYPE	FUNCTION	RUN 1			RUN 2	RUN 3
75P22 CABLE	COMMUNICATION DATA	1				
12SMFO CABLE	VIDEO DISTRIBUTION		1			
24SMFO CABLE	HUB TO TMC		1			
48SMFO CABLE	SONET/CCTV TRUNK			1		
INNERDUCT (SIZE 25)		1	1	1	3	
CONDUIT SIZE			103		103	2-78

CONDUIT AND CONDUCTOR SCHEDULE (THIS SHEET ONLY)

Dist	COUNTY	ROUTE	KILOMETER POST TOTAL PROJECT	SHEET No.	TOTAL SHEETS
07	LA	405	39.7/41.5	175	439

Jacqueline C Tan 1/6/10
REGISTERED ELECTRICAL ENGINEER DATE

6-7-10
PLANS APPROVAL DATE

REGISTERED PROFESSIONAL ENGINEER JACQUELINE C. TAN No. E015611 Exp. 12/31/11 ELECTRICAL STATE OF CALIFORNIA

THE STATE OF CALIFORNIA OR ITS OFFICERS OR AGENTS SHALL NOT BE RESPONSIBLE FOR THE ACCURACY OR COMPLETENESS OF ELECTRONIC COPIES OF THIS PLAN SHEET.

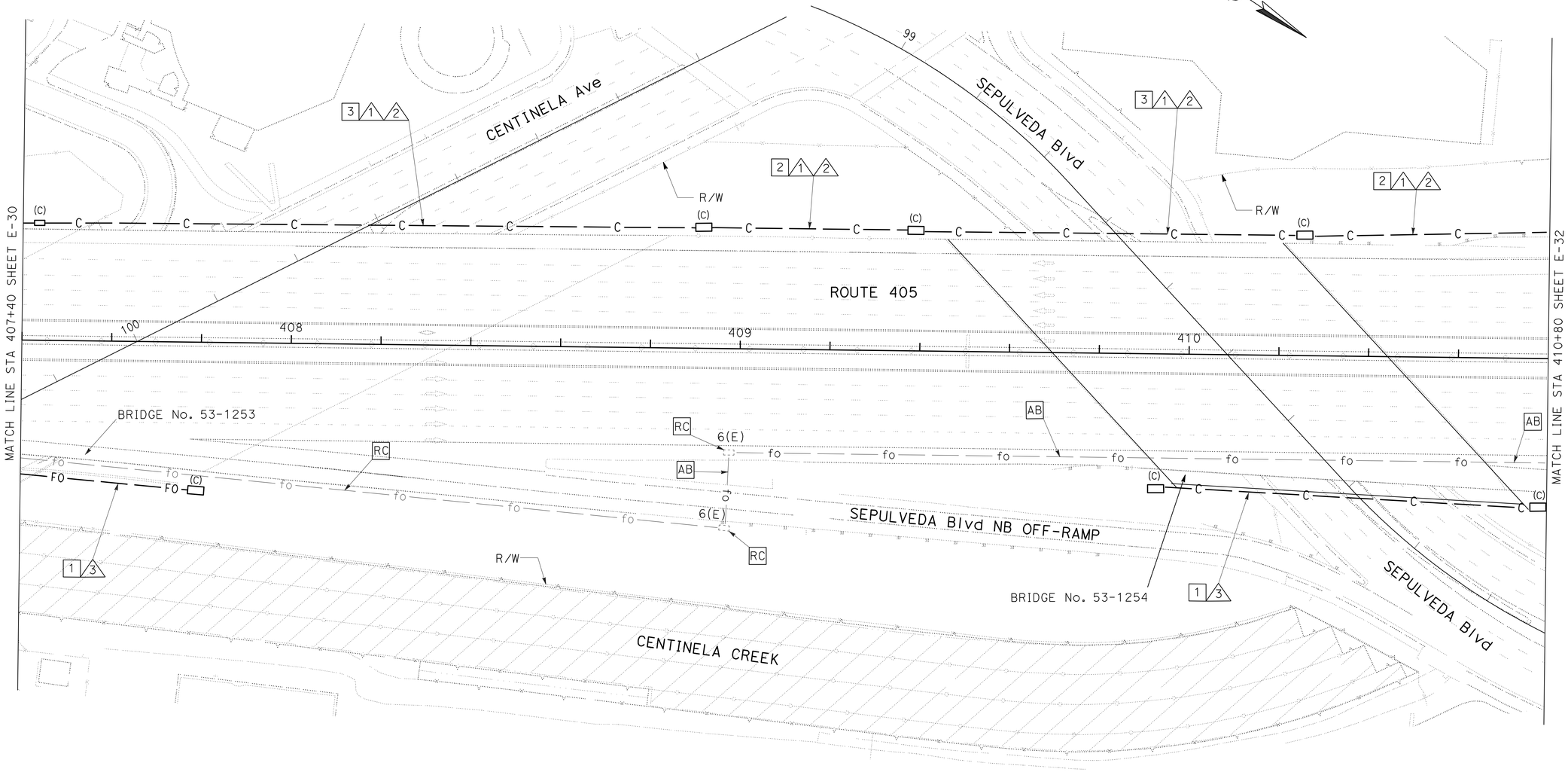

PROJECT NOTES: (THIS SHEET ONLY)

1. INSTALL 2-78C, MT, INSIDE CONCRETE BARRIER. SEE STRUCTURAL PLANS FOR DETAILS.
2. INSTALL CONDUIT(S) IN SOIL AREA. SEE SHEET E-34 FOR DETAILS.
3. ATTACH CONDUITS IN A METAL BOX ATTACHED TO BRIDGE RAILS SEE STRUCTURAL PLANS FOR DETAILS.

ALL DIMENSIONS ARE IN METERS UNLESS OTHERWISE SHOWN

MODIFY COMMUNICATION SYSTEM

SCALE 1:500

THIS PLAN IS ACCURATE FOR ELECTRICAL WORK ONLY.
FOR LEGENDS AND GENERAL NOTES, SEE SHEET E-28.

E-31

STATE OF CALIFORNIA - DEPARTMENT OF TRANSPORTATION
Caltrans OFFICE OF ITS

FUNCTIONAL SUPERVISOR: JACQUELINE C. TAN
CALCULATED-DESIGNED BY: HENRY TRINH
CHECKED BY: JACQUELINE C. TAN
REVISED BY: HT
DATE REVISED: 11-09

LAST REVISION 08-12-09 | DATE PLOTTED => 07-JUN-2010 | TIME PLOTTED => 14:45

Dist	COUNTY	ROUTE	KILOMETER POST TOTAL PROJECT	SHEET No.	TOTAL SHEETS
07	LA	405	39.7/41.5	176	439

Jacqueline C Tan 1/6/10
REGISTERED ELECTRICAL ENGINEER DATE

6-7-10
PLANS APPROVAL DATE

REGISTERED PROFESSIONAL ENGINEER JACQUELINE C. TAN No. E015611 Exp. 12/31/11 ELECTRICAL STATE OF CALIFORNIA

THE STATE OF CALIFORNIA OR ITS OFFICERS OR AGENTS SHALL NOT BE RESPONSIBLE FOR THE ACCURACY OR COMPLETENESS OF ELECTRONIC COPIES OF THIS PLAN SHEET.

Caltrans Metric

FOR ACCURATE RIGHT OF WAY AND ACCESS DATA,
CONTACT RIGHT OF WAY ENGINEERING AT THE DISTRICT OFFICE.

CONDUIT AND CONDUCTOR SCHEDULE (THIS SHEET ONLY)

CONDUCTOR TYPE	FUNCTION	RUN 1			RUN 2
75P22 CABLE	COMMUNICATION DATA	1			
12SMFO CABLE	VIDEO DISTRIBUTION		1		
24SMFO CABLE	HUB TO TMC		1		
48SMFO CABLE	SONET/CCTV TRUNK			1	
INNERDUCT (SIZE 25)		1	1	1	3
CONDUIT SIZE		103			103

PROJECT NOTE: (THIS SHEET ONLY)

1 INSTALL CONDUIT(S) IN SOIL AREA. SEE SHEET E-34 FOR DETAILS.

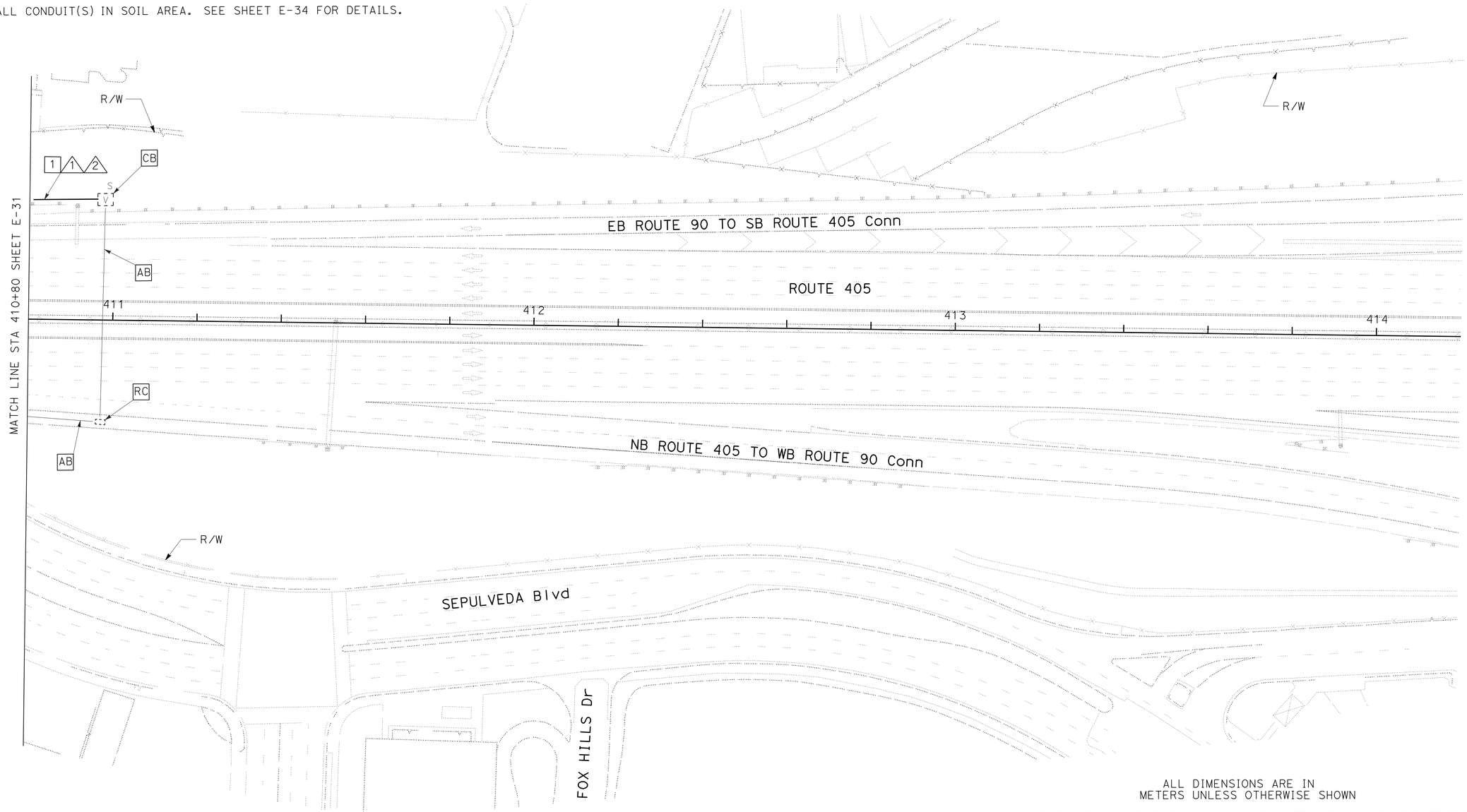

ALL DIMENSIONS ARE IN
METERS UNLESS OTHERWISE SHOWN

MODIFY COMMUNICATION SYSTEM

SCALE 1:500

THIS PLAN IS ACCURATE FOR ELECTRICAL WORK ONLY.
FOR LEGENDS AND GENERAL NOTES, SEE SHEET E-28.

E-32

STATE OF CALIFORNIA - DEPARTMENT OF TRANSPORTATION
Caltrans OFFICE OF ITS

FUNCTIONAL SUPERVISOR JACQUELINE C. TAN
CALCULATED-DESIGNED BY HENRY TRINH
CHECKED BY JACQUELINE C. TAN
REVISED BY HT
DATE REVISED 12-09

LAST REVISION 12-08-09
DATE PLOTTED => 07-JUN-2010
TIME PLOTTED => 14:45

DIST	COUNTY	ROUTE	KILOMETER POST TOTAL PROJECT	SHEET No	TOTAL SHEETS
07	LA	405	39.7/41.5	177	439

REGISTERED ELECTRICAL ENGINEER 1/6/10

6-7-10
PLANS APPROVAL DATE

REGISTERED PROFESSIONAL ENGINEER JACQUELINE TAN No. E015611 Exp. 12/31/11 ELECTRICAL STATE OF CALIFORNIA

The State of California or its officers or agents shall not be responsible for the accuracy or completeness of electronic copies of this plan sheet.

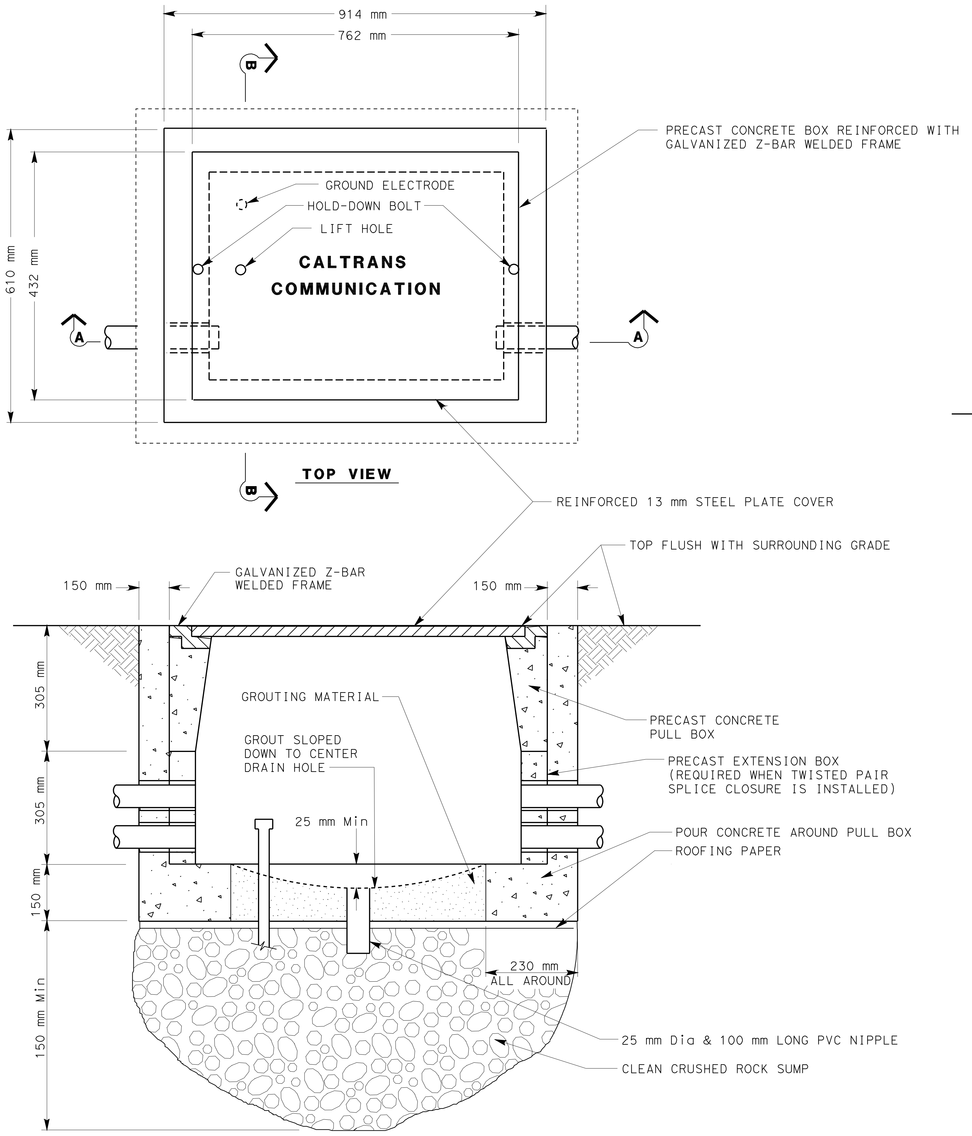

SECTION A-A

NOTES: (THIS SHEET ONLY)

1. FOR DETAILS NOT SHOWN SEE Std PLAN RSP ES-8.
2. CONDUITS SHOWN ARE FOR EXAMPLE ONLY. ADDITIONAL CONDUITS MAY BE REQURIED AS SHOWN ON THE PLAN SHEETS.
3. SEE SPECIAL PROVISIONS REGARDING HOLD-DOWN BOLTS FOR TRAFFIC COVERS.
4. CONDUITS SHALL EXTEND INTO THE PULL BOX A NOMINAL 50 mm FROM THE INSIDE WALL.

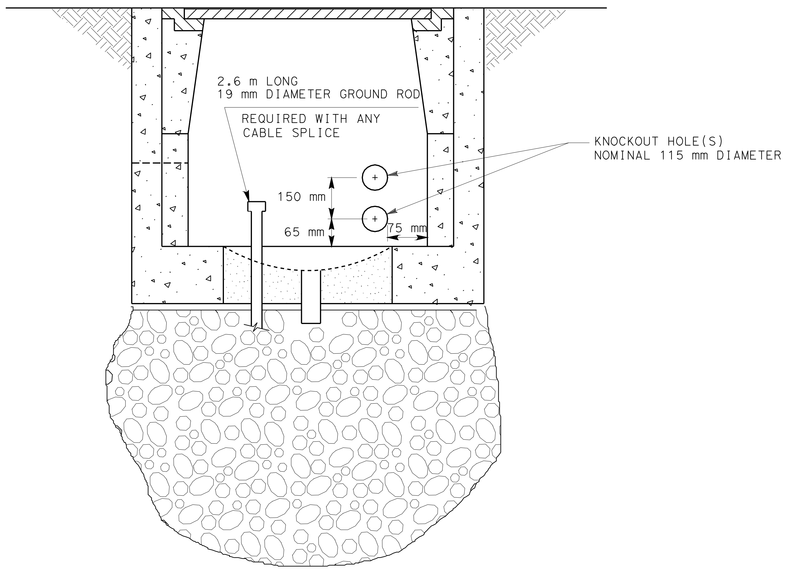

SECTION B-B

ALL DIMENSIONS ARE IN METERS UNLESS OTHERWISE SHOWN

MODIFY COMMUNICATION SYSTEM (COMMUNICATIONS PULL BOX DETAILS)

NO SCALE

THIS PLAN IS ACCURATE FOR ELECTRICAL WORK ONLY.
FOR LEGEND AND GENERAL NOTES SEE SHEET E-28.

E-33

CALCULATED/ DESIGNED BY	HENRY TRINH	DATE 9/09	REVISED BY	HT
CHECKED BY	JACQUELINE TAN	9/09	DATE REVISED	12/09

PROJECT ENGINEER HENRY TRINH

STATE OF CALIFORNIA - DEPARTMENT OF TRANSPORTATION
Caltrans
OFFICE OF ITS

LAST REVISION 00-00-00 DATE PLOTTED => 08-JUN-2010 TIME PLOTTED => 08:08

FOR REDUCED PLANS ORIGINAL SCALE IS IN MILLIMETERS 0 20 40 60 80

USERNAME => trmikesl
DGN FILE => T24130uo033.dgn

CU 07388 EA 241301

Dist	COUNTY	ROUTE	KILOMETER POST TOTAL PROJECT	SHEET No.	TOTAL SHEETS
07	LA	405	39.7/41.5	178	439

Caltrans Metric

Jacqueline C Tan 1/6/10
REGISTERED ELECTRICAL ENGINEER DATE

6-7-10
PLANS APPROVAL DATE

REGISTERED PROFESSIONAL ENGINEER JACQUELINE C. TAN No. E015611 Exp. 12/31/11 ELECTRICAL STATE OF CALIFORNIA

THE STATE OF CALIFORNIA OR ITS OFFICERS OR AGENTS SHALL NOT BE RESPONSIBLE FOR THE ACCURACY OR COMPLETENESS OF ELECTRONIC COPIES OF THIS PLAN SHEET.

NOTES: (THIS SHEET ONLY)

1. CENTER CONDUIT IN TRENCH.
2. WHEN TRENCH CROSSES FROM ASPHALT TO DIRT AREAS, CONDUIT SHALL GRADUALLY TRANSITION FROM 600 mm Min DEPTH TO 760 mm Min DEPTH.

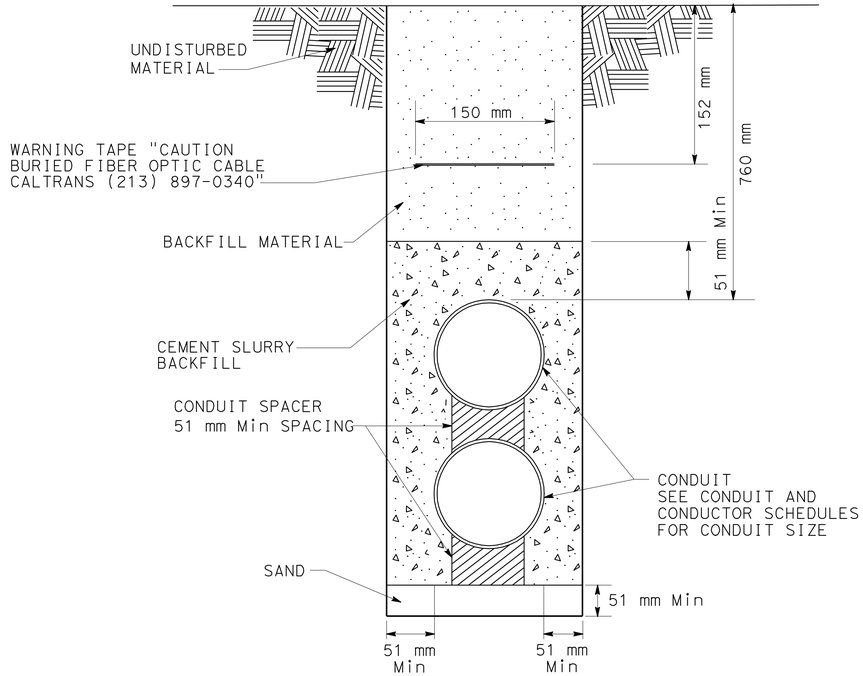

TRENCH IN SOIL DETAIL

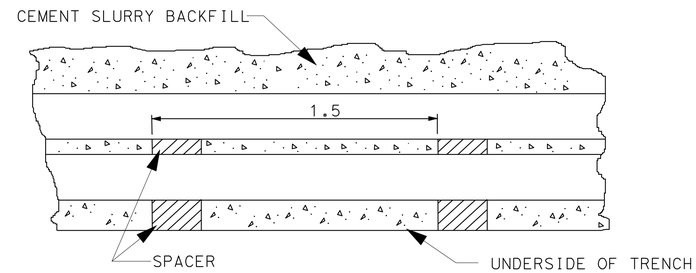

ELEVATION OF TRENCH

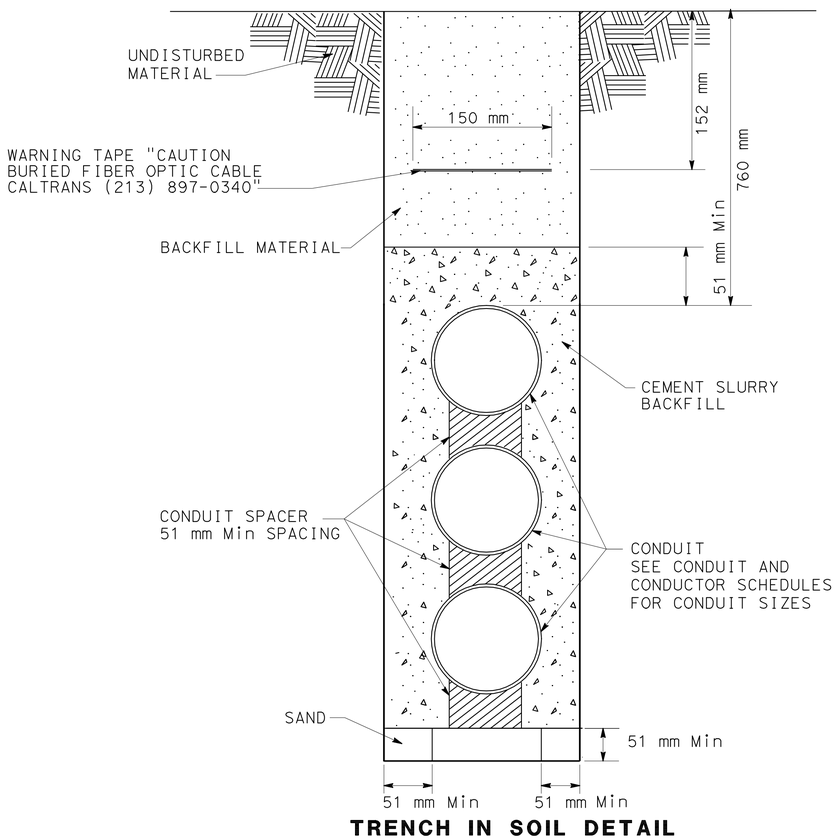

TRENCH IN SOIL DETAIL

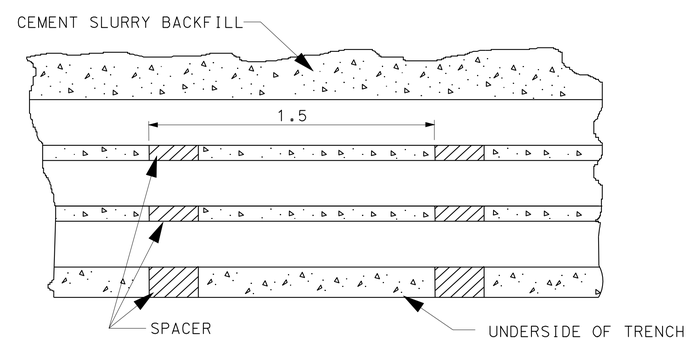

ELEVATION OF TRENCH

ALL DIMENSIONS ARE IN METERS UNLESS OTHERWISE SHOWN

MODIFY COMMUNICATION SYSTEM
(MULTIPLE TRENCH DETAILS)

NO SCALE

E-34

HENRY TRINH	HT	REVISED BY	
JACQUELINE C. TAN	8-09	DATE REVISED	
CALCULATED-DESIGNED BY			
CHECKED BY			
FUNCTIONAL SUPERVISOR			
JACQUELINE C. TAN			

STATE OF CALIFORNIA - DEPARTMENT OF TRANSPORTATION
Caltrans OFFICE OF ITS

LAST REVISION 08-12-09 | DATE PLOTTED => 07-JUN-2010 | TIME PLOTTED => 15:23

Dist	COUNTY	ROUTE	KILOMETER POST TOTAL PROJECT	SHEET No.	TOTAL SHEETS
07	LA	405	39.7/41.5	179	439

Caltrans Metric

Jacqueline C Tan 1/6/10
REGISTERED ELECTRICAL ENGINEER DATE

6-7-10
PLANS APPROVAL DATE

REGISTERED PROFESSIONAL ENGINEER JACQUELINE TAN No. E015611 Exp. 12/31/11 ELECTRICAL STATE OF CALIFORNIA

THE STATE OF CALIFORNIA OR ITS OFFICERS OR AGENTS SHALL NOT BE RESPONSIBLE FOR THE ACCURACY OR COMPLETENESS OF ELECTRONIC COPIES OF THIS PLAN SHEET.

NOTES: (THIS SHEET ONLY)

1. JACKED COMMUNICATION CONDUITS SHALL BE 760 mm Min BELOW FINISHED GRADE.
2. PLACE PULL BOXES AS SHOWN PER PLANS.
3. BENDS SHALL BE FACTORY BENDS.
4. BEND ANGLES AND CONDUIT DIRECTION VARY AS SHOWN PER PLANS.

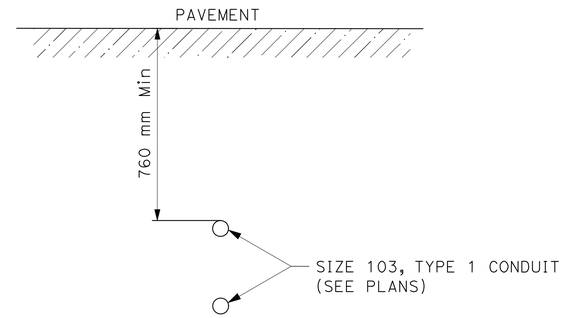

SECTION A-A

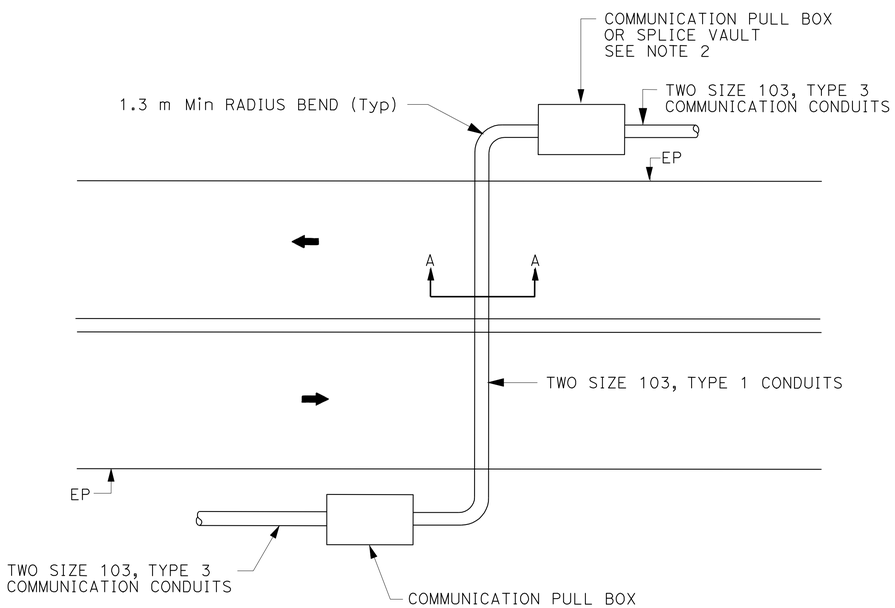

TYPICAL MAINLINE CROSSING (4 OR MORE LANES)

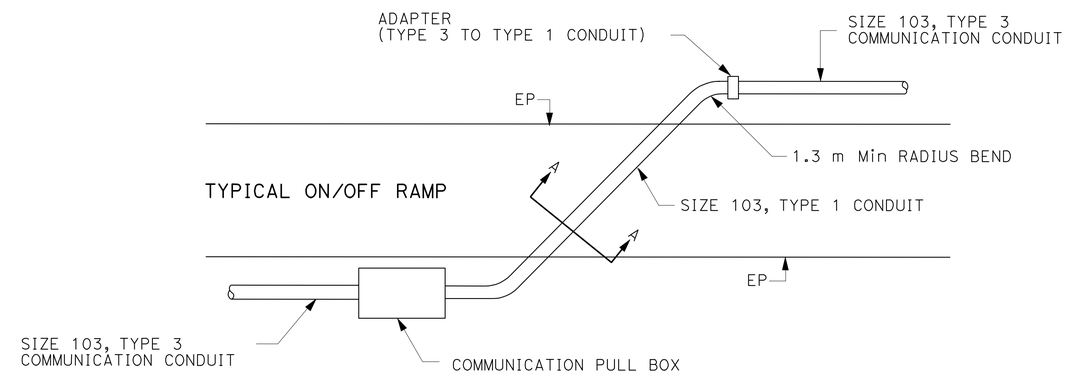

TYPICAL ON/OFF RAMP CROSSING

ALL DIMENSIONS ARE IN
METERS UNLESS OTHERWISE SHOWN

MODIFY COMMUNICATION SYSTEM
(JACKING DETAILS)

NO SCALE

THIS PLAN IS ACCURATE FOR ELECTRICAL WORK ONLY.
FOR LEGENDS AND GENERAL NOTES, SEE SHEET E-28.

E-35

HENRY TRINH	HT
JACQUELINE C. TAN	8-09
REVISED BY	DATE REVISED
CALCULATED-DESIGNED BY	
CHECKED BY	
FUNCTIONAL SUPERVISOR	
JACQUELINE C. TAN	

STATE OF CALIFORNIA - DEPARTMENT OF TRANSPORTATION
Caltrans OFFICE OF ITS

LAST REVISION 08-12-09 | DATE PLOTTED => 07-JUN-2010 | TIME PLOTTED => 15:23

DIST	COUNTY	ROUTE	KILOMETER POST TOTAL PROJECT	SHEET NO.	TOTAL SHEETS
07	LA	405	39.7/41.5	180	439

Caltrans Metric

Donald E Howe
REGISTERED CIVIL ENGINEER

June 6, 2008
PLANS APPROVAL DATE

REGISTERED PROFESSIONAL ENGINEER
Donald E. Howe
No. C46402
Exp. 3-31-09
CIVIL
STATE OF CALIFORNIA

The State of California or its officers or agents shall not be responsible for the accuracy or completeness of electronic copies of this plan sheet.

To get to the Caltrans web site, go to: http://www.dot.ca.gov

To accompany plans dated 6-7-10

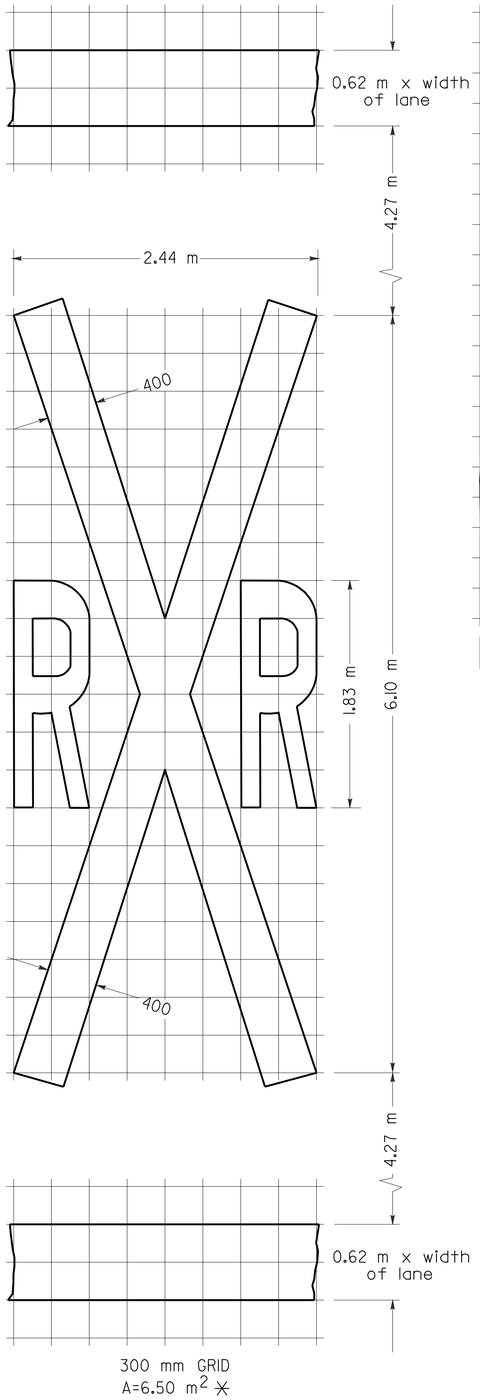

RAILROAD CROSSING SYMBOL

✳6.5 m^2 DOES NOT INCLUDE THE 0.6 m x VARIABLE WIDTH TRANSVERSE LINES.

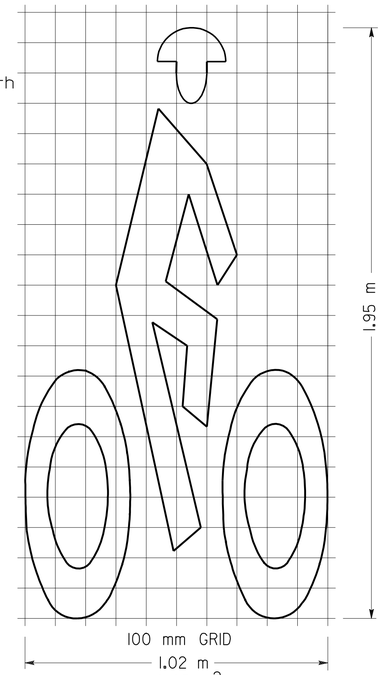

BIKE LANE SYMBOL

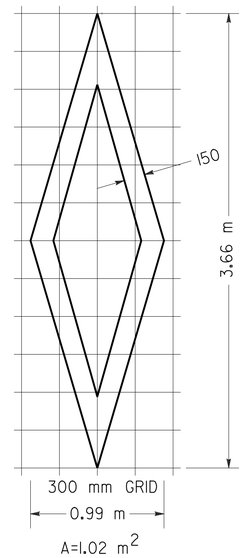

DIAMOND SYMBOL

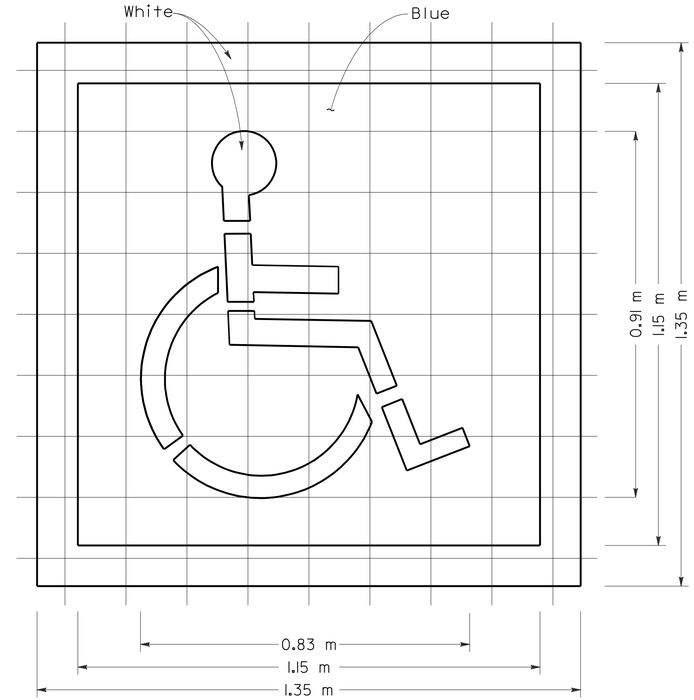

INTERNATIONAL SYMBOL OF ACCESSIBILITY MARKING

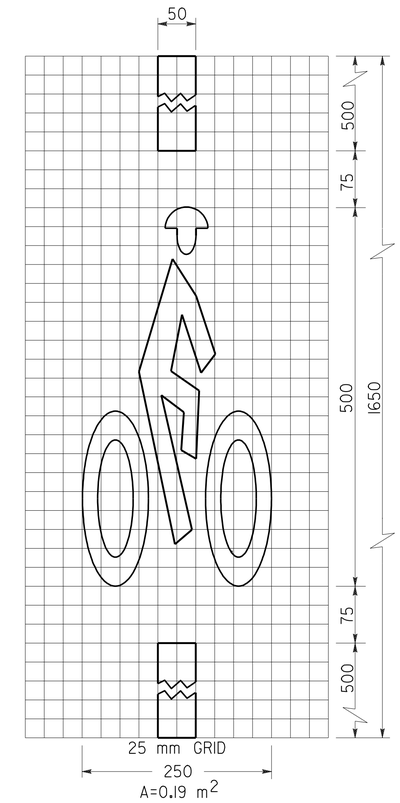

BICYCLE LOOP DETECTOR SYMBOL

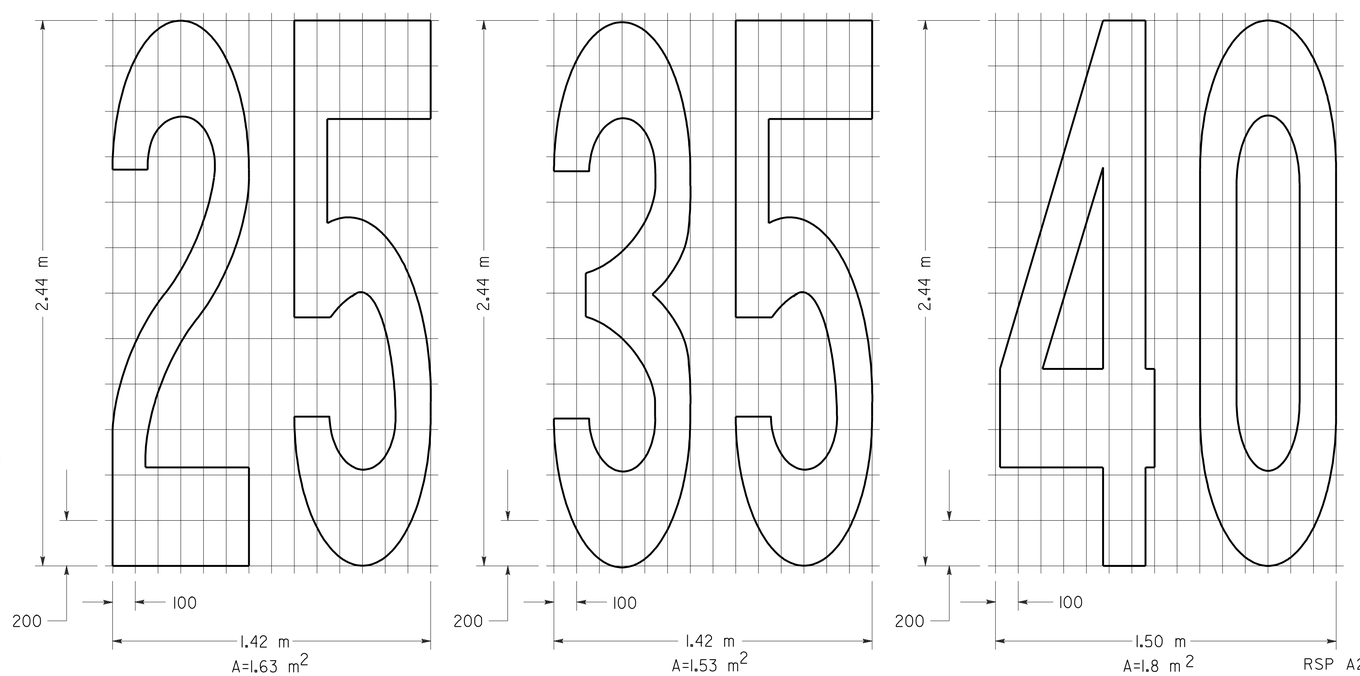

NUMERALS

NOTE:

1. Minor variations in dimensions may be accepted by the Engineer.

STATE OF CALIFORNIA
DEPARTMENT OF TRANSPORTATION

PAVEMENT MARKINGS SYMBOLS AND NUMERALS

NO SCALE

ALL DIMENSIONS ARE IN MILLIMETERS UNLESS OTHERWISE SHOWN

RSP A24C DATED JUNE 6, 2008 SUPERSEDES STANDARD PLAN A24C DATED July 1, 2004 - PAGE 11 OF THE STANDARD PLANS BOOK DATED July 2004.

REVISED STANDARD PLAN RSP A24C

2004 REVISED Std PLAN RSP A24C

5-27-08

To accompany plans dated 6-7-10

Caltrans Metric

DIST	COUNTY	ROUTE	KILOMETER POST TOTAL PROJECT	SHEET NO.	TOTAL SHEETS
07	LA	405	39.7/41.5	181	439

Randell D. Hiatt
REGISTERED CIVIL ENGINEER

October 20, 2006
PLANS APPROVAL DATE

REGISTERED PROFESSIONAL ENGINEER Randell D. Hiatt No. C50200 Exp. 6-30-07 CIVIL STATE OF CALIFORNIA

The State of California or its officers or agents shall not be responsible for the accuracy or completeness of electronic copies of this plan sheet.

To get to the Caltrans web site, go to: http://www.dot.ca.gov

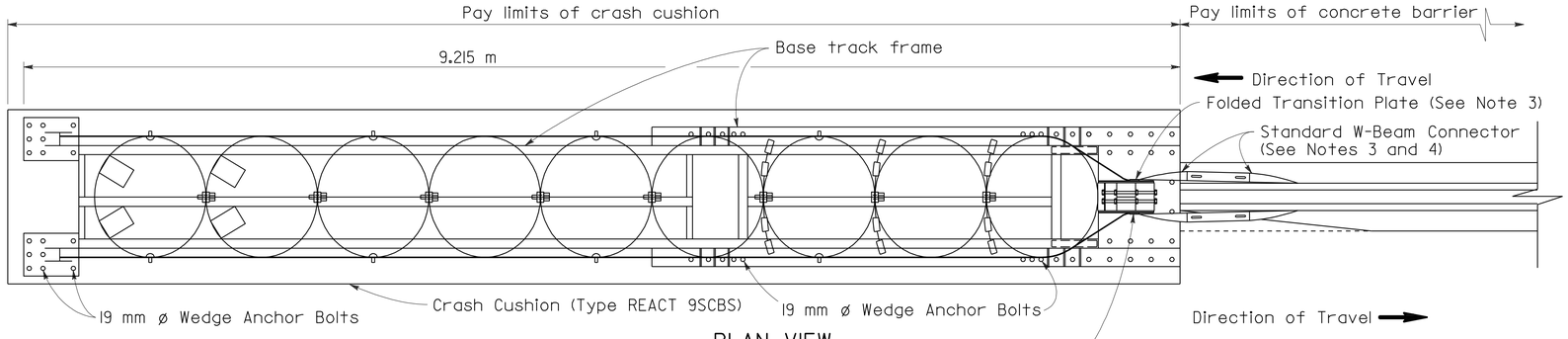

PLAN VIEW

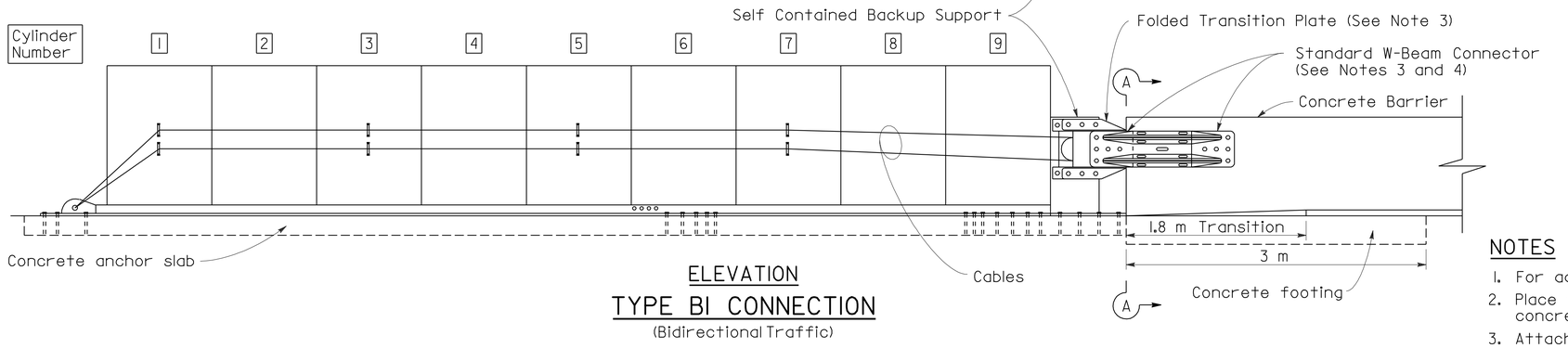

ELEVATION

TYPE BI CONNECTION

(Bidirectional Traffic)

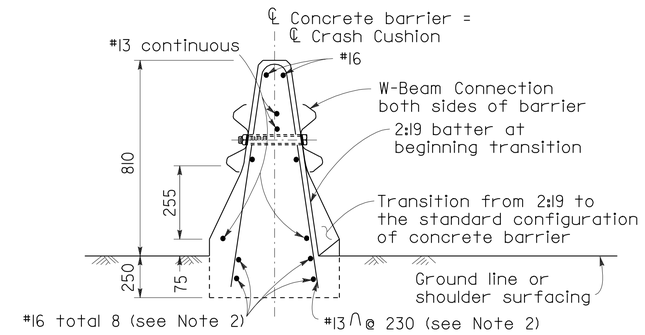

SECTION A-A

(Type 50 Barrier shown)

NOTES

1. For additional details of Crash Cushion (Type REACT 9SCBS), see Standard Plan A82D1.
2. Place this reinforcement for the full 3 meter length of the terminus of the concrete barrier.
3. Attach manufacturer supplied folded transition plates and W-Beam connectors to backup support with manufacturer supplied bolts.
4. Attach W-Beam Connectors to barrier with manufacturer supplied anchor bolts in the manner recommended by the manufacturer.

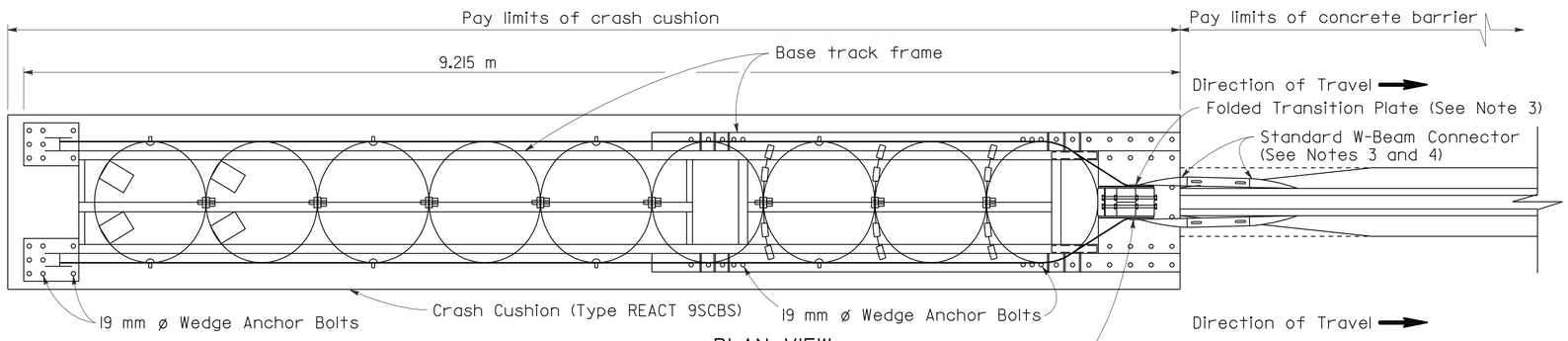

PLAN VIEW

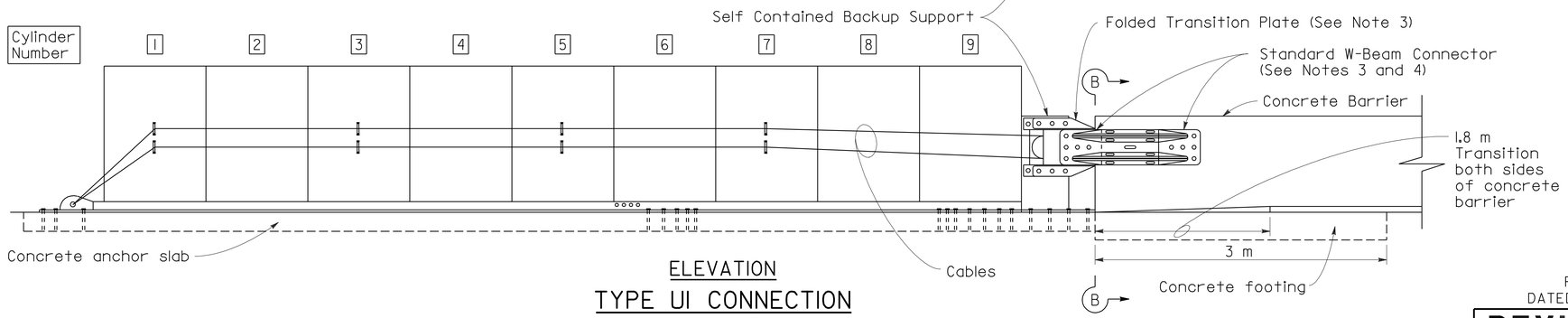

ELEVATION

TYPE UI CONNECTION

(Unidirectional Traffic)

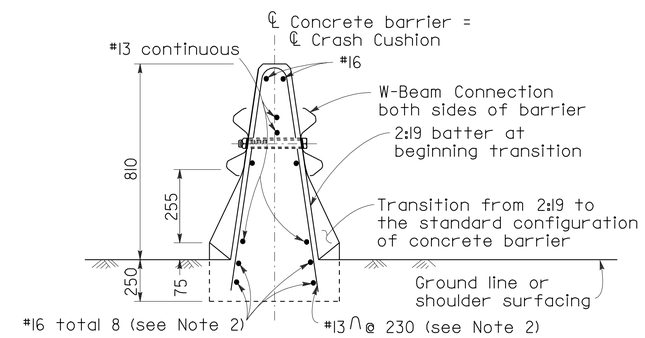

SECTION B-B

(Type 50 Barrier shown)

ALL DIMENSIONS ARE IN MILLIMETERS UNLESS OTHERWISE SHOWN

STATE OF CALIFORNIA
DEPARTMENT OF TRANSPORTATION

CRASH CUSHION (TYPE REACT 9SCBS) CONNECTION TO CONCRETE BARRIER

NO SCALE

RSP A82D2 DATED OCTOBER 20, 2006 SUPERSEDES STANDARD PLAN A82D2 DATED JULY 1, 2004-PAGE 110 OF THE STANDARD PLANS BOOK DATED JULY 2004.

REVISED STANDARD PLAN RSP A82D2

2004 REVISED Std PLAN RSP A82D2

9-13-06

DIST	COUNTY	ROUTE	KILOMETER POST TOTAL PROJECT	SHEET NO.	TOTAL SHEETS
07	LA	405	39.7/41.5	182	439

Caltrans Metric

REGISTERED CIVIL ENGINEER

November 17, 2006
PLANS APPROVAL DATE

REGISTERED PROFESSIONAL ENGINEER Michael Janzen No. 44788 Exp. 03-31-08 CIVIL STATE OF CALIFORNIA

The State of California or its officers or agents shall not be responsible for the accuracy or completeness of electronic copies of this plan sheet.

To get to the Caltrans web site, go to: http://www.dot.ca.gov

To accompany plans dated 6-7-10

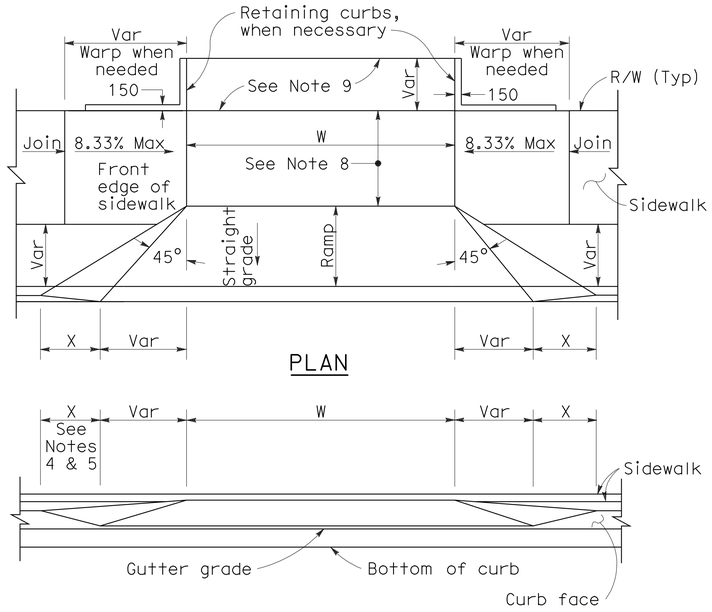

PLAN

ELEVATION

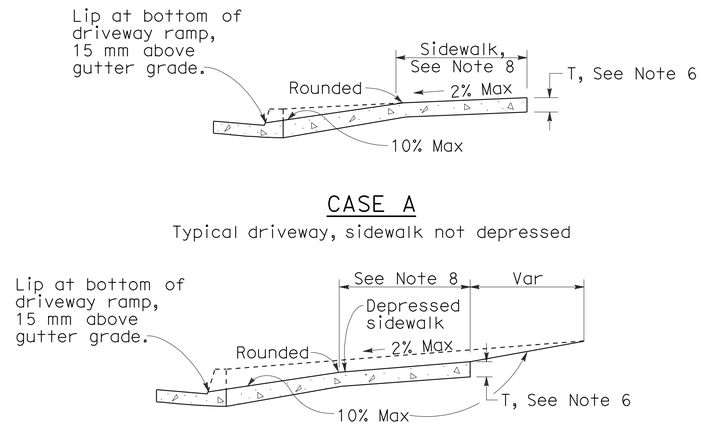

CASE A

Typical driveway, sidewalk not depressed

CASE B

Driveway with depressed sidewalk

SECTIONS

DRIVEWAYS

CURB QUANTITIES

TYPE	CUBIC METERS PER METER
A1-150	0.064
A1-200	0.075
A2-150	0.144
A2-200	0.155
A3-150	0.025
A3-200	0.035
B1-100	0.056
B1-150	0.073
B2-100	0.137
B2-150	0.152
B3-100	0.017
B3-150	0.027
B4	0.142
D-100	0.100
D-150	0.162
E	0.161

TABLE A

CURB TYPE	DIMENSIONS "H1"	"H2"	"W1"	"W2"
A1-150	350	150	190	40
A1-200	400	200	200	50
A2-150	300	150	790	40
A2-200	350	200	800	50
A3-150	150	130	185	35
A3-200	200	180	198	48
B1-100	300	100	200	70
B1-150	350	150	230	100
B2-100	250	100	800	70
B2-150	300	150	830	100
B3-100	100	80	185	55
B3-150	150	130	217	87
D-100	250	100	452	322
D-150	300	150	652	522

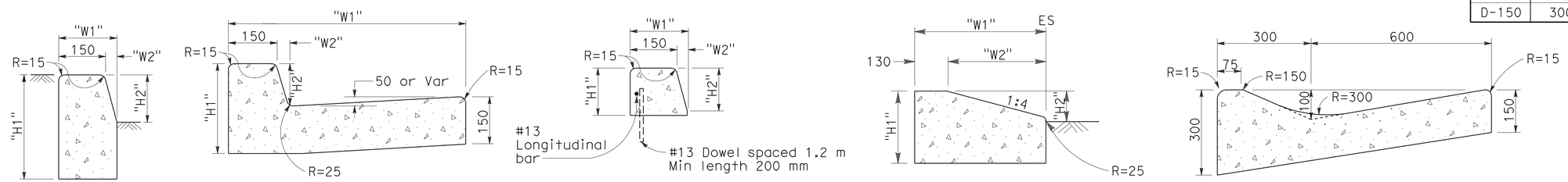

TYPE A1 CURBS
See Table A

TYPE A2 CURBS
See Table A

TYPE A3 CURBS
Superimposed on existing pavement
See Table A

TYPE D CURBS
See Table A

TYPE E CURB

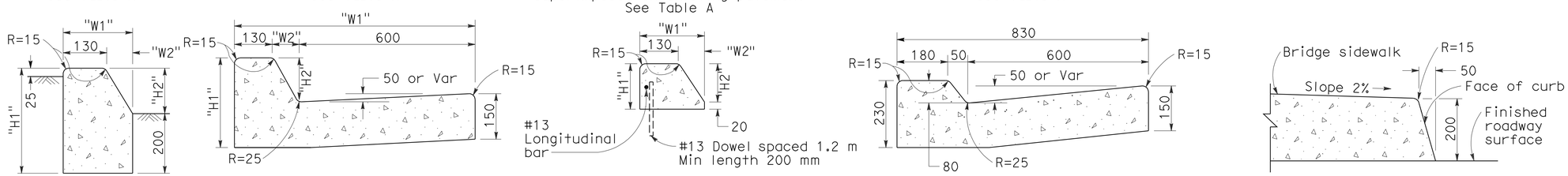

TYPE B1 CURBS
See Table A

TYPE B2 CURBS
See Table A

TYPE B3 CURBS
Superimposed on existing pavement
See Table A

TYPE B4 CURBS

TYPE H CURB
On Bridges

CURBS

NOTES

1. Case A driveway section typically applies.
2. Use Case B driveway section when ramp slopes would exceed 10% in Case A.
3. Use Case B driveway section when sidewalk cross slope would exceed 2% in Case A.
4. X=900 mm except for curb heights over 250 mm where 1:4 slopes shall be used on curb slope.
5. X is a variable when sidewalk is located where wheelchairs may traverse the surface. Slopes shall not exceed 8.33%.
6. Sidewalk and ramp thickness ``T'' at driveway shall be 100 mm for residental and 150 mm for commercial.
7. Difference in slope of the driveway ramp and the slope of a line between the gutter and a point on the roadway 1.5 meters from gutter line shall not exceed 15%. Reduce driveway ramp slope, not gutter slope, where required.
8. Minimum width of clear passageway for sidewalk shall be 1.22 meters.
9. Retaining curbs and acquisition of construction easement may be necessary for narrow sidewalks or curb heights in excess of 150 mm.
10. Across the pedestrian route at curb ramp locations, the gutter pan slope shall not exceed 25 mm of depth for each 600 mm of width.

STATE OF CALIFORNIA
DEPARTMENT OF TRANSPORTATION

CURBS AND DRIVEWAYS

NO SCALE

ALL DIMENSIONS ARE IN MILLIMETERS UNLESS OTHERWISE SHOWN

RSP A87A DATED NOVEMBER 17, 2006 SUPERSEDES STANDARD PLAN A87A DATED JULY 1, 2004-PAGE 115 OF THE STANDARD PLANS BOOK DATED JULY 2004.

REVISED STANDARD PLAN RSP A87A

2004 REVISED Std PLAN RSP A87A

10-25-06

DIST	COUNTY	ROUTE	KILOMETER POST TOTAL PROJECT	SHEET NO.	TOTAL SHEETS
07	LA	405	39.7/41.5	183	439

REGISTERED CIVIL ENGINEER

December 16, 2005
PLANS APPROVAL DATE

REGISTERED PROFESSIONAL ENGINEER Hector David Cordova No. C41957 Exp. 3-31-06 CIVIL STATE OF CALIFORNIA

The State of California or its officers or agents shall not be responsible for the accuracy or completeness of electronic copies of this plan sheet.

To get to the Caltrans web site, go to: http://www.dot.ca.gov

To accompany plans dated 6-7-10

Caltrans Metric

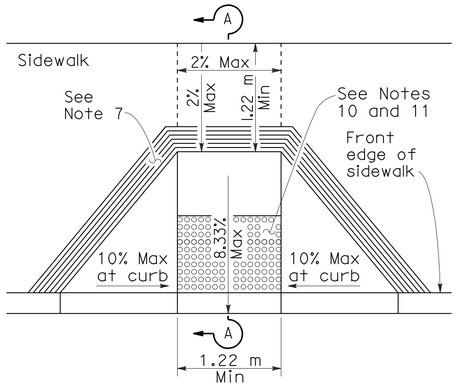

CASE A

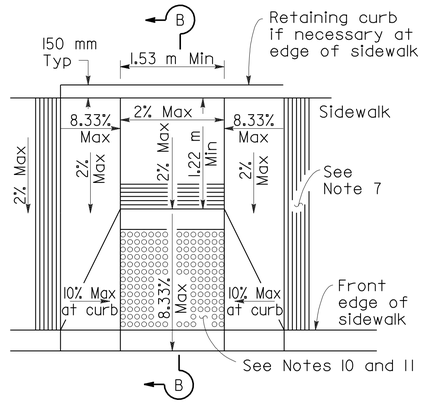

CASE B

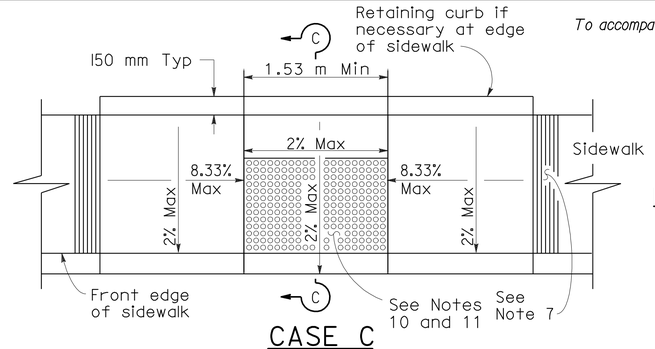

CASE C

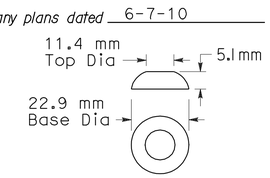

RAISED TRUNCATED DOME

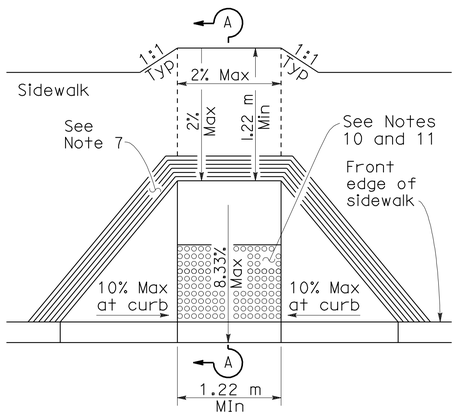

CASE D

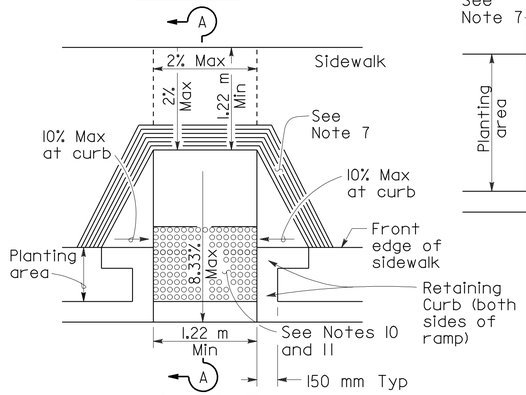

CASE E

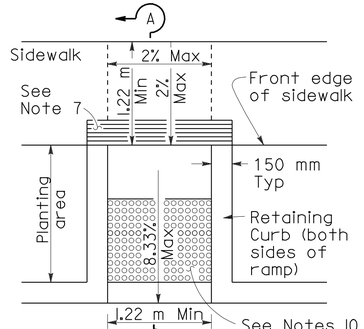

CASE F

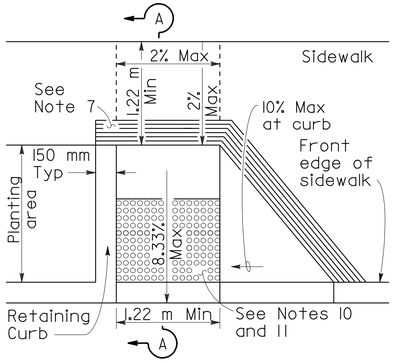

CASE G

See Note 4

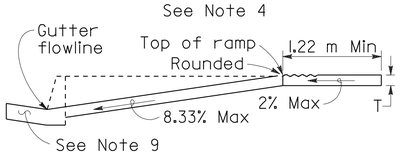

SECTION A-A

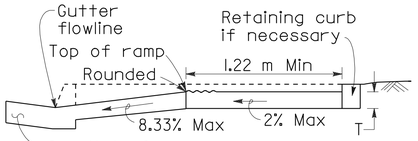

SECTION B-B

Depress entire sidewalk as required

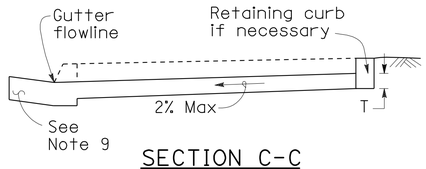

SECTION C-C

NOTES

1. As site conditions dictate, Case A through Case G curb ramps may be used for corner installations similar to those shown in Detail A and Detail B. The case of curb ramps used in Detail A do not have to be the same. Case A through Case G curb ramps also may be used at mid block locations, as site conditions dictate. For Cases B and C, the side of the curb ramp should always be perpendicular to curb face.
2. If distance from curb to back of sidewalk is too short to accommodate ramp and 1.22 m platform (landing) as shown in Case A, the sidewalk may be depressed longitudinally as in Case B, or C or may be widened as in Case D.
3. When ramp is located in center of curb return, crosswalk configuration must be similar to that shown for Detail B.
4. As site conditions dictate, the retaining curb side and the flared side of the Case G ramp shall be constructed in reversed position.
5. If located on a curve, the sides of the ramp need not be parallel, but the minimum width of the ramp shall be 1.22 m.
6. Side slope of ramp flares vary uniformly from a maximum of 10% at curb to conform with longitudinal sidewalk slope adjacent to top of the ramp, except in Case C and Case F.
7. The curb ramp shall be outlined, as shown, with a 305 mm wide border with 6 mm grooves approximately 19 mm on center. See grooving detail.
8. Transitions from ramps and landings to walks, gutters or streets shall be flush and free of abrupt changes.
9. Maximum slopes of adjoining gutters, the road surface immediately adjacent to the curb ramp, or accessible route shall not exceed 5 percent within 1.22 m of the top and bottom of the curb ramp.
10. Curb ramps shall have a detectable warning surface that extends the full width and 914 mm depth of the ramp. Detectable Warning Surfaces shall conform to the details on this plan and the requirements in the Special Provisions.
11. The edge of the detectable warning surface nearest the street shall be between 150 mm and 205 mm from the gutter flowline.
12. Sidewalk and ramp thickness, "T", shall be 90 mm minimum.
13. Utility pull boxes, manholes, vaults and all other utility facilities within the boundaries of the curb ramp will be relocated or adjusted to grade by the owner prior to, or in conjunction with, curb ramp construction.
14. For retrofit conditions, removal and replacement of curb apron will be at the Contractor's option, unless otherwise shown on project plans.

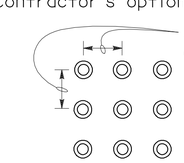

RAISED TRUNCATED DOME PATTERN (IN-LINE)

DETECTABLE WARNING SURFACE

See Note 10

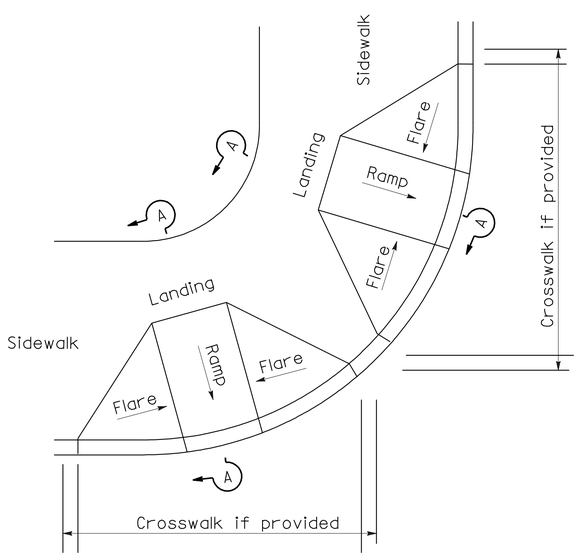

DETAIL A

TYPICAL TWO-RAMP CORNER INSTALLATION

See Note 1

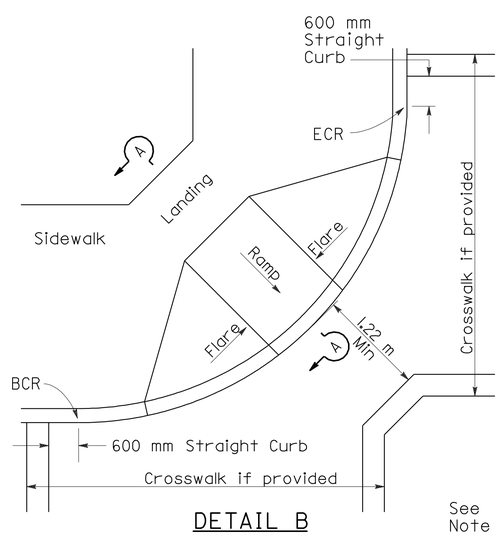

DETAIL B

TYPICAL ONE-RAMP CORNER INSTALLATION

See Notes 1 and 3

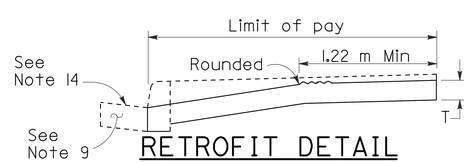

RETROFIT DETAIL

Existing curb and sidewalk

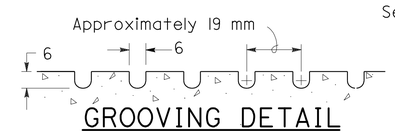

GROOVING DETAIL

STATE OF CALIFORNIA
DEPARTMENT OF TRANSPORTATION

CURB RAMP DETAILS

NO SCALE

ALL DIMENSIONS ARE IN MILLIMETERS UNLESS OTHERWISE SHOWN

RSP A88A DATED DECEMBER 16, 2005 SUPERSEDES STANDARD PLAN A88A DATED JULY 1, 2004-PAGE 117 OF THE STANDARD PLANS BOOK DATED JULY 2004.

REVISED STANDARD PLAN RSP A88A

2004 REVISED StdPLAN RSP A88A

12-16-05

DIST	COUNTY	ROUTE	KILOMETER POST TOTAL PROJECT	SHEET NO.	TOTAL SHEETS
07	LA	405	39.7/41.5	184	439

Caltrans Metric

REGISTERED CIVIL ENGINEER

November 17, 2006
PLANS APPROVAL DATE

REGISTERED PROFESSIONAL ENGINEER — William K. Farnbach — No. 49042 — Exp. 09-30-08 — CIVIL — STATE OF CALIFORNIA

The State of California or its officers or agents shall not be responsible for the accuracy or completeness of electronic copies of this plan sheet.

To get to the Caltrans web site, go to: http://www.dot.ca.gov

To accompany plans dated 6-7-10

2004 REVISED Std PLAN RSP P1

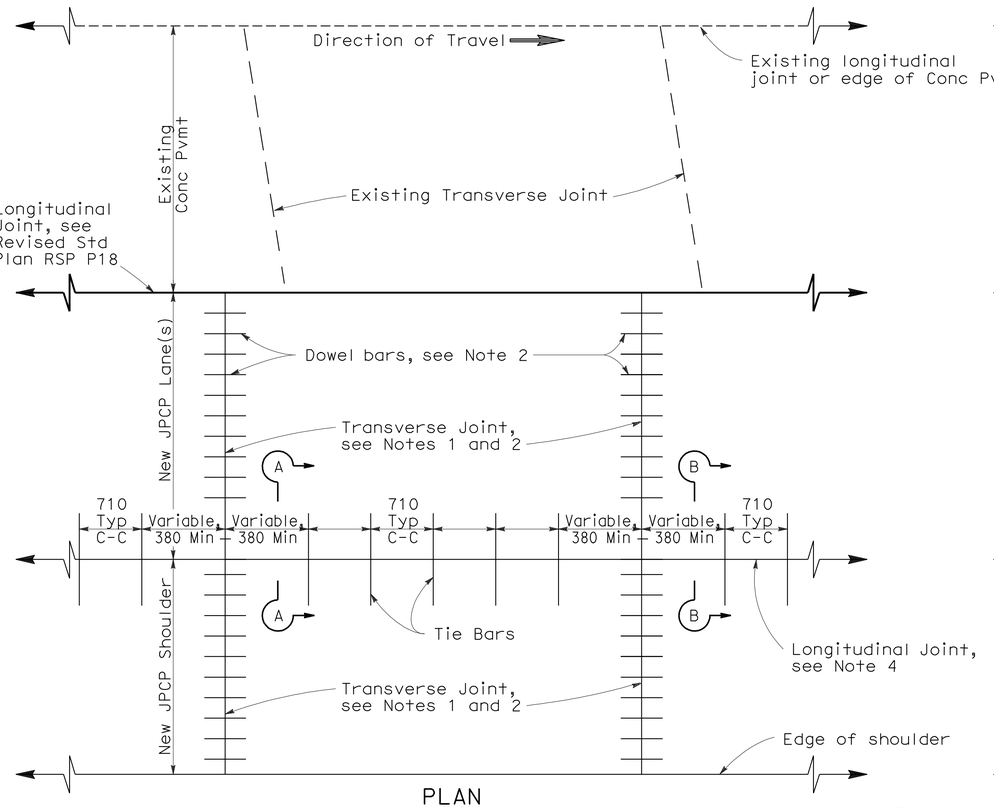

PLAN

LANE/SHOULDER ADDITION OR RECONSTRUCTION

See Notes 6 and 7

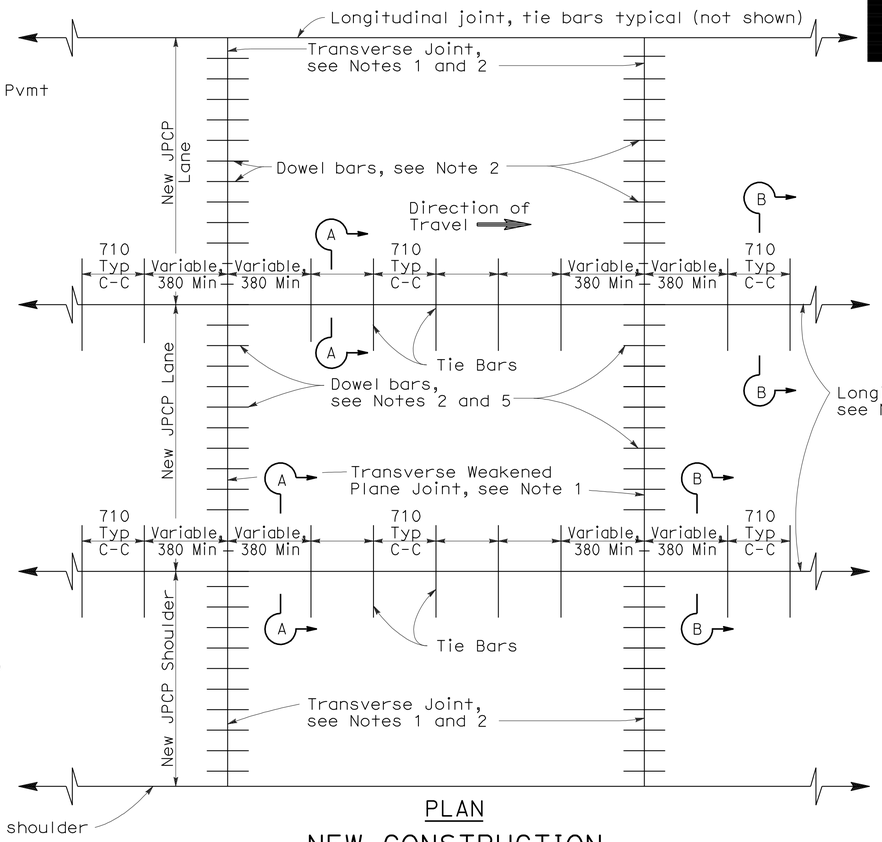

PLAN

NEW CONSTRUCTION

See Notes 6 and 7

NOTES

1. Transverse joints shall be constructed at right angles to the longitudinal pavement joints in new portland cement concrete pavement and spaced at successive repeated intervals of 3.66 m, 4.57 m, 3.96 m and 4.27 m.
2. For transverse joint and dowel bar details not shown, see Revised Standard Plan RSP P10.
3. Construct longitudinal weakened plane joints as shown in Section A-A when more than one lane or shoulder widths are placed at one time. If constructing one lane at a time, use longitudinal contact joint, as shown in Section B-B.
4. For additional longitudinal joint details, see Revised Standard Plan RSP P18.
5. If fresh concrete is placed adjacent to existing concrete, the top corner of the new hardened concrete does not need to be rounded to the 6 mm radius, as shown.
6. Joint spacing patterns do not apply to intersections.
7. Details can also apply to inside widening.

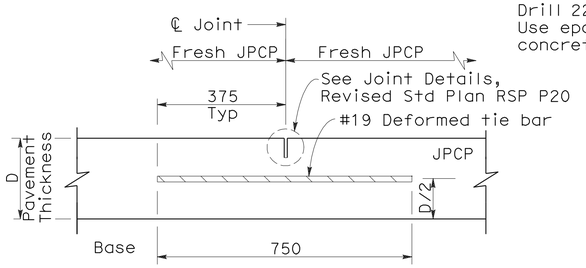

SECTION A-A

LONGITUDINAL WEAKENED PLANE JOINT

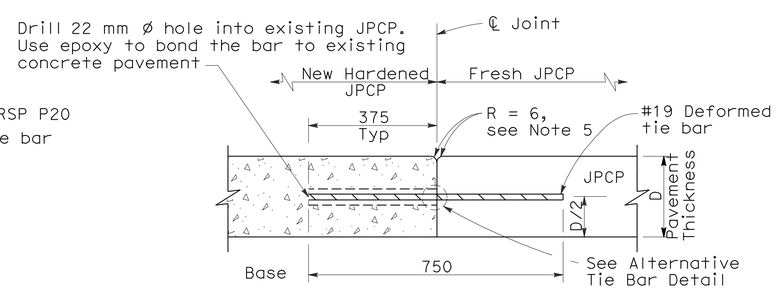

SECTION B-B

LONGITUDINAL CONTACT JOINT

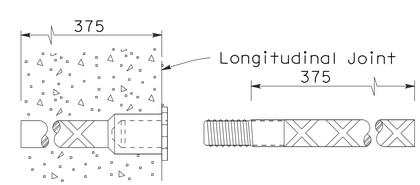

ALTERNATIVE TIE BAR DETAIL

(Dowel Splice Coupler)

TIE BAR DETAILS

STATE OF CALIFORNIA
DEPARTMENT OF TRANSPORTATION

JOINTED PLAIN CONCRETE PAVEMENT

NO SCALE

ALL DIMENSIONS ARE IN MILLIMETERS UNLESS OTHERWISE SHOWN

RSP P1 DATED NOVEMBER 17, 2006 SUPERSEDES STANDARD PLAN P1 DATED JULY 1, 2004-PAGE 121 OF THE STANDARD PLANS BOOK DATED JULY 2004.

REVISED STANDARD PLAN RSP P1

10-24-06

To accompany plans dated 6-7-10

Caltrans Metric

DIST	COUNTY	ROUTE	KILOMETER POST TOTAL PROJECT	SHEET NO.	TOTAL SHEETS
07	LA	405	39.7/41.5	185	439

William K. Farnbach
REGISTERED CIVIL ENGINEER

November 17, 2006
PLANS APPROVAL DATE

REGISTERED PROFESSIONAL ENGINEER William K. Farnbach No. 49042 Exp. 09-30-08 CIVIL STATE OF CALIFORNIA

The State of California or its officers or agents shall not be responsible for the accuracy or completeness of electronic copies of this plan sheet.

To get to the Caltrans web site, go to: http://www.dot.ca.gov

PLAN

HORIZONTAL OFFSET TOLERANCE

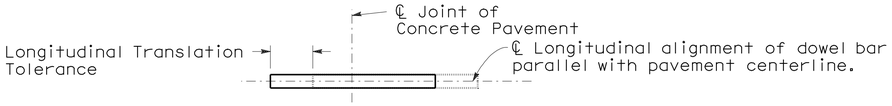

PLAN

LONGITUDINAL TRANSLATION TOLERANCE

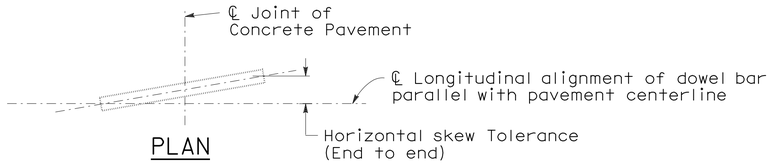

PLAN

HORIZONTAL SKEW TOLERANCE

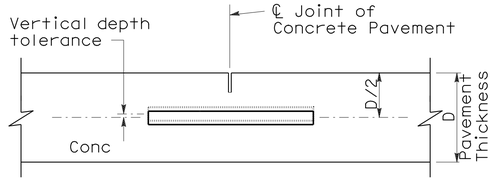

ELEVATION

VERTICAL DEPTH TOLERANCE

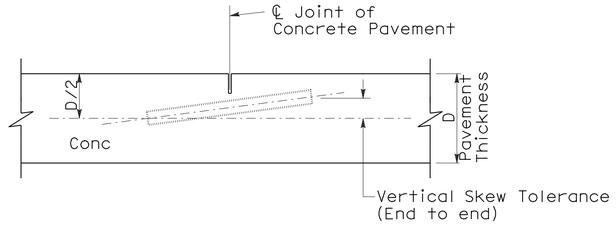

ELEVATION

VERTICAL SKEW TOLERANCE

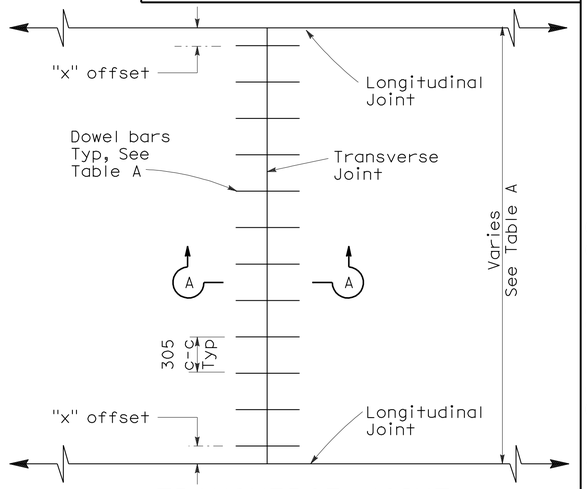

TRANSVERSE JOINT DOWEL BAR LAYOUT

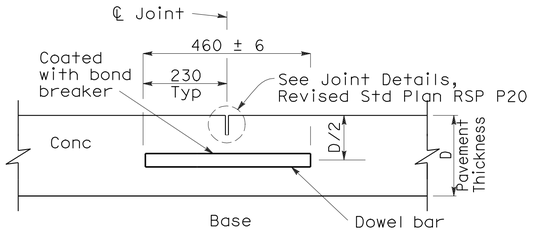

TRANSVERSE WEAKENED PLANE JOINT

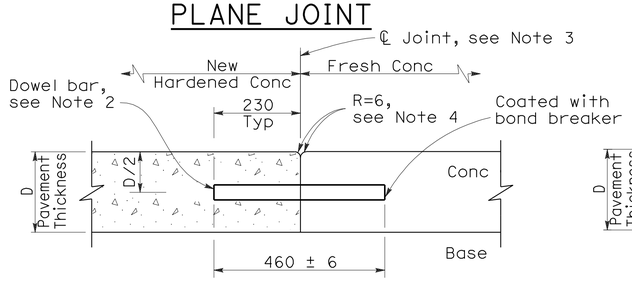

TRANSVERSE CONTACT JOINT DETAIL

SECTION A-A

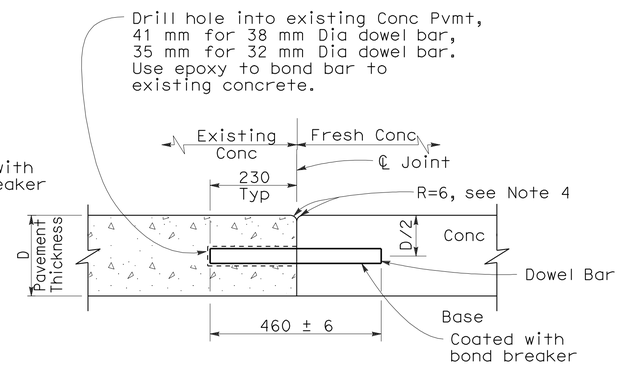

TRANSVERSE CONTACT JOINT FOR EXISTING CONCRETE PAVEMENT

(Drill and bond locations)

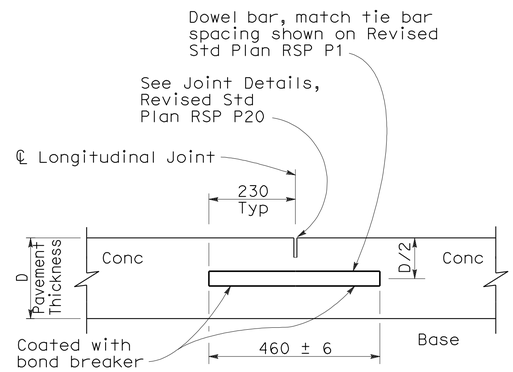

LONGITUDINAL WEAKENED PLANE JOINT WITH DOWEL BARS

(See Revised Std Plan RSP P18)

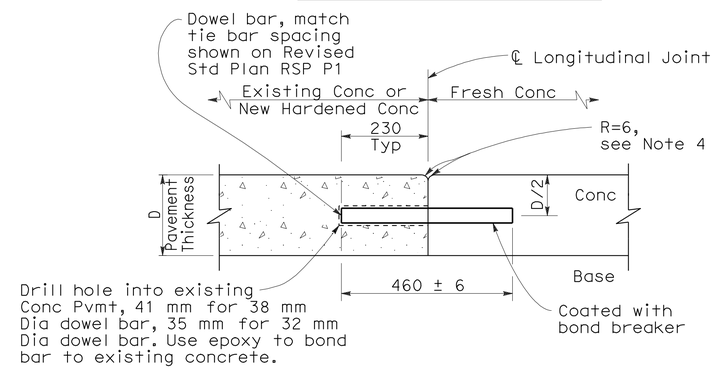

LONGITUDINAL CONTACT JOINT WITH DOWEL BARS

(See Revised Std Plan RSP P18)

TABLE A

Dowel Bar Transverse Spacing Table		
Width between Longitudinal Joints (m)	Offset Dimension "X" (mm)	Number of Dowels between Longitudinal Joints
4.27	152	14
3.66	152	12
3.60	125	12
3.05	152	10
3.00	125	10
2.44	152	8
2.4	130	8
1.52	150	5
1.50	140	5

See Note 3

NOTES

1. See Revised Standard Plan RSP P1 for typical dowel placement and locations.
2. 38 mm Dia smooth dowels are to be used with a pavement thickness, D, equal to or greater than 215 mm. For pavement thickness, D, less than 215 mm, use 32 mm Dia smooth dowels.
3. For widths not shown, see Project Plans.
4. If fresh concrete pavement is placed adjacent to existing concrete pavement, the top corner of the existing concrete pavement does not need to be rounded to the 6 mm radius, as shown.

STATE OF CALIFORNIA
DEPARTMENT OF TRANSPORTATION

CONCRETE PAVEMENT-DOWEL BAR DETAILS

NO SCALE

ALL DIMENSIONS ARE IN MILLIMETERS UNLESS OTHERWISE SHOWN

RSP P10 DATED NOVEMBER 17, 2006 SUPERSEDES STANDARD PLAN P10 DATED JULY 1, 2004-PAGE 125 OF THE STANDARD PLANS BOOK DATED JULY 2004.

REVISED STANDARD PLAN RSP P10

2004 REVISED Std PLAN RSP P10

10-25-06

DIST	COUNTY	ROUTE	KILOMETER POST TOTAL PROJECT	SHEET NO.	TOTAL SHEETS
07	LA	405	39.7/41.5	186	439

REGISTERED CIVIL ENGINEER

November 17, 2006
PLANS APPROVAL DATE

REGISTERED PROFESSIONAL ENGINEER William K. Farnbach No. 49042 Exp. 09-30-08 CIVIL STATE OF CALIFORNIA

The State of California or its officers or agents shall not be responsible for the accuracy or completeness of electronic copies of this plan sheet.

To get to the Caltrans web site, go to: http://www.dot.ca.gov

Caltrans Metric

To accompany plans dated 6-7-10

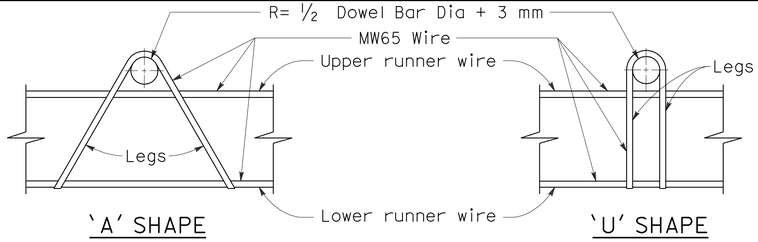

ASSEMBLY FRAME DETAILS

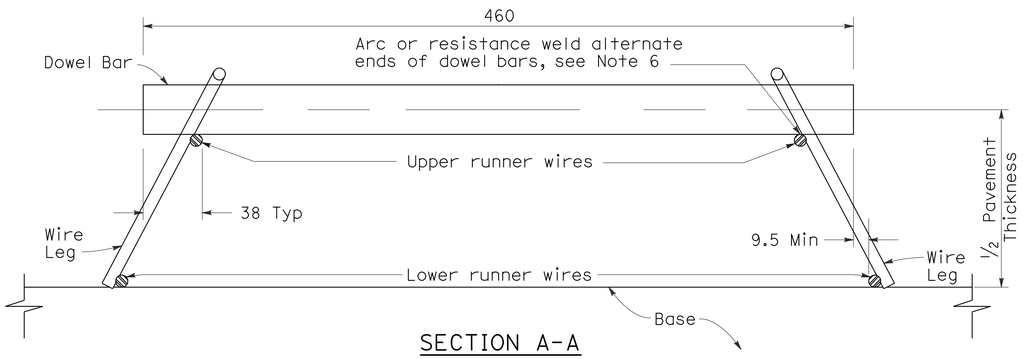

SECTION A-A

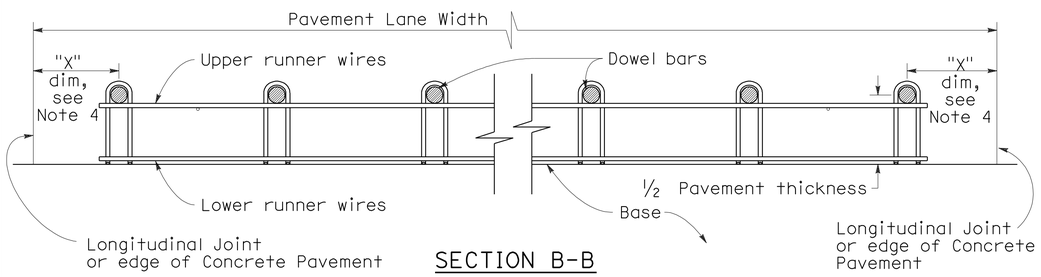

SECTION B-B

See Note 1

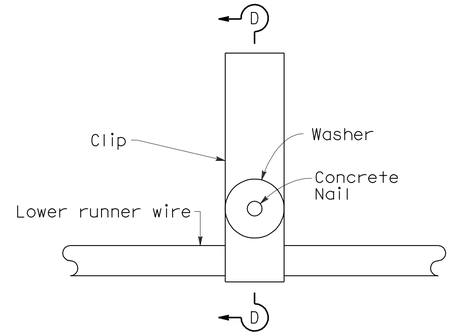

PLAN

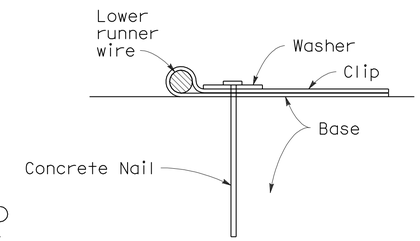

SECTION D-D

FASTENER DETAIL

NOTES

1. 'U' frame shape assembly shown. 'U' frame shape or 'A' frame shape are acceptable.
2. Wire sizes shown are minimum required.
3. All wire intersections are to be resistance welded.
4. For "X" dimension, number of dowel bars between longitudinal joints and other details for dowel bars not shown, See Revised Standard Plan RSP P10.
5. Use tie bar spacing for longitudinal dowel bar locations. See Revised Standard Plans RSP P1 and RSP P2, and New Standard Plan NSP P3 for tie bar requirements.
6. Weld may be at top or bottom of dowel bar.

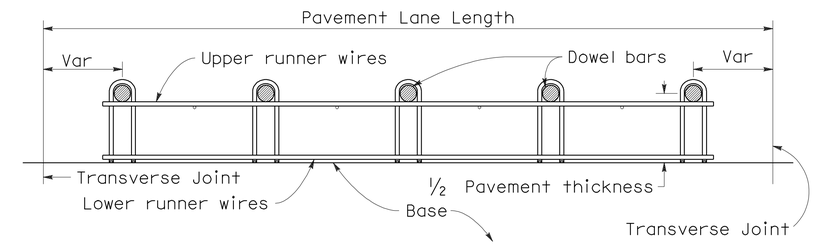

SECTION C-C

See Note 1 and 5

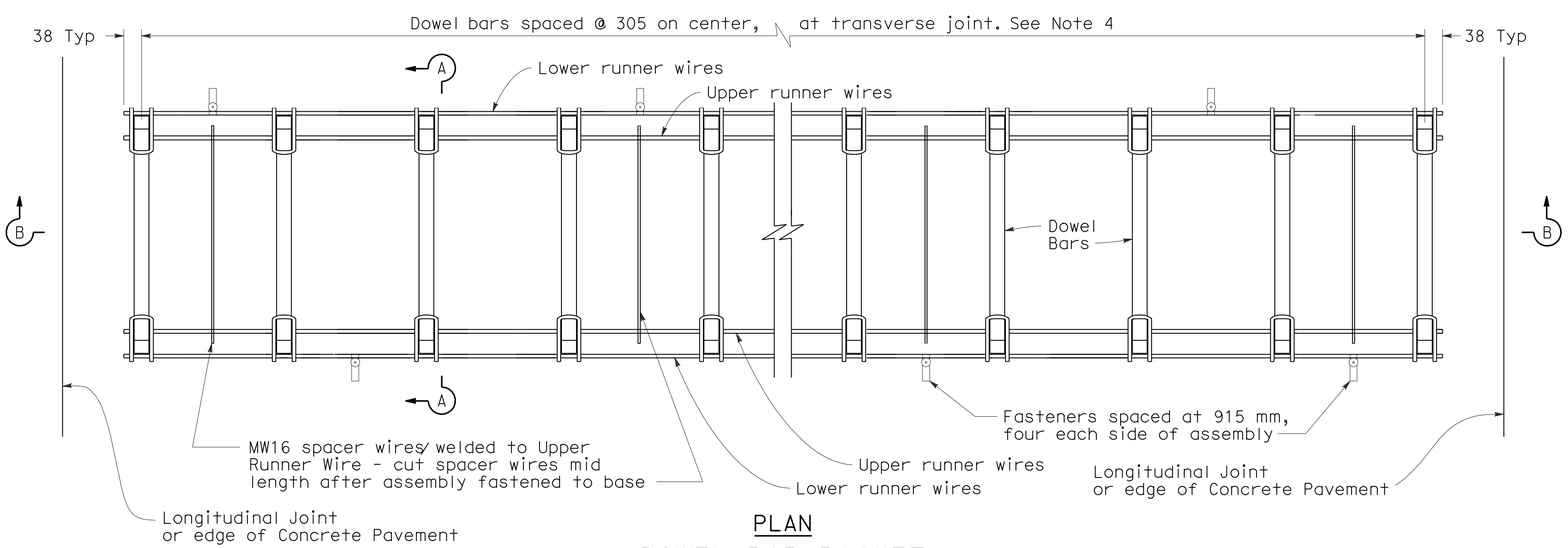

PLAN

DOWEL BAR BASKET (TRANSVERSE JOINT)

See Note 1

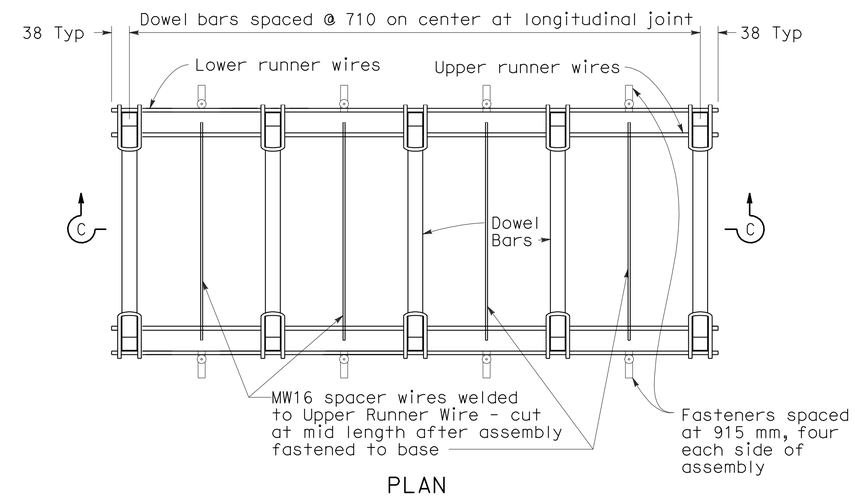

PLAN

DOWEL BAR BASKET (LONGITUDINAL JOINT)

See Note 1

STATE OF CALIFORNIA
DEPARTMENT OF TRANSPORTATION

CONCRETE PAVEMENT-DOWEL BAR BASKET DETAILS

NO SCALE

ALL DIMENSIONS ARE IN MILLIMETERS UNLESS OTHERWISE SHOWN

RSP P12 DATED NOVEMBER 17, 2006 SUPERSEDES STANDARD PLAN P12 DATED JULY 1, 2004-PAGE 126 OF THE STANDARD PLANS BOOK DATED JULY 2004.

REVISED STANDARD PLAN RSP P12

2004 REVISED Std PLAN RSP P12

10-25-06

DIST	COUNTY	ROUTE	KILOMETER POST TOTAL PROJECT	SHEET NO.	TOTAL SHEETS
07	LA	405	39.7/41.5	187	439

Caltrans Metric

REGISTERED CIVIL ENGINEER

November 17, 2006
PLANS APPROVAL DATE

REGISTERED PROFESSIONAL ENGINEER William K. Farnbach No. 49042 Exp. 09-30-08 CIVIL STATE OF CALIFORNIA

The State of California or its officers or agents shall not be responsible for the accuracy or completeness of electronic copies of this plan sheet.

To get to the Caltrans web site, go to: http://www.dot.ca.gov

To accompany plans dated 6-7-10

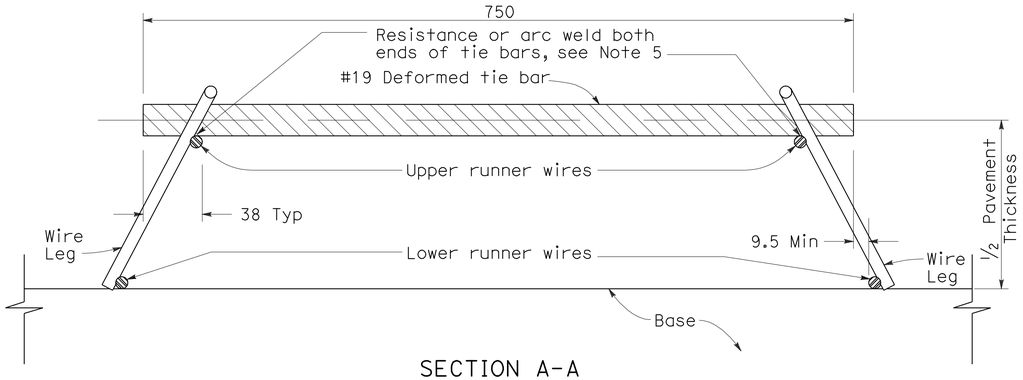

SECTION A-A

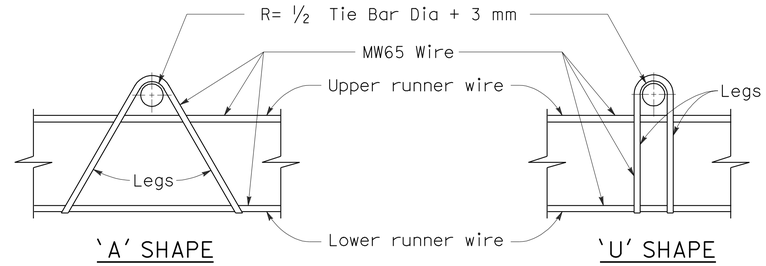

ASSEMBLY FRAME DETAILS

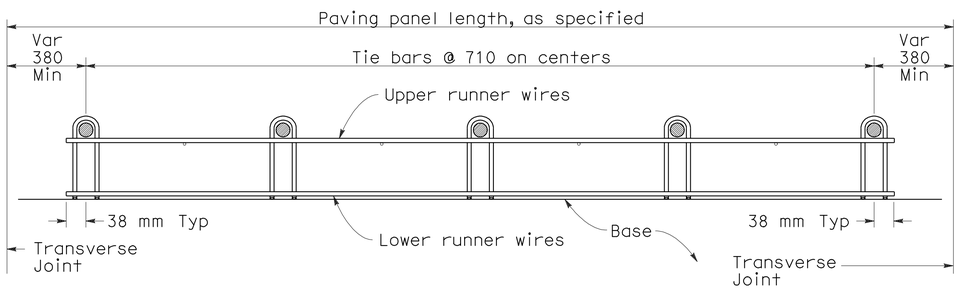

SECTION B-B
See Note 1

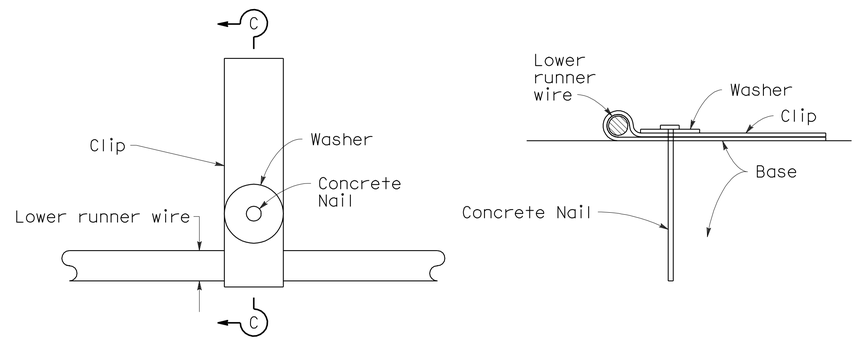

PLAN

SECTION C-C

FASTENER DETAIL

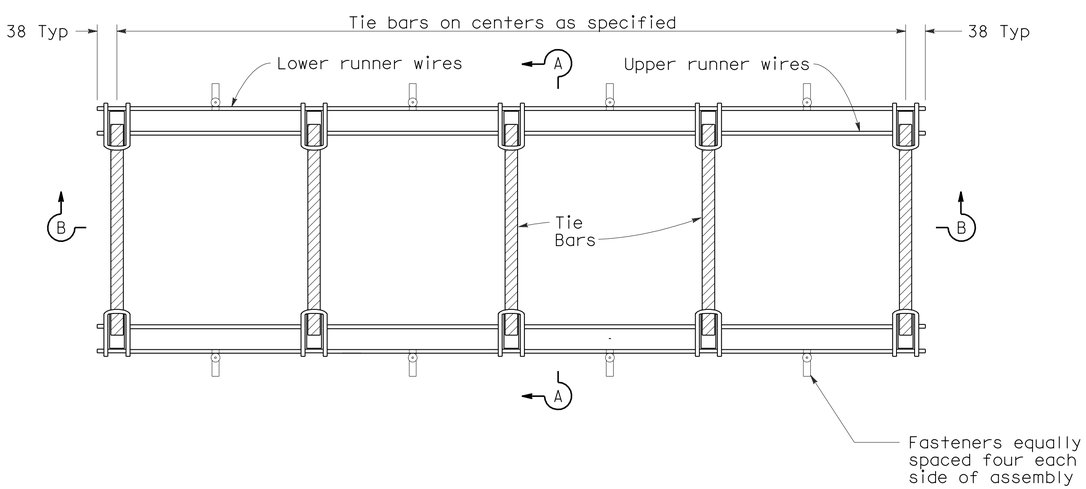

PLAN

TIE BAR BASKET

(TIE BARS AT LONGITUDINAL JOINT)
See Note 1

NOTES

1. 'U' frame shape assembly shown. 'U' frame shape or 'A' frame shape are acceptable.
2. Wire sizes shown are minimum required.
3. All wire intersections are to be resistance welded.
4. Not for use on undoweled skewed concrete pavement.
5. Weld may be at top or bottom of tie bar.

STATE OF CALIFORNIA
DEPARTMENT OF TRANSPORTATION

CONCRETE PAVEMENT-TIE BAR BASKET DETAILS

NO SCALE

ALL DIMENSIONS ARE IN MILLIMETERS UNLESS OTHERWISE SHOWN

RSP P17 DATED NOVEMBER 17, 2006 SUPERSEDES STANDARD PLAN P17 DATED JULY 1, 2004-PAGE 127 OF THE STANDARD PLANS BOOK DATED JULY 2004.

REVISED STANDARD PLAN RSP P17

2004 REVISED Std PLAN RSP P17

8-1-06

DIST	COUNTY	ROUTE	KILOMETER POST TOTAL PROJECT	SHEET NO.	TOTAL SHEETS
07	LA	405	39.7/41.5	188	439

Caltrans Metric

William K. Farnbach
REGISTERED CIVIL ENGINEER

November 17, 2006
PLANS APPROVAL DATE

REGISTERED PROFESSIONAL ENGINEER William K. Farnbach No. 49042 Exp. 09-30-08 CIVIL STATE OF CALIFORNIA

The State of California or its officers or agents shall not be responsible for the accuracy or completeness of electronic copies of this plan sheet.

To get to the Caltrans web site, go to: http://www.dot.ca.gov

To accompany plans dated 6-7-10

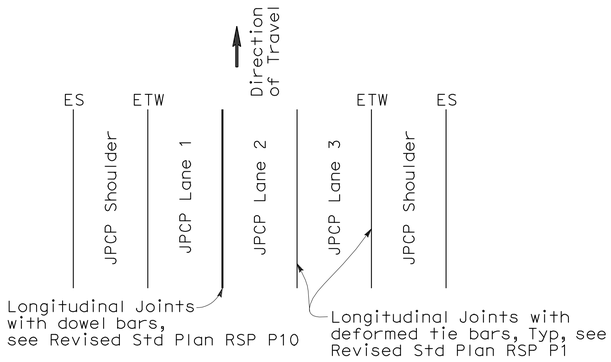

3 LANES WITH CONCRETE SHOULDERS
PLAN

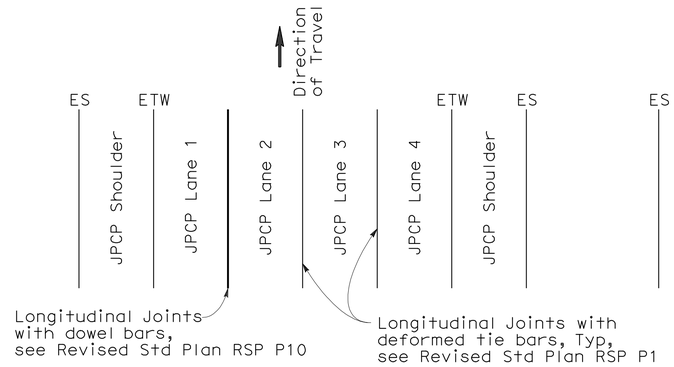

4 LANES WITH CONCRETE SHOULDERS
PLAN

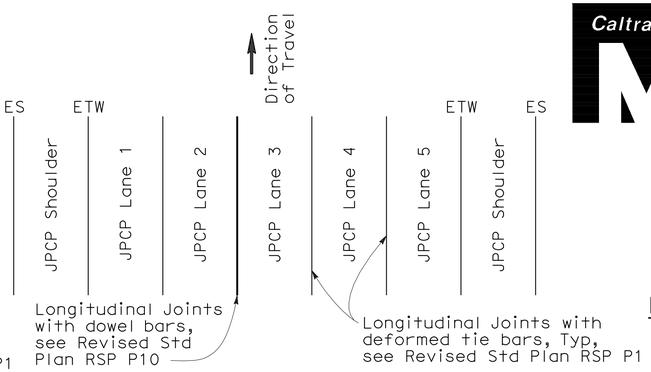

5 LANES WITH CONCRETE SHOULDERS
PLAN

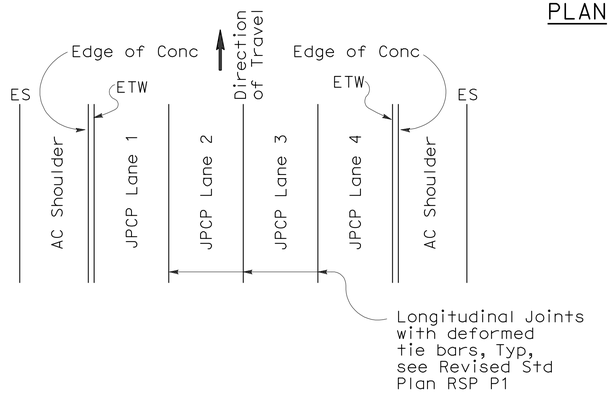

4 LANES OR LESS WITH AC SHOULDERS
PLAN

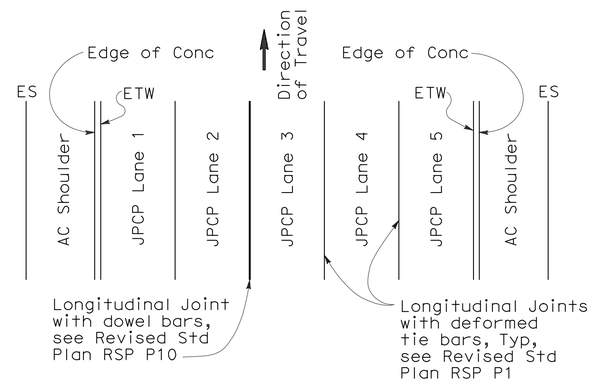

5 LANES WITH AC SHOULDERS
PLAN

NOTES

1. Where Lean Concrete Base is not used as base material, the joint filler material used for the longitudinal isolation joint shall only extend to the bottom of the new concrete slab. See Detail A.
2. Use 16±1 mm dimension for silicone sealant.
3. See Revised Stadard Plan RSP P10 for longitudinal joint with dowel bars.

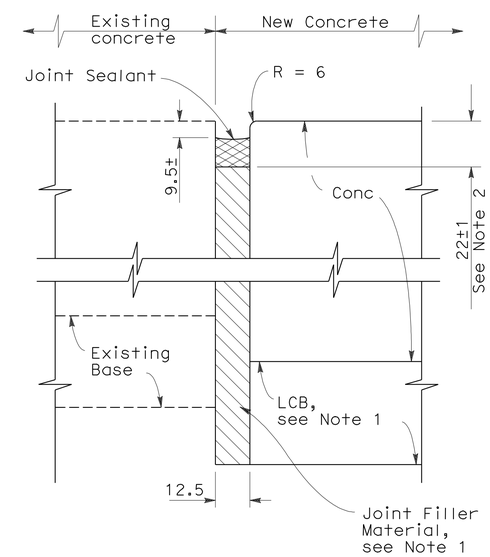

DETAIL A

ISOLATION JOINT

NEW CONSTRUCTION

Location of Longitudinal Joints
(JPCP only)

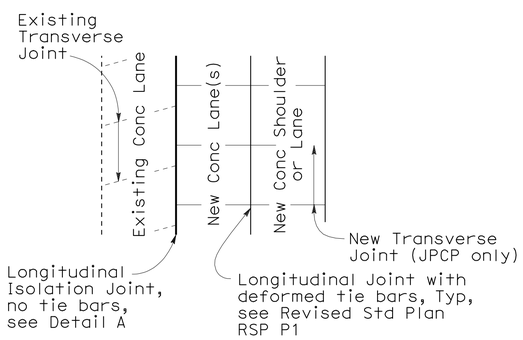

CASE 1
PLAN

Transverse Joints do not align between new and existing

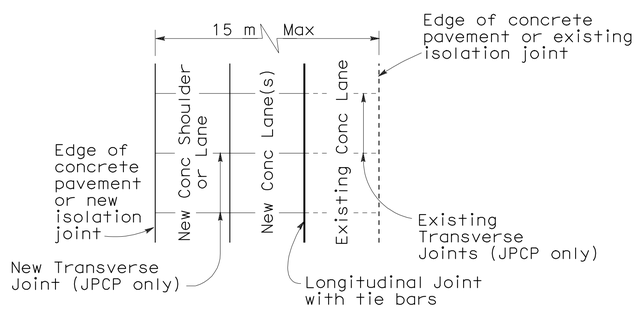

CASE 2
PLAN

Transverse Joints align between new and existing

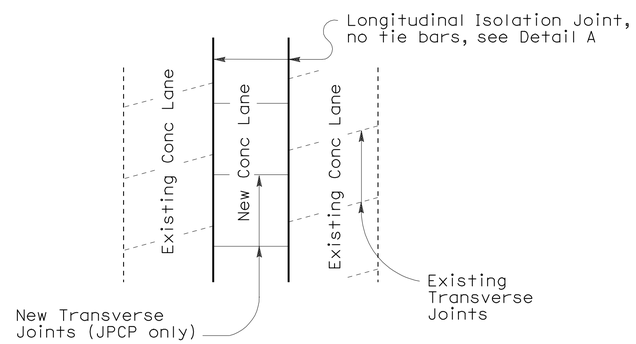

CASE 3 (INTERIOR LANE REPLACEMENT)
PLAN

Transverse Joints do not align between new and existing

LANE/SHOULDER ADDITION OR RECONSTRUCTION

For JPCP and Continuous Reinforced Concrete Pavement

STATE OF CALIFORNIA
DEPARTMENT OF TRANSPORTATION

CONCRETE PAVEMENT-LANE SCHEMATICS AND ISOLATION JOINT DETAIL

NO SCALE

ALL DIMENSIONS ARE IN MILLIMETERS UNLESS OTHERWISE SHOWN

RSP P18 DATED NOVEMBER 17, 2006 SUPERSEDES STANDARD PLAN P18 DATED JULY 1, 2004-PAGE 128 OF THE STANDARD PLANS BOOK DATED JULY 2004.

REVISED STANDARD PLAN RSP P18

2004 REVISED Std PLAN RSP P18

8-9-06

NOTE

1. Tie bars, dowel bars, and reinforcement are not shown in joint seal details, see Revised Std Plan RSP P1, New Std Plan NSP P3, Revised Std Plan RSP P10, Std Plan P35, Std Plan P45, or Std Plan P46 as applicable.

To accompany plans dated 6-7-10

Caltrans Metric

DIST	COUNTY	ROUTE	KILOMETER POST TOTAL PROJECT	SHEET NO.	TOTAL SHEETS
07	LA	405	39.7/41.5	189	439

REGISTERED CIVIL ENGINEER

November 17, 2006
PLANS APPROVAL DATE

REGISTERED PROFESSIONAL ENGINEER William K. Farnbach No. 49042 Exp. 09-30-08 CIVIL STATE OF CALIFORNIA

The State of California or its officers or agents shall not be responsible for the accuracy or completeness of electronic copies of this plan sheet.

To get to the Caltrans web site, go to: http://www.dot.ca.gov

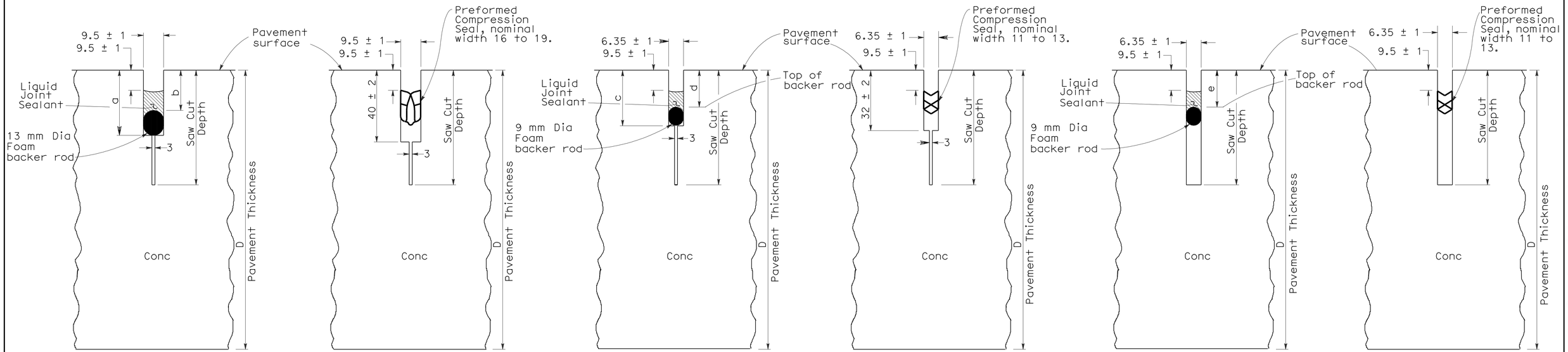

LIQUID SEALANT | COMPRESSION SEAL

TYPE A1

Transverse Weakened Plane Joints

LIQUID SEALANT | COMPRESSION SEAL

TYPE A2

Longitudinal Weakened Plane Joints

LIQUID SEALANT | COMPRESSION SEAL

TYPE B

Longitudinal or Transverse Weakened Plane Joints

LIQUID SEALANT RESERVOIR DEPTH

LIQUID SEALANT MATERIAL	9.5 mm Joint Width Type A1		6.35 mm Joint Width Type A2		6.35 mm Joint Width Type B
	DIMENSION		DIMENSION		DIMENSION
	a	b	c	d	e
SILICONE	26 ± 1	15 ± 1	23 ± 1	14 ± 1	14 ± 1
ASPHALT RUBBER	30 ± 1	19 ± 1	26 ± 1	17 ± 1	17 ± 1

TABLE A

Sawn Joint Width	Backer Rod Diameter	Dimension "c"	Dimension "d"
mm	mm ± 1	mm	mm
25	33	22	55
22	30	20	50
19	25	19	44
16	22	18	40
13	17	16	33

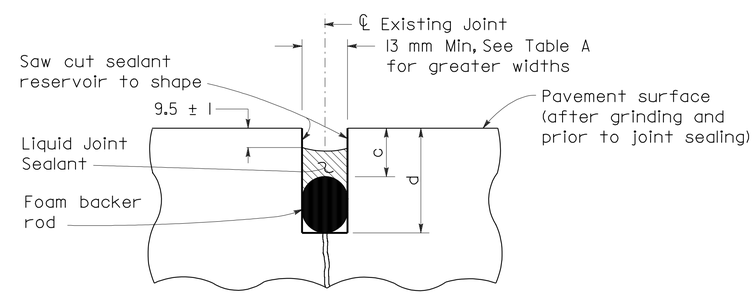

LIQUID SEALANT TYPE R

Retrofit Transverse and Longitudinal Joints

STATE OF CALIFORNIA
DEPARTMENT OF TRANSPORTATION

CONCRETE PAVEMENT-JOINT DETAILS

NO SCALE

ALL DIMENSIONS ARE IN MILLIMETERS UNLESS OTHERWISE SHOWN

RSP P20 DATED NOVEMBER 17, 2006 SUPERSEDES STANDARD PLAN P20 DATED JULY 1, 2004-PAGE 129 OF THE STANDARD PLANS BOOK DATED JULY 2004.

REVISED STANDARD PLAN RSP P20

2004 REVISED Std PLAN RSP P20

10-24-06

DIST	COUNTY	ROUTE	KILOMETER POST TOTAL PROJECT	SHEET NO.	TOTAL SHEETS
07	LA	405	39.7/41.5	190	439

Caltrans Metric

Raymond Don Tsztoo
REGISTERED CIVIL ENGINEER

January 18, 2008
PLANS APPROVAL DATE

REGISTERED PROFESSIONAL ENGINEER Raymond Don Tsztoo No. C37332 Exp. 6-30-08 CIVIL STATE OF CALIFORNIA

The State of California or its officers or agents shall not be responsible for the accuracy or completeness of electronic copies of this plan sheet.

To get to the Caltrans web site, go to: http://www.dot.ca.gov

To accompany plans dated 6-7-10

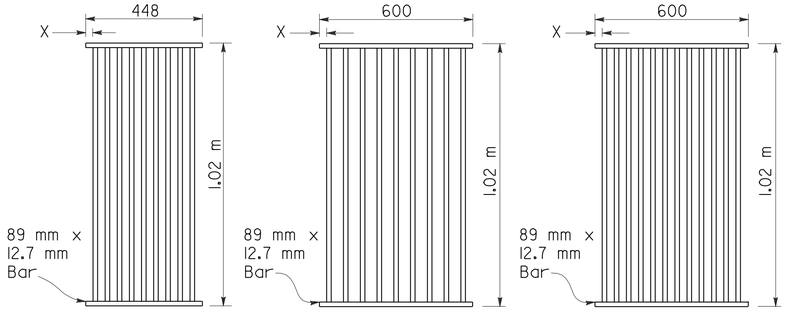

TYPE 450-9

35 mm Clear spacing. Use within the roadbed on highways where bicycles and pedestrians are excluded.

TYPE 600-9

51 mm Clear spacing. Use in locations off the roadbed on all types of highways.

TYPE 600-12

35 mm Clear spacing. Use within the roadbed on highways where bicycles and pedestrians are excluded.

RECTANGULAR GRATE DETAILS

(See table below)

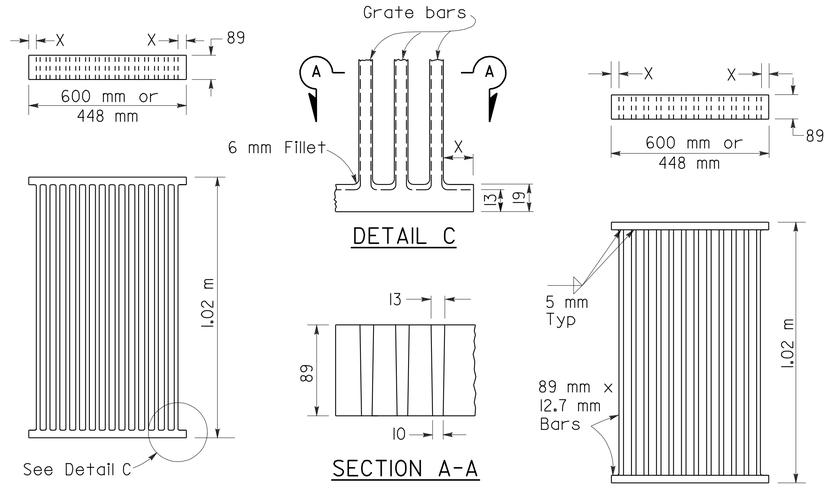

DETAIL C

SECTION A-A

ALTERNATIVE CAST NODULAR IRON GRATE OR CAST STEEL GRATE

ALTERNATIVE WELDED GRATE

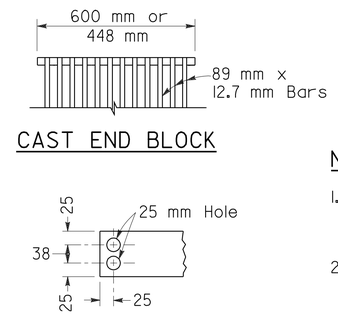

CAST END BLOCK

END OF BAR

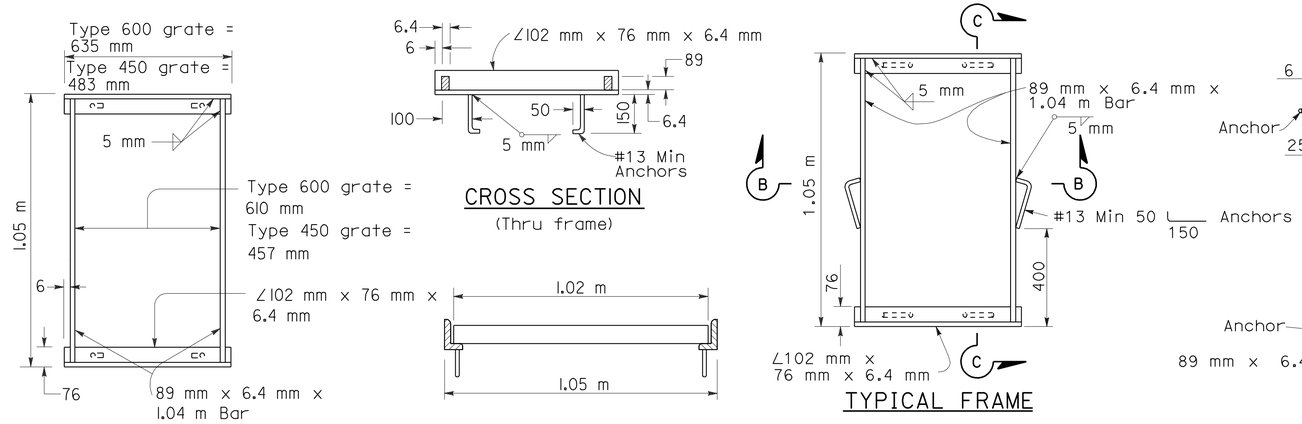

TYPICAL FRAME

CROSS SECTION

(Thru frame)

LONGITUDINAL SECTION

(Thru frame and grate)

TYPICAL FRAME

RECTANGULAR FRAME DETAILS

(For all rectangular grates)

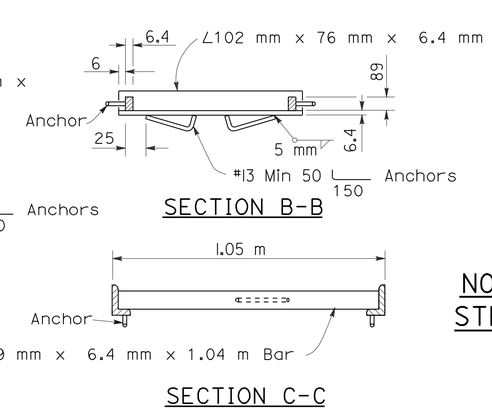

SECTION B-B

SECTION C-C

ALTERNATIVE ANCHOR FOR RECTANGULAR FRAME

(For details not shown, See Rectangular Frame Details)

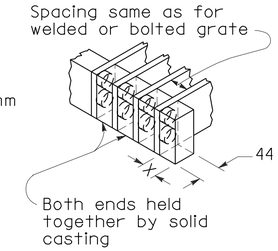

ALTERNATIVE CAST NODULAR IRON OR CAST STEEL END BLOCK GRATE

NOTES

1. Grate type numbers refer to approximate width of grate in millimeters and number of bars, respectively.
2. Contractor has the option of using cast nodular iron, cast steel, welded, bolted, or cast end block grate.
3. See Special Provisions for requirements pertaining to galvanizing or asphalt dipping of grates and frames.
4. Rounded top of bars optional on all grates.
5. Pipe inlets with a grate shall be placed so that bars parallel direction of principle surface flow.
6. Full penetration butt welds may be substituted for the fillet welds on all anchors.
7. Standard square, hexagon, round or equivalent headed anchors may be substituted for the right angle hooks on the anchors shown on this plan.
8. Grate and frame weights are based on welded grates (weights of face angles, steps, protection bars, etc. are not included).

GRATE BAR SPACING TABLE

TYPE	No. OF BARS	CLEAR BAR SPACING (mm)	X (mm)
450-9	9	35	27
600-9	9	51	40
600-12	12	35	32

INLET TYPE	COVER TYPE	MASS (kg)
OS	PLATE	79
OL-2.1	PLATE	77
OL-3.0	PLATE	77
OL-4.3	PLATE	77
OL-6.4	PLATE	77
OCP	PLATE	51
OCPI	PLATE	51
OCPI	REDWOOD	19
OMP	PLATE	80
OMPI	PLATE	80

INLET TYPE	GRATE TYPE	No. OF GRATES	MASS (kg)
GDO	600-12	2	288
GOL-2.1	600-12	1	148
GOL-3.0	600-12	1	148
GO,G1,G2,G3,G4(TYPE 600)	600-9	1	119
	600-12	1	148
G4(TYPE 450),G5,G6	450-9	1	113
GT-1	450-9	2	226
GT-2	450-9	2	226
GT-3	600-12	2	296
GT-4	600-12	2	296
TRASH RACK			10

BASIS FOR MISC IRON & STEEL FINAL PAY MASSES FOR DRAINAGE INLETS

(See General Notes, No. 8)

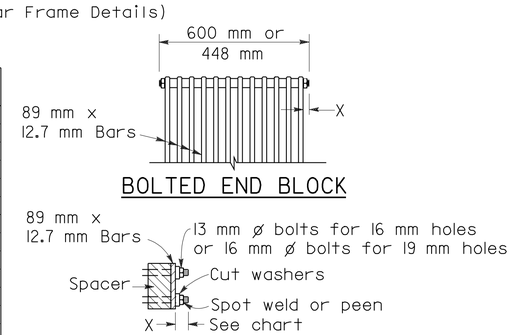

BOLTED END BLOCK

BOLTING DETAIL

ALTERNATIVE BOLTED GRATE

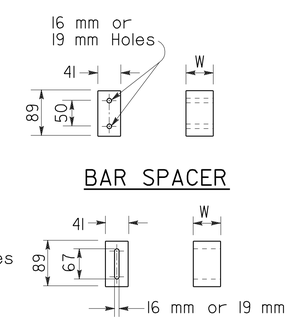

BAR SPACER

ALTERNATIVE SPACER

35 mm or 50 mm

STATE OF CALIFORNIA
DEPARTMENT OF TRANSPORTATION

GRATE DETAILS

NO SCALE

ALL DIMENSIONS ARE IN MILLIMETERS UNLESS OTHERWISE SHOWN

RSP D77A DATED JANUARY 18, 2008 SUPERSEDES STANDARD PLAN D77A DATED JULY 1, 2004 - PAGE 155 OF THE STANDARD PLANS BOOK DATED JULY 2004.

REVISED STANDARD PLAN RSP D77A

2004 REVISED Std PLAN RSP D77A

DIST	COUNTY	ROUTE	KILOMETER POST TOTAL PROJECT	SHEET NO.	TOTAL SHEETS
07	LA	405	39.7/41.5	191	439

Caltrans Metric

LICENSED LANDSCAPE ARCHITECT

March 7, 2008
PLANS APPROVAL DATE

LICENSED LANDSCAPE ARCHITECT Gregory A. Balzer 2576 Signature 02-28-2009 Renewal Date 02-21-08 Date STATE OF CALIFORNIA

The State of California or its officers or agents shall not be responsible for the accuracy or completeness of electronic copies of this plan sheet.

To get to the Caltrans web site, go to: http://www.dot.ca.gov

To accompany plans dated 6-7-10

2004 REVISED Std PLAN RSP H2

EXISTING	PROPOSED	ITEM DESCRIPTION
		WATER METER (WM)
		BACKFLOW PREVENTER ASSEMBLY (BPA)
		BACKFLOW PREVENTER ASSEMBLY IN ENCLOSURE (BPAE)
		BACKFLOW PREVENTER ENCLOSURE (BPE)
		BOOSTER PUMP (BP)
		TRUCK LOADING STANDPIPE (TLS)
fs	FS	FLOW SENSOR (FS)
		MASTER IRRIGATION CONTROLLER (MIC)
		AUXILIARY IRRIGATION CONTROLLER (AIC)
		IRRIGATION CONTROLLER (IC)/ IRRIGATION CONTROLLER (IC) (BATTERY)
		IRRIGATION CONTROLLER(S) IN CONTROLLER ENCLOSURE CABINET (ICC)
		CONTROL AND NEUTRAL CONDUCTORS (CNC)
scc	SCC	SPRINKLER CONTROL CONDUIT (SCC)
		CONDUIT (COND)
		IRRIGATION SLEEVE
dip	DIP	DUCTILE IRON PIPE (SUPPLY LINE) (MAIN) (DIP)
		GALVANIZED STEEL PIPE (SUPPLY LINE) (MAIN) (GSP)
		GALVANIZED STEEL PIPE (SUPPLY LINE) (LATERAL) (GSP)
		PLASTIC PIPE (PR 200) (SUPPLY LINE) (MAIN)
		PLASTIC PIPE (PR 200) (SUPPLY LINE) (LATERAL)
		PLASTIC PIPE (IRRIGATION LINE)
		REMOTE CONTROL VALVE (RCV) REMOTE CONTROL VALVE (MASTER) (RCVM)
		MANUAL CONTROL VALVE (MCV)
		VALVE ASSEMBLY UNIT (VAU)
		WYE STRAINER (WS)
		FILTER ASSEMBLY UNIT (FAU)
		GATE VALVE (GV)
		BALL VALVE (BV)

EXISTING	PROPOSED	ITEM DESCRIPTION
		QUICK COUPLING VALVE (QCV)
		CAM COUPLING ASSEMBLY (CCA)
		PRESSURE REDUCING VALVE (PRV)
		PRESSURE RELIEF VALVE (PRLV)
		FLOW CONTROL VALVE (FCV)
		COMBINATION AIR RELEASE VALVE (CARV)
		CHECK VALVE (CV)
		FLUSH VALVE (FV)
		NOZZLE LINE W/TURNING UNION
		IRRIGATION SYSTEM
		IRRIGATION SYSTEM TO BE REMOVED
		CHAIN LINK GATE
		QUICK COUPLING VALVE W/SPRINKLER PROTECTOR
3	3	SPRINKLER W/SPRINKLER PROTECTOR
		CONNECT TO EXISTING SYSTEM
		CAP
		CAP EXISTING

VALVE CODE

- RCV SIZE (mm)
- IRRIGATION CONTROLLER
- CONTROLLER STATION
- VALVE IN PARALLEL (IF APPLICABLE)
- L/min
- QUANTITY OF SPRINKLERS (WHEN SHOWN)

* 63.5-A-2b-151.4-60

- MCV SIZE (mm)
- VALVE NUMBER
- L/min
- QUANTITY OF TYPE SPRINKLERS (WHEN SHOWN)

* 50.8-3-113.5-50

* VALVE CODES FOR EXISTING VALVES ARE SHOWN IN A DASHED ENCLOSURE.

STATE OF CALIFORNIA
DEPARTMENT OF TRANSPORTATION

PLANTING AND IRRIGATION SYMBOLS

NO SCALE

ALL DIMENSIONS ARE IN MILLIMETERS UNLESS OTHERWISE SHOWN

RSP H2 DATED MARCH 7, 2008 SUPERSEDES STANDARD PLAN H2 DATED JULY 1, 2004 - PAGE 202 OF THE STANDARD PLANS BOOK DATED JULY 2004.

REVISED STANDARD PLAN RSP H2

2-20-08

DIST	COUNTY	ROUTE	KILOMETER POST TOTAL PROJECT	SHEET NO.	TOTAL SHEETS
07	LA	405	39.7/41.5	192	439

Caltrans Metric

Randell D. Hiatt
REGISTERED CIVIL ENGINEER

June 6, 2008
PLANS APPROVAL DATE

REGISTERED PROFESSIONAL ENGINEER
Randell D. Hiatt
No. C50200
Exp. 6-30-09
CIVIL
STATE OF CALIFORNIA

The State of California or its officers or agents shall not be responsible for the accuracy or completeness of electronic copies of this plan sheet.

To get to the Caltrans web site, go to: http://www.dot.ca.gov

To accompany plans dated 6-7-10

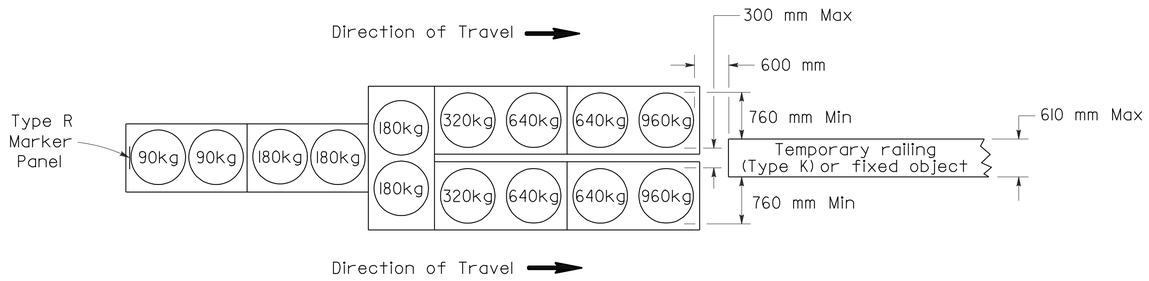

ARRAY 'TU14'

Approach speed 70 km/h or more

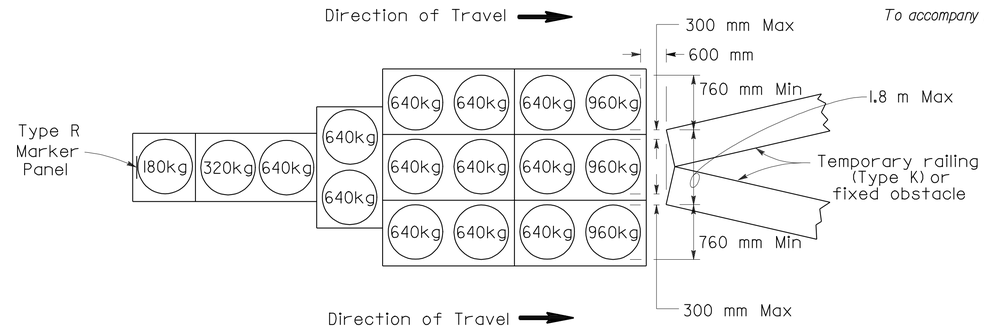

ARRAY 'TU17'

Approach speed less than 70 km/h

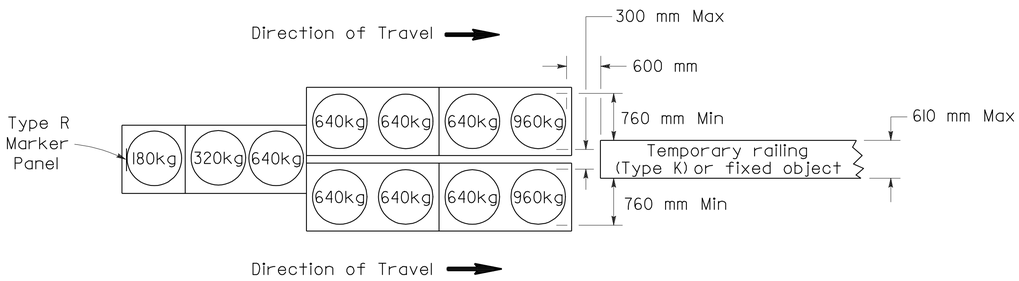

ARRAY 'TU11'

Approach speed less than 70 km/h

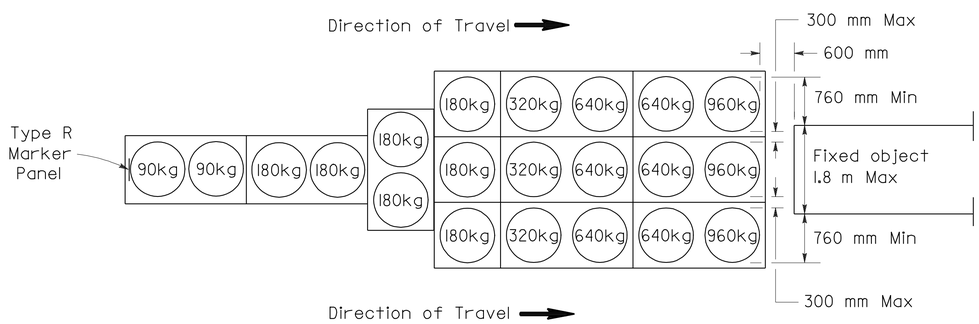

ARRAY 'TU21'

Approach speed 70 km/h or more

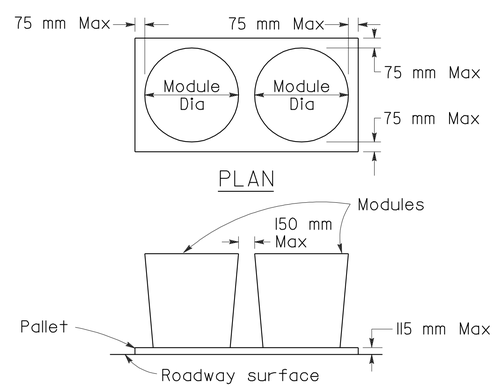

CRASH CUSHION PALLET DETAIL

See Note 7

NOTES

1. (XXX) Indicates sand filled module location and mass of sand in kilograms for each module. Module spacing is based on the greater diameter of the module.
2. All sand masses are nominal.
3. Temporary crash cushion arrays shall not encroach on the traveled way.
4. Place the top of Type R marker panel 25 mm below the module lid.
5. Refer to Standard Plan A73B for marker details.
6. Approach speeds indicated conform to NCHRP 350 Report criteria.
7. Use of Pallets is optional.

STATE OF CALIFORNIA
DEPARTMENT OF TRANSPORTATION

TEMPORARY CRASH CUSHION, SAND FILLED (UNIDIRECTIONAL)

NO SCALE

ALL DIMENSIONS ARE IN MILLIMETERS UNLESS OTHERWISE SHOWN

RSP T1A DATED JUNE 6, 2008 SUPERSEDES STANDARD PLAN T1A
DATED July 1, 2004 - PAGE 211 OF THE STANDARD PLANS BOOK DATED July 2004.

REVISED STANDARD PLAN RSP T1A

2004 REVISED Std PLAN RSP T1A

5-16-08

DIST	COUNTY	ROUTE	KILOMETER POST TOTAL PROJECT	SHEET NO.	TOTAL SHEETS
07	LA	405	39.7/41.5	193	439

Randell D. Hiatt
REGISTERED CIVIL ENGINEER

June 6, 2008
PLANS APPROVAL DATE

REGISTERED PROFESSIONAL ENGINEER
Randell D. Hiatt
No. C50200
Exp. 6-30-09
CIVIL
STATE OF CALIFORNIA

The State of California or its officers or agents shall not be responsible for the accuracy or completeness of electronic copies of this plan sheet.

To get to the Caltrans web site, go to: http://www.dot.ca.gov

To accompany plans dated 6-7-10

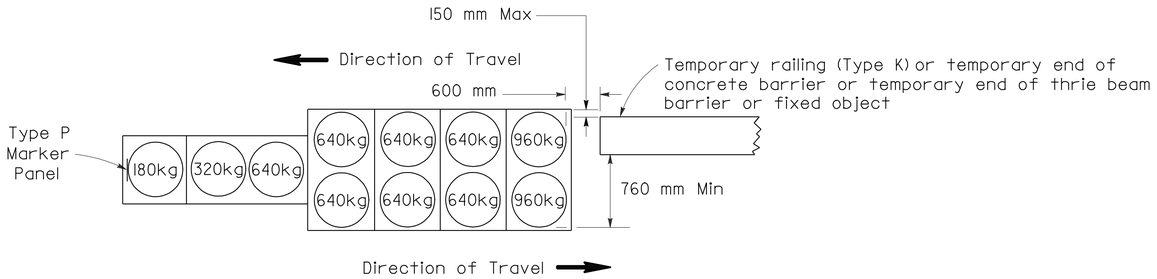

ARRAY 'TBI1'

Approach speed less than 70 km/h

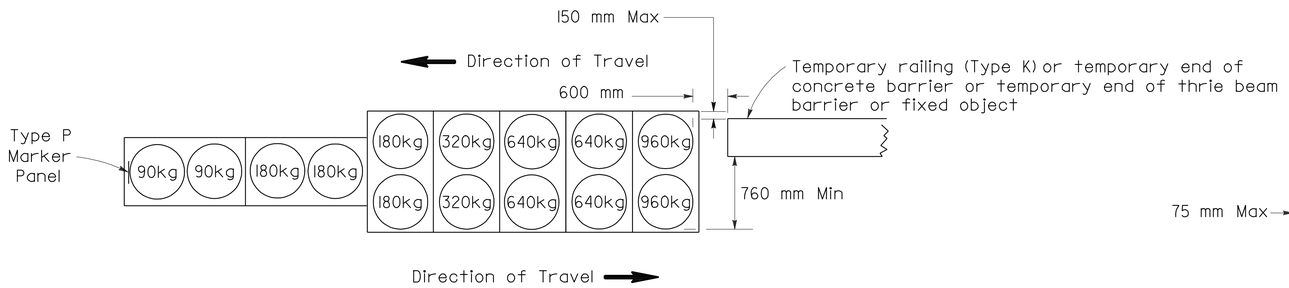

ARRAY 'TBI4'

Approach speed 70 km/h or more

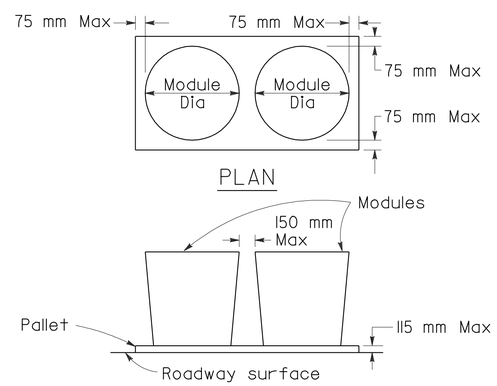

CRASH CUSHION PALLET DETAIL

See Note 7

NOTES

1. (XXX) Indicates sand filled module location and mass of sand in kilograms for each module. Module spacing is based on the greater diameter of the module.
2. All sand masses are nominal.
3. Temporary crash cushion arrays shall not encroach on the traveled way.
4. Place the Type P marker panel so that the bottom of the panel rests upon the pallet.
5. Refer to Standard Plan A73B for marker details.
6. Approach speeds indicated conform to NCHRP 350 Report criteria.
7. Use of Pallets is optional.

STATE OF CALIFORNIA
DEPARTMENT OF TRANSPORTATION

TEMPORARY CRASH CUSHION, SAND FILLED (BIDIRECTIONAL)

NO SCALE

ALL DIMENSIONS ARE IN MILLIMETERS UNLESS OTHERWISE SHOWN

RSP T1B DATED JUNE 6, 2008 SUPERSEDES STANDARD PLAN T1B DATED July 1, 2004 - PAGE 212 OF THE STANDARD PLANS BOOK DATED July 2004.

REVISED STANDARD PLAN RSP T1B

2004 REVISED Std PLAN RSP T1B

5-16-08

DIST	COUNTY	ROUTE	KILOMETER POST TOTAL PROJECT	SHEET NO.	TOTAL SHEETS
07	LA	405	39.7/41.5	194	439

Caltrans Metric

Randell D. Hiatt
REGISTERED CIVIL ENGINEER

June 6, 2008
PLANS APPROVAL DATE

REGISTERED PROFESSIONAL ENGINEER
Randell D. Hiatt
No. C50200
Exp. 6-30-09
CIVIL
STATE OF CALIFORNIA

The State of California or its officers or agents shall not be responsible for the accuracy or completeness of electronic copies of this plan sheet.

To get to the Caltrans web site, go to: http://www.dot.ca.gov

To accompany plans dated 6-7-10

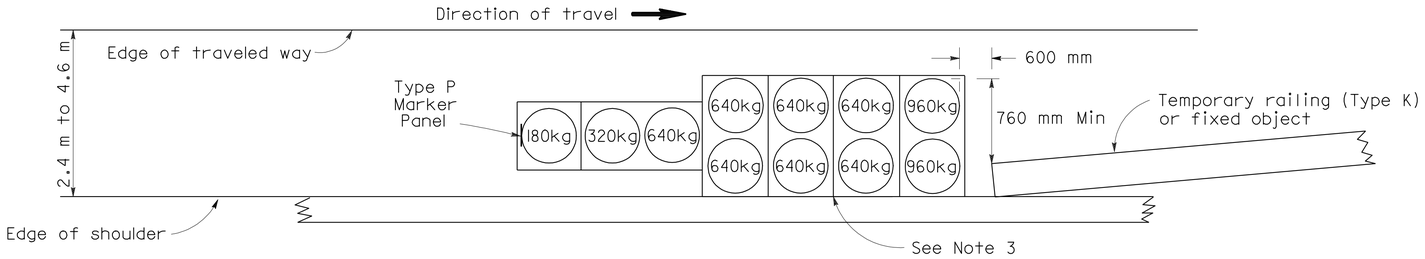

ARRAY 'TSI1'

Approach speed less than 70 km/h
See Note 9

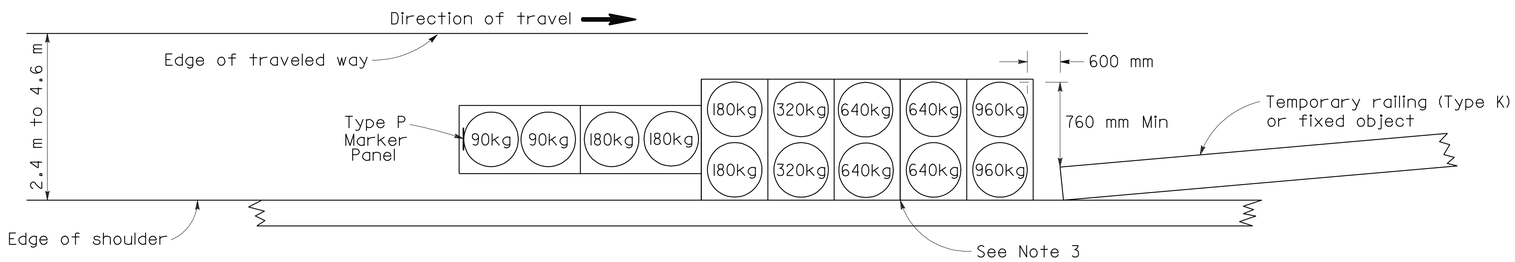

ARRAY 'TSI4'

Approach speed 70 km/h or more
See Note 9

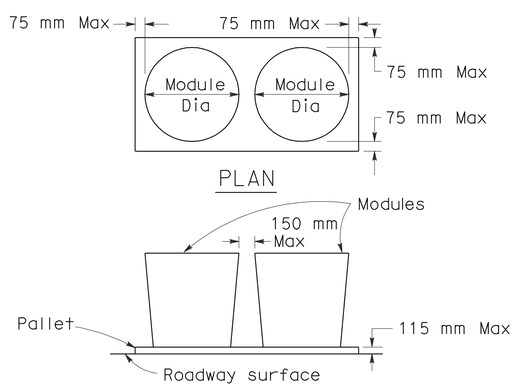

CRASH CUSHION PALLET DETAIL

See Note 11

NOTES

1. (XXX) Indicates sand filled module location and mass of sand in kilograms for each module. Module spacing is based on the greater diameter of the module.
2. All sand masses are nominal.
3. The temporary crash cushion arrays shown on this plan shall be used only in locations where there will be traffic on one side of the temporary crash cushion array.
4. If the fixed object or approach end of the temporary railing is less than 4.60 meters from the edge of traveled way, a temporary crash cushion is required.
5. Temporary crash cushion arrays shall not encroach on the traveled way.
6. Arrays for median shoulders shall conform to details shown on this plan for outside shoulders.
7. Place the Type P marker panel so that the bottom of the panel rest upon the pallet and faces traffic.
8. Refer to Standard Plan A73B for marker details.
9. For shoulder widths less than 2.4 m, appropriate approved crash cushion protection, other than sand filled modules, shall be provided at fixed objects and at approach ends of temporary railing. The specific type of crash cushion shall be as shown on the project plans or as specified in the Special Provisions, or if not shown on the project plans or specified in the Special Provisions, shall be as approved by the Engineer.
10. Approach speeds indicated conform to NCHRP 350 Report criteria.
11. Use of Pallets is optional.

STATE OF CALIFORNIA
DEPARTMENT OF TRANSPORTATION

TEMPORARY CRASH CUSHION, SAND FILLED (SHOULDER INSTALLATIONS)

NO SCALE

ALL DIMENSIONS ARE IN MILLIMETERS UNLESS OTHERWISE SHOWN

RSP T2 DATED JUNE 6, 2008 SUPERSEDES STANDARD PLAN T2
DATED July 1, 2004 - PAGE 213 OF THE STANDARD PLANS BOOK DATED July 2004.

REVISED STANDARD PLAN RSP T2

2004 REVISED Std PLAN RSP T2

5-16-08

To accompany plans dated 6-7-10

Caltrans Metric

DIST	COUNTY	ROUTE	KILOMETER POST TOTAL PROJECT	SHEET NO.	TOTAL SHEETS
07	LA	405	39.7/41.5	195	439

REGISTERED CIVIL ENGINEER

November 17, 2006
PLANS APPROVAL DATE

REGISTERED PROFESSIONAL ENGINEER — Greg W. Edwards No. C36386 Exp. 6-30-08 CIVIL — STATE OF CALIFORNIA

The State of California or its officers or agents shall not be responsible for the accuracy or completeness of electronic copies of this plan sheet.

To get to the Caltrans web site, go to: http://www.dot.ca.gov

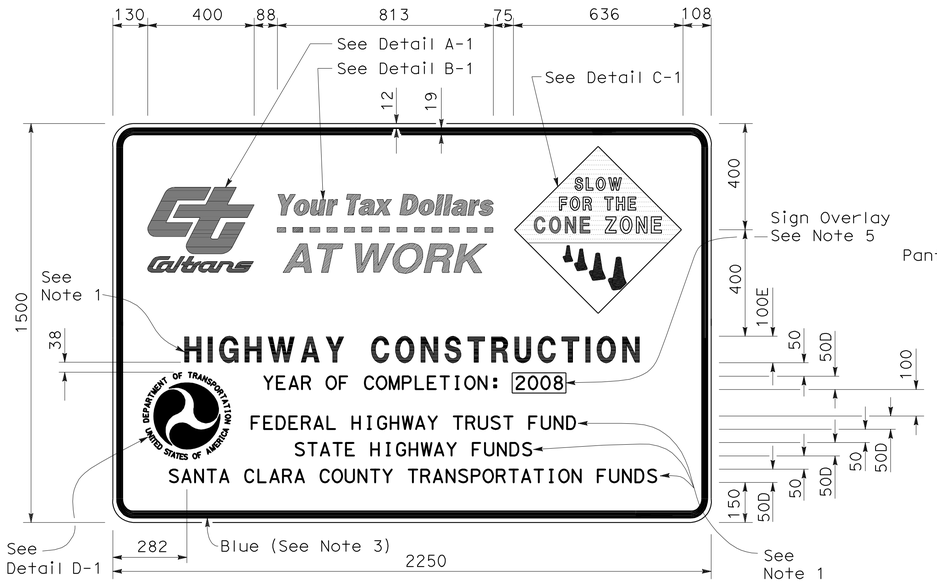

TYPE 1

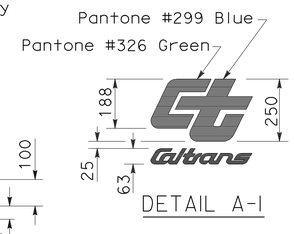

DETAIL A-1

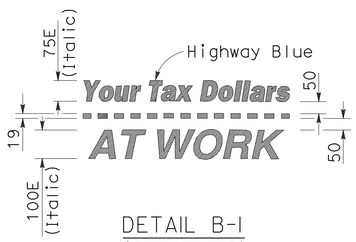

DETAIL B-1
(See Note 3)

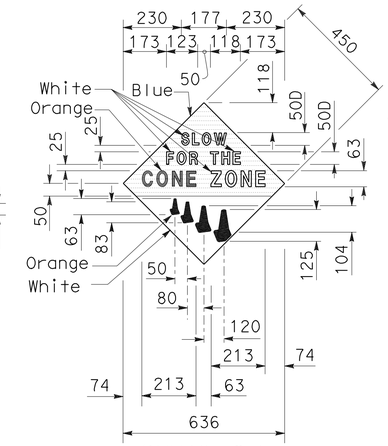

DETAIL C-1
(See Note 4)

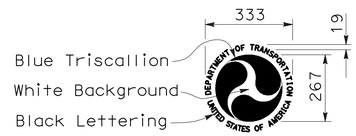

DETAIL D-1
(See Note 6)

NOTES:

1. The sign messages shown for type of project and fund types are examples only. See the Special Provisions for the applicable type of project and fund type messages to be used.
2. Except as otherwise shown, the legend of sign shall be black on a white background (non-reflective).
3. The border of the signs and details "B-1" and "B-2" shall be blue (non-reflective).
4. The diamond in details "C-1" and "C-2" shall be blue for the background of message, " SLOW FOR THE CONE ZONE", and white background for the orange cones. The color and type of font for the "SLOW FOR THE CONE ZONE" message shall be: "SLOW" white D; "FOR THE" white D; "CONE" orange Arial font; "ZONE" white Arial font.
5. Year of completion of project construction shown on the overlay is an example only. See the Special Provisions.
6. Use when the Project involves Federal Highway Trust Fund.

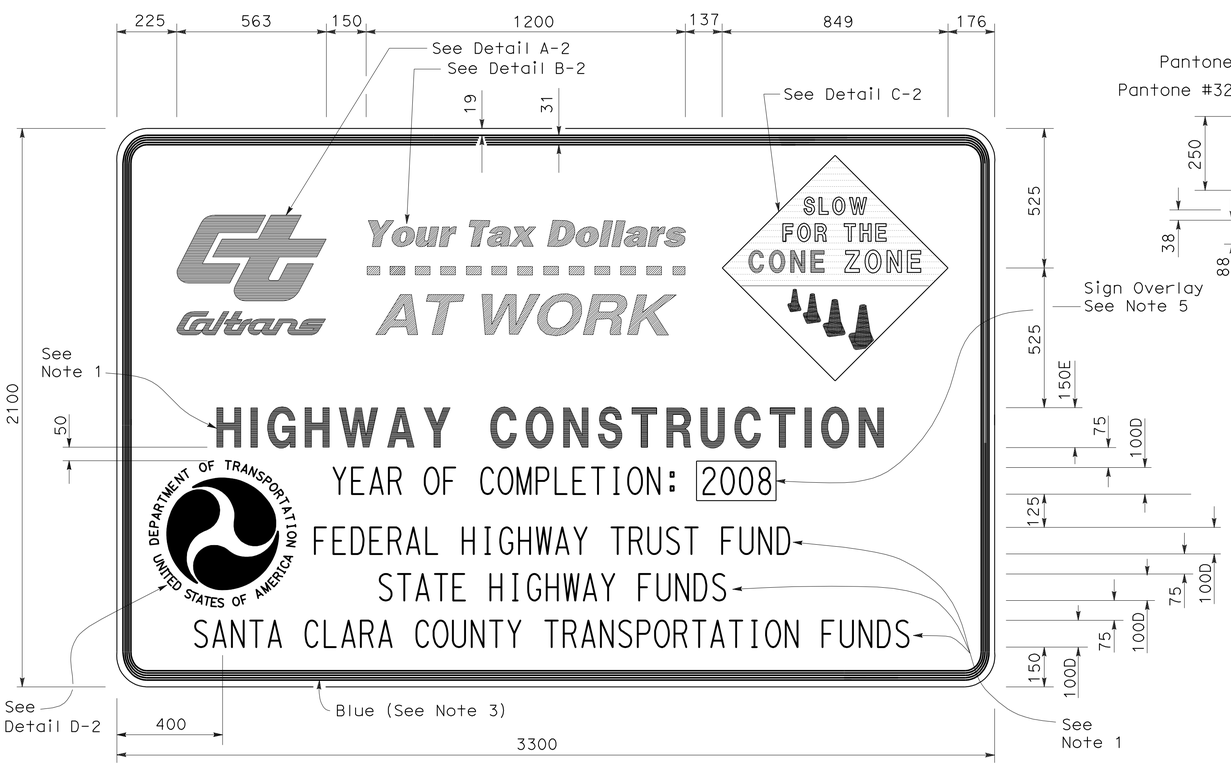

TYPE 2

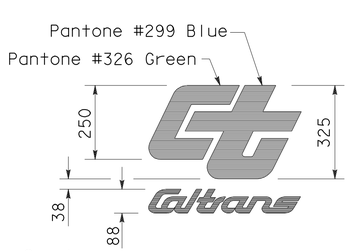

DETAIL A-2

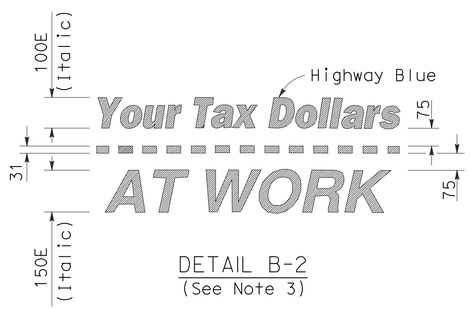

DETAIL B-2
(See Note 3)

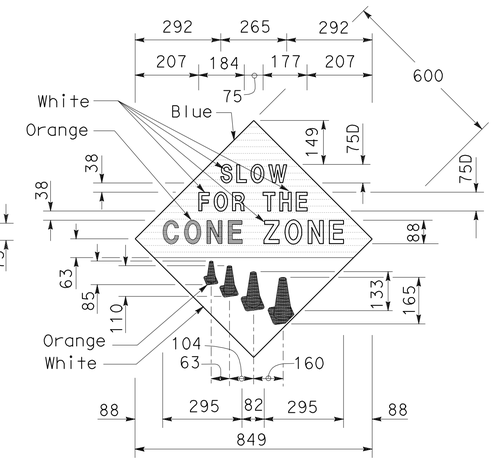

DETAIL C-2
(See Note 4)

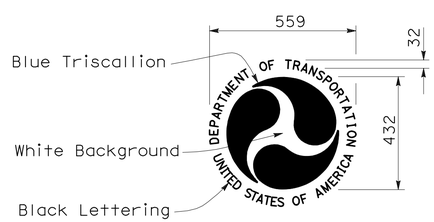

DETAIL D-2
(See Note 6)

STATE OF CALIFORNIA
DEPARTMENT OF TRANSPORTATION

CONSTRUCTION PROJECT FUNDING IDENTIFICATION SIGNS

NO SCALE

ALL DIMENSIONS ARE IN MILLIMETERS UNLESS OTHERWISE SHOWN

RSP T7 DATED NOVEMBER 17, 2006 SUPERSEDES RSP T7 DATED APRIL 28, 2005 AND STANDARD PLAN T7 DATED JULY 1, 2004-PAGE 217 OF THE STANDARD PLANS BOOK DATED JULY 2004.

REVISED STANDARD PLAN RSP T7

2004 REVISED Std PLAN RSP T7

9-7-06

DIST	COUNTY	ROUTE	KILOMETER POST TOTAL PROJECT	SHEET NO.	TOTAL SHEETS
07	LA	405	39.7/41.5	196	439

REGISTERED CIVIL ENGINEER

April 28, 2005
PLANS APPROVAL DATE

REGISTERED PROFESSIONAL ENGINEER Greg W. Edwards No. C36386 Exp. 6-30-06 CIVIL STATE OF CALIFORNIA

The State of California or its officers or agents shall not be responsible for the accuracy or completeness of electronic copies of this plan sheet.

To get to the Caltrans web site, go to: http://www.dot.ca.gov

To accompany plans dated 6-7-10

Caltrans Metric

NOTES

Unless otherwise specified in the special provisions, all temporary warning signs shall have black legend on orange background.

California code are designated by (CA). Otherwise, Federal codes are shown.

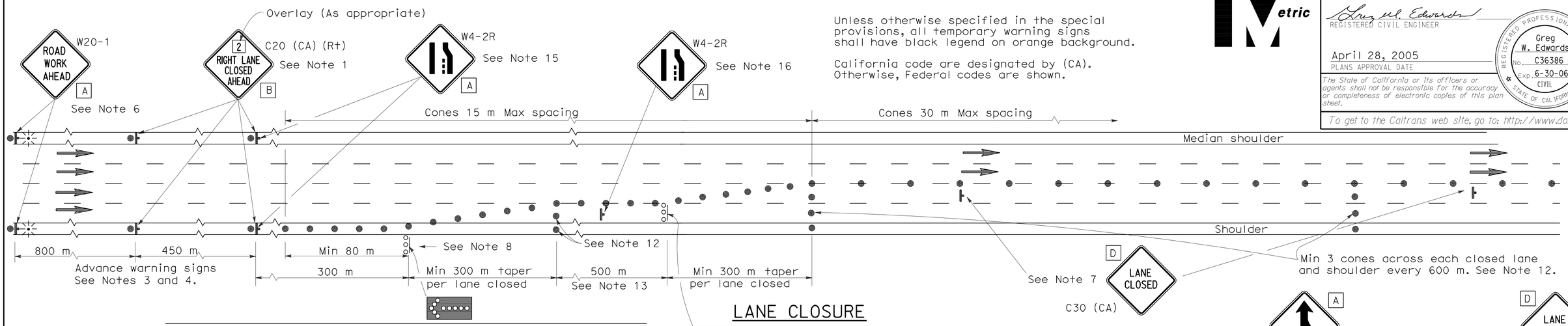

LANE CLOSURE

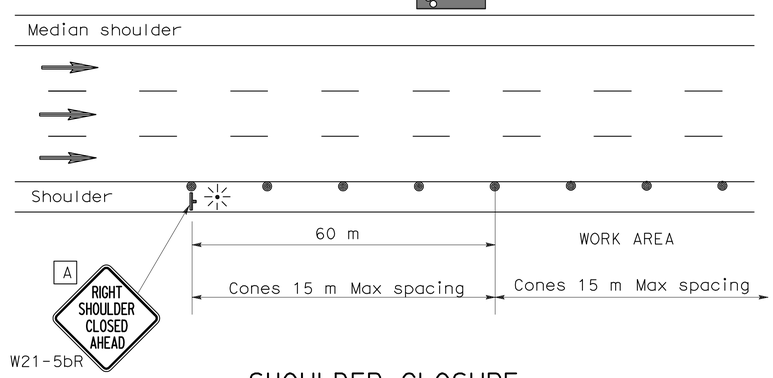

SHOULDER CLOSURE

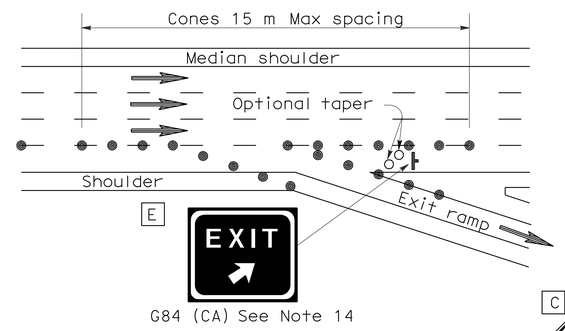

LANE CLOSURE AT EXIT RAMP

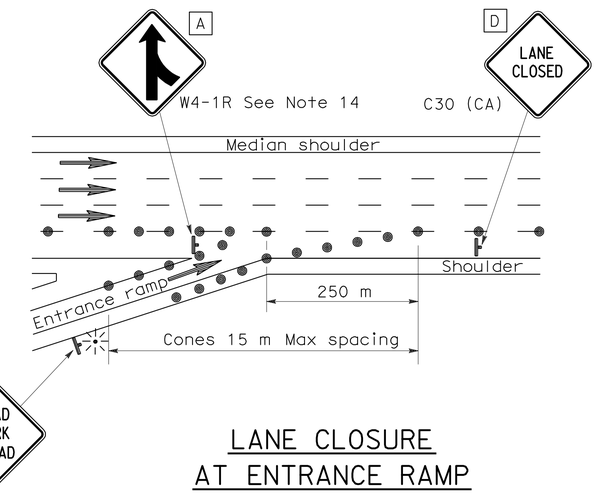

LANE CLOSURE AT ENTRANCE RAMP

NOTES

1. Median lane closures shall conform to the details for outside lane closures except that C20 (CA) (Lt) signs shall be used.
2. At least one person shall be assigned to provide full time maintenance of traffic control devices for lane closures.
3. Duplicate sign installations are not required:
   a) On opposite shoulder if at least one-half of the available lanes remain open to traffic.
   b) In the median if the width of the median shoulder is less than 2.4 m and the outside lanes are to be closed.
4. Each advance warning sign on each side of the roadway shall be equipped with at least two flags for daytime closure. Each flag shall be at least 400 mm x 400 mm in size and shall be orange or fluorescent red-orange in color. Flashing beacons shall be placed at the locations indicated for lane closure during hours of darkness.
5. A C14 (CA) "END ROAD WORK" sign, as appropriate, shall be placed at the end of the lane closure unless the end of work area is obvious or ends within a larger project's limits.
6. If the W20-1 sign would follow within 600 m of a stationary W20-1 or C11 (CA) "ROAD WORK NEXT _____ MILES", use a C20 (CA) sign for the first advance warning sign.
7. Place a C30 (CA) sign every 600 m throughout length of lane closure.
8. One flashing arrow sign for each lane closed. The first flashing arrow sign shall be Type I. All others may be either Type I or Type II.
9. A minimum 450 m of sight distance shall be provided where possible for vehicles approaching the first flashing arrow sign. Lane closures shall not begin at top of crest vertical curve or on a horizontal curve.
10. All cones used for lane closures during the hours of darkness shall be fitted with retroreflective bands (or sleeves) as specified in the specifications.
11. Portable delineators, placed at one-half the spacing indicated for traffic cones may be used instead of cones for daytime closures only.
12. Unless otherwise specified in the special provisions, a minimum of 3 cones shall be placed transversely across each closed lane and shoulder at each location where a taper across a traffic lane ends and every 600 m as shown on the "Lane Closure" detail. Two Type II barricades may be used instead of the 3 cones. The transverse alignment of the cones or barricades on the closed shoulder may be shifted from the transverse alignment to provide access to the work.
13. Unless otherwise specified in the special provisions, the 500 m tangent shown along lane lines shall be used between the 300 m tapers required for each closed traffic lane.
14. Unless otherwise specified in the special provisions, the G84 (CA) and W4-1 signs shall be used as shown.
15. When specified in the special provisions, a W4-2 "LANE ENDS" symbol sign is to be used in place of the C20 (CA) "RIGHT LANE CLOSED AHEAD" sign.
16. The W4-2 "LANE ENDS" symbol sign shown at this location is to be used where the W4-2 sign is used as advance warning as described in Note 15.

SIGN PANEL SIZE (Min)

A	1200 mm x 1200 mm
B	1219 mm x 1219 mm
C	750 mm x 750 mm
D	762 mm x 762 mm
E	1372 mm x 1219 mm

LEGEND

- Traffic Cone
- Traffic Cone (optional taper)
- Temporary Sign
- Flashing Arrow Sign (FAS)
- FAS Support or Trailer
- Direction of Travel
- Portable Flashing Beacon

STATE OF CALIFORNIA
DEPARTMENT OF TRANSPORTATION

TRAFFIC CONTROL SYSTEM FOR LANE CLOSURE ON FREEWAYS AND EXPRESSWAYS

NO SCALE

ALL DIMENSIONS ARE IN MILLIMETERS UNLESS OTHERWISE SHOWN

RSP T10 DATED APRIL 28, 2005 SUPERSEDES STANDARD PLAN T10 DATED JULY 1, 2004-PAGE 218 OF THE STANDARD PLANS BOOK DATED JULY 2004.

REVISED STANDARD PLAN RSP T10

2004 REVISED Std PLAN RSP T10

DIST	COUNTY	ROUTE	KILOMETER POST TOTAL PROJECT	SHEET NO.	TOTAL SHEETS
07	LA	405	39.7/41.5	197	439

REGISTERED CIVIL ENGINEER

April 28, 2005
PLANS APPROVAL DATE

REGISTERED PROFESSIONAL ENGINEER G.W. Edwards No. C36386 Exp. 6-30-06 CIVIL STATE OF CALIFORNIA

The State of California or its officers or agents shall not be responsible for the accuracy or completeness of electronic copies of this plan sheet.

To get to the Caltrans web site, go to: http://www.dot.ca.gov

Caltrans Metric

To accompany plans dated 6-7-10

NOTES

Unless otherwise specified in the special provisions, all temporary warning signs shall have black legend on orange background.

California code are designated by (CA). Otherwise, Federal codes are shown.

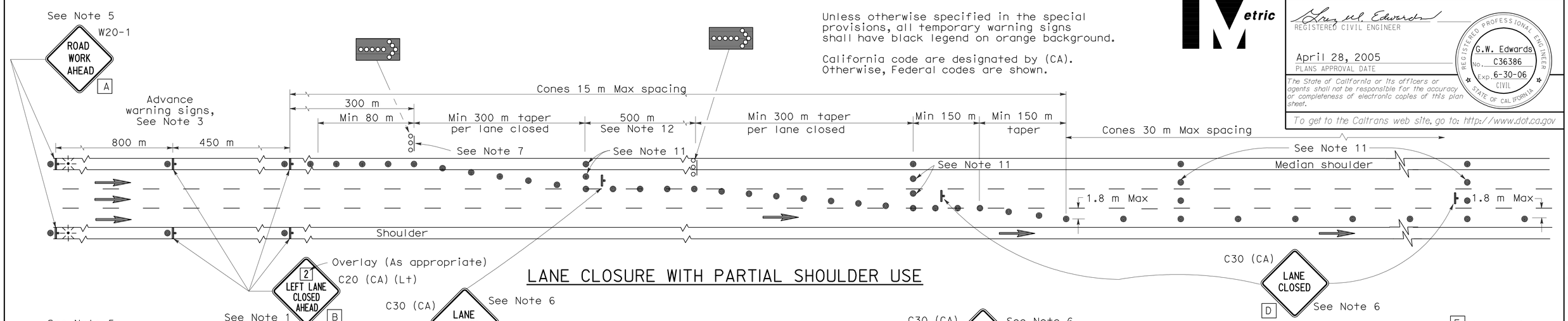

LANE CLOSURE WITH PARTIAL SHOULDER USE

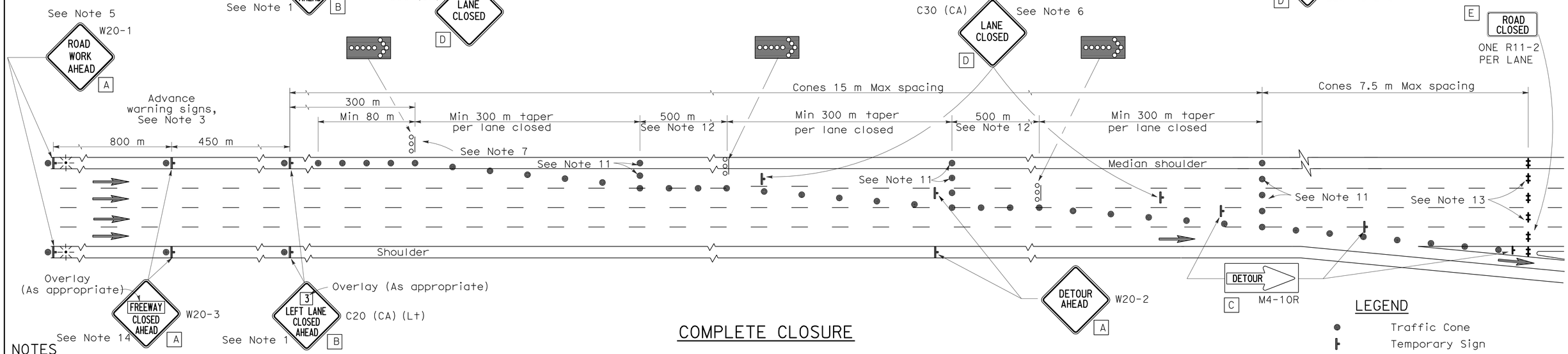

COMPLETE CLOSURE

NOTES

1. Lane closures on the right side using partial median shoulder as a traffic lane shall conform to the details for inside lane closure except that C20 (CA) (Rt) signs shall be used.
2. At least one person shall be assigned to provide full time maintenance of traffic control devices for lane closures.
3. Each advance warning sign on each side of the roadway shall be equipped with at least two flags for daytime closure. Each flag shall be at least 400 mm x 400 mm in size and shall be orange or fluorescent red-orange in color. Flashing beacons shall be placed at the locations indicated for lane closure during hours of darkness.
4. A C14 (CA) "END ROAD WORK" sign, as appropriate, shall be placed at the end of the lane closure unless the end of work area is obvious or ends within a larger project's limits.
5. If the W20-1 sign would follow within 600 m of a stationary W20-1 or C11 (CA) "ROAD WORK NEXT ___ MILES", use a C20 (CA) sign for the first advance warning sign.
6. Place a C30 (CA) sign every 600 m throughout length of lane closure.
7. One flashing arrow sign for each lane closed. The first flashing arrow sign shall be Type I. All others may be either Type I or Type II.
8. A minimum 450 m of sight distance shall be provided where possible for vehicles approaching the first flashing arrow sign. Lane closures shall not begin at the top of crest vertical curve or on a horizontal curve.
9. All cones used for lane closures during the hours of darkness shall be fitted with retroreflective bands (or sleeves) as specified in the specifications.
10. Portable delineators, placed at one-half the spacing indicated for traffic cones, may be used instead of cones for daytime closures only.
11. Unless otherwise specified in the special provisions, a minimum of 3 cones shall be placed transversely across each closed lane and shoulder at each location where a taper across a traffic lane ends and every 600 m as shown on the "Lane Closure With Partial Shoulder Use" detail. Two Type II barricades may be used instead of the 3 cones. The transverse alignment of the cones or barricades on the closed shoulder may be shifted from the transverse alignment to provide access to the work.
12. Unless otherwise specified in the special provisions, the 500 m tangent shown along lane lines shall be used between the 300 m tapers required for each closed traffic lane.
13. A minimum of Two Type II barricades shall be placed across each closed lane and shoulder at the location shown and every 600 m within the complete closure area. Within the complete closure area, the transverse alignment of the barricades on the closed shoulder may be shifted from the transverse alignment to provide access to the work.
14. When specified in the special provisions, a W20-2 "DETOUR AHEAD" sign is to be used in place of the W20-3 "FREEWAY CLOSED AHEAD" sign.

SIGN PANEL SIZE (Min)

A	1200 mm x 1200 mm
B	1219 mm x 1219 mm
C	1200 mm x 450 mm
D	762 mm x 762 mm
E	1200 mm x 750 mm

LEGEND

- Traffic Cone
- Temporary Sign
- Barricade
- Flashing Arrow Sign (FAS)
- FAS Support or Trailer
- Direction of Travel
- Portable Flashing Beacon

STATE OF CALIFORNIA
DEPARTMENT OF TRANSPORTATION

TRAFFIC CONTROL SYSTEM FOR LANE AND COMPLETE CLOSURES ON FREEWAYS AND EXPRESSWAYS

NO SCALE

ALL DIMENSIONS ARE IN MILLIMETERS UNLESS OTHERWISE SHOWN

RSP T10A DATED APRIL 28, 2005 SUPERSEDES STANDARD PLAN T10A DATED JULY 1, 2004-PAGE 219 OF THE STANDARD PLANS BOOK DATED JULY 2004.

REVISED STANDARD PLAN RSP T10A

2004 REVISED Std PLAN RSP T10A

TYPICAL RAMP CLOSURES

LEGEND

- Traffic Cone
- Temporary Sign
- Barricades
- Direction of Travel
- Turn Arrow

SIGN PANEL SIZE (Min)

A	1200 mm x 1200 mm
B	1200 mm x 750 mm
C	750 mm x 750 mm
D	762 mm x 762 mm
E	900 mm x 900 mm
F	1219 mm x 914 mm

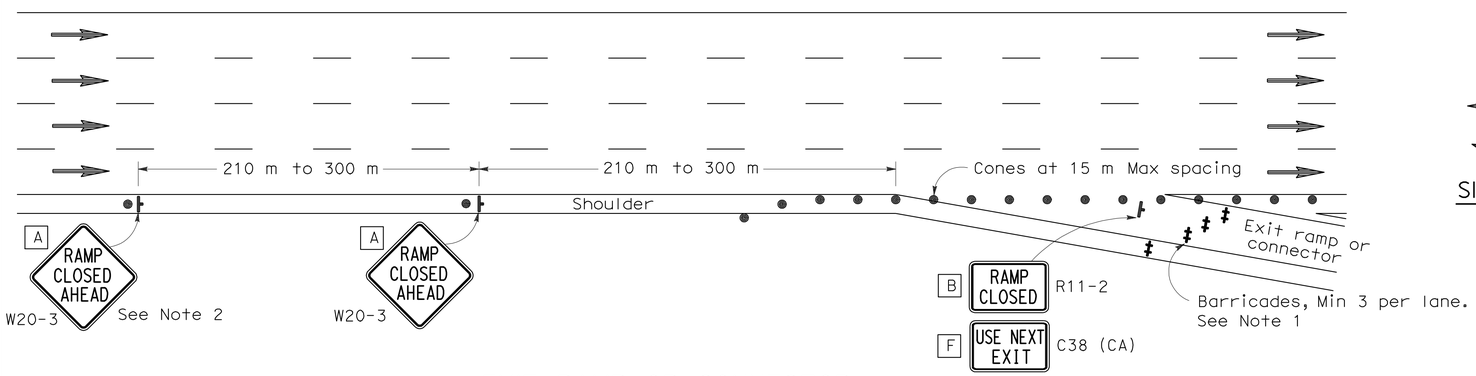

EXIT RAMP OR CONNECTOR

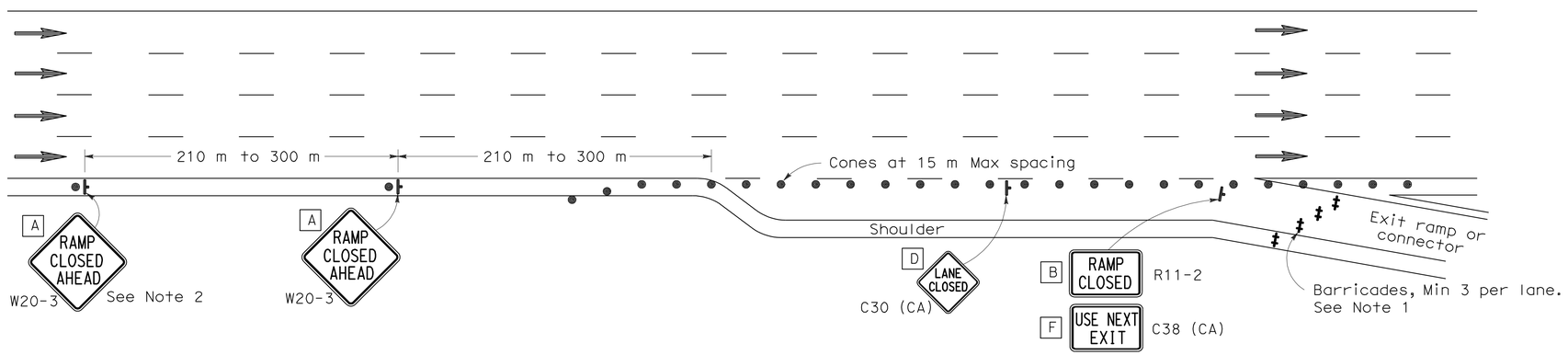

EXIT RAMP OR CONNECTOR WITH ADDITIONAL LANE

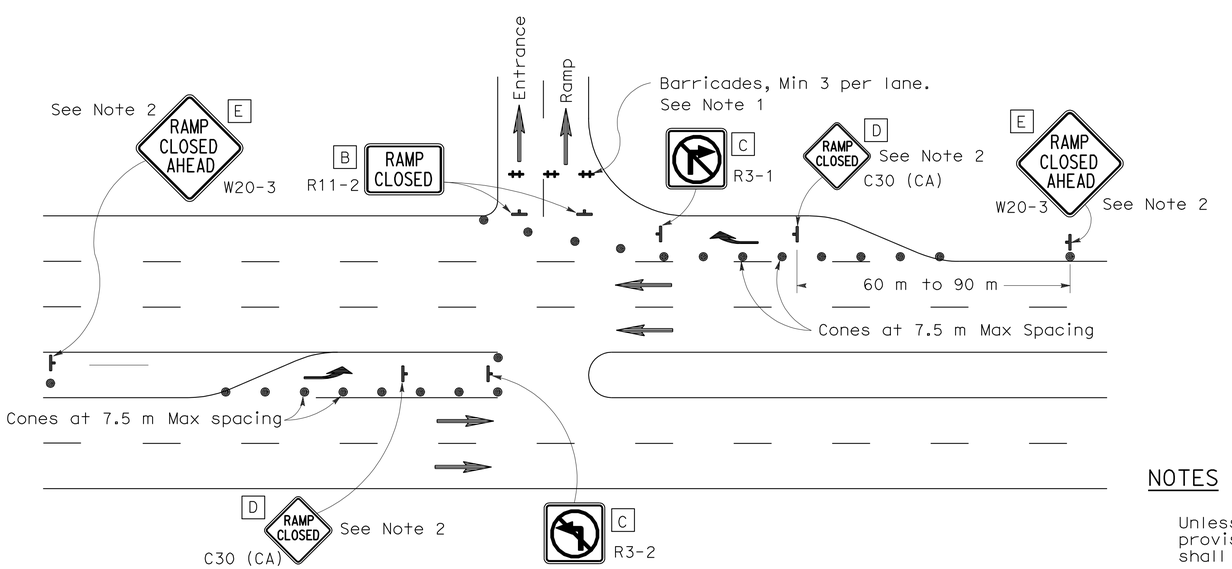

ENTRANCE RAMP WITH TURNING POCKETS

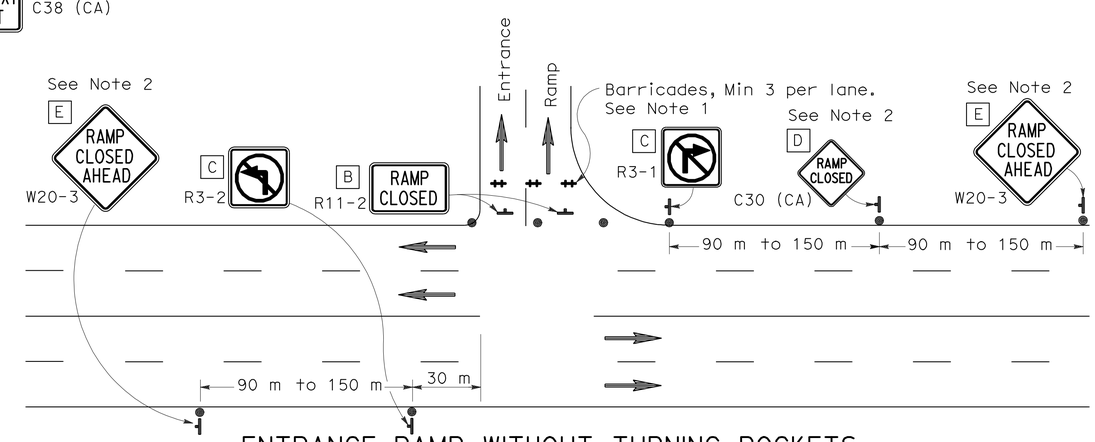

ENTRANCE RAMP WITHOUT TURNING POCKETS

NOTES

1. Barricades shall be Type I, II, or III for closures lasting one week or less and Type III for closures lasting longer than one week.
2. Instead of placing the W20-3 "RAMP CLOSED AHEAD" and C30 (CA) "RAMP CLOSED" signs, black on orange overlay plates with the word "CLOSED" may be mounted, as directed by the Engineer, on all guide signs that refer to the closed ramp. The letter size on the overlay shall be the same as the guide sign.
3. Each advance W20-3 "RAMP CLOSED AHEAD" sign shall be equipped with at least two flags for daytime closure. Each flag shall be at least 400 mm x 400 mm in size and shall be orange or fluorescent red-orange in color.
4. All cones used for ramp closures during the hours of darkness shall be fitted with retroreflective bands (or sleeves) as specified in the specifications.
5. Portable delineators, placed at one-half the spacing indicated for traffic cones, may be used instead of cones for daytime ramp closures only.
6. At least one person shall be assigned to provide full time maintenance of traffic control devices, unless otherwise directed by the Engineer.
7. The existing "EXIT" sign in the gore area shall be covered during ramp closures.

NOTES

Unless otherwise specified in the special provisions, all temporary warning signs shall have black legend on orange background.

California code are designated by (CA). Otherwise, Federal codes are shown.

DIST	COUNTY	ROUTE	KILOMETER POST TOTAL PROJECT	SHEET NO.	TOTAL SHEETS
07	LA	405	39.7/41.5	198	439

Caltrans Metric

REGISTERED CIVIL ENGINEER

April 28, 2005
PLANS APPROVAL DATE

REGISTERED PROFESSIONAL ENGINEER
Greg W. Edwards
No. C36386
Exp. 6-30-06
CIVIL
STATE OF CALIFORNIA

The State of California or its officers or agents shall not be responsible for the accuracy or completeness of electronic copies of this plan sheet.

To get to the Caltrans web site, go to: http://www.dot.ca.gov

To accompany plans dated 6-7-10

STATE OF CALIFORNIA
DEPARTMENT OF TRANSPORTATION

TRAFFIC CONTROL SYSTEM FOR RAMP CLOSURE

NO SCALE

ALL DIMENSIONS ARE IN MILLIMETERS UNLESS OTHERWISE SHOWN

RSP T14 DATED APRIL 28, 2005 SUPERSEDES STANDARD PLAN T14 DATED JULY 1, 2004-PAGE 223 OF THE STANDARD PLANS BOOK DATED JULY 2004.

REVISED STANDARD PLAN RSP T14

2004 REVISED Std PLAN RSP T14

DIST	COUNTY	ROUTE	KILOMETER POST TOTAL PROJECT	SHEET NO.	TOTAL SHEETS
07	LA	405	39.7/41.5	199	439

REGISTERED CIVIL ENGINEER

October 5, 2007
PLANS APPROVAL DATE

REGISTERED PROFESSIONAL ENGINEER Efthymios Delis No. C51434 Exp. 6-30-08 CIVIL STATE OF CALIFORNIA

The State of California or its officers or agents shall not be responsible for the accuracy or completeness of electronic copies of this plan sheet.

To get to the Caltrans web site, go to: http://www.dot.ca.gov

Caltrans Metric

To accompany plans dated 6-7-10

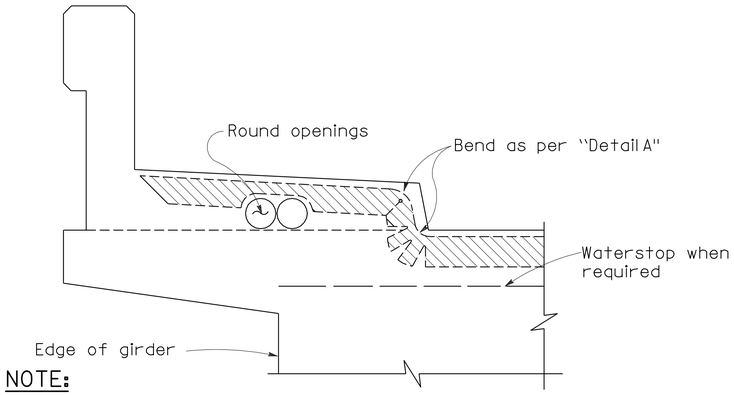

NOTE:

Type "B" seal shown. Type "A" seals to comform to the general path of seal shown, cuts for bending not required. Bend Type "A" seals 75 mm up into curb or barrier rail on only the low end of the seal.

CONCRETE BARRIER AND SIDEWALK

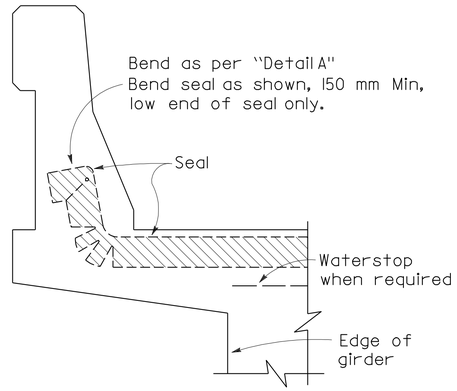

CONCRETE BARRIER

JOINT SEALS DETAILS

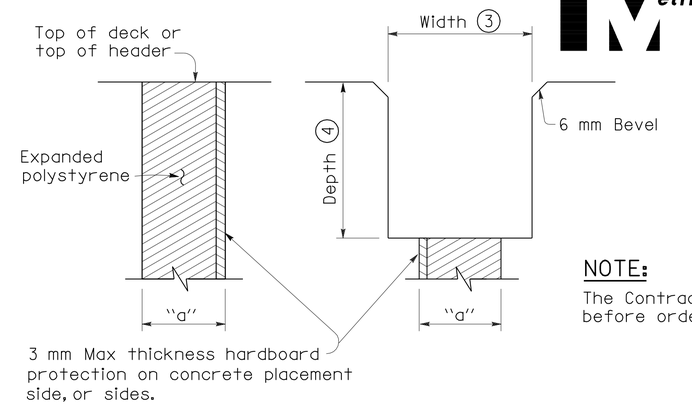

FORMING DETAIL SAWCUT DETAIL

NOTE:

The Contractor shall verify all controlling field dimensions before ordering or fabricating any material.

NOTES:

① Make smooth cuts from the bottom of seal to 40 mm clear of top leaving at least one complete cell between the top of the cut and top of the seal. When necessary cut back of seal to clear conduit and round openings.

② Opening in barrier to match width of sawn deck joint.

③ Sawcut groove widths shall be as ordered by the Engineer.

④ Depth of sawcut: Type A - Depth to be 50 mm minimum.
Type B - Depth to be equal to or greater than the depth of seal measured along the contact surface, when compressed to minimum width position (W_2) plus dimensions shown above.

⑤ MR (movement rating) as shown on other plan sheets.

⑥ Other depths must be approved by the Engineer.

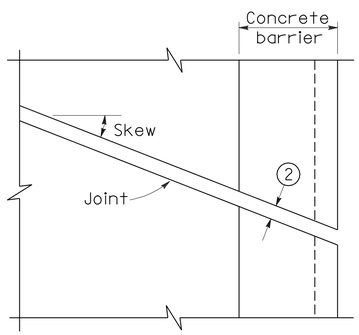

PLAN OF JOINT (SKEW ≤ 20°)

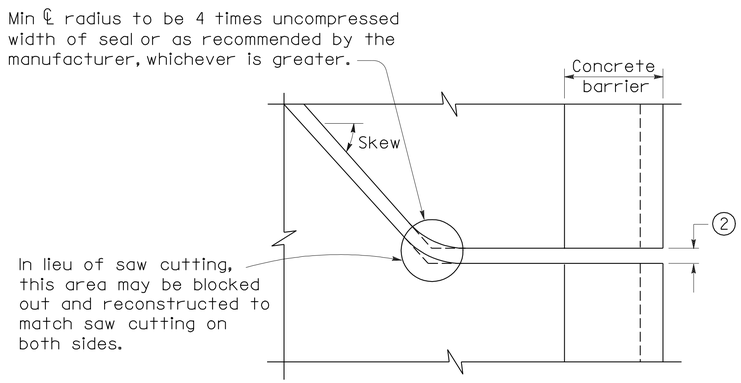

PLAN OF JOINT (SKEW > 20°)

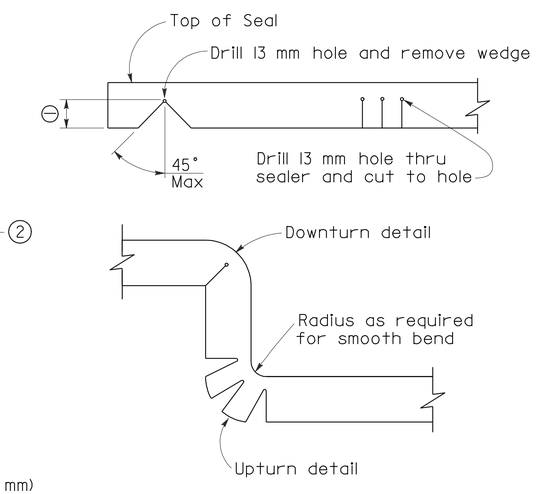

DETAIL A

DIMENSIONS "a" OF JOINT REQUIRED

Movement Rating (MR) ⑤	Bridge Type	"a" Dimension Deck Concrete Placed		
		Winter	Fall-Spring	Summer
50 mm	All except CIP/PS	40 mm	30 mm	20 mm
	CIP/PS	30 mm	25 mm	13 mm
40 mm	All except CIP/PS	30 mm	25 mm	13 mm
	CIP/PS	25 mm	20 mm	13 mm
25 mm	All except CIP/PS	25 mm	20 mm	13 mm
	CIP/PS	20 mm	13 mm	13 mm
13 mm	All except CIP/PS	20 mm	20 mm	13 mm
	CIP/PS	13 mm	13 mm	13 mm

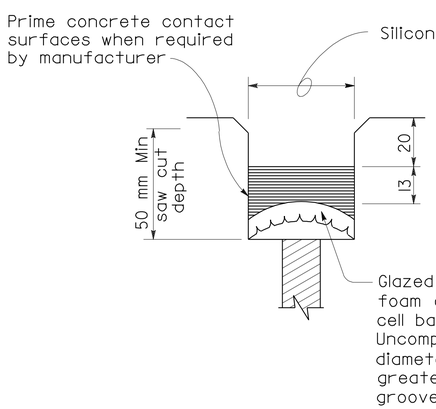

TYPE A SEAL

Movement rating : Silicone = 25 mm Max

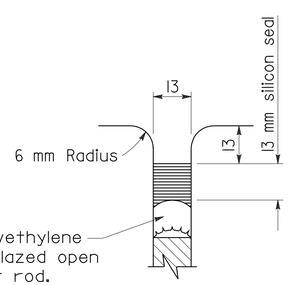

TYPE AL SEAL

Longitudinal joints only

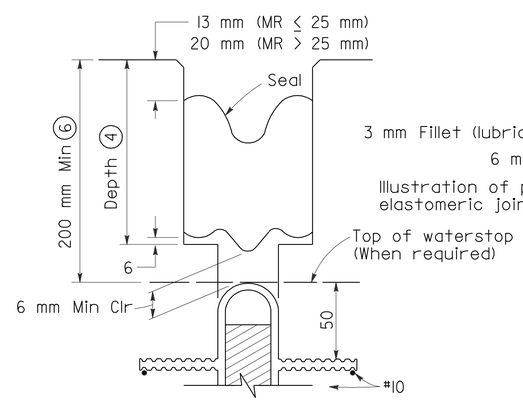

TYPE B JOINT SEAL IN MINIMUM WIDTH POSITION (W_2)

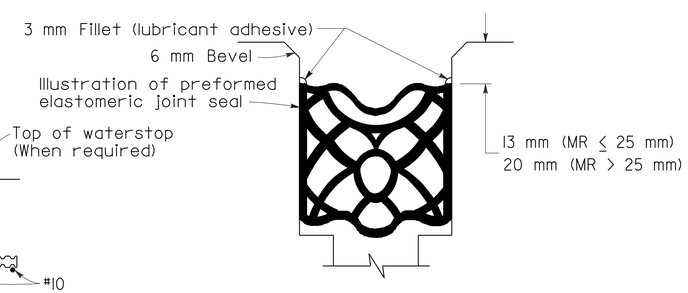

TYPE B SEAL

Movement Rating ≤ 50 mm

STATE OF CALIFORNIA
DEPARTMENT OF TRANSPORTATION

JOINT SEALS (MAXIMUM MOVEMENT RATING = 50 mm)

NO SCALE

ALL DIMENSIONS ARE IN MILLIMETERS UNLESS OTHERWISE SHOWN

RSP B6-21 DATED OCTOBER 5, 2007 SUPERSEDES RSP B6-21 DATED JANUARY 26, 2005 AND STANDARD PLAN B6-21 DATED JULY 1, 2004-PAGE 258 OF THE STANDARD PLANS BOOK DATED JULY 2004.

REVISED STANDARD PLAN RSP B6-21

2004 REVISED Std PLAN RSP B6-21

5-17-07

To accompany plans dated 6-7-10

Caltrans Metric

DIST	COUNTY	ROUTE	KILOMETER POST TOTAL PROJECT	SHEET NO.	TOTAL SHEETS
07	LA	405	39.7/41.5	200	439

REGISTERED CIVIL ENGINEER

April 28, 2005
PLANS APPROVAL DATE

REGISTERED PROFESSIONAL ENGINEER Michael Pope No. C54503 Exp. 12-31-05 CIVIL STATE OF CALIFORNIA

The State of California or its officers or agents shall not be responsible for the accuracy or completeness of electronic copies of this plan sheet.

To get to the Caltrans web site, go to: http://www.dot.ca.gov

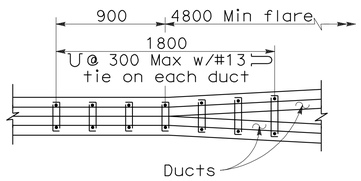

PLAN

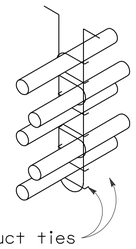

NOTE

Place closed end of duct ties in direction of flare.

STIRRUP REINFORCEMENT AT FLARE OF GIRDER STEM

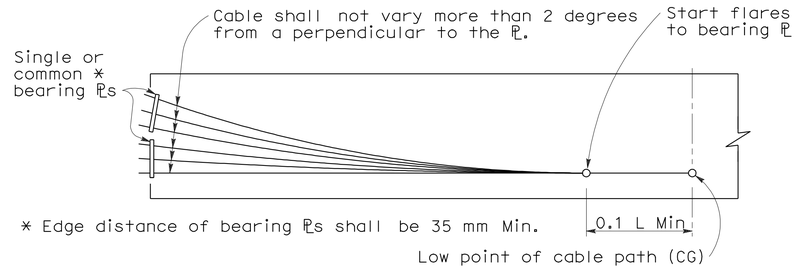

BEARING PLATE PRESTRESSING PATH

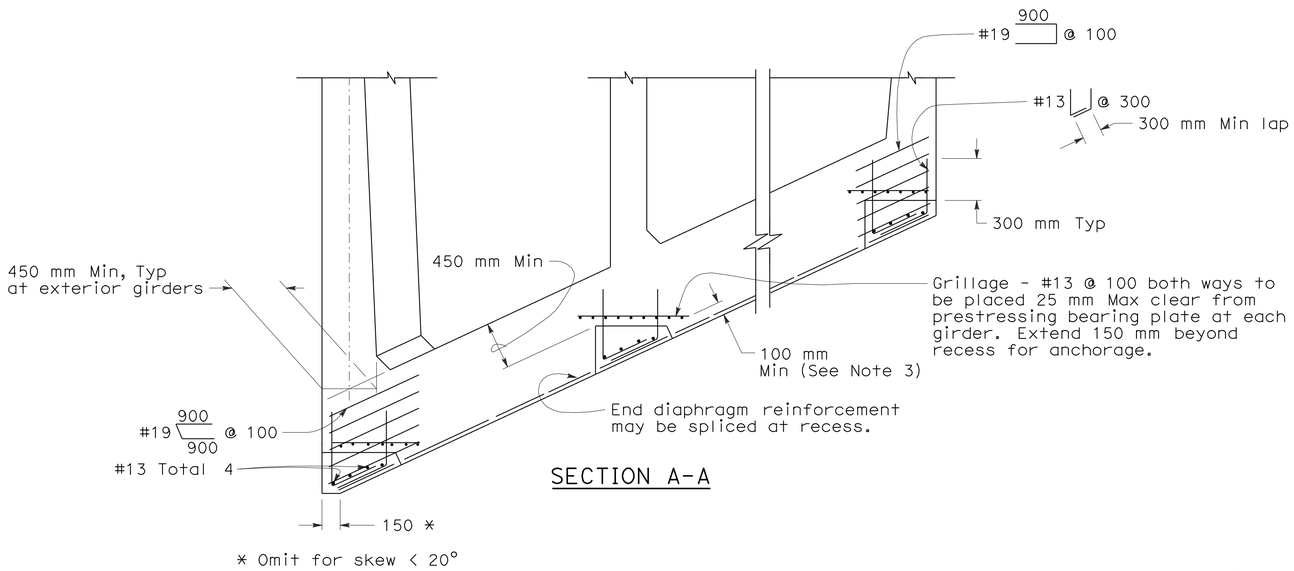

SECTION A-A

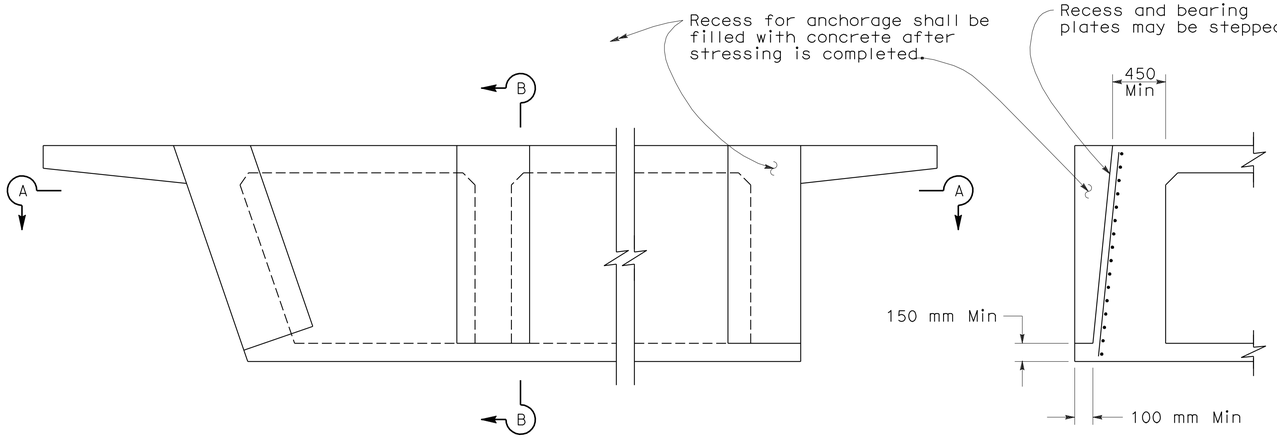

PRESTRESS ANCHORAGE DETAILS AT SEAT TYPE ABUTMENTS

SECTION B-B

NOTES

Distribution of prestressing force:

Unless otherwise noted, the prestressing force shall be distributed with an approximately equal amount in each girder and shall be placed symmetrically about the center line of the structure. In slabs, the prestressing force shall be uniformly distributed across the slab.

Stressing sequence:

No more than ½ of the prestressing force in any girder may be applied before an equal force is applied in the adjacent girders. The maximum force variation between girders shall also not exceed the prestressing force of the largest tendon used in all girders. At no time during stressing operations will more than 1/6 of total prestressing force be applied eccentrically about the centerline of the structure.

Girder stem may be flared near anchorage to provide clearances for the particular anchorage system.

Place duct ties, as shown for flare girder stem, at each location where ducts change horizontal direction.

Bar reinforcement interfering with the prestressing tendon alignment shall be adjusted, as approved by the Engineer.

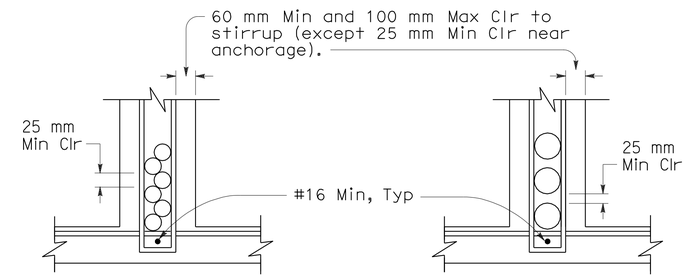

DUCTS 114 mm OD AND LESS

DUCTS OVER 114 mm OD

CLEARANCE REQUIREMENTS FOR DUCTS

NOTES

1. Duct patterns shown are for a 300 mm wide girder stem. For other widths the minimum clearances must be maintained.
2. ⊔ Stirrups may also be used. For continuous stirrups in girder stems greater than 400 mm wide (ie: at flares) use 2-#16 minimum ⊔ or ⊔.
3. 100 mm minimum is not required if this detail is used at hinge location.
4. For additional details, see Standard Plan B7-1.
5. Approval of the Engineer is required for deviations.

STATE OF CALIFORNIA
DEPARTMENT OF TRANSPORTATION

CAST-IN-PLACE PRESTRESSED GIRDER DETAILS

NO SCALE

ALL DIMENSIONS ARE IN MILLIMETERS UNLESS OTHERWISE SHOWN

RSP B8-5 DATED APRIL 28, 2005 SUPERSEDES STANDARD PLAN B8-5 DATED JULY 1, 2004-PAGE 266 OF THE STANDARD PLANS BOOK DATED JULY 2004.

REVISED STANDARD PLAN RSP B8-5

2004 REVISED Std PLAN RSP B8-5