Dist	COUNTY	ROUTE	POST MILES TOTAL PROJECT	SHEET No.	TOTAL SHEETS
07	LA	5	0.0/7.6	501	985

REGISTERED ELECTRICAL ENGINEER 10/18/12 DATE

6-24-13
PLANS APPROVAL DATE

REGISTERED PROFESSIONAL ENGINEER C. BURCIAGA No. E015302 Exp. 3/31/15 ELECT STATE OF CALIFORNIA

THE STATE OF CALIFORNIA OR ITS OFFICERS OR AGENTS SHALL NOT BE RESPONSIBLE FOR THE ACCURACY OR COMPLETENESS OF SCANNED COPIES OF THIS PLAN SHEET.

NOTES: (THIS SHEET)

1. FOR ACCURATE RIGHT OF WAY DATA, CONTACT RIGHT OF WAY ENGINEERING AT THE DISTRICT OFFICE.
2. ADJUST MVDS DETECTION ZONES WITH SHIFT IN LANES THROUGH THE DIFFERENT CONSTRUCTION STAGES, OR AS DIRECTED BY THE ENGINEER.
3. SEE SHEET E-58 FOR MVDS DETAILS.

LEGEND: (THIS SHEET)

1 INSTALL MVDS SENSOR UNIT ON WOOD POLE. SEE SES-1 THRU SES-5 FOR DETAILS.

2 INSTALL TEMPORARY WIRELESS DATA SERVICE SYSTEM, SEE SHEET E-62 FOR DETAILS.

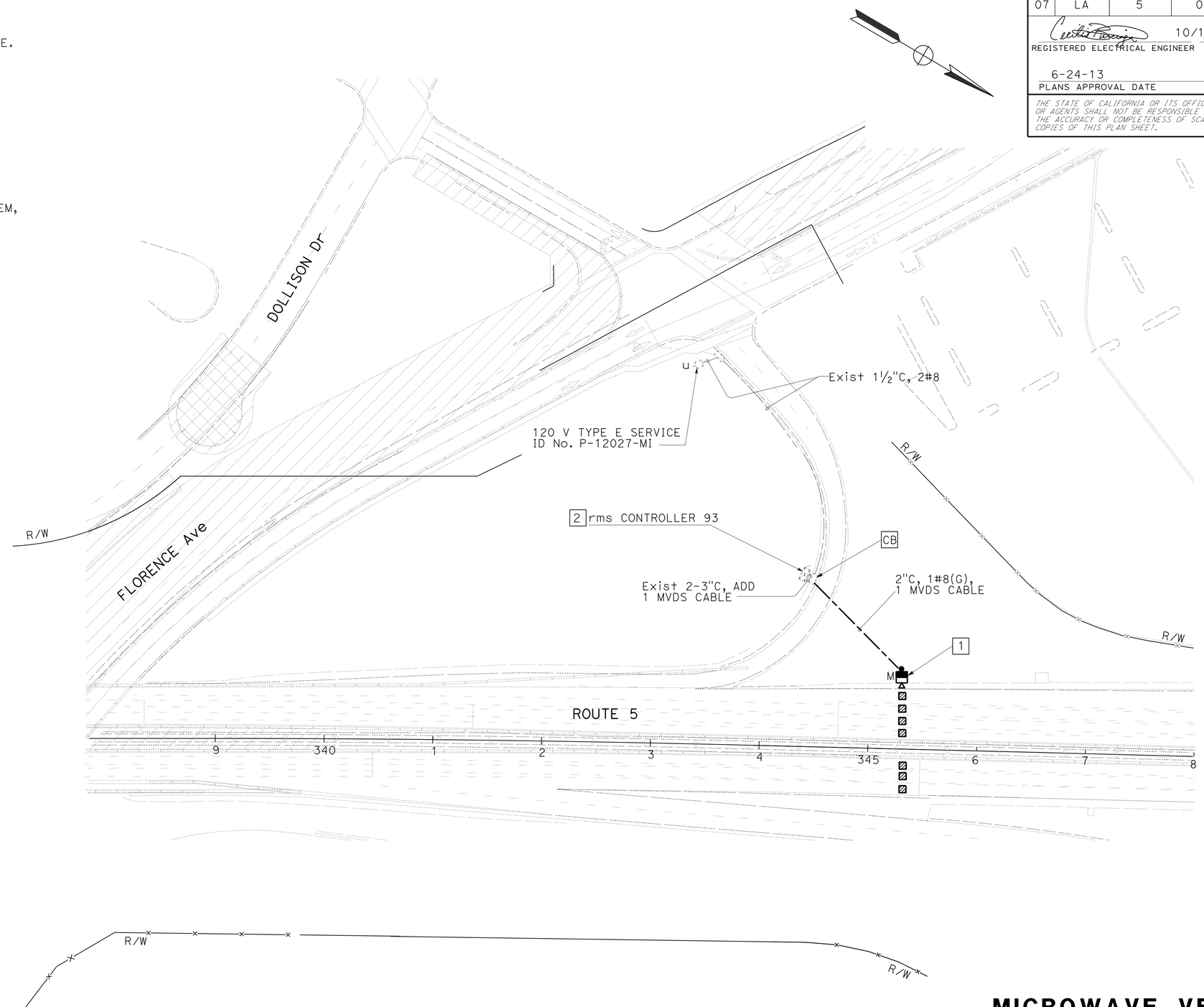

STAGE 1 PHASE 2

MICROWAVE VEHICLE DETECTION SYSTEM (TEMPORARY)

SCALE: 1" = 50'

E-33

APPROVED FOR ELECTRICAL WORK ONLY

STATE OF CALIFORNIA - DEPARTMENT OF TRANSPORTATION
Caltrans® TRAFFIC DESIGN

FUNCTIONAL SUPERVISOR: YI TSAU
CALCULATED-DESIGNED BY: QUINCIE TRAN
CHECKED BY: CECILIO BURCIAGA
REVISED BY / DATE REVISED

LAST REVISION 10-31-12 | DATE PLOTTED => 26-JUN-2013 | TIME PLOTTED => 19:55

Dist	COUNTY	ROUTE	POST MILES TOTAL PROJECT	SHEET No.	TOTAL SHEETS
07	LA	5	0.0/7.6	502	985

REGISTERED ELECTRICAL ENGINEER 10/18/12 DATE

6-24-13
PLANS APPROVAL DATE

REGISTERED PROFESSIONAL ENGINEER C. BURCIAGA No. E015302 Exp. 3/31/15 ELECT STATE OF CALIFORNIA

THE STATE OF CALIFORNIA OR ITS OFFICERS OR AGENTS SHALL NOT BE RESPONSIBLE FOR THE ACCURACY OR COMPLETENESS OF SCANNED COPIES OF THIS PLAN SHEET.

NOTES: (THIS SHEET)

1. FOR ACCURATE RIGHT OF WAY DATA, CONTACT RIGHT OF WAY ENGINEERING AT THE DISTRICT OFFICE.
2. PRIOR TO THE START OF ANY CONSTRUCTION OF RAMP METERING ELEMENTS, THE CONTRACTOR MUST INFORM RAMP METERING BRANCH AT LEAST 2 WEEKS IN ADVANCE TO ENSURE THE PRE-MARKED LOCATIONS OF STOP BARS, CABINETS, METER ON SIGNS, AND LOOPS ARE CORRECT.
3. RS †ms CONTROLLER.

LEGEND: (THIS SHEET)

1 INSTALL WOOD POLE WITH 1"C RISER, 2#8, 1#8 (G). SEE SES-1 THRU SES-5 FOR DETAILS.

2 FOR REFERENCE ONLY, SEE SHEET E-5 FOR INSTALLATION.

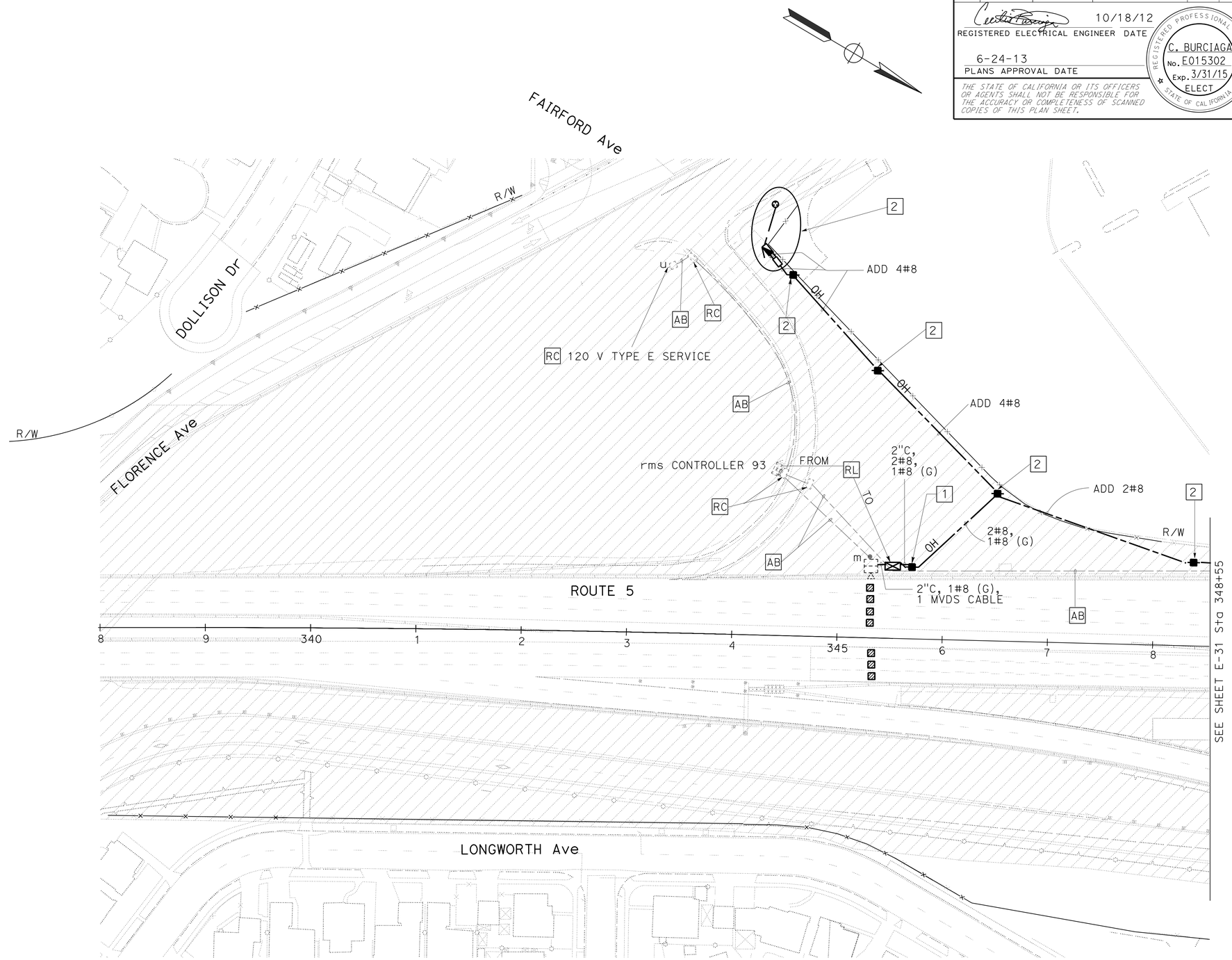

MICROWAVE VEHICLE DETECTION SYSTEM (TEMPORARY)

(STAGE 2 PHASE 2)

APPROVED FOR ELECTRICAL WORK ONLY

SCALE: 1" = 50'

E-34

STATE OF CALIFORNIA - DEPARTMENT OF TRANSPORTATION
Caltrans® TRAFFIC DESIGN

FUNCTIONAL SUPERVISOR: YI TSAU
CALCULATED-DESIGNED BY: QUINCIE TRAN
CHECKED BY: CECILIO BURCIAGA
REVISED BY
DATE REVISED

LAST REVISION 03-07-13
DATE PLOTTED => 26-JUN-2013
TIME PLOTTED => 19:55

Dist	COUNTY	ROUTE	POST MILES TOTAL PROJECT	SHEET No.	TOTAL SHEETS
07	LA	5	0.0/7.6	503	985

REGISTERED ELECTRICAL ENGINEER 10/18/12 DATE

6-24-13
PLANS APPROVAL DATE

REGISTERED PROFESSIONAL ENGINEER C. BURCIAGA No. E015302 Exp. 3/31/15 ELECT STATE OF CALIFORNIA

THE STATE OF CALIFORNIA OR ITS OFFICERS OR AGENTS SHALL NOT BE RESPONSIBLE FOR THE ACCURACY OR COMPLETENESS OF SCANNED COPIES OF THIS PLAN SHEET.

NOTE: (THIS SHEET)

1. FOR ACCURATE RIGHT OF WAY DATA, CONTACT RIGHT OF WAY ENGINEERING AT THE DISTRICT OFFICE.

LEGEND: (THIS SHEET)

1. INSTALL 3"C RISER.
2. INSTALL 3"C, 14 DLC, 1#8 (G).
3. INSTALL 120/240 V METERED TYPE III-BF SERVICE EQUIPMENT ENCLOSURE WITH:
   100 A, 240 V, 2P, CB-MAIN
   20 A, 120 V, 1P, CB-TMS
   CTID No. 07-53-0050-006.093
   11218 1/2 ORR AND DAY Rd, NORWALK
4. INSTALL MODEL 2070 CONTROLLER ASSEMBLY IN MODEL 334 CONTROLLER CABINET. INSTALL ADVANCED WIRELESS DATA SERVICE SYSTEM, SEE SHEET E-62 FOR DETAILS.
5. INSTALL 3"C, MT, SCE WILL INSTALL CONDUCTORS.
6. INSTALL 2-3"C, 14 DLC, 1#8 (G).

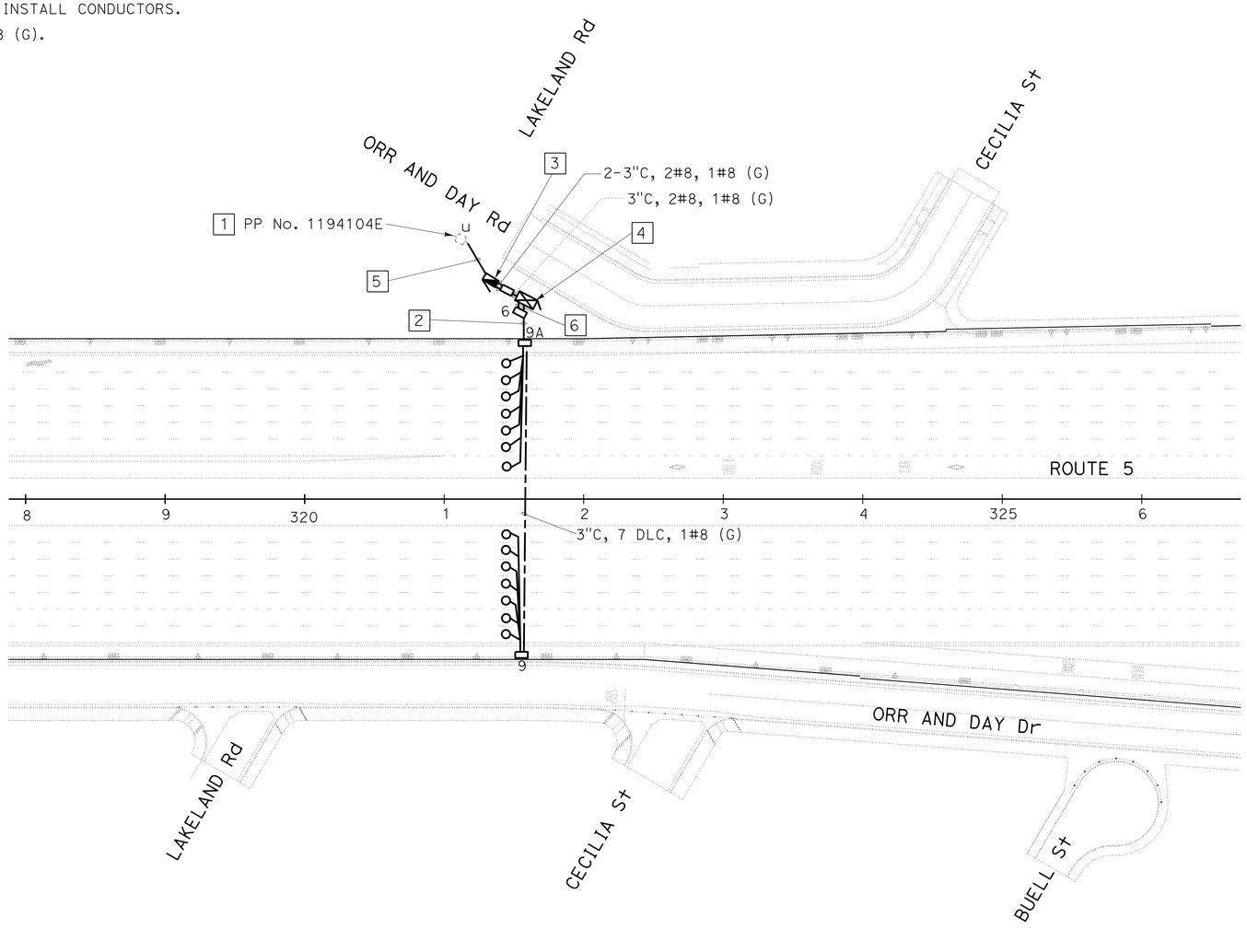

MODIFY TRAFFIC MONITORING STATION

SCALE: 1" = 50'

E-35

APPROVED FOR ELECTRICAL WORK ONLY

STATE OF CALIFORNIA - DEPARTMENT OF TRANSPORTATION
Caltrans® **TRAFFIC DESIGN**

FUNCTIONAL SUPERVISOR: YI TSAU
CALCULATED-DESIGNED BY: QUINCIE TRAN
CHECKED BY: CECILIO BURCIAGA
REVISED BY / DATE REVISED

LAST REVISION 10-31-12 | DATE PLOTTED => 26-JUN-2013 | TIME PLOTTED => 19:56

BORDER LAST REVISED 7/2/2010 | USERNAME => s117606 | DGN FILE => 721595ua035.dgn | RELATIVE BORDER SCALE IS IN INCHES 0 1 2 3 | UNIT 1880 | PROJECT NUMBER & PHASE 07000018351

Dist	COUNTY	ROUTE	POST MILES TOTAL PROJECT	SHEET No.	TOTAL SHEETS
07	LA	5	0.0/7.6	504	985

REGISTERED ELECTRICAL ENGINEER 10/18/12 DATE

6-24-13
PLANS APPROVAL DATE

REGISTERED PROFESSIONAL ENGINEER
C. BURCIAGA
No. E015302
Exp. 3/31/15
ELECT
STATE OF CALIFORNIA

THE STATE OF CALIFORNIA OR ITS OFFICERS OR AGENTS SHALL NOT BE RESPONSIBLE FOR THE ACCURACY OR COMPLETENESS OF SCANNED COPIES OF THIS PLAN SHEET.

NOTE: (THIS SHEET)

1. FOR ACCURATE RIGHT OF WAY DATA, CONTACT RIGHT OF WAY ENGINEERING AT THE DISTRICT OFFICE.

LEGEND: (THIS SHEET)

[1] INSTALL 2"C IN CONCRETE BARRIER, 2#12 DLC, 1#8 (G).

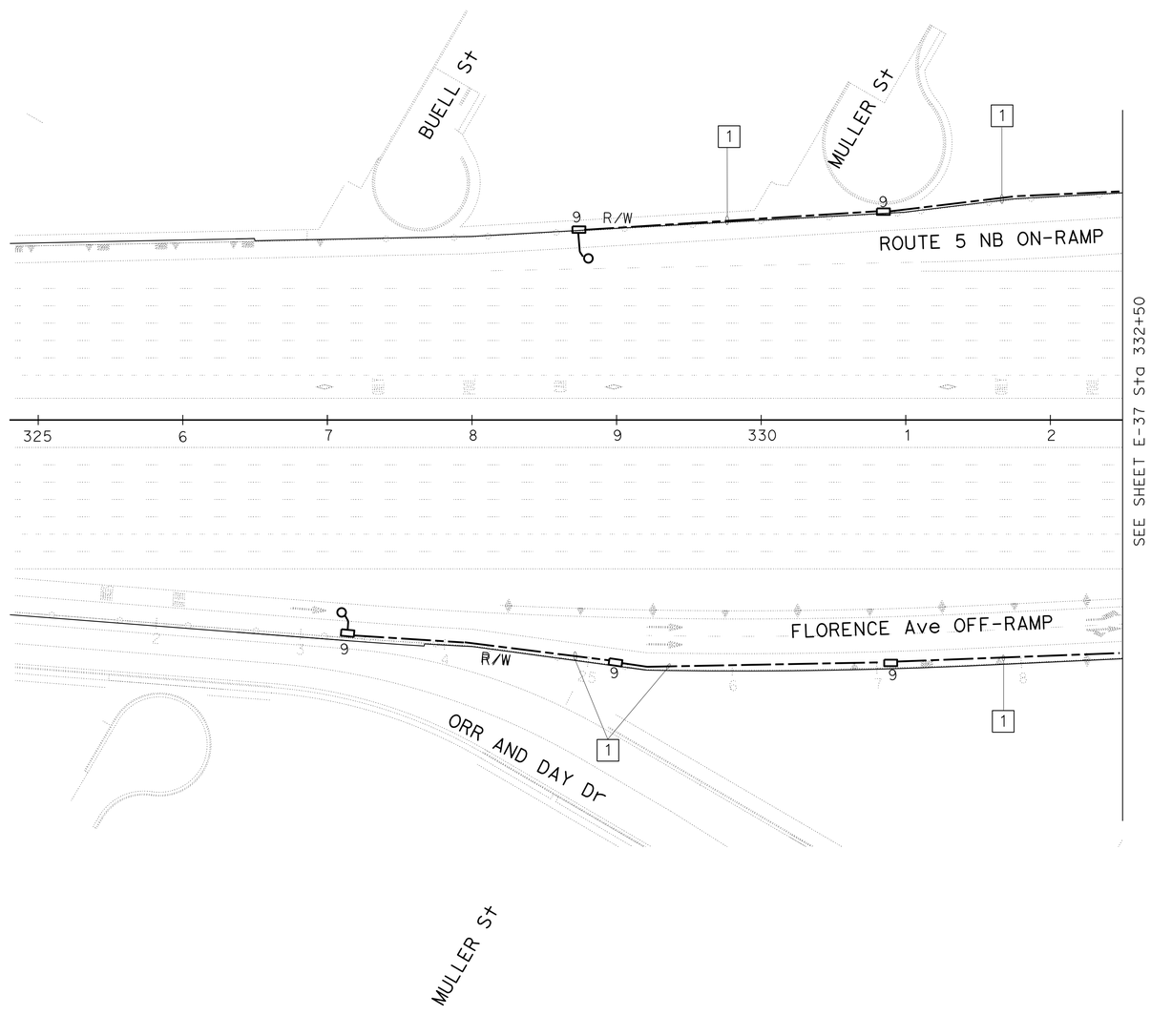

MODIFY RAMP METERING SYSTEM

SCALE: 1" = 50'

APPROVED FOR ELECTRICAL WORK ONLY

E-36

REVISED BY | DATE REVISED
QUINCIE TRAN | CECILIO BURCIAGA
CALCULATED-DESIGNED BY | CHECKED BY
FUNCTIONAL SUPERVISOR | YI TSAU
STATE OF CALIFORNIA - DEPARTMENT OF TRANSPORTATION
Caltrans® TRAFFIC DESIGN

LAST REVISION 10-31-12 | DATE PLOTTED => 26-JUN-2013 | TIME PLOTTED => 19:56

Dist	COUNTY	ROUTE	POST MILES TOTAL PROJECT	SHEET No.	TOTAL SHEETS
07	LA	5	0.0/7.6	505	985

REGISTERED ELECTRICAL ENGINEER 10/18/12 DATE

6-24-13
PLANS APPROVAL DATE

REGISTERED PROFESSIONAL ENGINEER C. BURCIAGA No. E015302 Exp. 3/31/15 ELECT STATE OF CALIFORNIA

THE STATE OF CALIFORNIA OR ITS OFFICERS OR AGENTS SHALL NOT BE RESPONSIBLE FOR THE ACCURACY OR COMPLETENESS OF SCANNED COPIES OF THIS PLAN SHEET.

NOTES: (THIS SHEET)

1. FOR ACCURATE RIGHT OF WAY DATA, CONTACT RIGHT OF WAY ENGINEERING AT THE DISTRICT OFFICE.
2. SEE SHEET E-60 FOR RMS DETAILS.
3. FOR LEGEND, SEE SHEET E-11.

LEGEND: (THIS SHEET)

1. INSTALL STATE-FURNISHED MODEL 2070 CONTROLLER ASSEMBLY IN MODEL 334 CONTROLLER CABINET. INSTALL LONG LEAD-IN CABLE LOOP DETECTOR SENSOR UNIT. INSTALL ADVANCED WIRELESS DATA SERVICE SYSTEM, SEE SHEET E-62 FOR DETAILS. RMS CONTROLLER 276.
2. INSTALL 2-3"C, 2#8, 21 DLC, 2#12 DLC, 9CSC, 5CSC, 1#8 (G).
3. INSTALL 3"C, 9CSC, 16 DLC, 1#8 (G).
4. INSTALL 3"C IN CONCRETE BARRIER, 9CSC, 18 DLC, 2#12 DLC, 1#8 (G).
5. INSTALL 3"C, 9CSC, 18 DLC, 2#12 DLC, 1#8 (G).
6. INSTALL 2"C IN CONCRETE BARRIER, 2#12 DLC, 1#8 (G).
7. INSTALL 2"C, 2#12 DLC, 2#8, 1#8 (G).
8. INSTALL 2"C IN CONCRETE BARRIER, 5CSC, 2#12 DLC, 2 DLC, 2#8, 1#8 (G).
9. INSTALL 2-3"C, 2#8, 5CSC, 2#12 DLC, 9CSC, 15 DLC, 1#8 (G).
10. INSTALL 3"C IN CONCRETE BARRIER, 9CSC, 13 DLC, 1#8 (G).
11. FOR REFERENCE ONLY, SEE SHEET E-11 FOR INSTALLATION.
12. INSTALL 7' TYPE 1-A POLE ON CONCRETE BARRIER, SEE SHEET E-60 FOR DETAILS.

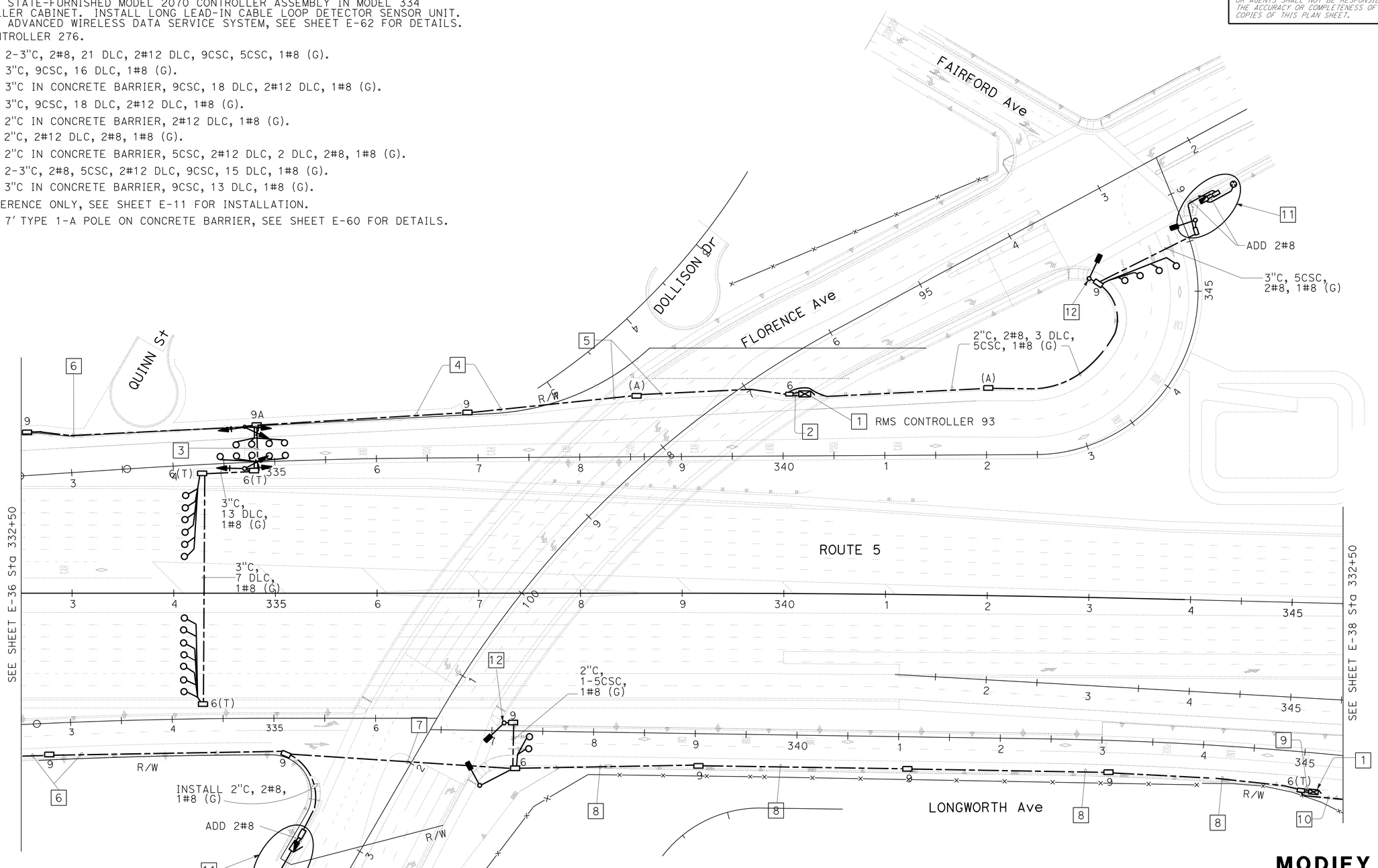

MODIFY RAMP METERING SYTEM

SCALE: 1" = 50'

E-37

APPROVED FOR ELECTRICAL WORK ONLY

STATE OF CALIFORNIA - DEPARTMENT OF TRANSPORTATION
Caltrans® TRAFFIC DESIGN

FUNCTIONAL SUPERVISOR: YI TSAU
CALCULATED-DESIGNED BY: QUINCIE TRAN
CHECKED BY: CECILIO BURCIAGA
REVISED BY
DATE REVISED

LAST REVISION 10-31-12
DATE PLOTTED => 26-JUN-2013
TIME PLOTTED => 19:56

Dist	COUNTY	ROUTE	POST MILES TOTAL PROJECT	SHEET No.	TOTAL SHEETS
07	LA	5	0.0/7.6	506	985

REGISTERED ELECTRICAL ENGINEER 10/18/12 DATE

6-24-13
PLANS APPROVAL DATE

REGISTERED PROFESSIONAL ENGINEER
C. BURCIAGA
No. E015302
Exp. 3/31/15
ELECT
STATE OF CALIFORNIA

THE STATE OF CALIFORNIA OR ITS OFFICERS OR AGENTS SHALL NOT BE RESPONSIBLE FOR THE ACCURACY OR COMPLETENESS OF SCANNED COPIES OF THIS PLAN SHEET.

NOTES: (THIS SHEET)

1. FOR ACCURATE RIGHT OF WAY DATA, CONTACT RIGHT OF WAY ENGINEERING AT THE DISTRICT OFFICE.
2. SEE SHEET E-60 FOR RMS DETAILS.
3. FOR LEGEND, SEE SHEET E-11.

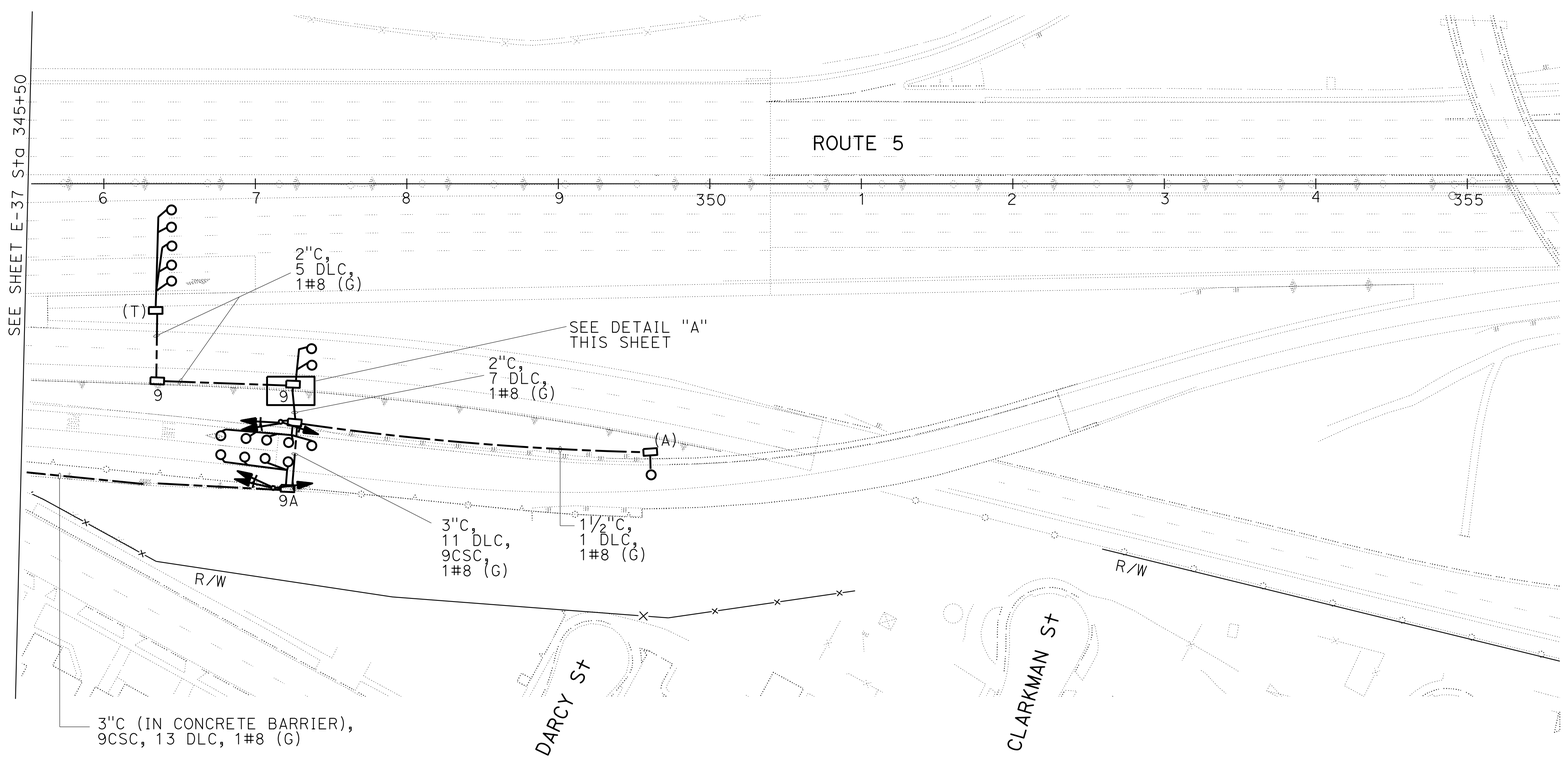

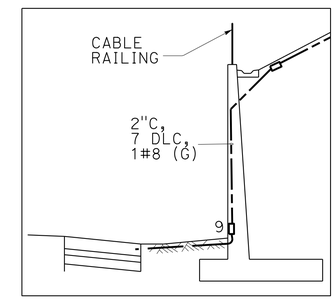

DETAIL "A"
NO SCALE

MODIFY RAMP METERING SYSTEM

SCALE: 1" = 50'

E-38

APPROVED FOR ELECTRICAL WORK ONLY

STATE OF CALIFORNIA - DEPARTMENT OF TRANSPORTATION
Caltrans® TRAFFIC DESIGN

FUNCTIONAL SUPERVISOR: YI TSAU
CALCULATED-DESIGNED BY: QUINCIE TRAN
CHECKED BY: CECILIO BURCIAGA
REVISED BY
DATE REVISED

LAST REVISION 02-20-13
DATE PLOTTED => 26-JUN-2013
TIME PLOTTED => 19:56

Dist	COUNTY	ROUTE	POST MILES TOTAL PROJECT	SHEET No.	TOTAL SHEETS
07	LA	5	0.0/7.6	507	985

REGISTERED ELECTRICAL ENGINEER 10/18/12 DATE

6-24-13
PLANS APPROVAL DATE

REGISTERED PROFESSIONAL ENGINEER C. BURCIAGA No. E015302 Exp. 3/31/15 ELECT STATE OF CALIFORNIA

THE STATE OF CALIFORNIA OR ITS OFFICERS OR AGENTS SHALL NOT BE RESPONSIBLE FOR THE ACCURACY OR COMPLETENESS OF SCANNED COPIES OF THIS PLAN SHEET.

NOTES: (THIS SHEET)

1. FOR ACCURATE RIGHT OF WAY DATA, CONTACT RIGHT OF WAY ENGINEERING AT THE DISTRICT OFFICE.
2. SEE SHEET E-60 FOR RMS DETAILS.
3. FOR LEGEND, SEE SHEET E-11.

LEGEND: (THIS SHEET)

1. INSTALL MODEL 2070 CONTROLLER ASSEMBLY IN MODEL 334 CONTROLLER CABINET.
   INSTALL LONG LEAD-IN CABLE LOOP DETECTOR SENSOR UNIT.
   INSTALL ADVANCED WIRELESS DATA SERVICE SYSTEM,
   SEE SHEET E-62 FOR DETAILS.
   TMS CONTROLLER 2296
2. INSTALL 2"C, 5 DLC, 1#8 (G).
3. INSTALL 2-3"C, 6 DLC, 2#6, 1#8 (G).
4. INSTALL 2"C, 2#6, 1#8 (G).
5. INSTALL 2"C, 2#8, 2#6, 1#8 (G).
6. FOR REFERENCE ONLY, SEE SHEETS E-11 & E-12 FOR INSTALLATION.
7. 1"C, 2#12 (Irrigation)
8. 120/240 V METERED TYPE III-BF SERVICE EQUIPMENT ENCLOSURE WITH TYPE V PEC (SCE):
   2-100 A, 240 V, 2P, CB-MAIN
   1-60 A, 240 V, 2P, CB-ltg
   2-50 A, 240 V, 2P, CB-ltg
   1-40 A, 240 V, 2P, CB-sign ltg
   2-15 A, 120 V, 1P, CB-peu
   1-20 A, 120 V, 1P, CB-irrigation
   1-30 A, 240 A, 2P, CB-LTG
   ADD 2-20 A, 120 V, 1P, CB-TMS
   ctid No. 07-53-0050-006.410
   ctid No. 07-53-0050-006.412
   11210 CLARKMAN St, SANTA FE SPRINGS

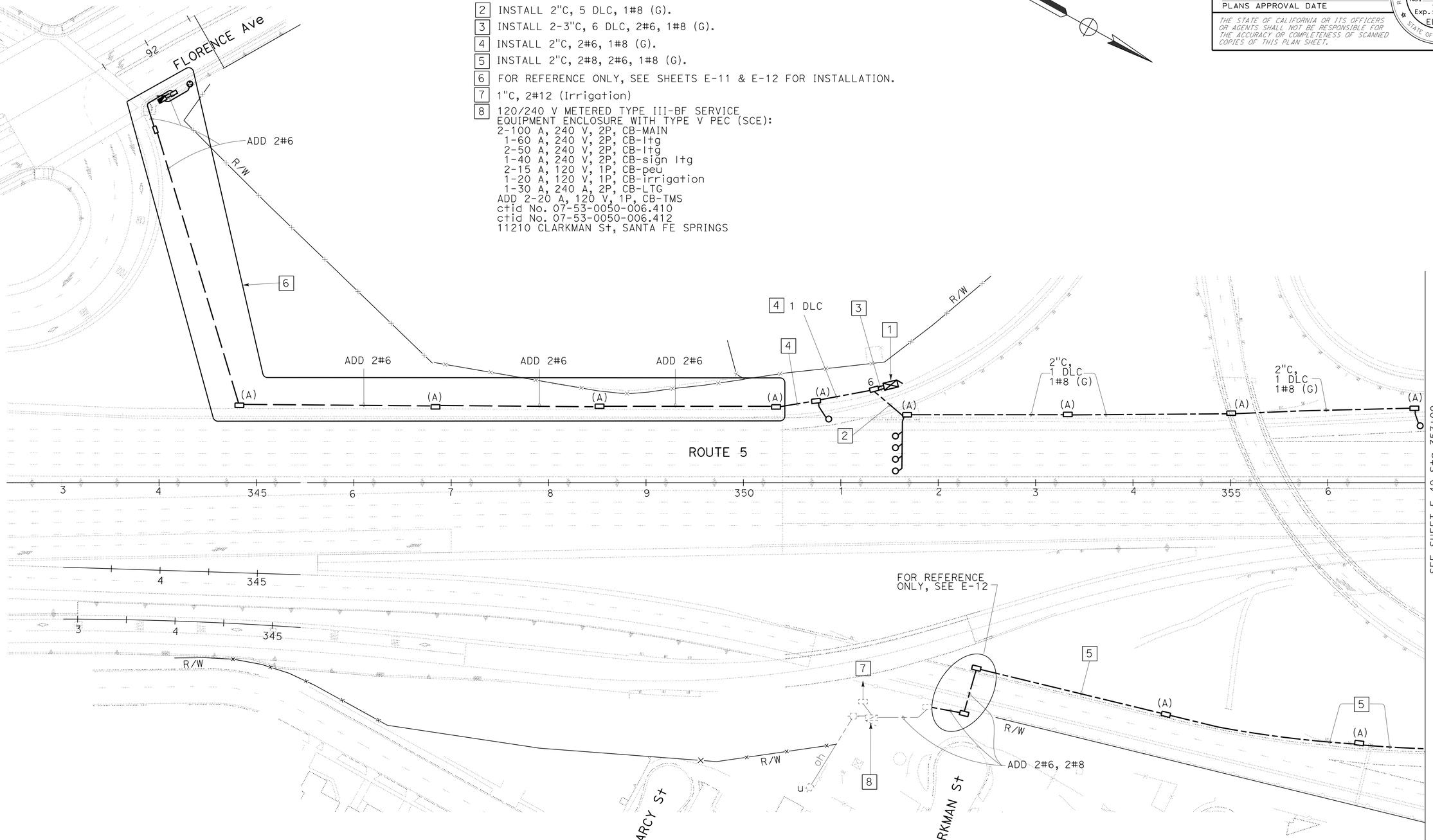

MODIFY TRAFFIC MONITORING STATION

SCALE: 1" = 50'

APPROVED FOR ELECTRICAL WORK ONLY

E-39

STATE OF CALIFORNIA - DEPARTMENT OF TRANSPORTATION
Caltrans® TRAFFIC DESIGN

FUNCTIONAL SUPERVISOR: YI TSAU
CALCULATED-DESIGNED BY: QUINCIE TRAN
CHECKED BY: CECILIO BURCIAGA
REVISED BY / DATE REVISED

LAST REVISION 10-31-12 | DATE PLOTTED => 26-JUN-2013 | TIME PLOTTED => 19:56

Dist	COUNTY	ROUTE	POST MILES TOTAL PROJECT	SHEET No.	TOTAL SHEETS
07	LA	5	0.0/7.6	508	985

REGISTERED ELECTRICAL ENGINEER 10/18/12 DATE

6-24-13
PLANS APPROVAL DATE

REGISTERED PROFESSIONAL ENGINEER
C. BURCIAGA
No. E015302
Exp. 3/31/15
ELECT
STATE OF CALIFORNIA

THE STATE OF CALIFORNIA OR ITS OFFICERS OR AGENTS SHALL NOT BE RESPONSIBLE FOR THE ACCURACY OR COMPLETENESS OF SCANNED COPIES OF THIS PLAN SHEET.

NOTES: (THIS SHEET)

1. FOR ACCURATE RIGHT OF WAY DATA, CONTACT RIGHT OF WAY ENGINEERING AT THE DISTRICT OFFICE.
2. FOR LEGEND, SEE SHEET E-11.

LEGEND: (THIS SHEET)

1. INSTALL MODEL 2070 CONTROLLER ASSEMBLY IN MODEL 334 CONTROLLER CABINET. INSTALL ADVANCED WIRELESS DATA SERVICE SYSTEM, SEE SHEET E-62 FOR DETAILS.
2. INSTALL 2"C, 2#6, 2#8, 1#8 (G).
3. INSTALL 3"C, 5 DLC, 1#8 (G).
4. INSTALL 2"C, 1 DLC, 2#6, 1#8 (G).
5. INSTALL 2"C, 2#6, 1#8 (G).
6. INSTALL 2"C, 2#8, 1#8 (G).
7. INSTALL 2-3"C, 2#6, 11 DLC, 1#8 (G).
8. INSTALL 2-2"C, 3 DLC, 2#8, 1#8 (G).

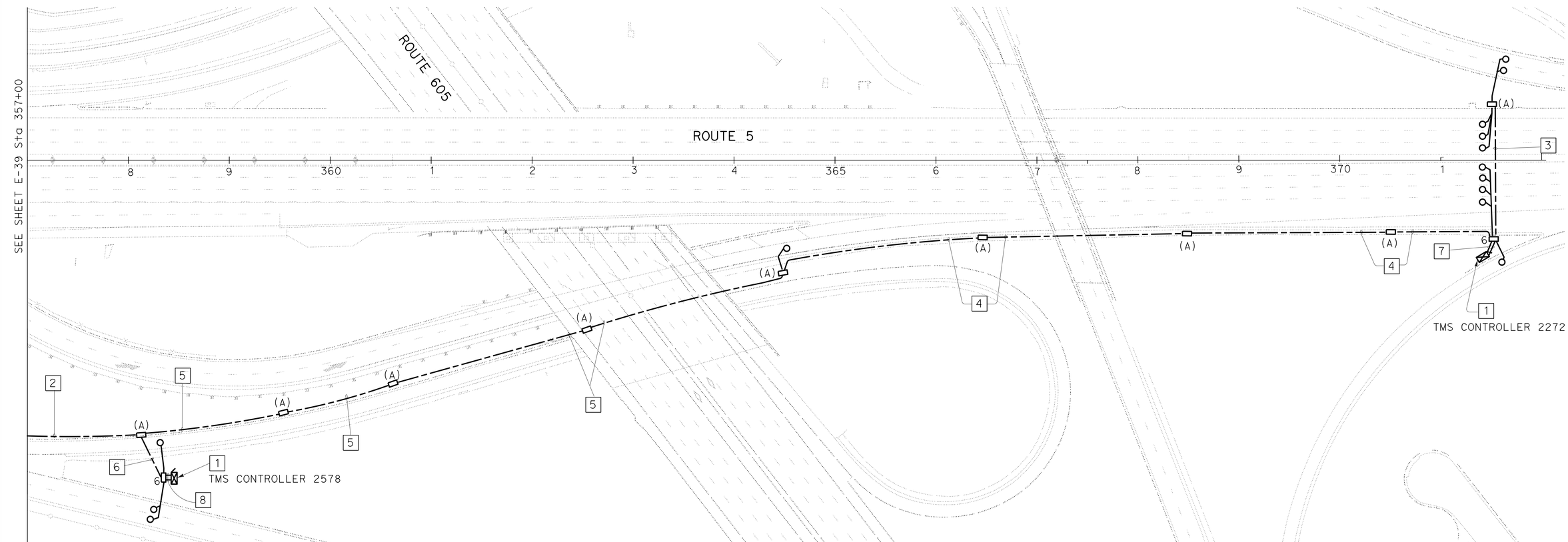

MODIFY TRAFFIC MONITORING STATION

SCALE: 1" = 50'

E-40

APPROVED FOR ELECTRICAL WORK ONLY

STATE OF CALIFORNIA - DEPARTMENT OF TRANSPORTATION
Caltrans® TRAFFIC DESIGN

FUNCTIONAL SUPERVISOR: YI TSAU
CALCULATED-DESIGNED BY: CECILIO BURCIAGA
CHECKED BY: QUINCIE TRAN
REVISED BY
DATE REVISED

LAST REVISION 10-31-12
DATE PLOTTED => 26-JUN-2013
TIME PLOTTED => 19:56

Dist	COUNTY	ROUTE	POST MILES TOTAL PROJECT	SHEET No.	TOTAL SHEETS
07	LA	5	0.0/7.6	509	985

REGISTERED ELECTRICAL ENGINEER 10/18/12 DATE

6-24-13
PLANS APPROVAL DATE

REGISTERED PROFESSIONAL ENGINEER C. BURCIAGA No. E015302 Exp. 3/31/15 ELECT STATE OF CALIFORNIA

THE STATE OF CALIFORNIA OR ITS OFFICERS OR AGENTS SHALL NOT BE RESPONSIBLE FOR THE ACCURACY OR COMPLETENESS OF SCANNED COPIES OF THIS PLAN SHEET.

NOTES: (THIS SHEET)

1. FOR ACCURATE RIGHT OF WAY DATA, CONTACT RIGHT OF WAY ENGINEERING AT THE DISTRICT OFFICE.
2. FOR LEGEND, SEE SHEET E-11.

LEGEND: (THIS SHEET)

1. FOR REFERENCE ONLY, SEE SHEETS E-44, E-49, E-53, E-54 FOR INSTALLATION.
2. INSTALL 2"C, 6P#19 SIC (TEMPORARY).
3. SEE E-57 FOR LOCATION OF CONTROLLER CABINET AND PULL BOX.
4. INSTALL 2"C, 3-6P#19 SIC.
5. INSTALL 2"C, 2-6P#19 SIC.
6. TO BE REMOVED AFTER TEMPORARY SIGNAL SYSTEM (CITY STREET LOCATION 4) IS NO LONGER NEEDED, OR AS DIRECTED BY THE ENGINEER.
7. SET PULL BOX FLUSH IN SIDEWALK.

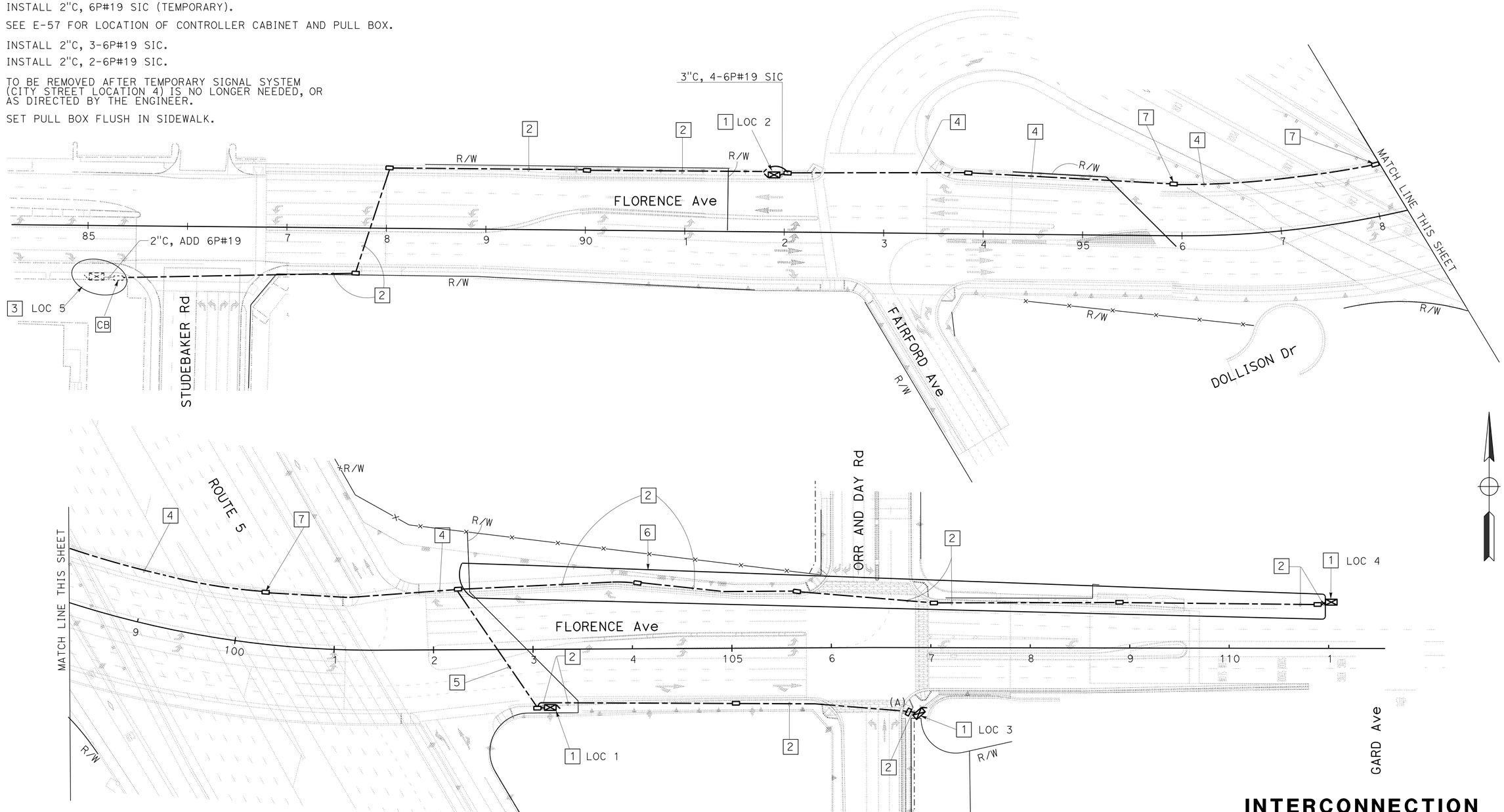

INTERCONNECTION CONDUIT AND CABLE

SCALE: 1" = 50'

APPROVED FOR ELECTRICAL WORK ONLY

E-41

STATE OF CALIFORNIA - DEPARTMENT OF TRANSPORTATION
Caltrans TRAFFIC DESIGN

FUNCTIONAL SUPERVISOR: YI TSAU
CALCULATED-DESIGNED BY: QUINCIE TRAN
CHECKED BY: CECILIO BURCIAGA
REVISED BY / DATE REVISED

LAST REVISION 10-31-12
DATE PLOTTED => 26-JUN-2013
TIME PLOTTED => 19:56

Dist	COUNTY	ROUTE	POST MILES TOTAL PROJECT	SHEET No.	TOTAL SHEETS
07	LA	5	0.0/7.6	510	985

REGISTERED ELECTRICAL ENGINEER 10/18/12 DATE

6-24-13
PLANS APPROVAL DATE

REGISTERED PROFESSIONAL ENGINEER C. BURCIAGA No. E015302 Exp. 3/31/15 ELECT STATE OF CALIFORNIA

THE STATE OF CALIFORNIA OR ITS OFFICERS OR AGENTS SHALL NOT BE RESPONSIBLE FOR THE ACCURACY OR COMPLETENESS OF SCANNED COPIES OF THIS PLAN SHEET.

INDUCTIVE LOOP DETECTOR SCHEDULE (ROUTE 5)

PM	LOCATION	(TYPE OF : CONTROLLER) (SYSTEM : NUMBER)	STATION	SEE DETAIL "A" THIS SHEET FOR TYPICAL LOCATION OF LOOP DETECTORS													No. OF STUBOUTS
				1	2	3	4	5	6	7	8	9	10	11	12	13	
1.62	JUST SOUTH OF ALONDRA Blvd	(TMS:0254)	85+75			X	X	X	X	X	X	X	X	X	X		2
2.06	SOUTH OF CARMENITA Ave	(TMS:2028)	109+00		X	X	X	X	X	X	X	X	X	X	X	X	2
2.86	NORTH OF CARMENITA Ave	(TMS:2546)	151+00		X	X	X	X	X	X	X	X	X	X	X	X	2
3.27	SB ON FROM ROSECRANS Ave	(RMS:0252)	172+50		X	X	X	X	X	X							1
3.66	NB ON FROM ROSECRANS Ave	(RMS:0251)	193+50								X	X	X	X	X	X	1
3.94	JUST SOUTH OF SILVERBOW POC	(TMS:2027)	208+00		X	X	X	X	X	X	X	X	X	X	X	X	2
4.26	SOUTH OF NORWALK Blvd	(RMS:0090)	225+00		X	X	X	X	X	X	X	X	X	X	X	X	2
4.68	NORTH OF NORWALK Blvd	(TMS:2580)	247+20		X	X	X	X	X	X	X	X	X	X	X	X	2
5.07	BETWEEN IMPERIAL Hwy & PIONEER Blvd	(RMS:0274)	267+80		X	X	X	X	X	X	X	X	X	X	X	X	2
5.57	NORTH OF PIONEER Blvd	(TMS:2026)	294+25		X	X	X	X	X	X	X	X	X	X	X	X	2

X - INSTALL TYPE E INDUCTIVE LOOP DETECTOR. (ABANDON EXISTING LOOPS AT SAME LOCATION WHERE APPLICABLE)

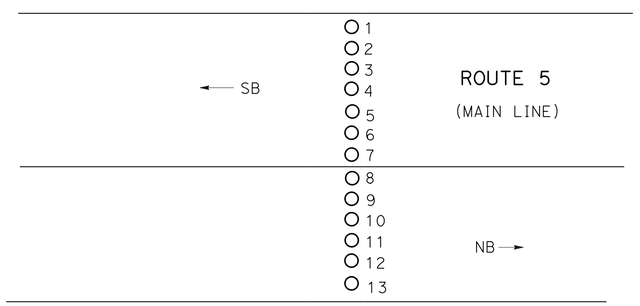

DETAIL "A"

DETAIL FOR TYPICAL LOOP DETECTOR INSTALLATION ON FREEWAY

NOTES:

1. NEW STUB OUTS SHALL BE 2". ABANDON EXISTING STUB OUTS.
2. PRIOR TO CONSTRUCTION, LOCATE EXISTING INDUCTIVE LOOP DETECTORS.
3. SPLICE NEW INDUCTIVE LOOP DETECTOR WITH EXISTING dlc IN ADJACENT PULL BOX.
4. TAG EXISTING dlc IN ADJACENT PULL BOX AND AT CONTROLLER CABINET.

INDUCTIVE LOOP DETECTOR

NO SCALE

E-42

STATE OF CALIFORNIA - DEPARTMENT OF TRANSPORTATION
Caltrans® TRAFFIC DESIGN

FUNCTIONAL SUPERVISOR: YI TSAU
CALCULATED-DESIGNED BY: QUINCIE TRAN
CHECKED BY: CECILIO BURCIAGA
REVISED BY
DATE REVISED

LAST REVISION 10-31-12
DATE PLOTTED => 26-JUN-2013
TIME PLOTTED => 19:56

Dist	COUNTY	ROUTE	POST MILES TOTAL PROJECT	SHEET No.	TOTAL SHEETS
07	LA	5	0.0/7.6	511	985

REGISTERED ELECTRICAL ENGINEER 10/18/12 DATE

6-24-13
PLANS APPROVAL DATE

REGISTERED PROFESSIONAL ENGINEER C. BURCIAGA No. E015302 Exp. 3/31/15 ELECT STATE OF CALIFORNIA

THE STATE OF CALIFORNIA OR ITS OFFICERS OR AGENTS SHALL NOT BE RESPONSIBLE FOR THE ACCURACY OR COMPLETENESS OF SCANNED COPIES OF THIS PLAN SHEET.

NOTES: (THIS SHEET)

1. FOR OTHER NOTES SEE E-44.
2. AT THE END OF THIS STAGE: RC TRAFFIC SIGNAL POLES F, G ,H, RC CONDUIT ON GROUND LEVEL, RR VIVDS.

LEGEND: (THIS SHEET)

1 COVER SIGNAL HEAD AND REMOVE COVER WHEN IS NO LONGER NEED.

2 TRAFFIC SIGNAL POLE AND ADJACENT PULL BOX, LOOP DETECTORS, CONTROLLER, SERVICE EQUIPMENT ENCLOSURE, AND CONDUIT FOR REFERENCE ONLY, SEE SHEET E-44 FOR INSTALLATION.

3 INSTALL 1½"C SCHEDULE 80 TYPE 3 CONDUIT AT GROUND LEVEL AGAINST K-RAIL.

POLE AND EQUIPMENT SCHEDULE

No.	STANDARD			VEH SIG MTG		PED SIGNAL	APS		LED LUMINAIRE	OTHERS
	Type	SMA	LMA	Mast Arm	Pole	MTG	Ø	ARROW		
A	29A-5-100	50′	12′	MAS	SV-1-T	SP-1-T	-	-	235 W	VIVDS
B	1-A	-	-	-	TV-1-T	-	2	→	-	-
C	21TS	-	12′	-	-	-	-	-	235 W	-
D	1-A (7′)	-	-	-	-	TP-1-T	2	←	-	-
E	1-A (7′)	-	-	-	TV-2-T	-	-	-	-	-
F	19-3-100*	15′	12′	MAS	SV-2-T	-	-	-	310 W (HPS)	VIVDS
G	1-A*	-	-	-	TV-1-T	-	-	-	-	-
H	1-A*	-	-	-	TV-3-T	-	-	-	-	-

* INSTALL TRAFFIC SIGNAL POLE ON STEEL PLATE WITH CONCRETE BLOCKS. (SEE SES-13 THRU SES-15 FOR DETAILS)

APS - ACCESSIBLE PEDESTRIAN SIGNAL

CONDUIT AND CONDUCTOR SCHEDULE

CONDUCTOR	CONDUCTOR RUN	△1	△2	△3	△4	△5	△6	△7
28CSC	C1	1	1	1	1	1	1	1
	C2	1	1	1	1	1		1
#10	LUMINAIRE		2	2	2		2	2
#8	EGC	1	1	1	1	1	1	1
#6	SIGNAL SERVICE	2						
VIVDS CABLE		2	1				1	1
CONDUIT		2-3"	4"	4"	3"	3"	1½"	2"

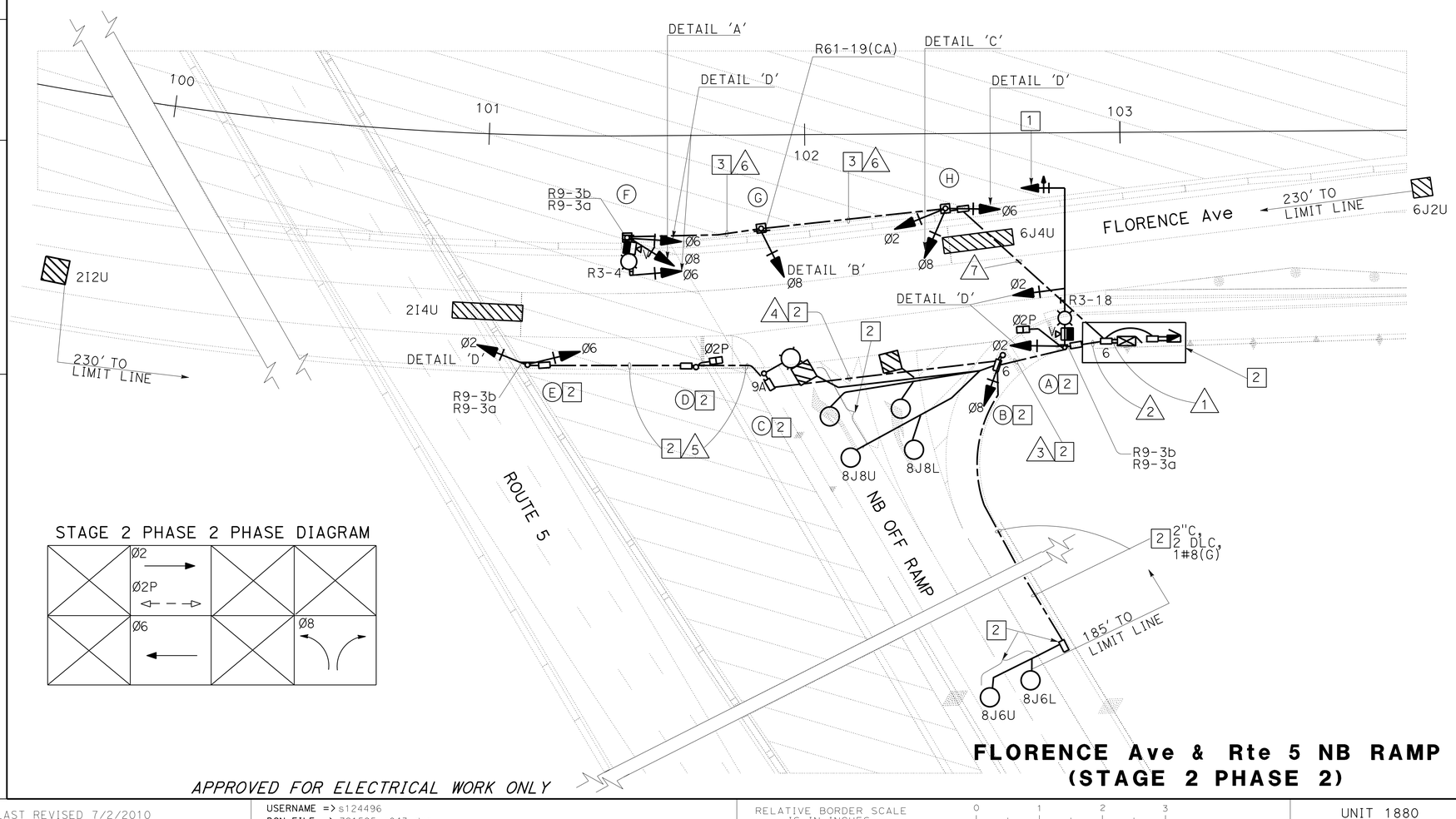

STAGE 2 PHASE 2 PHASE DIAGRAM

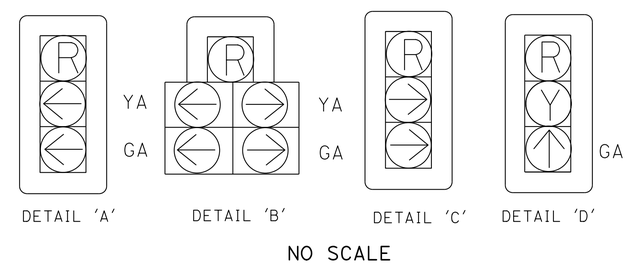

FLORENCE Ave & Rte 5 NB RAMP (STAGE 2 PHASE 2)

SIGNAL AND LIGHTING (LOCATION 1)

SCALE: 1" = 20′

E-43

APPROVED FOR ELECTRICAL WORK ONLY

STATE OF CALIFORNIA - DEPARTMENT OF TRANSPORTATION
Caltrans TRAFFIC DESIGN

FUNCTIONAL SUPERVISOR: YI TSAU
CALCULATED-DESIGNED BY: CECILIO BURCIAGA
CHECKED BY: QUINCIE TRAN
REVISED BY / DATE REVISED

LAST REVISION 02-14-13 | DATE PLOTTED => 26-JUN-2013 | TIME PLOTTED => 19:32

Dist	COUNTY	ROUTE	POST MILES TOTAL PROJECT	SHEET No.	TOTAL SHEETS
07	LA	5	0.0/7.6	512	985

REGISTERED ELECTRICAL ENGINEER 10/18/12 DATE

6-24-13
PLANS APPROVAL DATE

REGISTERED PROFESSIONAL ENGINEER C. BURCIAGA No. E015302 Exp. 3/31/15 ELECT STATE OF CALIFORNIA

THE STATE OF CALIFORNIA OR ITS OFFICERS OR AGENTS SHALL NOT BE RESPONSIBLE FOR THE ACCURACY OR COMPLETENESS OF SCANNED COPIES OF THIS PLAN SHEET.

NOTES: (SHEETS E-43 TO E-57)

1. FOR ACCURATE RIGHT OF WAY DATA, CONTACT RIGHT OF WAY ENGINEERING AT THE DISTRICT OFFICE.
2. ALL PEDESTRIAN HEADS MUST BE AUDIBLE, AND COUNTDOWN TYPE. PEDESTRIAN PUSH BUTTON MUST MEET CURRENT ADA REQUIREMENTS.
3. LOOP DETECTORS IN THE STRUCTURE MUST BE PREFORMED.
4. FOR INSTALLATION OF BIKE LOOPS, SEE SHEET E-63.
5. FOR INSTALLATION OF VIVDS, SEE SES-6.

CONDUIT AND CONDUCTOR SCHEDULE

CONDUCTOR	CONDUCTOR RUN	1	2	3	4	5	6	7	8	9
28CSC	C1	1	1	1	1	1		1	1	1
	C2	1	1	1	1	1	1	1	1	1
#10	LUMINAIRE		2	2			2	2	2	2
	IISNS						2	2	2	2
#8	EGC	1	1	1	1	1	1	1	1	1
#6	SIGNAL SERVICE	2								
DLC	Ø2	6	6	6	6					
	Ø5	4	4	4	4					
	Ø6	8							4	8
	Ø8	4	4							
TOTAL		22	14	10	10				4	8
CONDUIT		2-3"	4"	3"	3"	3"	2"	3"	3"	3"

POLE AND EQUIPMENT SCHEDULE

No.	STANDARD Type	SMA	LMA	VEH SIG MTG Mast Arm	Pole	PED SIGNAL MTG	APS Ø	ARROW	LED LUMINAIRE	IISNS
A	29A-5-100	50'	12'	2-MAS	SV-1-T	SP-1-T	-	-	235 W	-
B	1-A	-	-	-	TV-1-T	-	2	→	-	-
C	21TS	-	12'	-	-	-	-	-	235 W	-
D	1-A (7')	-	-	-	-	TP-1-T	2	←	-	-
E	1-A (7')	-	-	-	TV-2-T	-	-	-	-	-
F	26A-4-100	40'	12'	2-MAS	SV-2-T	-	6	→	235 W	ROUTE 5 NB ON RAMP →
G	19A-3-100	25'	12'	MAS	SV-1-T	-	6	←	235 W	FLORENCE Ave
H	21TS	-	12'	-	SV-2-T	SP-1-T	-	-	235 W	-

APS - ACCESSIBLE PEDESTRIAN SIGNAL

GENERAL NOTES: (THIS SHEET)

1. SEE STAGING PLANS FOR INSTALLATION OF CONTROLLER CABINET, SERVICE CABINET AND OTHER PERTINENT EQUIPMENT FOR THIS TRAFFIC SIGNAL SYSTEM.
2. RC SIGNAL EQUIPMENT AND AB CONDUIT FROM STAGING PLANS THAT ARE NOT USED IN THIS FINAL SIGNAL PLAN, OR AS DIRECTED BY THE ENGINEER.

LEGEND: (THIS SHEET)

1. INSTALL STATE-FURNISHED MODEL 2070 CONTROLLER ASSEMBLY WITH MODEL 332 CABINET AND MODEL 170E CONTROLLER. INSTALL BBS. INSTALL TRAFFIC SIGNAL INTERCONNECT SYSTEM, SEE DETAIL H ON E-61. INSTALL WIRELESS DATA SERVICE AND GPS TIME BASE SYSTEMS, SEE E-62 FOR DETAILS.
2. FOR REFERENCE ONLY, SEE SHEET E-11 FOR INSTALLATION.
3. INSTALL 3"C, 3#2, 1#4 (G).

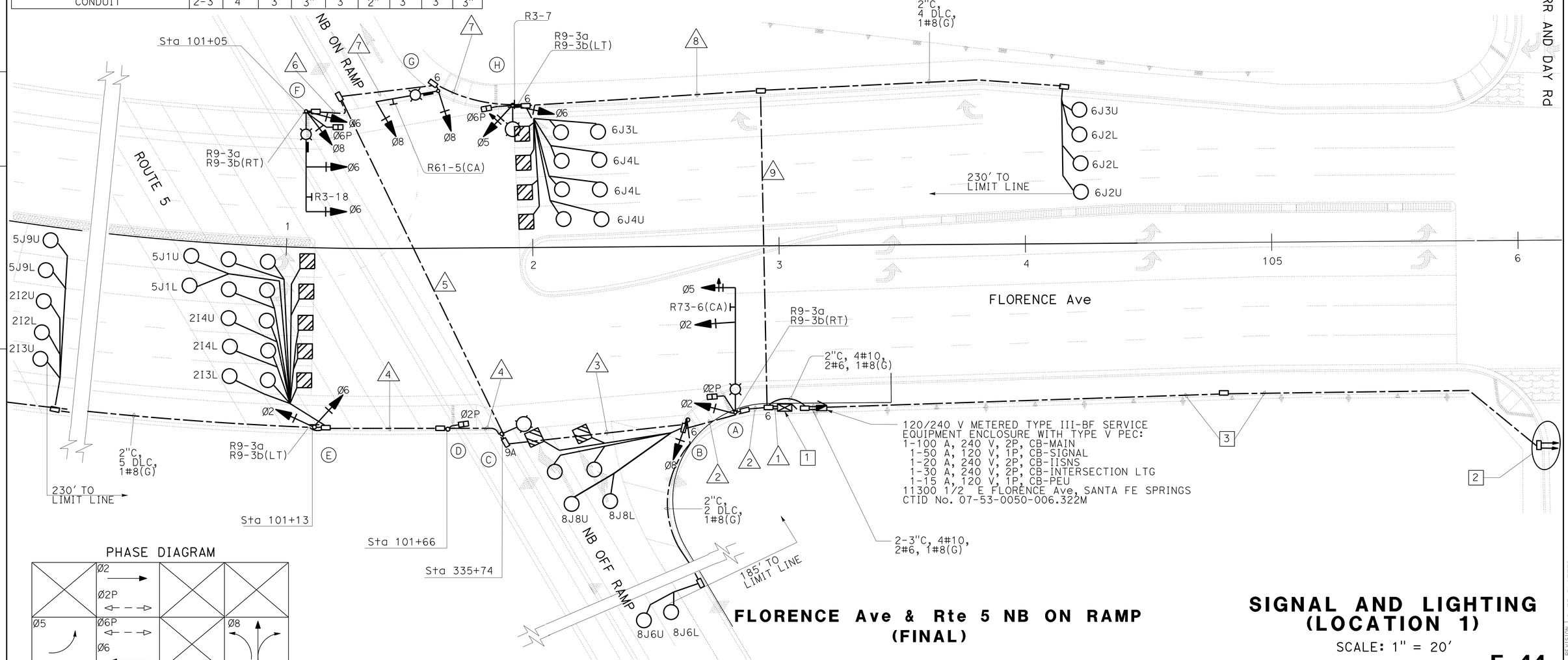

FLORENCE Ave & Rte 5 NB ON RAMP (FINAL)

SIGNAL AND LIGHTING (LOCATION 1)

SCALE: 1" = 20'

E-44

APPROVED FOR ELECTRICAL WORK ONLY

STATE OF CALIFORNIA - DEPARTMENT OF TRANSPORTATION
Caltrans® **TRAFFIC DESIGN**
FUNCTIONAL SUPERVISOR: YI TSAU
CALCULATED-DESIGNED BY: QUINCIE TRAN
CHECKED BY: CECILIO BURCIAGA
REVISED BY / DATE REVISED

LAST REVISION 10-31-12
DATE PLOTTED => 26-JUN-2013
TIME PLOTTED => 19:32

Dist	COUNTY	ROUTE	POST MILES TOTAL PROJECT	SHEET No.	TOTAL SHEETS
07	LA	5	0.0/7.6	513	985

REGISTERED ELECTRICAL ENGINEER 10/18/12 DATE

6-24-13
PLANS APPROVAL DATE

REGISTERED PROFESSIONAL ENGINEER C. BURCIAGA No. E015302 Exp. 3/31/15 ELECT STATE OF CALIFORNIA

THE STATE OF CALIFORNIA OR ITS OFFICERS OR AGENTS SHALL NOT BE RESPONSIBLE FOR THE ACCURACY OR COMPLETENESS OF SCANNED COPIES OF THIS PLAN SHEET.

NOTE: (THIS SHEET)

1. FOR OTHER NOTES SEE SHEET E-44.

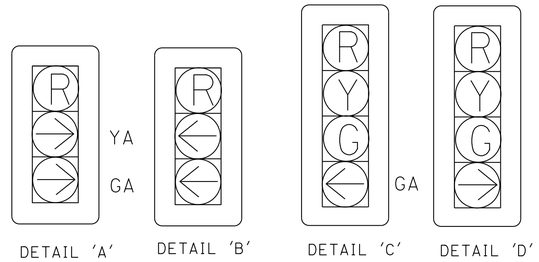

NO SCALE

EXISTING POLE AND EQUIPMENT SCHEDULE

No.	STANDARD Type	STANDARD SMA	STANDARD LMA	VEH SIG MTG Mast Arm	VEH SIG MTG Pole	PED SIGNAL MTG	PPB Ø	PPB ARROW	HPS LUMINAIRE	STREET NAME SIGN	OTHERS
A	15	-	12'	-	SV-1-T	SP-2-T	8	→	250 W	-	
B	**21TS(N)***	**-**	**12'(N)**	**-**	**SV-2-T(N)**	**-**	**-**	**-**	**310 W(N)**	-	
C	29-5-80	55'	15'	MAT MAS	SV-2-T	SP-1-T	8	←	250 W	← FAIRFORD Av	**VIVDS**
D	**19-3-100(N)***	**15'(N)**	**12'(N)**	**MAS(N)**	**SV-1-T(N)**	**-**	**-**	**-**	**310 W(N)**	**-**	VIVDS
E	**19A-4-100(N)**	**25'(N)**	**12'(N)**	**2-MAS(N)**	**SV-2-T(N)**	**-**	**-**	**-**	**310 W(N)**	**FAIRFORD Av → (R)**	VIVDS
F	**1-A(N)***	**-**	**-**	**-**	**TV-1-T(N)**	**-**	**-**	**-**	**-**	**-**	

(N) - NEW
(R) - RELOCATED FROM EXISTING POLE.
* - INSTALL TRAFFIC SIGNAL POLE ON STEEL PLATE WITH CONCRETE BLOCKS. SEE SES-12 THRU SES-15 FOR DETAILS.

STAGE 1 PHASE 2 PHASE DIAGRAM

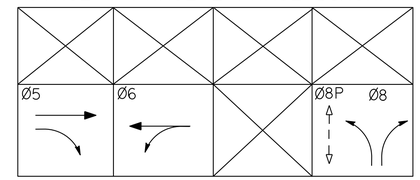

CONDUIT AND CONDUCTOR SCHEDULE

CONDUCTOR	CONDUCTOR RUN	1	2	3	4	5
12CSC	SIGNAL CABLE	1	1	1	1	
5CSC	SIGNAL CABLE	1	1	1	1	1
#10	LUMINAIRE		2	2	2	
#8	EGC	1	1	1	1	1
#8	SIGNAL SERVICE	2				
VIVDS CABLE		3	3	2	1	
CONDUIT		2-3"(E)	2"	2"	2"	1½"

(E) - EXISTING CONDUIT. RC CONDUCTORS

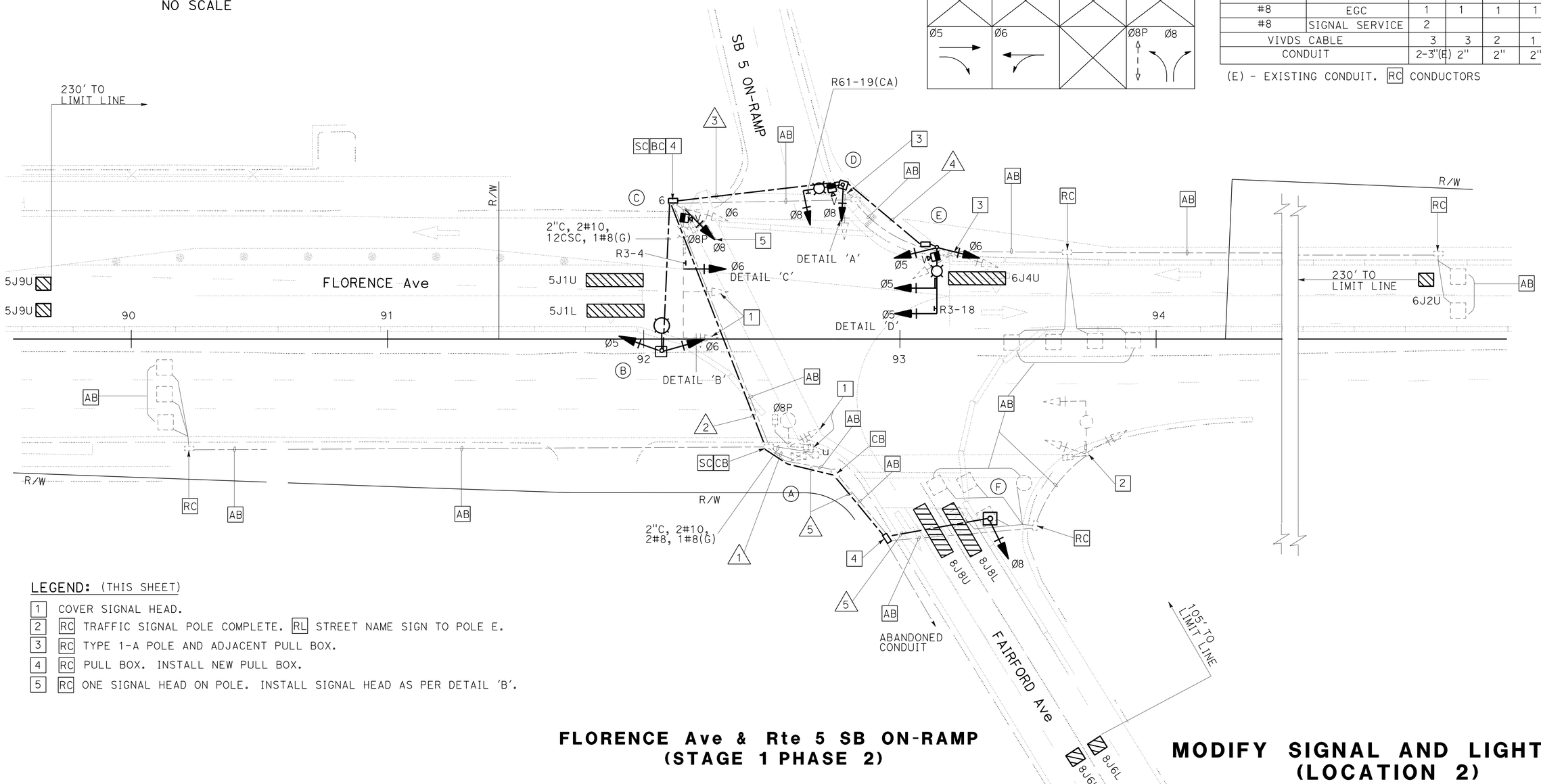

LEGEND: (THIS SHEET)

1. COVER SIGNAL HEAD.
2. RC TRAFFIC SIGNAL POLE COMPLETE. RL STREET NAME SIGN TO POLE E.
3. RC TYPE 1-A POLE AND ADJACENT PULL BOX.
4. RC PULL BOX. INSTALL NEW PULL BOX.
5. RC ONE SIGNAL HEAD ON POLE. INSTALL SIGNAL HEAD AS PER DETAIL 'B'.

FLORENCE Ave & Rte 5 SB ON-RAMP (STAGE 1 PHASE 2)

MODIFY SIGNAL AND LIGHTING (LOCATION 2)

SCALE: 1" = 20'

APPROVED FOR ELECTRICAL WORK ONLY

E-45

STATE OF CALIFORNIA - DEPARTMENT OF TRANSPORTATION
Caltrans® **TRAFFIC DESIGN**
FUNCTIONAL SUPERVISOR: YI TSAU
QUINCIE TRAN / CECILIO BURCIAGA
CALCULATED-DESIGNED BY / CHECKED BY
REVISED BY / DATE REVISED

LAST REVISION 10-31-12
DATE PLOTTED => 26-JUN-2013
TIME PLOTTED => 19:32

Dist	COUNTY	ROUTE	POST MILES TOTAL PROJECT	SHEET No.	TOTAL SHEETS
07	LA	5	0.0/7.6	514	985

REGISTERED ELECTRICAL ENGINEER 10/18/12 DATE

6-24-13
PLANS APPROVAL DATE

REGISTERED PROFESSIONAL ENGINEER C. BURCIAGA No. E015302 Exp. 3/31/15 ELECT STATE OF CALIFORNIA

THE STATE OF CALIFORNIA OR ITS OFFICERS OR AGENTS SHALL NOT BE RESPONSIBLE FOR THE ACCURACY OR COMPLETENESS OF SCANNED COPIES OF THIS PLAN SHEET.

NOTES: (THIS SHEET)

1. FOR OTHER NOTES SEE SHEET E-44.
2. AT THE END OF THIS STAGE: RC TRAFFIC SIGNAL POLES C, E COMPLETE AND ADJACENT PULL BOX.

LEGEND: (THIS SHEET)

1 RL TRAFFIC SIGNAL ON STEEL PLATE WITH CONCRETE BLOCKS POLES TO NEXT STAGE, SEE SHEET E-47.

2 RC CONTROLLER AND SERVICE ON POWER POLE.
RC TRAFFIC SIGNAL POLE. AB CONDUITS. RC PULL BOXES.

3 COVER SIGNAL HEADS AND PED HEADS.
RL VIVDS CAMERA TO NEXT STAGE, SEE SHEET E-47.

4 CB SC LIGHTING CONDUCTORS.

EXISTING POLE AND EQUIPMENT SCHEDULE

No.	STANDARD			VEH SIG MTG		PED SIGNAL	PPB		HPS LUMINAIRE	STREET NAME SIGN	OTHERS
	Type	SMA	LMA	Mast Arm	Pole	MTG	Ø	ARROW			
A	15	-	12′	-	SV-1-T	SP-2-T	8	→	250 W	-	-
B	21TS	-	12′	-	SV-2-T	-	-	-	310 W	-	-
C	29-5-80	55′	15′	MAT MAS	SV-2-T	SP-1-T	8	←	250 W	← FAIRFORD Av	VIVDS
D	19-3-100	15′	12′	MAS	SV-1-T	-	-	-	310 W	-	VIVDS
E	19A-4-100	25′	12′	2-MAS	SV-2-T	SP-1-T	-	-	310 W	FAIRFORD Av →	VIVDS
F	1-A	-	-	-	TV-1-T	-	-	-	-	-	-

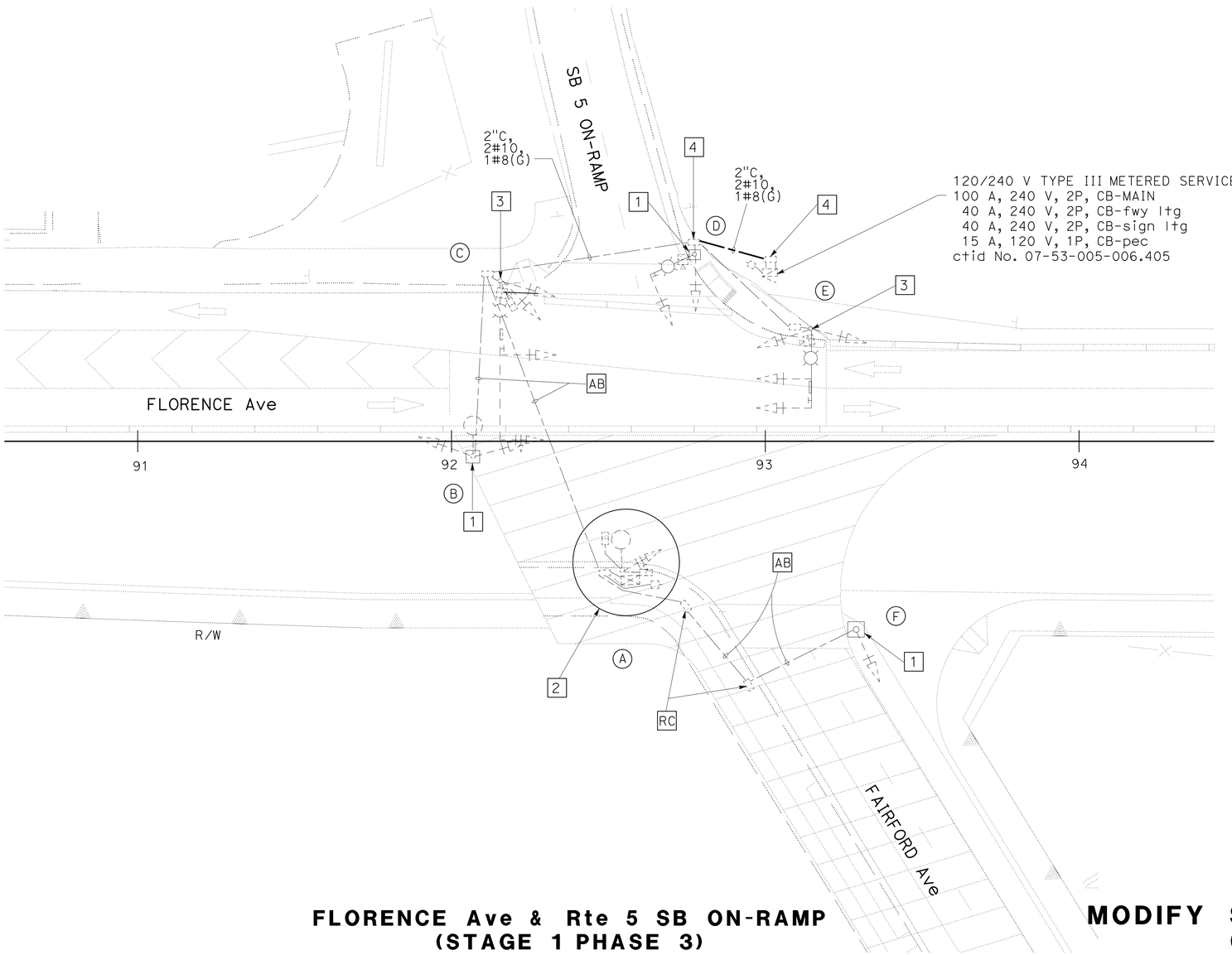

FLORENCE Ave & Rte 5 SB ON-RAMP
(STAGE 1 PHASE 3)

MODIFY SIGNAL AND LIGHTING
(LOCATION 2)

SCALE: 1" = 20′

E-46

APPROVED FOR ELECTRICAL WORK ONLY

STATE OF CALIFORNIA - DEPARTMENT OF TRANSPORTATION
Caltrans TRAFFIC DESIGN

FUNCTIONAL SUPERVISOR: YI TSAU
CALCULATED-DESIGNED BY: QUINCIE TRAN
CHECKED BY: CECILIO BURCIAGA
REVISED BY
DATE REVISED

LAST REVISION 10-31-12
DATE PLOTTED => 26-JUN-2013
TIME PLOTTED => 19:33

Dist	COUNTY	ROUTE	POST MILES TOTAL PROJECT	SHEET No.	TOTAL SHEETS
07	LA	5	0.0/7.6	515	985

REGISTERED ELECTRICAL ENGINEER 10/18/12 DATE

6-24-13
PLANS APPROVAL DATE

REGISTERED PROFESSIONAL ENGINEER C. BURCIAGA No. E015302 Exp. 3/31/15 ELECT STATE OF CALIFORNIA

THE STATE OF CALIFORNIA OR ITS OFFICERS OR AGENTS SHALL NOT BE RESPONSIBLE FOR THE ACCURACY OR COMPLETENESS OF SCANNED COPIES OF THIS PLAN SHEET.

NOTES: (THIS SHEET)

1. FOR OTHER NOTES SEE SHEET E-44.
2. AT THE END OF THIS STAGE: RS TRAFFIC SIGNAL POLES WITH STEEL PLATE ON CONCRETE BLOCKS AT LOCATIONS: A, B, C.
   RC CONDUITS ABOVE GROUND LEVEL,
   RC PULL BOX ADJACENT TO POLE A.
   RL CONTROLLER CABINET & SERVICE EQUIPMENT ENCLOSURE TO SIDEWALK, SEE SHEET E-49, OR AS DIRECTED BY THE ENGINEEER.

LEGEND: (THIS SHEET)

1. COVER SIGNAL HEAD.
2. TRAFFIC SIGNAL POLE AND ADJACENT PULL BOX, LOOP DETECTORS AND CONDUIT FOR REFERENCE ONLY, SEE SHEET E-49 FOR INSTALLATION.
3. INSTALL SIGN R61-19(CA) & R3-4 (2'X2') ON TYPE 3 BARRICADE.
4. INSTALL 1½"C SCHEDULE 80 TYPE 3 CONDUIT AT GROUND LEVEL AGAINST K-RAIL.
5. FOR REFERENCE ONLY, SEE SHEET E-5 FOR INSTALLATION.
6. INSTALL CONTROLLER AT TEMPORARY LOCATION. RELOCATE TO PERMANENT LOCATION ON SHEET E-49. CONTROLLER SHOWN FOR REFERENCE ONLY.

POLE AND EQUIPMENT

No.	STANDARD Type	STANDARD SMA	STANDARD LMA	VEH SIG MTG Mast Arm	VEH SIG MTG Pole	PED SIGNAL MTG	APS Ø	APS ARROW	LUMINAIRE	IISNS	OTHERS
A	19-3-100 (R)	15'	12'	MAS	SV-2-T	-	-	-	310 W (HPS)	-	VIVDS
B	1-A (R)	-	-	-	TV-1-T	-	-	-	-	-	-
C	21TS (R)	-	12'	-	SV-2-T	-	-	-	310 W (HPS)	-	-
D	29A-5-100	55'	12'	2-MAS	SV-1-T	SP-1-T	-	-	235 W (LED)	FAIRFORD Ave	VIVDS
E	21TS	-	12'	-	SV-1-T	-	2	→	235 W (LED)	-	-
F	21TS	-	12'	-	-	-	2	←	235 W (LED)	-	-
G	21TS	-	12'	-	SV-2-T	SP-1-T	-	-	235 W (LED)	-	-
H	16-1-100	20'	-	MAS	-	-	-	-	-	-	-

(R) - RELOCATED POLE ON STEEL PLATE WITH CONCRETE BLOCKS FROM PREVIOUS STAGE.
APS - ACCESSIBLE PEDESTRIAN SIGNAL

CONDUIT AND CONDUCTOR SCHEDULE

CONDUCTOR	CONDUCTOR RUN	1	2	3	4	5	6
28CSC	C1	2	1		1	1	1
	C2	1	1				
12CSC	SIGNAL CABLE	1	1	1	1	1	1
#10	LUMINAIRE		2	2	2	2	2
	IISNS		2		2	2	2
#8	EGC	1	1	1	1	1	1
#6	SIGNAL SERVICE	2					
DLC	Ø8	4	4			4	4
VIVDS CABLE		2	2		1	1	1
CONDUIT		2-3"	3"	1½"	3"	3"	3"

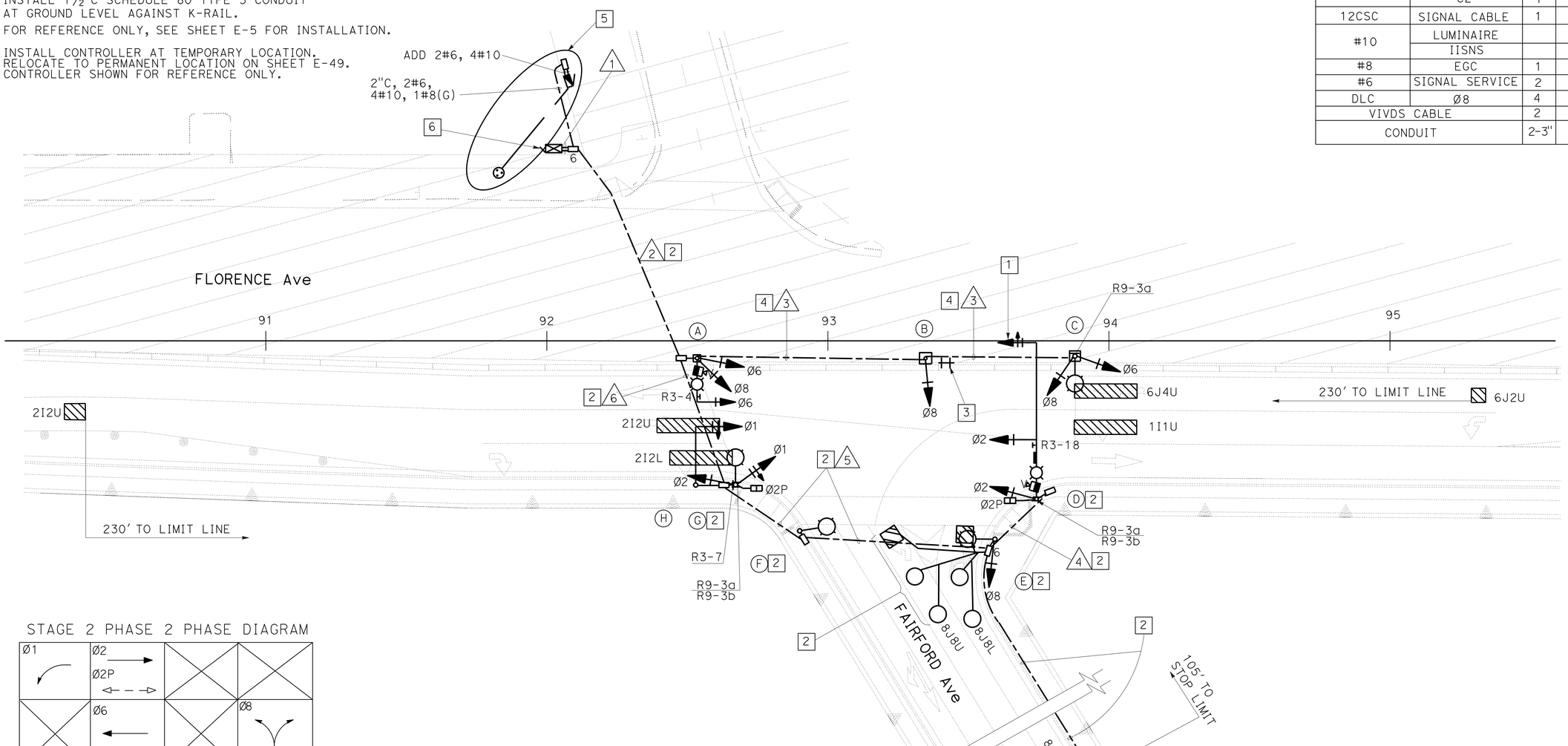

STAGE 2 PHASE 2 PHASE DIAGRAM

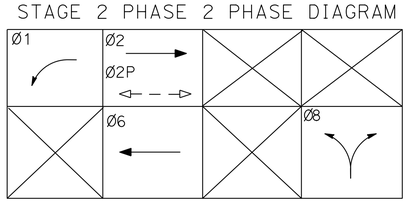

FLORENCE Ave & Rte 5 SB ON-RAMP (STAGE 2 PHASE 2)

MODIFY SIGNAL AND LIGHTING (LOCATION 2)

SCALE: 1" = 20'

APPROVED FOR ELECTRICAL WORK ONLY

E-47

STATE OF CALIFORNIA - DEPARTMENT OF TRANSPORTATION
Caltrans® TRAFFIC DESIGN
FUNCTIONAL SUPERVISOR: YI TSAU
CALCULATED-DESIGNED BY: QUINCIE TRAN
CHECKED BY: CECILIO BURCIAGA
REVISED BY / DATE REVISED

LAST REVISION 10-31-12 | DATE PLOTTED => 26-JUN-2013 | TIME PLOTTED => 19:33

Dist	COUNTY	ROUTE	POST MILES TOTAL PROJECT	SHEET No.	TOTAL SHEETS
07	LA	5	0.0/7.6	516	985

REGISTERED ELECTRICAL ENGINEER 10/18/12 DATE

PLANS APPROVAL DATE 6-24-13

REGISTERED PROFESSIONAL ENGINEER C. BURCIAGA No. E015302 Exp. 3/31/15 ELECT STATE OF CALIFORNIA

THE STATE OF CALIFORNIA OR ITS OFFICERS OR AGENTS SHALL NOT BE RESPONSIBLE FOR THE ACCURACY OR COMPLETENESS OF SCANNED COPIES OF THIS PLAN SHEET.

NOTES: (THIS SHEET)

1. FOR OTHER NOTES, SEE SHEET E-44.
2. TRAFFIC SIGNAL SYSTEM SHOWN FOR REFERENCE ONLY, SEE SHEET E-49 FOR INSTALLATION.

POLE AND EQUIPMENT SCHEDULE
(FOR REFERENCE ONLY, SEE SHEET E-49 FOR INSTALLATION)

No.	STANDARD Type	STANDARD SMA	STANDARD LMA	VEH SIG MTG Mast Arm	VEH SIG MTG Pole	PED SIGNAL MTG	APS Ø	APS ARROW	LED LUMINAIRE	ISSNS
A	29A-5-100	55′	12′	2-MAS	SV-2-T	SP-2-T	8 6	← ←	235 W	← FAIRFORD Ave SB ROUTE 5 ON →
B	26A-4-100	45′	12′	MAS	SV-1-T	-	-	-	235 W	FLORENCE Ave
C	21TS	-	12′	-	SV-2-T	SP-1-T	6	→	235 W	-
D	29A-5-100	55′	12′	2-MAS	SV-1-T	SP-1-T	-	-	235 W	FAIRFORD Ave → ← SB ROUTE 5 ON
E	21TS	-	12′	-	SV-1-T	-	2	→	235 W	-
F	21TS	-	12′	-	-	-	-	-	235 W	-
G	PPB	-	-	-	-	-	2	→	-	-
H	21TS	-	12′	-	SV-2-T	SP-2-T	8	←	235 W	-

APS - ACCESSIBLE PEDESTRIAN SIGNAL

LEGEND: (THIS SHEET)

1. COVER SIGNAL HEAD.
2. REMAIN COVERED FROM PREVIOUS STAGE.
3. FOR REFERENCE ONLY, SEE SHEET E-11 FOR INSTALLATION.

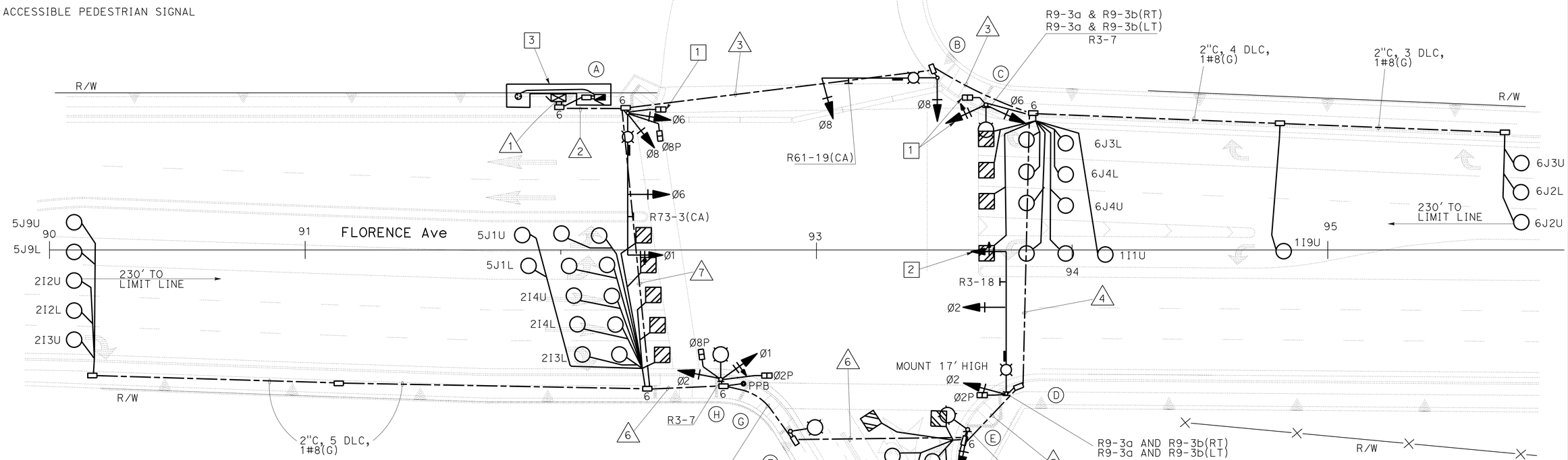

CONDUIT AND CONDUCTOR SCHEDULE
(FOR REFERENCE ONLY, SEE SHEET E-49 FOR INSTALLATION)

CONDUCTOR	CONDUCTOR RUN	1	2	3	4	5	6	7
28CSC	C1	2	2	1	1	1	1	1
	C2	2	2	1	1	1	1	1
#10	LUMINAIRE		2	2		2	2	2
	IISNS		2	2		2	2	2
#8	EGC	1	1	1	1	1	1	1
#6	SIGNAL SERVICE	2						
DLC	Ø1	2	2	2				
	Ø2	6	6					6
	5 (NOT USED)	4	4					4
	Ø6	6	6	6				
	Ø8	4	4				4	4
TOTAL		22	22	8			4	14
CONDUIT		2-3"	4"	3"	3"	3"	3"	3"

STAGE 3 PHASE 1, 2, 3 PHASE DIAGRAM

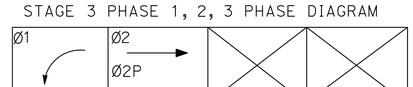

FLORENCE Ave & Rte 5 SB ON-RAMP (STAGE 3 PHASE 1, 2, 3)

APPROVED FOR ELECTRICAL WORK ONLY

MODIFY SIGNAL AND LIGHTING (LOCATION 2)

SCALE: 1" = 20′

E-48

STATE OF CALIFORNIA - DEPARTMENT OF TRANSPORTATION
Caltrans® TRAFFIC DESIGN
FUNCTIONAL SUPERVISOR: YI TSAU
CALCULATED-DESIGNED BY: CECILIO BURCIAGA
CHECKED BY
REVISED BY
DATE REVISED

LAST REVISION 10-31-12 | DATE PLOTTED => 26-JUN-2013 | TIME PLOTTED => 19:33

Dist	COUNTY	ROUTE	POST MILES TOTAL PROJECT	SHEET No.	TOTAL SHEETS
07	LA	5	0.0/7.6	517	985

REGISTERED ELECTRICAL ENGINEER 10/18/12 DATE

6-24-13
PLANS APPROVAL DATE

REGISTERED PROFESSIONAL ENGINEER C. BURCIAGA No. E015302 Exp. 3/31/15 ELECT STATE OF CALIFORNIA

THE STATE OF CALIFORNIA OR ITS OFFICERS OR AGENTS SHALL NOT BE RESPONSIBLE FOR THE ACCURACY OR COMPLETENESS OF SCANNED COPIES OF THIS PLAN SHEET.

NOTES: (THIS SHEET)

1. FOR OTHER NOTES, SEE SHEET E-44.
2. SEE STAGING PLANS FOR INSTALLATION OF CONTROLLER CABINET, SERVICE CABINET AND OTHER PERTINENT EQUIPMENT FOR THIS TRAFFIC SIGNAL SYSTEM.
3. RC SIGNAL EQUIPMENT AND AB CONDUIT FROM STAGING PLANS THAT ARE NOT USED IN THIS FINAL SIGNAL PLAN, OR AS DIRECTED BY THE ENGINEER.

POLE AND EQUIPMENT SCHEDULE
(FOR REFERENCE ONLY, FOR INSTALLATION)

No.	STANDARD Type	STANDARD SMA	STANDARD LMA	VEH SIG MTG Mast Arm	VEH SIG MTG Pole	PED SIGNAL MTG	APS Ø	APS ARROW	LED LUMINAIRE	ISSNS
(A)	29A-5-100	55'	12'	2-MAS	SV-2-T	SP-2-T	8 6	←←	235 W	← FAIRFORD Ave SB ROUTE 5 ON →
(B)	26A-4-100	45'	12'	MAS	SV-1-T	-	-	-	235 W	FLORENCE Ave
(C)	21TS	-	12'	-	SV-2-T	SP-1-T	6	→	235 W	-
(D)	29A-5-100	55'	12'	2-MAS	SV-1-T	SP-1-T	-	-	235 W	FAIRFORD Ave → ← SB ROUTE 5 ON
(E)	21TS	-	12'	-	SV-1-T	-	2	→	235 W	-
(F)	21TS	-	12'	-	-	-	-	-	235 W	-
(G)	PPB	-	-	-	-	-	2	→	-	-
(H)	21TS	-	12'	-	SV-2-T	SP-2-T	8	←	235 W	-

PHASE DIAGRAM

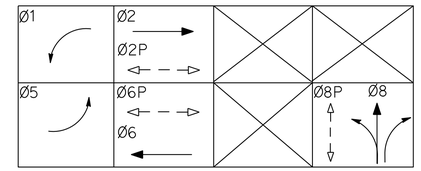

LEGEND: (THIS SHEET)

1. INSTALL STATE-FURNISHED MODEL 2070 CONTROLLER ASSEMBLY WITH MODEL 332 CABINET. INSTALL BBS. INSTALL STATE-FURNISHED C2P MODEM INTERCONNECT HARNESS, SEE DETAIL G ON SHEET E-61.
2. FOR REFERENCE ONLY, SEE SHEET E-11 FOR INSTALLATION.

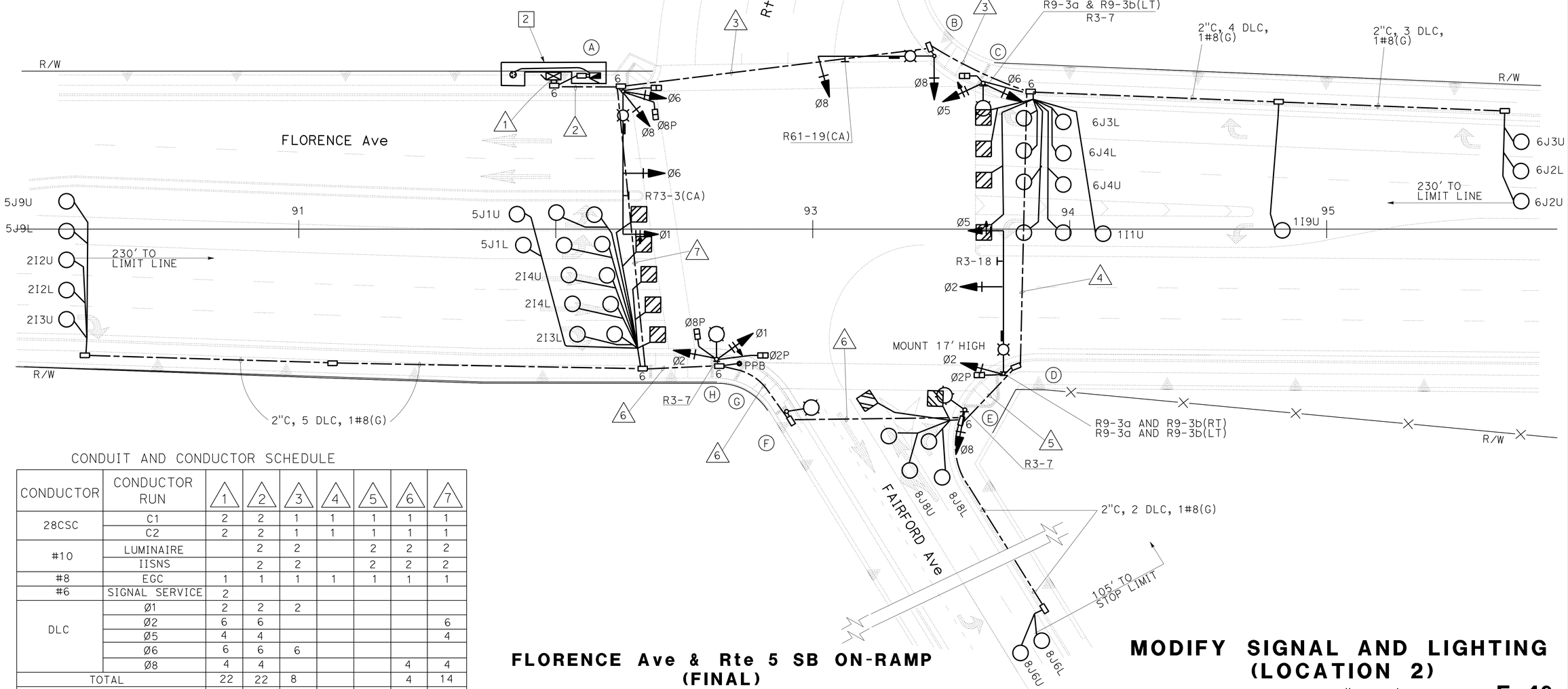

CONDUIT AND CONDUCTOR SCHEDULE

CONDUCTOR	CONDUCTOR RUN	1	2	3	4	5	6	7
28CSC	C1	2	2	1	1	1	1	1
	C2	2	2	1	1	1	1	1
#10	LUMINAIRE		2	2		2	2	2
	IISNS		2	2		2	2	2
#8	EGC	1	1	1	1	1	1	1
#6	SIGNAL SERVICE	2						
DLC	Ø1	2	2	2				
	Ø2	6	6					6
	Ø5	4	4					4
	Ø6	6	6	6				
	Ø8	4	4				4	4
TOTAL		22	22	8			4	14
CONDUIT		2-3"	4"	3"	3"	3"	3"	3"

FLORENCE Ave & Rte 5 SB ON-RAMP (FINAL)

APPROVED FOR ELECTRICAL WORK ONLY

MODIFY SIGNAL AND LIGHTING (LOCATION 2)

SCALE: 1" = 20'

E-49

STATE OF CALIFORNIA - DEPARTMENT OF TRANSPORTATION
Caltrans TRAFFIC DESIGN
FUNCTIONAL SUPERVISOR: YI TSAU
CALCULATED-DESIGNED BY: QUINCIE TRAN
CHECKED BY: CECILIO BURCIAGA
REVISED BY / DATE REVISED

LAST REVISION 10-31-12 | DATE PLOTTED => 26-JUN-2013 | TIME PLOTTED => 19:33

Dist	COUNTY	ROUTE	POST MILES TOTAL PROJECT	SHEET No.	TOTAL SHEETS
07	LA	5	0.0/7.6	518	985

10/18/12
REGISTERED ELECTRICAL ENGINEER DATE

6-24-13
PLANS APPROVAL DATE

REGISTERED PROFESSIONAL ENGINEER C. BURCIAGA No. E015302 Exp. 3/31/15 ELECT STATE OF CALIFORNIA

THE STATE OF CALIFORNIA OR ITS OFFICERS OR AGENTS SHALL NOT BE RESPONSIBLE FOR THE ACCURACY OR COMPLETENESS OF SCANNED COPIES OF THIS PLAN SHEET.

NOTES: (THIS SHEET)

1. FOR OTHER NOTES, SEE SHEET E-44.
2. AT THE END OF THIS STAGE: RC TRAFFIC SIGNAL POLE AT LOCATIONS: A, B, F, G & H. RC PULL BOXES. AB CONDUIT, AB PHASE 2 DETECTOR LOOPS, RS ON RAMP ELECTROLIER. RL TRAFFIC SIGNAL POLES ON STEEL PLATE WITH CONCRETE BLOCKS LOCATIONS: C, D & E, CONDUITS ON GROUND, AND VIVDS CAMERAS TO NEXT STAGE, OR AS DIRECTED BY THE ENGINEER.

EXISTING POLE AND EQUIPMENT SCHEDULE

	STANDARD			VEH SIG MTG		PED SIGNAL	PPB		HPS LUMINAIRE	IISNS	OTHERS
No.	Type	SMA	LMA	Mast Arm	Pole	MTG	Ø	ARROW			
A	19-4-80	30′	12′	MAS	SV-1-T	SP-1-T	6	←	400 W	FLORENCE Ave	—
B	1-A	—	—	—	TV-2-T(N)	SP-1-T	—	—	—	—	—
C	1-A (N) *	—	—	—	TV-2-T(N)	—	—	—	—	—	—
D	1-A (N) *	—	—	—	TV-1-T(N)	—	—	—	—	—	—
E	19-3-100 (N)*	15′(N)	12′(N)	MAS (N)	SV-2-T(N)	—	—	—	310 W (N)	—	VIVDS(N)
F	26-4-80	40′	15′	MAS	—	SP-1-T	—	—	400 W	ORR AND DAY Rd	VIVDS(N)
G	1-A	—	—	—	TV-1-T TV-1-T(N)	—	6	→	—	—	—
H	1-A (N) *	—	—	—	TV-1-T(N)	—	—	—	—	—	—

* - INSTALL TEMPORARY POLE ON STEEL PLATE WITH CONCRETE BLOCKS. SEE SES-13 THRU SES-15 FOR DETAILS
(N) - NEW

CONDUIT AND CONDUCTOR SCHEDULE

CONDUCTOR	CONDUCTOR RUN	1	2	3	4	5
12CSC	SIGNAL CABLE	1	1	1		1
5CSC	SIGNAL CABLE	1	1		1	
3CSC	PPB CABLE	1	1		1	1
#10	LUMINAIRE		2	2		2
#8	EGC	1	1	1	1	1
#6	SIGNAL SERVICE	2				
DLC	Ø5	3	3			3
VIVDS CABLE		2	2	1		1
CONDUIT		2-3"	3"	2"	1½"(E)	2"

(E) - EXISTING CONDUIT.

STAGE 1 PHASE 2 PHASE DIAGRAM

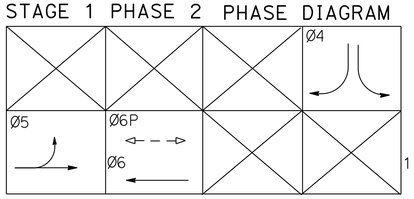

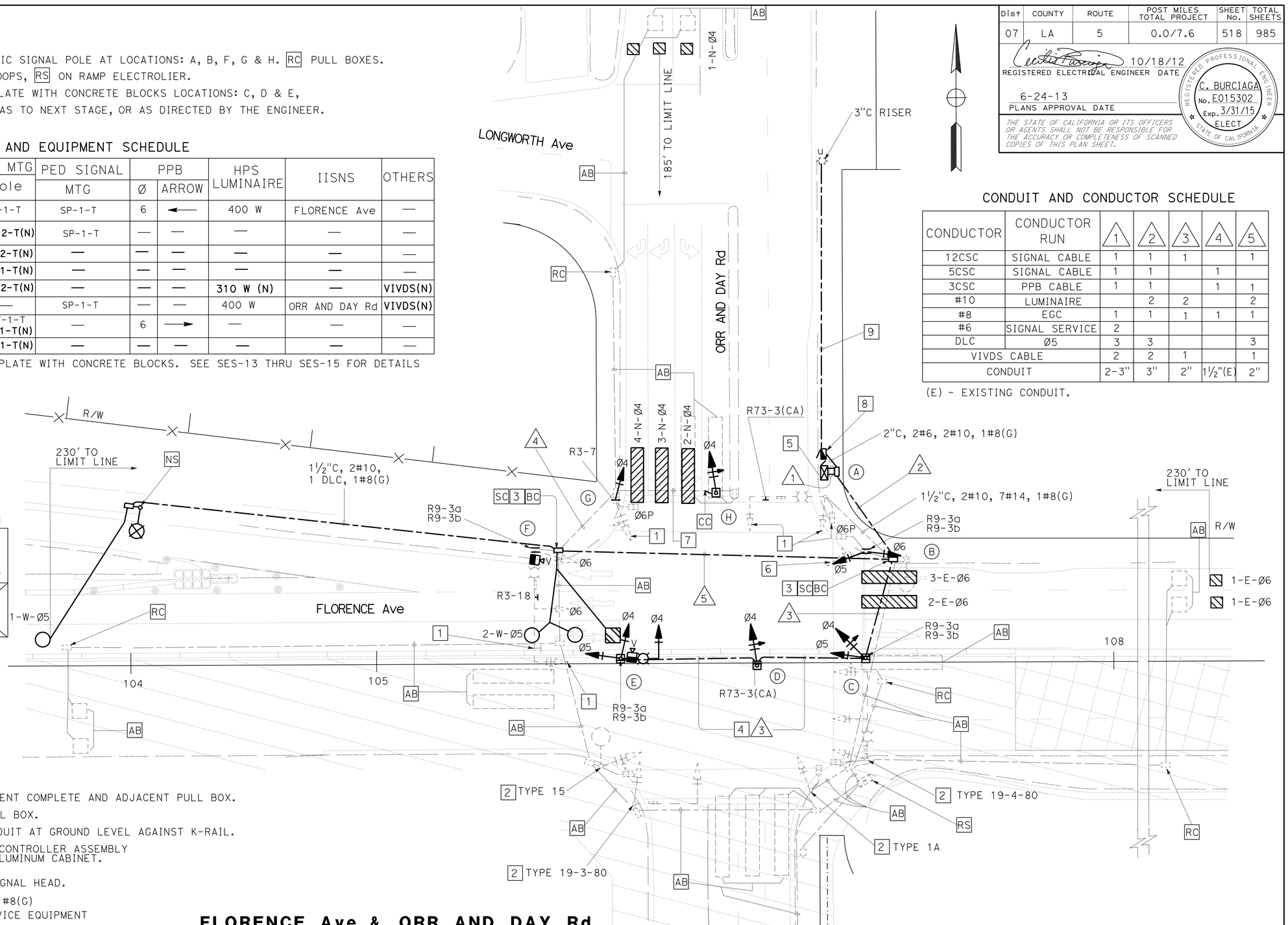

LEGEND: (THIS SHEET)

1. RC COVER SIGNAL HEAD OR SIGN.
2. RC TRAFFIC SIGNAL POLE AND EQUIPMENT COMPLETE AND ADJACENT PULL BOX.
3. RC PULL BOX AND INSTALL No. 6 PULL BOX.
4. INSTALL 2" SCHEDULE 80 TYPE 3 CONDUIT AT GROUND LEVEL AGAINST K-RAIL.
5. INSTALL ECONOLITE ASC/3 NEMA TS2 CONTROLLER ASSEMBLY AND GPS EQUIPMENT IN TYPE TS2 P ALUMINUM CABINET. INSTALL BATTERY BACKUP SYSTEM.
6. RC SIGNAL HEAD AND INSTALL NEW SIGNAL HEAD.
7. Exist 1½"C, RC 1 dlc. ADD 5CSC, 1#8(G)
8. INSTALL 120/240 V TYPE III-BF SERVICE EQUIPMENT ENCLOSURE WITH:
   100 A, 240 V, 2P, CB-MAIN
   50 A, 120 V, 1P, CB-SIGNAL
   30 A, 120 V, 1P, CB-INTERSECTION LTG
   15 A, 120 V, 1P, CB-PEC
   NE ORR AND DAY Rd & FLORENCE Ave, SANTA FE SPRINGS
9. INSTALL 3"C, MT, SCE WILL INSTALL CONDUCTORS.

FLORENCE Ave & ORR AND DAY Rd
(STAGE 1 PHASE 2)

APPROVED FOR ELECTRICAL WORK ONLY

MODIFY SIGNAL AND LIGHTING (CITY STREET LOCATION 3)

SCALE: 1" = 20′

E-50

STATE OF CALIFORNIA - DEPARTMENT OF TRANSPORTATION
Caltrans® TRAFFIC DESIGN
FUNCTIONAL SUPERVISOR: YI TSAU
CALCULATED-DESIGNED BY: QUINCIE TRAN
CHECKED BY: CECILIO BURCIAGA
REVISED BY / DATE REVISED

LAST REVISION 10-31-12 | DATE PLOTTED => 26-JUN-2013 | TIME PLOTTED => 19:33

Dist	COUNTY	ROUTE	POST MILES TOTAL PROJECT	SHEET No.	TOTAL SHEETS
07	LA	5	0.0/7.6	519	985

REGISTERED ELECTRICAL ENGINEER 10/18/12 DATE

6-24-13
PLANS APPROVAL DATE

REGISTERED PROFESSIONAL ENGINEER C. BURCIAGA No. E015302 Exp. 3/31/15 ELECT STATE OF CALIFORNIA

THE STATE OF CALIFORNIA OR ITS OFFICERS OR AGENTS SHALL NOT BE RESPONSIBLE FOR THE ACCURACY OR COMPLETENESS OF SCANNED COPIES OF THIS PLAN SHEET.

NOTES: (THIS SHEET)

1. FOR OTHER NOTES, SEE SHEET E-44.
2. AT THE END OF THIS STAGE: RS TRAFFIC SIGNAL POLE ON STEEL PLATE WITH CONCRETE BLOCKS AT LOCATIONS: C, D, AND E. RC TYPE 3 CONDUIT.
   RL VIVDS CAMERAS TO NEXT STAGE SEE SHEET E-52 & E-53 OR AS DIRECTED BY THE ENGINEEER.

LEGEND: (THIS SHEET)

1. RL TYPE 3 CONDUIT FROM PREVIOUS STAGE) AT GROUND LEVEL AGAINST K-RAIL.
2. TO REMAIN FOR NEXT STAGE SEE SHEET E-52.
3. COVER SIGNAL HEAD.
4. TRAFFIC SIGNAL AND ADJACENT PULL BOX, CONDUIT, LOOP DETECTOR, SERVICE EQUIPMENT ENCLOSURE, AND CONTROLLER CABINET SHOWN FOR REFERENCE ONLY, SEE SHEET E-53 FOR INSTALLATION. SEE SHEET E-18 FOR INSTALLATION OF SERVICE.
5. RC SIGNAL HEAD AT THE END OF THIS STAGE.

STAGE 2 PHASE 1 PHASE DIAGRAM

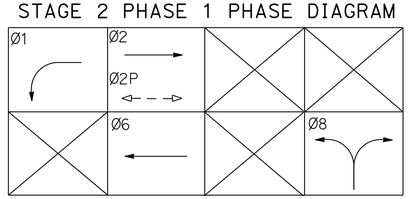

POLE AND EQUIPMENT SCHEDULE

No.	STANDARD Type	SMA	LMA	VEH SIG MTG Mast Arm	Pole	PED SIGNAL MTG	APS Ø	ARROW	HPS LUMINAIRE	IISNS	OTHERS
A	1-A	—	—	—	TV-1-T	SP-1-T	2	→	—	—	—
B	26A-4-100	35′	12′	—	—	—	2	←	250 W	FLORENCE Ave	VIVDS(R)
C	19-2-100	30′	12′	MAS	SV-2-T	SP-1-T	—	—	250 W	ORR AND DAY Rd	—
D	19-3-100 (R)	15′(R)	12′(R)	MAS(R)	SV-2-T(R)	—	—	—	250 W(R)	—	VIVDS(R)
E	1-A (R)	—	—	—	TV-1-T	—	—	—	—	—	—
F	1-A (R)	—	—	—	TV-2-T(R) TV-1-T	—	—	—	—	—	—
H	26A-4-100	40′	12′	2-MAS	SV-1-T	SP-1-T	—	—	250 W	ORR AND DAY Rd	—

(R) - RL FROM PREVIOUS STAGE.
APS - ACCESSIBLE PEDESTRIAN SIGNAL.

CONDUIT AND CONDUCTOR SCHEDULE

CONDUCTOR	CONDUCTOR RUN	1	2	3	4	5
28CSC	C1	1	1	1	1	1
	C2	1	1	1		1
12CSC	SIGNAL CABLE			1		
#10	LUMINAIRE		2	2	2	2
	IISNS		2	2		2
#8	EGC	1	1	1	1	1
#6	SIGNAL SERVICE	2				
DLC	Ø8	2	2			
VIVDS CABLE		2	2		1	2
CONDUIT		2-3"	4"	3"	2"	3"

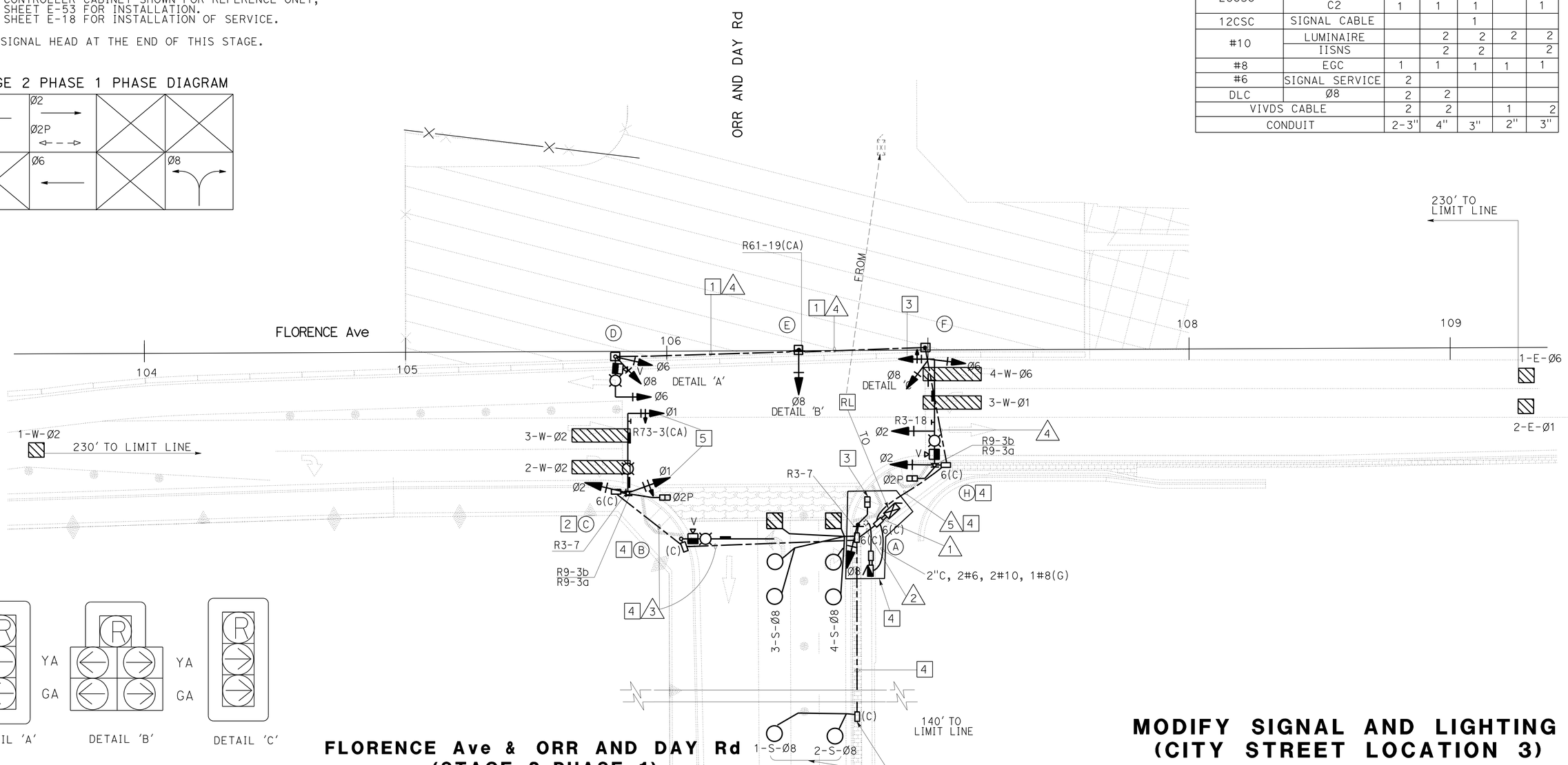

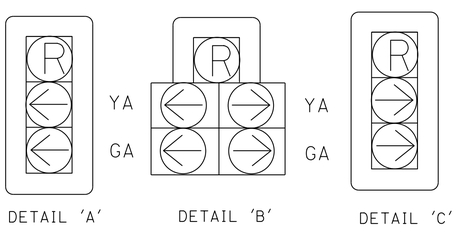

NO SCALE

FLORENCE Ave & ORR AND DAY Rd (STAGE 2 PHASE 1)

MODIFY SIGNAL AND LIGHTING (CITY STREET LOCATION 3)

SCALE: 1" = 20′

E-51

APPROVED FOR ELECTRICAL WORK ONLY

STATE OF CALIFORNIA - DEPARTMENT OF TRANSPORTATION
Caltrans TRAFFIC DESIGN
FUNCTIONAL SUPERVISOR: YI TSAU
CALCULATED-DESIGNED BY: CECILIO BURCIAGA
CHECKED BY: QUINCIE TRAN
REVISED BY / DATE REVISED

LAST REVISION 10-31-12 | DATE PLOTTED => 26-JUN-2013 | TIME PLOTTED => 19:33

Dist	COUNTY	ROUTE	POST MILES TOTAL PROJECT	SHEET No.	TOTAL SHEETS
07	LA	5	0.0/7.6	520	985

REGISTERED ELECTRICAL ENGINEER 10/18/12 DATE

6-24-13
PLANS APPROVAL DATE

REGISTERED PROFESSIONAL ENGINEER C. BURCIAGA No. E015302 Exp. 3/31/15 ELECT STATE OF CALIFORNIA

THE STATE OF CALIFORNIA OR ITS OFFICERS OR AGENTS SHALL NOT BE RESPONSIBLE FOR THE ACCURACY OR COMPLETENESS OF SCANNED COPIES OF THIS PLAN SHEET.

NOTE: (THIS SHEET)

1. FOR OTHER NOTES, SEE SHEET E-44.

POLE AND EQUIPMENT SCHEDULE

	STANDARD			VEH SIG MTG		PED SIGNAL	APS		HPS	IISNS	OTHERS
No.	Type	SMA	LMA	Mast Arm	Pole	MTG	Ø	ARROW	LUMINAIRE		
A	1-A	—	—	—	TV-1-T TV-1-T **(N)**	SP-1-T	2	→	—	—	—
B	26A-4-100	35′	12′	MAS **(N)**	SV-1-T **(N)**	—	2	←	250 W	FLORENCE Ave	VIVDS
C	19-2-100	30′	12′	MAS **(N)**	SV-1-T **(N)**	SP-1-T	—	—	250 W	ORR AND DAY Rd	—
D	29A-5-100 **(N)**	55′ **(N)**	12′ **(N)**	2-MAS **(N)**	SV-2-T **(N)**	SP-1-T **(N)**	—	—	250 W **(N)**	ORR AND DAY Rd **(N)**	VIVDS **(N)**
E	21TS **(N)**	—	12′ **(N)**	—	SV-1-T **(N)**	—	1 **(N)**	→	250 W **(N)**	—	—
F	26A-4-100 **(N)**	40′ **(N)**	12′ **(N)**	2-MAS **(N)**	SV-1-T **(N)**	SP-2-T	1 **(N)**	←	250 W **(N)**	FLORENCE Ave **(N)**	VIVDS **(N)**
G	21TS **(N)**	—	12′ **(N)**	—	SV-2-T **(N)**	SP-1-T **(N)**	8 **(N)**	→	250 W **(N)**	—	—
H	26A-4-100	40′	12′	2-MAS	SV-1-T	SP-1-T	8	←	250 W	ORR AND DAY Rd	VIVDS

APS - ACCESSIBLE PEDESTRIAN SIGNAL.
(N) - NEW

STAGE 2 PHASE 2 PHASE DIAGRAM

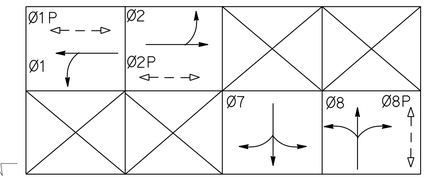

LEGEND: (THIS SHEET)

1. COVER SIGNAL HEAD.
2. SIGNAL HEAD REMAIN COVERED FROM PREVIOUS STAGE.
3. RC TRAFFIC SIGNAL POLE OR SIGNAL HEAD AT THE END OF THIS STAGE.
4. TRAFFIC SIGNAL POLE AND ADJACENT PULL BOX, AND CONDUIT SHOWN FOR REFERENCE ONLY, SEE SHEET E-53 FOR INSTALLATION.

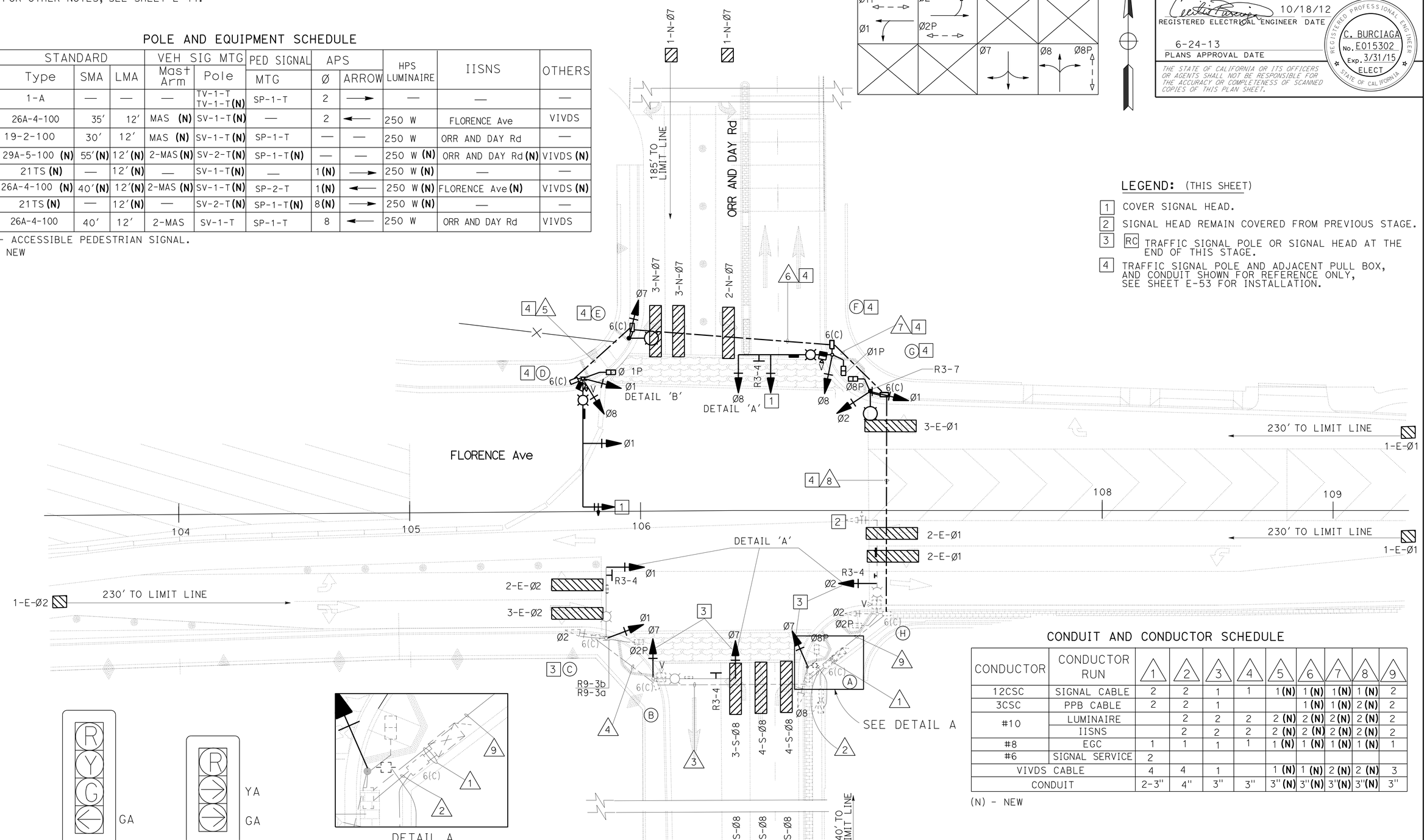

DETAIL 'A' DETAIL 'B'

NO SCALE

CONDUIT AND CONDUCTOR SCHEDULE

CONDUCTOR	CONDUCTOR RUN	1	2	3	4	5	6	7	8	9
12CSC	SIGNAL CABLE	2	2	1	1	1 **(N)**	1 **(N)**	1 **(N)**	1 **(N)**	2
3CSC	PPB CABLE	2	2	1			1 **(N)**	1 **(N)**	2 **(N)**	2
#10	LUMINAIRE		2	2	2	2 **(N)**	2 **(N)**	2 **(N)**	2 **(N)**	2
	IISNS		2	2	2	2 **(N)**	2 **(N)**	2 **(N)**	2 **(N)**	2
#8	EGC	1	1	1	1	1 **(N)**	1 **(N)**	1 **(N)**	1 **(N)**	1
#6	SIGNAL SERVICE	2								
VIVDS CABLE		4	4	1		1 **(N)**	1 **(N)**	2 **(N)**	2 **(N)**	3
CONDUIT		2-3"	4"	3"	3"	3" **(N)**	3" **(N)**	3" **(N)**	3" **(N)**	3"

(N) - NEW

FLORENCE Ave & ORR AND DAY Rd
(STAGE 2 PHASE 2)

APPROVED FOR ELECTRICAL WORK ONLY

MODIFY SIGNAL AND LIGHTING (CITY STREET LOCATION 3)

SCALE: 1" = 20′

E-52

STATE OF CALIFORNIA - DEPARTMENT OF TRANSPORTATION
Caltrans® TRAFFIC DESIGN

FUNCTIONAL SUPERVISOR: YI TSAU
CALCULATED-DESIGNED BY: QUINCIE TRAN
CHECKED BY: CECILIO BURCIAGA
REVISED BY / DATE REVISED

LAST REVISION 10-31-12
DATE PLOTTED => 26-JUN-2013
TIME PLOTTED => 19:33

Dist	COUNTY	ROUTE	POST MILES TOTAL PROJECT	SHEET No.	TOTAL SHEETS
07	LA	5	0.0/7.6	521	985

REGISTERED ELECTRICAL ENGINEER 10/18/12 DATE

6-24-13
PLANS APPROVAL DATE

REGISTERED PROFESSIONAL ENGINEER C. BURCIAGA No. E015302 Exp. 3/31/15 ELECT STATE OF CALIFORNIA

THE STATE OF CALIFORNIA OR ITS OFFICERS OR AGENTS SHALL NOT BE RESPONSIBLE FOR THE ACCURACY OR COMPLETENESS OF SCANNED COPIES OF THIS PLAN SHEET.

NOTES: (THIS SHEET)

1. FOR OTHER NOTES, SEE SHEET E-44.
2. SEE STAGING PLANS FOR INSTALLATION OF CONTROLLER CABINET, SERVICE EQUIPMENT ENCLOSURE AND OTHER PERTINENT EQUIPMENT FOR THIS TRAFFIC SIGNAL SYSTEM.
3. SEE STAGING PLANS FOR INSTALLATION OF CONTROLLER CABINET, SERVICE CABINET AND OTHER PERTINENT EQUIPMENT FOR THIS TRAFFIC SIGNAL SYSTEM.
4. RC SIGNAL EQUIPMENT AND AB CONDUIT FROM STAGING PLANS THAT ARE NOT USED IN THIS FINAL SIGNAL PLAN, OR AS DIRECTED BY THE ENGINEER.

POLE AND EQUIPMENT SCHEDULE

No.	STANDARD Type	STANDARD SMA	STANDARD LMA	VEH SIG MTG Mast Arm	VEH SIG MTG Pole	PED SIGNAL MTG	APS Ø	APS ARROW	HPS LUMINAIRE	IISNS	OTHERS
A	1-A	-	-	-	TV-2-T	SP-1-T	2	→	-	-	-
B	26A-4-100	35′	12′	2-MAS	SV-1-T	-	2	←	250 W	FLORENCE Ave	VIVDS
C	1-A	-	-	-	TV-2-T	SP-1-T	-	-	-	-	-
D	29A-5-100	55′	12′	2-MAS	SV-1-T	SP-1-T	-	-	250 W	ORR AND DAY Rd	VIVDS
E	21TS	-	12′	-	SV-2-T	-	6	→	250 W	-	-
F	26A-4-100	40′	12′	2-MAS	SV-1-T	SP-1-T	6	←	250 W	FLORENCE Ave	VIVDS
G	21TS	-	12′	-	SV-2-T	SP-1-T	8	→	250 W	-	-
H	26A-4-100	40′	12′	2-MAS	SV-1-T	SP-1-T	8	←	250 W	ORR AND DAY Rd	VIVDS

APS - ACCESSIBLE PEDESTRIAN SIGNAL.

CONDUIT AND CONDUCTOR SCHEDULE

CONDUCTOR	CONDUCTOR RUN	1	2	3	4	5	6	7	8	9	10
28CSC	C1	2	2	1	1	1	1	1	1	1	1
	C2	2	2	1	1	1	1	1	1	1	1
#10	LUMINAIRE		2	2	2	2			2	2	2
	ISSNS		2	2	2	2			2	2	2
#8	EGC	1	1	1	1	1	1	1	1	1	1
#6	SIGNAL SERVICE	2									
DLC	Ø1	1	1							1	1
	Ø2	3	3	3	3						
	Ø5	2	2	2	2						
	Ø6	3	3							3	3
	Ø7	4	4					4	4	4	4
	Ø8	3	3								
TOTAL		16	8	5	5			4	4	8	8
VIVDS CABLE		4	2	2	1	1			1	1	2
CONDUIT		2-3"	3"	3"	3"	3"	3"	3"	3"	3"	3"

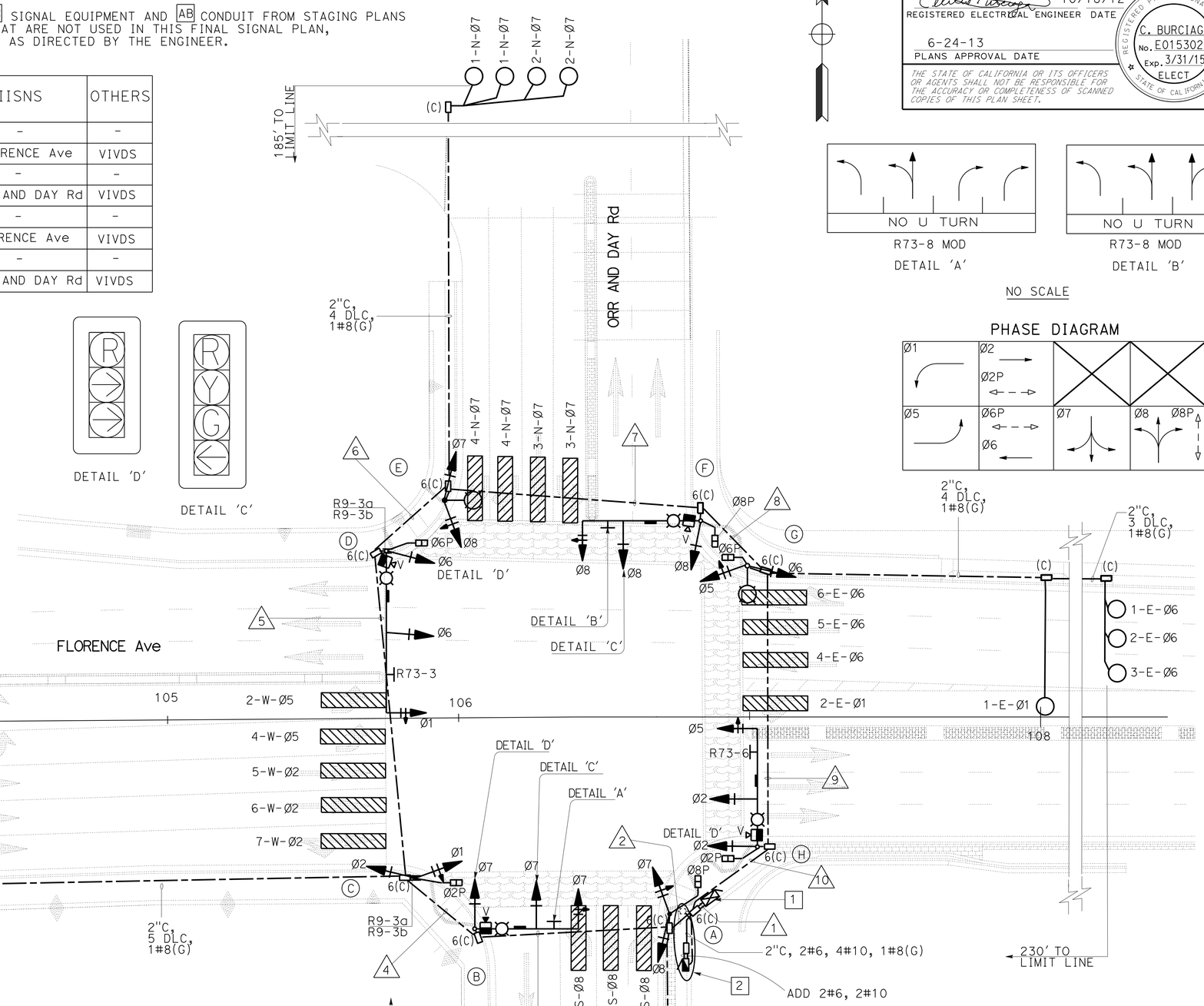

R73-8 MOD DETAIL 'A'

R73-8 MOD DETAIL 'B'

NO SCALE

PHASE DIAGRAM

LEGEND: (THIS SHEET)

1. INSTALL ECONOLITE ASC/3 NEMA TS2 CONTROLLER ASSEMBLY AND GPS EQUIPMENT IN TYPE TS2 P ALUMINUM CABINET. INSTALL BATTERY BACKUP SYSTEM AND CABINET.
2. FOR REFERENCE ONLY, SEE E-18 FOR INSTALLATION.

FLORENCE Ave & ORR AND DAY Rd (FINAL)

APPROVED FOR ELECTRICAL WORK ONLY

MODIFY SIGNAL AND LIGHTING (CITY STREET LOCATION 3)

SCALE: 1" = 20′

E-53

STATE OF CALIFORNIA - DEPARTMENT OF TRANSPORTATION
Caltrans® **TRAFFIC DESIGN**
FUNCTIONAL SUPERVISOR: YI TSAU
CALCULATED-DESIGNED BY: CECILIO BURCIAGA
CHECKED BY: QUINCIE TRAN
REVISED BY / DATE REVISED

LAST REVISION 10-31-12 | DATE PLOTTED => 26-JUN-2013 | TIME PLOTTED => 19:33

Dist	COUNTY	ROUTE	POST MILES TOTAL PROJECT	SHEET No.	TOTAL SHEETS
07	LA	5	0.0/7.6	522	985

REGISTERED ELECTRICAL ENGINEER 10/18/12 DATE

6-24-13
PLANS APPROVAL DATE

REGISTERED PROFESSIONAL ENGINEER C. BURCIAGA No. E015302 Exp. 3/31/15 ELECT STATE OF CALIFORNIA

THE STATE OF CALIFORNIA OR ITS OFFICERS OR AGENTS SHALL NOT BE RESPONSIBLE FOR THE ACCURACY OR COMPLETENESS OF SCANNED COPIES OF THIS PLAN SHEET.

NOTES: (THIS SHEET)

1. FOR OTHER NOTES, SEE SHEET E-44.
2. DETECTION ZONES MUST BE ADJUSTED WITH SHIFT IN LANES IN STAGE STAGE 2 PHASE 1, OR AS DIRECTED BY THE ENGINEER.

LEGEND: (THIS SHEET)

1. INSTALL ECONOLITE ASC/3 NEMA TS2 CONTROLLER ASSEMBLY AND GPS EQUIPMENT IN TYPE TS2 P ALUMINUM CABINET. INSTALL BATTERY BACKUP SYSTEM.
2. INSTALL 120/240 V TYPE III-BF SERVICE EQUIPMENT ENCLOSURE FOR SANTA FE SPRINGS WITH:
   100 A, 240 V, 2P, CB-MAIN
   30 A, 240 V, 2P, CB-INTERSECTION LTG (UNMETERED)
   50 A, 120 V, 1P, CB-TRAFFIC SIGNAL
   20 A, 240 V, 2P, CB-IISNS
   15 A, 120 V, 1P, CB-PEC
   11451 ½ FLORENCE Ave, SANTA FE SPRINGS
3. COVER SIGNAL HEAD AT THE BEGINNING OF STAGE 2 PHASE 1.
4. INSTALL 3"C, MT, SCE WILL INSTALL CONDUCTORS.

CONDUIT AND CONDUCTOR SCHEDULE

CONDUCTOR	CONDUCTOR RUN	1	2	3	4	5
28CSC	C1	1		1	1	1
	C2	1	1		1	1
#10	LUMINAIRE		2	2	2	2
	IISNS			2	2	2
#8	EGC	1	1	1	1	1
#6	SIGNAL SERVICE	2				
VIVDS CABLE		3	1	1	1	1
CONDUIT		2-3"	2"	3"	3"	3"

STAGE 1 PHASE 2 - PHASE DIAGRAM
STAGE 2 PHASE 1 - PHASE DIAGRAM

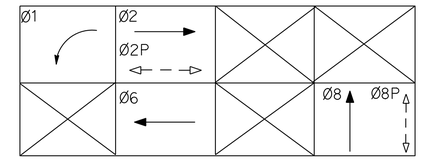

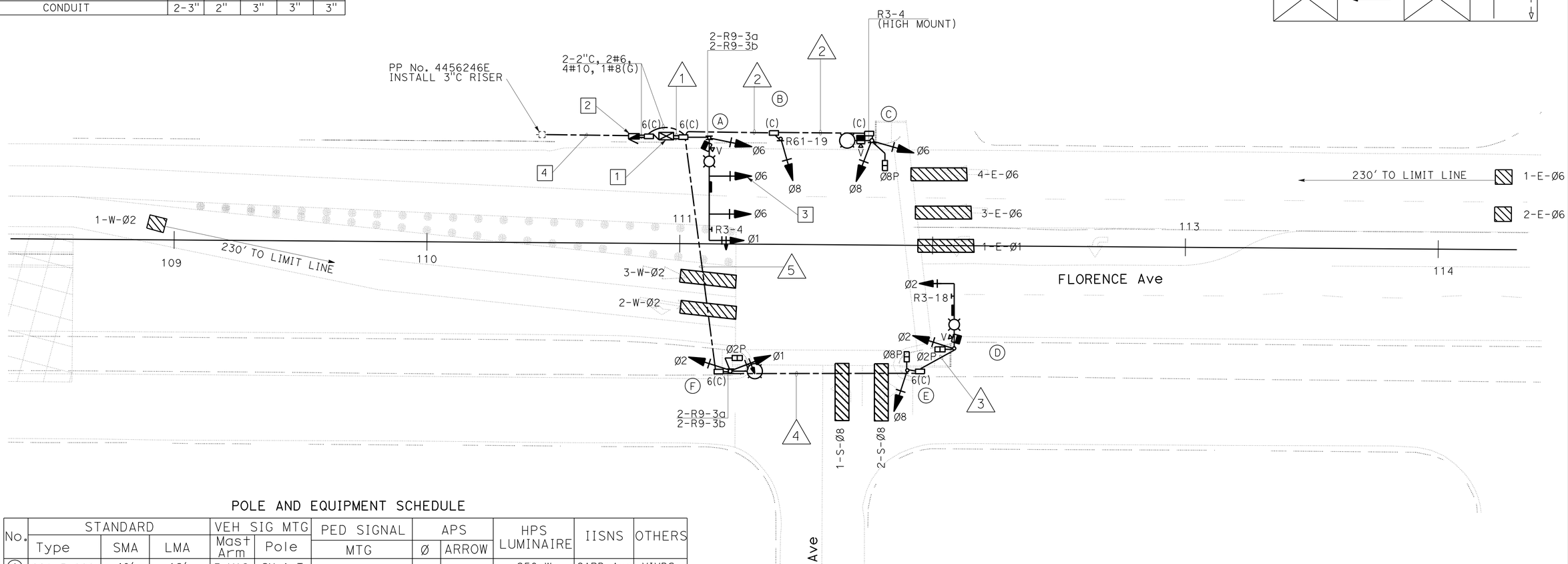

POLE AND EQUIPMENT SCHEDULE

No.	STANDARD Type	SMA	LMA	VEH SIG MTG Mast Arm	Pole	PED SIGNAL MTG	APS Ø	ARROW	HPS LUMINAIRE	IISNS	OTHERS
A	29A-5-100	40'	12'	3-MAS	SV-1-T	-	-	-	250 W	GARD Ave	VIVDS
B	1-A	-	-	-	TV-1-T	-	-	-	-	-	-
C	21TS	-	12'	-	SV-2-T	SP-1-T	8	←	250 W	-	VIVDS
D	19A-3-100	25'	12'	MAS	SV-1-T	SP-1-T	8	←	250 W	GARD Ave	VIVDS
E	1-A	-	-	-	TV-1-T	SP-1-T	2	→	-	-	-
F	21TS	-	12'	-	SV-2-T	SP-1-T	2	←	250 W	-	-

APS - ACCESSIBLE PEDESTRIAN SIGNAL.

FLORENCE Ave & GARD Ave
(STAGE 1 PHASE 2, STAGE 2 PHASE 1)

APPROVED FOR ELECTRICAL WORK ONLY

TEMPORARY SIGNAL SYSTEM
(CITY STREET LOCATION 4)

SCALE: 1" = 20'

E-54

STATE OF CALIFORNIA - DEPARTMENT OF TRANSPORTATION
Caltrans® **TRAFFIC DESIGN**
FUNCTIONAL SUPERVISOR: YI TSAU
CALCULATED-DESIGNED BY: QUINCIE TRAN
CHECKED BY: CECILIO BURCIAGA
REVISED BY / DATE REVISED

LAST REVISION 02-15-13 | DATE PLOTTED => 26-JUN-2013 | TIME PLOTTED => 19:33

Dist	COUNTY	ROUTE	POST MILES TOTAL PROJECT	SHEET No.	TOTAL SHEETS
07	LA	5	0.0/7.6	523	985

REGISTERED ELECTRICAL ENGINEER 10/18/12 DATE

6-24-13
PLANS APPROVAL DATE

REGISTERED PROFESSIONAL ENGINEER C. BURCIAGA No. E015302 Exp. 3/31/15 ELECT STATE OF CALIFORNIA

THE STATE OF CALIFORNIA OR ITS OFFICERS OR AGENTS SHALL NOT BE RESPONSIBLE FOR THE ACCURACY OR COMPLETENESS OF SCANNED COPIES OF THIS PLAN SHEET.

NOTE: (THIS SHEET)

1. FOR OTHER NOTES, SEE SHEET E-44.

EXISTING POLE AND EQUIPMENT SCHEDULE

No.	STANDARD Type	STANDARD SMA	STANDARD LMA	VEH SIG MTG Mast Arm	VEH SIG MTG Pole	PED SIGNAL MTG	PPB Ø	PPB ARROW	HPS LUMINAIRE	STREET NAME SIGN	OTHERS
(A)	26-3-80	40′	12′	MAT MAT(N)	SV-2-T	SP-1-T	2	←	250 W	Studebaker Rd	VIVDS
(B)	24-3-100	35′	12′	MAS	SV-1-T	SP-2-T	2	→	250 W	Florence Ave	-
(C)	15	-	6′	-	SV-1-T(N)	-	7	→	250 W	-	VIVDS
(D)	26-3-80	45′	12′	MAT MAS(N)	SV-1-T	SP-1-T	7	←	250 W	Studebaker Rd	VIVDS
(E)	1-A	-	-	-	TV-1-T	SP-1-T	1	→	-	-	-
(F)	26-4-100	40′	15′	MAS	SV-1-T	-	1	←	250 W	Florence Ave	-
(G)	1-A	-	-	-	TV-1-T(N)	SP-1-T	-	-	-	-	-

(N) - NEW

EXISTING CONDUIT AND CONDUCTOR SCHEDULE

CONDUCTOR	CONDUCTOR RUN	1	2	3	4	5	6	7
12 CSC		1	2	3	1	2	4	8
3 CSC		1	2	2	1	2	3	6
#10	LUMINAIRE	2	2	2	2	2	2	
#8	SERVICE			2				
EVP CABLE						1	2	2
VIVDS		1	1			1	2	4
6 STRAND SMFO								1
CONDUIT		2"	3"	2"	2"	3"	3"	3-2½"

LEGEND: (THIS SHEET)

1 COVER SIGNAL HEAD.
2 RR SIGNAL HEAD, SEE SHEET E-57.

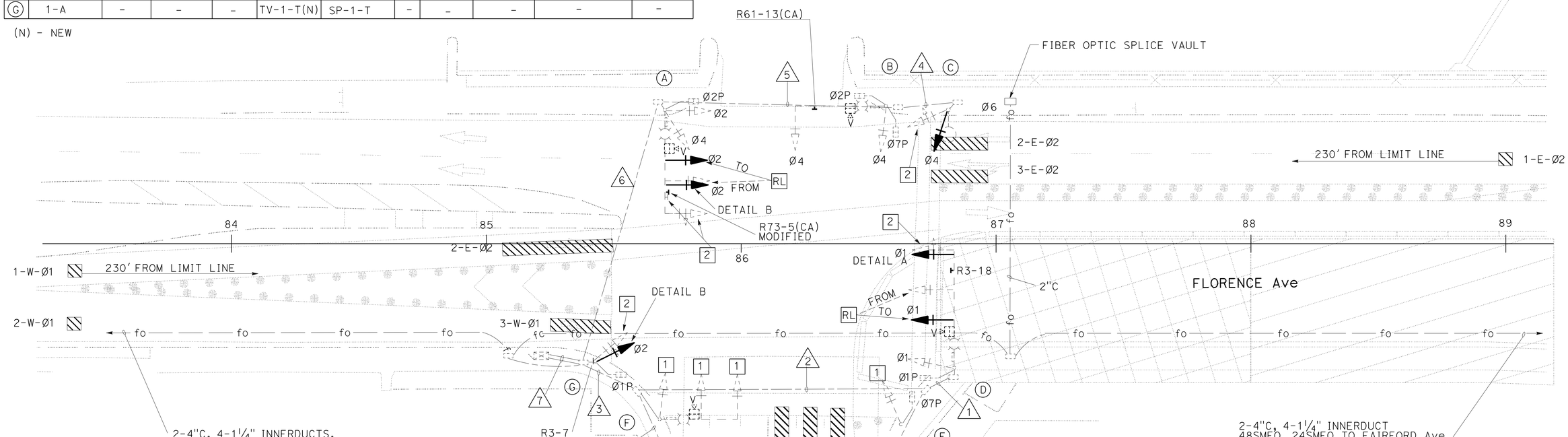

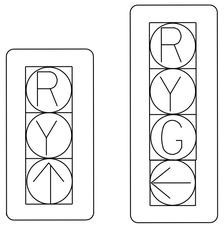

DETAIL A DETAIL B

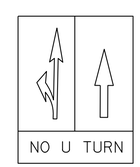

R73-5(CA) MODIFIED

STAGE 1 PHASE 2 & 3 PHASE DIAGRAM

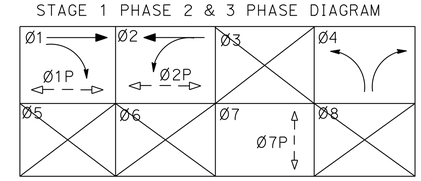

FLORENCE Ave & STUDEBAKER Rd (STAGE 1 PHASE 2 & 3)

APPROVED FOR ELECTRICAL WORK ONLY

MODIFY SIGNAL AND LIGHTING (CITY STREET LOCATION 5)

SCALE: 1" = 20′

E-55

STATE OF CALIFORNIA - DEPARTMENT OF TRANSPORTATION
Caltrans® TRAFFIC DESIGN
FUNCTIONAL SUPERVISOR: YI TSAU
CALCULATED-DESIGNED BY: QUINCIE TRAN
CHECKED BY: CECILIO BURCIAGA
REVISED BY / DATE REVISED

LAST REVISION 10-31-12 | DATE PLOTTED => 26-JUN-2013 | TIME PLOTTED => 19:33

Dist	COUNTY	ROUTE	POST MILES TOTAL PROJECT	SHEET No.	TOTAL SHEETS
07	LA	5	0.0/7.6	524	985

REGISTERED ELECTRICAL ENGINEER 10/18/12 DATE

6-24-13
PLANS APPROVAL DATE

REGISTERED PROFESSIONAL ENGINEER C. BURCIAGA No. E015302 Exp. 3/31/15 ELECT STATE OF CALIFORNIA

THE STATE OF CALIFORNIA OR ITS OFFICERS OR AGENTS SHALL NOT BE RESPONSIBLE FOR THE ACCURACY OR COMPLETENESS OF SCANNED COPIES OF THIS PLAN SHEET.

NOTE: (THIS SHEET)

1. FOR OTHER NOTES, SEE SHEET E-44.

EXISTING POLE AND EQUIPMENT SCHEDULE

No.	STANDARD Type	STANDARD SMA	STANDARD LMA	VEH SIG MTG Mast Arm	VEH SIG MTG Pole	PED SIGNAL MTG	PPB Ø	PPB ARROW	HPS LUMINAIRE	STREET NAME SIGN	OTHERS
A	26-3-80	40′	12′	MAT MAS	SV-2-T	SP-1-T	2	←	250 W	Studebaker Rd	VIVDS
B	24-3-100	35′	12′	MAS	SV-1-T	SP-2-T	2	→	250 W	Florence Ave	-
C	15	-	6′	-	SV-1-T	-	7	→	250 W	-	VIVDS
D	26-3-80	45′	12′	MAT MAT (N)	SV-1-T	SP-1-T	7	←	250 W	Studebaker Rd	VIVDS
E	1-A	-	-	-	TV-1-T	SP-1-T	1	→	-	-	-
F	26-4-100	40′	15′	MAS	SV-1-T	-	1	←	250 W	Florence Ave	-
G	1-A	-	-	-	TV-1-T	SP-1-T	-	-	-	-	-
H	19-3-100(N)*	15′	12′	MAS	SV-1-T(N)	-	-	-	250 W (N)	-	-

(N) - NEW
* - INSTALL TRAFFIC SIGNAL POLE ON STEEL PLATE WITH BLOCKS. SEE SES-13 THRU SES-15 FOR DETAILS.

EXISTING CONDUIT AND CONDUCTOR SCHEDULE

CONDUCTOR	CONDUCTOR RUN	1	2	3	4	5	6	7
12 CSC		1	2	3	1	2	4	8
3 CSC		1	2	2	1	2	3	6
#10	LUMINAIRE	2	2	2	2	2	2	
#8	SERVICE			2				
EVP CABLE						1	2	2
VIVDS		1	1			1	2	4
6 STRAND SMFO								1
CONDUIT		2"	3"	2"	2"	3"	3"	3-2½"

LEGEND: (THIS SHEET)

1. SIGNAL HEAD REMAIN COVERED FROM PREVIOUS STAGE.
2. INSTALL 2"C, 1-12 CSC, 2#10.
3. RR R73-5(CA) MODIFIED, INSTALL R73-3(CA).

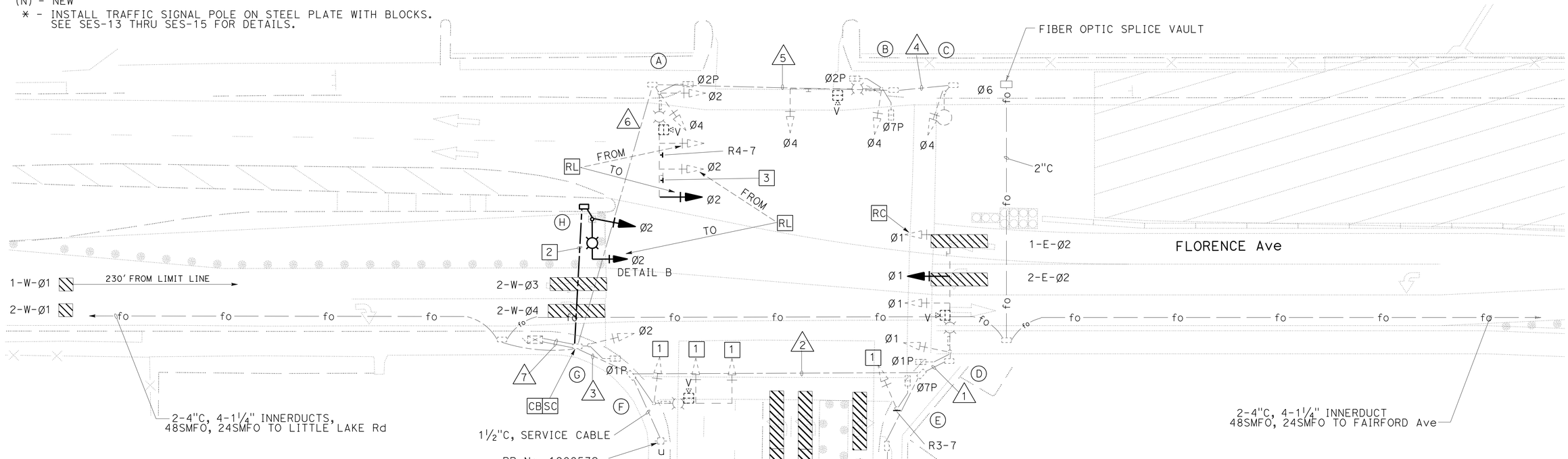

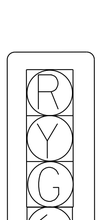

DETAIL B

STAGE 2 PHASE 1 & 2 PHASE DIAGRAM

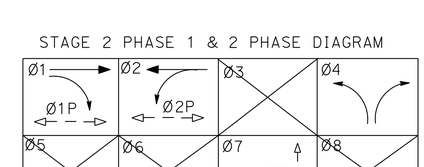

FLORENCE Ave & STUDEBAKER Rd (STAGE 2 PHASE 1 & 2)

APPROVED FOR ELECTRICAL WORK ONLY

MODIFY SIGNAL AND LIGHTING (CITY STREET LOCATION 5)

SCALE: 1" = 20′

E-56

STATE OF CALIFORNIA - DEPARTMENT OF TRANSPORTATION
Caltrans® TRAFFIC DESIGN
FUNCTIONAL SUPERVISOR: YI TSAU
CALCULATED-DESIGNED BY: QUINCIE TRAN
CHECKED BY: CECILIO BURCIAGA
REVISED BY / DATE REVISED

LAST REVISION 10-31-12
DATE PLOTTED => 26-JUN-2013
TIME PLOTTED => 19:33

Dist	COUNTY	ROUTE	POST MILES TOTAL PROJECT	SHEET No.	TOTAL SHEETS
07	LA	5	0.0/7.6	525	985

REGISTERED ELECTRICAL ENGINEER 10/18/12 DATE

6-24-13
PLANS APPROVAL DATE

REGISTERED PROFESSIONAL ENGINEER C. BURCIAGA No. E015302 Exp. 3/31/15 ELECT STATE OF CALIFORNIA

THE STATE OF CALIFORNIA OR ITS OFFICERS OR AGENTS SHALL NOT BE RESPONSIBLE FOR THE ACCURACY OR COMPLETENESS OF SCANNED COPIES OF THIS PLAN SHEET.

NOTE: (THIS SHEET)

1. FOR OTHER NOTES, SEE SHEET E-44.

EXISTING POLE AND EQUIPMENT SCHEDULE

No.	STANDARD Type	STANDARD SMA	STANDARD LMA	VEH SIG MTG Mast Arm	VEH SIG MTG Pole	PED SIGNAL MTG	PPB Ø	PPB ARROW	HPS LUMINAIRE	STREET NAME SIGN	OTHERS
A	26-3-80	40′	12′	MAT MAS	SV-2-T	SP-1-T	2	←	250 W	Studebaker Rd	VIVDS
B	24-3-100	35′	12′	MAS	SV-1-T	SP-2-T	2	→	250 W	Florence Ave	-
C	15	-	6′	-	SV-1-T	-	7	→	250 W	-	VIVDS
D	26-3-80	25′	12′	MAT MAS	SV-1-T	SP-1-T	7	←	250 W	Studebaker Rd	VIVDS
E	1-A	-	-	-	TV-1-T	SP-1-T	6	→	-	-	-
F	26-4-100	-	15′	MAS	SV-1-T	-	6	←	250 W	Florence Ave	-
G	1-A	-	-	-	TV-1-T	SP-1-T	-	-	-	-	-

EXISTING CONDUIT AND CONDUCTOR SCHEDULE

CONDUCTOR	CONDUCTOR RUN	△1	△2	△3	△4	△5	△6	△7
12 CSC		1	2	3	1	2	4	8
3 CSC		1	2	2	1	2	3	6
#10	LUMINAIRE	2	2	2	2	2	2	
#8	SERVICE			2				
EVP CABLE						1	2	2
VIVDS		1	1			1	2	4
6 STRAND SMFO								1
CONDUIT		2"	3"	2"	2"	3"	3"	3-2½"

LEGEND: (THIS SHEET)

1. RC R73-3(CA), REINSTALL R73-5(CA).
2. REINSTALL SIGNAL HEAD, SEE SHEET E-55.

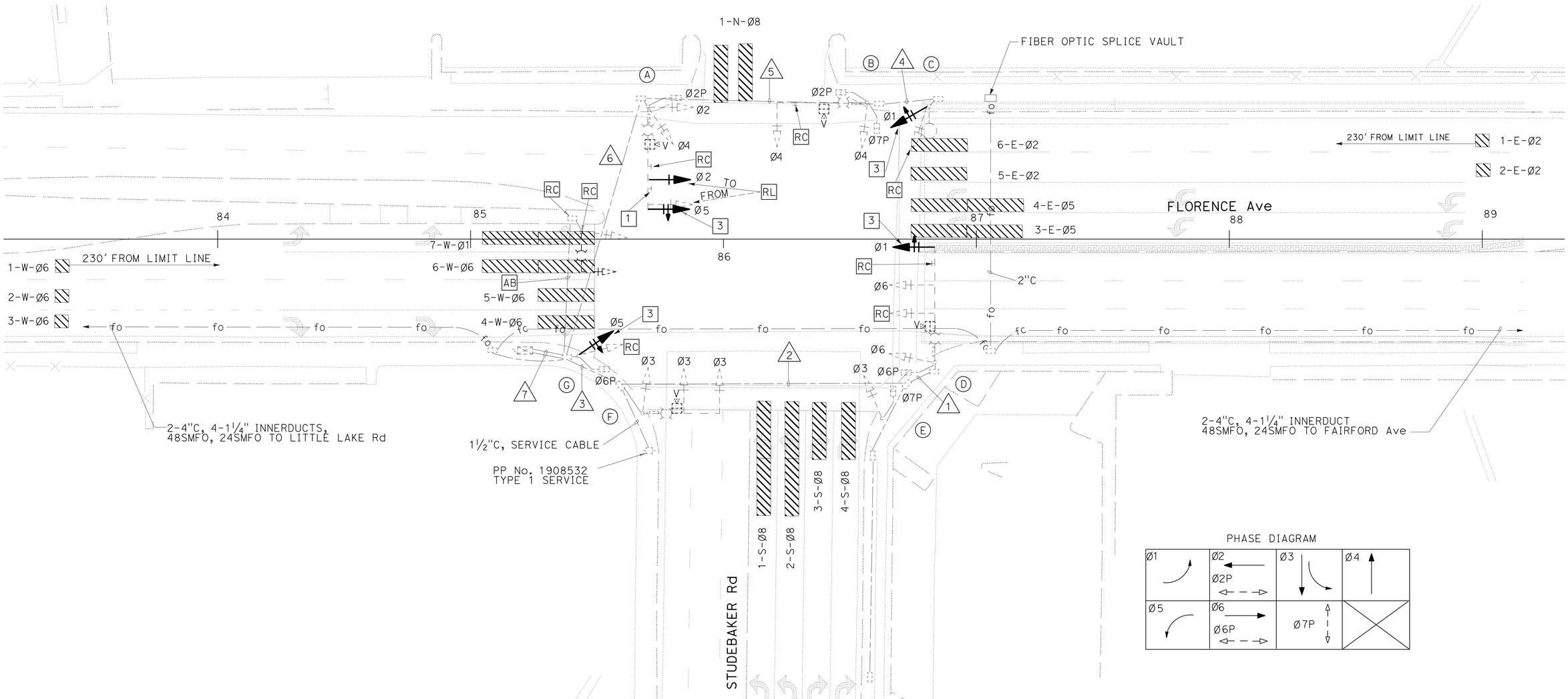

PHASE DIAGRAM

FLORENCE Ave & STUDEBAKER Rd (FINAL)

APPROVED FOR ELECTRICAL WORK ONLY

MODIFY SIGNAL AND LIGHTING (CITY STREET LOCATION 5)

SCALE: 1" = 20′

E-57

STATE OF CALIFORNIA - DEPARTMENT OF TRANSPORTATION
Caltrans® **TRAFFIC DESIGN**
FUNCTIONAL SUPERVISOR: YI TSAU
CALCULATED-DESIGNED BY: QUINCIE TRAN
CHECKED BY: CECILIO BURCIAGA
REVISED BY / DATE REVISED

LAST REVISION 10-31-12 | DATE PLOTTED => 26-JUN-2013 | TIME PLOTTED => 19:33

Dist	COUNTY	ROUTE	POST MILES TOTAL PROJECT	SHEET No.	TOTAL SHEETS
07	LA	5	0.0/7.6	526	985

REGISTERED ELECTRICAL ENGINEER 10/18/12 DATE

6-24-13
PLANS APPROVAL DATE

REGISTERED PROFESSIONAL ENGINEER C. BURCIAGA No. E015302 Exp. 3/31/15 ELECT STATE OF CALIFORNIA

THE STATE OF CALIFORNIA OR ITS OFFICERS OR AGENTS SHALL NOT BE RESPONSIBLE FOR THE ACCURACY OR COMPLETENESS OF SCANNED COPIES OF THIS PLAN SHEET.

WIRE USAGE IN MVDS CABLE

MS CONNECTOR PIN ID	WIRE NUMBER	PAIR NUMBER	FUNCTION
A	1	1	DETECTOR #1
B	2	1	DETECTOR #1 RETURN
C	3	2	DETECTOR #2
D	4	2	DETECTOR #2 RETURN
E	5	3	DETECTOR #3
F	6	3	DETECTOR #3 RETURN
G	7	4	DETECTOR #4
H	8	4	DETECTOR #4 RETURN
J	9	5	DETECTOR #5
K	10	5	DETECTOR #5 RETURN
L	11	6	DETECTOR #6
M	12	6	DETECTOR #6 RETURN
N	13	7	DETECTOR #7
P	14	7	DETECTOR #7 RETURN
R	15	8	DETECTOR #8
S	16	8	DETECTOR #8 RETURN
T	17	9	RS232 RX (RECEIVE)
U	18	9	RS232 G (RECEIVE GROUND)
V	19	10	RS232 TX (TRANSMIT)
W	20	10	RS232 G (TRANSMIT GROUND)
f	21	11	12-24 VOLTS AC/DC POWER
g	22	11	12-24 VOLTS AC/DC POWER

NOTES: (THIS SHEET ONLY)

1 MOUNTING PLATE, ARTICULATING JOINT AND RADAR UNIT ASSEMBLY CONNECTIONS PER MANUFACTURER'S RECOMMENDATION.

A SURGE PROTECTOR(S)

MTA = MVDS TERMINATION ASSEMBLY
PDA = POWER DISTRIBUTION ASSEMBLY

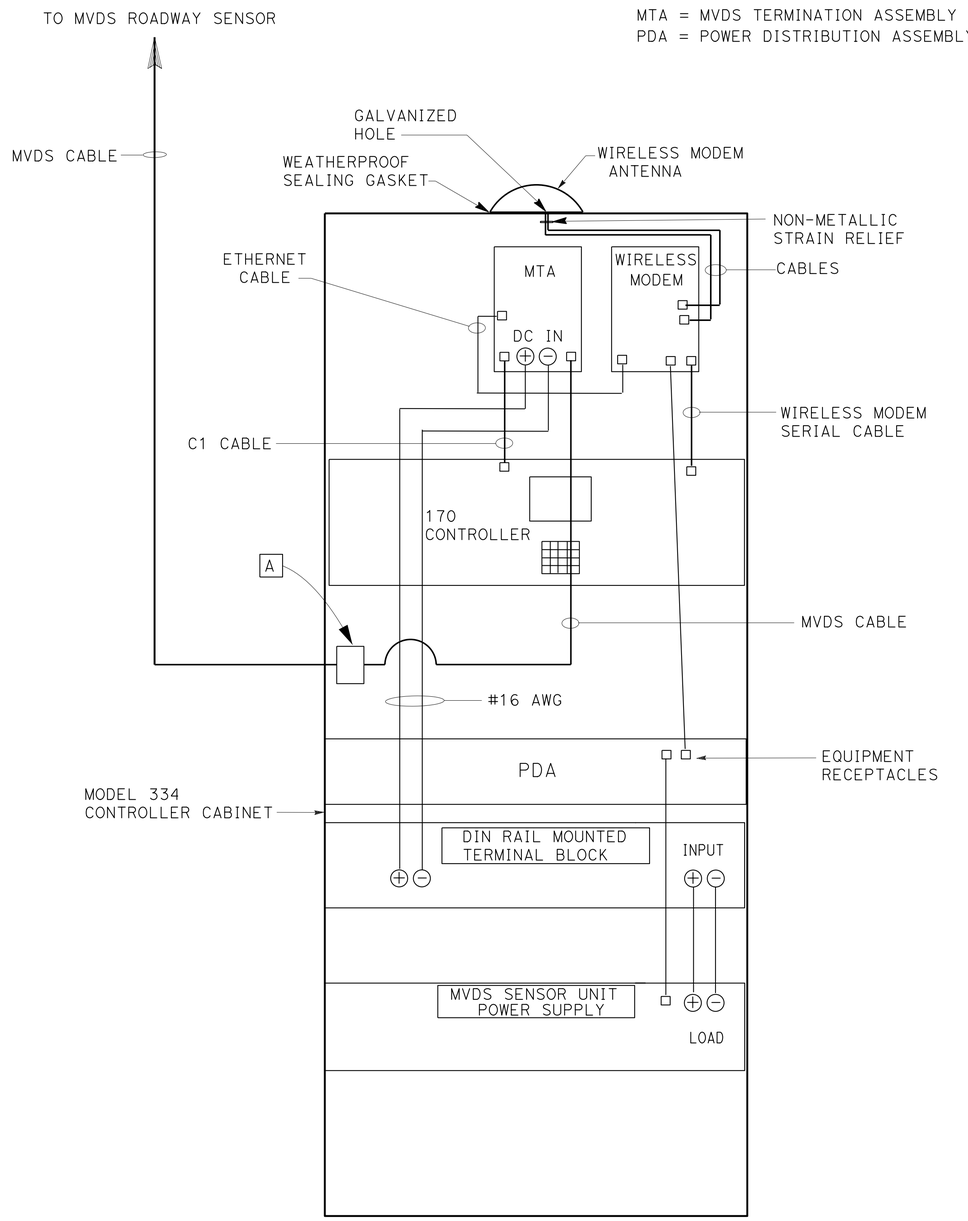

DETAIL 'A'

TYPICAL ENCLOSURE LAYOUT

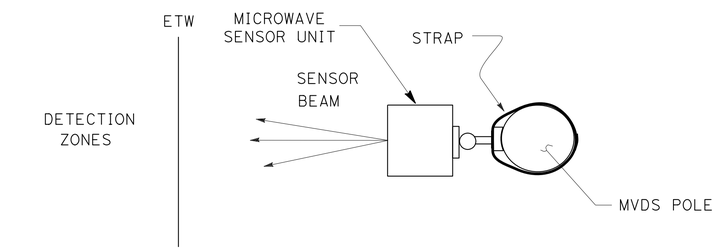

SECTION A-A

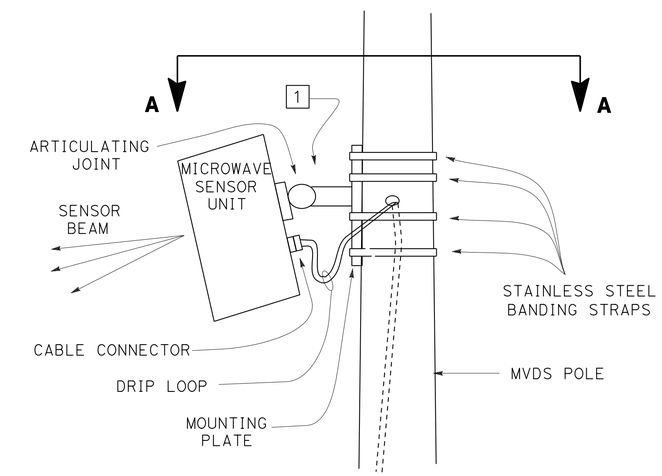

ELEVATION

DETAIL 'B'

MICROWAVE VEHICLE DETECTION SYSTEM (TEMPORARY)

ELECTRICAL DETAILS

NO SCALE

E-58

STATE OF CALIFORNIA - DEPARTMENT OF TRANSPORTATION
Caltrans TRAFFIC DESIGN

FUNCTIONAL SUPERVISOR: YI TSAU
CALCULATED-DESIGNED BY: QUINCIE TRAN
CHECKED BY: CECILIO BURCIAGA
REVISED BY
DATE REVISED

LAST REVISION 09-21-12
DATE PLOTTED => 26-JUN-2013
TIME PLOTTED => 19:33

Dist	COUNTY	ROUTE	POST MILES TOTAL PROJECT	SHEET No.	TOTAL SHEETS
07	LA	5	0.0/7.6	527	985

REGISTERED ELECTRICAL ENGINEER 10/18/12 DATE

6-24-13
PLANS APPROVAL DATE

REGISTERED PROFESSIONAL ENGINEER
C. BURCIAGA
No. E015302
Exp. 3/31/15
ELECT
STATE OF CALIFORNIA

THE STATE OF CALIFORNIA OR ITS OFFICERS OR AGENTS SHALL NOT BE RESPONSIBLE FOR THE ACCURACY OR COMPLETENESS OF SCANNED COPIES OF THIS PLAN SHEET.

LEFT RIGHT BOTH

PEDESTRIAN PUSH BUTTON SIGNS (R10-3)

DETAIL A

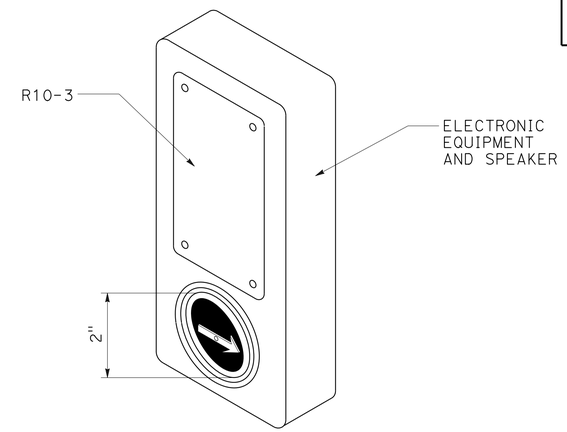

ACCESSIBLE PEDESTRIAN SIGNAL

DETAIL B

PERSON WALKING INTERVAL

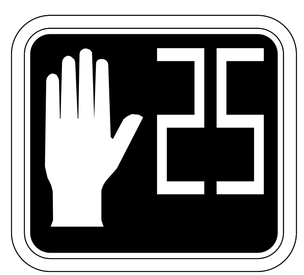

FLASHING UPRAISED HAND INTERVAL

STEADY UPRAISED HAND INTERVAL

PEDESTRIAN SIGNAL FACE

ELECTRICAL DETAILS

NO SCALE

E-59

STATE OF CALIFORNIA - DEPARTMENT OF TRANSPORTATION
Caltrans® TRAFFIC DESIGN

FUNCTIONAL SUPERVISOR: YI TSAU
CALCULATED-DESIGNED BY: JORGE FUENTES
CHECKED BY: CECILIO BURCIAGA
REVISED BY
DATE REVISED

LAST REVISION 10-31-12
DATE PLOTTED => 26-JUN-2013
TIME PLOTTED => 19:34

Dist	COUNTY	ROUTE	POST MILES TOTAL PROJECT	SHEET No.	TOTAL SHEETS
07	LA	5	0.0/7.6	528	985

REGISTERED ELECTRICAL ENGINEER 10/18/12 DATE

6-24-13
PLANS APPROVAL DATE

REGISTERED PROFESSIONAL ENGINEER C. BURCIAGA No. E015302 Exp. 3/31/15 ELECT STATE OF CALIFORNIA

THE STATE OF CALIFORNIA OR ITS OFFICERS OR AGENTS SHALL NOT BE RESPONSIBLE FOR THE ACCURACY OR COMPLETENESS OF SCANNED COPIES OF THIS PLAN SHEET.

LEGEND: (THIS SHEET)

1. SEE PLANS FOR CONDUIT SIZES & TYPES OF PULL BOXES. SEE TYPICAL LOOP LEAD-IN DETAIL AT PAVEMENT JOINT ON THIS SHEET.
2. SEE ES-5D.
3. THE CONTRACTOR MUST VERIFY ALL CONTROLLER FIELD DIMENSIONS BEFORE ORDERING OR FABRICATING MATERIAL.

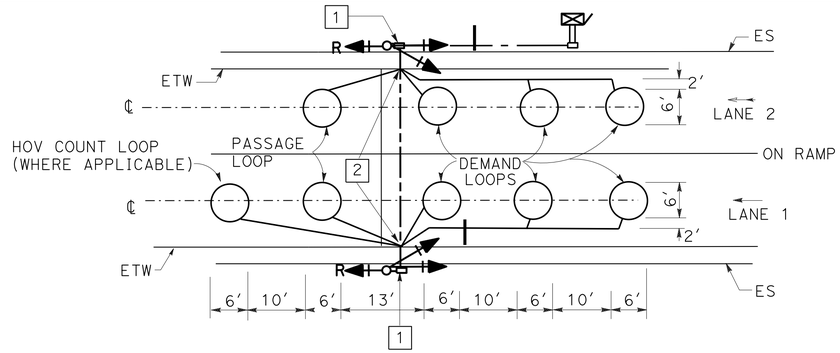

TYPICAL 2-LANE RAMP
METERING SYSTEM INSTALLATION

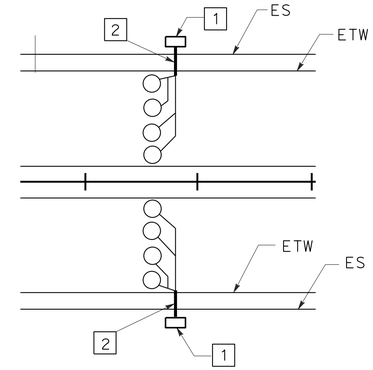

TYPICAL TRAFFIC
MONITORING LOOP CONFIGURATION

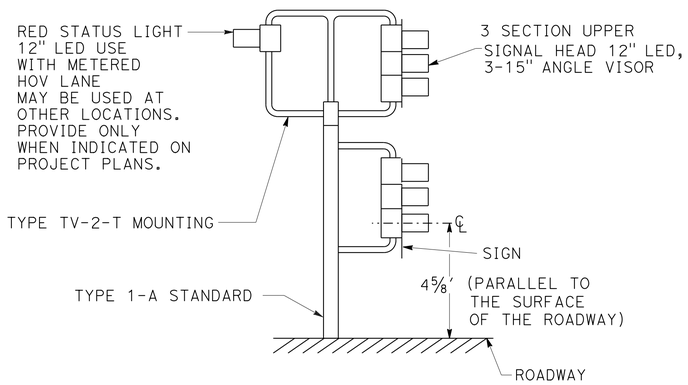

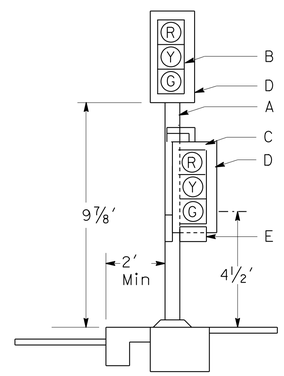

RAMP METER SIGNAL

A. TYPE 1-A SIGNAL STANDARD.

B. 3-SECTION 12" LED SIGNAL HEAD (RED, YELLOW, GREEN). 18" x 7 7/8" ANGLED VISORS ARE REQUIRED WHERE SHOWN ON PLANS.

C. 3-SECTION 12" LED SIGNAL HEAD (RED, YELLOW, GREEN). 12" FULL CIRCLE VISORS TYPE SV-1-T BRACKET MOUNTING ON SIDE OF STANDARD, AWAY FROM TRAFFIC.

D. BACKPLATE.

E. R89(CA) OR R89-1(CA) MOUNT ON BACK PLATE AND CENTER BETWEEN GREEN SECTION AND BOTTOM OF BACK PLATES AND SIDES. ATTACH WITH 1/4" x 3/4" BOLTS, HEX NUTS, PLAIN AND LOCK WASHERS.

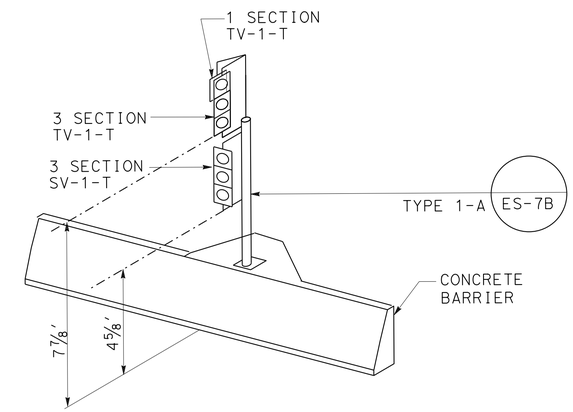

TYPICAL DETAIL FOR RAMP METER SIGNAL ON CONCRETE BARRIER

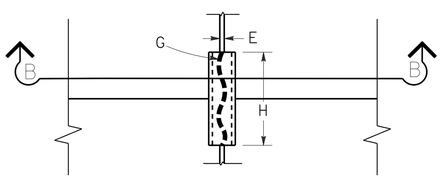

PLAN VIEW

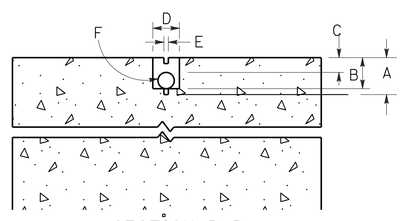

SECTION B-B

A. SAW-CUT DEPTH TO ACCOMMODATE SPECIFIED NUMBER OF CONDUCTORS WITH A MINIMUM OF 1/2" FROM TOP OF WIRE TO PAVEMENT SURFACE (3 1/4" Max).

B. SLOT SAW-CUT DEPTH TO ACCOMMODATE 1" TYPE 3 CONDUIT WITH 1/2" MINIMUM FROM TOP OF CONDUIT TO PAVEMENT SURFACE.

C. 1/2" MINIMUM BETWEEN TOP OF CONDUIT AND PAVEMENT SURFACE.

D. SAW-CUT WIDTH TO ACCOMMODATE 1" TYPE 3 CONDUIT WITH 1/2" CLEARANCE.

E. SAW-CUT 2/5" WIDE (Max).

F. 1" TYPE 3 CONDUIT, 6" LONG, PLUG BOTH ENDS WITH CAULKING COMPOUND TO KEEP OUT EPOXY.

G. CONDUCTORS WITH 1/2" MINIMUM SLACK INSIDE CONDUIT.

H. SAW-CUT LENGTH OF SLOT 1/8" LONGER THAN CONDUIT.

TYPICAL LOOP LEAD-IN
DETAIL AT PAVEMENT JOINT

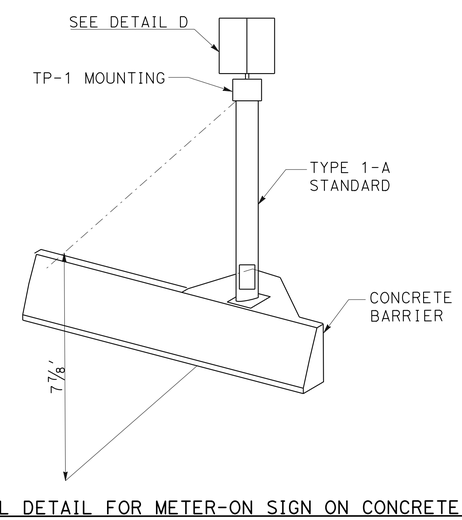

TYPICAL DETAIL FOR METER-ON SIGN ON CONCRETE BARRIER

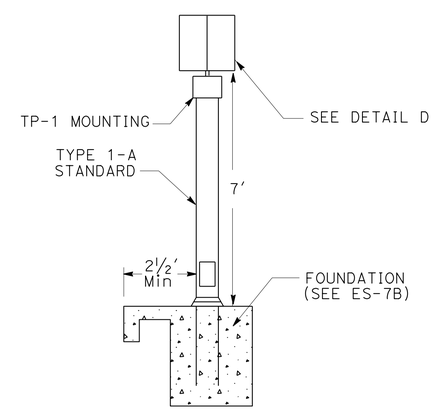

METER-ON SIGN

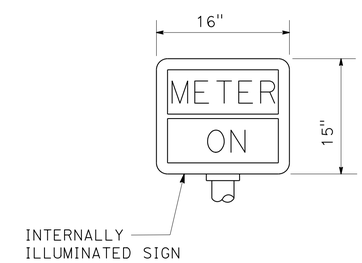

DETAIL D
METER-ON SIGN

MODIFY RAMP METERING SYSTEM

ELECTRICAL DETAILS

NO SCALE

E-60

STATE OF CALIFORNIA - DEPARTMENT OF TRANSPORTATION
Caltrans TRAFFIC DESIGN

FUNCTIONAL SUPERVISOR: YI TSAU
CALCULATED-DESIGNED BY: QUINCIE TRAN
CHECKED BY: CECILIO BURCIAGA
REVISED BY / DATE REVISED

LAST REVISION 10-31-12 | DATE PLOTTED => 26-SEP-2013 | TIME PLOTTED => 07:47

Dist	COUNTY	ROUTE	POST MILES TOTAL PROJECT	SHEET No.	TOTAL SHEETS
07	LA	5	0.0/7.6	529	985

REGISTERED ELECTRICAL ENGINEER 10/18/12 DATE

6-24-13
PLANS APPROVAL DATE

REGISTERED PROFESSIONAL ENGINEER JORGE FUENTES No. E13875 Exp. 6/30/14 ELECT STATE OF CALIFORNIA

THE STATE OF CALIFORNIA OR ITS OFFICERS OR AGENTS SHALL NOT BE RESPONSIBLE FOR THE ACCURACY OR COMPLETENESS OF SCANNED COPIES OF THIS PLAN SHEET.

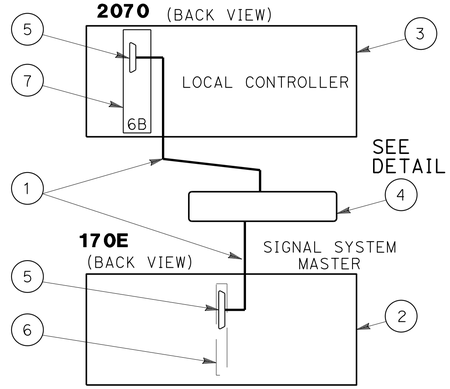

DETAIL D

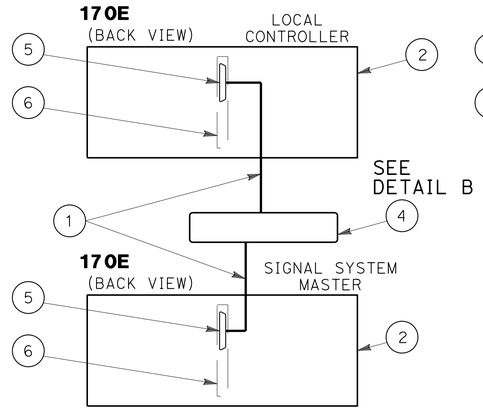

DETAIL E

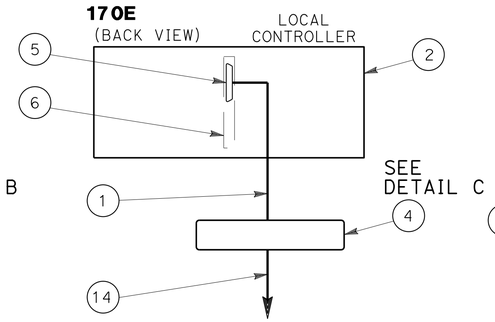

DETAIL F

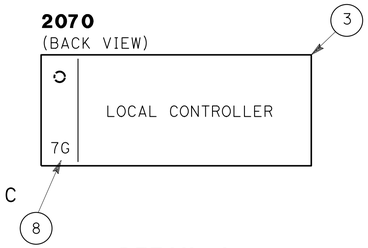

DETAIL J

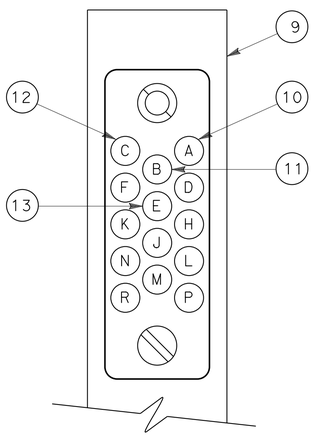

CONNECTOR C2P DETAIL

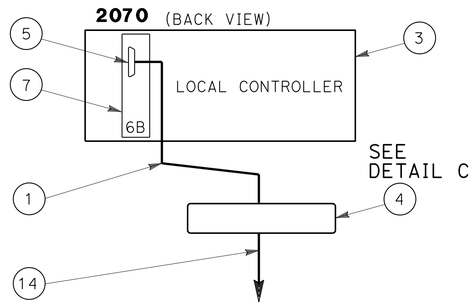

DETAIL G

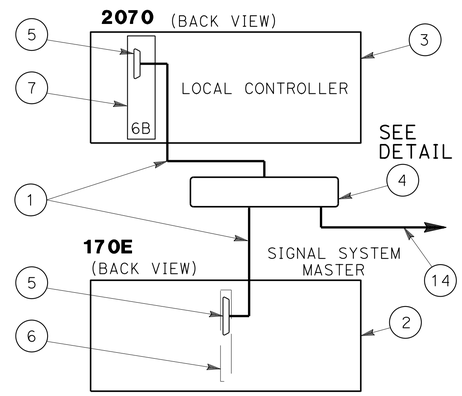

DETAIL H

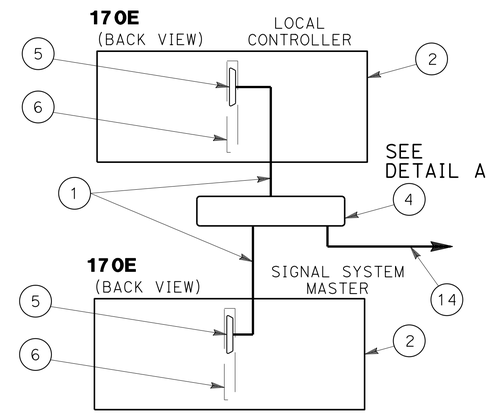

DETAIL I

LEGEND: (THIS SHEET)

1. C2 MODEM HARNESS
2. MODEL 170E CONTROLLER
3. MODEL 2070 CONTROLLER
4. TERMINAL BLOCK Ø (TBØ)
5. C2S PORT
6. MODEL 400B MODEM IN MODEM SLOT 1
7. MODEL 2070-6B MODEM IN SLOT A2
8. MODEL 2070-7G MODULE IN SLOT A1
9. CONNECTOR C2P
10. C2 A SIGNAL (WHITE)
11. C2 B SIGNAL (GREEN)
12. C2 C SIGNAL (RED)
13. C2 E SIGNAL (BLACK)
14. SIC(S) SIGNAL INTERCONNECT CABLE(S) TO OTHER CABINET(S)

LEGEND (THIS SHEET)

SIC SIGNAL INTERCONNECT CABLE
C2P C2 PLUG
C2S C2 SOCKET

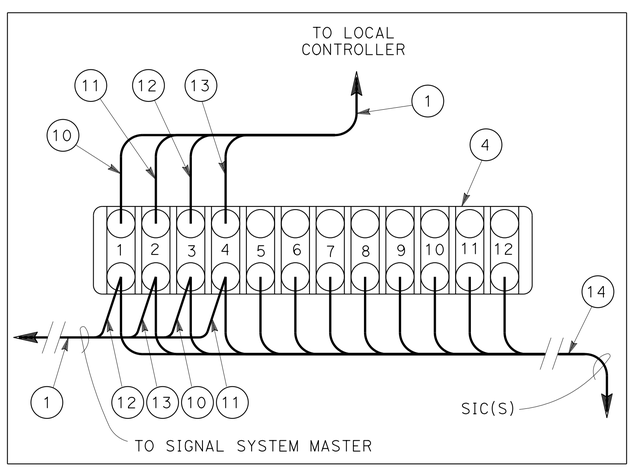

DETAIL A

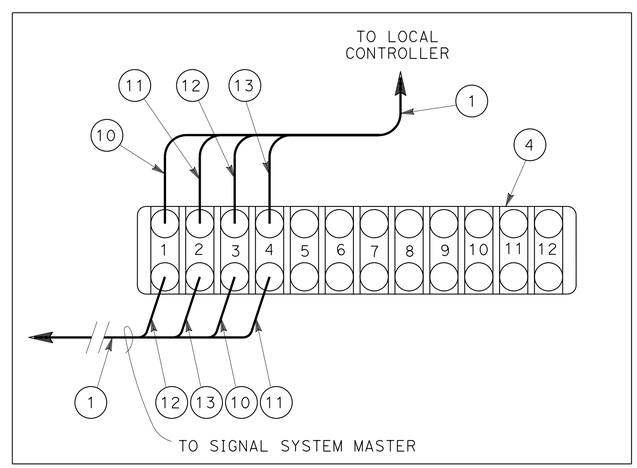

DETAIL B

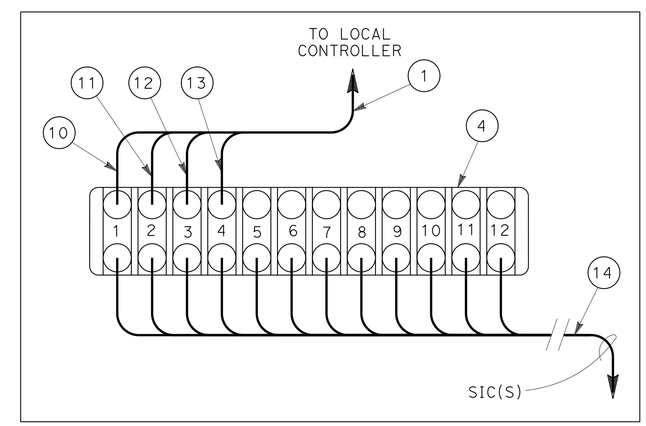

DETAIL C

TRAFFIC SIGNAL INTERCONNECT SYSTEM

ELECTRICAL DETAILS

NO SCALE

E-61

STATE OF CALIFORNIA - DEPARTMENT OF TRANSPORTATION
Caltrans TRAFFIC DESIGN

FUNCTIONAL SUPERVISOR: YI TSAU
CALCULATED-DESIGNED BY: JORGE FUENTES
CHECKED BY: CECILIO BURCIAGA
REVISED BY
DATE REVISED

LAST REVISION 10-31-12
DATE PLOTTED => 26-JUN-2013
TIME PLOTTED => 19:34

Dist	COUNTY	ROUTE	POST MILES TOTAL PROJECT	SHEET No.	TOTAL SHEETS
07	LA	5	0.0/7.6	530	985

REGISTERED ELECTRICAL ENGINEER 10/18/12 DATE

6-24-13
PLANS APPROVAL DATE

REGISTERED PROFESSIONAL ENGINEER JORGE FUENTES No. E13875 Exp. 6/30/14 ELECT STATE OF CALIFORNIA

THE STATE OF CALIFORNIA OR ITS OFFICERS OR AGENTS SHALL NOT BE RESPONSIBLE FOR THE ACCURACY OR COMPLETENESS OF SCANNED COPIES OF THIS PLAN SHEET.

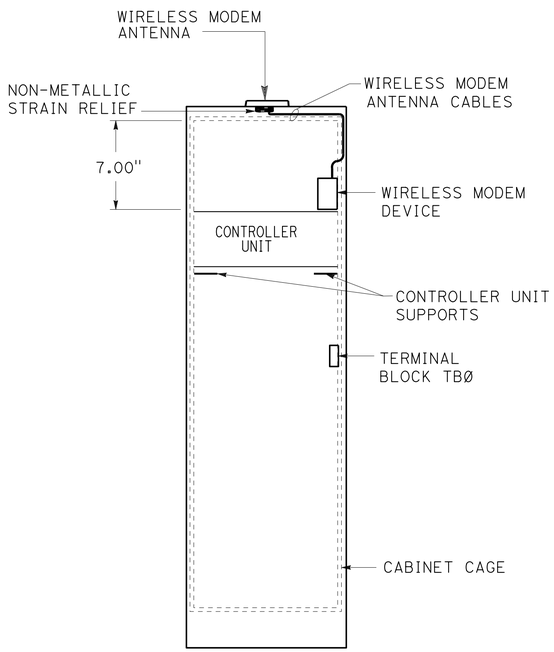

Back View
MODEL 334
CONTROLLER CABINET

WIRELESS MODEM DEVICE AND WIRELESS MODEM ANTENNA PLACEMENT DETAIL

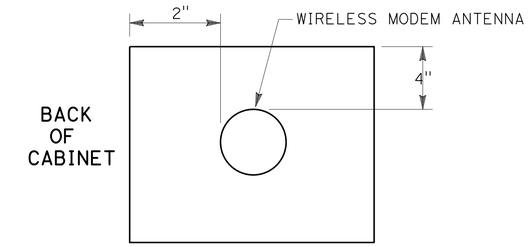

Top View
MODEL 332 CABINET

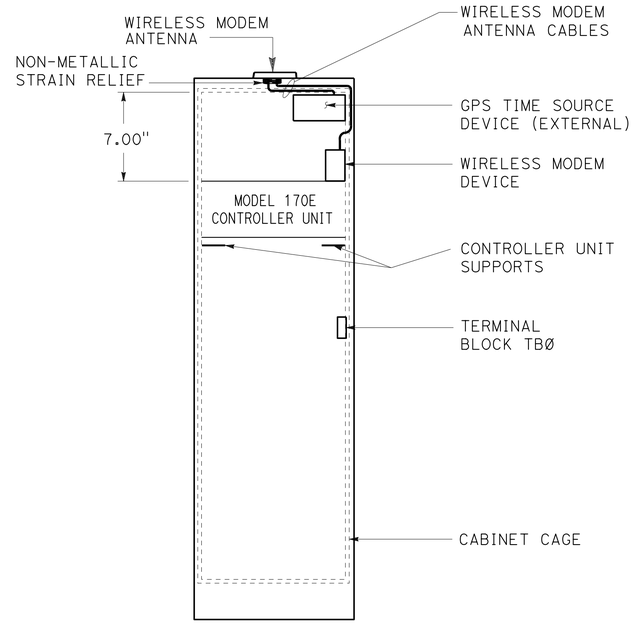

Back View
MODEL 332
CONTROLLER CABINET

WIRELESS MODEM DEVICE, GPS TIME SOURCE DEVICE, AND WIRELESS MODEM ANTENNA PLACEMENT DETAIL

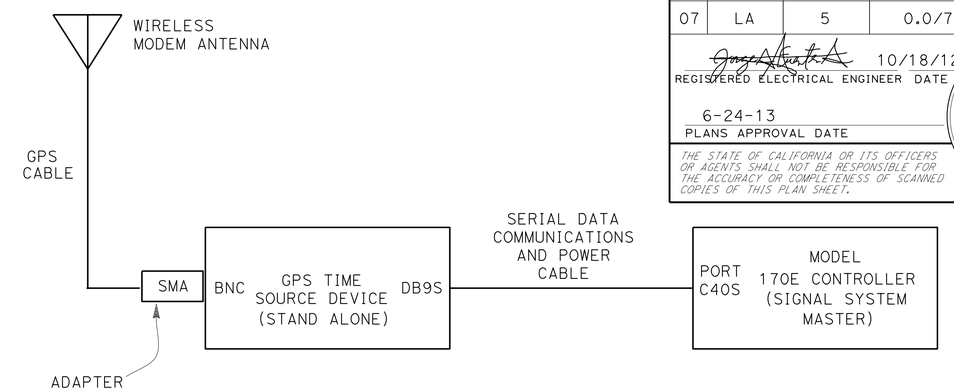

GPS TIME SOURCE DEVICE CONNECTION DETAIL

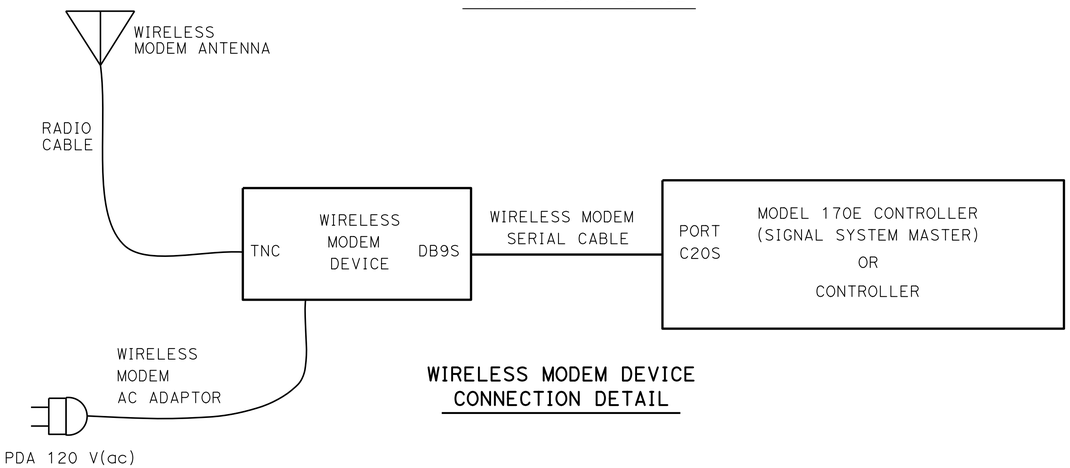

WIRELESS MODEM DEVICE CONNECTION DETAIL

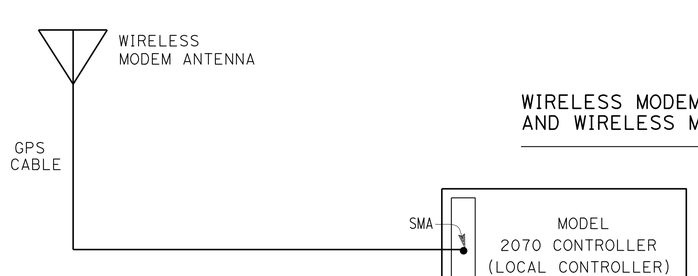

2070-7G MODULE CONNECTION DETAIL

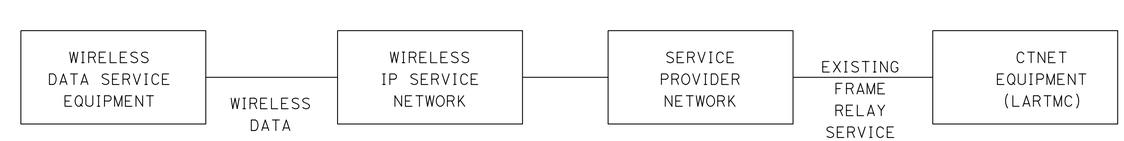

WIRELESS CONNECTIVITY DETAIL

LEGEND (THIS SHEET)

AC	ALTERNATING CURRENT
V(ac)	VOLTS ALTERNATING CURRENT
PDA	POWER DISTRIBUTION ASSEMBLY
CTNET	CALTRANS TRAFFIC SIGNAL NETWORK.
LARTMC	LOS ANGELES REGIONAL TRANSPORTATION MANAGEMENT CENTER
IP	INTERNET PROTOCOL
GPS	GLOBAL POSITIONING SYSTEM
DB9S	SERIES D SUBMINIATURE CONNECTOR, E SIZE SHELL, 9 PIN SOCKET
TNC	THREADED NEILL-CONCELMAN
SMA	SUBMINIATURE VERSION A
BNC	BAYONET NEILL-CONCELMAN

ADVANCED WIRELESS DATA SERVICE SYSTEM AND TEMPORARY WIRELESS DATA SERVICE SYSTEM (WIRELESS DATA SERVICE AND GPS TIME BASE SYSTEMS)

ELECTRICAL DETAILS

NO SCALE

E-62

REVISED BY | DATE REVISED
JORGE FUENTES | CECILIO BURCIAGA
CALCULATED-DESIGNED BY | CHECKED BY
FUNCTIONAL SUPERVISOR: YI TSAU

STATE OF CALIFORNIA - DEPARTMENT OF TRANSPORTATION
Caltrans TRAFFIC DESIGN

LAST REVISION 10-31-12 | DATE PLOTTED => 26-JUN-2013 | TIME PLOTTED => 19:34

Dist	COUNTY	ROUTE	POST MILES TOTAL PROJECT	SHEET No.	TOTAL SHEETS
07	LA	5	0.0/7.6	531	985

REGISTERED ELECTRICAL ENGINEER 10/18/12 DATE

6-24-13
PLANS APPROVAL DATE

REGISTERED PROFESSIONAL ENGINEER JORGE FUENTES No. E13875 Exp. 6/30/14 ELECT STATE OF CALIFORNIA

THE STATE OF CALIFORNIA OR ITS OFFICERS OR AGENTS SHALL NOT BE RESPONSIBLE FOR THE ACCURACY OR COMPLETENESS OF SCANNED COPIES OF THIS PLAN SHEET.

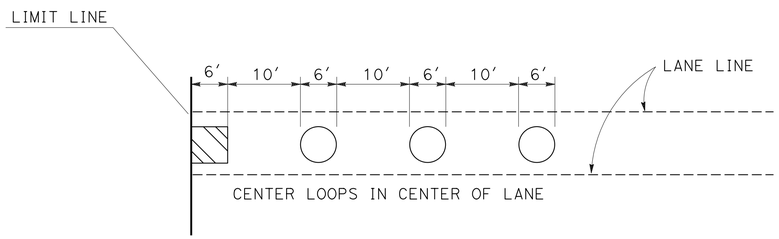

TYPICAL LOOP DETAIL

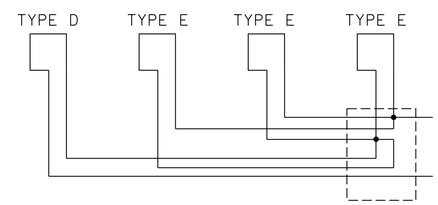

LOOP CONNECTION

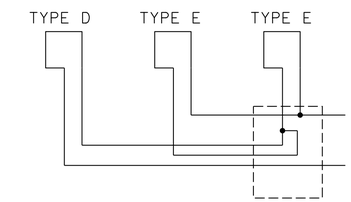

LOOP CONNECTION

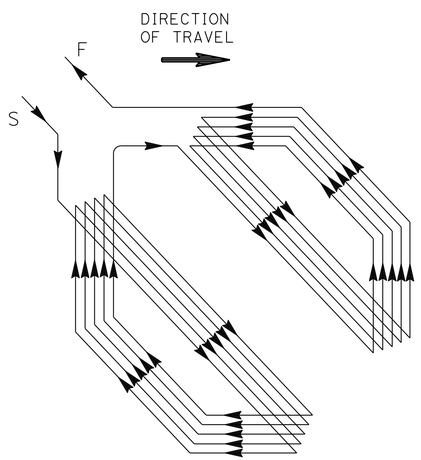

WINDING DETAIL

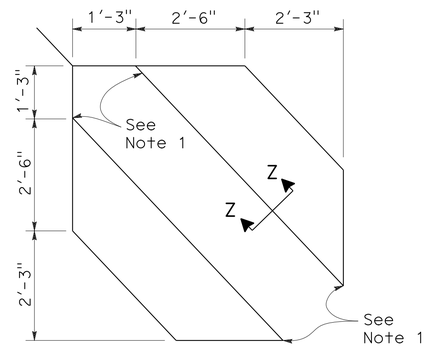

SAWCUT DETAIL

TYPE D LOOP DETECTOR CONFIGURATION

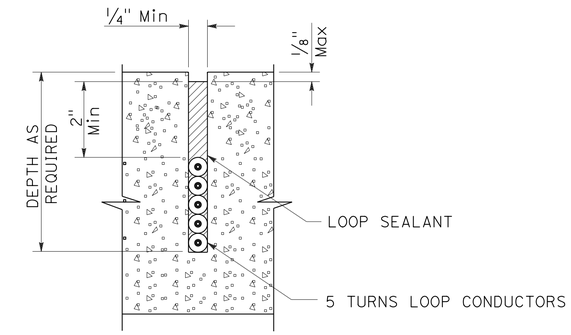

SECTION Z-Z (FOR TYPE D LOOP DETECTOR)

SLOT DETAILS - TYPE 2 LOOP CONDUCTOR

NOTES:

1. ROUND CORNERS OF ACUTE ANGLE SAWCUTS TO PREVENT DAMAGE TO CONDUCTORS.
2. USE SECTION Z-Z INSTEAD OF A-A IN ES-5A FOR TYPE D LOOP DETECTOR.
3. INSTALL 5 TURNS FOR ALL TYPE D LOOPS.

BICYCLE LOOP DETECTOR DETAILS

ELECTRICAL DETAILS
NO SCALE
E-63

STATE OF CALIFORNIA - DEPARTMENT OF TRANSPORTATION
Caltrans® **TRAFFIC DESIGN**
FUNCTIONAL SUPERVISOR: YI TSAU
CALCULATED-DESIGNED BY: QUINCIE TRAN
CHECKED BY: JORGE FUENTES
REVISED BY / DATE REVISED

LAST REVISION 10-31-12 | DATE PLOTTED => 26-JUN-2013 | TIME PLOTTED => 19:34

Dist	COUNTY	ROUTE	POST MILES TOTAL PROJECT	SHEET No.	TOTAL SHEETS
07	LA	5	0.0/7.6	532	985

REGISTERED ELECTRICAL ENGINEER 10/18/12 DATE

6-24-13
PLANS APPROVAL DATE

REGISTERED PROFESSIONAL ENGINEER C. BURCIAGA No. E015302 Exp. 3/31/15 ELECT STATE OF CALIFORNIA

THE STATE OF CALIFORNIA OR ITS OFFICERS OR AGENTS SHALL NOT BE RESPONSIBLE FOR THE ACCURACY OR COMPLETENESS OF SCANNED COPIES OF THIS PLAN SHEET.

NOTES: (THIS SHEET)

1. BOXES AND COVERS ARE REINFORCED WITH CONTINUOUS STRAND MAT AND HOT WOVEN ROVING.
2. POLYMER CONCRETE COVERS AND BOXES ARE INTENDED FOR INCIDENTAL H-20 TRAFFIC WHEEL LOADING.

1pc. POLYMER COVER

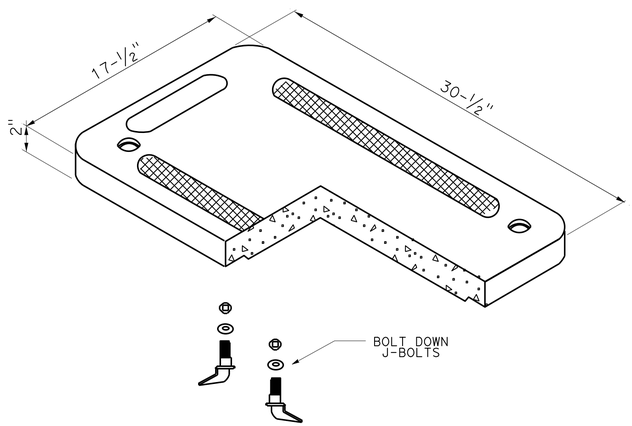

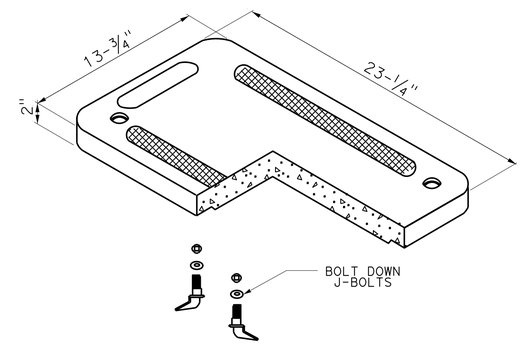

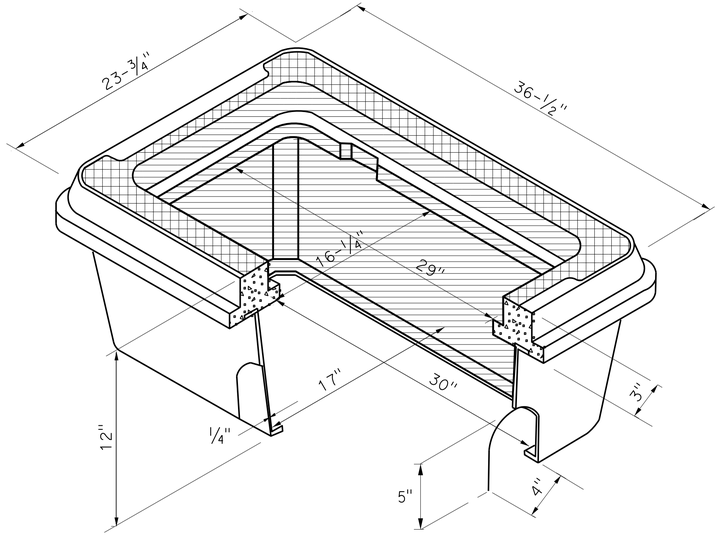

P-E6B-2 PULL BOX

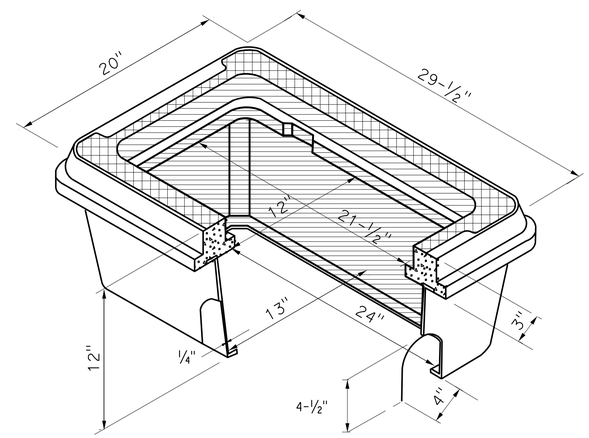

P-E5-2 PULL BOX

PULL BOX WITH FIBERGLASS
BODY & POLYMER CONCRETE RING

(CITY OF SANTA FE SPRINGS)

ABBREVIATIONS: (THIS SHEET ONLY)

UC = UPPERCASE
LC = LOWERCASE

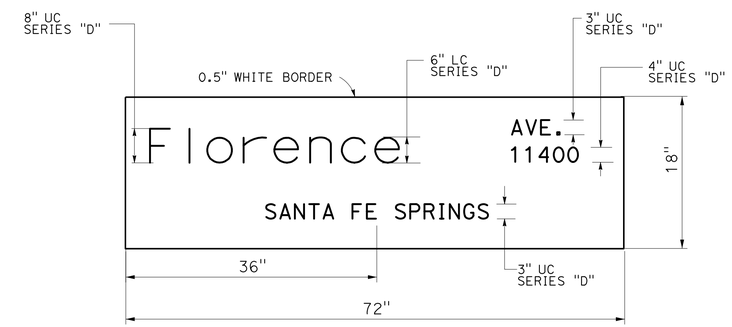

STREET NAME SIGN

(CITY OF SANTA FE SPRINGS)

TYPICAL

CITY PULL BOX AND STREET NAME SIGN DETAILS

ELECTRICAL DETAILS

NO SCALE

E-64

STATE OF CALIFORNIA - DEPARTMENT OF TRANSPORTATION
Caltrans® **TRAFFIC DESIGN**
FUNCTIONAL SUPERVISOR: YI TSAU
CALCULATED-DESIGNED BY: QUINCIE TRAN
CHECKED BY: CECILIO BURCIAGA
REVISED BY
DATE REVISED

LAST REVISION 10-31-12 | DATE PLOTTED => 26-JUN-2013 | TIME PLOTTED => 19:34

Dist	COUNTY	ROUTE	POST MILES TOTAL PROJECT	SHEET No.	TOTAL SHEETS
07	LA	5	0.0/7.6	533	985

REGISTERED ELECT. ENGINEER DATE 12/18/12

6-24-13
PLANS APPROVAL DATE

REGISTERED PROFESSIONAL ENGINEER JACQUELINE C. TAN No. E015611 Exp. 12/31/13 ELECTRICAL STATE OF CALIFORNIA

THE STATE OF CALIFORNIA OR ITS OFFICERS OR AGENTS SHALL NOT BE RESPONSIBLE FOR THE ACCURACY OR COMPLETENESS OF SCANNED COPIES OF THIS PLAN SHEET.

NOTES: (SHEETS E-66 TO E-71)

1. EXISTING COMMUNICATION CABLES, WHERE SHOWN ON THE PLANS TO BE MODIFIED, MUST BE SPLICED TO THE SAME ASSIGNED FIBER NUMBER.
2. CONDUIT CONTAINING FIBER OPTIC CABLE MUST ENTER PULL BOXES ON THE SHORT SIDE ONLY. PULL BOXES MUST NOT BE USED TO CHANGE ALIGNMENT OF THE COMMUNICATION CONDUIT.
3. EXISTING IRRIGATION SYSTEMS ARE NOT SHOWN FOR CLARITY.
4. NUMBER OF CONDUITS IN SOME COMMUNICATION RUNS MAY NOT BE SHOWN FOR CLARITY. THE CONTRACTOR MUST REROUTE IMPACTED CONDUITS AND REPLACE ITS CONTENTS AS NOTED ON THE PLANS.
5. CONDUITS INSTALLED ACROSS NEW WALLS MUST BE CORED THRU THE WALL OR MUST BE INSTALLED DURING SOUNDWALL CONSTRUCTION.
6. ALL PULL BOXES AND SPLICE VAULTS INSTALLED IN THE SHOULDER MUST BE TRAFFIC RATED.
7. INSTALL ALL CABLES IN THE LOWER SIZE 4"C. UPPER SIZE 4"C IS EMPTY.

ABBREVIATIONS: (SHEETS E-66 TO E-71)

#	NUMBER
12SMFO	12 SINGLEMODE FIBER OPTIC CABLE
36SMFO	36 SINGLEMODE FIBER OPTIC CABLE
48SMFO	48 SINGLEMODE FIBER OPTIC CABLE
AC	ALTERNATING CURRENT
BNC	BAYONET NEILL-CONCELMAN CONNECTOR
CAT-5E	ANSI/TIA-568-B STANDARD
COAX	COAXIAL CABLE
DB-9	9 PIN D-SUBMINIATURE CONNECTOR
EIA-232	ELECTRONICS INDUSTRIES ASSOCIATION STANDARD RS-232
EIA-422	ELECTRONICS INDUSTRIES ASSOCIATION STANDARD RS-422
FDU	FIBER DISTRIBUTION UNIT
FOSC	FIBER OPTIC SPLICE CLOSURE
HT	HIGH TEMPERATURE
ID	IDENTIFICATION NUMBER
LARTMC	LOS ANGELES REGIONAL TRANSPORTATION MANAGEMENT CENTER
PDA	POWER DISTRIBUTION ASSEMBLY
RG-6A/U	COAXIAL CABLE
8P8C	8 PIN 8 CONDUCTOR CONNECTOR
RMS	RAMP METERING SYSTEM
RX	RECEIVE OR RECEIVER
SFP	SMALL FORM FACTOR PLUGGABLE TRANSCEIVER (LX TYPE)
SMFO	SINGLEMODE FIBER OPTIC CABLE
TX	TRANSMIT OR TRANSMITTER
W/GFI	WITH GROUND FAULT INTERRUPTER

LEGEND: (SHEETS E-66 TO E-71)

NEW	EXISTING	
CCTV	CCTV	CCTV CABINET
V S	V S	SPLICE VAULT WITH SPLICE CLOSURE
		SURGE PROTECTOR
HT	HT	HIGH TEMPERATURE RELAY COIL
HT	HT	RELAY CONTACT NORMALLY CLOSED
6	6	WIRE SIZE, IF NOT INDICATED MUST BE #12 AWG
F	F	FAN
L	L	INDICATOR LAMP
		THERMOSTATIC CONTROL
THERMO	THERMO	ADJUSTABLE CALIBRATED THERMOSTAT
R	R	DUPLEX RECEPTACLE

NOTES, ABBREVIATIONS AND LEGEND

MODIFY COMMUNICATION SYSTEM

NO SCALE

E-65

HENRY TRINH	REVISED BY	HT	
JACQUELINE C. TAN	DATE REVISED	12/12	
CALCULATED-DESIGNED BY			
CHECKED BY			
FUNCTIONAL SUPERVISOR			
JACQUELINE C. TAN			

STATE OF CALIFORNIA - DEPARTMENT OF TRANSPORTATION
Caltrans
OFFICE OF ITS

LAST REVISION 12-31-12 | DATE PLOTTED => 26-JUN-2013 | TIME PLOTTED => 19:34

Dist	COUNTY	ROUTE	POST MILES TOTAL PROJECT	SHEET No.	TOTAL SHEETS
07	LA	5	0.0/7.6	534	985

REGISTERED ELECTRICAL ENGINEER 12/18/12 DATE

6-24-13
PLANS APPROVAL DATE

REGISTERED PROFESSIONAL ENGINEER JACQUELINE C. TAN No. E015611 Exp. 12/31/13 ELECTRICAL STATE OF CALIFORNIA

THE STATE OF CALIFORNIA OR ITS OFFICERS OR AGENTS SHALL NOT BE RESPONSIBLE FOR THE ACCURACY OR COMPLETENESS OF SCANNED COPIES OF THIS PLAN SHEET.

NOTE:

FOR ACCURATE RIGHT OF WAY DATA,
CONTACT RIGHT OF WAY ENGINEERING AT THE DISTRICT OFFICE.

CONDUIT AND CONDUCTOR SCHEDULE (THIS SHEET ONLY)

CONDUIT/ CONDUCTOR	FUNCTION	RUN 1							
48SMFO CABLE	TRUNK					1			
36SMFO CABLE	SPARE DISTRIBUTION						1		
48SMFO CABLE	DATA DISTRIBUTION							1	
1 INCH INNERDUCT						1	1	1	1
#12 AWG	TRACER WIRE	1							
CONDUIT SIZE		4", MT				4"			

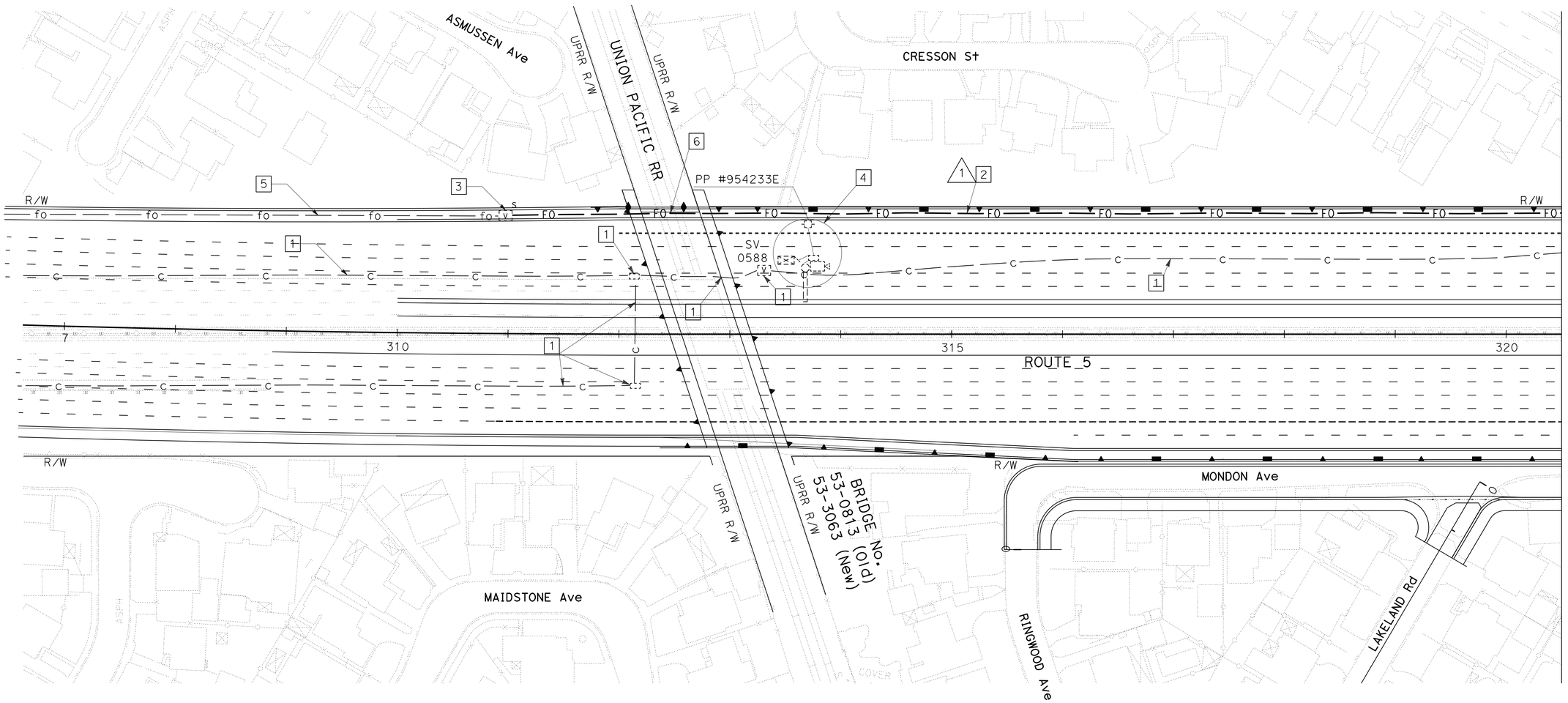

LEGEND: (THIS SHEET ONLY)

1. RC COMMUNICATION CONDUITS, SPLICE VAULT, PULL BOXES AND CONTENTS, FOUNDATIONS AS PART OF ROADWAY EXCAVATION.
2. TRENCH CONDUITS IN SHOULDER. SEE DETAILS ON SHEET E-80.
3. INSTALL FIBER OPTIC SPLICE CLOSURE AND SPLICE IN KIND WITH EXISTING 48SMFO, 36SMFO, AND 48SMFO IN EXISTING SPLICE VAULT.
4. RS CCTV CAMERA ASSEMBLY, CCTV POLE, CCTV CABINET AND ITS CONTENTS.
5. COORDINATE WITH PROJECT 0700001834 (EA 215941) FOR DETAILS.
6. SEE STRUCTURE PLANS FOR "COMMUNICATION CONDUIT SUPPORT HANGER DETAILS"

FOR ABBREVIATIONS AND NOTES, SEE SHEET E-65.

APPROVED FOR ELECTRICAL WORK ONLY.

MODIFY COMMUNICATION SYSTEM

SCALE: 1" = 50'

E-66

STATE OF CALIFORNIA - DEPARTMENT OF TRANSPORTATION
Caltrans
OFFICE OF ITS

FUNCTIONAL SUPERVISOR: JACQUELINE C. TAN
CALCULATED-DESIGNED BY: HENRY TRINH
CHECKED BY: JACQUELINE C. TAN
REVISED BY: HT
DATE REVISED: 12/12

LAST REVISION 12-31-12
DATE PLOTTED => 26-JUN-2013
TIME PLOTTED => 19:34

Dist	COUNTY	ROUTE	POST MILES TOTAL PROJECT	SHEET No.	TOTAL SHEETS
07	LA	5	0.0/7.6	535	985

REGISTERED ELECTRICAL ENGINEER — DATE 12/18/12

6-24-13
PLANS APPROVAL DATE

REGISTERED PROFESSIONAL ENGINEER — JACQUELINE C. TAN — No. E015611 — Exp. 12/31/13 — ELECTRICAL — STATE OF CALIFORNIA

THE STATE OF CALIFORNIA OR ITS OFFICERS OR AGENTS SHALL NOT BE RESPONSIBLE FOR THE ACCURACY OR COMPLETENESS OF SCANNED COPIES OF THIS PLAN SHEET.

LEGEND: (THIS SHEET ONLY)

1. RC COMMUNICATION CONDUITS, PULL BOXES AND CONTENTS, CABINETS, FOUNDATIONS AS PART OF ROADWAY EXCAVATION.
2. TRENCH CONDUITS IN SHOULDER. SEE DETAILS ON SHEET E-80.
3. SHOWN FOR REFERENCE ONLY. SEE ELECTRICAL PLANS FOR INSTALLATION OF TMS.
4. INSTALL LAYER 2 ETHERNET SWITCH WITH 2 SFP MODULE ETHERNET CARDS AND FDU IN TMS CONTROLLER CABINET.
5. INSTALL FIBER OPTIC SPLICE CLOSURE.

CONDUIT AND CONDUCTOR SCHEDULE (THIS SHEET ONLY)

CONDUIT/ CONDUCTOR	FUNCTION	RUN 1								RUN 2
48SMFO CABLE	TRUNK					1				
36SMFO CABLE	VIDEO DISTRIBUTION						1			
48SMFO CABLE	DATA DISTRIBUTION							1		
1 INCH INNERDUCT						1	1	1	1	1
12SMFO CABLE	DISTRIBUTION									1
#12 AWG	TRACER WIRE						1			
CONDUIT SIZE			4", MT				4"			3"

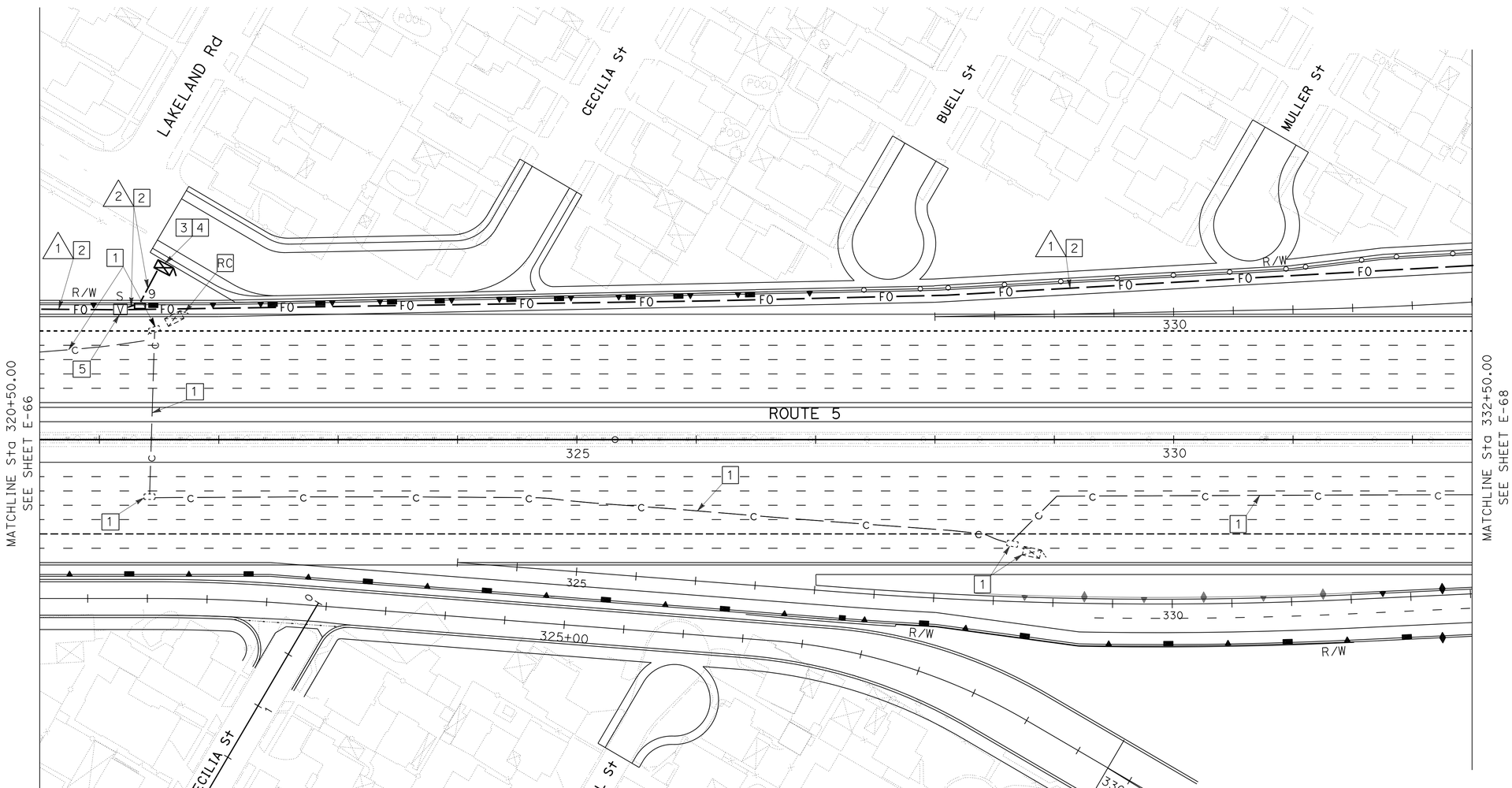

NOTE:
FOR ACCURATE RIGHT OF WAY DATA, CONTACT RIGHT OF WAY ENGINEERING AT THE DISTRICT OFFICE.

FOR LEGEND ABBREVIATIONS AND NOTES, SEE SHEET E-65.

APPROVED FOR ELECTRICAL WORK ONLY.

MODIFY COMMUNICATION SYSTEM

SCALE: 1" = 50'

E-67

STATE OF CALIFORNIA - DEPARTMENT OF TRANSPORTATION
Caltrans
OFFICE OF ITS

FUNCTIONAL SUPERVISOR: JACQUELINE C. TAN
CALCULATED-DESIGNED BY: HENRY TRINH
CHECKED BY: JACQUELINE C. TAN
REVISED BY: HT
DATE REVISED: 12/12

LAST REVISION 12-31-12
DATE PLOTTED => 26-JUN-2013
TIME PLOTTED => 19:34

Dist	COUNTY	ROUTE	POST MILES TOTAL PROJECT	SHEET No.	TOTAL SHEETS
07	LA	5	0.0/7.6	536	985

REGISTERED ELECTRICAL ENGINEER 12/18/12 DATE

6-24-13
PLANS APPROVAL DATE

REGISTERED PROFESSIONAL ENGINEER JACQUELINE C. TAN No. E015611 Exp. 12/31/13 ELECTRICAL STATE OF CALIFORNIA

THE STATE OF CALIFORNIA OR ITS OFFICERS OR AGENTS SHALL NOT BE RESPONSIBLE FOR THE ACCURACY OR COMPLETENESS OF SCANNED COPIES OF THIS PLAN SHEET.

LEGEND: (THIS SHEET ONLY)

1. RC COMMUNICATION CONDUITS, PULL BOXES AND CONTENTS, CABINETS, FOUNDATIONS AS PART OF ROADWAY EXCAVATION.
2. TRENCH CONDUITS IN SHOULDER. SEE DETAILS ON SHEET E-80.
3. SHOWN FOR REFERENCE ONLY. SEE ELECTRICAL PLANS FOR INSTALLATION OF RMS No. 276.
4. INSTALL LAYER 2 ETHERNET SWITCH WITH 2 SFP MODULE ETHERNET CARDS & FDU IN RMS CONTROLLER CABINET.
5. SHOWN FOR REFERENCE ONLY. SEE ELECTRICAL PLANS FOR INSTALLATION OF RMS No. 93.
6. JACK CONDUITS ACCROSS FREEWAY. SEE DETAILS ON SHEET E-81.
7. INSTALL FIBER OPTIC SPLICE CLOSURE.

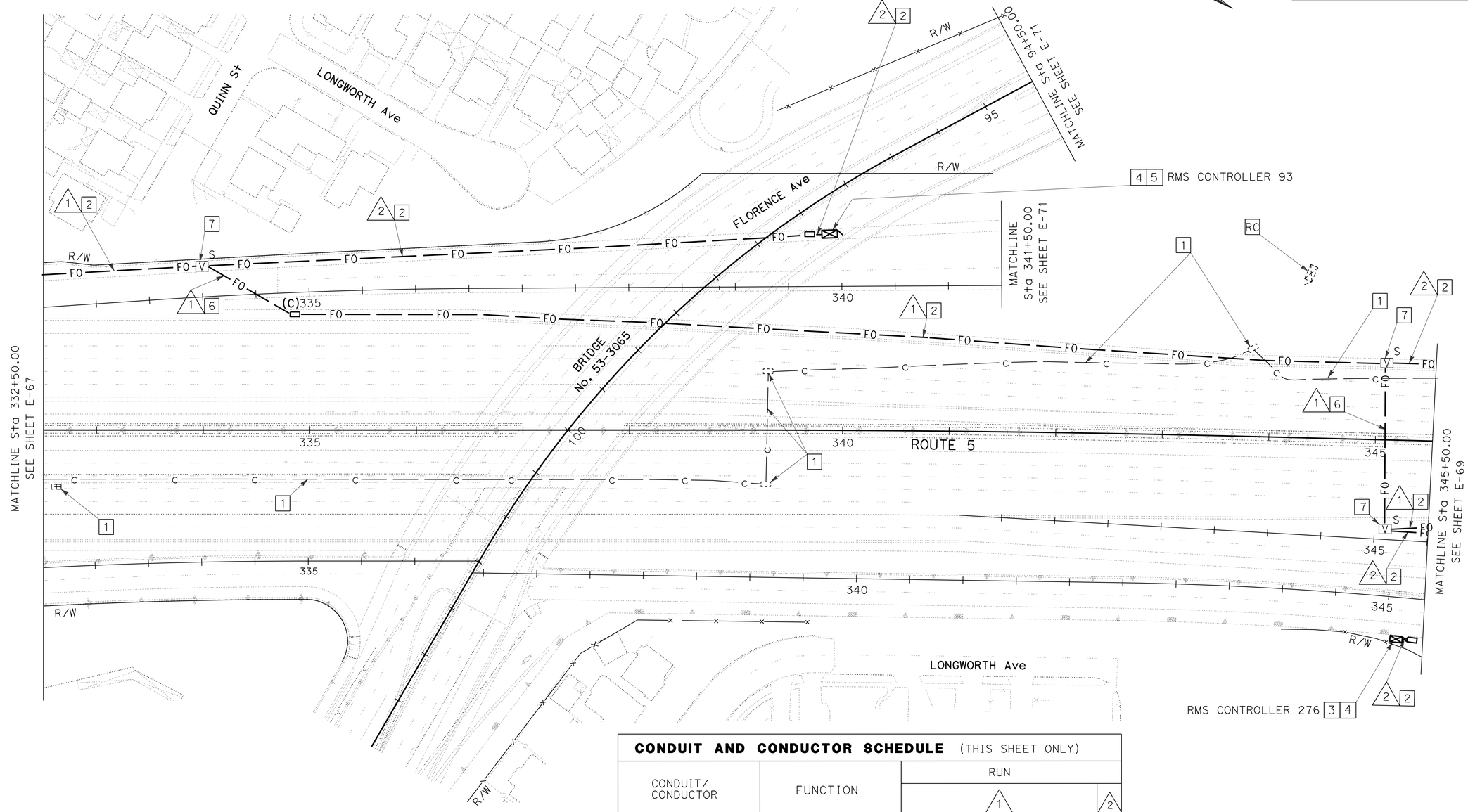

CONDUIT AND CONDUCTOR SCHEDULE (THIS SHEET ONLY)

CONDUIT/ CONDUCTOR	FUNCTION	RUN								
						1				2
48SMFO CABLE	TRUNK					1				
36SMFO CABLE	VIDEO DISTRIBUTION						1			
48SMFO CABLE	DATA DISTRIBUTION							1		
1 INCH INNERDUCT						1	1	1	1	1
12SMFO CABLE	DISTRIBUTION									1
#12 AWG	TRACER WIRE	1								
CONDUIT SIZE		4", MT				4"				3"

NOTE:

FOR ACCURATE RIGHT OF WAY DATA, CONTACT RIGHT OF WAY ENGINEERING AT THE DISTRICT OFFICE.

FOR LEGEND ABBREVIATIONS AND NOTES, SEE SHEET E-65.

APPROVED FOR ELECTRICAL WORK ONLY.

MODIFY COMMUNICATION SYSTEM

SCALE: 1" = 50'

E-68

STATE OF CALIFORNIA - DEPARTMENT OF TRANSPORTATION
Caltrans
OFFICE OF ITS

FUNCTIONAL SUPERVISOR: JACQUELINE C. TAN
CALCULATED-DESIGNED BY: HENRY TRINH
CHECKED BY: JACQUELINE C. TAN
REVISED BY: HT
DATE REVISED: 12/12

LAST REVISION 12-31-12
DATE PLOTTED => 26-JUN-2013
TIME PLOTTED => 19:34

Dist	COUNTY	ROUTE	POST MILES TOTAL PROJECT	SHEET No.	TOTAL SHEETS
07	LA	5	0.0/7.6	537	985

Jacqueline C Tan 12/18/12
REGISTERED ELECTRICAL ENGINEER DATE

6-24-13
PLANS APPROVAL DATE

REGISTERED PROFESSIONAL ENGINEER JACQUELINE C TAN No. E015611 Exp. 12/31/13 ELECTRICAL STATE OF CALIFORNIA

THE STATE OF CALIFORNIA OR ITS OFFICERS OR AGENTS SHALL NOT BE RESPONSIBLE FOR THE ACCURACY OR COMPLETENESS OF SCANNED COPIES OF THIS PLAN SHEET.

CONDUIT AND CONDUCTOR SCHEDULE (THIS SHEET ONLY)

CONDUIT/ CONDUCTOR	FUNCTION	RUN 1								2	3
48SMFO CABLE	TRUNK					1					
36SMFO CABLE	VIDEO DISTRIBUTION						1				
48SMFO CABLE	DATA DISTRIBUTION							1			
1 INCH INNERDUCT						1	1	1	1	1	
12SMFO	DISTRIBUTION									1	
#2 AWG	POWER CONDUCTOR										4
#1G AWG	GROUND CONDUCTOR										1
#12 AWG	TRACER WIRE						1				
CONDUIT SIZE		4", MT				4"				3"	3"

LEGEND: (THIS SHEET ONLY)

1. RC COMMUNICATION CONDUITS, PULL BOXES AND CONTENTS, CABINETS, FOUNDATIONS AS PART OF ROADWAY EXCAVATION.
2. TRENCH CONDUITS IN SHOULDER. SEE DETAILS ON SHEET E-80.
3. JACK CONDUITS ACROSS FREEWAY. SEE DETAILS ON SHEET E-81.
4. INSTALL LAYER 2 ETHERNET SWITCH WITH 2 SFP MODULE ETHERNET CARDS & FDU IN TMS CONTROLLER CABINET.
5. SHOWN FOR REFERENCE ONLY. SEE ELECTRICAL PLANS FOR INSTALLATION OF TMS No. 2578.
6. SHOWN FOR REFERENCE ONLY. SEE ELECTRICAL PLANS FOR INSTALLATION OF TMS No. 2296.
7. TRENCH CONDUITS IN SOIL. SEE DETAILS ON SHEET E-80.

8. Existl 120/240 V METERED TYPE III-CF SERVICE EQUIPMENT ENCLOSURE WITH TYPE V PEC (SCE):
   2-100 A, 240 V, 2P, CB-MAIN
   1-60 A, 240 V, 2P, CB-Ltg
   2-50 A, 240 V, 2P, CB-Ltg
   1-40 A, 240 V, 2P, CB-Sign Ltg
   2-15 A, 120 V, 1P, CB-Peu
   1-20 A, 120 V, 1P, CB-Irrigation
   ADD: 1-30 A, 120 V, 1P, CB-CCTV Camera
   CTID No. 07-53-0050-006.410
   11210 CLARKMAN St SANTA FE SPRINGS
9. INSTALL FIBER OPTIC SPLICE CLOSURE.

DETAIL "A"

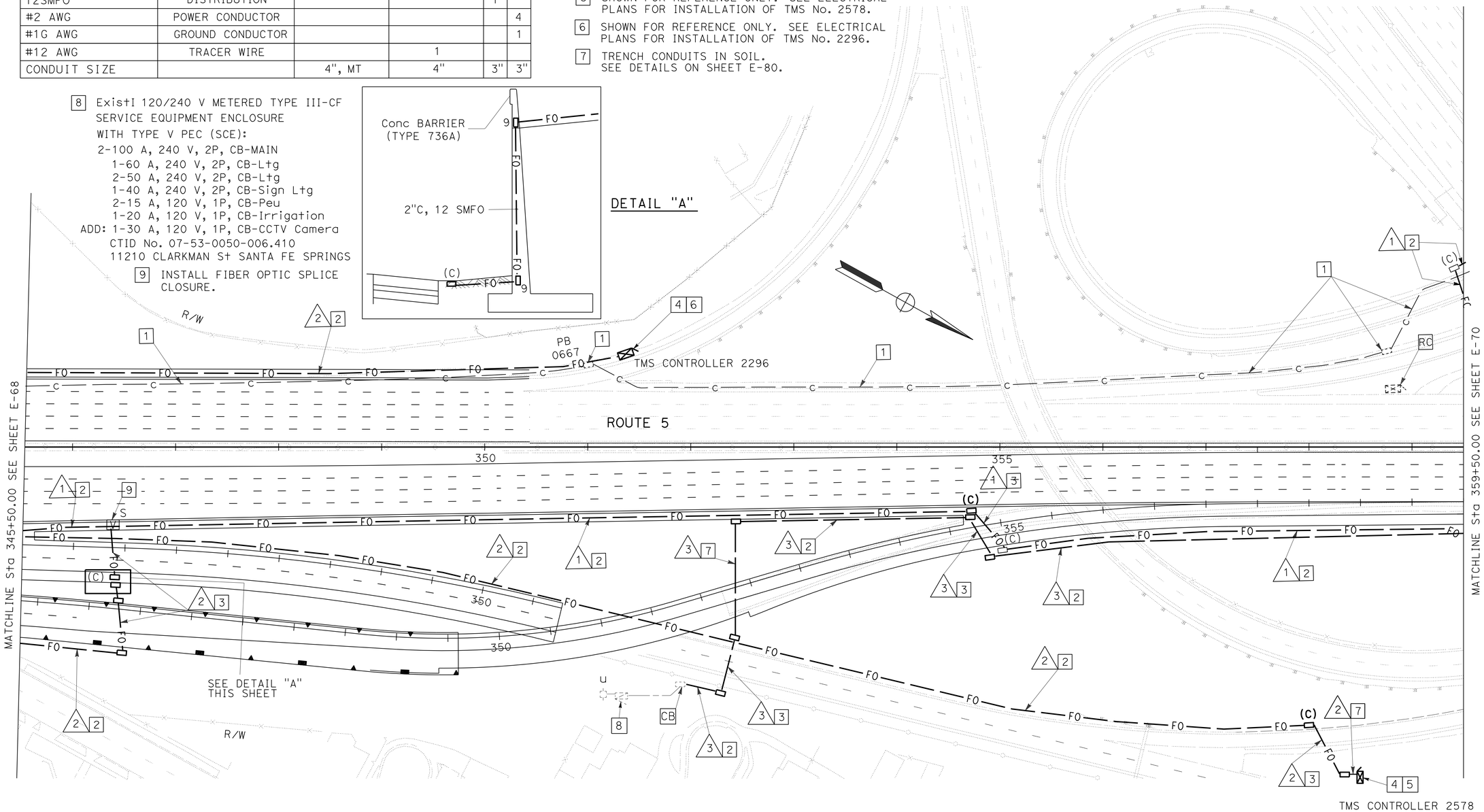

NOTE:
FOR ACCURATE RIGHT OF WAY DATA, CONTACT RIGHT OF WAY ENGINEERING AT THE DISTRICT OFFICE.

FOR LEGEND ABBREVIATIONS AND NOTES, SEE SHEET E-65.

APPROVED FOR ELECTRICAL WORK ONLY.

MODIFY COMMUNICATION SYSTEM

SCALE: 1" = 50'

E-69

STATE OF CALIFORNIA - DEPARTMENT OF TRANSPORTATION
Caltrans
OFFICE OF ITS

FUNCTIONAL SUPERVISOR: JACQUELINE C. TAN
CALCULATED-DESIGNED BY: HENRY TRINH
CHECKED BY: JACQUELINE C. TAN
REVISED BY: HT
DATE REVISED: 12/12

LAST REVISION 12-31-12
DATE PLOTTED => 26-JUN-2013
TIME PLOTTED => 19:34

Dist	COUNTY	ROUTE	POST MILES TOTAL PROJECT	SHEET No.	TOTAL SHEETS
07	LA	5	0.0/7.6	538	985

Jacqueline C Tan 12/18/12
REGISTERED ELECT. ENGINEER DATE

6-24-13
PLANS APPROVAL DATE

REGISTERED PROFESSIONAL ENGINEER JACQUELINE C. TAN No. E015611 Exp. 12/31/13 ELECTRICAL STATE OF CALIFORNIA

THE STATE OF CALIFORNIA OR ITS OFFICERS OR AGENTS SHALL NOT BE RESPONSIBLE FOR THE ACCURACY OR COMPLETENESS OF SCANNED COPIES OF THIS PLAN SHEET.

NOTE:
FOR ACCURATE RIGHT OF WAY DATA,
CONTACT RIGHT OF WAY ENGINEERING AT THE DISTRICT OFFICE.

CONDUIT AND CONDUCTOR SCHEDULE (THIS SHEET ONLY)

CONDUIT/ CONDUCTOR	FUNCTION	RUN 1								2	3	4
48SMFO CABLE	TRUNK					1						
36SMFO CABLE	SPARE DISTRIBUTION						1					
48SMFO CABLE	DATA DISTRIBUTION							1				
1 INCH INNERDUCT						1	1	1	1	1		
12SMFO CABLE	DISTRIBUTION									1		
#12 AWG	TRACER WIRE						1					
#2 AWG	POWER CONDUCTOR										4	2
#1G AWG	GROUND CONDUCTOR										1	1
CONDUIT SIZE		4", MT				4"				3"	3"	3"

LEGEND: (THIS SHEET ONLY)

1. RC COMMUNICATION CONDUITS, SPLICE VAULT, PULL BOXES AND CONTENTS, FOUNDATIONS AS PART OF ROADWAY EXCAVATION.
2. TRENCH CONDUIT IN SHOULDER. SEE TRENCH IN SOIL DETAIL ON SHEET E-80.
3. INSTALL FIBER OPTIC SPLICE CLOSURE AND SPLICE IN KIND INTO EXISTING 48SMFO, 36SMFO, AND 48SMFO IN EXISTING SPLICE VAULT.
4. SHOWN FOR REFERENCE ONLY. SEE ELECTRICAL PLANS FOR INSTALLATION OF TMS No. 2272.
5. INSTALL LAYER 2 ETHERNET SWITCH WITH 2 SFP MODULE ETHERNET CARDS & FDU IN TMS CONTROLLER CABINET.
6. JACK CONDUIT ACROSS FREEWAY. SEE DETAILS ON SHEET E-81.
7. INSTALL FIBER OPTIC CABLES IN EXISTING CONDUIT.
8. INSTALL FIBER OPTIC SPLICE CLOSURE.
9. INSTALL MODEL 334-TV CONTROLLER CABINET, EIA-232 TO EIA-422 CONVERTER, DIGITAL FIELD VIDEO ENCODER, LAYER 2 ETHERNET SWITCH WITH 2 SFP MODULES, FDU AND TEMPERATURE SENSOR. SEE SHEETS E-73 AND E-74 FOR DETAILS.
10. INSTALL CCTV CAMERA POLE TYPE HM CCTV 60. INSTALL CCTV CAMERA ASSEMBLY ON POLE.
11. INSTALL 2"C, COMPOSITE VIDEO CABLE (CCTV). SEE SHEET E-73 FOR DETAILS.
12. INSTALL 2"C, 12SMFO CABLE.

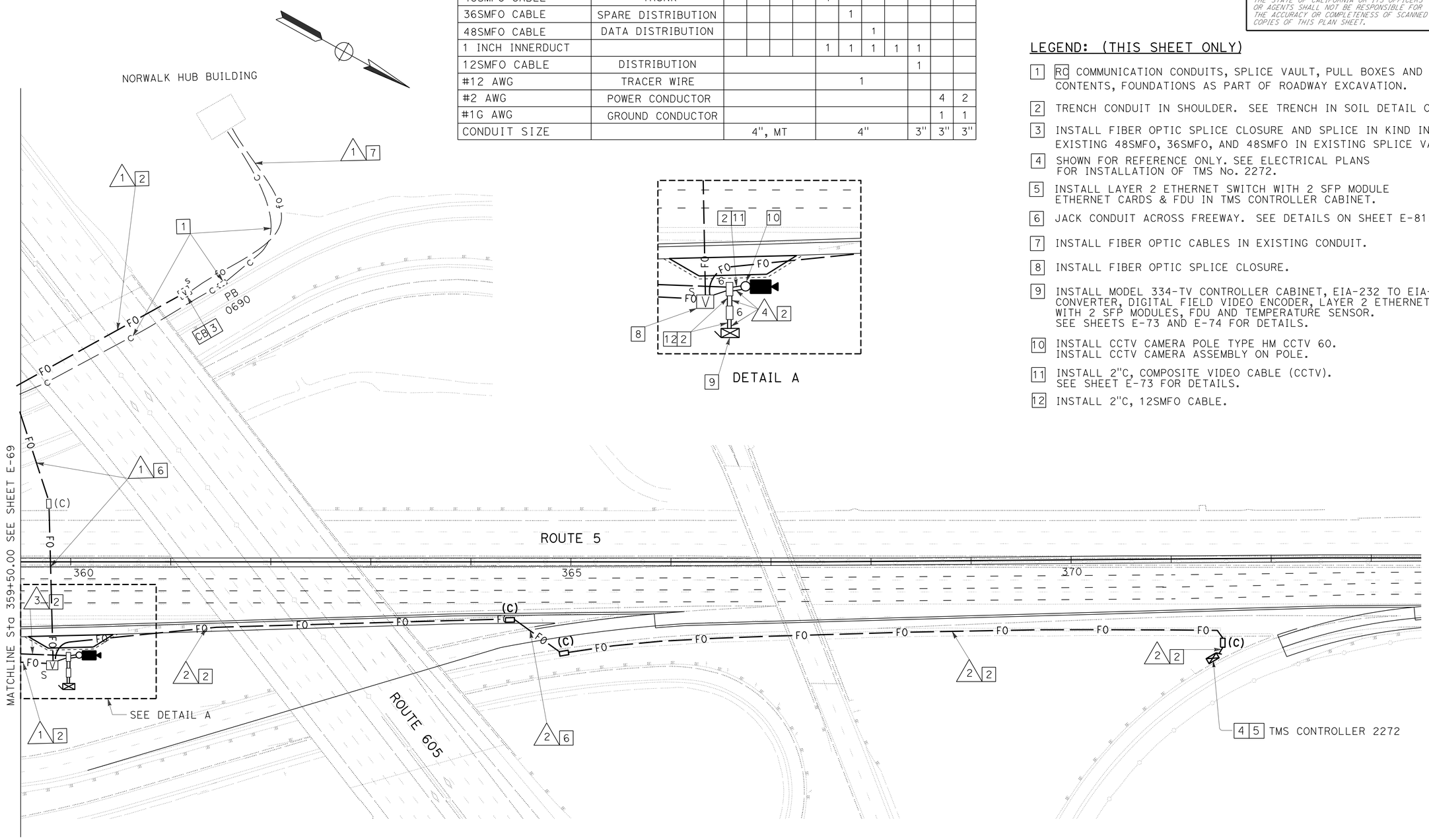

CCTV CAMERA LOCATION SA059

FOR LEGEND, ABBREVIATIONS, AND NOTES, SEE SHEET E-65.

APPROVED FOR ELECTRICAL WORK ONLY

MODIFY COMMUNICATION SYSTEM

SCALE: 1" = 50'

E-70

STATE OF CALIFORNIA - DEPARTMENT OF TRANSPORTATION
Caltrans
OFFICE OF ITS

FUNCTIONAL SUPERVISOR: JACQUELINE C. TAN
CALCULATED-DESIGNED BY: HENRY TRINH
CHECKED BY: JACQUELINE C. TAN
REVISED BY: HT
DATE REVISED: 12/12

LAST REVISION 12-31-12
DATE PLOTTED => 26-JUN-2013
TIME PLOTTED => 19:34

Dist	COUNTY	ROUTE	POST MILES TOTAL PROJECT	SHEET No.	TOTAL SHEETS
07	LA	5	0.0/7.6	539	985

REGISTERED ELECT. ENGINEER DATE 12/18/12

6-24-13
PLANS APPROVAL DATE

REGISTERED PROFESSIONAL ENGINEER JACQUELINE C. TAN No. E015611 Exp. 12/31/13 ELECTRICAL STATE OF CALIFORNIA

THE STATE OF CALIFORNIA OR ITS OFFICERS OR AGENTS SHALL NOT BE RESPONSIBLE FOR THE ACCURACY OR COMPLETENESS OF SCANNED COPIES OF THIS PLAN SHEET.

NOTE:

FOR ACCURATE RIGHT OF WAY DATA,
CONTACT RIGHT OF WAY ENGINEERING AT THE DISTRICT OFFICE.

CONDUIT AND CONDUCTOR SCHEDULE (THIS SHEET ONLY)

CONDUIT/ CONDUCTOR	FUNCTION	RUN 1				RUN 2				RUN 3
48SMFO CABLE	DISTRIBUTION CABLE	1								
24SMFO CABLE	BACKBONE CABLE		1							
12SMFO CABLE	DROP CABLE									1
1 INCH INNERDUCT		1	1	1	1					
#12 AWG	PULL ROPE			1	1	1				
CONDUIT SIZE		4"				4", MT				3"

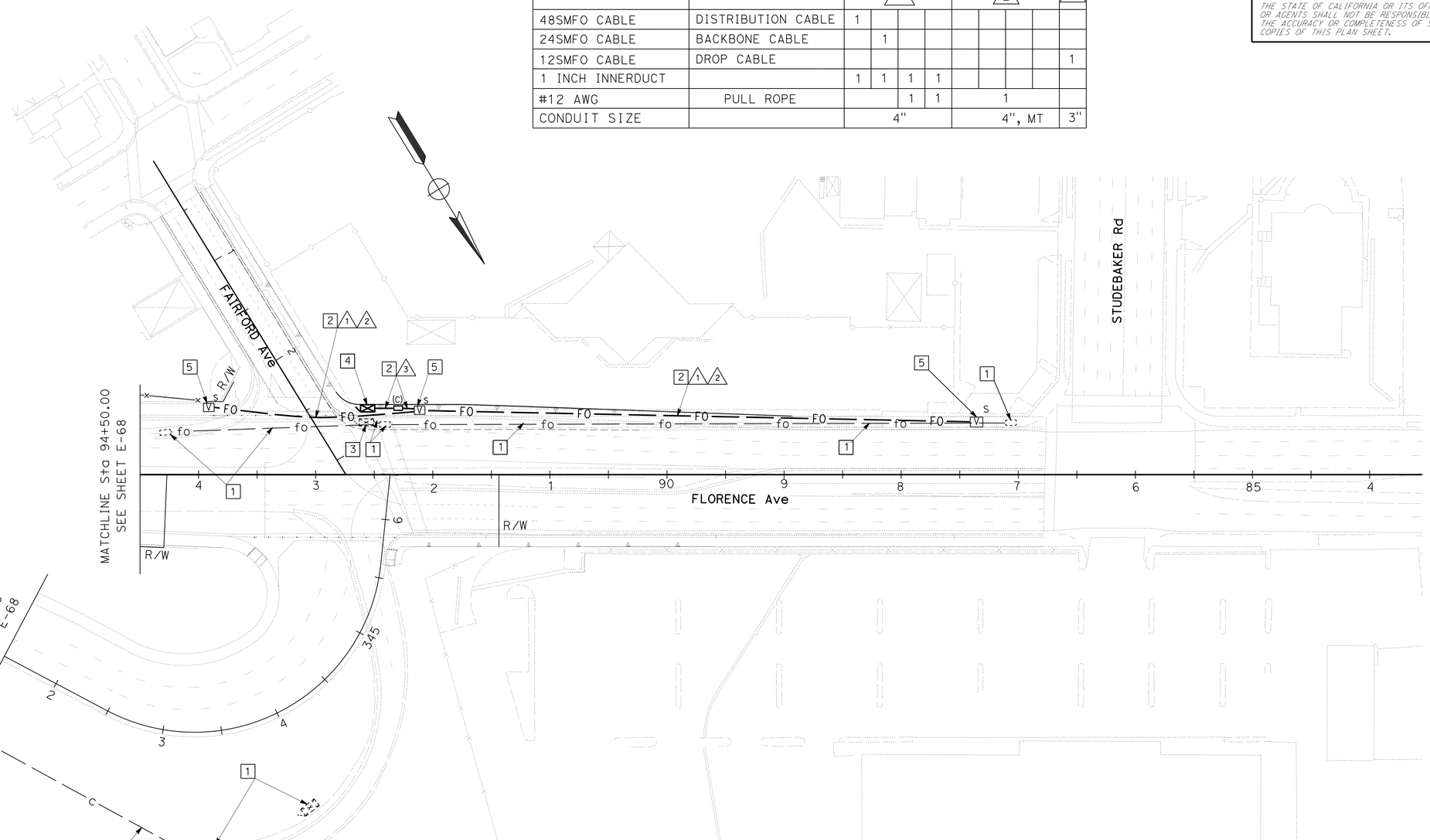

LEGEND: (THIS SHEET ONLY)

1. RC COMMUNICATION CONDUITS, PULL BOXES AND CONTENTS, CABINETS, FOUNDATIONS AS PART OF ROADWAY EXCAVATION.
2. TRENCH CONDUITS IN SIDEWALK/PAVEMENT. SEE DETAILS ON SHEET E-80.
3. EXISTING MODEL 332 CONTROLLER CABINET TO BE RELOCATED.
4. RELOCATE MODEL 332 CONTROLLER CABINET AS SHOWN ON PLAN.
5. INSTALL FIBER OPTIC SPLICE CLOSURE.

FOR LEGEND, ABBREVIATIONS AND NOTES, SEE SHEET E-65.

APPROVED FOR ELECTRICAL WORK ONLY.

MODIFY COMMUNICATION SYSTEM

SCALE: 1" = 50'

E-71

STATE OF CALIFORNIA - DEPARTMENT OF TRANSPORTATION
Caltrans OFFICE OF ITS

FUNCTIONAL SUPERVISOR: JACQUELINE C. TAN
CALCULATED-DESIGNED BY: HENRY TRINH
CHECKED BY: JACQUELINE C. TAN
REVISED BY: HT
DATE REVISED: 12/12

LAST REVISION 12-31-12
DATE PLOTTED => 26-JUN-2013
TIME PLOTTED => 19:34

Dist	COUNTY	ROUTE	POST MILES TOTAL PROJECT	SHEET No.	TOTAL SHEETS
07	LA	5	0.0/7.6	540	985

Jacqueline C Tan 12/18/12
REGISTERED ELECT. ENGINEER DATE

6-24-13
PLANS APPROVAL DATE

REGISTERED PROFESSIONAL ENGINEER JACQUELINE C. TAN No. E015611 Exp. 12/31/13 ELECTRICAL STATE OF CALIFORNIA

THE STATE OF CALIFORNIA OR ITS OFFICERS OR AGENTS SHALL NOT BE RESPONSIBLE FOR THE ACCURACY OR COMPLETENESS OF SCANNED COPIES OF THIS PLAN SHEET.

NOTES: (THIS SHEET ONLY)

1. THE CONTRACTOR MUST PROVIDE CABLE LENGTH FROM THE CAMERA ASSEMBLY TO THE VIDEO ENCODER AND PDA INCLUDING CONNECTORS AS SHOWN IN THIS SHEET.
2. ALL CABLES MUST BE ALUMINUM SHIELDED TO PREVENT CROSSTALK.
3. IN THE CCTV CAMERA CONTROLLER CABINET, THE NUMBER INDENTIFIES THE SPECIFIC CONDUCTOR TO BE USED FOR THE INDICATED FUNCTION.
4. CONNECT ALL DRAIN WIRES OF SHIELDED-CONDUCTORS TO CABINET GROUND AT THE LOCAL PATCH PANEL.
5. INSTALL CONNECTORS IN ACCORDANCE WITH THE MANUFACTURER'S INSTRUCTIONS.
6. WATERPROOF ALL CONNECTORS AND CABLES USING WATER-TIGHT GROMMETS, SEALING COMPOUNDS AND TAPE.
7. IF REQUIRED, THE CONTRACTOR MUST INSTALL ADAPTER MOUNTING PLATES TO MOUNT CCTV CAMERA ON POLE.

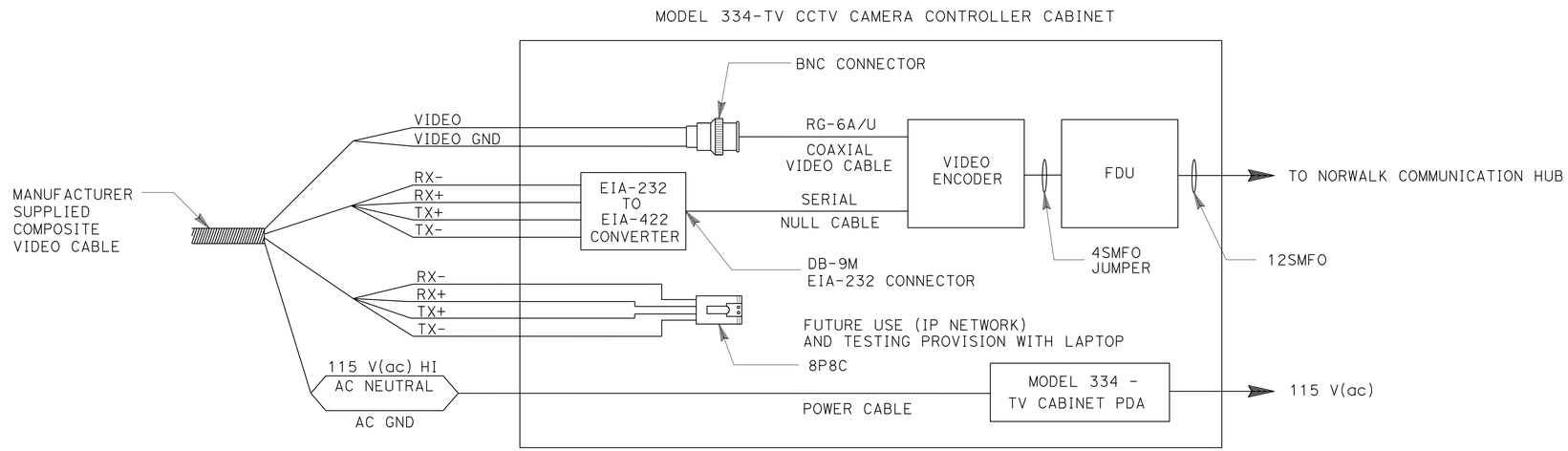

TYPICAL WIRING DIAGRAM

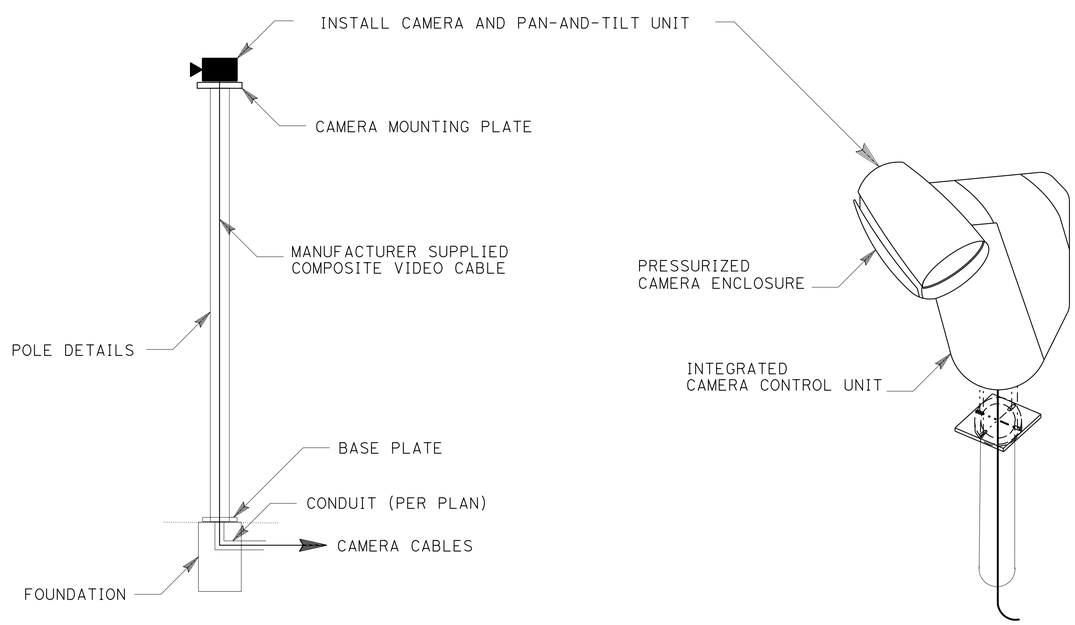

TYPICAL CAMERA WITH PAN-AND-TILT UNIT

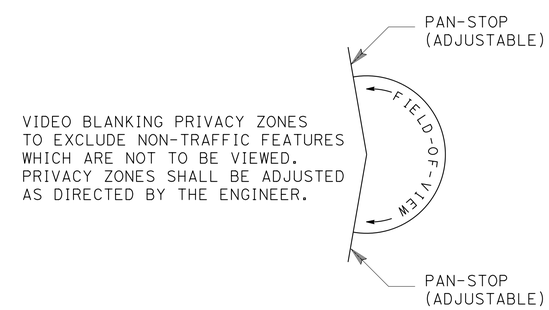

VIDEO BLANKING PRIVACY ZONES TO EXCLUDE NON-TRAFFIC FEATURES WHICH ARE NOT TO BE VIEWED. PRIVACY ZONES SHALL BE ADJUSTED AS DIRECTED BY THE ENGINEER.

ADJUSTABLE PAN-STOP DETAIL

WIRING DIAGRAM WITH PAN-AND-TILT UNIT

ELECTRICAL DETAILS

NO SCALE

E-72

FOR LEGEND, ABBREVIATIONS AND NOTES, SEE SHEET E-65.

HENRY TRINH	REVISED BY: HT
JACQUELINE C. TAN	DATE REVISED: 12/12
CALCULATED-DESIGNED BY	
CHECKED BY	
FUNCTIONAL SUPERVISOR: JACQUELINE C. TAN	

STATE OF CALIFORNIA - DEPARTMENT OF TRANSPORTATION
Caltrans
OFFICE OF ITS

LAST REVISION: 12-31-12
DATE PLOTTED => 26-JUN-2013
TIME PLOTTED => 19:34

Dist	COUNTY	ROUTE	POST MILES TOTAL PROJECT	SHEET No.	TOTAL SHEETS
07	LA	5	0.0/7.6	541	985

Jacqueline C Tan 12/18/12
REGISTERED ELECT. ENGINEER DATE

6-24-13
PLANS APPROVAL DATE

REGISTERED PROFESSIONAL ENGINEER
JACQUELINE C. TAN
No. E015611
Exp. 12/31/13
ELECTRICAL
STATE OF CALIFORNIA

THE STATE OF CALIFORNIA OR ITS OFFICERS OR AGENTS SHALL NOT BE RESPONSIBLE FOR THE ACCURACY OR COMPLETENESS OF SCANNED COPIES OF THIS PLAN SHEET.

LEGEND: (THIS SHEET ONLY)

1 CONNECTORIZING DONE BY THE CONTRACTOR AT THE MODEL 334-TV CONTROLLER CABINET

NOTE: (SHEETS E-72 TO E-73)

ALL COMPONENTS AND CONNECTORS MUST MEET NEMA TS2 REQUIREMENTS.

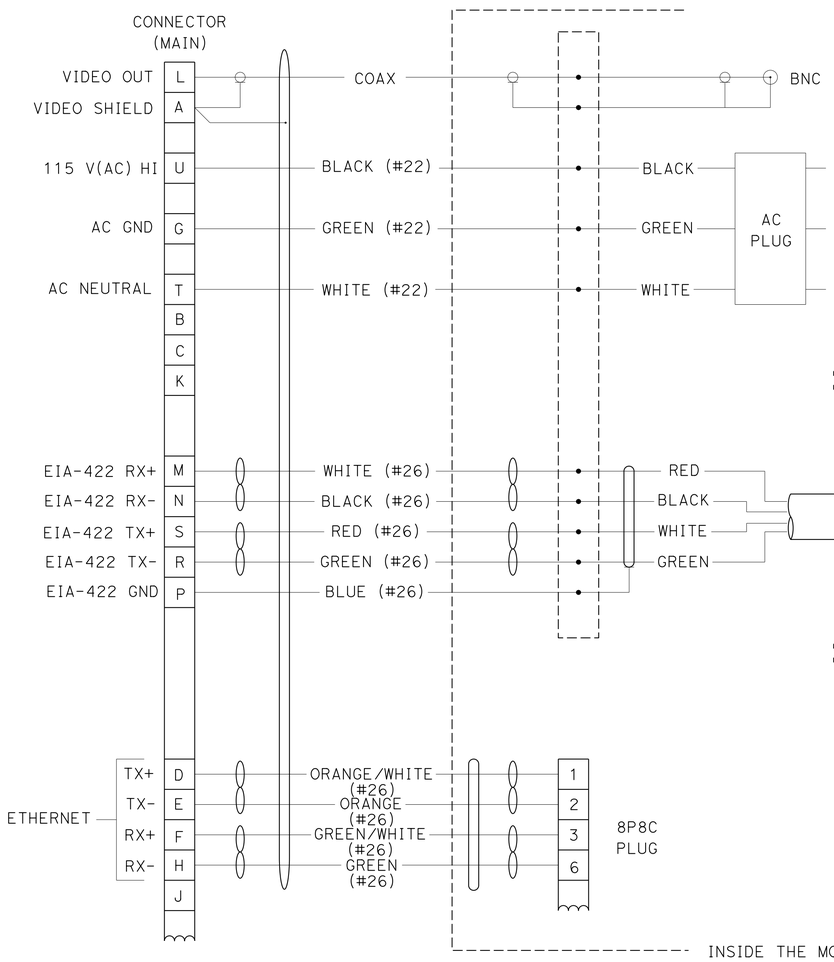

CABLE SCHEMATIC

SEE SHEET E-72 FOR DETAIL

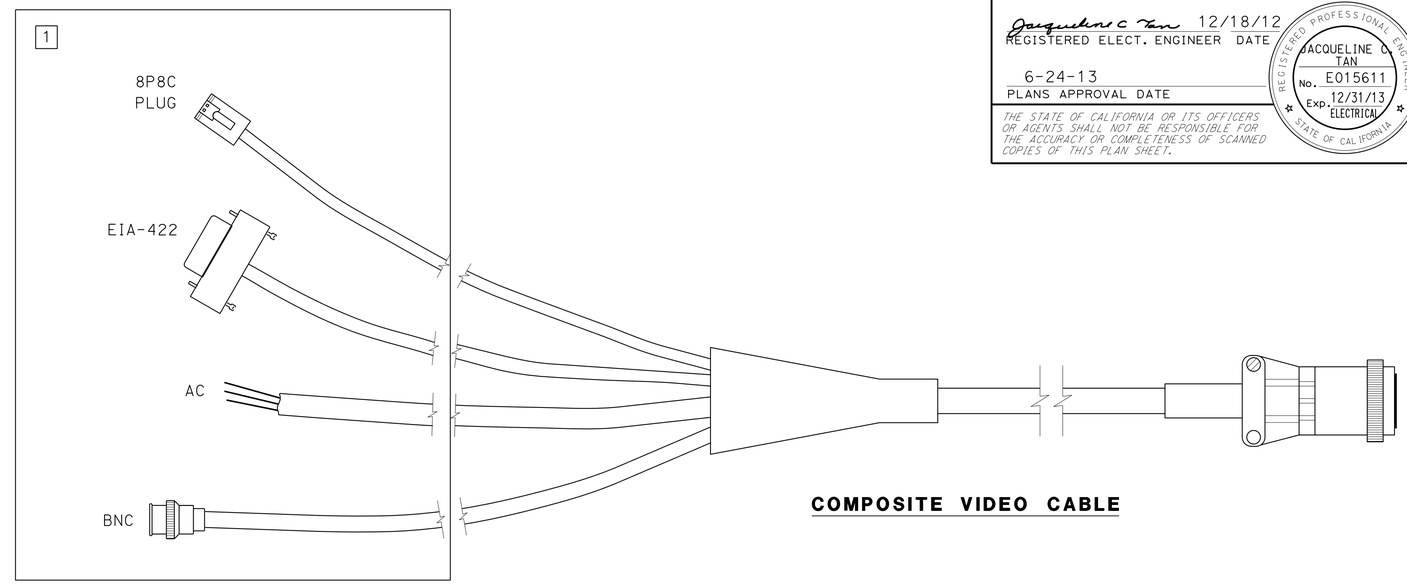

COMPOSITE VIDEO CABLE

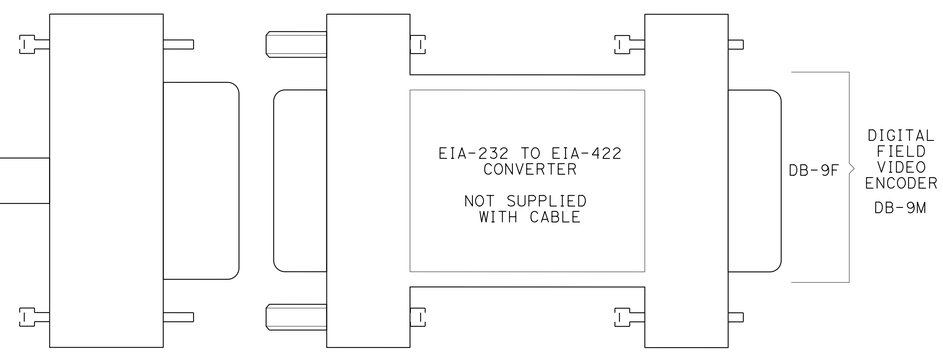

EIA-232 TO EIA-422 CONVERTER

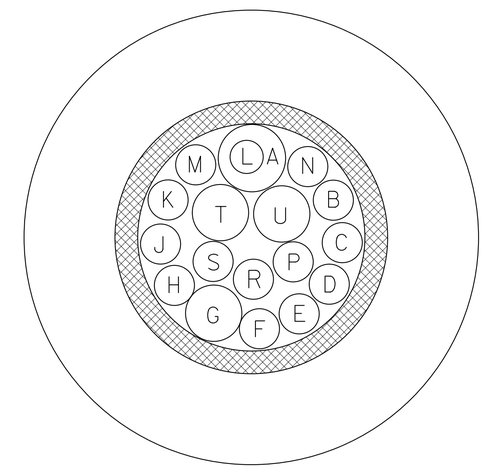

COMPOSITE VIDEO CABLE CROSS SECTION

COMPOSITE VIDEO CABLE

FOR LEGEND, ABBREVIATIONS AND NOTES, SEE SHEET E-65.

ELECTRICAL DETAILS

NO SCALE

E-73

STATE OF CALIFORNIA - DEPARTMENT OF TRANSPORTATION
Caltrans
OFFICE OF ITS

FUNCTIONAL SUPERVISOR: JACQUELINE C. TAN
CALCULATED-DESIGNED BY: HENRY TRINH
CHECKED BY: JACQUELINE C. TAN
REVISED BY: HT
DATE REVISED: 12/12

LAST REVISION 12-31-12
DATE PLOTTED => 26-JUN-2013
TIME PLOTTED => 19:35

Dist	COUNTY	ROUTE	POST MILES TOTAL PROJECT	SHEET No.	TOTAL SHEETS
07	LA	5	0.0/7.6	542	985

Jacqueline C Tan 12/18/12
REGISTERED ELECT. ENGINEER DATE

6-24-13
PLANS APPROVAL DATE

REGISTERED PROFESSIONAL ENGINEER JACQUELINE C TAN No. E015611 Exp. 12/31/13 ELECTRICAL STATE OF CALIFORNIA

THE STATE OF CALIFORNIA OR ITS OFFICERS OR AGENTS SHALL NOT BE RESPONSIBLE FOR THE ACCURACY OR COMPLETENESS OF SCANNED COPIES OF THIS PLAN SHEET.

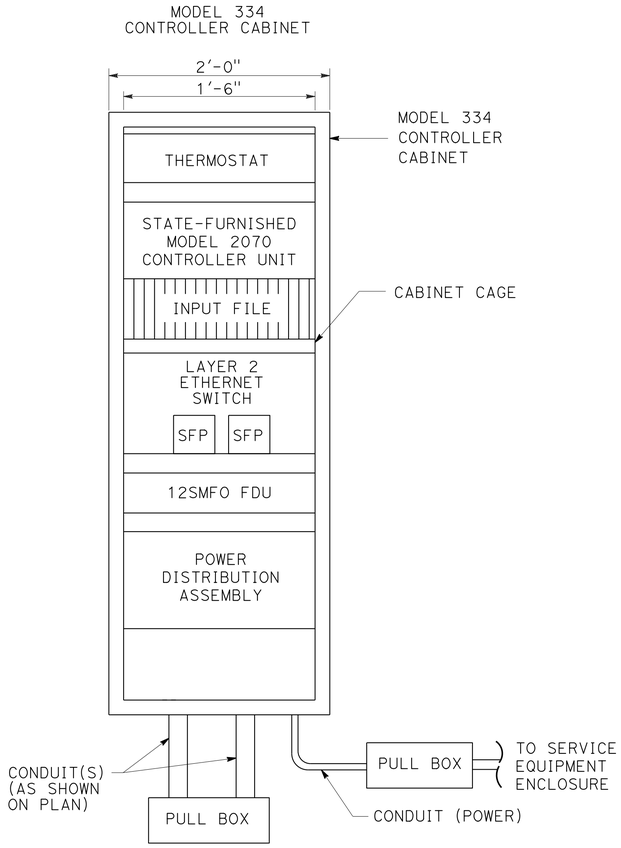

TYPICAL MODEL 334 CONTROLLER CABINET EQUIPMENT LAYOUT FOR RMS/TMS

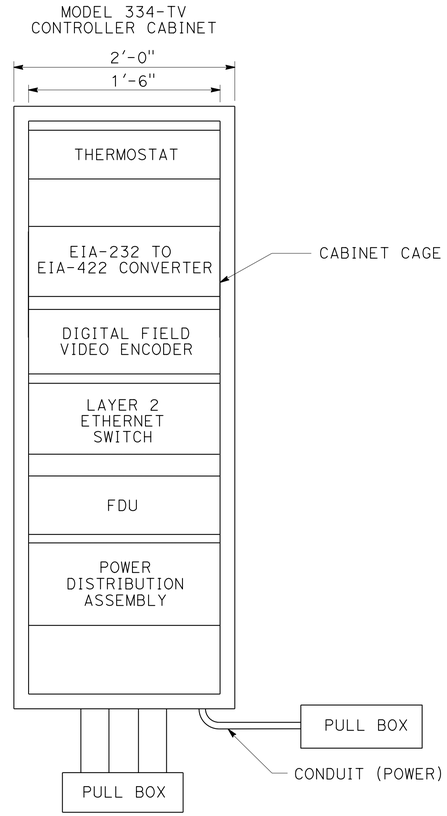

TYPICAL MODEL 334-TV CONTROLLER CABINET EQUIPMENT LAYOUT

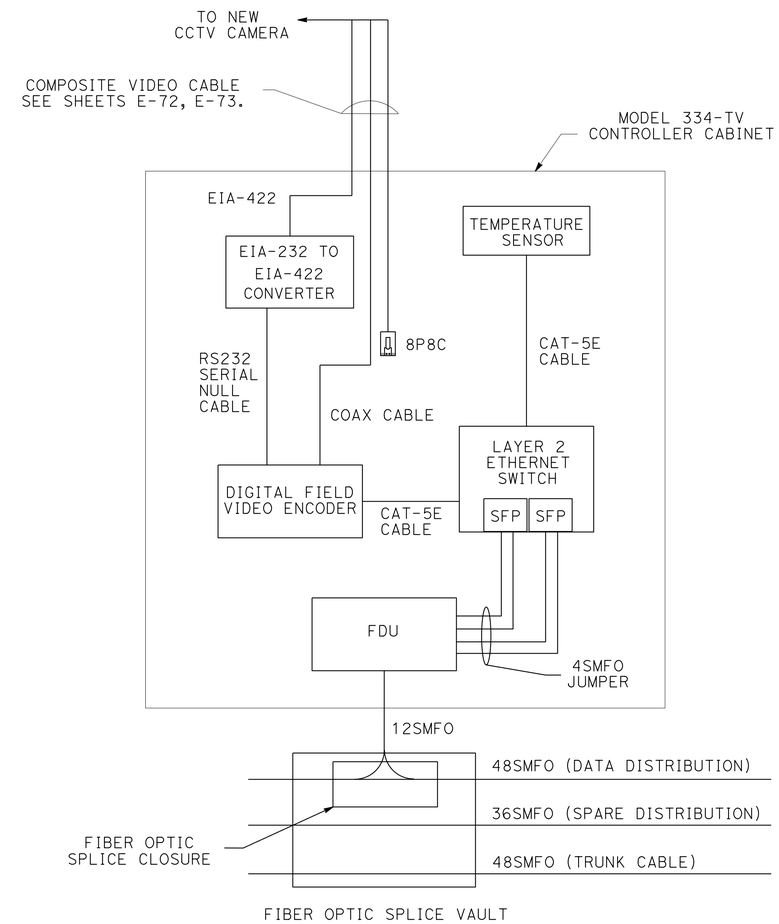

TYPICAL MODEL 344-TV CONTROLLER CABINET WIRING DETAIL

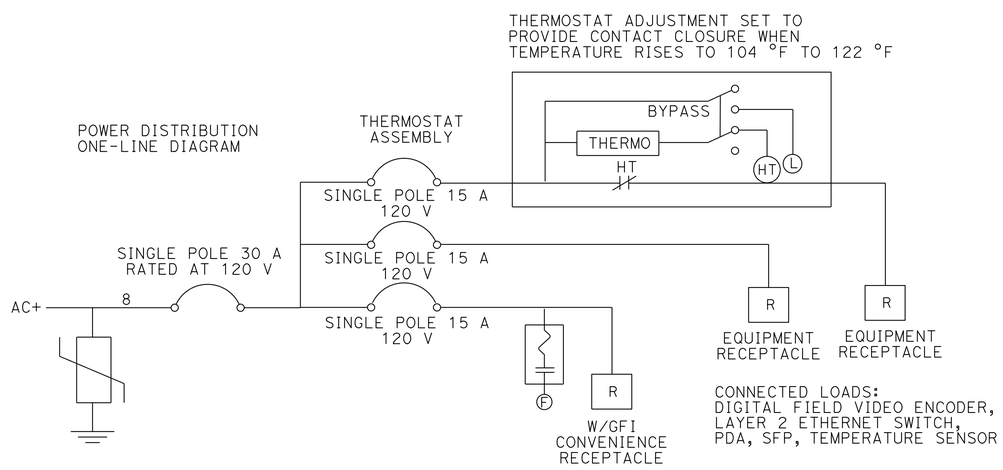

TYPICAL POWER DISTRIBUTION ASSEMBLY

MODEL 334 CONTROLLER CABINET DETAILS

FOR LEGEND, ABBREVIATIONS AND NOTES, SEE SHEET E-65.

ELECTRICAL DETAILS

NO SCALE

E-74

HENRY TRINH	HT
JACQUELINE C. TAN	12/12
CALCULATED-DESIGNED BY	REVISED BY
CHECKED BY	DATE REVISED
FUNCTIONAL SUPERVISOR	
JACQUELINE C. TAN	

STATE OF CALIFORNIA - DEPARTMENT OF TRANSPORTATION
Caltrans®
OFFICE OF ITS

LAST REVISION 12-31-12
DATE PLOTTED => 26-JUN-2013
TIME PLOTTED => 19:35

Dist	COUNTY	ROUTE	POST MILES TOTAL PROJECT	SHEET No.	TOTAL SHEETS
07	LA	5	0.0/7.6	543	985

REGISTERED ELECT. ENGINEER 12/18/12 DATE

6-24-13
PLANS APPROVAL DATE

REGISTERED PROFESSIONAL ENGINEER JACQUELINE C. TAN No. E015611 Exp. 12/31/13 ELECTRICAL STATE OF CALIFORNIA

THE STATE OF CALIFORNIA OR ITS OFFICERS OR AGENTS SHALL NOT BE RESPONSIBLE FOR THE ACCURACY OR COMPLETENESS OF SCANNED COPIES OF THIS PLAN SHEET.

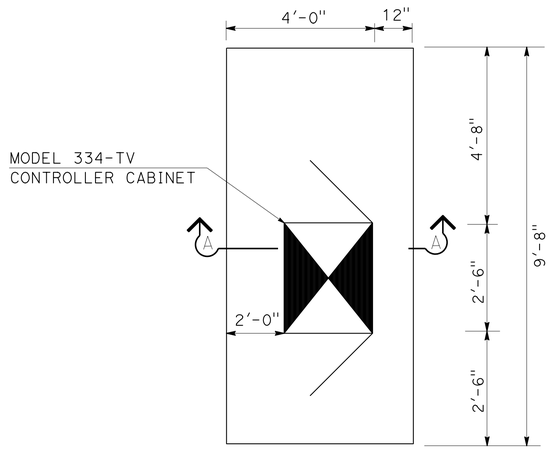

DETAIL A
PLAN VIEW

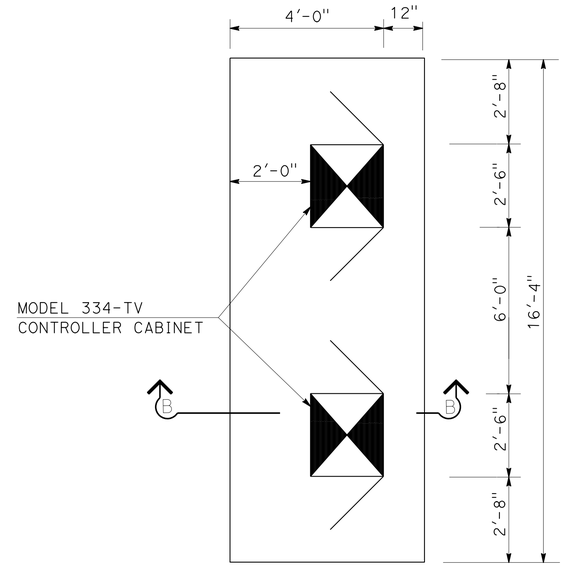

DETAIL B
PLAN VIEW

NOTES: (THIS SHEET ONLY)

1. FOR INFORMATION NOT SHOWN, SEE STANDARD PLANS SHEET RSP ES-3C.
2. CONSTRUCT PAD AND GRADE TO DRAIN AROUND AND AWAY FROM CABINET IN KEEPING WITH EXISTING DRAINAGE PATTERN.
3. CABINET DOOR MUST BE LOCATED PER PLAN AND HINGED AWAY FROM TRAVEL WAY.
4. SLOPE SECTION OF PAD IS LOWERED TO 4" WHEN REQUIRED BY FIELD CONDITION.

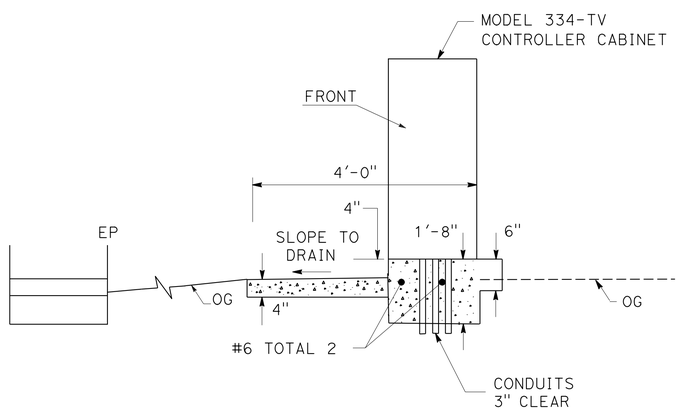

SECTION A-A
ELEVATION VIEW FOR DETAIL A

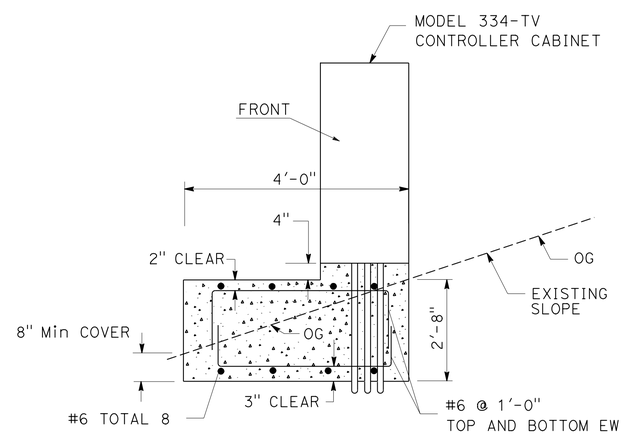

SECTION B-B
ELEVATION VIEW FOR DETAIL B

CONTROLLER CABINET FOUNDATION DETAILS

FOR LEGEND, ABBREVIATIONS AND NOTES, SEE SHEET E-65.

ELECTRICAL DETAILS
NO SCALE **E-75**

REVISED BY	DATE REVISED
HT	12/12

HENRY TRINH
JACQUELINE C. TAN
CALCULATED-DESIGNED BY
CHECKED BY
FUNCTIONAL SUPERVISOR
JACQUELINE C. TAN

STATE OF CALIFORNIA - DEPARTMENT OF TRANSPORTATION
Caltrans
OFFICE OF ITS

LAST REVISION 12-31-12
DATE PLOTTED => 26-JUN-2013
TIME PLOTTED => 19:35

Dist	COUNTY	ROUTE	POST MILES TOTAL PROJECT	SHEET No.	TOTAL SHEETS
07	LA	5	0.0/7.6	544	985

Jacqueline C. Tan 12/18/12
REGISTERED ELECT. ENGINEER DATE

6-24-13
PLANS APPROVAL DATE

REGISTERED PROFESSIONAL ENGINEER JACQUELINE C. TAN No. E015611 Exp. 12/31/13 ELECTRICAL STATE OF CALIFORNIA

THE STATE OF CALIFORNIA OR ITS OFFICERS OR AGENTS SHALL NOT BE RESPONSIBLE FOR THE ACCURACY OR COMPLETENESS OF SCANNED COPIES OF THIS PLAN SHEET.

LEGEND: (THIS SHEET ONLY)

1. LAYER 2 ETHERNET SWITCH WITH 2 SFP-LX MODULES WITH POWER SUPPLY.
2. SEE SHEET E-73 FOR COMPONENT DETAILS.
3. FOR REFERENCE ONLY. SEE SHEET E-74 FOR COMPONENT DETAILS.

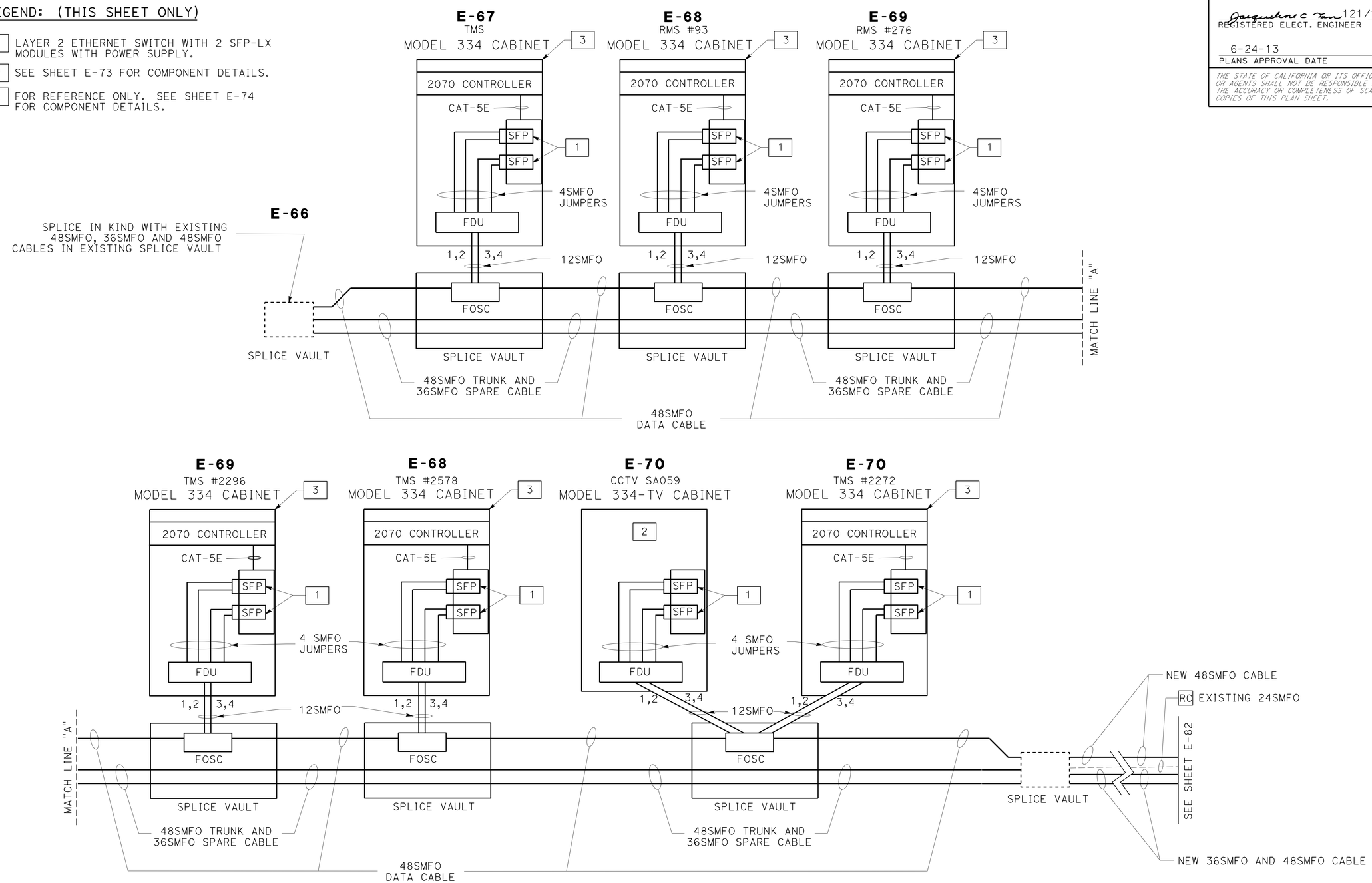

BLOCK DIAGRAM

FOR LEGEND, ABBREVIATIONS AND NOTES, SEE SHEET E-65.

ELECTRICAL DETAILS

NO SCALE

E-76

HENRY TRINH	HT
JACQUELINE C. TAN	12/12
CALCULATED-DESIGNED BY	REVISED BY
CHECKED BY	DATE REVISED
FUNCTIONAL SUPERVISOR	
JACQUELINE C. TAN	

STATE OF CALIFORNIA - DEPARTMENT OF TRANSPORTATION
OFFICE OF ITS
Caltrans

LAST REVISION 12-31-12
DATE PLOTTED => 26-JUN-2013
TIME PLOTTED => 19:35

Dist	COUNTY	ROUTE	POST MILES TOTAL PROJECT	SHEET No.	TOTAL SHEETS
07	LA	5	0.0/7.6	545	985

Jacqueline C. Tan 12/18/12
REGISTERED ELECT. ENGINEER DATE

6-24-13
PLANS APPROVAL DATE

REGISTERED PROFESSIONAL ENGINEER
JACQUELINE C. TAN
No. E015611
Exp. 12/31/13
ELECTRICAL
STATE OF CALIFORNIA

THE STATE OF CALIFORNIA OR ITS OFFICERS OR AGENTS SHALL NOT BE RESPONSIBLE FOR THE ACCURACY OR COMPLETENESS OF SCANNED COPIES OF THIS PLAN SHEET.

VIDEO AND DATA DISTRIBUTION FIBER OPTIC CABLE (48SMFO) ASSIGNMENT TABLE (PM 0.0 TO PM 7.6)

PM	5.9	6.5	6.5	6.6	6.7	6.7	6.8	6.9	7.1	
	SB SPLICE VAULT	TMS	SB RMS 93	NB RMS 276	SB TMS 2296	NB TMS 2578	NB TMS 2272	NB CCTV 059	SB SPLICE VAULT	
USE										FIBER
	--								--	FIBER 1
	--								--	FIBER 2
	--								--	FIBER 3
	--								--	FIBER 4
	--								--	FIBER 5
	--								--	FIBER 6
	--								--	FIBER 7
	--								--	FIBER 8
	--								*	FIBER 9
	--								*	FIBER 10
	--								*	FIBER 11
	--								*	FIBER 12
TRANSMIT IN 1	--	X		X		X			*	FIBER 13
TRANSMIT OUT 1	--	X		X		X			*	FIBER 14
TRANSMIT IN 2	--		X		X		X		*	FIBER 15
TRANSMIT OUT 2	--		X		X		X		*	FIBER 16
TRANSMIT IN 3	--								*	FIBER 17
TRANSMIT OUT 3	--								*	FIBER 18
TRANSMIT IN 4	--							X	*	FIBER 19
TRANSMIT OUT 4	--							X	*	FIBER 20
	--								--	FIBER 21
	--								--	FIBER 22
	--								--	FIBER 23
	--								--	FIBER 24
	--								--	FIBER 25
	--								--	FIBER 26
	--								--	FIBER 27
	--								--	FIBER 28
	--								--	FIBER 29
	--								--	FIBER 30
	--								--	FIBER 31
	--								--	FIBER 32
	--								--	FIBER 33
	--								--	FIBER 34
	--								--	FIBER 35
	--								--	FIBER 36
	--								--	FIBER 37
	--								--	FIBER 38
	--								--	FIBER 39
	--								--	FIBER 40
	--								--	FIBER 41
	--								--	FIBER 42
	--								--	FIBER 43
	--								--	FIBER 44
	--								--	FIBER 45
	--								--	FIBER 46
	--								--	FIBER 47
	--								--	FIBER 48

LEGEND: (THIS SHEET ONLY)

X TERMINATED ACTIVE ON FDU

O TERMINATED SPARE WITH F/O PIGTAIL IN CABINET

-- SPLICE WITH EXISTING DATA DISTRIBUTION 48SMFO CABLE

* TERMINATED ACTIVE ON NEW 48SMFO FDU AT NORWALK HUB

NOTES: (THIS SHEET ONLY)

1. FIBER NUMBERS MAY BE RE-ASSIGNED BY THE ENGINEER DURING CONSTRUCTION.
2. SPLICE WITH ADJACENT TRUNK AND SPARE FIBER OPTIC CABLES WITH ON GOING PROJECT(S).

FOR LEGEND, ABBREVIATIONS AND NOTES, SEE SHEET E-65.

ELECTRICAL DETAILS

NO SCALE

E-77

STATE OF CALIFORNIA - DEPARTMENT OF TRANSPORTATION
Caltrans
OFFICE OF ITS

FUNCTIONAL SUPERVISOR: JACQUELINE C. TAN
CALCULATED-DESIGNED BY: HENRY TRINH
CHECKED BY: JACQUELINE C. TAN
REVISED BY: HT
DATE REVISED: 12/12

LAST REVISION 12-31-12
DATE PLOTTED => 26-JUN-2013
TIME PLOTTED => 19:35

Dist	COUNTY	ROUTE	POST MILES TOTAL PROJECT	SHEET No.	TOTAL SHEETS
07	LA	5	0.0/7.6	546	985

REGISTERED ELECT. ENGINEER DATE 12/18/12

6-24-13
PLANS APPROVAL DATE

REGISTERED PROFESSIONAL ENGINEER JACQUELINE C. TAN No. E015611 Exp. 12/31/13 ELECTRICAL STATE OF CALIFORNIA

THE STATE OF CALIFORNIA OR ITS OFFICERS OR AGENTS SHALL NOT BE RESPONSIBLE FOR THE ACCURACY OR COMPLETENESS OF SCANNED COPIES OF THIS PLAN SHEET.

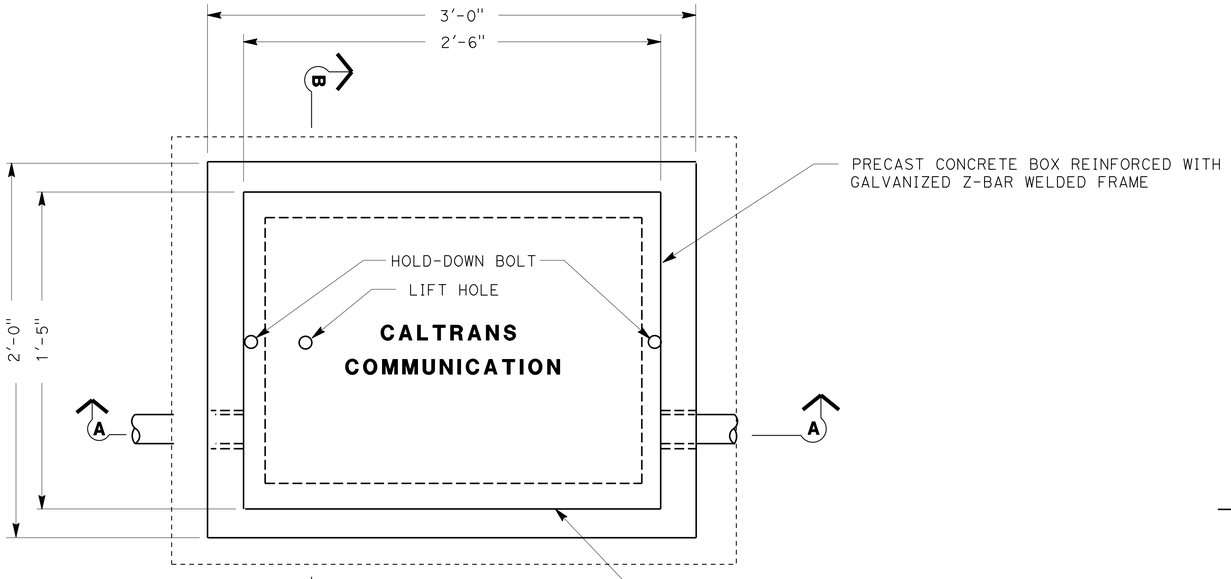

TOP VIEW

NOTES: (THIS SHEET ONLY)

1. FOR DETAILS NOT SHOWN SEE STD PLAN ES-8A.
2. CONDUITS SHOWN ARE FOR EXAMPLE ONLY. ADDITIONAL CONDUITS MAY BE REQUIRED AS SHOWN ON THE PLAN SHEETS.
3. SEE SPECIAL PROVISIONS REGARDING HOLDDOWN BOLTS FOR TRAFFIC RATE COVERS.

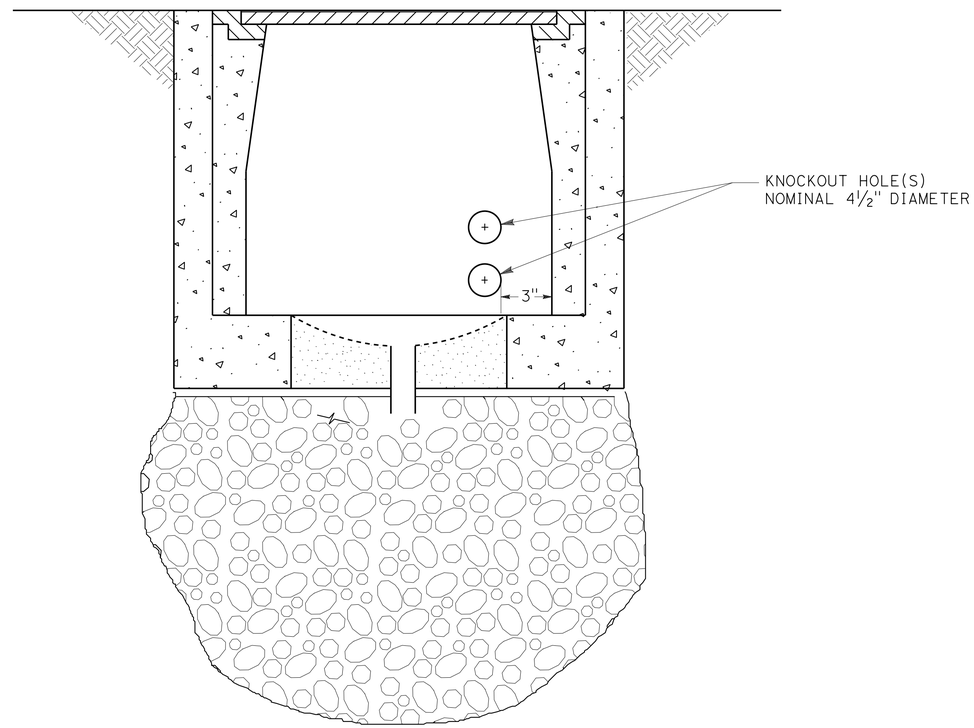

SECTION B-B

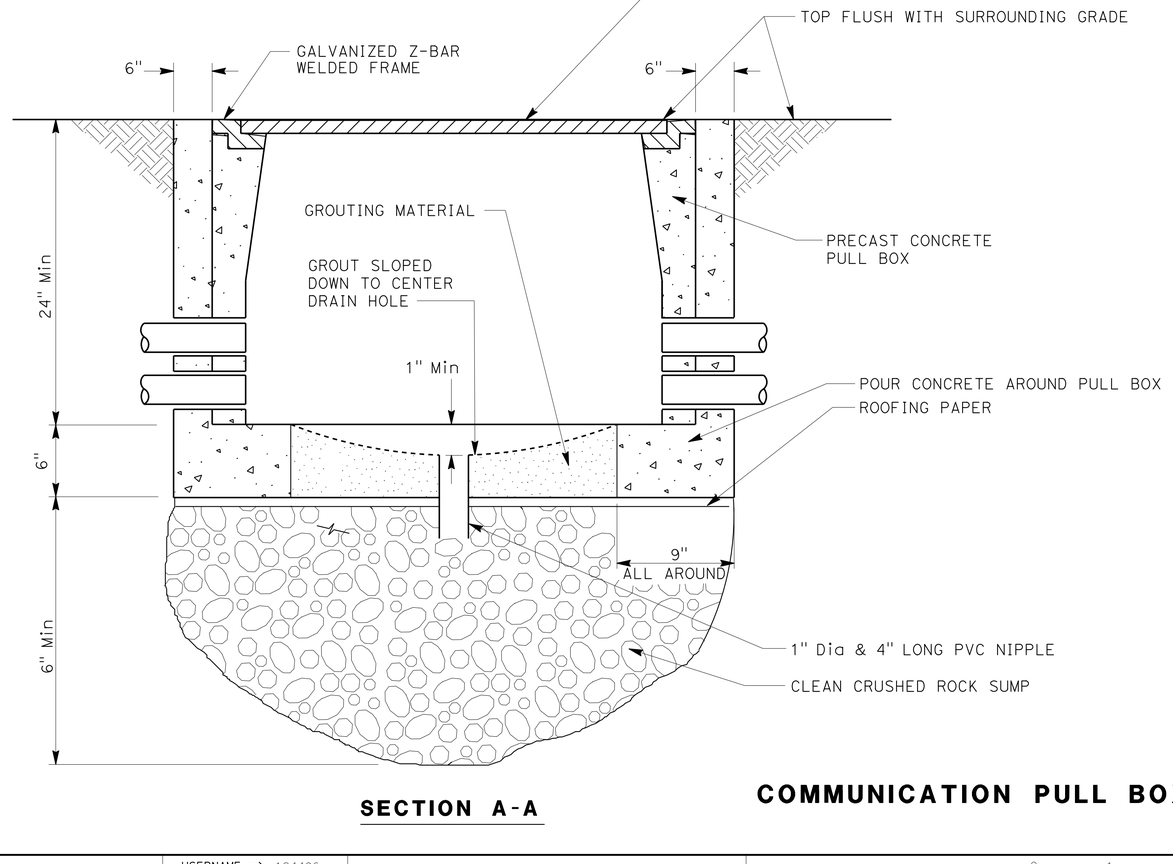

SECTION A-A

COMMUNICATION PULL BOX DETAILS

ELECTRICAL DETAILS
NO SCALE

E-78

STATE OF CALIFORNIA - DEPARTMENT OF TRANSPORTATION
Caltrans®
OFFICE OF ITS

FUNCTIONAL SUPERVISOR: JACQUELINE C. TAN
CALCULATED-DESIGNED BY: HENRY TRINH
CHECKED BY: JACQUELINE C. TAN
REVISED BY: HT
DATE REVISED: 12/12

LAST REVISION 12-31-12
DATE PLOTTED => 26-JUN-2013
TIME PLOTTED => 19:35

Dist	COUNTY	ROUTE	POST MILES TOTAL PROJECT	SHEET No.	TOTAL SHEETS
07	LA	5	0.0/7.6	547	985

REGISTERED ELECTRICAL ENGINEER 12/18/12 DATE

6-24-13
PLANS APPROVAL DATE

REGISTERED PROFESSIONAL ENGINEER JACQUELINE C. TAN No. E015611 Exp. 12/31/13 ELECTRICAL STATE OF CALIFORNIA

THE STATE OF CALIFORNIA OR ITS OFFICERS OR AGENTS SHALL NOT BE RESPONSIBLE FOR THE ACCURACY OR COMPLETENESS OF SCANNED COPIES OF THIS PLAN SHEET.

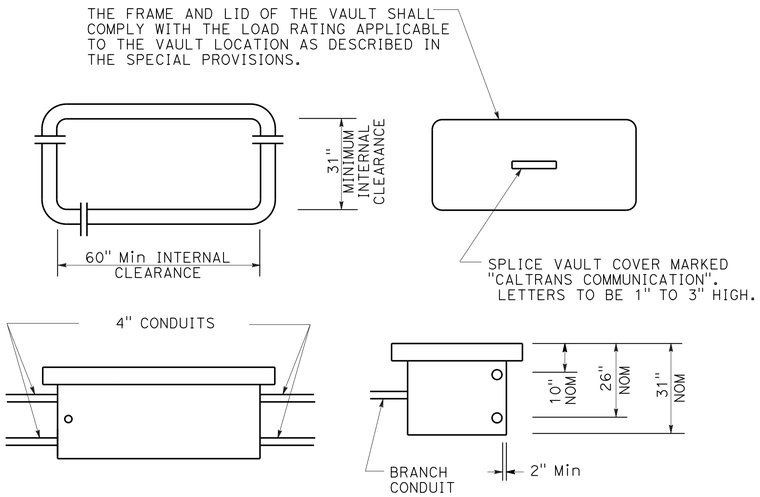

SPLICE VAULT DIMENSIONS

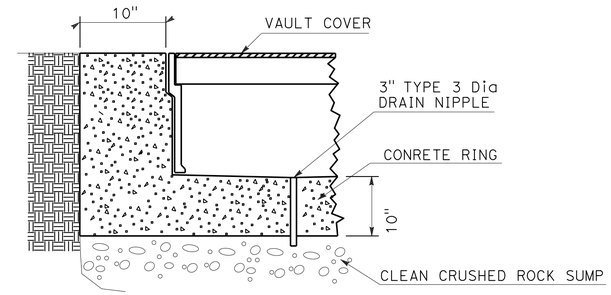

DETAIL A

INSTALLATION IN ASPHALT PAVEMENT

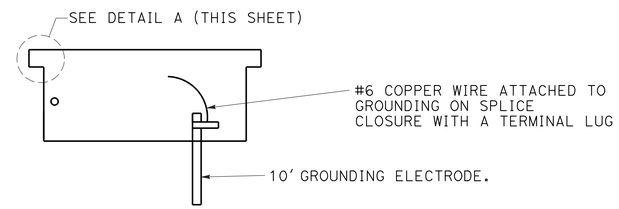

SPLICE VAULT INSTALLATION

NOTES:

1. CONCRETE ENCASEMENT AROUND SPLICE VAULT SHALL BE MINOR CONCRETE.
2. PAVEMENT AND SUBGRADE TO BE AS DIRECTED BY THE ENGINEER.
3. LONGER SIDE OF THE SPLICE VAULT MUST BE PARALLEL TO THE DIRECTION OF TRAVEL.

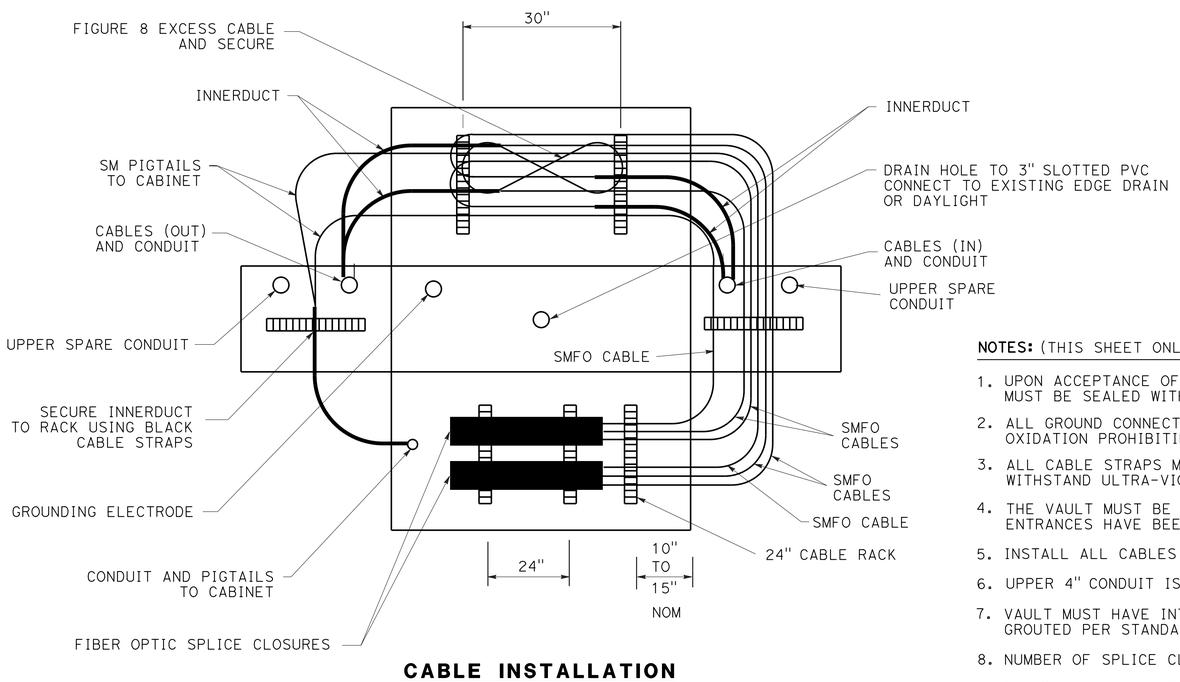

CABLE INSTALLATION

TOP VIEW - WALLS FOLDED DOWN FOR CLARITY

NOTES: (THIS SHEET ONLY)

1. UPON ACCEPTANCE OF THE WORK ALL CONDUITS MUST BE SEALED WITH COMPATIBLE SEALANT MATERIAL.
2. ALL GROUND CONNECTIONS MUST BE COATED WITH OXIDATION PROHIBITING COMPOUND.
3. ALL CABLE STRAPS MUST BE DESIGNED TO WITHSTAND ULTRA-VIOLET EXPOSURE.
4. THE VAULT MUST BE CAULKED AFTER ALL KNOWN ENTRANCES HAVE BEEN MADE.
5. INSTALL ALL CABLES IN LOWER 4" CONDUIT.
6. UPPER 4" CONDUIT IS SPARE ONLY.
7. VAULT MUST HAVE INTEGRAL BASE OR MUST BE GROUTED PER STANDARD SPECIFICATION OF PULL BOXES.
8. NUMBER OF SPLICE CLOSURES MAY VARY.
9. SPLICE VAULTS MUST BE STEEL PLATED.
10. ADDITIONAL KNOCKOUTS MAY BE NEEDED ON THE LONGER SIDE OF THE SPLICE VAULT.

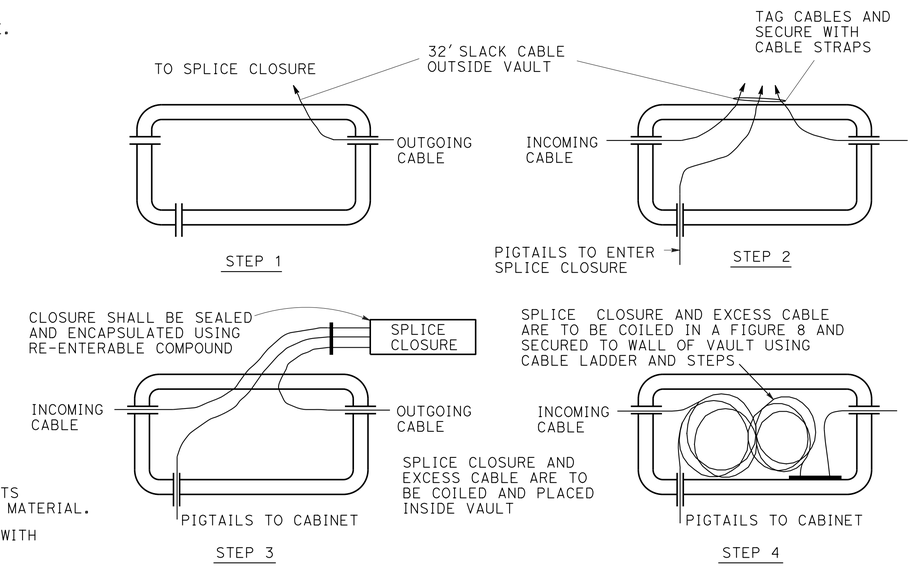

SPLICE PROCEDURE

SPLICE VAULT DETAILS

ELECTRICAL DETAILS

NO SCALE

E-79

STATE OF CALIFORNIA - DEPARTMENT OF TRANSPORTATION
Caltrans® OFFICE OF ITS

FUNCTIONAL SUPERVISOR: JACQUELINE C. TAN
CALCULATED-DESIGNED BY: HENRY H. TRINH
CHECKED BY: JACQUELINE C. TAN
REVISED BY: HT
DATE REVISED: 12/12

LAST REVISION 12-31-12
DATE PLOTTED => 26-JUN-2013
TIME PLOTTED => 19:35

Dist	COUNTY	ROUTE	POST MILES TOTAL PROJECT	SHEET No.	TOTAL SHEETS
07	LA	5	0.0/7.6	548	985

REGISTERED ELECT. ENGINEER DATE 12/18/12

6-24-13
PLANS APPROVAL DATE

REGISTERED PROFESSIONAL ENGINEER JACQUELINE C. TAN No. E015611 Exp. 12/31/13 ELECTRICAL STATE OF CALIFORNIA

THE STATE OF CALIFORNIA OR ITS OFFICERS OR AGENTS SHALL NOT BE RESPONSIBLE FOR THE ACCURACY OR COMPLETENESS OF SCANNED COPIES OF THIS PLAN SHEET.

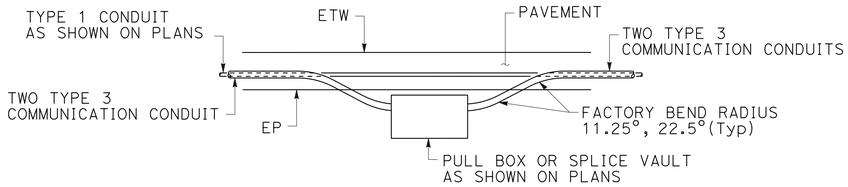

OUTSIDE SHOULDER PULL BOX INSTALLATION (TOP VIEW)

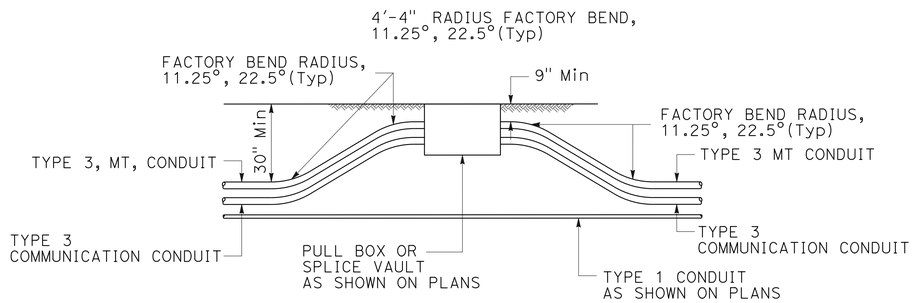

PULL BOX FOR SOIL AREA TRENCHING (ELEVATION)

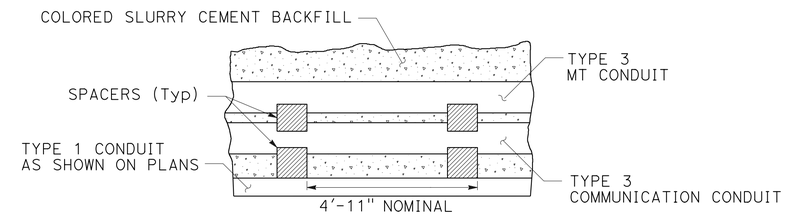

CONDUIT SPACER PLACEMENT (SIDE VIEW)

NOTES: (THIS SHEET ONLY)

1. REPLACE AC DIKE IN KIND, AS NECESSARY.
2. TRENCH TO BE CENTERED IN SHOULDER OR AS DIRECTED BY ENGINEER.
3. MAINTAIN 24" MINIMUM COVER AND BACKFILL TRENCH WITH SLURRY CEMENT BETWEEN PULL BOX AND PAVED SHOULDER.
4. WHERE TRENCH TRANSITIONS FROM ASPHALT TO UNPAVED AREA, EXCEPT AT PULL BOXES, CONDUIT TO GRADUALLY TRANSITION FROM 24" MINIMUM DEPTH TO 30" MINIMUM DEPTH WITHIN THE ASPHALT AREA.
5. 24" MINIMUM COVER MAY BE REDUCED TO 9" MINIMUM COVER IF NEEDED TO CLEAR A STORM DRAIN OR OTHER FIXED OBJECT AS DIRECTED BY RESIDENT ENGINEER.
6. PROVIDE MINIMUM 5' CLEARANCE BETWEEN ANY CONDUIT AND EXISTING STRUCTURE FOUNDATIONS.
7. ANCHOR/RESTRAIN TOP CONDUIT FROM FLOATING DURING SLURRY CEMENT BACKFILL.
8. CONDUITS MUST BE INSTALLED IN NEW ASPHALT PAVEMENT AFTER AGGREGATE BASE IS PLACED AND COMPACTED. CONDUIT INSTALLATION MUST PRECEDE ROADWAY PAVING.

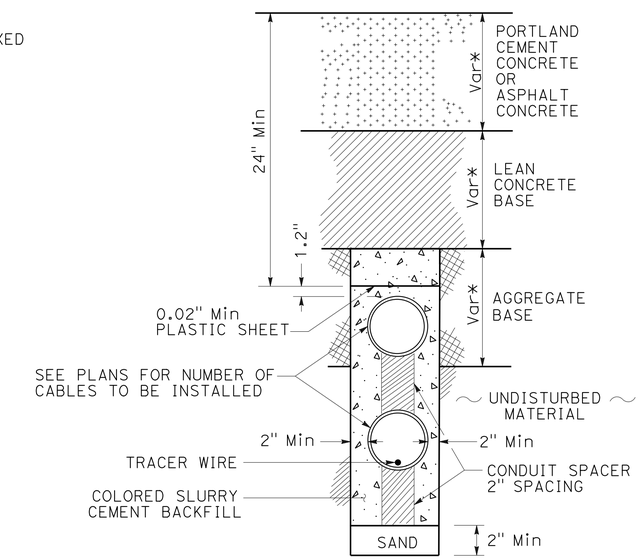

NEW PAVEMENT (PCC or ASPHALT)
WITH TYPE 3 COMMUNICATION CONDUIT(S)

(* PAVEMENT THICKNESS, SEE TYPICAL CROSS SECTION PLANS)

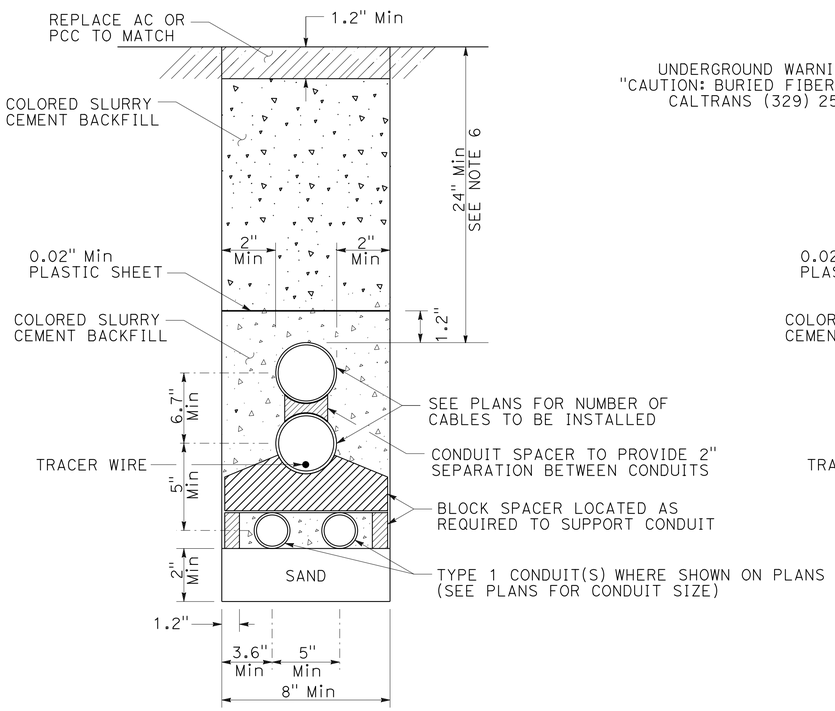

TRENCH IN PAVEMENT (CONCRETE OR ASPHALT)
WITH TYPE 3 COMMUNICATION CONDUIT(S)
AND TYPE 1 CONDUIT(S)

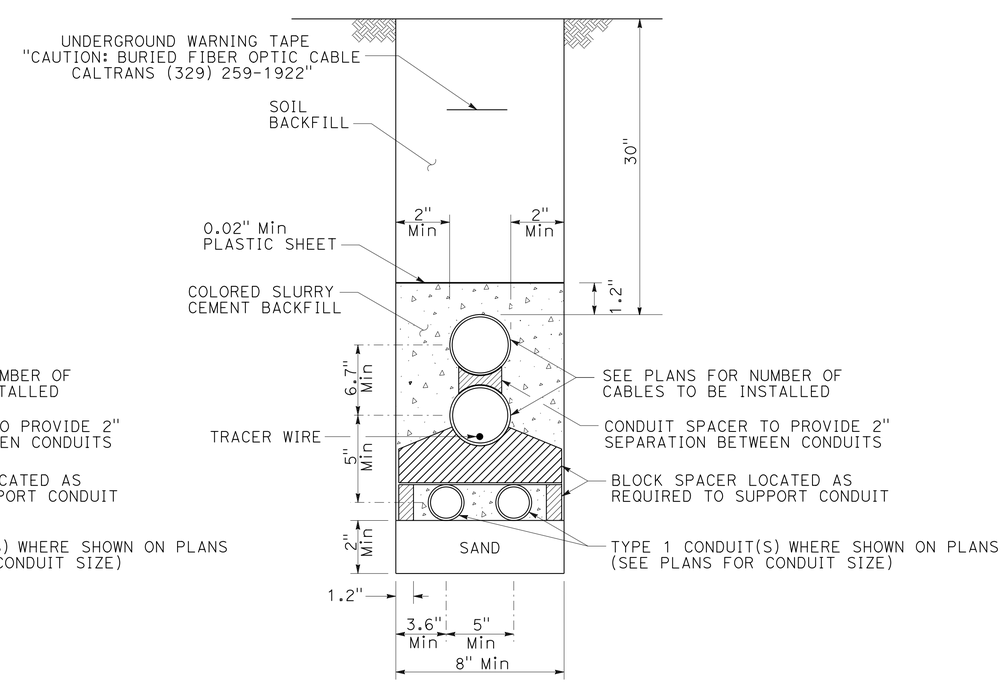

TRENCH IN SOIL
WITH TYPE 3 COMMUNICATION CONDUIT(S)
AND TYPE 1 CONDUIT(S)

COMMUNICATION CONDUIT INSTALLATION DETAILS

ELECTRICAL DETAILS
NO SCALE
E-80

HENRY TRINH	HT
JACQUELINE C. TAN	12/12
CALCULATED-DESIGNED BY	REVISED BY
CHECKED BY	DATE REVISED
FUNCTIONAL SUPERVISOR	
JACQUELINE C. TAN	

STATE OF CALIFORNIA - DEPARTMENT OF TRANSPORTATION
Caltrans®
OFFICE OF ITS

LAST REVISION 12-31-12
DATE PLOTTED => 26-JUN-2013
TIME PLOTTED => 19:35

Dist	COUNTY	ROUTE	POST MILES TOTAL PROJECT	SHEET No.	TOTAL SHEETS
07	LA	5	0.0/7.6	549	985

REGISTERED ELECT. ENGINEER 12/18/12 DATE

6-24-13
PLANS APPROVAL DATE

REGISTERED PROFESSIONAL ENGINEER JACQUELINE C. TAN No. E015611 Exp. 12/31/13 ELECTRICAL STATE OF CALIFORNIA

THE STATE OF CALIFORNIA OR ITS OFFICERS OR AGENTS SHALL NOT BE RESPONSIBLE FOR THE ACCURACY OR COMPLETENESS OF SCANNED COPIES OF THIS PLAN SHEET.

NOTES: (THIS SHEET ONLY)

1. JACKED COMMUNICATION CONDUITS SHALL BE 30" MINIMUM BELOW FINISHED GRADE.
2. PLACE PULL BOXES OR SPLICE VAULTS AS SHOWN PER PLAN.
3. BENDS MUST BE FACTORY BENDS.

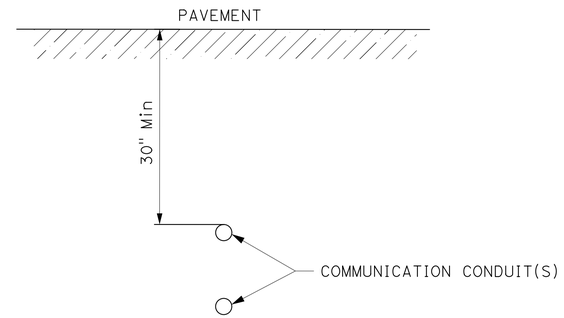

SECTION A-A

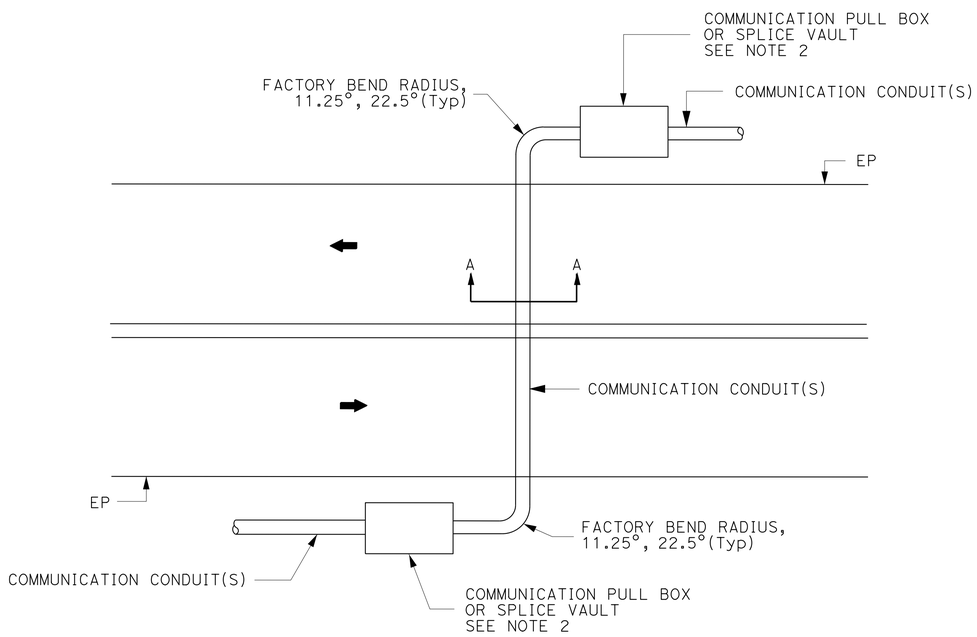

TYPICAL MAINLINE CROSSING (4 OR MORE LANES)

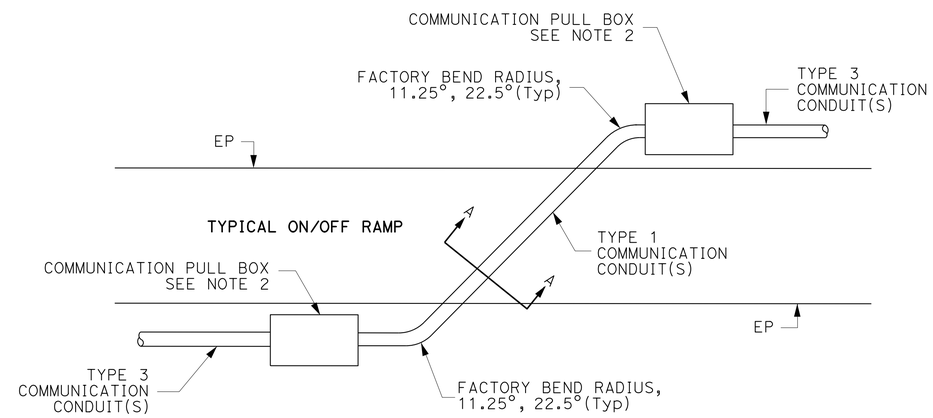

TYPICAL ON/OFF RAMP CROSSING

COMMUNICATION CONDUIT JACKING DETAILS

ELECTRICAL DETAILS
NO SCALE
E-81

REVISED BY	DATE REVISED
HT	12/12

HENRY TRINH
CALCULATED-DESIGNED BY
JACQUELINE C. TAN
CHECKED BY
FUNCTIONAL SUPERVISOR
JACQUELINE C. TAN

STATE OF CALIFORNIA - DEPARTMENT OF TRANSPORTATION
Caltrans
OFFICE OF ITS

LAST REVISION 12-31-12
DATE PLOTTED => 26-JUN-2013
TIME PLOTTED => 19:35

Dist	COUNTY	ROUTE	POST MILES TOTAL PROJECT	SHEET No.	TOTAL SHEETS
07	LA	5	0.0/7.6	550	985

REGISTERED ELECT. ENGINEER DATE 12/18/12

6-24-13
PLANS APPROVAL DATE

REGISTERED PROFESSIONAL ENGINEER JACQUELINE C. TAN No. E015611 Exp. 12/31/13 ELECTRICAL STATE OF CALIFORNIA

THE STATE OF CALIFORNIA OR ITS OFFICERS OR AGENTS SHALL NOT BE RESPONSIBLE FOR THE ACCURACY OR COMPLETENESS OF SCANNED COPIES OF THIS PLAN SHEET.

LEGEND: (THIS SHEET ONLY)

1 LAYER 2 ETHERNET SWITCH WITH 2 SFP-LX MODULES WITH POWER SUPPLY.

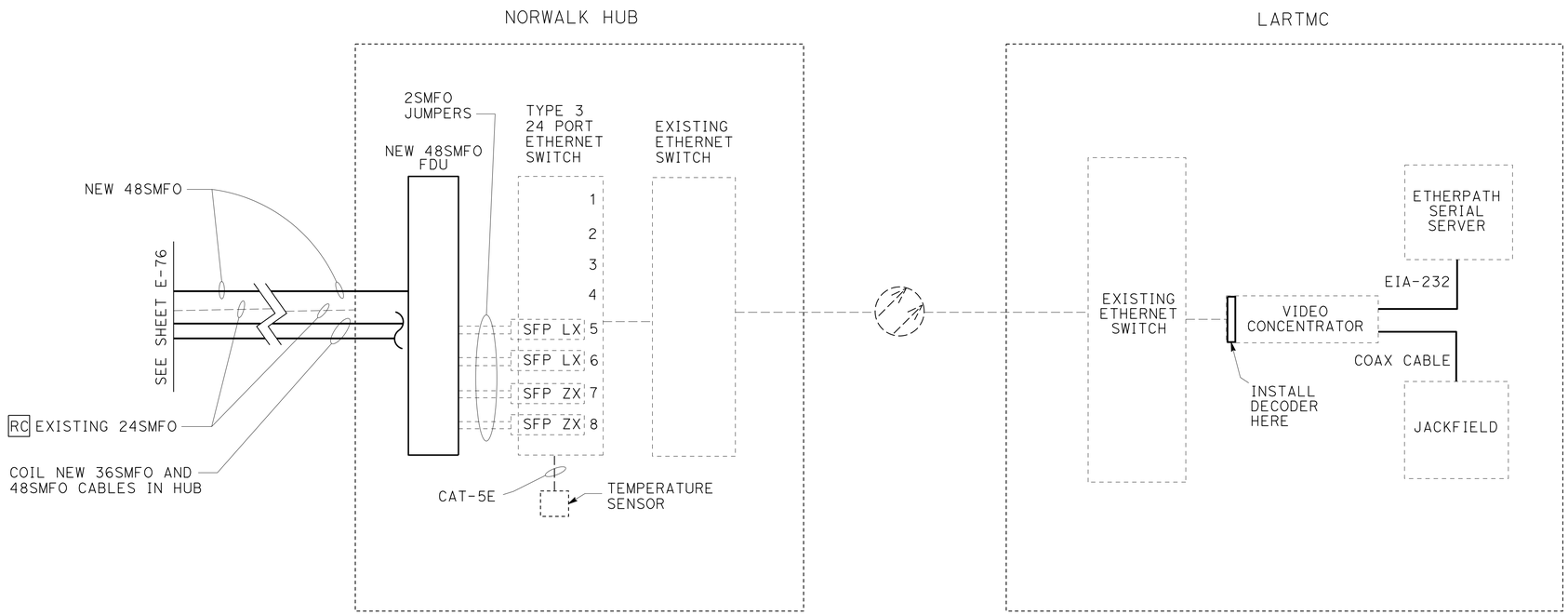

BLOCK DIAGRAM

WORK AT NORWALK HUB BUILDING AND LOS ANGELES REGIONAL TRANSPORTATION MANAGEMENT CENTER

NO SCALE

E-82

FOR LEGEND, ABBREVIATIONS AND NOTES, SEE SHEET E-65.

STATE OF CALIFORNIA - DEPARTMENT OF TRANSPORTATION
Caltrans
OFFICE OF ITS

FUNCTIONAL SUPERVISOR: JACQUELINE C. TAN
CALCULATED-DESIGNED BY: HENRY TRINH
CHECKED BY: JACQUELINE C. TAN
REVISED BY: HT
DATE REVISED: 12/12

LAST REVISION 12-31-12
DATE PLOTTED => 26-JUN-2013
TIME PLOTTED => 19:35

Dist	COUNTY	ROUTE	POST MILES TOTAL PROJECT	SHEET No.	TOTAL SHEETS
07	LA	5	0.0/7.6	551	985

REGISTERED ELECTRICAL ENGINEER 10/18/12 DATE

6-24-13
PLANS APPROVAL DATE

REGISTERED PROFESSIONAL ENGINEER C. BURCIAGA No. E015302 Exp. 3/31/13 ELECT STATE OF CALIFORNIA

THE STATE OF CALIFORNIA OR ITS OFFICERS OR AGENTS SHALL NOT BE RESPONSIBLE FOR THE ACCURACY OR COMPLETENESS OF SCANNED COPIES OF THIS PLAN SHEET.

TEMPORARY LIGHTING AND SIGN ILLUMINATION

SHEET No.	RC-EE & Foundation (EA) (N)	RC-PB (EA) (N)	RC-mv (EA) (N)	AB-Conduit (FT) (N)	RC Ser (EA) (N)	RC wood pole (EA) (N)	Type E Ser (EA) (N)	T21 ON BLKS (EA) (N)	STEEL POLE ON BLOCKS (EA) (N)	RC T21 ON BLKS (EA) (N)	RC STEEL POLE ON BLKS (EA) (N)	1½"C PVC (FT) (N)	Wood pole (EA) (N)	PB (EA) (N)	#8 (FT) (N)	#6 (FT) (N)	#8G/ #10G (FT) (N)	3"C (FT) (N)	2"C (FT) (N)	1½"C Riser (FT) (N)
E-1	4	5	4	1273	1															
E-2		2		333	1		1						2	1	400		50		52	
E-3	5	12	2	1343	1															
E-4	5	8	2	1600																
E-5	12	19	5	1790	1	8							7	1	1730		865	58	10	75
E-6	3	5		570		1							1		352		176		4	25
E-7								3	1			710		1		1500	750			25
E-8		1						2		5	1	156				422	211			
Total	29	52	13	6909	4	9	1	5	1	5	1	866	10	3	2482	1922	2052	58	66	125

NOTE: (SHEETS E-83 THRU E-87)

(N) - NOT A SEPARATE PAY ITEM, FOR INFORMATION ONLY.

MODIFY LIGHTING AND SIGN ILLUMINATION

SHEET No.	RC-mv (EA) (N)	RC-Electro-lier (EA) (N)	AB-Conduit (FT) (N)	T21 (EA) (N)	T30 (EA) (N)	PB-9/9A (EA) (N)	PB-5A (EA) (N)	PB-6A (EA) (N)	SC1A (EA) (N)	2"C (FT) (N)	3"C (FT) (N)	#6 (FT) (N)	#8G (FT) (N)	ISL (EA) (N)	TIII-BF (EA) (N)	ADD Breaker (EA) (N)
E-9				4		4				725		2850	840			1
E-10				11		16			2	2475		4950	2475	7		
E-11				4	6	9	15	2	2	3330	740	8154	3670	6	2	
E-12		3	325	2	10	2	14			2210		4535	2270			1
E-13	6					1			2		90	3200	1600	6		
Total	6	3	325	21	16	32	29	2	6	8740	830	23689	10855	19	2	2

LIGHTING (TUNNEL)

SHEET No.	Wall LUM (EA) (N)	PB-5(A) (EA) (N)	2"C (FT) (N)	3"C (FT) (N)	#10 (FT) (N)	#8G (FT) (N)	TIII-BF (EA) (N)
E-14	12	3	705	260	1822	710	1
Total	12	3	705	260	1822	710	1

ELECTRICAL QUANTITIES
E-83

REVISED BY | DATE REVISED
QUINCIE TRAN | CECILIO BURCIAGA
CALCULATED-DESIGNED BY | CHECKED BY
FUNCTIONAL SUPERVISOR | YI TSAU

STATE OF CALIFORNIA - DEPARTMENT OF TRANSPORTATION
Caltrans TRAFFIC DESIGN

LAST REVISION 09-21-12 | DATE PLOTTED => 26-JUN-2013 | TIME PLOTTED => 19:39

Dist	COUNTY	ROUTE	POST MILES TOTAL PROJECT	SHEET No.	TOTAL SHEETS
07	LA	5	0.0/7.6	552	985

REGISTERED ELECTRICAL ENGINEER 10/18/12 DATE

6-24-13
PLANS APPROVAL DATE

REGISTERED PROFESSIONAL ENGINEER C. BURCIAGA No. E015302 Exp. 3/31/13 ELECT STATE OF CALIFORNIA

THE STATE OF CALIFORNIA OR ITS OFFICERS OR AGENTS SHALL NOT BE RESPONSIBLE FOR THE ACCURACY OR COMPLETENESS OF SCANNED COPIES OF THIS PLAN SHEET.

LIGHTING (CITY STREET)

Sheet No.	Octa-flute City Lgt (EA) (N)	Decorative Ltg (EA) (N)	RL-ltg Standard (EA) (N)	AB-Conduit (FT) (N)	RC-pb (EA) (N)	City PB (EA) (N)	PB-3 (EA) (N)	PB-6 (EA) (N)	PB-5 (EA) (N)	TIII-BF (EA) (N)	3"C (FT) (N)	2"C (FT) (N)	#8 (FT) (N)	#8G (FT) (N)
E-15	2		2	605	4	5			6	1	510	610	1390	620
E-16	2								6	1	800		1200	600
E-17	3	17					1	1	23	1	3180		8180	2880
E-18		3	6		6	13				1	460	1317	3214	1317
Total	7	20	8	605	10	18	1	1	35	4	4950	2327	14614	5417

ELECTRIC SERVICE (IRRIGATION)

Sheet No.	PB-5 (EA) (N)	2"C (FT) (N)	#10 (FT) (N)	#8G (FT) (N)
E-19	3	360	2360	410
Total	3	360	2360	410

TEMPORARY RAMP METERING SYSTEM

Sheet No.	RC-Signal Head & Type 1A (EA) (N)	RC-meter on sign & Type 1A (EA) (N)	RC-pb (EA) (N)	AB-Loop (EA) (N)	AB-Conduit (FT) (N)	RC-Controller (EA) (N)	RC-Service (EA) (N)	RC-tdc (EA) (N)
E-24	2	1	17	13	1420	2	2	1
E-25	2	1	13	9	2040		1	1
E-28	2	1	17	10	1990	1	1	1
Total	6	3	47	32	5450	3	4	3

TEMPORARY TRAFFIC MONITORING STATION

Sheet No.	WIRELESS DATA (EA) (N)	#6 AWG (FT) (N)	WOOD POLE (EA) (N)	#8 (FT) (N)	#8G (FT) (N)	1½"C (FT) (N)	RC-Controller (EA) (N)	AB-loop (EA) (N)	RC-pb (EA) (N)	AB-Conduit (FT) (N)	RC-wood pole (EA) (N)
E-26	2						2	9	10	1170	
E-27	1						1	5	9	1314	
E-29	1	1200			800		1	3	8	1560	
E-30	1				1300		1	5	8	1375	
E-31			1	446	223	25			14	220	1
Total	5	1200	1	446	2323	25	5	22	39	5639	1

MICROWAVE VEHICLE DETECTION SYSTEM (TEMPORARY)

Sheet No.	MVDS (EA) (N)	RL-170 (EA) (N)	WIRELESS DATA (EA) (N)	2"C (FT) (N)	#8 (FT) (N)	#8G (FT) (N)	WOOD POLE (EA) (N)	MVDS Cable (FT) (N)	AB-conduit (FT) (N)	RC-pb (EA) (N)	RC-mvds (EA) (N)	RC-170 (EA) (N)	RC-Service (EA) (N)
E-32	1			14		40		40	14		1		
E-33	1		1	115		140		140					
E-34		1		5	1910	650	1	30	652	3	1	1	1
Total	2	1	1	134	1910	830	1	210	666	3	2	1	1

MODIFY RAMP METERING SYSTEM

Sheet No.	Loop (EA) (N)	Stub out (EA) (N)	SF-2070 (EA) (N)	WIRELESS DATA (EA) (N)	Meter-On +T1A (EA) (N)	1A (EA) (N)	Sig Head (EA) (N)	PB-5A/T (EA) (N)	PB-6A/T (EA) (N)	PB-9 (EA) (N)	1½"C (FT) (N)	2"C (FT) (N)	3"C (FT) (N)	#12 DLC (FT) (N)	DLC (FT) (N)	#8G (FT) (N)	#8 (FT) (N)	5CSC (FT) (N)	9CSC (FT) (N)
E-36	2	2								5		1000		2000		1000			
E-37	28	6	2	2	4	6	6	2	7	10		2400	1227	4100	15150	3327	3400	1400	650
E-38	17	5				2	6	3		3	237	166	221		3870	725			221
Total	47	13	2	2	4	8	12	5	7	18	237	3566	1448	6100	19020	5052	3400	1400	871

ELECTRICAL QUANTITIES
E-84

REVISED BY | DATE REVISED
QUINCIE TRAN | CECILIO BURCIAGA
CALCULATED-DESIGNED BY | CHECKED BY
FUNCTIONAL SUPERVISOR | YI TSAU

STATE OF CALIFORNIA - DEPARTMENT OF TRANSPORTATION
Caltrans TRAFFIC DESIGN

LAST REVISION 09-21-12 | DATE PLOTTED => 26-JUN-2013 TIME PLOTTED => 19:39

Dist	COUNTY	ROUTE	POST MILES TOTAL PROJECT	SHEET No.	TOTAL SHEETS
07	LA	5	0.0/7.6	553	985

REGISTERED ELECTRICAL ENGINEER 10/18/12 DATE

6-24-13
PLANS APPROVAL DATE

REGISTERED PROFESSIONAL ENGINEER C. BURCIAGA No. E015302 Exp. 3/31/13 ELECT STATE OF CALIFORNIA

THE STATE OF CALIFORNIA OR ITS OFFICERS OR AGENTS SHALL NOT BE RESPONSIBLE FOR THE ACCURACY OR COMPLETENESS OF SCANNED COPIES OF THIS PLAN SHEET.

MODIFY TRAFFIC MONITORING STATION

Sheet No.	Loop (EA) (N)	Stub out (EA) (N)	2070 (EA) (N)	WIRELESS DATA (EA) (N)	TIII-BF (EA) (N)	Ckt Bkr (EA) (N)	PB-5A (EA) (N)	PB-6A/T (EA) (N)	PB-9/9A (EA) (N)	2"C (FT) (N)	3"C (FT) (N)	DLC (FT) (N)	#8G (FT) (N)	#8 (FT) (N)	#6 (FT) (N)
E-35	14	2	1	1	1		1	1	2		316	1974	270		
E-39	6	3	1	1		2	7	1		1947	8	742	1970	1238	3350
E-40	14		2	2			9	2		1534	142	1425	1676	334	3124
Total	34	5	4	4	1	2	17	4	2	3481	466	4141	3916	1572	6474

INTERCONNECTION CONDUIT AND CABLE

Sheet No.	2"C (FT) (N)	PB-5 (EA) (N)	#8G (FT) (N)	6PR #19 (FT) (N)
E-41	3135	17	3135	5400
Total	3135	17	3135	5400

INDUCTIVE LOOP DETECTOR

Sheet No.	STUB-OUT (EA) (N)	LOOP (EA) (N)
E-42	18	106
Total	18	106

SIGNAL AND LIGHTING (LOCATION 1)

Sheet No.	†temp T1A (EA) (N)	†temp T19 (EA) (N)	VIVDS (EA) (N)	Sig Head (EA) (N)	1½"C PVC (FT) (N)	2"C (FT) (N)	3"C (FT) (N)	4"C (FT) (N)	#8G (FT) (N)	VIVDS Cable (FT) (N)	TS+LUM (EA) (N)	T1A (EA) (N)	T21TS (EA) (N)	PED (EA) (N)	APS (EA) (N)	SF-2070 (EA) (N)	BBS (EA) (N)	LOOP (EA) (N)	STUB OUT (EA) (N)	PB (EA) (N)	PB-6 (EA) (N)	PB-9A (EA) (N)	#10 (FT) (N)	#6 (FT) (N)	28CSC (FT) (N)	DLC (FT) (N)	SIGN (EA) (N)	IISNS (EA) (N)	RC Temp T1A (EA) (N)	RC Temp T19 (EA) (N)	RC VIVDS (EA) (N)	RC Signal Head (EA) (N)
E-43	2	1	2	7	108	245	150	25	170	220				2					2	1					448				2	1	2	7
E-44				14		555	610		1165		3	3	2	4	4	1	1	46	6	9	4	1	1632	20	1250	6053	12	2				
Total	2	1	2	21	108	800	760	25	1335	220	3	3	2	6	4	1	1	46	8	10	4	1	1632	20	1698	6053	12	2	2	1	2	7

MODIFY SIGNAL AND LIGHTING (LOCATION 2)

Sheet No.	Temp 1A (EA) (N)	Temp T19 (EA) (N)	Temp T21 (EA) (N)	VIVDS (EA) (N)	Sig Head (EA) (N)	RC-TEMP TS (EA) (N)	RC 1A (EA) (N)	RL Temp TS (EA) (N)	RC-Sig Head (EA) (N)	RC-pb (EA) (N)	AB-Loop (EA) (N)	AB-Conduit (FT) (N)	Cover Sig head (EA) (N)	RC-Con-troller (EA) (N)	RC-Servie on pole (EA) (N)	RL-VIVDS (EA) (N)	1½"C PVC (FT) (N)	TS+ LUM (EA) (N)	PPB (EA) (N)	21TS (EA) (N)	SIGN (EA) (N)	IISNS (EA) (N)	PED (EA) (N)	APS (EA) (N)	SF-2070 (EA) (N)	BBS (EA) (N)	LOOP (EA) (N)	STUB OUT (EA) (N)	PB (EA) (N)	PB-6 (EA) (N)	1½"C (FT) (N)	2"C (FT) (N)	3"C (FT) (N)	#8G (FT) (N)	#10 (FT) (N)	#6 (FT) (N)	VIVDS Cable (FT) (N)	12CSC (FT) (N)	5CSC (FT) (N)	28CSC (FT) (N)	DLC (FT) (N)
E-45	1	1	1	3	10	1	2		2	5	13	755									3		1						2	1	105	205		380	590		500	272	314		
E-46						4				3		375	8	1	1																	25		90	185						
E-47						3		3								2	136												2			30	90	260	1458	80		140			
E-48													4																													
E-49																		3	1	4	10	3	6	1	1	1	47	7	14			575	445	1020	1796	20				1100	6365
Total	1	1	1	3	10	8	2	3	2	8	13	1130	12	1	1	2	136	3	1	4	13	3	7	1	1	1	47	7	18	1	105	835	535	1750	4029	100	500	412	314	1100	6365

ELECTRICAL QUANTITIES
E-85

REVISED BY | DATE REVISED
QUINCIE TRAN | CECILIO BURCIAGA
CALCULATED-DESIGNED BY | CHECKED BY
FUNCTIONAL SUPERVISOR | YI TSAU

STATE OF CALIFORNIA - DEPARTMENT OF TRANSPORTATION
Caltrans® TRAFFIC DESIGN

LAST REVISION 09-21-12 | DATE PLOTTED => 26-JUN-2013 | TIME PLOTTED => 19:39

Dist	COUNTY	ROUTE	POST MILES TOTAL PROJECT	SHEET No.	TOTAL SHEETS
07	LA	5	0.0/7.6	554	985

REGISTERED ELECTRICAL ENGINEER 10/18/12 DATE

6-24-13
PLANS APPROVAL DATE

REGISTERED PROFESSIONAL ENGINEER C. BURCIAGA No. E015302 Exp. 3/31/13 ELECT STATE OF CALIFORNIA

THE STATE OF CALIFORNIA OR ITS OFFICERS OR AGENTS SHALL NOT BE RESPONSIBLE FOR THE ACCURACY OR COMPLETENESS OF SCANNED COPIES OF THIS PLAN SHEET.

MODIFY SIGNAL AND LIGHTING (CITY STREET LOCATION 3)

Sheet No.	Temp T1A (EA) (N)	Temp T19 (EA) (N)	Temp T30 (EA) (N)	VIVDS (EA) (N)	Sig HEAD (EA) (N)	RC-TS (EA) (N)	RC-TEMP TS (EA) (N)	RC T30 (EA) (N)	RL Temp TS (EA) (N)	RC-Sig Head (EA) (N)	RC-pb (EA) (N)	AB-Loop (EA) (N)	AB-Conduit (FT) (N)	Cover Sig Head (EA) (N)	RL-CONTROLLER (EA) (N)	RL-VIVDS (EA) (N)	1½"C PVC (FT) (N)	TS+ LUM (EA) (N)	1A (EA) (N)	21TS (EA) (N)	SIGN (EA) (N)	IISNS (EA) (N)	PED (EA) (N)	APS (EA) (N)	ECONO LITE (EA) (N)	LOOP (EA) (N)	STUB OUT (EA) (N)	BBS (EA) (N)	PB-#5 (EA) (N)	PB-#6 (EA) (N)	1½"C (FT) (N)	2"C (FT) (N)	3#C (FT) (N)	#8G (FT) (N)	#10 (FT) (N)	#6 (FT) (N)	12CSC (FT) (N)	5CSC (FT) (N)	28CSC (FT) (N)	DLC (FT) (N)	VIVDS Cable (FT) (N)	TIII-BF (EA) (N)
E-50	3	1	1	2	10	8	1	1		1	12	15	920	4			102								1	4	2		3	1	167	185	45	520	975	20	320	150		344	363	1
E-51		1			3	4	3		3	2		6	165	1	1	2					4	1				6	1					165		165	330	10	165			30	165	
E-52					5	1				4				2																												
E-53				2	4													3	2	1		4	6	1	1	16	6	1	9	5		800	520	1320	1600	15			1026	2990	620	
Total	3	2	1	4	23	13	4	1	3	7	12	21	1085	7	1	2	102	3	2	1	4	5	6	1	2	26	9	1	12	6	167	1150	565	2005	2905	45	485	150	1026	3364	1148	1

TEMPORARY SIGNAL SYSTEM (CITY STREET LOCATION 4)

Sheet No.	TS+ LUM (EA) (N)	1A (EA) (N)	T21TS (EA) (N)	VIVDS (EA) (N)	Sig HEAD (EA) (N)	PED (EA) (N)	SIGN (EA) (N)	IISNS (EA) (N)	APS (EA) (N)	Controller (EA) (N)	BBS (EA) (N)	TIII-BF (EA) (N)	PB (EA) (N)	2"C (FT) (N)	3"C (FT) (N)	#8G (FT) (N)	#10 (FT) (N)	#6 (FT) (N)	28CSC (FT) (N)	VIVDS Cable (FT) (N)	RC-PB (EA) (N)	RC-TS (EA) (N)	RC-1A (EA) (N)	RC-T21 (EA) (N)	RS-VIVDS (EA) (N)	RC-Controller (EA) (N)	RC-TIII-BF (EA) (N)	AB-Conduit (FT) (N)
E-54	2	2	2	3	12	4	7	2	1	1	1	1	6	92	191	283	910	20	477	283	6	2	2	2	3	1	1	283
Total	2	2	2	3	12	4	7	2	1	1	1	1	6	92	191	283	910	20	477	283	6	2	2	2	3	1	1	283

MODIFY SIGNAL AND LIGHTING (CITY STREET LOCATION 5)

Sheet No.	TS+LUM (EA) (N)	Sig Head (EA) (N)	RC-TS (EA) (N)	RC-Sig Head (EA) (N)	RC-pb (EA) (N)	RL-Sig Head (EA) (N)	Cover-Sig Head (EA) (N)	Sign (EA) (N)	PB-#5 (EA) (N)	2"C (FT) (N)	#8G (FT) (N)	#10 (FT) (N)	12CSC (FT) (N)
E-55		3				2	4	3					
E-56	1	2				2		1	1	53	53	106	53
E-57			1	4	1	1							
Total	1	5	1	4	1	5	4	4	1	53	53	106	53

ELECTRICAL QUANTITIES

E-86

REVISED BY | DATE REVISED
QUINCIE TRAN | CECILIO BURCIAGA
CALCULATED-DESIGNED BY | CHECKED BY
FUNCTIONAL SUPERVISOR | YI TSAU
STATE OF CALIFORNIA - DEPARTMENT OF TRANSPORTATION
Caltrans® TRAFFIC DESIGN

LAST REVISION 09-21-12 | DATE PLOTTED => 26-JUN-2013 | TIME PLOTTED => 19:39

Dist	COUNTY	ROUTE	POST MILES TOTAL PROJECT	SHEET No.	TOTAL SHEETS
07	LA	5	0.0/7.6	555	985

REGISTERED ELECT. ENGINEER DATE 10/18/12

PLANS APPROVAL DATE 6-24-13

REGISTERED PROFESSIONAL ENGINEER JACQUELINE C. TAN No. E015611 Exp. 12/31/13 ELECTRICAL STATE OF CALIFORNIA

THE STATE OF CALIFORNIA OR ITS OFFICERS OR AGENTS SHALL NOT BE RESPONSIBLE FOR THE ACCURACY OR COMPLETENESS OF SCANNED COPIES OF THIS PLAN SHEET.

MODIFY COMMUNICATION SYSTEM

SHEET No.	(N) FDU	(N) SWITCH	(N) SFP MODULES	(N) 3"C	(N) 12SMFO	(N) 2-48SMFO	(N) 36SMFO	(N) 2-4"C	(N) 4-1" INNERDUCT	(N) TRACER WIRE	(N) SPLICE VAULT	(N) RL CABINET	(N) CCTV POLE	(N) ENCODER	(N) DECODER	(N) EIA-422 TO EIA-232 CONVERTER	(N) PB (C)	(N) PB (T)	(N) RL CCTV POLE	(N) FIBER OPTIC SPLICE CLOSURE	(N) CONDUCTOR
	EA	EA	EA	FT	FT	FT	FT	FT	FT	FT	EA	EA	EA	EA	EA	EA	EA	EA	EA	EA	FT
E-66						950	950	950	950	950											
E-67	1	1	2	15	15	1250	1250	1250	1265	1250	1							1		1	
E-68	2	2	4	700	700	1550	1550	1550	2250	1550	3						1	2		3	
E-69	2	2	4	3200	2200	1400	1400	1400	3600	1400	2						4	8		2	3200
E-70	2	2	4	1400	1300	300	300	300	1600	300	1	1	1	1		1	4	2	1	1	100
E-71				15	15	700	700	700	700	700											
TOTAL	7	7	14	5330	4230	6150	6150	6150	10365	6150	7	1	1	1		1	9	13	1	7	3300

(N)- NOT A SEPARATE PAY ITEM, FOR INFORMATION ONLY

WORK AT NORWALK HUB AND LOS ANGELES REGIONAL TRANSPORTATION MANAGEMENT CENTER

SHEET No.	(N) FDU	(N) SWITCH	(N) SFP MODULES	(N) 3"C	(N) 12SMFO	(N) 2-48SMFO	(N) 36SMFO	(N) 2-4"C	(N) 4-1" INNERDUCT	(N) TRACER WIRE	(N) SPLICE VAULT	(N) RL CABINET	(N) CCTV POLE	(N) ENCODER	(N) DECODER	(N) EIA-422 TO EIA-232 CONVERTER	(N) PB (C)	(N) PB (T)	(N) RL CCTV POLE	(N) FIBER OPTIC SPLICE CLOSURE	(N) CONDUCTOR
	EA	EA	EA	FT	FT	FT	FT	FT	FT	FT	EA	EA	EA	EA	EA	EA	EA	EA	EA	EA	FT
E-82															1						

ELECTRICAL QUANTITIES
E-87

STATE OF CALIFORNIA - DEPARTMENT OF TRANSPORTATION
Caltrans® OFFICE OF ITS

FUNCTIONAL SUPERVISOR: JACQUELINE C. TAN

CALCULATED-DESIGNED BY: HENRY TRINH
CHECKED BY: JACQUELINE C. TAN

REVISED BY: HT
DATE REVISED: 12/12

LAST REVISION 12-31-12
DATE PLOTTED => 26-JUN-2013
TIME PLOTTED => 19:39

DIST	COUNTY	ROUTE	POST MILES TOTAL PROJECT	SHEET No.	TOTAL SHEETS
07	LA	5	0.0/7.6	556	985

REGISTERED CIVIL ENGINEER 4-25-12 DATE

6-24-13
PLANS APPROVAL DATE

REGISTERED PROFESSIONAL ENGINEER JOEL MAGANA No. C61500 Exp. 6/30/13 CIVIL STATE OF CALIFORNIA

The State of California or its officers or agents shall not be responsible for the accuracy or completeness of electronic copies of this plan sheet.

POLE TABLES

DEAD-END POLES

MAX SPAN	MAXIMUM OH CONDUCTORS CARRIED *	POLE TYPE	CLASS	LUMINARE ARM **	POLE EMBEDMENT	GUY ANCHOR CALL OUT
150′	5#8	A	40′ CLASS H1	-	10′-0"	G1
		B	40′ CLASS H3		11′-0"	-
200′	3#8	A	45′ CLASS H1	-	10′-0"	G1
		B	45′ CLASS H3		12′-0"	-

POLES WITHOUT OH CONDUCTORS

MAX SPAN	MAXIMUM OH CONDUCTORS CARRIED *	POLE TYPE	CLASS	LUMINARE ARM **	POLE EMBEDMENT	GUY ANCHOR CALL OUT
N/A	N/A	B	45′ CLASS 1	15′LMA	9′-0"	-

TANGENT POLES

MAX SPAN	MAXIMUM OH CONDUCTORS CARRIED *	POLE TYPE	CLASS	LUMINARE ARM **	POLE EMBEDMENT	GUY ANCHOR CALL OUT
150′	5#8	-	45′ CLASS 1	-	9′-0"	-

JUNCTION POLES

MAX (SHORT) SPAN	MAXIMUM OH CONDUCTORS CARRIED *	POLE TYPE	CLASS	LUMINARE ARM **	POLE EMBEDMENT	GUY ANCHOR CALL OUT	GUY LAYOUT ANGLE
200′ (130′)	5#8	B	45′ CLASS H1	-	11′-0"	-	-

* DESIGN VALID IF SIZE OF OH CONDUCTOR(S) CARRIED SHOWN ARE REPLACED WITH SMALLER SIZE (O. D. & WEIGHT).
** POLE CLASS SELECTION APPLICABLE WITHOUT USE OF LUMINAIRE MAST ARM (LMA) PER TABLE.

POLE LAYOUT I.D.

(GUYING ILLUSTRATES TYPE A POLE)

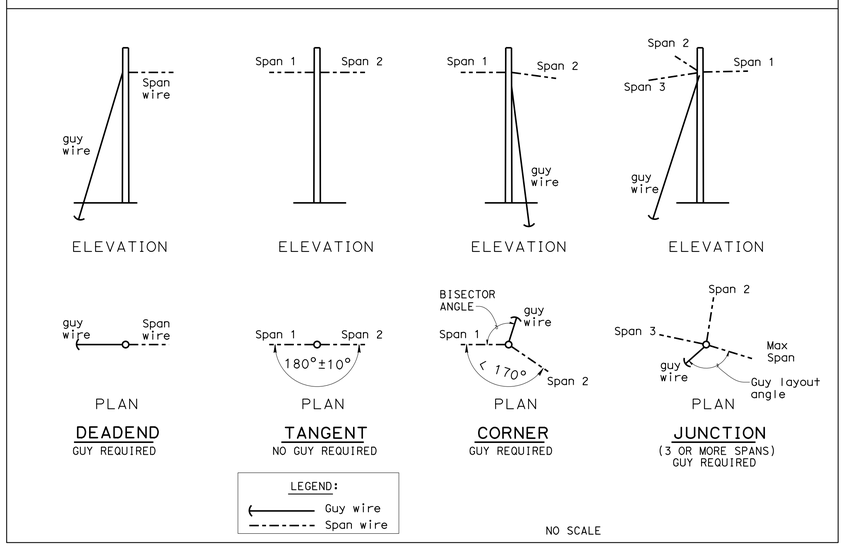

NOTE:
THE CONTRACTOR SHALL VERIFY ALL CONTROLLING FIELD DIMENSIONS BEFORE ORDERING OR FABRICATING ANY MATERIAL.

GENERAL NOTES:

1. TYPE A poles shall be stabilized using guy wires, breast blocks or rakes at each dead end, corner, drop or line deviation more than 10° from straight line and shall be attached to pole with a thru-bolt connection or as nearly as practical to the center of conductors load, 3′-0" maximum. The direction of the guy shall counteract the resultant of unbalanced force applied to pole. See pole layout I.D., otherwise see note 2.
2. Where space or conflict prevent guy installation, TYPE B poles may be used in place of TYPE A poles with specified embedment depth. (See POLE TABLES this sheet).
3. Overhead line construction not specifically covered here shall conform to the provisions of General Order No. 95 Of Public Utilities Commission.
4. All overhead cables shall be sagged with 20′+0.5% of span length minimum overhead clearance and sag of 5.5% ± 0.5%, UON.
5. For signal spans supported overhead use ¼" tether wire with 5.5% ± 0.5% sag where required.
6. Conductors shall be suspended from ⅜" ø 7 strand messenger span-wire as follows: Continuous lashing wire, No spare wire conductors allowed except as noted. Bundled vertical dimension shall not exceed 1.5" for spans 150′ or less, or 1.25" for spans 200′ or less. Maximum OH span shall not exceed Max spans on "POLE TABLES".
7. Install attachments shown if indicated on the "Electrical Plans". When specific connection detail is not shown, mount attachments per manufacturer recommended methods that do not require loss of pole cross section.
8. Attach luminaire arm or combination of attachments as specified at locations where indicated on "Electrical Plans".
9. All attachments shall be mounted with stainless steel straps or other manufacturers methods without drilling holes in pole, except as shown on these SES sheets. Any other drilling into pole will require the Engineer's approval.
10. For additional details, see all SES Sheets.
11. Pole selection shall be based on the larger pole choice of OH conductors carried and Max span per "POLE TABLES".

DESIGN NOTES:

Design: AASHTO Standard Specifications for Structural Supports for Highway Signs, Luminaires and Traffic Signals, Fifth Edition (LTS-5).

GROUP LOAD COMBINATIONS:

I Dead Load
II Dead Load + Wind Load
III Dead Load + 0.5 (Wind Load) + Ice Load
IV Fatigue: Not used

LOADING

Wind Loadings: 100 mph (3-second gust)
Wind Recurrence interval: 10 years
Combined height, exposure, and elevated terrain factor = 1.05
(Exposure C, structure is located on or over the top half of a 30′ Maximum tall ridge, hill or escarpment)

BASIC DESIGN VALUES:

Timber Poles: Fb = 1850 psi
Fv = 110 psi
Fcp = 230 psi
Fc = 950 psi
E = 1500 x 10^3 psi

TREATMENT

To conform with Section 86 Standard Specifications

SPECIFICATIONS

Caltrans Standard Specifications 2010
ANSI Wood Poles
ASTM A475, Utility Grade, 7 -strand wires
Termination efficiency factor 0.80

FOUNDATION DESIGN NOTES:

1. Pole embedment depth design is based on Broms' approximate procedure as described in Article 13.6 of AASHTO LTS-5.
2. Standard embedment depth is calculated based on level ground assumption (slope inclination is flatter than 4H:1V).
3. Embedment depth is calculated based on following: Cohesionless Soil: ø = 30 deg, γ = 120 pcf.
4. An overload factor of 2.0 and an undercapacity factor of 0.7 were used for safety factor of 2.86.
5. If pole is located on or near a steep slope (up to 2H:1V) add 2 feet extra embedment.
6. Allowable vertical bearing pressure at the end bearing of poles is 3,000 psf at 6 feet or more embedment.
7. The Contractor is to field verify the soil conditions indicated on FOUNDATION DESIGN NOTES 3 and 6.

	BY	CHECKED
DESIGN	JOEL MAGANA	VICTOR LOPEZ
DETAILS	P C WELLS	JOEL MAGANA
QUANTITIES	X	X

STATE OF CALIFORNIA
DEPARTMENT OF TRANSPORTATION

DIVISION OF ENGINEERING SERVICES
STRUCTURE DESIGN
SPECIAL DESIGN BRANCH

BRIDGE NO. N/A
POST MILE Varies

TEMPORARY WOOD POLE NOTES AND TABLES

SES-1

STRUCTURES DESIGN SPECIAL DESIGN SHEET (ENGLISH) (REV. 09-01-10)

ORIGINAL SCALE IN INCHES FOR REDUCED PLANS 0 1 2 3

UNIT: 3619
PROJECT NUMBER & PHASE: 07000018351
CONTRACT NO.: 07-215951

DISREGARD PRINTS BEARING EARLIER REVISION DATES

REVISION DATES 10-14-11 11-28-11 4-19-12

SHEET 1 OF 5

FILE => 07-215951_u-msc-01.dgn

USERNAME => s124496 DATE PLOTTED => 26-JUN-2013 TIME PLOTTED => 19:48

DIST	COUNTY	ROUTE	POST MILES TOTAL PROJECT	SHEET No.	TOTAL SHEETS
07	LA	5	0.0/7.6	557	985

REGISTERED CIVIL ENGINEER 4-25-12 DATE

6-24-13
PLANS APPROVAL DATE

REGISTERED PROFESSIONAL ENGINEER JOEL MAGANA No. C61500 Exp. 6/30/13 CIVIL STATE OF CALIFORNIA

The State of California or its officers or agents shall not be responsible for the accuracy or completeness of electronic copies of this plan sheet.

LUMINARE ARM DATA			
Projected Length	N Rise	Min OD At Pole	Thickness
15'-0"	4'-9"	4¼"	0.1196"

Refer to ES-6A for Luminare arm details

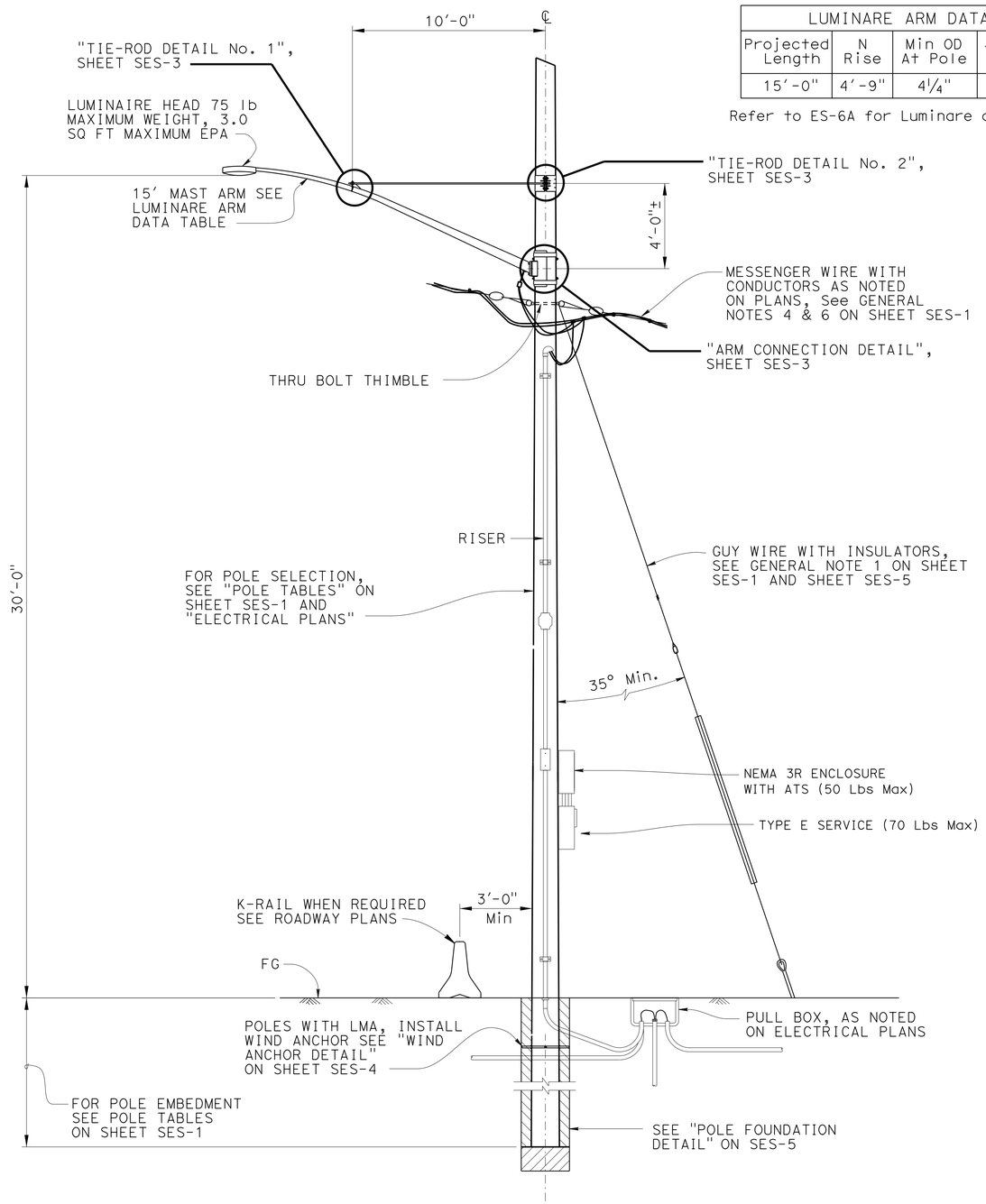

TYPICAL WOOD POLE SUPPORT WITH OPTIONAL ATTACHMENTS

NO SCALE

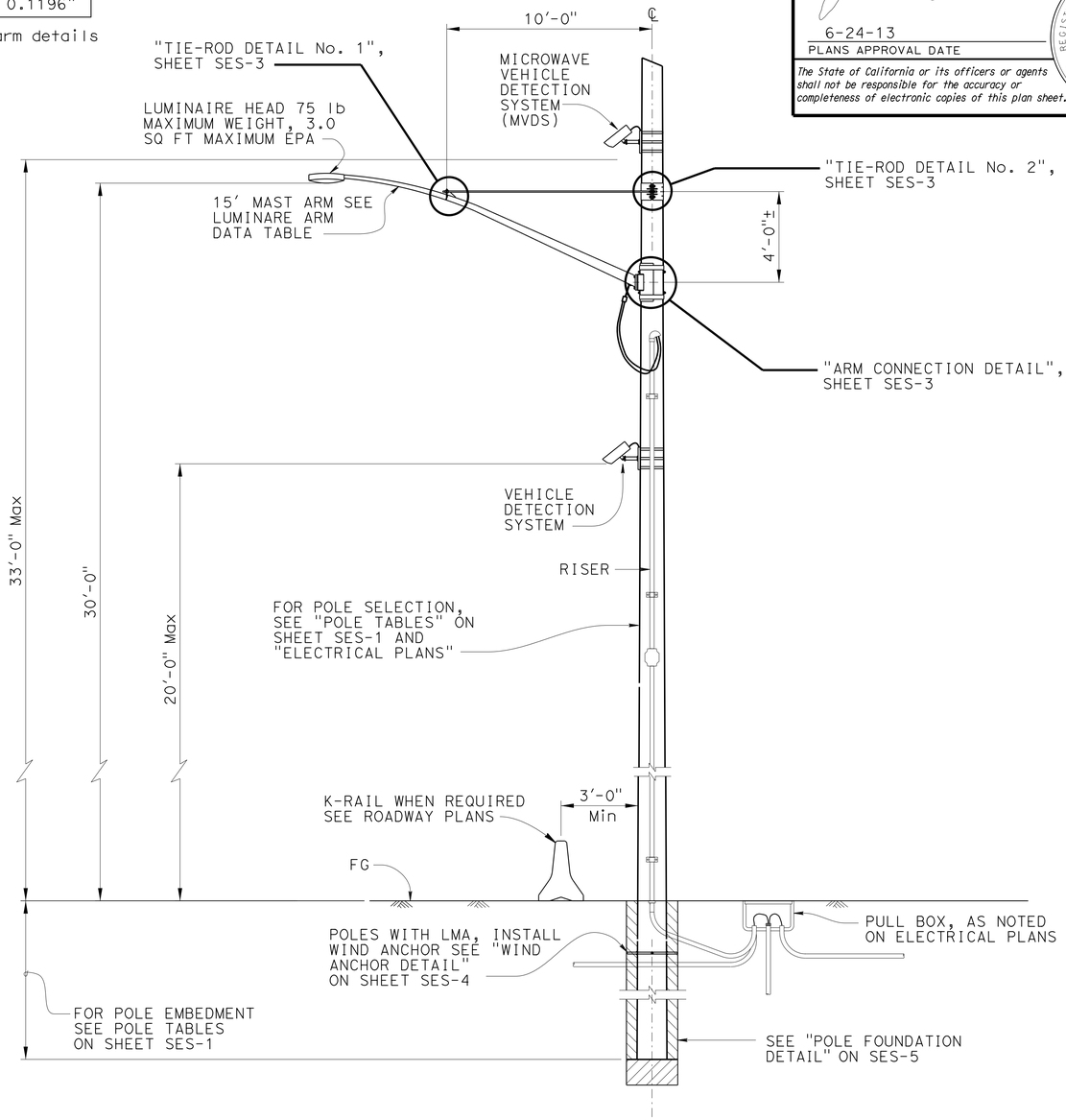

TYPICAL WOOD POLE WITHOUT OH CONDUCTORS WITH OPTIONAL ATTACHMENTS

NO SCALE

NOTE:
THE CONTRACTOR SHALL VERIFY ALL CONTROLLING FIELD DIMENSIONS BEFORE ORDERING OR FABRICATING ANY MATERIAL.

NOTE:

1. Refer to GENERAL NOTES and FOUNDATION NOTES on SES-1.

	BY	CHECKED
DESIGN	JOEL MAGANA	VICTOR LOPEZ
DETAILS	P C WELLS	JOEL MAGANA
QUANTITIES	X	X

STATE OF CALIFORNIA
DEPARTMENT OF TRANSPORTATION

DIVISION OF ENGINEERING SERVICES
STRUCTURE DESIGN
SPECIAL DESIGN BRANCH

BRIDGE NO. N/A
POST MILE Varies

TEMPORARY WOOD POLE LIGHTING & MVDS

SES-2

STRUCTURES DESIGN SPECIAL DESIGN SHEET (ENGLISH) (REV. 09-01-10)

ORIGINAL SCALE IN INCHES FOR REDUCED PLANS 0 1 2 3

UNIT: 3619
PROJECT NUMBER & PHASE: 07000018351
CONTRACT NO.: 07-215951

DISREGARD PRINTS BEARING EARLIER REVISION DATES

REVISION DATES 10-14-11 4-19-12

SHEET 2 OF 5

FILE => 07-215951_u-msc-02.dgn

USERNAME => s124496 DATE PLOTTED => 26-JUN-2013 TIME PLOTTED => 13:48

DIST	COUNTY	ROUTE	POST MILES TOTAL PROJECT	SHEET No.	TOTAL SHEETS
07	LA	5	0.0/7.6	558	985

REGISTERED CIVIL ENGINEER 4-25-12 DATE

6-24-13
PLANS APPROVAL DATE

The State of California or its officers or agents shall not be responsible for the accuracy or completeness of electronic copies of this plan sheet.

REGISTERED PROFESSIONAL ENGINEER JOEL MAGANA No. C61500 Exp. 6/30/13 CIVIL STATE OF CALIFORNIA

NOTES:

1. All hardware and steel shall be galvanized after fabrication.
2. Arm Base connection details shall be in compliance with Standard Plans Detail Sheet ES-6D with noted modifications.
3. 2000 lb Min capacity strap system shall be used for top and bottom of plate.
4. The Contractor to verify pole dimensions at Tie-Rod attachment height. Fabricate 8" flat bar with "L" Dimension to maintain an open gap between encasement in finished installation.

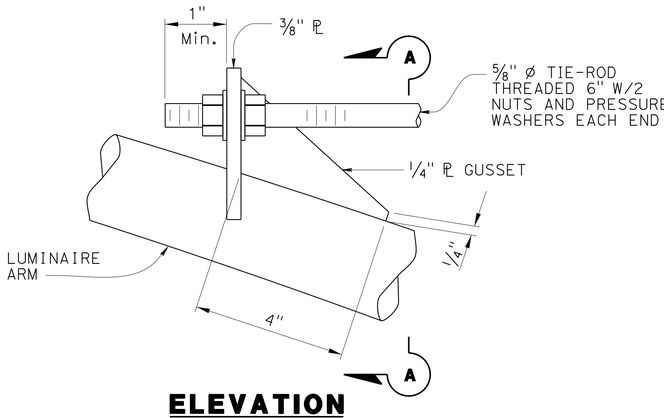

ELEVATION

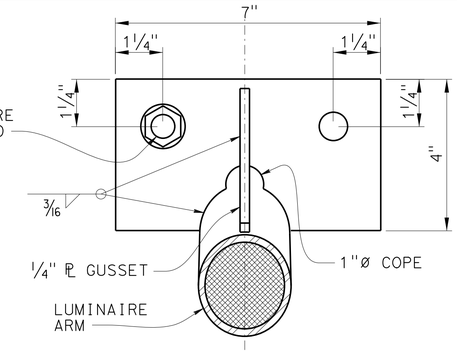

SECTION A-A

TIE-ROD DETAIL No. 1

NO SCALE

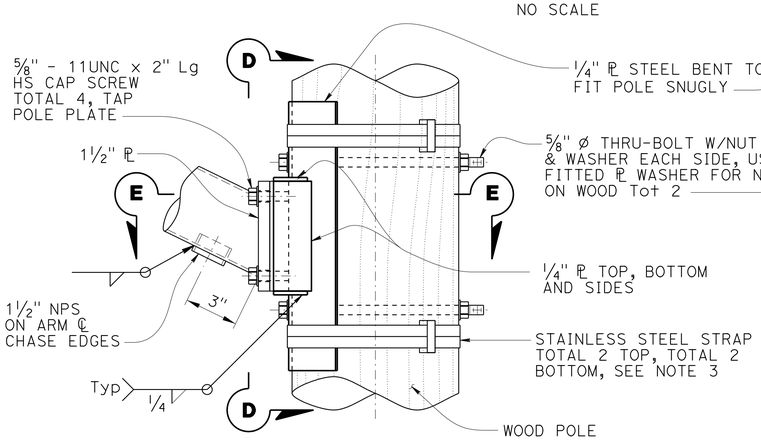

ELEVATION

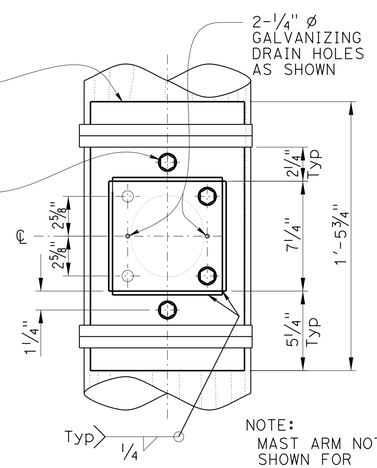

VIEW D-D

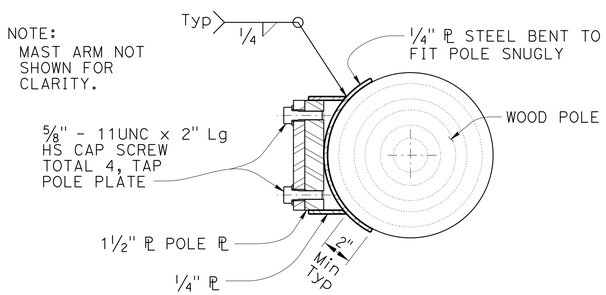

SECTION E-E

ARM CONNECTION DETAILS

NO SCALE

NOTE:
THE CONTRACTOR SHALL VERIFY ALL CONTROLLING FIELD DIMENSIONS BEFORE ORDERING OR FABRICATING ANY MATERIAL.

NOTE:
Not all screw and bolt heads shown for clarity.

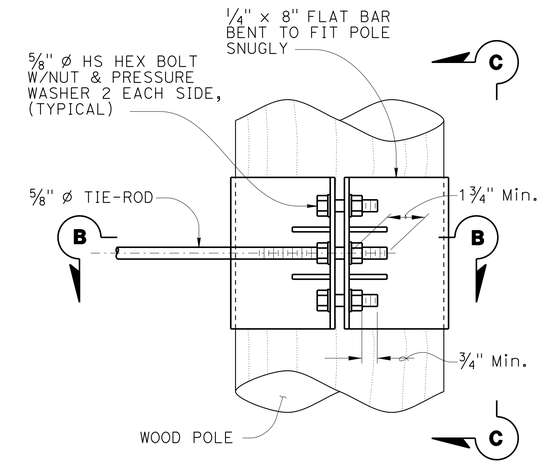

ELEVATION

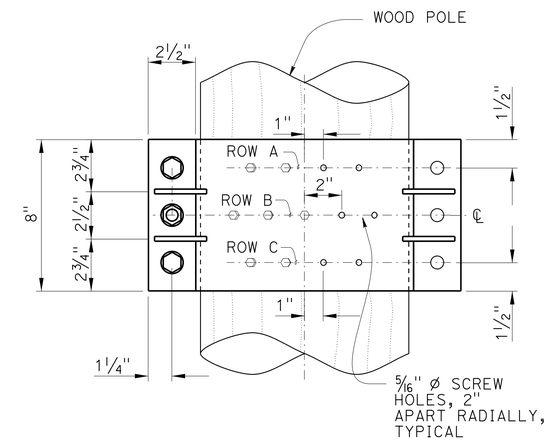

VIEW C-C

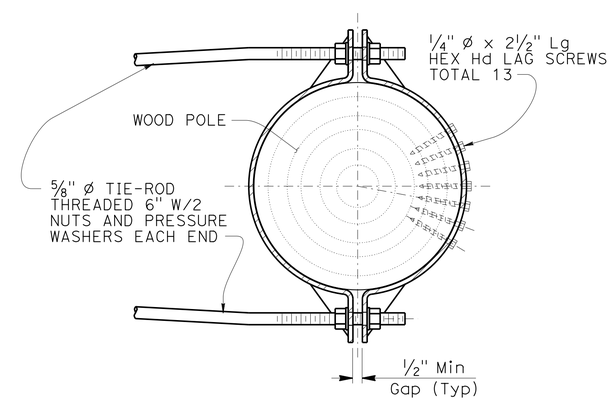

SECTION B-B

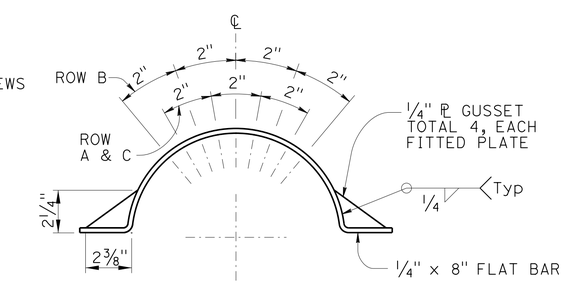

LAG SCREW AND GUSSET PLATE LAYOUT

TIE-ROD DETAILS No. 2

NO SCALE

DESIGN	BY JOEL MAGANA	CHECKED VICTOR LOPEZ	
DETAILS	BY P C WELLS	CHECKED JOEL MAGANA	
QUANTITIES	BY X	CHECKED X	

STATE OF CALIFORNIA
DEPARTMENT OF TRANSPORTATION

DIVISION OF ENGINEERING SERVICES
STRUCTURE DESIGN
SPECIAL DESIGN BRANCH

BRIDGE NO. N/A
POST MILE Varies

TEMPORARY WOOD POLE MISCELLANEOUS DETAILS 1

SES-3

STRUCTURES DESIGN SPECIAL DESIGN SHEET (ENGLISH) (REV. 09-01-10)

ORIGINAL SCALE IN INCHES FOR REDUCED PLANS 0 1 2 3

UNIT: 3619
PROJECT NUMBER & PHASE: 07000018351
CONTRACT NO.: 07-215951

DISREGARD PRINTS BEARING EARLIER REVISION DATES → 10-18-11 11-28-11

SHEET 3 OF 5

FILE => 07-215951_u-msc-03.dgn

USERNAME => s124496 DATE PLOTTED => 26-JUN-2013 TIME PLOTTED => 19:49

DIST	COUNTY	ROUTE	POST MILES TOTAL PROJECT	SHEET No.	TOTAL SHEETS
07	LA	5	0.0/7.6	559	985

REGISTERED CIVIL ENGINEER 4-25-12 DATE

6-24-13
PLANS APPROVAL DATE

The State of California or its officers or agents shall not be responsible for the accuracy or completeness of electronic copies of this plan sheet.

REGISTERED PROFESSIONAL ENGINEER JOEL MAGANA No. C61500 Exp. 6/30/13 CIVIL STATE OF CALIFORNIA

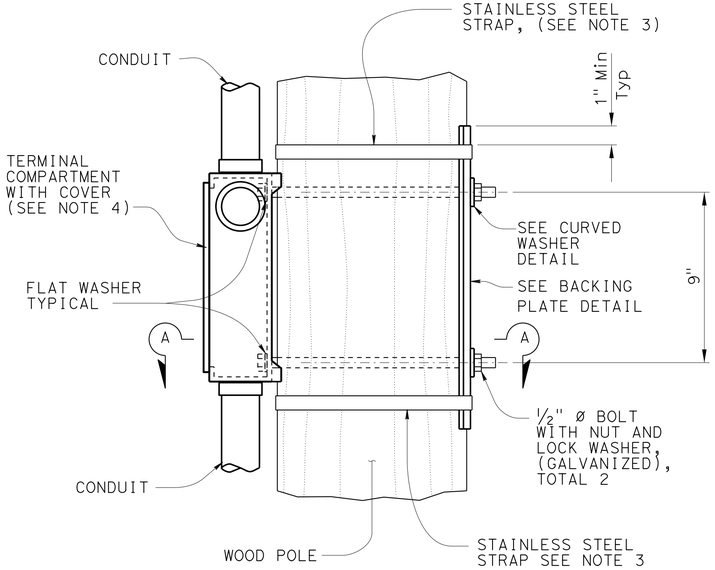

ELEVATION
3" = 1'-0"

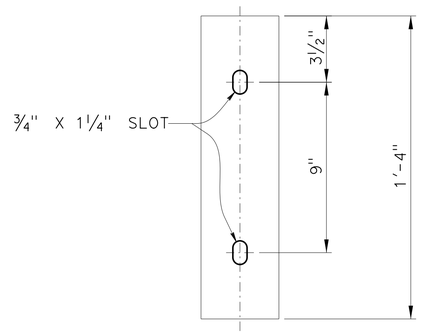

ELEVATION

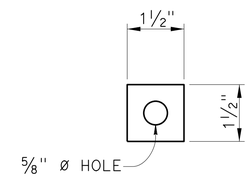

ELEVATION

PLAN

BACKING PLATE DETAIL
3" = 1'-0"

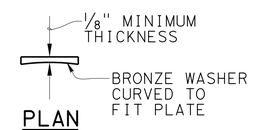

PLAN

CURVED WASHER DETAIL
6" = 1'-0"

NOTES:

1. The Contractor to verify pole dimensions at terminal compartment for fabrication of backing plate and curved washer.
2. Backing plate to be galvanized after fabrication.
3. 3/4" x 0.044" minimum, rounded edge stainless steel straps, double wrapped with 2" long bend under stainless steel strap buckle.
4. For details not shown see STANDARD PLAN ES-4D.

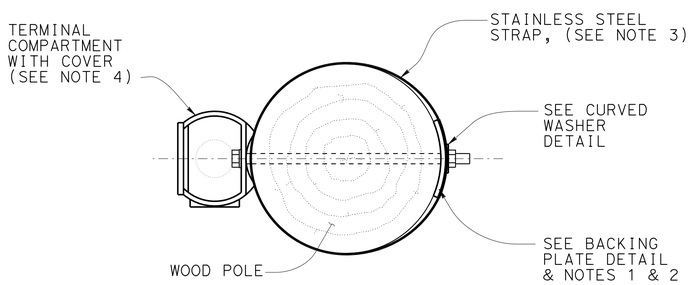

SECTION A-A
3" = 1'-0"

SIDE MOUNTING TERMINAL COMPARTMENT
For Details Not Shown See RSP-ES-4D Sheet

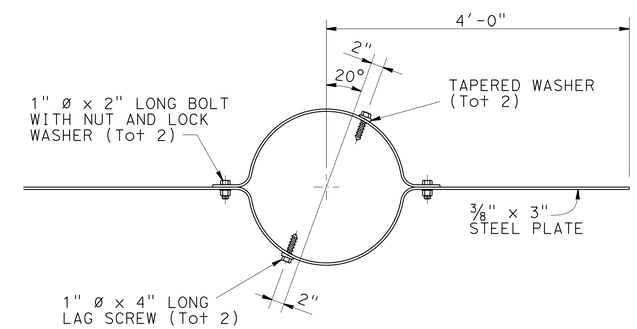

WIND ANCHOR
To be installed perpendicular to mast arms and 2'-0" Min below grade

NOTE:
THE CONTRACTOR SHALL VERIFY ALL CONTROLLING FIELD DIMENSIONS BEFORE ORDERING OR FABRICATING ANY MATERIAL.

	BY	CHECKED
DESIGN	JOEL MAGANA	VICTOR LOPEZ
DETAILS	P C WELLS	JOEL MAGANA
QUANTITIES	X	X

STATE OF CALIFORNIA
DEPARTMENT OF TRANSPORTATION

DIVISION OF ENGINEERING SERVICES
STRUCTURE DESIGN
SPECIAL DESIGN BRANCH

BRIDGE NO. N/A
POST MILE Varies

MOUNTINGS FOR SIGNAL HEADS
MISCELLANEOUS DETAILS 2

SES-4

STRUCTURES DESIGN SPECIAL DESIGN SHEET (ENGLISH) (REV. 09-01-10)

ORIGINAL SCALE IN INCHES FOR REDUCED PLANS 0 1 2 3

UNIT: X619
PROJECT NUMBER & PHASE: 07000018351
CONTRACT NO.: 07-215951

DISREGARD PRINTS BEARING EARLIER REVISION DATES
REVISION DATES 10-18-11 11-28-11

SHEET 4 OF 5

FILE => 07-215951_u-msc-04.dgn

USERNAME => s124436 DATE PLOTTED => 26-JUN-2013 TIME PLOTTED => 13:49

DIST	COUNTY	ROUTE	POST MILES TOTAL PROJECT	SHEET No.	TOTAL SHEETS
07	LA	5	0.0/7.6	560	985

REGISTERED CIVIL ENGINEER 4-25-12 DATE

6-24-13
PLANS APPROVAL DATE

The State of California or its officers or agents shall not be responsible for the accuracy or completeness of electronic copies of this plan sheet.

REGISTERED PROFESSIONAL ENGINEER JOEL MAGAÑA No. C61500 Exp. 6/30/13 CIVIL STATE OF CALIFORNIA

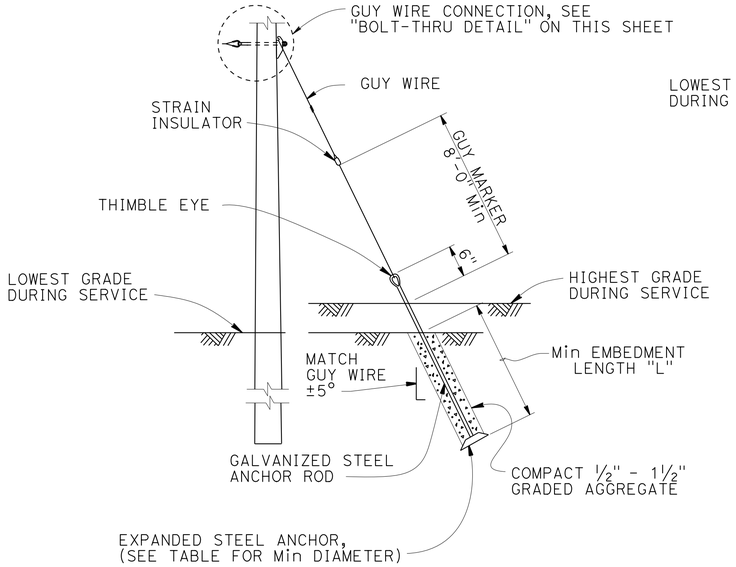

TYPICAL GUY WIRE INSTALLATION DETAIL

(EXPANDED STEEL ANCHOR)

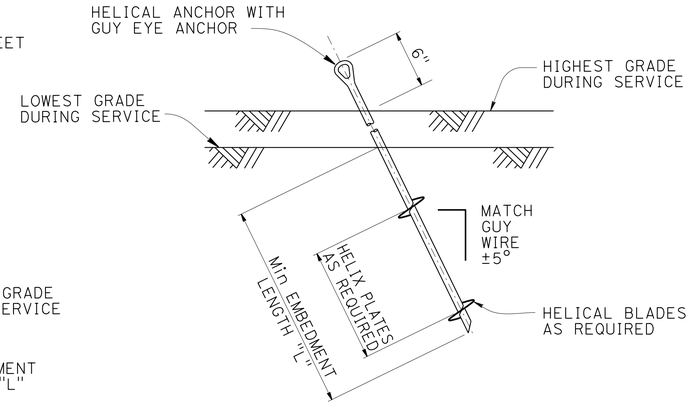

ALTERNATIVE GUY WIRE ANCHOR DETAIL

(HELICAL ANCHOR)

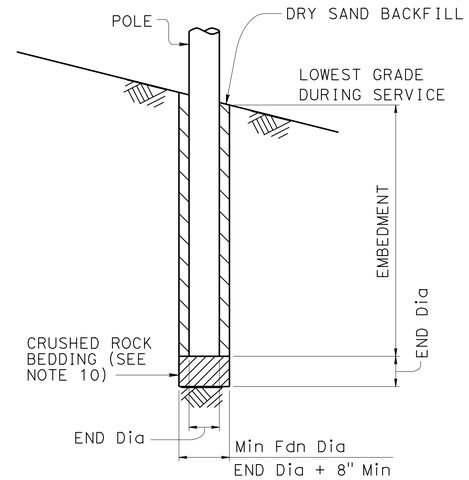

POLE FOUNDATION DETAIL

NO SCALE

EXPANDED STEEL ANCHOR REQUIREMENTS, (SEE NOTES 1 & 5 ON THIS SHEET)					ALTERNATIVE HELICAL ANCHOR REQUIREMENTS, (SEE NOTES 1 - 5 ON THIS SHEET)		
GUY ANCHOR CALLOUT	GUY WIRE DIAMETER	THIMBLE EYE BOLT DIAMETER	MINIMUM EMBEDMENT LENGTH "L"	EXPANDED STEEL PLATE DIAMETER	HELIX PLATE DIAMETER	MINIMUM ALLOWABLE TENSION CAPACITY "Q_a"	MINIMUM INSTALLATION TORQUE "T"
-	5/16"	5/8"	8'-0"	8"	8"	2,133 lbs	429 ft-lbs
G1	3/8"	5/8"	8'-0"	12"	12"	4,089 lbs	812 ft-lbs
-	7/16"	3/4"	8'-0"	14"	14"	6,400 lbs	1,266 ft-lbs
-	1/2"	7/8"	8'-0"	16"	16"	8,889 lbs	1,771 ft-lbs

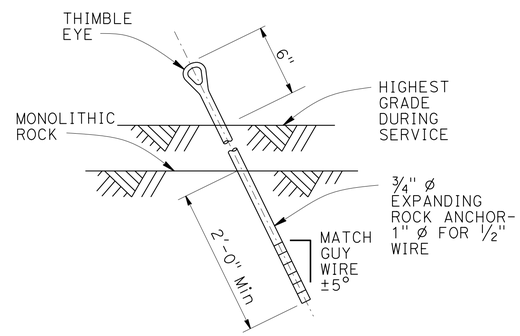

GUY WIRE ROCK ANCHOR DETAIL

NO SCALE

NOTES:

1. The Contractor to verify soil condition, slope, and adjust anchoring to satisfy basic design requirements per Foundation Design Notes on SES-1 sheet.
2. Use of Alternative Guy Wire Anchor Installation Detail requires that the soil bearing capacity be verified by the Contractor.
3. The Contractor shall determine the most appropriate value for k_t based on soil conditions and shall adjust the Min Installation Torque based on the revised k_t. A k_t value of 10 was assumed for the Min Installation Torque shown in the table.

   The Helical Installation Torque Formula is $Q_u = k_t * T$ where,

   $Q_u = Q_a * FS$ = Ultimate Helical Anchor Capacity (lb)
   FS = Factor of Safety = 2.0
   Q_a = Min Helical Anchor Capacity (lb)
   k_t = Empirical Torque Factor $(ft)^{-1}$
   T = Min Installation Torque (ft-lb)
4. Requests made by Helical Anchor Installation Contractor to reduce the minimum embedment length or helix ℄ diameter require the Engineer's approval.
5. The Contractor shall locate and mark all of the substructures and utilities. Installation of anchors underneath utilities or subsurface structures is prohibited. Horizontal clearances of anchors shall be determined by the Engineer during construction.
6. For poles requiring more than one thru-bolt, install thru-bolts a minimum of 8" vertically spaced on pole.
7. For non-guyed poles, replace guy hook with 3" x 3"x ¼" curved square washer.
8. For non guyed poles use 5/8" diameter thimble eye bolt, (Min).
9. Refer to notes on SES - 1 and "ELECTRICAL PLANS" for additional information.
10. Crushed rock shall comply with requirements for pervious backfill material with grading specified for 1½" x ¾" primary aggregate meeting the course aggregate grading specifications.

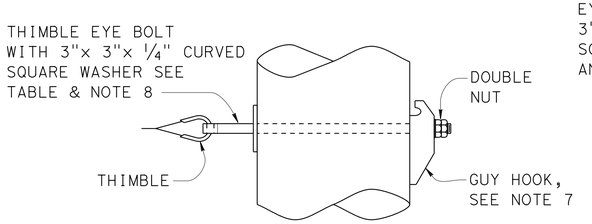

DEAD-END POLES

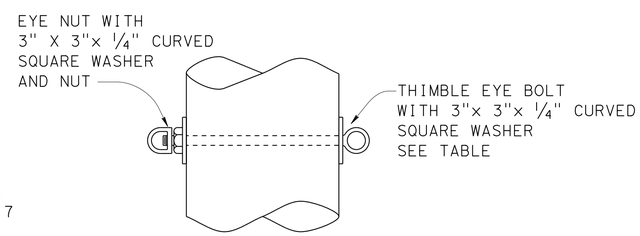

POLES WITH ADJACENT SPANS

THRU-BOLT DETAIL

NO SCALE

NOTE:
THE CONTRACTOR SHALL VERIFY ALL CONTROLLING FIELD DIMENSIONS BEFORE ORDERING OR FABRICATING ANY MATERIAL.

	BY	CHECKED
DESIGN	JOEL MAGANA	VICTOR LOPEZ
DETAILS	P C WELLS	JOEL MAGANA
QUANTITIES	X	X

STATE OF CALIFORNIA
DEPARTMENT OF TRANSPORTATION

DIVISION OF ENGINEERING SERVICES
STRUCTURE DESIGN
SPECIAL DESIGN BRANCH

BRIDGE NO. N/A
POST MILE Varies

TEMPORARY WOOD POLE GUYING AND ANCHORING DETAILS

SES-5

STRUCTURES DESIGN SPECIAL DESIGN SHEET (ENGLISH) (REV. 09-01-10)

ORIGINAL SCALE IN INCHES FOR REDUCED PLANS 0 1 2 3

UNIT: X619
PROJECT NUMBER & PHASE: 07000018351
CONTRACT NO.: 07-215951

DISREGARD PRINTS BEARING EARLIER REVISION DATES

REVISION DATES 11-28-11

SHEET 5 OF 5

FILE => 07-215951_u-msc-05.dgn

USERNAME => s124496 DATE PLOTTED => 26-JUN-2013 TIME PLOTTED => 19:49

DIST	COUNTY	ROUTE	POST MILES TOTAL PROJECT	SHEET No	TOTAL SHEETS
07	LA	5	0.0/7.6	561	985

Eliseo Lopez 6/26/12
REGISTERED CIVIL ENGINEER DATE

6-24-13
PLANS APPROVAL DATE

REGISTERED PROFESSIONAL ENGINEER
ELISEO LOPEZ
No. C72910
Exp. 12/31/14
CIVIL
STATE OF CALIFORNIA

The State of California or its officers or agents shall not be responsible for the accuracy or completeness of electronic copies of this plan sheet.

ABBREVIATIONS

VIVDS = Video Image Video Detection System

NOTES:

1. All metallic conduits, bolts, straps and misc hardware shall be galvanized.

2. Elements (Total VIVDS assembly) shall have a maximum weight of 10 lbs and a maximum effective pressure area of 1 square foot.

3. Maximum of 2 VIVDS elements added per traffic signal structure. Maximum of 1 element per arm (luminaire arm or traffic signal arm). This detail shown applies only to newly Installed poles designed according to Standard Plans.

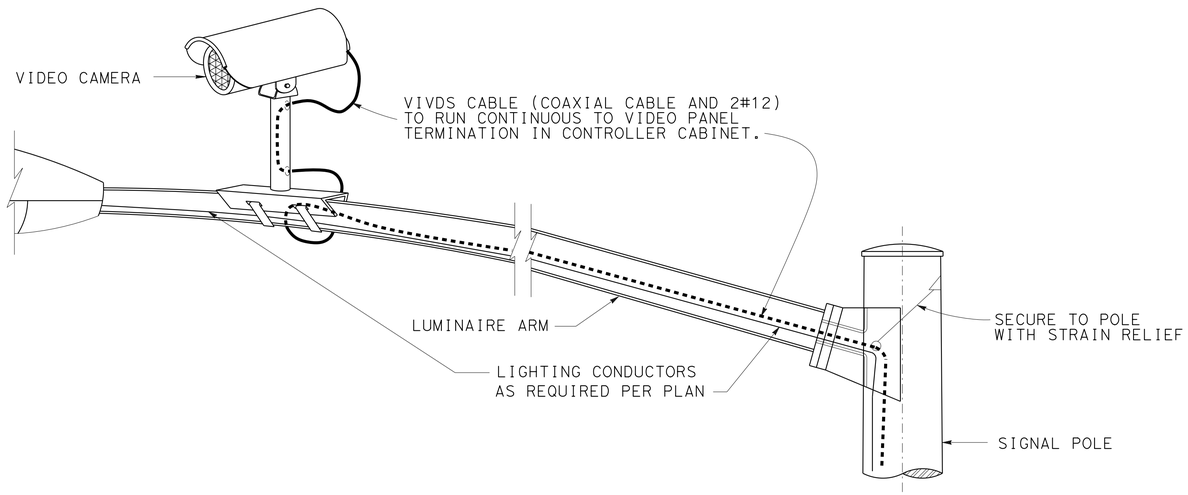

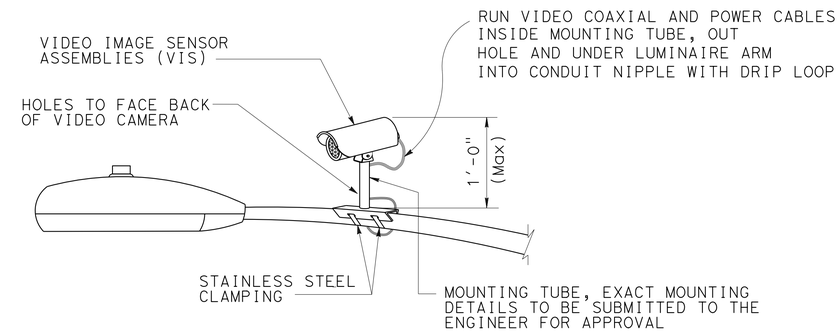

VIDEO CAMERA MOUNTING DETAILS

NO SCALE

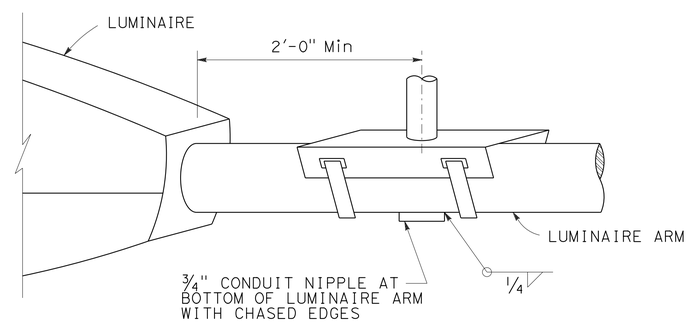

DETAIL A

NO SCALE

THE CONTRACTOR SHALL VERIFY ALL CONTROLLING FIELD DIMENSIONS BEFORE ORDERING OR FABRICATING ANY MATERIAL.

BRANCH CHIEF	JEFFREY B WOODY	DESIGN	BY E LOPEZ / CHECKED K.C. LIU
		DETAILS	BY A R DUDSAK / CHECKED K.C.LIU
		QUANTITIES	BY / CHECKED

STATE OF CALIFORNIA
DEPARTMENT OF TRANSPORTATION

DIVISION OF ENGINEERING SERVICES
DESIGN AND TECHNICAL SERVICES
SPECIAL DESIGNS BRANCH
A

BRIDGE NO. N/A
POST MILE

VIDEO CAMERA MOUNTING DETAILS
SIGNAL AND LIGHTING SYSTEM

SES-6

(ENGLISH) SPECIAL DESIGNS BRANCH BORDER SHEET (REV. 7-1-09)

ORIGINAL SCALE IN INCHES FOR REDUCED PLANS 0 1 2 3

UNIT: 3620
PROJECT NUMBER & PHASE: 07000018351
CONTRACT NO.: 07-215951

DISREGARD PRINTS BEARING EARLIER REVISION DATES
REVISION DATES: 3/20/12 5/20/12 6/26/12
SHEET OF

FILE => spec_des_br_prj/2012sd/07-215951/07-215951_ses-6.dgn

USERNAME => s124436 DATE PLOTTED => 26-JUN-2013 TIME PLOTTED => 19:49

DIST	COUNTY	ROUTE	POST MILES TOTAL PROJECT	SHEET No	TOTAL SHEETS
07	LA	5	0.0/7.6	562	985

Eliseo Lopez 7-26-12
REGISTERED CIVIL ENGINEER DATE

6-24-13
PLANS APPROVAL DATE

REGISTERED PROFESSIONAL ENGINEER ELISEO LOPEZ No. C72910 Exp. 12/31/14 CIVIL STATE OF CALIFORNIA

The State of California or its officers or agents shall not be responsible for the accuracy or completeness of electronic copies of this plan sheet.

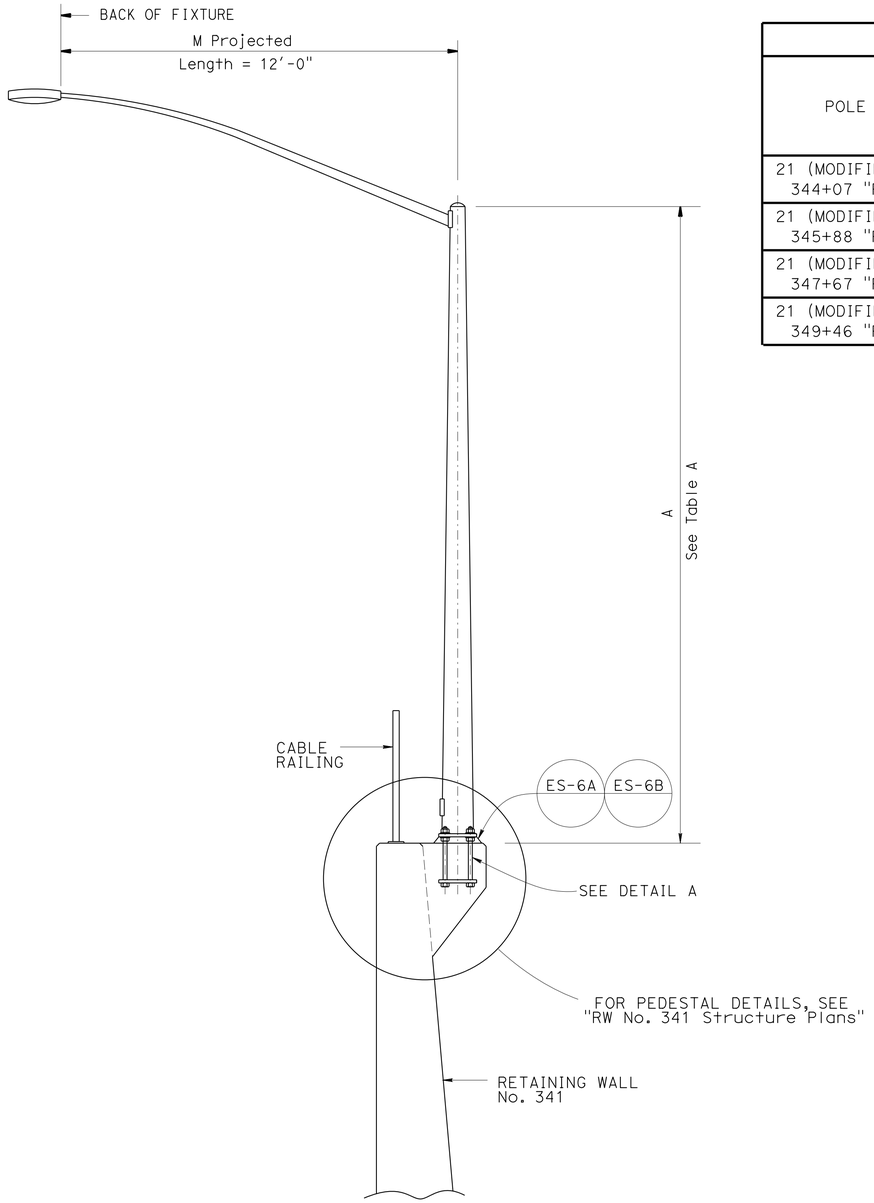

ELEVATION
TYPE 21 (MODIFIED)

TABLE A

POLE TYPE	POLE DATA				BASE PLATE DATA			
	HEIGHT "A"	MIN OD		WALL THICKNESS	"C"	THICKNESS	ANCHOR BOLTS	
		BASE	TOP				SIZE	BC = BOLT CIRCLE
21 (MODIFIED) at STA 344+07 "FL1" LINE	14'-0"	8⅝"	3 9/16"	0.1793"	See Standard Plans ES-6A & ES-6B			
21 (MODIFIED) at STA 345+88 "FL1" LINE	20'-0"							
21 (MODIFIED) at STA 347+67 "FL1" LINE	24'-0"							
21 (MODIFIED) at STA 349+46 "FL1" LINE								

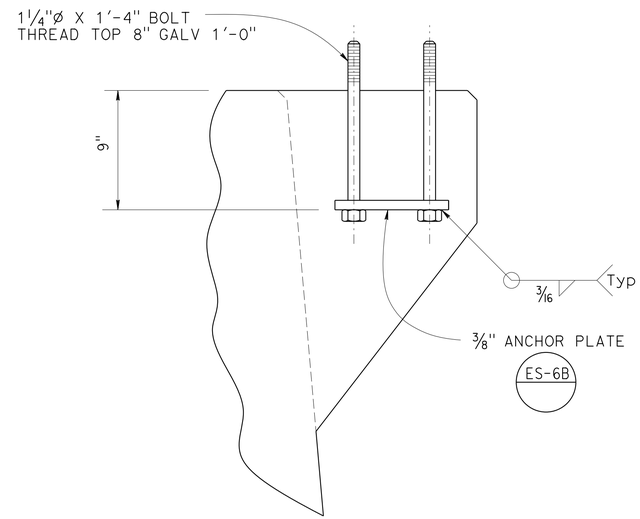

DETAIL A

GENERAL NOTES:

SPECIFICATIONS

Design: AASHTO Standard Specifications for Structural Supports for Highway Signs, Luminaires and Traffic Signals, Fifth Edition.

LOADING

Wind Loadings: 100 MPH

UNIT STRESSES

Structural Steel: fy = 55,000 psi tapered steel tube
fy = 50,000 psi unless otherwise noted.

Anchor bolts : fy = 55 ksi

Reinforced Concrete: f'c = 3,600 psi
fy = 60,000 psi

NOTES:

1. For pole locations, see "ELECTRICAL"Plans.
2. All steel shall be galvanized after fabrication.
3. During pole erection the post shall be raked as necessary with the use of leveling nuts to provide a plumb pole axis.
4. For details not shown, see "2010 STANDARD PLANS" and "2010 REVISED STANDARD PLANS".
5. For Retaining Wall Details see "Retaining Wall No. 341 Structure Plans".

THE CONTRACTOR SHALL VERIFY ALL CONTROLLING FIELD DIMENSIONS BEFORE ORDERING OR FABRICATING ANY MATERIAL.

NO SCALE

BRANCH CHIEF JEFFREY B WOODY

	BY	CHECKED
DESIGN	E LOPEZ	J DATILES
DETAILS	A R DUDSAK	J DATILES
QUANTITIES		

STATE OF CALIFORNIA
DEPARTMENT OF TRANSPORTATION

DIVISION OF ENGINEERING SERVICES
DESIGN AND TECHNICAL SERVICES
SPECIAL DESIGNS BRANCH A

BRIDGE NO. N/A
POST MILE

TYPE 21 MODIFIED
POLE DETAILS

SES-7

(ENGLISH) SPECIAL DESIGNS BRANCH BORDER SHEET (REV. 7-1-09)

ORIGINAL SCALE IN INCHES FOR REDUCED PLANS 0 1 2 3

UNIT: 3619
PROJECT NUMBER & PHASE: 07000018351
CONTRACT NO.: 07-215951

DISREGARD PRINTS BEARING EARLIER REVISION DATES

REVISION DATES 7-26-12 1-22-13 5-24-12 6-26-12

SHEET OF

FILE => spec_des_br_prj/2012sd/07-215951/07-215951_ses-7.dgn

USERNAME => s124936 DATE PLOTTED => 26-JUN-2013 TIME PLOTTED => 19:49

DIST	COUNTY	ROUTE	POST MILES TOTAL PROJECT	SHEET No.	TOTAL SHEETS
07	LA	5	0.0/7.6	563	985

REGISTERED CIVIL ENGINEER — DATE 1/25/12

6-24-13
PLANS APPROVAL DATE

The State of California or its officers or agents shall not be responsible for the accuracy or completeness of scanned copies of this plan sheet.

REGISTERED PROFESSIONAL ENGINEER — ANDREW BUI — No. C63560 — Exp. 9/30/14 — CIVIL — STATE OF CALIFORNIA

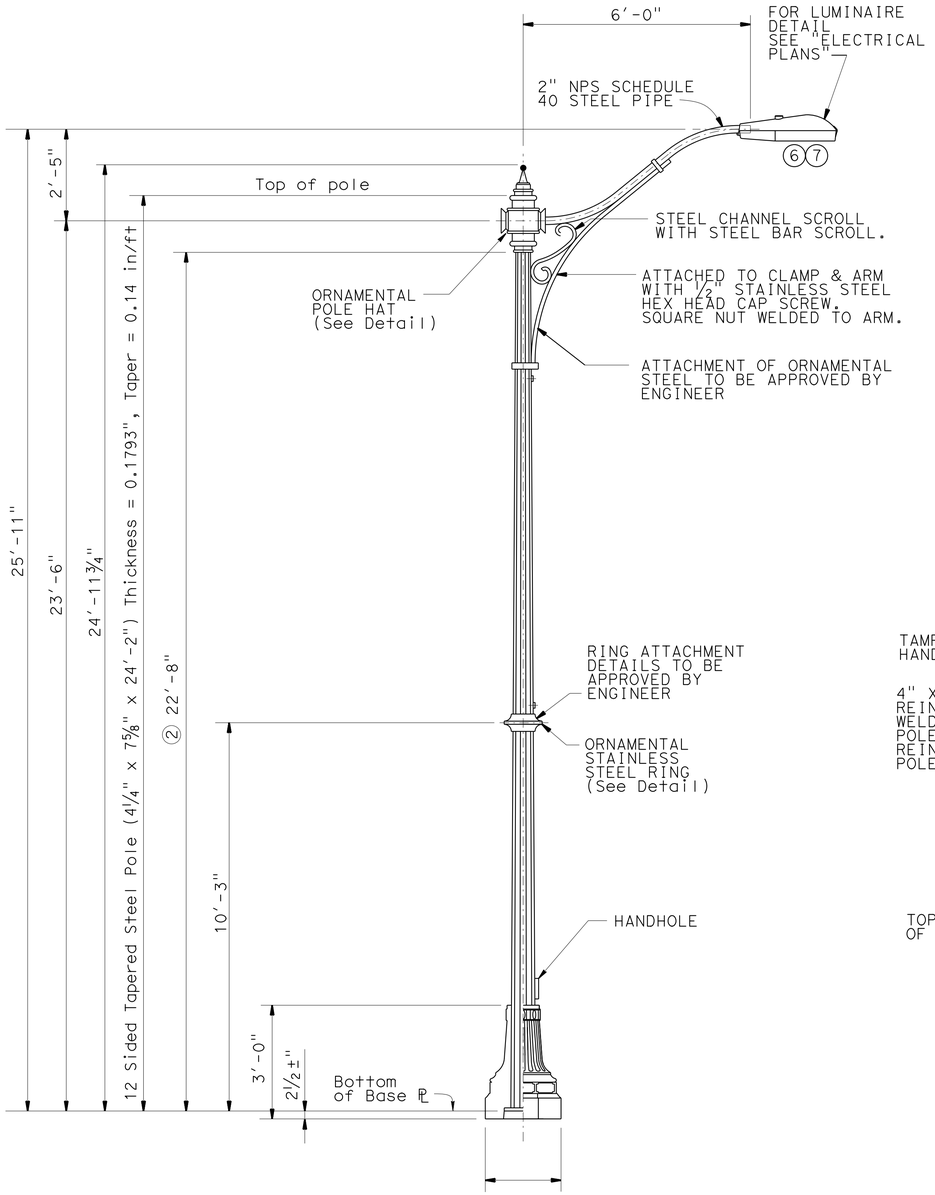

ELEVATION VIEW OF POLE

½"= 1'-0"

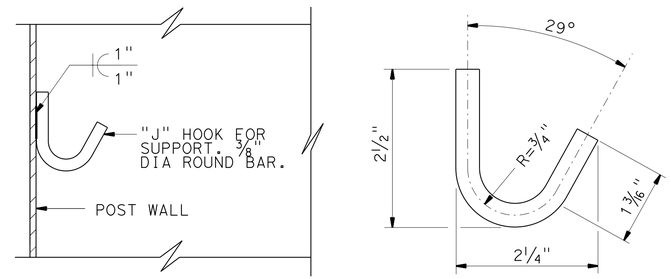

J HOOK DETAILS

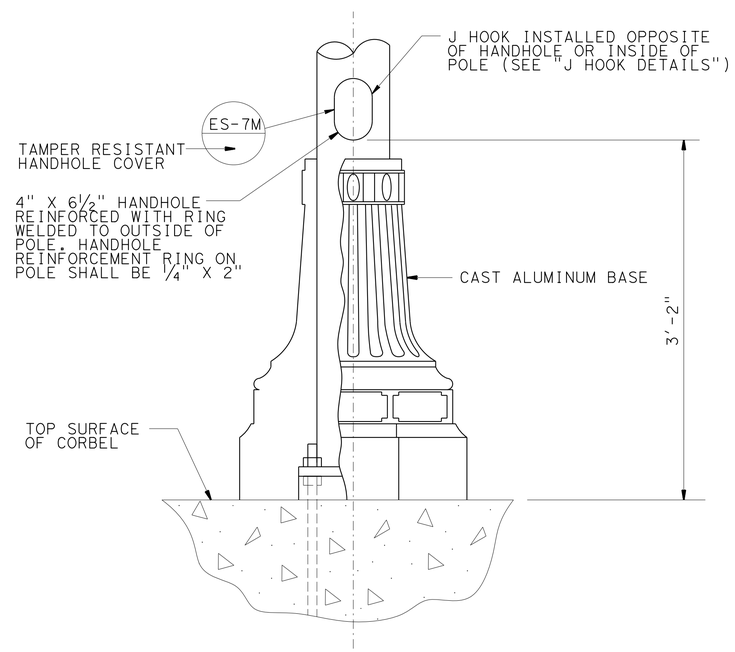

CUT-AWAY OF LOWER POLE VIEWED FROM STREET

1½"= 1'-0"

GENERAL NOTES:

SPECIFICATIONS:

a. Design: AASHTO Standard Specifications for Structural Supports for Highway Signs, Luminaires and Traffic Signals" dated 2001 and including 2002 interims.

b. Loading: Wind loading shall be 100 mph (3-second gust) for the purposes of analysis.

c. Unit Stresses:
   i. f_y = 48 ksi tapered steel tube
   ii. f_y = 36 ksi unless otherwise specified

NOTES:

1. For decorative poles & locations See Sheets E-15 to E-18.

② Alternative pole sections require approval by the Engineer.

3. The Contractor shall match pole paint color with existing adjacent poles owned by the City of Santa Fe. Paint color shall be approved by the Engineer.

4. Wiring connections at base of pole shall be avoided except as necessary. Wiring connections shall be accommodated in the nearest pull box where possible.

5. A design for the luminaire connection to luminaire arm shall be submitted to Engineer for approval.

⑥ Luminaire shall not have an effective pressure area and weight exceeding 3 square feet and 75 lbs., respectively.

⑦ All fasteners shall meet requirements in Section 55 of Standard Specifications. Where fasteners are not covered by these specifications, fittings shall be stainless steel.

THE CONTRACTOR SHALL VERIFY ALL CONTROLLING FIELD DIMENSIONS BEFORE ORDERING OR FABRICATING ANY MATERIAL.

NO SCALE

BRANCH CHIEF JEFFREY B WOODY

	BY	CHECKED
DESIGN	A BUI	K C LIU
DETAILS	A R DUDSAK	A BUI
QUANTITIES		

STATE OF CALIFORNIA DEPARTMENT OF TRANSPORTATION

DIVISION OF ENGINEERING SERVICES STRUCTURE DESIGN — SPECIAL DESIGN BRANCH

BRIDGE NO. N/A — POST MILE X

DECORATIVE LIGHTING STANDARD POLE DETAILS NO. 1

SES-8

STRUCTURES DESIGN SPECIAL DESIGN SHEET (ENGLISH) (REV. 09-01-10)

ORIGINAL SCALE IN INCHES FOR REDUCED PLANS 0 1 2 3

UNIT:
PROJECT NUMBER & PHASE: 07000018351 CONTRACT NO.: 07-215951

DISREGARD PRINTS BEARING EARLIER REVISION DATES

REVISION DATES — SHEET X OF X

USERNAME => s124496 DATE PLOTTED => 26-JUN-2013 TIME PLOTTED => 19:49

FILE => SPEC DES BR PROJ/2012SD/07-215931/07-215951ses-08.dgn

DIST	COUNTY	ROUTE	POST MILES TOTAL PROJECT	SHEET No.	TOTAL SHEETS
07	LA	5	0.0/7.6	564	985

REGISTERED CIVIL ENGINEER 1/25/12 DATE

6-24-13
PLANS APPROVAL DATE

REGISTERED PROFESSIONAL ENGINEER ANDREW BUI No. C63560 Exp. 9/30/14 CIVIL STATE OF CALIFORNIA

The State of California or its officers or agents shall not be responsible for the accuracy or completeness of scanned copies of this plan sheet.

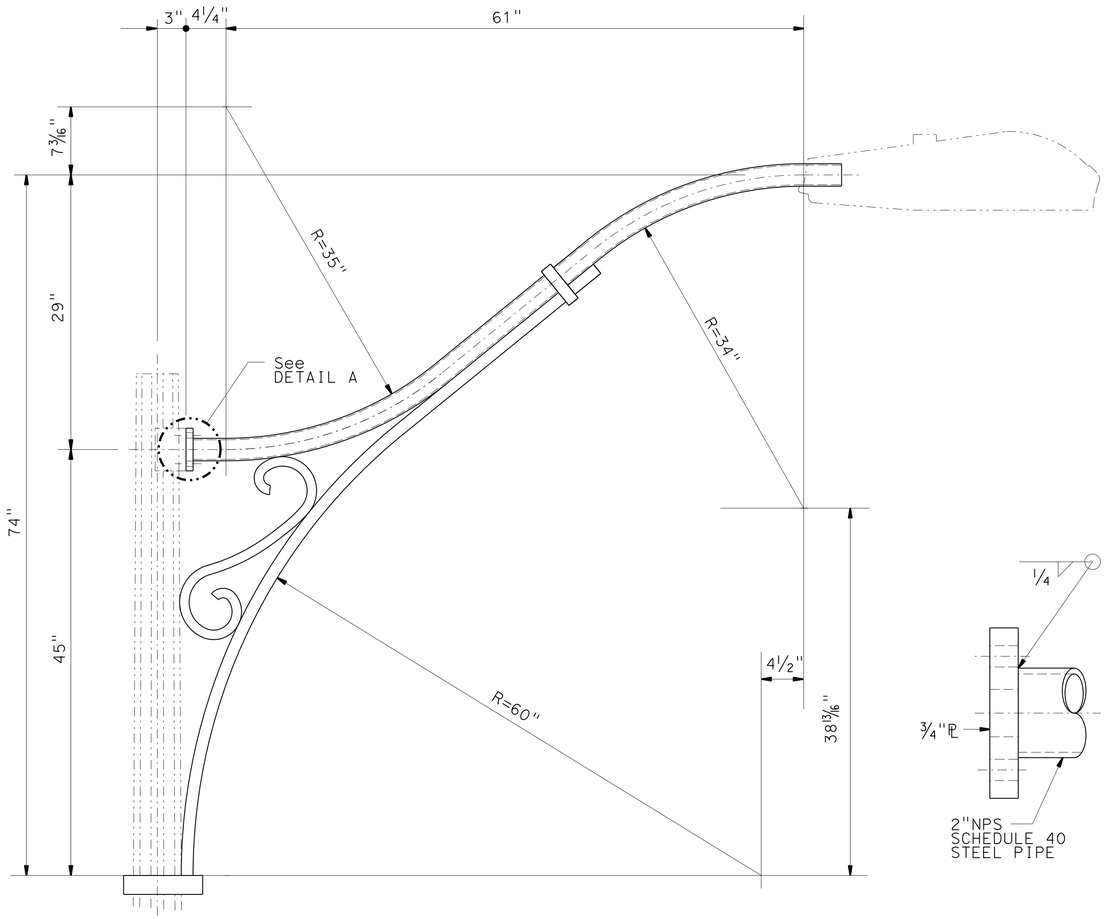

DECORATIVE ARM

1 1/2"= 1'-0"

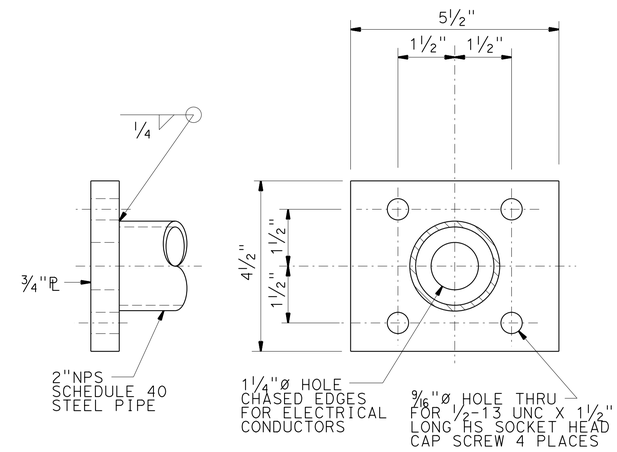

DETAIL A

6"= 1'-0"

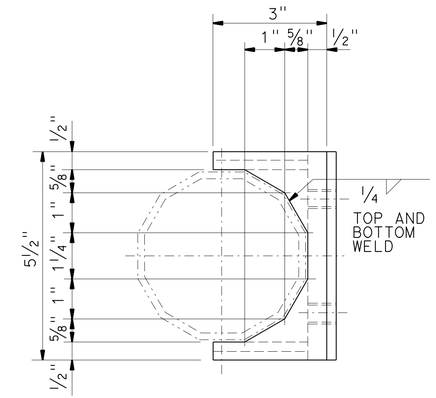

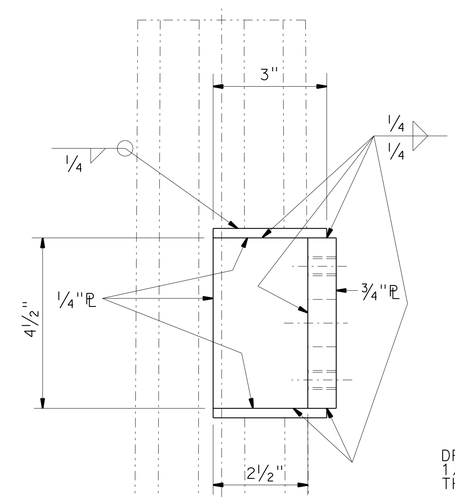

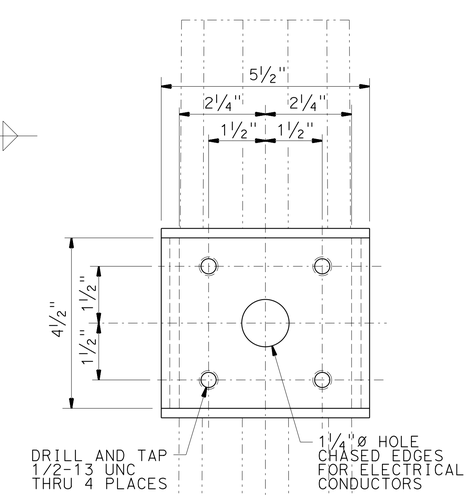

DECORATIVE ARM CONNECTION DETAIL

6"= 1'-0"

THE CONTRACTOR SHALL VERIFY ALL CONTROLLING FIELD DIMENSIONS BEFORE ORDERING OR FABRICATING ANY MATERIAL.

NO SCALE

DESIGN	BY A BUI	CHECKED K C LIU	
DETAILS	BY A R DUDSAK	CHECKED A BUI	
QUANTITIES	BY	CHECKED	

BRANCH CHIEF JEFFREY B WOODY

STATE OF CALIFORNIA DEPARTMENT OF TRANSPORTATION

DIVISION OF ENGINEERING SERVICES STRUCTURE DESIGN SPECIAL DESIGN BRANCH

BRIDGE NO. N/A

POST MILE X

DECORATIVE LIGHTING STANDARD POLE DETAILS NO. 2

SES-9

STRUCTURES DESIGN SPECIAL DESIGN SHEET (ENGLISH) (REV. 09-01-10)

ORIGINAL SCALE IN INCHES FOR REDUCED PLANS 0 1 2 3

UNIT:
PROJECT NUMBER & PHASE: 07000018351 CONTRACT NO.: 07-215951

DISREGARD PRINTS BEARING EARLIER REVISION DATES

REVISION DATES

SHEET X OF X

FILE => SPEC DES BR PROJ/2012SD/07-215931/07-215951ses-09.dgn

USERNAME => s124496 DATE PLOTTED => 26-JUN-2013 TIME PLOTTED => 19:49

DIST	COUNTY	ROUTE	POST MILES TOTAL PROJECT	SHEET No.	TOTAL SHEETS
07	LA	5	0.0/7.6	565	985

REGISTERED CIVIL ENGINEER — DATE 1/25/12

6-24-13
PLANS APPROVAL DATE

REGISTERED PROFESSIONAL ENGINEER — ANDREW BUI — No. C63560 — Exp. 9/30/14 — CIVIL — STATE OF CALIFORNIA

The State of California or its officers or agents shall not be responsible for the accuracy or completeness of scanned copies of this plan sheet.

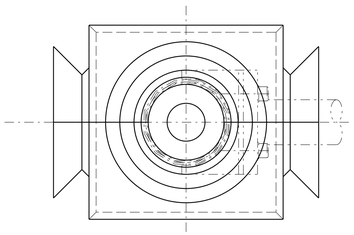

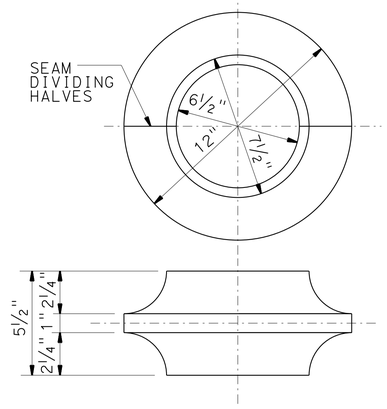

ORNAMENTAL RING

3"= 1'-0"

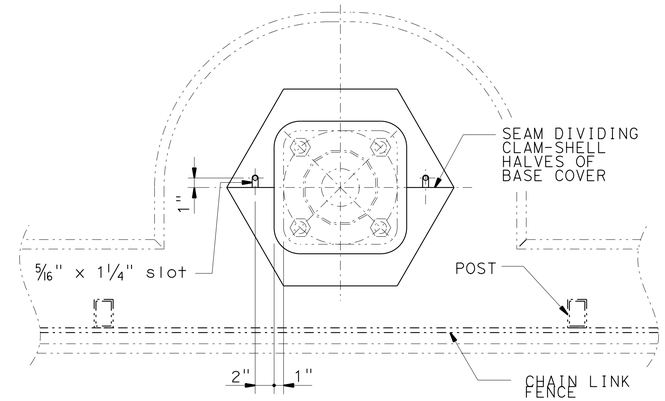

PLAN VIEW

1½"= 1'-0"

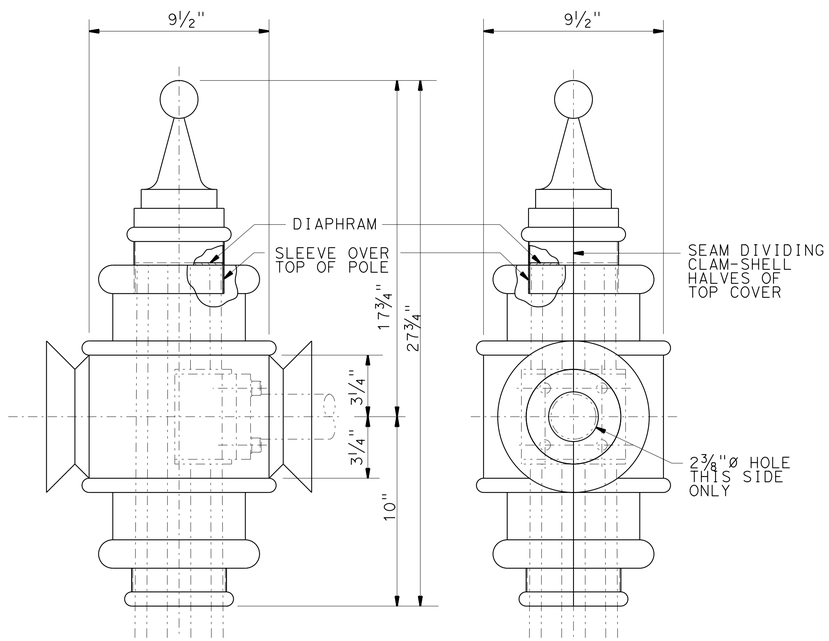

DECORATIVE POLE HAT

3"= 1'-0"

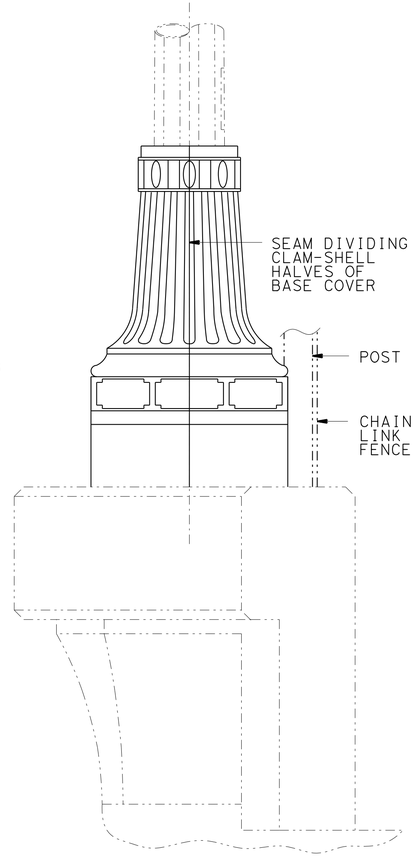

PROFILE VIEW

1½"= 1'-0"

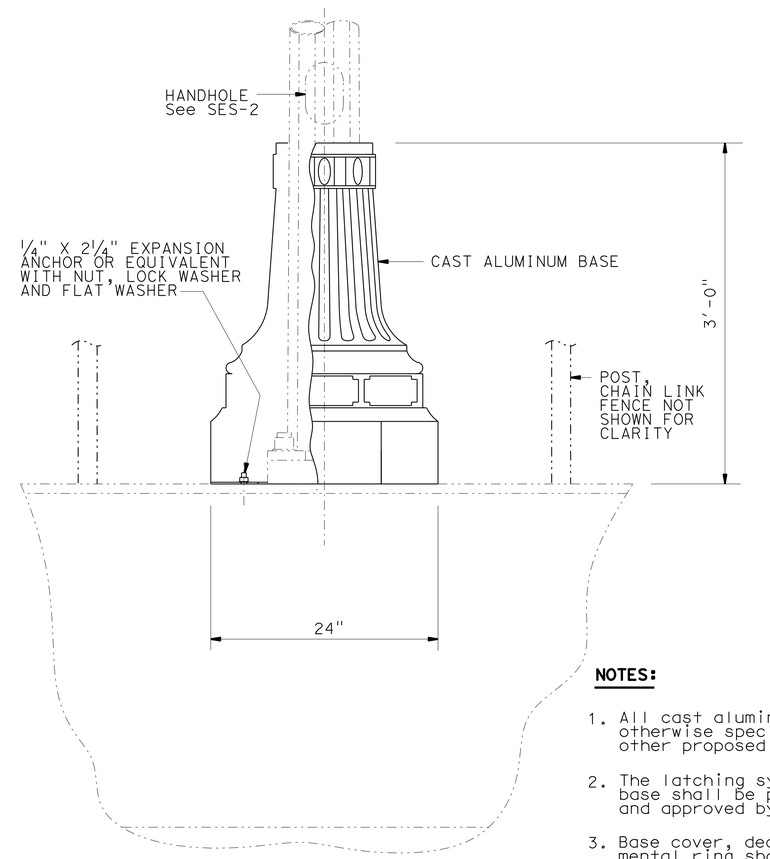

ELEVATION VIEW

1½"= 1'-0"

NOTES:

1. All cast aluminum shall be ASTM 356 unless otherwise specified. The Engineer may approve other proposed ASTM specification.
2. The latching system for the cast aluminum base shall be proposed by the Contractor and approved by the Engineer.
3. Base cover, decorative pole hat and ornamental ring shall meet stated specifications and shall be of similar design as shown. Designs to be approved by the Engineer.

THE CONTRACTOR SHALL VERIFY ALL CONTROLLING FIELD DIMENSIONS BEFORE ORDERING OR FABRICATING ANY MATERIAL.

NO SCALE

BRANCH CHIEF JEFFREY B WOODY

	BY	CHECKED
DESIGN	A BUI	K C LIU
DETAILS	A R DUDSAK	A BUI
QUANTITIES		

STATE OF CALIFORNIA
DEPARTMENT OF TRANSPORTATION

DIVISION OF ENGINEERING SERVICES
STRUCTURE DESIGN
SPECIAL DESIGN BRANCH

BRIDGE NO. N/A
POST MILE X

DECORATIVE LIGHTING STANDARD
POLE DETAILS NO. 3

SES-10

STRUCTURES DESIGN SPECIAL DESIGN SHEET (ENGLISH) (REV. 09-01-10)

ORIGINAL SCALE IN INCHES FOR REDUCED PLANS 0 1 2 3

UNIT:
PROJECT NUMBER & PHASE: 07000018351 CONTRACT NO.: 07-215951

DISREGARD PRINTS BEARING EARLIER REVISION DATES

REVISION DATES | SHEET X | OF X

FILE => SPEC DES BR PROJ/2012SD/07-215931/07-215951ses-10.dgn

USERNAME => s124436 DATE PLOTTED => 26-JUN-2013 TIME PLOTTED => 13:49

DIST	COUNTY	ROUTE	POST MILES TOTAL PROJECT	SHEET No.	TOTAL SHEETS
07	LA	5	0.0/7.6	566	985

REGISTERED CIVIL ENGINEER 1/25/12 DATE

6-24-13
PLANS APPROVAL DATE

REGISTERED PROFESSIONAL ENGINEER ANDREW BUI No. C63560 Exp. 9/30/14 CIVIL STATE OF CALIFORNIA

The State of California or its officers or agents shall not be responsible for the accuracy or completeness of scanned copies of this plan sheet.

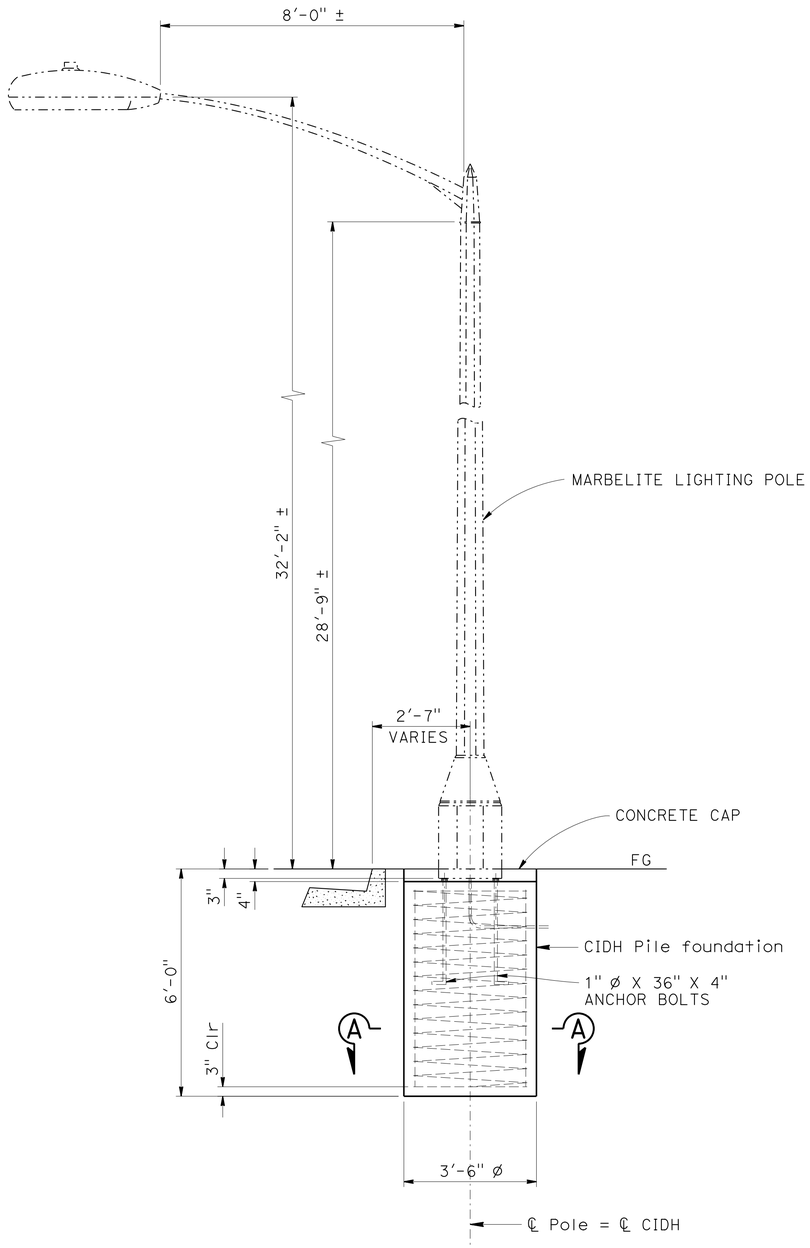

ELEVATION

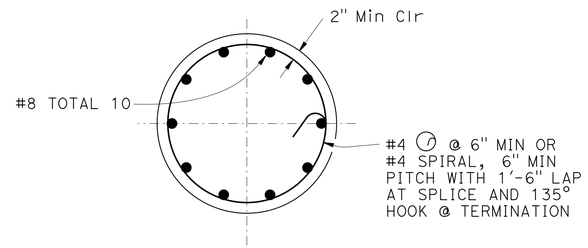

SECTION A-A

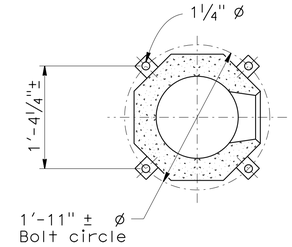

BASE DETAIL

NOTES:

1. See "ROAD PLANS" for locations.
2. Street light conduit must be installed within 2" from the back of curb and 18" below top of curb, unless otherwise specified.
3. The marbelite poles are proprietary and are not warranted for performance. Anchor bolts are pre-specified and their performance is not warranted.
4. CIDH pile foundation was analyzed only for overturning moment resistance.
5. During pole erection, the post shall be raked as necessary with the use of leveling nuts to provide a plumb pole.

THE CONTRACTOR SHALL VERIFY ALL CONTROLLING FIELD DIMENSIONS BEFORE ORDERING OR FABRICATING ANY MATERIAL.

NO SCALE

BRANCH CHIEF JEFFREY B WOODY

	BY	CHECKED
DESIGN	A BUI	K C LIU
DETAILS	D W JUSTICE Jr	A BUI
QUANTITIES		

STATE OF CALIFORNIA DEPARTMENT OF TRANSPORTATION

DIVISION OF ENGINEERING SERVICES STRUCTURE DESIGN SPECIAL DESIGN BRANCH

BRIDGE NO. N/A POST MILE X

MARBELITE LIGHTING POLE FOUNDATION DETAILS

SES-11

STRUCTURES DESIGN SPECIAL DESIGN SHEET (ENGLISH) (REV. 09-01-10)

ORIGINAL SCALE IN INCHES FOR REDUCED PLANS 0 1 2 3

UNIT:
PROJECT NUMBER & PHASE: 07000018351 CONTRACT NO.: 07-215951

DISREGARD PRINTS BEARING EARLIER REVISION DATES

REVISION DATES SHEET X OF X

FILE => SPEC DES BR PROJ/2012SD/07-215931/07-215951ses-11.dgn

USERNAME => s124496 DATE PLOTTED => 26-JUN-2013 TIME PLOTTED => 19:49

DIST	COUNTY	ROUTE	POST MILES TOTAL PROJECT	SHEET No.	TOTAL SHEETS
07	LA	5	0.0/7.6	567	985

REGISTERED CIVIL ENGINEER 1/25/12 DATE

6-24-13
PLANS APPROVAL DATE

REGISTERED PROFESSIONAL ENGINEER ANDREW BUI No. C63560 Exp. 9/30/14 CIVIL STATE OF CALIFORNIA

The State of California or its officers or agents shall not be responsible for the accuracy or completeness of scanned copies of this plan sheet.

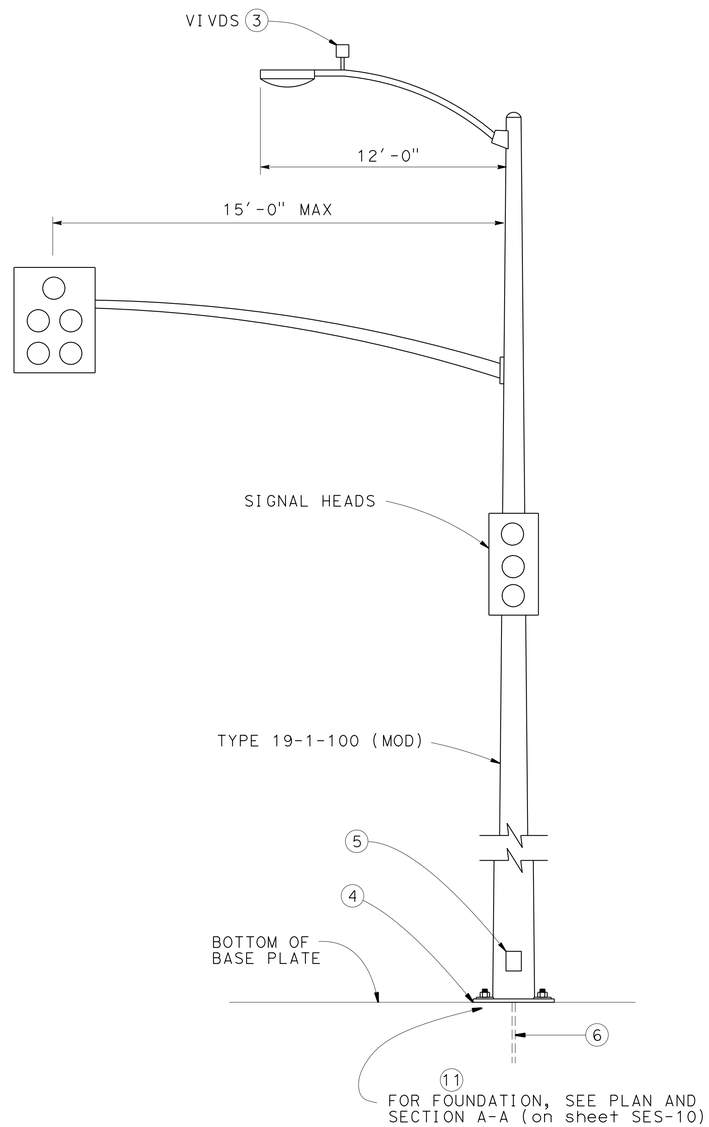

TYPE 19-3-100 (MOD)

NOTES:

1. Type 19-3-100 (MOD) shall conform to 2010 Standard Plan RSP ES-7C (foundation excluded).
2. Type 19-3-100 (MOD) shall have a maximum of two 3-section heads and 2-ped heads mounted to the pole and one 5-section signal head mounted on the signal arm. (2-ped heads not shown).

(3) For VIVDS details, see sheet SES-6.

(4) No grout required.

(5) For Handhole details, see 2010 Standard Plan ES-7M.

(6) For wiring connection details, See Electrical Plans.

7. Pole Locations:
   -Rte 5 12+80 SB Off Ramp
   -Rte 5 13+80 SB Off Ramp.
8. For details not shown, see 2010 Standard Plans and 2010 Revised Standard Plans.
9. All steel shall be galvanized after fabrication.
10. During pole installation the post shall be raked as necessary with the use of leveling nuts to provide a plumb pole axis.

(11) The foundation shall be on level ground with slope inclination Max 4:1 (Horizontal : Vertical).

12. Design Specification: AASHTO Standard Specifications for Structural Supports for Highway Signs, Luminaires and Traffic Signals dated 2001.
13. Wind Loadings: 100 mph (3-second gust).
14. Unit Stresses (Structural Steel):
    a. fy = 55,000 psi (tapered steeltube)
    b. fy = 50,000 psi (unless otherwise noted).
15. Anchor bolts: fy = 55,000 psi.
16. Threaded rod: fy = 55,000 psi.
17. Unit Stresses (Reinforced Concrete):
    a. minor concrete
    b. fy = 60,000 psi (rebar).

THE CONTRACTOR SHALL VERIFY ALL CONTROLLING FIELD DIMENSIONS BEFORE ORDERING OR FABRICATING ANY MATERIAL.

NO SCALE

BRANCH CHIEF JEFFREY B WOODY

	BY	CHECKED
DESIGN	A BUI	K C LIU
DETAILS	A R DUDSAK	A BUI
QUANTITIES		

STATE OF CALIFORNIA DEPARTMENT OF TRANSPORTATION

DIVISION OF ENGINEERING SERVICES STRUCTURE DESIGN SPECIAL DESIGN BRANCH

BRIDGE NO. N/A
POST MILE X

ELECTRICAL SYSTEMS
MODIFY SIGNAL AND LIGHTING TEMPORARY POLE DETAILS

SES-12

STRUCTURES DESIGN SPECIAL DESIGN SHEET (ENGLISH) (REV. 09-01-10)

ORIGINAL SCALE IN INCHES FOR REDUCED PLANS 0 1 2 3

UNIT:
PROJECT NUMBER & PHASE: 07000018351 CONTRACT NO.: 07-215951

DISREGARD PRINTS BEARING EARLIER REVISION DATES

REVISION DATES 11-28-12 SHEET X OF X

FILE => SPEC DES BR PROJ/2012SD/07-215931/07-215951ses-12.dgn

USERNAME => s124496 DATE PLOTTED => 26-JUN-2013 TIME PLOTTED => 19:49

DIST	COUNTY	ROUTE	POST MILES TOTAL PROJECT	SHEET No.	TOTAL SHEETS
07	LA	5	0.0/7.6	568	985

REGISTERED CIVIL ENGINEER 1/25/12 DATE

6-24-13
PLANS APPROVAL DATE

The State of California or its officers or agents shall not be responsible for the accuracy or completeness of scanned copies of this plan sheet.

REGISTERED PROFESSIONAL ENGINEER
ANDREW BUI
No. C63560
Exp. 9/30/14
CIVIL
STATE OF CALIFORNIA

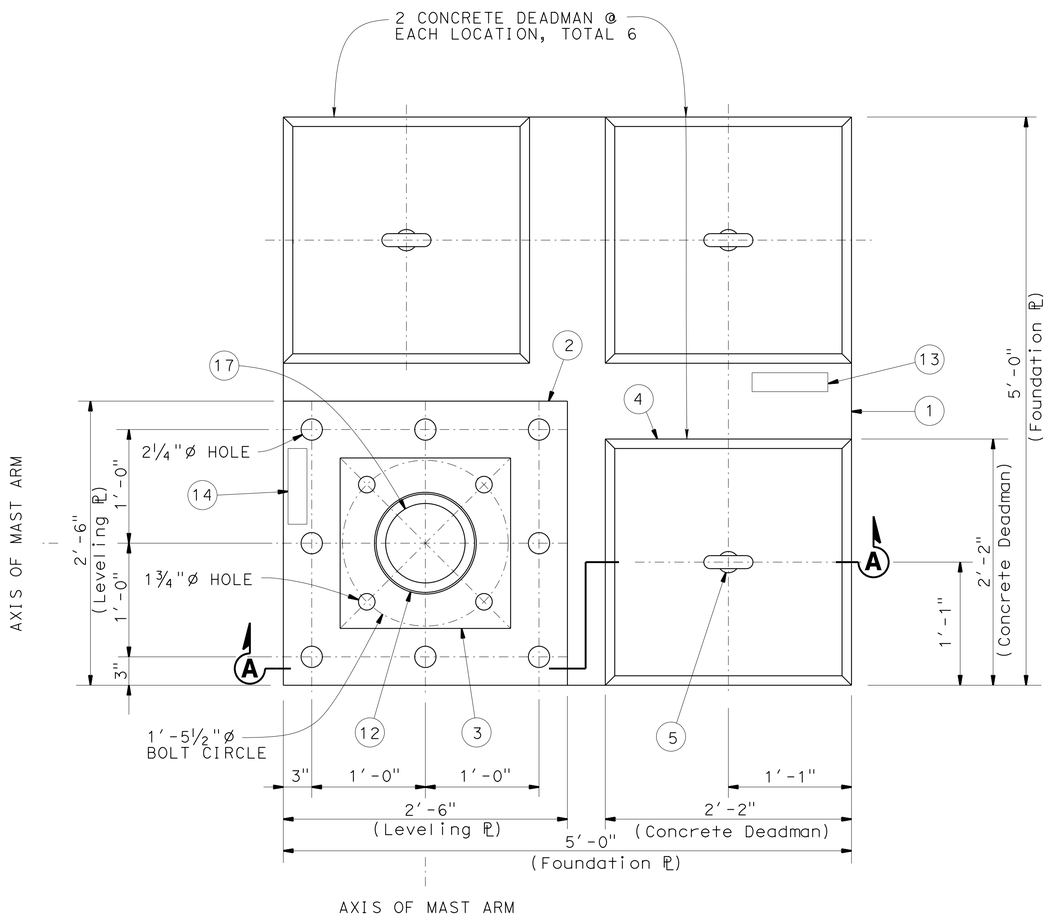

PLAN

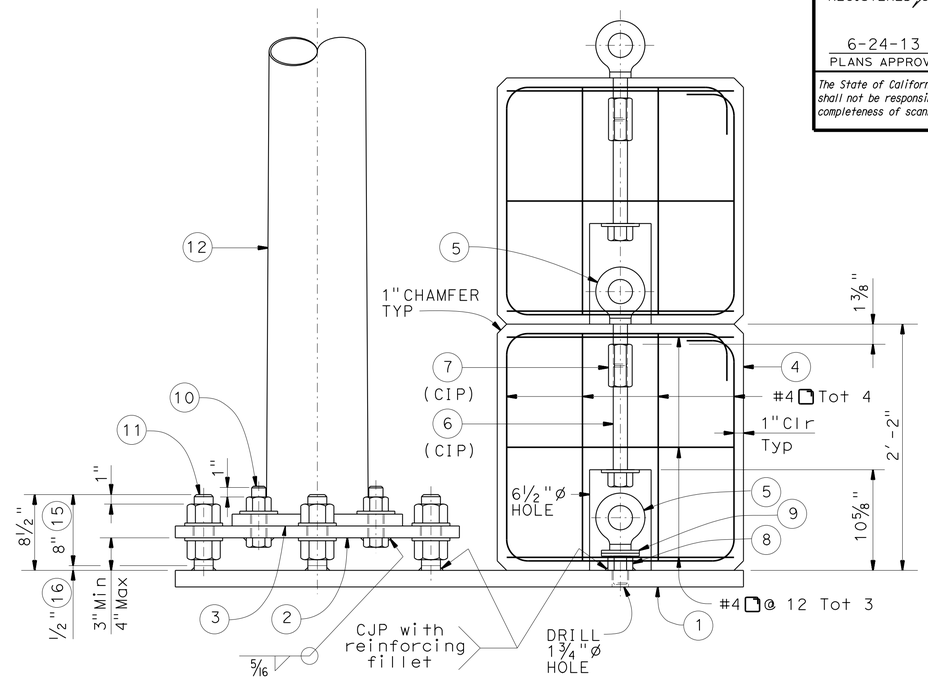

SECTION A-A

NOTES:

1. Foundation ℙ 1¾" X 5'-0" X 5'-0".
2. Leveling ℙ 1¼" X 2'-6" X 2'-6".
3. Base ℙ 1¼" X 1'-7" X 1'-7".
4. Concrete Deadman 2'-2" X 2'-2" X 2'-2".
5. 1½"ø Forged eyebolt with 3⅝" shank.
6. 1½"ø X 12" Heavy hex bolt with 4"ø X 5/16" thick washer (CIP).
7. 1½"ø Hex coupling nut (CIP).
8. 1½"ø Heavy hex nut.
9. 1½"ø X 5/16" thick washer total (2) each location.
10. 1½"ø Heavy hex bolt with nut and 4"ø X 5/16" thick washers.
11. 2"ø X 8½" Threaded rod with (2) heavy hex nuts and (2) 4"ø X 5/16" thick washer.
12. Type 19-3-100 (MOD) Mod Pole.
13. Stamp Foundation ℙ with "Lift ℙ with minimum of (2) forged eyebolts".
14. Stamp Leveling ℙ with "ℙ for Type 19-3-100 (MOD) pole".
15. Threaded rod.
16. Non-Threaded Rod.
17. Hole in Leveling ℙ to be same size as hole in Base ℙ.

NO SCALE

THE CONTRACTOR SHALL VERIFY ALL CONTROLLING FIELD DIMENSIONS BEFORE ORDERING OR FABRICATING ANY MATERIAL.

BRANCH CHIEF JEFFREY B WOODY

	BY	CHECKED
DESIGN	A BUI	K C LIU
DETAILS	A R DUDSAK	A BUI
QUANTITIES		

STATE OF CALIFORNIA
DEPARTMENT OF TRANSPORTATION

DIVISION OF ENGINEERING SERVICES
STRUCTURE DESIGN
SPECIAL DESIGN BRANCH

BRIDGE NO. N/A
POST MILE X

ELECTRICAL SYSTEMS
MODIFY SIGNAL AND LIGHTING
TEMPORARY POLE DETAILS FOR TYPE 19-3-100

SES-13

STRUCTURES DESIGN SPECIAL DESIGN SHEET (ENGLISH) (REV. 09-01-10)

ORIGINAL SCALE IN INCHES FOR REDUCED PLANS 0 1 2 3

UNIT:
PROJECT NUMBER & PHASE: 07000018351 CONTRACT NO.: 07-215951

DISREGARD PRINTS BEARING EARLIER REVISION DATES

REVISION DATES | SHEET X | OF X

FILE => SPEC DES BR PROJ/2012SD/07-215931/07-215951ses-13.dgn

USERNAME => s124496 DATE PLOTTED => 26-JUN-2013 TIME PLOTTED => 19:49

DIST	COUNTY	ROUTE	POST MILES TOTAL PROJECT	SHEET No.	TOTAL SHEETS
07	LA	5	0.0/7.6	569	985

REGISTERED CIVIL ENGINEER 1/25/12 DATE

6-24-13
PLANS APPROVAL DATE

REGISTERED PROFESSIONAL ENGINEER ANDREW BUI No. C63560 Exp. 9/30/14 CIVIL STATE OF CALIFORNIA

The State of California or its officers or agents shall not be responsible for the accuracy or completeness of scanned copies of this plan sheet.

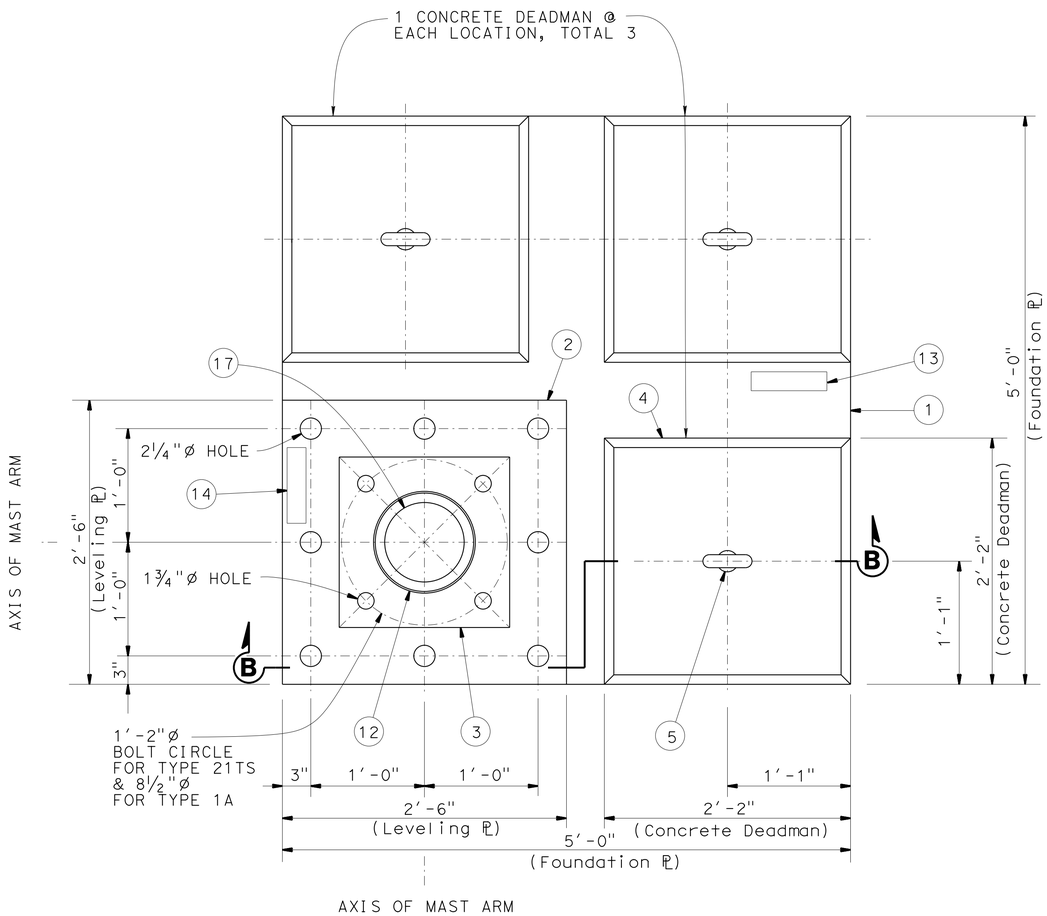

PLAN

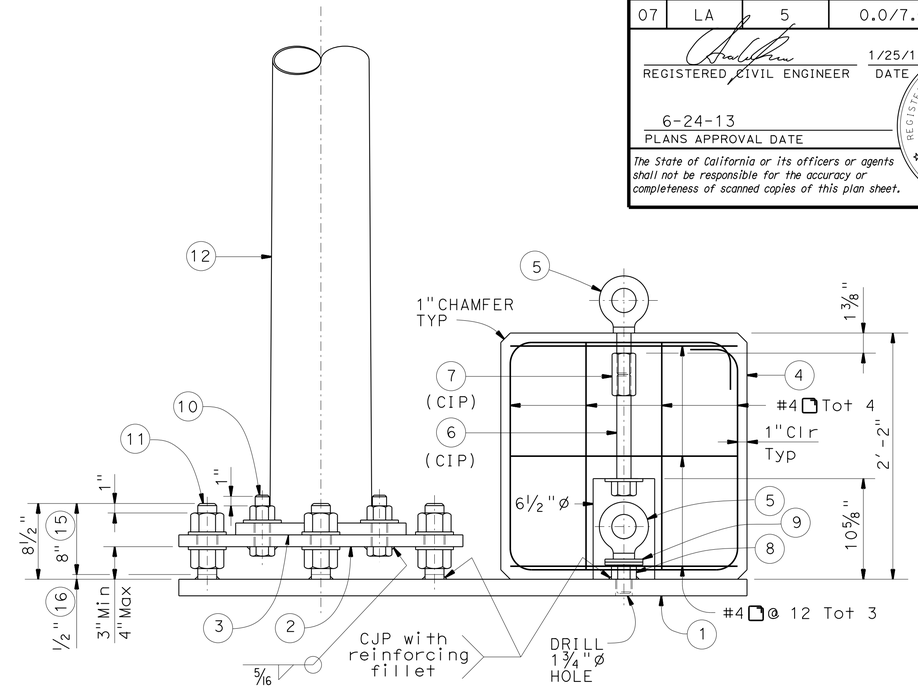

SECTION B-B

NOTES:

1. Foundation ℞ 1¾" X 5'-0" X 5'-0".
2. Leveling ℞ 1¼" X 2'-6" X 2'-6".
3. Base ℞ 1½"X 9½"X 9½" for TYPE 1A & Base ℞ 1½" X 1'-1½"X 1'-1½" for TYPE 15TS.
4. Concrete Deadman 2'-2" X 2'-2" X 2'-2".
5. 1½"Ø Forged eyebolt with 3⅝" shank.
6. 1½" Ø X 12" Heavy hex bolt with 4"Ø X 5/16" thick washer (CIP).
7. 1½"Ø Hex coupling nut (CIP).
8. 1½"Ø Heavy hex nut.
9. 1½"Ø X 5/16" thick washer total (2) each location.
10. 1½"Ø Heavy hex bolt with nut and 4"Ø X 5/16" thick washers.
11. 2"Ø X 8½" Threaded rod with (2) heavy hex nuts and (2) 4"Ø X 5/16" thick washer.
12. TYPE 1A Signal pole & TYPE 21TS pole.
13. Stamp Foundation ℞ with "Lift ℞ with minimum of (2) forged eyebolts".
14. Stamp Leveling ℞ with "℞ for TYPE 1A pole".
15. Threaded rod.
16. Non-Threaded Rod.
17. Hole in Leveling ℞ to be same size as hole in Base ℞.

THE CONTRACTOR SHALL VERIFY ALL CONTROLLING FIELD DIMENSIONS BEFORE ORDERING OR FABRICATING ANY MATERIAL.

NO SCALE

BRANCH CHIEF JEFFREY B WOODY

	BY	CHECKED
DESIGN	A BUI	K C LIU
DETAILS	A R DUDSAK	A BUI
QUANTITIES		

STATE OF CALIFORNIA DEPARTMENT OF TRANSPORTATION

DIVISION OF ENGINEERING SERVICES STRUCTURE DESIGN SPECIAL DESIGN BRANCH

BRIDGE NO. N/A
POST MILE X

ELECTRICAL SYSTEMS
MODIFY SIGNAL AND LIGHTING TEMPORARY POLE DETAILS FOR TYPE 1A & TYPE 21TS

SES-14

STRUCTURES DESIGN SPECIAL DESIGN SHEET (ENGLISH) (REV. 09-01-10)

ORIGINAL SCALE IN INCHES FOR REDUCED PLANS 0 1 2 3

UNIT:
PROJECT NUMBER & PHASE: 07000018351 CONTRACT NO.: 07-215951

DISREGARD PRINTS BEARING EARLIER REVISION DATES → 11-28-12

REVISION DATES | SHEET X | OF X

FILE => SPEC DES BR PROJ/2012SD/07-215951/07-215951ses-14.dgn

USERNAME => s124496 DATE PLOTTED => 26-JUN-2013 TIME PLOTTED => 13:49

DIST	COUNTY	ROUTE	POST MILES TOTAL PROJECT	SHEET No.	TOTAL SHEETS
07	LA	5	0.0/7.6	570	985

REGISTERED CIVIL ENGINEER — DATE 1/25/12

6-24-13
PLANS APPROVAL DATE

The State of California or its officers or agents shall not be responsible for the accuracy or completeness of scanned copies of this plan sheet.

REGISTERED PROFESSIONAL ENGINEER — ANDREW BUI — No. C63560 — Exp. 9/30/14 — CIVIL — STATE OF CALIFORNIA

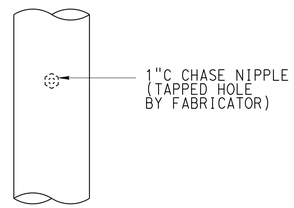

DETAIL A

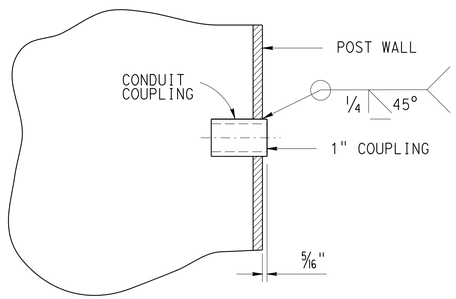

RAINTIGHT COUPLING-1"Ø MAX
DETAIL B

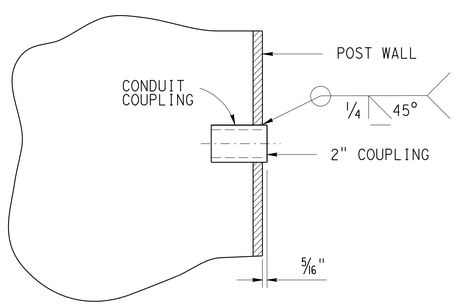

RAINTIGHT COUPLING-2"Ø MAX
DETAIL C

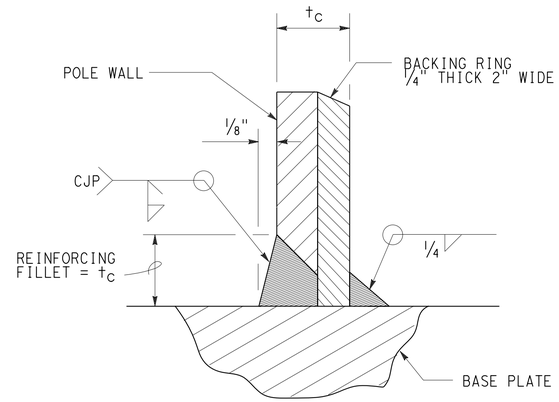

DETAIL D

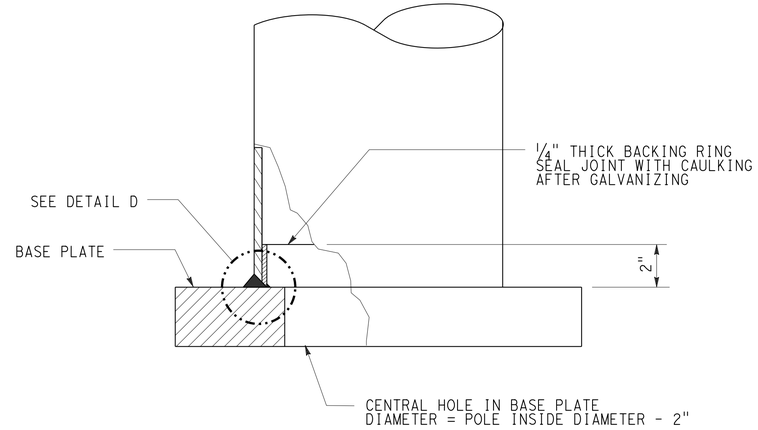

ELEVATION BASE PLATE

THE CONTRACTOR SHALL VERIFY ALL CONTROLLING FIELD DIMENSIONS BEFORE ORDERING OR FABRICATING ANY MATERIAL.

NO SCALE

BRANCH CHIEF JEFFREY B WOODY

	BY	CHECKED
DESIGN	A BUI	K C LIU
DETAILS	A R DUDSAK	A BUI
QUANTITIES		

STATE OF CALIFORNIA
DEPARTMENT OF TRANSPORTATION

DIVISION OF ENGINEERING SERVICES
STRUCTURE DESIGN
SPECIAL DESIGN BRANCH

BRIDGE NO. N/A
POST MILE X

ELECTRICAL SYSTEMS
TEMPORARY POLE DETAILS

SES-15

STRUCTURES DESIGN SPECIAL DESIGN SHEET (ENGLISH) (REV. 09-01-10)

ORIGINAL SCALE IN INCHES FOR REDUCED PLANS 0 1 2 3

UNIT:
PROJECT NUMBER & PHASE: 07000018351
CONTRACT NO.: 07-215951

DISREGARD PRINTS BEARING EARLIER REVISION DATES

REVISION DATES

SHEET X OF X

FILE => SPEC DES BR PROJ/2012SD/07-215931/07-215951ses-15.dgn

USERNAME => s124496 DATE PLOTTED => 26-JUN-2013 TIME PLOTTED => 19:50

DIST	COUNTY	ROUTE	POST MILES TOTAL PROJECT	SHEET No	TOTAL SHEETS
07	LA	5	0.0/7.6	571	985

REGISTERED CIVIL ENGINEER — DATE 2/5/13

6-24-13
PLANS APPROVAL DATE

REGISTERED PROFESSIONAL ENGINEER — JEFF WOODY — No. C41260 — Exp. 3/31/15 — CIVIL — STATE OF CALIFORNIA

The State of California or its officers or agents shall not be responsible for the accuracy or completeness of electronic copies of this plan sheet.

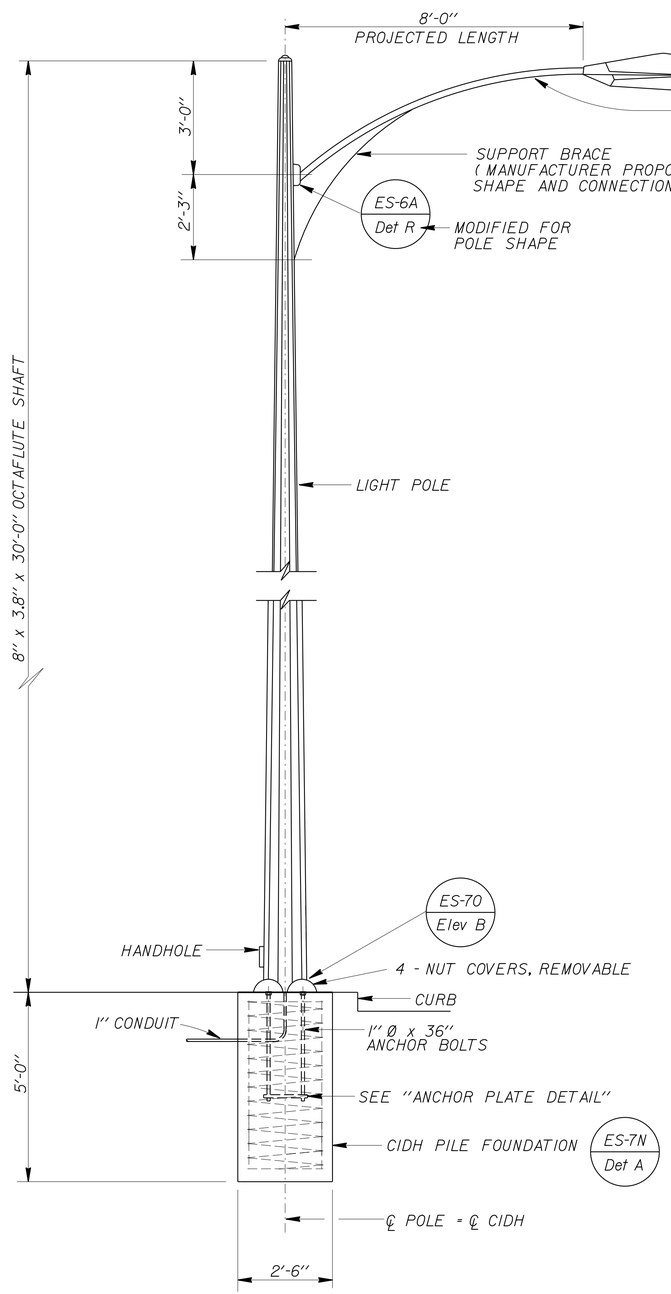

ELEVATION

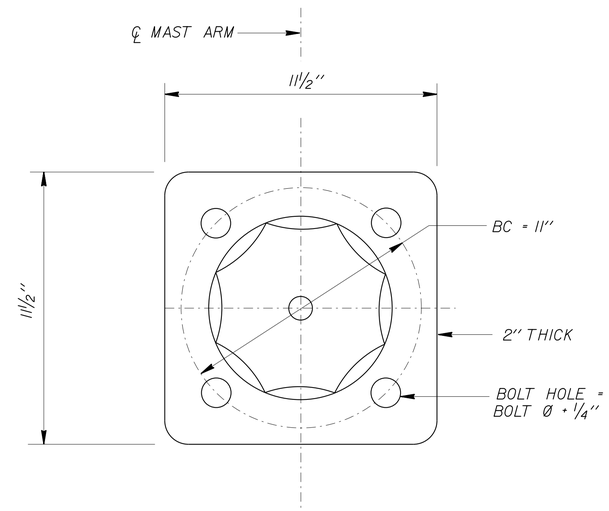

BASE PLATE

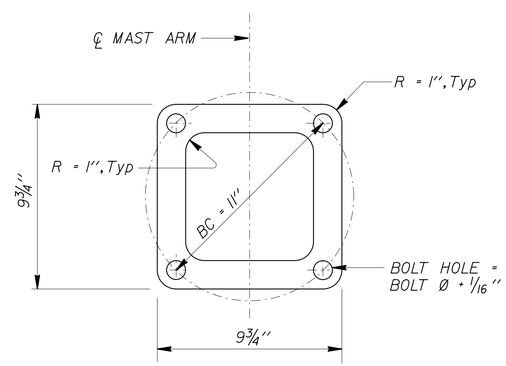

ANCHOR PLATE DETAIL

GENERAL NOTES:

Design : AASHTO Standard Specifications for Structural Supports for Highway Signs, Luminaires and Traffic Signals, Fifth Edition

LOADING

Wind Loadings: 100 MPH

UNIT STRESSES

Structural steel: fy = 55,000 psi (Tapered steel tube and anchor bolts)
fy = 50,000 psi (Unless otherwise noted)

Concrete: f'c = 3,600 psi
fy = 60,000 psi

NOTES:

1. For pole location, see "ELECTRICAL" plans.
2. All steel shall be galvanized after fabrication.
3. During pole erection, the post shall be raked as necessary with the use of leveling nuts to provide a plumb pole.
4. The foundation shall be treated as level ground condition if the slope inclination is flatter than 4H:1V.
5. For details not shown, see "2010 STANDARD PLANS".

NOTE:
THE CONTRACTOR SHALL VERIFY ALL CONTROLLING FIELD DIMENSIONS BEFORE ORDERING OR FABRICATING ANY MATERIAL.

STANDARD PLAN SHEET No.
DETAIL No.

NO SCALE

BRANCH CHIEF	JEFF WOODY	DESIGN	BY JOHN DATILES	CHECKED JUAN JAUREGUI
		DETAILS	BY R. YEE	CHECKED JOHN DATILES
		QUANTITIES	BY	CHECKED

STATE OF CALIFORNIA
DEPARTMENT OF TRANSPORTATION

DIVISION OF ENGINEERING SERVICES
DESIGN AND TECHNICAL SERVICES
SPECIAL DESIGNS BRANCH
A

BRIDGE NO.
POST MILE 0.0/7.6

DECORATIVE LIGHTING MOUNTING DETAILS

SES-16

(ENGLISH) SPECIAL DESIGNS BRANCH BORDER SHEET (REV. 7-1-09)

ORIGINAL SCALE IN INCHES FOR REDUCED PLANS 0 1 2 3

UNIT: 3619
PROJECT NUMBER & PHASE: 07000018351
CONTRACT NO.: 07-215951

DISREGARD PRINTS BEARING EARLIER REVISION DATES

REVISION DATES 1/25/13 2/8/13 2/8/13 2/11/13

SHEET OF

FILE => 2013sd/07-215951/ses-16.dgn

USERNAME => s124496 DATE PLOTTED => 26-JUN-2013 TIME PLOTTED => 19:50

DIST.	COUNTY	ROUTE	POST MILES TOTAL PROJECT	SHEET NO.	TOTAL SHEETS
07	LA	5	0.0/7.6	572	985

H. Abdelsayed — REGISTERED ELECTRICAL ENGINEER — 12-5-12 DATE

REGISTERED PROFESSIONAL ENGINEER H. ABDELSAYED No. 16757 Exp. 9-30-14 ELEC STATE OF CALIFORNIA

6-24-13
PLANS APPROVAL DATE

The State of California or its officers or agents shall not be responsible for the accuracy or completeness of scanned copies of this plan sheet.

GRAPHIC SYMBOLS FOR ELECTRICAL WIRING AND LAYOUT DIAGRAMS

SYMBOL	DESCRIPTION
	POLE-TOP ELECTROLIER
	POLE-ARM ELECTROLIER
CEILING / WALL	
S / S	SURFACE FLUORESCENT, METAL HALIDE, OR SODIUM VAPOR FIXTURE
R / R	RECESSED FLUORESCENT, METAL HALIDE, OR SODIUM VAPOR FIXTURE
X / X	EXIT LIGHT
	SURFACE OR PENDANT INDIVIDUAL FLUORESCENT FIXTURE
R	RECESSED INDIVIDUAL FLUORESCENT FIXTURE
	SURFACE OR PENDANT CONTINUOUS ROW FLUORESCENT FIXTURES

NOTE: A LOWER CASE LETTER NEAR GRAPHIC LIGHTING FIXTURE SYMBOL DENOTES THAT FIXTURE IS CONTROLLED BY A SIMILARLY MARKED SWITCH, AN ALPHA-NUMERIC SYMBOL NEAR GRAPHIC LIGHTING FIXTURE SYMBOL DENOTES FIXTURE TYPE, (I=INCANDESCENT, F=FLUORESCENT, MH=METAL HALIDE, H=HIGH PRESSURE SODIUM VAPOR), DESIGN TYPE, NUMBER OF LAMPS AND WATTAGE.

EXAMPLE : (4) F2-2x32
- 32 WATT LAMPS
- 2 LAMPS
- DESIGN TYPE
- FLUORESCENT
- NUMBER OF FIXTURES

B / B	BLANK OUTLET
J / J	JUNCTION BOX
D	DROP CORD
	SINGLE RECEPTACLE OUTLET
	DUPLEX RECEPTACLE OUTLET
(GFCI)	DUPLEX RECEPTACLE OUTLET (WITH GFCI)
(GFCI) WP	DUPLEX RECEPTACLE OUTLET, WEATHERPROOF (WITH GFCI)
	SINGLE, SPECIAL PURPOSE RECEPTACLE OUTLET
	DUPLEX, SPECIAL PURPOSE RECEPTACLE OUTLET
R	RANGE OUTLET
C	CLOCK HANGER RECEPTACLE
F	FAN HANGER RECEPTACLE
	FLOOR SINGLE RECEPTACLE OUTLET
	FLOOR DUPLEX RECEPTACLE OUTLET
	FLOOR SPECIAL PURPOSE OUTLET
	FLOOR RADIO OUTLET
	FLOOR TELEPHONE OUTLET
	MULTI-FLOOR OUTLET, 2 OR MORE GANG
	MULTI-OUTLET ASSEMBLY
S	SWITCH AND SINGLE RECEPTACLE
S	SWITCH AND DUPLEX RECEPTACLE
	RADIO OUTLET
	COMMUNICATION OUTLET
	SOUND SYSTEM LOUD SPEAKER OUTLET
R	RADIO OUTLET
TV	TELEVISION OUTLET
M	MICROPHONE OUTLET
T	THERMOSTAT

SYMBOL	DESCRIPTION
S	SINGLE-POLE SWITCH
S_2	DOUBLE-POLE SWITCH
S_3	THREE-WAY SWITCH
S_4	FOUR-WAY SWITCH
S_D	AUTOMATIC DOOR
S_K	KEY OPERATED SWITCH
S_P	SWITCH AND PILOT LIGHT
S_{MC}	MOMENTARY CONTACT SWITCH
S_{RC}	REMOTE CONTROL SWITCH
S_{WP}	WEATHERPROOF SWITCH
S_F	FAN SWITCH
S_L	LIGHT SWITCH
S_H	HEATER SWITCH
S_{VS}	VARIABLE SPEED MOTOR CONTROL SWITCH
S_{CHLF}	TWO TIMER SWITCHES, ONE SWITCH FOR LIGHT AND FAN AND ONE SWITCH FOR HEAT LAMP
S^O_1	OCCUPANCY SENSOR WALL SWITCH, SINGLE LEVEL
S^O_2	OCCUPANCY SENSOR WALL SWITCH, BILEVEL
S_M	MOTION SENSOR SWITCH
S_T	MANUAL MOTOR STARTING SWITCH, THERMAL OVERLOAD TYPE
S_{HP}	MANUAL MOTOR STARTING SWITCH, WITHOUT OVERLOAD ELEMENT
T_S	TIMER SWITCH
	PUSHBUTTON
L	PUSHBUTTON STATION, NC, WITH LOCKING DEVICE FOR OPEN
	PUSHBUTTON STATION MOTOR CONTROL
	BUZZER
	BELL
	COMBINATION BELL-BUZZER
PS	PRESSURE SWITCH
R	CONTROL RELAY
FS	FLOW SWITCH
PEU	PHOTOELECTRIC UNIT
	HAND DRYER NOZZLE
H	HAND DRYER
	FLUSH-MOUNTED PANELBOARD AND CABINET
	SURFACE-MOUNTED PANELBOARD AND CABINET
	LIGHTING PANEL
	POWER PANEL
	COMBINATION LIGHTING AND POWER
MC	MOTOR CONTROLLER
	DISCONNECT SWITCH
	CONDUIT CONCEALED IN CEILING OR WALL
	CONDUIT CONCEALED IN FLOOR
	CONDUIT EXPOSED
	CROSS-LINES INDICATE NUMBER OF #12 AWG CONDUCTORS. LONGER CROSS-LINE INDICATES 1#12 AWG (G) FOR EQUIPMENT GROUNDING CONDUCTOR. NO CROSS-LINE INDICATES 2#12 WITH 1#12 (G) UNLESS OTHERWISE NOTED. ALL CONDUIT ½" UNLESS OTHERWISE NOTED.
A1,2	HOMERUN TO PANELBOARD, ARROWS INDICATE NUMBER OF CIRCUITS, LETTER DENOTES PANELBOARD, NUMERAL DENOTES CIRCUIT

SYMBOL	DESCRIPTION
SM	SURFACE METAL RACEWAY

(2) ½"C,TYPE 2 2#12
- CONDUCTOR INFO (PER CONDUIT)
- CONDUIT TYPE
- CONDUIT SIZE
- NUMBER OF CONDUITS (NO NUMBER INDICATES ONE CONDUIT)

MC	CONDUIT, TYPE 1, UNDERGROUND
CMC	CONDUIT, TYPE 2, UNDERGROUND
PVC	CONDUIT, TYPE 3, UNDERGROUND
	CONDUIT, TYPE 4
	CONDUIT, TURN UP
	CONDUIT, TURN DOWN
	CONDUIT SEAL, EXPLOSION-PROOF
X	CONDUIT, EXPANSION JOINT
	ADAPTER, ONE TYPE CONDUIT TO ANOTHER
	POLE
OC	OCCUPANCY SENSOR
P	OCCUPANCY SENSOR POWER PACK
P	MANUAL PULL STATION
AV	AUDIO/VISUAL ALARM DEVICE
H	HEAT DETECTOR
S	SMOKE DETECTOR
G	GLASS BREAK DISCRIMINATOR
C	MAGNETIC CONTACT SWITCH-PEDESTRIAN DOOR
C	MAGNETIC CONTACT SWITCH-VEHICLE DOOR
K	KEYPAD FOR ALARM SYSTEM
	CURRENT SWITCH
E	PULL BOX, No. 5 UNLESS OTHERWISE NOTED, LETTER INDICATES TYPE OF PULL BOX (E-ELECTRICAL, T-TELEPHONE, R-RADIO)
(T)T	PULL BOX (TRAFFIC-RATED), No. 5 UNLESS OTHERWISE NOTED, LETTER INDICATES TYPE OF PULL BOX (E-ELECTRICAL, T-TELEPHONE, R-RADIO)

A / EE-2 — SECTION/ELEVATION LETTER — SHEET NUMBER

1 / EE-2 — DETAIL NUMBER — SHEET NUMBER

REMODEL WORK

SYMBOL	DESCRIPTION
	EXISTING FLUORESCENT FIXTURE-TO REMAIN
	EXISTING FLUORESCENT FIXTURE-REMOVE
	EXISTING INCANDESCENT FIXTURE-TO REMAIN
	EXISTING INCANDESCENT FIXTURE-REMOVE
	EXISTING OUTLET-TO REMAIN
	EXISTING RECEPTACLE OUTLET-TO REMAIN
	EXISTING RECEPTACLE OUTLET-REMOVE
-E---E-	EXISTING CONDUIT AND CONDUCTORS-TO REMAIN UNLESS OTHERWISE NOTED
-X---X-	EXISTING CONDUIT AND CONDUCTORS-REMOVE
S	EXISTING SWITCH-TO REMAIN
	EXISTING SWITCH-REMOVE
J	EXISTING JUNCTION BOX-TO REMAIN
	EXISTING JUNCTION BOX-REMOVE

GRAPHIC SYMBOLS FOR ELECTRICAL DIAGRAMS

SYMBOL	DESCRIPTION
	CIRCUIT BREAKER, SINGLE-POLE
	CIRCUIT BREAKER, DOUBLE-POLE
	CIRCUIT BREAKER, THREE-POLE
GFCI	CIRCUIT BREAKER, WITH GROUND FAULT CIRCUIT INTERRUPTER
	CIRCUIT BREAKER, SINGLE-POLE, SWITCHED NEUTRAL
	CONTACT, NORMALLY OPEN
	CONTACT, NORMALLY CLOSED
	CONTACT, NORMALLY CLOSED, TIME DELAY CLOSING ON DE-ENERGIZING
	CONTACT, NORMALLY OPEN, TIME DELAY OPENING ON DE-ENERGIZING
	CONTACT, NORMALLY OPEN, TIME DELAY CLOSING ON ENERGIZING
	CONTACT, NORMALLY CLOSED, TIME DELAY OPENING ON ENERGIZING
	CONTACT, SINGLE-POLE, DOUBLE-THROW
	OPERATING COIL
	LIQUID LEVEL ACTUATED SWITCH, NORMALLY CLOSED
	LIQUID LEVEL ACTUATED SWITCH, NORMALLY OPEN
	PRESSURE ACTUATED SWITCH, NORMALLY CLOSED
	PRESSURE ACTUATED SWITCH, NORMALLY OPEN
	FLOW ACTUATED SWITCH, NORMALLY CLOSED
	FLOW ACTUATED SWITCH, NORMALLY OPEN
	TEMPERATURE ACTUATED SWITCH, NORMALLY CLOSED
	TEMPERATURE ACTUATED SWITCH, NORMALLY OPEN
	LIMIT SWITCH, NORMALLY CLOSED
	LIMIT SWITCH, NORMALLY OPEN
	PUSHBUTTON SWITCH, NORMALLY CLOSED
	PUSHBUTTON SWITCH, NORMALLY OPEN
	SWITCH, SINGLE-POLE
	SWITCH, SINGLE-POLE, DOUBLE-THROW
	SWITCH, DOUBLE-POLE
	SWITCH, DOUBLE-POLE, DOUBLE-THROW
	SWITCH, SINGLE-POLE, 3-POSITION
	THERMAL OVERLOAD
	FUSE
	RESISTOR
	VARIABLE RESISTOR
	TRANSFORMER WINDING
	GROUNDING ELECTRODE
	ENCLOSURE BOND
A	PILOT LIGHT (A=AMBER, G=GREEN, R=RED)
G	GENERATOR
M	MOTOR
F	FAN MOTOR

CALIFORNIA STATE FIRE MARSHAL APPROVED
Approval of this plan does not authorize or approve any omission or deviation from applicable regulations. Final approval is subject to field inspection. One set of approved plans shall be available on the project site at all times.
Reviewed by: SPENCER MEYER
Approval date: 09-03-12
CSFM #01-19-11-0196-000

DESIGN	BY Helmy Abdelsayed	CHECKED Jesse Sandhu	
DETAILS	BY Ed D. Tapalla 1/12	CHECKED Helmy Abdelsayed	
QUANTITIES	BY Helmy Abdelsayed	CHECKED Jesse Sandhu	

STATE OF CALIFORNIA DEPARTMENT OF TRANSPORTATION

DIVISION OF ENGINEERING SERVICES ELECTRICAL-MECHANICAL-WATER AND WASTEWATER DESIGN

BRIDGE NO. 53-1660W
POST MILE 5.8/8.3

ROUTE 5/605 PUMPING PLANT

LEGEND

SHEET EE-0.0

TAEMWW Imperial Rev. 7/10

ORIGINAL SCALE IN INCHES FOR REDUCED PLANS 0 1 2 3

UNIT 3597
PROJECT NUMBER & PHASE 07000018351
EA 215951

DISREGARD PRINTS BEARING EARLIER REVISION DATES → 1/27/12 7/25/12 12/5/12

REVISION DATES (PRELIMINARY STAGE ONLY) SHEET OF

27-JUN-2013 05:28

ee_0.0.dgn

DIST.	COUNTY	ROUTE	POST MILES TOTAL PROJECT	SHEET NO.	TOTAL SHEETS
07	LA	5	0.0/7.6	573	985

H. Abdelsayed 12-5-12
REGISTERED ELECTRICAL ENGINEER DATE

REGISTERED PROFESSIONAL ENGINEER H.ABDELSAYED No. 16757 Exp. 9-30-14 ELEC STATE OF CALIFORNIA

6-24-13
PLANS APPROVAL DATE

The State of California or its officers or agents shall not be responsible for the accuracy or completeness of scanned copies of this plan sheet.

CALIFORNIA STATE FIRE MARSHAL APPROVED
Approval of this plan does not authorize or approve any omission or deviation from applicable regulations. Final approval is subject to field inspection. One set of approved plans shall be available on the project site at all times.
Reviewed by: SPENCER MEYER
Approval date: 09-03-12
CSFM #01-19-11-0196-000

ABBREVIATIONS

A

A	AMPERES
AC	ALTERNATING CURRENT or ASPHALT CONCRETE
A/C	AIR CONDITIONING UNIT
ACS	AIR COMPRESSOR STARTER
AFCI	ARC FAULT CIRCUIT INTERRUPTER
AI	ANALOG INPUT
AL	ALARM LIGHT
AO	ANALOG OUTPUT
Approx	APPROXIMATE
AR	ALARM RESET
AVC	AIR VOLUME CONTROLLER

B

BC	BARE COPPER
BD	BUILDING DISCONNECT
Bldg	BUILDING
BP	BOOSTER PUMP
Brk	BREAKER

C

C	CONDUIT
Cat	CATEGORY
CB	CIRCUIT BREAKER
Ckt	CIRCUIT
CL	CHAIN LINK
℄	CENTER LINE
Clr	CLEAR or CLEARANCE
CM	CENTER MARGIN LIGHT
COMM	COMMUNICATION
Conc	CONCRETE
CR	CONTROL RELAY
CS	CURRENT SWITCH
CT	CONTROL TRANSFORMER OR CURRENT TRANSFORMER
CTPD	CONTROL TRANSFORMER PRIMARY DISCONNECT
CTSD	CONTROL TRANSFORMER SECONDARY DISCONNECT

D

D	DEPTH
DC	DIRECT CURRENT
Dia	DIAMETER
DI	DIGITAL INPUT
DLC	LOOP DETECTOR LEAD-IN CABLE
DMM	DIGITAL MULTIMETER
DO	DIGITAL OUTPUT
DP	DUPLEX PLUG RECEPTACLE
DS	DOOR SWITCH

E

(E)	EXISTING
EB	EASTBOUND
EF	EXHAUST FAN
Elev	ELEVATION
EMS	EXTINGUISHABLE MESSAGE SIGN

F

F	FUSE
FG	FINISH GRADE
FL	FAILURE LIGHT
FLA	FLASHER
Flex	FLEXIBLE CONDUIT
FLS	FLOW SWITCH
FO	FIBER OPTIC
FR	FAILURE RESET or FLAME RESISTANT
FS	FLOAT SWITCH

G

(G)	GROUND
Ga	GAUGE
Galv	GALVANIZED
GFCI	GROUND FAULT CIRCUIT INTERRUPTER
GRS	GALVANIZED RIGID STEEL

H

hp	HORSEPOWER
HPS	HIGH PRESSURE SODIUM

I

IC	IRRIGATION CONTROLLER
ICC	IRRIGATION CONTROLLER CABINET
IL	INDICATOR LIGHT
ISB	INTRINSICALLY SAFE BARRIER
ISR	INTRINSICALLY SAFE RELAY
IR	INDUCTION RELAY

J

JB	JUNCTION BOX

K

kV	KILOVOLT
kVA	KILOVOLT AMPERES
kW	KILOWATT

L

L	LIGHT or LENGTH
LC	LIGHTING CONTACTOR
LCD	LIQUID CRYSTAL DISPLAY
LCP	LIGHTING CONTROL PANEL
LD	LIGHT DISCONNECT
LDCI	LEAK DETECTOR CIRCUIT INTERRUPTER
LED	LIGHT EMITTING DIODE
LL	LIQUID LEVEL RELAY
LLC	LIQUID LEVEL CONTROLLER
LP	LIGHT PANEL
LPS	LOW PRESSURE SODIUM
LS	LIGHT SWITCH
LT	LIGHT TRANSFORMER
LTO	LIGHT TRANSFORMER OVERLOAD
LTPD	LIGHT TRANSFORMER PRIMARY DISCONNECT
LTSD	LIGHT TRANSFORMER SECONDARY DISCONNECT

M

Max	MAXIMUM
MB	MAIN BREAKER
MC	METALLIC CONDUIT
MCP	MOTOR CIRCUIT PROTECTOR
MCC	MOTOR CONTROL CENTER
MH	MOUNTING HEIGHT
Min	MINIMUM
Misc	MISCELLANEOUS
MSB	MAIN SWITCHBOARD
MT	EMPTY CONDUIT

N

(N)	NEW
Nav	NAVIGATIONAL LIGHTS
NB	NEUTRAL BUS or NORTHBOUND
NC	NORMALLY CLOSED
No.	NUMBER
Nos.	NUMBERS
NO	NORMALLY OPEN
NPS	NOMINAL PIPE SIZE
NSW	NEUTRAL SWITCHING BREAKER

O

O/C	ON CENTER
OG	ORIGINAL GROUND
OH	OVERHEAD
OL	OVERLOAD

P

P	POLE (CIRCUIT BREAKER)
PB	PULL BOX or PUSHBUTTON
PCC	PORTLAND CONCRETE CEMENT
PCP	PUMP CONTROL PANEL
PEC	PHOTOELECTRIC CONTROL
PEU	PHOTOELECTRIC UNIT
PFR	PHASE FAILURE RELAY
PFRD	PHASE FAILURE RELAY DISCONNECT
ℙ	PLATE
PL	PILOT LIGHT
PS	POWER SWITCH or PRESSURE SWITCH
PTS	POWER TRANSFER SWITCH
PV	PHOTOVOLTAIC
PVC	POLYVINYL CHLORIDE

R

R	RELAY
RES	RESISTOR
Rm	ROOM
RTB	RADIO TERMINAL BOARD
R/W	RIGHT OF WAY

S

S	STARTER COIL
Sch	SCHEDULE
SD	SERVICE DISCONNECT
SFR	SEAL FAILURE RELAY
SL	SUMP LIGHT
SPR	STANDBY POWER RECEPTACLE
Sq	SQUARE
SS	SELECTOR SWITCH or STAINLESS STEEL
ST	STARTER
Std	STANDARD
SV	SOLENOID VALVE
SWIM	SLOW WEIGH-IN-MOTION

T

TB	TERMINAL BLOCK
TDR	TIME DELAY RELAY
TGLS	TOGGLE SWITCH
TM	TIME METER
Tot	TOTAL
TS	TIMER SWITCH
TSW	TEST SWITCH
TTB	TELEPHONE TERMINAL BOARD
Typ	TYPICAL

U

UPS	UNINTERRUPTIBLE POWER SUPPLY

V

V	VOLT(S)
Var	VARIABLE or VARIES

W

W	WATT or WIDTH
WB	WESTBOUND
WIM	WEIGH-IN-MOTION
WLS	WATER LEVEL SWITCH
WP	WEATHERPROOF
WSMS	WEIGH STATION MESSAGE SIGN

X

XFMR	TRANSFORMER

SYMBOLS

∠	ANGLE
@	AT
°	DEGREES
Δ	DELTA
Ω	OHM(S)
ø	PHASE
±	PLUS OR MINUS

PROJECT NOTES

1. Separate grounded (Neutral) conductor must be used for each 120-Volt circuit.
2. Homeruns to Panelboards must be installed as shown on the plans. Homeruns must not be combined.
3. A single insulated equipment grounding conductor, sized as required, must be installed in each conduit run.

STANDARD NOTES

- AB Abandon. If applied to conduit, remove conductors.
- BC Install pull box in existing conduit run.
- CB Install conduit into existing pull box.
- CC Connect new and existing conduit. Remove existing conductors and install conductors as indicated.
- CF Conduit to remain for future use. Remove conductors, install pull rope and plug.
- FA Remove foundation above grade and abandon foundation below grade.
- RL Relocate equipment.
- RLD Relocated equipment.
- SC Splice new to existing conductors.

	BY	CHECKED
DESIGN	Helmy Abdelsayed	Jesse Sandhu
DETAILS	Ed D. Tapalla 6/12	Helmy Abdelsayed
QUANTITIES	Helmy Abdelsayed	Jesse Sandhu

STATE OF CALIFORNIA
DEPARTMENT OF TRANSPORTATION

DIVISION OF ENGINEERING SERVICES
ELECTRICAL-MECHANICAL-WATER AND WASTEWATER DESIGN

BRIDGE NO. 53-1660W
POST MILE 5.8/8.3

ROUTE 5/605 PUMPING PLANT
NOTES AND ABBREVIATIONS

SHEET **EE-0.1**

TAEMWW Imperial Rev. 7/10

ORIGINAL SCALE IN INCHES FOR REDUCED PLANS 0 1 2 3

UNIT 3597
PROJECT NUMBER & PHASE 07000018351
EA 215951

DISREGARD PRINTS BEARING EARLIER REVISION DATES → 6/8/12 7/25/12 12/5/12

REVISION DATES (PRELIMINARY STAGE ONLY) SHEET OF

27-JUN-2013 05:28
ee_0.1.dgn

DIST.	COUNTY	ROUTE	POST MILES TOTAL PROJECT	SHEET NO.	TOTAL SHEETS
07	LA	5	0.0/7.6	574	985

CALIFORNIA STATE FIRE MARSHAL APPROVED
Approval of this plan does not authorize or approve any omission or deviation from applicable regulations. Final approval is subject to field inspection. One set of approved plans shall be available on the project site at all times.
Reviewed by: SPENCER MEYER
Approval date: 09-03-12
CSFM #01-19-11-0196-000

H. Abdelsayed 12-5-12
REGISTERED ELECTRICAL ENGINEER DATE

REGISTERED PROFESSIONAL ENGINEER H.ABDELSAYED No. 16757 Exp. 9-30-14 ELEC STATE OF CALIFORNIA

6-24-13
PLANS APPROVAL DATE

The State of California or its officers or agents shall not be responsible for the accuracy or completeness of scanned copies of this plan sheet.

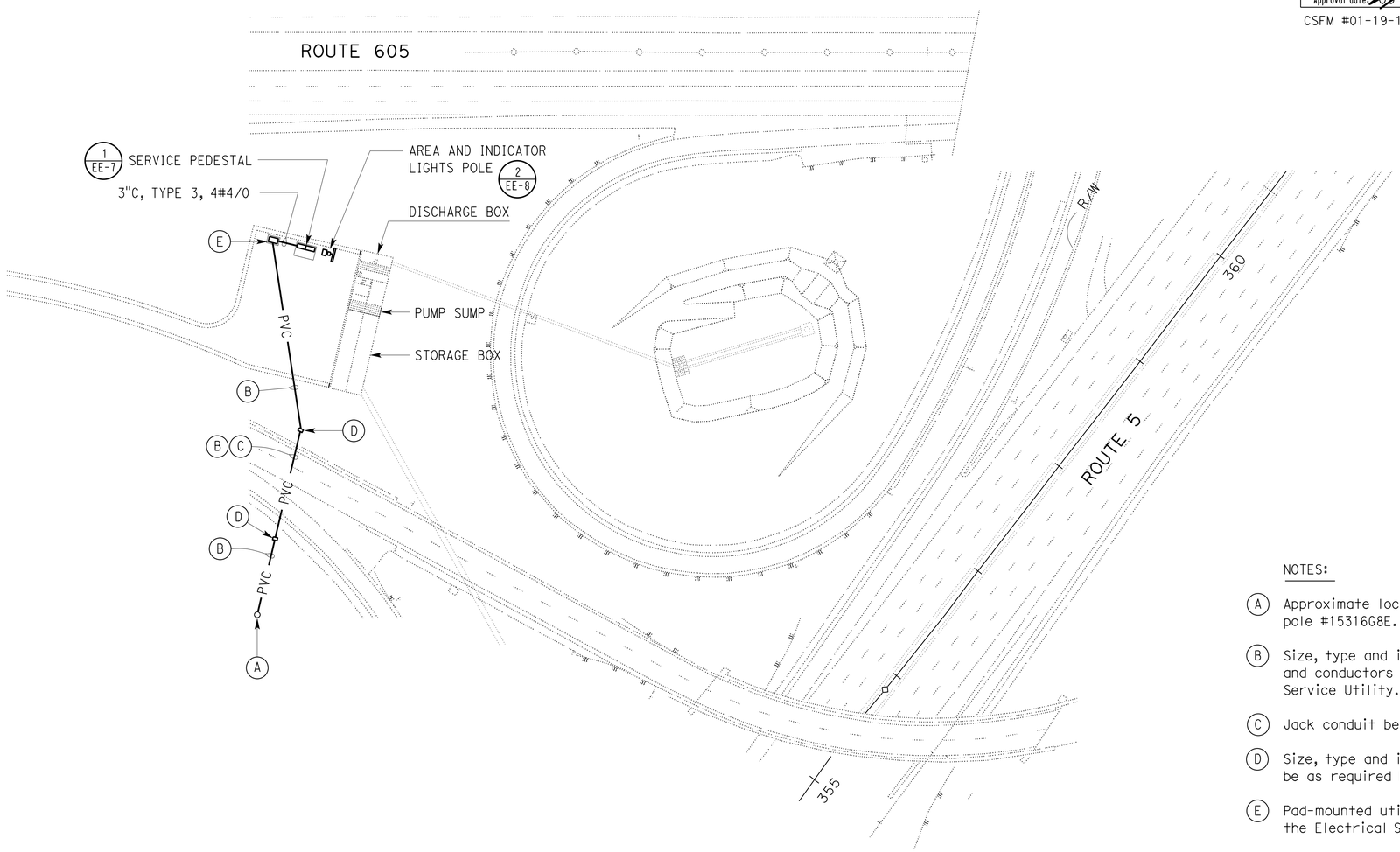

NOTES:

(A) Approximate location of Electrical Service Utility pole #15316G8E.

(B) Size, type and installation of high voltage conduit and conductors will be as required by the Electrical Service Utility.

(C) Jack conduit between the two vaults.

(D) Size, type and installation of high voltage vault will be as required by the Electrical Service Utility.

(E) Pad-mounted utility transformer. Pad as required by the Electrical Service Utility.

SITE PLAN

1" = 50'

THIS DRAWING ACCURATE FOR ELECTRICAL WORK ONLY

DESIGN SUPERVISOR	DESIGN	BY Helmy Abdelsayed	CHECKED Jesse Sandhu
DESIGN ENGINEER	DETAILS	BY Ed D. Tapalla 1/12	CHECKED Helmy Abdelsayed
	QUANTITIES	BY Helmy Abdelsayed	CHECKED Jesse Sandhu

STATE OF CALIFORNIA DEPARTMENT OF TRANSPORTATION

DIVISION OF ENGINEERING SERVICES
ELECTRICAL-MECHANICAL-WATER AND WASTEWATER DESIGN

BRIDGE NO. 53-1660W
POST MILE 5.8/8.3

ROUTE 5/605 PUMPING PLANT
SITE PLAN

SHEET **EE-1**

TAEMWW Imperial Rev. 7/10

ORIGINAL SCALE IN INCHES FOR REDUCED PLANS 0 1 2 3

UNIT 3597
PROJECT NUMBER & PHASE 07000018351
EA 215951

DISREGARD PRINTS BEARING EARLIER REVISION DATES
REVISION DATES (PRELIMINARY STAGE ONLY) 1/21/12 5/21/12 7/24/12 12/5/12
SHEET OF

27-JUN-2013 05:28
ee_01.dgn

DIST.	COUNTY	ROUTE	POST MILES TOTAL PROJECT	SHEET NO.	TOTAL SHEETS
07	LA	5	0.0/7.6	575	985

H. Abdelsayed 12-5-12
REGISTERED ELECTRICAL ENGINEER DATE

REGISTERED PROFESSIONAL ENGINEER H.ABDELSAYED No. 16757 Exp. 9-30-14 ELEC STATE OF CALIFORNIA

6-24-13
PLANS APPROVAL DATE

The State of California or its officers or agents shall not be responsible for the accuracy or completeness of scanned copies of this plan sheet.

CALIFORNIA STATE FIRE MARSHAL APPROVED
Approval of this plan does not authorize or approve any omission or deviation from applicable regulations. Final approval is subject to field inspection. One set of approved plans shall be available on the project site at all times.
Reviewed by: SPENCER MEYER
Approval date: 03-03-12
CSFM #01-19-11-0196-000

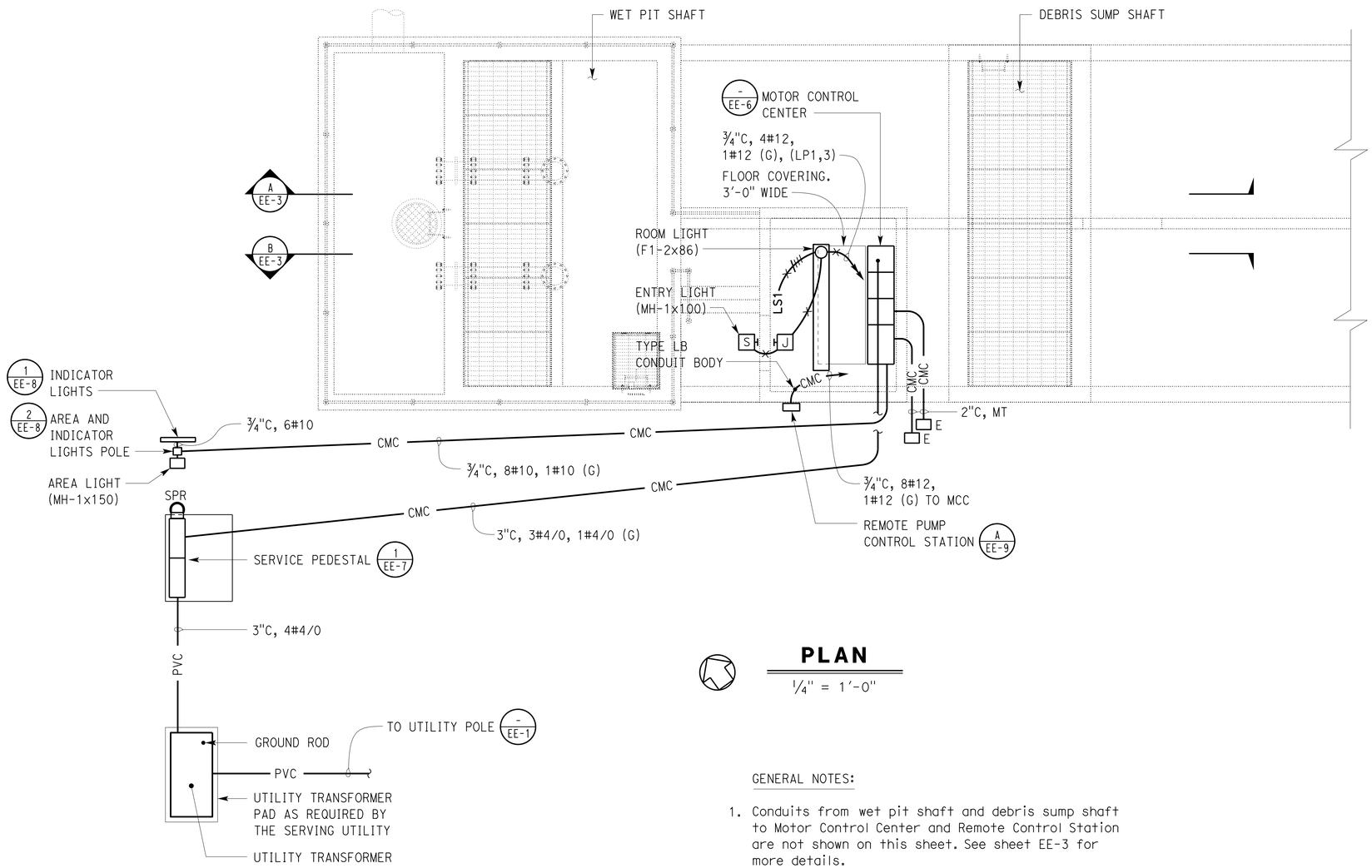

PLAN

¼" = 1'-0"

GENERAL NOTES:

1. Conduits from wet pit shaft and debris sump shaft to Motor Control Center and Remote Control Station are not shown on this sheet. See sheet EE-3 for more details.

THIS DRAWING ACCURATE FOR ELECTRICAL WORK ONLY

	BY	CHECKED
DESIGN	Helmy Abdelsayed	Jesse Sandhu
DETAILS	Ed D. Tapalla 2/12	Helmy Abdelsayed
QUANTITIES	Helmy Abdelsayed	Jesse Sandhu

STATE OF CALIFORNIA
DEPARTMENT OF TRANSPORTATION

DIVISION OF ENGINEERING SERVICES
ELECTRICAL-MECHANICAL-WATER AND WASTEWATER DESIGN

BRIDGE NO. 53-1660W
POST MILE 5.8/8.3

ROUTE 5/605 PUMPING PLANT

POWER AND LIGHTING PLAN

SHEET **EE-2**

TAEMWW Imperial Rev. 7/10

ORIGINAL SCALE IN INCHES FOR REDUCED PLANS 0 1 2 3

UNIT 3597
PROJECT NUMBER & PHASE 07000018351
EA 215951

DISREGARD PRINTS BEARING EARLIER REVISION DATES
REVISION DATES (PRELIMINARY STAGE ONLY) 2/7/12 5/25/12 7/25/12 12/5/12
SHEET OF

27-JUN-2013 05:28
ee_02.dgn

DIST.	COUNTY	ROUTE	POST MILES TOTAL PROJECT	SHEET NO.	TOTAL SHEETS
07	LA	5	0.0/7.6	576	985

H. Abdelsayed 12-5-12
REGISTERED ELECTRICAL ENGINEER DATE

REGISTERED PROFESSIONAL ENGINEER H.ABDELSAYED No. 16757 Exp. 9-30-14 ELEC STATE OF CALIFORNIA

6-24-13
PLANS APPROVAL DATE

The State of California or its officers or agents shall not be responsible for the accuracy or completeness of scanned copies of this plan sheet.

CALIFORNIA STATE FIRE MARSHAL APPROVED
Approval of this plan does not authorize or approve any omission or deviation from applicable regulations. Final approval is subject to field inspection. One set of approved plans shall be available on the project site at all times.
Reviewed by: SPENCER MEYER
Approval date: 06-03-12
CSFM #01-19-11-0196-000

NOTES:

(A) Install conduit seal in the conduit prior to penetrating the wall to Motor Control Center. Conduit run between conduit seal and outside the wet pit shall be a minimum of 10 feet continuous conduit run without coupling or any other fittings.

(B) Conduit seal must be installed within 18" from sump light. No fitting must be installed between conduit seal and sump light.

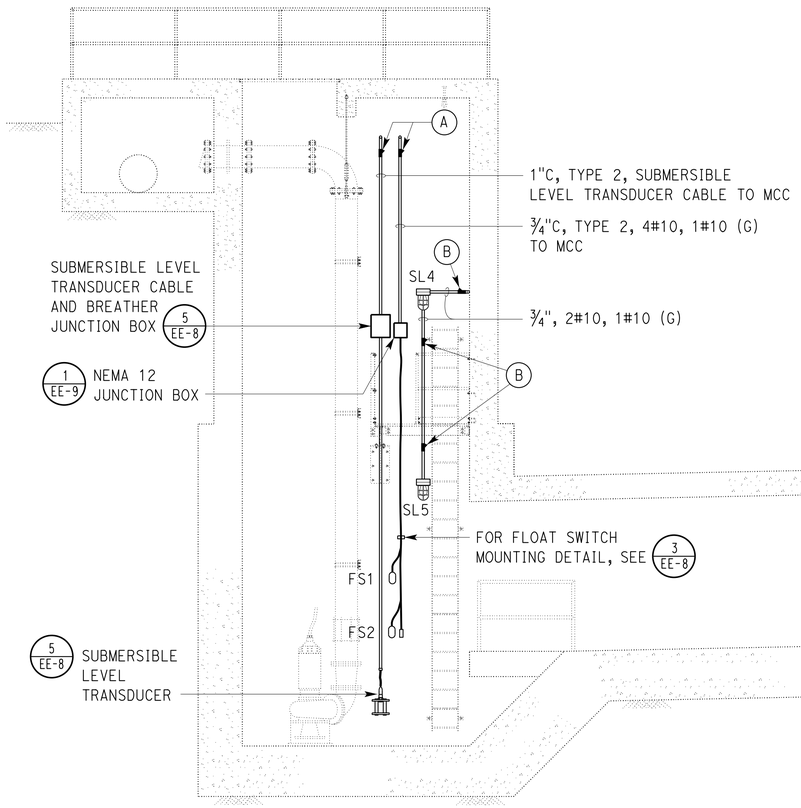

(A) SECTION
¼" = 1'-0"

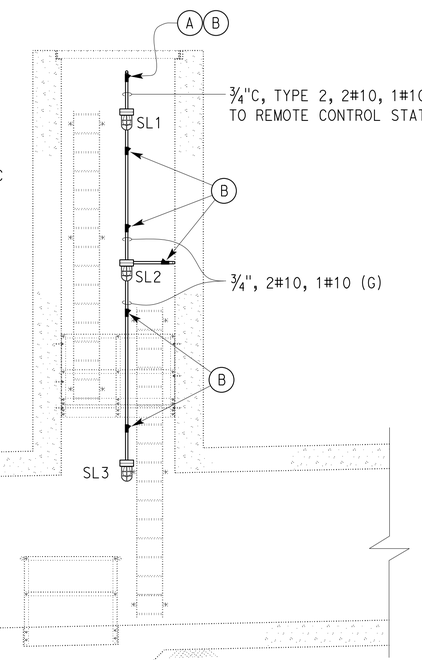

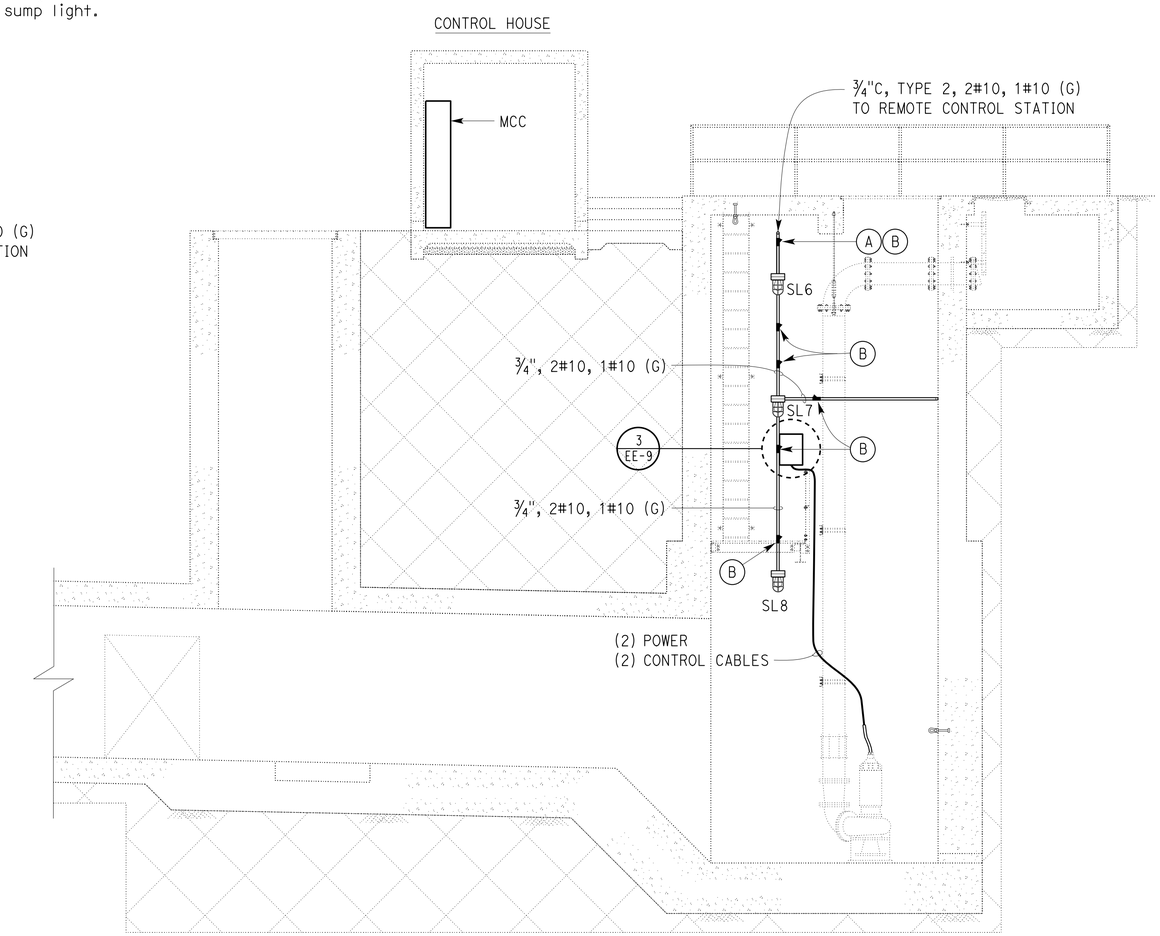

(B) SECTION
¼" = 1'-0"

THIS DRAWING ACCURATE FOR ELECTRICAL WORK ONLY

	BY	CHECKED
DESIGN	Helmy Abdelsayed	Jesse Sandhu
DETAILS	Ed D. Tapalla 2/12	Helmy Abdelsayed
QUANTITIES	Helmy Abdelsayed	Jesse Sandhu

STATE OF CALIFORNIA
DEPARTMENT OF TRANSPORTATION

DIVISION OF ENGINEERING SERVICES
ELECTRICAL-MECHANICAL-WATER AND WASTEWATER DESIGN

BRIDGE NO. 53-1660W
POST MILE 5.8/8.3

ROUTE 5/605 PUMPING PLANT

DETAILS 1

SHEET **EE-3**

TAEMWW Imperial Rev. 7/10

ORIGINAL SCALE IN INCHES FOR REDUCED PLANS 0 1 2 3

UNIT 3597
PROJECT NUMBER & PHASE 07000018351
EA 215951

DISREGARD PRINTS BEARING EARLIER REVISION DATES
REVISION DATES (PRELIMINARY STAGE ONLY) 2/14/12 5/23/12 11/29/12 12/5/12
SHEET OF

27-JUN-2013 05:28
ee_03.dgn

DIST.	COUNTY	ROUTE	POST MILES TOTAL PROJECT	SHEET NO.	TOTAL SHEETS
07	LA	5	0.0/7.6	577	985

CALIFORNIA STATE FIRE MARSHAL APPROVED

Approval of this plan does not authorize or approve any omission or deviation from applicable regulations. Final approval is subject to field inspection. One set of approved plans shall be available on the project site at all times.

Reviewed by: SPENCER MEYER

Approval date: 09-03-12

CSFM #01-19-11-0196-000

H. Abdelsayed 12-5-12

REGISTERED ELECTRICAL ENGINEER — DATE

REGISTERED PROFESSIONAL ENGINEER H.ABDELSAYED No. 16757 Exp. 9-30-14 ELEC STATE OF CALIFORNIA

6-24-13

PLANS APPROVAL DATE

The State of California or its officers or agents shall not be responsible for the accuracy or completeness of scanned copies of this plan sheet.

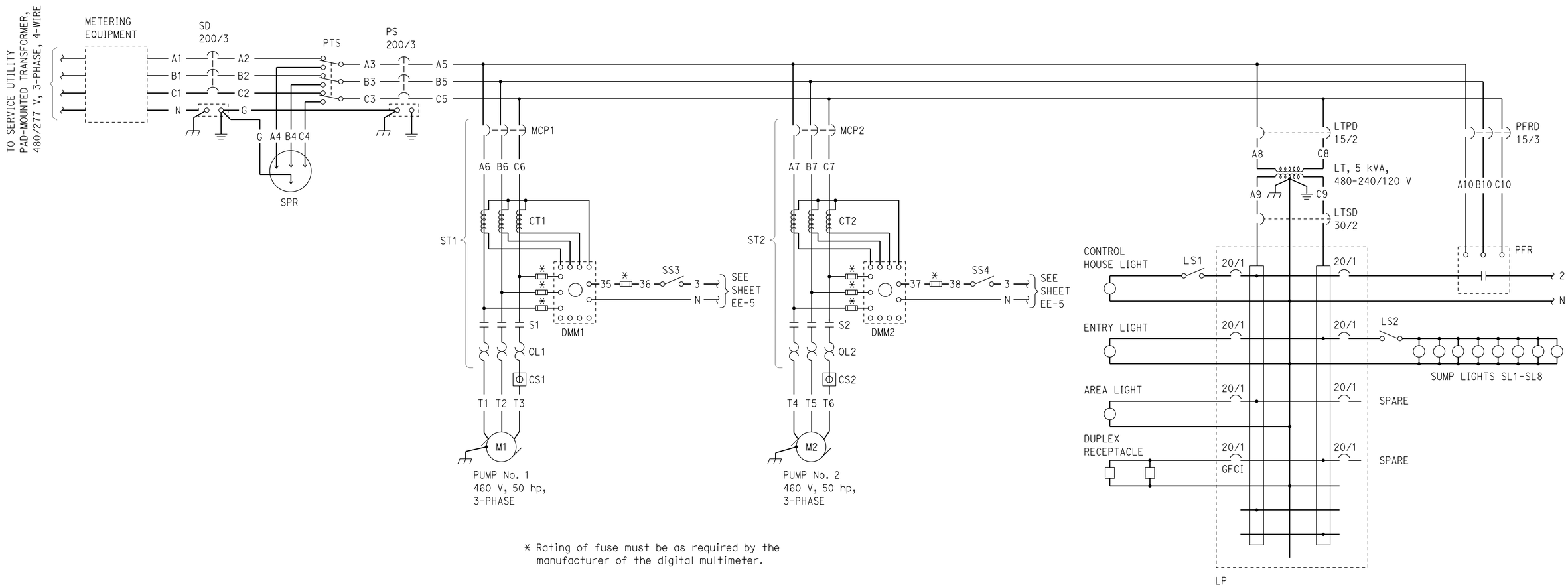

* Rating of fuse must be as required by the manufacturer of the digital multimeter.

DESIGN	BY Helmy Abdelsayed	CHECKED Jesse Sandhu	
DETAILS	BY Ed D. Tapalla 1/12	CHECKED Helmy Abdelsayed	
QUANTITIES	BY Helmy Abdelsayed	CHECKED Jesse Sandhu	

STATE OF CALIFORNIA DEPARTMENT OF TRANSPORTATION

DIVISION OF ENGINEERING SERVICES ELECTRICAL-MECHANICAL-WATER AND WASTEWATER DESIGN

BRIDGE NO. 53-1660W

POST MILE 5.8/8.3

ROUTE 5/605 PUMPING PLANT

POWER SCHEMATIC DIAGRAM

SHEET EE-4

TAEMWW Imperial Rev. 7/10

ORIGINAL SCALE IN INCHES FOR REDUCED PLANS 0 1 2 3

UNIT 3597

PROJECT NUMBER & PHASE 07000018351

EA 215951

DISREGARD PRINTS BEARING EARLIER REVISION DATES → 1/25/12 5/25/12 7/24/12 12/5/12

REVISION DATES (PRELIMINARY STAGE ONLY) SHEET OF

27-JUN-2013 05:28

ee_04.dgn

DIST.	COUNTY	ROUTE	POST MILES TOTAL PROJECT	SHEET NO.	TOTAL SHEETS
07	LA	5	0.0/7.6	578	985

H. Abdelsayed 12-5-12
REGISTERED ELECTRICAL ENGINEER DATE

REGISTERED PROFESSIONAL ENGINEER H.ABDELSAYED No. 16757 Exp. 9-30-14 ELEC STATE OF CALIFORNIA

6-24-13
PLANS APPROVAL DATE

The State of California or its officers or agents shall not be responsible for the accuracy or completeness of scanned copies of this plan sheet.

CALIFORNIA STATE FIRE MARSHAL APPROVED
Approval of this plan does not authorize or approve any omission or deviation from applicable regulations. Final approval is subject to field inspection. One set of approved plans shall be available on the project site at all times.
Reviewed by: SPENCER MEYER
Approval date: 09-03-12
CSFM #01-19-11-0196-000

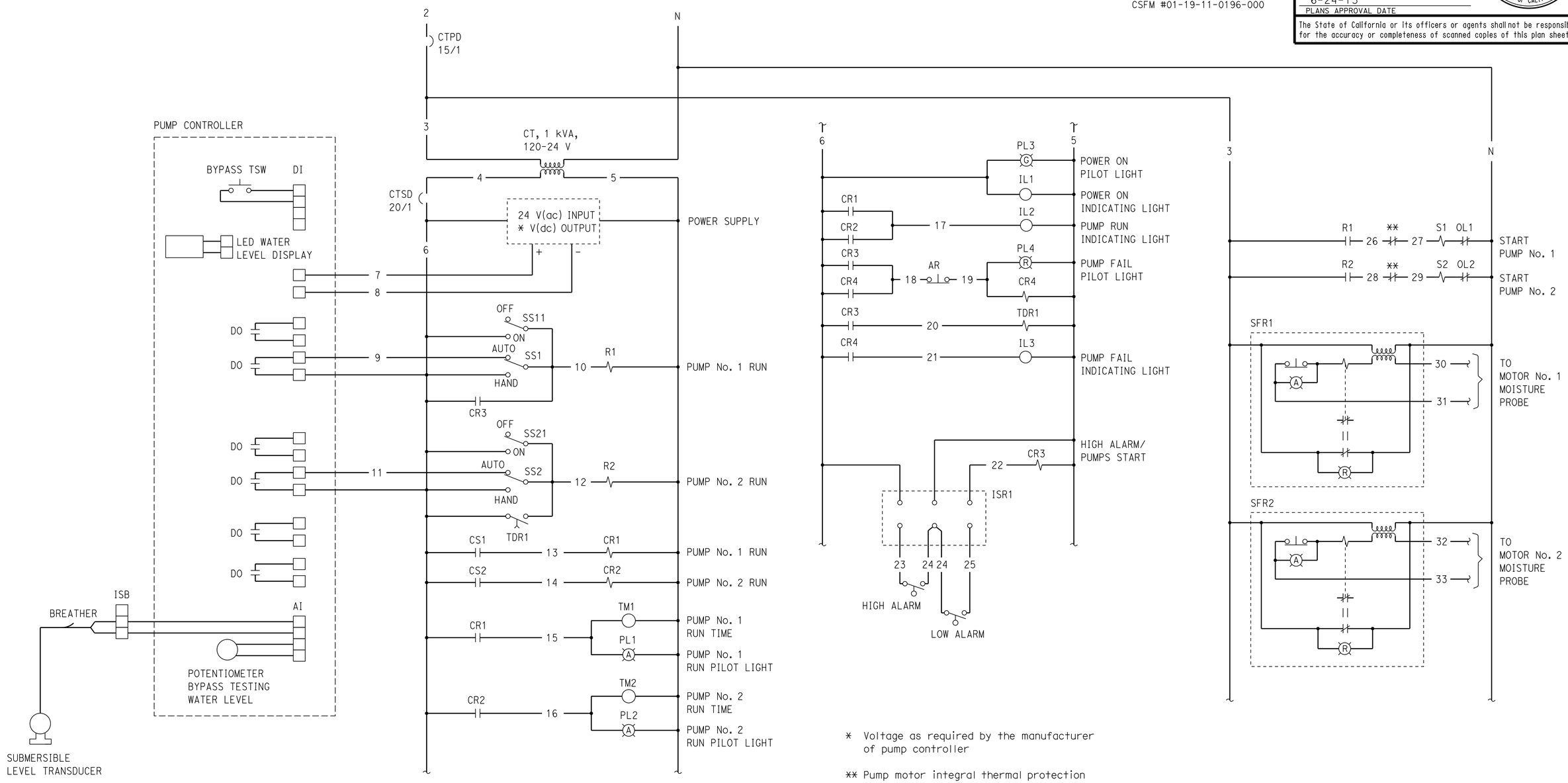

* Voltage as required by the manufacturer of pump controller

** Pump motor integral thermal protection

DESIGN	BY Helmy Abdelsayed	CHECKED Jesse Sandhu	
DETAILS	BY Ed D. Tapalla 1/12	CHECKED Helmy Abdelsayed	
QUANTITIES	BY Helmy Abdelsayed	CHECKED Jesse Sandhu	

STATE OF CALIFORNIA
DEPARTMENT OF TRANSPORTATION

DIVISION OF ENGINEERING SERVICES
ELECTRICAL-MECHANICAL-WATER AND WASTEWATER DESIGN

BRIDGE NO. 53-1660W
POST MILE 5.8/8.3

ROUTE 5/605 PUMPING PLANT

CONTROL SCHEMATIC DIAGRAM

SHEET EE-5

TAEMWW Imperial Rev. 7/10

ORIGINAL SCALE IN INCHES FOR REDUCED PLANS 0 1 2 3

UNIT 3597
PROJECT NUMBER & PHASE 07000018351
EA 215951

DISREGARD PRINTS BEARING EARLIER REVISION DATES → REVISION DATES (PRELIMINARY STAGE ONLY) 1/25/12 5/25/12 7/24/12 12/5/12 SHEET OF

30-AUG-2013 09:31
ee_05.dgn

DIST.	COUNTY	ROUTE	POST MILES TOTAL PROJECT	SHEET NO.	TOTAL SHEETS
07	LA	5	0.0/7.6	579	985

REGISTERED ELECTRICAL ENGINEER — 12-5-12 DATE

REGISTERED PROFESSIONAL ENGINEER H.ABDELSAYED No. 16757 Exp. 9-30-14 ELEC STATE OF CALIFORNIA

6-24-13
PLANS APPROVAL DATE

The State of California or its officers or agents shall not be responsible for the accuracy or completeness of scanned copies of this plan sheet.

CALIFORNIA STATE FIRE MARSHAL APPROVED
Approval of this plan does not authorize or approve any omission or deviation from applicable regulations. Final approval is subject to field inspection. One set of approved plans shall be available on the project site at all times.
Reviewed by: SPENCER MEYER
Approval date: 09-03-12
CSFM #01-19-11-0196-000

GENERAL NOTES:

1. The Contractor must verify all controlling field dimensions before ordering or fabricating any material.
2. Seismic bracing and anchorage for the Motor Control Center must be installed per manufacturer's recommendation to meet or exceed Seismic Zone 4 requirements.

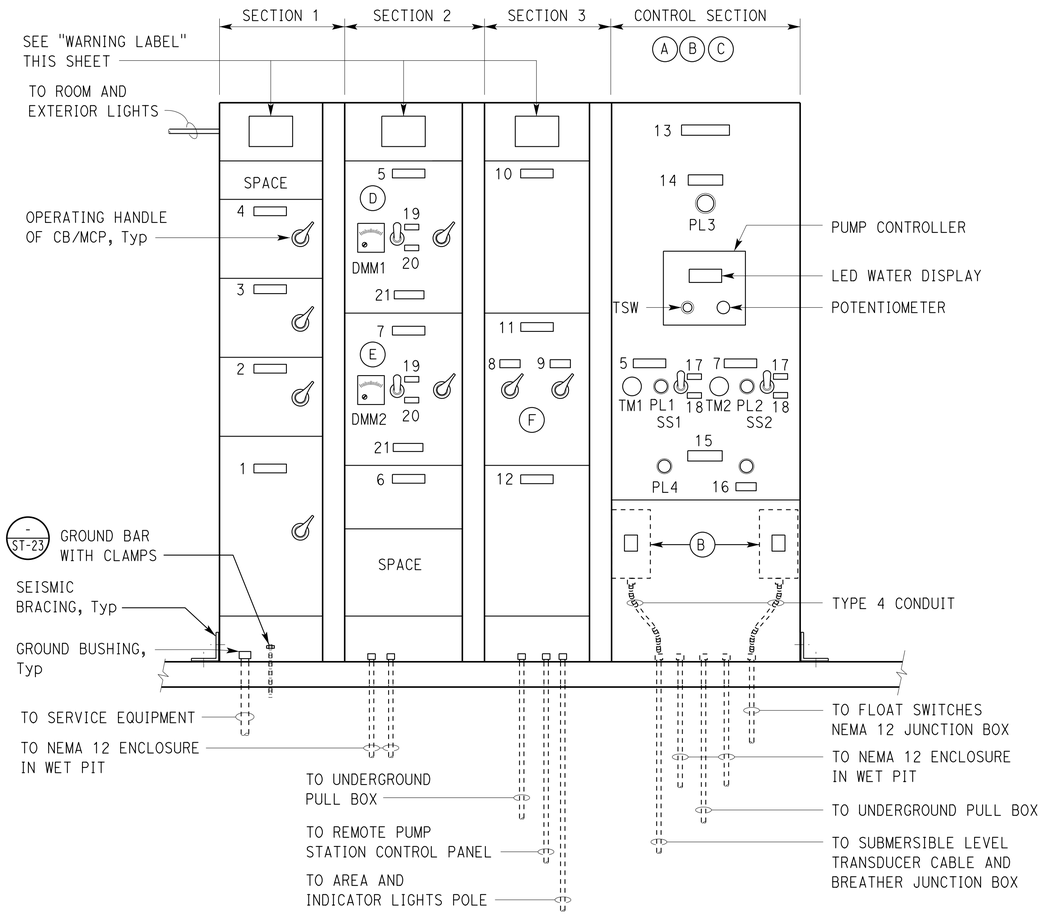

A ELEVATION
NO SCALE

NAMEPLATE SCHEDULE

ITEM No.	INSCRIPTION	LETTER HEIGHT (INCH)
1	POWER SWITCH	1/2
2	PHASE FAILURE	1/4
3	LIGHT TRANSFORMER PRIMARY	"
4	LIGHT TRANSFORMER SECONDARY	"
5	PUMP No. 1	"
6	R1, R2, SFR1, SFR2	"
7	PUMP No. 2	"
8	CONTROL TRANSFORMER PRIMARY	"
9	CONTROL TRANSFORMER SECONDARY	"
10	LIGHT PANEL	"
11	CONTROL TRANSFORMER	"
12	LIGHT TRANSFORMER	"
13	CONTROL SECTION-24 V	1/2
14	UTILITY POWER	1/4
15	PUMP FAILURE	"
16	RESET	"
17	HAND	"
18	AUTO	"
19	ON	"
20	OFF	"
WARNING NAMEPLATE		
21	WARNING MOTOR DISCONNECT DOES NOT OPEN CONTROL CIRCUIT	1/4

NOTES:

(A) Do not terminate or run conductors having more than 24 Volts between grounded and ungrounded conductors thru Control Section.

(B) Provide two metal barriers, one metal barrier must house ISR1 and the other metal barrier must house the wet transducer ISB.

(C) The following component must be mounted inside the Control Section; CR1, CR2, CR3, CR4, TDR1 power supply, wet transducer ISB and ISR1.

(D) CS1 and DMM1 current transformers and associated fuses must be installed inside this compartment.

(E) CS2 and DMM2 current transformers and associated fuses must be installed inside this compartment.

(F) Control transformer must be installed inside this compartment.

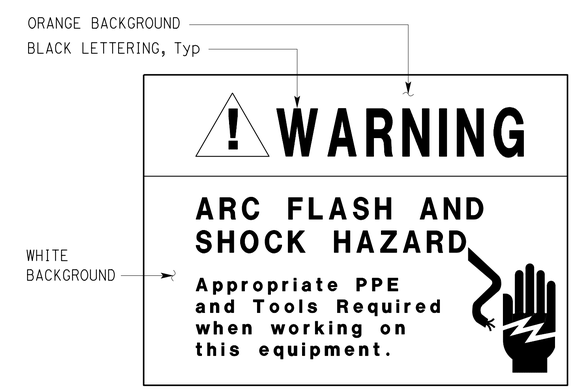

WARNING LABEL*

* Warning label must be constructed with high degree of chemical abrasion, heat resistance and UL recognized material.

THIS DRAWING ACCURATE FOR ELECTRICAL WORK ONLY

	BY	CHECKED
DESIGN	Helmy Abdelsayed	Jesse Sandhu
DETAILS	Ed D. Tapalla 1/12	Helmy Abdelsayed
QUANTITIES	Helmy Abdelsayed	Jesse Sandhu

STATE OF CALIFORNIA
DEPARTMENT OF TRANSPORTATION

DIVISION OF ENGINEERING SERVICES
ELECTRICAL-MECHANICAL-WATER AND WASTEWATER DESIGN

BRIDGE NO. 53-1660W
POST MILE 5.8/8.3

ROUTE 5/605 PUMPING PLANT
MOTOR CONTROL CENTER

SHEET **EE-6**

TAEMWW Imperial Rev. 7/10

ORIGINAL SCALE IN INCHES FOR REDUCED PLANS 0 1 2 3

UNIT 3597
PROJECT NUMBER & PHASE 07000018351
EA 215951

DISREGARD PRINTS BEARING EARLIER REVISION DATES — 1/25/12 5/25/12 7/27/12 12/5/12

REVISION DATES (PRELIMINARY STAGE ONLY) SHEET OF

27-JUN-2013 05:28

ee_06.dgn

DIST.	COUNTY	ROUTE	POST MILES TOTAL PROJECT	SHEET NO.	TOTAL SHEETS
07	LA	5	0.0/7.6	580	985

REGISTERED ELECTRICAL ENGINEER — 12-5-12 DATE

REGISTERED PROFESSIONAL ENGINEER H.ABDELSAYED No. 16757 Exp. 9-30-14 ELEC STATE OF CALIFORNIA

6-24-13
PLANS APPROVAL DATE

The State of California or its officers or agents shall not be responsible for the accuracy or completeness of scanned copies of this plan sheet.

CALIFORNIA STATE FIRE MARSHAL APPROVED
Approval of this plan does not authorize or approve any omission or deviation from applicable regulations. Final approval is subject to field inspection. One set of approved plans shall be available on the project site at all times.
Reviewed by: SPENCER MEYER
Approval date: 09-03-12
CSFM #01-19-11-0196-000

GENERAL NOTES:

1. The Contractor must verify all controlling field dimensions before ordering or fabricating any material.
2. Seismic bracing and anchorage for Service Pedestal must be installed per manufacturer's recommendation to meet or exceed Seismic Zone 4 requirements.
3. Seismic bracing and anchorage not shown on "Side View" for clarity.

NOTES:

(A) Mount Warning label on the exterior door.

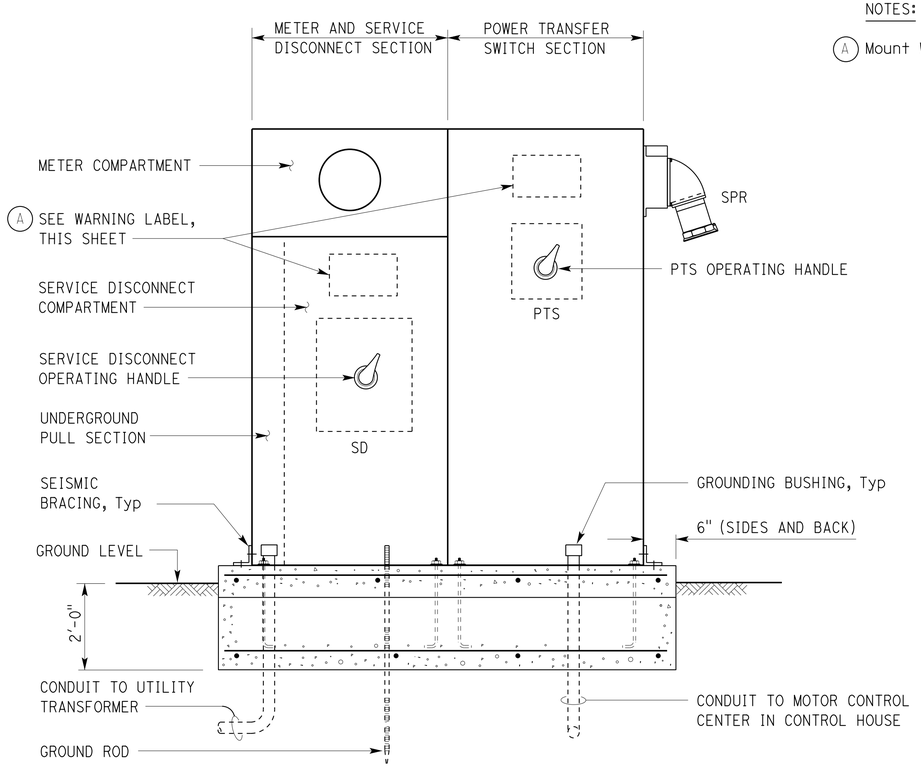

FRONT VIEW

(EXTERIOR DOOR NOT SHOWN, INTERIOR DEAD FRONT DOORS CLOSED)

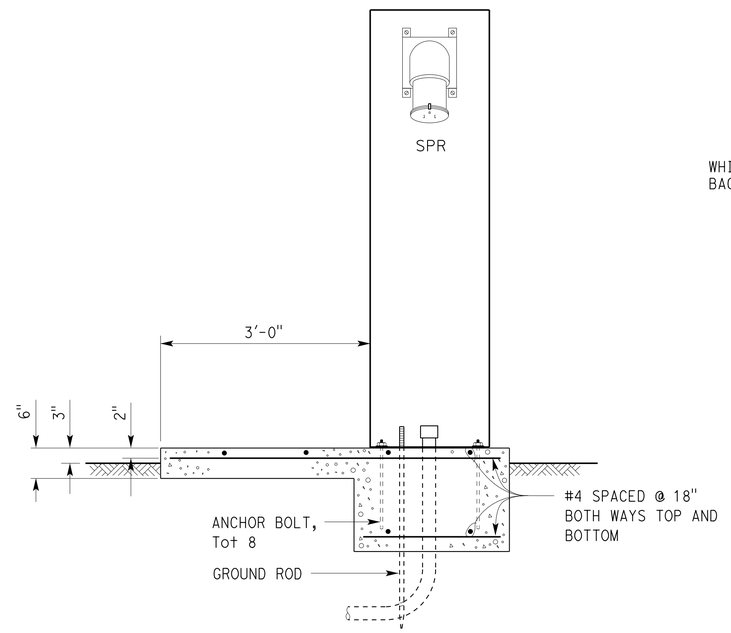

SIDE VIEW

(1) SERVICE PEDESTAL
NO SCALE

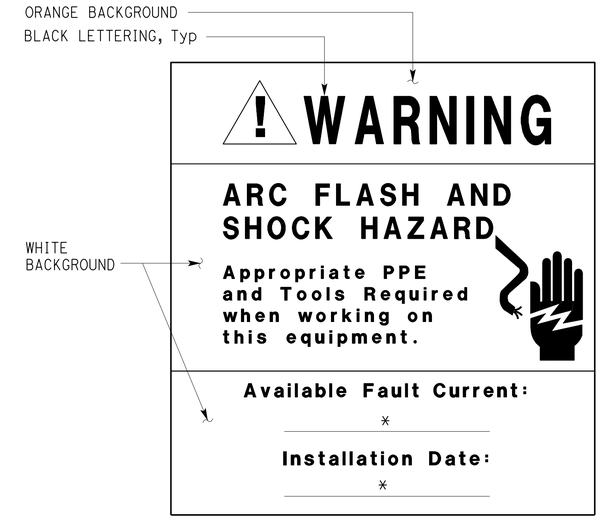

WARNING LABEL

NOTES:

- Legibly marked label with the available fault current to comply with NEC 110.21 (A)
- Warning label must be constructed with high degree of chemical abrasion, heat resistance and UL recognized material

* The Engineer will provide this data to the Contractor after utility service related work is done by the local Electric Utility Company.

THIS DRAWING ACCURATE FOR ELECTRICAL WORK ONLY

	BY	CHECKED
DESIGN	Helmy Abdelsayed	Jesse Sandhu
DETAILS	Ed D. Tapalla 1/12	Helmy Abdelsayed
QUANTITIES	Helmy Abdelsayed	Jesse Sandhu

STATE OF CALIFORNIA DEPARTMENT OF TRANSPORTATION

DIVISION OF ENGINEERING SERVICES
ELECTRICAL-MECHANICAL-WATER AND WASTEWATER DESIGN

BRIDGE NO. 53-1660W
POST MILE 5.8/8.3

ROUTE 5/605 PUMPING PLANT
SERVICE EQUIPMENT

SHEET **EE-7**

TAEMWW Imperial Rev. 7/10

ORIGINAL SCALE IN INCHES FOR REDUCED PLANS 0 1 2 3

UNIT 3597
PROJECT NUMBER & PHASE 07000018351
EA 215951

DISREGARD PRINTS BEARING EARLIER REVISION DATES
REVISION DATES (PRELIMINARY STAGE ONLY) 1/25/12 5/25/12 7/24/12 12/5/12

SHEET OF

27-JUN-2013 05:28
ee_07.dgn

DIST.	COUNTY	ROUTE	POST MILES TOTAL PROJECT	SHEET NO.	TOTAL SHEETS
07	LA	5	0.0/7.6	581	985

H. Abdelsayed 12-5-12
REGISTERED ELECTRICAL ENGINEER DATE

REGISTERED PROFESSIONAL ENGINEER H.ABDELSAYED No. 16757 Exp. 9-30-14 ELEC STATE OF CALIFORNIA

6-24-13
PLANS APPROVAL DATE

The State of California or its officers or agents shall not be responsible for the accuracy or completeness of scanned copies of this plan sheet.

NOTES:

(A) Install conduit seal in the conduit prior to penetrating the wall to Motor Control Center. Conduit run between conduit seal and outside the wet pit shall be a minimum of 10 feet continuous conduit run without coupling or any other fittings.

(B) Provide appropriate desiccant bag at the termination of the breathing tube. Loop 18" of cable inside the box. Install a hook and wire mesh cable grip, simular to "Detail 2" on sheet EE-9 for the transducer cable.

CALIFORNIA STATE FIRE MARSHAL APPROVED
Approval of this plan does not authorize or approve any omission or deviation from applicable regulations. Final approval is subject to field inspection. One set of approved plans shall be available on the project site at all times.
Reviewed by: SPENCER MEYER
Approval date: 08-03-12
CSFM #01-19-11-0196-000

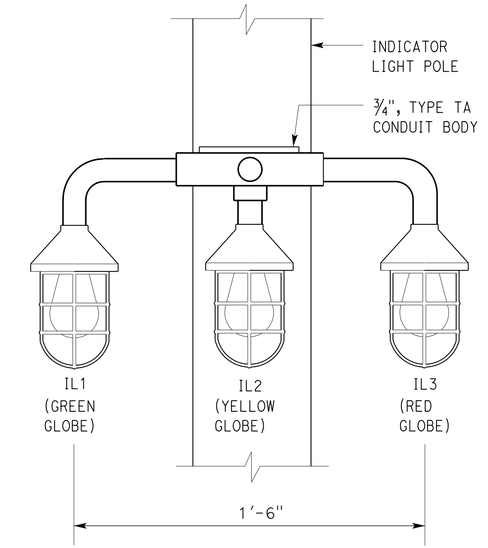

ELEVATION

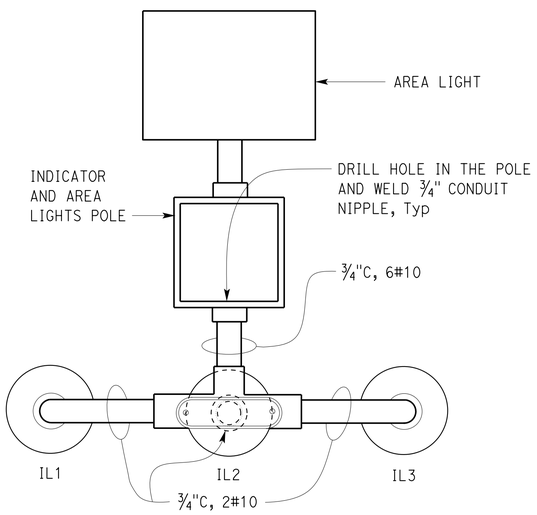

PLAN

1 INDICATOR LIGHTS MOUNTING DETAIL

NO SCALE

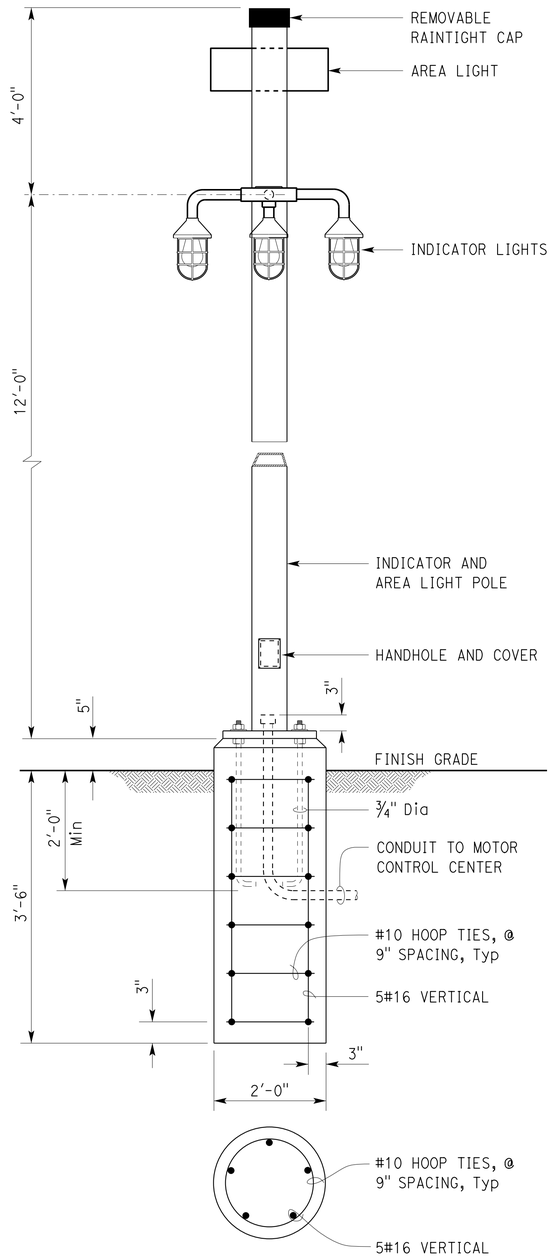

2 AREA AND INDICATOR LIGHTS POLE DETAIL

NO SCALE

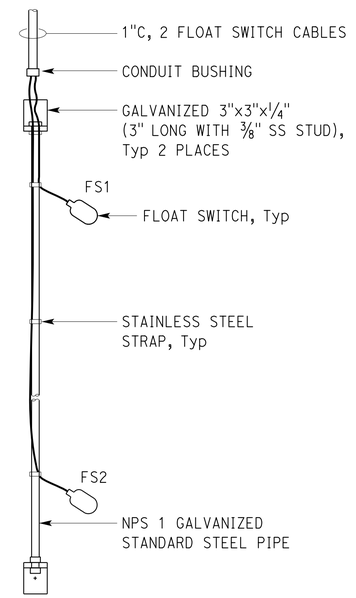

3 FLOAT SWITCH MOUNTING DETAIL

NO SCALE

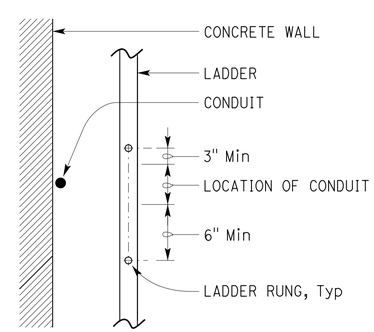

4 CONDUIT BEHIND LADDER

NO SCALE

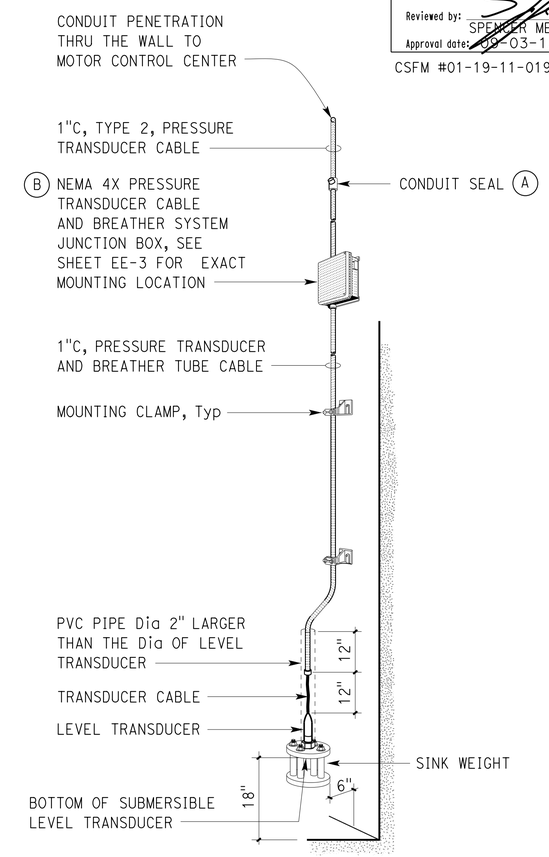

5 SUBMERSIBLE LEVEL TRANSDUCER MOUNTING DETAIL

NO SCALE

THIS DRAWING ACCURATE FOR ELECTRICAL WORK ONLY

	BY	CHECKED
DESIGN	Helmy Abdelsayed	Jesse Sandhu
DETAILS	Ed D. Tapalla 1/12	Helmy Abdelsayed
QUANTITIES	Helmy Abdelsayed	Jesse Sandhu

ORIGINAL SCALE IN INCHES FOR REDUCED PLANS 0 1 2 3

STATE OF CALIFORNIA DEPARTMENT OF TRANSPORTATION

DIVISION OF ENGINEERING SERVICES ELECTRICAL-MECHANICAL-WATER AND WASTEWATER DESIGN

BRIDGE NO. 53-1660W
POST MILE 5.8/8.3

ROUTE 5/605 PUMPING PLANT
DETAILS 2

SHEET EE-8

UNIT 3597
PROJECT NUMBER & PHASE 07000018351
EA 215951

DISREGARD PRINTS BEARING EARLIER REVISION DATES → 1/24/12 5/24/12 7/24/12 12/5/12

REVISION DATES (PRELIMINARY STAGE ONLY) SHEET OF

TAEMWW Imperial Rev. 7/10

30-AUG-2013 09:31
ee_08.dgn

DIST.	COUNTY	ROUTE	POST MILES TOTAL PROJECT	SHEET NO.	TOTAL SHEETS
07	LA	5	0.0/7.6	582	985

REGISTERED ELECTRICAL ENGINEER — 12-5-12 DATE

REGISTERED PROFESSIONAL ENGINEER H.ABDELSAYED No. 16757 Exp. 9-30-14 ELEC STATE OF CALIFORNIA

6-24-13
PLANS APPROVAL DATE

The State of California or its officers or agents shall not be responsible for the accuracy or completeness of scanned copies of this plan sheet.

CALIFORNIA STATE FIRE MARSHAL APPROVED
Approval of this plan does not authorize or approve any omission or deviation from applicable regulations. Final approval is subject to field inspection. One set of approved plans shall be available on the project site at all times.
Reviewed by: SPENCER MEYER
Approval date: 10-03-12
CSFM #01-19-11-0196-000

NAMEPLATE SCHEDULE

ITEM No.	INSCRIPTION	LETTER HEIGHT (INCH)
1	PUMP No. 1	1/4
2	PUMP No. 2	"
3	ON	"
4	OFF	"
5	SUMP LIGHTS	"

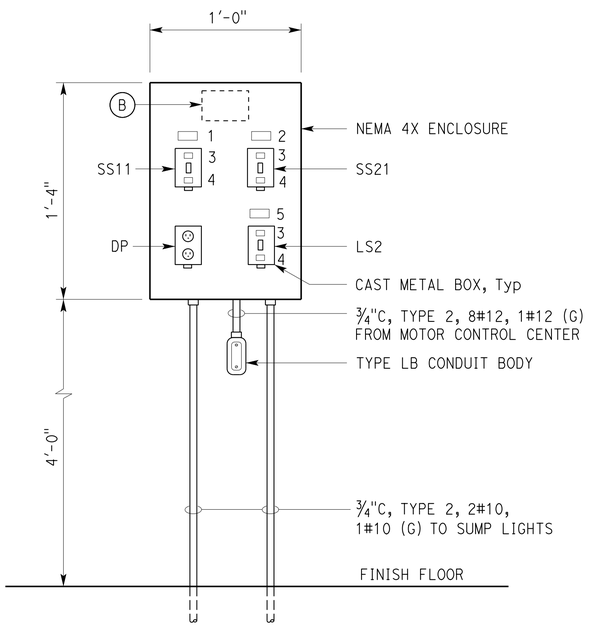

A REMOTE PUMP CONTROL STATION
NO SCALE
(EXTERIOR DOOR NOT SHOWN, INTERIOR DOOR CLOSED)

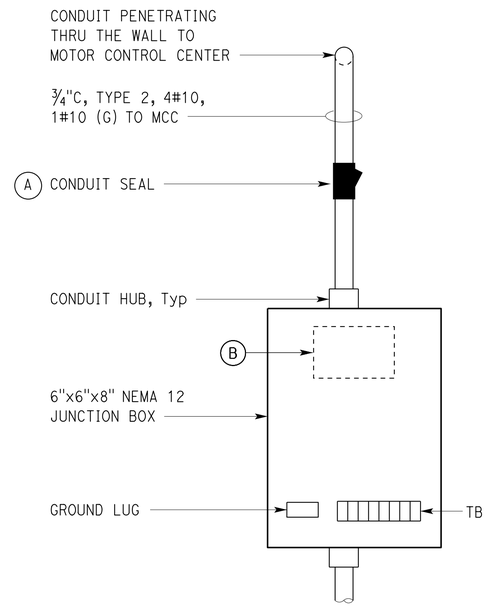

1 JUNCTION BOX
NO SCALE
(EXTERIOR DOOR NOT SHOWN)

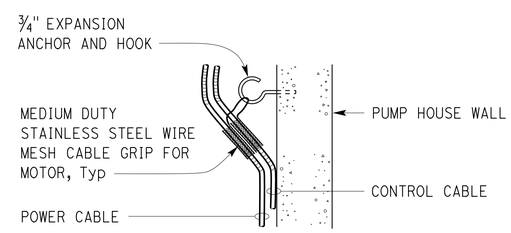

2 DETAIL
NO SCALE

NOTES:

(A) Install conduit seal in the conduit prior to penetrating the wall to Motor Control Center. Conduit run between conduit seal and outside the wet pit must be a minimum of 10 feet continuous conduit run without coupling or any other fittings.

(B) Warning label, install on exterior door. See sheet EE-6 for Warning Label Detail.

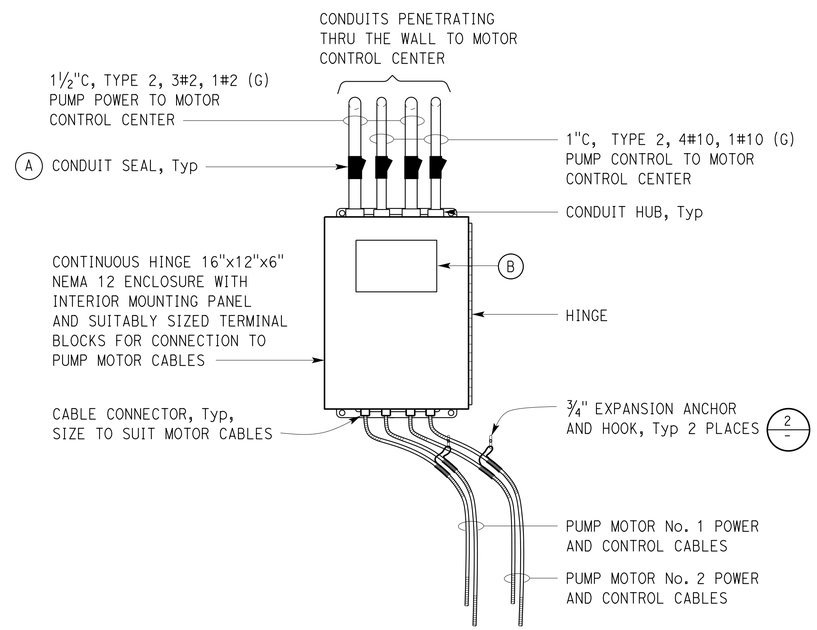

3 DETAIL
NO SCALE

THIS DRAWING ACCURATE FOR ELECTRICAL WORK ONLY

	BY	CHECKED
DESIGN	Helmy Abdelsayed	Jesse Sandhu
DETAILS	Ed D. Tapalla 3/12	Helmy Abdelsayed
QUANTITIES	Helmy Abdelsayed	Jesse Sandhu

STATE OF CALIFORNIA DEPARTMENT OF TRANSPORTATION

DIVISION OF ENGINEERING SERVICES ELECTRICAL-MECHANICAL-WATER AND WASTEWATER DESIGN

BRIDGE NO. 53-1660W
POST MILE 5.8/8.3

ROUTE 5/605 PUMPING PLANT
DETAILS 3

SHEET **EE-9**

TAEMWW Imperial Rev. 7/10

ORIGINAL SCALE IN INCHES FOR REDUCED PLANS 0 1 2 3

UNIT 3597
PROJECT NUMBER & PHASE 07000018351
EA 215951

DISREGARD PRINTS BEARING EARLIER REVISION DATES → 3/12/12 5/25/12 7/25/12 12/5/12

REVISION DATES (PRELIMINARY STAGE ONLY) SHEET OF

27-JUN-2013 05:28
ee_09.dgn

Dist	COUNTY	ROUTE	POST MILES TOTAL PROJECT	SHEET No.	TOTAL SHEETS
07	LA	5	0.0/7.6	583	985

REGISTERED CIVIL ENGINEER

April 20, 2012
PLANS APPROVAL DATE

REGISTERED PROFESSIONAL ENGINEER
Roberta L. McLaughlin
No. C40375
Exp. 3-31-13
CIVIL
STATE OF CALIFORNIA

THE STATE OF CALIFORNIA OR ITS OFFICERS OR AGENTS SHALL NOT BE RESPONSIBLE FOR THE ACCURACY OR COMPLETENESS OF SCANNED COPIES OF THIS PLAN SHEET.

TO ACCOMPANY PLANS DATED 6-24-13

2010 REVISED STANDARD PLAN RSP A24A

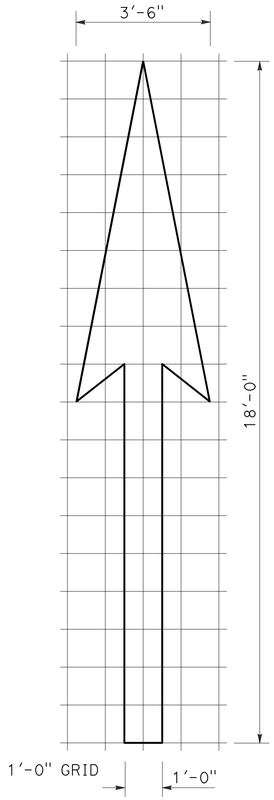

A=25 ft^2

TYPE I 18'-0" ARROW

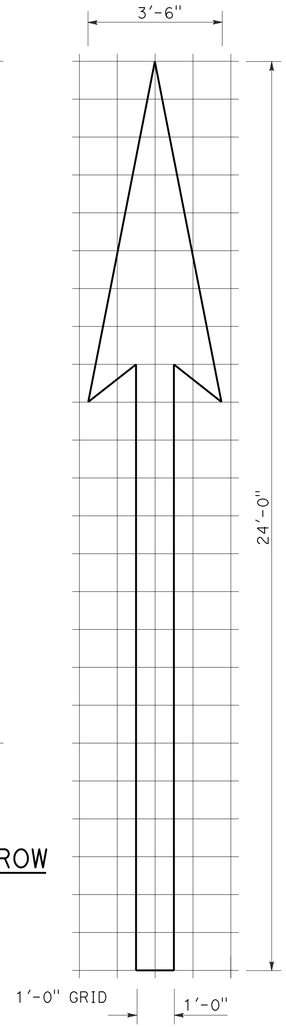

A=31 ft^2

TYPE I 24'-0" ARROW

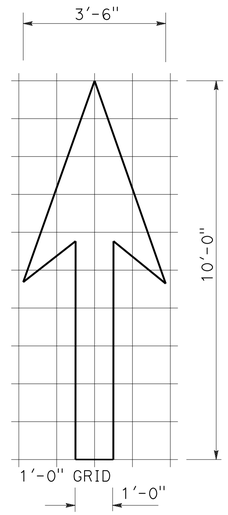

A=14 ft^2

TYPE I 10'-0" ARROW

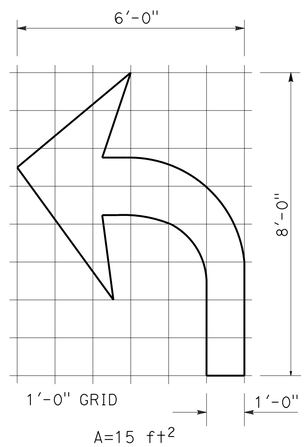

A=15 ft^2

TYPE IV (L) ARROW

(For Type IV (R) arrow, use mirror image)

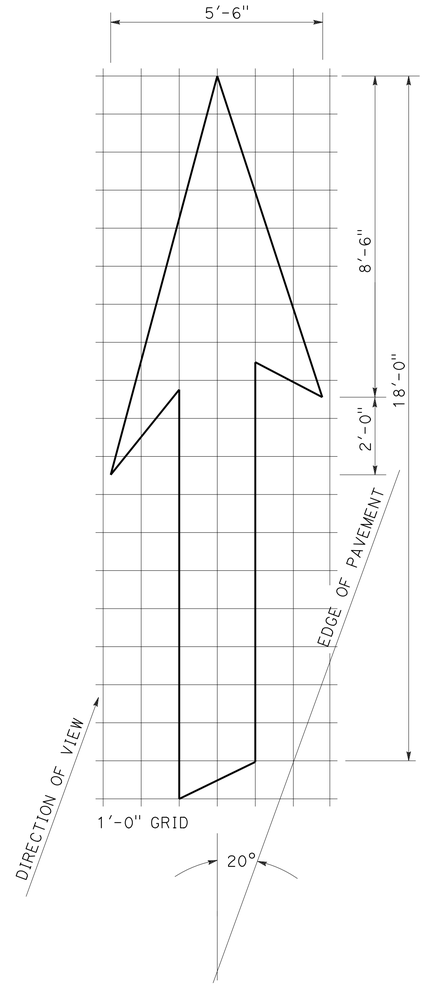

A=42 ft^2

TYPE VI ARROW

Right lane drop arrow
(For left lane, use mirror image)

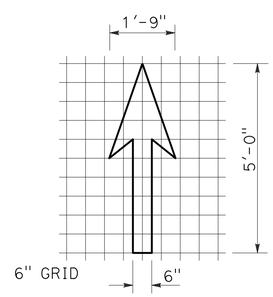

A=3.5 ft^2

BIKE LANE ARROW

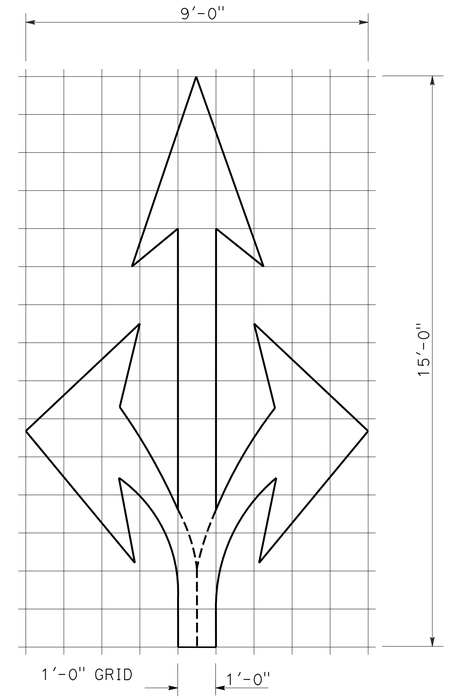

A=36 ft^2

TYPE VIII ARROW

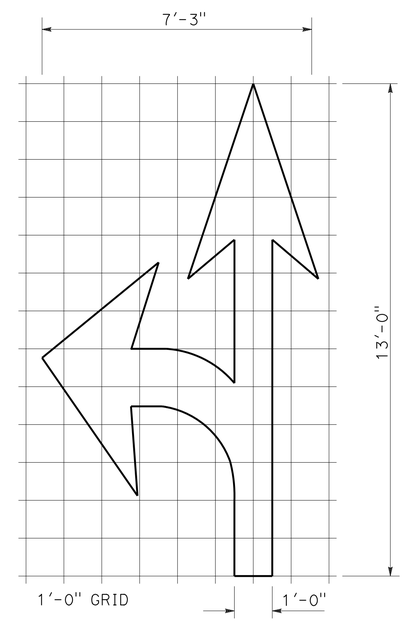

A=27 ft^2

TYPE VII (L) ARROW

(For Type VII (R) arrow, use mirror image)

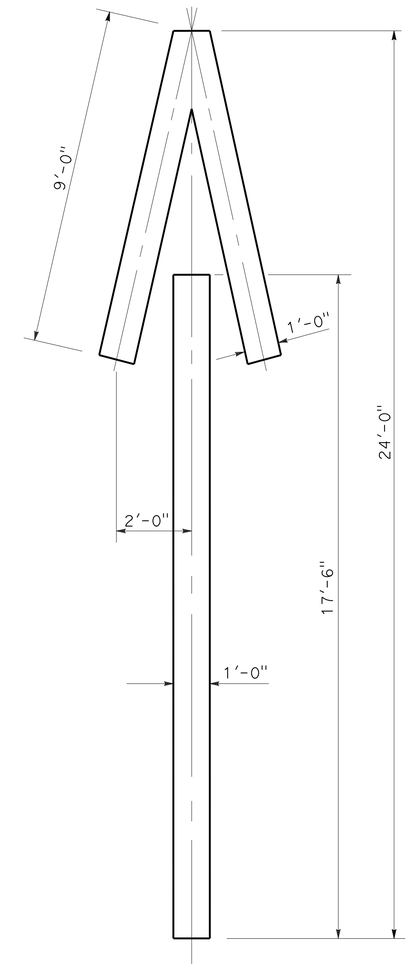

A=33 ft^2

TYPE V ARROW

NOTE:
Minor variations in dimensions may be accepted by the Engineer.

STATE OF CALIFORNIA
DEPARTMENT OF TRANSPORTATION

PAVEMENT MARKINGS ARROWS

NO SCALE

RSP A24A DATED APRIL 20, 2012 SUPERSEDES STANDARD PLAN A24A DATED MAY 20, 2011 - PAGE 13 OF THE STANDARD PLANS BOOK DATED 2010.

REVISED STANDARD PLAN RSP A24A

3-14-12

Dist	COUNTY	ROUTE	POST MILES TOTAL PROJECT	SHEET No.	TOTAL SHEETS
07	LA	5	0.0/7.6	584	985

Roberta L. McLaughlin
REGISTERED CIVIL ENGINEER

October 19, 2012
PLANS APPROVAL DATE

REGISTERED PROFESSIONAL ENGINEER
Roberta L. McLaughlin
No. C40375
Exp. 3-31-13
CIVIL
STATE OF CALIFORNIA

THE STATE OF CALIFORNIA OR ITS OFFICERS OR AGENTS SHALL NOT BE RESPONSIBLE FOR THE ACCURACY OR COMPLETENESS OF SCANNED COPIES OF THIS PLAN SHEET.

NOTE: TO ACCOMPANY PLANS DATED 6-24-13

Minor variations in dimensions may be accepted by the Engineer.

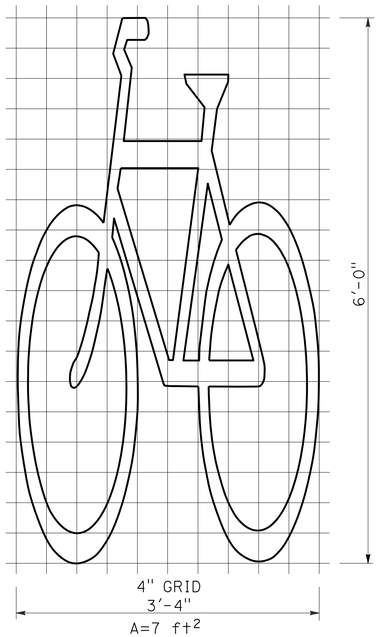

BIKE LANE SYMBOL WITHOUT PERSON

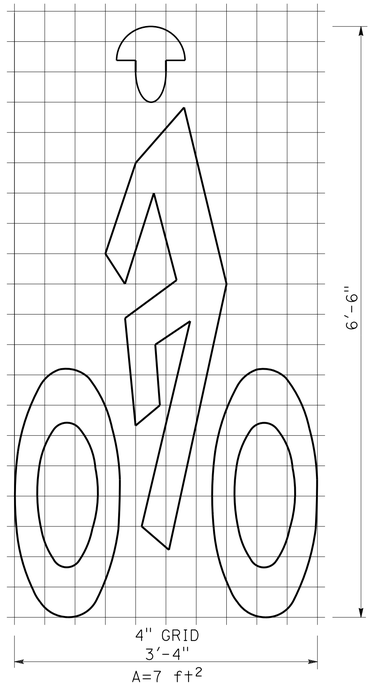

BIKE LANE SYMBOL WITH PERSON

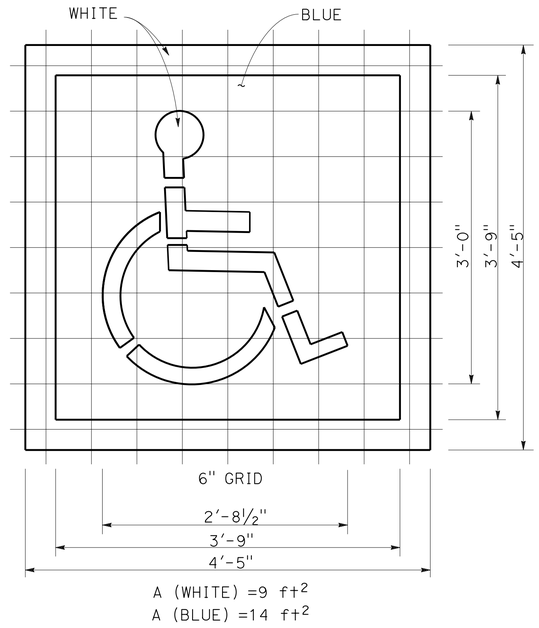

INTERNATIONAL SYMBOL OF ACCESSIBILITY (ISA) MARKING

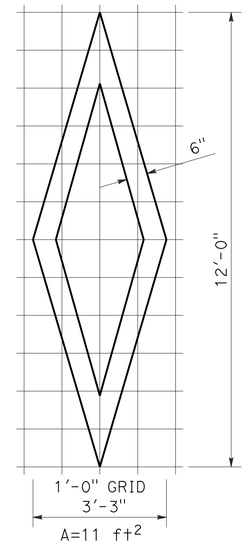

DIAMOND SYMBOL

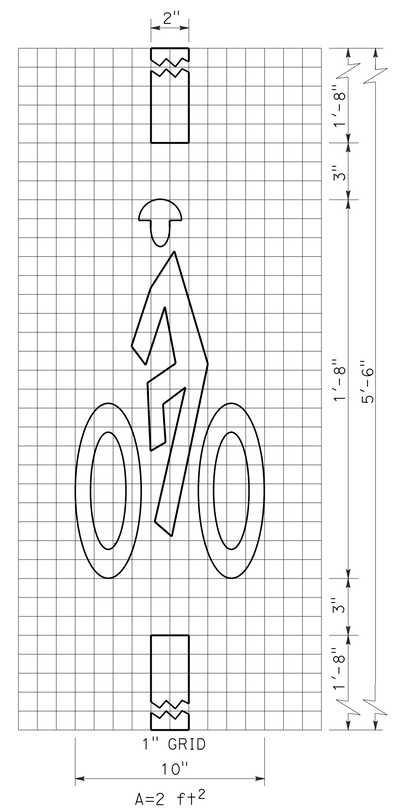

BICYCLE LOOP DETECTOR SYMBOL

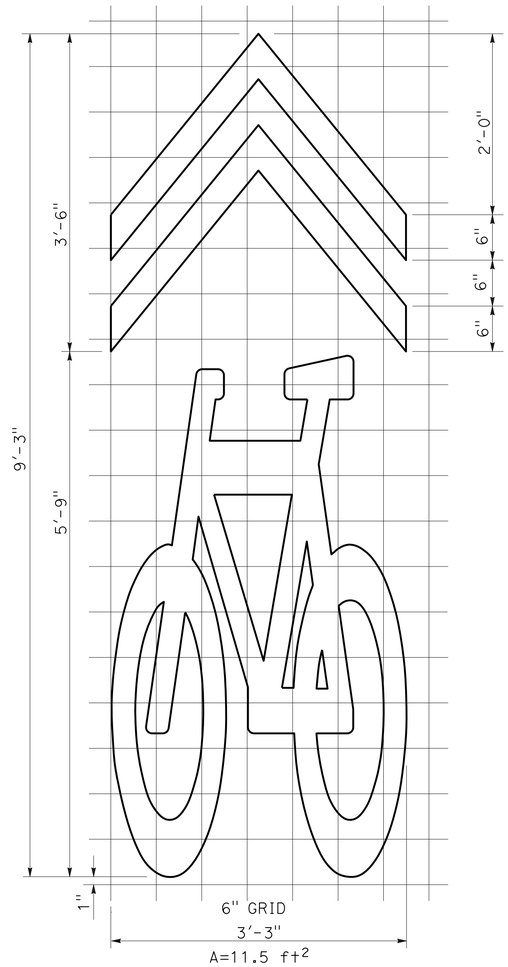

SHARED ROADWAY BICYCLE MARKING

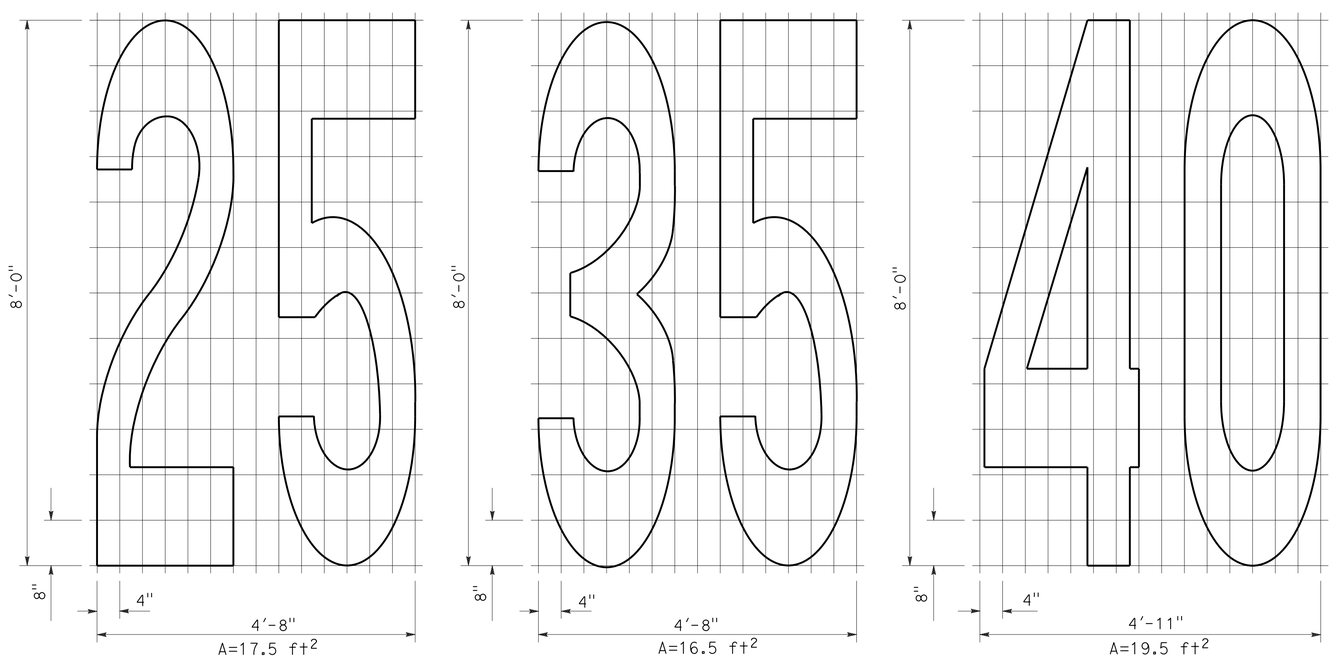

NUMERALS

STATE OF CALIFORNIA
DEPARTMENT OF TRANSPORTATION

PAVEMENT MARKINGS SYMBOLS AND NUMERALS

NO SCALE

RSP A24C DATED OCTOBER 19, 2012 SUPERSEDES STANDARD PLAN A24C DATED MAY 20, 2011 - PAGE 15 OF THE STANDARD PLANS BOOK DATED 2010.

REVISED STANDARD PLAN RSP A24C

2010 REVISED STANDARD PLAN RSP A24C

6-28-12

Dist	COUNTY	ROUTE	POST MILES TOTAL PROJECT	SHEET No.	TOTAL SHEETS
07	LA	5	0.0/7.6	585	985

REGISTERED CIVIL ENGINEER

July 20, 2012
PLANS APPROVAL DATE

REGISTERED PROFESSIONAL ENGINEER
Roberta L. McLaughlin
No. C40375
Exp. 3-31-13
CIVIL
STATE OF CALIFORNIA

THE STATE OF CALIFORNIA OR ITS OFFICERS OR AGENTS SHALL NOT BE RESPONSIBLE FOR THE ACCURACY OR COMPLETENESS OF SCANNED COPIES OF THIS PLAN SHEET.

TO ACCOMPANY PLANS DATED 6-24-13

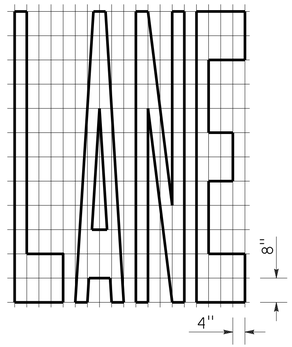

A=24 ft²

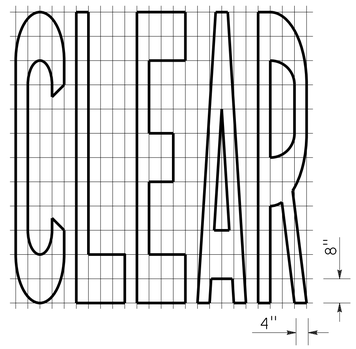

A=27 ft²

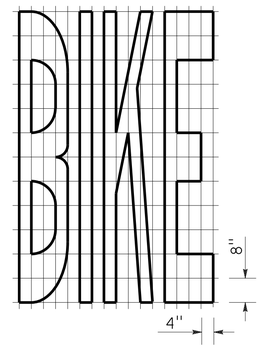

A=21 ft²

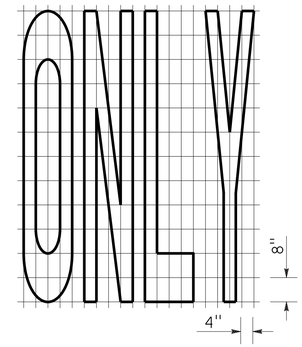

A=22 ft²

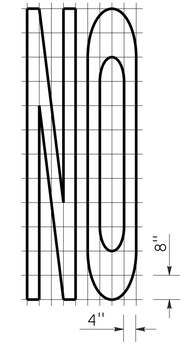

A=14 ft²

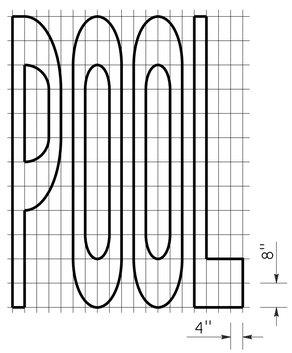

A=23 ft²

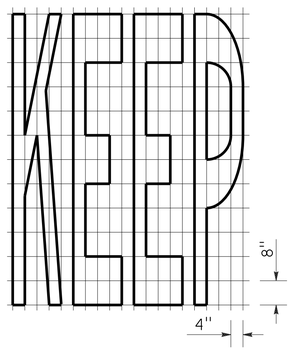

A=24 ft²

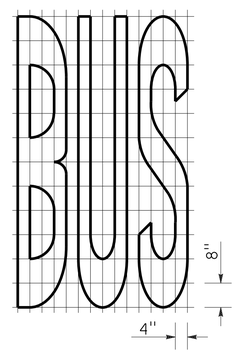

A=20 ft²

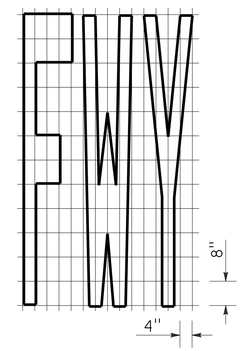

A=16 ft²

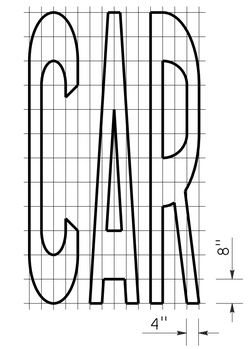

A=17 ft²

WORD MARKINGS			
ITEM	ft²	ITEM	ft²
LANE	24	NO	14
POOL	23	BIKE	21
CAR	17	BUS	20
CLEAR	27	ONLY	22
KEEP	24	FWY	16

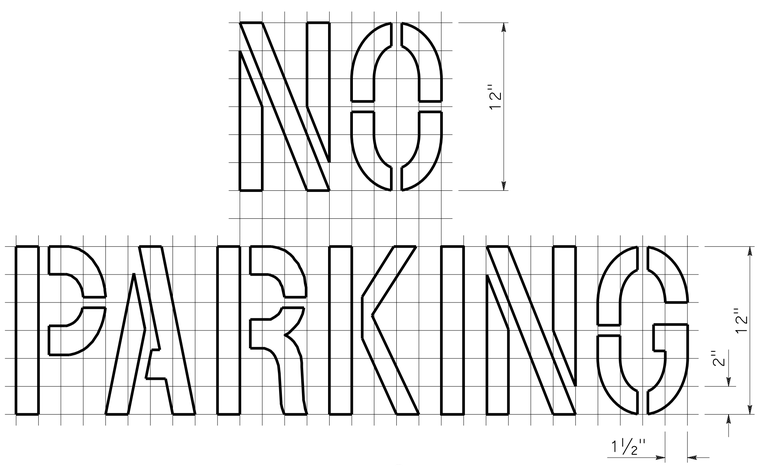

A=2 ft²

See Notes 6 and 7

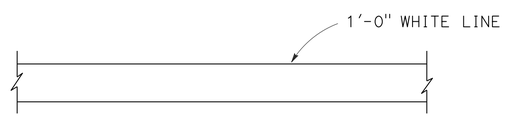

LIMIT LINE (STOP LINE)

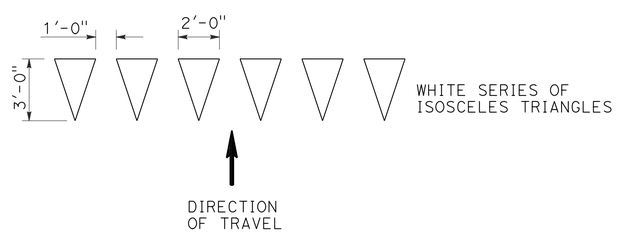

YIELD LINE

NOTES:

1. If a message consists of more than one word, it should read "UP", i.e., the first word should be nearest the driver.
2. The space between words should be at least four times the height of the characters for low speed roads, but not more than ten times the height of the characters. The space may be reduced appropriately where there is limited space because of local conditions.
3. Minor variations in dimensions may be accepted by the Engineer.
4. Portions of a letter, number or symbol may be separated by connecting segments not to exceed 2" in width.
5. The words "NO PARKING" pavement marking is to be used for parking facilities. For typical locations of markings, see Standard Plans A90A and A90B.
6. The words "NO PARKING", shall be painted in white letters no less than 1'-0" high on a contrasting background and located so that it is visible to traffic enforcement officials.

STATE OF CALIFORNIA
DEPARTMENT OF TRANSPORTATION

PAVEMENT MARKINGS WORDS, LIMIT AND YIELD LINES

NO SCALE

RSP A24E DATED JULY 20, 2012 SUPERSEDES STANDARD PLAN A24E
DATED MAY 20, 2011 - PAGE 17 OF THE STANDARD PLANS BOOK DATED 2010.

REVISED STANDARD PLAN RSP A24E

2010 REVISED STANDARD PLAN RSP A24E

6-12-12

Dist	COUNTY	ROUTE	POST MILES TOTAL PROJECT	SHEET No.	TOTAL SHEETS
07	LA	5	0.0/7.6	586	985

REGISTERED CIVIL ENGINEER

July 20, 2012
PLANS APPROVAL DATE

REGISTERED PROFESSIONAL ENGINEER
Roberta L. McLaughlin
No. C40375
Exp. 3-31-13
CIVIL
STATE OF CALIFORNIA

THE STATE OF CALIFORNIA OR ITS OFFICERS OR AGENTS SHALL NOT BE RESPONSIBLE FOR THE ACCURACY OR COMPLETENESS OF SCANNED COPIES OF THIS PLAN SHEET.

TO ACCOMPANY PLANS DATED 6-24-13

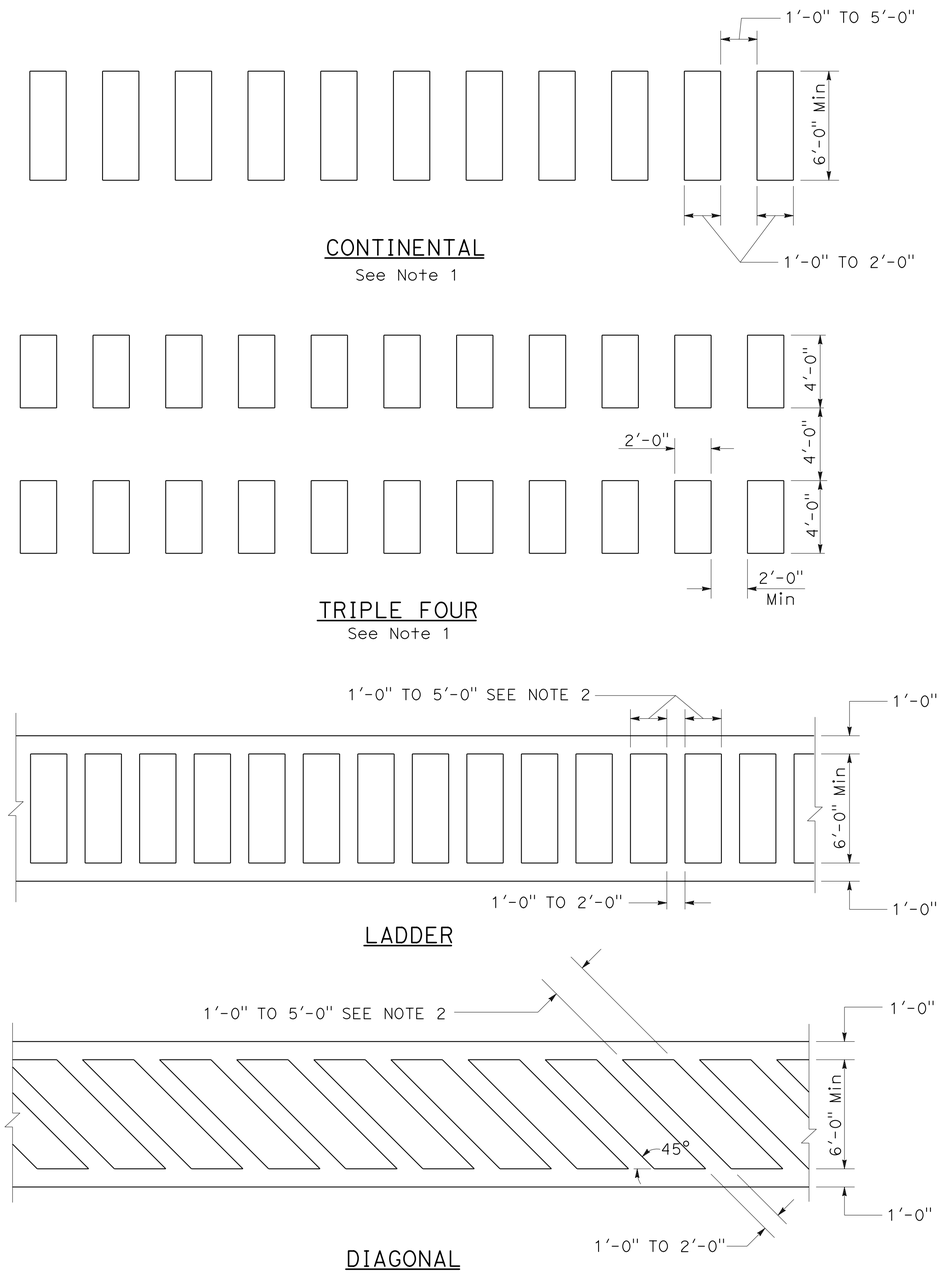

HIGHER VISIBILITY CROSSWALKS

NOTES:

1. Spaces between markings should be placed in wheel tracks of each lane.
2. Spacings not to exceed 2.5 times width of longitudinal line.
3. All crosswalk markings must be white except for those near schools must be yellow.

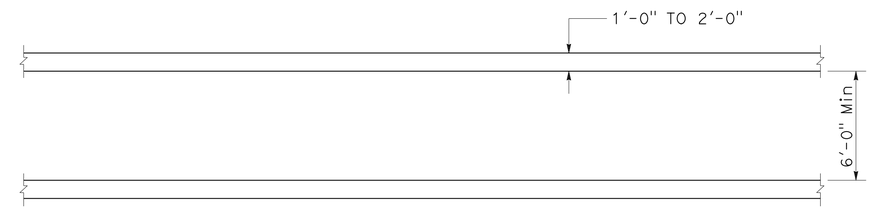

BASIC

STATE OF CALIFORNIA
DEPARTMENT OF TRANSPORTATION

PAVEMENT MARKINGS CROSSWALKS

NO SCALE

RSP A24F DATED JULY 20, 2012 SUPPLEMENTS THE STANDARD PLANS BOOK DATED 2010.

REVISED STANDARD PLAN RSP A24F

2010 REVISED STANDARD PLAN RSP A24F

6-28-12

Dist	COUNTY	ROUTE	POST MILES TOTAL PROJECT	SHEET No.	TOTAL SHEETS
07	LA	5	0.0/7.6	587	985

REGISTERED CIVIL ENGINEER

October 19, 2012
PLANS APPROVAL DATE

REGISTERED PROFESSIONAL ENGINEER Glenn DeCou No. C34547 Exp. 9-30-13 CIVIL STATE OF CALIFORNIA

THE STATE OF CALIFORNIA OR ITS OFFICERS OR AGENTS SHALL NOT BE RESPONSIBLE FOR THE ACCURACY OR COMPLETENESS OF SCANNED COPIES OF THIS PLAN SHEET.

TO ACCOMPANY PLANS DATED 6-24-13

2010 REVISED STANDARD PLAN RSP A85B

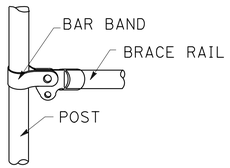

BRACE RAIL

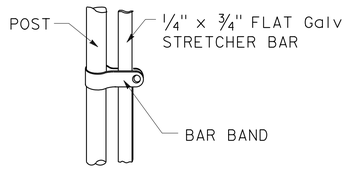

STRETCHER BAR

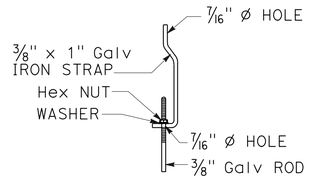

TRUSS TIGHTENER

NOTES:

1. All material for abutment connection to be galvanized.
2. The chain link fabric shall be replaced by barbed wire strands at 12" maximum centers between the double posts.
3. When the width of the culvert makes it necessary to anchor a post to the top of the culvert, a cast iron shoe or other device approved by the Engineer shall be used.
4. Fencing over stream and around headwall may also use Barbed Wire or Wire Mesh fencing with either wood post or steel post installation.
5. See Standard Plan A85 for Chain Link fence dimensions. See Standard Plan A86 for Barbed Wire and Wire Mesh fence dimensions and for wood post and steel post installation.

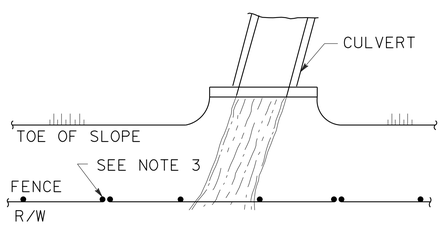

PLAN

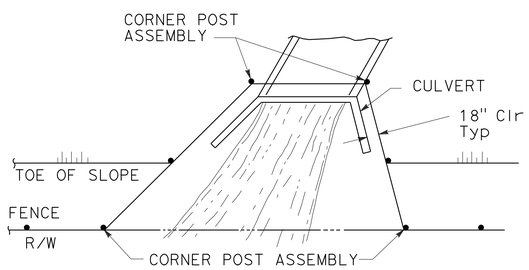

PLAN

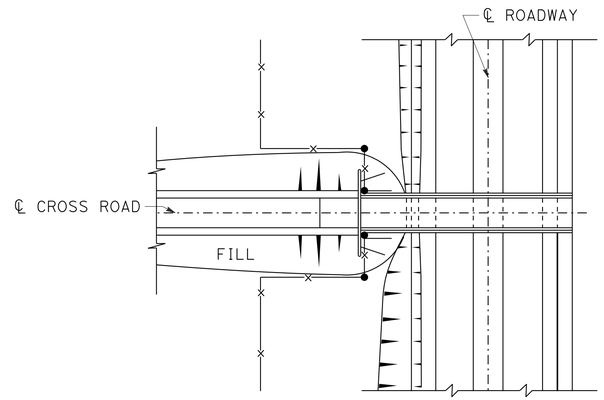

PLAN OF ROADWAY - OVERCROSSING

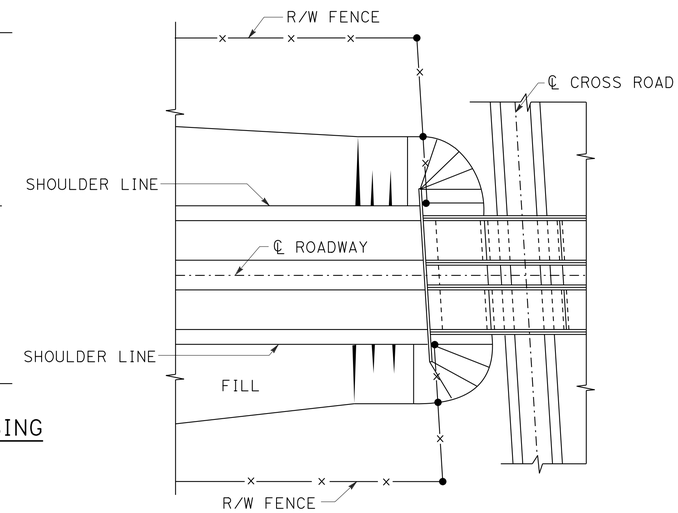

PLAN OF ROADWAY - UNDERCROSSING

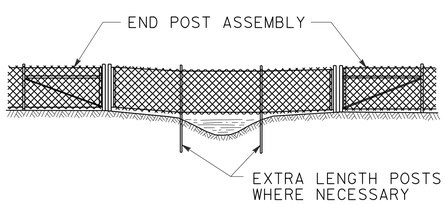

ELEVATION

INSTALLATION OVER STREAM

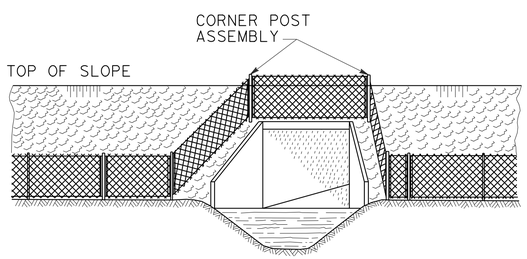

ELEVATION

INSTALLATION AROUND HEADWALL

See Note 4

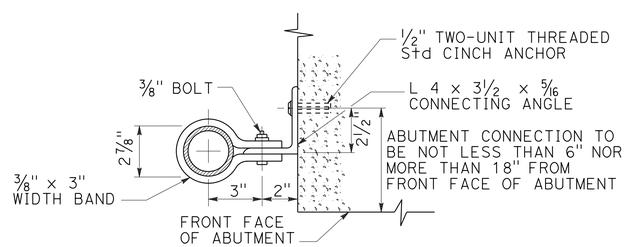

ABUTMENT CONNECTION

TYPICAL INSTALLATION AT BRIDGES

STATE OF CALIFORNIA
DEPARTMENT OF TRANSPORTATION

CHAIN LINK FENCE DETAILS

NO SCALE

RSP A85B DATED OCTOBER 19, 2012 SUPERSEDES STANDARD PLAN A85B
DATED MAY 20, 2011 - PAGE 114 OF THE STANDARD PLANS BOOK DATED 2010.

REVISED STANDARD PLAN RSP A85B

7-19-12

Dist	COUNTY	ROUTE	POST MILES TOTAL PROJECT	SHEET No.	TOTAL SHEETS
07	LA	5	0.0/7.6	588	985

REGISTERED CIVIL ENGINEER

April 20, 2012
PLANS APPROVAL DATE

REGISTERED PROFESSIONAL ENGINEER Florante E. Bautista No. C54859 Exp. 6-30-12 CIVIL STATE OF CALIFORNIA

THE STATE OF CALIFORNIA OR ITS OFFICERS OR AGENTS SHALL NOT BE RESPONSIBLE FOR THE ACCURACY OR COMPLETENESS OF SCANNED COPIES OF THIS PLAN SHEET.

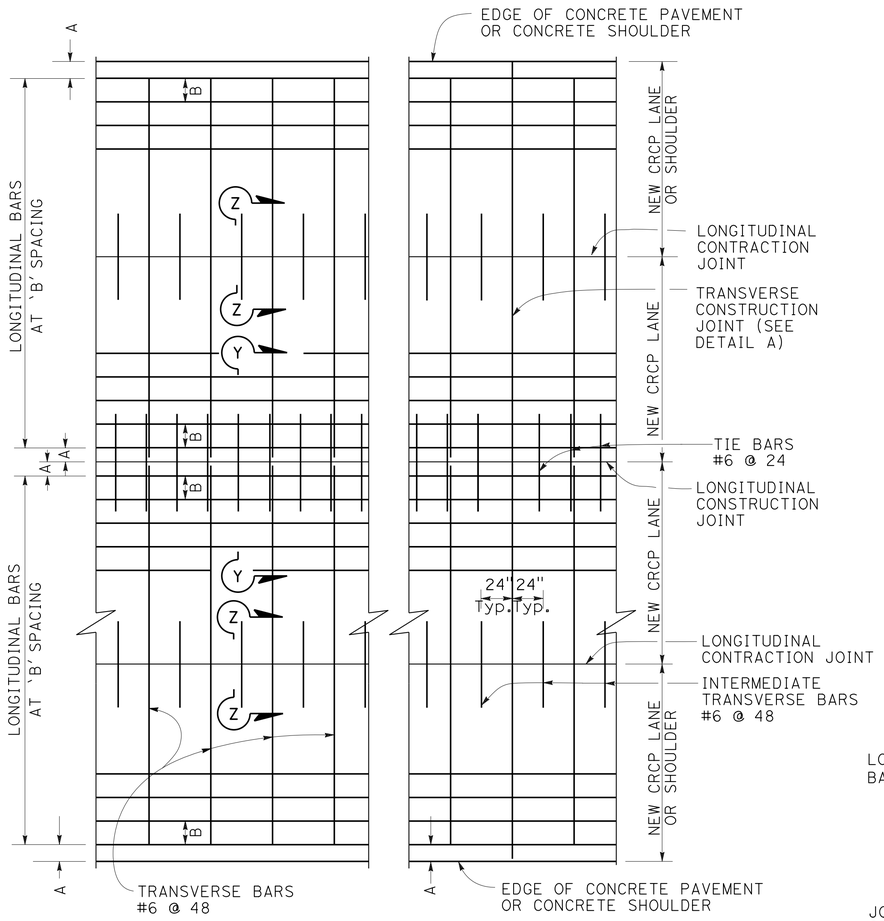

PLAN

TABLE No. 1 LONGITUDINAL BAR REINFORCEMENT						
SLAB THICKNESS AND BAR SIZE		FIRST SPACING AT EDGE OR JOINT	REGULAR BARS	ADDITIONAL BARS AT TRANSVERSE CONSTRUCTION JOINT		Clr
D	BAR SIZE	SPACING A	SPACING B	SPACING 2 x B	LENGTH L	X
.80′	#6	3" TO 4"	7.5"	15"	50"	4"
.85′	#6	3" TO 4"	7.0"	14"	50"	4"
.90′	#6	3" TO 4"	6.5"	13"	50"	4"
.95′	#6	3" TO 4"	6.25"	12.5"	50"	4"
1.00′	#6	3" TO 4"	6.0"	12"	50"	6"
1.05′	#6	3" TO 4"	5.75"	11.5"	50"	6"
1.10′	#6	3" TO 4"	5.5"	11"	50"	6"

NOTES:

TO ACCOMPANY PLANS DATED 6-24-13

1. Place tie bar in the same plane as transverse bars.
2. Place additional longitudinal bars in the same horizontal plane as the longitudinal bars.
3. Place tie bars and intermediate transvese bars parallel to transverse bars.
4. Joint seals at longitudinal construction joints shall conform to the details shown on Standard Plan P20 for Type C joint.
5. Intermediate transverse bar spacing shall be equal to transverse bar spacing.
6. Reinforcing bar splices shall be a minimum of 25".
7. Additional longitudinal bars symmetrical about longitudinal construction joint.
8. Place Intermediate transverse bar in the same plane as transverse bars.

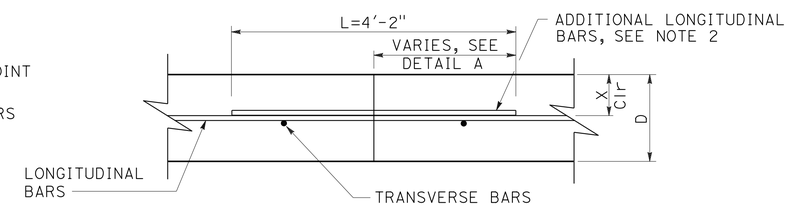

SECTION X-X

TRANSVERSE CONSTRUCTION JOINT

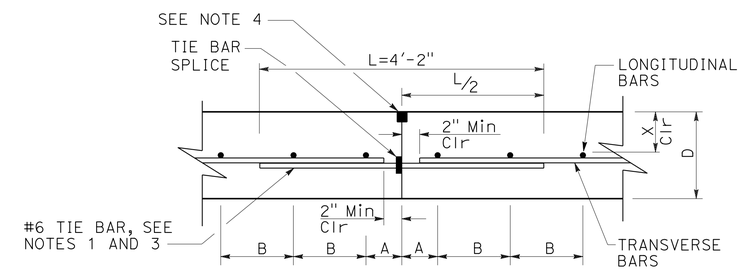

SECTION Y-Y

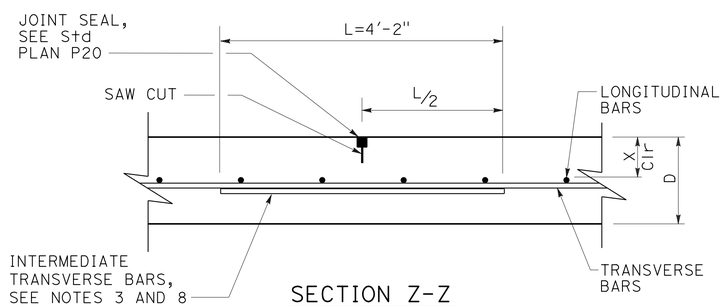

SECTION Z-Z

LONGITUDINAL CONTRACTION JOINT

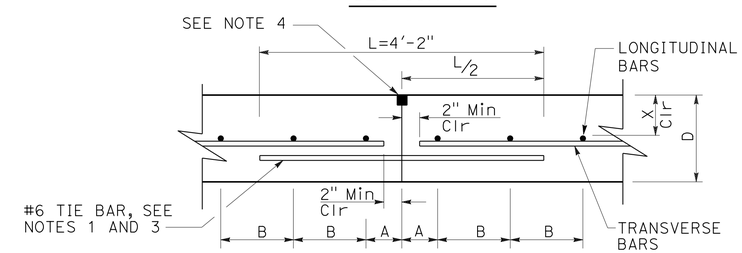

ALTERNATE

LONGITUDINAL CONSTRUCTION JOINT

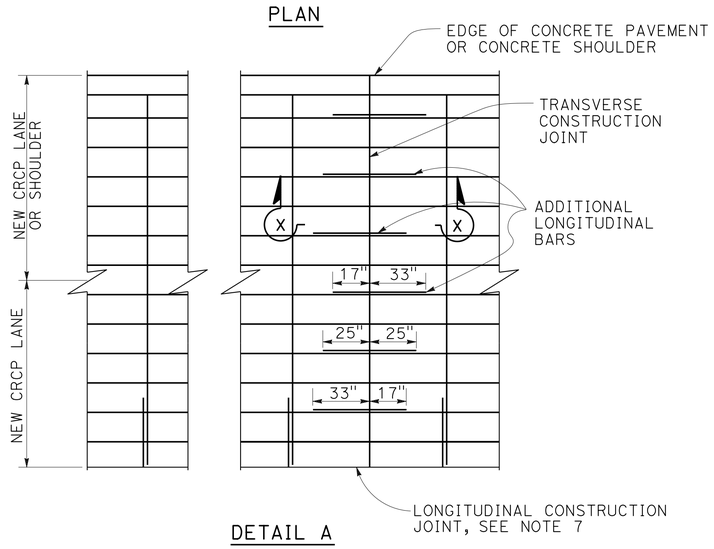

DETAIL A

ADDITIONAL LONGITUDINAL BARS AT TRANSVERSE CONSTRUCTION JOINT

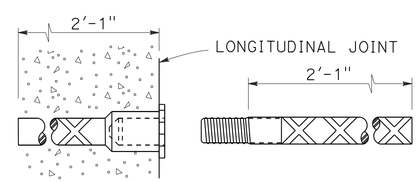

TIE BAR SPLICE DETAIL

Splice Coupler

STATE OF CALIFORNIA
DEPARTMENT OF TRANSPORTATION

CONTINUOUSLY REINFORCED CONCRETE PAVEMENT

NO SCALE

RSP P4 DATED APRIL 20, 2012 SUPERSEDES STANDARD PLAN P4
DATED MAY 20, 2011 - PAGE 128 OF THE STANDARD PLANS BOOK DATED 2010.

REVISED STANDARD PLAN RSP P4

2010 REVISED STANDARD PLAN RSP P4

2-22-12

Dist	COUNTY	ROUTE	POST MILES TOTAL PROJECT	SHEET No.	TOTAL SHEETS
07	LA	5	0.0/7.6	589	985

REGISTERED CIVIL ENGINEER

April 20, 2012
PLANS APPROVAL DATE

REGISTERED PROFESSIONAL ENGINEER — William K. Farnbach — No. C49042 — Exp. 9-30-12 — CIVIL — STATE OF CALIFORNIA

THE STATE OF CALIFORNIA OR ITS OFFICERS OR AGENTS SHALL NOT BE RESPONSIBLE FOR THE ACCURACY OR COMPLETENESS OF SCANNED COPIES OF THIS PLAN SHEET.

TO ACCOMPANY PLANS DATED 6-24-13

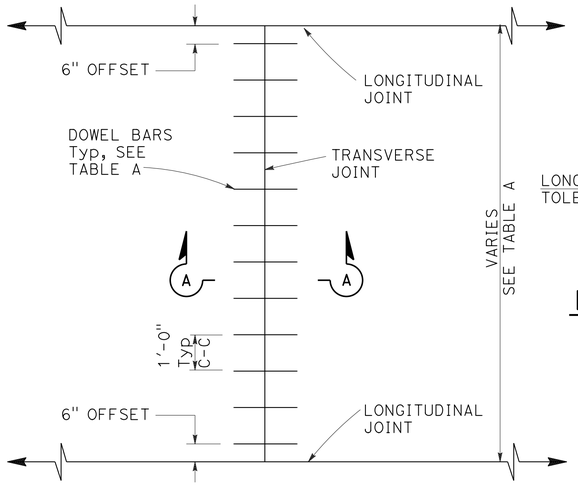

TRANSVERSE JOINT DOWEL BAR LAYOUT

PLAN

HORIZONTAL OFFSET TOLERANCE

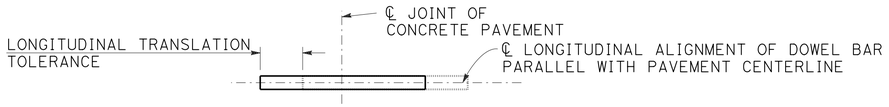

PLAN

LONGITUDINAL TRANSLATION TOLERANCE

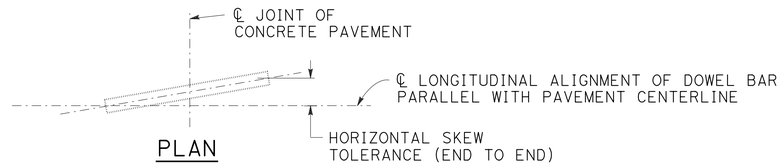

PLAN

HORIZONTAL SKEW TOLERANCE

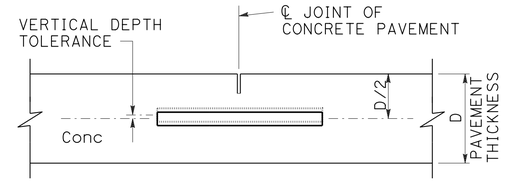

ELEVATION

VERTICAL DEPTH TOLERANCE

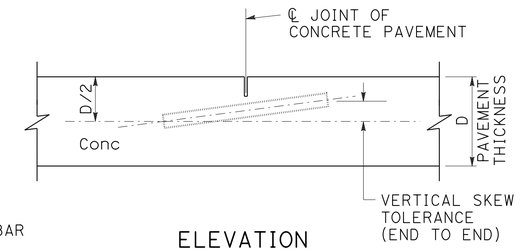

ELEVATION

VERTICAL SKEW TOLERANCE

NOTES:

1. See Standard Plan P1 for typical dowel bar placement and locations.
2. 1½" Dia dowel bars are to be used with a pavement thickness, D, equal to or greater than 0.70 feet. For pavement thickness, D, less than 0.70 feet, use 1¼" Dia dowel bars.
3. For widths not shown, see Project Plans.
4. If fresh concrete pavement is placed adjacent to existing concrete pavement, the top corner of the existing concrete pavement does not need to be rounded to the ¼" radius, as shown.
5. May also use ¾" Dia dowel bars 2'-4" ± ¼" in length. Center the length of dowel bars at the centerline of longitudinal joint.

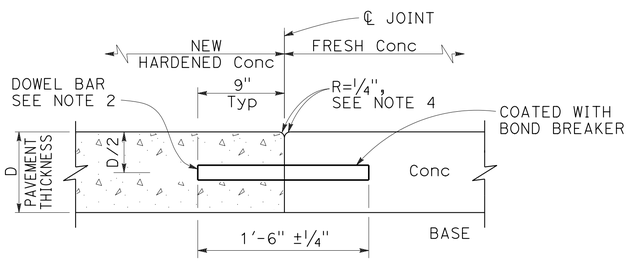

SECTION A-A

TRANSVERSE CONSTRUCTION JOINT DETAIL

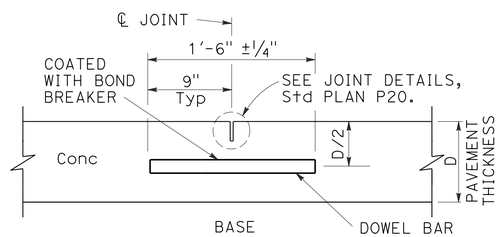

TRANSVERSE CONTRACTION JOINT

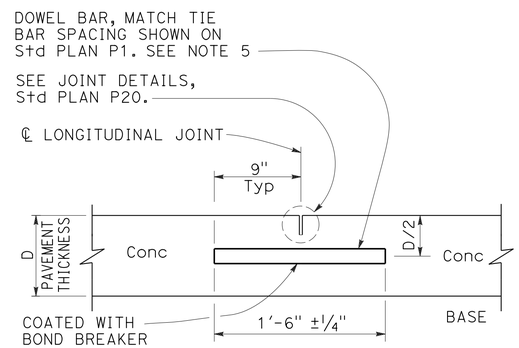

LONGITUDINAL CONTRACTION JOINT WITH DOWEL BARS

See Revised Std Plan RSP P18

TABLE A (See Note 3)

DOWEL BAR TRANSVERSE SPACING TABLE	
WIDTH BETWEEN LONGITUDINAL JOINTS	NUMBER OF DOWELS BETWEEN LONGITUDINAL JOINTS
14'-0"	14
13'-0"	13
12'-0"	12
11'-0"	11
10'-0"	10
8'-0"	8
5'-0"	5
4'-0"	4

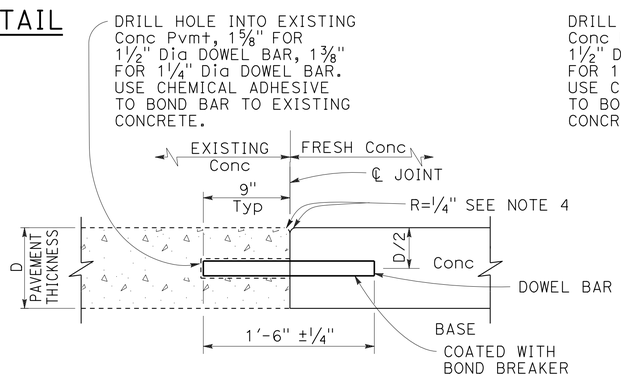

TRANSVERSE CONSTRUCTION JOINT FOR EXISTING CONCRETE PAVEMENT

Drill and bond locations

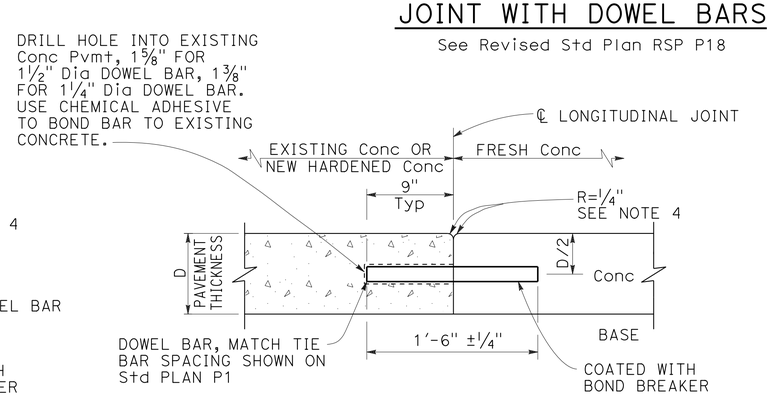

LONGITUDINAL CONSTRUCTION JOINT WITH DOWEL BARS

See Revised Std Plan RSP P18

STATE OF CALIFORNIA
DEPARTMENT OF TRANSPORTATION

CONCRETE PAVEMENT-DOWEL BAR DETAILS

NO SCALE

RSP P10 DATED APRIL 20, 2012 SUPERSEDES STANDARD PLAN P10 DATED MAY 20, 2011 - PAGE 131 OF THE STANDARD PLANS BOOK DATED 2010.

REVISED STANDARD PLAN RSP P10

2010 REVISED STANDARD PLAN RSP P10

2-22-12

Dist	COUNTY	ROUTE	POST MILES TOTAL PROJECT	SHEET No.	TOTAL SHEETS
07	LA	5	0.0/7.6	590	985

William K. Farnbach
REGISTERED CIVIL ENGINEER

April 20, 2012
PLANS APPROVAL DATE

REGISTERED PROFESSIONAL ENGINEER William K. Farnbach No. C49042 Exp. 9-30-12 CIVIL STATE OF CALIFORNIA

THE STATE OF CALIFORNIA OR ITS OFFICERS OR AGENTS SHALL NOT BE RESPONSIBLE FOR THE ACCURACY OR COMPLETENESS OF SCANNED COPIES OF THIS PLAN SHEET.

TO ACCOMPANY PLANS DATED 6-24-13

2010 REVISED STANDARD PLAN RSP P18

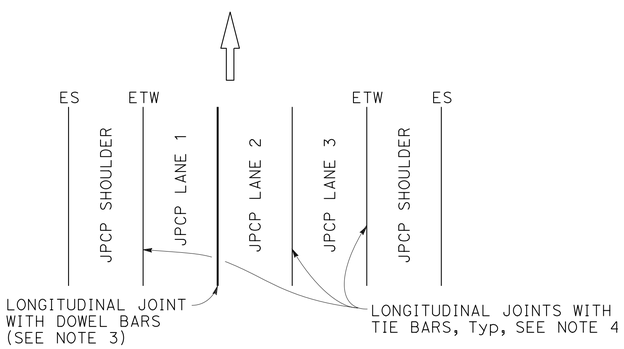

3 LANES WITH CONCRETE SHOULDERS
PLAN

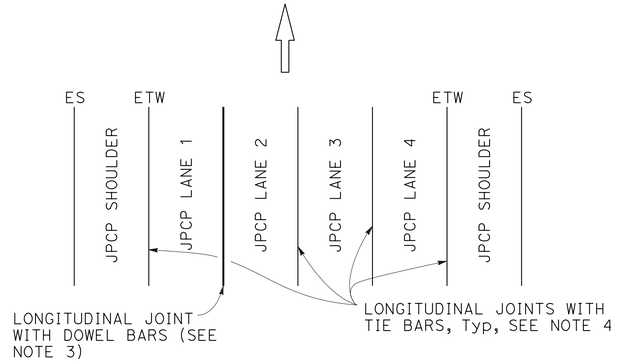

4 LANES WITH CONCRETE SHOULDERS
PLAN

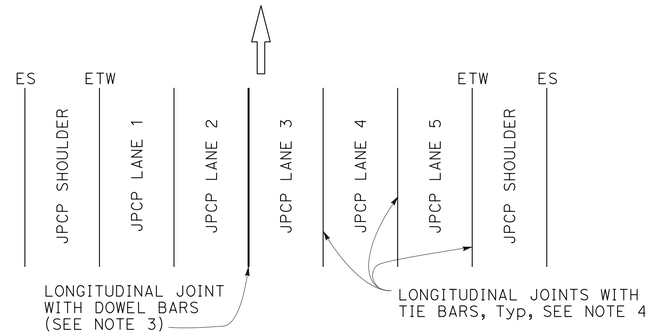

5 LANES WITH CONCRETE SHOULDERS
PLAN

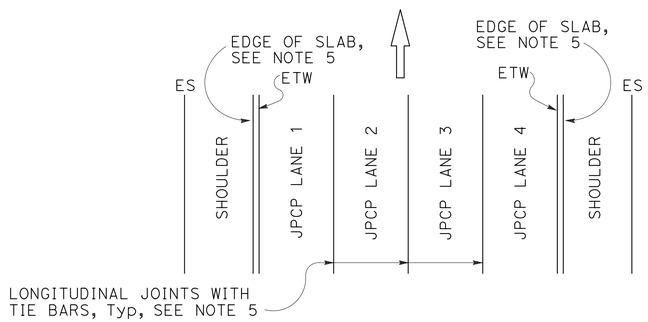

4 LANES OR LESS WITH AC SHOULDERS
PLAN

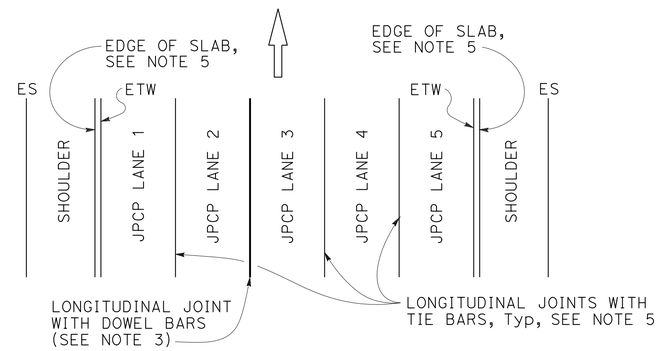

5 LANES WITH AC SHOULDERS
PLAN

NEW CONSTRUCTION

Location of Longitudinal Joints For JPCP

NOTES:

1. Where Lean Concrete Base is not used as base material, the joint filler material used for the longitudinal isolation joint shall only extend to the bottom of the new concrete slab. See Detail A.
2. Use $\frac{5}{8}$" $\pm\frac{1}{16}$" dimension for silicone sealant.
3. See Revised Standard Plan RSP P10 for longitudinal joint with dowel bars.
4. See Standard Plan P1.
5. See Standard Plan P2.

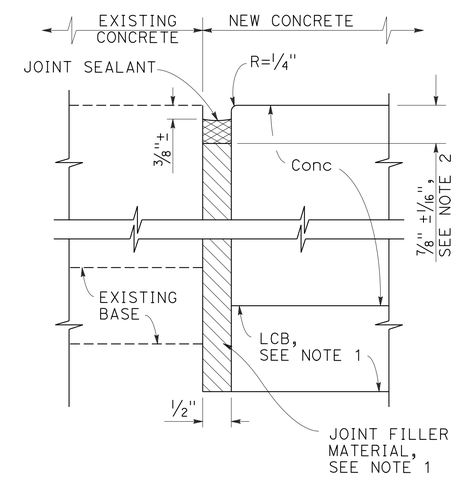

DETAIL "A"

ISOLATION JOINT

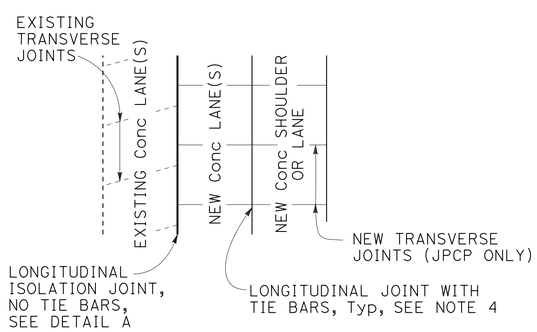

CASE 1
PLAN

Transverse Joints do not align between new and existing.

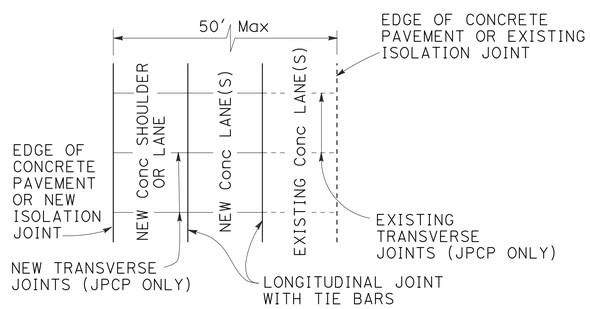

CASE 2
PLAN

Transverse Joints align between new and existing.

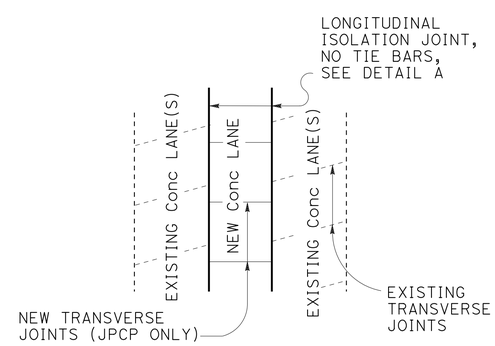

CASE 3 (INTERIOR LANE REPLACEMENT)
PLAN

Transverse Joints do not align between new and existing.

LANE/SHOULDER ADDITION OR RECONSTRUCTION

For JPCP and CRCP

STATE OF CALIFORNIA
DEPARTMENT OF TRANSPORTATION

CONCRETE PAVEMENT-LANE SCHEMATICS AND ISOLATION JOINT DETAIL

NO SCALE

RSP P18 DATED APRIL 20, 2012 SUPERSEDES STANDARD PLAN P18 DATED MAY 20, 2011 - PAGE 135 OF THE STANDARD PLANS BOOK DATED 2010.

REVISED STANDARD PLAN RSP P18

2-22-12

Dist	COUNTY	ROUTE	POST MILES TOTAL PROJECT	SHEET No.	TOTAL SHEETS
07	LA	5	0.0/7.6	591	985

REGISTERED CIVIL ENGINEER

April 20, 2012
PLANS APPROVAL DATE

REGISTERED PROFESSIONAL ENGINEER William K. Farnbach No. C49042 Exp. 9-30-12 CIVIL STATE OF CALIFORNIA

THE STATE OF CALIFORNIA OR ITS OFFICERS OR AGENTS SHALL NOT BE RESPONSIBLE FOR THE ACCURACY OR COMPLETENESS OF SCANNED COPIES OF THIS PLAN SHEET.

TO ACCOMPANY PLANS DATED 6-24-13

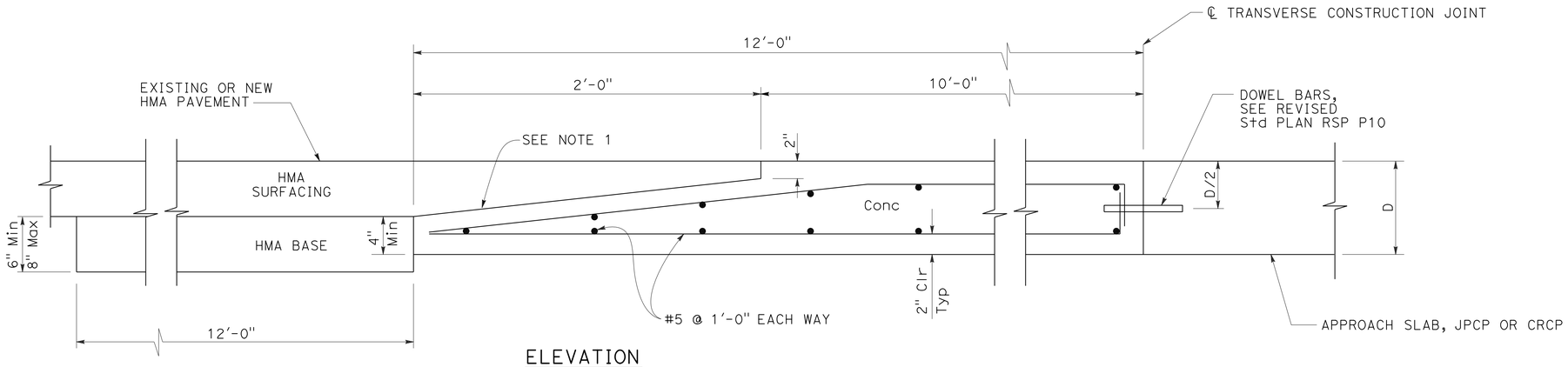

ELEVATION

CONCRETE PAVEMENT TRANSITION PANEL

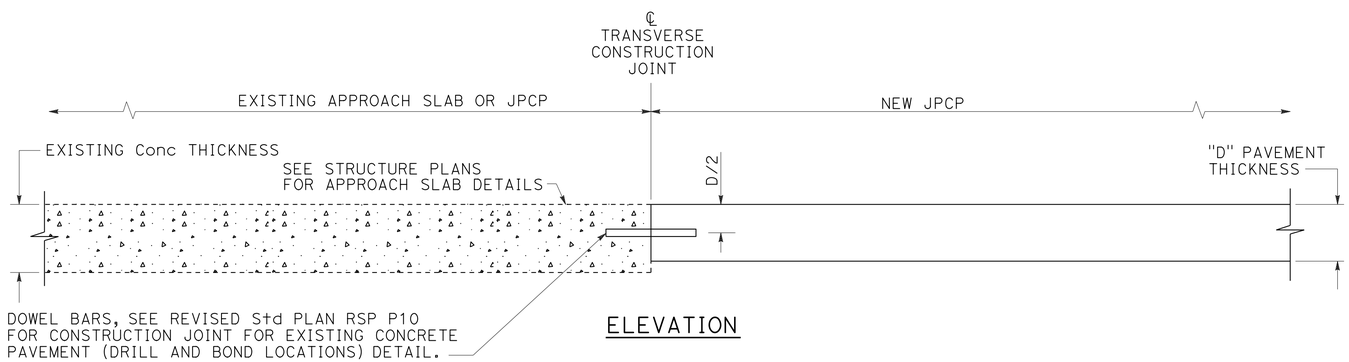

ELEVATION

TERMINAL JOINT TYPE 1

For Exist JPCP or Structure Approach Slab

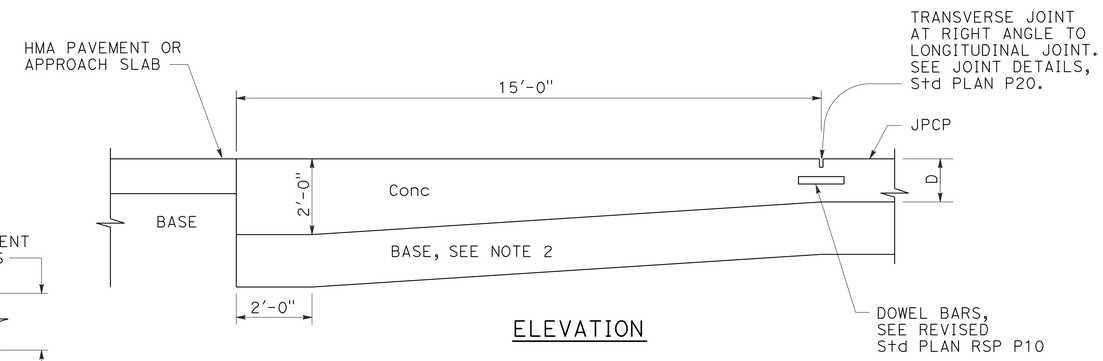

ELEVATION

PAVEMENT END ANCHOR

For HMA Pvmt or Structure Approach Slab

NOTES:

1. Heavy broom finish.
2. Maintain same base thickness as JPCP.

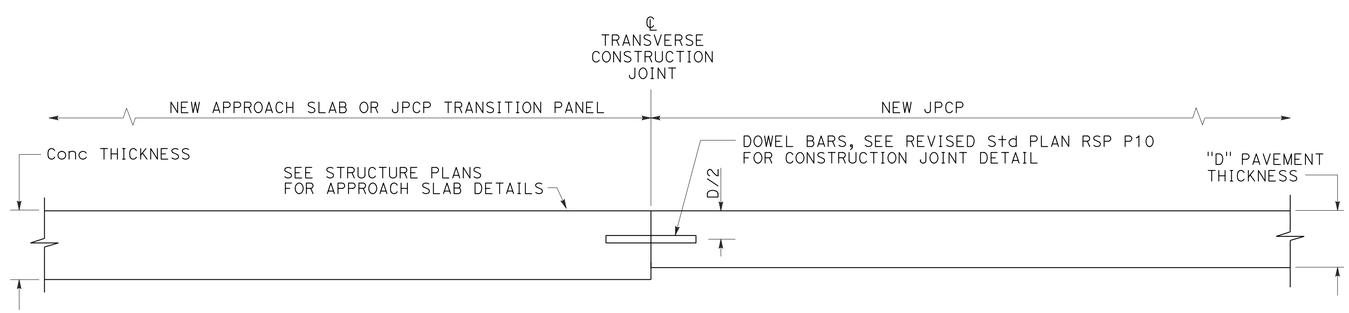

ELEVATION

TERMINAL JOINT TYPE 2

For JPCP Transition Panel or Structure Approach Slab

STATE OF CALIFORNIA
DEPARTMENT OF TRANSPORTATION

CONCRETE PAVEMENT-END PANEL PAVEMENT TRANSITIONS

NO SCALE

RSP P30 DATED APRIL 20, 2012 SUPERSEDES STANDARD PLAN P30 DATED MAY 20, 2011 - PAGE 137 OF THE STANDARD PLANS BOOK DATED 2010.

REVISED STANDARD PLAN RSP P30

2010 REVISED STANDARD PLAN RSP P30

2-22-12

Dist	COUNTY	ROUTE	POST MILES TOTAL PROJECT	SHEET No.	TOTAL SHEETS
07	LA	5	0.0/7.6	592	985

REGISTERED CIVIL ENGINEER

April 20, 2012
PLANS APPROVAL DATE

REGISTERED PROFESSIONAL ENGINEER — Florante E. Bautista — No. C54859 — Exp. 6-30-12 — CIVIL — STATE OF CALIFORNIA

THE STATE OF CALIFORNIA OR ITS OFFICERS OR AGENTS SHALL NOT BE RESPONSIBLE FOR THE ACCURACY OR COMPLETENESS OF SCANNED COPIES OF THIS PLAN SHEET.

TO ACCOMPANY PLANS DATED 6-24-13

2010 REVISED STANDARD PLAN RSP P31B

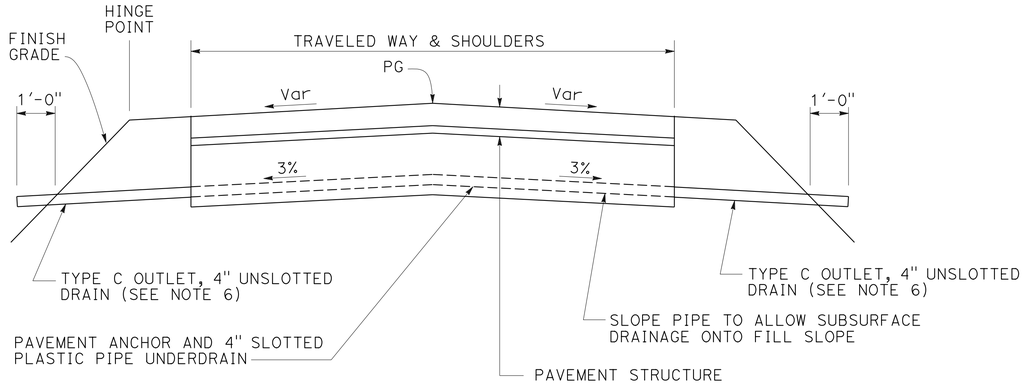

PAVEMENT ANCHOR PROFILE

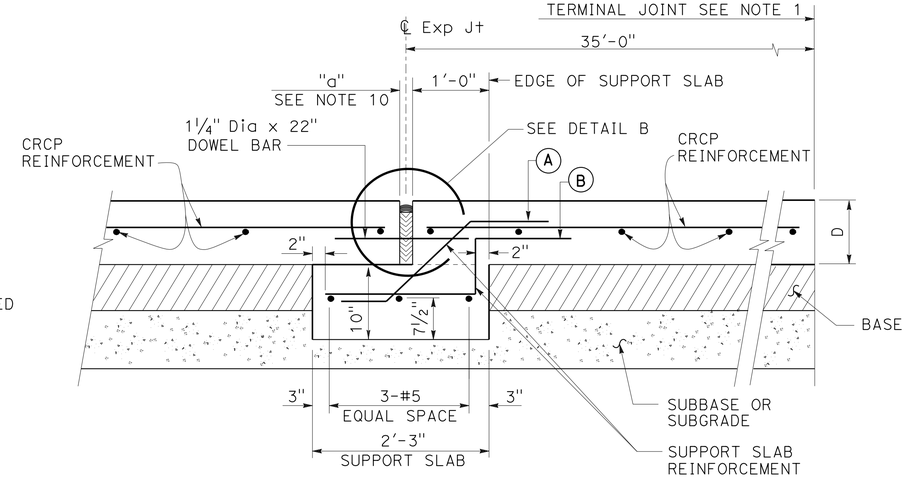

EXPANSION JOINT TYPE AN

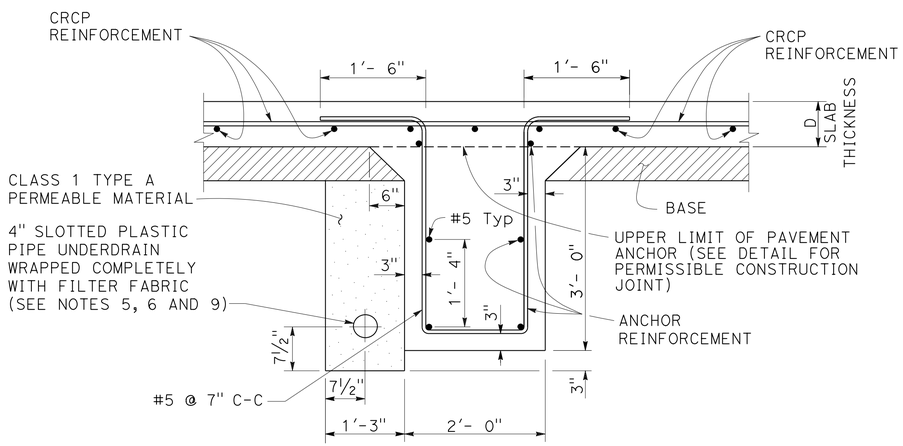

PAVEMENT ANCHOR

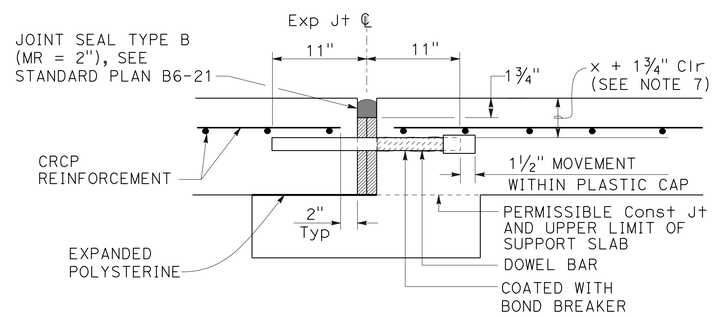

DETAIL B

(For layout, tolerances, and other details not shown, see Revised Standard Plan RSP P10.)

NOTES:

1. For the locations of the terminal joints, expansion joints and pavement anchors, see project plans.
2. The CRCP shall continue across the pavement anchor and expansion joints as shown.
3. Details of reinforcement, tie bars, and longitudinal joints (and if necessary, transverse construction joints) are shown on Revised Standard Plan RSP P4.
4. Transverse construction joints are not allowed within 20'-0" of the pavement anchor.
5. When placing pipe through concrete barrier, use 4" unslotted plastic pipe wrapped completely with 3/16" polystyrene.
6. See Standard Plan D99B for details not shown.
7. See Revised Standard Plan RSP P4 for "x".
8. D = thickness of CRCP
9. Place the 4" Slotted Plastic Pipe on the high side of the longitudinal grade.
10. See Standard Plan B6-21 for "a".

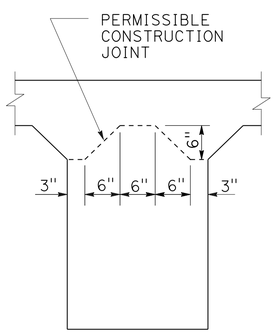

PAVEMENT ANCHOR DETAIL SHOWING PERMISSIBLE CONSTRUCTION JOINT

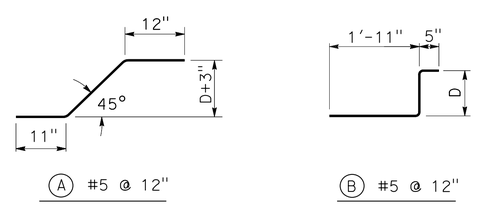

REINFORCEMENT DETAIL

STATE OF CALIFORNIA
DEPARTMENT OF TRANSPORTATION

CONTINUOUSLY REINFORCED CONCRETE PAVEMENT- EXPANSION JOINT AND ANCHOR DETAILS

NO SCALE

RSP P31B DATED APRIL 20, 2012 SUPERSEDES STANDARD PLAN P31B DATED MAY 20, 2011 - PAGE 139 OF THE STANDARD PLANS BOOK DATED 2010.

REVISED STANDARD PLAN RSP P31B

2-22-12

DIST	COUNTY	ROUTE	POST MILES TOTAL PROJECT	SHEET No.	TOTAL SHEETS
07	LA	5	0.0/7.6	593	985

REGISTERED CIVIL ENGINEER

January 20, 2012
PLANS APPROVAL DATE

REGISTERED PROFESSIONAL ENGINEER
Cornelis M. Hakim
No. C55610
Exp. 12-31-12
CIVIL
STATE OF CALIFORNIA

THE STATE OF CALIFORNIA OR ITS OFFICERS OR AGENTS SHALL NOT BE RESPONSIBLE FOR THE ACCURACY OR COMPLETENESS OF SCANNED COPIES OF THIS PLAN SHEET.

TO ACCOMPANY PLANS DATED 6-24-13

2010 REVISED STANDARD PLAN RSP P74

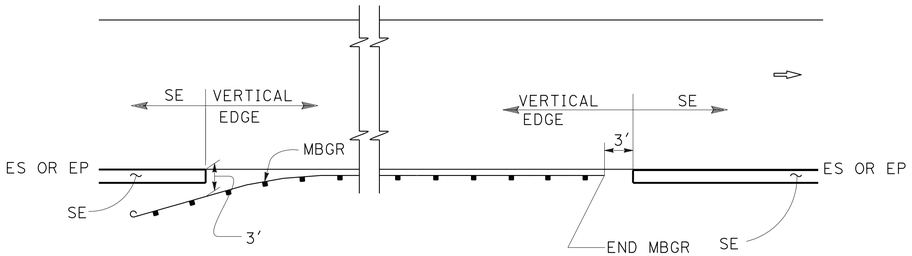

MBGR

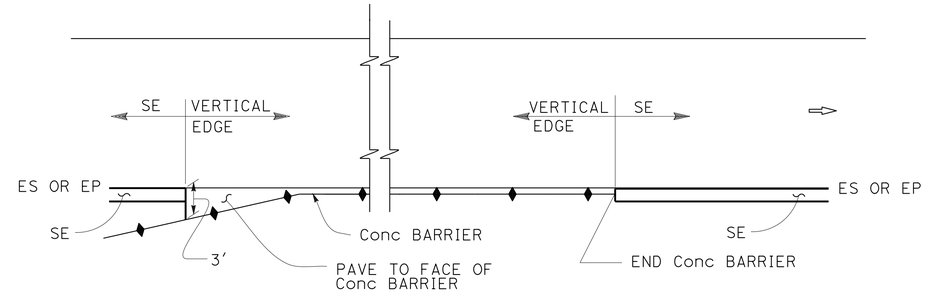

CONCRETE BARRIER

ABBREVIATIONS:

SE SAFETY EDGE

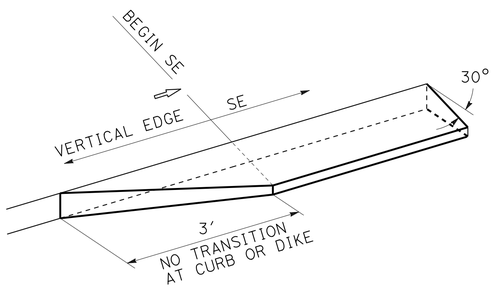

TRANSITION DETAIL FOR CONCRETE ONLY

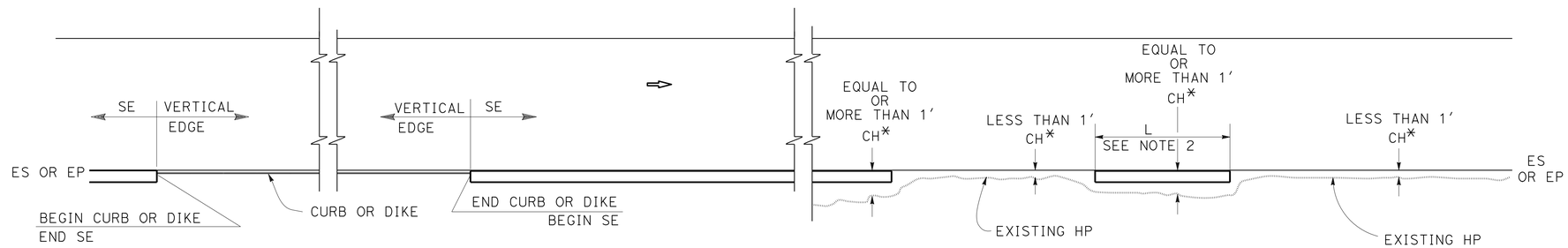

CURB OR DIKE

NARROW SIDE SLOPE

* CH = Distance from ES or EP to existing HP.

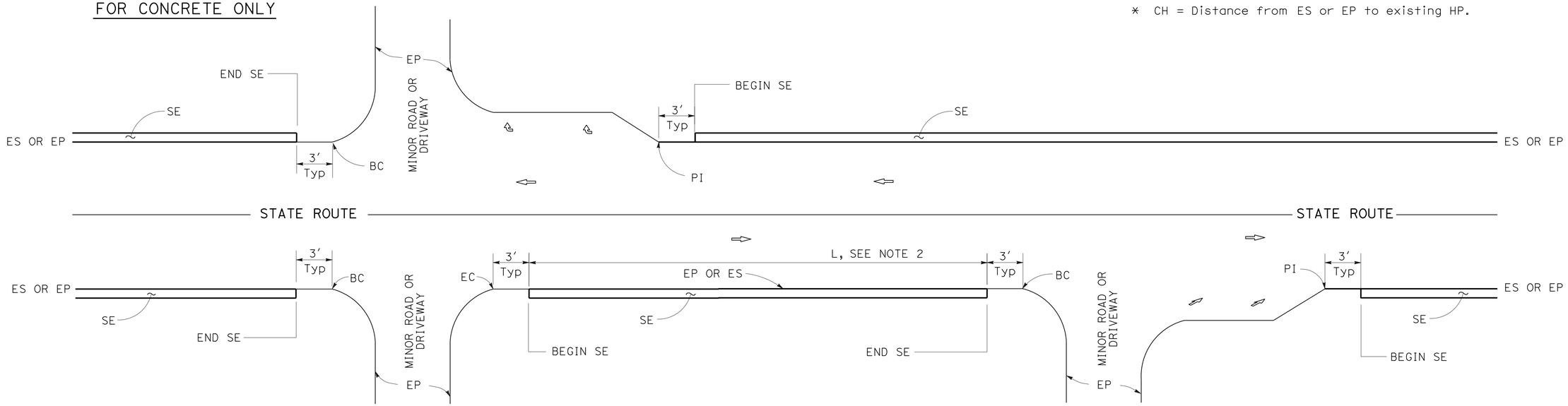

INTERSECTION

DRIVEWAY AND INTERSECTION

MINOR ROADWAY OR DRIVEWAY

NOTES:

1. For details not shown, see Revised Standard Plans RSP P75 and RSP P76.
2. Safety edge is optional when L is less than 30′.

STATE OF CALIFORNIA
DEPARTMENT OF TRANSPORTATION

PAVEMENT EDGE TREATMENTS

NO SCALE

RSP P74 DATED JANUARY 20, 2012 SUPPLEMENTS THE STANDARD PLANS BOOK DATED 2010.

REVISED STANDARD PLAN RSP P74

01-05-12

DIST	COUNTY	ROUTE	POST MILES TOTAL PROJECT	SHEET No.	TOTAL SHEETS
07	LA	5	0.0/7.6	594	985

REGISTERED CIVIL ENGINEER

January 20, 2012
PLANS APPROVAL DATE

REGISTERED PROFESSIONAL ENGINEER
Cornelis M. Hakim
No. C55610
Exp. 12-31-12
CIVIL
STATE OF CALIFORNIA

THE STATE OF CALIFORNIA OR ITS OFFICERS OR AGENTS SHALL NOT BE RESPONSIBLE FOR THE ACCURACY OR COMPLETENESS OF SCANNED COPIES OF THIS PLAN SHEET.

TO ACCOMPANY PLANS DATED 6-24-13

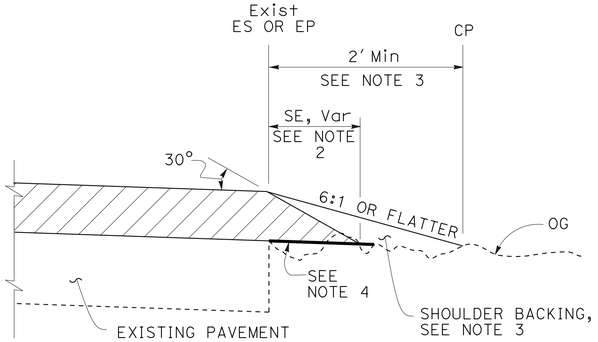

CASE A
Safety Edge

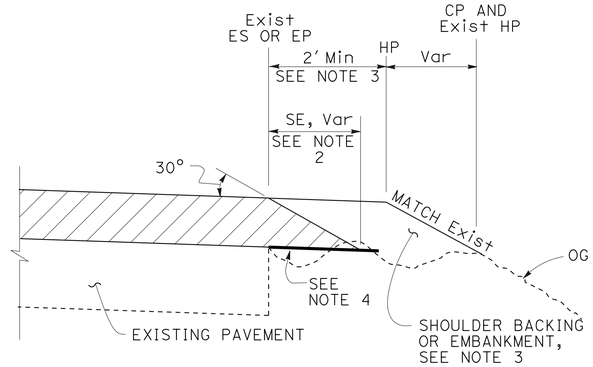

CASE B
Safety Edge

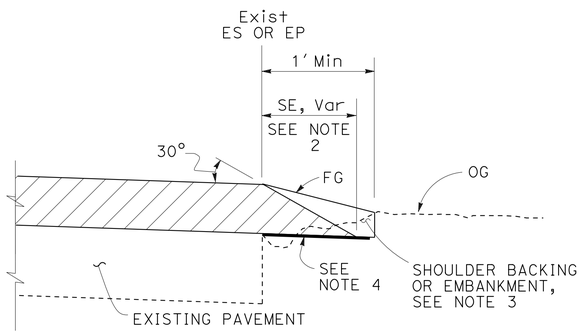

CASE C
Safety Edge

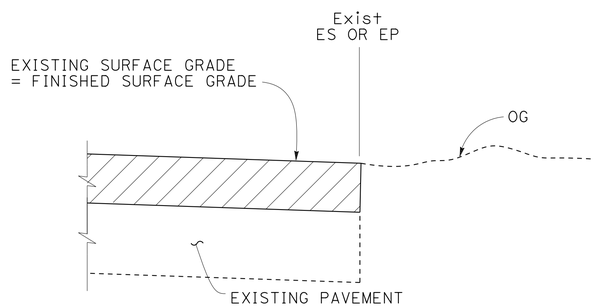

CASE D
Vertical Edge

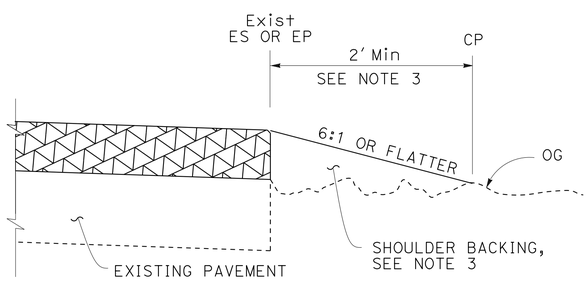

CASE E
Vertical Edge

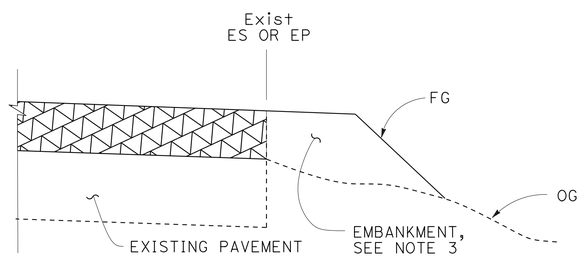

CASE F
Vertical Edge
* See Table A and Revised Std Plan RSP P74

LEGEND:

- HMA OVERLAY
- HMA OR CONCRETE OVERLAY
- CONCRETE OVERLAY

ABBREVIATIONS:

SE SAFETY EDGE
TT TOTAL THICKNESS OF SE

TABLE A
EDGE TREATMENT FOR VARIOUS OVERLAY THICKNESS AND CONDITIONS

	OVERLAY THICKNESS	
FIELD CONDITION	LESS THAN 0.15′	0.15′ OR MORE
Exist SLOPE 6:1 OR FLATTER	CASE E	CASE A
Exist SLOPE 3:1 TO 6:1	CASE E	CASE B
Exist SLOPE STEEPER THAN 3:1	CASE F	CASE F
CUT SECTION (REPLACE, COLD PLANE, MILL PAVEMENT)	CASE D	CASE C

ADDITIONAL HMA OR CONCRETE QUANTITIES FOR SE/SIDE/MILE

TYPICAL CROSS SECTION	TT	TOTAL ADDITIONAL MATERIAL FOR SE/SIDE/MILE		
		HMA (TON)	CONCRETE (CY)*	CONCRETE (CY)**
TT	0.15′	NA	NA	NA
	0.20′	13.7	NA	NA
	0.30′	30.9	NA	NA
	0.40′	54.9	NA	NA
	0.45′	69.4	NA	NA
TT 0.43′	0.50′	84.2	NA	NA
	0.60′	113.9	NA	NA
	0.70′	143.6	70.9	94.2
	0.80′	173.3	85.6	112.2
	0.90′	203.0	100.3	130.2
	1.00′	232.7	114.9	148.2
	1.10′	262.4	129.6	166.2
	1.20′	292.1	144.3	184.2

* For Detail "A"
** For Optional Detail "A"

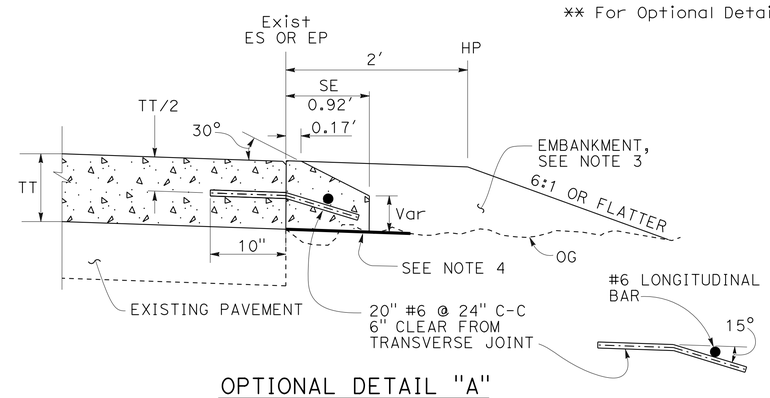

OPTIONAL DETAIL "A"
For concrete overlay
See Note 5

NOTES:

1. For limits of safety edge and vertical edge treatments, see Revised Standard Plan RSP P74.
2. Details shown for HMA overlay thickness less than 0.43′. See Detail "A" for HMA overlay thickness more than 0.43′ or concrete overlay.
3. For locations and limits of shoulder backing or embankment see project plans.
4. Grade existing ground to place safety edge. 1′ minimum width
5. Safety edge transverse joint must match overlay transverse joint. End of #6 longitudinal bar must be 2" ±½" clear from transverse joint.
6. Safety edge is not needed in the area of MBGR, barrier, right turn lane and acceleration lane. See Revised Standard Plan RSP P74.

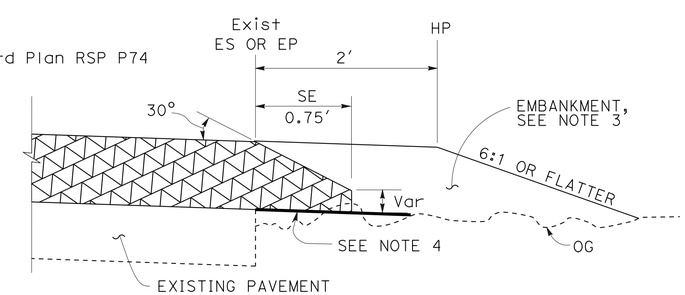

DETAIL "A"
For HMA overlay thickness more than 0.43′ or concrete overlay

STATE OF CALIFORNIA
DEPARTMENT OF TRANSPORTATION

PAVEMENT EDGE TREATMENTS-OVERLAYS

NO SCALE

RSP P75 DATED JANUARY 20, 2012 SUPPLEMENTS THE STANDARD PLANS BOOK DATED 2010.

REVISED STANDARD PLAN RSP P75

2010 REVISED STANDARD PLAN RSP P75

DIST	COUNTY	ROUTE	POST MILES TOTAL PROJECT	SHEET No.	TOTAL SHEETS
07	LA	5	0.0/7.6	595	985

REGISTERED CIVIL ENGINEER

January 20, 2012
PLANS APPROVAL DATE

REGISTERED PROFESSIONAL ENGINEER
Cornelis M. Hakim
No. C55610
Exp. 12-31-12
CIVIL
STATE OF CALIFORNIA

THE STATE OF CALIFORNIA OR ITS OFFICERS OR AGENTS SHALL NOT BE RESPONSIBLE FOR THE ACCURACY OR COMPLETENESS OF SCANNED COPIES OF THIS PLAN SHEET.

TO ACCOMPANY PLANS DATED 6-24-13

LEGEND:

- HMA PAVEMENT
- HMA OR CONCRETE PAVEMENT
- CONCRETE PAVEMENT

ABBREVIATIONS:

SE SAFETY EDGE
TT TOTAL THICKNESS OF SE
HW HINGE WIDTH, DISTANCE FROM ES OR EP TO HP

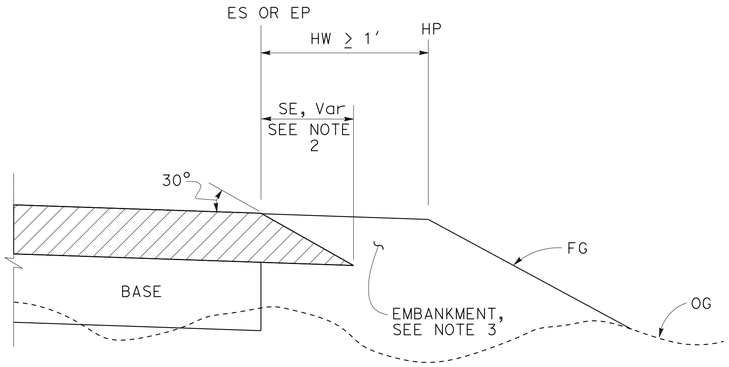

CASE K
Safety Edge - Fill Section, HW ≥ 1′

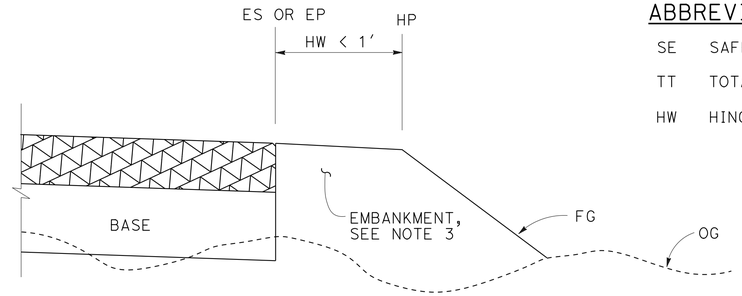

CASE L
Vertical Edge - Fill Section, HW < 1′

FILL SECTION

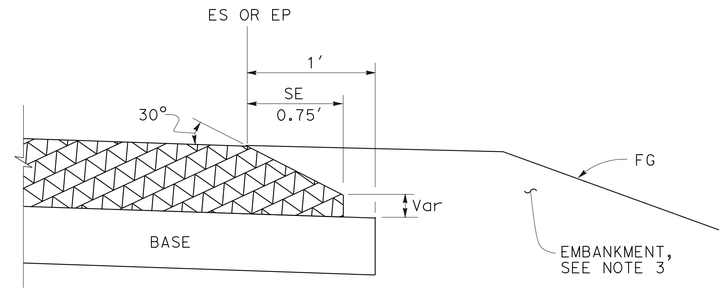

DETAIL "B"
For HMA pavement thickness more than 0.43′ or concrete pavement

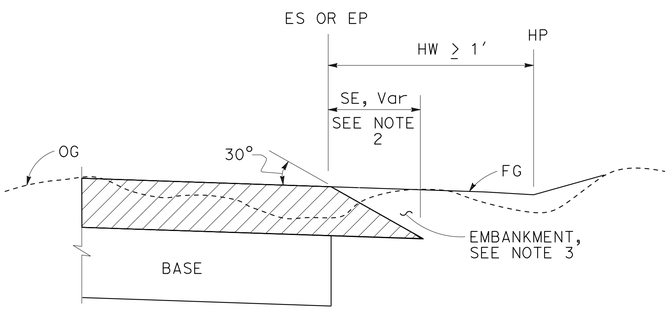

CASE M
Safety Edge - Cut Section, HW ≥ 1′

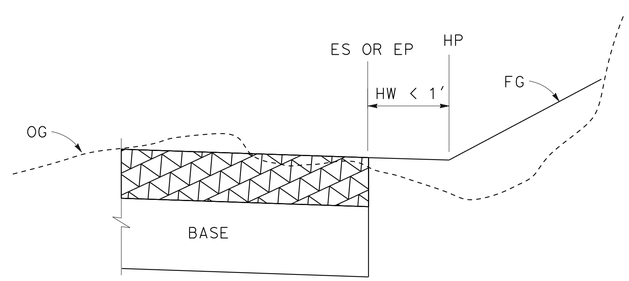

CASE N
Vertical Edge - Cut Section, HW < 1′

CUT SECTION

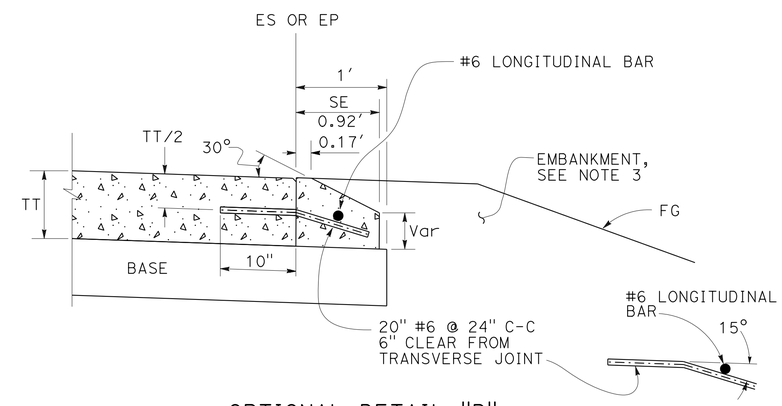

OPTIONAL DETAIL "B"
For concrete pavement
See Note 4

NOTES:

1. For limits of safety edge and vertical edge treatments, see Revised Standard Plan RSP P74
2. Details shown for HMA pavement thickness less than 0.43′. See Detail "B" for HMA pavement thickness more than 0.43′ or concrete pavement.
3. For locations and limits of embankment see project plans.
4. Safety edge transverse joint must match pavement transverse joint. End of #6 longitudinal bar must be 2" ±½" clear from transverse joint.
5. Safety edge is not needed in the area of MBGR, barrier, right turn lane and acceleration lane. See Revised Standard Plan RSP P74.

STATE OF CALIFORNIA
DEPARTMENT OF TRANSPORTATION

PAVEMENT EDGE TREATMENTS-NEW CONSTRUCTION

NO SCALE

RSP P76 DATED JANUARY 20, 2012 SUPPLEMENTS THE STANDARD PLANS BOOK DATED 2010.

REVISED STANDARD PLAN RSP P76

2010 REVISED STANDARD PLAN RSP P76

TO ACCOMPANY PLANS DATED 6-24-13

Dist	COUNTY	ROUTE	POST MILES TOTAL PROJECT	SHEET No.	TOTAL SHEETS
07	LA	5	0.0/7.6	596	985

REGISTERED CIVIL ENGINEER

October 19, 2012
PLANS APPROVAL DATE

REGISTERED PROFESSIONAL ENGINEER Glenn DeCou No. C34547 Exp. 9-30-13 CIVIL STATE OF CALIFORNIA

THE STATE OF CALIFORNIA OR ITS OFFICERS OR AGENTS SHALL NOT BE RESPONSIBLE FOR THE ACCURACY OR COMPLETENESS OF SCANNED COPIES OF THIS PLAN SHEET.

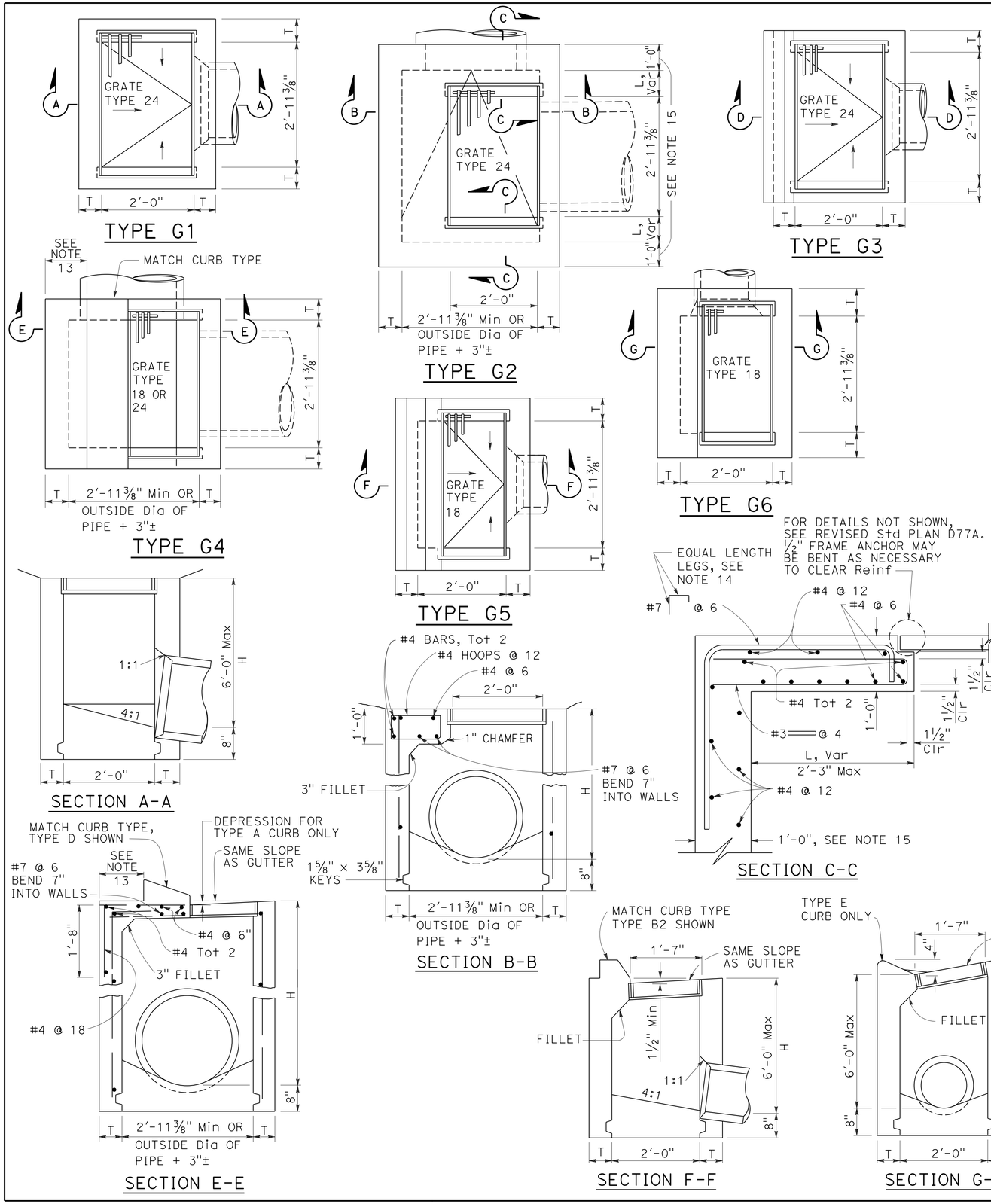

NOTES:

1. "H" is the difference in elevation between the outlet pipe flow line and the normal gutter grade line undepressed.
2. For "T" wall thickness, see Table A below.
3. Wall reinforcing not required when "H" is 8'-0" or less and the unsupported width or length is 7'-0" or less. Walls exceeding these limits shall be reinforced with #4 bars @ 1'-6" ± centers placed 1½" clear to inside of box unless otherwise shown.
4. Inlet bottom reinforcing not required. See Standard Plan D74C for alternative reinforced bottom and alternative half round bottom.
5. Steps-None required where "H" is less than 2'-6". Where "H" is 2'-6" or more, install steps with lowest rung 1'-0" above the floor and highest rung not more than 6" below top of inlet. The distance between steps shall not exceed 1'-0" and shall be uniform throughout the length of the wall. Place steps in the wall without an opening. Steps inserts may be substituted for the bar steps. Step inserts shall comply with State Industrial Safety requirements. See Standard Plan D74C for step details.
6. Details shown apply to both metal and concrete pipe.
7. Pipe(s) can be placed in any wall.
8. Curb section shall match adjacent curb.
9. Basin floors shall have wood trowel finish and a minimum slope of 12:3 from all directions toward outlet pipe.
10. Set inlet so that grate bars are parallel to direction of principal surface flow.
11. See Revised Standard Plans D77A and D77B for grate and frame details and weights of miscellaneous iron and steel.
12. See Standard Plan D78A for gutter depression details.
13. This dimenison will vary with different grates, curbs types, box width and wall thickness.
14. Bar may be rotated as necessary to clear opening. Where "L" is 6" or less, bar may be omitted.
15. Where "L" is 6" or less, wall thickness shall be as shown in Table A.
16. Cast-in-place inlets to be formed around all pipes/stubs intersecting the inlet, and concrete poured in one continuous operation. Precast inlets shall have mortared connections conforming to details for Type GCP Inlet shown on Standard Plan D75B. See Standard Specifications for mortar composition.

TABLE A

CONCRETE QUANTITIES				
TYPE	H=3'-0" TO 8'-0" (T=6")		H=8'-1" TO 20'-0" (T=8")	
	H=3'-0" (CY)	ADDITIONAL PCC PER FOOT (CY)	H=8'-1" (CY)	ADDITIONAL PCC PER FOOT (CY)
G-1	0.95	0.220	See Note A	SEE NOTE A
G-2*	1.31	0.255	3.50	0.357
G-3	1.03	0.220	See Note A	SEE NOTE A
G-4* (TYPE 24)	1.27	0.255	3.48	0.357
G-4* (TYPE 18)	1.30	0.255	3.50	0.357
G-5	1.02	0.220	SEE NOTE A	SEE NOTE A
G-6	1.04	0.220	SEE NOTE A	SEE NOTE A

TABLE BASED ON 8" FLOOR SLAB. NO DEDUCTIONS ARE TO BE MADE TO THESE QUANTITIES BECAUSE OF PIPE OPENINGS, DIFFERENT FLOOR ALTERNATIVES OR DIFFERENT CURB TYPES. * QUANTITIES FOR TYPE G-2 AND G-4 INLETS BASED ON THE MINIMUM INTERIOR DIMENSIONS.

NOTE A:

Maximum allowable height 6'-0".

STATE OF CALIFORNIA
DEPARTMENT OF TRANSPORTATION

DRAINAGE INLETS

NO SCALE

RSP D73 DATED OCTOBER 19, 2012 SUPERSEDES STANDARD PLAN D73 DATED MAY 20, 2011 - PAGE 156 OF THE STANDARD PLANS BOOK DATED 2010.

REVISED STANDARD PLAN RSP D73

2010 REVISED STANDARD PLAN RSP D73

7-19-12

Dist	COUNTY	ROUTE	POST MILES TOTAL PROJECT	SHEET No.	TOTAL SHEETS
07	LA	5	0.0/7.6	597	985

Raymond Don Tsztoo
REGISTERED CIVIL ENGINEER

April 19, 2013
PLANS APPROVAL DATE

REGISTERED PROFESSIONAL ENGINEER Raymond Don Tsztoo No. C37332 Exp. 6-30-14 CIVIL STATE OF CALIFORNIA

THE STATE OF CALIFORNIA OR ITS OFFICERS OR AGENTS SHALL NOT BE RESPONSIBLE FOR THE ACCURACY OR COMPLETENESS OF SCANNED COPIES OF THIS PLAN SHEET.

TO ACCOMPANY PLANS DATED 6-24-13

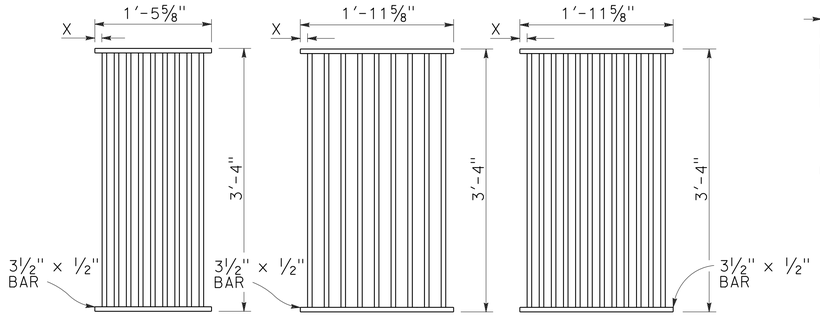

TYPE 18-9

1⅜" Clear spacing. Use within the roadbed on highways where bicycles and pedestrians are excluded.

TYPE 24-9

2" Clear spacing. Use in locations off the roadbed on all types of highways.

TYPE 24-12

1⅜" Clear spacing. Use within the roadbed on highways where bicycles and pedestrians are excluded.

RECTANGULAR GRATE DETAILS

(See table below)

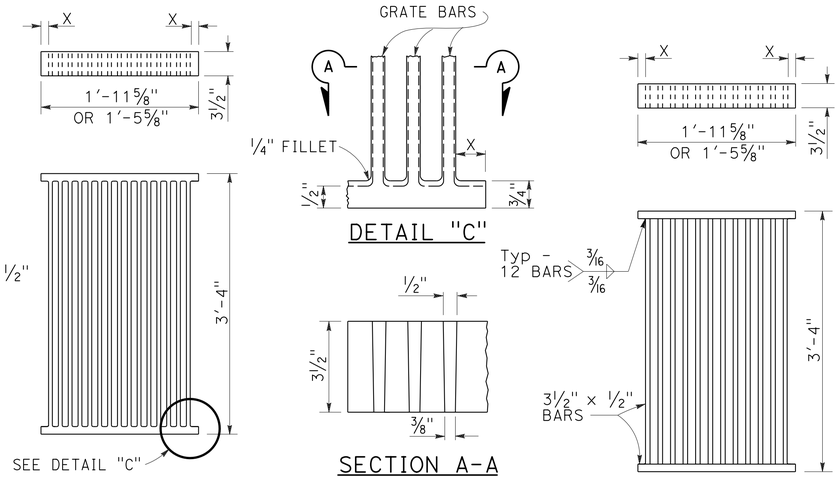

ALTERNATIVE CAST DUCTILE IRON GRATE OR CAST CARBON STEEL GRATE

ALTERNATIVE WELDED GRATE

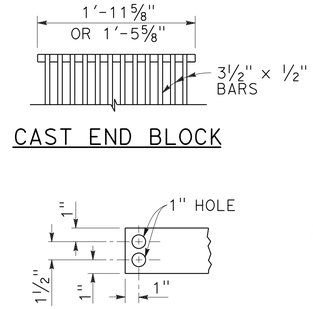

CAST END BLOCK

END OF BAR

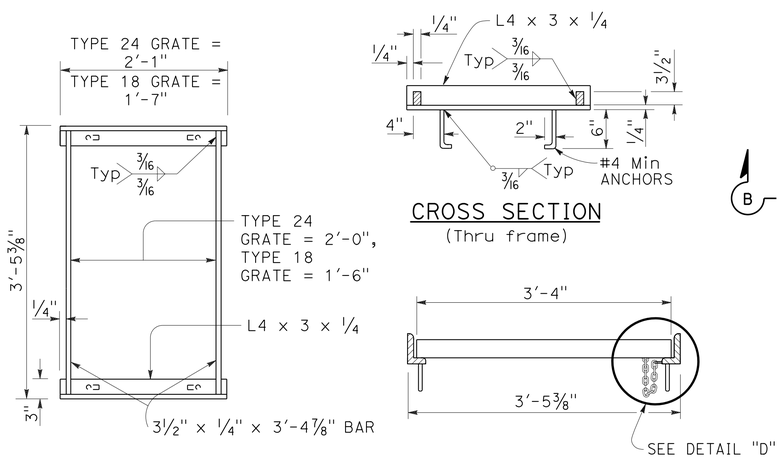

TYPICAL FRAME

CROSS SECTION
(Thru frame)

LONGITUDINAL SECTION
(Thru frame and grate)

RECTANGULAR FRAME DETAILS

(For all rectangular grates)

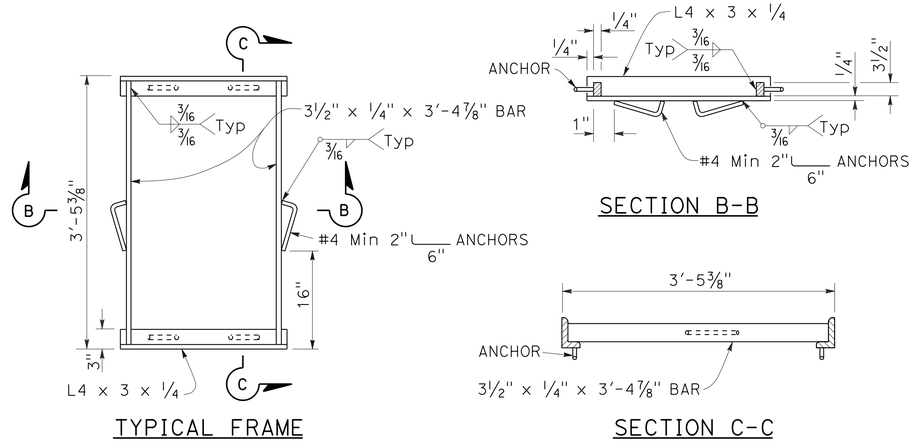

ALTERNATIVE ANCHOR FOR RECTANGULAR FRAME

(For details not shown, See Rectangular Frame Details)

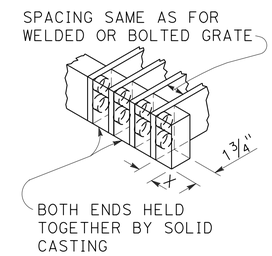

ALTERNATIVE CAST DUCTILE IRON OR CAST CARBON STEEL END BLOCK GRATE

NOTES:

1. Grate type numbers refer to approximate width of grate in inches and number of bars, respectively.
2. Contractor has the option of using cast ductile iron, cast carbon steel, welded, bolted, or cast end block grate.
3. Rounded top of bars optional on all grates.
4. Pipe inlets with a grate shall be placed so that bars parallel direction of principle surface flow.
5. Complete joint penetration butt welds may be substituted for the fillet welds on all anchors.
6. Standard square, hexagon, round or equivalent headed anchors may be substituted for the right angle hooks on the anchors shown on this plan.
7. Grate and frame weights are based on welded grates (weights of face angles, steps, protection bars, etc. are not included).
8. Connect chain to grate and frame only at locations shown on the plans. When chain is required, do not use cast ductile iron grates.

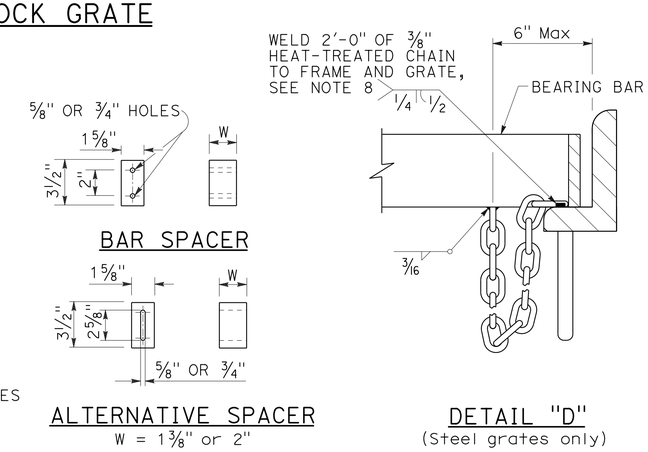

GRATE BAR SPACING TABLE

TYPE	No. OF BARS	CLEAR BAR SPACING	X
18-9	9	1⅜"	1 1/16"
24-9	9	2"	1 9/16"
24-12	12	1⅜"	1¼"

INLET TYPE	COVER TYPE	WEIGHT LB
OS	PLATE	174
OL-7	PLATE	170
OL-10	PLATE	170
OL-14	PLATE	170
OL-21	PLATE	170
OCP	PLATE	112
OCPI	PLATE	112
OCPI	REDWOOD	42
OMP	PLATE	177
OMPI	PLATE	177

INLET TYPE	GRATE TYPE	No. OF GRATES	WEIGHT LB
GDO	24-12	2	634
GOL-7	24-12	1	326
GOL-10	24-12	1	326
GO,G1,G2,G3,G4 (TYPE 24)	24-9	1	263
	24-12	1	326
G4 (TYPE 18),G5,G6	18-9	1	249
GT1	18-9	2	498
GT2	18-9	2	498
GT3	24-12	2	652
GT4	24-12	2	652
TRASH RACK			22
GRATE CHAIN			3

BASIS FOR Misc IRON & STEEL FINAL PAY WEIGHTS FOR DRAINAGE INLETS

(See Note 7)

STATE OF CALIFORNIA
DEPARTMENT OF TRANSPORTATION

GRATE DETAILS No. 1

NO SCALE

RSP D77A DATED APRIL 19, 2013 SUPERSEDES RSP D77A DATED JULY 20, 2012 AND STANDARD PLAN D77A DATED MAY 20, 2011 - PAGE 164 OF THE STANDARD PLANS BOOK DATED 2010.

REVISED STANDARD PLAN RSP D77A

2010 REVISED STANDARD PLAN RSP D77A

4-4-13

Dist	COUNTY	ROUTE	POST MILES TOTAL PROJECT	SHEET No.	TOTAL SHEETS
07	LA	5	0.0/7.6	598	985

REGISTERED CIVIL ENGINEER

April 19, 2013
PLANS APPROVAL DATE

REGISTERED PROFESSIONAL ENGINEER Raymond Don Tsztoo No. C37332 Exp. 6-30-14 CIVIL STATE OF CALIFORNIA

THE STATE OF CALIFORNIA OR ITS OFFICERS OR AGENTS SHALL NOT BE RESPONSIBLE FOR THE ACCURACY OR COMPLETENESS OF SCANNED COPIES OF THIS PLAN SHEET.

TO ACCOMPANY PLANS DATED 6-24-13

2010 REVISED STANDARD PLAN RSP D77B

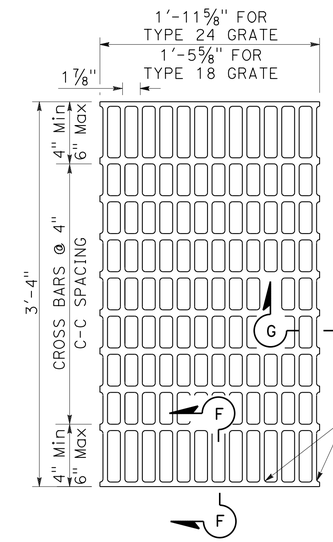

NOTES:

Bearing bars to be 3½" x ¼" bars on 1⅞" centers.

⅜"± ø Cross bars may be fillet welded, resistance welded or electroforged to bearing bars.

Weight of Type 24 grate = 141 LBS.

Weight of Type 18 grate = 107 LBS. (Type 24 grate shown).

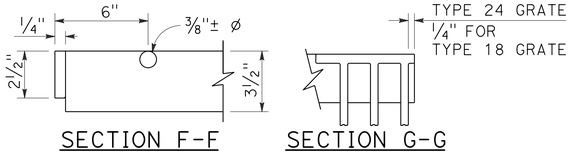

SECTION F-F SECTION G-G

TYPE 18-10 AND 24-13 GRATE

(Welded Steel)

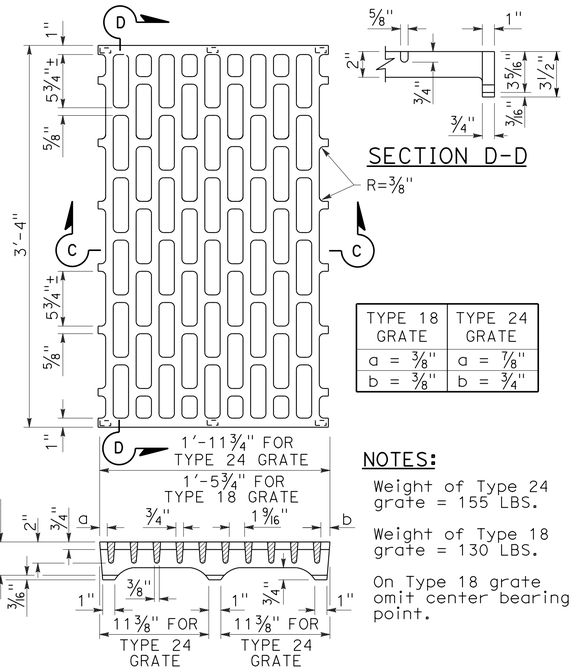

TYPE 18 GRATE	TYPE 24 GRATE
a = ⅜"	a = ⅞"
b = ⅜"	b = ¾"

NOTES:

Weight of Type 24 grate = 155 LBS.

Weight of Type 18 grate = 130 LBS.

On Type 18 grate omit center bearing point.

SECTION C-C

TYPE 18-8C AND 24-10C GRATE

(Cast ductile iron)

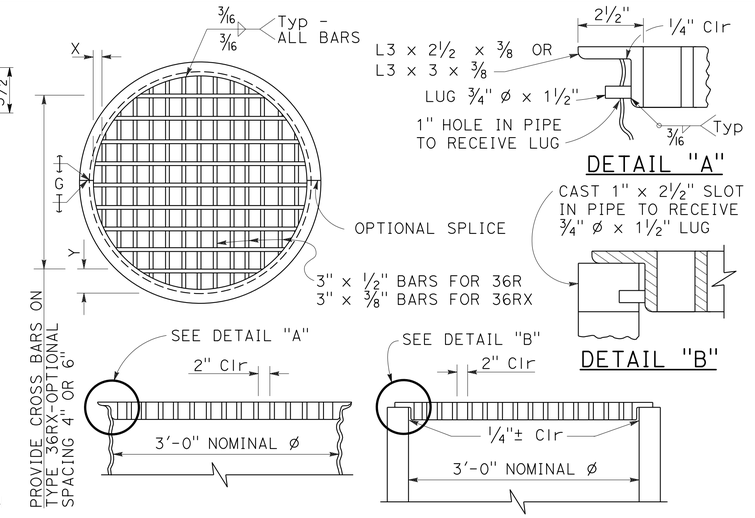

TYPE 36R AND 36RX GRATE DETAILS

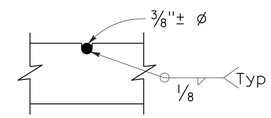

⅜"± ø Cross bars may be fillet welded, resistance welded or electroforged to bearing bars.

CROSS BAR DETAIL TYPE 36RX GRATE (WELDED STEEL)

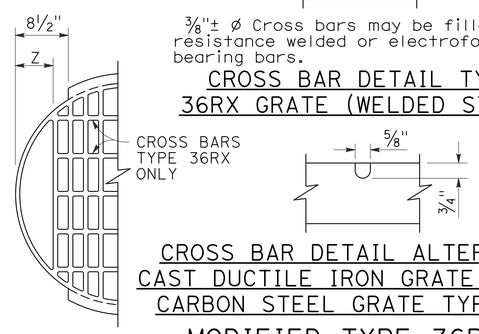

CROSS BAR DETAIL ALTERNATIVE CAST DUCTILE IRON GRATE OR CAST CARBON STEEL GRATE TYPE 36RX

MODIFIED TYPE 36R AND 36RX GRATE FOR ODI INLET

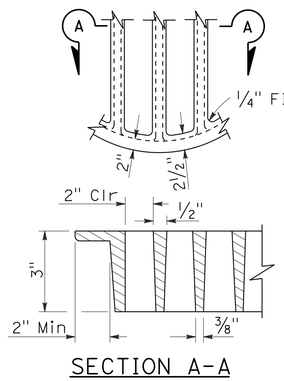

SECTION A-A

ALTERNATIVE CAST DUCTILE IRON GRATE OR CAST CARBON STEEL GRATE TYPE 36R AND 36RX

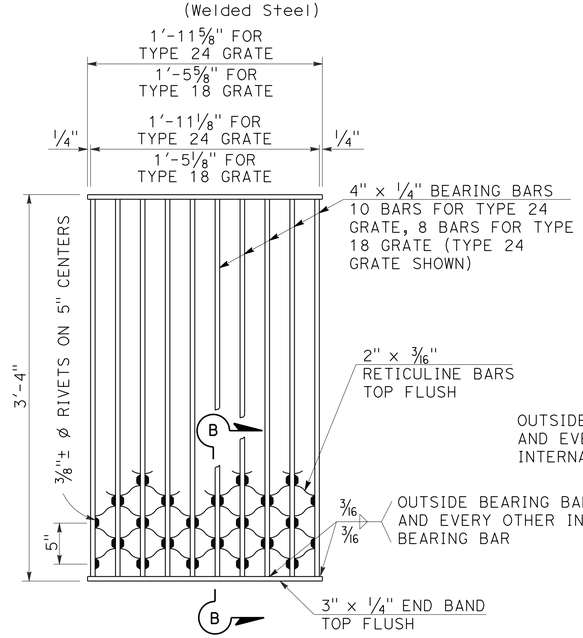

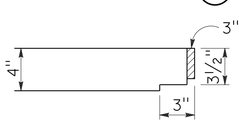

NOTES:

Weight of Type 24 grate = 182 LBS.
Weight of Type 18 grate = 145 LBS.

SECTION B-B

TYPE 18-8S AND 24-10S GRATE

(Welded Steel) Reticuline type

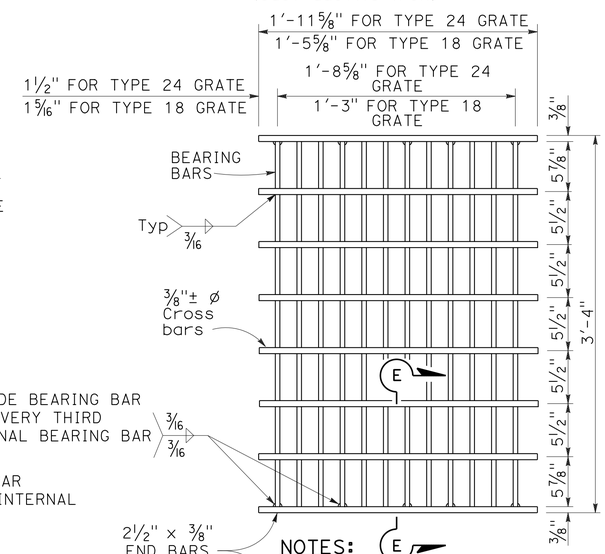

NOTES:

Bearing bars to be 3½" x ⅜" bars on 1⅞" centers.

12 Bars for Type 24 grate - 9 bars for Type 18 grates. (Type 24 grate shown).

Weight of Type 24 grate = 192 LBS.

Weight of Type 18 grate = 145 LBS.

⅜"± ø Cross bars may be fillet welded, resistance welded or electroforged to bearing bars.

SECTION E-E

TYPE 18-9X AND 24-12X GRATE

(Welded Steel)

NOTES:

1. When alternative grates are allowed - Final pay based on alternative with the lesser weight.
2. Use frame shown on Standard Plan D74A, D74B or RSP D77A as appropriate.
3. When Type 24-10S, 24-12X or 24-13 grates are used with GDO Inlets, a ¼" x 3½" x 3'-4⅞" steel bar shall be welded across the center of inlet frame to separate the individual grates.
4. See Revised Standard Plan RSP D77A for connecting chain to welded grate and frame. When chain is required, do not use cast ductile iron grate.

GRATE BAR SPACING TABLE

TYPE	No. OF BARS	CLEAR BAR SPACING	X	Y 4" SPACING	Y 6" SPACING	Z
36R	13	2"	2⅛"	-	-	-
36RX (STEEL)	15	2"	9/16"	3¾"	5¾"	-
36RX (CAST)	13	2"	2⅛"	3¾"	5¾"	-
36R Mod	12	2"	2⅛"	-	-	5"
36RX Mod (STEEL)	13	2"	9/16"	3¾"	5¾"	5 11/16"
36RX Mod (CAST)	12	2"	2⅛"	3¾"	5¾"	5"

BASIS FOR Misc IRON AND STEEL FINAL PAY WEIGHTS FOR DRAINAGE INLETS

INLET TYPE	GRATE TYPE	No. OF GRATES	WEIGHT LB
GDO (SEE NOTE 4)	24-10C	2	391
	24-10S	2	456
	24-12X	2	473
	24-13	2	374
GO,GOL,G1,G2, G3,G4 (TYPE 24)	24-10C	1	202
	24-10S	1	229
	24-12X	1	239
	24-13	1	188
G4 (TYPE 18) G5,G6	18-8S	1	187
	18-9X	1	187
	18-10	1	149
GT1,GT2	18-8S	2	374
	18-9X	2	374
	18-10	2	298
GT3,GT4	24-10C	2	404
	24-10S	2	458
	24-12X	2	478
	24-13	2	376
ODI	36RX (Mod)	1	196
GMP,GCP,GCPI	36RX	1	215
ODI	36R (Mod)	1	220
GMP,GCP,GCPI	36R	1	236
TRASH RACK			22
GRATE CHAIN			3

STATE OF CALIFORNIA
DEPARTMENT OF TRANSPORTATION

GRATE DETAILS No. 2

NO SCALE

RSP D77B DATED APRIL 19, 2013 SUPERSEDES RSP D77B DATED JULY 20, 2012 AND STANDARD PLAN D77B DATED MAY 20, 2011 - PAGE 165 OF THE STANDARD PLANS BOOK DATED 2010.

REVISED STANDARD PLAN RSP D77B

4-4-13

Dist	COUNTY	ROUTE	POST MILES TOTAL PROJECT	SHEET No.	TOTAL SHEETS
07	LA	5	0.0/7.6	599	985

REGISTERED CIVIL ENGINEER

April 19, 2013
PLANS APPROVAL DATE

REGISTERED PROFESSIONAL ENGINEER
Gurinderpal Bhullar
No. C48815
Exp. 9-30-14
CIVIL
STATE OF CALIFORNIA

THE STATE OF CALIFORNIA OR ITS OFFICERS OR AGENTS SHALL NOT BE RESPONSIBLE FOR THE ACCURACY OR COMPLETENESS OF SCANNED COPIES OF THIS PLAN SHEET.

TO ACCOMPANY PLANS DATED 6-24-13

2010 REVISED STANDARD PLAN RSP T9

TABLE 1

TAPER LENGTH CRITERIA AND CHANNELIZING DEVICE SPACING

SPEED (S)	MINIMUM TAPER LENGTH * FOR WIDTH OF OFFSET 12 FEET (W)				MAXIMUM CHANNELIZING DEVICE SPACING		
					X	Y	Z **
	TANGENT 2L	MERGING L	SHIFTING L/2	SHOULDER L/3	TAPER	TANGENT	CONFLICT
mph	ft	ft	ft	ft	ft	ft	ft
20	160	80	40	27	20	40	10
25	250	125	63	42	25	50	12
30	360	180	90	60	30	60	15
35	490	245	123	82	35	70	17
40	640	320	160	107	40	80	20
45	1080	540	270	180	45	90	22
50	1200	600	300	200	50	100	25
55	1320	660	330	220	55	110	27
60	1440	720	360	240	60	120	30
65	1560	780	390	260	65	130	32
70	1680	840	420	280	70	140	35

* - For other offsets, use the following merging taper length formula for L:
For speed of 40 mph or less, $L = WS^2/60$
For speed of 45 mph or more, $L = WS$

Where: L = Taper length in feet
W = Width of offset in feet
S = Posted speed limit, off-peak 85th-percentile speed prior to work starting, or the anticipated operating speed in mph

** - Use for taper and tangent sections where there are no pavement markings or where there is a conflict between existing pavement markings and channelizers (CA).

TABLE 2

LONGITUDINAL BUFFER SPACE AND FLAGGER STATION SPACING

SPEED *	Min D **	DOWNGRADE Min D ***		
		-3%	-6%	-9%
mph	ft	ft	ft	ft
20	115	116	120	126
25	155	158	165	173
30	200	205	215	227
35	250	257	271	287
40	305	315	333	354
45	360	378	400	427
50	425	446	474	507
55	495	520	553	593
60	570	598	638	686
65	645	682	728	785
70	730	771	825	891

* - Speed is posted speed limit, off-peak 85th-percentile speed prior to work starting, or the anticipated operating speed in mph

** - Longitudinal buffer space or flagger station spacing

*** - Use on sustained downgrade steeper than -3 percent and longer than 1 mile.

TABLE 3

ADVANCE WARNING SIGN SPACING

ROAD TYPE	DISTANCE BETWEEN SIGNS *		
	A	B	C
	ft	ft	ft
URBAN - 25 mph OR LESS	100	100	100
URBAN - MORE THAN 25 mph TO 40 mph	250	250	250
URBAN - MORE THAN 40 mph	350	350	350
RURAL	500	500	500
EXPRESSWAY / FREEWAY	1000	1500	2640

* - The distances are approximate, are intended for guidance purposes only, and should be applied with engineering judgment. These distances should be adjusted by the Engineer for field conditions, if necessary, by increasing or decreasing the recommmended distances.

STATE OF CALIFORNIA
DEPARTMENT OF TRANSPORTATION

TRAFFIC CONTROL SYSTEM FOR LANE CLOSURE ON FREEWAYS AND EXPRESSWAYS

NO SCALE

RSP T9 DATED APRIL 19, 2013 SUPPLEMENTS THE STANDARD PLANS BOOK DATED 2010.

REVISED STANDARD PLAN RSP T9

1-23-13

Dist	COUNTY	ROUTE	POST MILES TOTAL PROJECT	SHEET No.	TOTAL SHEETS
07	LA	5	0.0/7.6	600	985

REGISTERED CIVIL ENGINEER

April 19, 2013
PLANS APPROVAL DATE

REGISTERED PROFESSIONAL ENGINEER Gurinderpal Bhullar No. C48815 Exp. 9-30-14 CIVIL STATE OF CALIFORNIA

THE STATE OF CALIFORNIA OR ITS OFFICERS OR AGENTS SHALL NOT BE RESPONSIBLE FOR THE ACCURACY OR COMPLETENESS OF SCANNED COPIES OF THIS PLAN SHEET.

TO ACCOMPANY PLANS DATED 6-24-13

NOTES:

See Revised Standard Plan RSP T9 for tables.

Use cone spacing X for taper segment, Y for tangent segment or Z for conflict situations, as approriate, per Table 1, unless X, Y, or Z cone spacing is shown on this sheet.

Unless otherwise specified in the special provisions, all temporary warning signs shall have black legend on fluorescent orange background.

California codes are designated by (CA). Otherwise, Federal (MUTCD) codes are shown.

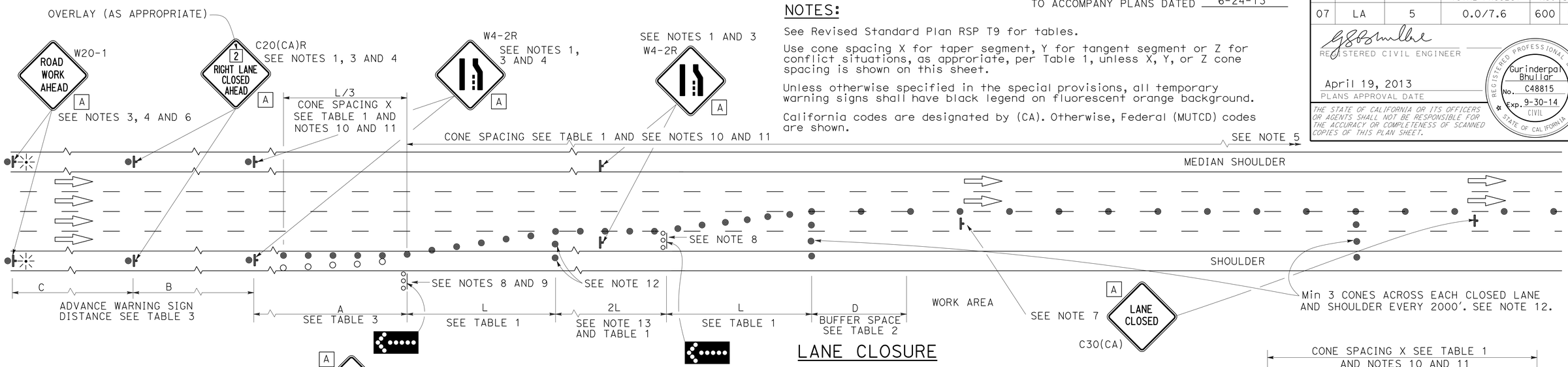

LANE CLOSURE

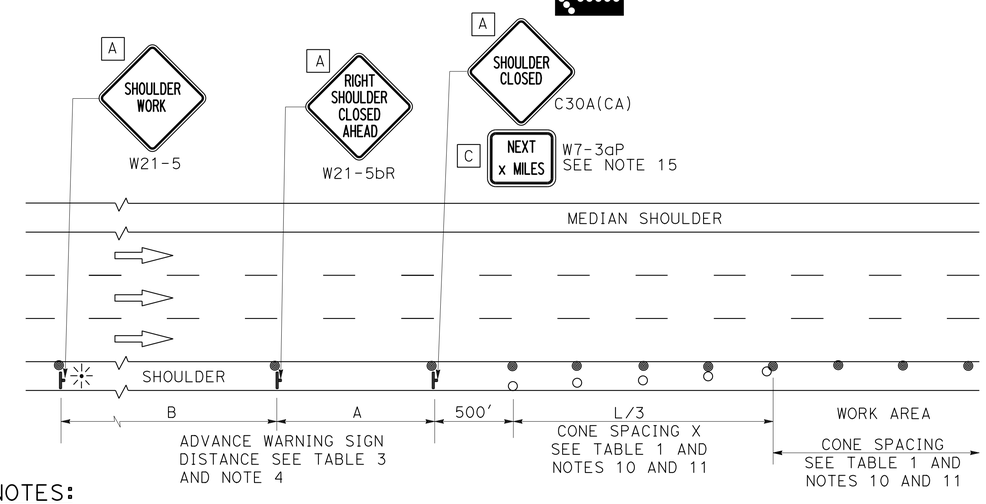

SHOULDER CLOSURE

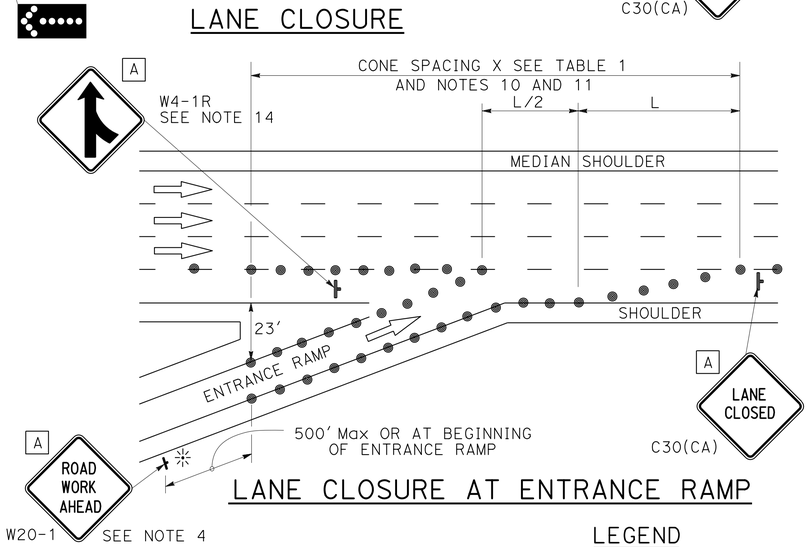

LANE CLOSURE AT ENTRANCE RAMP

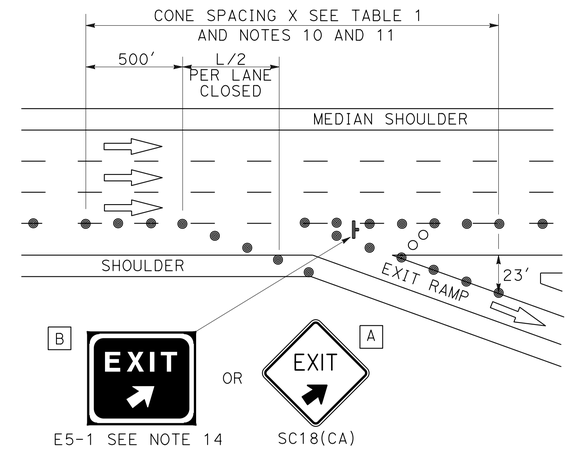

LANE CLOSURE AT EXIT RAMP

NOTES:

1. Median lane closures shall conform to the details as shown except that C20(CA)L and W4-2L signs shall be used.
2. At least one person shall be assigned to provide full time maintenance of traffic control devices for lane closures.
3. Duplicate sign installations are not required:
   a) On opposite shoulder if at least one-half of the available lanes remain open to traffic.
   b) In the median if the width of the median shoulder is less than 8' and the outside lanes are to be closed.
4. Each advance warning sign on each side of the roadway shall be equipped with at least two flags for daytime closure. Each flag shall be at least 16" x 16" in size and shall be orange or fluorescent red-orange in color. Flashing beacons shall be placed at the locations indicated for lane closure during hours of darkness.
5. A G20-2 "END ROAD WORK" sign, with minimum size of 48" x 24" as appropriate, shall be placed at the end of the lane closure unless the end of work area is obvious or ends within a larger project's limits.
6. If the W20-1 sign would follow within 2000' of a stationary W20-1 or G20-1 "ROAD WORK NEXT _____ MILES", use a C20(CA) sign for the first advance warning sign.
7. Place a C30(CA) sign every 2000' throughout length of lane closure.
8. One flashing arrow sign for each lane closed. The flashing arrow signs shall be Type I.
9. A minimum 1500' of sight distance shall be provided where possible for vehicles approaching the first flashing arrow sign. Lane closures shall not begin at top of crest vertical curve or on a horizontal curve.
10. All cones used for lane closures during the hours of darkness shall be fitted with retroreflective bands (or sleeves) as specified in the specifications.
11. Portable delineators, placed at one-half the spacing indicated for traffic cones may be used instead of cones for daytime closures only.
12. Unless otherwise specified in the special provisions, a minimum of 3 cones shall be placed transversely across each closed lane and shoulder at each location where a taper across a traffic lane ends and every 2000' as shown on the "Lane Closure" detail. Two Type II barricades may be used instead of the 3 cones. The transverse alignment of the cones or barricades on the closed shoulder may be shifted from the transverse alignment to provide access to the work.
13. Unless otherwise specified in the special provisions, the 2L tangent shown along lane lines shall be used between the L tapers required for each closed traffic lane.
14. Unless otherwise specified in the special provisions, the E5-1 or SC18(CA) and W4-1 signs shall be used as shown.
15. A W7-3aP "NEXT____ MILES" plaque must be used if theshoulder closure extends beyond the distance that can be perceived by road users.

LEGEND

- TRAFFIC CONE
- TRAFFIC CONE (OPTIONAL TAPER)
- TEMPORARY TRAFFIC CONTROL SIGN
- FLASHING ARROW SIGN (FAS)
- FAS SUPPORT OR TRAILER
- PORTABLE FLASHING BEACON

SIGN PANEL SIZE (Min)

A	48" x 48"
B	72" x 60"
C	36" x 30"

STATE OF CALIFORNIA
DEPARTMENT OF TRANSPORTATION

TRAFFIC CONTROL SYSTEM FOR LANE CLOSURE ON FREEWAYS AND EXPRESSWAYS

NO SCALE

RSP T10 DATED APRIL 19, 2013 SUPERSEDES STANDARD PLAN T10 DATED MAY 20, 2011 - PAGE 237 OF THE STANDARD PLANS BOOK DATED 2010.

REVISED STANDARD PLAN RSP T10

2010 REVISED STANDARD PLAN RSP T10

12-18-12