Dist	COUNTY	ROUTE	POST MILES TOTAL PROJECT	SHEET No.	TOTAL SHEETS
07	LA	5	29.4/31.6	1771	1931

David McCord 05-21-12
REGISTERED CIVIL ENGINEER DATE

05-21-12
PLANS APPROVAL DATE

REGISTERED PROFESSIONAL ENGINEER DAVID WILLIAM McCORD No. E-15317 Exp. June 30, 2013 ELECTRICAL STATE OF CALIFORNIA

THE STATE OF CALIFORNIA OR ITS OFFICERS OR AGENTS SHALL NOT BE RESPONSIBLE FOR THE ACCURACY OR COMPLETENESS OF SCANNED COPIES OF THIS PLAN SHEET.

SCRRA
279 E. ARROW HIGHWAY
SAN DIMAS, CA 91773

XORAIL
201 NORTH INDIAN HILL BLVD
SUITE 201
CLAREMONT, CA 91711

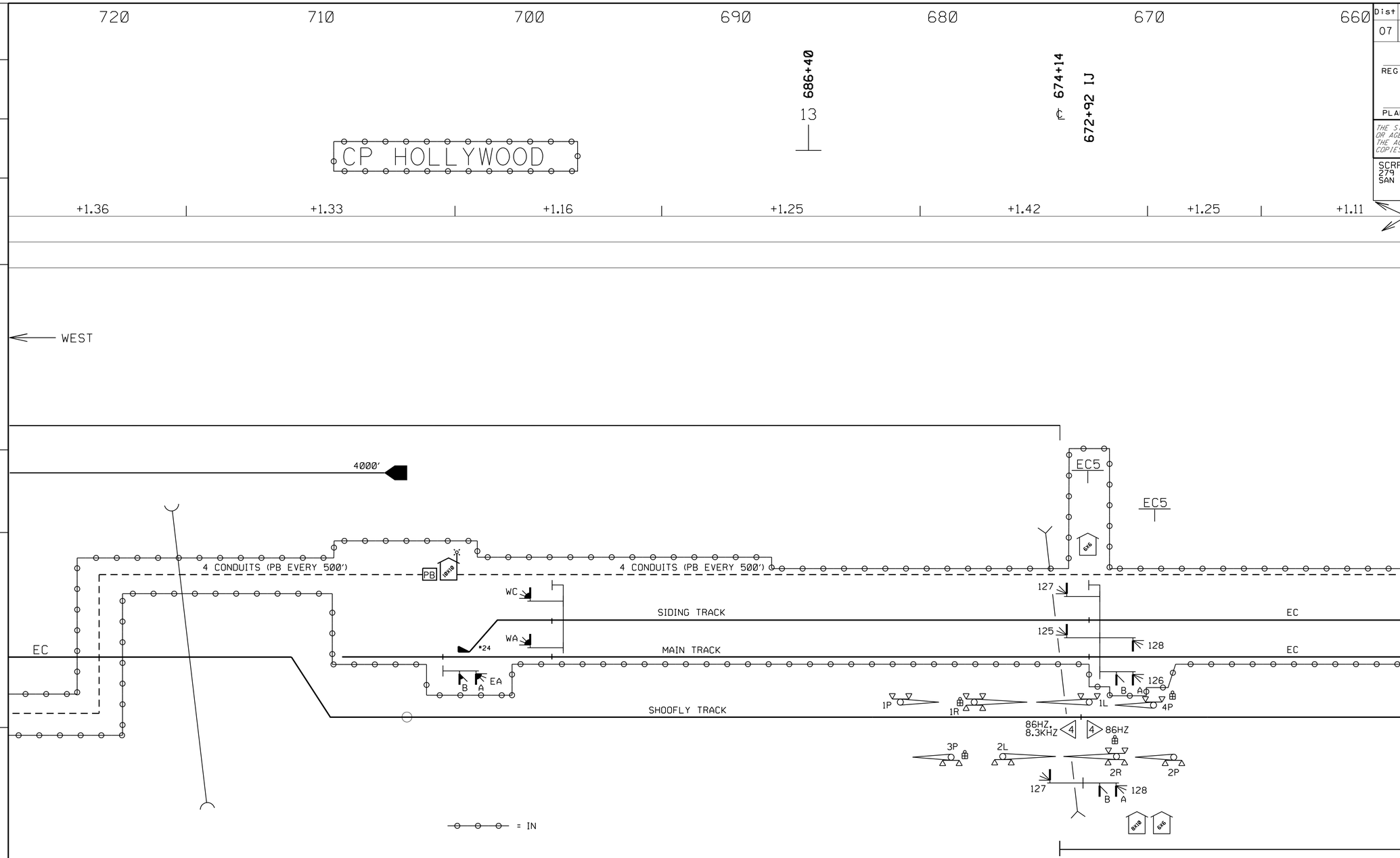

GRADES
#1
CURVES
#2

LEGEND

- METER SERVICE
- MS 500
- HXP BI-DIRECTIONAL
- HXP UNI-DIRECTIONAL
- GCP 3000 BI-DIRECTIONAL
- GCP 3000 UNI-DIRECTIONAL
- GCP 4000 BI-DIRECTIONAL
- GCP 4000 UNI-DIRECTIONAL
- PREDICTION LIMITS
- ADVANCED PREEMTION LIMITS
- DAX FEED FROM THIS LOCATION
- NARROW BAND SHUNT
- WIDE BAND SHUNT
- EC = TRACK CODE
- LC = LINE CODE
- DWBS = DUAL WIDE BAND SHUNT AROUND INSULATED JOINT, EACH RAIL
- DRAGGING EQUIPMENT DETECTOR
- HOT BOX DETECTOR
- HIGH/WIDE LOAD DETECTOR
- STOP SIGN
- SPRING SWITCH
- POWER SWITCH
- ELECTRIC LOCK
- SELECTOR WIRED SWITCH
- TJC = TUNED JOINT COUPLER AROUND INSULATED JOINT, EACH RAIL
- BSC = BI-DIRECTIONAL SIMULATION CONFIGURATION
- HIGH WATER DETECTOR
- PERMISSIVE PLATE
- UNDERPASS
- OVERPASS
- CROSSING

SIGNAL STAGE 2 (PHASE 2 & 3)

RR-SP-011

HOLLYWOOD WAY
VY-13.57
DOT 746783K

BUENA VISTA STREET
VY-12.77
(ADVANCED TRAFFIC PREEMPTION 32 SEC) *

* - SPEED REDUCED TO 60 MPH

79 MPH/50 MPH

0 500
SCALE IN FEET

THIS PLAN ACCURATE FOR RAILROAD WORK ONLY.

RAILROAD SHEET NO.
11 OF 171

CENTRALIZED TRAFFIC CONTROL
SUN VALLEY
SIDING PROJECT
VY 11-13
SH. 1 OF 2
10/12/99

STATE OF CALIFORNIA - DEPARTMENT OF TRANSPORTATION
Caltrans
DESIGN

CONSULTANT FUNCTIONAL SUPERVISOR: GLENN BREINDEL
CALCULATED-DESIGNED BY: RAMON VALDEZ
CHECKED BY
REVISED BY
DATE REVISED

LAST REVISION 00-00-00
DATE PLOTTED 7/18/2012
TIME PLOTTED 2:47:08 PM

Dist	COUNTY	ROUTE	POST MILES TOTAL PROJECT	SHEET No.	TOTAL SHEETS
07	LA	5	29.4/31.6	1772	1931

David McCord 05-21-12
REGISTERED CIVIL ENGINEER DATE

05-21-12
PLANS APPROVAL DATE

REGISTERED PROFESSIONAL ENGINEER DAVID WILLIAM McCORD No. E-15317 Exp. June 30, 2013 ELECTRICAL STATE OF CALIFORNIA

THE STATE OF CALIFORNIA OR ITS OFFICERS OR AGENTS SHALL NOT BE RESPONSIBLE FOR THE ACCURACY OR COMPLETENESS OF SCANNED COPIES OF THIS PLAN SHEET.

SCRRA
279 E. ARROW HIGHWAY
SAN DIMAS, CA 91773

XORAIL
201 NORTH INDIAN HILL BLVD
SUITE 201
CLAREMONT, CA 91711

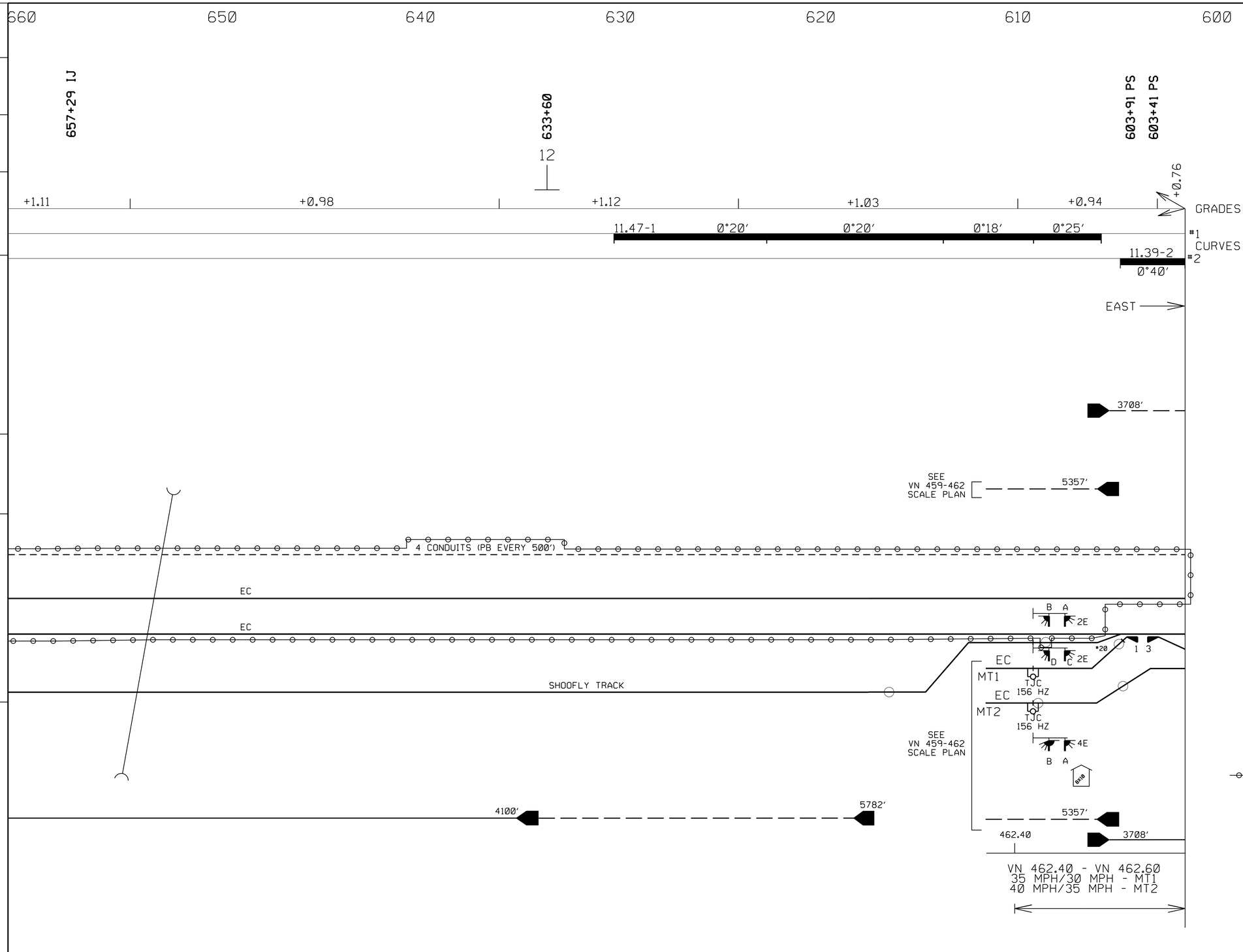

THIS PLAN ACCURATE FOR RAILROAD WORK ONLY.

LEGEND

- METER SERVICE
- MS 500
- HXP BI-DIRECTIONAL
- HXP UNI-DIRECTIONAL
- GCP 3000 BI-DIRECTIONAL
- GCP 3000 UNI-DIRECTIONAL
- GCP 4000 BI-DIRECTIONAL
- GCP 4000 UNI-DIRECTIONAL
- PREDICTION LIMITS
- ADVANCED PREEMTION LIMITS
- DAX FEED FROM THIS LOCATION
- NARROW BAND SHUNT
- WIDE BAND SHUNT
- EC — TRACK CODE
- LC — LINE CODE
- DWBS — DUAL WIDE BAND SHUNT AROUND INSULATED JOINT, EACH RAIL
- DRAGGING EQUIPMENT DETECTOR
- HOT BOX DETECTOR
- HIGH/WIDE LOAD DETECTOR
- STOP SIGN
- SPRING SWITCH
- POWER SWITCH
- ELECTRIC LOCK
- SELECTOR WIRED SWITCH
- TJC — TUNED JOINT COUPLER AROUND INSULATED JOINT, EACH RAIL
- BSC — BI-DIRECTIONAL SIMULATION CONFIGURATION
- HIGH WATER DETECTOR
- PERMISSIVE PLATE
- UNDERPASS
- OVERPASS
- CROSSING

SIGNAL STAGE 2 (PHASE 2 & 3)

RR-SP-012

CENTRALIZED TRAFFIC CONTROL
SUN VALLEY
SIDING PROJECT
VY 11-13

SH. 2 OF 2 10/12/99

RAILROAD SHEET NO.
12 OF 171

STATE OF CALIFORNIA - DEPARTMENT OF TRANSPORTATION
DESIGN
CONSULTANT FUNCTIONAL SUPERVISOR: GLENN BREINDEL
CALCULATED-DESIGNED BY: RAMON VALDEZ
CHECKED BY
REVISED BY
DATE REVISED

LAST REVISION 00-00-00
DATE PLOTTED = 7/18/2012
TIME PLOTTED = 2:47:09 PM

Dist	COUNTY	ROUTE	POST MILES TOTAL PROJECT	SHEET No.	TOTAL SHEETS
07	LA	5	29.4/31.6	1773	1931

David McCord 05-21-12
REGISTERED CIVIL ENGINEER DATE

05-21-12
PLANS APPROVAL DATE

REGISTERED PROFESSIONAL ENGINEER DAVID WILLIAM McCORD No. E-15317 Exp. June 30, 2013 ELECTRICAL STATE OF CALIFORNIA

THE STATE OF CALIFORNIA OR ITS OFFICERS OR AGENTS SHALL NOT BE RESPONSIBLE FOR THE ACCURACY OR COMPLETENESS OF SCANNED COPIES OF THIS PLAN SHEET.

SCRRA
279 E. ARROW HIGHWAY
SAN DIMAS, CA 91773

XORAIL
201 NORTH INDIAN HILL BLVD
SUITE 201
CLAREMONT, CA 91711

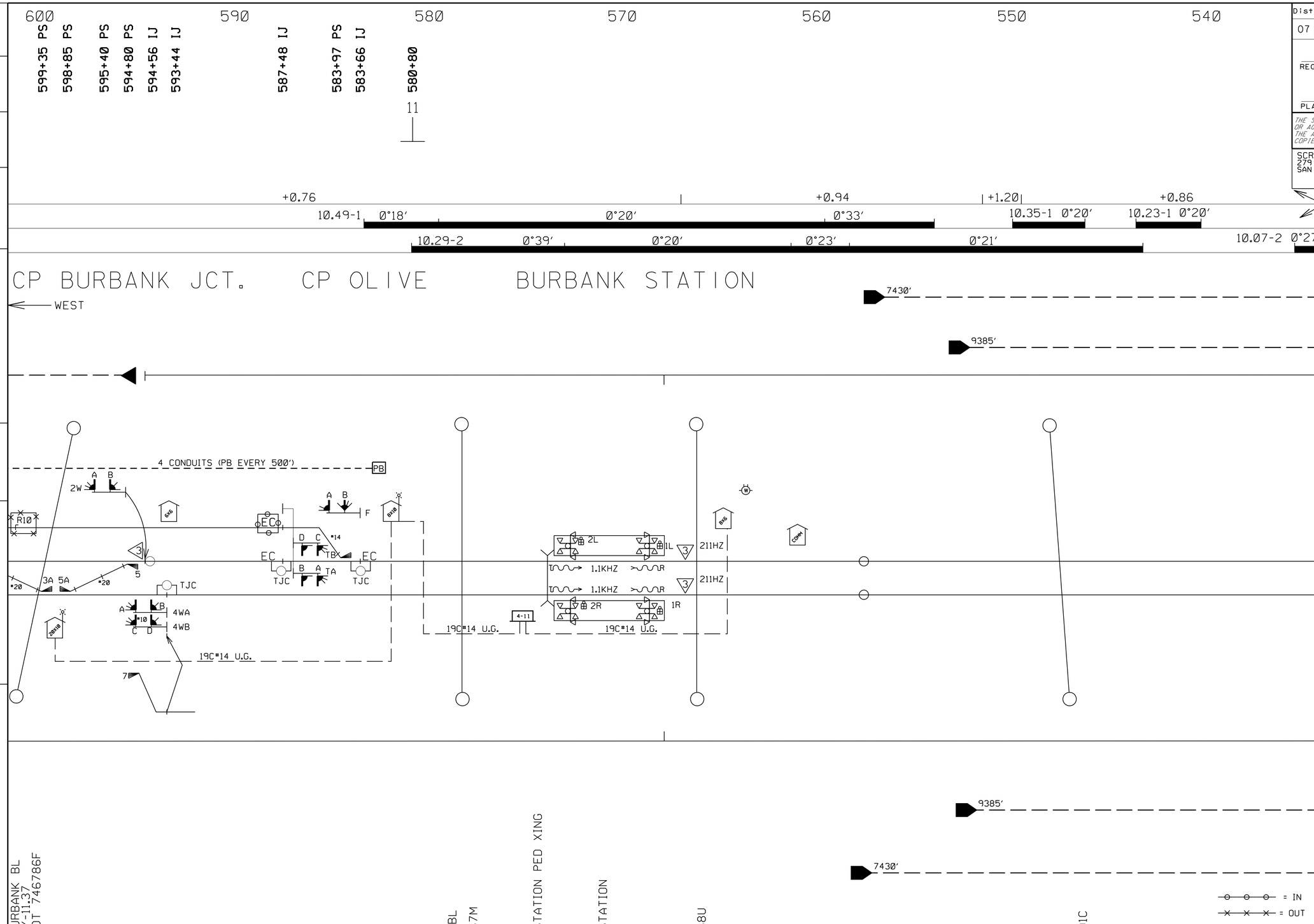

THIS PLAN ACCURATE FOR RAILROAD WORK ONLY.

GRADES

LEGEND

#1 CURVES #2

- = METER SERVICE
- = MS 500
- = HXP BI-DIRECTIONAL
- = HXP UNI-DIRECTIONAL
- = GCP 3000 BI-DIRECTIONAL
- = GCP 3000 UNI-DIRECTIONAL
- = GCP 4000 BI-DIRECTIONAL
- = GCP 4000 UNI-DIRECTIONAL
- = PREDICTION LIMITS
- = ADVANCED PREEMTION LIMITS
- = DAX FEED FROM THIS LOCATION
- = NARROW BAND SHUNT
- = WIDE BAND SHUNT
- EC = TRACK CODE
- LC = LINE CODE
- DWBS = DUAL WIDE BAND SHUNT AROUND INSULATED JOINT, EACH RAIL
- = DRAGGING EQUIPMENT DETECTOR
- = HOT BOX DETECTOR
- = HIGH/WIDE LOAD DETECTOR
- = STOP SIGN
- = SPRING SWITCH
- = POWER SWITCH
- = ELECTRIC LOCK
- = SELECTOR WIRED SWITCH
- TJC = TUNED JOINT COUPLER AROUND INSULATED JOINT, EACH RAIL
- BSC = BI-DIRECTIONAL SIMULATION CONFIGURATION
- = HIGH WATER DETECTOR
- = PERMISSIVE PLATE
- = UNDERPASS
- = OVERPASS
- = CROSSING

SIGNAL STAGE 3

RR-SP-013

CENTRALIZED TRAFFIC CONTROL
CP BURBANK JCT.-
SONORA AVE.
VY 8-11

SH. 1 OF 2 01/19/99

RAILROAD SHEET NO.
13 OF 171

STATE OF CALIFORNIA - DEPARTMENT OF TRANSPORTATION
Caltrans® DESIGN

CONSULTANT FUNCTIONAL SUPERVISOR: GLENN BREINDEL
CALCULATED-DESIGNED BY: RAMON VALDEZ
CHECKED BY
REVISED BY
DATE REVISED

LAST REVISION 00-00-00
DATE PLOTTED 7/18/2012
TIME PLOTTED 2:47:10 PM

Dist	COUNTY	ROUTE	POST MILES TOTAL PROJECT	SHEET No.	TOTAL SHEETS
07	LA	5	29.4/31.6	1774	1931

David McCord 05-21-12
REGISTERED CIVIL ENGINEER DATE

05-21-12
PLANS APPROVAL DATE

REGISTERED PROFESSIONAL ENGINEER DAVID WILLIAM McCORD No. E-15317 Exp. June 30, 2013 ELECTRICAL STATE OF CALIFORNIA

THE STATE OF CALIFORNIA OR ITS OFFICERS OR AGENTS SHALL NOT BE RESPONSIBLE FOR THE ACCURACY OR COMPLETENESS OF SCANNED COPIES OF THIS PLAN SHEET.

SCRRA
279 E. ARROW HIGHWAY
SAN DIMAS, CA 91773

XORAIL
201 NORTH INDIAN HILL BLVD
SUITE 201
CLAREMONT, CA 91711

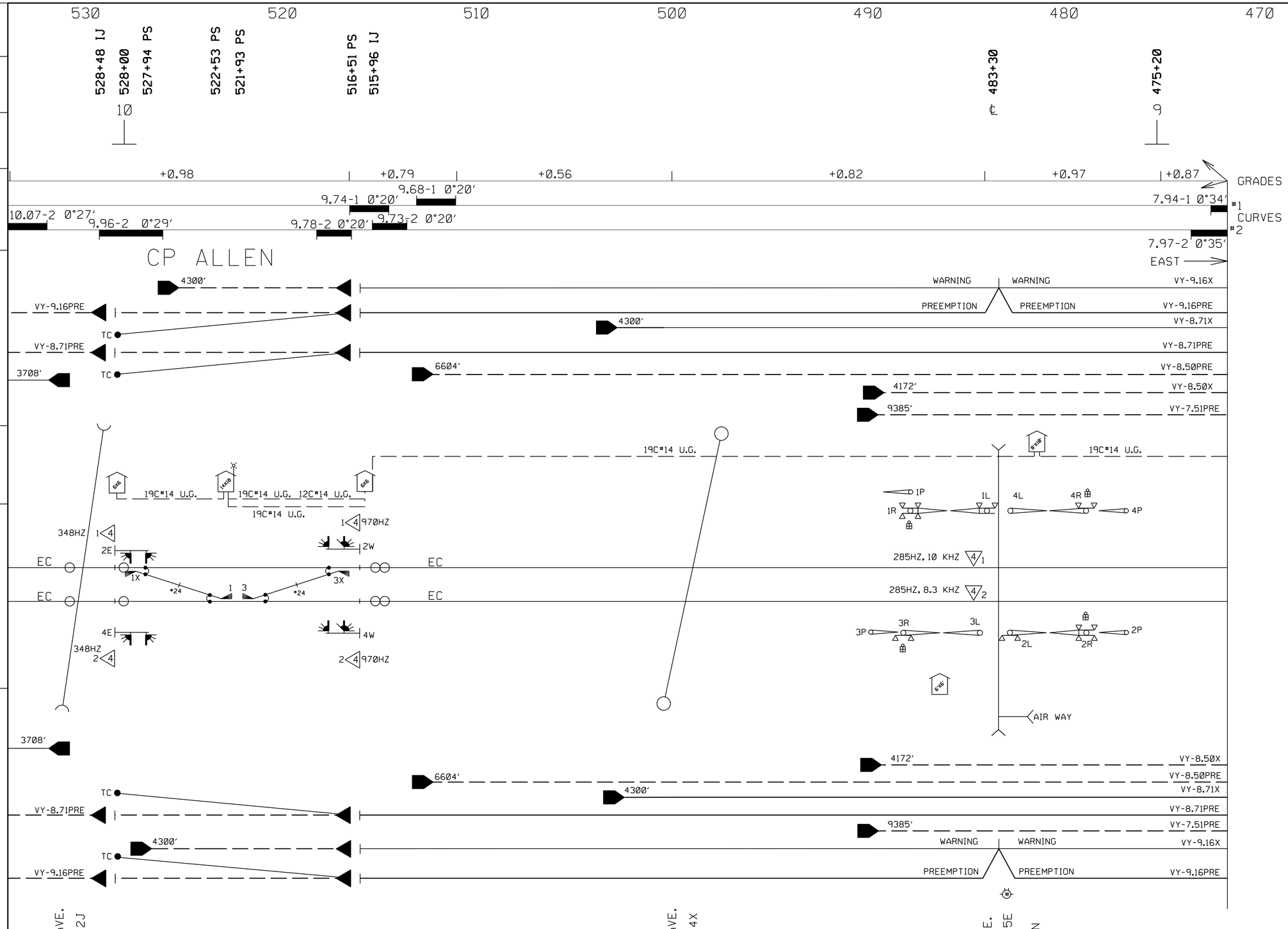

LEGEND

- : METER SERVICE
- : MS 500
- : HXP BI-DIRECTIONAL
- : HXP UNI-DIRECTIONAL
- : GCP 3000 BI-DIRECTIONAL
- : GCP 3000 UNI-DIRECTIONAL
- : GCP 4000 BI-DIRECTIONAL
- : GCP 4000 UNI-DIRECTIONAL
- : PREDICTION LIMITS
- : ADVANCED PREEMTION LIMITS
- : DAX FEED FROM THIS LOCATION
- : NARROW BAND SHUNT
- : WIDE BAND SHUNT
- EC : TRACK CODE
- LC : LINE CODE
- DWBS : DUAL WIDE BAND SHUNT AROUND INSULATED JOINT, EACH RAIL
- : DRAGGING EQUIPMENT DETECTOR
- : HOT BOX DETECTOR
- : HIGH/WIDE LOAD DETECTOR
- : STOP SIGN
- : SPRING SWITCH
- : POWER SWITCH
- : ELECTRIC LOCK
- : SELECTOR WIRED SWITCH
- TJC : TUNED JOINT COUPLER AROUND INSULATED JOINT, EACH RAIL
- BSC : BI-DIRECTIONAL SIMULATION CONFIGURATION
- : HIGH WATER DETECTOR
- : PERMISSIVE PLATE
- : UNDERPASS
- : OVERPASS
- : CROSSING

SIGNAL STAGE 3

RR-SP-014

CENTRALIZED TRAFFIC CONTROL
CP BURBANK JCT.-
SONORA AVE.
VY 8-11

SH. 2 OF 2 01/19/99

RAILROAD SHEET NO.
14 OF 171

REVISED BY | DATE REVISED
RAMON VALDEZ
CALCULATED-DESIGNED BY | CHECKED BY
CONSULTANT FUNCTIONAL SUPERVISOR
GLENN BREINDEL
STATE OF CALIFORNIA - DEPARTMENT OF TRANSPORTATION
DESIGN
Caltrans

LAST REVISION 00-00-00 | DATE PLOTTED 7/18/2012 | TIME PLOTTED 2:47:11 PM

BORDER LAST REVISED 7/2/2010 | USERNAME = gharibiana | DGN FILE = ...\moc\xorail\sheet\SP-014-.sht | RELATIVE BORDER SCALE IS IN INCHES 0 1 2 3 | UNIT 1812 | PROJECT NUMBER & PHASE 07000211191

Dist	COUNTY	ROUTE	POST MILES TOTAL PROJECT	SHEET No.	TOTAL SHEETS
07	LA	5	29.4/31.6	1775	1931

David McCord 05-21-12
REGISTERED CIVIL ENGINEER DATE

05-21-12
PLANS APPROVAL DATE

REGISTERED PROFESSIONAL ENGINEER DAVID WILLIAM McCORD No. E-15317 Exp. June 30, 2013 ELECTRICAL STATE OF CALIFORNIA

THE STATE OF CALIFORNIA OR ITS OFFICERS OR AGENTS SHALL NOT BE RESPONSIBLE FOR THE ACCURACY OR COMPLETENESS OF SCANNED COPIES OF THIS PLAN SHEET.

SCRRA
279 E. ARROW HIGHWAY
SAN DIMAS, CA 91773

XORAIL
201 NORTH INDIAN HILL BLVD
SUITE 201
CLAREMONT, CA 91711

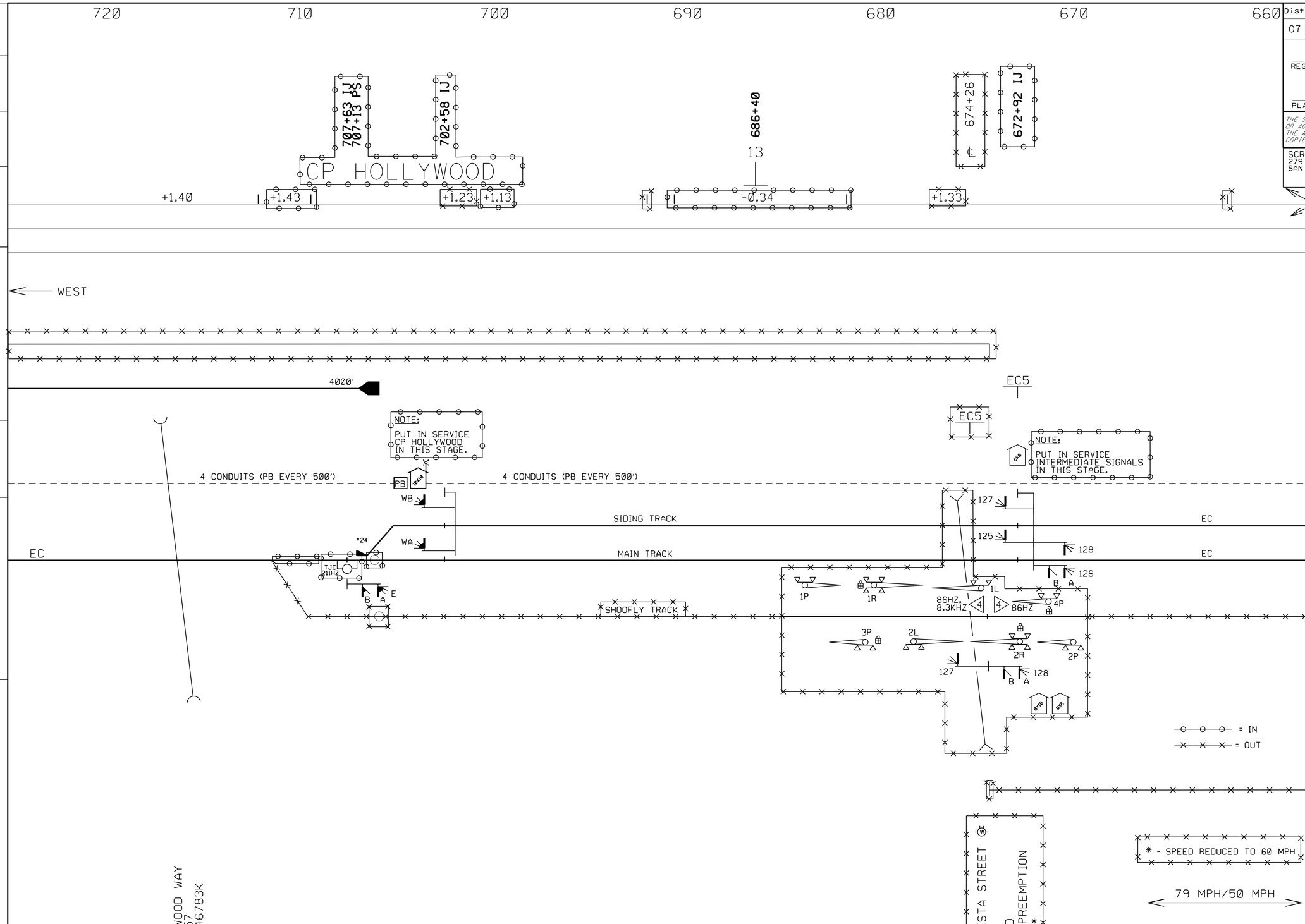

GRADES
#1
CURVES
#2

LEGEND

- METER SERVICE
- MS 500
- HXP BI-DIRECTIONAL
- HXP UNI-DIRECTIONAL
- GCP 3000 BI-DIRECTIONAL
- GCP 3000 UNI-DIRECTIONAL
- GCP 4000 BI-DIRECTIONAL
- GCP 4000 UNI-DIRECTIONAL
- PREDICTION LIMITS
- ADVANCED PREEMTION LIMITS
- DAX FEED FROM THIS LOCATION
- NARROW BAND SHUNT
- WIDE BAND SHUNT
- EC = TRACK CODE
- LC = LINE CODE
- DWBS = DUAL WIDE BAND SHUNT AROUND INSULATED JOINT, EACH RAIL
- DRAGGING EQUIPMENT DETECTOR
- HOT BOX DETECTOR
- HIGH/WIDE LOAD DETECTOR
- STOP SIGN
- SPRING SWITCH
- POWER SWITCH
- ELECTRIC LOCK
- SELECTOR WIRED SWITCH
- TJC = TUNED JOINT COUPLER AROUND INSULATED JOINT, EACH RAIL
- BSC = BI-DIRECTIONAL SIMULATION CONFIGURATION
- HIGH WATER DETECTOR
- PERMISSIVE PLATE
- UNDERPASS
- OVERPASS
- CROSSING

SIGNAL STAGE 3

RR-SP-015

* - SPEED REDUCED TO 60 MPH

79 MPH/50 MPH

BUENA VISTA STREET
VY-12.77
ADVANCED TRAFFIC PREEMPTION *
(32 SEC)

0 500
SCALE IN FEET

HOLLYWOOD WAY
VY-13.57
DOT 746783K

THIS PLAN ACCURATE FOR RAILROAD WORK ONLY.

RAILROAD SHEET NO.
15 OF 171

CENTRALIZED TRAFFIC CONTROL
SUN VALLEY
SIDING PROJECT
VY 11-13
SH. 1 OF 2
10/12/99

STATE OF CALIFORNIA - DEPARTMENT OF TRANSPORTATION
DESIGN
CONSULTANT FUNCTIONAL SUPERVISOR: GLENN BREINDEL
CALCULATED-DESIGNED BY: RAMON VALDEZ
CHECKED BY
REVISED BY
DATE REVISED

LAST REVISION 00-00-00
DATE PLOTTED = 7/18/2012
TIME PLOTTED = 23:47:12 PM

Dist	COUNTY	ROUTE	POST MILES TOTAL PROJECT	SHEET No.	TOTAL SHEETS
07	LA	5	29.4/31.6	1776	1931

David McCord 05-21-12
REGISTERED CIVIL ENGINEER DATE

05-21-12
PLANS APPROVAL DATE

REGISTERED PROFESSIONAL ENGINEER DAVID WILLIAM McCORD No. E-15317 Exp. June 30, 2013 ELECTRICAL STATE OF CALIFORNIA

THE STATE OF CALIFORNIA OR ITS OFFICERS OR AGENTS SHALL NOT BE RESPONSIBLE FOR THE ACCURACY OR COMPLETENESS OF SCANNED COPIES OF THIS PLAN SHEET.

SCRRA
279 E. ARROW HIGHWAY
SAN DIMAS, CA 91773

XORAIL
201 NORTH INDIAN HILL BLVD
SUITE 201
CLAREMONT, CA 91711

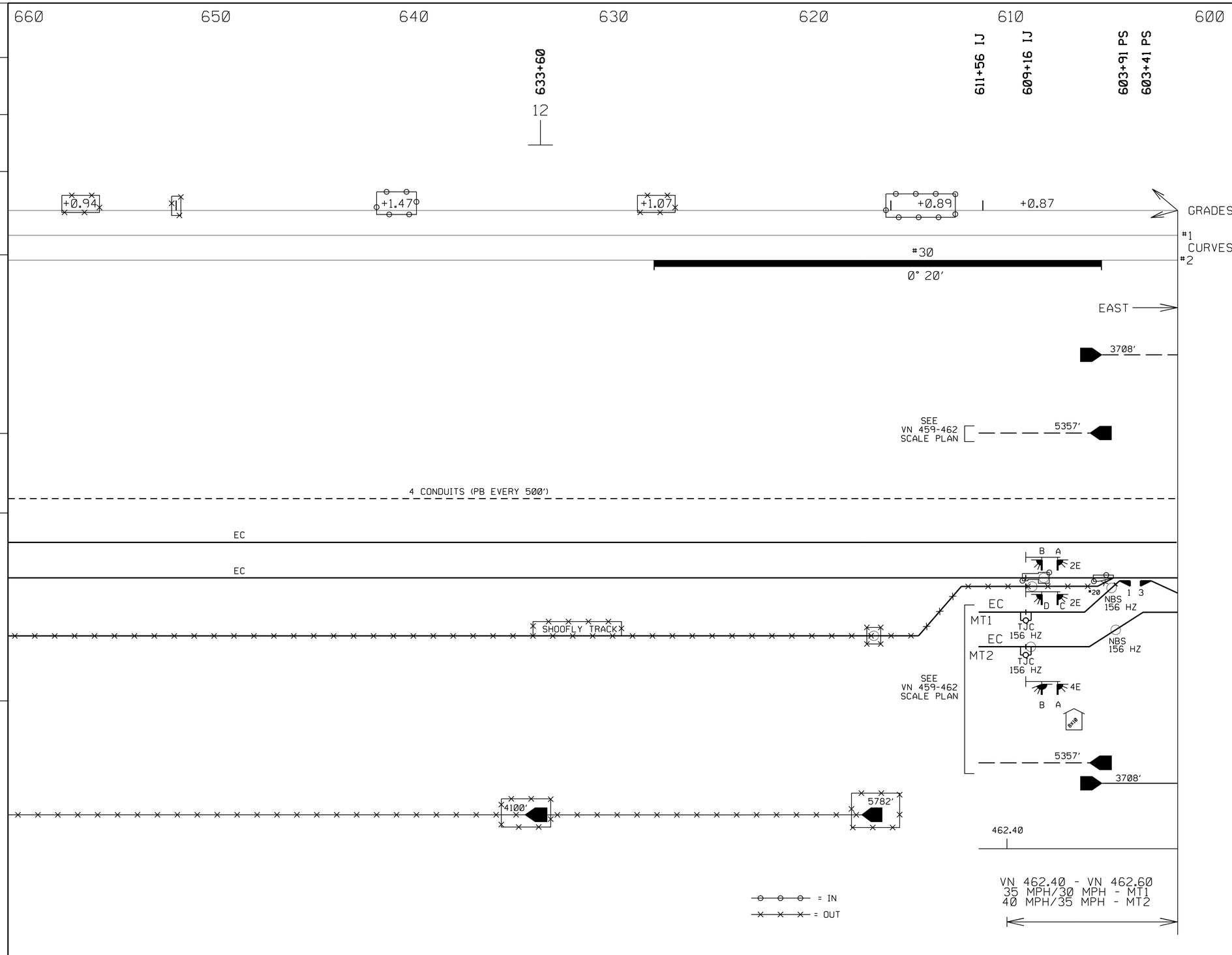

THIS PLAN ACCURATE FOR RAILROAD WORK ONLY.

LEGEND

- W = METER SERVICE
- 5 = MS 500
- H = HXP BI-DIRECTIONAL
- H = HXP UNI-DIRECTIONAL
- 3 = GCP 3000 BI-DIRECTIONAL
- 3 = GCP 3000 UNI-DIRECTIONAL
- 4 = GCP 4000 BI-DIRECTIONAL
- 4 = GCP 4000 UNI-DIRECTIONAL
- = PREDICTION LIMITS
- = ADVANCED PREEMTION LIMITS
- = DAX FEED FROM THIS LOCATION
- = NARROW BAND SHUNT
- = WIDE BAND SHUNT
- EC = TRACK CODE
- LC = LINE CODE
- DWBS = DUAL WIDE BAND SHUNT AROUND INSULATED JOINT, EACH RAIL
- = DRAGGING EQUIPMENT DETECTOR
- H = HOT BOX DETECTOR
- H = HIGH/WIDE LOAD DETECTOR
- L = HIGH/WIDE LOAD DETECTOR
- = STOP SIGN
- $ = SPRING SWITCH
- = POWER SWITCH
- = ELECTRIC LOCK
- = SELECTOR WIRED SWITCH
- TJC = TUNED JOINT COUPLER AROUND INSULATED JOINT, EACH RAIL
- BSC = BI-DIRECTIONAL SIMULATION CONFIGURATION
- W = HIGH WATER DETECTOR
- P = PERMISSIVE PLATE
- = UNDERPASS
- = OVERPASS
- = CROSSING

SIGNAL STAGE 3

RR-SP-016

CENTRALIZED TRAFFIC CONTROL
SUN VALLEY
SIDING PROJECT
VY 11-13

SH. 2 OF 2
10/12/99

RAILROAD SHEET NO.
16 OF 171

STATE OF CALIFORNIA - DEPARTMENT OF TRANSPORTATION
Caltrans DESIGN

CONSULTANT FUNCTIONAL SUPERVISOR: GLENN BREINDEL
CALCULATED-DESIGNED BY: RAMON VALDEZ
CHECKED BY
REVISED BY
DATE REVISED

LAST REVISION 00-00-00
DATE PLOTTED = 7/18/2012
TIME PLOTTED = 2:47:13 PM

BORDER LAST REVISED 7/2/2010
USERNAME = gharibiana
DGN FILE = ...\moc\xorail\sheet\SP-016-.sht
RELATIVE BORDER SCALE IS IN INCHES 0 1 2 3
UNIT 1812
PROJECT NUMBER & PHASE 07000211191

Dist	COUNTY	ROUTE	POST MILES TOTAL PROJECT	SHEET No.	TOTAL SHEETS
07	LA	5	29.4/31.6	1777	1931

David McCord 05-21-12
REGISTERED CIVIL ENGINEER DATE

05-21-12
PLANS APPROVAL DATE

REGISTERED PROFESSIONAL ENGINEER DAVID WILLIAM McCORD No. E-15317 Exp. June 30, 2013 ELECTRICAL STATE OF CALIFORNIA

THE STATE OF CALIFORNIA OR ITS OFFICERS OR AGENTS SHALL NOT BE RESPONSIBLE FOR THE ACCURACY OR COMPLETENESS OF SCANNED COPIES OF THIS PLAN SHEET.

SCRRA
279 E. ARROW HIGHWAY
SAN DIMAS, CA 91773

XORAIL
201 NORTH INDIAN HILL BLVD
SUITE 201
CLAREMONT, CA 91711

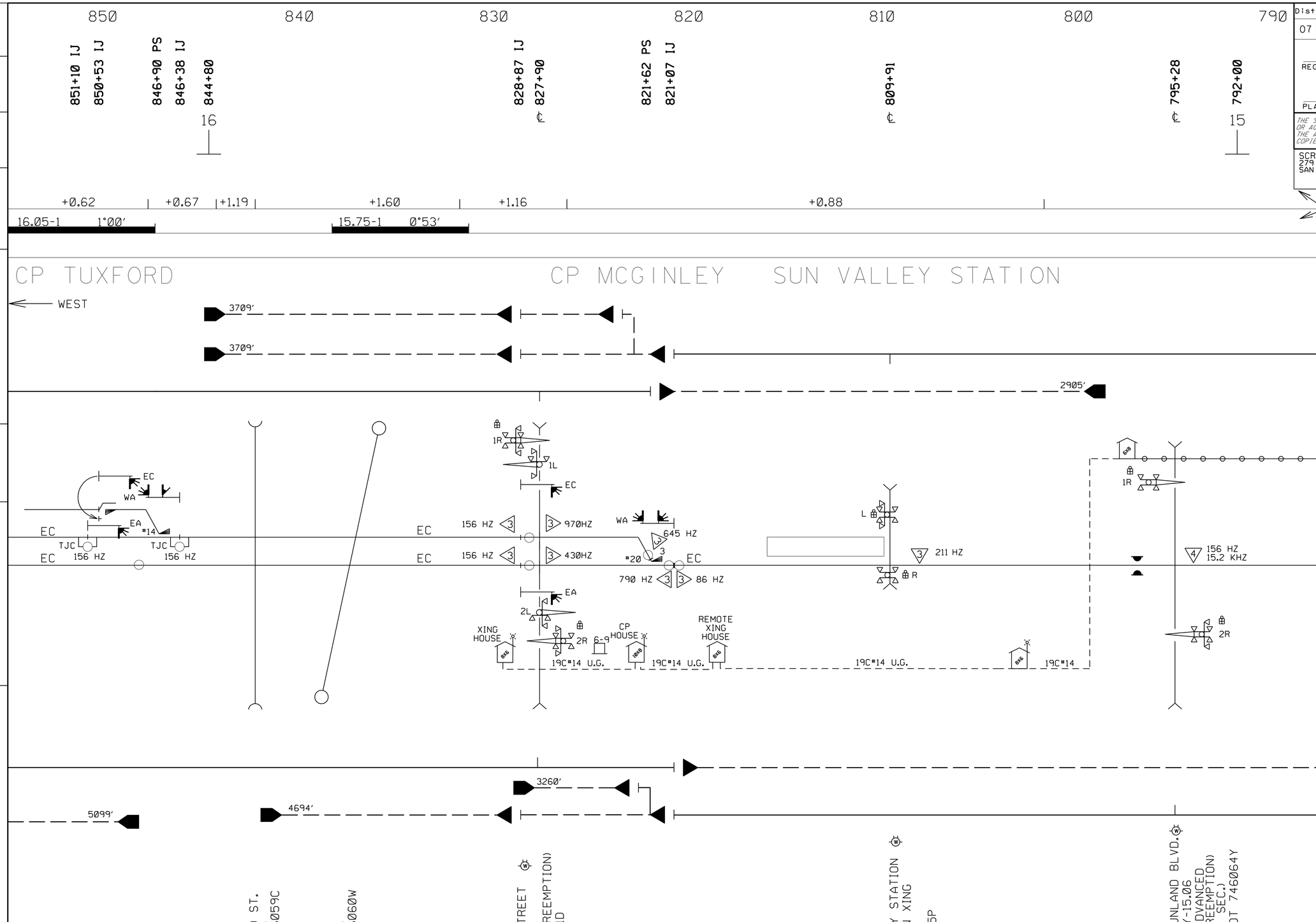

GRADES LEGEND

CURVES #1 #2

- METER SERVICE
- MS 500
- HXP BI-DIRECTIONAL
- HXP UNI-DIRECTIONAL
- GCP 3000 BI-DIRECTIONAL
- GCP 3000 UNI-DIRECTIONAL
- GCP 4000 BI-DIRECTIONAL
- GCP 4000 UNI-DIRECTIONAL
- PREDICTION LIMITS
- ADVANCED PREEMTION LIMITS
- DAX FEED FROM THIS LOCATION
- NARROW BAND SHUNT
- WIDE BAND SHUNT
- EC = TRACK CODE
- LC = LINE CODE
- DWBS = DUAL WIDE BAND SHUNT AROUND INSULATED JOINT, EACH RAIL
- DRAGGING EQUIPMENT DETECTOR
- HOT BOX DETECTOR
- HIGH/WIDE LOAD DETECTOR
- STOP SIGN
- SPRING SWITCH
- POWER SWITCH
- ELECTRIC LOCK
- SELECTOR WIRED SWITCH
- TJC = TUNED JOINT COUPLER AROUND INSULATED JOINT, EACH RAIL
- BSC = BI-DIRECTIONAL SIMULATION CONFIGURATION
- HIGH WATER DETECTOR
- PERMISSIVE PLATE
- UNDERPASS
- OVERPASS
- CROSSING

SIGNAL STAGE 3

RR-SP-017

THIS PLAN ACCURATE FOR RAILROAD WORK ONLY.

RAILROAD SHEET NO.
17 OF 171

CENTRALIZED TRAFFIC CONTROL
SUN VALLEY
SIDING PROJECT
VY 13-16
SH. 1 OF 2
10/12/99

STATE OF CALIFORNIA - DEPARTMENT OF TRANSPORTATION
DESIGN
Caltrans®

CONSULTANT FUNCTIONAL SUPERVISOR: GLENN BREINDEL
CALCULATED-DESIGNED BY: RAMON VALDEZ
CHECKED BY
REVISED BY
DATE REVISED

LAST REVISION 00-00-00
DATE PLOTTED = 7/18/2012
TIME PLOTTED = 21:47:14 PM

Dist	COUNTY	ROUTE	POST MILES TOTAL PROJECT	SHEET NO.	TOTAL SHEETS
07	LA	5	29.4/31.6	1778	1931

David McCord 05-21-12
REGISTERED CIVIL ENGINEER DATE

05-21-12
PLANS APPROVAL DATE

REGISTERED PROFESSIONAL ENGINEER DAVID WILLIAM McCORD No. E-15317 Exp. June 30, 2013 ELECTRICAL STATE OF CALIFORNIA

THE STATE OF CALIFORNIA OR ITS OFFICERS OR AGENTS SHALL NOT BE RESPONSIBLE FOR THE ACCURACY OR COMPLETENESS OF SCANNED COPIES OF THIS PLAN SHEET.

SCRRA
279 E. ARROW HIGHWAY
SAN DIMAS, CA 91773

XORAIL
201 NORTH INDIAN HILL BLVD
SUITE 201
CLAREMONT, CA 91711

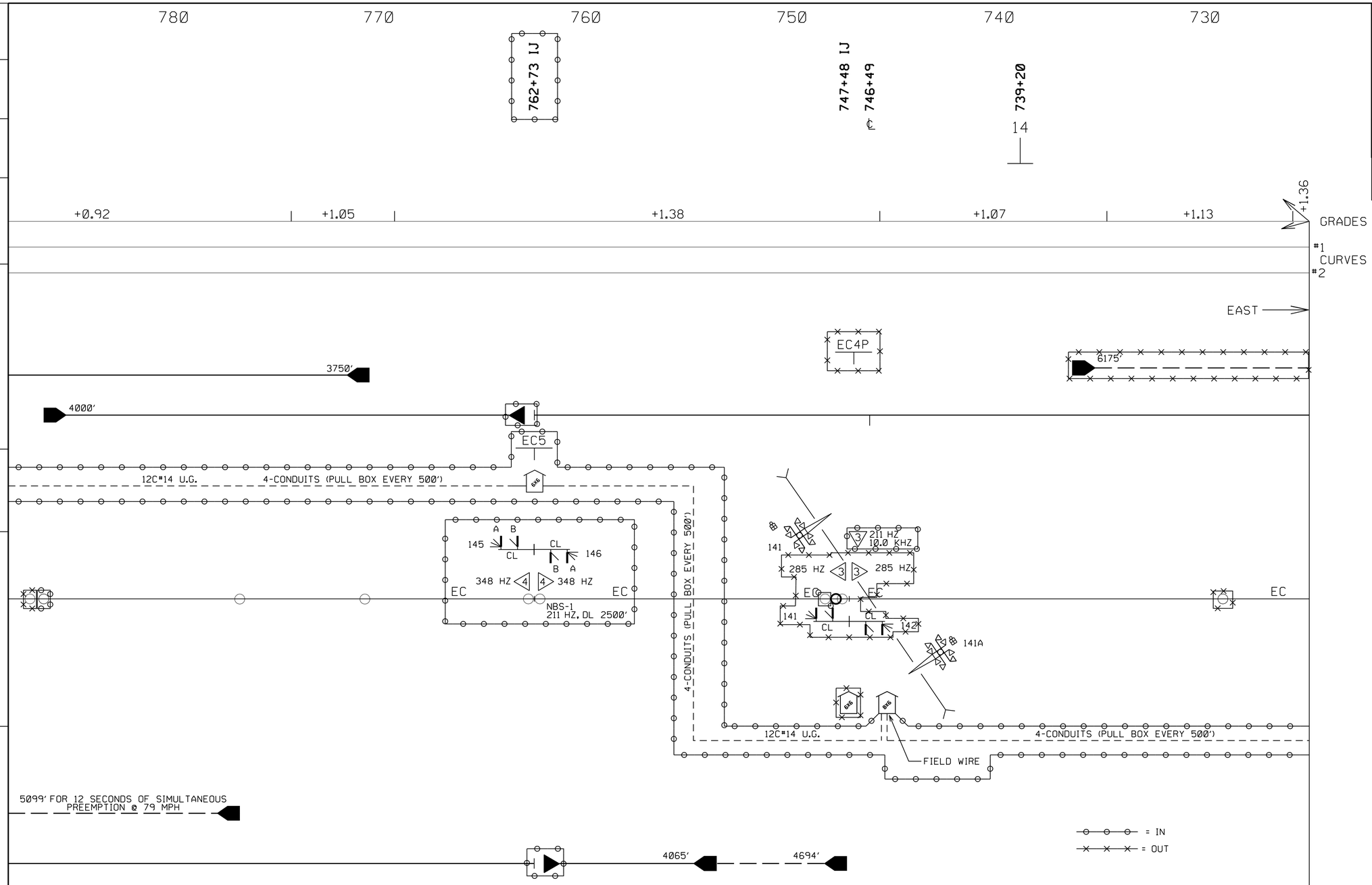

LEGEND

- : METER SERVICE
- : MS 500
- : HXP BI-DIRECTIONAL
- : HXP UNI-DIRECTIONAL
- : GCP 3000 BI-DIRECTIONAL
- : GCP 3000 UNI-DIRECTIONAL
- : GCP 4000 BI-DIRECTIONAL
- : GCP 4000 UNI-DIRECTIONAL
- : PREDICTION LIMITS
- : ADVANCED PREEMTION LIMITS
- : DAX FEED FROM THIS LOCATION
- : NARROW BAND SHUNT
- : WIDE BAND SHUNT
- EC : TRACK CODE
- LC : LINE CODE
- DWBS : DUAL WIDE BAND SHUNT AROUND INSULATED JOINT, EACH RAIL
- : DRAGGING EQUIPMENT DETECTOR
- : HOT BOX DETECTOR
- : HIGH/WIDE LOAD DETECTOR
- : STOP SIGN
- : SPRING SWITCH
- : POWER SWITCH
- : ELECTRIC LOCK
- : SELECTOR WIRED SWITCH
- TJC : TUNED JOINT COUPLER AROUND INSULATED JOINT, EACH RAIL
- BSC : BI-DIRECTIONAL SIMULATION CONFIGURATION
- : HIGH WATER DETECTOR
- : PERMISSIVE PLATE
- : UNDERPASS
- : OVERPASS
- : CROSSING

SIGNAL STAGE 3

RR-SP-018

ARVILLA AVE.
VY-14.14
(TRAFFIC PREEMPTION)
DOT 746782D

0 500
SCALE IN FEET

RAILROAD SHEET NO.
18 OF 171

CENTRALIZED TRAFFIC CONTROL
SUN VALLEY
SIDING PROJECT
VY 13-16
SH. 2 OF 2
10/12/99

THIS PLAN ACCURATE FOR RAILROAD WORK ONLY.

STATE OF CALIFORNIA - DEPARTMENT OF TRANSPORTATION
Caltrans® DESIGN
CONSULTANT FUNCTIONAL SUPERVISOR GLENN BREINDEL
CALCULATED-DESIGNED BY RAMON VALDEZ
CHECKED BY
REVISED BY
DATE REVISED

LAST REVISION 00-00-00
DATE PLOTTED = 7/18/2012
TIME PLOTTED = 2:47:15 PM

Dist	COUNTY	ROUTE	POST MILES TOTAL PROJECT	SHEET No.	TOTAL SHEETS
7	LA	5	29.4/31.6	1779	1931

David McCord 05-21-12
REGISTERED CIVIL ENGINEER DATE

05-21-12
PLANS APPROVAL DATE

REGISTERED PROFESSIONAL ENGINEER DAVID WILLIAM McCORD No. E-15317 Exp. June 30, 2013 ELECTRICAL STATE OF CALIFORNIA

THE STATE OF CALIFORNIA OR ITS OFFICERS OR AGENTS SHALL NOT BE RESPONSIBLE FOR THE ACCURACY OR COMPLETENESS OF SCANNED COPIES OF THIS PLAN SHEET.

SCRRA
279 E. ARROW HIGHWAY
SAN DIMAS, CA 91773

XORAIL
201 NORTH INDIAN HILL BLVD
SUITE 201
CLAREMONT, CA 91711

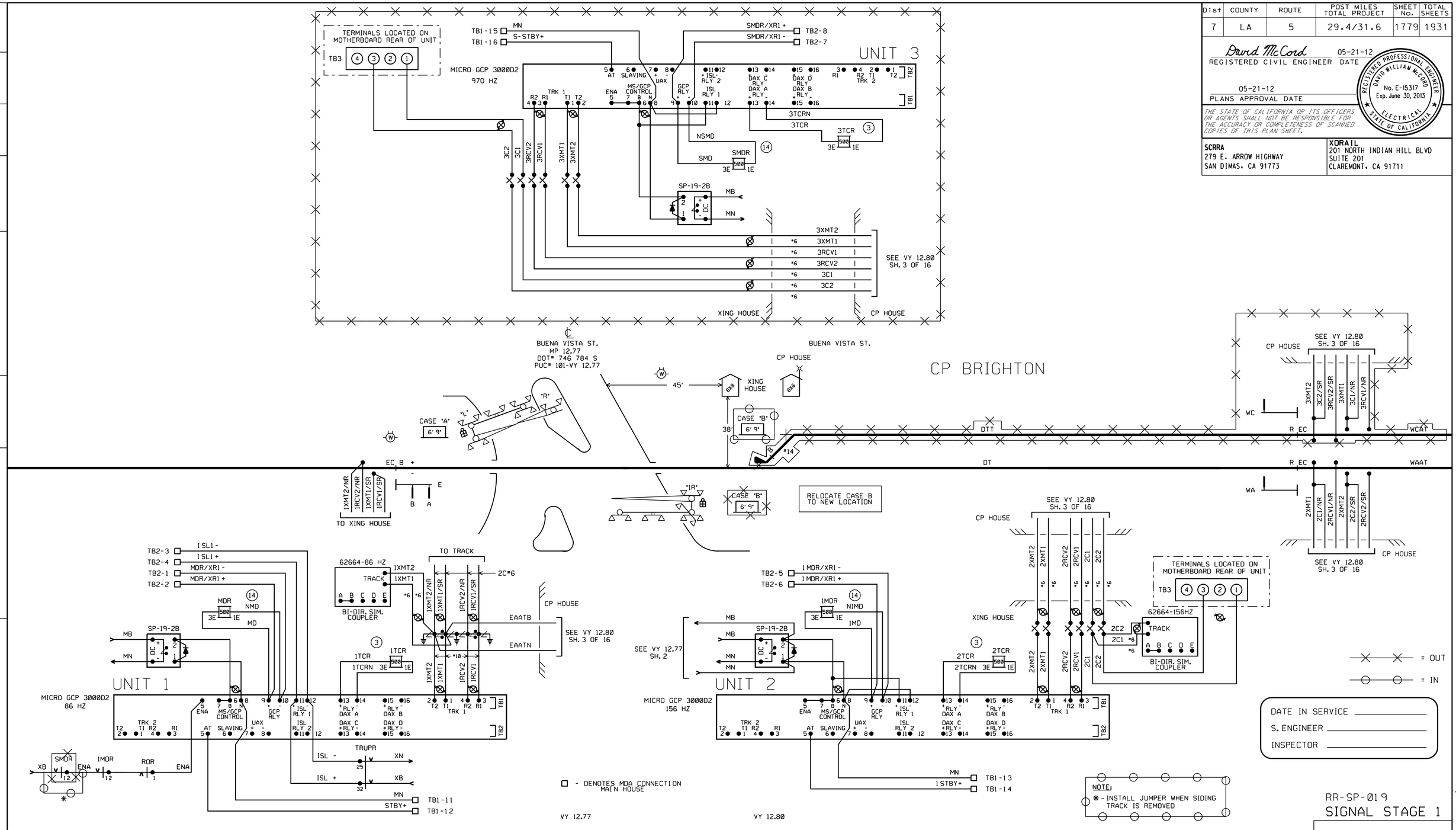

RR-SP-019
SIGNAL STAGE 1

CROSSING CIRCUIT PLAN
BUENA VISTA ST.
VY 12.77
SH. 1 OF 10

RAILROAD SHEET NO.
19 OF 171

THIS PLAN ACCURATE FOR RAILROAD WORK ONLY.

STATE OF CALIFORNIA - DEPARTMENT OF TRANSPORTATION
DESIGN
CONSULTANT FUNCTIONAL SUPERVISOR GLENN BREINDEL
CALCULATED-DESIGNED BY RAMON VALDEZ
CHECKED BY
REVISED BY
DATE REVISED

LAST REVISION 00-00-00
DATE PLOTTED 7/18/2012
TIME PLOTTED 23:47:16 PM

Dist	COUNTY	ROUTE	POST MILES TOTAL PROJECT	SHEET No.	TOTAL SHEETS
7	LA	5	29.4/31.6	1780	1931

David McCord 05-21-12
REGISTERED CIVIL ENGINEER DATE

05-21-12
PLANS APPROVAL DATE

REGISTERED PROFESSIONAL ENGINEER DAVID WILLIAM McCORD No. E-15317 Exp. June 30, 2013 ELECTRICAL STATE OF CALIFORNIA

THE STATE OF CALIFORNIA OR ITS OFFICERS OR AGENTS SHALL NOT BE RESPONSIBLE FOR THE ACCURACY OR COMPLETENESS OF SCANNED COPIES OF THIS PLAN SHEET.

SCRRA
279 E. ARROW HIGHWAY
SAN DIMAS, CA 91773

XORAIL
201 NORTH INDIAN HILL BLVD
SUITE 201
CLAREMONT, CA 91711

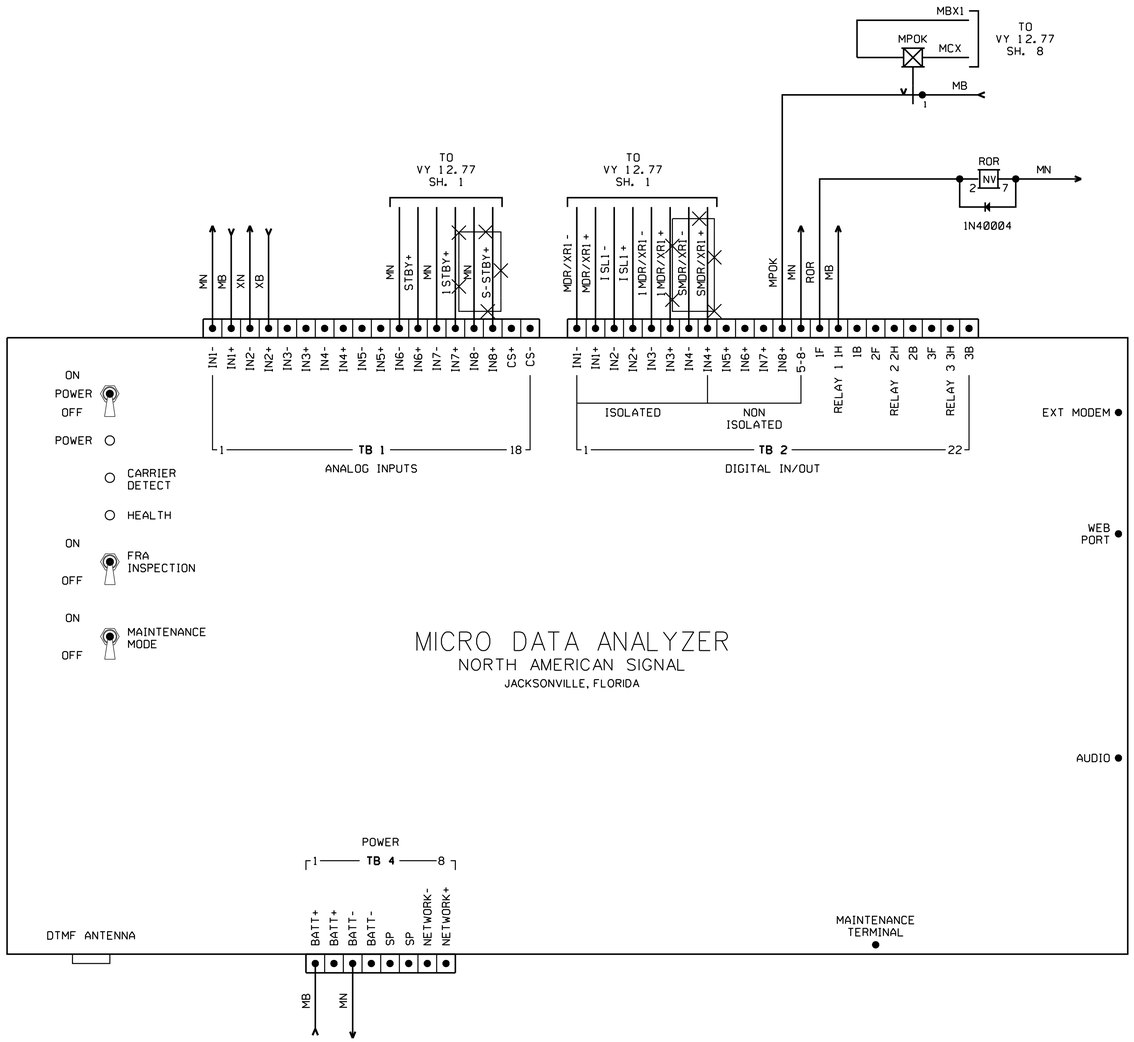

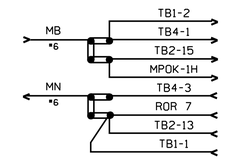

= OUT

DATE IN SERVICE _____
S. ENGINEER _____
INSPECTOR _____

NOTE:
1. ALL DATA RECORDER WIRE CONNECTIONS ARE 16 GAUGE UNLESS OTHERWISE SPECIFIED.
2. USE EIGHT (8) TURNS WHEN WINDING #10 WIRE THROUGH THE CURRENT SENSORS.
3. POR IS A 120VAC DAYTON RELAY

MDA I SOFTWARE CONFIGURATION MANAGEMENT TABLE

APPLICATION	FILE NAME	DATE	DESCRIPTION
CPU LOADER	LDMICRO3.S19	02-23-04	
CPU EXECUTIVE	MDA1_R16.S19	06-02-06	
CPU APPLICATION	REMOTE1	10-27-06	

RR-SP-020
SIGNAL STAGE 1

DATA RECORDER CIRCUIT PLAN
BUENA VISTA ST.
VY 12.77
SH. 2 OF 10

RAILROAD SHEET NO.
20 OF 171

THIS PLAN ACCURATE FOR RAILROAD WORK ONLY.

8'X6' MAIN HOUSE

STATE OF CALIFORNIA - DEPARTMENT OF TRANSPORTATION
Caltrans DESIGN
CONSULTANT FUNCTIONAL SUPERVISOR GLENN BREINDEL
CALCULATED-DESIGNED BY RAMON VALDEZ
CHECKED BY
REVISED BY
DATE REVISED

LAST REVISION 00-00-00
DATE PLOTTED = 7/18/2012
TIME PLOTTED = 21:47:17 PM

BORDER LAST REVISED 7/2/2010
USERNAME = gharibiana
DGN FILE = ...\moc\xorail\sheet\SP-020-.sht
RELATIVE BORDER SCALE IS IN INCHES 0 1 2 3
UNIT 1812
PROJECT NUMBER & PHASE 07000211191

Dist	COUNTY	ROUTE	POST MILES TOTAL PROJECT	SHEET No.	TOTAL SHEETS
7	LA	5	29.4/31.6	1781	1931

David McCord 05-21-12
REGISTERED CIVIL ENGINEER DATE

05-21-12
PLANS APPROVAL DATE

REGISTERED PROFESSIONAL ENGINEER DAVID WILLIAM McCORD No. E-15317 Exp. June 30, 2013 ELECTRICAL STATE OF CALIFORNIA

THE STATE OF CALIFORNIA OR ITS OFFICERS OR AGENTS SHALL NOT BE RESPONSIBLE FOR THE ACCURACY OR COMPLETENESS OF SCANNED COPIES OF THIS PLAN SHEET.

SCRRA
279 E. ARROW HIGHWAY
SAN DIMAS, CA 91773

XORAIL
201 NORTH INDIAN HILL BLVD
SUITE 201
CLAREMONT, CA 91711

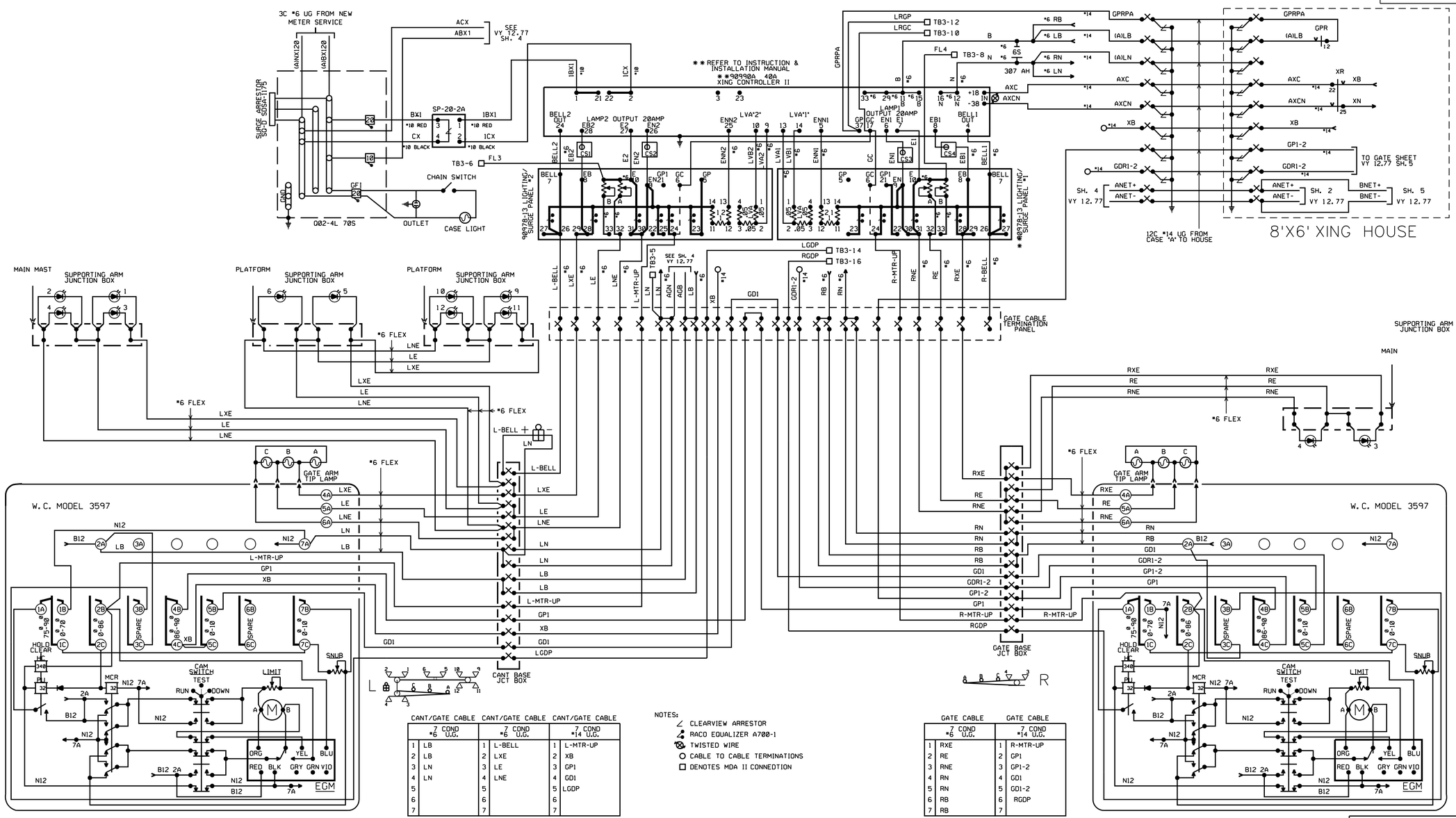

CANT/GATE CABLE #6 U.G. 7 COND		CANT/GATE CABLE #6 U.G. 7 COND		CANT/GATE CABLE #14 U.G. 7 COND	
1	LB	1	L-BELL	1	L-MTR-UP
2	LB	2	LXE	2	XB
3	LN	3	LE	3	GP1
4	LN	4	LNE	4	GD1
5		5		5	LGDP
6		6		6	
7		7		7	

NOTES:
- CLEARVIEW ARRESTOR
- RACO EQUALIZER A700-1
- TWISTED WIRE
- CABLE TO CABLE TERMINATIONS
- DENOTES MDA II CONNEDTION

GATE CABLE #6 U.G. 7 COND		GATE CABLE #14 U.G. 7 COND	
1	RXE	1	R-MTR-UP
2	RE	2	GP1
3	RNE	3	GP1-2
4	RN	4	GD1
5	RN	5	GD1-2
6	RB	6	RGDP
7	RB	7	

THIS PLAN ACCURATE FOR RAILROAD WORK ONLY.

CASE "A" 6' 9"

RR-SP-021
SIGNAL STAGE 1

6' 9" CASE "A" GATE CIRCUIT PLAN
BUENA VISTA ST.
VY 12.77
SH. 3 OF 10

RAILROAD SHEET NO.
21 OF 171

STATE OF CALIFORNIA - DEPARTMENT OF TRANSPORTATION
Caltrans DESIGN

CONSULTANT FUNCTIONAL SUPERVISOR: GLENN BREINDEL
CALCULATED-DESIGNED BY: RAMON VALDEZ
CHECKED BY
REVISED BY
DATE REVISED

LAST REVISION 00-00-00
DATE PLOTTED = 7/18/2012
TIME PLOTTED = 2:47:18 PM

BORDER LAST REVISED 7/2/2010
USERNAME = gharibiana
DGN FILE = ...\moc\xorail\sheet\SP-021-.sht
RELATIVE BORDER SCALE IS IN INCHES 0 1 2 3
UNIT 1812
PROJECT NUMBER & PHASE 07000211191

Dist	COUNTY	ROUTE	POST MILES TOTAL PROJECT	SHEET No.	TOTAL SHEETS
7	LA	5	29.4/31.6	1782	1931

David McCord 05-21-12
REGISTERED CIVIL ENGINEER DATE

05-21-12
PLANS APPROVAL DATE

REGISTERED PROFESSIONAL ENGINEER DAVID WILLIAM MCCORD No. E-15317 Exp. June 30, 2013 ELECTRICAL STATE OF CALIFORNIA

THE STATE OF CALIFORNIA OR ITS OFFICERS OR AGENTS SHALL NOT BE RESPONSIBLE FOR THE ACCURACY OR COMPLETENESS OF SCANNED COPIES OF THIS PLAN SHEET.

SCRRA
279 E. ARROW HIGHWAY
SAN DIMAS, CA 91773

XORAIL
201 NORTH INDIAN HILL BLVD
SUITE 201
CLAREMONT, CA 91711

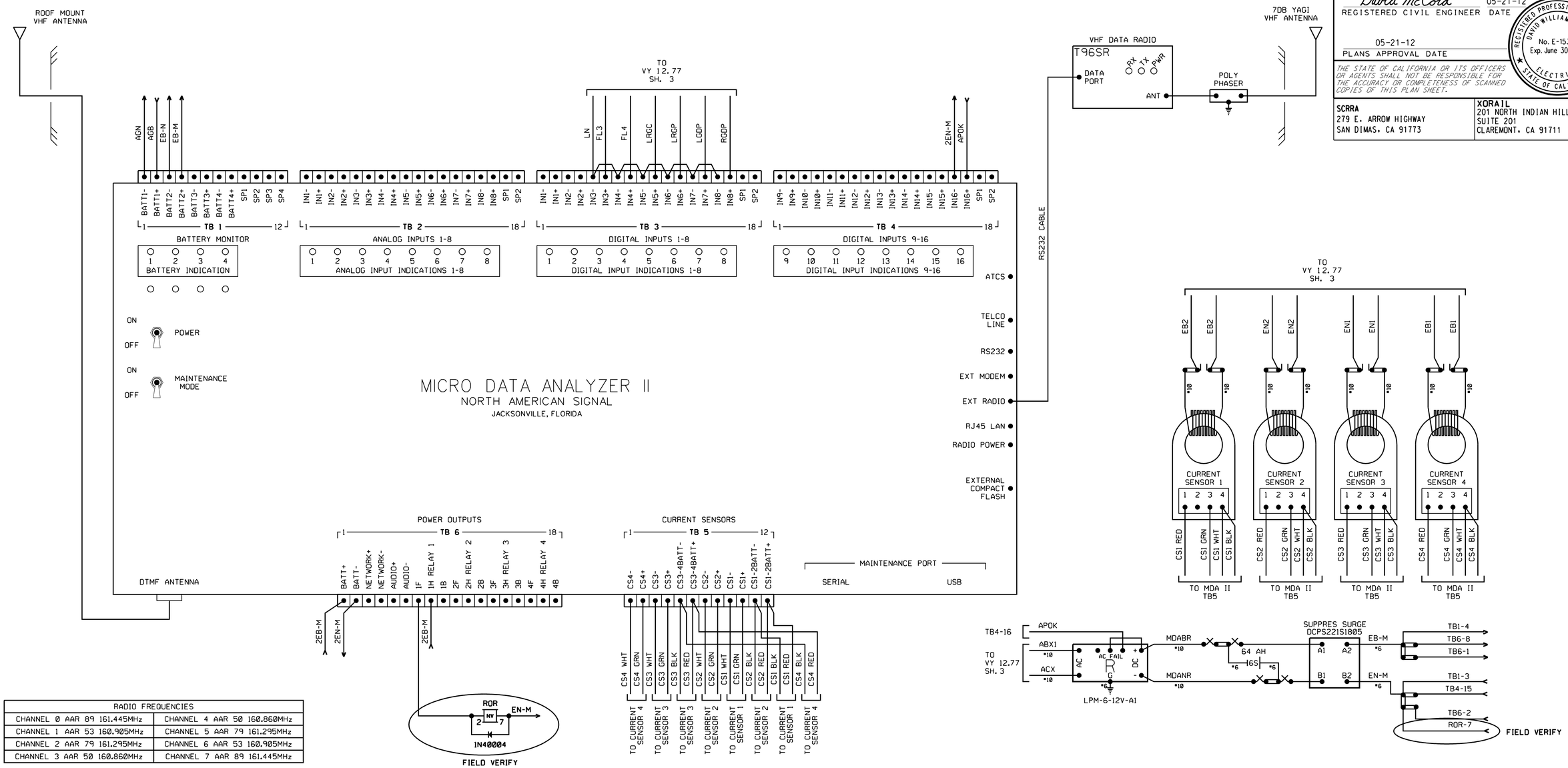

RADIO FREQUENCIES	
CHANNEL 0 AAR 89 161.445MHz	CHANNEL 4 AAR 50 160.860MHz
CHANNEL 1 AAR 53 160.905MHz	CHANNEL 5 AAR 79 161.295MHz
CHANNEL 2 AAR 79 161.295MHz	CHANNEL 6 AAR 53 160.905MHz
CHANNEL 3 AAR 50 160.860MHz	CHANNEL 7 AAR 89 161.445MHz

MDA II SOFTWARE CONFIGURATION MANAGEMENT TABLE

APPLICATION	FILE NAME	DATE	DESCRIPTION
CPU LOADER	MBOOT10	03-05-06	
CPU EXECUTIVE	M2_EX19.S19	06-06-06	
CPU I/O	M2_IO19.S19	04-18-06	
CPU APPLICATION	746 784S	10-27-06	DOT *

NOTE:
1. ALL DATA RECORDER WIRE CONNECTIONS ARE 16 GAUGE UNLESS OTHERWISE SPECIFIED.
2. USE EIGHT (8) TURNS WHEN WINDING #10 WIRE THROUGH THE CURRENT SENSORS.
3. 2ROR AND 2RLR ARE 12VDC DAYTON 1A484M RELAYS.

RR-SP-022
SIGNAL STAGE 1

DATA RECORDER CIRCUIT PLAN
BUENA VISTA ST.
VY 12.77
SH. 4 OF 10

RAILROAD SHEET NO.
22 OF 171

THIS PLAN ACCURATE FOR RAILROAD WORK ONLY.

CASE "A" 6' 9"

STATE OF CALIFORNIA - DEPARTMENT OF TRANSPORTATION
Caltrans DESIGN
CONSULTANT FUNCTIONAL SUPERVISOR GLENN BREINDEL
CALCULATED-DESIGNED BY RAMON VALDEZ
CHECKED BY
REVISED BY
DATE REVISED

LAST REVISION 00-00-00
DATE PLOTTED 7/18/2012
TIME PLOTTED 2:47:19 PM

Dist	COUNTY	ROUTE	POST MILES TOTAL PROJECT	SHEET No.	TOTAL SHEETS
7	LA	5	29.4/31.6	1783	1931

David McCord 05-21-12
REGISTERED CIVIL ENGINEER DATE

05-21-12
PLANS APPROVAL DATE

REGISTERED PROFESSIONAL ENGINEER DAVID WILLIAM McCORD No. E-15317 Exp. June 30, 2013 ELECTRICAL STATE OF CALIFORNIA

THE STATE OF CALIFORNIA OR ITS OFFICERS OR AGENTS SHALL NOT BE RESPONSIBLE FOR THE ACCURACY OR COMPLETENESS OF SCANNED COPIES OF THIS PLAN SHEET.

SCRRA
279 E. ARROW HIGHWAY
SAN DIMAS, CA 91773

XORAIL
201 NORTH INDIAN HILL BLVD
SUITE 201
CLAREMONT, CA 91711

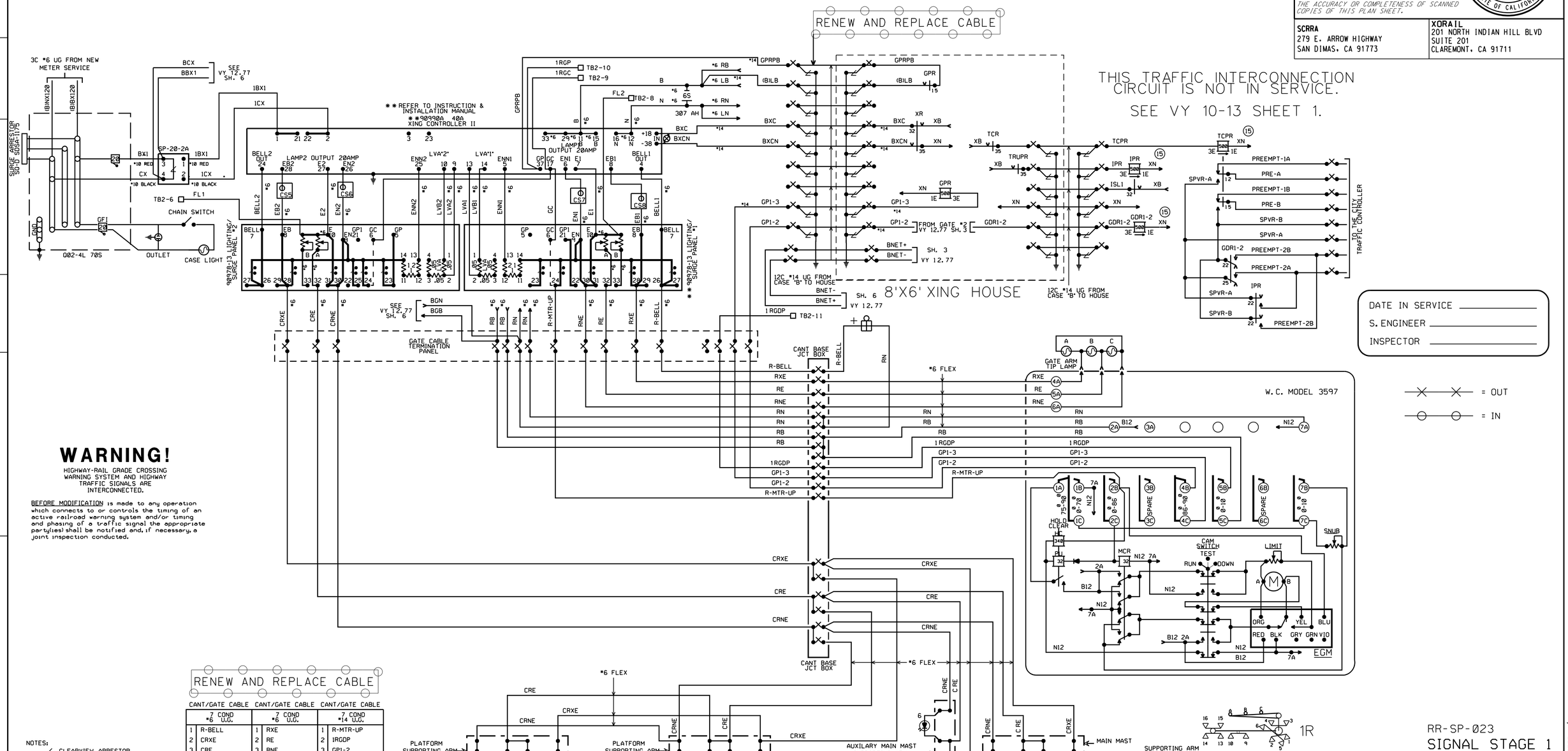

WARNING!

HIGHWAY-RAIL GRADE CROSSING WARNING SYSTEM AND HIGHWAY TRAFFIC SIGNALS ARE INTERCONNECTED.

BEFORE MODIFICATION is made to any operation which connects to or controls the timing of an active railroad warning system and/or timing and phasing of a traffic signal the appropriate party(ies) shall be notified and, if necessary, a joint inspection conducted.

RENEW AND REPLACE CABLE

CANT/GATE CABLE 7 COND *6 U.G.		CANT/GATE CABLE 7 COND *6 U.G.		CANT/GATE CABLE 7 COND *14 U.G.	
1	R-BELL	1	RXE	1	R-MTR-UP
2	CRXE	2	RE	2	1RGDP
3	CRE	3	RNE	3	GP1-2
4	CRNE	4	RN	4	GP1-3
5		5	RN	5	
6		6	RB	6	
7		7	RB	7	

NOTES:
- CLEARVIEW ARRESTOR
- RACO EQUALIZER A700-1
- TWISTED WIRE
- CABLE TO CABLE TERMINATIONS
- DENOTES MDA CONNECTION (B)

THIS PLAN ACCURATE FOR RAILROAD WORK ONLY.

RAILROAD SHEET NO. 23 OF 171

RR-SP-023
SIGNAL STAGE 1

6' 9" CASE "B" GATE CIRCUIT PLAN
BUENA VISTA ST.
VY 12.77
SH. 5 OF 10

STATE OF CALIFORNIA - DEPARTMENT OF TRANSPORTATION
Caltrans® DESIGN
CONSULTANT FUNCTIONAL SUPERVISOR: GLENN BREINDEL
RAMON VALDEZ
CALCULATED-DESIGNED BY | CHECKED BY | REVISED BY | DATE REVISED

LAST REVISION 00-00-00 | DATE PLOTTED = 7/18/2012 | TIME PLOTTED = 2:47:21 PM

BORDER LAST REVISED 7/2/2010 | USERNAME = gharibiana | DGN FILE = ...\moc\xorail\sheet\SP-023-.sht | RELATIVE BORDER SCALE IS IN INCHES 0 1 2 3 | UNIT 1812 | PROJECT NUMBER & PHASE 07000211191

Dist	COUNTY	ROUTE	POST MILES TOTAL PROJECT	SHEET No.	TOTAL SHEETS
7	LA	5	29.4/31.6	1784	1931

David McCord 05-21-12
REGISTERED CIVIL ENGINEER DATE

05-21-12
PLANS APPROVAL DATE

REGISTERED PROFESSIONAL ENGINEER DAVID WILLIAM MCCORD No. E-15317 Exp. June 30, 2013 ELECTRICAL STATE OF CALIFORNIA

THE STATE OF CALIFORNIA OR ITS OFFICERS OR AGENTS SHALL NOT BE RESPONSIBLE FOR THE ACCURACY OR COMPLETENESS OF SCANNED COPIES OF THIS PLAN SHEET.

SCRRA
279 E. ARROW HIGHWAY
SAN DIMAS, CA 91773

XORAIL
201 NORTH INDIAN HILL BLVD
SUITE 201
CLAREMONT, CA 91711

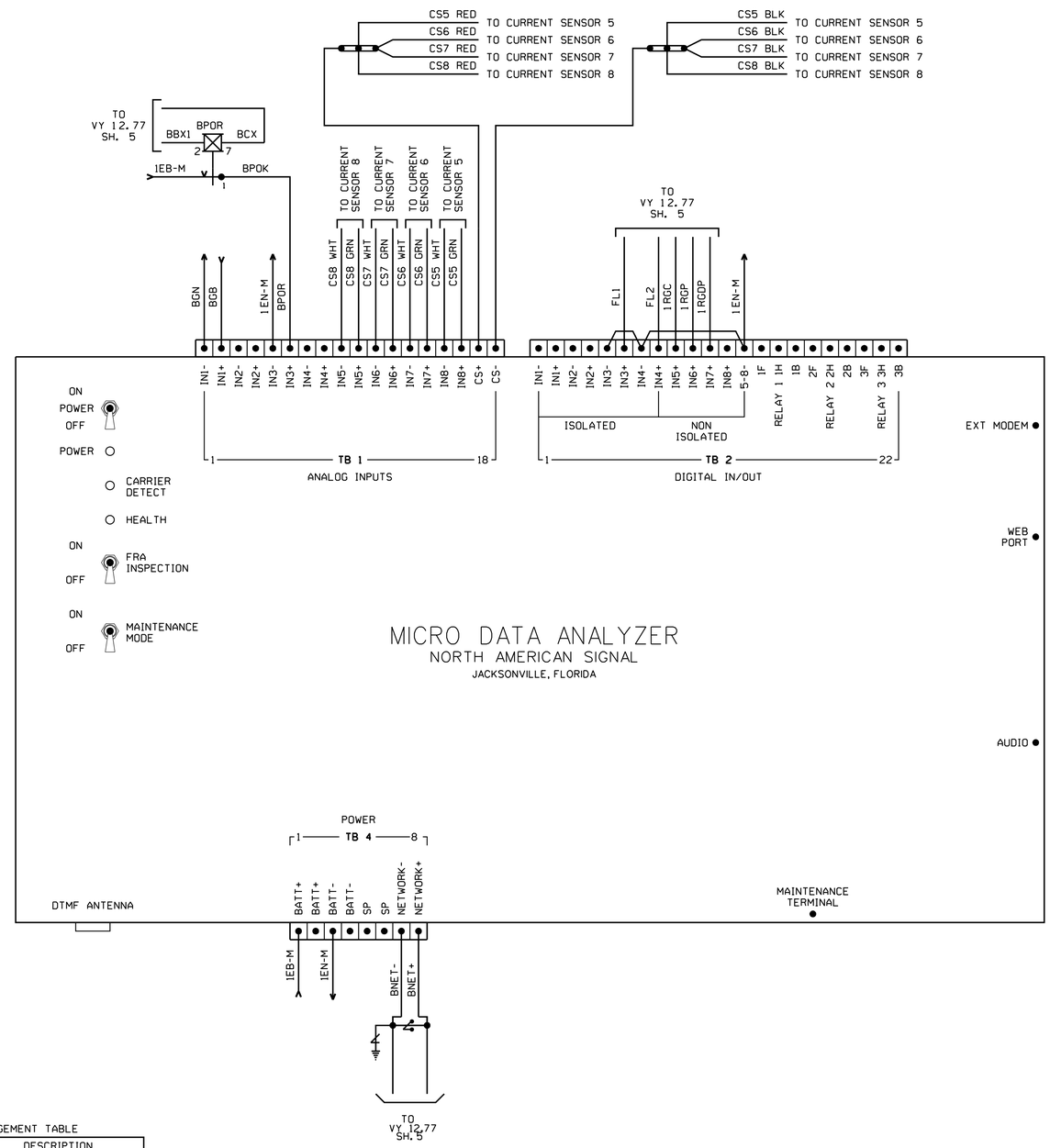

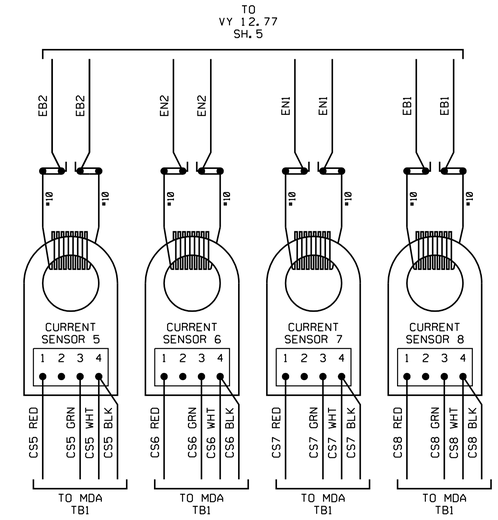

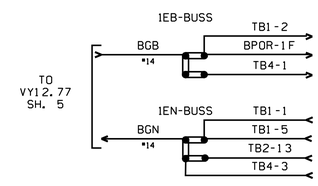

MDA I SOFTWARE CONFIGURATION MANAGEMENT TABLE

APPLICATION	FILE NAME	DATE	DESCRIPTION
CPU LOADER	LDMICRO3.S19	02-23-04	
CPU EXECUTIVE	MDA1_R16.S19	06-02-06	
CPU APPLICATION	REMOTE1	10-27-06	

NOTE:

1. ALL DATA RECORDER WIRE CONNECTIONS ARE 16 GAUGE UNLESS OTHERWISE SPECIFIED.
2. USE EIGHT (8) TURNS WHEN WINDING #10 WIRE THROUGH THE CURRENT SENSORS.
3. 1POR IS A 120VAC POTTER & BRUMFIELD KRPA-11AY-120 RELAY.
   1RLR IS A 12 VDC DAYTON 1A48M RELAY.

RR-SP-024
SIGNAL STAGE 1

DATA RECORDER CIRCUIT PLAN
BUENA VISTA ST.
VY 12.77
SH. 6 OF 10

RAILROAD SHEET NO.
24 OF 171

THIS PLAN ACCURATE FOR RAILROAD WORK ONLY.

CASE "B" 6'9"

STATE OF CALIFORNIA - DEPARTMENT OF TRANSPORTATION
Caltrans DESIGN
CONSULTANT FUNCTIONAL SUPERVISOR GLENN BREINDEL
CALCULATED-DESIGNED BY RAMON VALDEZ
CHECKED BY
REVISED BY
DATE REVISED

LAST REVISION 00-00-00
DATE PLOTTED = 7/18/2012
TIME PLOTTED = 2:47:22 PM

Dist	COUNTY	ROUTE	POST MILES TOTAL PROJECT	SHEET No.	TOTAL SHEETS
7	LA	5	29.4/31.6	1785	1931

David McCord 05-21-12
REGISTERED CIVIL ENGINEER DATE

05-21-12
PLANS APPROVAL DATE

REGISTERED PROFESSIONAL ENGINEER DAVID WILLIAM McCORD No. E-15317 Exp. June 30, 2013 ELECTRICAL STATE OF CALIFORNIA

THE STATE OF CALIFORNIA OR ITS OFFICERS OR AGENTS SHALL NOT BE RESPONSIBLE FOR THE ACCURACY OR COMPLETENESS OF SCANNED COPIES OF THIS PLAN SHEET.

SCRRA
279 E. ARROW HIGHWAY
SAN DIMAS, CA 91773

XORAIL
201 NORTH INDIAN HILL BLVD
SUITE 201
CLAREMONT, CA 91711

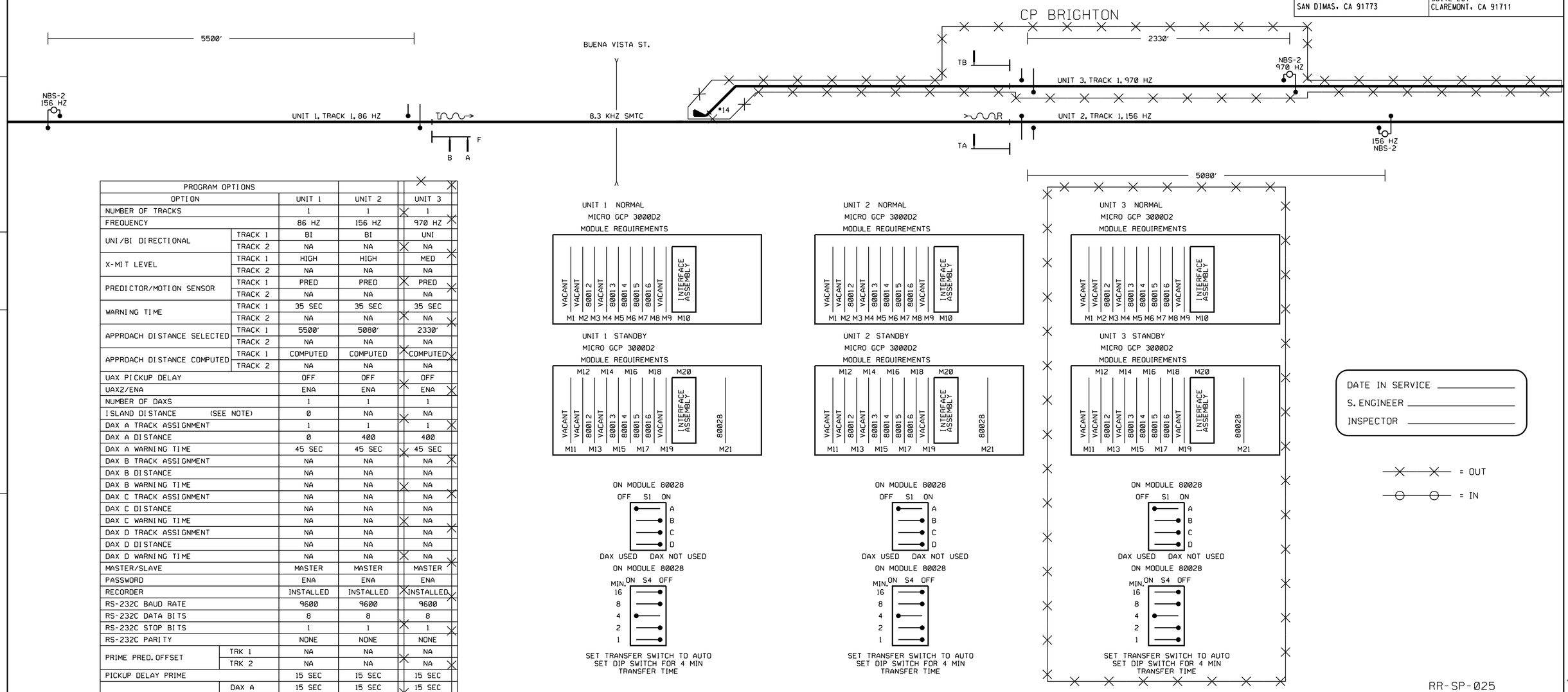

PROGRAM OPTIONS				
OPTION		UNIT 1	UNIT 2	UNIT 3
NUMBER OF TRACKS		1	1	1
FREQUENCY		86 HZ	156 HZ	970 HZ
UNI/BI DIRECTIONAL	TRACK 1	BI	BI	UNI
	TRACK 2	NA	NA	NA
X-MIT LEVEL	TRACK 1	HIGH	HIGH	MED
	TRACK 2	NA	NA	NA
PREDICTOR/MOTION SENSOR	TRACK 1	PRED	PRED	PRED
	TRACK 2	NA	NA	NA
WARNING TIME	TRACK 1	35 SEC	35 SEC	35 SEC
	TRACK 2	NA	NA	NA
APPROACH DISTANCE SELECTED	TRACK 1	5500'	5080'	2330'
	TRACK 2	NA	NA	NA
APPROACH DISTANCE COMPUTED	TRACK 1	COMPUTED	COMPUTED	COMPUTED
	TRACK 2	NA	NA	NA
UAX PICKUP DELAY		OFF	OFF	OFF
UAX2/ENA		ENA	ENA	ENA
NUMBER OF DAXS		1	1	1
ISLAND DISTANCE (SEE NOTE)		0	NA	NA
DAX A TRACK ASSIGNMENT		1	1	1
DAX A DISTANCE		0	400	400
DAX A WARNING TIME		45 SEC	45 SEC	45 SEC
DAX B TRACK ASSIGNMENT		NA	NA	NA
DAX B DISTANCE		NA	NA	NA
DAX B WARNING TIME		NA	NA	NA
DAX C TRACK ASSIGNMENT		NA	NA	NA
DAX C DISTANCE		NA	NA	NA
DAX C WARNING TIME		NA	NA	NA
DAX D TRACK ASSIGNMENT		NA	NA	NA
DAX D DISTANCE		NA	NA	NA
DAX D WARNING TIME		NA	NA	NA
MASTER/SLAVE		MASTER	MASTER	MASTER
PASSWORD		ENA	ENA	ENA
RECORDER		INSTALLED	INSTALLED	INSTALLED
RS-232C BAUD RATE		9600	9600	9600
RS-232C DATA BITS		8	8	8
RS-232C STOP BITS		1	1	1
RS-232C PARITY		NONE	NONE	NONE
PRIME PRED. OFFSET	TRK 1	NA	NA	NA
	TRK 2	NA	NA	NA
PICKUP DELAY PRIME		15 SEC	15 SEC	15 SEC
PICKUP DELAY DAX	DAX A	15 SEC	15 SEC	15 SEC
	DAX B	NA	NA	NA
	DAX C	NA	NA	NA
	DAX D	NA	NA	NA
NUMBER OF TRACK WIRES		4	6	6

DATE IN SERVICE _____
S. ENGINEER _____
INSPECTOR _____

= OUT
= IN

WITH "F" LEVEL SOFTWARE, ISLAND DISTANCE HAS TO BE ENTERED.

NOTE: WHEN DAX IS USED FOR ISLAND DISTANCE, MEASURE THE DISTANCE BETWEEN THE TRANSMITTER AND RECEIVER LEADS AND ENTER ON CHART (MUST BE 120' MINIMUM).
DL=DEFAULT LEVEL
NA=NON APPLICABLE

THIS PLAN ACCURATE FOR RAILROAD WORK ONLY.

RR-SP-025
SIGNAL STAGE 1

PROGRAM OPTIONS PLAN
BUENA VISTA ST.
VY 12.77
SH. 7 OF 10

RAILROAD SHEET NO.
25 OF 171

STATE OF CALIFORNIA - DEPARTMENT OF TRANSPORTATION
Caltrans® DESIGN
CONSULTANT FUNCTIONAL SUPERVISOR GLENN BREINDEL
CALCULATED-DESIGNED BY RAMON VALDEZ
CHECKED BY
REVISED BY
DATE REVISED

LAST REVISION 00-00-00
DATE PLOTTED = 7/18/2012
TIME PLOTTED = 2:47:23 PM

Dist	COUNTY	ROUTE	POST MILES TOTAL PROJECT	SHEET No.	TOTAL SHEETS
7	LA	5	29.4/31.6	1786	1931

David McCord 05-21-12
REGISTERED CIVIL ENGINEER DATE

05-21-12
PLANS APPROVAL DATE

REGISTERED PROFESSIONAL ENGINEER DAVID WILLIAM McCORD No. E-15317 Exp. June 30, 2013 ELECTRICAL STATE OF CALIFORNIA

THE STATE OF CALIFORNIA OR ITS OFFICERS OR AGENTS SHALL NOT BE RESPONSIBLE FOR THE ACCURACY OR COMPLETENESS OF SCANNED COPIES OF THIS PLAN SHEET.

SCRRA
279 E. ARROW HIGHWAY
SAN DIMAS, CA 91773

XORAIL
201 NORTH INDIAN HILL BLVD
SUITE 201
CLAREMONT, CA 91711

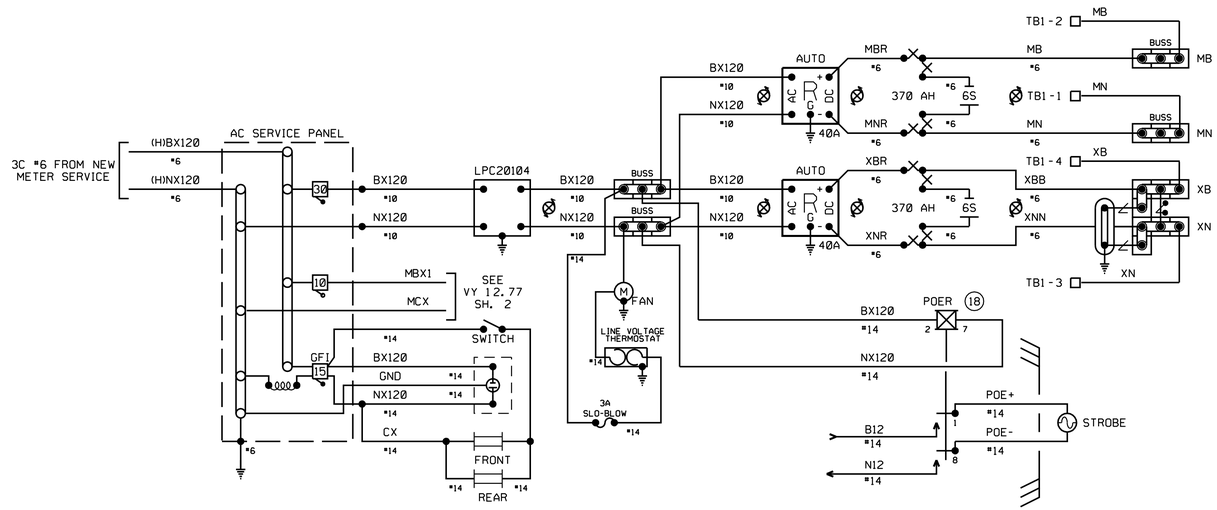

□ = DENOTES MDA CONNECTION

THIS PLAN ACCURATE FOR RAILROAD WORK ONLY.

8′ X 6′ CROSSING HOUSE

RR-SP-026
SIGNAL STAGE 1

DATA RECORDER AND POWER PLAN
BUENA VISTA ST.
VY 12.77
SH. 8 OF 10

RAILROAD SHEET NO.
26 OF 171

STATE OF CALIFORNIA - DEPARTMENT OF TRANSPORTATION
Caltrans DESIGN

CONSULTANT FUNCTIONAL SUPERVISOR: GLENN BREINDEL
CALCULATED-DESIGNED BY: RAMON VALDEZ
CHECKED BY
REVISED BY
DATE REVISED

LAST REVISION 00-00-00
DATE PLOTTED = 7/18/2012
TIME PLOTTED = 2:47:24 PM

BORDER LAST REVISED 7/2/2010
USERNAME = gharibiana
DGN FILE = ...\moc\xorail\sheet\SP-026-.sht
RELATIVE BORDER SCALE IS IN INCHES 0 1 2 3
UNIT 1812
PROJECT NUMBER & PHASE 07000211191

Dist	COUNTY	ROUTE	POST MILES TOTAL PROJECT	SHEET No.	TOTAL SHEETS
7	LA	5	29.4/31.6	1787	1931

David McCord 05-21-12
REGISTERED CIVIL ENGINEER DATE

05-21-12
PLANS APPROVAL DATE

REGISTERED PROFESSIONAL ENGINEER DAVID WILLIAM McCORD No. E-15317 Exp. June 30, 2013 ELECTRICAL STATE OF CALIFORNIA

THE STATE OF CALIFORNIA OR ITS OFFICERS OR AGENTS SHALL NOT BE RESPONSIBLE FOR THE ACCURACY OR COMPLETENESS OF SCANNED COPIES OF THIS PLAN SHEET.

SCRRA
279 E. ARROW HIGHWAY
SAN DIMAS, CA 91773

XORAIL
201 NORTH INDIAN HILL BLVD
SUITE 201
CLAREMONT, CA 91711

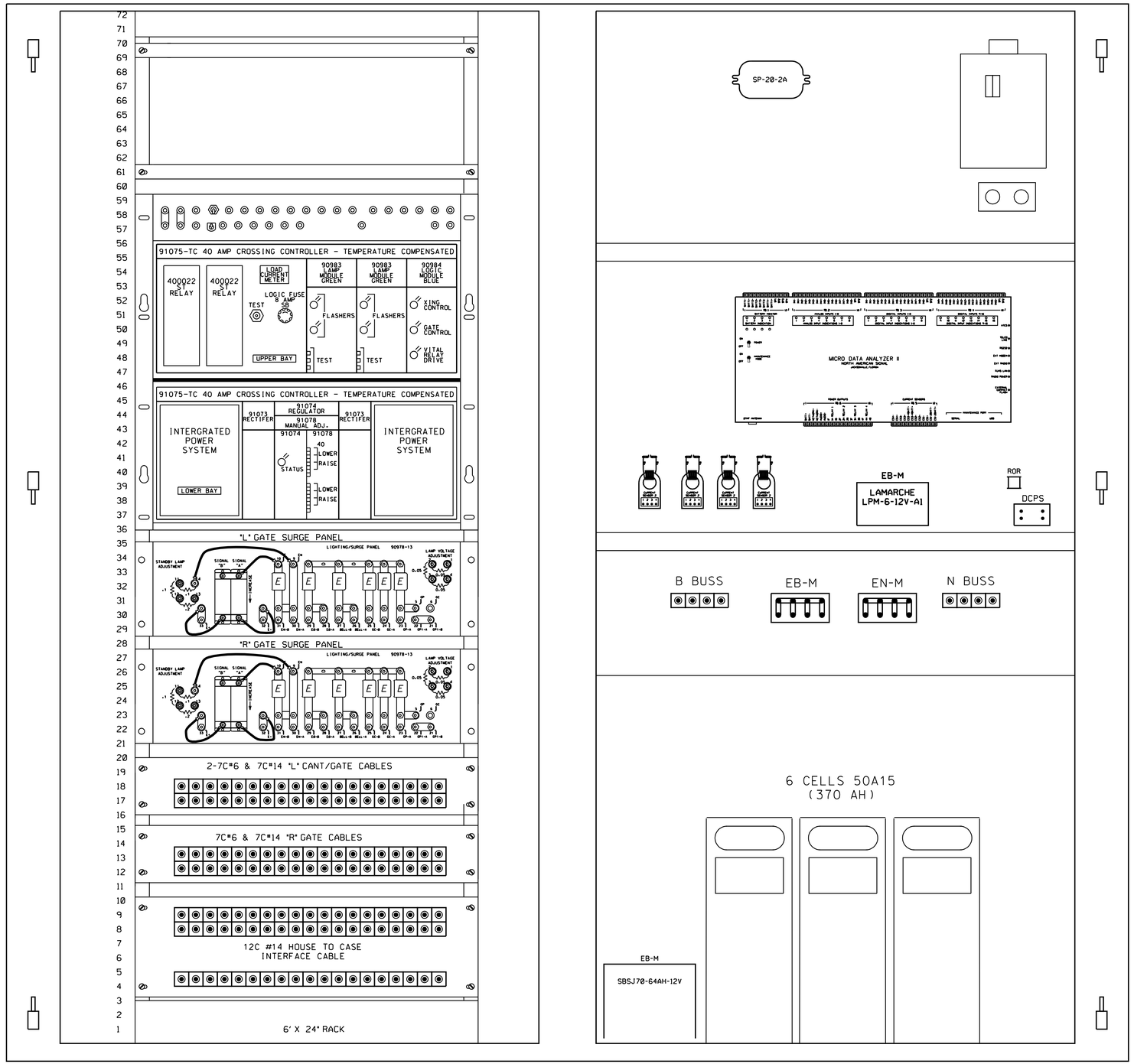

RR-SP-027
SIGNAL STAGE 1

6' 9" CASE "A" LAYOUT
BUENA VISTA ST.
VY 12.77
SH. 9 OF 10

RAILROAD SHEET NO.
27 OF 171

CASE "A" 6' 9"

THIS PLAN ACCURATE FOR RAILROAD WORK ONLY.

STATE OF CALIFORNIA - DEPARTMENT OF TRANSPORTATION
Caltrans DESIGN
CONSULTANT FUNCTIONAL SUPERVISOR GLENN BREINDEL
CALCULATED-DESIGNED BY RAMON VALDEZ
CHECKED BY
REVISED BY
DATE REVISED

LAST REVISION 00-00-00
DATE PLOTTED 7/18/2012
TIME PLOTTED 2:47:25 PM

BORDER LAST REVISED 7/2/2010
USERNAME gharibiana
DGN FILE ...\moc\xorail\sheet\SP-027-.sht
RELATIVE BORDER SCALE IS IN INCHES 0 1 2 3
UNIT 1812
PROJECT NUMBER & PHASE 07000211191

Dist	COUNTY	ROUTE	POST MILES TOTAL PROJECT	SHEET No.	TOTAL SHEETS
7	LA	5	29.4/31.6	1788	1931

David McCord 05-21-12
REGISTERED CIVIL ENGINEER DATE

05-21-12
PLANS APPROVAL DATE

REGISTERED PROFESSIONAL ENGINEER DAVID WILLIAM McCORD No. E-15317 Exp. June 30, 2013 ELECTRICAL STATE OF CALIFORNIA

THE STATE OF CALIFORNIA OR ITS OFFICERS OR AGENTS SHALL NOT BE RESPONSIBLE FOR THE ACCURACY OR COMPLETENESS OF SCANNED COPIES OF THIS PLAN SHEET.

SCRRA
279 E. ARROW HIGHWAY
SAN DIMAS, CA 91773

XORAIL
201 NORTH INDIAN HILL BLVD
SUITE 201
CLAREMONT, CA 91711

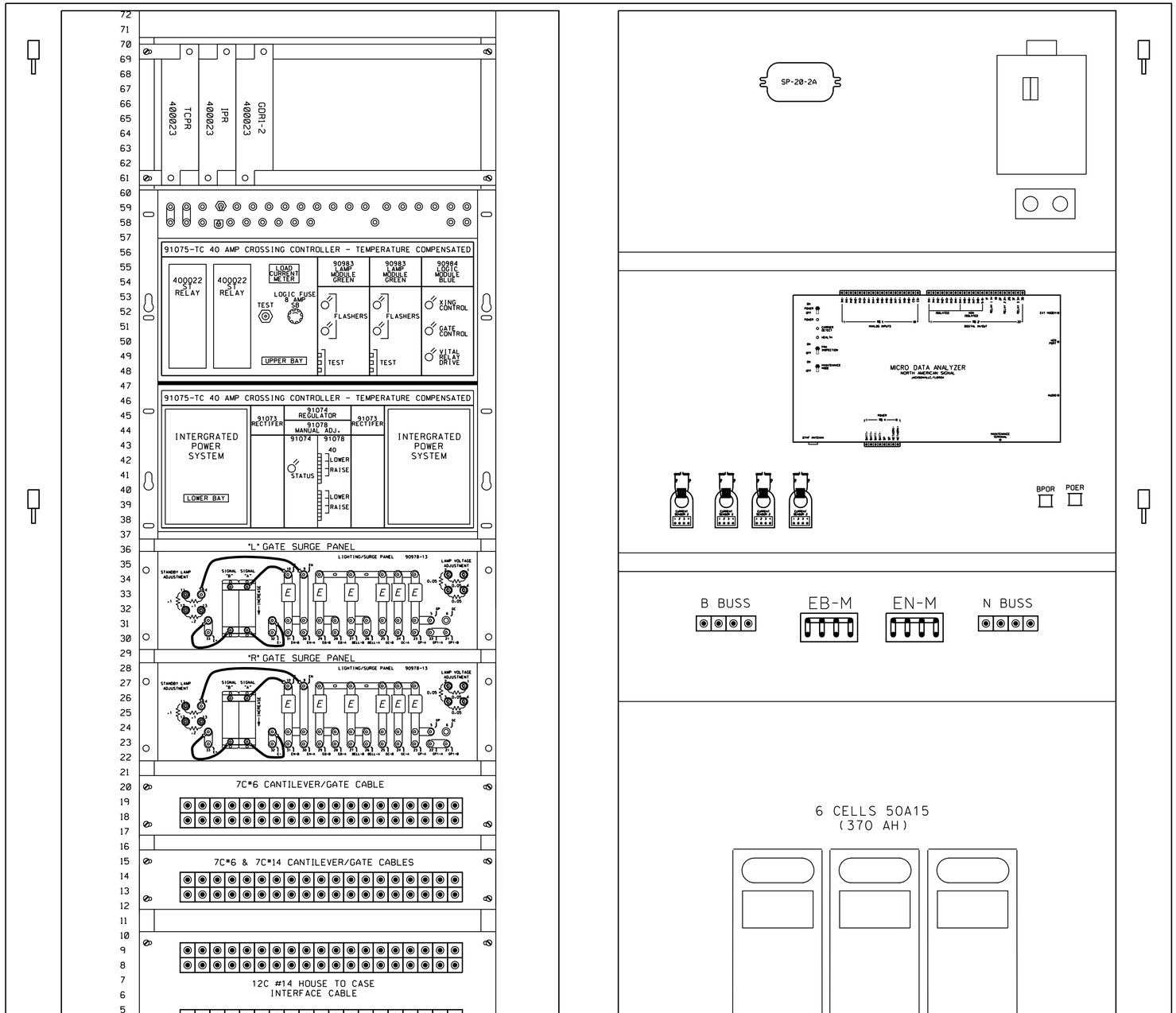

1 FOOT

RR-SP-028
SIGNAL STAGE 1

6' 9" CASE "B" LAYOUT
BUENA VISTA ST.
VY 12.77
SH. 10 OF 10

RAILROAD SHEET NO.
28 OF 171

THIS PLAN ACCURATE FOR RAILROAD WORK ONLY.

CASE "B" 6' 9"

STATE OF CALIFORNIA - DEPARTMENT OF TRANSPORTATION
Caltrans® DESIGN
CONSULTANT FUNCTIONAL SUPERVISOR GLENN BREINDEL
CALCULATED-DESIGNED BY RAMON VALDEZ
CHECKED BY
REVISED BY
DATE REVISED

LAST REVISION 00-00-00
DATE PLOTTED = 7/18/2012
TIME PLOTTED = 2:47:27 PM

Dist	COUNTY	ROUTE	POST MILES TOTAL PROJECT	SHEET No.	TOTAL SHEETS
7	LA	5	29.4/31.6	1789	1931

David McCord 05-21-12
REGISTERED CIVIL ENGINEER DATE

05-21-12
PLANS APPROVAL DATE

REGISTERED PROFESSIONAL ENGINEER DAVID WILLIAM MCCORD No. E-15317 Exp. June 30, 2013 ELECTRICAL STATE OF CALIFORNIA

THE STATE OF CALIFORNIA OR ITS OFFICERS OR AGENTS SHALL NOT BE RESPONSIBLE FOR THE ACCURACY OR COMPLETENESS OF SCANNED COPIES OF THIS PLAN SHEET.

SCRRA
279 E. ARROW HIGHWAY
SAN DIMAS, CA 91773

XORAIL
201 NORTH INDIAN HILL BLVD
SUITE 201
CLAREMONT, CA 91711

CP BRIGHTON

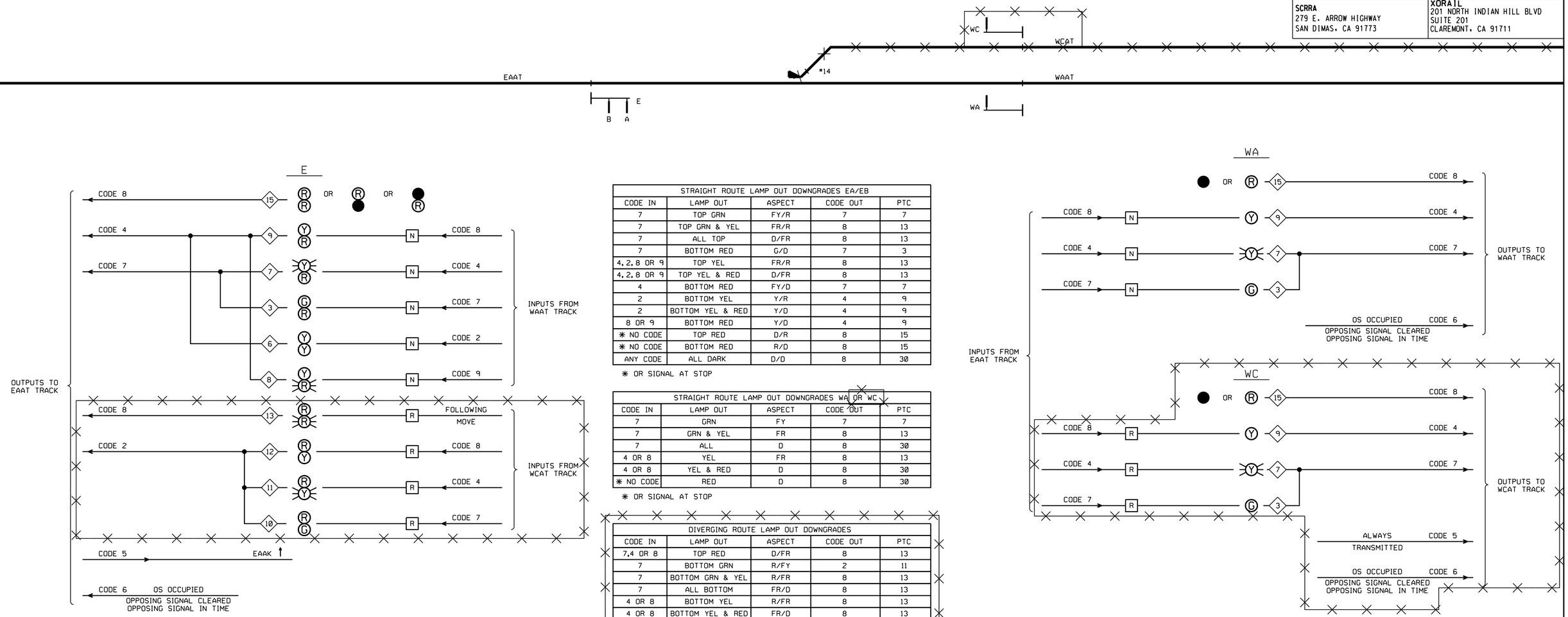

STRAIGHT ROUTE LAMP OUT DOWNGRADES EA/EB				
CODE IN	LAMP OUT	ASPECT	CODE OUT	PTC
7	TOP GRN	FY/R	7	7
7	TOP GRN & YEL	FR/R	8	13
7	ALL TOP	D/FR	8	13
7	BOTTOM RED	G/D	7	3
4, 2, 8 OR 9	TOP YEL	FR/R	8	13
4, 2, 8 OR 9	TOP YEL & RED	D/FR	8	13
4	BOTTOM RED	FY/D	7	7
2	BOTTOM YEL	Y/R	4	9
2	BOTTOM YEL & RED	Y/D	4	9
8 OR 9	BOTTOM RED	Y/D	4	9
✳ NO CODE	TOP RED	D/R	8	15
✳ NO CODE	BOTTOM RED	R/D	8	15
ANY CODE	ALL DARK	D/D	8	30

✳ OR SIGNAL AT STOP

STRAIGHT ROUTE LAMP OUT DOWNGRADES WA OR WC				
CODE IN	LAMP OUT	ASPECT	CODE OUT	PTC
7	GRN	FY	7	7
7	GRN & YEL	FR	8	13
7	ALL	D	8	30
4 OR 8	YEL	FR	8	13
4 OR 8	YEL & RED	D	8	30
✳ NO CODE	RED	D	8	30

✳ OR SIGNAL AT STOP

DIVERGING ROUTE LAMP OUT DOWNGRADES				
CODE IN	LAMP OUT	ASPECT	CODE OUT	PTC
7, 4 OR 8	TOP RED	D/FR	8	13
7	BOTTOM GRN	R/FY	2	11
7	BOTTOM GRN & YEL	R/FR	8	13
7	ALL BOTTOM	FR/D	8	13
4 OR 8	BOTTOM YEL	R/FR	8	13
4 OR 8	BOTTOM YEL & RED	FR/D	8	13
✳ NO CODE	TOP RED	D/FR	8	13
✳ NO CODE	BOTTOM RED	FR/D	8	13
ANY CODE	ALL DARK	D/D	8	30

✳ WITH FOLLOWING STICK

NOTES:
- N - SWITCH NORMAL
- R - SWITCH REVERSE
- ◇ - PTC CODE NUMBER

DATE IN SERVICE _____
S. ENGINEER _____
INSPECTOR _____

= OUT
= IN

TIME RELEASE ON ALL ROUTES IS SET AT 6 MINUTES 00 SECONDS

PTC WORK TO BE PERFORMED BY OTHERS.

RR-SP-029
SIGNAL STAGE 1

ASPECT SHEET
CP BRIGHTON
VY 12.80
SH. 1 OF 16

RAILROAD SHEET NO.
29 OF 171

THIS PLAN ACCURATE FOR RAILROAD WORK ONLY.

STATE OF CALIFORNIA - DEPARTMENT OF TRANSPORTATION
DESIGN
CONSULTANT FUNCTIONAL SUPERVISOR: GLENN BREINDEL
CALCULATED-DESIGNED BY: RAMON VALDEZ
CHECKED BY
REVISED BY
DATE REVISED

LAST REVISION 00-00-00
DATE PLOTTED = 7/18/2012
TIME PLOTTED = 2:47:28 PM

Dist	COUNTY	ROUTE	POST MILES TOTAL PROJECT	SHEET No.	TOTAL SHEETS
7	LA	5	29.4/31.6	1790	1931

David McCord 05-21-12
REGISTERED CIVIL ENGINEER DATE

05-21-12
PLANS APPROVAL DATE

REGISTERED PROFESSIONAL ENGINEER DAVID WILLIAM McCORD No. E-15317 Exp. June 30, 2013 ELECTRICAL STATE OF CALIFORNIA

THE STATE OF CALIFORNIA OR ITS OFFICERS OR AGENTS SHALL NOT BE RESPONSIBLE FOR THE ACCURACY OR COMPLETENESS OF SCANNED COPIES OF THIS PLAN SHEET.

SCRRA
279 E. ARROW HIGHWAY
SAN DIMAS, CA 91773

XORAIL
201 NORTH INDIAN HILL BLVD
SUITE 201
CLAREMONT, CA 91711

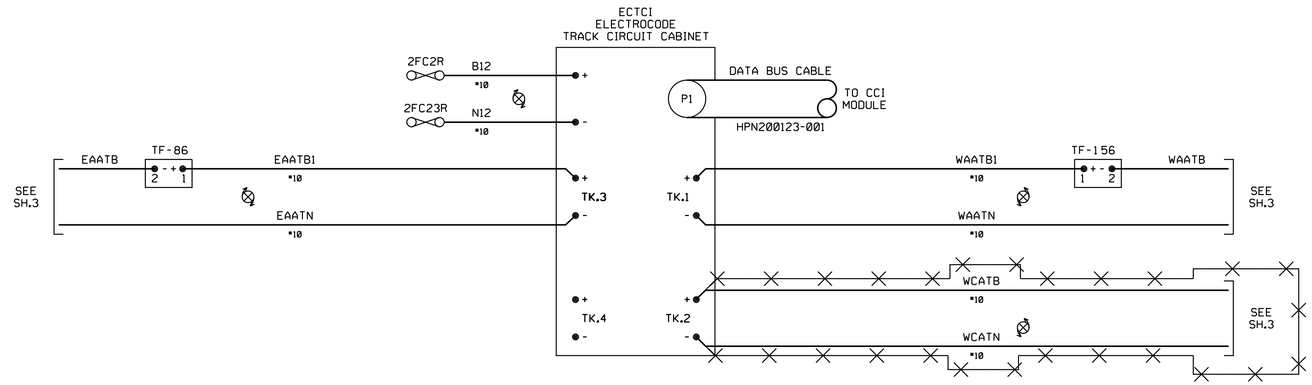

DATE IN SERVICE _____
S. ENGINEER _____
INSPECTOR _____

= OUT
= IN

RR-SP-030
SIGNAL STAGE 1

ELECTROCODE CIRCUITS
CP BRIGHTON
VY 12.80
SH. 2 OF 16

RAILROAD SHEET NO.
30 OF 171

THIS PLAN ACCURATE FOR RAILROAD WORK ONLY.

STATE OF CALIFORNIA - DEPARTMENT OF TRANSPORTATION
Caltrans DESIGN

CONSULTANT FUNCTIONAL SUPERVISOR: GLENN BREINDEL

CALCULATED-DESIGNED BY: RAMON VALDEZ
CHECKED BY

REVISED BY
DATE REVISED

LAST REVISION 00-00-00
DATE PLOTTED 7/18/2012
TIME PLOTTED 2:47:29 PM

Dist	COUNTY	ROUTE	POST MILES TOTAL PROJECT	SHEET No.	TOTAL SHEETS
7	LA	5	29.4/31.6	1791	1931

David McCord 05-21-12
REGISTERED CIVIL ENGINEER DATE

05-21-12
PLANS APPROVAL DATE

REGISTERED PROFESSIONAL ENGINEER DAVID WILLIAM MCCORD No. E-15317 Exp. June 30, 2013 ELECTRICAL STATE OF CALIFORNIA

THE STATE OF CALIFORNIA OR ITS OFFICERS OR AGENTS SHALL NOT BE RESPONSIBLE FOR THE ACCURACY OR COMPLETENESS OF SCANNED COPIES OF THIS PLAN SHEET.

SCRRA
279 E. ARROW HIGHWAY
SAN DIMAS, CA 91773

XORAIL
201 NORTH INDIAN HILL BLVD
SUITE 201
CLAREMONT, CA 91711

TRACK CIRCUITS

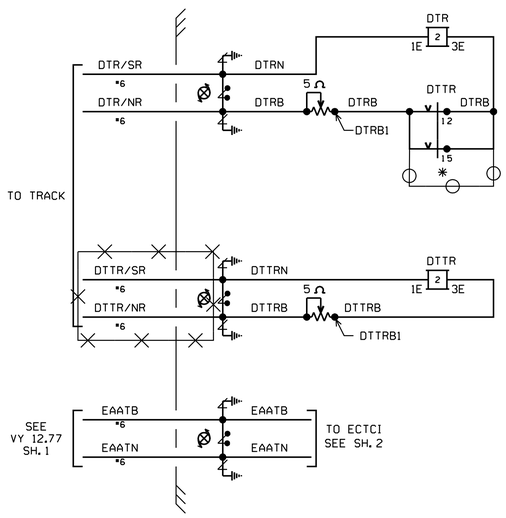

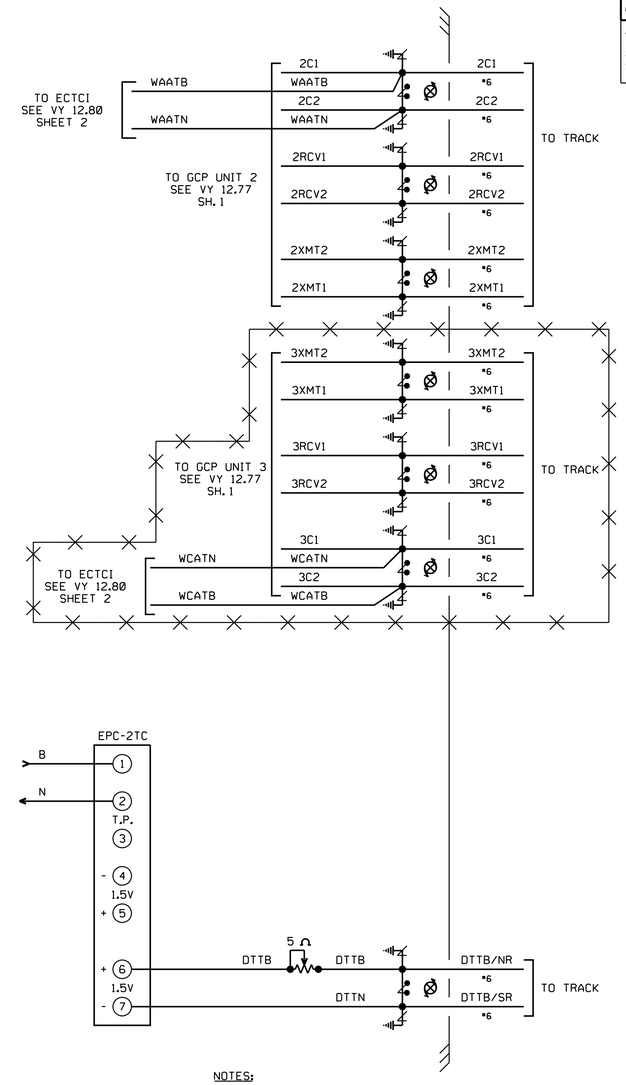

DATE IN SERVICE _____
S. ENGINEER _____
INSPECTOR _____

= OUT
= IN

NOTES:
* - INSTALL JUMPER WHEN SIDING TRACK & SWITCH ARE REMOVE.D.

RR-SP-031
SIGNAL STAGE 1

TRACK CIRCUITS
CP BRIGHTON
VY 12.80
SH. 3 OF 16

RAILROAD SHEET NO.
31 OF 171

THIS PLAN ACCURATE FOR RAILROAD WORK ONLY.

STATE OF CALIFORNIA - DEPARTMENT OF TRANSPORTATION
Caltrans® DESIGN
CONSULTANT FUNCTIONAL SUPERVISOR GLENN BREINDEL
CALCULATED-DESIGNED BY RAMON VALDEZ
CHECKED BY
REVISED BY
DATE REVISED

LAST REVISION 00-00-00
DATE PLOTTED = 7/18/2012
TIME PLOTTED = 2:47:30 PM

Dist	COUNTY	ROUTE	POST MILES TOTAL PROJECT	SHEET No.	TOTAL SHEETS
7	LA	5	29.4/31.6	1792	1931

David McCord 05-21-12
REGISTERED CIVIL ENGINEER DATE

05-21-12
PLANS APPROVAL DATE

REGISTERED PROFESSIONAL ENGINEER DAVID WILLIAM MCCORD No. E-15317 Exp. June 30, 2013 ELECTRICAL STATE OF CALIFORNIA

THE STATE OF CALIFORNIA OR ITS OFFICERS OR AGENTS SHALL NOT BE RESPONSIBLE FOR THE ACCURACY OR COMPLETENESS OF SCANNED COPIES OF THIS PLAN SHEET.

SCRRA
279 E. ARROW HIGHWAY
SAN DIMAS, CA 91773

XORAIL
201 NORTH INDIAN HILL BLVD
SUITE 201
CLAREMONT, CA 91711

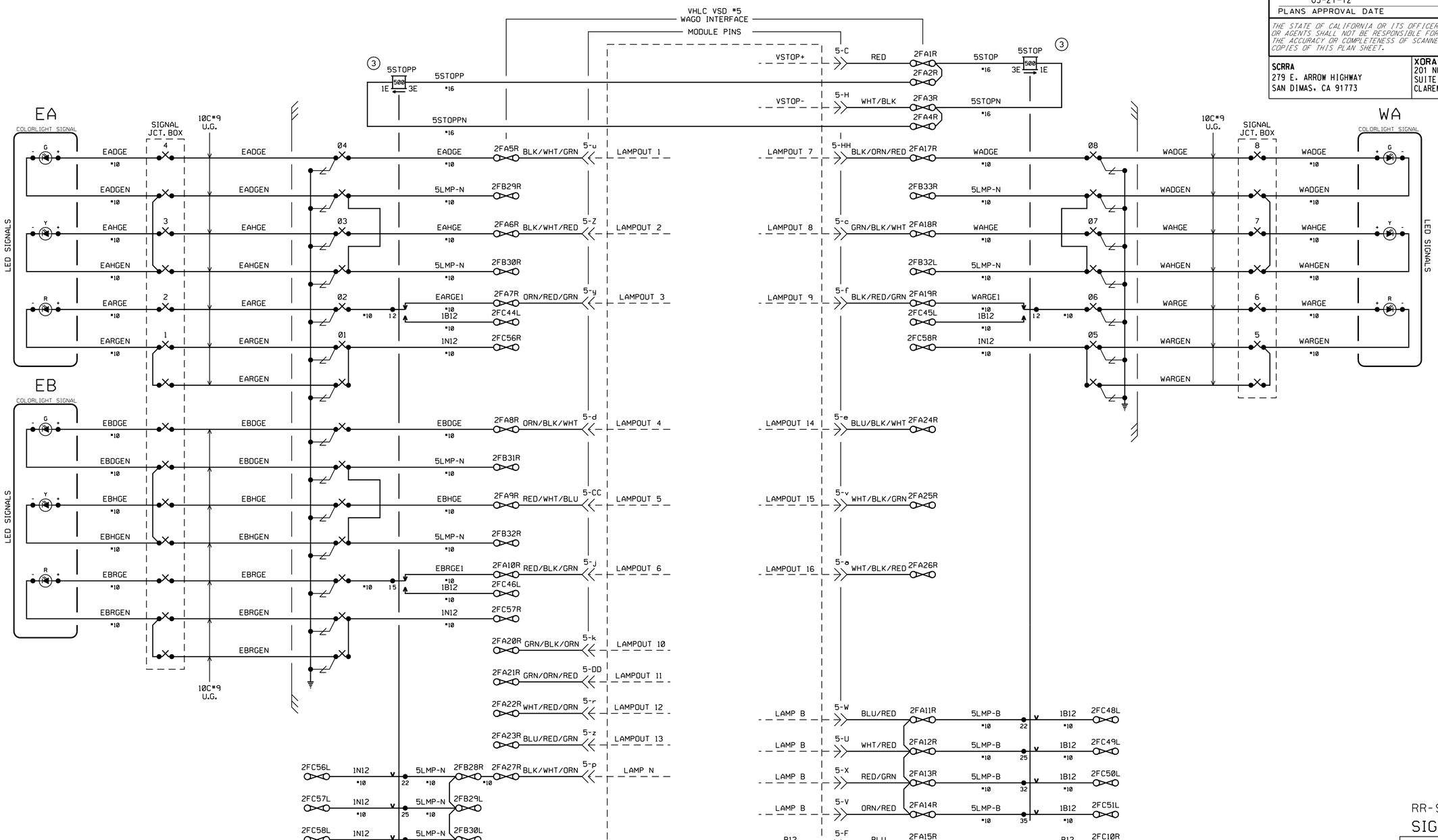

THIS PLAN ACCURATE FOR RAILROAD WORK ONLY.

RR-SP-032
SIGNAL STAGE 1

SIGNAL LIGHTING
CP BRIGHTON
VY 12.80
SH. 4 OF 16

RAILROAD SHEET NO.
32 OF 171

REVISED BY	DATE REVISED

RAMON VALDEZ — CALCULATED-DESIGNED BY
CHECKED BY
CONSULTANT FUNCTIONAL SUPERVISOR — GLENN BREINDEL
STATE OF CALIFORNIA - DEPARTMENT OF TRANSPORTATION — DESIGN
Caltrans

LAST REVISION 00-00-00
DATE PLOTTED 7/18/2012
TIME PLOTTED 21:47:31 PM

Dist	COUNTY	ROUTE	POST MILES TOTAL PROJECT	SHEET No.	TOTAL SHEETS
7	LA	5	29.4/31.6	1793	1931

David McCord 05-21-12
REGISTERED CIVIL ENGINEER DATE

05-21-12
PLANS APPROVAL DATE

REGISTERED PROFESSIONAL ENGINEER DAVID WILLIAM McCORD No. E-15317 Exp. June 30, 2013 ELECTRICAL STATE OF CALIFORNIA

THE STATE OF CALIFORNIA OR ITS OFFICERS OR AGENTS SHALL NOT BE RESPONSIBLE FOR THE ACCURACY OR COMPLETENESS OF SCANNED COPIES OF THIS PLAN SHEET.

SCRRA
279 E. ARROW HIGHWAY
SAN DIMAS, CA 91773

XORAIL
201 NORTH INDIAN HILL BLVD
SUITE 201
CLAREMONT, CA 91711

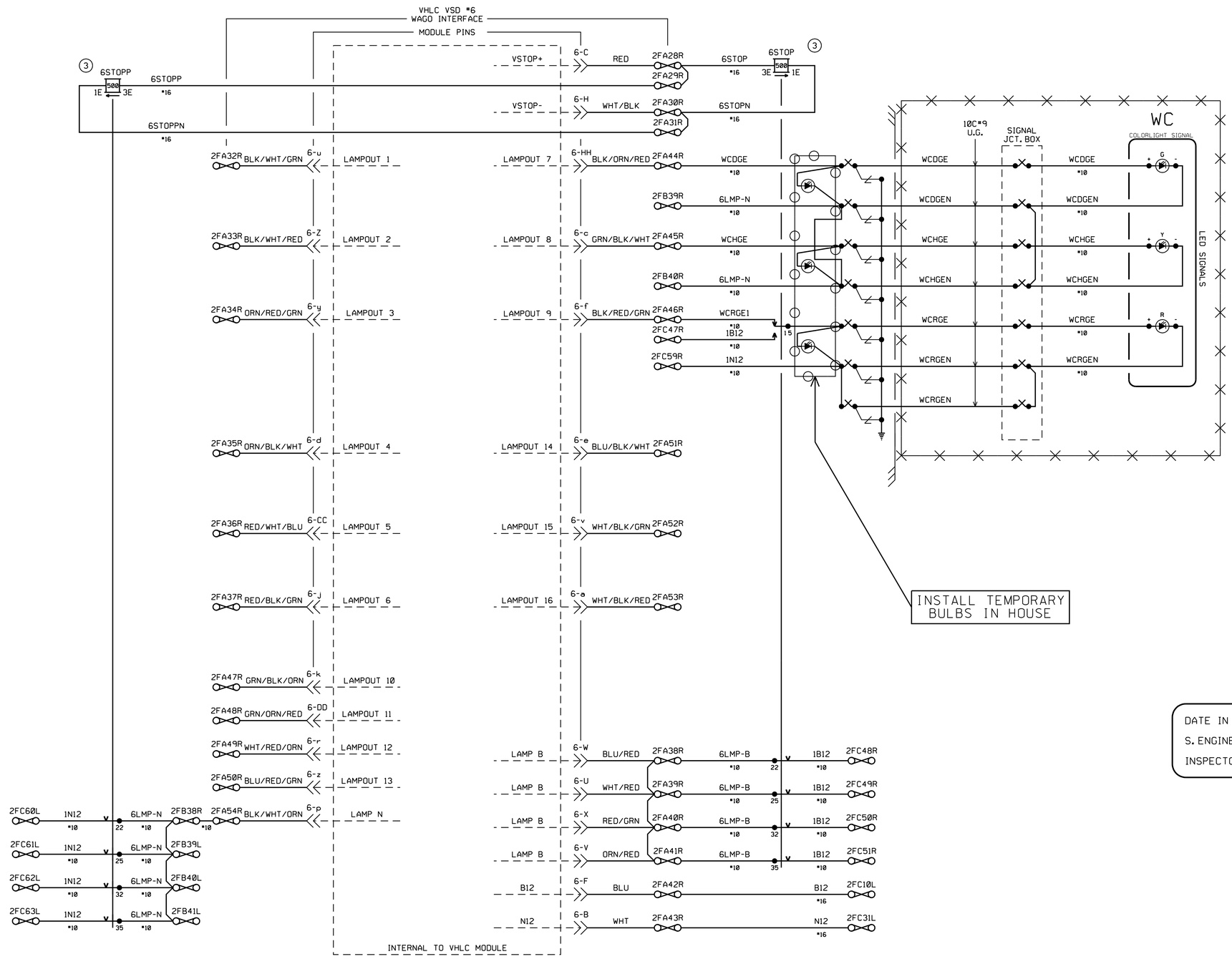

DATE IN SERVICE _____
S. ENGINEER _____
INSPECTOR _____

= OUT
= IN

RR-SP-033
SIGNAL STAGE 1

SIGNAL LIGHTING
CP BRIGHTON
VY 12.80
SH. 5 OF 16

RAILROAD SHEET NO.
33 OF 171

THIS PLAN ACCURATE FOR RAILROAD WORK ONLY.

STATE OF CALIFORNIA - DEPARTMENT OF TRANSPORTATION
Caltrans DESIGN

CONSULTANT FUNCTIONAL SUPERVISOR: GLENN BREINDEL
CALCULATED-DESIGNED BY: RAMON VALDEZ
CHECKED BY
REVISED BY
DATE REVISED

LAST REVISION 00-00-00
DATE PLOTTED 7/18/2012
TIME PLOTTED 2:47:32 PM

Dist	COUNTY	ROUTE	POST MILES TOTAL PROJECT	SHEET No.	TOTAL SHEETS
7	LA	5	29.4/31.6	1794	1931

David McCord 05-21-12
REGISTERED CIVIL ENGINEER DATE

05-21-12
PLANS APPROVAL DATE

REGISTERED PROFESSIONAL ENGINEER DAVID WILLIAM McCORD No. E-15317 Exp. June 30, 2013 ELECTRICAL STATE OF CALIFORNIA

THE STATE OF CALIFORNIA OR ITS OFFICERS OR AGENTS SHALL NOT BE RESPONSIBLE FOR THE ACCURACY OR COMPLETENESS OF SCANNED COPIES OF THIS PLAN SHEET.

SCRRA
279 E. ARROW HIGHWAY
SAN DIMAS, CA 91773

XORAIL
201 NORTH INDIAN HILL BLVD
SUITE 201
CLAREMONT, CA 91711

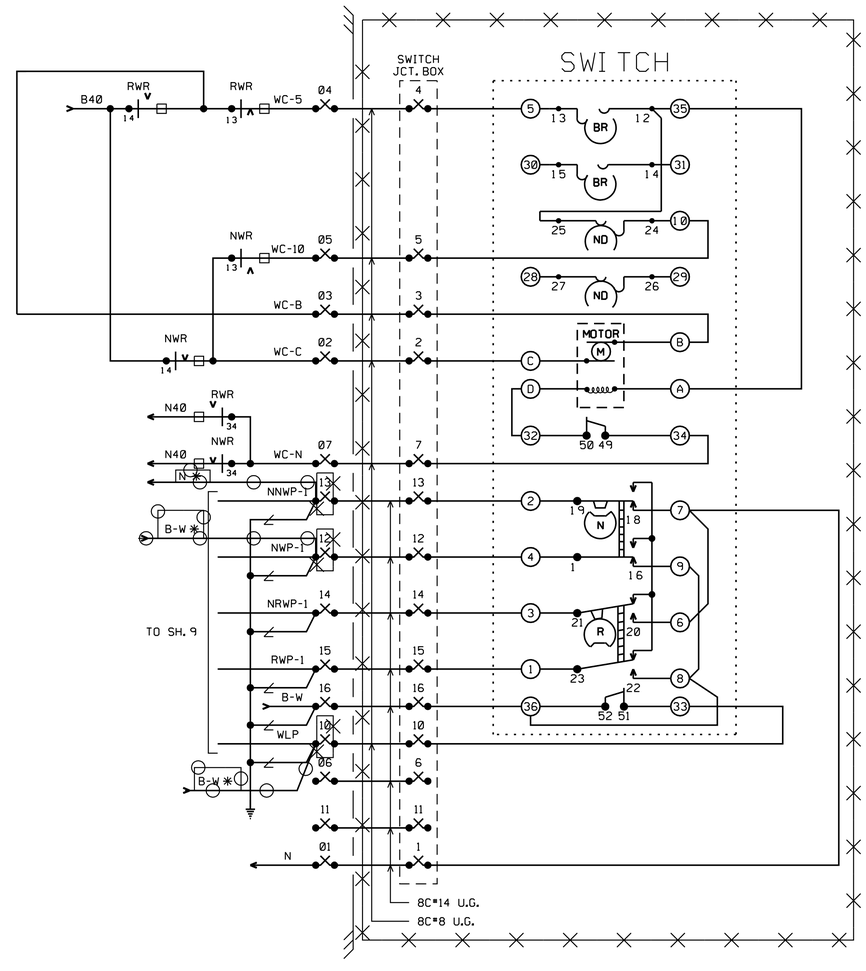

NOTE:
✱ INSTALL N & B-W WIRES WHEN SWITCH IS REMOVED

= OUT

= IN

DATE IN SERVICE _____
S. ENGINEER _____
INSPECTOR _____

1) WIRING SHOWN IS FOR SWITCH WITH LEFT HAND POINT NORMALLY CLOSED.
2) WITH SWITCH IN NORMAL POSITION, SET INDICATION CAMS SO CONTACTS 19 & 17 ARE CLOSED (DOWN) AND CONTACTS 21 & 23 ARE SHUNTED BY SHUNT BAR.
3) ALL WIRES TO MOTOR ARE #9 COPPER.
4) CONTACTS 49-50 AND 51-52 OPEN WHEN SELECTOR LEVER IS PLACED IN HAND THROW.

THIS PLAN ACCURATE FOR RAILROAD WORK ONLY.

RR-SP-034
SIGNAL STAGE 1

SWITCH CIRCUITS
CP BRIGHTON
VY 12.80
SH. 6 OF 16

RAILROAD SHEET NO.
34 OF 171

STATE OF CALIFORNIA - DEPARTMENT OF TRANSPORTATION
Caltrans DESIGN

CONSULTANT FUNCTIONAL SUPERVISOR: GLENN BREINDEL
CALCULATED-DESIGNED BY: RAMON VALDEZ
CHECKED BY
REVISED BY
DATE REVISED

LAST REVISION 00-00-00
DATE PLOTTED 7/18/2012
TIME PLOTTED 2:47:33 PM

Dist	COUNTY	ROUTE	POST MILES TOTAL PROJECT	SHEET No.	TOTAL SHEETS
7	LA	5	29.4/31.6	1795	1931

David McCord 05-21-12
REGISTERED CIVIL ENGINEER DATE

05-21-12
PLANS APPROVAL DATE

REGISTERED PROFESSIONAL ENGINEER DAVID WILLIAM McCORD No. E-15317 Exp. June 30, 2013 ELECTRICAL STATE OF CALIFORNIA

THE STATE OF CALIFORNIA OR ITS OFFICERS OR AGENTS SHALL NOT BE RESPONSIBLE FOR THE ACCURACY OR COMPLETENESS OF SCANNED COPIES OF THIS PLAN SHEET.

SCRRA
279 E. ARROW HIGHWAY
SAN DIMAS, CA 91773

XORAIL
201 NORTH INDIAN HILL BLVD
SUITE 201
CLAREMONT, CA 91711

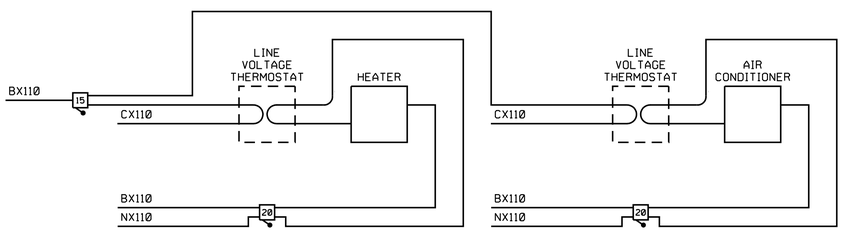

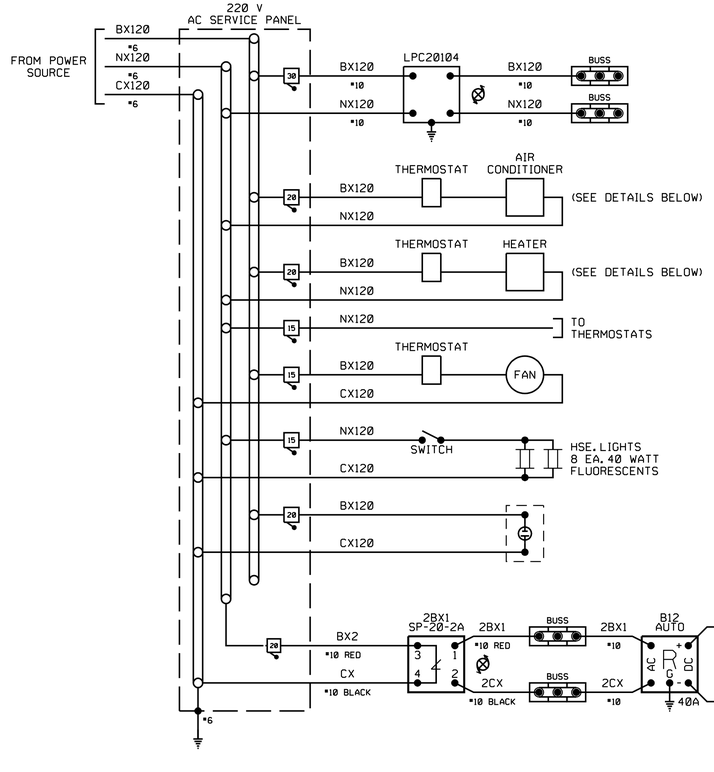

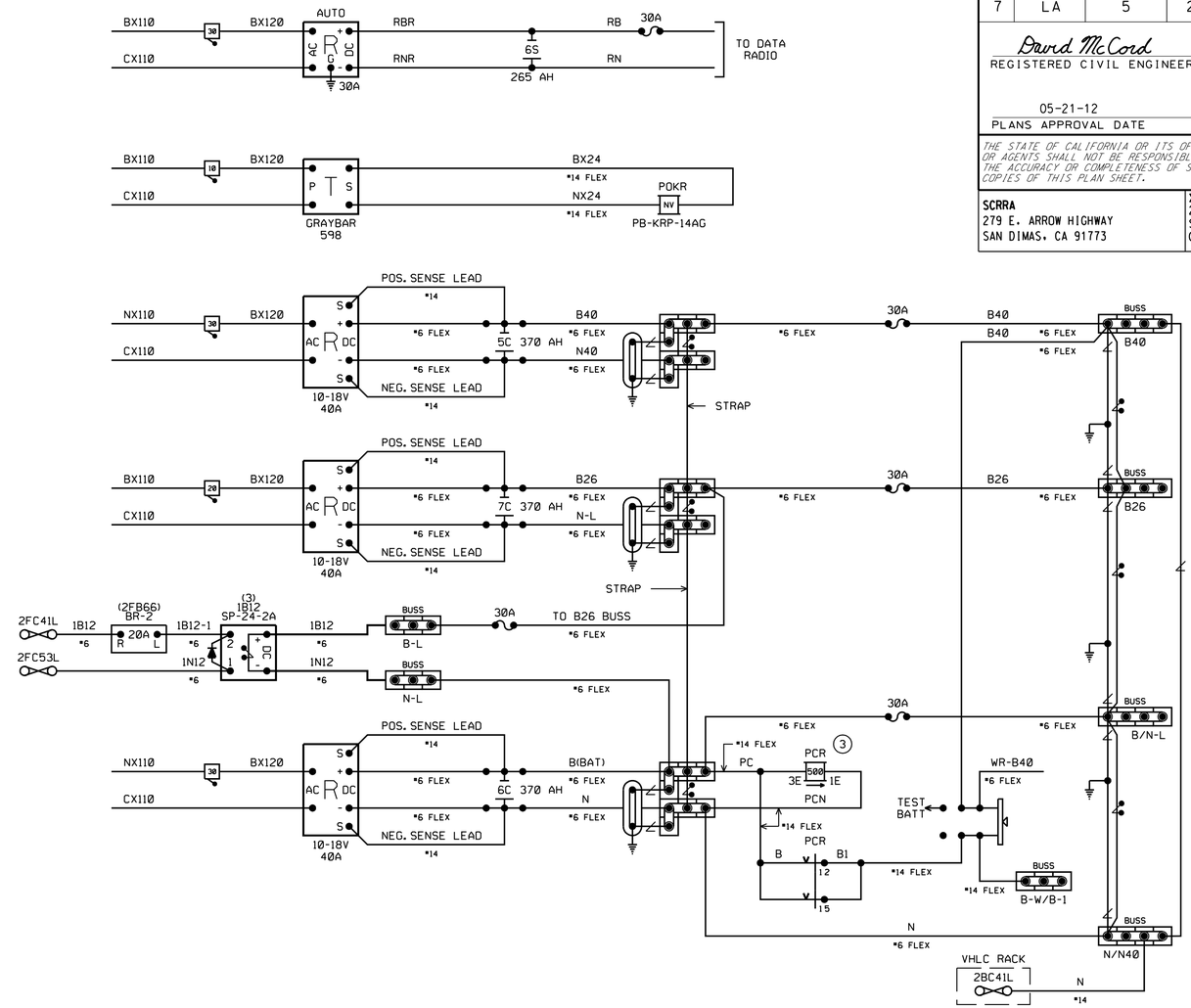

THIS PLAN ACCURATE FOR RAILROAD WORK ONLY.

REFERENCE ONLY

RR-SP-035
SIGNAL STAGE 1

POWER CIRCUITS
CP BRIGHTON
VY 12.80
SH. 7 OF 16

RAILROAD SHEET NO.
35 OF 171

STATE OF CALIFORNIA - DEPARTMENT OF TRANSPORTATION
Caltrans® DESIGN
CONSULTANT FUNCTIONAL SUPERVISOR: GLENN BREINDEL
CALCULATED-DESIGNED BY: RAMON VALDEZ
CHECKED BY
REVISED BY
DATE REVISED

LAST REVISION 00-00-00
DATE PLOTTED = 7/18/2012
TIME PLOTTED = 2:47:33 PM

BORDER LAST REVISED 7/2/2010
USERNAME = gharibiana
DGN FILE = ...\moc\xorail\sheet\SP-035-.sht
RELATIVE BORDER SCALE IS IN INCHES 0 1 2 3
UNIT 1812
PROJECT NUMBER & PHASE 07000211191

Dist	COUNTY	ROUTE	POST MILES TOTAL PROJECT	SHEET No.	TOTAL SHEETS
7	LA	5	29.4/31.6	1796	1931

David McCord 05-21-12
REGISTERED CIVIL ENGINEER DATE

05-21-12
PLANS APPROVAL DATE

REGISTERED PROFESSIONAL ENGINEER DAVID WILLIAM McCORD No. E-15317 Exp. June 30, 2013 ELECTRICAL STATE OF CALIFORNIA

THE STATE OF CALIFORNIA OR ITS OFFICERS OR AGENTS SHALL NOT BE RESPONSIBLE FOR THE ACCURACY OR COMPLETENESS OF SCANNED COPIES OF THIS PLAN SHEET.

SCRRA
279 E. ARROW HIGHWAY
SAN DIMAS, CA 91773

XORAIL
201 NORTH INDIAN HILL BLVD
SUITE 201
CLAREMONT, CA 91711

CHASSIS ID 1280

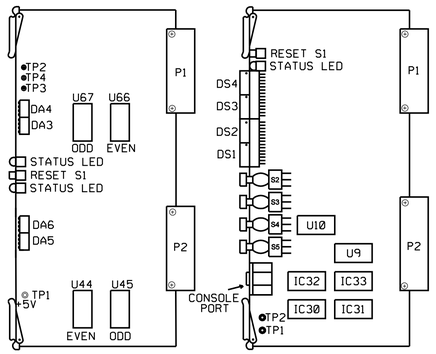

VITAL LOGIC PROCESSOR

AUXILIARY COMMUNICATIONS PROCESSOR

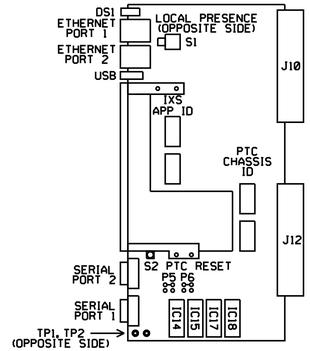

SITE SPECIFIC / PTC PROCESSOR

VHLC (REAR VIEW)
(2-32)

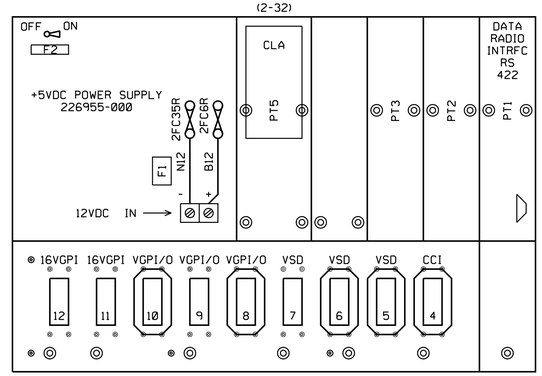

A5PTC VER. 1.14 OR LATER

U44 CKSUM *	U66 CKSUM *
U45 CKSUM *	U67 CKSUM *

ATCS VER 1.6 OR LATER

IC32 CKSUM *	IC33 CKSUM *
IC30 CKSUM *	IC31 CKSUM *
U10 CKSUM *	U9 CKSUM *
CRC *	CRC *

SSM PROGRAM XXXXXX

IC14 CKSUM XXXX	IC17 CKSUM ____
CRC XXXX	CRC ____
IC15 CKSUM XXXX	IC18 CKSUM ____
CRC XXXX	CRC ____

PTC EXECUTIVE
XXXX VER. X.X OR GREATER

PTC MAP XXXXXX
CRC _____

PTC CFG XXXXXX
CRC _____

SITE SPECIFIC MODULE JUMPER LOCATIONS

EPROM	P3	P4	P5	P6
27C64	1-3	1-3	1-3	1-3
27C128	1-3	1-3	1-3	1-3
27C256	2-4	1-3	1-3	1-3
27C512	2-4	2-4	1-3	1-3
27C010	2-4	2-4	2-4	1-3

MODULE CABLES

MODULE	HPN
CCI	200123-001
VSD	200125-020
VGPI/O	200124-120
16VGPI	200661-120
CLA	202037-005

LOCATION # 30

CONTROLS									INDICATIONS								
BIT	1	2	3	4	5	6	7	8	BIT	1	2	3	4	5	6	7	8
WORD1	NWS	RWS	EHS	WHS					WORD1	NWK	RWK	ITK	EGK	WGK	TEK	LOK	
WORD2									WORD2		EAAK		WAAK	WCAK	POK	LCK	
WORD3									WORD3								

PTC MESSAGE

TYPE	SWITCH	SIGNAL	SIGNAL	SIGNAL
NAME	SW	E	WA	WC
OFFSET	0	2	7	12

TYPICAL INSTALLATION OF EPROM

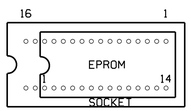

LOCATION NAME: CP BRIGHTON

ATCS INFORMATION		SIGNAL EQUIPMENT: (VHLC)			
SIGNAL CODE		MCP CODE		CPC CODE	
TYPE	5	TYPE	5	TYPE	2
RR ID SCAX	340	RR ID SCAX	340	RR ID SCAX	340
CODE LINE	06	CODE LINE	06	NODE	06
SITE ID	30	SITE ID	30	CODE LINE	5516
DEVICE ID	01	DEVICE ID	01		

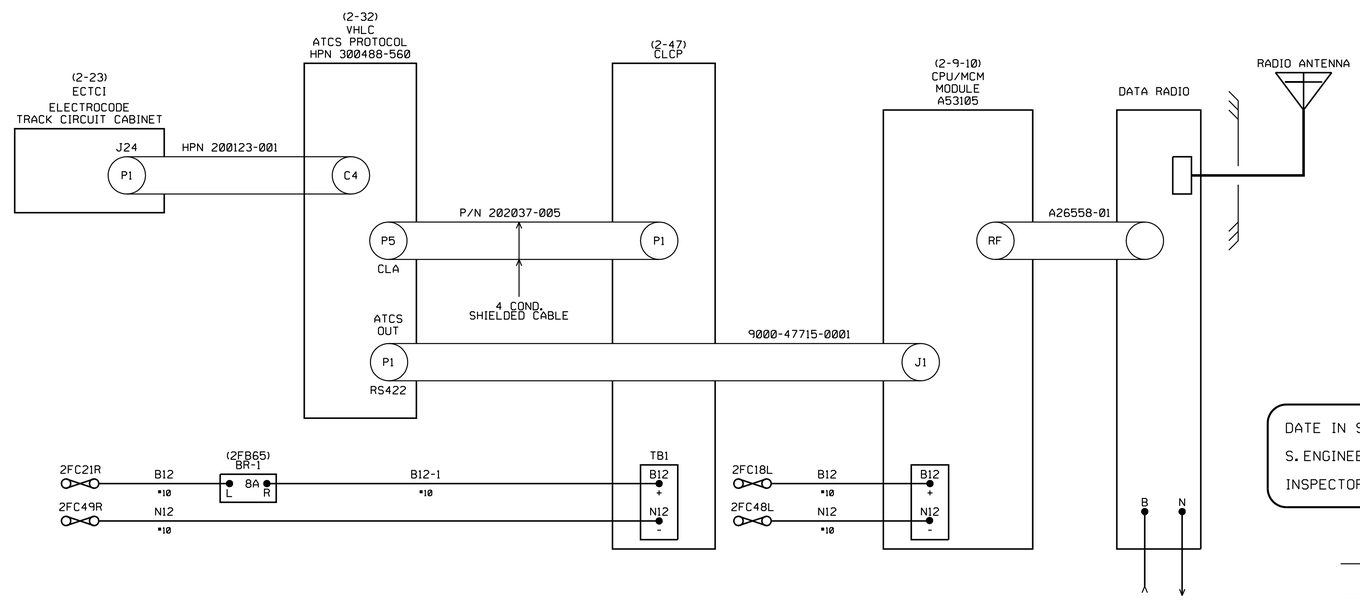

DATE IN SERVICE _____
S. ENGINEER _____
INSPECTOR _____

= OUT
= IN

PTC WORK TO BE PERFORMED BY OTHERS.

RR-SP-036
SIGNAL STAGE 1

RADIO/BLOCK DIAGRAM & CODE ASSIGNMENTS
CP BRIGHTON
VY 12.80
SH. 8 OF 16

RAILROAD SHEET NO.
36 OF 171

THIS PLAN ACCURATE FOR RAILROAD WORK ONLY.

STATE OF CALIFORNIA - DEPARTMENT OF TRANSPORTATION
DESIGN
CONSULTANT FUNCTIONAL SUPERVISOR: GLENN BREINDEL
CALCULATED-DESIGNED BY: RAMON VALDEZ
CHECKED BY
REVISED BY
DATE REVISED

LAST REVISION 00-00-00
DATE PLOTTED = 7/18/2012
TIME PLOTTED = 23:47:35 PM

Dist	COUNTY	ROUTE	POST MILES TOTAL PROJECT	SHEET No.	TOTAL SHEETS
7	LA	5	29.4/31.6	1797	1931

David McCord 05-21-12
REGISTERED CIVIL ENGINEER DATE

05-21-12
PLANS APPROVAL DATE

REGISTERED PROFESSIONAL ENGINEER DAVID WILLIAM MCCORD No. E-15317 Exp. June 30, 2013 ELECTRICAL STATE OF CALIFORNIA

THE STATE OF CALIFORNIA OR ITS OFFICERS OR AGENTS SHALL NOT BE RESPONSIBLE FOR THE ACCURACY OR COMPLETENESS OF SCANNED COPIES OF THIS PLAN SHEET.

SCRRA
279 E. ARROW HIGHWAY
SAN DIMAS, CA 91773

XORAIL
201 NORTH INDIAN HILL BLVD
SUITE 201
CLAREMONT, CA 91711

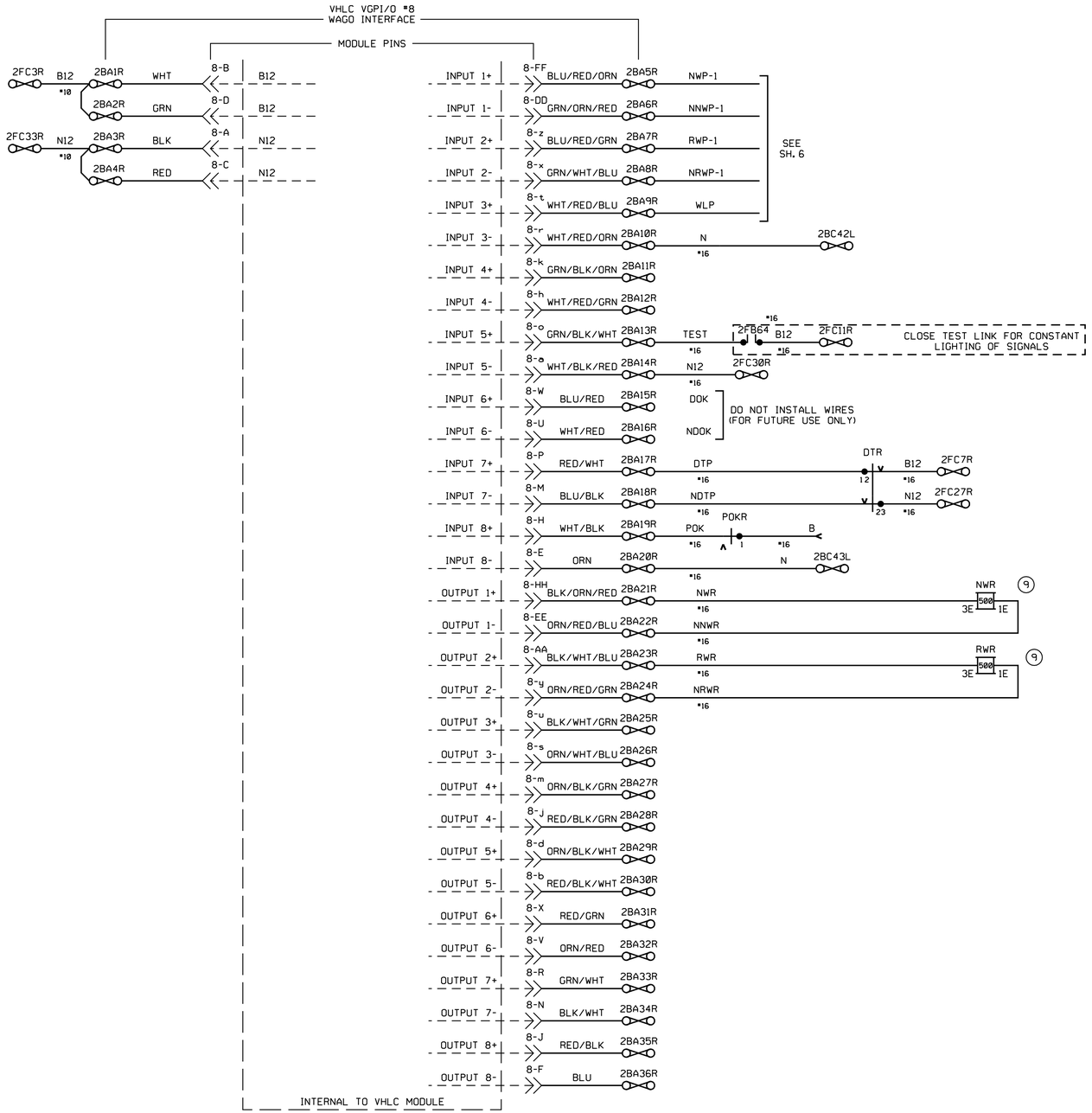

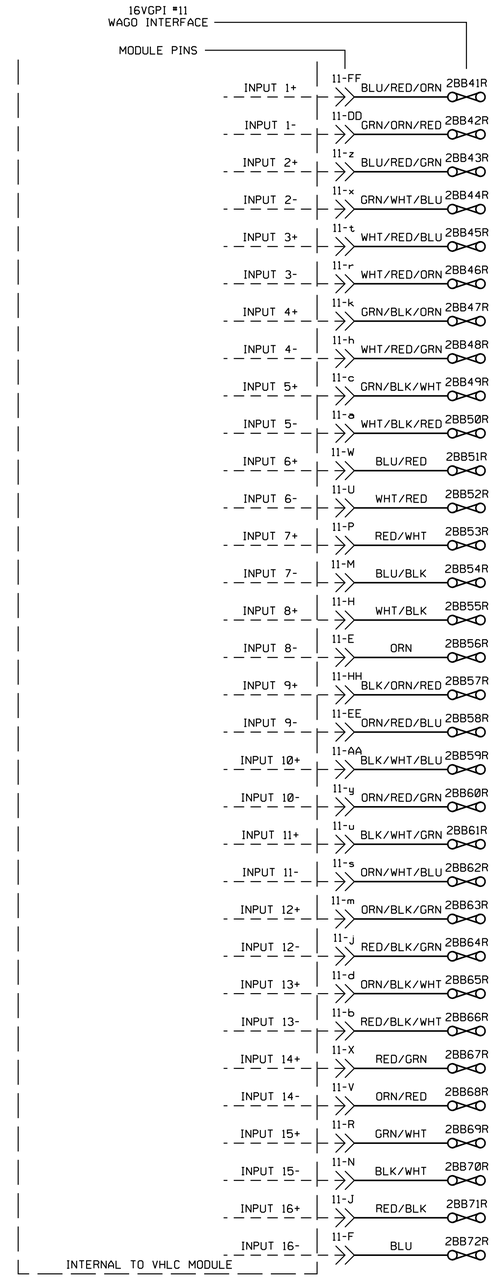

RR-SP-037
SIGNAL STAGE 1

VHLC I/O CONNECTIONS
CP BRIGHTON
VY 12.80
SH. 9 OF 16

STATE OF CALIFORNIA - DEPARTMENT OF TRANSPORTATION
Caltrans® DESIGN

CONSULTANT FUNCTIONAL SUPERVISOR: GLENN BREINDEL
CALCULATED-DESIGNED BY: RAMON VALDEZ
CHECKED BY
REVISED BY
DATE REVISED

THIS PLAN ACCURATE FOR RAILROAD WORK ONLY.

REFERENCE ONLY

RAILROAD SHEET NO.
37 OF 171

LAST REVISION 00-00-00
DATE PLOTTED = 7/18/2012
TIME PLOTTED = 2:47:36 PM

BORDER LAST REVISED 7/2/2010
USERNAME = gharibiana
DGN FILE = ...\moc\xorail\sheet\SP-037-.sht
RELATIVE BORDER SCALE IS IN INCHES 0 1 2 3
UNIT 1812
PROJECT NUMBER & PHASE 07000211191

Dist	COUNTY	ROUTE	POST MILES TOTAL PROJECT	SHEET No.	TOTAL SHEETS
7	LA	5	29.4/31.6	1798	1931

David McCord 05-21-12
REGISTERED CIVIL ENGINEER DATE

05-21-12
PLANS APPROVAL DATE

REGISTERED PROFESSIONAL ENGINEER DAVID WILLIAM MCCORD No. E-15317 Exp. June 30, 2013 ELECTRICAL STATE OF CALIFORNIA

THE STATE OF CALIFORNIA OR ITS OFFICERS OR AGENTS SHALL NOT BE RESPONSIBLE FOR THE ACCURACY OR COMPLETENESS OF SCANNED COPIES OF THIS PLAN SHEET.

SCRRA
279 E. ARROW HIGHWAY
SAN DIMAS, CA 91773

XORAIL
201 NORTH INDIAN HILL BLVD
SUITE 201
CLAREMONT, CA 91711

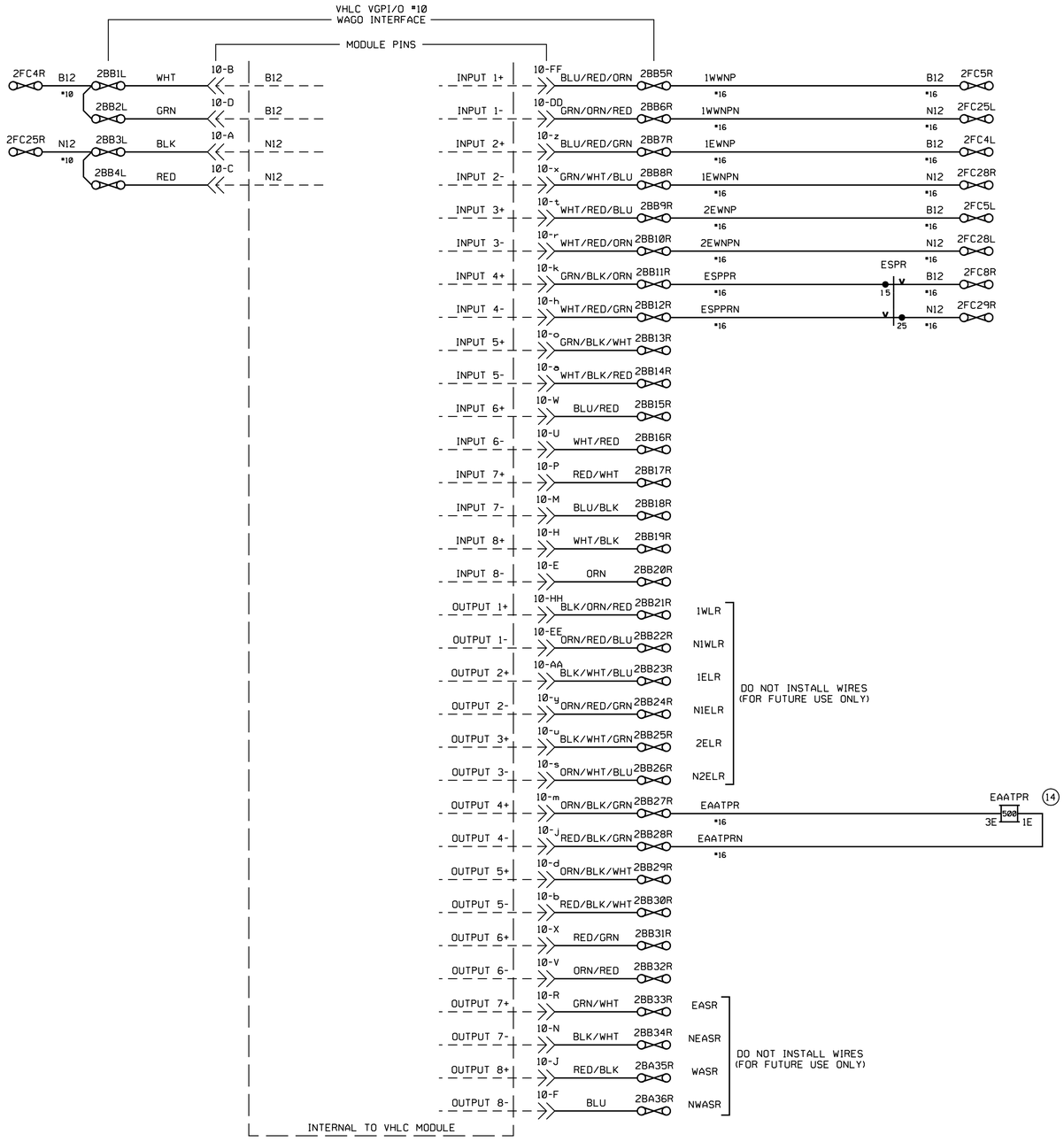

RR-SP-038
SIGNAL STAGE 1

VHLC I/O CONNECTIONS
CP BRIGHTON
VY 12.80
SH.10 OF 16

RAILROAD SHEET NO.
38 OF 171

REFERENCE ONLY

THIS PLAN ACCURATE FOR RAILROAD WORK ONLY.

STATE OF CALIFORNIA - DEPARTMENT OF TRANSPORTATION
Caltrans® DESIGN

CONSULTANT FUNCTIONAL SUPERVISOR: GLENN BREINDEL
CALCULATED-DESIGNED BY: RAMON VALDEZ
CHECKED BY
REVISED BY
DATE REVISED

LAST REVISION 00-00-00
DATE PLOTTED = 7/18/2012
TIME PLOTTED = 23:47:37 PM

Dist	COUNTY	ROUTE	POST MILES TOTAL PROJECT	SHEET No.	TOTAL SHEETS
7	LA	5	29.4/31.6	1799	1931

David McCord 05-21-12
REGISTERED CIVIL ENGINEER DATE

05-21-12
PLANS APPROVAL DATE

REGISTERED PROFESSIONAL ENGINEER DAVID WILLIAM McCORD No. E-15317 Exp. June 30, 2013 ELECTRICAL STATE OF CALIFORNIA

THE STATE OF CALIFORNIA OR ITS OFFICERS OR AGENTS SHALL NOT BE RESPONSIBLE FOR THE ACCURACY OR COMPLETENESS OF SCANNED COPIES OF THIS PLAN SHEET.

SCRRA
279 E. ARROW HIGHWAY
SAN DIMAS, CA 91773

XORAIL
201 NORTH INDIAN HILL BLVD
SUITE 201
CLAREMONT, CA 91711

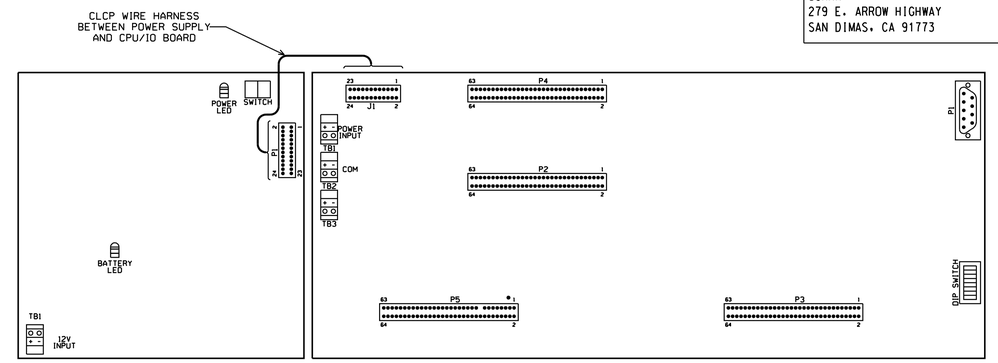

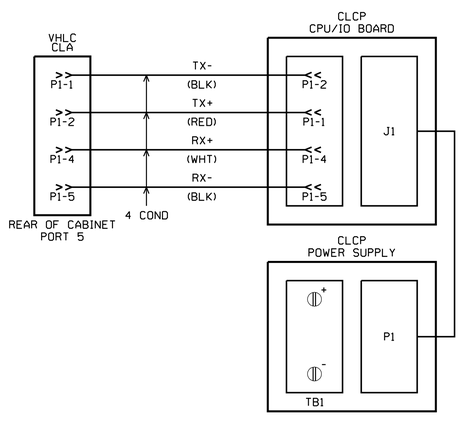

DIP SWITCH LOCATED ON CLCP CPU/IO BOARD

	OFF	ON	
NO START SWITCH		1	START SWITCH
NOT USED		2	
128		3	
256		4	
LOOP BACK		5	
COMMON ANODE		6	COMMON CATHODE
NORMALLY CLOSED		7	NORMALLY OPEN
NORMAL MODE		8	SELF TEST MODE

LCP EPROM
VER. 1.3
CHKSUM 8B3C

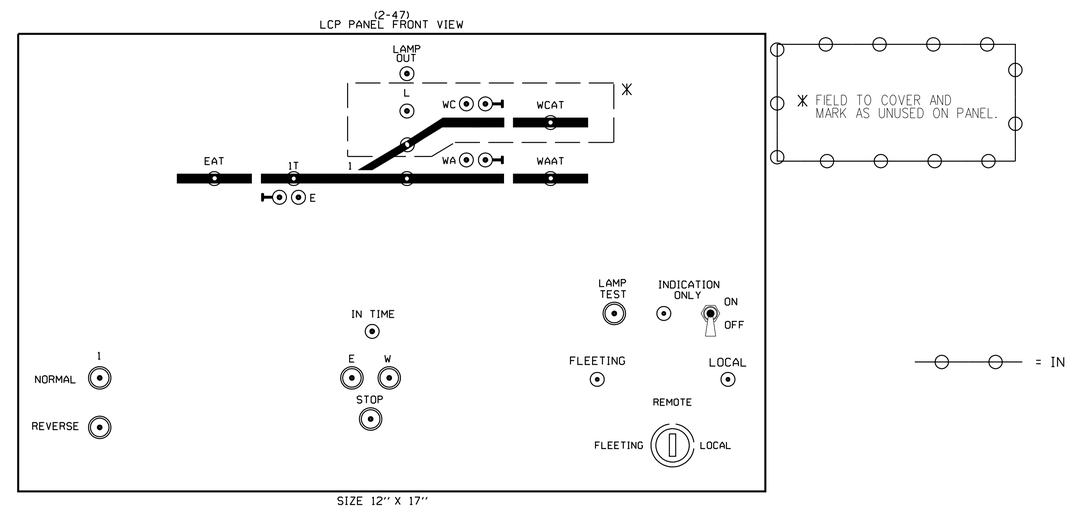

RR-SP-039
SIGNAL STAGE 1

LOCAL CONTROL PANEL
CP BRIGHTON
VY 12.80
SH. 11 OF 16

RAILROAD SHEET NO.
39 OF 171

THIS PLAN ACCURATE FOR RAILROAD WORK ONLY.

STATE OF CALIFORNIA - DEPARTMENT OF TRANSPORTATION
DESIGN
CONSULTANT FUNCTIONAL SUPERVISOR GLENN BREINDEL
CALCULATED-DESIGNED BY RAMON VALDEZ
CHECKED BY
REVISED BY
DATE REVISED

LAST REVISION 00-00-00
DATE PLOTTED = 7/18/2012
TIME PLOTTED = 2:47:38 PM

Dist	COUNTY	ROUTE	POST MILES TOTAL PROJECT	SHEET No.	TOTAL SHEETS
7	LA	5	29.4/31.6	1800	1931

David McCord 05-21-12
REGISTERED CIVIL ENGINEER DATE

05-21-12
PLANS APPROVAL DATE

REGISTERED PROFESSIONAL ENGINEER DAVID WILLIAM McCORD No. E-15317 Exp. June 30, 2013 ELECTRICAL STATE OF CALIFORNIA

THE STATE OF CALIFORNIA OR ITS OFFICERS OR AGENTS SHALL NOT BE RESPONSIBLE FOR THE ACCURACY OR COMPLETENESS OF SCANNED COPIES OF THIS PLAN SHEET.

SCRRA
279 E. ARROW HIGHWAY
SAN DIMAS, CA 91773

XORAIL
201 NORTH INDIAN HILL BLVD
SUITE 201
CLAREMONT, CA 91711

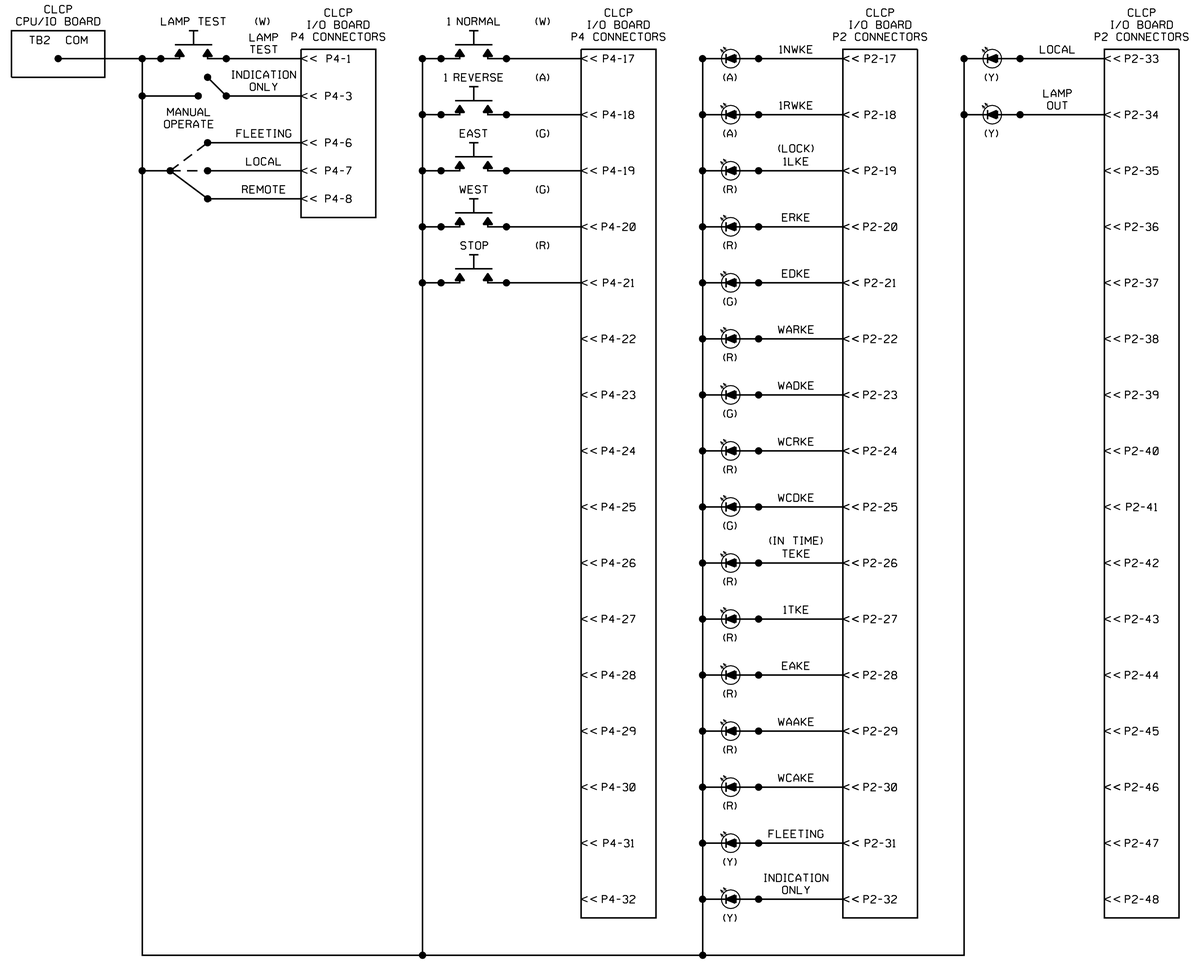

RR-SP-040
SIGNAL STAGE 1

LOCAL CONTROL PANEL CIRCUITS
CP BRIGHTON
VY 12.80
SH. 12 OF 16

RAILROAD SHEET NO.
40 OF 171

REFERENCE ONLY

THIS PLAN ACCURATE FOR RAILROAD WORK ONLY.

STATE OF CALIFORNIA - DEPARTMENT OF TRANSPORTATION
Caltrans® DESIGN

CONSULTANT FUNCTIONAL SUPERVISOR: GLENN BREINDEL
CALCULATED-DESIGNED BY: RAMON VALDEZ
CHECKED BY
REVISED BY
DATE REVISED

LAST REVISION 00-00-00
DATE PLOTTED = 7/18/2012
TIME PLOTTED = 2:47:39 PM

Dist	COUNTY	ROUTE	POST MILES TOTAL PROJECT	SHEET No.	TOTAL SHEETS
7	LA	5	29.4/31.6	1801	1931

David McCord 05-21-12
REGISTERED CIVIL ENGINEER DATE

05-21-12
PLANS APPROVAL DATE

REGISTERED PROFESSIONAL ENGINEER DAVID WILLIAM MCCORD No. E-15317 Exp. June 30, 2013 ELECTRICAL STATE OF CALIFORNIA

THE STATE OF CALIFORNIA OR ITS OFFICERS OR AGENTS SHALL NOT BE RESPONSIBLE FOR THE ACCURACY OR COMPLETENESS OF SCANNED COPIES OF THIS PLAN SHEET.

SCRRA
279 E. ARROW HIGHWAY
SAN DIMAS, CA 91773

XORAIL
201 NORTH INDIAN HILL BLVD
SUITE 201
CLAREMONT, CA 91711

RACK - 2 FRONT VIEW

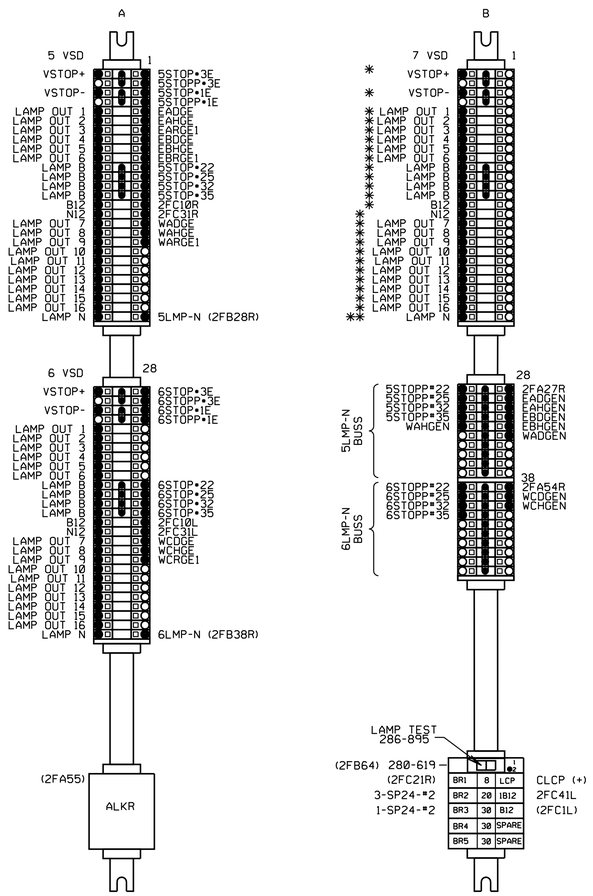

* WAGO'S ASSIGNED AS SHOWN FOR FUTURE USE.

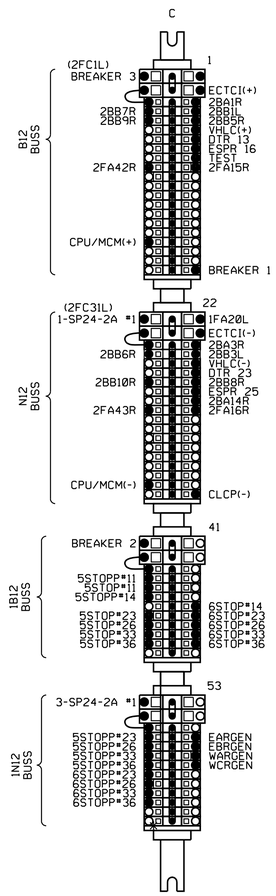

RACK - 2 REAR VIEW

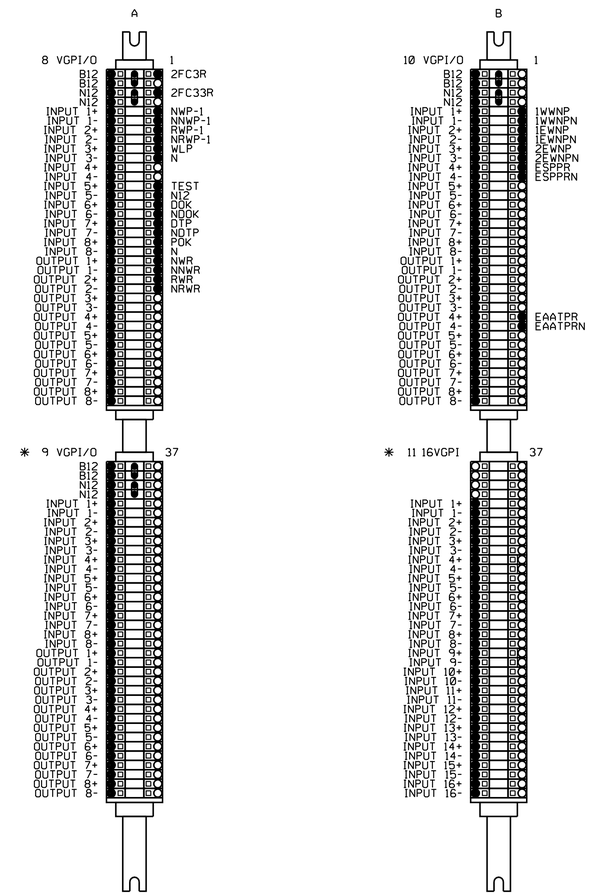

* WAGO'S ASSIGNED AS SHOWN FOR FUTURE USE.

* WAGO'S ASSIGNED AS SHOWN FOR FUTURE USE.

* WAGO'S ASSIGNED AS SHOWN FOR FUTURE USE.

RR-SP-041
SIGNAL STAGE 1

WAGO DETAIL
CP BRIGHTON
VY 12.80
SH. 13 OF 16

THIS PLAN ACCURATE FOR RAILROAD WORK ONLY.

REFERENCE ONLY

RAILROAD SHEET NO.
41 OF 171

STATE OF CALIFORNIA - DEPARTMENT OF TRANSPORTATION
DESIGN

CONSULTANT FUNCTIONAL SUPERVISOR: GLENN BREINDEL
CALCULATED-DESIGNED BY: RAMON VALDEZ
CHECKED BY
REVISED BY
DATE REVISED

LAST REVISION 00-00-00
DATE PLOTTED = 7/18/2012
TIME PLOTTED = 21:47:40 PM

Dist	COUNTY	ROUTE	POST MILES TOTAL PROJECT	SHEET No.	TOTAL SHEETS
7	LA	5	29.4/31.6	1802	1931

David McCord 05-21-12
REGISTERED CIVIL ENGINEER DATE

05-21-12
PLANS APPROVAL DATE

REGISTERED PROFESSIONAL ENGINEER DAVID WILLIAM McCORD No. E-15317 Exp. June 30, 2013 ELECTRICAL STATE OF CALIFORNIA

THE STATE OF CALIFORNIA OR ITS OFFICERS OR AGENTS SHALL NOT BE RESPONSIBLE FOR THE ACCURACY OR COMPLETENESS OF SCANNED COPIES OF THIS PLAN SHEET.

SCRRA
279 E. ARROW HIGHWAY
SAN DIMAS, CA 91773

XORAIL
201 NORTH INDIAN HILL BLVD
SUITE 201
CLAREMONT, CA 91711

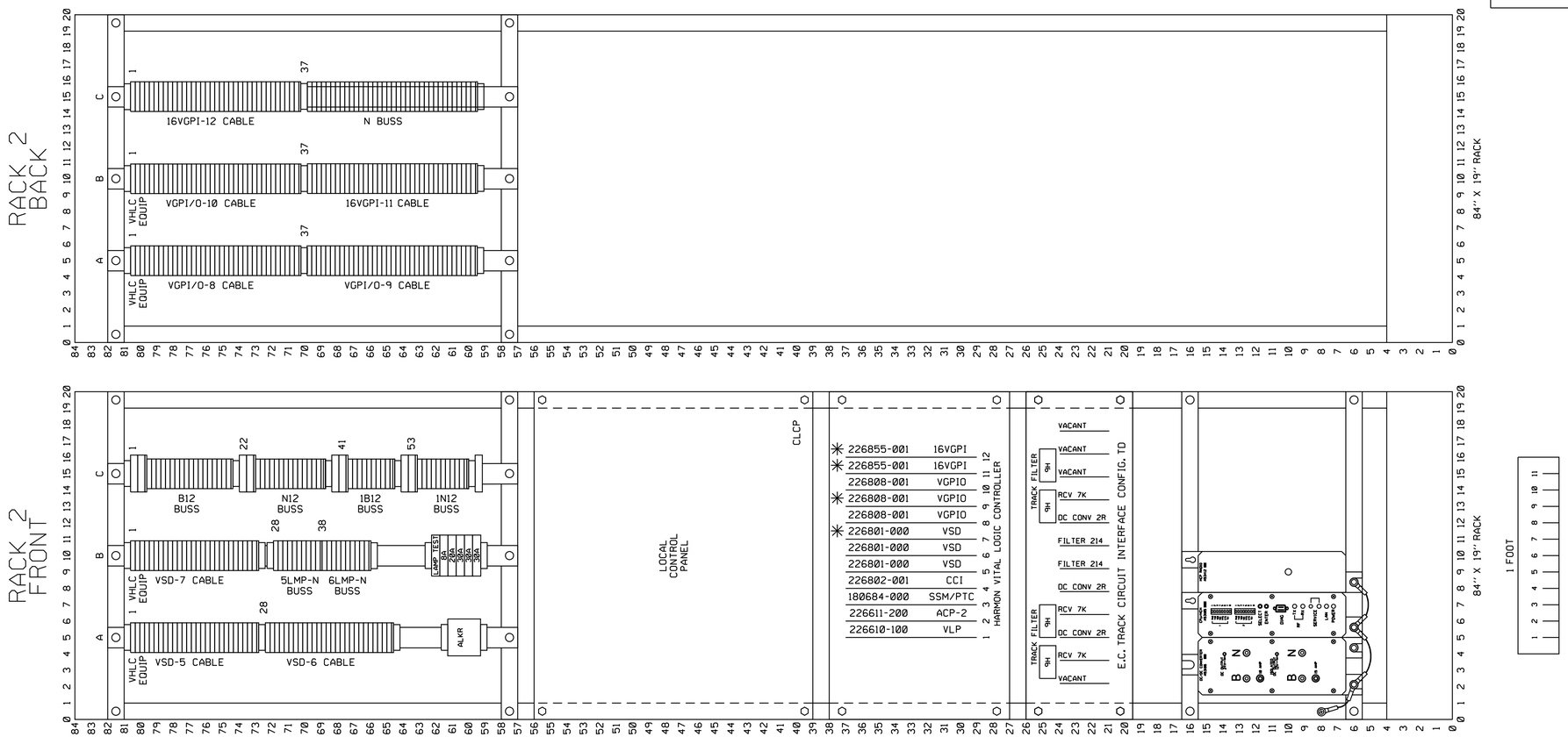

✳ = CARDS NOT INSTALLED FOR FUTURE USE.

RR-SP-042
SIGNAL STAGE 1

RACK #2 LAYOUT
CP BRIGHTON
VY 12.80
SH.14 OF 16

RAILROAD SHEET NO.
42 OF 171

REFERENCE ONLY

THIS PLAN ACCURATE FOR RAILROAD WORK ONLY.

STATE OF CALIFORNIA - DEPARTMENT OF TRANSPORTATION
Caltrans® DESIGN

CONSULTANT FUNCTIONAL SUPERVISOR: GLENN BREINDEL
CALCULATED-DESIGNED BY: RAMON VALDEZ
CHECKED BY
REVISED BY
DATE REVISED

LAST REVISION 00-00-00
DATE PLOTTED 7/18/2012
TIME PLOTTED 21:47:42 PM

BORDER LAST REVISED 7/2/2010
USERNAME gharibiana
DGN FILE ...\moc\xorail\sheet\SP-042-.sht
RELATIVE BORDER SCALE IS IN INCHES 0 1 2 3
UNIT 1812
PROJECT NUMBER & PHASE 07000211191

Dist	COUNTY	ROUTE	POST MILES TOTAL PROJECT	SHEET No.	TOTAL SHEETS
7	LA	5	29.4/31.6	1803	1931

David McCord 05-21-12
REGISTERED CIVIL ENGINEER DATE

05-21-12
PLANS APPROVAL DATE

REGISTERED PROFESSIONAL ENGINEER DAVID WILLIAM McCORD No. E-15317 Exp. June 30, 2013 ELECTRICAL STATE OF CALIFORNIA

THE STATE OF CALIFORNIA OR ITS OFFICERS OR AGENTS SHALL NOT BE RESPONSIBLE FOR THE ACCURACY OR COMPLETENESS OF SCANNED COPIES OF THIS PLAN SHEET.

SCRRA
279 E. ARROW HIGHWAY
SAN DIMAS, CA 91773

XORAIL
201 NORTH INDIAN HILL BLVD
SUITE 201
CLAREMONT, CA 91711

CP BRIGHTON

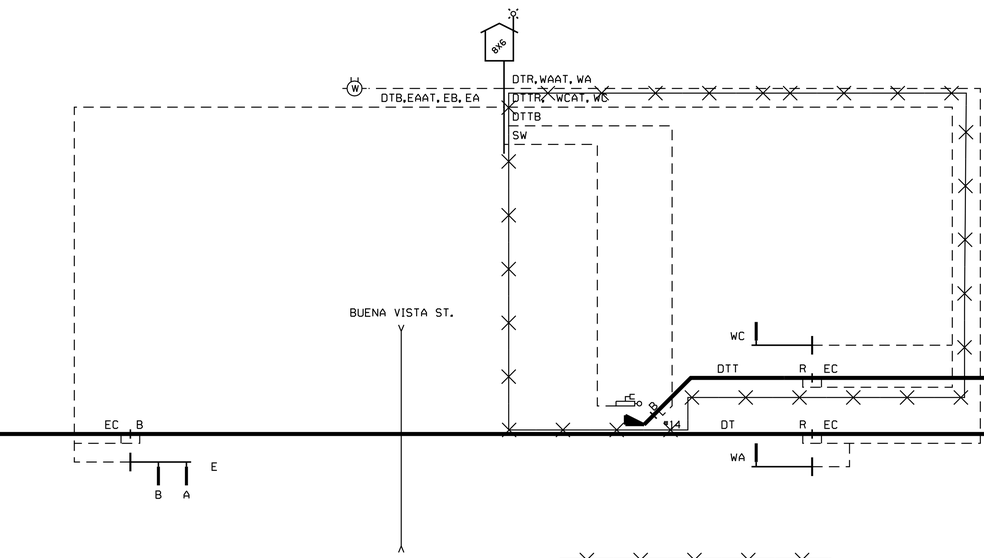

EB 10 COND #9 U.G.	
1	EBDGE
2	EBHGE
3	EBRGE
4	EBDGEN
5	EBHGEN
6	EBRGEN
7	EBRGEN
8	
9	
10	

EA 10 COND #9 U.G.	
1	EADGE
2	EAHGE
3	EARGE
4	EADGEN
5	EAHGEN
6	EARGEN
7	EARGEN
8	
9	
10	

DTB 2 COND #6 U.G.	
1	DTB/NR
2	DTB/SR

EAAT 2 COND #6 U.G.	
1	EAAT/NR
2	EAAT/SR

SW 8 COND #14 U.G.	
1	NNWP-1
2	NWP-1
3	NRWP-1
4	RWP-1
5	B-W
6	
7	
8	N

SW 8 COND #8 U.G.	
1	WC-5
2	WC-10
3	WC-B
4	WC-C
5	WC-N
6	WLP
7	
8	

WC 10 COND #9 U.G.	
1	WCDGE
2	WCHGE
3	WCRGE
4	WCDGEN
5	WCHGEN
6	WCRGEN
7	WCRGEN
8	
9	
10	

DTTB 2 COND #6 U.G.	
1	DTTB/NR
2	DTTB/SR

DTTR 2 COND #6 U.G.	
1	DTTR/NR
2	DTTR/SR

WA 10 COND #9 U.G.	
1	WADGE
2	WAHGE
3	WARGE
4	WADGEN
5	WAHGEN
6	WARGEN
7	WARGEN
8	
9	
10	

DTR 2 COND #6 U.G.	
1	DTR/NR
2	DTR/SR

WCAT 2 COND #6 U.G.	
1	WCAT/NR
2	WCAT/SR

WAAT 2 COND #6 U.G.	
1	WAAT/NR
2	WAAT/SR

DATE IN SERVICE _____
S. ENGINEER _____
INSPECTOR _____

= OUT
= IN

RR-SP-043
SIGAL STAGE 1

CABLE SHEET
CP BRIGHTON
VY 12.80
SH. 15 OF 16

RAILROAD SHEET NO.
43 OF 171

THIS PLAN ACCURATE FOR RAILROAD WORK ONLY.

REVISED BY	DATE REVISED
RAMON VALDEZ	

CALCULATED-DESIGNED BY
CHECKED BY

CONSULTANT FUNCTIONAL SUPERVISOR
GLENN BREINDEL

STATE OF CALIFORNIA - DEPARTMENT OF TRANSPORTATION
Caltrans
DESIGN

LAST REVISION 00-00-00
DATE PLOTTED 7/18/2012
TIME PLOTTED 2:47:43 PM

Dist	COUNTY	ROUTE	POST MILES TOTAL PROJECT	SHEET No.	TOTAL SHEETS
7	LA	5	29.4/31.6	1804	1931

David McCord 05-21-12
REGISTERED CIVIL ENGINEER DATE

05-21-12
PLANS APPROVAL DATE

REGISTERED PROFESSIONAL ENGINEER DAVID WILLIAM MCCORD No. E-15317 Exp. June 30, 2013 ELECTRICAL STATE OF CALIFORNIA

THE STATE OF CALIFORNIA OR ITS OFFICERS OR AGENTS SHALL NOT BE RESPONSIBLE FOR THE ACCURACY OR COMPLETENESS OF SCANNED COPIES OF THIS PLAN SHEET.

SCRRA
279 E. ARROW HIGHWAY
SAN DIMAS, CA 91773

XORAIL
201 NORTH INDIAN HILL BLVD
SUITE 201
CLAREMONT, CA 91711

WAGO DETAIL

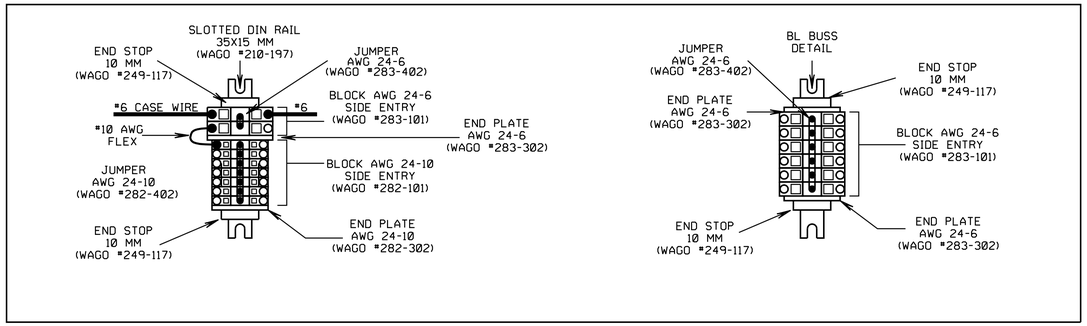

DETAIL A

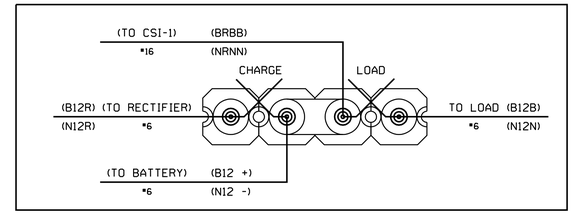

LOCATION LEGENDS

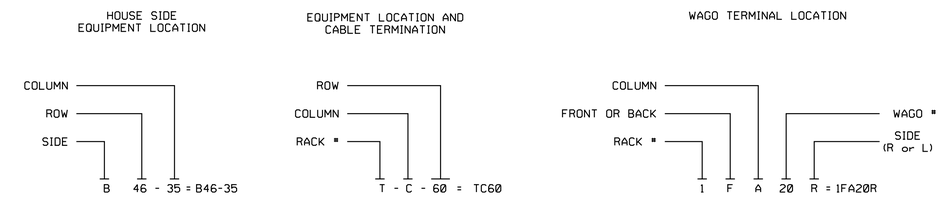

NOTES:

1. ALL INTERNAL CASE WIRES SHALL BE "TAGGED" USING NON-SHRINK WHITE VINYL MARKING SLEEVES.
2. EQUIVALENT SAFETRAN PLUG-IN RELAYS MAY BE SUBSTITUTED FOR GRS RELAYS SHOWN.
3. WAGO RAIL MOUNT "THROUGH" TERMINAL BLOCKS SHALL BE INSTALLED AS SHOWN.
4. NO. 14-16 RING TERMINALS SHALL BE AMP #327743 WITH 1/4-INCH STUD PIDG. NO. 10-12 AWG RING TERMINALS SHALL BE AMP #35110 WITH 1/4-INCH STUD PIDG.
5. L&W INDUSTRIES, INC. TERMINAL POST INSULATING SHIELDS AND CAPS SHALL BE INSTALLED ON ALL AC POWER TERMINALS. EQUIVALENT INSULATORS ARE ACCEPTABLE.

= SAFETRAN CLEARVIEW ARRESTOR NO. 022485-28X

= SAFETRAN HEAVY DUTY EQUALIZER NO. 022700-1X

= SAFETRAN INSULATED TEST TERMINAL NO. 024620-1X, OR EQUIVALENT

= SAFETRAN TERMINAL BLOCK NO. 023390-11X, OR EQUIVALENT

= SAFETRAN MODEL 612 TERMINAL BLOCK, OR EQUIVALENT

= DRILL 1/2-INCH HOLE AND FINISH EDGES FOR CASE WIRE AND CABLE CONDUCTORS

= DRILL 1-1/4 INCH HOLE AND FINISH EDGES FOR TRACK WIRE

2WTR 2.0 OHM TRC. RES. = SAFETRAN ADJUSTABLE RESISTANCE UNIT NO. 029807-1X, OR EQUIVALENT

= TWISTED WIRE

GENERAL NOTES:

1. CONTRACTOR SHALL FURNISH INSTRUMENT ENCLOSURE AS SHOWN ON CONTRACT DRAWINGS. THE TOP AND BOTTOM OF EQUIPMENT RACKS SHALL BE PROPERLY SECURED TO THE ENCLOSURE. EQUIPMENT SHALL BE INSTALLED AND WIRED TO PROVIDE A COMPLETE AND OPERATING SYSTEM AS SHOWN ON THE CONTRACT DRAWINGS.
2. ALL INSULATION ON WIRE NO. 2 AND SMALLER SHALL BE INSULATED WITH MODIFIED ETHYLENE TETRAFLUOROETHYLENE (ETFE) CONFORMING TO ASTM D3159 (I.E. OKOZEL MANUFACTURED BY OKONITE).
3. APPLICATION LOGIC PROGRAMMING FOR INTERLOCKING CONTROL SYSTEMS SHALL BE FURNISHED BY OTHERS.
4. BOLTS, NUTS, WASHERS AND MISCELLANEOUS HARDWARE MAY BE SUBSTITUTED WITH COMPARABLE MATERIAL OF EQUAL OR BETTER QUALITY.
5. CONTRACTOR SHALL PERFORM NECESSARY TESTS TO ENSURE ENCLOSURE IS COMPLETE AND WILL OPERATE AS INTENDED.
6. ALL EQUIPMENT SHALL BE SECURED TO AVOID DAMAGE DURING SHIPMENT. HEAVY APPARATUS AND RELAYS SHALL BE REMOVED FROM THEIR MOUNTINGS AND PLACED IN SEPARATE PACKAGES TO PREVENT DAMAGE DURING SHIPMENT. ALL MATERIALS PACKAGED SEPARATELY SHALL BE SECURED AND SHIPPED WITH THE ENCLOSURE.
7. UNLESS NOTED OTHERWISE, WIRES SHALL BE NO. 16 AWG FLEX. ALL GROUND WIRES SHALL BE NO. 6 AWG SOFTDRAWN COPPER. WIRES TO BATTERIES SHALL BE NO. 6 AWG FLEX CASE WIRE.
8. ALL WIRE TAGS SHALL BE MADE TO SHOW LOCATION, CIRCUIT NAME AND DESTINATION PER EXAMPLE.

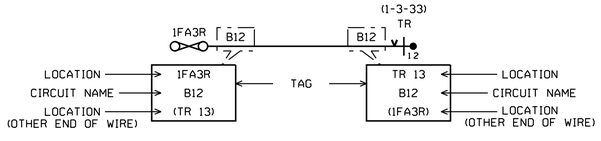

WIRE TAGGING DETAILS

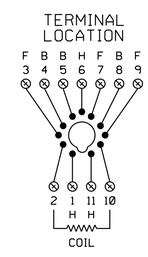

POR & ALKR RELAY BASE 27E123 DETAIL

TOP VIEW

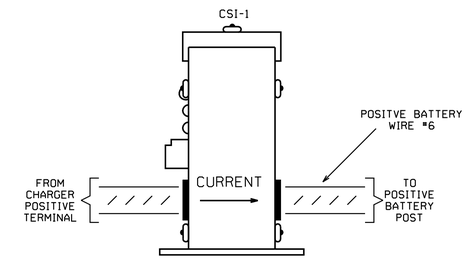

NOTE:

USING A DVM, ADJUST CSI-1 UNITS TO 1.1 VDC (11 VOLT THRESHOLD) AND 2.4 VDC OR AS INSTRUCTED BY THE SIGNAL ENGINEER.

RR-SP-044
SIGNAL STAGE 1

DETAILS, LEGENDS & NOTES
CP BRIGHTON
VY 12.80
SH. 16 OF 16

RAILROAD SHEET NO.
44 OF 171

THIS PLAN ACCURATE FOR RAILROAD WORK ONLY.

REFERENCE ONLY

STATE OF CALIFORNIA - DEPARTMENT OF TRANSPORTATION
DESIGN
CONSULTANT FUNCTIONAL SUPERVISOR: GLENN BREINDEL
CALCULATED-DESIGNED BY: RAMON VALDEZ
CHECKED BY
REVISED BY
DATE REVISED

LAST REVISION 00-00-00
DATE PLOTTED = 7/18/2012
TIME PLOTTED = 23:47:43 PM

Dist	COUNTY	ROUTE	POST MILES TOTAL PROJECT	SHEET No.	TOTAL SHEETS
7	LA	5	29.4/31.6	1805	1931

David McCord 05-21-12
REGISTERED CIVIL ENGINEER DATE

05-21-12
PLANS APPROVAL DATE

REGISTERED PROFESSIONAL ENGINEER DAVID WILLIAM McCORD No. E-15317 Exp. June 30, 2013 ELECTRICAL STATE OF CALIFORNIA

THE STATE OF CALIFORNIA OR ITS OFFICERS OR AGENTS SHALL NOT BE RESPONSIBLE FOR THE ACCURACY OR COMPLETENESS OF SCANNED COPIES OF THIS PLAN SHEET.

SCRRA
279 E. ARROW HIGHWAY
SAN DIMAS, CA 91773

XORAIL
201 NORTH INDIAN HILL BLVD
SUITE 201
CLAREMONT, CA 91711

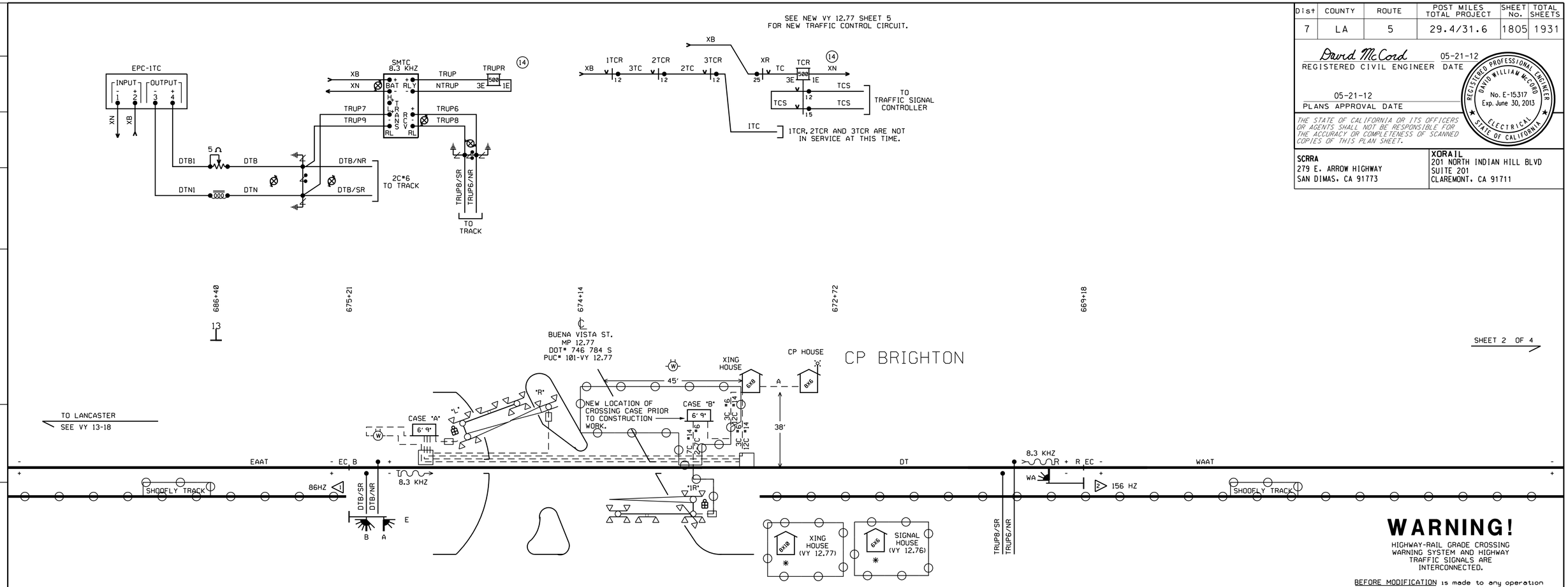

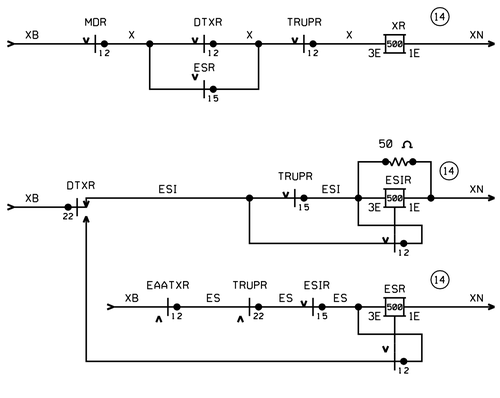

VY 12.77

A	19 COND #14 U.G.
1	EAATX
2	NEAATX
3	DTX
4	NDTX
5	ESP
6	NESP
7	
8	
9	
10	
11	
12	
13	
14	
15	
16	
17	
18	
19	

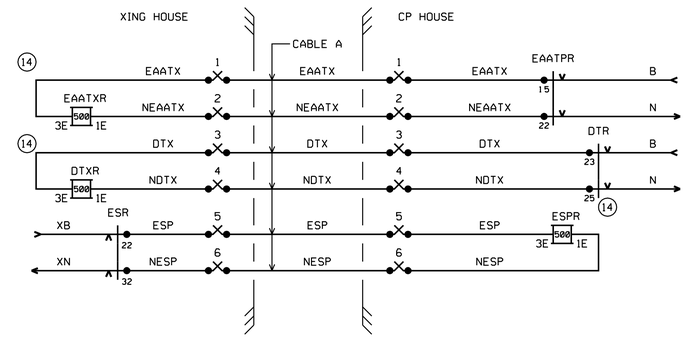

VY 12.80

WARNING!

HIGHWAY-RAIL GRADE CROSSING WARNING SYSTEM AND HIGHWAY TRAFFIC SIGNALS ARE INTERCONNECTED.

BEFORE MODIFICATION is made to any operation which connects to or controls the timing of an active railroad warning system and/or timing and phasing of a traffic signal the appropriate party(ies) shall be notified and, if necessary, a joint inspection conducted.

NOTES:
✱ - INSTALL SIGNAL HOUSE & CROSSING HOUSE IN STAGE 1 - PHASE 3 (TCP)
TCP - TRAFFIC CONTROL PLAN

= OUT
= IN

DATE IN SERVICE _____
S. ENGINEER _____
INSPECTOR _____

RR-SP-045
SIGNAL STAGE 1

SIGNAL CIRCUIT PLAN
CP ALLEN-CP BRIGHTON
VY 10-13
SH. 1 OF 4

RAILROAD SHEET NO.
45 OF 171

THIS PLAN ACCURATE FOR RAILROAD WORK ONLY.

STATE OF CALIFORNIA - DEPARTMENT OF TRANSPORTATION
Caltrans® DESIGN
CONSULTANT FUNCTIONAL SUPERVISOR GLENN BREINDEL
CALCULATED-DESIGNED BY RAMON VALDEZ
CHECKED BY
REVISED BY
DATE REVISED

LAST REVISION 00-00-00
DATE PLOTTED 7/18/2012
TIME PLOTTED 23:47:45 PM

Dist	COUNTY	ROUTE	POST MILES TOTAL PROJECT	SHEET No.	TOTAL SHEETS
7	LA	5	29.4/31.6	1806	1931

David McCord 05-21-12
REGISTERED CIVIL ENGINEER DATE

05-21-12
PLANS APPROVAL DATE

REGISTERED PROFESSIONAL ENGINEER DAVID WILLIAM McCORD No. E-15317 Exp. June 30, 2013 ELECTRICAL STATE OF CALIFORNIA

THE STATE OF CALIFORNIA OR ITS OFFICERS OR AGENTS SHALL NOT BE RESPONSIBLE FOR THE ACCURACY OR COMPLETENESS OF SCANNED COPIES OF THIS PLAN SHEET.

SCRRA
279 E. ARROW HIGHWAY
SAN DIMAS, CA 91773

XORAIL
201 NORTH INDIAN HILL BLVD
SUITE 201
CLAREMONT, CA 91711

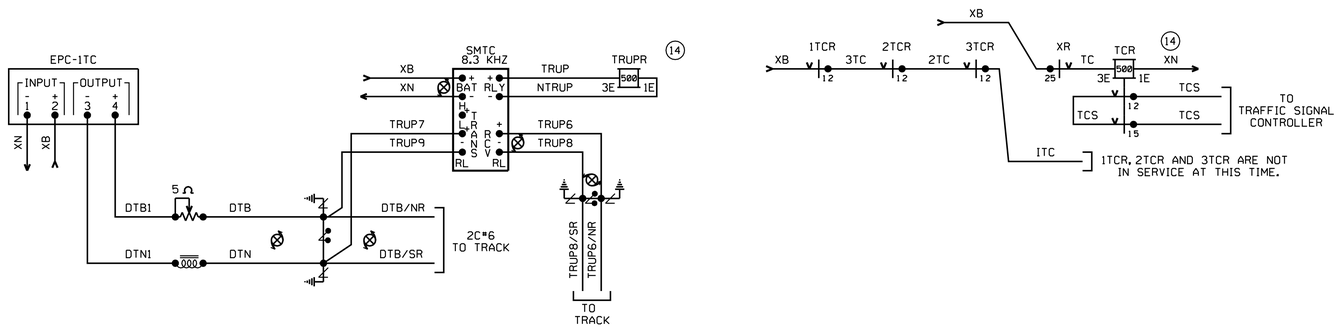

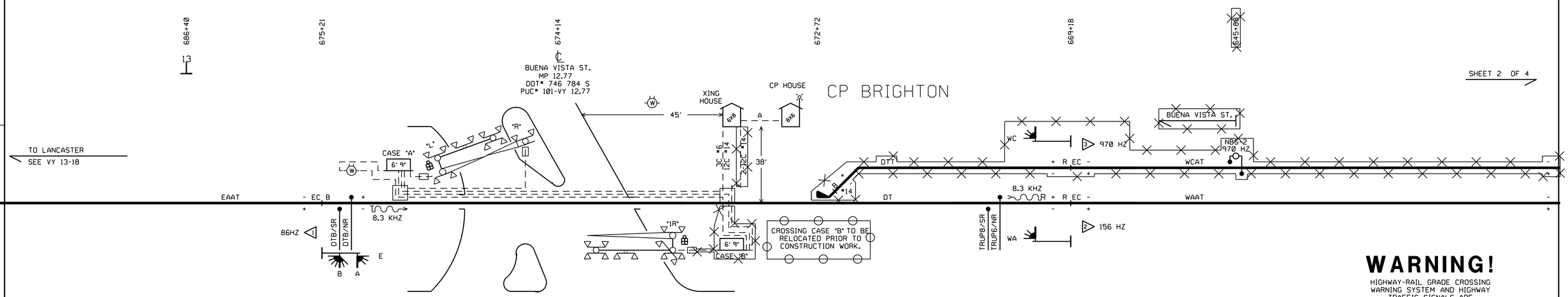

WARNING!

HIGHWAY-RAIL GRADE CROSSING
WARNING SYSTEM AND HIGHWAY
TRAFFIC SIGNALS ARE
INTERCONNECTED.

BEFORE MODIFICATION is made to any operation which connects to or controls the timing of an active railroad warning system and/or timing and phasing of a traffic signal the appropriate party(ies) shall be notified and, if necessary, a joint inspection conducted.

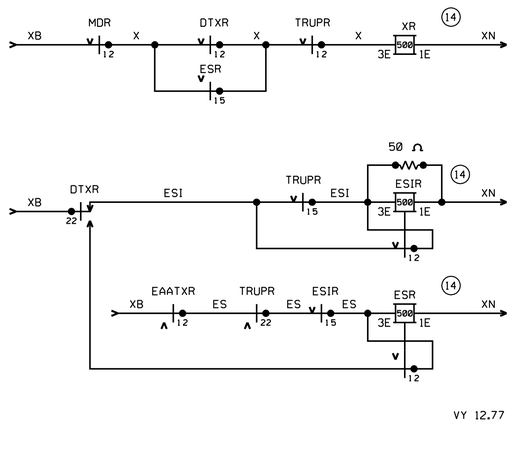

VY 12.77

A	19 COND #14 U.G.
1	EAATX
2	NEAATX
3	DTX
4	NDTX
5	ESP
6	NESP
7	
8	
9	
10	
11	
12	
13	
14	
15	
16	
17	
18	
19	

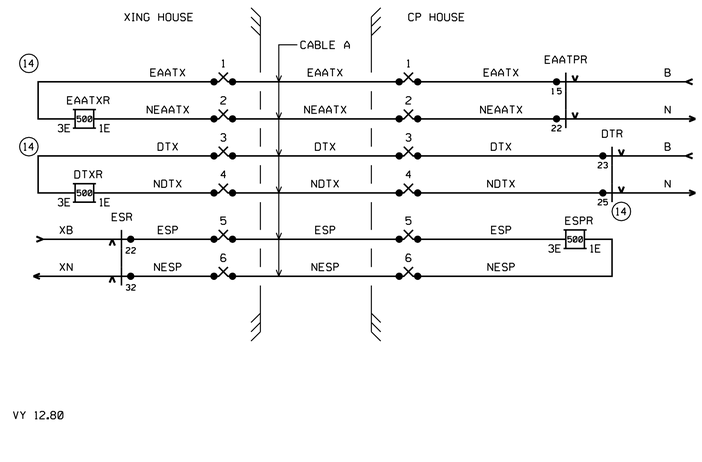

VY 12.80

= OUT

= IN

DATE IN SERVICE _____
S. ENGINEER _____
INSPECTOR _____

RR-SP-046
SIGNAL STAGE 1

SIGNAL CIRCUIT PLAN
CP ALLEN-CP BRIGHTON
VY 10-13
SH. T1 OF 4

RAILROAD SHEET NO.
46 OF 171

THIS PLAN ACCURATE FOR RAILROAD WORK ONLY.

STATE OF CALIFORNIA - DEPARTMENT OF TRANSPORTATION
Caltrans DESIGN
CONSULTANT FUNCTIONAL SUPERVISOR GLENN BREINDEL
CALCULATED-DESIGNED BY RAMON VALDEZ
CHECKED BY
REVISED BY
DATE REVISED

LAST REVISION 00-00-00
DATE PLOTTED 7/18/2012
TIME PLOTTED 2:47:46 PM

Dist	COUNTY	ROUTE	POST MILES TOTAL PROJECT	SHEET No.	TOTAL SHEETS
7	LA	5	29.4/31.6	1807	1931

David McCord 05-21-12
REGISTERED CIVIL ENGINEER DATE

05-21-12
PLANS APPROVAL DATE

REGISTERED PROFESSIONAL ENGINEER DAVID WILLIAM McCORD No. E-15317 Exp. June 30, 2013 ELECTRICAL STATE OF CALIFORNIA

THE STATE OF CALIFORNIA OR ITS OFFICERS OR AGENTS SHALL NOT BE RESPONSIBLE FOR THE ACCURACY OR COMPLETENESS OF SCANNED COPIES OF THIS PLAN SHEET.

SCRRA
279 E. ARROW HIGHWAY
SAN DIMAS, CA 91773

XORAIL
201 NORTH INDIAN HILL BLVD
SUITE 201
CLAREMONT, CA 91711

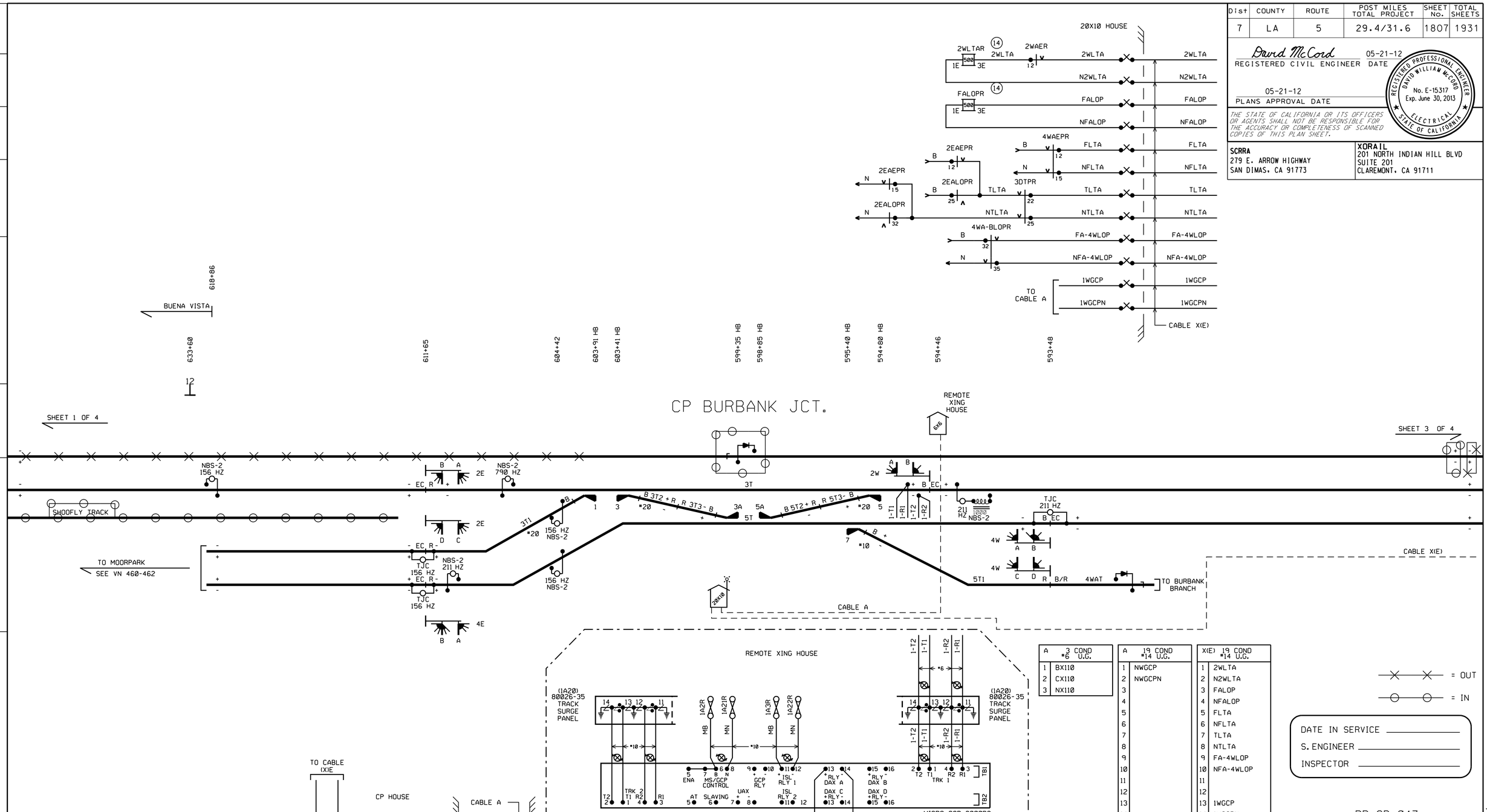

A	3 COND #6 U.G.
1	BX110
2	CX110
3	NX110

A	19 COND #14 U.G.
1	NWGCP
2	NWGCPN
3	
4	
5	
6	
7	
8	
9	
10	
11	
12	
13	
14	
15	
16	
17	
18	
19	

X(E)	19 COND #14 U.G.
1	2WLTA
2	N2WLTA
3	FALOP
4	NFALOP
5	FLTA
6	NFLTA
7	TLTA
8	NTLTA
9	FA-4WLOP
10	NFA-4WLOP
11	
12	
13	1WGCP
14	1WGCPN
15	
16	
17	
18	
19	

= OUT
= IN

DATE IN SERVICE _____
S. ENGINEER _____
INSPECTOR _____

RR-SP-047
SIGNAL STAGE 1

CROSSING CIRCUIT PLAN
CP ALLEN-CP BRIGHTON
VY 10-13
SH. 2 OF 4

RAILROAD SHEET NO.
47 OF 171

THIS PLAN ACCURATE FOR RAILROAD WORK ONLY.

STATE OF CALIFORNIA - DEPARTMENT OF TRANSPORTATION
DESIGN

CONSULTANT FUNCTIONAL SUPERVISOR: GLENN BREINDEL
CALCULATED-DESIGNED BY: RAMON VALDEZ
CHECKED BY
REVISED BY
DATE REVISED

LAST REVISION 00-00-00
DATE PLOTTED 7/18/2012
TIME PLOTTED 2:47:47 PM

Dist	COUNTY	ROUTE	POST MILES TOTAL PROJECT	SHEET No.	TOTAL SHEETS
7	LA	5	29.4/31.6	1808	1931

David McCord 05-21-12
REGISTERED CIVIL ENGINEER DATE

05-21-12
PLANS APPROVAL DATE

REGISTERED PROFESSIONAL ENGINEER DAVID WILLIAM McCORD No. E-15317 Exp. June 30, 2013 ELECTRICAL STATE OF CALIFORNIA

THE STATE OF CALIFORNIA OR ITS OFFICERS OR AGENTS SHALL NOT BE RESPONSIBLE FOR THE ACCURACY OR COMPLETENESS OF SCANNED COPIES OF THIS PLAN SHEET.

SCRRA
279 E. ARROW HIGHWAY
SAN DIMAS, CA 91773

XORAIL
201 NORTH INDIAN HILL BLVD
SUITE 201
CLAREMONT, CA 91711

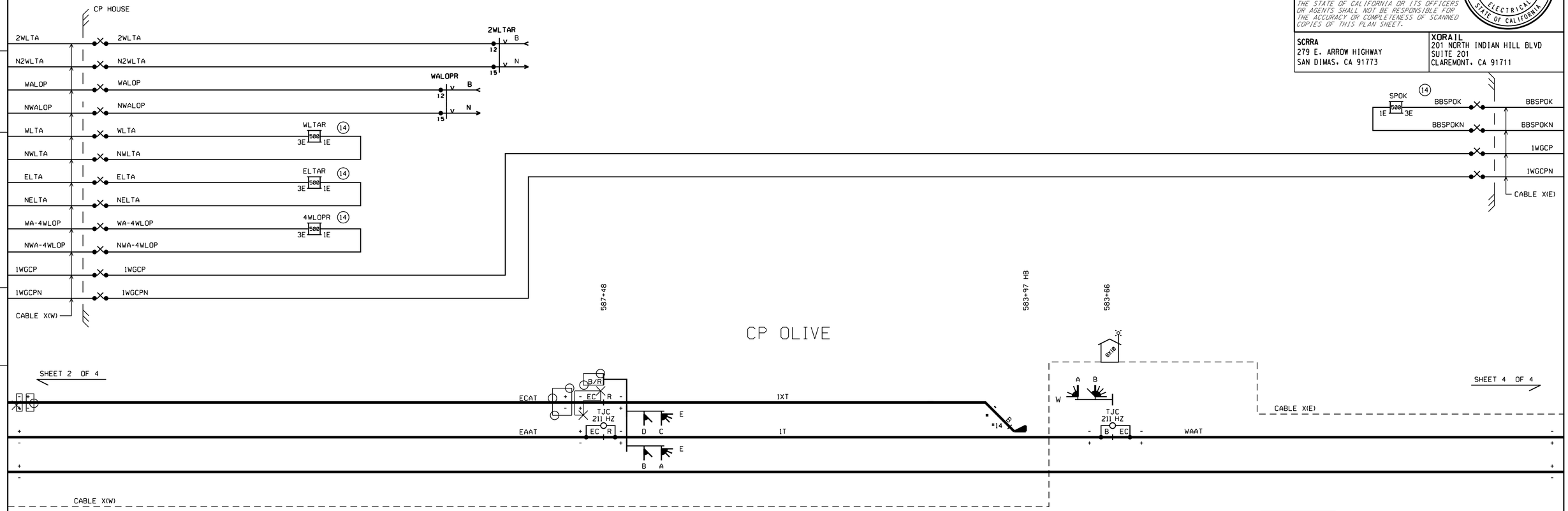

X(W) 19 COND #14 U.G.	
1	2WLTA
2	N2WLTA
3	WALOP
4	NWALOP
5	WLTA
6	NWLTA
7	ELTA
8	NELTA
9	WA-4WLOP
10	NWA-4WLOP
11	
12	
13	1WGCP
14	1WGCPN
15	
16	
17	
18	
19	

X(E) 19 COND #14 U.G.	
1	1WGCP
2	1WGCPN
3	BBSPOK
4	BBSPOKN
5	
6	
7	
8	
9	
10	
11	
12	
13	
14	
15	
16	
17	
18	
19	

= OUT

= IN

DATE IN SERVICE _____
S. ENGINEER _____
INSPECTOR _____

RR-SP-048

SIGNAL STAGE 1

SIGNAL CIRCUIT PLAN
CP ALLEN-CP BRIGHTON
VY 10-13
SH. 3 OF 4

RAILROAD SHEET NO.
48 OF 171

VY 11.13

THIS PLAN ACCURATE FOR RAILROAD WORK ONLY.

STATE OF CALIFORNIA - DEPARTMENT OF TRANSPORTATION
Caltrans DESIGN

CONSULTANT FUNCTIONAL SUPERVISOR: GLENN BREINDEL
CALCULATED-DESIGNED BY: RAMON VALDEZ
CHECKED BY
REVISED BY
DATE REVISED

LAST REVISION 00-00-00
DATE PLOTTED 07/18/2012
TIME PLOTTED 2:47:48 PM

Dist	COUNTY	ROUTE	POST MILES TOTAL PROJECT	SHEET No.	TOTAL SHEETS
7	LA	5	29.4/31.6	1809	1931

David McCord 05-21-12
REGISTERED CIVIL ENGINEER DATE

05-21-12
PLANS APPROVAL DATE

REGISTERED PROFESSIONAL ENGINEER DAVID WILLIAM McCORD No. E-15317 Exp. June 30, 2013 ELECTRICAL STATE OF CALIFORNIA

THE STATE OF CALIFORNIA OR ITS OFFICERS OR AGENTS SHALL NOT BE RESPONSIBLE FOR THE ACCURACY OR COMPLETENESS OF SCANNED COPIES OF THIS PLAN SHEET.

SCRRA
279 E. ARROW HIGHWAY
SAN DIMAS, CA 91773

XORAIL
201 NORTH INDIAN HILL BLVD
SUITE 201
CLAREMONT, CA 91711

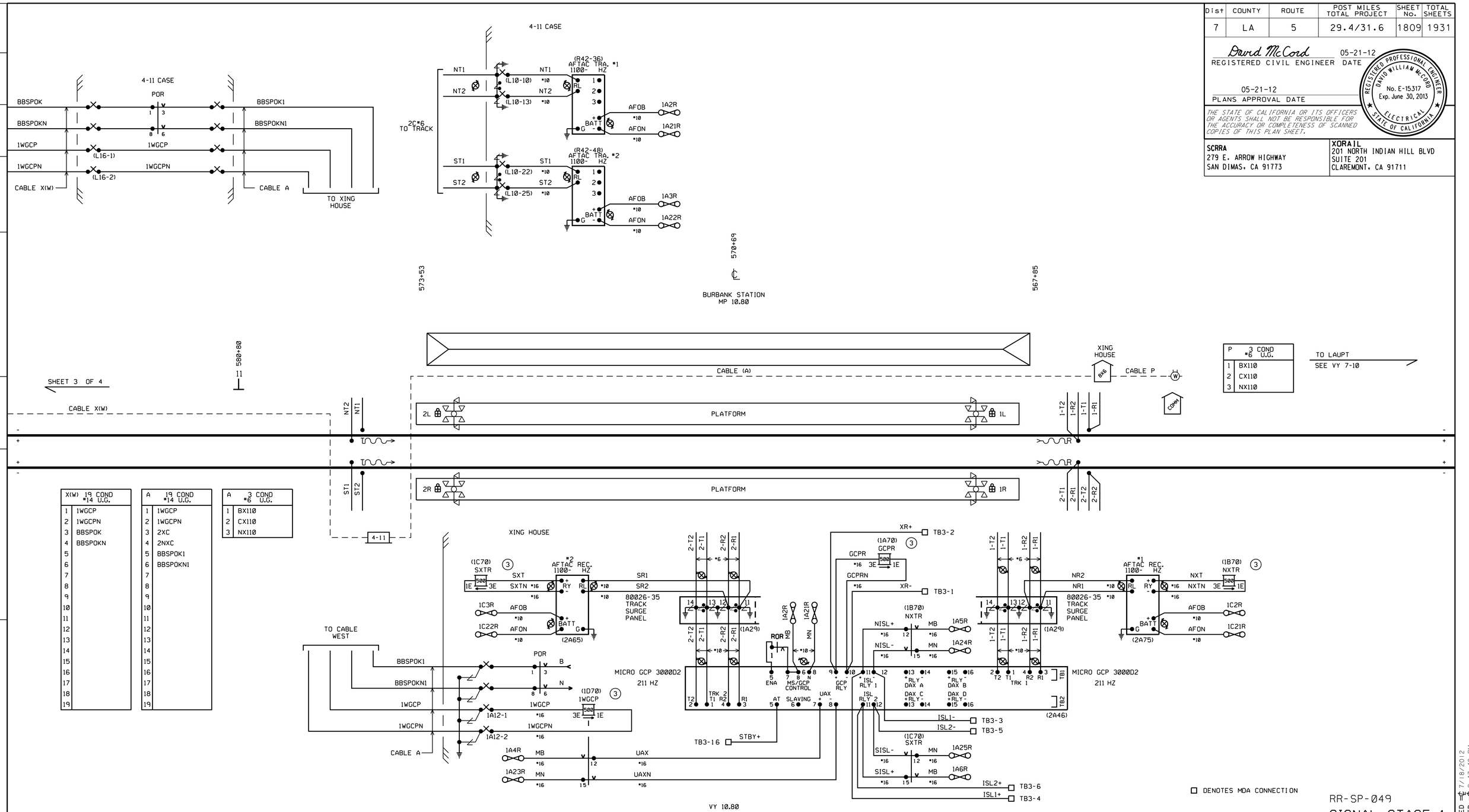

RR-SP-049
SIGNAL STAGE 1

SIGNAL CIRCUIT PLAN
CP ALLEN-CP BRIGHTON
VY 10-13
SH. 4 OF 4

RAILROAD SHEET NO.
49 OF 171

REFERENCE ONLY

THIS PLAN ACCURATE FOR RAILROAD WORK ONLY.

STATE OF CALIFORNIA - DEPARTMENT OF TRANSPORTATION
Caltrans DESIGN
CONSULTANT FUNCTIONAL SUPERVISOR GLENN BREINDEL
CALCULATED-DESIGNED BY RAMON VALDEZ
CHECKED BY
REVISED BY
DATE REVISED

LAST REVISION 00-00-00
DATE PLOTTED = 7/18/2012
TIME PLOTTED = 21:47:48 PM

Dist	COUNTY	ROUTE	POST MILES TOTAL PROJECT	SHEET No.	TOTAL SHEETS
7	LA	5	29.4/31.6	1810	1931

David McCord 05-21-12
REGISTERED CIVIL ENGINEER DATE

05-21-12
PLANS APPROVAL DATE

REGISTERED PROFESSIONAL ENGINEER DAVID WILLIAM McCORD No. E-15317 Exp. June 30, 2013 ELECTRICAL STATE OF CALIFORNIA

THE STATE OF CALIFORNIA OR ITS OFFICERS OR AGENTS SHALL NOT BE RESPONSIBLE FOR THE ACCURACY OR COMPLETENESS OF SCANNED COPIES OF THIS PLAN SHEET.

SCRRA
279 E. ARROW HIGHWAY
SAN DIMAS, CA 91773

XORAIL
201 NORTH INDIAN HILL BLVD
SUITE 201
CLAREMONT, CA 91711

CP OLIVE

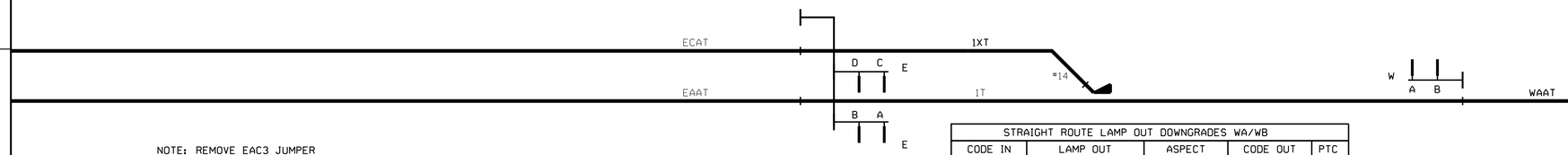

NOTE: REMOVE EAC3 JUMPER ON SHEET 9 WHEN NEW PTC SOFTWARE IS INSTALLED AT CP BURBANK JCT.

PTC WORK TO BE PERFORMED BY OTHERS.

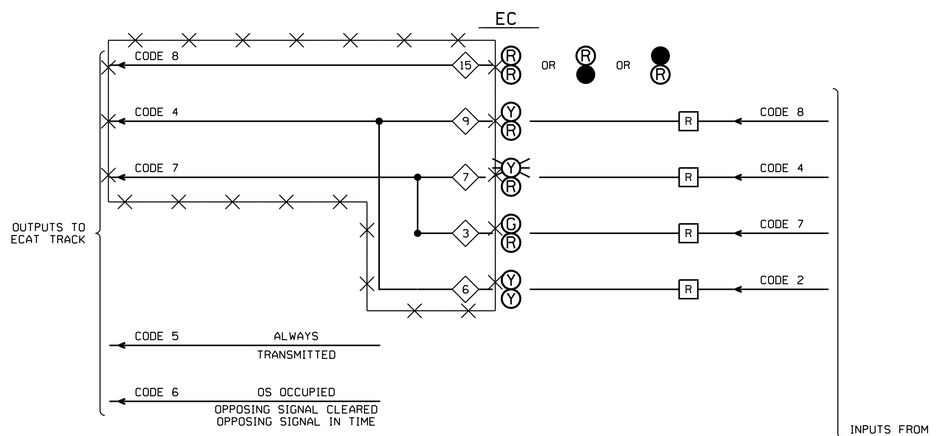

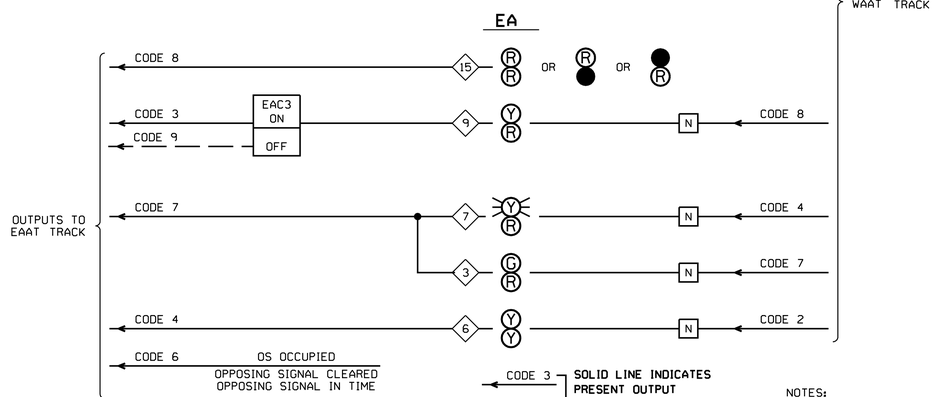

NOTES:
- N - SWITCH NORMAL
- R - SWITCH REVERSE
- ◇ - PTC CODE NUMBER

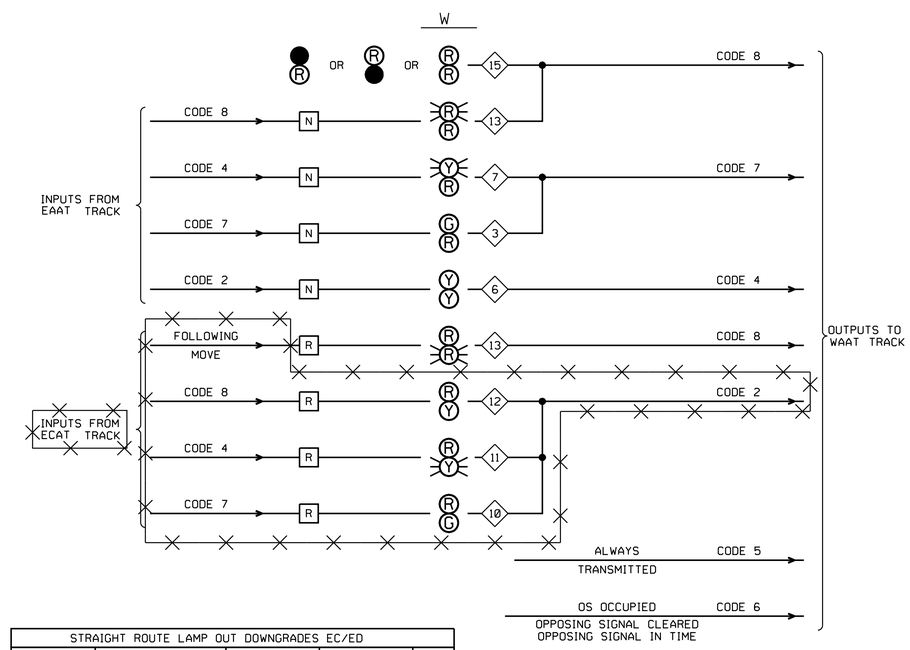

STRAIGHT ROUTE LAMP OUT DOWNGRADES WA/WB				
CODE IN	LAMP OUT	ASPECT	CODE OUT	PTC
7	TOP GRN	FY/R	7	7
7	TOP GRN & YEL	FR/R	8	13
7	ALL TOP	D/FR	8	13
7	BOTTOM RED	G/D	7	3
4	TOP YEL	FR/R	8	13
4	TOP YEL & RED	D/FR	8	13
4	BOTTOM RED	FY/D	7	7
2	TOP YEL	FR/R	8	13
2	TOP YEL & RED	D/FR	8	13
2	BOTTOM YEL	Y/R	8	9
2	BOTTOM YEL & RED	Y/D	8	9
8	TOP RED	D/FR	8	13
8	BOTTOM RED	FR/D	8	13
4WLOP ↓	TOP RED	D/FR	8	13
4WLOP ↓	BOTTOM RED	FR/D	8	13
NO CODE	TOP RED	D/R	8	15
NO CODE	BOTTOM RED	R/D	8	15
ANY CODE	ALL DARK	D/D	8	30

OR SIGNAL AT STOP

DIVERGING ROUTE LAMP OUT DOWNGRADES WA/WB				
CODE IN	LAMP OUT	ASPECT	CODE OUT	PTC
7, 4 OR 8	TOP RED	D/FR	8	13
7	BOTTOM GRN	R/FY	2	11
7	BOTTOM GRN &YEL	R/FR	8	13
7	ALL BOTTOM	FR/D	8	13
4	BOTTOM YEL	R/FR	8	13
4	BOTTOM YEL & RED	FR/D	8	13
8	BOTTOM YEL	R/FR	8	13
8	BOTTOM YEL & RED	FR/D	8	13
4WLOP ↓	TOP RED	D/FR	8	13
4WLOP ↓	BOTTOM RED	FR/D	8	13
* NO CODE	TOP RED	D/FR	8	13
* NO CODE	BOTTOM RED	FR/D	8	13
NO CODE	TOP RED	D/R	8	15
NO CODE	BOTTOM RED	R/D	8	15
ANY CODE	ALL DARK	D/D	8	30

* FOLLOWING MOVE

STRAIGHT ROUTE LAMP OUT DOWNGRADES EA/EB				
CODE IN	LAMP OUT	ASPECT	CODE OUT	PTC
7	TOP GRN	FY/R	7	7
7	TOP GRN & YEL	FR/R	8	13
7	ALL TOP	D/FR	8	13
7	BOTTOM RED	G/D	7	3
4	TOP YEL	FR/R	8	13
4	TOP YEL & RED	D/FR	8	13
4	BOTTOM RED	FY/D	7	7
2	TOP YEL	FR/R	8	13
2	TOP YEL & RED	D/FR	8	13
2	BOTTOM YEL	Y/R	3 OR 9*	9
2	BOTTOM YEL & RED	Y/D	3 OR 9*	9
8	TOP YEL	FR/R	8	13
8	TOP YEL & RED	D/FR	8	13
8	BOTTOM RED	Y/D	3 OR 9*	9
NO CODE	TOP RED	D/R	8	15
NO CODE	BOTTOM RED	R/D	8	15
ANY CODE	ALL DARK	D/D	8	30

* CODE 3 WITH EAC3
CODE 9 WITHOUT EAC3

STRAIGHT ROUTE LAMP OUT DOWNGRADES EC/ED				
CODE IN	LAMP OUT	ASPECT	CODE OUT	PTC
7	TOP GRN	FY/R	7	7
7	TOP GRN & YEL	FR/R	8	13
7	ALL TOP	D/FR	8	13
7	BOTTOM RED	G/D	7	3
4	TOP YEL	FR/R	8	13
4	TOP YEL & RED	D/FR	8	13
4	BOTTOM RED	FY/D	7	7
2	TOP YEL	FR/R	8	13
2	TOP YEL & RED	D/FR	8	13
2	BOTTOM YEL	Y/R	4	9
2	BOTTOM YEL & RED	Y/D	4	9
8	TOP YEL	FR/R	8	13
8	TOP YEL & RED	D/FR	8	13
8	BOTTOM RED	Y/D	4	9
NO CODE	TOP RED	D/R	8	15
NO CODE	BOTTOM RED	R/D	8	15
ANY CODE	ALL DARK	D/D	8	30

= OUT
= IN

DATE IN SERVICE _____
S. ENGINEER _____
INSPECTOR _____

RR-SP-050
SIGNAL STAGE 1 & 2

ASPECT SHEET
CP OLIVE
VY 11.13
SH. 1 OF 14

TIME RELEASE ON ALL ROUTES IS SET AT 6 MINUTES 00 SECONDS

THIS PLAN ACCURATE FOR RAILROAD WORK ONLY.

RAILROAD SHEET NO.
50 OF 171

STATE OF CALIFORNIA - DEPARTMENT OF TRANSPORTATION
Caltrans DESIGN
CONSULTANT FUNCTIONAL SUPERVISOR GLENN BREINDEL
CALCULATED-DESIGNED BY RAMON VALDEZ
CHECKED BY
REVISED BY
DATE REVISED
LAST REVISION 00-00-00
DATE PLOTTED 7/18/2012
TIME PLOTTED 2:47:50 PM

Dist	COUNTY	ROUTE	POST MILES TOTAL PROJECT	SHEET No.	TOTAL SHEETS
7	LA	5	29.4/31.6	1811	1931

David McCord 05-21-12
REGISTERED CIVIL ENGINEER DATE

05-21-12
PLANS APPROVAL DATE

REGISTERED PROFESSIONAL ENGINEER DAVID WILLIAM McCORD No. E-15317 Exp. June 30, 2013 ELECTRICAL STATE OF CALIFORNIA

THE STATE OF CALIFORNIA OR ITS OFFICERS OR AGENTS SHALL NOT BE RESPONSIBLE FOR THE ACCURACY OR COMPLETENESS OF SCANNED COPIES OF THIS PLAN SHEET.

SCRRA
279 E. ARROW HIGHWAY
SAN DIMAS, CA 91773

XORAIL
201 NORTH INDIAN HILL BLVD
SUITE 201
CLAREMONT, CA 91711

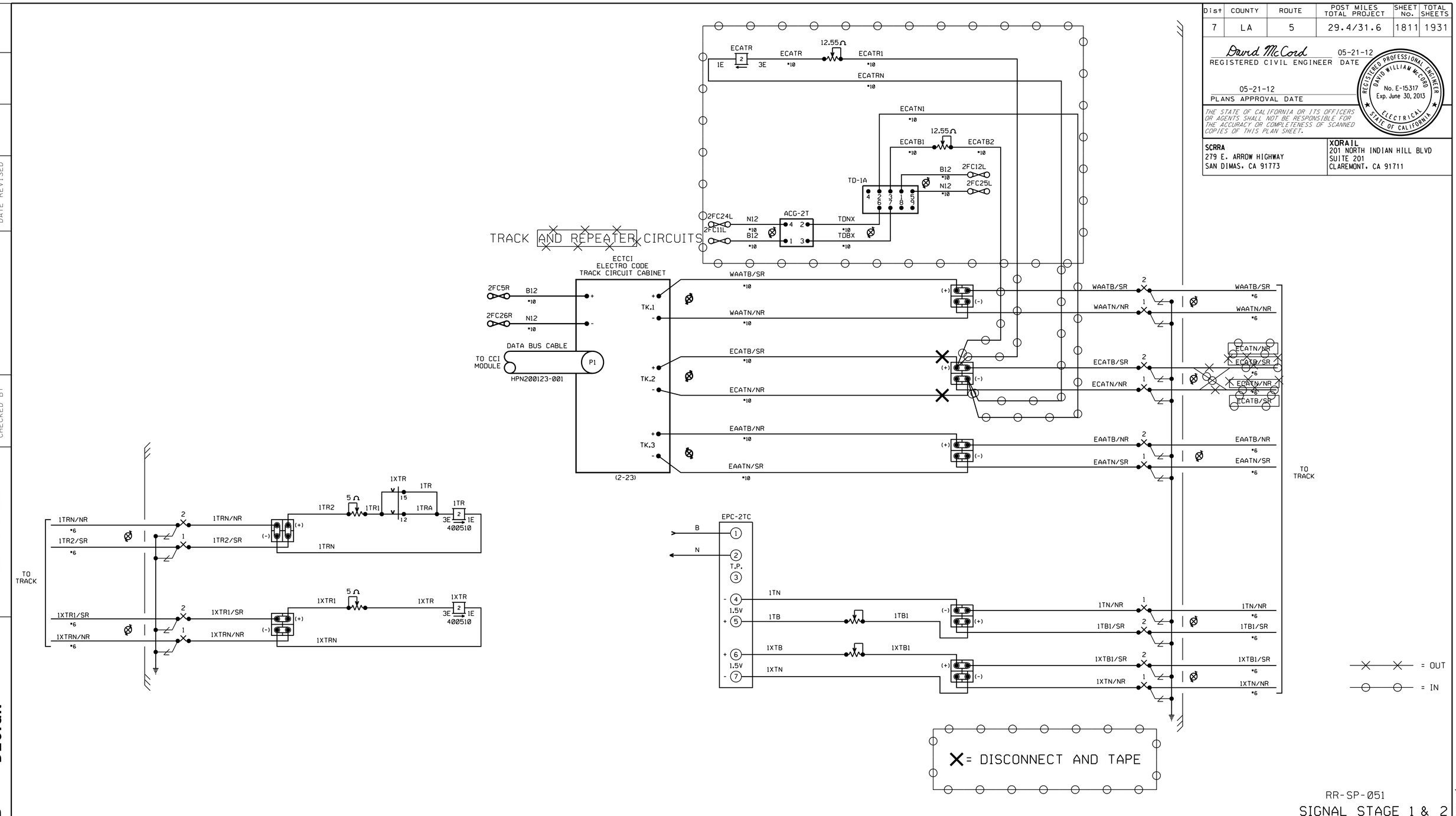

RR-SP-051
SIGNAL STAGE 1 & 2

TRACK CIRCUIT
CP OLIVE
VY 11.13
SH. 2 OF 14

RAILROAD SHEET NO.
51 OF 171

THIS PLAN ACCURATE FOR RAILROAD WORK ONLY.

STATE OF CALIFORNIA - DEPARTMENT OF TRANSPORTATION
Caltrans DESIGN

CONSULTANT FUNCTIONAL SUPERVISOR: GLENN BREINDEL
CALCULATED-DESIGNED BY: RAMON VALDEZ
CHECKED BY
REVISED BY
DATE REVISED

LAST REVISION 00-00-00
DATE PLOTTED 7/18/2012
TIME PLOTTED 2:47:51 PM

Dist	COUNTY	ROUTE	POST MILES TOTAL PROJECT	SHEET No.	TOTAL SHEETS
7	LA	5	29.4/31.6	1812	1931

David McCord 05-21-12
REGISTERED CIVIL ENGINEER DATE

05-21-12
PLANS APPROVAL DATE

REGISTERED PROFESSIONAL ENGINEER DAVID WILLIAM McCORD No. E-15317 Exp. June 30, 2013 ELECTRICAL STATE OF CALIFORNIA

THE STATE OF CALIFORNIA OR ITS OFFICERS OR AGENTS SHALL NOT BE RESPONSIBLE FOR THE ACCURACY OR COMPLETENESS OF SCANNED COPIES OF THIS PLAN SHEET.

SCRRA
279 E. ARROW HIGHWAY
SAN DIMAS, CA 91773

XORAIL
201 NORTH INDIAN HILL BLVD
SUITE 201
CLAREMONT, CA 91711

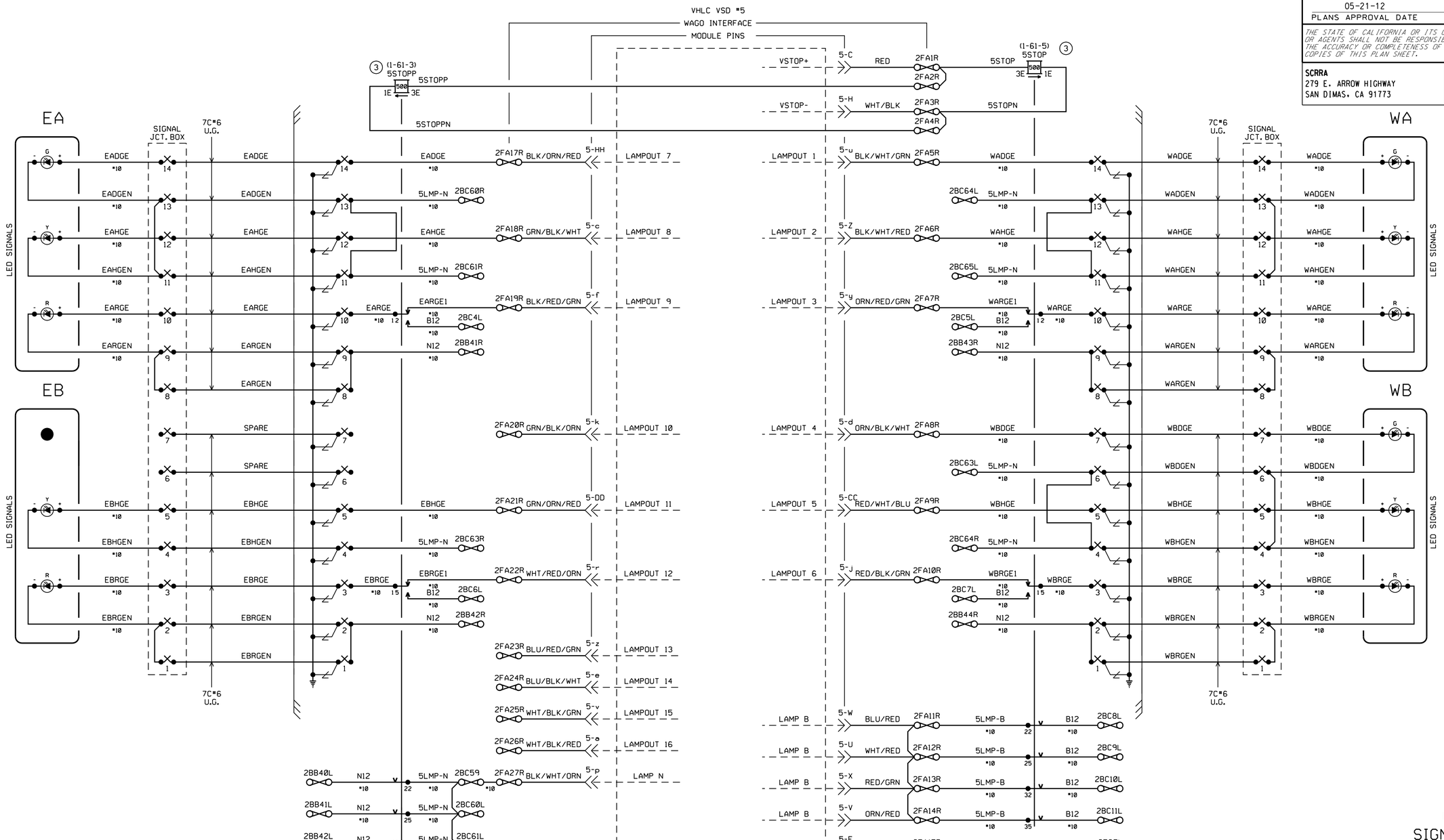

THIS PLAN ACCURATE FOR RAILROAD WORK ONLY.

REFERENCE ONLY

RR-SP-052
SIGNAL STAGE 1 & 2

SIGNAL LIGHTING
CP OLIVE
VY 11.13
SH. 3 OF 14

RAILROAD SHEET NO.
52 OF 171

LAST REVISION 00-00-00
DATE PLOTTED = 7/18/2012
TIME PLOTTED = 2:47:52 PM

STATE OF CALIFORNIA - DEPARTMENT OF TRANSPORTATION
Caltrans® DESIGN
CONSULTANT FUNCTIONAL SUPERVISOR GLENN BREINDEL
CALCULATED-DESIGNED BY RAMON VALDEZ
CHECKED BY
REVISED BY
DATE REVISED

BORDER LAST REVISED 7/2/2010
USERNAME = gharibiana
DGN FILE = ...\moc\xorail\sheet\SP-052-.sht
RELATIVE BORDER SCALE IS IN INCHES 0 1 2 3
UNIT 1812
PROJECT NUMBER & PHASE 07000211191

Dist	COUNTY	ROUTE	POST MILES TOTAL PROJECT	SHEET No.	TOTAL SHEETS
7	LA	5	29.4/31.6	1813	1931

David McCord 05-21-12
REGISTERED CIVIL ENGINEER DATE

05-21-12
PLANS APPROVAL DATE

REGISTERED PROFESSIONAL ENGINEER DAVID WILLIAM McCORD No. E-15317 Exp. June 30, 2013 ELECTRICAL STATE OF CALIFORNIA

THE STATE OF CALIFORNIA OR ITS OFFICERS OR AGENTS SHALL NOT BE RESPONSIBLE FOR THE ACCURACY OR COMPLETENESS OF SCANNED COPIES OF THIS PLAN SHEET.

SCRRA
279 E. ARROW HIGHWAY
SAN DIMAS, CA 91773

XORAIL
201 NORTH INDIAN HILL BLVD
SUITE 201
CLAREMONT, CA 91711

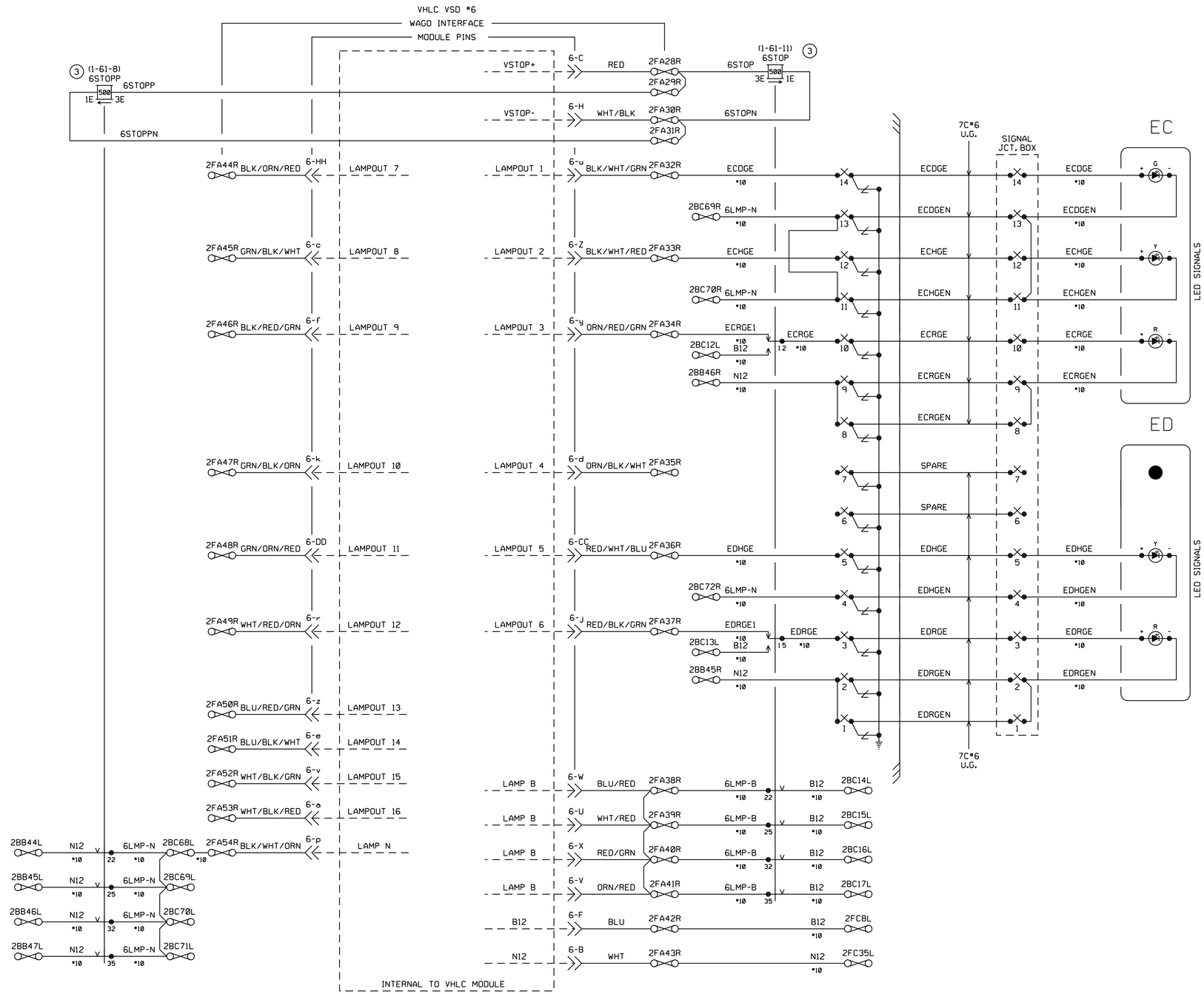

RR-SP-053
SIGNAL STAGE 1 & 2

SIGNAL LIGHTING
CP OLIVE
VY 11.13
SH. 4 OF 14

THIS PLAN ACCURATE FOR RAILROAD WORK ONLY.

REFERENCE ONLY

RAILROAD SHEET NO.
53 OF 171

STATE OF CALIFORNIA - DEPARTMENT OF TRANSPORTATION
Caltrans® DESIGN

CONSULTANT FUNCTIONAL SUPERVISOR: GLENN BREINDEL
CALCULATED-DESIGNED BY: RAMON VALDEZ
CHECKED BY
REVISED BY
DATE REVISED

LAST REVISION 00-00-00
DATE PLOTTED = 7/18/2012
TIME PLOTTED = 23:47:53 PM

Dist	COUNTY	ROUTE	POST MILES TOTAL PROJECT	SHEET No.	TOTAL SHEETS
7	LA	5	29.4/31.6	1814	1931

David McCord 05-21-12
REGISTERED CIVIL ENGINEER DATE

05-21-12
PLANS APPROVAL DATE

REGISTERED PROFESSIONAL ENGINEER DAVID WILLIAM McCORD No. E-15317 Exp. June 30, 2013 ELECTRICAL STATE OF CALIFORNIA

THE STATE OF CALIFORNIA OR ITS OFFICERS OR AGENTS SHALL NOT BE RESPONSIBLE FOR THE ACCURACY OR COMPLETENESS OF SCANNED COPIES OF THIS PLAN SHEET.

SCRRA
279 E. ARROW HIGHWAY
SAN DIMAS, CA 91773

XORAIL
201 NORTH INDIAN HILL BLVD
SUITE 201
CLAREMONT, CA 91711

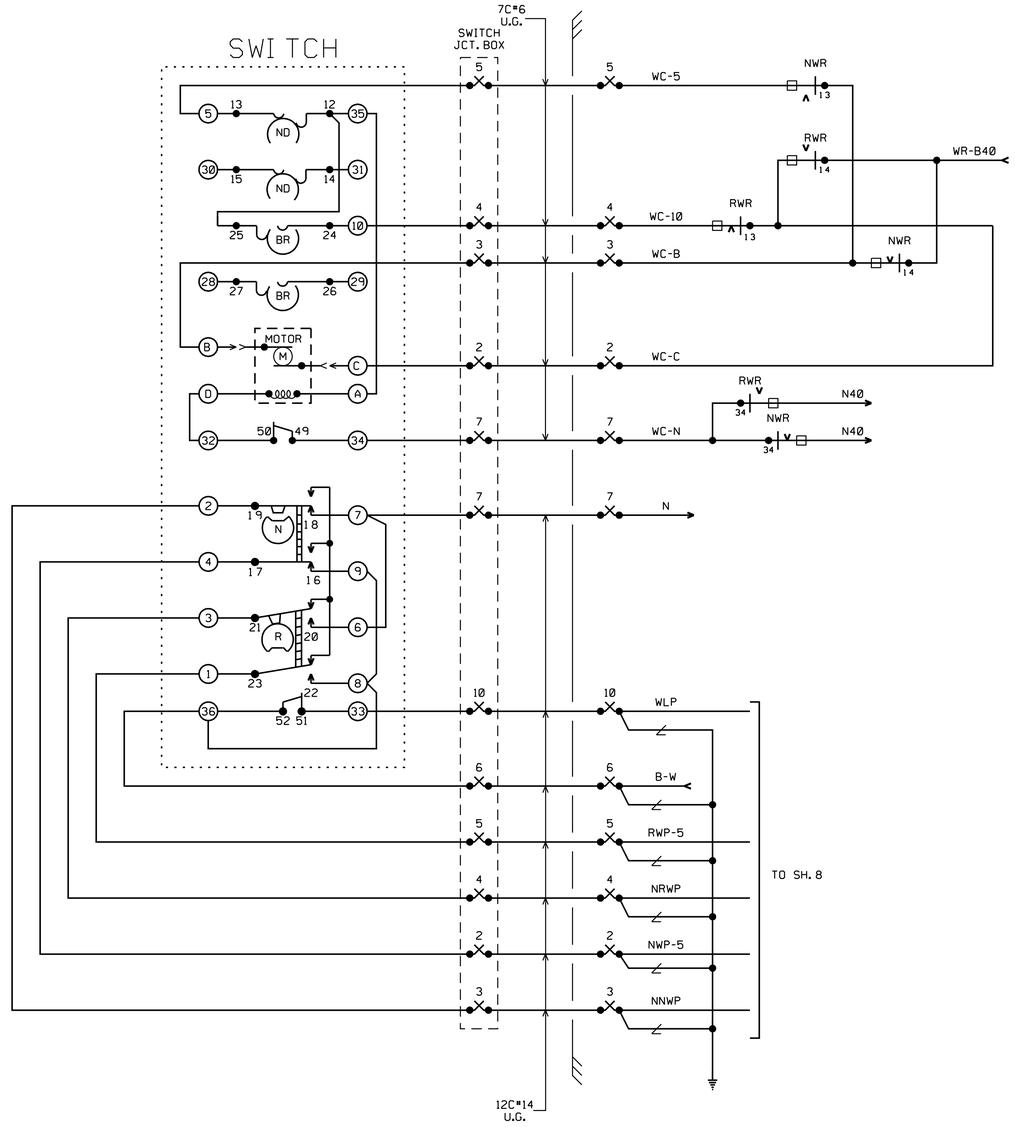

1) WIRING SHOWN IS FOR SWITCH WITH RIGHT HAND POINT NORMALLY CLOSED.
2) WITH SWITCH IN NORMAL POSITION, SET INDICATION CAMS SO CONTACTS 19 & 17 ARE CLOSED (DOWN) AND CONTACTS 21 & 23 ARE SHUNTED BY SHUNT BAR.
3) ALL WIRES TO MOTOR ARE #9 COPPER.
4) CONTACTS 49-50 AND 51-52 OPEN WHEN SELECTOR LEVER IS PLACED IN HAND THROW.

RR-SP-054
SIGNAL STAGE 1 & 2

SWITCH CIRCUITS
CP OLIVE
VY 11.13
SH. 5 OF 14

REFERENCE ONLY

RAILROAD SHEET NO.
54 OF 171

THIS PLAN ACCURATE FOR RAILROAD WORK ONLY.

STATE OF CALIFORNIA - DEPARTMENT OF TRANSPORTATION
Caltrans® DESIGN

CONSULTANT FUNCTIONAL SUPERVISOR: GLENN BREINDEL
CALCULATED-DESIGNED BY: RAMON VALDEZ
CHECKED BY
REVISED BY
DATE REVISED

LAST REVISION 00-00-00
DATE PLOTTED 7/18/2012
TIME PLOTTED 23:47:54 PM

BORDER LAST REVISED 7/2/2010
USERNAME = gharibiana
DGN FILE = ...\moc\xorail\sheet\SP-054-.sht
RELATIVE BORDER SCALE IS IN INCHES 0 1 2 3
UNIT 1812
PROJECT NUMBER & PHASE
07000211191

Dist	COUNTY	ROUTE	POST MILES TOTAL PROJECT	SHEET No.	TOTAL SHEETS
7	LA	5	29.4/31.6	1815	1931

David McCord 05-21-12
REGISTERED CIVIL ENGINEER DATE

05-21-12
PLANS APPROVAL DATE

REGISTERED PROFESSIONAL ENGINEER DAVID WILLIAM MCCORD No. E-15317 Exp. June 30, 2013 ELECTRICAL STATE OF CALIFORNIA

THE STATE OF CALIFORNIA OR ITS OFFICERS OR AGENTS SHALL NOT BE RESPONSIBLE FOR THE ACCURACY OR COMPLETENESS OF SCANNED COPIES OF THIS PLAN SHEET.

SCRRA
279 E. ARROW HIGHWAY
SAN DIMAS, CA 91773

XORAIL
201 NORTH INDIAN HILL BLVD
SUITE 201
CLAREMONT, CA 91711

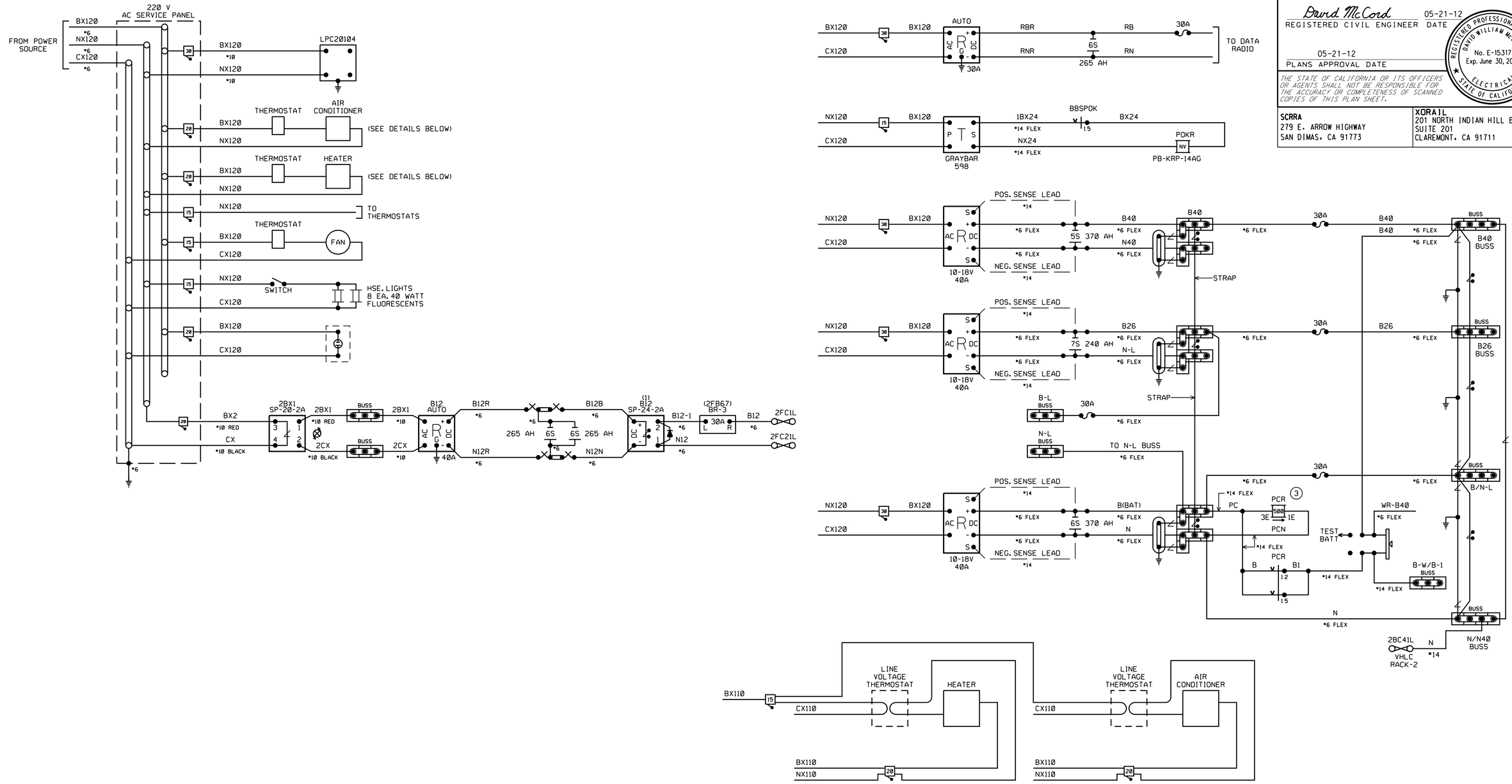

RR-SP-055
SIGNAL STAGE 1 & 2

POWER CIRCUITS
CP OLIVE
VY 11.13
SH. 6 OF 14

THIS PLAN ACCURATE FOR RAILROAD WORK ONLY.

REFERENCE ONLY

RAILROAD SHEET NO.
55 OF 171

STATE OF CALIFORNIA - DEPARTMENT OF TRANSPORTATION
Caltrans DESIGN
CONSULTANT FUNCTIONAL SUPERVISOR: GLENN BREINDEL
CALCULATED-DESIGNED BY: RAMON VALDEZ
CHECKED BY
REVISED BY
DATE REVISED

LAST REVISION 00-00-00
DATE PLOTTED 7/18/2012
TIME PLOTTED 2:47:55 PM

Dist	COUNTY	ROUTE	POST MILES TOTAL PROJECT	SHEET No.	TOTAL SHEETS
7	LA	5	29.4/31.6	1816	1931

David McCord 05-21-12
REGISTERED CIVIL ENGINEER DATE

05-21-12
PLANS APPROVAL DATE

REGISTERED PROFESSIONAL ENGINEER DAVID WILLIAM MCCORD No. E-15317 Exp. June 30, 2013 ELECTRICAL STATE OF CALIFORNIA

THE STATE OF CALIFORNIA OR ITS OFFICERS OR AGENTS SHALL NOT BE RESPONSIBLE FOR THE ACCURACY OR COMPLETENESS OF SCANNED COPIES OF THIS PLAN SHEET.

SCRRA
279 E. ARROW HIGHWAY
SAN DIMAS, CA 91773

XORAIL
201 NORTH INDIAN HILL BLVD
SUITE 201
CLAREMONT, CA 91711

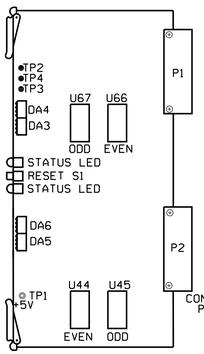

VITAL LOGIC PROCESSOR

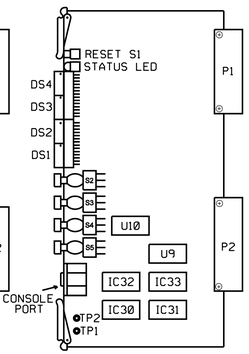

AUXILIARY COMMUNICATIONS PROCESSOR

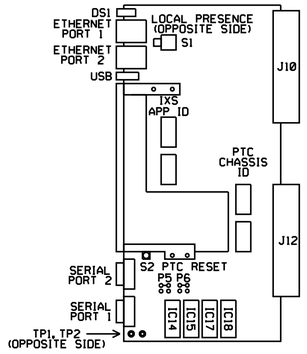

SITE SPECIFIC / PTC PROCESSOR

A5PTC VER. _____

U44	U66
CKSUM _____	CKSUM _____
U45	U67
CKSUM _____	CKSUM _____

ATCS VER

IC32	IC33
CKSUM _____	CKSUM _____
IC30	IC31
CKSUM _____	CKSUM _____
U10	U9
CKSUM XXXX	CKSUM XXXX
CRC XXXX	CRC XXXX

SSM PROGRAM XXXXXX

IC14 CKSUM XXXX	IC17 CKSUM ____
CRC XXXX	CRC ____
IC15 CKSUM XXXX	IC18 CKSUM ____
CRC XXXX	CRC ____

PTC EXECUTIVE
XXXX VER. X.X OR GREATER

PTC MAP XXXXXX
CRC _____

PTC CFG XXXXXX
CRC _____

TYPICAL INSTALLATION OF EPROM

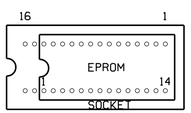

*FIELD ENTER DATA

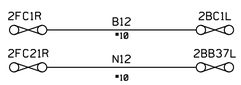

LOCATION NAME: CP OLIVE

ATCS INFORMATION		SIGNAL EQUIPMENT: (VHLC)			
SIGNAL CODE		MCP CODE		CPC CODE	
TYPE	5	TYPE	5	TYPE	2
RR ID SCAX	340	RR ID SCAX	340	RR ID SCAX	340
CODE LINE	16	CODE LINE	16	NODE	01
SITE ID	34	SITE ID	34	CODE LINE	5516
DEVICE ID		DEVICE ID			

CHASSIS ID 1113

VHLC (REAR VIEW)

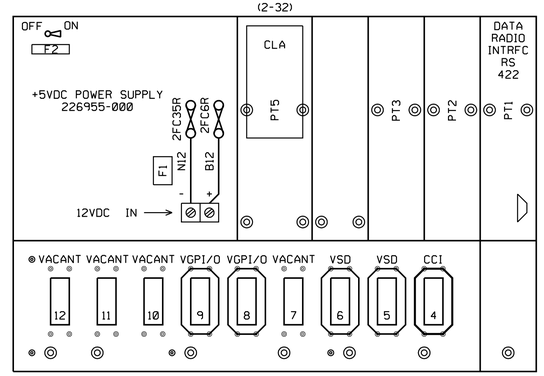

SITE SPECIFIC MODULE JUMPER LOCATIONS

EPROM	P3	P4	P5	P6
27C64	1-3	1-3	1-3	1-3
27C128	1-3	1-3	1-3	1-3
27C256	2-4	1-3	1-3	1-3
27C512	2-4	2-4	1-3	1-3
27C010	2-4	2-4	2-4	1-3

MODULE CABLES

MODULE	HPN
CCI	200123-001
VSD	200125-020
VGPI/O	200124-120
16VGPI	200661-120
CLA	202037-005

LOCATION # 34

CONTROLS									INDICATIONS								
BIT	1	2	3	4	5	6	7	8	BIT	1	2	3	4	5	6	7	8
WORD1	1NWS	1RWS	WHS	EHS					WORD1	1NWK	1RWK	1TK	WGK	EGK	TEK	LOK	
WORD2	EGFS	WGFS							WORD2			WAAK	EAAK	ECAK	POK	LCK	
WORD3									WORD3								

PTC MESSAGE

TYPE	SWITCH	SIGNAL	SIGNAL	SIGNAL
NAME	SW	EA	W	EC
OFFSET	0	2	7	12

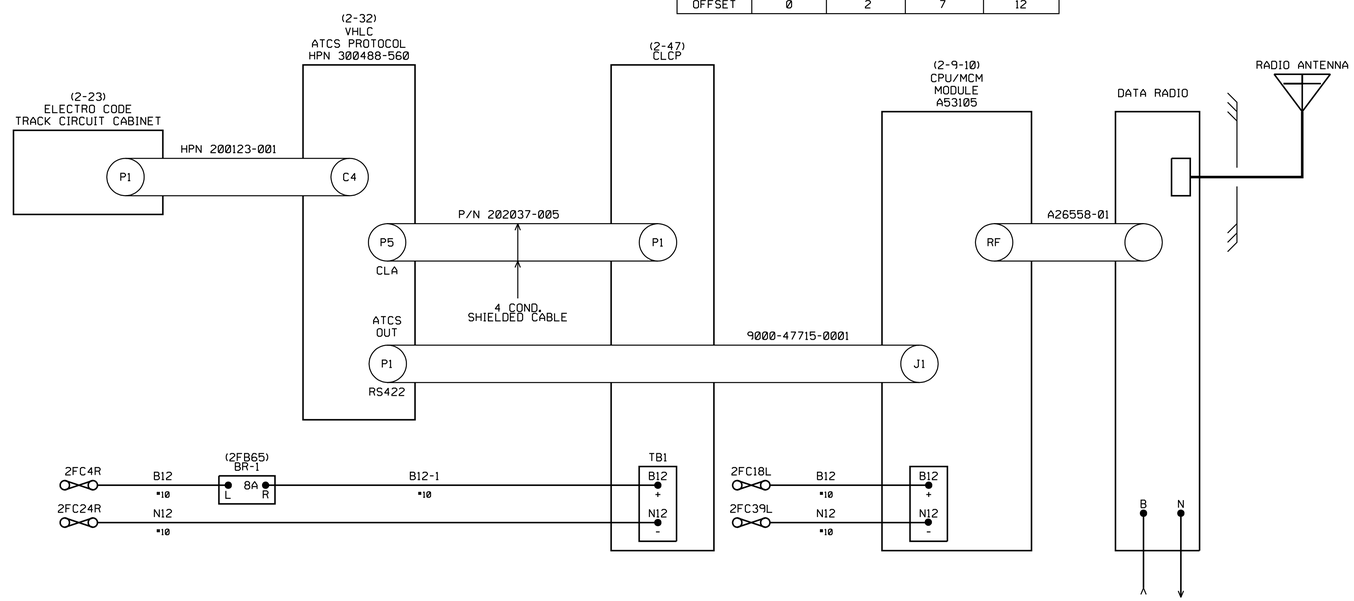

PTC WORK TO BE PERFORMED BY OTHERS.

RR-SP-056
SIGNAL STAGE 1 & 2

RADIO/BLOCK DIAGRAM & CODE ASSIGNMENT
CP OLIVE
VY 11.13
SH. 7 OF 14

RAILROAD SHEET NO.
56 OF 171

REFERENCE ONLY

THIS PLAN ACCURATE FOR RAILROAD WORK ONLY.

STATE OF CALIFORNIA - DEPARTMENT OF TRANSPORTATION
DESIGN
CONSULTANT FUNCTIONAL SUPERVISOR GLENN BREINDEL
CALCULATED-DESIGNED BY
CHECKED BY
REVISED BY
DATE REVISED
RAMON VALDEZ

LAST REVISION 00-00-00
DATE PLOTTED = 7/18/2012
TIME PLOTTED = 2:47:56 PM

Dist	COUNTY	ROUTE	POST MILES TOTAL PROJECT	SHEET No.	TOTAL SHEETS
7	LA	5	29.4/31.6	1817	1931

David McCord 05-21-12
REGISTERED CIVIL ENGINEER DATE

05-21-12
PLANS APPROVAL DATE

REGISTERED PROFESSIONAL ENGINEER DAVID WILLIAM MCCORD No. E-15317 Exp. June 30, 2013 ELECTRICAL STATE OF CALIFORNIA

THE STATE OF CALIFORNIA OR ITS OFFICERS OR AGENTS SHALL NOT BE RESPONSIBLE FOR THE ACCURACY OR COMPLETENESS OF SCANNED COPIES OF THIS PLAN SHEET.

SCRRA
279 E. ARROW HIGHWAY
SAN DIMAS, CA 91773

XORAIL
201 NORTH INDIAN HILL BLVD
SUITE 201
CLAREMONT, CA 91711

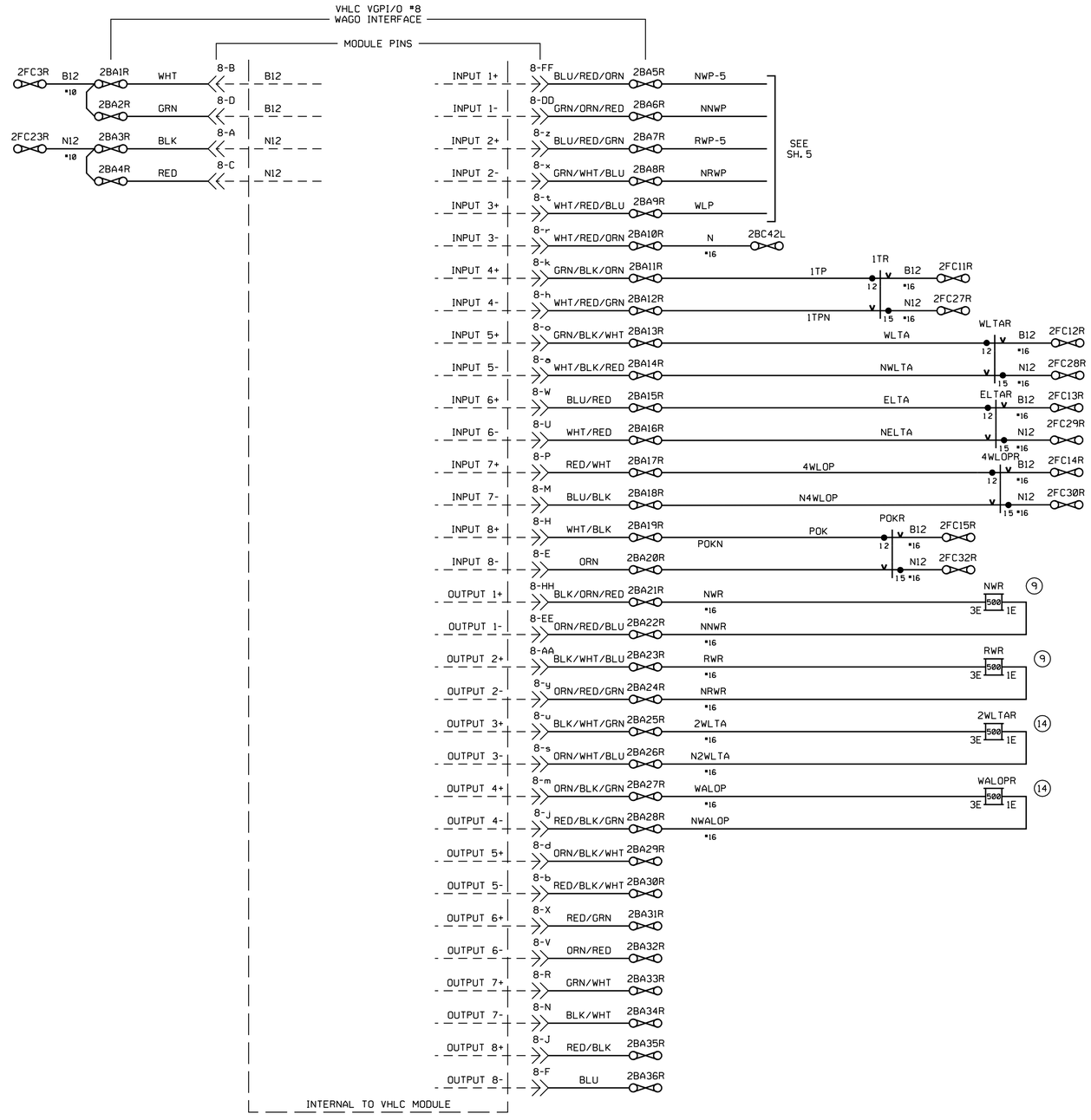

RR-SP-057
SIGNAL STAGE 1 & 2

VHLC I/O CONNECTIONS
CP OLIVE
VY 11.13
SH. 8 OF 14

RAILROAD SHEET NO.
57 OF 171

REFERENCE ONLY

THIS PLAN ACCURATE FOR RAILROAD WORK ONLY.

STATE OF CALIFORNIA - DEPARTMENT OF TRANSPORTATION
Caltrans® DESIGN

CONSULTANT FUNCTIONAL SUPERVISOR: GLENN BREINDEL
CALCULATED-DESIGNED BY: RAMON VALDEZ
CHECKED BY
REVISED BY
DATE REVISED

LAST REVISION 00-00-00
DATE PLOTTED = 7/18/2012
TIME PLOTTED = 2:47:57 PM

Dist	COUNTY	ROUTE	POST MILES TOTAL PROJECT	SHEET No.	TOTAL SHEETS
7	LA	5	29.4/31.6	1818	1931

David McCord 05-21-12
REGISTERED CIVIL ENGINEER DATE

05-21-12
PLANS APPROVAL DATE

REGISTERED PROFESSIONAL ENGINEER DAVID WILLIAM McCORD No. E-15317 Exp. June 30, 2013 ELECTRICAL STATE OF CALIFORNIA

THE STATE OF CALIFORNIA OR ITS OFFICERS OR AGENTS SHALL NOT BE RESPONSIBLE FOR THE ACCURACY OR COMPLETENESS OF SCANNED COPIES OF THIS PLAN SHEET.

SCRRA
279 E. ARROW HIGHWAY
SAN DIMAS, CA 91773

XORAIL
201 NORTH INDIAN HILL BLVD
SUITE 201
CLAREMONT, CA 91711

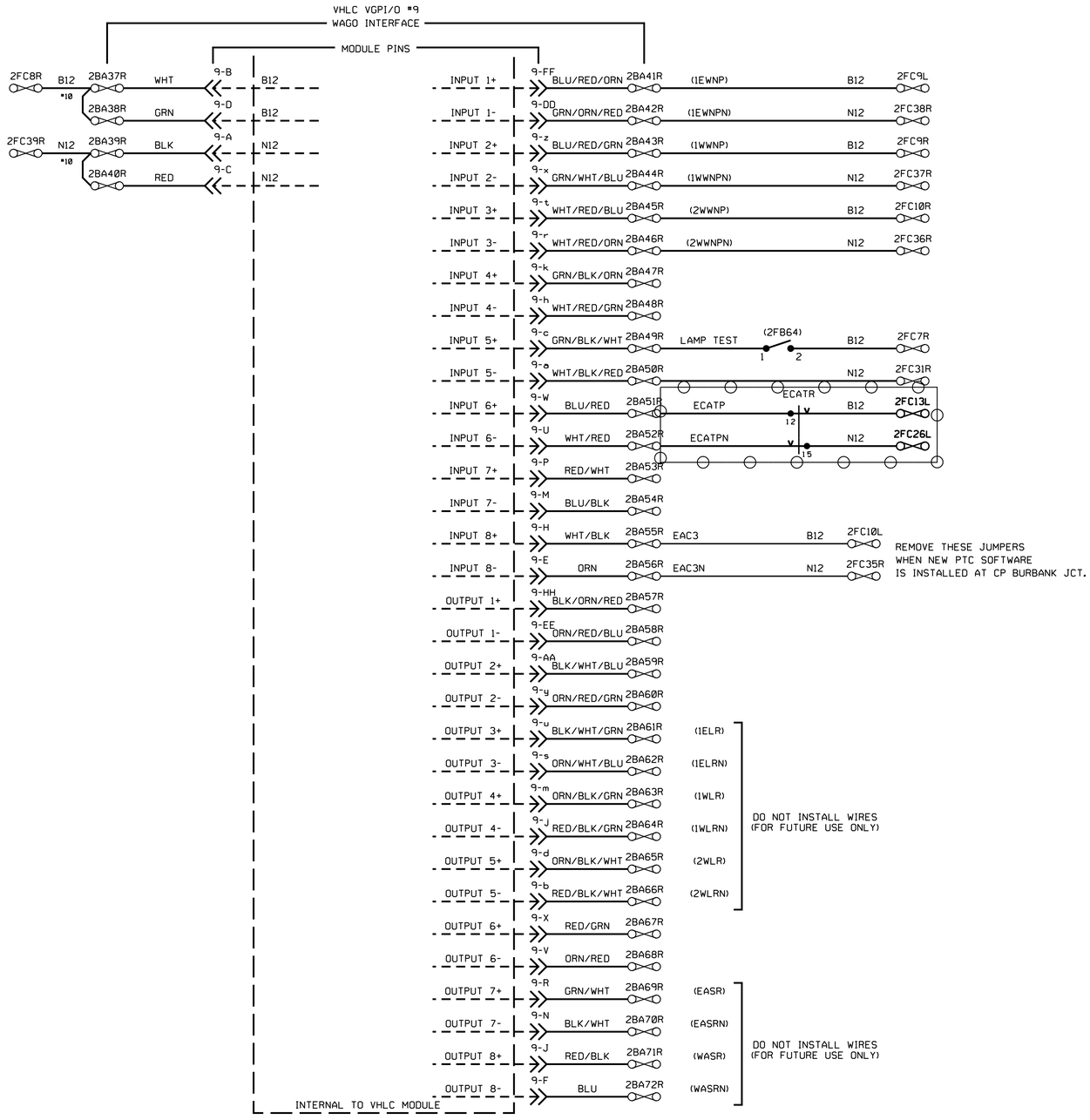

RR-SP-058
SIGNAL STAGE 1 & 2

VHLC I/O CONNECTIONS
CP OLIVE
VY 11.13
SH. 9 OF 14

RAILROAD SHEET NO.
58 OF 171

STATE OF CALIFORNIA - DEPARTMENT OF TRANSPORTATION
Caltrans® DESIGN
CONSULTANT FUNCTIONAL SUPERVISOR: GLENN BREINDEL
CALCULATED-DESIGNED BY: RAMON VALDEZ
CHECKED BY
REVISED BY
DATE REVISED

LAST REVISION 00-00-00
DATE PLOTTED = 7/18/2012
TIME PLOTTED = 23:47:57 PM

Dist	COUNTY	ROUTE	POST MILES TOTAL PROJECT	SHEET No.	TOTAL SHEETS
7	LA	5	29.4/31.6	1819	1931

David McCord 05-21-12
REGISTERED CIVIL ENGINEER DATE

05-21-12
PLANS APPROVAL DATE

REGISTERED PROFESSIONAL ENGINEER DAVID WILLIAM McCORD No. E-15317 Exp. June 30, 2013 ELECTRICAL STATE OF CALIFORNIA

THE STATE OF CALIFORNIA OR ITS OFFICERS OR AGENTS SHALL NOT BE RESPONSIBLE FOR THE ACCURACY OR COMPLETENESS OF SCANNED COPIES OF THIS PLAN SHEET.

SCRRA
279 E. ARROW HIGHWAY
SAN DIMAS, CA 91773

XORAIL
201 NORTH INDIAN HILL BLVD
SUITE 201
CLAREMONT, CA 91711

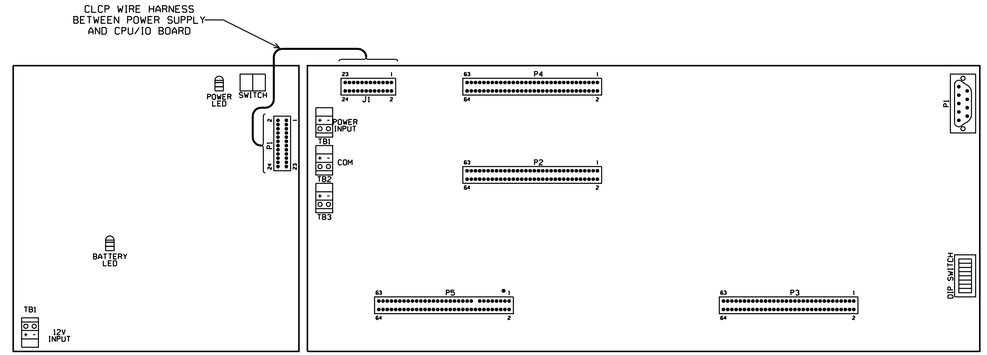

CUSTOM LCP POWER SUPPLY (FRONT)

CUSTOM LCP CPU/IO MODULE (FRONT)

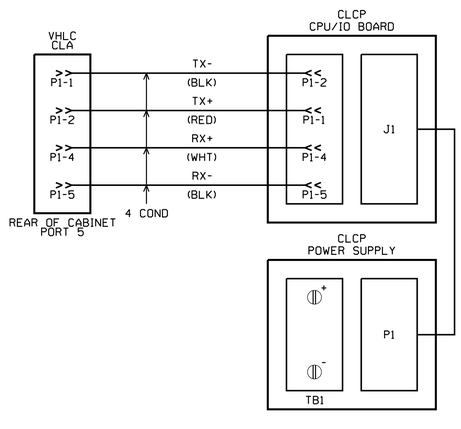

DIP SWITCH LOCATED ON CLCP CPU/IO BOARD

	OFF	ON		
NO START SWITCH			1	START SWITCH
NOT USED			2	
128			3	
256			4	
LOOP BACK			5	
COMMON ANODE			6	COMMON CATHODE
NORMALLY CLOSED			7	NORMALLY OPEN
NORMAL MODE			8	SELF TEST MODE

LCP EPROM

VER. 1.3

CHKSUM 8B3C

(2-47)
LCP PANEL FRONT VIEW

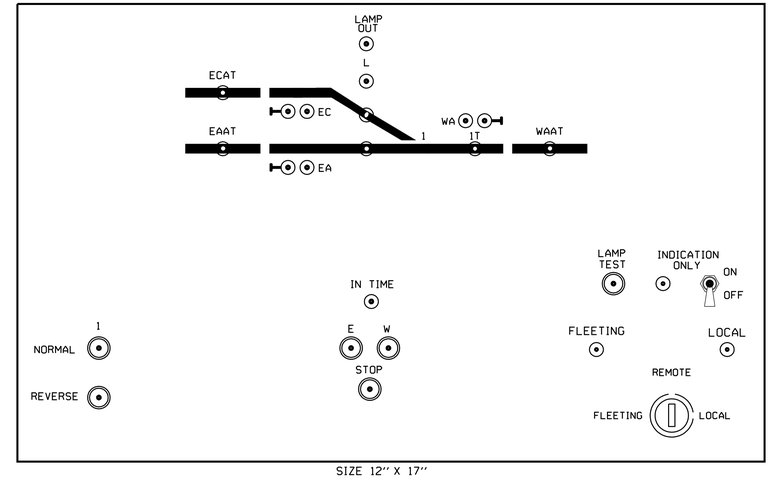

SIZE 12" X 17"

RR-SP-059
SIGNAL STAGE 1 & 2

LOCAL CONTROL PANEL
CP OLIVE
VY 11.13
SH. 10 OF 14

RAILROAD SHEET NO.
59 OF 171

REFERENCE ONLY

THIS PLAN ACCURATE FOR RAILROAD WORK ONLY.

STATE OF CALIFORNIA - DEPARTMENT OF TRANSPORTATION
Caltrans DESIGN

CONSULTANT FUNCTIONAL SUPERVISOR: GLENN BREINDEL
CALCULATED-DESIGNED BY: RAMON VALDEZ
CHECKED BY
REVISED BY
DATE REVISED

LAST REVISION 00-00-00
DATE PLOTTED = 7/18/2012
TIME PLOTTED = 2:47:58 PM

Dist	COUNTY	ROUTE	POST MILES TOTAL PROJECT	SHEET No.	TOTAL SHEETS
7	LA	5	29.4/31.6	1820	1931

David McCord 05-21-12
REGISTERED CIVIL ENGINEER DATE

05-21-12
PLANS APPROVAL DATE

REGISTERED PROFESSIONAL ENGINEER DAVID WILLIAM McCORD No. E-15317 Exp. June 30, 2013 ELECTRICAL STATE OF CALIFORNIA

THE STATE OF CALIFORNIA OR ITS OFFICERS OR AGENTS SHALL NOT BE RESPONSIBLE FOR THE ACCURACY OR COMPLETENESS OF SCANNED COPIES OF THIS PLAN SHEET.

SCRRA
279 E. ARROW HIGHWAY
SAN DIMAS, CA 91773

XORAIL
201 NORTH INDIAN HILL BLVD
SUITE 201
CLAREMONT, CA 91711

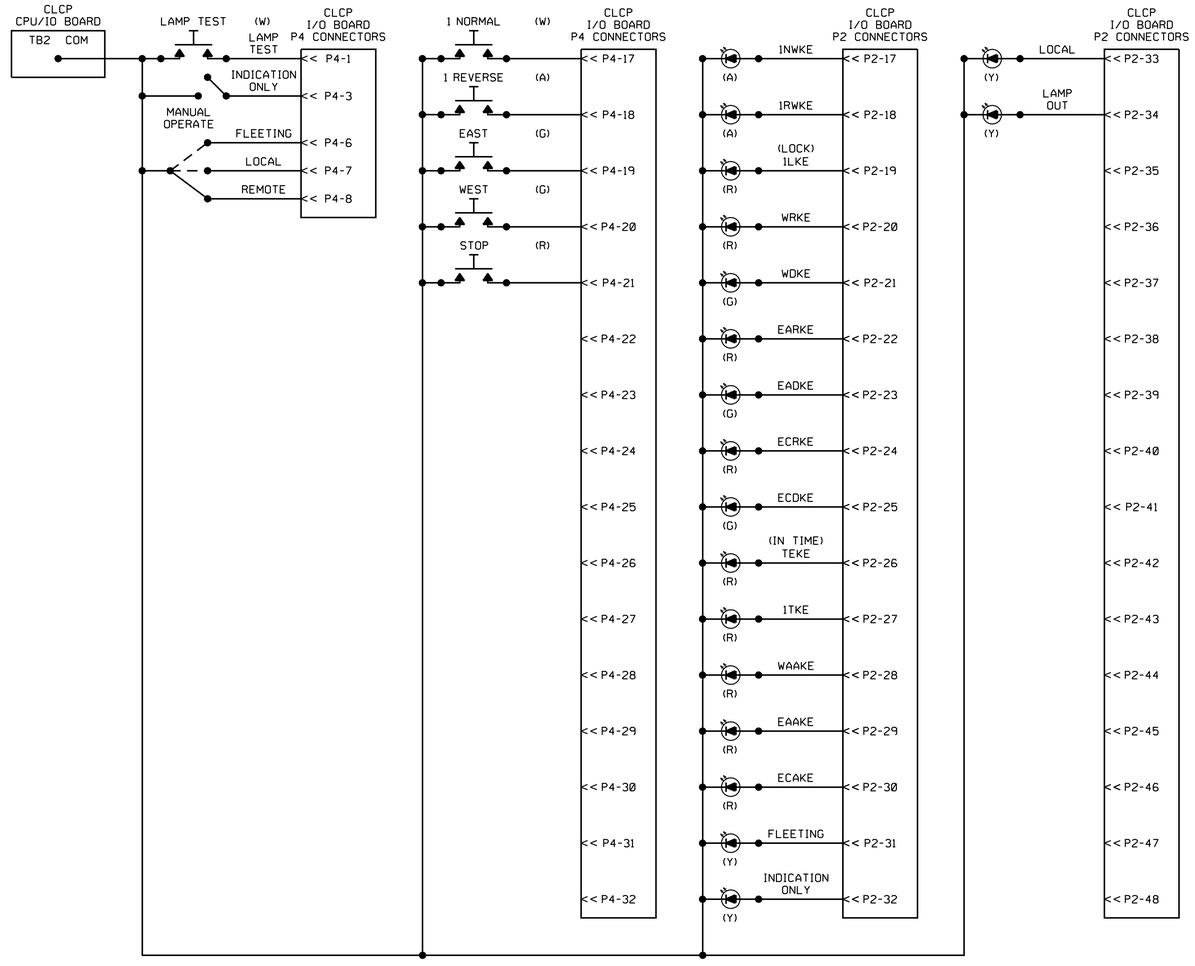

RR-SP-060
SIGNAL STAGE 1 & 2

LOCAL CONTROL PANEL CIRCUITS
CP OLIVE
VY 11.13
SH. 11 OF 14

THIS PLAN ACCURATE FOR RAILROAD WORK ONLY.

REFERENCE ONLY

RAILROAD SHEET NO.
60 OF 171

STATE OF CALIFORNIA - DEPARTMENT OF TRANSPORTATION
Caltrans® DESIGN

CONSULTANT FUNCTIONAL SUPERVISOR: GLENN BREINDEL
CALCULATED-DESIGNED BY: RAMON VALDEZ
CHECKED BY
REVISED BY
DATE REVISED

LAST REVISION 00-00-00
DATE PLOTTED = 7/18/2012
TIME PLOTTED = 2:47:59 PM

BORDER LAST REVISED 7/2/2010
USERNAME = gharibiana
DGN FILE = ...\moc\xorail\sheet\SP-060-.sht
RELATIVE BORDER SCALE IS IN INCHES 0 1 2 3
UNIT 1812
PROJECT NUMBER & PHASE 07000211191

Dist	COUNTY	ROUTE	POST MILES TOTAL PROJECT	SHEET No.	TOTAL SHEETS
7	LA	5	29.4/31.6	1821	1931

David McCord 05-21-12
REGISTERED CIVIL ENGINEER DATE

05-21-12
PLANS APPROVAL DATE

REGISTERED PROFESSIONAL ENGINEER DAVID WILLIAM McCORD No. E-15317 Exp. June 30, 2013 ELECTRICAL STATE OF CALIFORNIA

THE STATE OF CALIFORNIA OR ITS OFFICERS OR AGENTS SHALL NOT BE RESPONSIBLE FOR THE ACCURACY OR COMPLETENESS OF SCANNED COPIES OF THIS PLAN SHEET.

SCRRA
279 E. ARROW HIGHWAY
SAN DIMAS, CA 91773

XORAIL
201 NORTH INDIAN HILL BLVD
SUITE 201
CLAREMONT, CA 91711

RACK - 2 FRONT VIEW

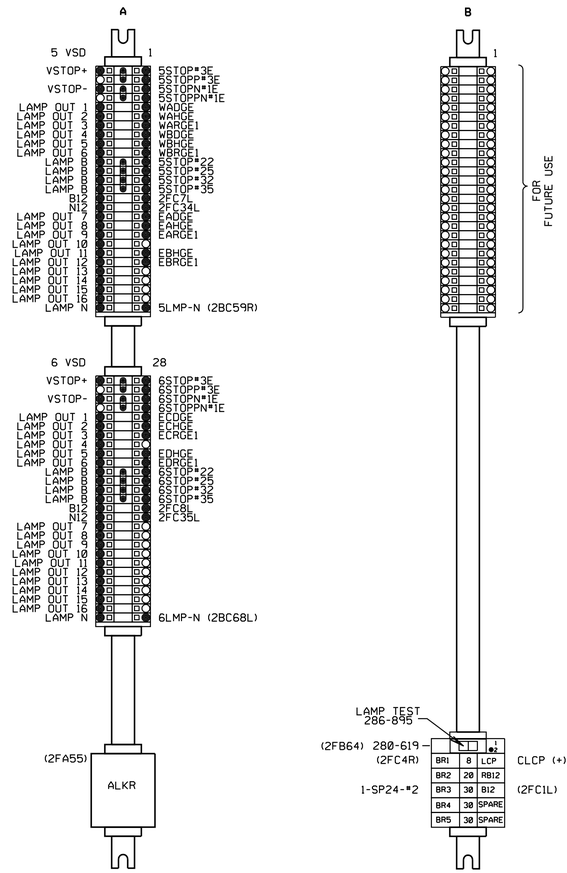

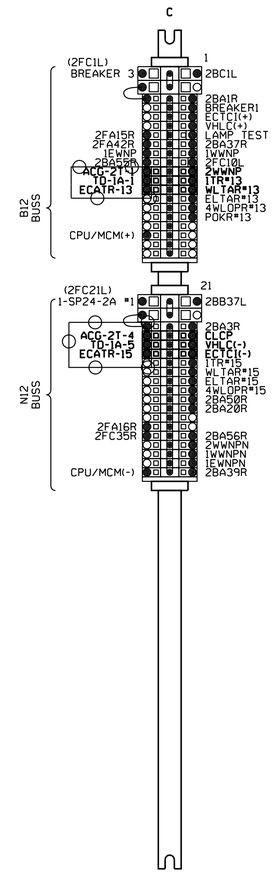

RACK - 2 REAR VIEW

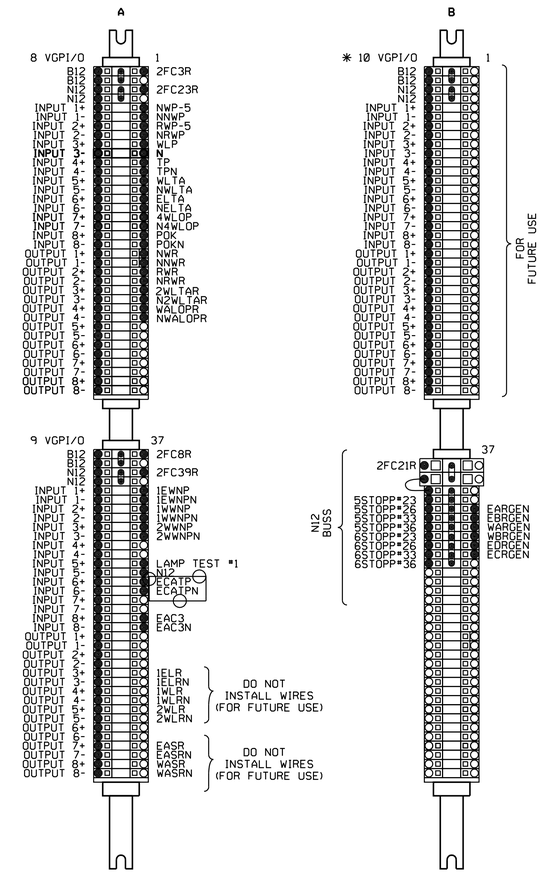

* WAGO'S ASSIGNED AS SHOWN FOR FUTURE USE.

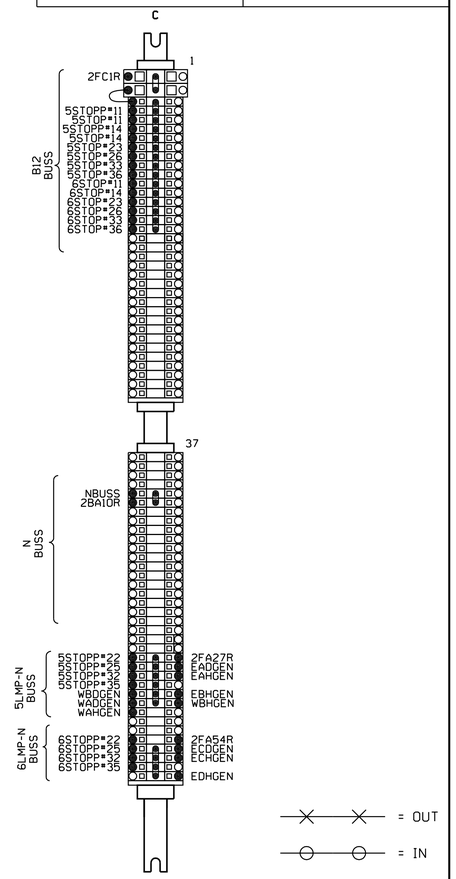

= OUT

= IN

RR-SP-061

SIGNAL STAGE 1 & 2

WAGO DETAIL
CP OLIVE
VY 11.13
SH. 12 OF 14

RAILROAD SHEET NO.
61 OF 171

STATE OF CALIFORNIA - DEPARTMENT OF TRANSPORTATION
Caltrans® DESIGN

CONSULTANT FUNCTIONAL SUPERVISOR: GLENN BREINDEL
CALCULATED-DESIGNED BY: RAMON VALDEZ
CHECKED BY
REVISED BY
DATE REVISED

LAST REVISION 00-00-00
DATE PLOTTED = 7/18/2012
TIME PLOTTED = 2:48:00 PM

Dist	COUNTY	ROUTE	POST MILES TOTAL PROJECT	SHEET No.	TOTAL SHEETS
7	LA	5	29.4/31.6	1822	1931

David McCord 05-21-12
REGISTERED CIVIL ENGINEER DATE

05-21-12
PLANS APPROVAL DATE

REGISTERED PROFESSIONAL ENGINEER DAVID WILLIAM McCORD No. E-15317 Exp. June 30, 2013 ELECTRICAL STATE OF CALIFORNIA

THE STATE OF CALIFORNIA OR ITS OFFICERS OR AGENTS SHALL NOT BE RESPONSIBLE FOR THE ACCURACY OR COMPLETENESS OF SCANNED COPIES OF THIS PLAN SHEET.

SCRRA
279 E. ARROW HIGHWAY
SAN DIMAS, CA 91773

XORAIL
201 NORTH INDIAN HILL BLVD
SUITE 201
CLAREMONT, CA 91711

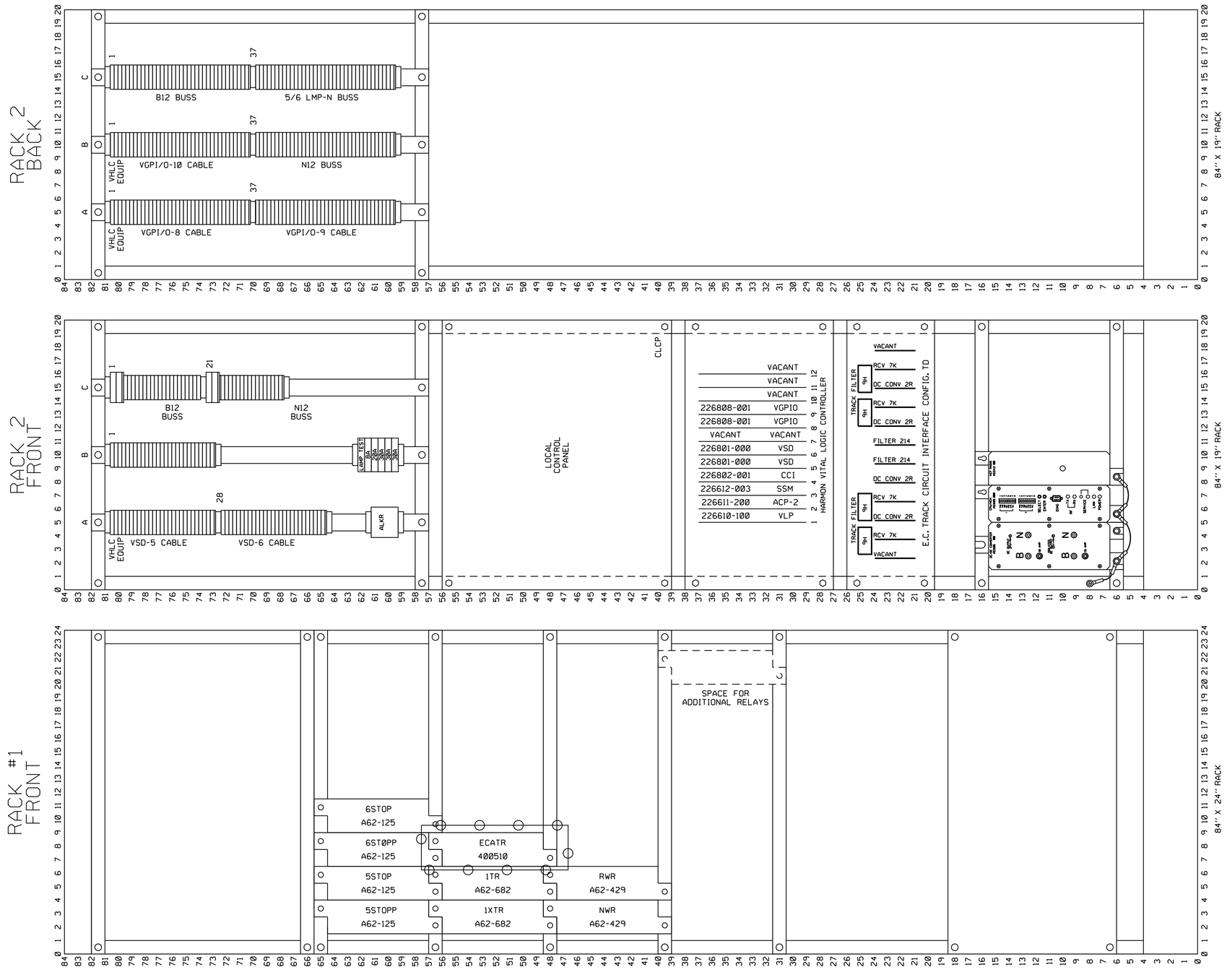

= OUT

= IN

RR-SP-062
SIGNAL STAGE 1 & 2

RACK #2 LAYOUT
CP OLIVE
VY 11.13
SH.13 OF 14

RAILROAD SHEET NO.
62 OF 171

THIS PLAN ACCURATE FOR RAILROAD WORK ONLY.

STATE OF CALIFORNIA - DEPARTMENT OF TRANSPORTATION
Caltrans® DESIGN
CONSULTANT FUNCTIONAL SUPERVISOR: GLENN BREINDEL
CALCULATED-DESIGNED BY: RAMON VALDEZ
CHECKED BY
REVISED BY
DATE REVISED

LAST REVISION 00-00-00
DATE PLOTTED = 7/18/2012
TIME PLOTTED = 2:48:02 PM

BORDER LAST REVISED 7/2/2010
USERNAME = gharibiana
DGN FILE = ...\moc\xorail\sheet\SP-062-.sht
RELATIVE BORDER SCALE IS IN INCHES 0 1 2 3
UNIT 1812
PROJECT NUMBER & PHASE 07000211191

Dist	COUNTY	ROUTE	POST MILES TOTAL PROJECT	SHEET No.	TOTAL SHEETS
7	LA	5	29.4/31.6	1823	1931

David McCord 05-21-12
REGISTERED CIVIL ENGINEER DATE

05-21-12
PLANS APPROVAL DATE

REGISTERED PROFESSIONAL ENGINEER DAVID WILLIAM McCORD No. E-15317 Exp. June 30, 2013 ELECTRICAL STATE OF CALIFORNIA

THE STATE OF CALIFORNIA OR ITS OFFICERS OR AGENTS SHALL NOT BE RESPONSIBLE FOR THE ACCURACY OR COMPLETENESS OF SCANNED COPIES OF THIS PLAN SHEET.

SCRRA
279 E. ARROW HIGHWAY
SAN DIMAS, CA 91773

XORAIL
201 NORTH INDIAN HILL BLVD
SUITE 201
CLAREMONT, CA 91711

CP OLIVE

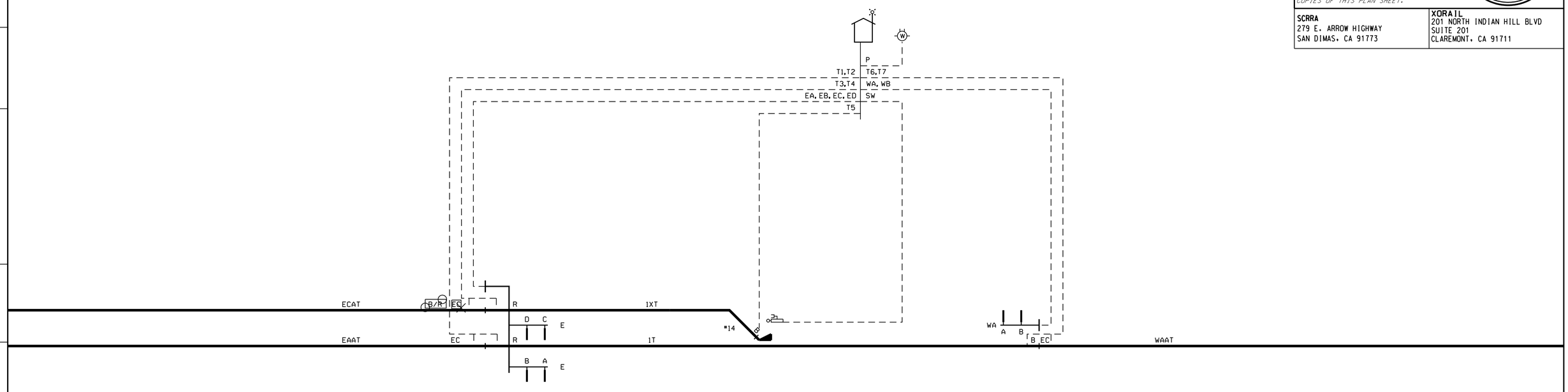

T1 2 COND #6 TW TRK	
1	EAATN/SR
2	EAATB/NR

T2 2 COND #6 TW TRK	
1	1TR2/SR
2	1TRN/NR

T3 2 COND #6 TW TRK	
1	ECATB/SR
2	ECATN/NR

T4 2 COND #6 TW TRK	
1	1XTR1/SR
2	1XTRN/NR

T5 2 COND #6 TW TRK	
1	1XTB1/SR
2	1XTN/NR

EA 7 COND #6 U.G.	
1	EADGE
2	EADGEN
3	EAHGE
4	EAHGEN
5	EARGE
6	EARGEN
7	EARGEN

WA 7 COND #6 U.G.	
1	WADGE
2	WADGEN
3	WAHGE
4	WAHGEN
5	WARGE
6	WARGEN
7	WARGEN

SW 7 COND #6 U.G.	
1	WC-C
2	WC-B
3	WC-5
4	WC-10
5	SPARE
6	WC-N
7	SPARE

EC 7 COND #6 U.G.	
1	ECDGE
2	ECDGEN
3	ECHGE
4	ECHGEN
5	ECRGE
6	ECRGEN
7	ECRGEN

T6 2 COND #6 TW TRK	
1	WAATB/SR
2	WAATN/NR

T7 2 COND #6 TW TRK	
1	1TB1/SR
2	1TN/NR

P 3 COND #6 U.G.	
1	BX120
2	NX120
3	

EB 7 COND #6 U.G.	
1	SPARE
2	SPARE
3	EBHGE
4	EBHGEN
5	EBRGE
6	EBRGEN
7	EBRGEN

WB 7 COND #6 U.G.	
1	WBDGE
2	WBDGEN
3	WBHGE
4	WBHGEN
5	WBRGE
6	WBRGEN
7	WBRGEN

SW 12 COND #14 U.G.	
1	B-W
2	NWP-5
3	NNWP
4	NRWP
5	RWP-5
6	WLP
7	N
8	SPARE
9	SPARE
10	SPARE
11	SPARE
12	SPARE

ED 7 COND #6 U.G.	
1	SPARE
2	SPARE
3	EDHGE
4	EDHGEN
5	EDRGE
6	EDRGEN
7	EDRGEN

= OUT
= IN

RR-SP-063
SIGNAL STAGE 1 & 2

CABLE SHEET
CP OLIVE
VY 11.13
SH.14 OF 14

RAILROAD SHEET NO.
63 OF 171

THIS PLAN ACCURATE FOR RAILROAD WORK ONLY.

STATE OF CALIFORNIA - DEPARTMENT OF TRANSPORTATION
Caltrans® DESIGN
CONSULTANT FUNCTIONAL SUPERVISOR GLENN BREINDEL
CALCULATED-DESIGNED BY RAMON VALDEZ
CHECKED BY
REVISED BY
DATE REVISED

LAST REVISION 00-00-00
DATE PLOTTED = 7/18/2012
TIME PLOTTED = 2:48:03 PM

Dist	COUNTY	ROUTE	POST MILES TOTAL PROJECT	SHEET No.	TOTAL SHEETS
7	LA	5	29.4/31.6	1824	1931

David McCord 05-21-12
REGISTERED CIVIL ENGINEER DATE

05-21-12
PLANS APPROVAL DATE

REGISTERED PROFESSIONAL ENGINEER DAVID WILLIAM MCCORD No. E-15317 Exp. June 30, 2013 ELECTRICAL STATE OF CALIFORNIA

THE STATE OF CALIFORNIA OR ITS OFFICERS OR AGENTS SHALL NOT BE RESPONSIBLE FOR THE ACCURACY OR COMPLETENESS OF SCANNED COPIES OF THIS PLAN SHEET.

SCRRA
279 E. ARROW HIGHWAY
SAN DIMAS, CA 91773

XORAIL
201 NORTH INDIAN HILL BLVD
SUITE 201
CLAREMONT, CA 91711

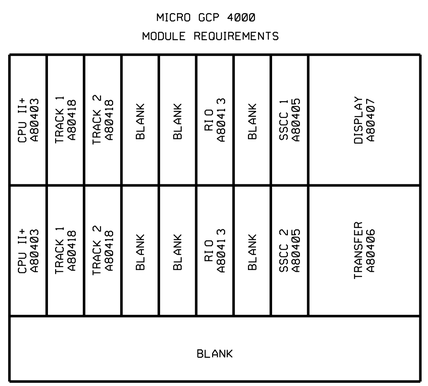

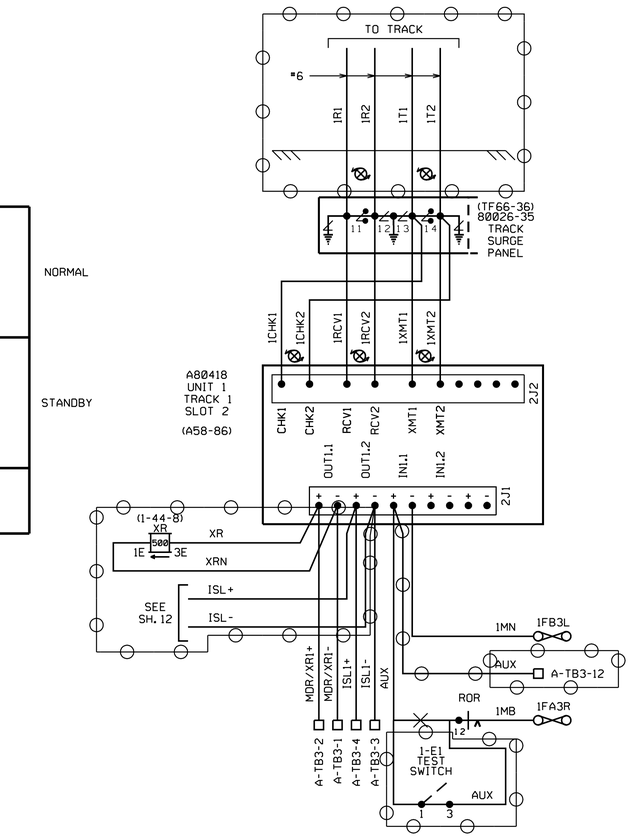

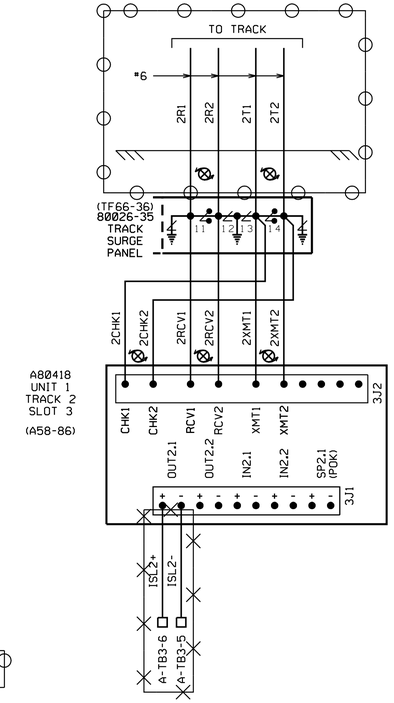

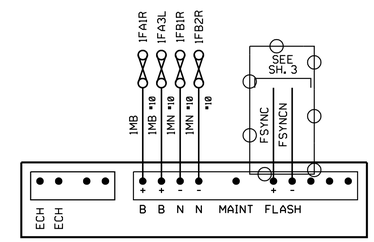

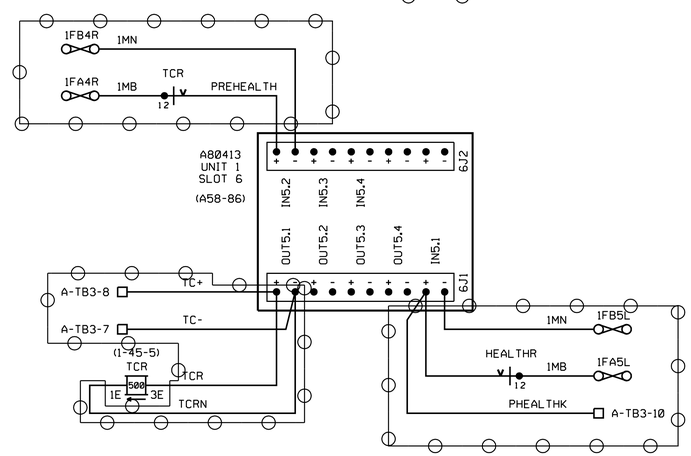

= OUT

= IN

□-DENOTES RECORDER CONNECTION

RR-SP-064
SIGNAL STAGE 2

GCP 4000
BUENA VISTA ST.
VY 12.77
SH. 1 OF 17

THIS PLAN ACCURATE FOR RAILROAD WORK ONLY.

XING HOUSE

RAILROAD SHEET NO.
64 OF 171

STATE OF CALIFORNIA - DEPARTMENT OF TRANSPORTATION
Caltrans® DESIGN
CONSULTANT FUNCTIONAL SUPERVISOR GLENN BREINDEL
CALCULATED-DESIGNED BY RAMON VALDEZ
CHECKED BY
REVISED BY
DATE REVISED

LAST REVISION 00-00-00
DATE PLOTTED = 7/18/2012
TIME PLOTTED = 21:48:04 PM

BORDER LAST REVISED 7/2/2010
USERNAME = gharibiana
DGN FILE = ...\moc\xorail\sheet\SP-064-.sht
RELATIVE BORDER SCALE IS IN INCHES 0 1 2 3
UNIT 1812
PROJECT NUMBER & PHASE 07000211191

Dist	COUNTY	ROUTE	POST MILES TOTAL PROJECT	SHEET No.	TOTAL SHEETS
7	LA	5	29.4/31.6	1825	1931

David McCord 05-21-12
REGISTERED CIVIL ENGINEER DATE

05-21-12
PLANS APPROVAL DATE

REGISTERED PROFESSIONAL ENGINEER DAVID WILLIAM MCCORD No. E-15317 Exp. June 30, 2013 ELECTRICAL STATE OF CALIFORNIA

THE STATE OF CALIFORNIA OR ITS OFFICERS OR AGENTS SHALL NOT BE RESPONSIBLE FOR THE ACCURACY OR COMPLETENESS OF SCANNED COPIES OF THIS PLAN SHEET.

SCRRA
279 E. ARROW HIGHWAY
SAN DIMAS, CA 91773

XORAIL
201 NORTH INDIAN HILL BLVD
SUITE 201
CLAREMONT, CA 91711

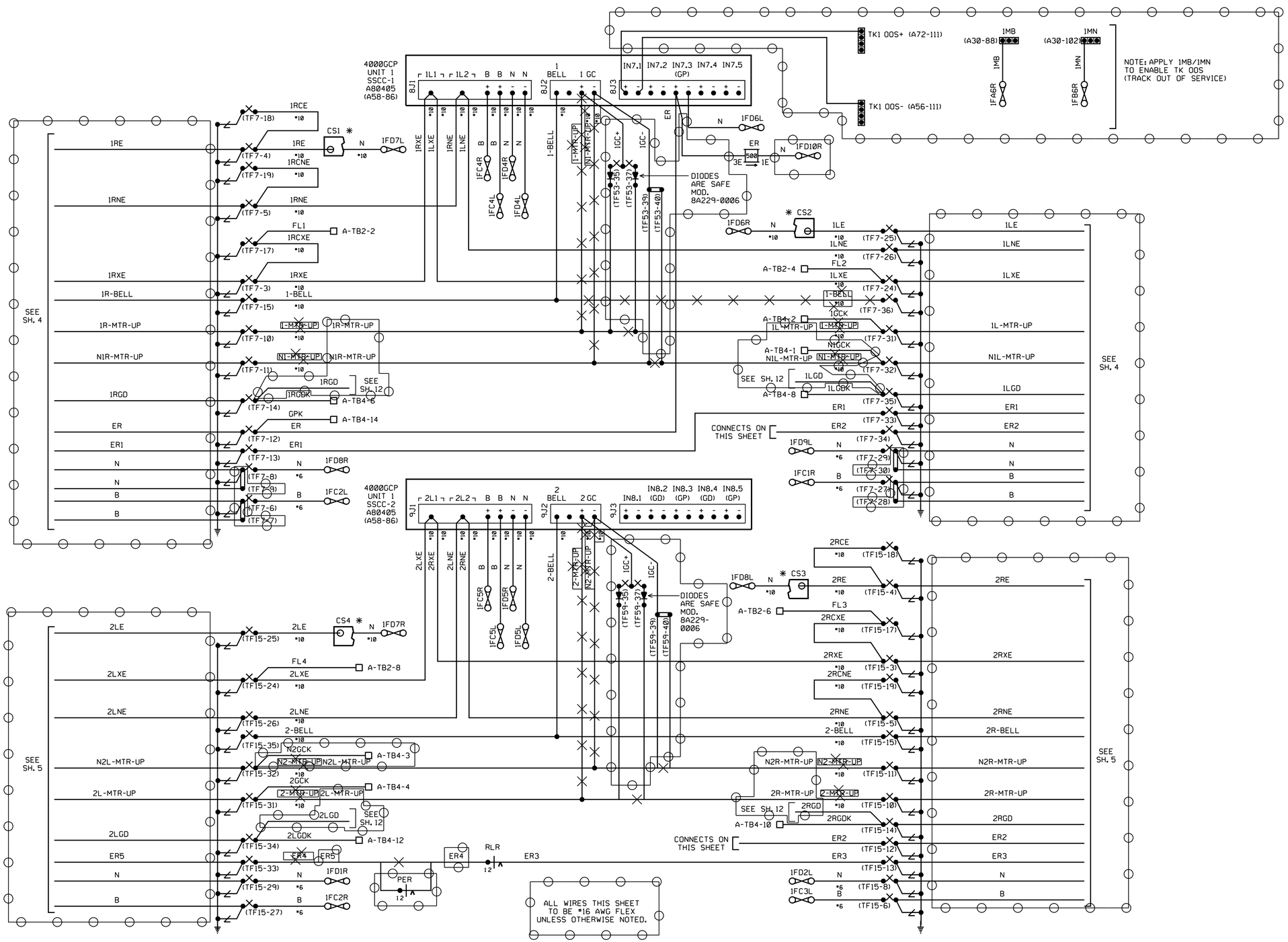

✱ - SEE CURRENT SENSOR DETAIL ON DATA RECORDER CIRCUIT PLAN.
□ -DENOTES RECORDER CONNECTION.

THIS PLAN ACCURATE FOR RAILROAD WORK ONLY.

XING HOUSE

RAILROAD SHEET NO. 65 OF 171

RR-SP-065
SIGNAL STAGE 2

SSCC 1 & 2 CROSSING CONTROLLER
BUENA VISTA ST.
VY 12.77
SH. 2 OF 17

LAST REVISION 00-00-00
DATE PLOTTED = 7/18/2012
TIME PLOTTED = 2:48:05 PM

STATE OF CALIFORNIA - DEPARTMENT OF TRANSPORTATION
DESIGN
Caltrans®
CONSULTANT FUNCTIONAL SUPERVISOR GLENN BREINDEL
CALCULATED-DESIGNED BY
CHECKED BY
REVISED BY
DATE REVISED
RAMON VALDEZ

BORDER LAST REVISED 7/2/2010
USERNAME = gharibiana
DGN FILE = ...\moc\xorail\sheet\SP-065-.sht
RELATIVE BORDER SCALE IS IN INCHES 0 1 2 3
UNIT 1812
PROJECT NUMBER & PHASE 07000211191

Dist	COUNTY	ROUTE	POST MILES TOTAL PROJECT	SHEET No.	TOTAL SHEETS
7	LA	5	29.4/31.6	1826	1931

David McCord 05-21-12
REGISTERED CIVIL ENGINEER DATE

05-21-12
PLANS APPROVAL DATE

REGISTERED PROFESSIONAL ENGINEER DAVID WILLIAM MCCORD No. E-15317 Exp. June 30, 2013 ELECTRICAL STATE OF CALIFORNIA

THE STATE OF CALIFORNIA OR ITS OFFICERS OR AGENTS SHALL NOT BE RESPONSIBLE FOR THE ACCURACY OR COMPLETENESS OF SCANNED COPIES OF THIS PLAN SHEET.

SCRRA
279 E. ARROW HIGHWAY
SAN DIMAS, CA 91773

XORAIL
201 NORTH INDIAN HILL BLVD
SUITE 201
CLAREMONT, CA 91711

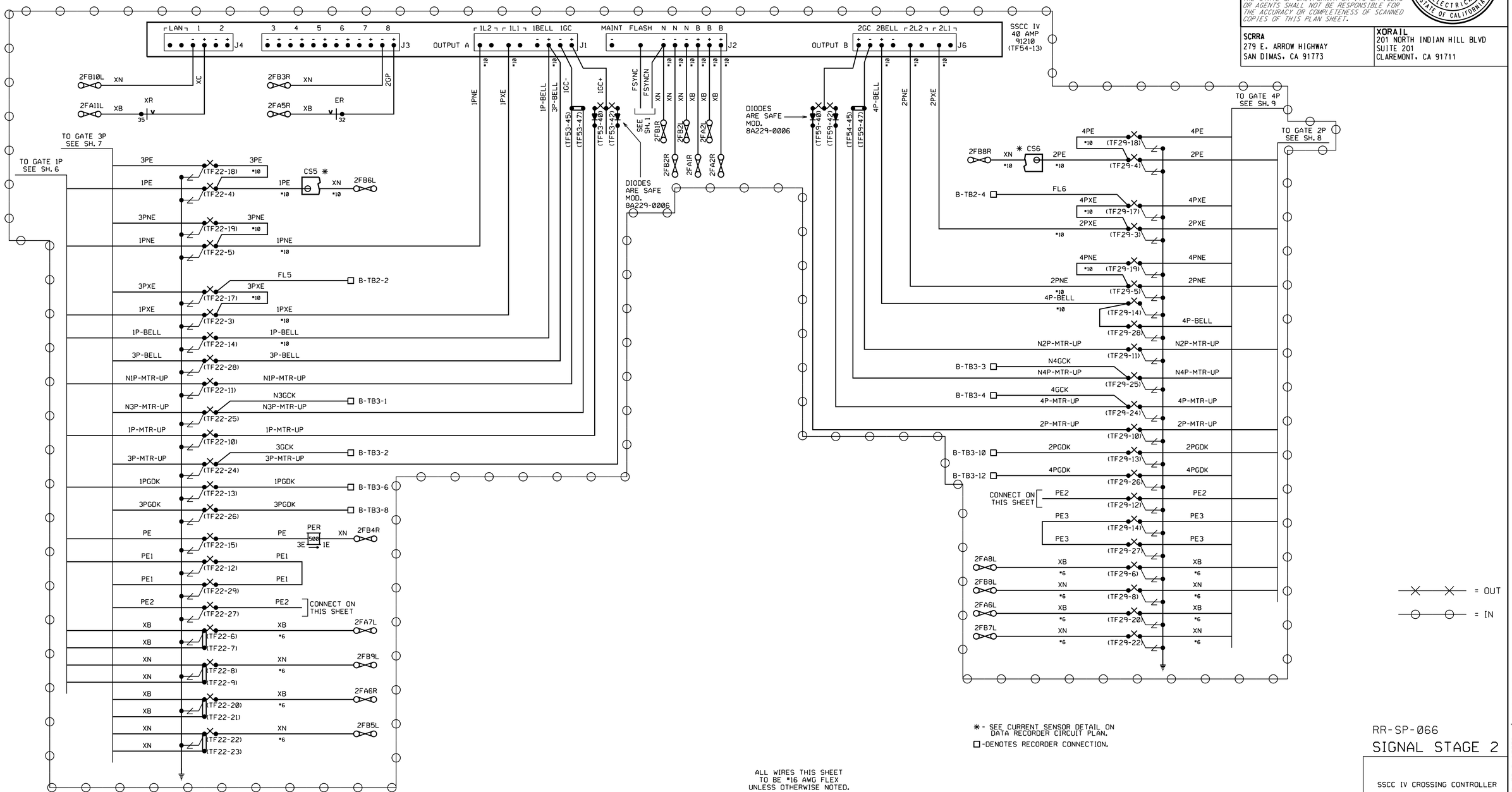

✱ - SEE CURRENT SENSOR DETAIL ON DATA RECORDER CIRCUIT PLAN.
□ -DENOTES RECORDER CONNECTION.

ALL WIRES THIS SHEET TO BE #16 AWG FLEX UNLESS OTHERWISE NOTED.

THIS PLAN ACCURATE FOR RAIL ROAD WORK ONLY.

RR-SP-066
SIGNAL STAGE 2

SSCC IV CROSSING CONTROLLER
BUENA VISTA ST.
VY 12.77
SH. 3 OF 17

XING HOUSE

RAILROAD SHEET NO.
66 OF 171

STATE OF CALIFORNIA - DEPARTMENT OF TRANSPORTATION
Caltrans® DESIGN
CONSULTANT FUNCTIONAL SUPERVISOR GLENN BREINDEL
CALCULATED-DESIGNED BY | CHECKED BY
REVISED BY | DATE REVISED

LAST REVISION 00-00-00
DATE PLOTTED = 7/18/2012
TIME PLOTTED = 2:48:06 PM

BORDER LAST REVISED 7/2/2010
USERNAME = gharibiana
DGN FILE = ...\moc\xorail\sheet\SP-066-.sht
RELATIVE BORDER SCALE IS IN INCHES 0 1 2 3
UNIT 1812
PROJECT NUMBER & PHASE 07000211191

Dist	COUNTY	ROUTE	POST MILES TOTAL PROJECT	SHEET No.	TOTAL SHEETS
7	LA	5	29.4/31.6	1827	1931

David McCord 05-21-12
REGISTERED CIVIL ENGINEER DATE

05-21-12
PLANS APPROVAL DATE

REGISTERED PROFESSIONAL ENGINEER DAVID WILLIAM McCORD No. E-15317 Exp. June 30, 2013 ELECTRICAL STATE OF CALIFORNIA

THE STATE OF CALIFORNIA OR ITS OFFICERS OR AGENTS SHALL NOT BE RESPONSIBLE FOR THE ACCURACY OR COMPLETENESS OF SCANNED COPIES OF THIS PLAN SHEET.

SCRRA
279 E. ARROW HIGHWAY
SAN DIMAS, CA 91773

XORAIL
201 NORTH INDIAN HILL BLVD
SUITE 201
CLAREMONT, CA 91711

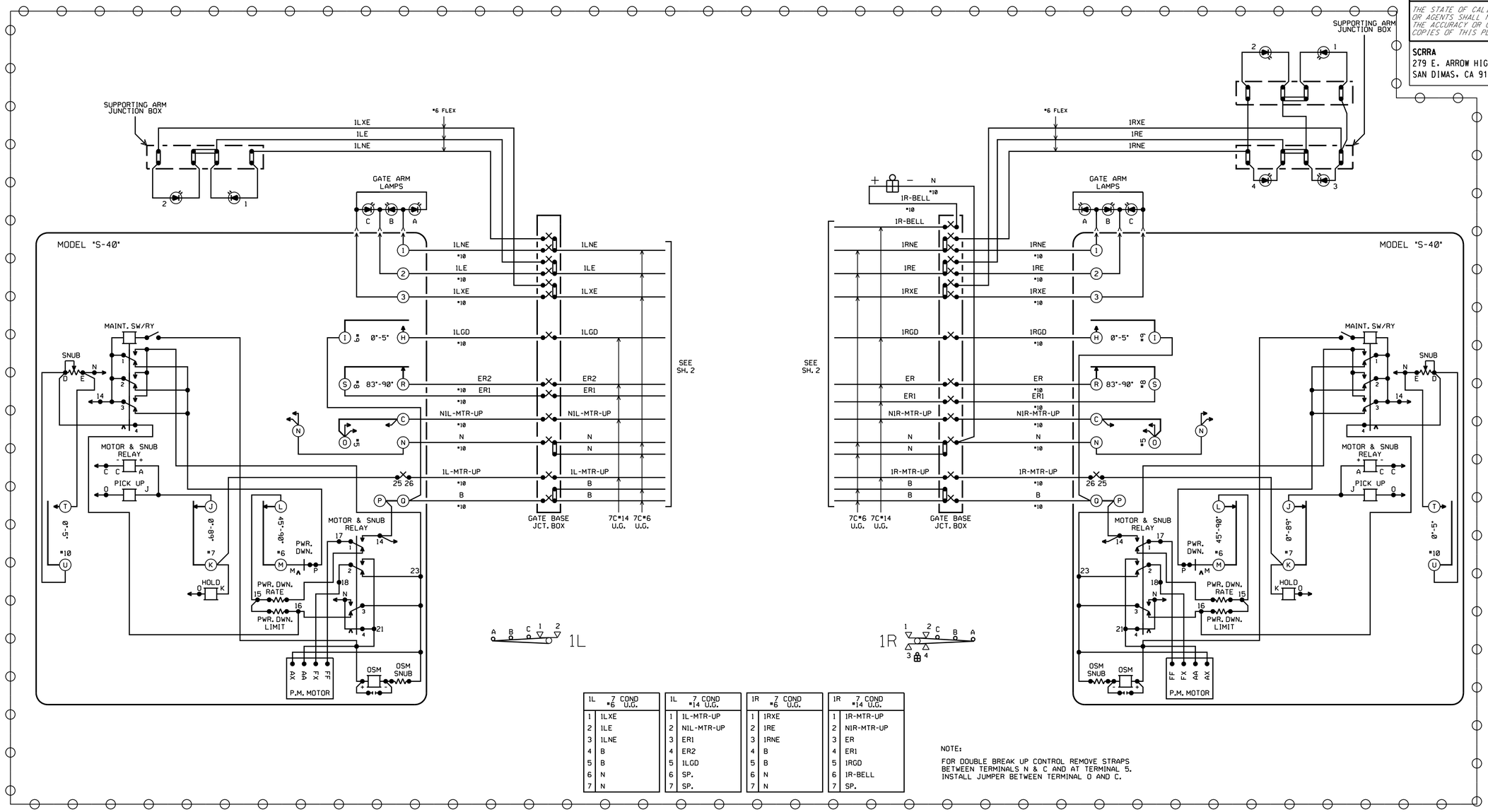

1L 7 COND *6 U.G.	
1	1LXE
2	1LE
3	1LNE
4	B
5	B
6	N
7	N

1L 7 COND *14 U.G.	
1	1L-MTR-UP
2	N1L-MTR-UP
3	ER1
4	ER2
5	1LGD
6	SP.
7	SP.

1R 7 COND *6 U.G.	
1	1RXE
2	1RE
3	1RNE
4	B
5	B
6	N
7	N

1R 7 COND *14 U.G.	
1	1R-MTR-UP
2	N1R-MTR-UP
3	ER
4	ER1
5	1RGD
6	1R-BELL
7	SP.

NOTE:
FOR DOUBLE BREAK UP CONTROL REMOVE STRAPS BETWEEN TERMINALS N & C AND AT TERMINAL 5. INSTALL JUMPER BETWEEN TERMINAL O AND C.

RR-SP-067
SIGNAL STAGE 2

GATES 1L & 1R CIRCUITS
BUENA VISTA ST.
VY 12.77
SH. 4 OF 17

THIS PLAN ACCURATE FOR RAILROAD WORK ONLY.

XING HOUSE

RAILROAD SHEET NO.
67 OF 171

STATE OF CALIFORNIA - DEPARTMENT OF TRANSPORTATION
Caltrans® DESIGN
CONSULTANT FUNCTIONAL SUPERVISOR GLENN BREINDEL
CALCULATED-DESIGNED BY RAMON VALDEZ
CHECKED BY
REVISED BY
DATE REVISED

LAST REVISION 00-00-00
DATE PLOTTED 7/18/2012
TIME PLOTTED 2:48:08 PM

Dist	COUNTY	ROUTE	POST MILES TOTAL PROJECT	SHEET No.	TOTAL SHEETS
7	LA	5	29.4/31.6	1828	1931

David McCord 05-21-12
REGISTERED CIVIL ENGINEER DATE

05-21-12
PLANS APPROVAL DATE

REGISTERED PROFESSIONAL ENGINEER DAVID WILLIAM McCORD No. E-15317 Exp. June 30, 2013 ELECTRICAL STATE OF CALIFORNIA

THE STATE OF CALIFORNIA OR ITS OFFICERS OR AGENTS SHALL NOT BE RESPONSIBLE FOR THE ACCURACY OR COMPLETENESS OF SCANNED COPIES OF THIS PLAN SHEET.

SCRRA
279 E. ARROW HIGHWAY
SAN DIMAS, CA 91773

XORAIL
201 NORTH INDIAN HILL BLVD
SUITE 201
CLAREMONT, CA 91711

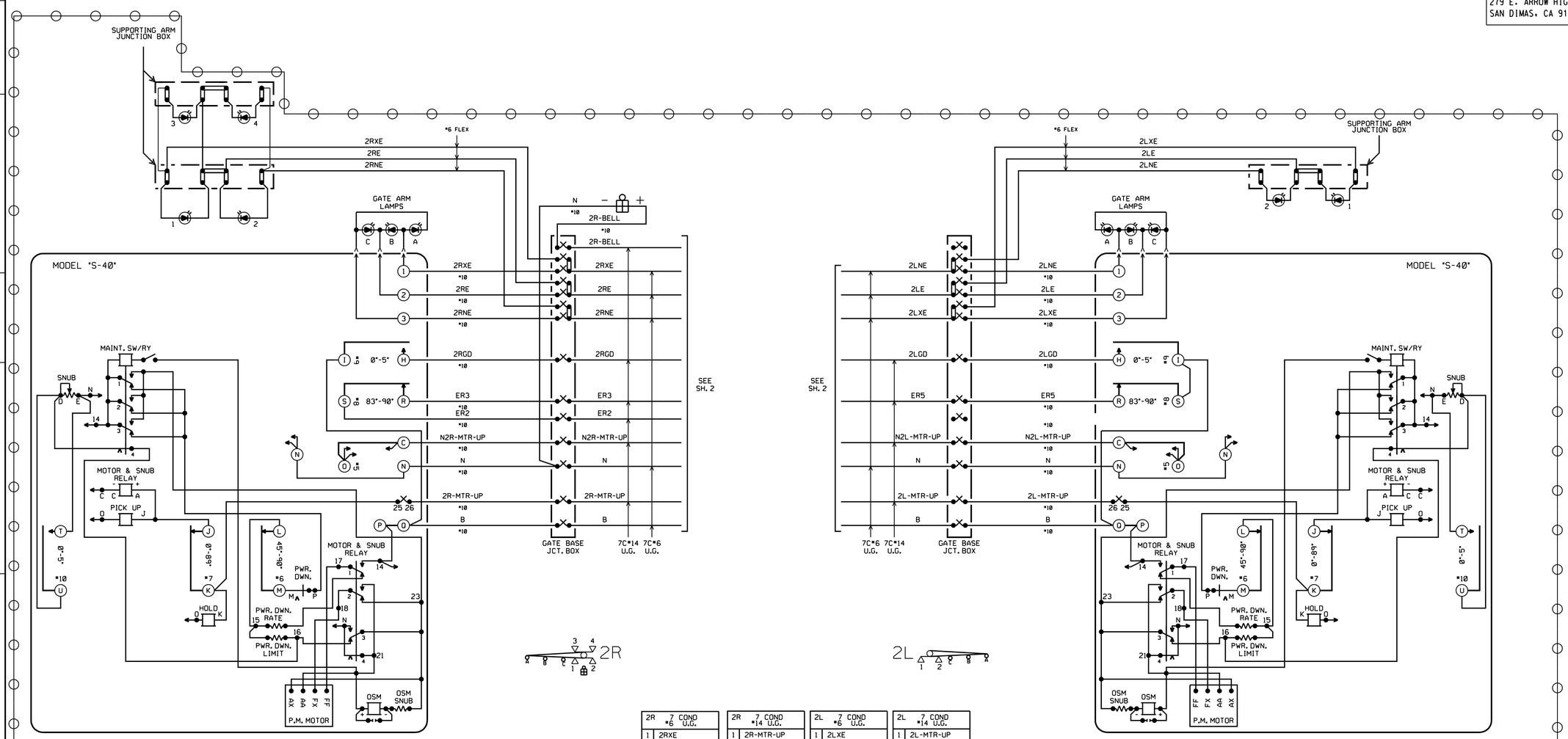

2R 7 COND *6 U.G.	
1	2RXE
2	2RE
3	2RNE
4	B
5	SP
6	N
7	SP

2R 7 COND *14 U.G.	
1	2R-MTR-UP
2	N2R-MTR-UP
3	ER2
4	ER3
5	2RGD
6	2R-BELL
7	SP.

2L 7 COND *6 U.G.	
1	2LXE
2	2LE
3	2LNE
4	B
5	SP
6	N
7	SP

2L 7 COND *14 U.G.	
1	2L-MTR-UP
2	N2L-MTR-UP
3	ER5
4	2LGD
5	SP
6	SP
7	SP

NOTE:
FOR DOUBLE BREAK UP CONTROL REMOVE STRAPS BETWEEN TERMINALS N & C AND AT TERMINAL 5. INSTALL JUMPER BETWEEN TERMINAL O AND C.

RR-SP-068
SIGNAL STAGE 2

GATES 2L & 2R CIRCUITS
BUENA VISTA ST.
VY 12.77
SH. 5 OF 17

THIS PLAN ACCURATE FOR RAILROAD WORK ONLY.

XING HOUSE

RAILROAD SHEET NO.
68 OF 171

STATE OF CALIFORNIA - DEPARTMENT OF TRANSPORTATION
DESIGN

CONSULTANT FUNCTIONAL SUPERVISOR: GLENN BREINDEL
CALCULATED-DESIGNED BY: RAMON VALDEZ
CHECKED BY
REVISED BY
DATE REVISED

LAST REVISION 00-00-00
DATE PLOTTED 7/18/2012
TIME PLOTTED 2:48:09 PM

BORDER LAST REVISED 7/2/2010
USERNAME gharibiana
DGN FILE ...\moc\xorail\sheet\SP-068-.sht
RELATIVE BORDER SCALE IS IN INCHES 0 1 2 3
UNIT 1812
PROJECT NUMBER & PHASE 07000211191

Dist	COUNTY	ROUTE	POST MILES TOTAL PROJECT	SHEET No.	TOTAL SHEETS
7	LA	5	29.4/31.6	1829	1931

David McCord 05-21-12
REGISTERED CIVIL ENGINEER DATE

05-21-12
PLANS APPROVAL DATE

REGISTERED PROFESSIONAL ENGINEER DAVID WILLIAM McCORD No. E-15317 Exp. June 30, 2013 ELECTRICAL STATE OF CALIFORNIA

THE STATE OF CALIFORNIA OR ITS OFFICERS OR AGENTS SHALL NOT BE RESPONSIBLE FOR THE ACCURACY OR COMPLETENESS OF SCANNED COPIES OF THIS PLAN SHEET.

SCRRA
279 E. ARROW HIGHWAY
SAN DIMAS, CA 91773

XORAIL
201 NORTH INDIAN HILL BLVD
SUITE 201
CLAREMONT, CA 91711

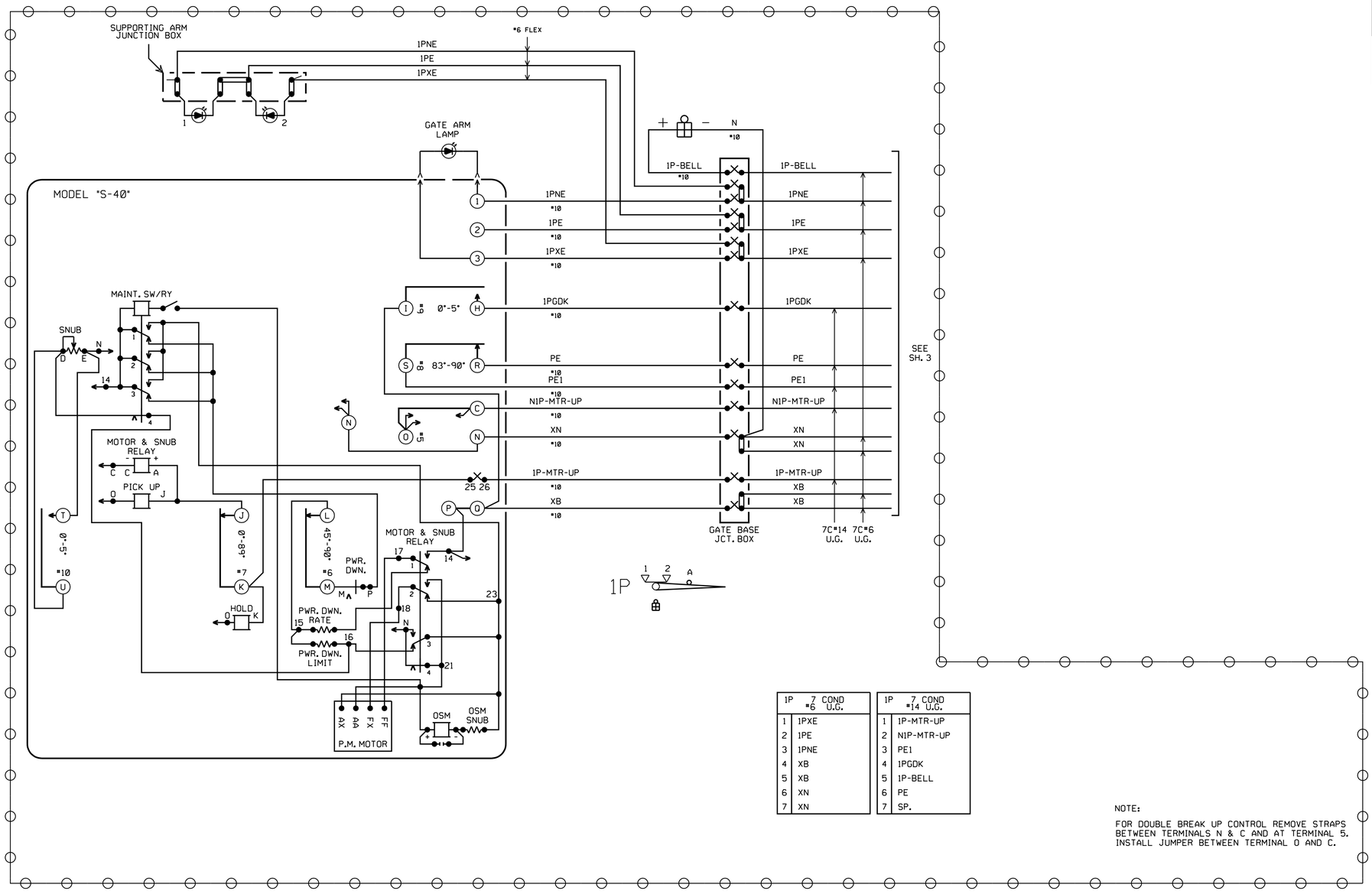

1P	7 COND *6 U.G.
1	1PXE
2	1PE
3	1PNE
4	XB
5	XB
6	XN
7	XN

1P	7 COND *14 U.G.
1	1P-MTR-UP
2	N1P-MTR-UP
3	PE1
4	1PGDK
5	1P-BELL
6	PE
7	SP.

= OUT
= IN

NOTE:
FOR DOUBLE BREAK UP CONTROL REMOVE STRAPS BETWEEN TERMINALS N & C AND AT TERMINAL 5. INSTALL JUMPER BETWEEN TERMINAL O AND C.

RR-SP-069
SIGNAL STAGE 2

GATE 1P CIRCUITS
BUENA VISTA ST.
VY 12.77
SH. 6 OF 17

THIS PLAN ACCURATE FOR RAILROAD WORK ONLY.

XING HOUSE

RAILROAD SHEET NO.
69 OF 171

STATE OF CALIFORNIA - DEPARTMENT OF TRANSPORTATION
Caltrans DESIGN
CONSULTANT FUNCTIONAL SUPERVISOR GLENN BREINDEL
CALCULATED-DESIGNED BY RAMON VALDEZ
CHECKED BY
REVISED BY
DATE REVISED

LAST REVISION 00-00-00
DATE PLOTTED 7/18/2012
TIME PLOTTED 2:48:10 PM

BORDER LAST REVISED 7/2/2010
USERNAME gharibiana
DGN FILE ...\moc\xorail\sheet\SP-069-.sht
RELATIVE BORDER SCALE IS IN INCHES 0 1 2 3
UNIT 1812
PROJECT NUMBER & PHASE 07000211191

Dist	COUNTY	ROUTE	POST MILES TOTAL PROJECT	SHEET No.	TOTAL SHEETS
7	LA	5	29.4/31.6	1830	1931

David McCord 05-21-12
REGISTERED CIVIL ENGINEER DATE

05-21-12
PLANS APPROVAL DATE

REGISTERED PROFESSIONAL ENGINEER DAVID WILLIAM McCORD No. E-15317 Exp. June 30, 2013 ELECTRICAL STATE OF CALIFORNIA

THE STATE OF CALIFORNIA OR ITS OFFICERS OR AGENTS SHALL NOT BE RESPONSIBLE FOR THE ACCURACY OR COMPLETENESS OF SCANNED COPIES OF THIS PLAN SHEET.

SCRRA
279 E. ARROW HIGHWAY
SAN DIMAS, CA 91773

XORAIL
201 NORTH INDIAN HILL BLVD
SUITE 201
CLAREMONT, CA 91711

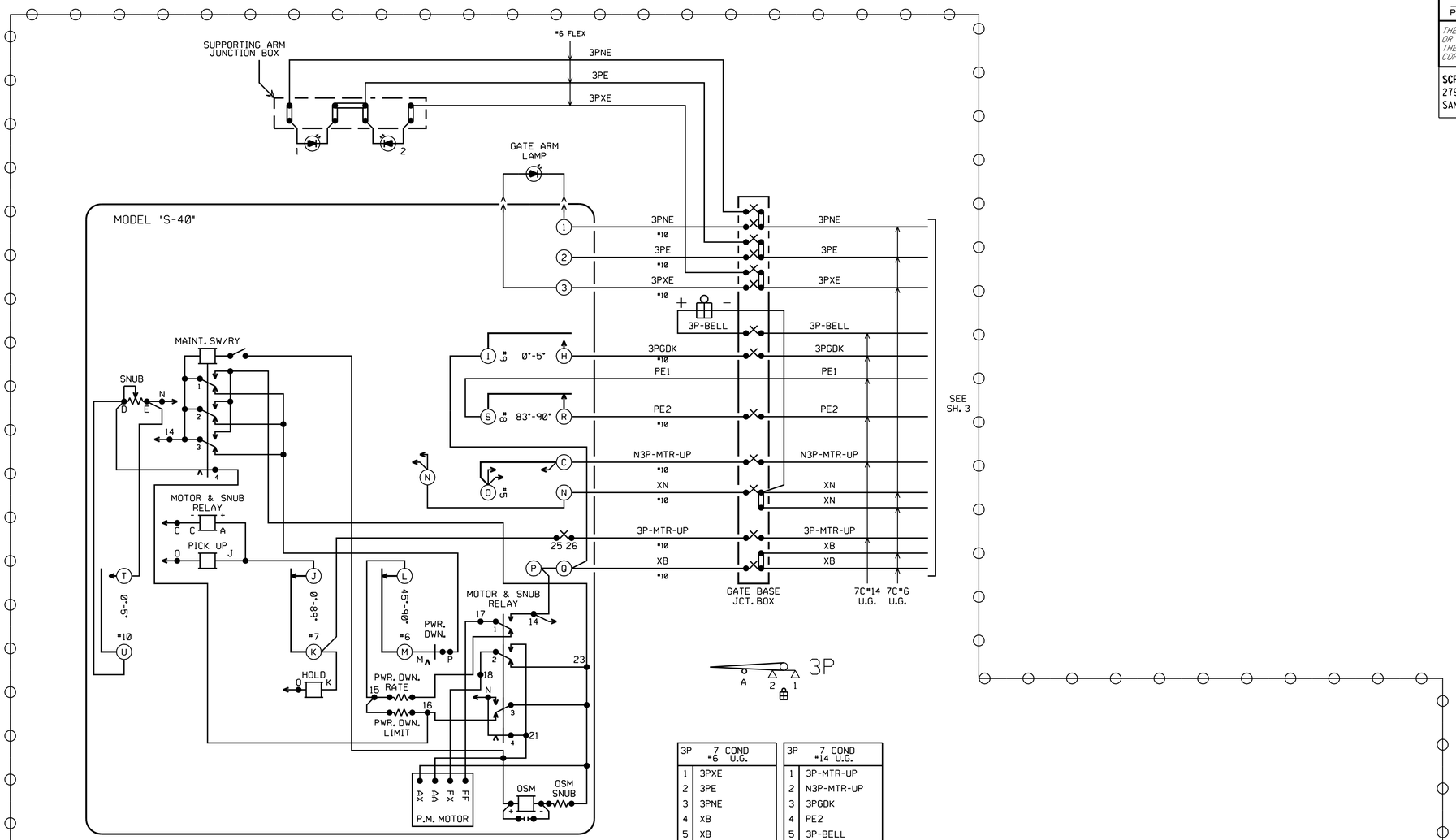

3P	7 COND *6 U.G.
1	3PXE
2	3PE
3	3PNE
4	XB
5	XB
6	XN
7	XN

3P	7 COND *14 U.G.
1	3P-MTR-UP
2	N3P-MTR-UP
3	3PGDK
4	PE2
5	3P-BELL
6	PE1
7	SP.

NOTE:

FOR DOUBLE BREAK UP CONTROL REMOVE STRAPS BETWEEN TERMINALS N & C AND AT TERMINAL 5. INSTALL JUMPER BETWEEN TERMINAL O AND C.

RR-SP-070
SIGNAL STAGE 2

GATE 3P CIRCUITS
BUENA VISTA ST.
VY 12.77
SH. 7 OF 17

THIS PLAN ACCURATE FOR RAILROAD WORK ONLY.

XING HOUSE

RAILROAD SHEET NO.
70 OF 171

STATE OF CALIFORNIA - DEPARTMENT OF TRANSPORTATION
Caltrans® DESIGN
CONSULTANT FUNCTIONAL SUPERVISOR GLENN BREINDEL
CALCULATED-DESIGNED BY RAMON VALDEZ
CHECKED BY
REVISED BY
DATE REVISED

LAST REVISION 00-00-00
DATE PLOTTED 7/18/2012
TIME PLOTTED 2:48:11 PM

BORDER LAST REVISED 7/2/2010
USERNAME gharibiana
DGN FILE ...\moc\xorail\sheet\SP-070-.sht
RELATIVE BORDER SCALE IS IN INCHES 0 1 2 3
UNIT 1812
PROJECT NUMBER & PHASE 07000211191

Dist	COUNTY	ROUTE	POST MILES TOTAL PROJECT	SHEET No.	TOTAL SHEETS
7	LA	5	29.4/31.6	1831	1931

David McCord 05-21-12
REGISTERED CIVIL ENGINEER DATE

05-21-12
PLANS APPROVAL DATE

REGISTERED PROFESSIONAL ENGINEER DAVID WILLIAM McCORD No. E-15317 Exp. June 30, 2013 ELECTRICAL STATE OF CALIFORNIA

THE STATE OF CALIFORNIA OR ITS OFFICERS OR AGENTS SHALL NOT BE RESPONSIBLE FOR THE ACCURACY OR COMPLETENESS OF SCANNED COPIES OF THIS PLAN SHEET.

SCRRA
279 E. ARROW HIGHWAY
SAN DIMAS, CA 91773

XORAIL
201 NORTH INDIAN HILL BLVD
SUITE 201
CLAREMONT, CA 91711

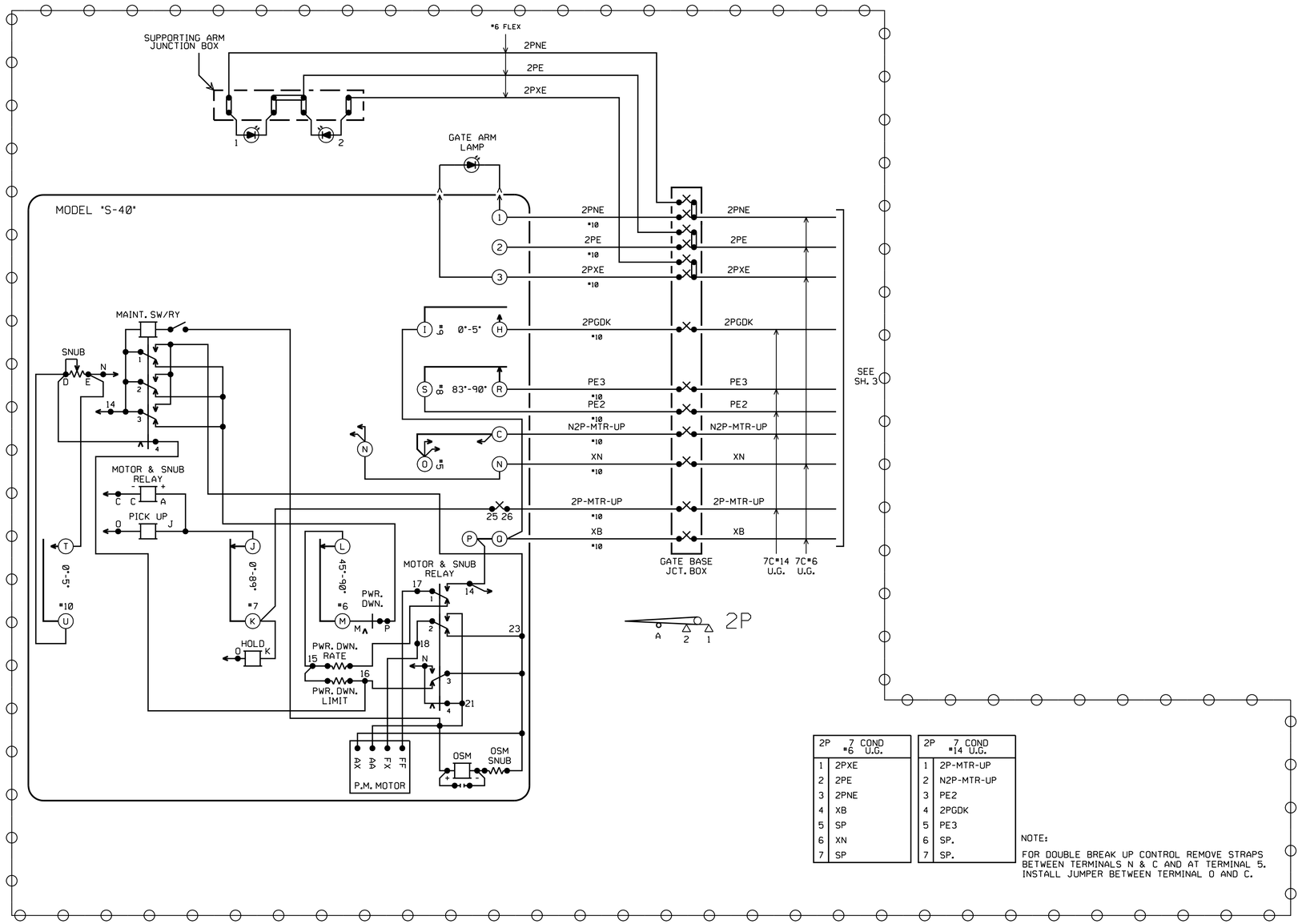

2P 7 COND #6 U.G.	
1	2PXE
2	2PE
3	2PNE
4	XB
5	SP
6	XN
7	SP

2P 7 COND #14 U.G.	
1	2P-MTR-UP
2	N2P-MTR-UP
3	PE2
4	2PGDK
5	PE3
6	SP.
7	SP.

NOTE:
FOR DOUBLE BREAK UP CONTROL REMOVE STRAPS BETWEEN TERMINALS N & C AND AT TERMINAL 5. INSTALL JUMPER BETWEEN TERMINAL O AND C.

RR-SP-071
SIGNAL STAGE 2

GATE 2P CIRCUITS
BUENA VISTA ST.
VY 12.77
SH. 8 OF 17

THIS PLAN ACCURATE FOR RAILROAD WORK ONLY.

XING HOUSE

RAILROAD SHEET NO.
71 OF 171

STATE OF CALIFORNIA - DEPARTMENT OF TRANSPORTATION
Caltrans® DESIGN

CONSULTANT FUNCTIONAL SUPERVISOR: GLENN BREINDEL
CALCULATED-DESIGNED BY: RAMON VALDEZ
CHECKED BY
REVISED BY
DATE REVISED

LAST REVISION 00-00-00
DATE PLOTTED = 7/18/2012
TIME PLOTTED = 2:48:12 PM

BORDER LAST REVISED 7/2/2010
USERNAME = gharibiana
DGN FILE = ...\moc\xorail\sheet\SP-071-.sht
RELATIVE BORDER SCALE IS IN INCHES 0 1 2 3
UNIT 1812
PROJECT NUMBER & PHASE 07000211191

Dist	COUNTY	ROUTE	POST MILES TOTAL PROJECT	SHEET No.	TOTAL SHEETS
7	LA	5	29.4/31.6	1832	1931

David McCord 05-21-12
REGISTERED CIVIL ENGINEER DATE

05-21-12
PLANS APPROVAL DATE

REGISTERED PROFESSIONAL ENGINEER DAVID WILLIAM MCCORD No. E-15317 Exp. June 30, 2013 ELECTRICAL STATE OF CALIFORNIA

THE STATE OF CALIFORNIA OR ITS OFFICERS OR AGENTS SHALL NOT BE RESPONSIBLE FOR THE ACCURACY OR COMPLETENESS OF SCANNED COPIES OF THIS PLAN SHEET.

SCRRA
279 E. ARROW HIGHWAY
SAN DIMAS, CA 91773

XORAIL
201 NORTH INDIAN HILL BLVD
SUITE 201
CLAREMONT, CA 91711

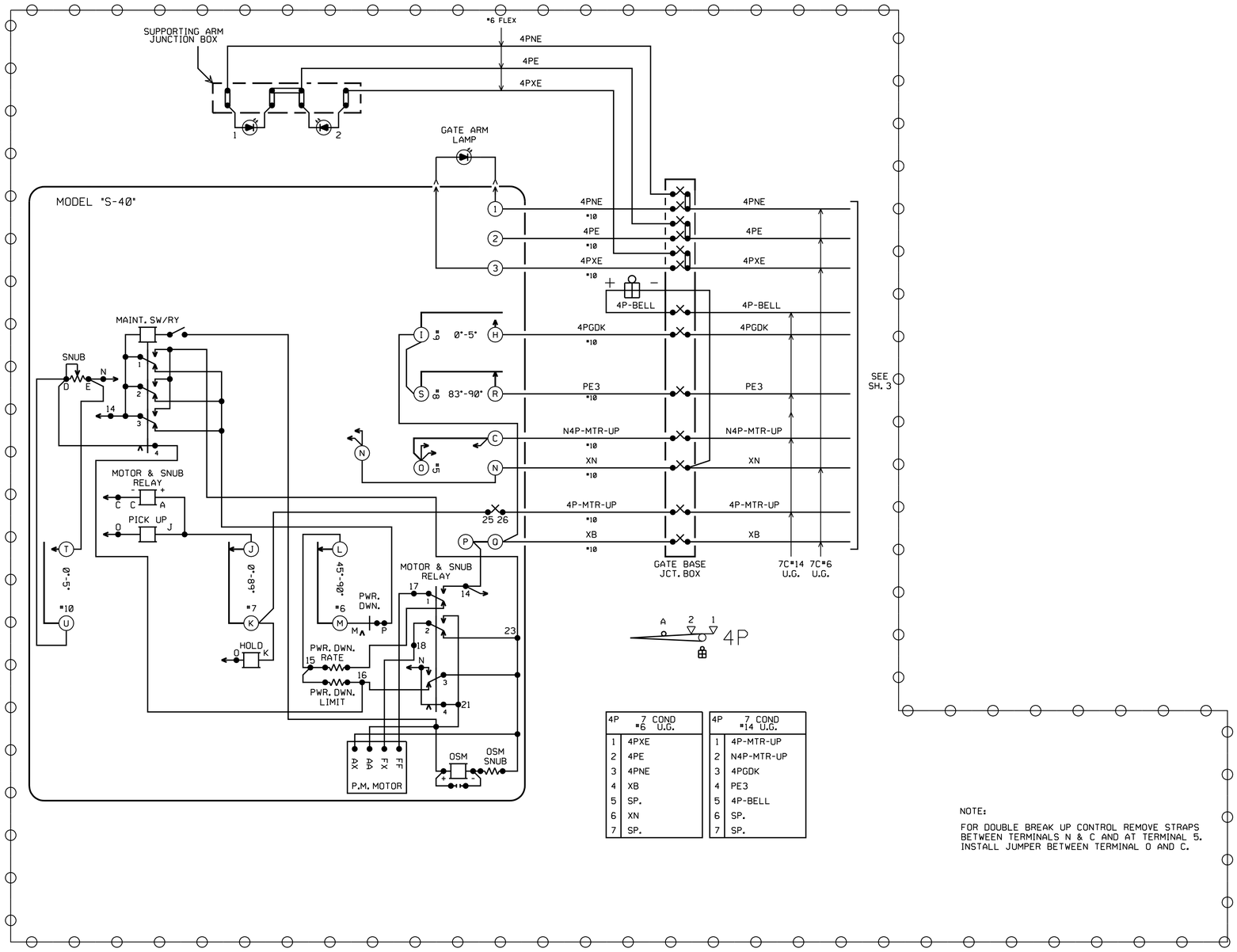

4P	7 COND *6 U.G.
1	4PXE
2	4PE
3	4PNE
4	XB
5	SP.
6	XN
7	SP.

4P	7 COND *14 U.G.
1	4P-MTR-UP
2	N4P-MTR-UP
3	4PGDK
4	PE3
5	4P-BELL
6	SP.
7	SP.

NOTE:

FOR DOUBLE BREAK UP CONTROL REMOVE STRAPS BETWEEN TERMINALS N & C AND AT TERMINAL 5. INSTALL JUMPER BETWEEN TERMINAL O AND C.

= OUT

= IN

RR-SP-072

SIGNAL STAGE 2

GATE 4P CIRCUITS
BUENA VISTA ST.
VY 12.77
SH. 9 OF 17

THIS PLAN ACCURATE FOR RAILROAD WORK ONLY.

XING HOUSE

RAILROAD SHEET NO.
72 OF 171

STATE OF CALIFORNIA - DEPARTMENT OF TRANSPORTATION
Caltrans DESIGN

CONSULTANT FUNCTIONAL SUPERVISOR: GLENN BREINDEL

CALCULATED-DESIGNED BY: RAMON VALDEZ

CHECKED BY

REVISED BY

DATE REVISED

LAST REVISION 00-00-00

DATE PLOTTED 7/18/2012
TIME PLOTTED 2:48:13 PM

BORDER LAST REVISED 7/2/2010

USERNAME = gharibiana
DGN FILE = ...\moc\xorail\sheet\SP-072-.sht

RELATIVE BORDER SCALE IS IN INCHES 0 1 2 3

UNIT 1812

PROJECT NUMBER & PHASE 07000211191

Dist	COUNTY	ROUTE	POST MILES TOTAL PROJECT	SHEET No.	TOTAL SHEETS
7	LA	5	29.4/31.6	1833	1931

David McCord 05-21-12
REGISTERED CIVIL ENGINEER DATE

05-21-12
PLANS APPROVAL DATE

REGISTERED PROFESSIONAL ENGINEER DAVID WILLIAM MCCORD No. E-15317 Exp. June 30, 2013 ELECTRICAL STATE OF CALIFORNIA

THE STATE OF CALIFORNIA OR ITS OFFICERS OR AGENTS SHALL NOT BE RESPONSIBLE FOR THE ACCURACY OR COMPLETENESS OF SCANNED COPIES OF THIS PLAN SHEET.

SCRRA
279 E. ARROW HIGHWAY
SAN DIMAS, CA 91773

XORAIL
201 NORTH INDIAN HILL BLVD
SUITE 201
CLAREMONT, CA 91711

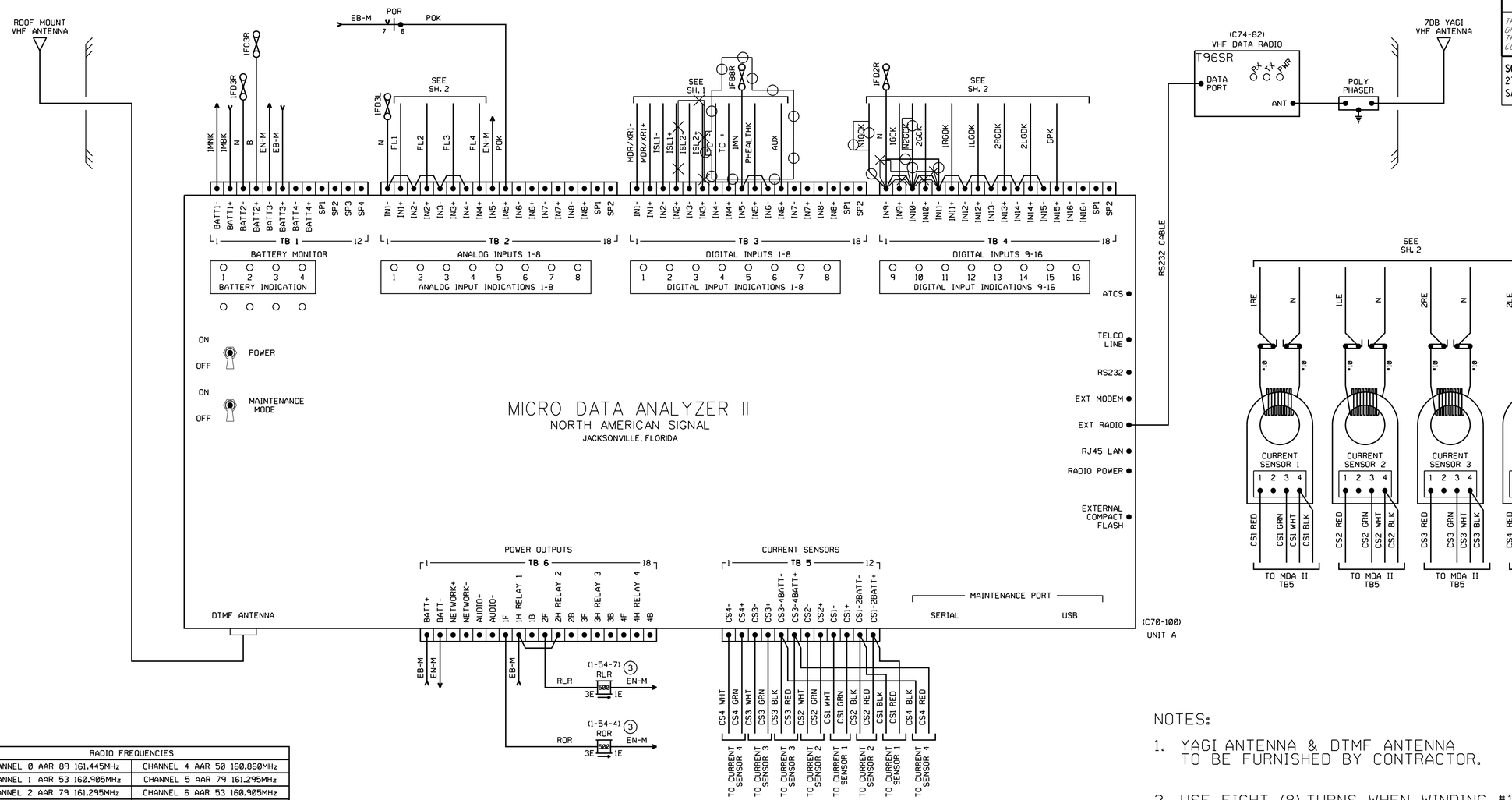

RADIO FREQUENCIES	
CHANNEL 0 AAR 89 161.445MHz	CHANNEL 4 AAR 50 160.860MHz
CHANNEL 1 AAR 53 160.905MHz	CHANNEL 5 AAR 79 161.295MHz
CHANNEL 2 AAR 79 161.295MHz	CHANNEL 6 AAR 53 160.905MHz
CHANNEL 3 AAR 50 160.860MHz	CHANNEL 7 AAR 89 161.445MHz

MDA II SOFTWARE CONFIGURATION MANAGEMENT TABLE

APPLICATION	FILE NAME	DATE	DESCRIPTION
CPU LOADER	MBOOT10	03-05-06	
CPU EXECUTIVE	M2_EXI9.SI9	06-06-06	
CPU I/O	M2_IOI9.SI9	04-18-06	
CPU APPLICATION	747 280V		DOT *

NOTES:

1. YAGI ANTENNA & DTMF ANTENNA TO BE FURNISHED BY CONTRACTOR.
2. USE EIGHT (8) TURNS WHEN WINDING #10 WIRE THROUGH THE CURRENT SENSORS.

= OUT
= IN

RR-SP-073
SIGNAL STAGE 2

DATA RECORDER A CIRCUIT PLAN
BUENA VISTA ST.
VY 12.77
SH. 10 OF 17

RAILROAD SHEET NO.
73 OF 171

THIS PLAN ACCURATE FOR RAILROAD WORK ONLY.

STATE OF CALIFORNIA - DEPARTMENT OF TRANSPORTATION
DESIGN
CONSULTANT FUNCTIONAL SUPERVISOR: GLENN BREINDEL
CALCULATED-DESIGNED BY: RAMON VALDEZ
CHECKED BY
REVISED BY
DATE REVISED

LAST REVISION 00-00-00
DATE PLOTTED = 7/18/2012
TIME PLOTTED = 23:48:14 PM

Dist	COUNTY	ROUTE	POST MILES TOTAL PROJECT	SHEET No.	TOTAL SHEETS
7	LA	5	29.4/31.6	1834	1931

David McCord 05-21-12
REGISTERED CIVIL ENGINEER DATE

05-21-12
PLANS APPROVAL DATE

REGISTERED PROFESSIONAL ENGINEER DAVID WILLIAM MCCORD No. E-15317 Exp. June 30, 2013 ELECTRICAL STATE OF CALIFORNIA

THE STATE OF CALIFORNIA OR ITS OFFICERS OR AGENTS SHALL NOT BE RESPONSIBLE FOR THE ACCURACY OR COMPLETENESS OF SCANNED COPIES OF THIS PLAN SHEET.

SCRRA
279 E. ARROW HIGHWAY
SAN DIMAS, CA 91773

XORAIL
201 NORTH INDIAN HILL BLVD
SUITE 201
CLAREMONT, CA 91711

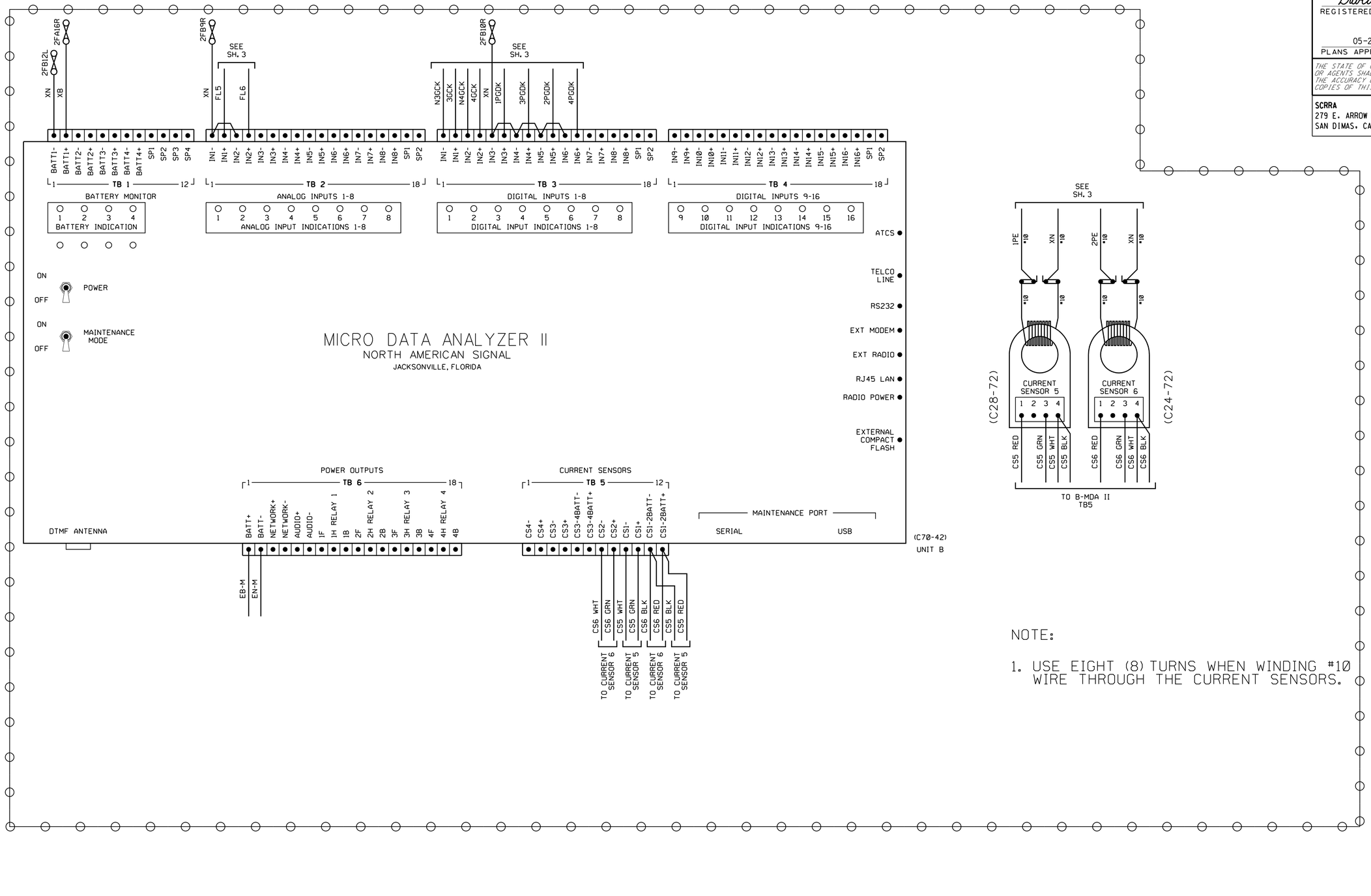

NOTE:

1. USE EIGHT (8) TURNS WHEN WINDING #10 WIRE THROUGH THE CURRENT SENSORS.

= OUT
= IN

RR-SP-074
SIGNAL STAGE 2

DATA RECORDER B CIRCUIT PLAN
BUENA VISTA ST.
VY 12.77
SH. 11 OF 17

THIS PLAN ACCURATE FOR RAILROAD WORK ONLY.

XING HOUSE

RAILROAD SHEET NO.
74 OF 171

STATE OF CALIFORNIA - DEPARTMENT OF TRANSPORTATION
DESIGN
CONSULTANT FUNCTIONAL SUPERVISOR: GLENN BREINDEL
CALCULATED-DESIGNED BY: RAMON VALDEZ
CHECKED BY
REVISED BY
DATE REVISED

LAST REVISION 00-00-00
DATE PLOTTED = 7/18/2012
TIME PLOTTED = 2:48:15 PM

BORDER LAST REVISED 7/2/2010
USERNAME = gharibiana
DGN FILE = ...\moc\xorail\sheet\SP-074-.sht
RELATIVE BORDER SCALE IS IN INCHES 0 1 2 3
UNIT 1812
PROJECT NUMBER & PHASE 07000211191

Dist	COUNTY	ROUTE	POST MILES TOTAL PROJECT	SHEET No.	TOTAL SHEETS
7	LA	5	29.4/31.6	1835	1931

David McCord 05-21-12
REGISTERED CIVIL ENGINEER DATE

05-21-12
PLANS APPROVAL DATE

REGISTERED PROFESSIONAL ENGINEER DAVID WILLIAM McCORD No. E-15317 Exp. June 30, 2013 ELECTRICAL STATE OF CALIFORNIA

THE STATE OF CALIFORNIA OR ITS OFFICERS OR AGENTS SHALL NOT BE RESPONSIBLE FOR THE ACCURACY OR COMPLETENESS OF SCANNED COPIES OF THIS PLAN SHEET.

SCRRA
279 E. ARROW HIGHWAY
SAN DIMAS, CA 91773

XORAIL
201 NORTH INDIAN HILL BLVD
SUITE 201
CLAREMONT, CA 91711

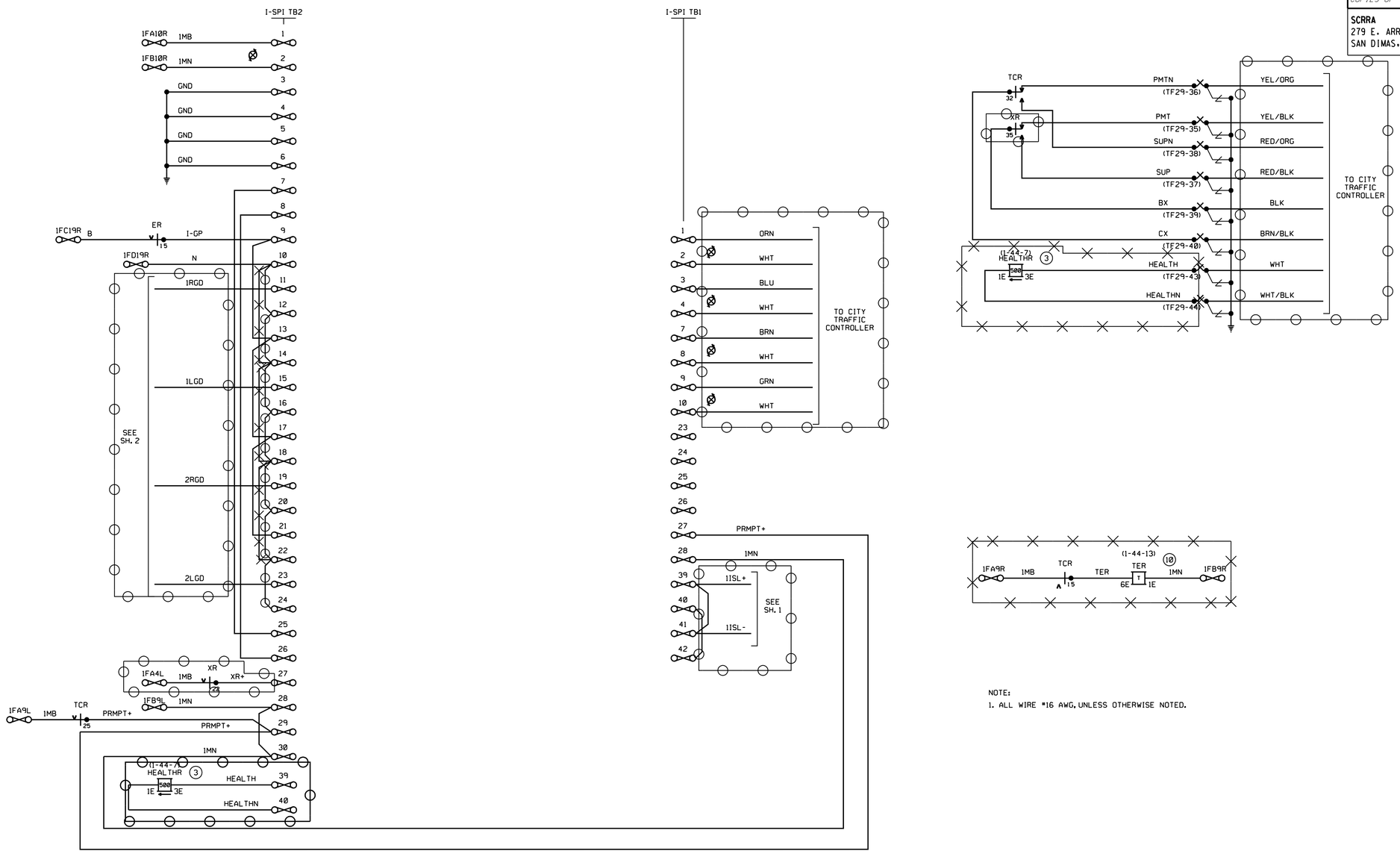

NOTE:
1. ALL WIRE #16 AWG, UNLESS OTHERWISE NOTED.

DATE IN SERVICE _____
S. ENGINEER _____
INSPECTOR _____

= OUT
= IN

RR-SP-075
SIGNAL STAGE 2

I - SPI CIRCUIT PLAN
BUENA VISTA ST.
VY 12.77
SH. 12 OF 17

THIS PLAN ACCURATE FOR RAILROAD WORK ONLY.

XING HOUSE

RAILROAD SHEET NO.
75 OF 171

STATE OF CALIFORNIA - DEPARTMENT OF TRANSPORTATION
Caltrans DESIGN
CONSULTANT FUNCTIONAL SUPERVISOR GLENN BREINDEL
CALCULATED-DESIGNED BY RAMON VALDEZ
CHECKED BY
REVISED BY
DATE REVISED

LAST REVISION 00-00-00
DATE PLOTTED = 7/18/2012
TIME PLOTTED = 2:48:16 PM

BORDER LAST REVISED 7/2/2010
USERNAME = gharibiana
DGN FILE = ...\moc\xorail\sheet\SP-075-.sht
RELATIVE BORDER SCALE IS IN INCHES 0 1 2 3
UNIT 1812
PROJECT NUMBER & PHASE 07000211191

Dist	COUNTY	ROUTE	POST MILES TOTAL PROJECT	SHEET No.	TOTAL SHEETS
7	LA	5	29.4/31.6	1936	1931

David McCord 05-21-12
REGISTERED CIVIL ENGINEER DATE

05-21-12
PLANS APPROVAL DATE

REGISTERED PROFESSIONAL ENGINEER DAVID WILLIAM McCORD No. E-15317 Exp. June 30, 2013 ELECTRICAL STATE OF CALIFORNIA

THE STATE OF CALIFORNIA OR ITS OFFICERS OR AGENTS SHALL NOT BE RESPONSIBLE FOR THE ACCURACY OR COMPLETENESS OF SCANNED COPIES OF THIS PLAN SHEET.

SCRRA
279 E. ARROW HIGHWAY
SAN DIMAS, CA 91773

XORAIL
201 NORTH INDIAN HILL BLVD
SUITE 201
CLAREMONT, CA 91711

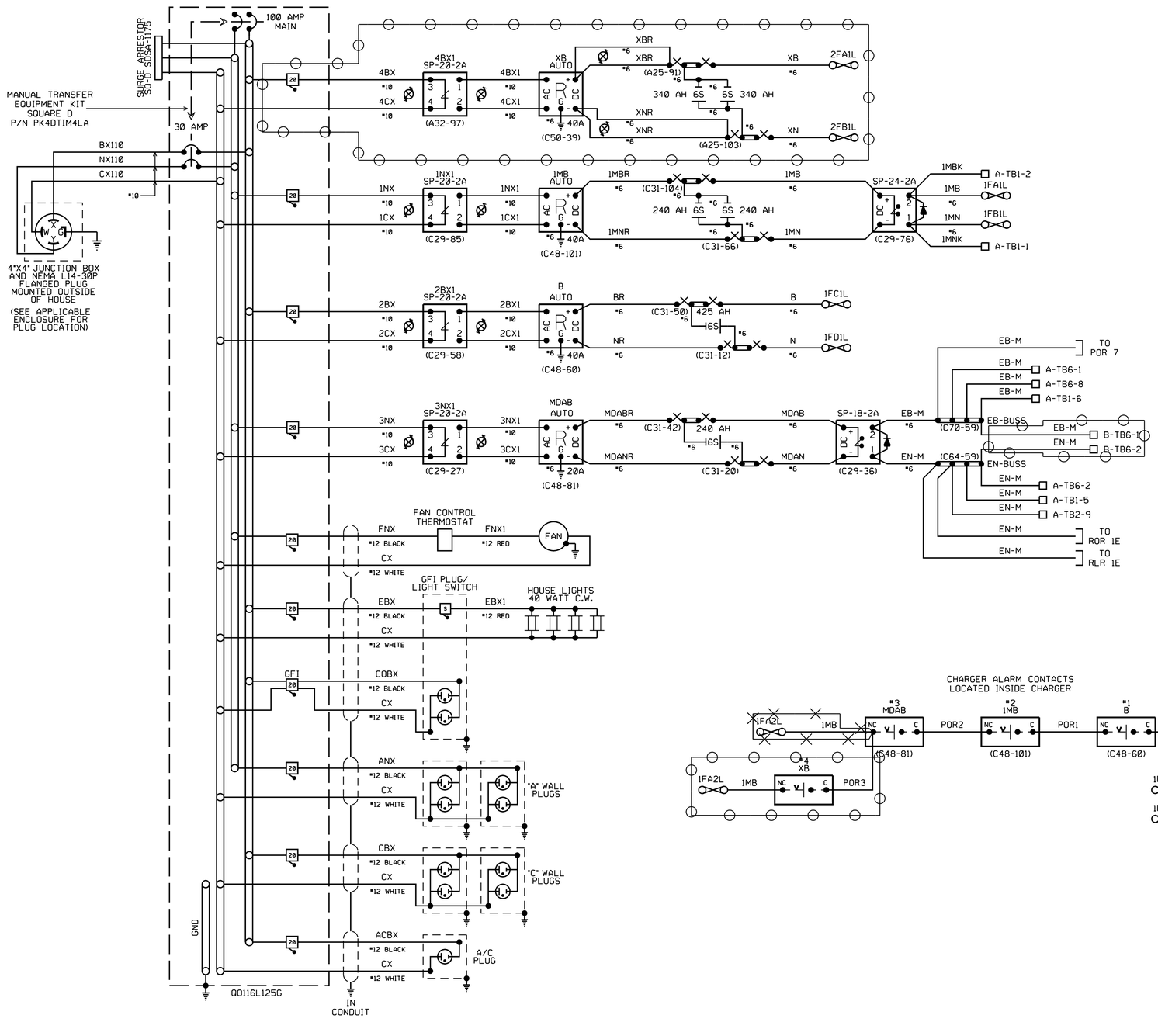

□-DENOTES RECORDER CONNECTION.

RR-SP-076

SIGNAL STAGE 2

POWER & BATTERY CIRCUITS
BUENA VISTA ST.
VY 12.77
SH. 13 OF 17

XING HOUSE

RAILROAD SHEET NO.
76 OF 171

THIS PLAN ACCURATE FOR RAILROAD WORK ONLY.

STATE OF CALIFORNIA - DEPARTMENT OF TRANSPORTATION
Caltrans DESIGN
CONSULTANT FUNCTIONAL SUPERVISOR GLENN BREINDEL
CALCULATED-DESIGNED BY RAMON VALDEZ
CHECKED BY
REVISED BY
DATE REVISED

LAST REVISION 00-00-00
DATE PLOTTED 07/18/2012
TIME PLOTTED 12:48:17 PM

BORDER LAST REVISED 7/2/2010
USERNAME gharibiana
DGN FILE ...\moc\xorail\sheet\SP-076-.sht
RELATIVE BORDER SCALE IS IN INCHES 0 1 2 3
UNIT 1812
PROJECT NUMBER & PHASE 07000211191

Dist	COUNTY	ROUTE	POST MILES TOTAL PROJECT	SHEET No.	TOTAL SHEETS
7	LA	5	29.4/31.6	1837	1931

David McCord 05-21-12
REGISTERED CIVIL ENGINEER DATE

05-21-12
PLANS APPROVAL DATE

REGISTERED PROFESSIONAL ENGINEER DAVID WILLIAM McCORD No. E-15317 Exp. June 30, 2013 ELECTRICAL STATE OF CALIFORNIA

THE STATE OF CALIFORNIA OR ITS OFFICERS OR AGENTS SHALL NOT BE RESPONSIBLE FOR THE ACCURACY OR COMPLETENESS OF SCANNED COPIES OF THIS PLAN SHEET.

SCRRA
279 E. ARROW HIGHWAY
SAN DIMAS, CA 91773

XORAIL
201 NORTH INDIAN HILL BLVD
SUITE 201
CLAREMONT, CA 91711

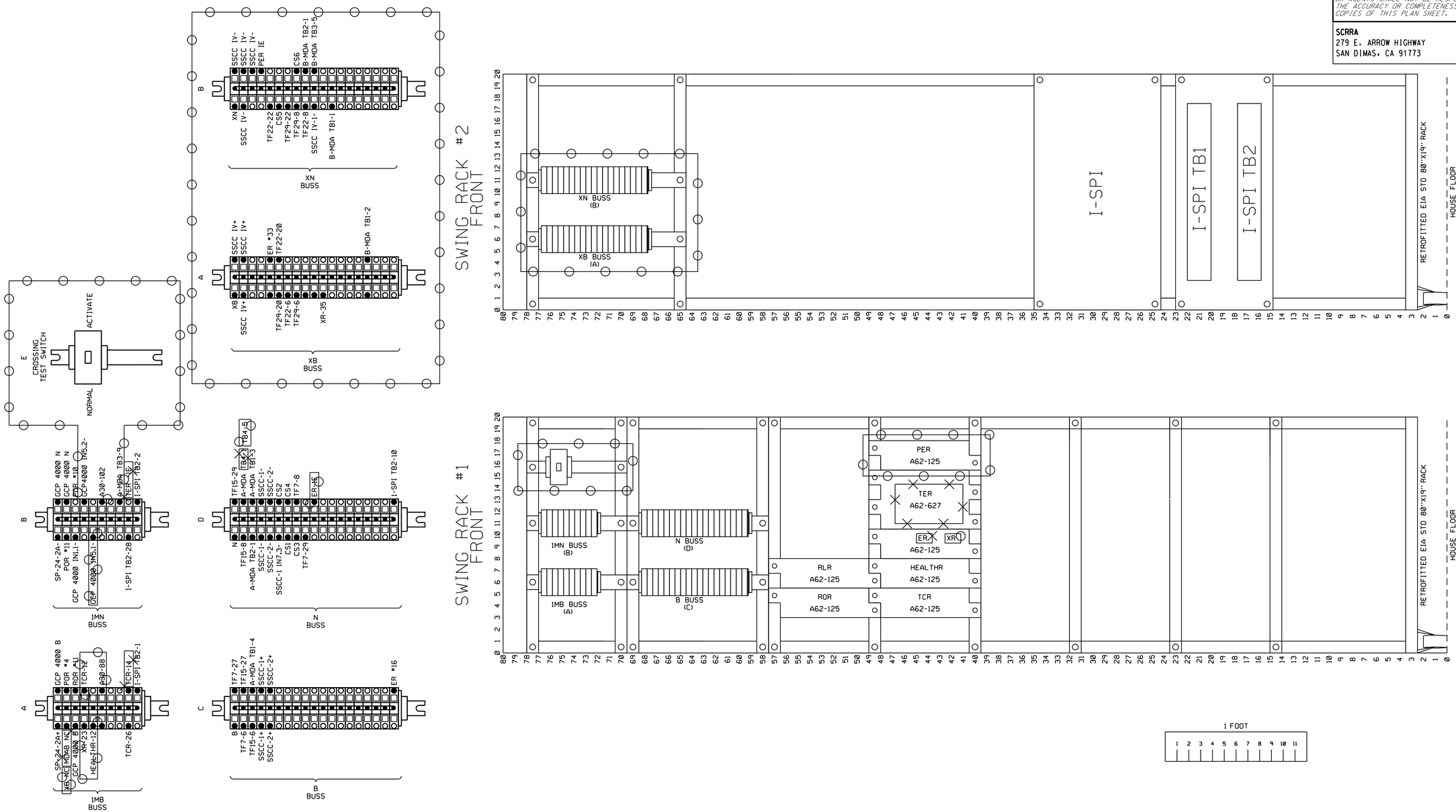

THIS PLAN ACCURATE FOR RAILROAD WORK ONLY.

XING HOUSE

RR-SP-077
SIGNAL STAGE 2

RAILROAD SHEET NO.
77 OF 171

RACKS #1 & #2 LAYOUT
BUENA VISTA ST.
VY 12.77
SH. 14 OF 17

STATE OF CALIFORNIA - DEPARTMENT OF TRANSPORTATION
Caltrans® DESIGN
CONSULTANT FUNCTIONAL SUPERVISOR GLENN BREINDEL
CALCULATED-DESIGNED BY RAMON VALDEZ
CHECKED BY
REVISED BY
DATE REVISED

LAST REVISION 00-00-00
DATE PLOTTED = 7/18/2012
TIME PLOTTED = 21:48:18 PM

BORDER LAST REVISED 7/2/2010
USERNAME = gharibiana
DGN FILE = ...\moc\xorail\sheet\SP-077-.sht
RELATIVE BORDER SCALE IS IN INCHES 0 1 2 3
UNIT 1812
PROJECT NUMBER & PHASE 07000211191

Dist	COUNTY	ROUTE	POST MILES TOTAL PROJECT	SHEET No.	TOTAL SHEETS
7	LA	5	29.4/31.6	1838	1931

David McCord 05-21-12
REGISTERED CIVIL ENGINEER DATE

05-21-12
PLANS APPROVAL DATE

REGISTERED PROFESSIONAL ENGINEER DAVID WILLIAM MCCORD No. E-15317 Exp. June 30, 2013 ELECTRICAL STATE OF CALIFORNIA

THE STATE OF CALIFORNIA OR ITS OFFICERS OR AGENTS SHALL NOT BE RESPONSIBLE FOR THE ACCURACY OR COMPLETENESS OF SCANNED COPIES OF THIS PLAN SHEET.

SCRRA
279 E. ARROW HIGHWAY
SAN DIMAS, CA 91773

XORAIL
201 NORTH INDIAN HILL BLVD
SUITE 201
CLAREMONT, CA 91711

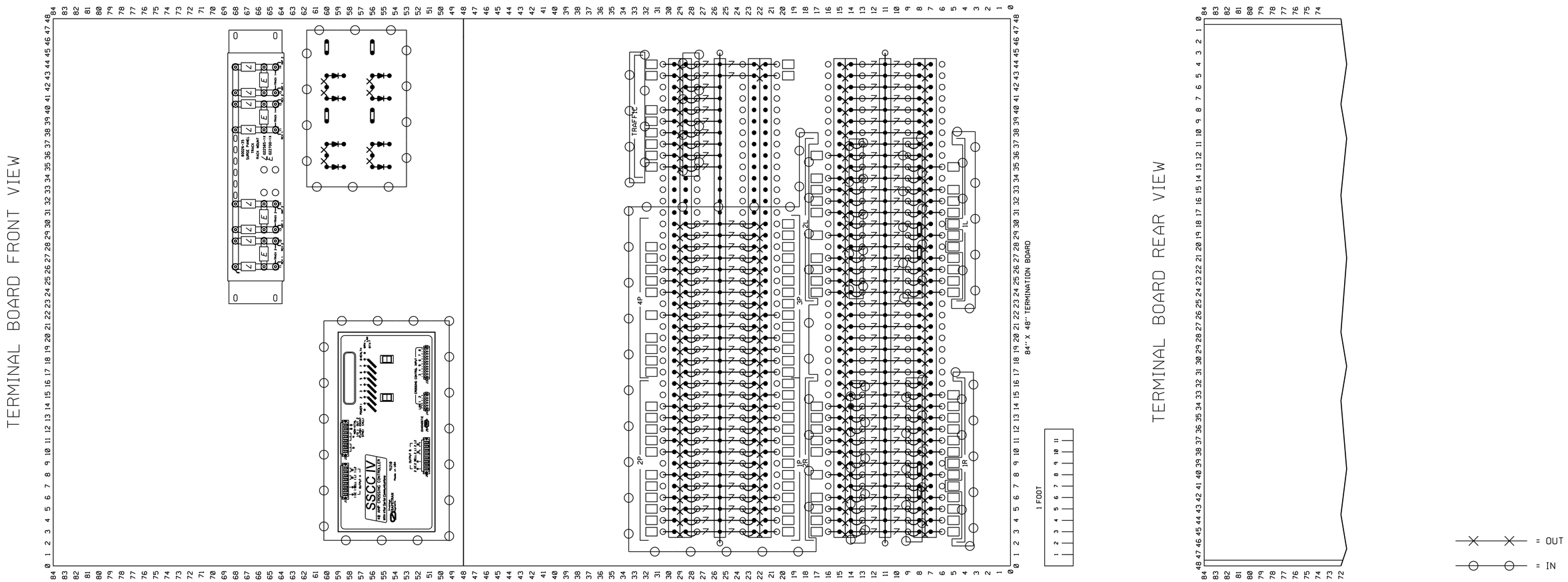

THIS PLAN ACCURATE FOR RAILROAD WORK ONLY.

XING HOUSE

RAILROAD SHEET NO. 78 OF 171

RR-SP-078
SIGNAL STAGE 2

TERMINAL BOARD LAYOUT
BUENA VISTA ST.
VY 12.77
SH. 15 OF 17

STATE OF CALIFORNIA - DEPARTMENT OF TRANSPORTATION
Caltrans® DESIGN
CONSULTANT FUNCTIONAL SUPERVISOR: GLENN BREINDEL
CALCULATED-DESIGNED BY: RAMON VALDEZ
CHECKED BY
REVISED BY
DATE REVISED

LAST REVISION 00-00-00
DATE PLOTTED = 7/18/2012
TIME PLOTTED = 2:48:19 PM

BORDER LAST REVISED 7/2/2010
USERNAME = gharibiana
DGN FILE = ...\moc\xorail\sheet\SP-078-.sht
RELATIVE BORDER SCALE IS IN INCHES 0 1 2 3
UNIT 1812
PROJECT NUMBER & PHASE 07000211191

Dist	COUNTY	ROUTE	POST MILES TOTAL PROJECT	SHEET No.	TOTAL SHEETS
7	LA	5	29.4/31.6	1839	1931

David McCord 05-21-12
REGISTERED CIVIL ENGINEER DATE

05-21-12
PLANS APPROVAL DATE

REGISTERED PROFESSIONAL ENGINEER DAVID WILLIAM McCORD No. E-15317 Exp. June 30, 2013 ELECTRICAL STATE OF CALIFORNIA

THE STATE OF CALIFORNIA OR ITS OFFICERS OR AGENTS SHALL NOT BE RESPONSIBLE FOR THE ACCURACY OR COMPLETENESS OF SCANNED COPIES OF THIS PLAN SHEET.

SCRRA
279 E. ARROW HIGHWAY
SAN DIMAS, CA 91773

XORAIL
201 NORTH INDIAN HILL BLVD
SUITE 201
CLAREMONT, CA 91711

SIDE A

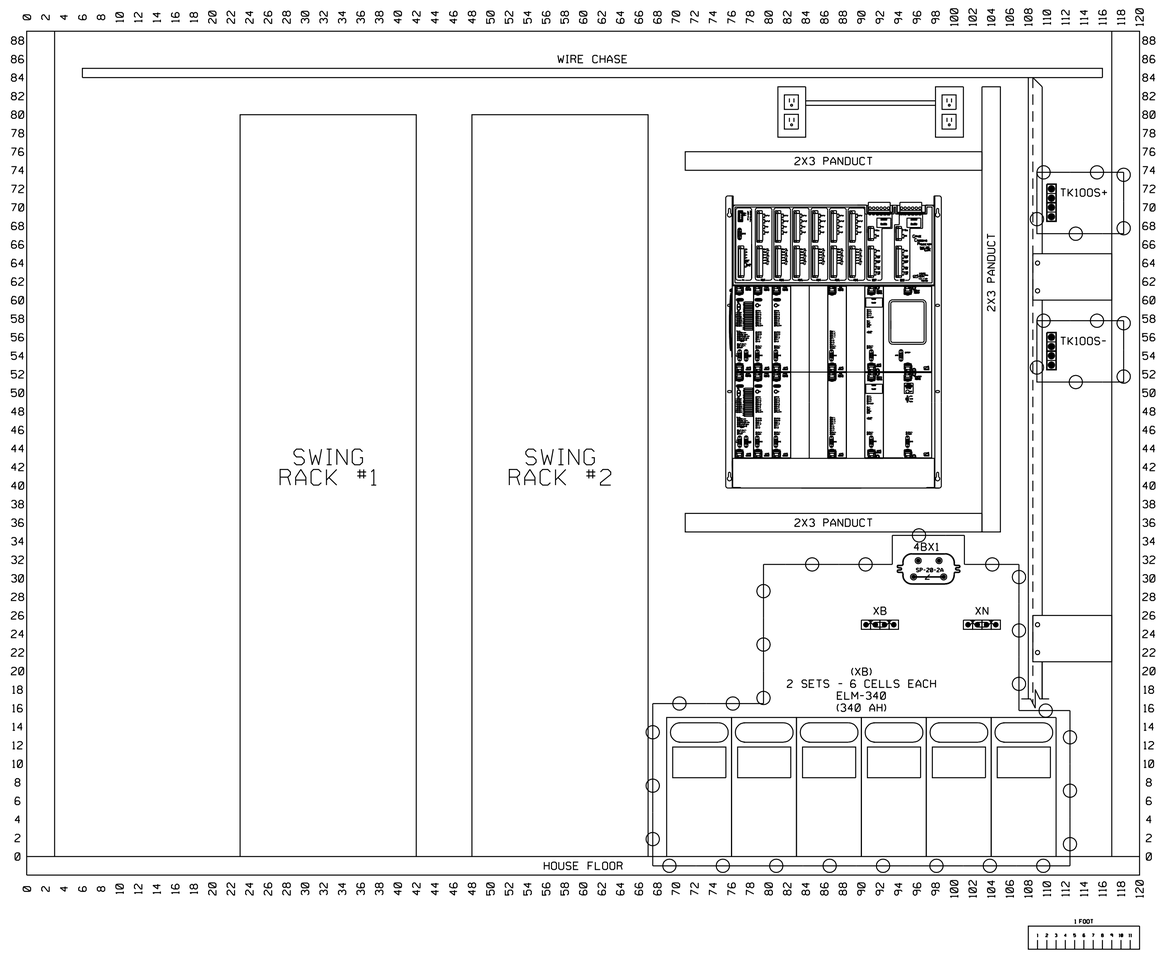

= OUT

= IN

DATE IN SERVICE _____
S. ENGINEER _____
INSPECTOR _____

RR-SP-079
SIGNAL STAGE 2

SIDE A - HOUSE LAYOUT
BUENA VISTA ST.
VY 12.77
SH. 16 OF 17

THIS PLAN ACCURATE FOR RAILROAD WORK ONLY.

XING HOUSE

RAILROAD SHEET NO.
79 OF 171

STATE OF CALIFORNIA - DEPARTMENT OF TRANSPORTATION
Caltrans® DESIGN
CONSULTANT FUNCTIONAL SUPERVISOR: GLENN BREINDEL
CALCULATED-DESIGNED BY: RAMON VALDEZ
CHECKED BY
REVISED BY
DATE REVISED

LAST REVISION 00-00-00
DATE PLOTTED = 7/18/2012
TIME PLOTTED = 2:48:21 PM

BORDER LAST REVISED 7/2/2010
USERNAME = gharibiana
DGN FILE = ...\moc\xorail\sheet\SP-079-.sht
RELATIVE BORDER SCALE IS IN INCHES 0 1 2 3
UNIT 1812
PROJECT NUMBER & PHASE 07000211191

Dist	COUNTY	ROUTE	POST MILES TOTAL PROJECT	SHEET No.	TOTAL SHEETS
7	LA	5	29.4/31.6	1840	1931

David McCord 05-21-12
REGISTERED CIVIL ENGINEER DATE

05-21-12
PLANS APPROVAL DATE

REGISTERED PROFESSIONAL ENGINEER DAVID WILLIAM McCORD No. E-15317 Exp. June 30, 2013 ELECTRICAL STATE OF CALIFORNIA

THE STATE OF CALIFORNIA OR ITS OFFICERS OR AGENTS SHALL NOT BE RESPONSIBLE FOR THE ACCURACY OR COMPLETENESS OF SCANNED COPIES OF THIS PLAN SHEET.

SCRRA
279 E. ARROW HIGHWAY
SAN DIMAS, CA 91773

XORAIL
201 NORTH INDIAN HILL BLVD
SUITE 201
CLAREMONT, CA 91711

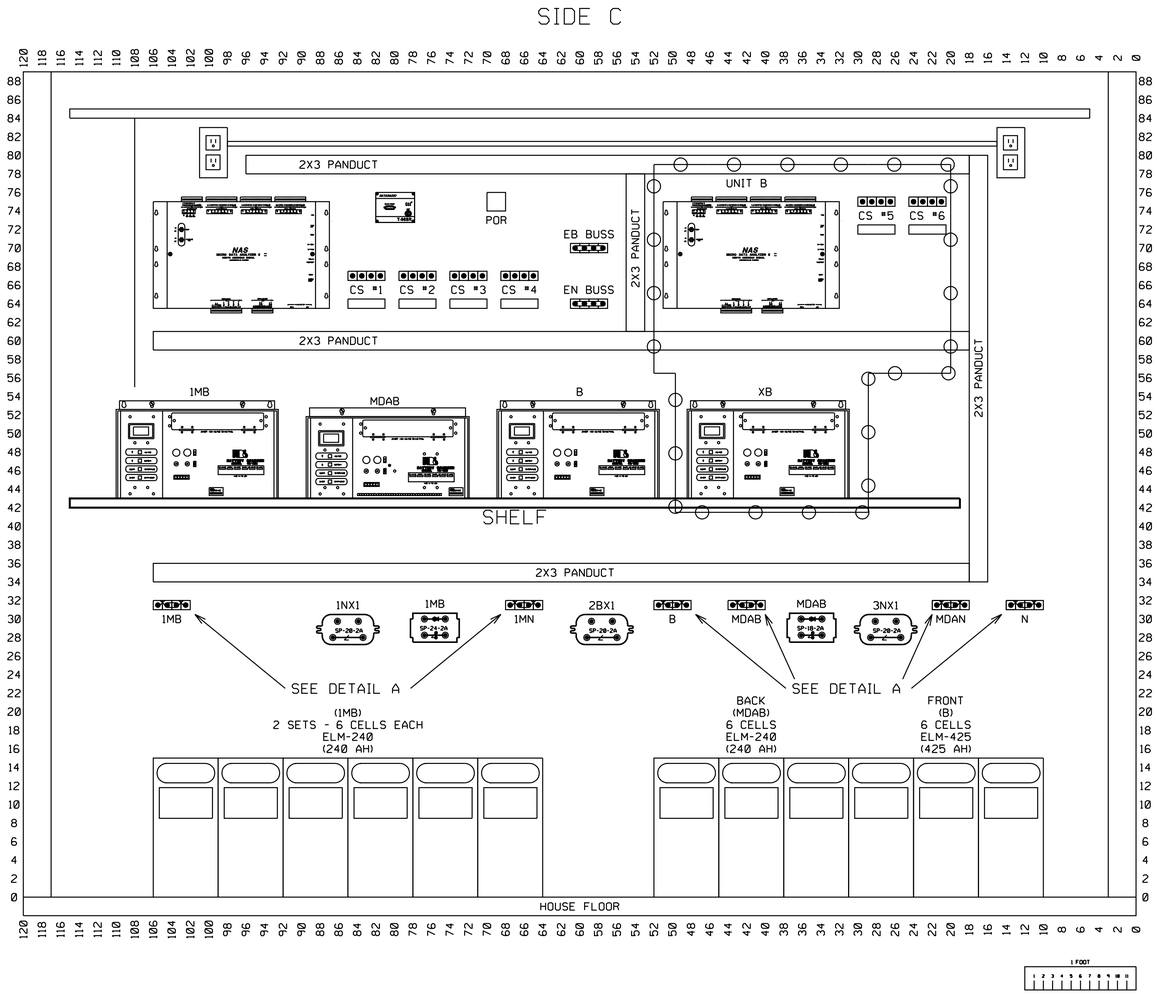

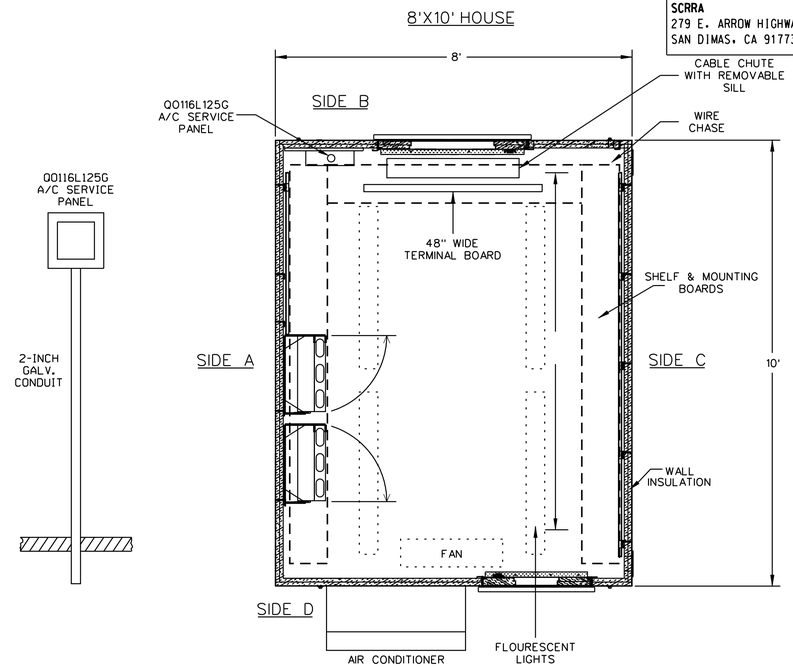

FLOOR PLAN
(NO SCALE)

8'X10' POWDER COATED STEEL SHELTER
OR
8'X10' ALUMINUM SHELTER WITH
STAINLESS STEEL HARDWARE.
(SEE NOTE 1)

= OUT
= IN

NOTE:

1. HOUSE TYPE TO BE SPECIFIED UPON PURCHASE ORDER RELEASE.

THIS PLAN ACCURATE FOR RAILROAD WORK ONLY.

RR-SP-080
SIGNAL STAGE 2

SIDE C - HOUSE LAYOUT
BUENA VISTA ST.
VY 12.77
SH. 17 OF 17

XING HOUSE

RAILROAD SHEET NO.
80 OF 171

LAST REVISION 00-00-00
DATE PLOTTED = 7/18/2012
TIME PLOTTED = 2:48:23 PM

STATE OF CALIFORNIA - DEPARTMENT OF TRANSPORTATION
Caltrans® DESIGN
CONSULTANT FUNCTIONAL SUPERVISOR GLENN BREINDEL
CALCULATED-DESIGNED BY RAMON VALDEZ
CHECKED BY
REVISED BY
DATE REVISED

BORDER LAST REVISED 7/2/2010
USERNAME = gharlbiana
DGN FILE = ...\moc\xorail\sheet\SP-080-.sht
RELATIVE BORDER SCALE IS IN INCHES 0 1 2 3
UNIT 1812
PROJECT NUMBER & PHASE 07000211191

Dist	COUNTY	ROUTE	POST MILES TOTAL PROJECT	SHEET No.	TOTAL SHEETS
7	LA	5	29.4/31.6	1841	1931

David McCord 05-21-12
REGISTERED CIVIL ENGINEER DATE

05-21-12
PLANS APPROVAL DATE

REGISTERED PROFESSIONAL ENGINEER DAVID WILLIAM McCORD No. E-15317 Exp. June 30, 2013 ELECTRICAL STATE OF CALIFORNIA

THE STATE OF CALIFORNIA OR ITS OFFICERS OR AGENTS SHALL NOT BE RESPONSIBLE FOR THE ACCURACY OR COMPLETENESS OF SCANNED COPIES OF THIS PLAN SHEET.

SCRRA
279 E. ARROW HIGHWAY
SAN DIMAS, CA 91773

XORAIL
201 NORTH INDIAN HILL BLVD
SUITE 201
CLAREMONT, CA 91711

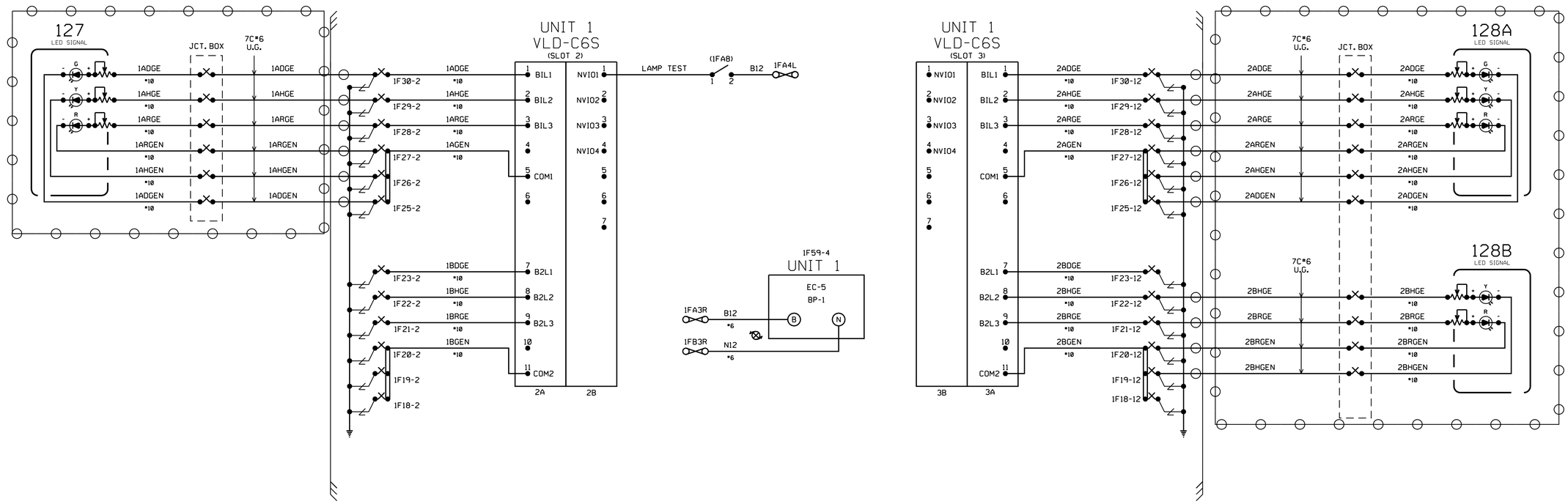

RECEIVING CODE	127 SIGNAL ASPECT	TRANSMITTING CODE	PTC #
CODE 7	GREEN	CODE 7	3
CODE 4	FLASHING YELLOW	CODE 7	7
CODE 2	YELLOW	CODE 4	9
CODE 8	YELLOW	CODE 4	9
NO CODE	RED	CODE 1	15
NO CODE (STICK)	RED	CODE 8	15
CODE 1	RED	CODE 1	15

PTC NOTES
REPLACEMENT PTC MODULES:
-MODULE VPM-2 TO BE REPLACED WITH MODULE VPM-3.
-MODULE CI-1 TO BE REPLACED WITH MODULE CI-2.

PTC MESSAGE		
TYPE	SIGNAL	SIGNAL
NAME	127	128
OFFSET	0	5

RECEIVING CODE	128 SIGNAL ASPECT	TRANSMITTING CODE	PTC #
CODE 7	GREEN/RED	CODE 7	3
CODE 4	FLASHING YELLOW/RED	CODE 7	7
CODE 2	YELLOW/YELLOW	CODE 4	6
CODE 9	YELLOW/FLASHING RED	CODE 8	8
CODE 8	YELLOW/RED	CODE 8	9
NO CODE	RED/RED	CODE 1	15
NO CODE (STICK)	RED/RED	CODE 8	15
CODE 1	RED/RED	CODE 1	15

= OUT
= IN

DATE IN SERVICE _____
S. ENGINEER _____
INSPECTOR _____

ELECTROCODE 5
COLORLIGHT CONFIGURATION
GETS P/N 300671-004
UNITS 1
CHASSIS ID
●0000000
1 2 3 4 5 6 7 8
● NOT PUNCHED = ON
○ PUNCHED = OFF

TRACK 1 ALTERNATING CODE 5= ALT 5
TRACK 2 ALTERNATING CODE 5= ALT 5

PTC WORK TO BE PERFORMED BY OTHERS.

RR-SP-081
SIGNAL STAGE 2

ELECTROCODE 5 CIRCUITS
SIGNALS 127 & 128
VY 12.76
SH. 1 OF 6

RAILROAD SHEET NO.
81 OF 171

THIS PLAN ACCURATE FOR RAILROAD WORK ONLY.

STATE OF CALIFORNIA - DEPARTMENT OF TRANSPORTATION
Caltrans® DESIGN
CONSULTANT FUNCTIONAL SUPERVISOR: GLENN BREINDEL
CALCULATED-DESIGNED BY: RAMON VALDEZ
CHECKED BY
REVISED BY
DATE REVISED

LAST REVISION 00-00-00
DATE PLOTTED = 7/18/2012
TIME PLOTTED = 2:48:25 PM

BORDER LAST REVISED 7/2/2010
USERNAME = gharibiana
DGN FILE = ...\moc\xorail\sheet\SP-081-.sht
RELATIVE BORDER SCALE IS IN INCHES 0 1 2 3
UNIT 1812
PROJECT NUMBER & PHASE 07000211191

Dist	COUNTY	ROUTE	POST MILES TOTAL PROJECT	SHEET No.	TOTAL SHEETS
7	LA	5	29.4/31.6	1842	1931

David McCord 05-21-12
REGISTERED CIVIL ENGINEER DATE

05-21-12
PLANS APPROVAL DATE

REGISTERED PROFESSIONAL ENGINEER DAVID WILLIAM McCORD No. E-15317 Exp. June 30, 2013 ELECTRICAL STATE OF CALIFORNIA

THE STATE OF CALIFORNIA OR ITS OFFICERS OR AGENTS SHALL NOT BE RESPONSIBLE FOR THE ACCURACY OR COMPLETENESS OF SCANNED COPIES OF THIS PLAN SHEET.

SCRRA
279 E. ARROW HIGHWAY
SAN DIMAS, CA 91773

XORAIL
201 NORTH INDIAN HILL BLVD
SUITE 201
CLAREMONT, CA 91711

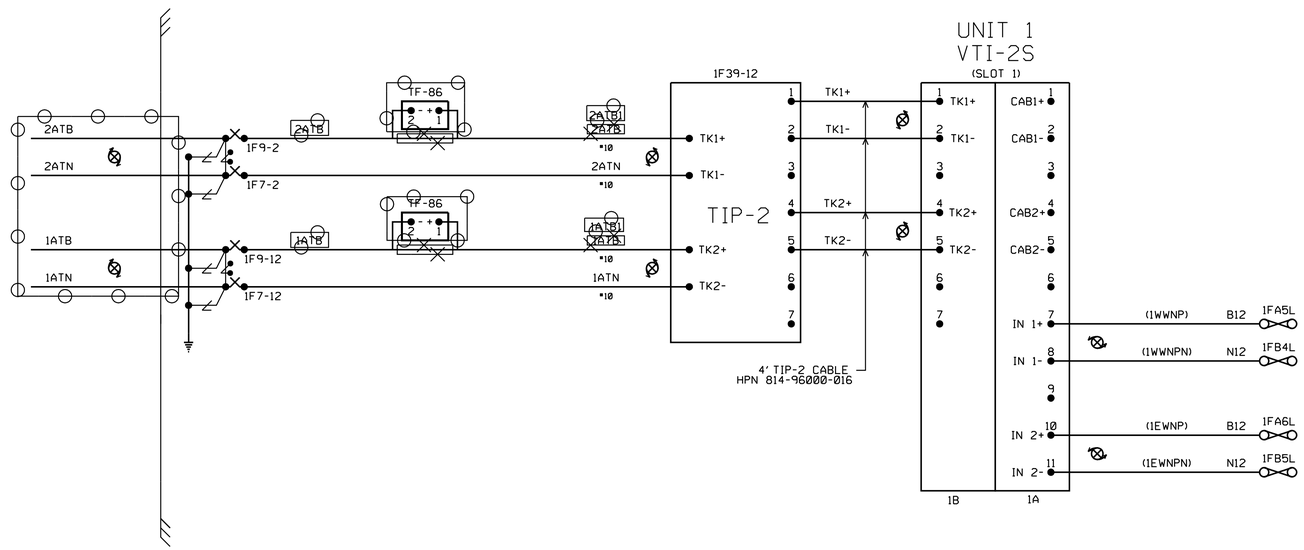

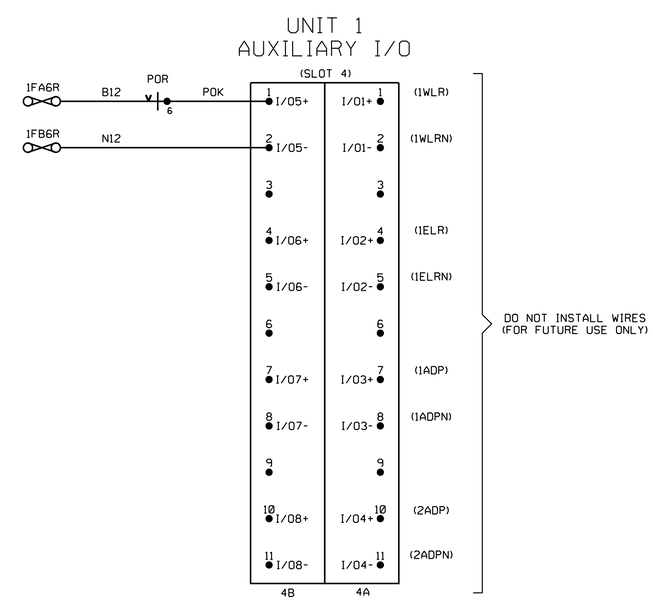

= OUT

= IN

PTC WORK TO BE PERFORMED BY OTHERS.

RR-SP-082
SIGNAL STAGE 2

ELECTROCODE 5 CIRCUITS
SIGNALS 127 & 128
VY 12.76
SH. 2 OF 6

RAILROAD SHEET NO.
82 OF 171

THIS PLAN ACCURATE FOR RAILROAD WORK ONLY.

STATE OF CALIFORNIA - DEPARTMENT OF TRANSPORTATION
DESIGN
CONSULTANT FUNCTIONAL SUPERVISOR: GLENN BREINDEL
CALCULATED-DESIGNED BY: RAMON VALDEZ
CHECKED BY
REVISED BY
DATE REVISED

LAST REVISION 00-00-00
DATE PLOTTED = 7/18/2012
TIME PLOTTED = 2:48:26 PM

Dist	COUNTY	ROUTE	POST MILES TOTAL PROJECT	SHEET No.	TOTAL SHEETS
7	LA	5	29.4/31.6	1843	1931

David McCord 05-21-12
REGISTERED CIVIL ENGINEER DATE

05-21-12
PLANS APPROVAL DATE

REGISTERED PROFESSIONAL ENGINEER DAVID WILLIAM McCORD No. E-15317 Exp. June 30, 2013 ELECTRICAL STATE OF CALIFORNIA

THE STATE OF CALIFORNIA OR ITS OFFICERS OR AGENTS SHALL NOT BE RESPONSIBLE FOR THE ACCURACY OR COMPLETENESS OF SCANNED COPIES OF THIS PLAN SHEET.

SCRRA
279 E. ARROW HIGHWAY
SAN DIMAS, CA 91773

XORAIL
201 NORTH INDIAN HILL BLVD
SUITE 201
CLAREMONT, CA 91711

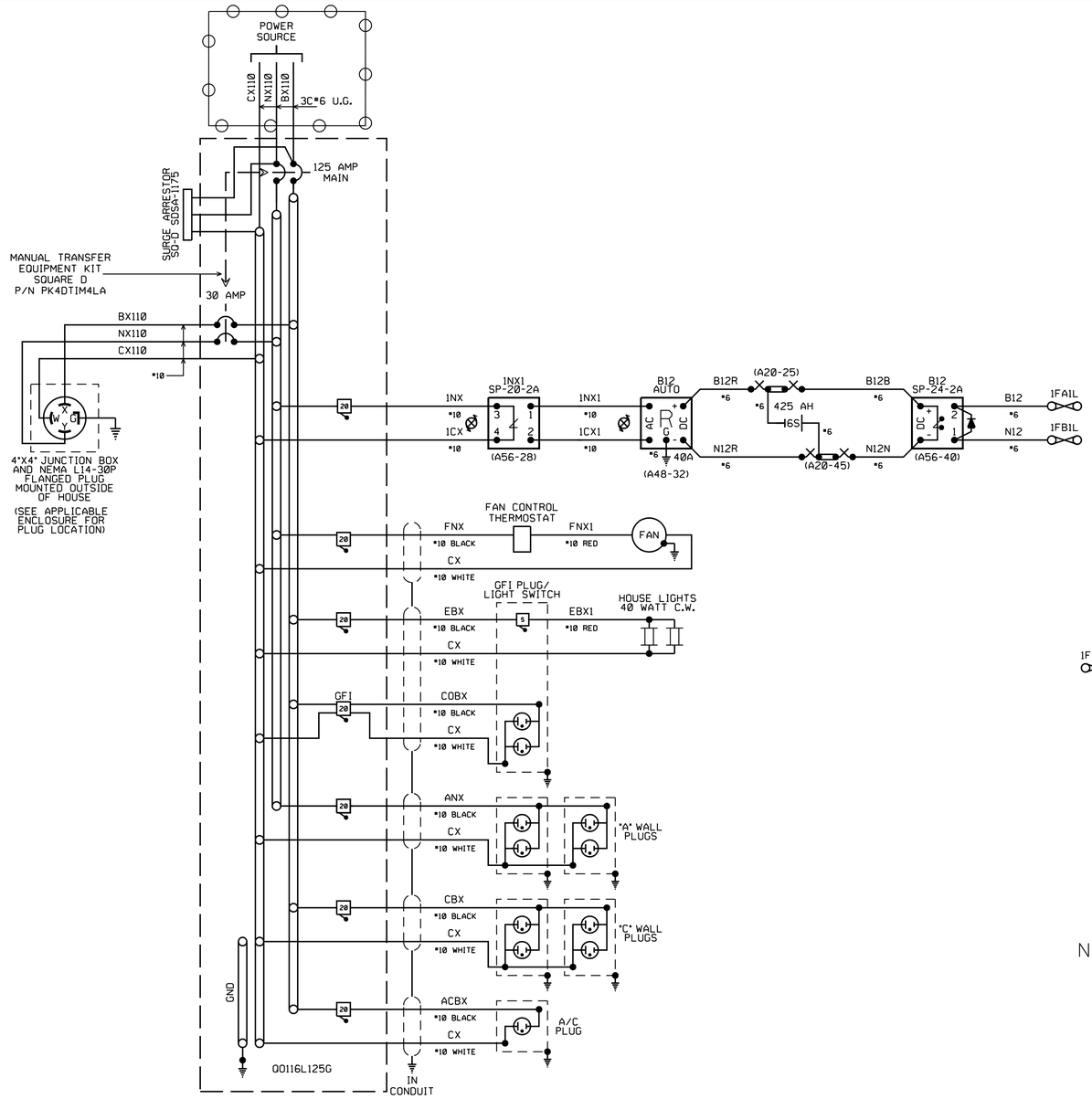

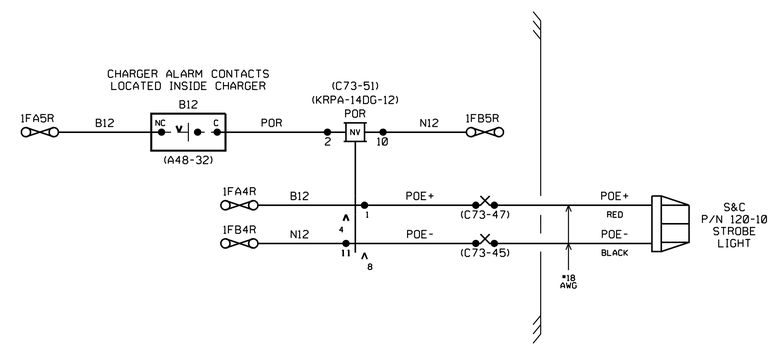

NOTE:

1. POE STROBE LIGHT AND ASSOCIATED MISCELLANEOUS MATERIALS TO BE FURNISHED BY CONTRACTOR.

DATE IN SERVICE _____
S. ENGINEER _____
INSPECTOR _____

= IN

PTC WORK TO BE PERFORMED BY OTHERS.

RR-SP-083
SIGNAL STAGE 2

POWER & BATTERY CIRCUITS
SIGNALS 127 & 128
VY 12.76
SH. 3 OF 6

RAILROAD SHEET NO.
83 OF 171

THIS PLAN ACCURATE FOR RAILROAD WORK ONLY.

STATE OF CALIFORNIA - DEPARTMENT OF TRANSPORTATION
Caltrans DESIGN
CONSULTANT FUNCTIONAL SUPERVISOR: GLENN BREINDEL
CALCULATED-DESIGNED BY: RAMON VALDEZ
CHECKED BY
REVISED BY
DATE REVISED

LAST REVISION 00-00-00
DATE PLOTTED = 7/18/2012
TIME PLOTTED = 2:48:27 PM

Dist	COUNTY	ROUTE	POST MILES TOTAL PROJECT	SHEET No.	TOTAL SHEETS
7	LA	5	29.4/31.6	1844	1931

David McCord 05-21-12
REGISTERED CIVIL ENGINEER DATE

05-21-12
PLANS APPROVAL DATE

REGISTERED PROFESSIONAL ENGINEER DAVID WILLIAM McCORD No. E-15317 Exp. June 30, 2013 ELECTRICAL STATE OF CALIFORNIA

THE STATE OF CALIFORNIA OR ITS OFFICERS OR AGENTS SHALL NOT BE RESPONSIBLE FOR THE ACCURACY OR COMPLETENESS OF SCANNED COPIES OF THIS PLAN SHEET.

SCRRA
279 E. ARROW HIGHWAY
SAN DIMAS, CA 91773

XORAIL
201 NORTH INDIAN HILL BLVD
SUITE 201
CLAREMONT, CA 91711

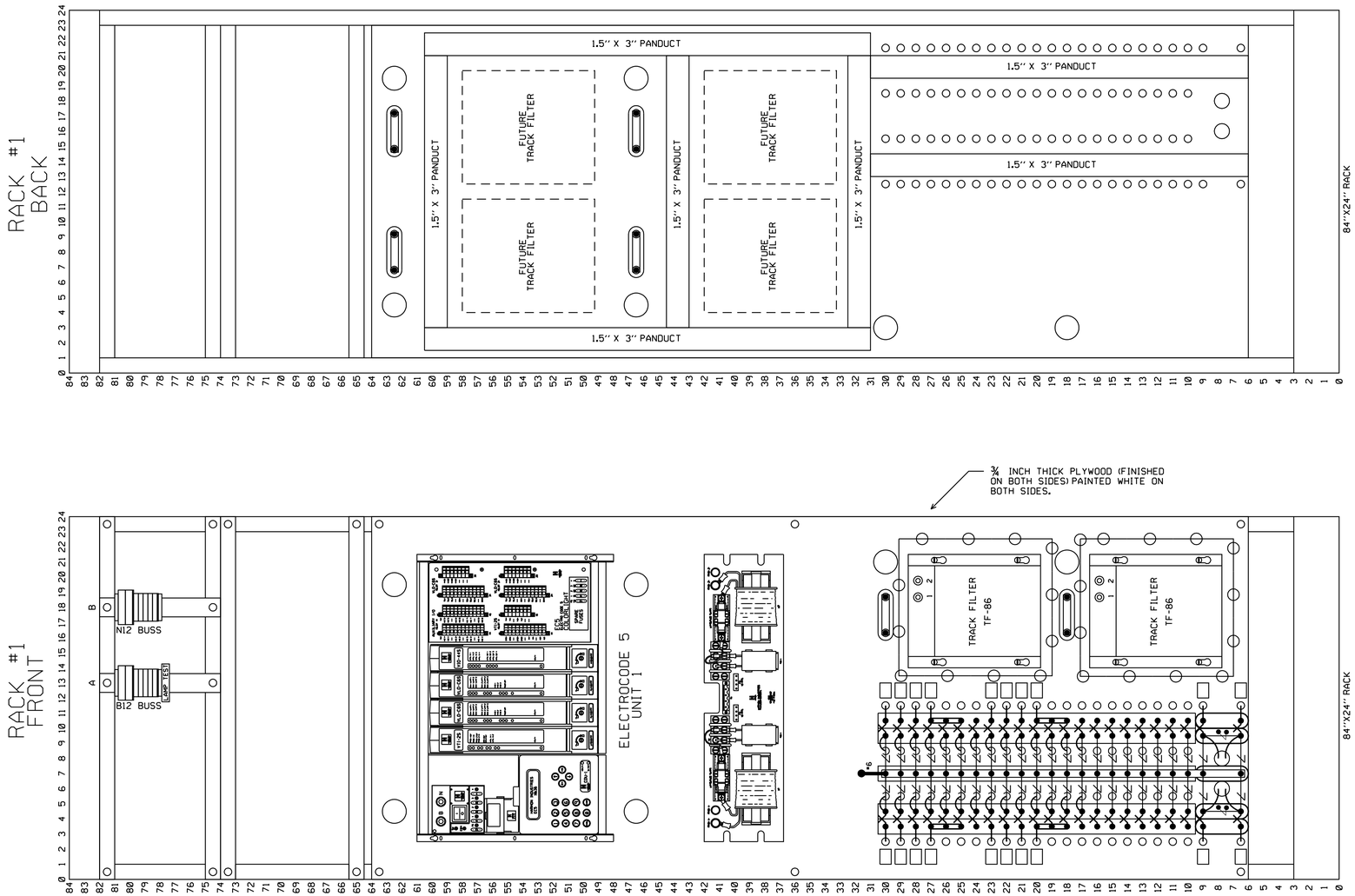

¾ INCH THICK PLYWOOD (FINISHED ON BOTH SIDES) PAINTED WHITE ON BOTH SIDES.

PTC WORK TO BE PERFORMED BY OTHERS.

DATE IN SERVICE _____
S. ENGINEER _____
INSPECTOR _____

= IN

NOTE:

1. PROVIDE SPACE FOR INSTALLATION OF TRACK FILTERS AS SHOWN.

THIS PLAN ACCURATE FOR RAILROAD WORK ONLY.

RR-SP-084
SIGNAL STAGE 2

RACK #1 LAYOUT
SIGNALS 127 & 128
VY 12.76
SH. 4 OF 6

RAILROAD SHEET NO.
84 OF 171

LAST REVISION 00-00-00
DATE PLOTTED = 7/18/2012
TIME PLOTTED = 2:48:27 PM

STATE OF CALIFORNIA - DEPARTMENT OF TRANSPORTATION
Caltrans® DESIGN
CONSULTANT FUNCTIONAL SUPERVISOR GLENN BREINDEL
CALCULATED-DESIGNED BY RAMON VALDEZ
CHECKED BY
REVISED BY
DATE REVISED

BORDER LAST REVISED 7/2/2010
USERNAME = gharibiana
DGN FILE = ...\moc\xorail\sheet\SP-084-.sht
RELATIVE BORDER SCALE IS IN INCHES 0 1 2 3
UNIT 1812
PROJECT NUMBER & PHASE 07000211191

Dist	COUNTY	ROUTE	POST MILES TOTAL PROJECT	SHEET No.	TOTAL SHEETS
7	LA	5	29.4/31.6	1845	1931

David McCord 05-21-12
REGISTERED CIVIL ENGINEER DATE

05-21-12
PLANS APPROVAL DATE

REGISTERED PROFESSIONAL ENGINEER
DAVID WILLIAM McCORD
No. E-15317
Exp. June 30, 2013
ELECTRICAL
STATE OF CALIFORNIA

THE STATE OF CALIFORNIA OR ITS OFFICERS OR AGENTS SHALL NOT BE RESPONSIBLE FOR THE ACCURACY OR COMPLETENESS OF SCANNED COPIES OF THIS PLAN SHEET.

SCRRA
279 E. ARROW HIGHWAY
SAN DIMAS, CA 91773

XORAIL
201 NORTH INDIAN HILL BLVD
SUITE 201
CLAREMONT, CA 91711

RACK #2
BACK

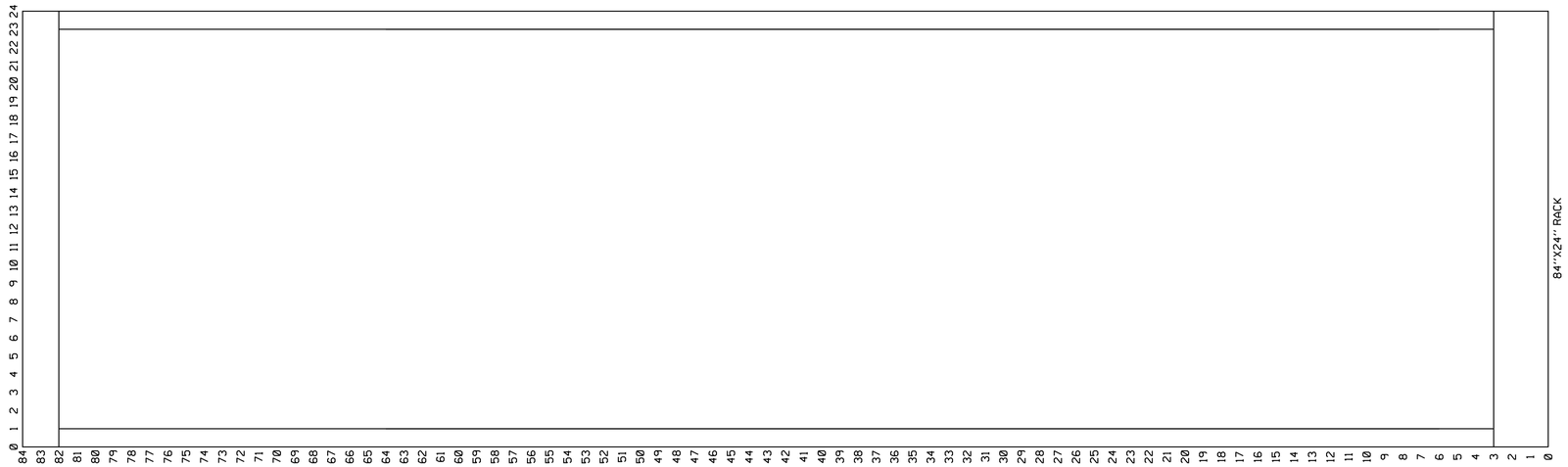

RACK #2
FRONT

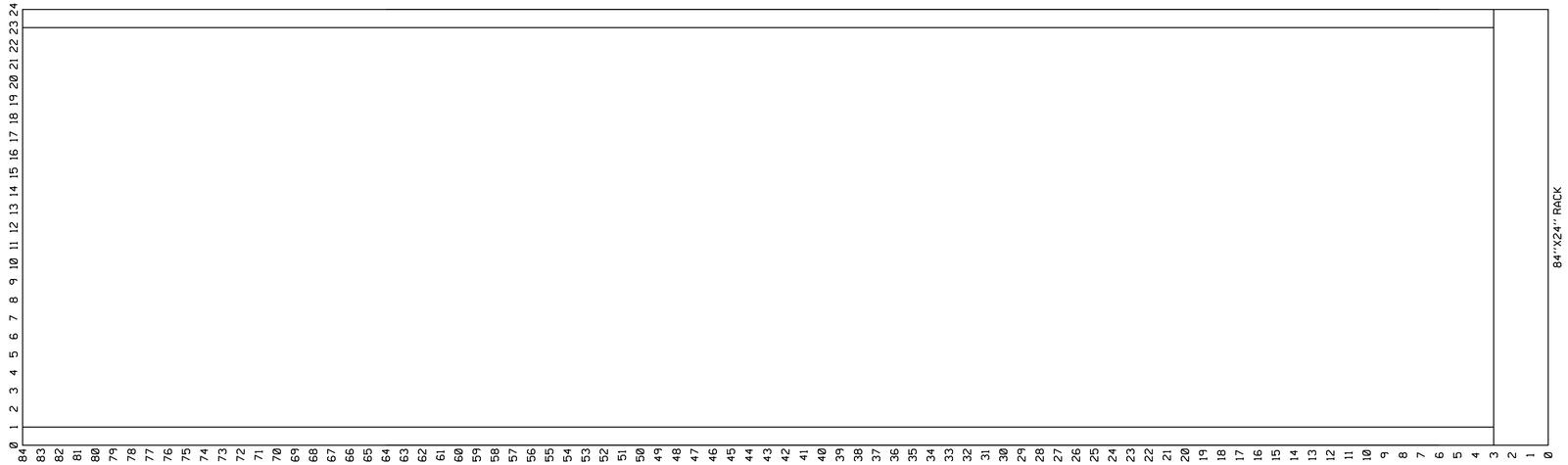

DATE IN SERVICE _____
S. ENGINEER _____
INSPECTOR _____

PTC WORK TO BE PERFORMED BY OTHERS.

THIS PLAN ACCURATE FOR RAILROAD WORK ONLY.

RR-SP-085
SIGNAL STAGE 2

RACK #2 LAYOUT
SIGNALS 127 & 128
VY 12.76
SH. 5 OF 6

RAILROAD SHEET NO.
85 OF 171

STATE OF CALIFORNIA - DEPARTMENT OF TRANSPORTATION
Caltrans® DESIGN

CONSULTANT FUNCTIONAL SUPERVISOR: GLENN BREINDEL
CALCULATED-DESIGNED BY: RAMON VALDEZ
CHECKED BY
REVISED BY
DATE REVISED

LAST REVISION 00-00-00
DATE PLOTTED = 7/18/2012
TIME PLOTTED = 2:48:29 PM

Dist	COUNTY	ROUTE	POST MILES TOTAL PROJECT	SHEET No.	TOTAL SHEETS
7	LA	5	29.4/31.6	1846	1931

David McCord 05-21-12
REGISTERED CIVIL ENGINEER DATE

05-21-12
PLANS APPROVAL DATE

REGISTERED PROFESSIONAL ENGINEER DAVID WILLIAM McCORD No. E-15317 Exp. June 30, 2013 ELECTRICAL STATE OF CALIFORNIA

THE STATE OF CALIFORNIA OR ITS OFFICERS OR AGENTS SHALL NOT BE RESPONSIBLE FOR THE ACCURACY OR COMPLETENESS OF SCANNED COPIES OF THIS PLAN SHEET.

SCRRA
279 E. ARROW HIGHWAY
SAN DIMAS, CA 91773

XORAIL
201 NORTH INDIAN HILL BLVD
SUITE 201
CLAREMONT, CA 91711

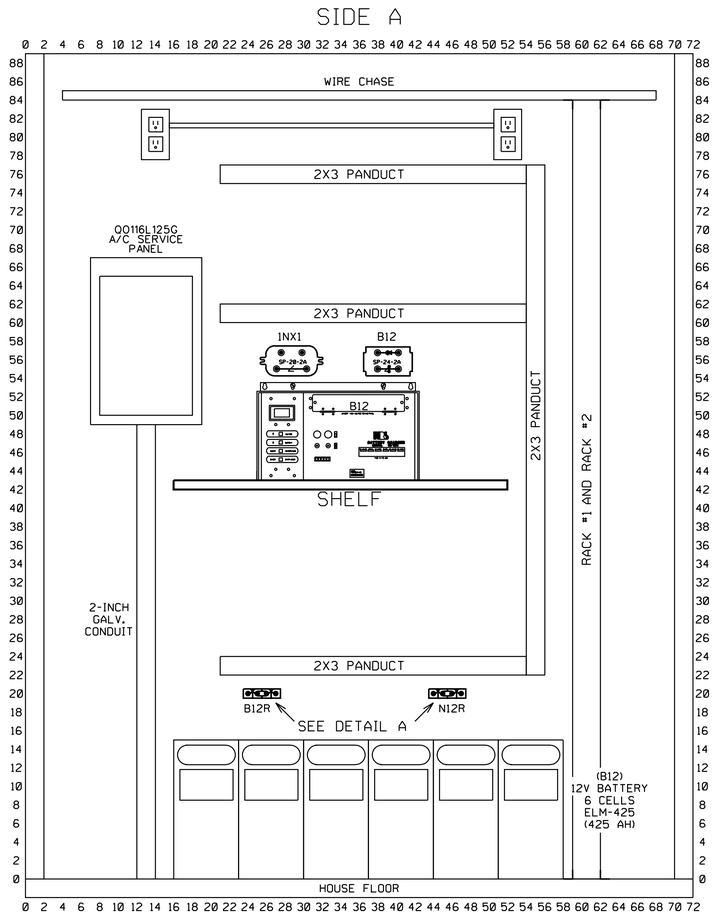

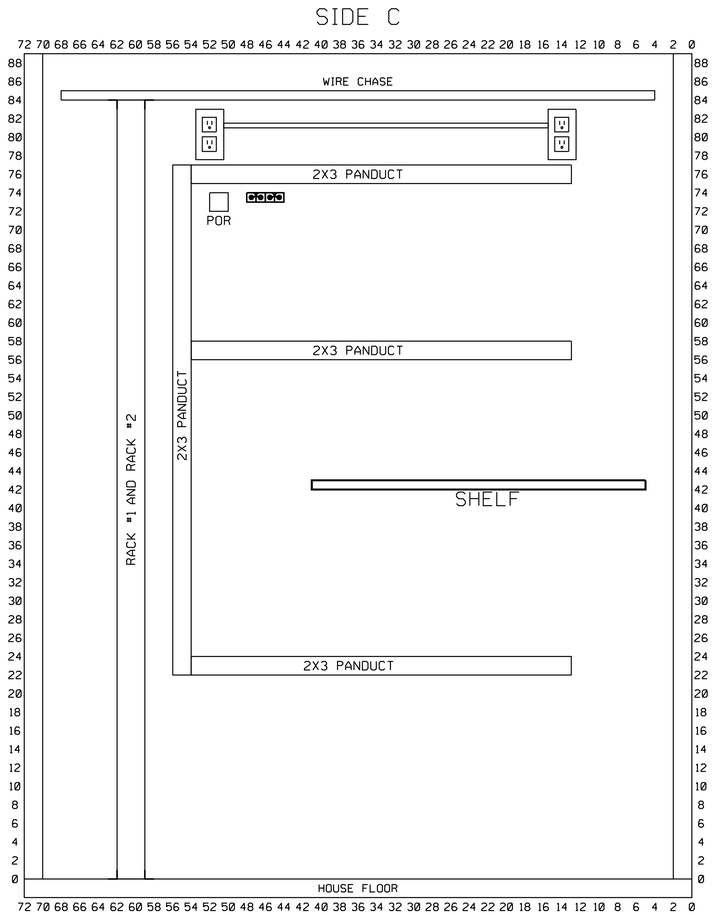

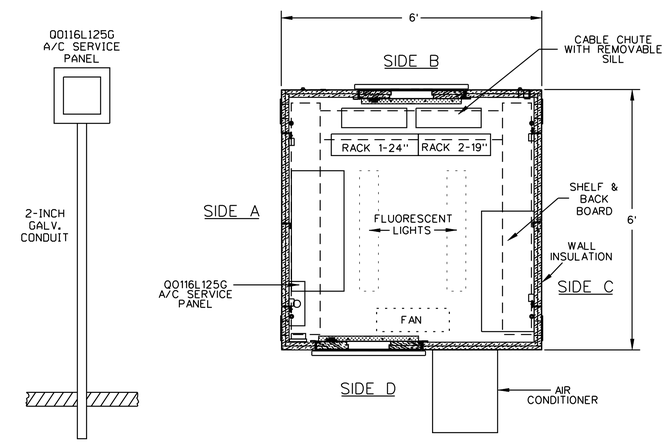

FLOOR PLAN
(NO SCALE)

6'X6' POWDER COATED STEEL SHELTER
OR
6'X6' ALUMINUM SHELTER WITH
STAINLESS STEEL HARDWARE.

DATE IN SERVICE _____
S. ENGINEER _____
INSPECTOR _____

PTC WORK TO BE PERFORMED BY OTHERS.

THIS PLAN ACCURATE FOR RAILROAD WORK ONLY.

RR-SP-086
SIGNAL STAGE 2

SIDES A & C - HOUSE LAYOUT
SIGNALS 127 & 128
VY 12.76
SH. 6 OF 6

RAILROAD SHEET NO.
86 OF 171

REVISED BY	DATE REVISED

CALCULATED-DESIGNED BY: RAMON VALDEZ
CHECKED BY:
SUPERVISOR: GLENN BREINDEL
CONSULTANT FUNCTIONAL SUPERVISOR:
STATE OF CALIFORNIA - DEPARTMENT OF TRANSPORTATION
Caltrans® DESIGN

LAST REVISION 00-00-00
DATE PLOTTED = 7/18/2012
TIME PLOTTED = 2:48:30 PM

Dist	COUNTY	ROUTE	POST MILES TOTAL PROJECT	SHEET No.	TOTAL SHEETS
7	LA	5	29.4/31.6	1847	1931

David McCord 05-21-12
REGISTERED CIVIL ENGINEER DATE

05-21-12
PLANS APPROVAL DATE

REGISTERED PROFESSIONAL ENGINEER DAVID WILLIAM McCORD No. E-15317 Exp. June 30, 2013 ELECTRICAL STATE OF CALIFORNIA

THE STATE OF CALIFORNIA OR ITS OFFICERS OR AGENTS SHALL NOT BE RESPONSIBLE FOR THE ACCURACY OR COMPLETENESS OF SCANNED COPIES OF THIS PLAN SHEET.

SCRRA
279 E. ARROW HIGHWAY
SAN DIMAS, CA 91773

XORAIL
201 NORTH INDIAN HILL BLVD
SUITE 201
CLAREMONT, CA 91711

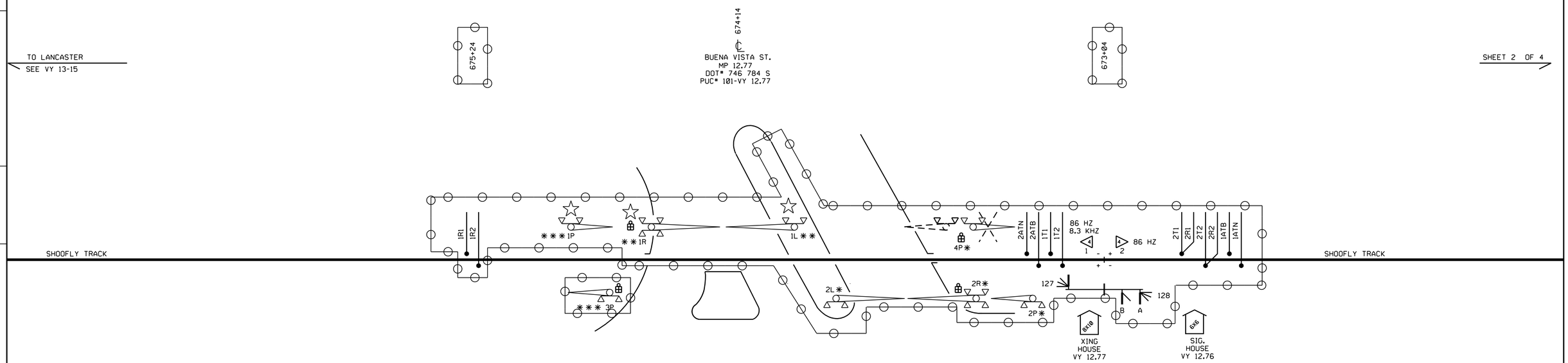

NOTES:

☆ - INSTALL U.G., PULLBOXES AND FOUNDATIONS STAGE 3 (TCP).

✱ - INSTALL GATES 2L, 2R, 2P & 4P IN STAGE 3 (TCP). GATES 2R & 2L WILL BE ACTIVATED IN STAGE 4 (TCP).

----- RELOCATE PED GATE 4P TO NEW FOUNDATION IN STAGE 9 (TCP).

✱✱ - INSTALL GATES 1R & 1L ON TEMPORARY FOUNDATIONS IN STAGE 4 (TCP) AND MOVED TO PERMANENT FOUNDATIONS IN STAGE 6 (TCP) AND ADJUST ARMS ACCORDINGLY.

✱✱✱ - INSTALL PED. GATES 1P & 3P IN STAGE 8 (TCP).

TCP - TRAFFIC CONTROL PLAN

= OUT

= IN

PTC WORK TO BE PERFORMED BY OTHERS.

THIS PLAN ACCURATE FOR RAILROAD WORK ONLY.

RR-SP-087
SIGNAL STAGE 2

SIGNAL CIRCUIT PLAN
CP ALLEN-BUENA VISTA ST
VY 10-13
SH. 1 OF 4

RAILROAD SHEET NO.
87 OF 171

STATE OF CALIFORNIA - DEPARTMENT OF TRANSPORTATION
Caltrans® DESIGN

CONSULTANT FUNCTIONAL SUPERVISOR: GLENN BREINDEL
CALCULATED-DESIGNED BY: RAMON VALDEZ
CHECKED BY
REVISED BY
DATE REVISED

LAST REVISION 00-00-00
DATE PLOTTED = 7/18/2012
TIME PLOTTED = 2:48:31 PM

BORDER LAST REVISED 7/2/2010
USERNAME = gharibiana
DGN FILE = ...\moc\xorail\sheet\SP-087-.sht
RELATIVE BORDER SCALE IS IN INCHES 0 1 2 3
UNIT 1812
PROJECT NUMBER & PHASE 07000211191

Dist	COUNTY	ROUTE	POST MILES TOTAL PROJECT	SHEET No.	TOTAL SHEETS
7	LA	5	29.4/31.6	1848	1931

David McCord 05-21-12
REGISTERED CIVIL ENGINEER DATE

05-21-12
PLANS APPROVAL DATE

REGISTERED PROFESSIONAL ENGINEER DAVID WILLIAM McCORD No. E-15317 Exp. June 30, 2013 ELECTRICAL STATE OF CALIFORNIA

THE STATE OF CALIFORNIA OR ITS OFFICERS OR AGENTS SHALL NOT BE RESPONSIBLE FOR THE ACCURACY OR COMPLETENESS OF SCANNED COPIES OF THIS PLAN SHEET.

SCRRA
279 E. ARROW HIGHWAY
SAN DIMAS, CA 91773

XORAIL
201 NORTH INDIAN HILL BLVD
SUITE 201
CLAREMONT, CA 91711

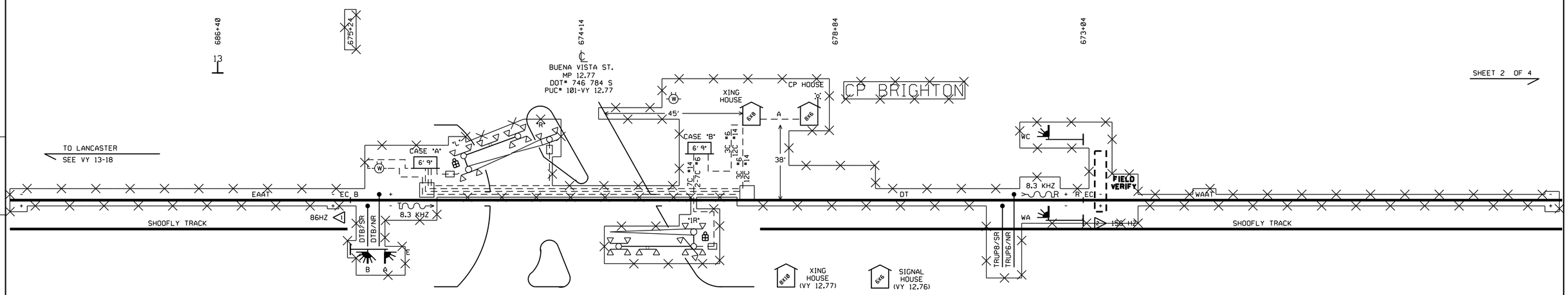

WARNING!

HIGHWAY-RAIL GRADE CROSSING WARNING SYSTEM AND HIGHWAY TRAFFIC SIGNALS ARE INTERCONNECTED.

BEFORE MODIFICATION is made to any operation which connects to or controls the timing of an active railroad warning system and/or timing and phasing of a traffic signal the appropriate party(ies) shall be notified and, if necessary, a joint inspection conducted.

= OUT

= IN

PTC WORK TO BE PERFORMED BY OTHERS.

RR-SP-088

SIGNAL STAGE 2

SIGNAL CIRCUIT PLAN
CP ALLEN-CP BRIGHTON
VY 10-13
SH. IX OF 4

RAILROAD SHEET NO.
88 OF 171

STATE OF CALIFORNIA - DEPARTMENT OF TRANSPORTATION
Caltrans® DESIGN

CONSULTANT FUNCTIONAL SUPERVISOR: GLENN BREINDEL
CALCULATED-DESIGNED BY: RAMON VALDEZ
CHECKED BY
REVISED BY
DATE REVISED

LAST REVISION 00-00-00
DATE PLOTTED = 7/18/2012
TIME PLOTTED = 2:48:32 PM

Dist	COUNTY	ROUTE	POST MILES TOTAL PROJECT	SHEET No.	TOTAL SHEETS
7	LA	5	29.4/31.6	1849	1931

David McCord 05-21-12
REGISTERED CIVIL ENGINEER DATE

05-21-12
PLANS APPROVAL DATE

REGISTERED PROFESSIONAL ENGINEER DAVID WILLIAM McCORD No. E-15317 Exp. June 30, 2013 ELECTRICAL STATE OF CALIFORNIA

THE STATE OF CALIFORNIA OR ITS OFFICERS OR AGENTS SHALL NOT BE RESPONSIBLE FOR THE ACCURACY OR COMPLETENESS OF SCANNED COPIES OF THIS PLAN SHEET.

SCRRA
279 E. ARROW HIGHWAY
SAN DIMAS, CA 91773

XORAIL
201 NORTH INDIAN HILL BLVD
SUITE 201
CLAREMONT, CA 91711

PTC WORK TO BE PERFORMED BY OTHERS.

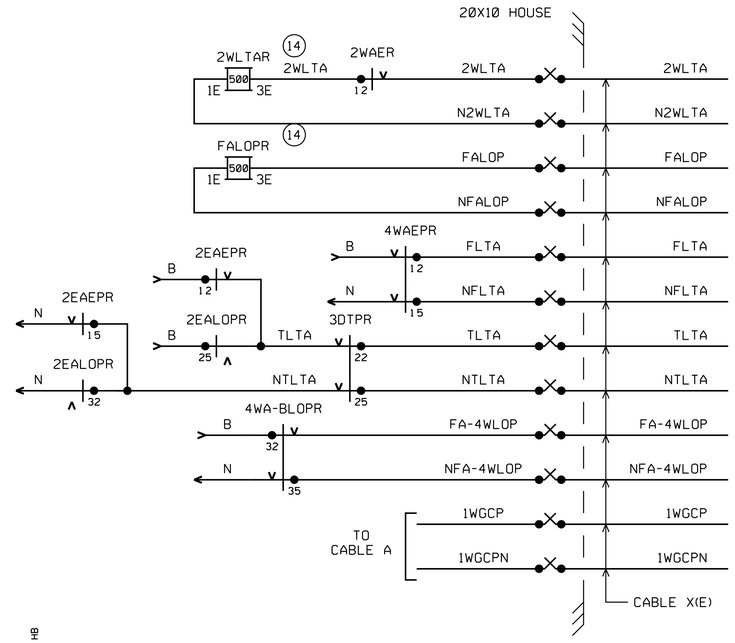

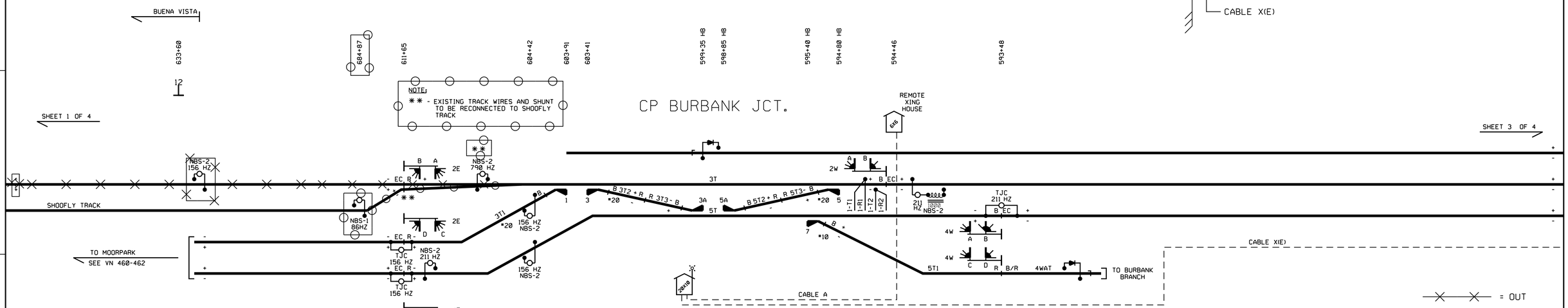

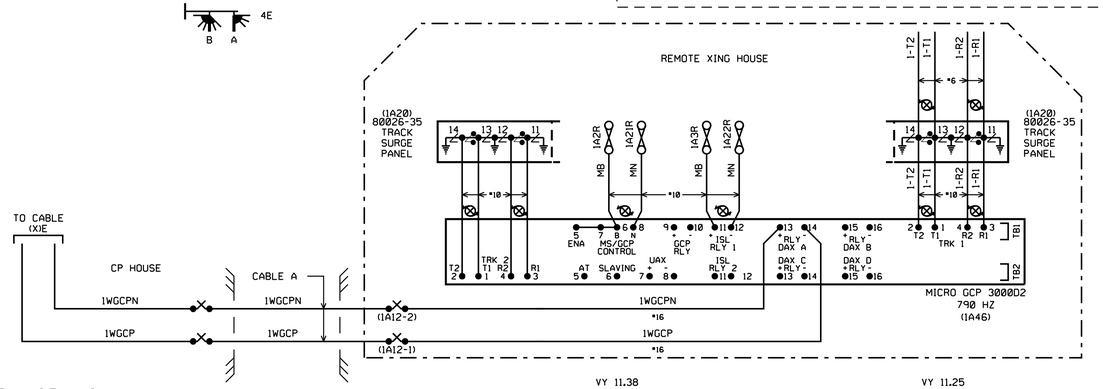

A	3 COND #6 U.G.
1	BX110
2	CX110
3	NX110

A	19 COND #14 U.G.
1	NWGCP
2	NWGCPN
3	
4	
5	
6	
7	
8	
9	
10	
11	
12	
13	
14	
15	
16	
17	
18	
19	

X(E)	19 COND #14 U.G.
1	2WLTA
2	N2WLTA
3	FALOP
4	NFALOP
5	FLTA
6	NFLTA
7	TLTA
8	NTLTA
9	FA-4WLOP
10	NFA-4WLOP
11	
12	
13	1WGCP
14	1WGCPN
15	
16	
17	
18	
19	

DATE IN SERVICE _____
S. ENGINEER _____
INSPECTOR _____

RR-SP-089
SIGNAL STAGE 2

SIGNAL CIRCUIT PLAN
CP ALLEN BUENA VISTA ST
VY 10-13
SH. 2 OF 4

RAILROAD SHEET NO.
89 OF 171

THIS PLAN ACCURATE FOR RAILROAD WORK ONLY.

STATE OF CALIFORNIA - DEPARTMENT OF TRANSPORTATION
Caltrans DESIGN
CONSULTANT FUNCTIONAL SUPERVISOR: GLENN BREINDEL
CALCULATED-DESIGNED BY: RAMON VALDEZ
CHECKED BY
REVISED BY
DATE REVISED

LAST REVISION 00-00-00
DATE PLOTTED = 7/18/2012
TIME PLOTTED = 2:48:33 PM

Dist	COUNTY	ROUTE	POST MILES TOTAL PROJECT	SHEET No.	TOTAL SHEETS
7	LA	5	29.4/31.6	1850	1931

David McCord 05-21-12
REGISTERED CIVIL ENGINEER DATE

05-21-12
PLANS APPROVAL DATE

REGISTERED PROFESSIONAL ENGINEER DAVID WILLIAM McCORD No. E-15317 Exp. June 30, 2013 ELECTRICAL STATE OF CALIFORNIA

THE STATE OF CALIFORNIA OR ITS OFFICERS OR AGENTS SHALL NOT BE RESPONSIBLE FOR THE ACCURACY OR COMPLETENESS OF SCANNED COPIES OF THIS PLAN SHEET.

SCRRA
279 E. ARROW HIGHWAY
SAN DIMAS, CA 91773

XORAIL
201 NORTH INDIAN HILL BLVD
SUITE 201
CLAREMONT, CA 91711

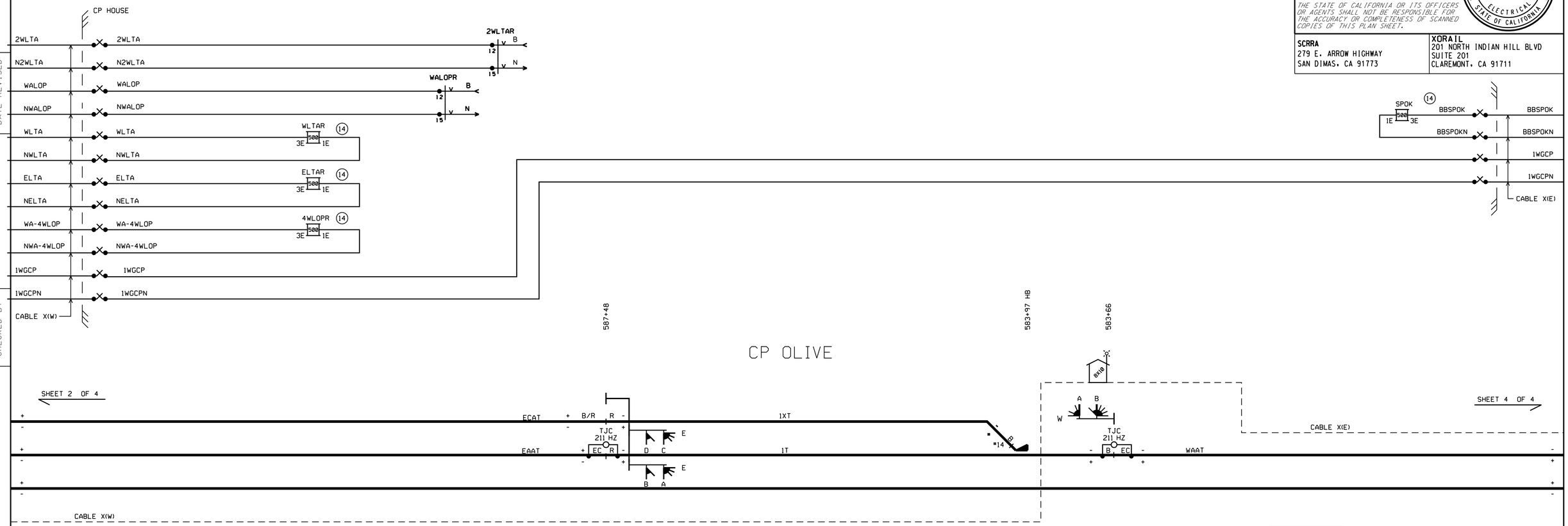

X(W) 19 COND #14 U.G.	
1	2WLTA
2	N2WLTA
3	WALOP
4	NWALOP
5	WLTA
6	NWLTA
7	ELTA
8	NELTA
9	WA-4WLOP
10	NWA-4WLOP
11	
12	
13	1WGCP
14	1WGCPN
15	
16	
17	
18	
19	

X(E) 19 COND #14 U.G.	
1	1WGCP
2	1WGCPN
3	BBSPOK
4	BBSPOKN
5	
6	
7	
8	
9	
10	
11	
12	
13	
14	
15	
16	
17	
18	
19	

= IN

DATE IN SERVICE _____
S. ENGINEER _____
INSPECTOR _____

PTC WORK TO BE PERFORMED BY OTHERS.

REFERENCE ONLY

THIS PLAN ACCURATE FOR RAILROAD WORK ONLY.

VY 11.13

RR-SP-090
SIGNAL STAGE 2

SIGNAL CIRCUIT PLAN
CP ALLEN-BUENA VISTA ST
VY 10-13
SH. 3 OF 4

RAILROAD SHEET NO.
90 OF 171

LAST REVISION 00-00-00
DATE PLOTTED = 7/18/2012
TIME PLOTTED = 2:48:34 PM

REVISED BY
DATE REVISED
RAMON VALDEZ
CALCULATED-DESIGNED BY
CHECKED BY
CONSULTANT FUNCTIONAL SUPERVISOR
GLENN BREINDEL
STATE OF CALIFORNIA - DEPARTMENT OF TRANSPORTATION
Caltrans® DESIGN

BORDER LAST REVISED 7/2/2010
USERNAME = ℄ gharibiana
DGN FILE = ℄ ...\moc\xorail\sheet\SP-090-.sht
RELATIVE BORDER SCALE IS IN INCHES 0 1 2 3
UNIT 1812
PROJECT NUMBER & PHASE 07000211191

Dist	COUNTY	ROUTE	POST MILES TOTAL PROJECT	SHEET No.	TOTAL SHEETS
7	LA	5	29.4/31.6	1851	1931

David McCord 05-21-12
REGISTERED CIVIL ENGINEER DATE

05-21-12
PLANS APPROVAL DATE

REGISTERED PROFESSIONAL ENGINEER DAVID WILLIAM McCORD No. E-15317 Exp. June 30, 2013 ELECTRICAL STATE OF CALIFORNIA

THE STATE OF CALIFORNIA OR ITS OFFICERS OR AGENTS SHALL NOT BE RESPONSIBLE FOR THE ACCURACY OR COMPLETENESS OF SCANNED COPIES OF THIS PLAN SHEET.

SCRRA
279 E. ARROW HIGHWAY
SAN DIMAS, CA 91773

XORAIL
201 NORTH INDIAN HILL BLVD
SUITE 201
CLAREMONT, CA 91711

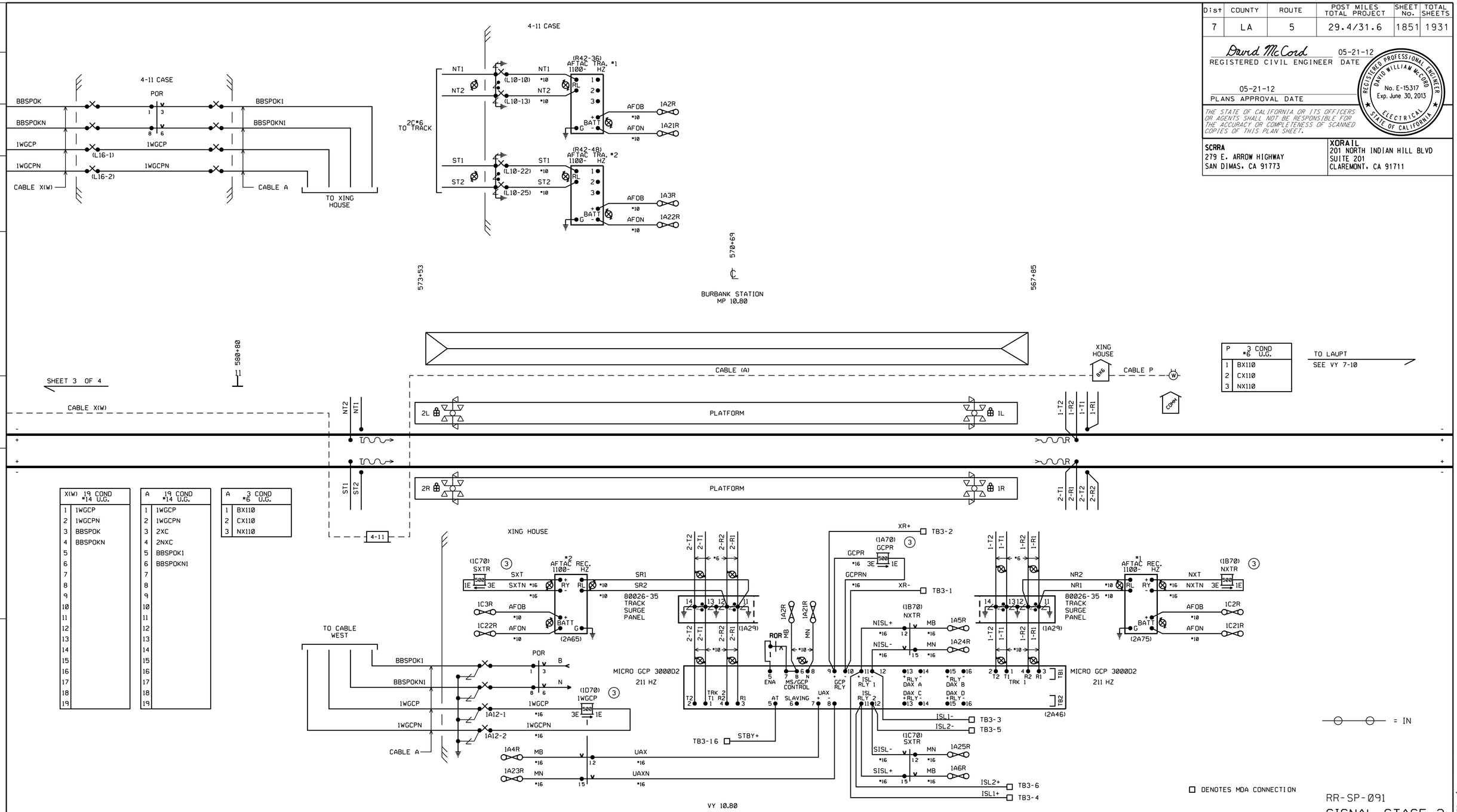

PTC WORK TO BE PERFORMED BY OTHERS.

REFERENCE ONLY

THIS PLAN ACCURATE FOR RAILROAD WORK ONLY.

RR-SP-091
SIGNAL STAGE 2

SIGNAL CIRCUIT PLAN
CP ALLEN-BUENA VISTA ST
VY 10-13
SH. 4 OF 4

RAILROAD SHEET NO.
91 OF 171

LAST REVISION 00-00-00
DATE PLOTTED = 7/18/2012
TIME PLOTTED = 2:48:35 PM

STATE OF CALIFORNIA - DEPARTMENT OF TRANSPORTATION
Caltrans® DESIGN
CONSULTANT FUNCTIONAL SUPERVISOR GLENN BREINDEL
CALCULATED-DESIGNED BY RAMON VALDEZ
CHECKED BY
REVISED BY
DATE REVISED

BORDER LAST REVISED 7/2/2010
USERNAME = gharibiana
DGN FILE = ...\moc\xorail\sheet\SP-091-.sht
RELATIVE BORDER SCALE IS IN INCHES 0 1 2 3
UNIT 1812
PROJECT NUMBER & PHASE 07000211191

Dist	COUNTY	ROUTE	POST MILES TOTAL PROJECT	SHEET No.	TOTAL SHEETS
7	LA	5	29.4/31.6	1852	1931

David McCord 05-21-12
REGISTERED CIVIL ENGINEER DATE

05-21-12
PLANS APPROVAL DATE

REGISTERED PROFESSIONAL ENGINEER DAVID WILLIAM McCORD No. E-15317 Exp. June 30, 2013 ELECTRICAL STATE OF CALIFORNIA

THE STATE OF CALIFORNIA OR ITS OFFICERS OR AGENTS SHALL NOT BE RESPONSIBLE FOR THE ACCURACY OR COMPLETENESS OF SCANNED COPIES OF THIS PLAN SHEET.

SCRRA
279 E. ARROW HIGHWAY
SAN DIMAS, CA 91773

XORAIL
201 NORTH INDIAN HILL BLVD
SUITE 201
CLAREMONT, CA 91711

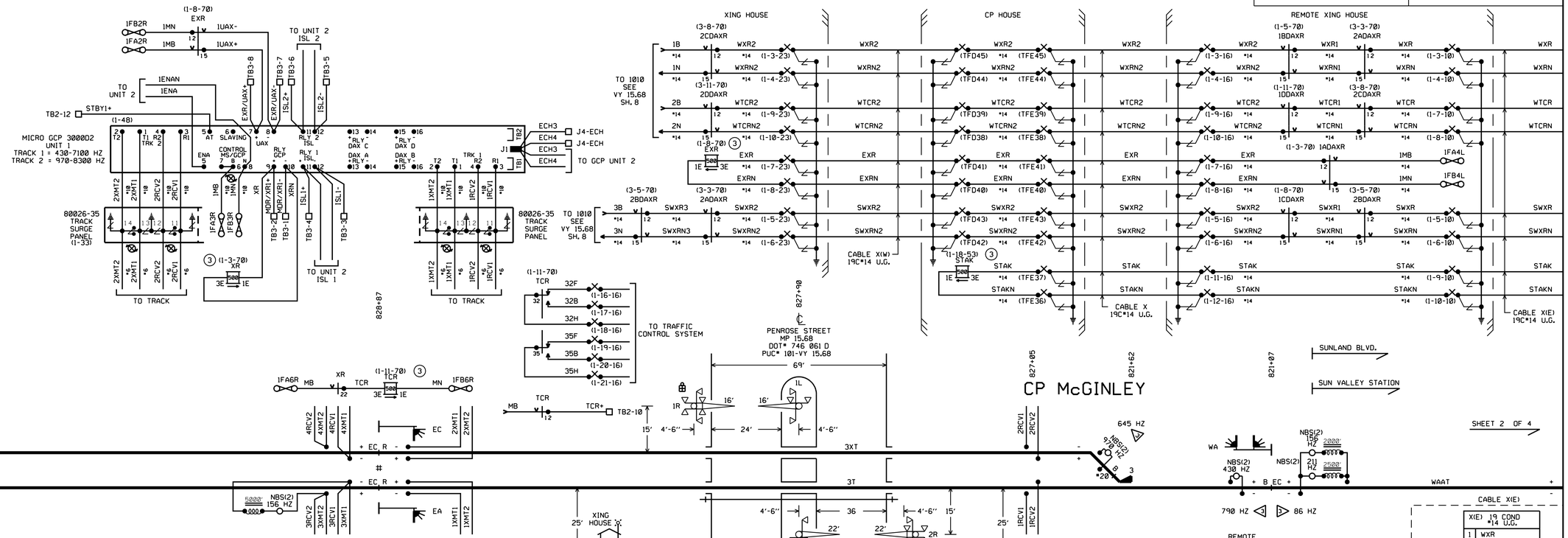

RR-SP-092
SIGNAL STAGE 2

SIGNAL CIRCUIT PLAN
BUENA VISTA ST/CP MCGINLEY
VY 13-15
SH. 1 OF 4

RAILROAD SHEET NO.
92 OF 171

STATE OF CALIFORNIA - DEPARTMENT OF TRANSPORTATION
Caltrans® DESIGN
CONSULTANT FUNCTIONAL SUPERVISOR: GLENN BREINDEL
CALCULATED-DESIGNED BY: RAMON VALDEZ
CHECKED BY
REVISED BY
DATE REVISED

LAST REVISION 00-00-00
DATE PLOTTED = 7/18/2012
TIME PLOTTED = 2:48:36 PM

BORDER LAST REVISED 7/2/2010
USERNAME = gharibiana
DGN FILE = ...\moc\xorail\sheet\SP-092-.sht
RELATIVE BORDER SCALE IS IN INCHES 0 1 2 3
UNIT 1812
PROJECT NUMBER & PHASE 07000211191

Dist	COUNTY	ROUTE	POST MILES TOTAL PROJECT	SHEET No.	TOTAL SHEETS
7	LA	5	29.4/31.6	1853	1931

David McCord 05-21-12
REGISTERED CIVIL ENGINEER DATE

05-21-12
PLANS APPROVAL DATE

REGISTERED PROFESSIONAL ENGINEER DAVID WILLIAM McCORD No. E-15317 Exp. June 30, 2013 ELECTRICAL STATE OF CALIFORNIA

THE STATE OF CALIFORNIA OR ITS OFFICERS OR AGENTS SHALL NOT BE RESPONSIBLE FOR THE ACCURACY OR COMPLETENESS OF SCANNED COPIES OF THIS PLAN SHEET.

SCRRA
279 E. ARROW HIGHWAY
SAN DIMAS, CA 91773

XORAIL
201 NORTH INDIAN HILL BLVD
SUITE 201
CLAREMONT, CA 91711

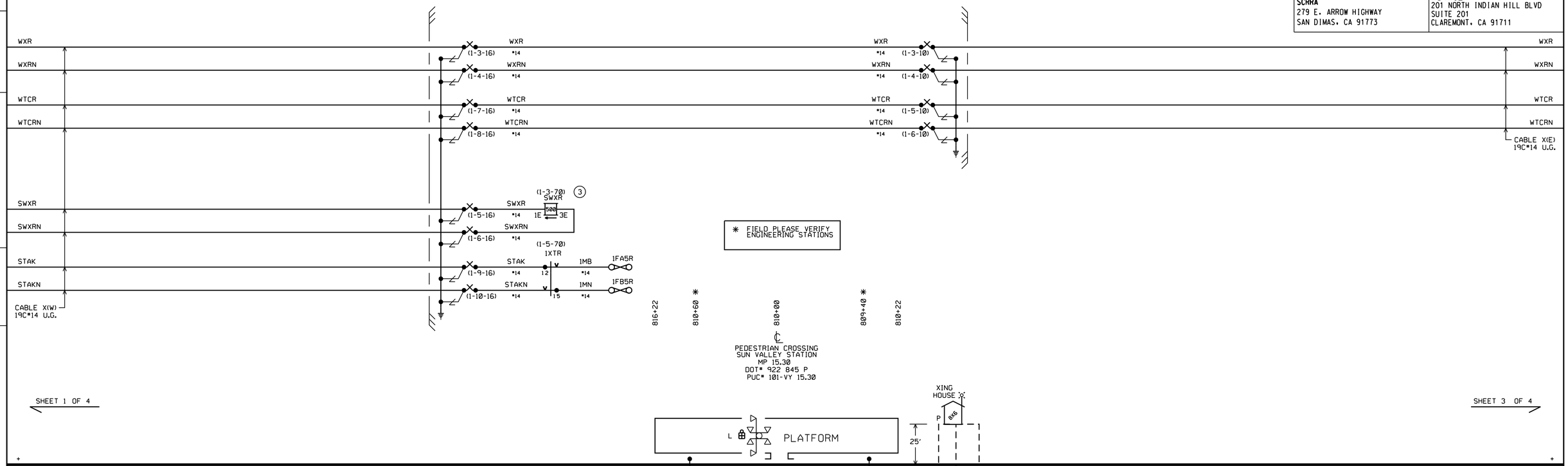

SHEET 1 OF 4

SHEET 3 OF 4

* FIELD PLEASE VERIFY ENGINEERING STATIONS

X(W) 19 COND #14 U.G.	
1	WXR
2	WXRN
3	SWXR
4	SWXRN
5	WTCR
6	WTCRN
7	STAK
8	STAKN
9	
10	
11	
12	
13	
14	
15	
16	
17	
18	
19	

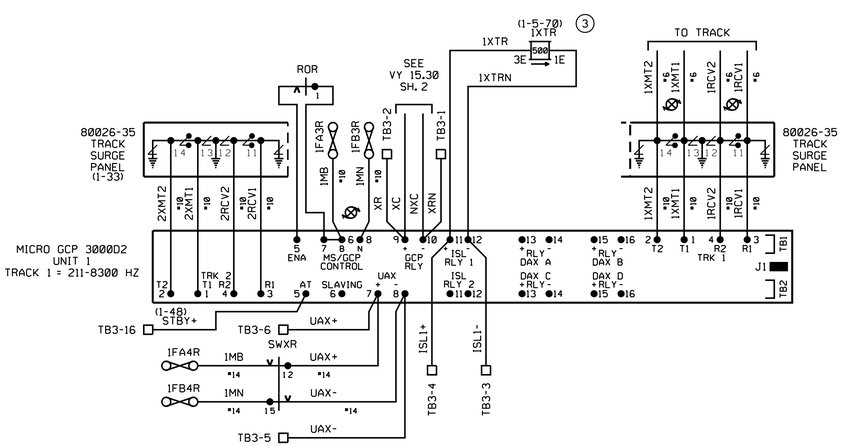

P 3 COND #6 U.G.	
1	BX110
2	NX110
3	CX110

□ - DENOTES MDA II CONNECTION.

VY 15.30

X(E) 19 COND #14 U.G.	
1	WXR
2	WXRN
3	WTCR
4	WTCRN
5	
6	
7	
8	
9	
10	
11	
12	
13	
14	
15	
16	
17	
18	
19	

= IN

PTC WORK TO BE PERFORMED BY OTHERS.

RR-SP-093

SIGNAL STAGE 2

SIGNAL CIRCUIT PLAN
BUENA VISTA STOP MCGINLEY
VY 13-15
SH. 2 OF 4

THIS PLAN ACCURATE FOR RAILROAD WORK ONLY.

REFERENCE ONLY

RAILROAD SHEET NO.
93 OF 171

STATE OF CALIFORNIA - DEPARTMENT OF TRANSPORTATION
Caltrans® DESIGN
CONSULTANT FUNCTIONAL SUPERVISOR: GLENN BREINDEL
CALCULATED-DESIGNED BY: RAMON VALDEZ
CHECKED BY
REVISED BY
DATE REVISED

LAST REVISION 00-00-00
DATE PLOTTED = 7/18/2012
TIME PLOTTED = 2:48:38 PM

Dist	COUNTY	ROUTE	POST MILES TOTAL PROJECT	SHEET No.	TOTAL SHEETS
7	LA	5	29.4/31.6	1854	1931

David McCord 05-21-12
REGISTERED CIVIL ENGINEER DATE

05-21-12
PLANS APPROVAL DATE

REGISTERED PROFESSIONAL ENGINEER DAVID WILLIAM McCORD No. E-15317 Exp. June 30, 2013 ELECTRICAL STATE OF CALIFORNIA

THE STATE OF CALIFORNIA OR ITS OFFICERS OR AGENTS SHALL NOT BE RESPONSIBLE FOR THE ACCURACY OR COMPLETENESS OF SCANNED COPIES OF THIS PLAN SHEET.

SCRRA
279 E. ARROW HIGHWAY
SAN DIMAS, CA 91773

XORAIL
201 NORTH INDIAN HILL BLVD
SUITE 201
CLAREMONT, CA 91711

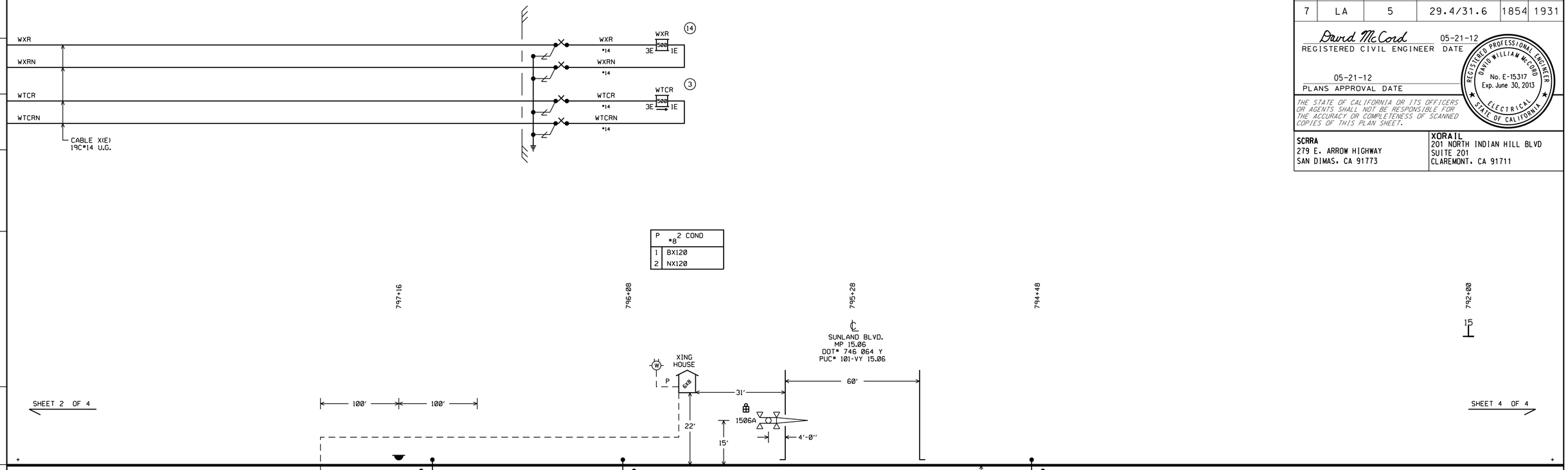

X(W) 19 COND #14 U.G.	
1	WXR
2	WXRN
3	WTCR
4	WTCRN
5	
6	
7	
8	
9	
10	
11	
12	
13	
14	
15	
16	
17	
18	
19	

P #8	2 COND
1	BX120
2	NX120

PTC WORK TO BE PERFORMED BY OTHERS.

□ - DENOTES DATA RECORDER CONNECTION.

VY 15.06

WARNING!

HIGHWAY-RAIL GRADE CROSSING WARNING SYSTEM AND HIGHWAY TRAFFIC SIGNALS ARE INTERCONNECTED.

BEFORE MODIFICATION is made to any operation which connects to or controls the timing of an active railroad warning system and/or timing and phasing of a traffic signal the appropriate party(ies) shall be notified and, if necessary, a joint inspection conducted.

RR-SP-094
SIGNAL STAGE 2

SIGNAL CIRCUIT PLAN
BUENA VISTA ST CP MCGINLEY
VY 13-15
SH. 3 OF 4

THIS PLAN ACCURATE FOR RAILROAD WORK ONLY.

REFERENCE ONLY

RAILROAD SHEET NO.
94 OF 171

STATE OF CALIFORNIA - DEPARTMENT OF TRANSPORTATION
Caltrans® DESIGN

CONSULTANT FUNCTIONAL SUPERVISOR: GLENN BREINDEL
CALCULATED-DESIGNED BY: RAMON VALDEZ
CHECKED BY
REVISED BY
DATE REVISED

LAST REVISION 00-00-00
DATE PLOTTED = 7/18/2012
TIME PLOTTED = 2:48:39 PM

Dist	COUNTY	ROUTE	POST MILES TOTAL PROJECT	SHEET No.	TOTAL SHEETS
7	LA	5	29.4/31.6	1855	1931

David McCord 05-21-12
REGISTERED CIVIL ENGINEER DATE

05-21-12
PLANS APPROVAL DATE

REGISTERED PROFESSIONAL ENGINEER DAVID WILLIAM McCORD No. E-15317 Exp. June 30, 2013 ELECTRICAL STATE OF CALIFORNIA

THE STATE OF CALIFORNIA OR ITS OFFICERS OR AGENTS SHALL NOT BE RESPONSIBLE FOR THE ACCURACY OR COMPLETENESS OF SCANNED COPIES OF THIS PLAN SHEET.

SCRRA
279 E. ARROW HIGHWAY
SAN DIMAS, CA 91773

XORAIL
201 NORTH INDIAN HILL BLVD
SUITE 201
CLAREMONT, CA 91711

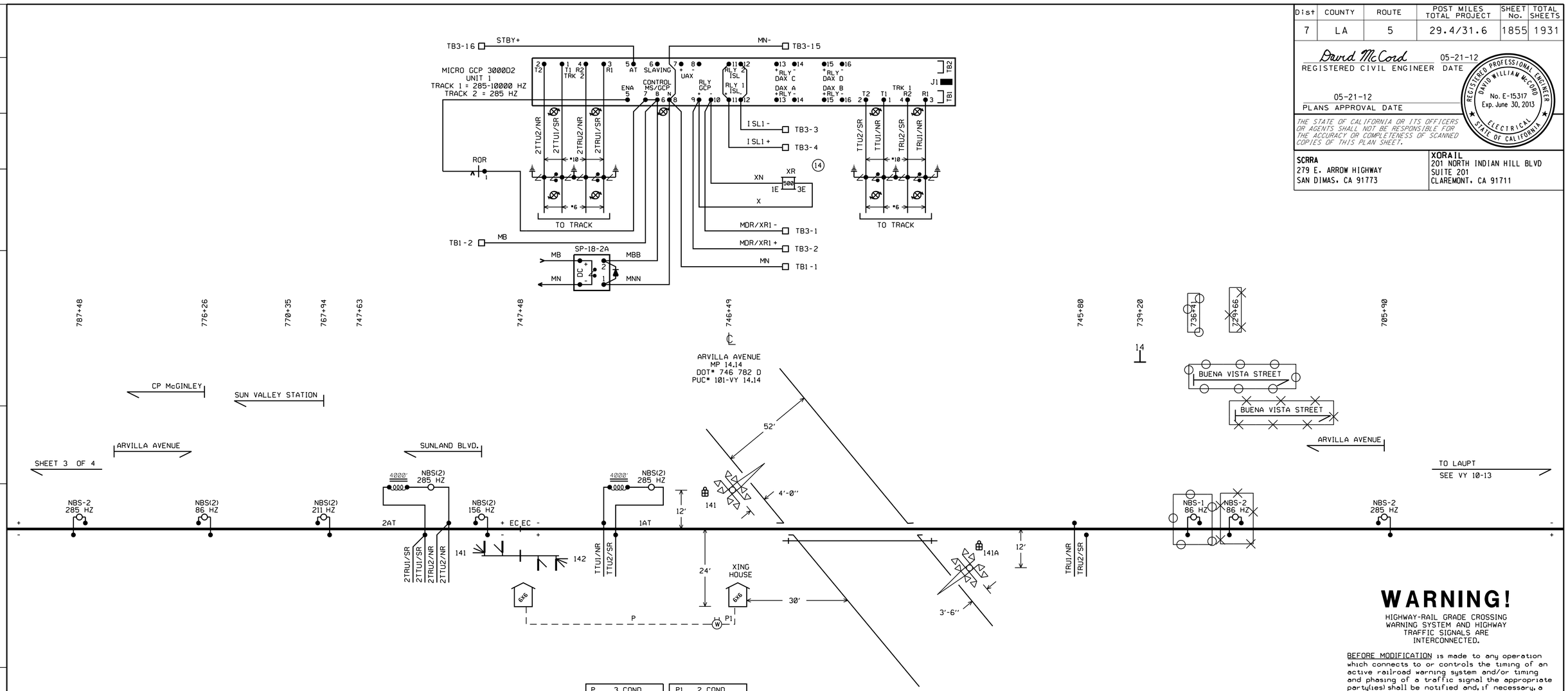

P	3 COND #6 U.G.
1	BX110
2	NX110
3	CX110

P1	2 COND #8
1	BX120
2	NX120

WARNING!

HIGHWAY-RAIL GRADE CROSSING WARNING SYSTEM AND HIGHWAY TRAFFIC SIGNALS ARE INTERCONNECTED.

BEFORE MODIFICATION is made to any operation which connects to or controls the timing of an active railroad warning system and/or timing and phasing of a traffic signal the appropriate party(ies) shall be notified and, if necessary, a joint inspection conducted.

PTC WORK TO BE PERFORMED BY OTHERS.

☐ - DENOTES DATA RECORDER CONNECTION.

VY 14.14

NOTICE:
THERE ARE FIELD VERIFY NOTES THAT HAVE NOT BEEN VERIFIED
DATE 11-17-03

RR-SP-095
SIGNAL STAGE 2

SIGNAL CIRCUIT PLAN
BUENA VISTA ST-CP MCGINLEY
VY 13-15
SH. 4 OF 4

RAILROAD SHEET NO.
95 OF 171

THIS PLAN ACCURATE FOR RAILROAD WORK ONLY.

STATE OF CALIFORNIA - DEPARTMENT OF TRANSPORTATION
Caltrans® DESIGN
CONSULTANT FUNCTIONAL SUPERVISOR GLENN BREINDEL
CALCULATED-DESIGNED BY RAMON VALDEZ
CHECKED BY
REVISED BY
DATE REVISED

LAST REVISION 00-00-00
DATE PLOTTED = ¢ 7/18/2012
TIME PLOTTED = ¢ 2:48:40 PM

BORDER LAST REVISED 7/2/2010
USERNAME = ¢ gharibiana
DGN FILE = ¢ ...\moc\xorail\sheet\SP-095-.sht
RELATIVE BORDER SCALE IS IN INCHES 0 1 2 3
UNIT 1812
PROJECT NUMBER & PHASE 07000211191

Dist	COUNTY	ROUTE	POST MILES TOTAL PROJECT	SHEET No.	TOTAL SHEETS
7	LA	5	29.4/31.6	1856	1931

David McCord 05-21-12
REGISTERED CIVIL ENGINEER DATE

05-21-12
PLANS APPROVAL DATE

REGISTERED PROFESSIONAL ENGINEER DAVID WILLIAM McCORD No. E-15317 Exp. June 30, 2013 ELECTRICAL STATE OF CALIFORNIA

THE STATE OF CALIFORNIA OR ITS OFFICERS OR AGENTS SHALL NOT BE RESPONSIBLE FOR THE ACCURACY OR COMPLETENESS OF SCANNED COPIES OF THIS PLAN SHEET.

SCRRA
279 E. ARROW HIGHWAY
SAN DIMAS, CA 91773

XORAIL
201 NORTH INDIAN HILL BLVD
SUITE 201
CLAREMONT, CA 91711

PTC WORK TO BE PERFORMED BY OTHERS.

CP OLIVE

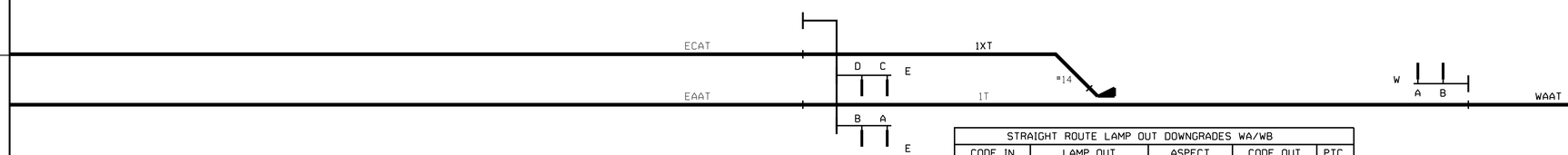

NOTE: REMOVE EAC3 JUMPER ON SHEET 9 WHEN NEW PTC SOFTWARE IS INSTALLED AT CP BURBANK JCT.

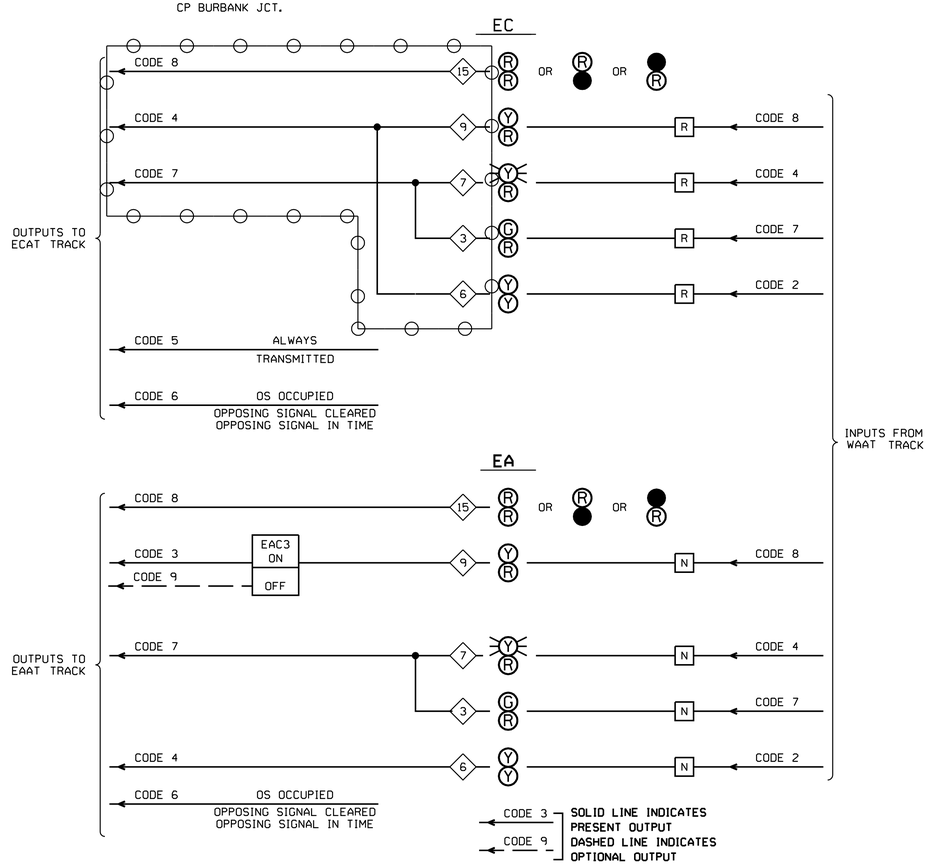

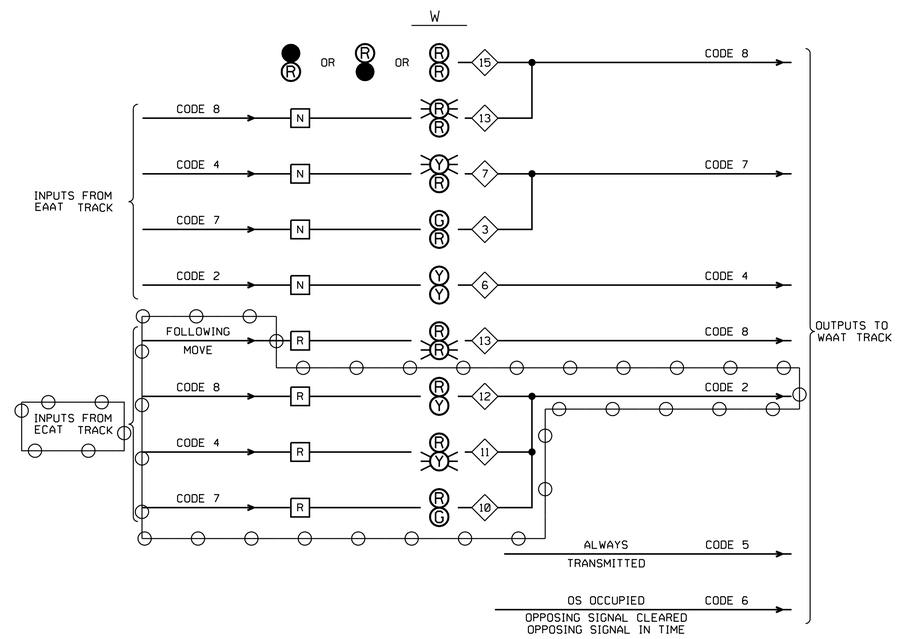

STRAIGHT ROUTE LAMP OUT DOWNGRADES WA/WB				
CODE IN	LAMP OUT	ASPECT	CODE OUT	PTC
7	TOP GRN	FY/R	7	7
7	TOP GRN & YEL	FR/R	8	13
7	ALL TOP	D/FR	8	13
7	BOTTOM RED	G/D	7	3
4	TOP YEL	FR/R	8	13
4	TOP YEL & RED	D/FR	8	13
4	BOTTOM RED	FY/D	7	7
2	TOP YEL	FR/R	8	13
2	TOP YEL & RED	D/FR	8	13
2	BOTTOM YEL	Y/R	8	9
2	BOTTOM YEL & RED	Y/D	8	9
8	TOP RED	D/FR	8	13
8	BOTTOM RED	FR/D	8	13
4WLOP ↓	TOP RED	D/FR	8	13
4WLOP ↓	BOTTOM RED	FR/D	8	13
NO CODE	TOP RED	D/R	8	15
NO CODE	BOTTOM RED	R/D	8	15
ANY CODE	ALL DARK	D/D	8	30

DIVERGING ROUTE LAMP OUT DOWNGRADES WA/WB				
CODE IN	LAMP OUT	ASPECT	CODE OUT	PTC
7, 4 OR 8	TOP RED	D/FR	8	13
7	BOTTOM GRN	R/FY	2	11
7	BOTTOM GRN &YEL	R/FR	8	13
7	ALL BOTTOM	FR/D	8	13
4	BOTTOM YEL	R/FR	8	13
4	BOTTOM YEL & RED	FR/D	8	13
8	BOTTOM YEL	R/FR	8	13
8	BOTTOM YEL & RED	FR/D	8	13
4WLOP ↓	TOP RED	D/FR	8	13
4WLOP ↓	BOTTOM RED	FR/D	8	13
* NO CODE	TOP RED	D/FR	8	13
* NO CODE	BOTTOM RED	FR/D	8	13
NO CODE	TOP RED	D/R	8	15
NO CODE	BOTTOM RED	R/D	8	15
ANY CODE	ALL DARK	D/D	8	30

* FOLLOWING MOVE

STRAIGHT ROUTE LAMP OUT DOWNGRADES EA/EB				
CODE IN	LAMP OUT	ASPECT	CODE OUT	PTC
7	TOP GRN	FY/R	7	7
7	TOP GRN & YEL	FR/R	8	13
7	ALL TOP	D/FR	8	13
7	BOTTOM RED	G/D	7	3
4	TOP YEL	FR/R	8	13
4	TOP YEL & RED	D/FR	8	13
4	BOTTOM RED	FY/D	7	7
2	TOP YEL	FR/R	8	13
2	TOP YEL & RED	D/FR	8	13
2	BOTTOM YEL	Y/R	3 OR 9*	9
2	BOTTOM YEL & RED	Y/D	3 OR 9*	9
8	TOP YEL	FR/R	8	13
8	TOP YEL & RED	D/FR	8	13
8	BOTTOM RED	Y/D	3 OR 9*	9
NO CODE	TOP RED	D/R	8	15
NO CODE	BOTTOM RED	R/D	8	15
ANY CODE	ALL DARK	D/D	8	30

* CODE 3 WITH EAC3
CODE 9 WITHOUT EAC3

STRAIGHT ROUTE LAMP OUT DOWNGRADES EC/ED				
CODE IN	LAMP OUT	ASPECT	CODE OUT	PTC
7	TOP GRN	FY/R	7	7
7	TOP GRN & YEL	FR/R	8	13
7	ALL TOP	D/FR	8	13
7	BOTTOM RED	G/D	7	3
4	TOP YEL	FR/R	8	13
4	TOP YEL & RED	D/FR	8	13
4	BOTTOM RED	FY/D	7	7
2	TOP YEL	FR/R	8	13
2	TOP YEL & RED	D/FR	8	13
2	BOTTOM YEL	Y/R	4	9
2	BOTTOM YEL & RED	Y/D	4	9
8	TOP YEL	FR/R	8	13
8	TOP YEL & RED	D/FR	8	13
8	BOTTOM RED	Y/D	4	9
NO CODE	TOP RED	D/R	8	15
NO CODE	BOTTOM RED	R/D	8	15
ANY CODE	ALL DARK	D/D	8	30

NOTES:
- N - SWITCH NORMAL
- R - SWITCH REVERSE
- # - PTC CODE NUMBER
- = OUT
- = IN

DATE IN SERVICE _____
S. ENGINEER _____
INSPECTOR _____

RR-SP-096
SIGNAL STAGE 3

ASPECT SHEET
CP OLIVE
VY 11.13
SH. 1 OF 14

TIME RELEASE ON ALL ROUTES IS SET AT 6 MINUTES 00 SECONDS

THIS PLAN ACCURATE FOR RAILROAD WORK ONLY.

RAILROAD SHEET NO.
96 OF 171

STATE OF CALIFORNIA - DEPARTMENT OF TRANSPORTATION
Caltrans DESIGN
CONSULTANT FUNCTIONAL SUPERVISOR GLENN BREINDEL
CALCULATED-DESIGNED BY RAMON VALDEZ
CHECKED BY
REVISED BY
DATE REVISED
LAST REVISION 00-00-00
DATE PLOTTED = 7/18/2012
TIME PLOTTED = 2:48:41 PM

Dist	COUNTY	ROUTE	POST MILES TOTAL PROJECT	SHEET No.	TOTAL SHEETS
7	LA	5	29.4/31.6	1857	1931

David McCord 05-21-12
REGISTERED CIVIL ENGINEER DATE

05-21-12
PLANS APPROVAL DATE

REGISTERED PROFESSIONAL ENGINEER DAVID WILLIAM McCORD No. E-15317 Exp. June 30, 2013 ELECTRICAL STATE OF CALIFORNIA

THE STATE OF CALIFORNIA OR ITS OFFICERS OR AGENTS SHALL NOT BE RESPONSIBLE FOR THE ACCURACY OR COMPLETENESS OF SCANNED COPIES OF THIS PLAN SHEET.

SCRRA
279 E. ARROW HIGHWAY
SAN DIMAS, CA 91773

XORAIL
201 NORTH INDIAN HILL BLVD
SUITE 201
CLAREMONT, CA 91711

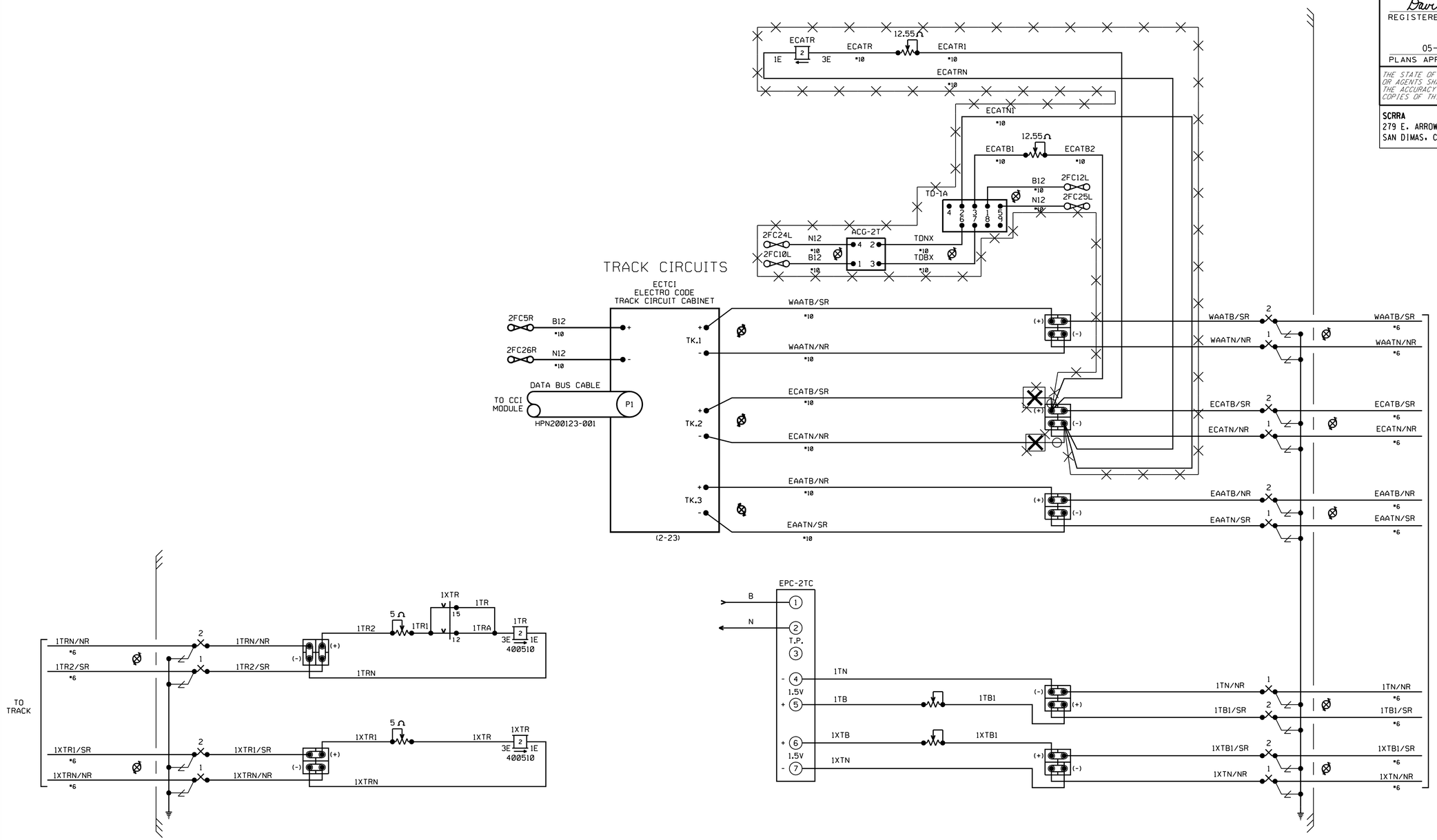

PTC WORK TO BE PERFORMED BY OTHERS.

DATE IN SERVICE _____
S. ENGINEER _____
INSPECTOR _____

RR-SP-097
SIGNAL STAGE 3

TRACK CIRCUITS
CP OLIVE
VY 11.13
SH. 2 OF 14

RAILROAD SHEET NO.
97 OF 171

THIS PLAN ACCURATE FOR RAILROAD WORK ONLY.

STATE OF CALIFORNIA - DEPARTMENT OF TRANSPORTATION
Caltrans® DESIGN
CONSULTANT FUNCTIONAL SUPERVISOR GLENN BREINDEL
CALCULATED-DESIGNED BY RAMON VALDEZ
CHECKED BY
REVISED BY
DATE REVISED

LAST REVISION 00-00-00
DATE PLOTTED = ¢ 7/18/2012
TIME PLOTTED = ¢ 2:48:42 PM

Dist	COUNTY	ROUTE	POST MILES TOTAL PROJECT	SHEET No.	TOTAL SHEETS
7	LA	5	29.4/31.6	1858	1931

David McCord 05-21-12
REGISTERED CIVIL ENGINEER DATE

05-21-12
PLANS APPROVAL DATE

REGISTERED PROFESSIONAL ENGINEER DAVID WILLIAM McCORD No. E-15317 Exp. June 30, 2013 ELECTRICAL STATE OF CALIFORNIA

THE STATE OF CALIFORNIA OR ITS OFFICERS OR AGENTS SHALL NOT BE RESPONSIBLE FOR THE ACCURACY OR COMPLETENESS OF SCANNED COPIES OF THIS PLAN SHEET.

SCRRA
279 E. ARROW HIGHWAY
SAN DIMAS, CA 91773

XORAIL
201 NORTH INDIAN HILL BLVD
SUITE 201
CLAREMONT, CA 91711

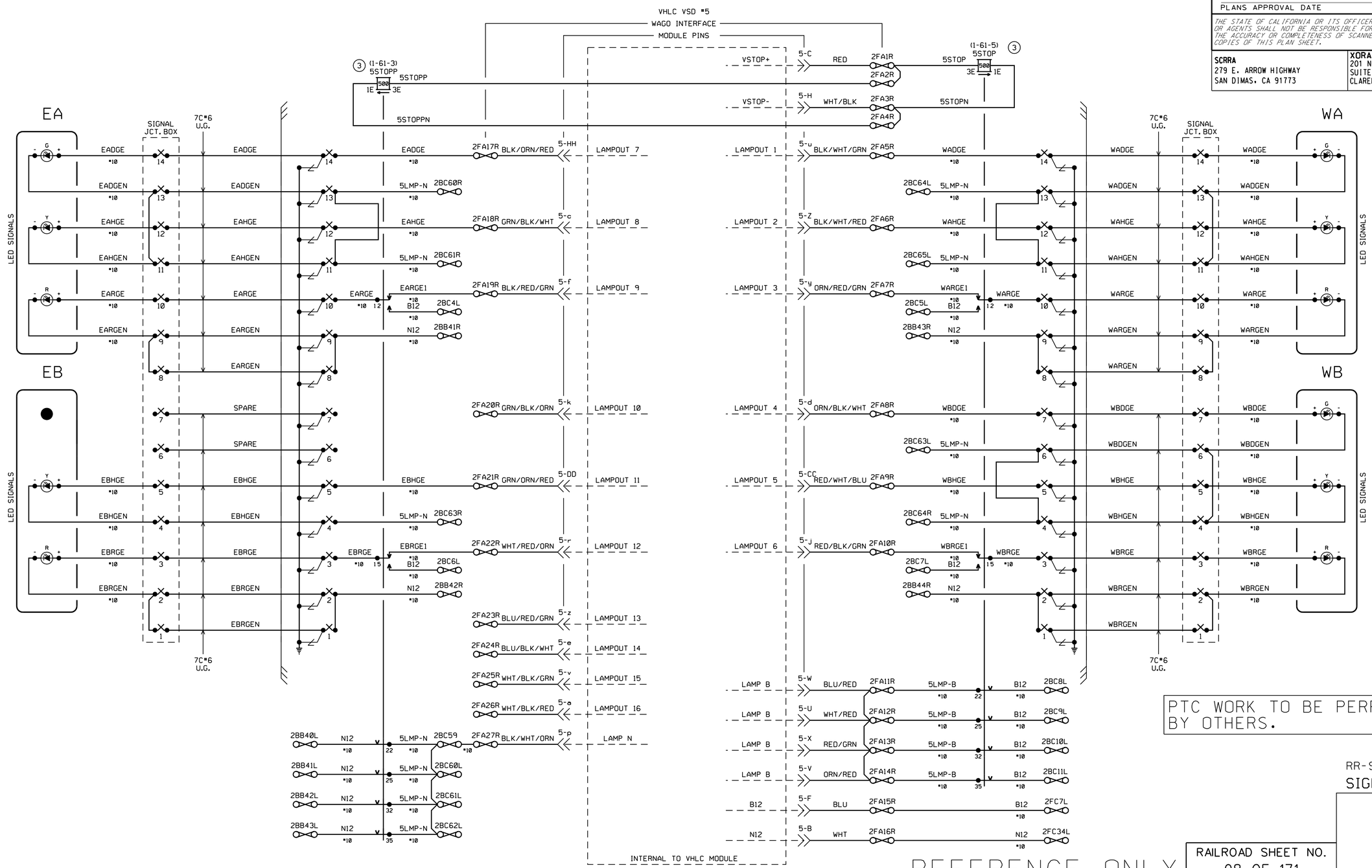

PTC WORK TO BE PERFORMED BY OTHERS.

RR-SP-098
SIGNAL STAGE 3

SIGNAL LIGHTING
CP OLIVE
VY 11.13
SH. 3 OF 14

THIS PLAN ACCURATE FOR RAILROAD WORK ONLY.

REFERENCE ONLY

RAILROAD SHEET NO.
98 OF 171

STATE OF CALIFORNIA - DEPARTMENT OF TRANSPORTATION
Caltrans® DESIGN

CONSULTANT FUNCTIONAL SUPERVISOR: GLENN BREINDEL
CALCULATED-DESIGNED BY: RAMON VALDEZ
CHECKED BY
REVISED BY
DATE REVISED

LAST REVISION 00-00-00
DATE PLOTTED = 7/18/2012
TIME PLOTTED = 2:48:43 PM

Dist	COUNTY	ROUTE	POST MILES TOTAL PROJECT	SHEET No.	TOTAL SHEETS
7	LA	5	29.4/31.6	1859	1931

David McCord 05-21-12
REGISTERED CIVIL ENGINEER DATE

05-21-12
PLANS APPROVAL DATE

REGISTERED PROFESSIONAL ENGINEER DAVID WILLIAM McCORD No. E-15317 Exp. June 30, 2013 ELECTRICAL STATE OF CALIFORNIA

THE STATE OF CALIFORNIA OR ITS OFFICERS OR AGENTS SHALL NOT BE RESPONSIBLE FOR THE ACCURACY OR COMPLETENESS OF SCANNED COPIES OF THIS PLAN SHEET.

SCRRA
279 E. ARROW HIGHWAY
SAN DIMAS, CA 91773

XORAIL
201 NORTH INDIAN HILL BLVD
SUITE 201
CLAREMONT, CA 91711

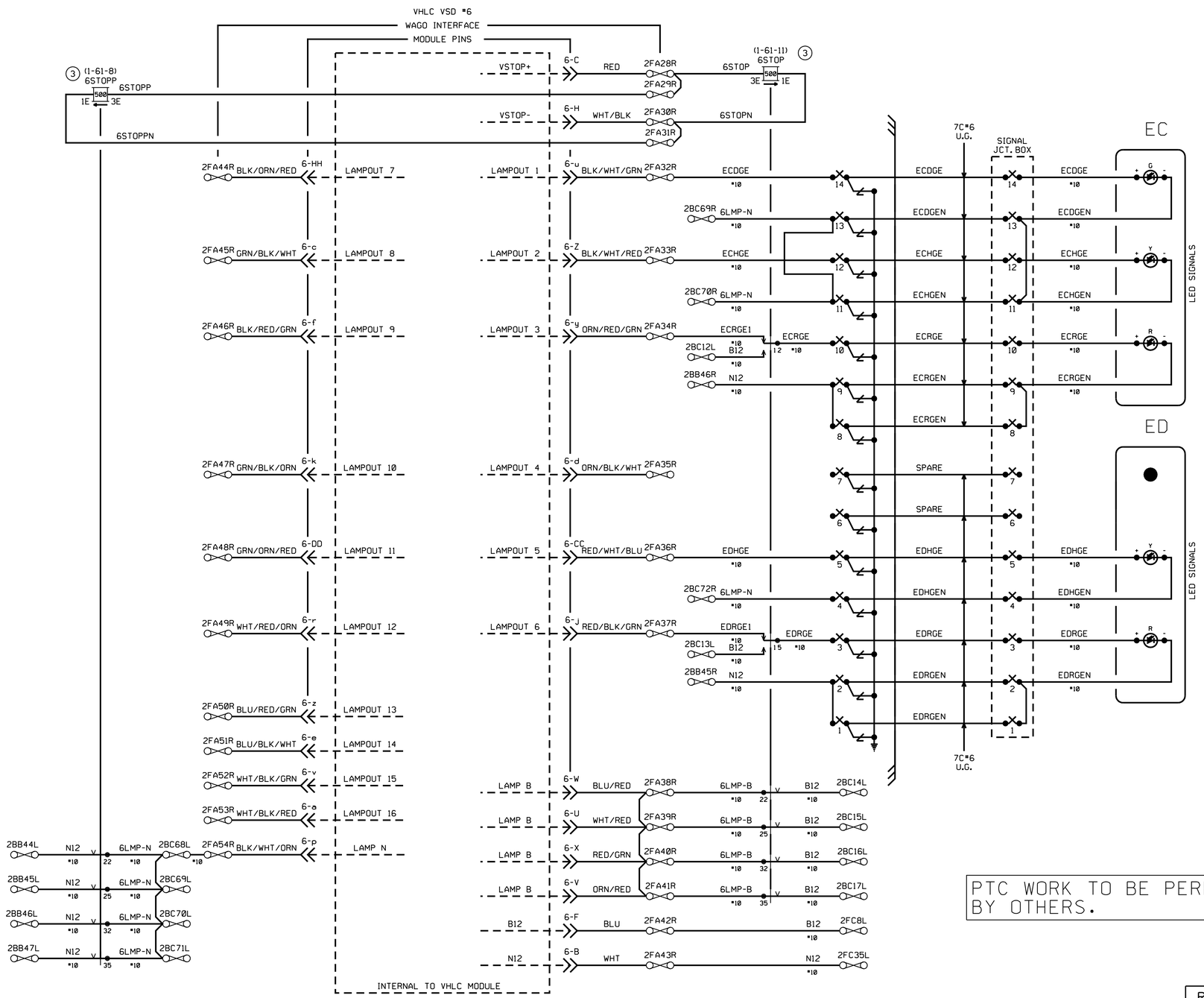

PTC WORK TO BE PERFORMED BY OTHERS.

RR-SP-099
SIGNAL STAGE 3

SIGNAL LIGHTING
CP OLIVE
VY 11.13
SH. 4 OF 14

THIS PLAN ACCURATE FOR RAILROAD WORK ONLY.

REFERENCE ONLY

RAILROAD SHEET NO.
99 OF 171

STATE OF CALIFORNIA - DEPARTMENT OF TRANSPORTATION
Caltrans® DESIGN

CONSULTANT FUNCTIONAL SUPERVISOR: GLENN BREINDEL
CALCULATED-DESIGNED BY: RAMON VALDEZ
CHECKED BY
REVISED BY
DATE REVISED

LAST REVISION 00-00-00
DATE PLOTTED = 7/18/2012
TIME PLOTTED = 2:48:44 PM

BORDER LAST REVISED 7/2/2010
USERNAME = gharibiana
DGN FILE = ...\moc\xorail\sheet\SP-099-.sht
RELATIVE BORDER SCALE IS IN INCHES 0 1 2 3
UNIT 1812
PROJECT NUMBER & PHASE 07000211191

Dist	COUNTY	ROUTE	POST MILES TOTAL PROJECT	SHEET No.	TOTAL SHEETS
7	LA	5	29.4/31.6	1860	1931

David McCord 05-21-12
REGISTERED CIVIL ENGINEER DATE

05-21-12
PLANS APPROVAL DATE

REGISTERED PROFESSIONAL ENGINEER DAVID WILLIAM McCORD No. E-15317 Exp. June 30, 2013 ELECTRICAL STATE OF CALIFORNIA

THE STATE OF CALIFORNIA OR ITS OFFICERS OR AGENTS SHALL NOT BE RESPONSIBLE FOR THE ACCURACY OR COMPLETENESS OF SCANNED COPIES OF THIS PLAN SHEET.

SCRRA
279 E. ARROW HIGHWAY
SAN DIMAS, CA 91773

XORAIL
201 NORTH INDIAN HILL BLVD
SUITE 201
CLAREMONT, CA 91711

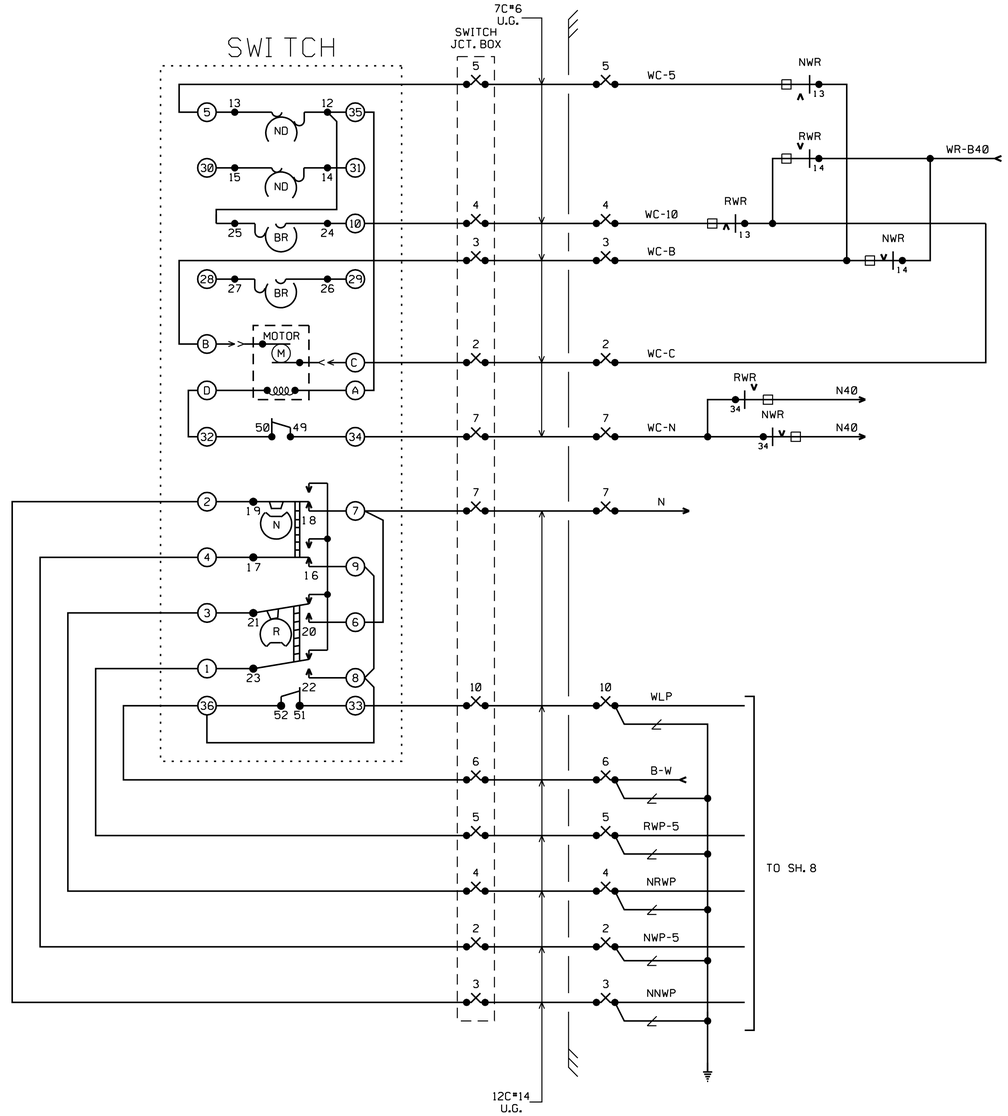

PTC WORK TO BE PERFORMED BY OTHERS.

1) WIRING SHOWN IS FOR SWITCH WITH RIGHT HAND POINT NORMALLY CLOSED.
2) WITH SWITCH IN NORMAL POSITION, SET INDICATION CAMS SO CONTACTS 19 & 17 ARE CLOSED (DOWN) AND CONTACTS 21 & 23 ARE SHUNTED BY SHUNT BAR.
3) ALL WIRES TO MOTOR ARE #9 COPPER.
4) CONTACTS 49-50 AND 51-52 OPEN WHEN SELECTOR LEVER IS PLACED IN HAND THROW.

RR-SP-100
SIGNAL STAGE 3

SWITCH CIRCUITS
CP OLIVE
VY 11.13
SH. 5 OF 14

THIS PLAN ACCURATE FOR RAILROAD WORK ONLY.

REFERENCE ONLY

RAILROAD SHEET NO.
100 OF 171

STATE OF CALIFORNIA - DEPARTMENT OF TRANSPORTATION
Caltrans® DESIGN
CONSULTANT FUNCTIONAL SUPERVISOR: GLENN BREINDEL
CALCULATED-DESIGNED BY: RAMON VALDEZ
CHECKED BY
REVISED BY
DATE REVISED

LAST REVISION 00-00-00
DATE PLOTTED = 7/18/2012
TIME PLOTTED = 2:48:45 PM

Dist	COUNTY	ROUTE	POST MILES TOTAL PROJECT	SHEET No.	TOTAL SHEETS
7	LA	5	29.4/31.6	1861	1931

David McCord 05-21-12
REGISTERED CIVIL ENGINEER DATE

05-21-12
PLANS APPROVAL DATE

REGISTERED PROFESSIONAL ENGINEER DAVID WILLIAM McCORD No. E-15317 Exp. June 30, 2013 ELECTRICAL STATE OF CALIFORNIA

THE STATE OF CALIFORNIA OR ITS OFFICERS OR AGENTS SHALL NOT BE RESPONSIBLE FOR THE ACCURACY OR COMPLETENESS OF SCANNED COPIES OF THIS PLAN SHEET.

SCRRA
279 E. ARROW HIGHWAY
SAN DIMAS, CA 91773

XORAIL
201 NORTH INDIAN HILL BLVD
SUITE 201
CLAREMONT, CA 91711

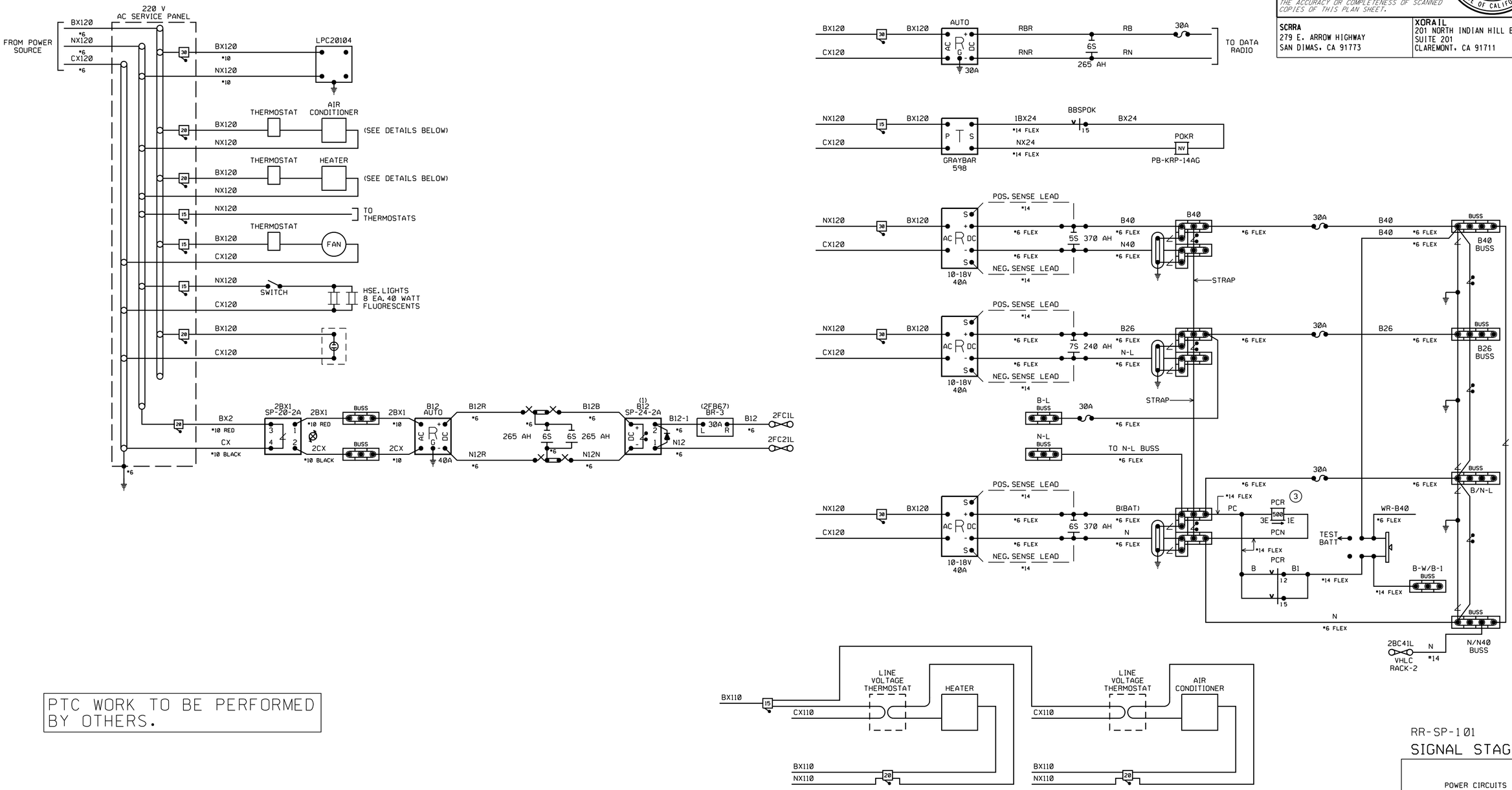

PTC WORK TO BE PERFORMED BY OTHERS.

THIS PLAN ACCURATE FOR RAILROAD WORK ONLY.

REFERENCE ONLY

RR-SP-101
SIGNAL STAGE 3

POWER CIRCUITS
CP OLIVE
VY 11.13
SH. 6 OF 14

RAILROAD SHEET NO.
101 OF 171

STATE OF CALIFORNIA - DEPARTMENT OF TRANSPORTATION
Caltrans® DESIGN
CONSULTANT FUNCTIONAL SUPERVISOR: GLENN BREINDEL
CALCULATED-DESIGNED BY: RAMON VALDEZ
CHECKED BY
REVISED BY
DATE REVISED

LAST REVISION 00-00-00
DATE PLOTTED = 7/18/2012
TIME PLOTTED = 2:48:46 PM

BORDER LAST REVISED 7/2/2010
USERNAME = gharibiana
DGN FILE = ...\moc\xorail\sheet\SP-101.sht
RELATIVE BORDER SCALE IS IN INCHES 0 1 2 3
UNIT 1812
PROJECT NUMBER & PHASE 07000211191

Dist	COUNTY	ROUTE	POST MILES TOTAL PROJECT	SHEET No.	TOTAL SHEETS
7	LA	5	29.4/31.6	1862	1931

David McCord 05-21-12
REGISTERED CIVIL ENGINEER DATE

05-21-12
PLANS APPROVAL DATE

REGISTERED PROFESSIONAL ENGINEER DAVID WILLIAM McCORD No. E-15317 Exp. June 30, 2013 ELECTRICAL STATE OF CALIFORNIA

THE STATE OF CALIFORNIA OR ITS OFFICERS OR AGENTS SHALL NOT BE RESPONSIBLE FOR THE ACCURACY OR COMPLETENESS OF SCANNED COPIES OF THIS PLAN SHEET.

SCRRA
279 E. ARROW HIGHWAY
SAN DIMAS, CA 91773

XORAIL
201 NORTH INDIAN HILL BLVD
SUITE 201
CLAREMONT, CA 91711

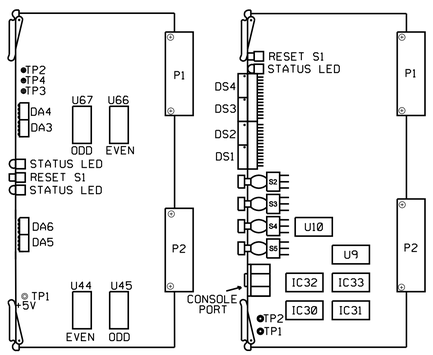

VITAL LOGIC PROCESSOR

AUXILIARY COMMUNICATIONS PROCESSOR

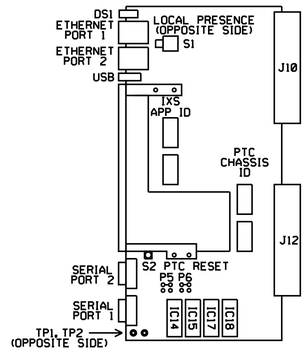

SITE SPECIFIC / PTC PROCESSOR

CHASSIS ID 1113

VHLC (REAR VIEW)
(2-32)

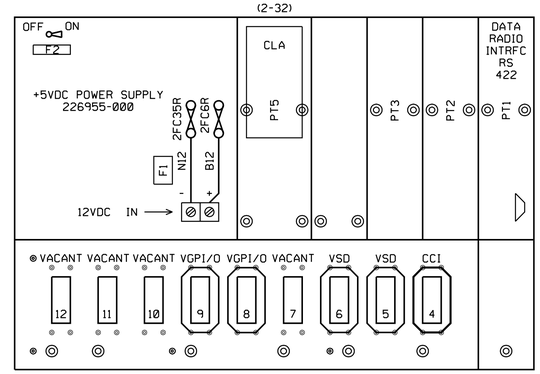

LOCATION # 34

CONTROLS									INDICATIONS								
BIT	1	2	3	4	5	6	7	8	BIT	1	2	3	4	5	6	7	8
WORD1	1NWS	1RWS	WHS	EHS					WORD1	1NWK	1RWK	1TK	WGK	EGK	TEK	LOK	
WORD2	EGFS	WGFS							WORD2			WAAK	EAAK	ECAK	POK	LCK	
WORD3									WORD3								

PTC MESSAGE

TYPE	SWITCH	SIGNAL	SIGNAL	SIGNAL
NAME	SW	EA	W	EC
OFFSET	0	2	7	12

A5PTC VER. _____

U44	U66
CKSUM _____	CKSUM _____
U45	U67
CKSUM _____	CKSUM _____

ATCS VER

IC32	IC33
CKSUM _____	CKSUM _____
IC30	IC31
CKSUM _____	CKSUM _____
U10	U9
CKSUM XXXX	CKSUM XXXX
CRC XXXX	CRC XXXX

SSM PROGRAM XXXXXX

IC14 CKSUM XXXX	IC17 CKSUM ____
CRC XXXX	CRC ____
IC15 CKSUM XXXX	IC18 CKSUM ____
CRC XXXX	CRC ____

PTC EXECUTIVE
XXXX VER. X.X OR GREATER

PTC MAP XXXXXX
CRC _____

PTC CFG XXXXXX
CRC _____

SITE SPECIFIC MODULE JUMPER LOCATIONS

EPROM	P3	P4	P5	P6
27C64	1-3	1-3	1-3	1-3
27C128	1-3	1-3	1-3	1-3
27C256	2-4	1-3	1-3	1-3
27C512	2-4	2-4	1-3	1-3
27C010	2-4	2-4	2-4	1-3

MODULE CABLES

MODULE	HPN
CCI	200123-001
VSD	200125-020
VGPI/O	200124-120
16VGPI	200661-120
CLA	202037-005

TYPICAL INSTALLATION OF EPROM

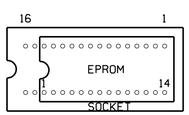

*FIELD ENTER DATA

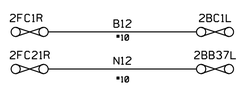

LOCATION NAME: CP OLIVE

ATCS INFORMATION		SIGNAL EQUIPMENT: (VHLC)			
SIGNAL CODE		MCP CODE		CPC CODE	
TYPE	5	TYPE	5	TYPE	2
RR ID SCAX	340	RR ID SCAX	340	RR ID SCAX	340
CODE LINE	16	CODE LINE	16	NODE	01
SITE ID	34	SITE ID	34	CODE LINE	5516
DEVICE ID		DEVICE ID			

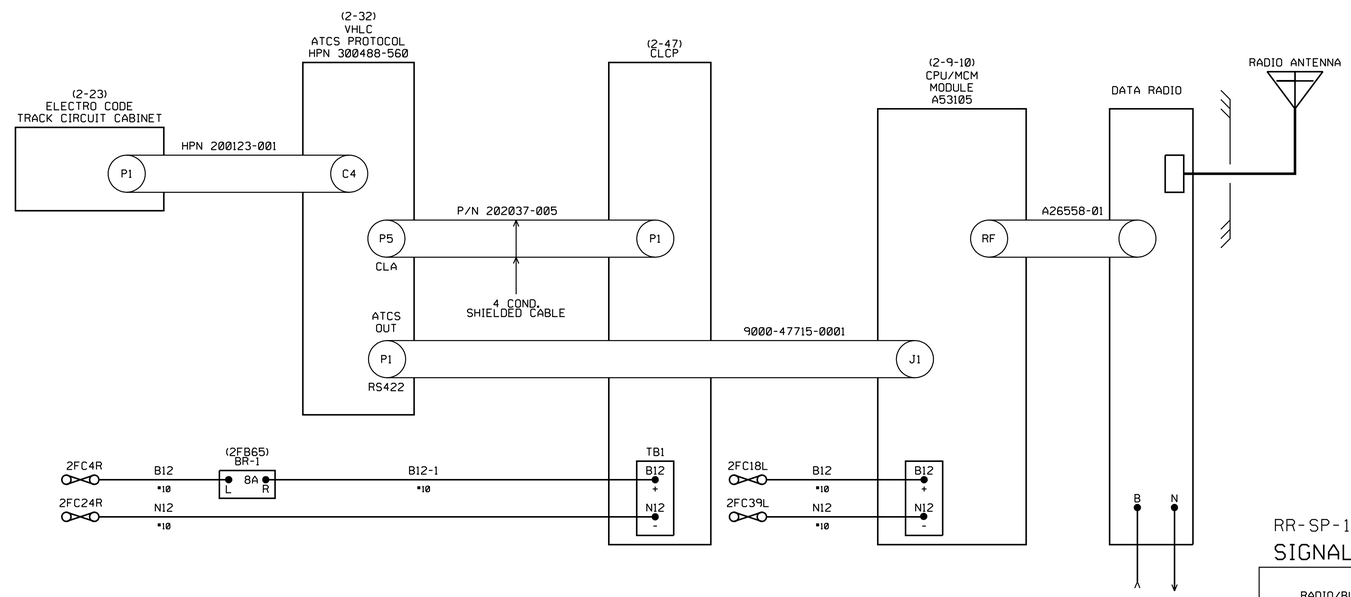

PTC WORK TO BE PERFORMED BY OTHERS.

REFERENCE ONLY

THIS PLAN ACCURATE FOR RAILROAD WORK ONLY.

RR-SP-102
SIGNAL STAGE 3

RADIO/BLOCK DIAGRAM & CODE ASSIGNMENTS
CP OLIVE
VY 11.13
SH. 7 OF 14

RAILROAD SHEET NO.
102 OF 171

LAST REVISION 00-00-00
DATE PLOTTED = 7/18/2012
TIME PLOTTED = 2:48:47 PM

STATE OF CALIFORNIA - DEPARTMENT OF TRANSPORTATION
Caltrans® DESIGN
CONSULTANT FUNCTIONAL SUPERVISOR GLENN BREINDEL
CALCULATED-DESIGNED BY RAMON VALDEZ
CHECKED BY
REVISED BY
DATE REVISED

BORDER LAST REVISED 7/2/2010
USERNAME = gharibiana
DGN FILE = ...\moc\xorail\sheet\SP-102.sht
RELATIVE BORDER SCALE IS IN INCHES 0 1 2 3
UNIT 1812
PROJECT NUMBER & PHASE 07000211191

Dist	COUNTY	ROUTE	POST MILES TOTAL PROJECT	SHEET No.	TOTAL SHEETS
7	LA	5	29.4/31.6	1863	1931

David McCord 05-21-12
REGISTERED CIVIL ENGINEER DATE

05-21-12
PLANS APPROVAL DATE

REGISTERED PROFESSIONAL ENGINEER DAVID WILLIAM McCORD No. E-15317 Exp. June 30, 2013 ELECTRICAL STATE OF CALIFORNIA

THE STATE OF CALIFORNIA OR ITS OFFICERS OR AGENTS SHALL NOT BE RESPONSIBLE FOR THE ACCURACY OR COMPLETENESS OF SCANNED COPIES OF THIS PLAN SHEET.

SCRRA
279 E. ARROW HIGHWAY
SAN DIMAS, CA 91773

XORAIL
201 NORTH INDIAN HILL BLVD
SUITE 201
CLAREMONT, CA 91711

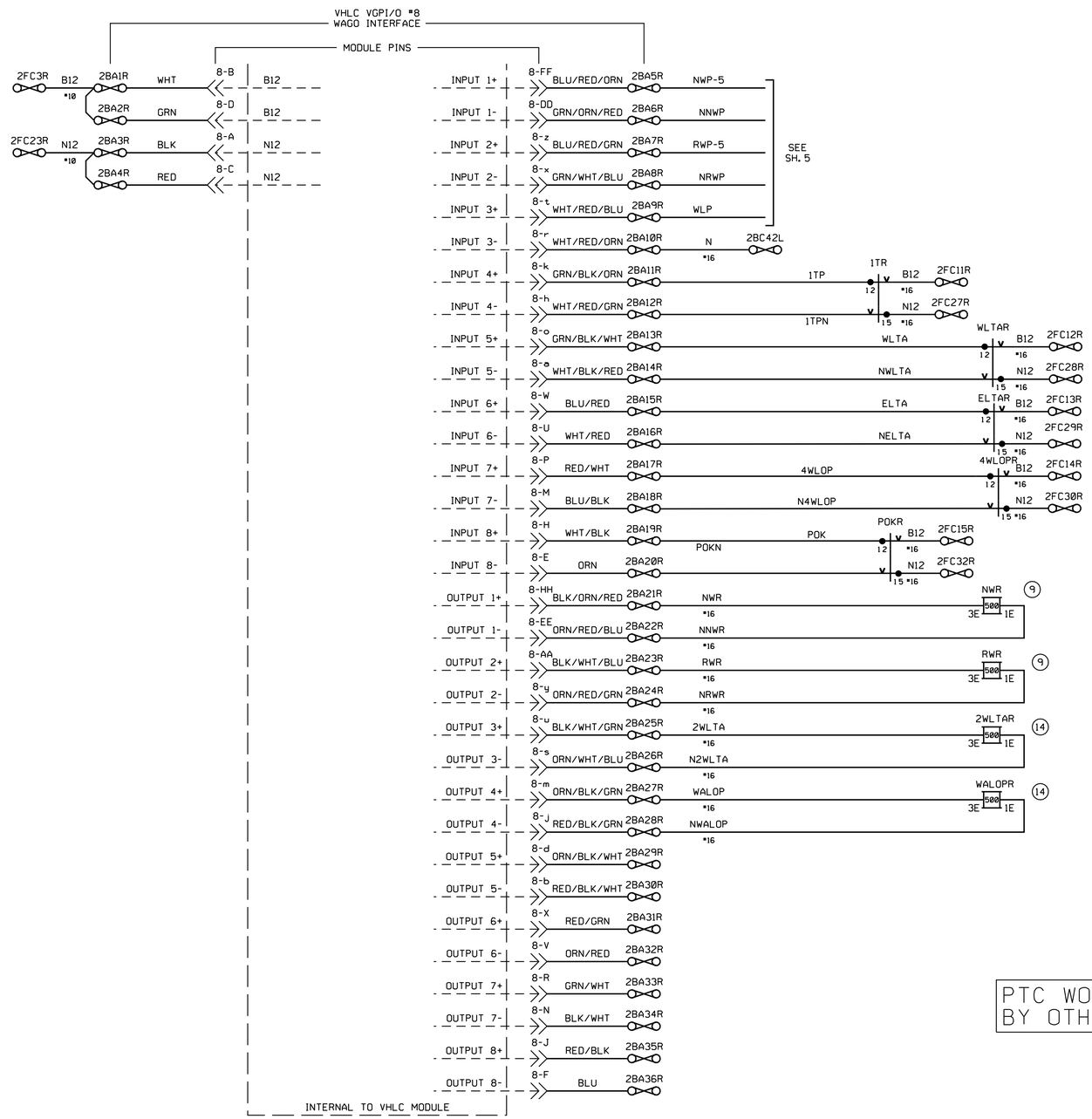

PTC WORK TO BE PERFORMED BY OTHERS.

RR-SP-103
SIGNAL STAGE 3

VHLC I/O CONNECTIONS
CP OLIVE
VY 11.13
SH. 8 OF 14

RAILROAD SHEET NO.
103 OF 171

REFERENCE ONLY

THIS PLAN ACCURATE FOR RAILROAD WORK ONLY.

STATE OF CALIFORNIA - DEPARTMENT OF TRANSPORTATION
Caltrans® DESIGN
CONSULTANT FUNCTIONAL SUPERVISOR GLENN BREINDEL
CALCULATED-DESIGNED BY RAMON VALDEZ
CHECKED BY
REVISED BY
DATE REVISED

LAST REVISION 00-00-00
DATE PLOTTED = 7/18/2012
TIME PLOTTED = 2:48:48 PM

Dist	COUNTY	ROUTE	POST MILES TOTAL PROJECT	SHEET No.	TOTAL SHEETS
7	LA	5	29.4/31.6	1864	1931

David McCord 05-21-12
REGISTERED CIVIL ENGINEER DATE

05-21-12
PLANS APPROVAL DATE

REGISTERED PROFESSIONAL ENGINEER DAVID WILLIAM McCORD No. E-15317 Exp. June 30, 2013 ELECTRICAL STATE OF CALIFORNIA

THE STATE OF CALIFORNIA OR ITS OFFICERS OR AGENTS SHALL NOT BE RESPONSIBLE FOR THE ACCURACY OR COMPLETENESS OF SCANNED COPIES OF THIS PLAN SHEET.

SCRRA
279 E. ARROW HIGHWAY
SAN DIMAS, CA 91773

XORAIL
201 NORTH INDIAN HILL BLVD
SUITE 201
CLAREMONT, CA 91711

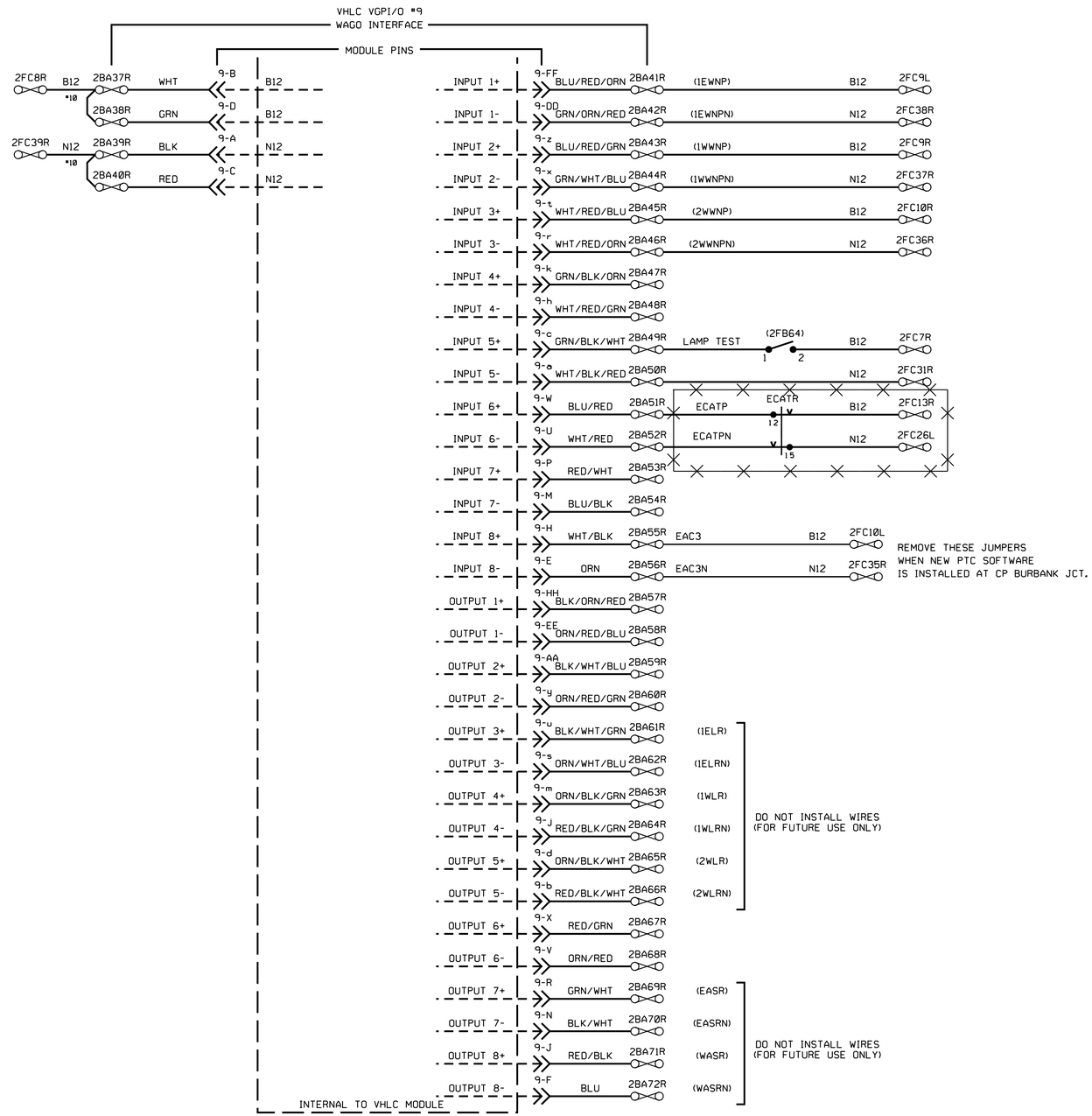

REMOVE THESE JUMPERS WHEN NEW PTC SOFTWARE IS INSTALLED AT CP BURBANK JCT.

= OUT
= IN

DATE IN SERVICE _____
S. ENGINEER _____
INSPECTOR _____

PTC WORK TO BE PERFORMED BY OTHERS.

THIS PLAN ACCURATE FOR RAILROAD WORK ONLY.

RR-SP-104
SIGNAL STAGE 3

VHLC I/O CONNECTIONS
CP OLIVE
VY 11.13
SH. 9 OF 14

RAILROAD SHEET NO.
104 OF 171

LAST REVISION 00-00-00
DATE PLOTTED = 7/18/2012
TIME PLOTTED = 2:48:49 PM

STATE OF CALIFORNIA - DEPARTMENT OF TRANSPORTATION
Caltrans® DESIGN
CONSULTANT FUNCTIONAL SUPERVISOR GLENN BREINDEL
CALCULATED-DESIGNED BY RAMON VALDEZ
CHECKED BY
REVISED BY
DATE REVISED

Dist	COUNTY	ROUTE	POST MILES TOTAL PROJECT	SHEET No.	TOTAL SHEETS
7	LA	5	29.4/31.6	1865	1931

David McCord 05-21-12
REGISTERED CIVIL ENGINEER DATE

05-21-12
PLANS APPROVAL DATE

REGISTERED PROFESSIONAL ENGINEER
DAVID WILLIAM McCORD
No. E-15317
Exp. June 30, 2013
ELECTRICAL
STATE OF CALIFORNIA

THE STATE OF CALIFORNIA OR ITS OFFICERS OR AGENTS SHALL NOT BE RESPONSIBLE FOR THE ACCURACY OR COMPLETENESS OF SCANNED COPIES OF THIS PLAN SHEET.

SCRRA
279 E. ARROW HIGHWAY
SAN DIMAS, CA 91773

XORAIL
201 NORTH INDIAN HILL BLVD
SUITE 201
CLAREMONT, CA 91711

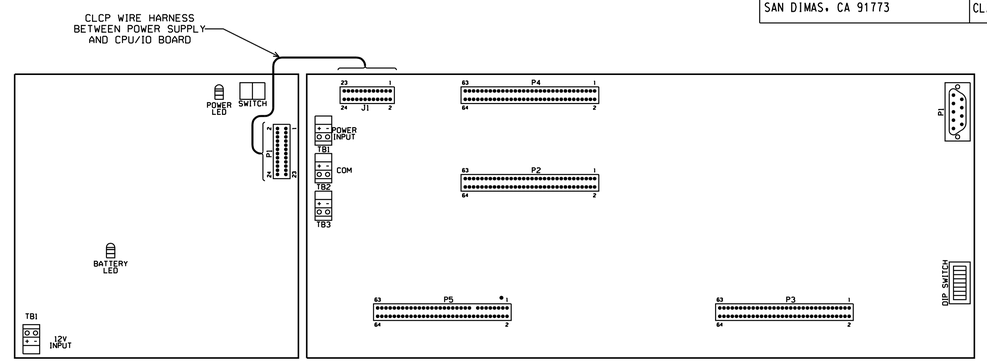

CUSTOM LCP POWER SUPPLY (FRONT)

CUSTOM LCP CPU/IO MODULE (FRONT)

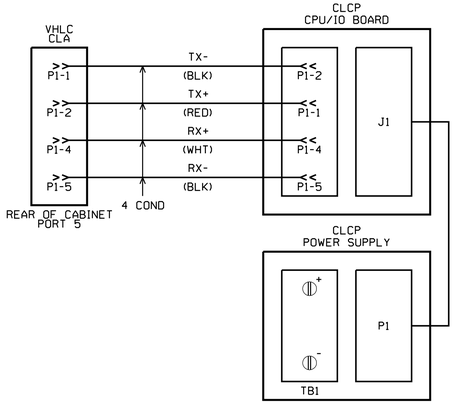

DIP SWITCH LOCATED ON CLCP CPU/IO BOARD

	OFF	ON	
NO START SWITCH		1	START SWITCH
NOT USED		2	
128		3	
256		4	
LOOP BACK		5	
COMMON ANODE		6	COMMON CATHODE
NORMALLY CLOSED		7	NORMALLY OPEN
NORMAL MODE		8	SELF TEST MODE

LCP EPROM

VER. 1.3

CHKSUM 8B3C

(2-47)
LCP PANEL FRONT VIEW

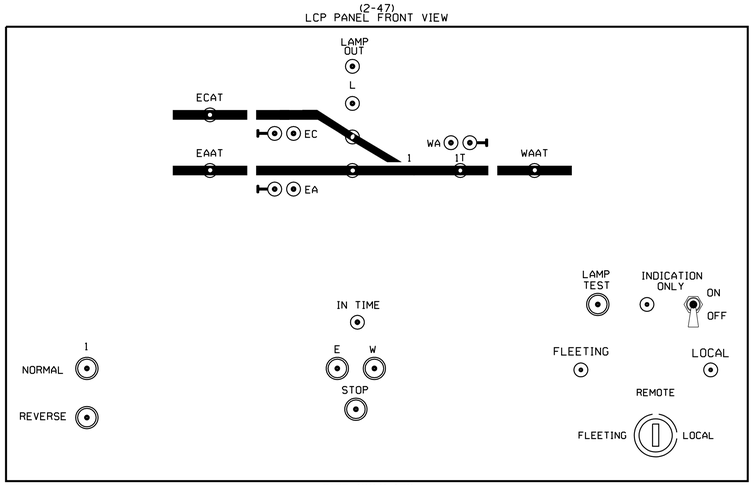

SIZE 12" X 17"

PTC WORK TO BE PERFORMED BY OTHERS.

THIS PLAN ACCURATE FOR RAILROAD WORK ONLY.

REFERENCE ONLY

RR-SP-105
SIGNAL STAGE 3

LOCAL CONTROL PANEL
CP OLIVE
VY 11.13
SH.10 OF 14

RAILROAD SHEET NO.
105 OF 171

STATE OF CALIFORNIA - DEPARTMENT OF TRANSPORTATION
Caltrans DESIGN

CONSULTANT FUNCTIONAL SUPERVISOR: GLENN BREINDEL

CALCULATED-DESIGNED BY: RAMON VALDEZ

CHECKED BY

REVISED BY

DATE REVISED

LAST REVISION 00-00-00

DATE PLOTTED = 7/18/2012
TIME PLOTTED = 2:48:49 PM

Dist	COUNTY	ROUTE	POST MILES TOTAL PROJECT	SHEET No.	TOTAL SHEETS
7	LA	5	29.4/31.6	1866	1931

David McCord 05-21-12
REGISTERED CIVIL ENGINEER DATE

05-21-12
PLANS APPROVAL DATE

REGISTERED PROFESSIONAL ENGINEER DAVID WILLIAM McCORD No. E-15317 Exp. June 30, 2013 ELECTRICAL STATE OF CALIFORNIA

THE STATE OF CALIFORNIA OR ITS OFFICERS OR AGENTS SHALL NOT BE RESPONSIBLE FOR THE ACCURACY OR COMPLETENESS OF SCANNED COPIES OF THIS PLAN SHEET.

SCRRA
279 E. ARROW HIGHWAY
SAN DIMAS, CA 91773

XORAIL
201 NORTH INDIAN HILL BLVD
SUITE 201
CLAREMONT, CA 91711

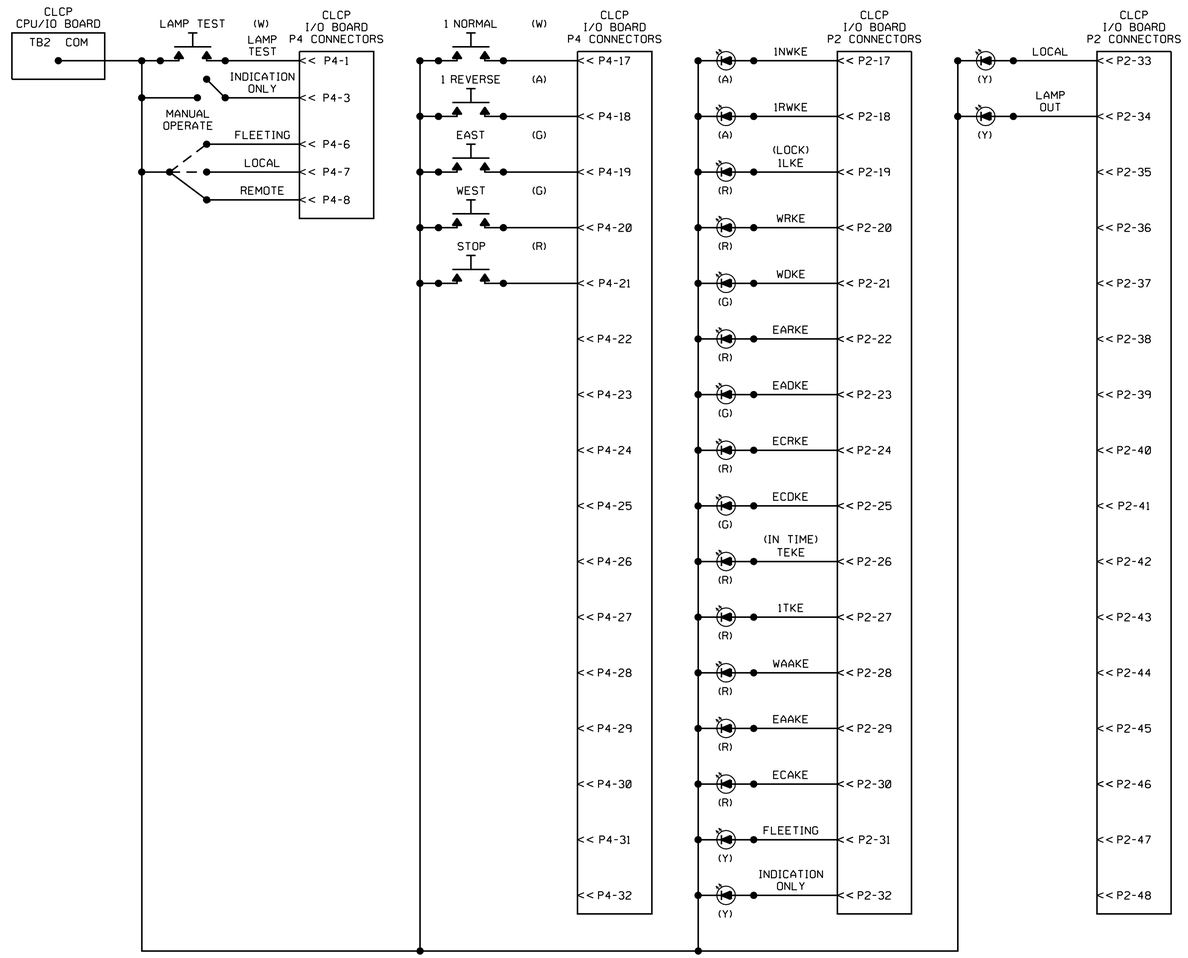

PTC WORK TO BE PERFORMED BY OTHERS.

RR-SP-106
SIGNAL STAGE 3

LOCAL CONTROL PANEL CIRCUITS
CP OLIVE
VY 11.13
SH. 11 OF 14

RAILROAD SHEET NO.
106 OF 171

REFERENCE ONLY

THIS PLAN ACCURATE FOR RAILROAD WORK ONLY.

STATE OF CALIFORNIA - DEPARTMENT OF TRANSPORTATION
Caltrans® DESIGN

CONSULTANT FUNCTIONAL SUPERVISOR: GLENN BREINDEL
CALCULATED-DESIGNED BY: RAMON VALDEZ
CHECKED BY
REVISED BY
DATE REVISED

LAST REVISION 00-00-00
DATE PLOTTED = 7/18/2012
TIME PLOTTED = 2:48:51 PM

Dist	COUNTY	ROUTE	POST MILES TOTAL PROJECT	SHEET No.	TOTAL SHEETS
7	LA	5	29.4/31.6	1867	1931

David McCord 05-21-12
REGISTERED CIVIL ENGINEER DATE

05-21-12
PLANS APPROVAL DATE

REGISTERED PROFESSIONAL ENGINEER DAVID WILLIAM McCORD No. E-15317 Exp. June 30, 2013 ELECTRICAL STATE OF CALIFORNIA

THE STATE OF CALIFORNIA OR ITS OFFICERS OR AGENTS SHALL NOT BE RESPONSIBLE FOR THE ACCURACY OR COMPLETENESS OF SCANNED COPIES OF THIS PLAN SHEET.

SCRRA
279 E. ARROW HIGHWAY
SAN DIMAS, CA 91773

XORAIL
201 NORTH INDIAN HILL BLVD
SUITE 201
CLAREMONT, CA 91711

RACK - 2 FRONT VIEW

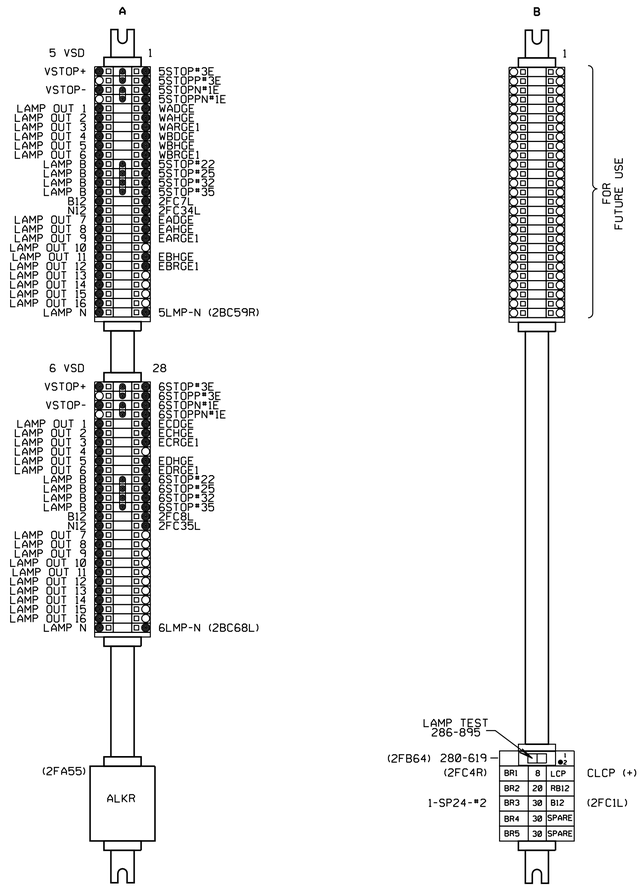

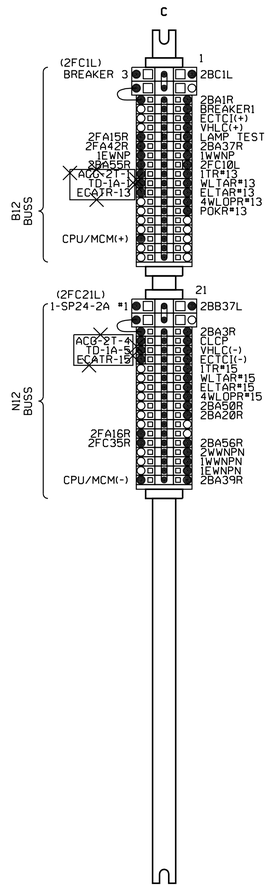

RACK - 2 REAR VIEW

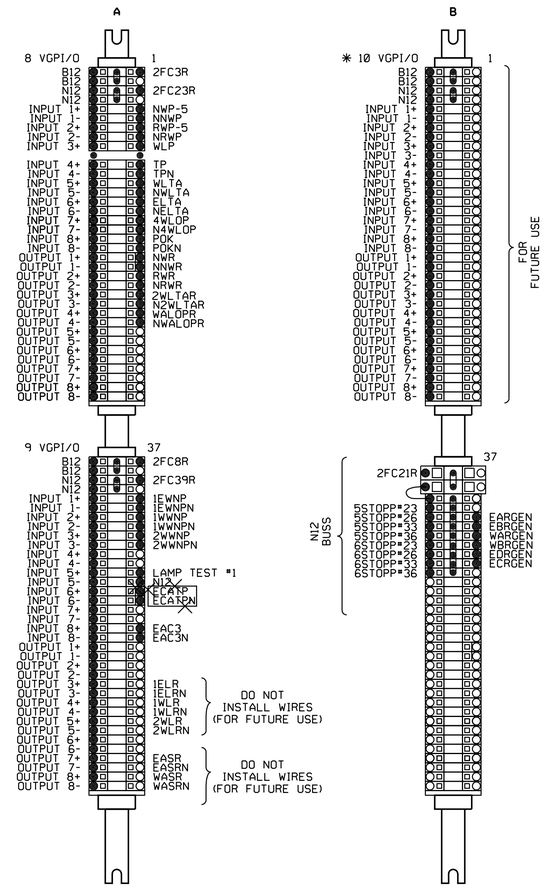

DATE IN SERVICE _____
S. ENGINEER _____
INSPECTOR _____

RR-SP-107
SIGNAL STAGE 3

PTC WORK TO BE PERFORMED BY OTHERS.

WAGO DETAIL
CP OLIVE
VY 11.13
SH. 12 OF 14

RAILROAD SHEET NO.
107 OF 171

THIS PLAN ACCURATE FOR RAILROAD WORK ONLY.

STATE OF CALIFORNIA - DEPARTMENT OF TRANSPORTATION
Caltrans® DESIGN
CONSULTANT FUNCTIONAL SUPERVISOR: GLENN BREINDEL
CALCULATED-DESIGNED BY: RAMON VALDEZ
CHECKED BY
REVISED BY
DATE REVISED

LAST REVISION 00-00-00
DATE PLOTTED = 7/18/2012
TIME PLOTTED = 3:39:45 PM

Dist	COUNTY	ROUTE	POST MILES TOTAL PROJECT	SHEET No.	TOTAL SHEETS
7	LA	5	29.4/31.6	1868	1931

David McCord 05-21-12
REGISTERED CIVIL ENGINEER DATE

05-21-12
PLANS APPROVAL DATE

REGISTERED PROFESSIONAL ENGINEER
DAVID WILLIAM McCORD
No. E-15317
Exp. June 30, 2013
ELECTRICAL
STATE OF CALIFORNIA

THE STATE OF CALIFORNIA OR ITS OFFICERS OR AGENTS SHALL NOT BE RESPONSIBLE FOR THE ACCURACY OR COMPLETENESS OF SCANNED COPIES OF THIS PLAN SHEET.

SCRRA
279 E. ARROW HIGHWAY
SAN DIMAS, CA 91773

XORAIL
201 NORTH INDIAN HILL BLVD
SUITE 201
CLAREMONT, CA 91711

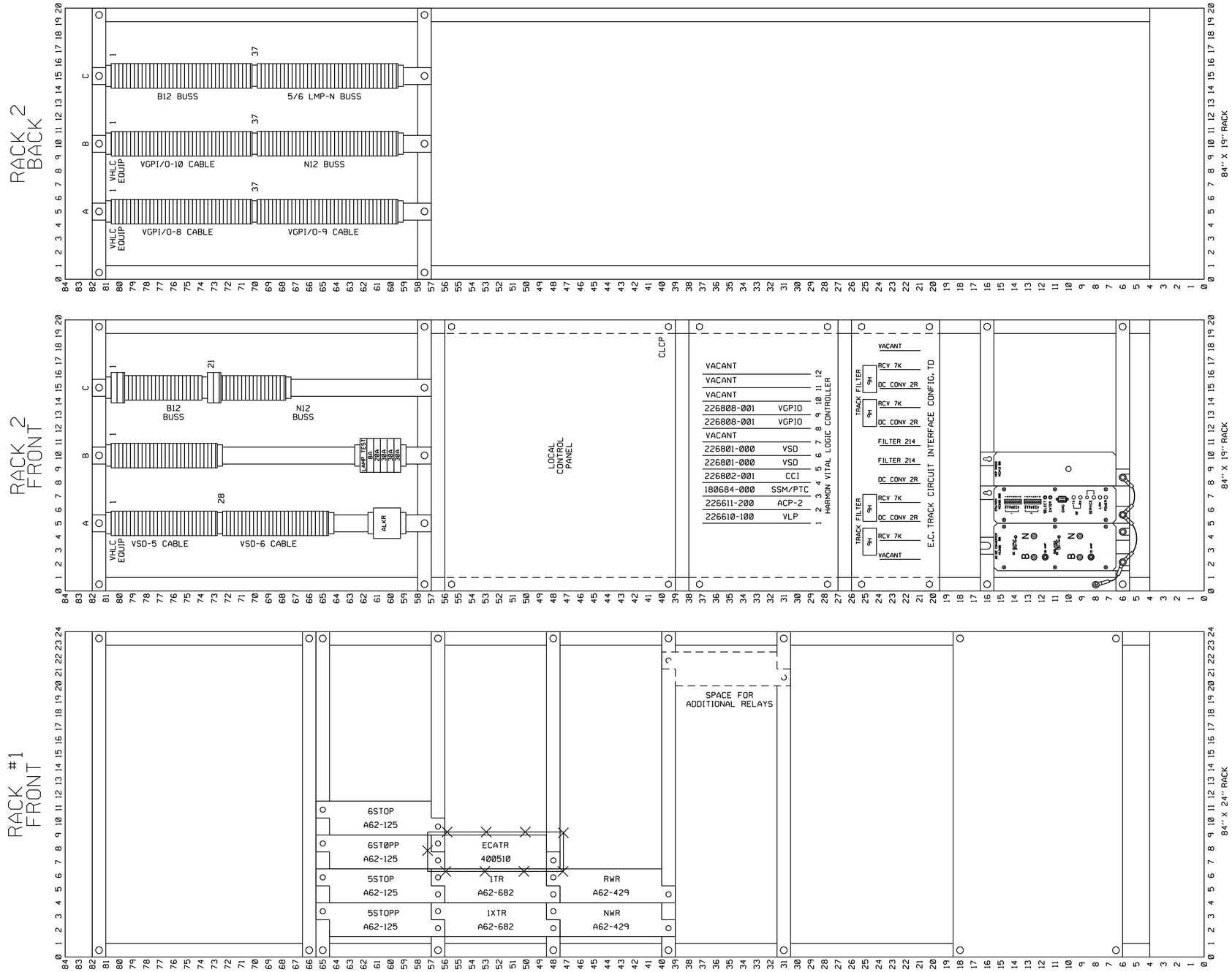

PTC WORK TO BE PERFORMED BY OTHERS.

= OUT
= IN

DATE IN SERVICE _____
S. ENGINEER _____
INSPECTOR _____

RR-SP-108
SIGNAL STAGE 3

RACK #2 LAYOUT
CP OLIVE
VY 11.13
SH. 13 OF 14

RAILROAD SHEET NO.
108 OF 171

THIS PLAN ACCURATE FOR RAILROAD WORK ONLY.

STATE OF CALIFORNIA - DEPARTMENT OF TRANSPORTATION
Caltrans® DESIGN
CONSULTANT FUNCTIONAL SUPERVISOR: GLENN BREINDEL
CALCULATED-DESIGNED BY: RAMON VALDEZ
CHECKED BY
REVISED BY
DATE REVISED

LAST REVISION 00-00-00
DATE PLOTTED = ¢ 7/18/2012
TIME PLOTTED = ¢ 2:48:53 PM

Dist	COUNTY	ROUTE	POST MILES TOTAL PROJECT	SHEET No.	TOTAL SHEETS
7	LA	5	29.4/31.6	1869	1931

David McCord 05-21-12
REGISTERED CIVIL ENGINEER DATE

05-21-12
PLANS APPROVAL DATE

REGISTERED PROFESSIONAL ENGINEER DAVID WILLIAM McCORD No. E-15317 Exp. June 30, 2013 ELECTRICAL STATE OF CALIFORNIA

THE STATE OF CALIFORNIA OR ITS OFFICERS OR AGENTS SHALL NOT BE RESPONSIBLE FOR THE ACCURACY OR COMPLETENESS OF SCANNED COPIES OF THIS PLAN SHEET.

SCRRA
279 E. ARROW HIGHWAY
SAN DIMAS, CA 91773

XORAIL
201 NORTH INDIAN HILL BLVD
SUITE 201
CLAREMONT, CA 91711

CP OLIVE

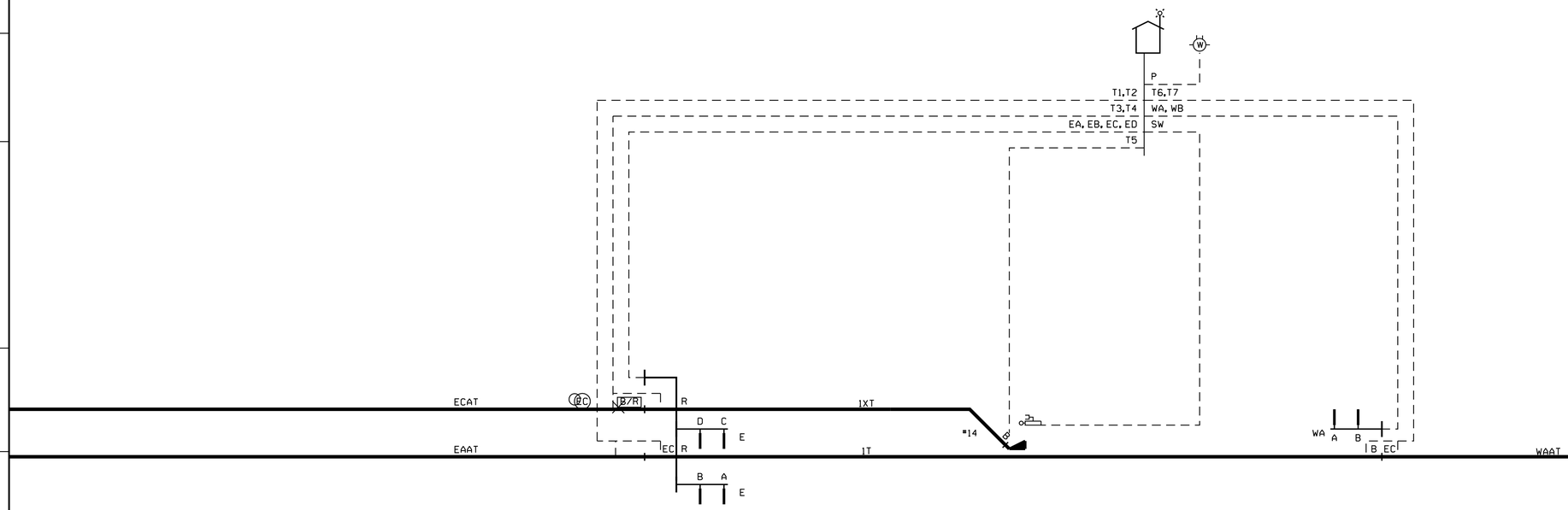

T1 2 COND #6 TW TRK	
1	EAATN/SR
2	EAATB/NR

T2 2 COND #6 TW TRK	
1	1TR2/SR
2	1TRN/NR

T3 2 COND #6 TW TRK	
1	ECATB/SR
2	ECATN/NR

T4 2 COND #6 TW TRK	
1	1XTR1/SR
2	1XTRN/NR

T5 2 COND #6 TW TRK	
1	1XTB1/SR
2	1XTN/NR

EA 7 COND #6 U.G.	
1	EADGE
2	EADGEN
3	EAHGE
4	EAHGEN
5	EARGE
6	EARGEN
7	EARGEN

EB 7 COND #6 U.G.	
1	SPARE
2	SPARE
3	EBHGE
4	EBHGEN
5	EBRGE
6	EBRGEN
7	EBRGEN

WA 7 COND #6 U.G.	
1	WADGE
2	WADGEN
3	WAHGE
4	WAHGEN
5	WARGE
6	WARGEN
7	WARGEN

WB 7 COND #6 U.G.	
1	WBDGE
2	WBDGEN
3	WBHGE
4	WBHGEN
5	WBRGE
6	WBRGEN
7	WBRGEN

SW 7 COND #6 U.G.	
1	WC-C
2	WC-B
3	WC-5
4	WC-10
5	SPARE
6	WC-N
7	SPARE

SW 12 COND #14 U.G.	
1	B-W
2	NWP-5
3	NNWP
4	NRWP
5	RWP-5
6	WLP
7	N
8	SPARE
9	SPARE
10	SPARE
11	SPARE
12	SPARE

EC 7 COND #6 U.G.	
1	ECDGE
2	ECDGEN
3	ECHGE
4	ECHGEN
5	ECRGE
6	ECRGEN
7	ECRGEN

ED 7 COND #6 U.G.	
1	SPARE
2	SPARE
3	EDHGE
4	EDHGEN
5	EDRGE
6	EDRGEN
7	EDRGEN

T6 2 COND #6 TW TRK	
1	WAATB/SR
2	WAATN/NR

T7 2 COND #6 TW TRK	
1	1TB1/SR
2	1TN/NR

P 3 COND #6 U.G.	
1	BX120
2	NX120
3	

= OUT

= IN

DATE IN SERVICE _____
S. ENGINEER _____
INSPECTOR _____

RR-SP-109
SIGNAL STAGE 3

PTC WORK TO BE PERFORMED BY OTHERS.

THIS PLAN ACCURATE FOR RAILROAD WORK ONLY.

RAILROAD SHEET NO.
109 OF 171

CABLE SHEET
CP OLIVE
VY 11.13
SH. 14 OF 14

LAST REVISION 00-00-00
DATE PLOTTED = 7/18/2012
TIME PLOTTED = 2:48:54 PM

STATE OF CALIFORNIA - DEPARTMENT OF TRANSPORTATION
Caltrans® DESIGN
CONSULTANT FUNCTIONAL SUPERVISOR GLENN BREINDEL
CALCULATED-DESIGNED BY RAMON VALDEZ
CHECKED BY
REVISED BY
DATE REVISED

Dist	COUNTY	ROUTE	POST MILES TOTAL PROJECT	SHEET No.	TOTAL SHEETS
7	LA	5	29.4/31.6	1870	1931

David McCord 05-21-12
REGISTERED CIVIL ENGINEER DATE

05-21-12
PLANS APPROVAL DATE

REGISTERED PROFESSIONAL ENGINEER DAVID WILLIAM McCORD No. E-15317 Exp. June 30, 2013 ELECTRICAL STATE OF CALIFORNIA

THE STATE OF CALIFORNIA OR ITS OFFICERS OR AGENTS SHALL NOT BE RESPONSIBLE FOR THE ACCURACY OR COMPLETENESS OF SCANNED COPIES OF THIS PLAN SHEET.

SCRRA
279 E. ARROW HIGHWAY
SAN DIMAS, CA 91773

XORAIL
201 NORTH INDIAN HILL BLVD
SUITE 201
CLAREMONT, CA 91711

PTC WORK TO BE PERFORMED BY OTHERS.

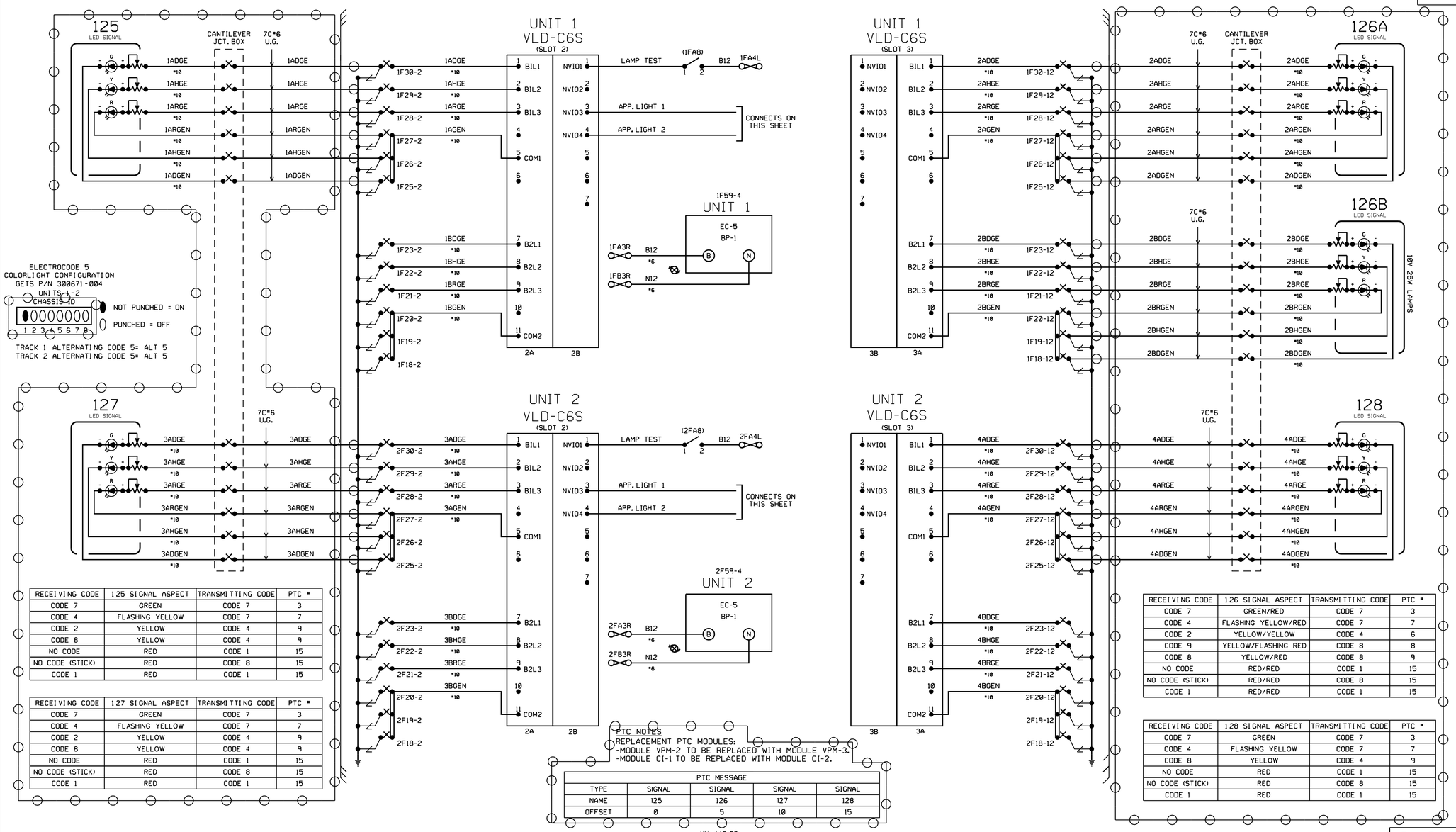

RECEIVING CODE	125 SIGNAL ASPECT	TRANSMITTING CODE	PTC #
CODE 7	GREEN	CODE 7	3
CODE 4	FLASHING YELLOW	CODE 7	7
CODE 2	YELLOW	CODE 4	9
CODE 8	YELLOW	CODE 4	9
NO CODE	RED	CODE 1	15
NO CODE (STICK)	RED	CODE 8	15
CODE 1	RED	CODE 1	15

RECEIVING CODE	127 SIGNAL ASPECT	TRANSMITTING CODE	PTC #
CODE 7	GREEN	CODE 7	3
CODE 4	FLASHING YELLOW	CODE 7	7
CODE 2	YELLOW	CODE 4	9
CODE 8	YELLOW	CODE 4	9
NO CODE	RED	CODE 1	15
NO CODE (STICK)	RED	CODE 8	15
CODE 1	RED	CODE 1	15

RECEIVING CODE	126 SIGNAL ASPECT	TRANSMITTING CODE	PTC #
CODE 7	GREEN/RED	CODE 7	3
CODE 4	FLASHING YELLOW/RED	CODE 7	7
CODE 2	YELLOW/YELLOW	CODE 4	6
CODE 9	YELLOW/FLASHING RED	CODE 8	8
CODE 8	YELLOW/RED	CODE 8	9
NO CODE	RED/RED	CODE 1	15
NO CODE (STICK)	RED/RED	CODE 8	15
CODE 1	RED/RED	CODE 1	15

RECEIVING CODE	128 SIGNAL ASPECT	TRANSMITTING CODE	PTC #
CODE 7	GREEN	CODE 7	3
CODE 4	FLASHING YELLOW	CODE 7	7
CODE 8	YELLOW	CODE 4	9
NO CODE	RED	CODE 1	15
NO CODE (STICK)	RED	CODE 8	15
CODE 1	RED	CODE 1	15

DATE IN SERVICE _____
S. ENGINEER _____
INSPECTOR _____

RR-SP-110
SIGNAL STAGE 3

ELECTROCODE 5 CIRCUITS
SIGNALS 125, 126, 127 & 128
VY 12.74
SH. 1 OF 6

RAILROAD SHEET NO.
110 OF 171

THIS PLAN ACCURATE FOR RAILROAD WORK ONLY.

STATE OF CALIFORNIA - DEPARTMENT OF TRANSPORTATION
DESIGN
CONSULTANT FUNCTIONAL SUPERVISOR: GLENN BREINDEL
CALCULATED-DESIGNED BY: RAMON VALDEZ
CHECKED BY
REVISED BY
DATE REVISED

LAST REVISION 00-00-00
DATE PLOTTED = 7/18/2012
TIME PLOTTED = 2:48:55 PM