DIST	COUNTY	ROUTE	KILOMETER POST TOTAL PROJECT	SHEET NO.	TOTAL SHEETS
07	LA	5	50.8/58.0	701	869

Caltrans Metric

REGISTERED ELECTRICAL ENGINEER

October 5, 2007
PLANS APPROVAL DATE

REGISTERED PROFESSIONAL ENGINEER Jeffery G. McRae No. E14512 Exp. 6-30-08 ELECTRICAL STATE OF CALIFORNIA

The State of California or its officers or agents shall not be responsible for the accuracy or completeness of electronic copies of this plan sheet.

To get to the Caltrans web site, go to: http://www.dot.ca.gov

To accompany plans dated 5-3-10

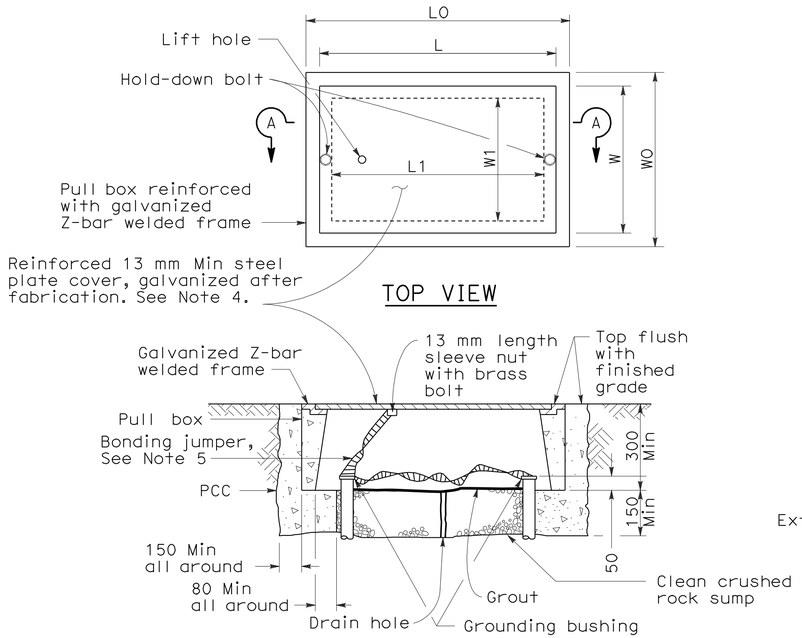

SECTION A-A

No. 3½(T), No. 5(T) AND No. 6(T) TRAFFIC PULL BOX

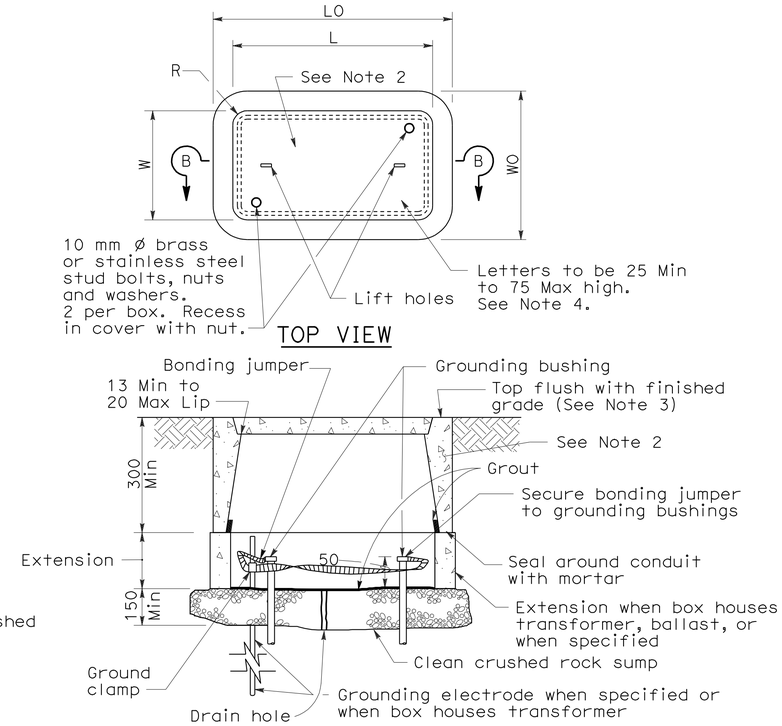

SECTION B-B

INSTALLATION DETAILS

DIMENSION TABLE

PULL BOX	CONCRETE BOX				NON-PCC BOX		CONCRETE OR NON-PCC COVERS				
	Minimum * Thickness	Minimum Depth Box and Extension	L0 (mm)	W0 (mm)	Minimum ** Thickness	Minimum Depth Box and Extension	L ** (mm)	W ** (mm)	R (mm)	Edge Thickness	Edge Taper
No. 3½	25 mm	No Extension	457	330	8 mm	No Extension	390	260	27	45 mm	3 mm
No. 5	25 mm	560 mm	666	425	8 mm	510 mm	590	350	32	50 mm	3 mm
No. 6	40 mm	610 mm	854	524	10 mm	510 mm	775	444	32	50 mm	3 mm

* Excluding conduit web ** Top dimension

DIMENSION TABLE

PULL BOX	CONCRETE BOX						NON-PCC BOX		CONCRETE OR NON-PCC COVERS				
	Minimum * Thickness	Minimum Depth Box and Extension	L0 (mm)	W0 (mm)	L1 (mm)	W1 (mm)	Minimum ** Thickness	Minimum Depth Box and Extension	L ** (mm)	W ** (mm)	R (mm)	Edge Thickness	Edge Taper
No. 3½(T)	40 mm	305 mm	530 ±	430 ± 25	370 ±	270 ± 25	Does Not Apply		510 ±	350 ±	0	13 mm	None
No. 5(T)	45 mm	305 mm	750 ±	600 ± 25	480 ±	330 ± 25	Does Not Apply		690 ±	410 ±	0	13 mm	None
No. 6(T)	50 mm	305 mm	900 ±	760 ± 25	600 ±	430 ± 25	Does Not Apply		840 ±	510 ±	0	13 mm	None

* Excluding conduit web ** Top dimension

NOTES ON PULL BOXES:

1. Traffic pull box shall be provided with steel cover and special concrete footing. Steel cover shall have embossed non-skid pattern.
2. Steel reinforcing shall be as regularly used in the standard products of the respective manufacturer.
3. Top of pull boxes shall be flush with surrounding grade or top of adjacent curb, except that in unpaved areas where pull box is not immediately adjacent to and protected by a concrete foundation, pole or other protective construction, the box shall be placed with its top 30 mm above surrounding grade. Where practicable, pull boxes shown in the vicinity of curbs shall be placed adjacent to the back of curb, and pull boxes shown adjacent to standards shall be placed on side of foundation facing away from traffic, unless otherwise noted. When pull box is installed in sidewalk area, the depth of the pull box shall be adjusted so that the top of the pull box is flush with the sidewalk.
4. Pull box covers shall be marked as follows: "SERVICE" Service circuits between service point and service disconnect; "SPRINKLER-CONTROL" Sprinkler control circuits, 50 V or less; "CALTRANS" On all pull boxes, except pull boxes marked "SPRINKLER-CONTROL"; and "TELEPHONE" Telephone service.

   a) No. 3½ pull box.

      1) "SIGNAL" Traffic signal circuits with or without street or sign lighting circuits.

      2) "ST LIGHTING" Street or sign lighting circuits where voltage is under 600 V.

   b) No. 5, 6, 9 or 9A pull box.

      1) "TRAFFIC SIGNAL" Traffic signal circuits with or without street or sign lighting circuits.

      2) "STREET LIGHTING" Street or sign lighting circuits where voltage is under 600 V.

      3) "STREET LIGHTING-HIGH VOLTAGE" Street or sign lighting circuits where voltage is above 600 V.

      4) "IRRIGATION" Circuits to irrigation controller 120 V or more.

      5) "RAMP METER" Ramp meter circuits.

      6) "COUNT STATION" Count or speed monitor circuits.

      7) "COMMUNICATION" Communication circuits.

      8) "TOS COMMUNICATIONS" TOS communications line.

      9) "TOS POWER" TOS power.

      10) "TDC POWER" Telephone demarcation cabinet power.

      11) "CCTV" Closed circuit television circuits.

      12) "TMS" Traffic monitoring station circuits.

      13) "CMS" Changeable message sign circuits.

      14) "HAR" Highway advisory radio circuits.
5. Bonding jumper for metal covers shall be 1 m long, minimum.
6. The nominal dimensions of the opening in which the cover sets shall be the same as the cover dimensions except the length and width dimensions shall be 3 mm greater.
7. Covers and boxes shall be interchangeable with California standard male and female gages. When interchanged with a standard male or female gage, the top surfaces shall be flush within 3 mm. Top outside edge of concrete covers and pull boxes shall have a 6 mm minimum radius.
8. Pull box shall not be installed within the boundaries of new or existing curb ramps.
9. Pull boxes for electroliers, post and signal standards shall be located ± 1.5 m from the station of the adjacent electrolier, post or signal standard. Pull boxes shall be placed adjacent to back of curb or edge of shoulder except where this is impractical, a box may be placed in another suitable protected and accessible location.

STATE OF CALIFORNIA
DEPARTMENT OF TRANSPORTATION

ELECTRICAL SYSTEMS (PULL BOX DETAILS)

NO SCALE

ALL DIMENSIONS ARE IN MILLIMETERS UNLESS OTHERWISE SHOWN

RSP ES-8 DATED OCTOBER 5, 2007 SUPERSEDES STANDARD PLAN ES-8 DATED JULY 1, 2004-PAGE 467 OF THE STANDARD PLANS BOOK DATED JULY 2004.

REVISED STANDARD PLAN RSP ES-8

2004 REVISED Std PLAN RSP ES-8

7-3-07

DIST	COUNTY	ROUTE	KILOMETER POST TOTAL PROJECT	SHEET NO.	TOTAL SHEETS
07	LA	5	50.8/58.0	702	869

Caltrans Metric

REGISTERED ELECTRICAL ENGINEER

October 5, 2007
PLANS APPROVAL DATE

REGISTERED PROFESSIONAL ENGINEER Jeffery G. McRae No. E14512 Exp. 6-30-08 ELECTRICAL STATE OF CALIFORNIA

The State of California or its officers or agents shall not be responsible for the accuracy or completeness of electronic copies of this plan sheet.

To get to the Caltrans web site, go to: http://www.dot.ca.gov

To accompany plans dated 5-3-10

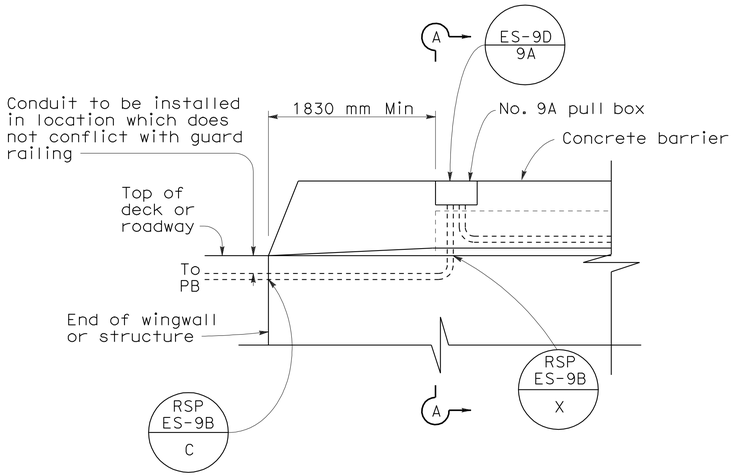

SIDEVIEW

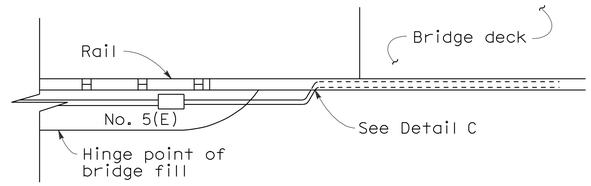

TOP VIEW

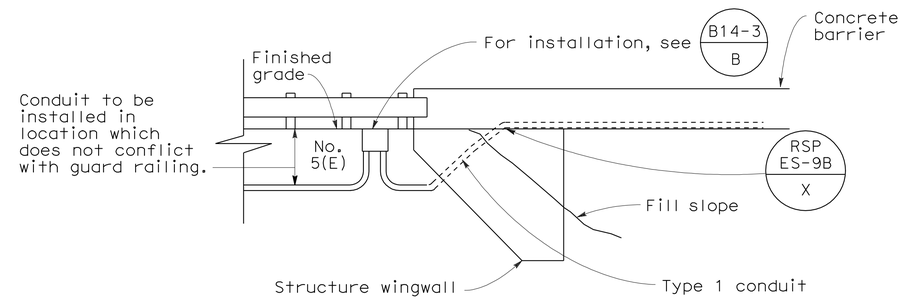

SIDE VIEW
DETAIL I
CONDUIT TERMINATION

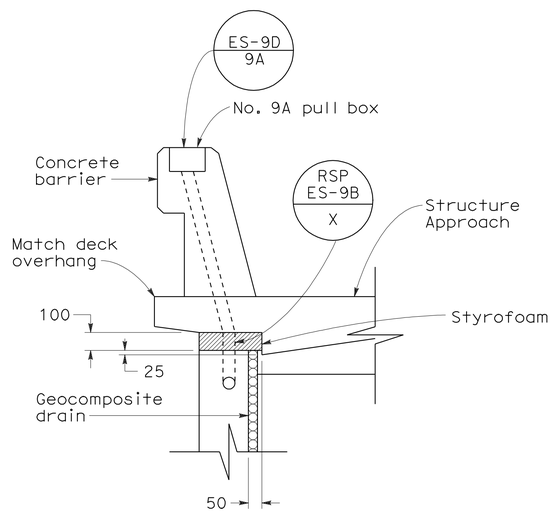

SECTION A-A

DETAIL A
CONDUIT TERMINATION

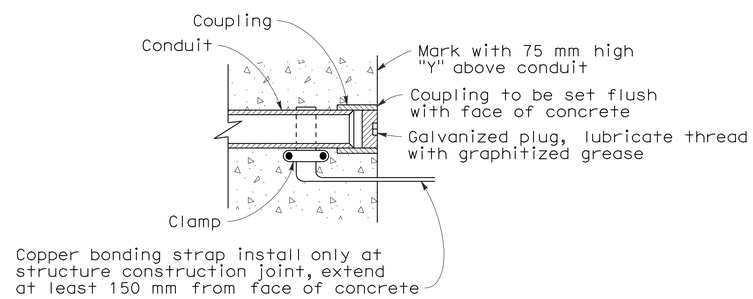

DETAIL C
CONDUIT TERMINATION

STATE OF CALIFORNIA
DEPARTMENT OF TRANSPORTATION

ELECTRICAL SYSTEMS (ELECTRICAL DETAILS STRUCTURE INSTALLATIONS)

NO SCALE

ALL DIMENSIONS ARE IN MILLIMETERS UNLESS OTHERWISE SHOWN

RSP ES-9A DATED OCTOBER 5, 2007 SUPERSEDES STANDARD PLAN ES-9A DATED JULY 1, 2004-PAGE 468 OF THE STANDARD PLANS BOOK DATED JULY 2004.

REVISED STANDARD PLAN RSP ES-9A

2004 REVISED Std PLAN RSP ES-9A

10-1-07

DIST	COUNTY	ROUTE	KILOMETER POST TOTAL PROJECT	SHEET NO.	TOTAL SHEETS
07	LA	5	50.8/58.0	703	869

Caltrans Metric

REGISTERED ELECTRICAL ENGINEER

October 5, 2007
PLANS APPROVAL DATE

REGISTERED PROFESSIONAL ENGINEER J. S. Sandhu No. E11803 Exp. 9-30-08 ELECTRICAL STATE OF CALIFORNIA

The State of California or its officers or agents shall not be responsible for the accuracy or completeness of electronic copies of this plan sheet.

To get to the Caltrans web site, go to: http://www.dot.ca.gov

To accompany plans dated 5-3-10

2004 REVISED Std PLAN RSP ES-9B

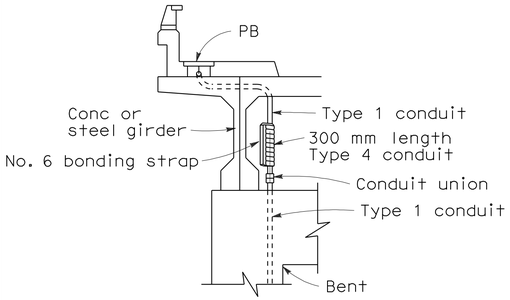

DETAIL R
CONDUIT RISER CONNECTION

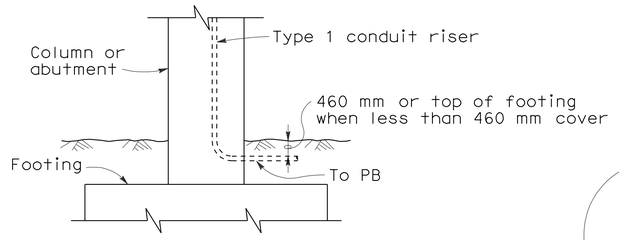

DETAIL T
LOWER END OF CONDUIT RISER AT COLUMN OR ABUTMENT

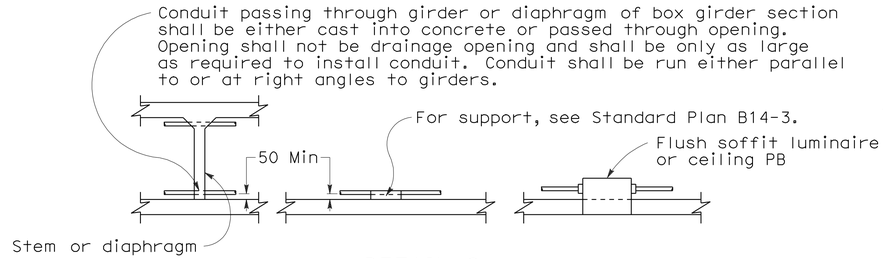

DETAIL S
CONDUIT INSTALLATION WITHIN BOX GIRDER SECTIONS

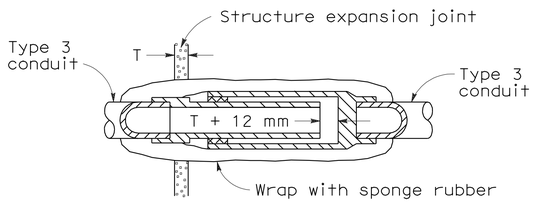

NON-METALLIC CONDUIT EXPANSION FITTING INSTALLATION DETAIL
(To be used only when shown or specified on Project Plans)

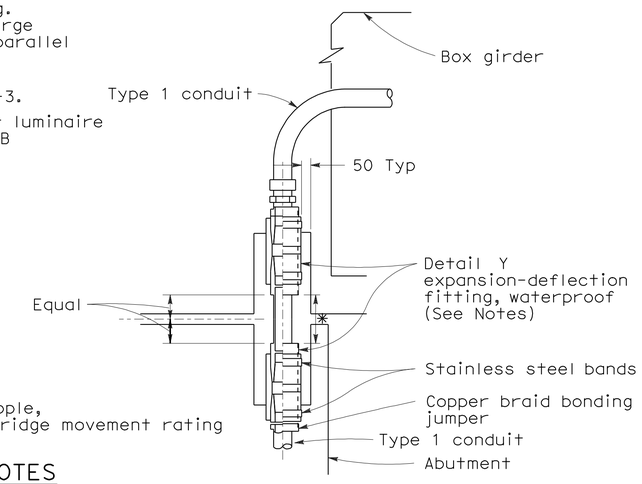

NOTES

1. Fitting and pocket required only where movement can occur between girder and abutment.
2. Fill pocket around fitting with resilient waterproof compound.

DETAIL U
CONDUIT RISER CONNECTION AT COLUMN, ABUTMENT OR STRUCTURE WING WALL

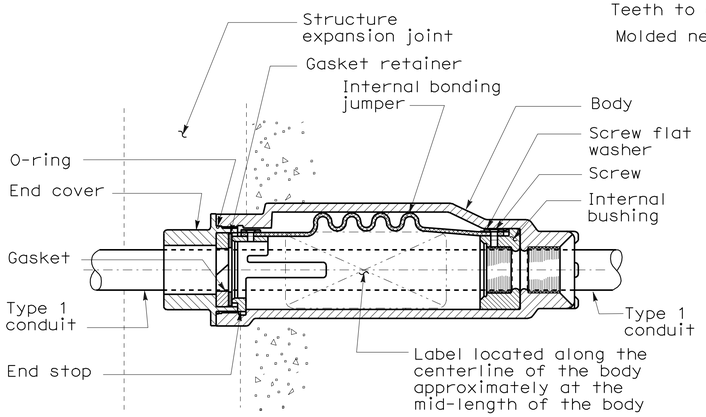

DETAIL X
CONDUIT EXPANSION FITTINGS

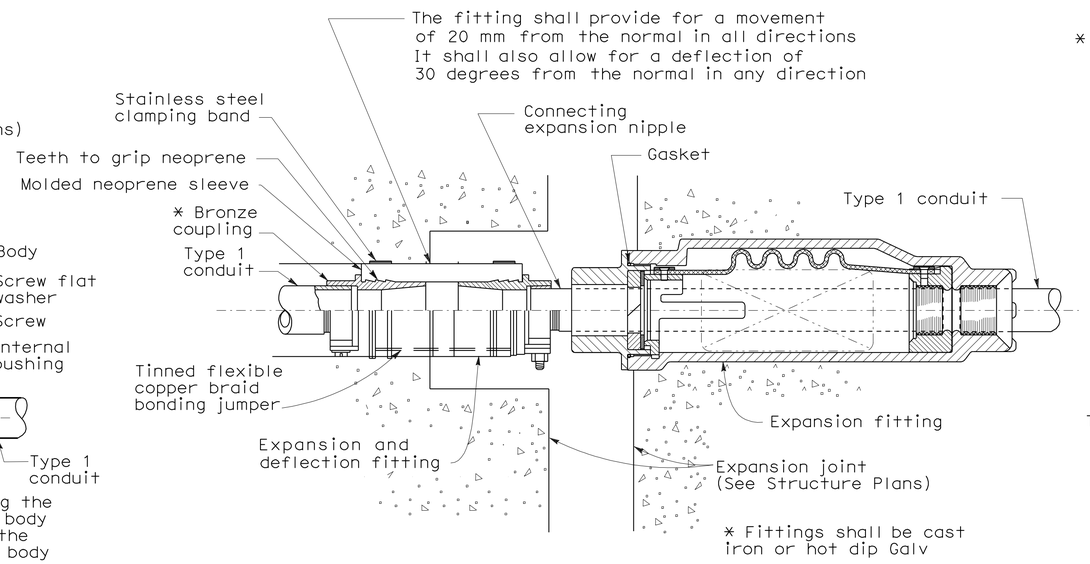

DETAIL XY
COMBINATION EXPANSION-DEFLECTION FITTINGS
METALLIC CONDUIT INSTALLATION

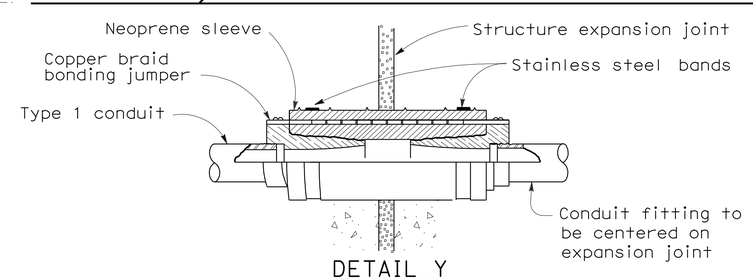

DETAIL Y
CONDUIT EXPANSION-DEFLECTION FITTING

NOTES

1. Except for sidewalk joints, a conduit expansion fitting or expansion-deflection fitting shall be installed at each 13 mm or greater structure joint, hinge or abutment.
2. Fittings or combination of fittings shall be installed to accommodate the movement rating as shown on the structure plans.
3. Fittings shall be installed parallel to superstructure girders.
4. Where lateral movement greater than 6 mm may occur, a neoprene sleeve expansion-deflection fitting shall be installed straddling the joint.

STATE OF CALIFORNIA
DEPARTMENT OF TRANSPORTATION

ELECTRICAL SYSTEMS (ELECTRICAL DETAILS STRUCTURE INSTALLATIONS)

NO SCALE
ALL DIMENSIONS ARE IN MILLIMETERS UNLESS OTHERWISE SHOWN

RSP ES-9B DATED OCTOBER 5, 2007 SUPERSEDES STANDARD PLAN ES-9B DATED JULY 1, 2004-PAGE 469 OF THE STANDARD PLANS BOOK DATED JULY 2004.

REVISED STANDARD PLAN RSP ES-9B

7-2-07

DIST	COUNTY	ROUTE	KILOMETER POST TOTAL PROJECT	SHEET NO.	TOTAL SHEETS
07	LA	5	50.8/58.0	704	869

Caltrans Metric

REGISTERED ELECTRICAL ENGINEER

October 5, 2007
PLANS APPROVAL DATE

REGISTERED PROFESSIONAL ENGINEER Jeffery G. McRae No. E14512 Exp. 6-30-08 ELECTRICAL STATE OF CALIFORNIA

The State of California or its officers or agents shall not be responsible for the accuracy or completeness of electronic copies of this plan sheet.

To get to the Caltrans web site, go to: http://www.dot.ca.gov

To accompany plans dated 5-3-10

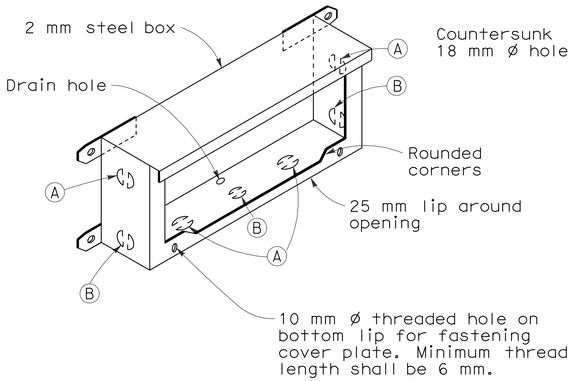

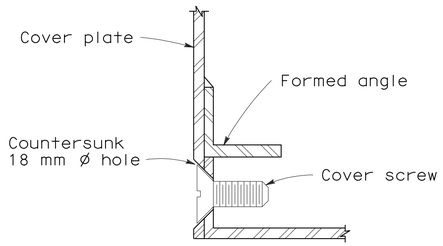

DETAIL J

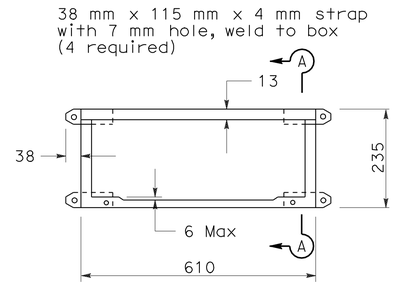

PLAN

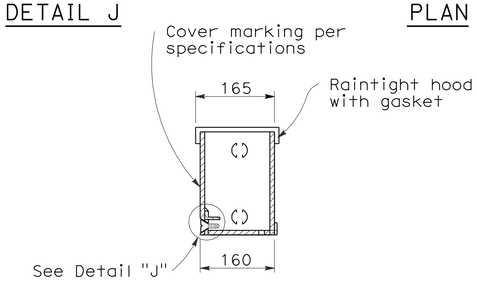

SECTION A-A

No. 9 STRUCTURE PULL BOX

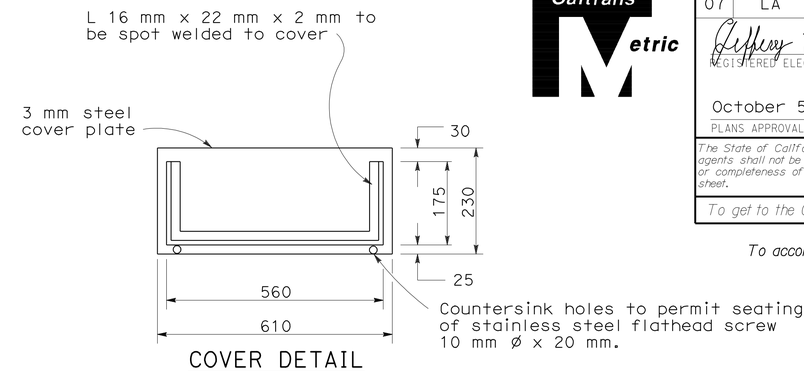

COVER DETAIL

INSTALLATION NOTE

Box shall be parallel to top of railing. Close cover box during pouring with 6 mm plywood of sufficient size to provide 1:1 chamfer on 3 sides of cover. Upper edge of plywood shall fit against lower edge of raintight hood.

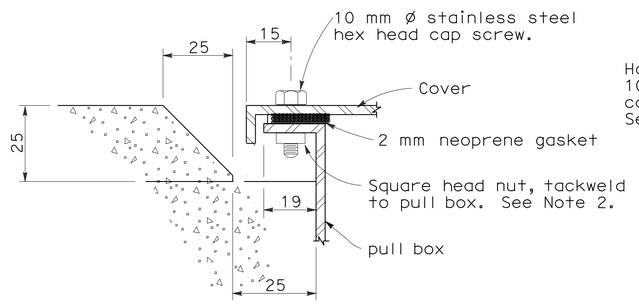

SECTION C-C

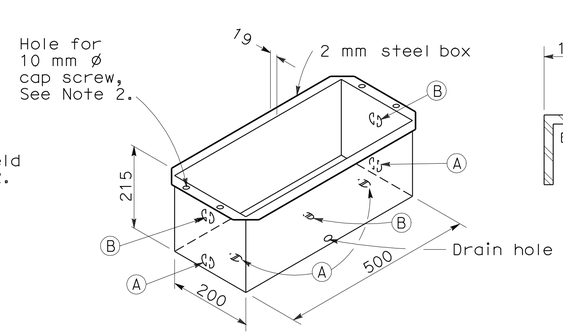

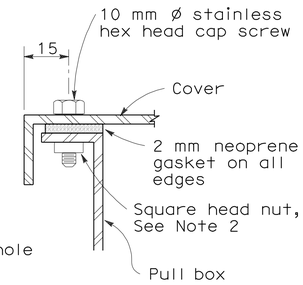

DETAIL A

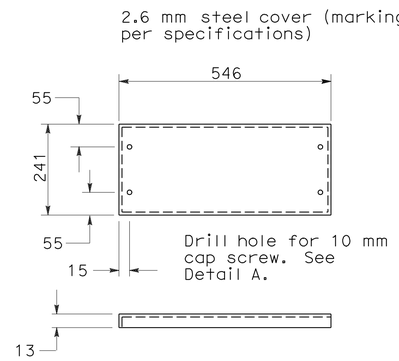

COVER DETAIL

No. 9A STRUCTURE PULL BOX

NOTES: No. 9 and 9A Pull Box

1. Corner joints shall be lapped and secured by spot welding or riveting.
2. Where cap screws are used to attach cover to box, either of the following methods of providing adequate threading may be used:
   a. Tack weld square nut to bottom of flange (Total 4), or
   b. Tack weld a 6 mm x 16 mm x 200 mm bar beneath flange (Total 2).
3. Pound knockouts flat after punching.
4. Multiple size knockouts shall not be permitted.
5. Pull box covers shall be marked as shown on Revised Standard Plan RSP ES-8.

KNOCKOUT SCHEDULE
No. 9 AND 9A PULL BOX

(A) 53C, 1 each end, 2 on bottom.

(B) 78C, 1 each end, 1 on bottom.

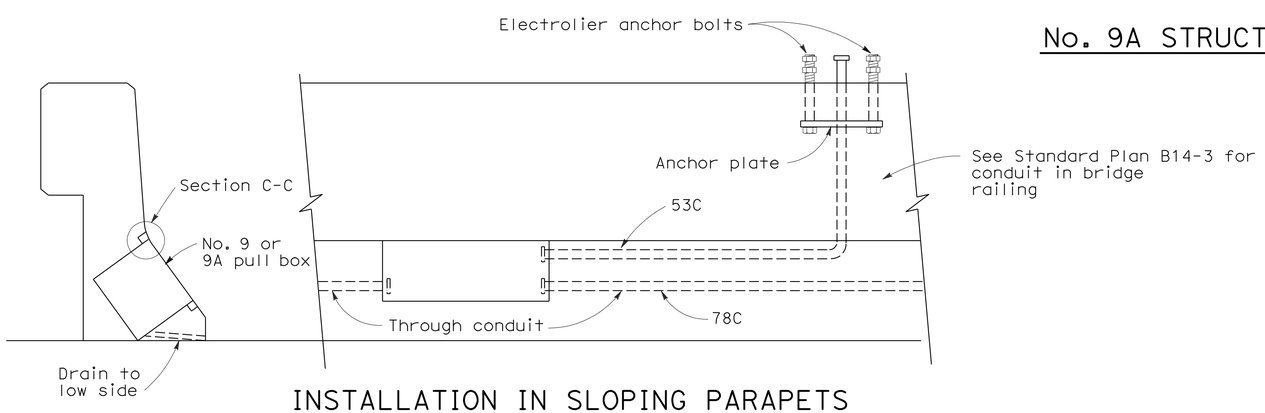

INSTALLATION IN SLOPING PARAPETS

For reinforcement in area of electrolier, see railing sheets. For electrolier anchor bolts, see Standard Plan ES-6B.

STATE OF CALIFORNIA
DEPARTMENT OF TRANSPORTATION

ELECTRICAL SYSTEMS (ELECTRICAL DETAILS STRUCTURE INSTALLATIONS)

NO SCALE

ALL DIMENSIONS ARE IN MILLIMETERS UNLESS OTHERWISE SHOWN

RSP ES-9C DATED OCTOBER 5, 2007 SUPERSEDES STANDARD PLAN ES-9C DATED JULY 1, 2004-PAGE 470 OF THE STANDARD PLANS BOOK DATED JULY 2004.

REVISED STANDARD PLAN RSP ES-9C

2004 REVISED Std PLAN RSP ES-9C

7-26-07

DIST	COUNTY	ROUTE	KILOMETER POST TOTAL PROJECT	SHEET NO.	TOTAL SHEETS
07	LA	5	50.8/58.0	705	869

REGISTERED ELECTRICAL ENGINEER

October 5, 2007
PLANS APPROVAL DATE

REGISTERED PROFESSIONAL ENGINEER Jeffery G. McRae No. E14512 Exp. 6-30-08 ELECTRICAL STATE OF CALIFORNIA

The State of California or its officers or agents shall not be responsible for the accuracy or completeness of electronic copies of this plan sheet.

To get to the Caltrans web site, go to: http://www.dot.ca.gov

To accompany plans dated 5-3-10

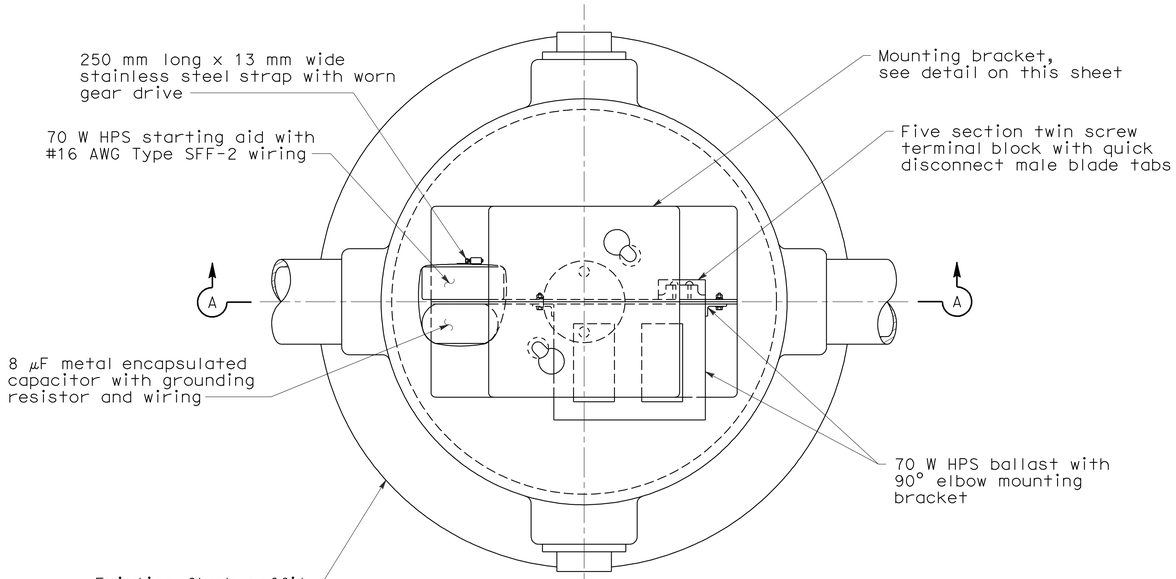

PLAN

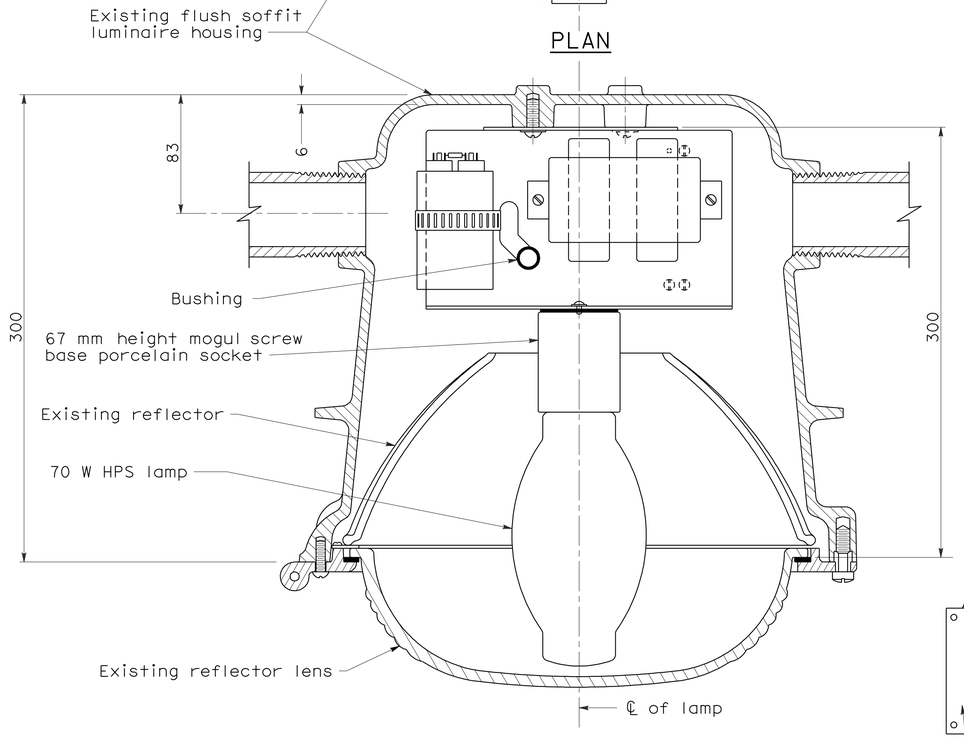

SECTION A-A

FLUSH SOFFIT LUMINAIRE ASSEMBLY

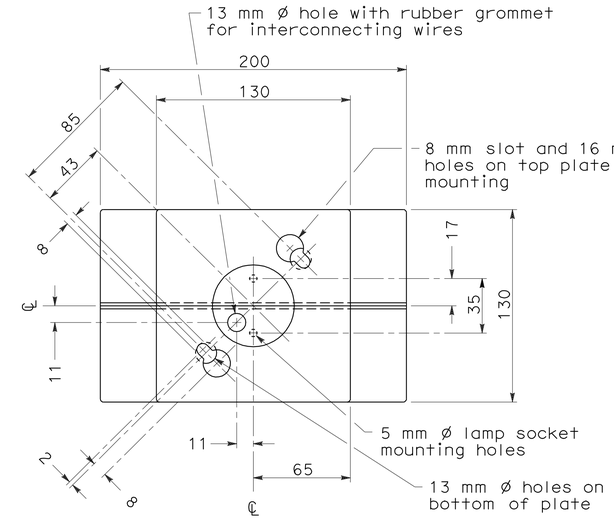

TOP VIEW

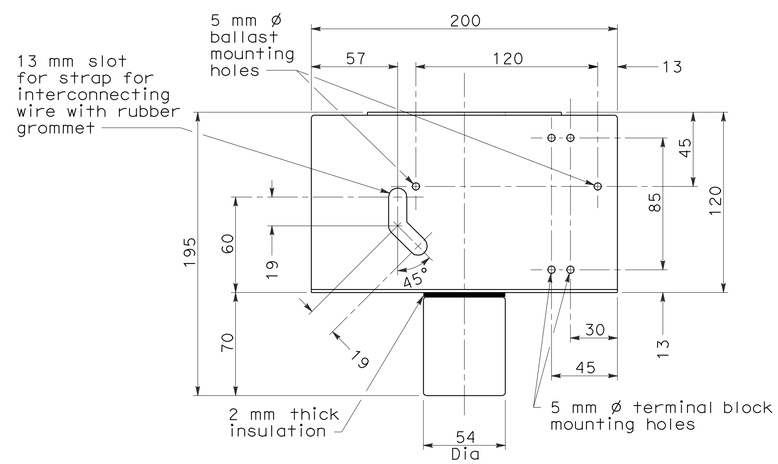

FRONT VIEW

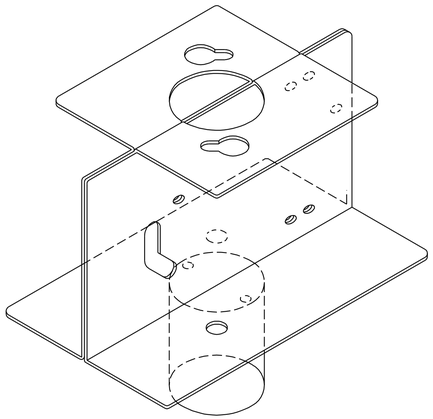

Preform two sheets 1.6 mm mild steel as shown, spotweld together in each corner with four spotwelds.

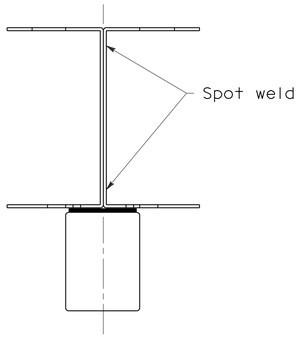

SIDE VIEW

MOUNTING BRACKET DETAILS

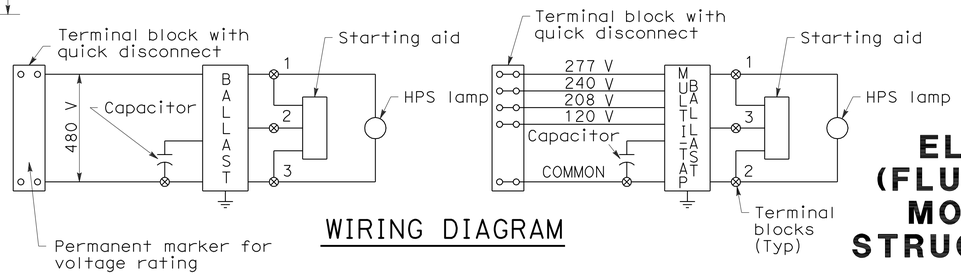

WIRING DIAGRAM

NOTES

1. Fixture wiring shall be Type SFF-2.
2. Use 4.2 mm ø machine screws, lockwashers and nuts for mounting ballast and terminal strips.
3. In-line fuse as required on Revised Standard Plan RSP ES-13B.

STATE OF CALIFORNIA
DEPARTMENT OF TRANSPORTATION

ELECTRICAL SYSTEMS (FLUSH SOFFIT LUMINAIRE MODIFICATION DETAILS STRUCTURE INSTALLATIONS)

NO SCALE

ALL DIMENSIONS ARE IN MILLIMETERS UNLESS OTHERWISE SHOWN

RSP ES-9F DATED OCTOBER 5, 2007 SUPERSEDES STANDARD PLAN ES-9F DATED JULY 1, 2004-PAGE 473 OF THE STANDARD PLANS BOOK DATED JULY 2004.

REVISED STANDARD PLAN RSP ES-9F

2004 REVISED Std PLAN RSP ES-9F

6-27-07

DIST	COUNTY	ROUTE	KILOMETER POST TOTAL PROJECT	SHEET NO.	TOTAL SHEETS
07	LA	5	50.8/58.0	706	869

Caltrans Metric

REGISTERED ELECTRICAL ENGINEER

October 5, 2007
PLANS APPROVAL DATE

REGISTERED PROFESSIONAL ENGINEER Jeffery G. McRae No. E14512 Exp. 6-30-08 ELECTRICAL STATE OF CALIFORNIA

The State of California or its officers or agents shall not be responsible for the accuracy or completeness of electronic copies of this plan sheet.

To get to the Caltrans web site, go to: http://www.dot.ca.gov

To accompany plans dated 5-3-10

ISOLUX CURVE - MINIMUM

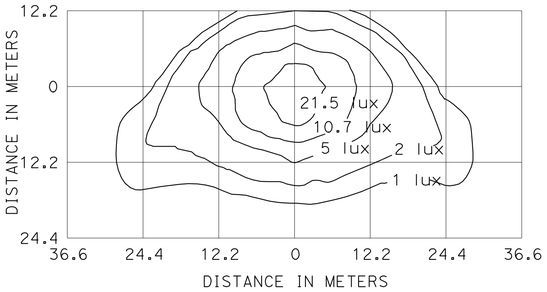

TYPE III MEDIUM CUTOFF

Cutoff Luminaire
10.4 m Mounting Height
LAMP OPERATED AT 22 000 lm
200 W HIGH PRESSURE SODIUM LAMP
ANSI DESIGNATION S66

ISOLUX CURVE - MINIMUM

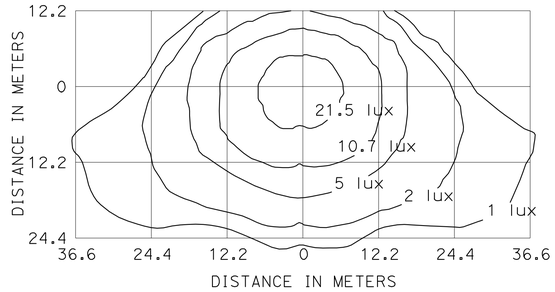

TYPE III MEDIUM CUTOFF

Cutoff Luminaire
12.2 m Mounting Height
LAMP OPERATED AT 37 000 lm
310 W HIGH PRESSURE SODIUM LAMP
ANSI DESIGNATION S67

ISOLUX CURVE - MINIMUM

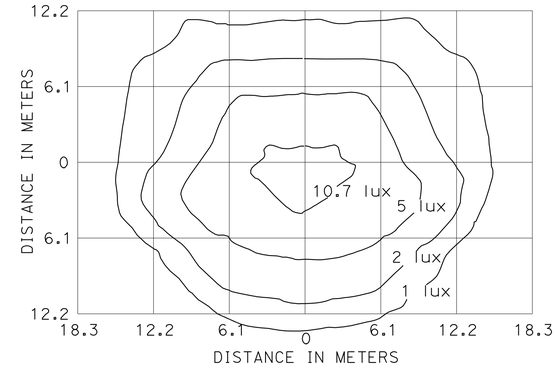

FLUSH SOFFIT LUMINAIRE

5.2 m Mounting Height
LAMP OPERATED AT 5800 lm
70 W HIGH PRESSURE SODIUM LAMP
ANSI DESIGNATION S62

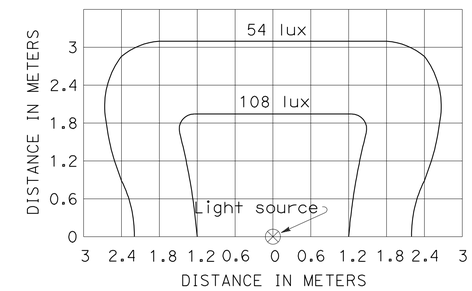

SIGN LIGHTING FIXTURE ISOLUX DIAGRAM

1. Curves represent the minimum lux of initial illumination on a 3 m x 6 m panel.
2. The lux shown are with the fixture attached to the light fixture mounting channel which places the center of the source 1420 mm in front of panel and 300 mm below the bottom edge.
3. Applicable lamp: 85-W fluorescent phosphor coated induction lamp.

ISOLUX CURVE - MINIMUM

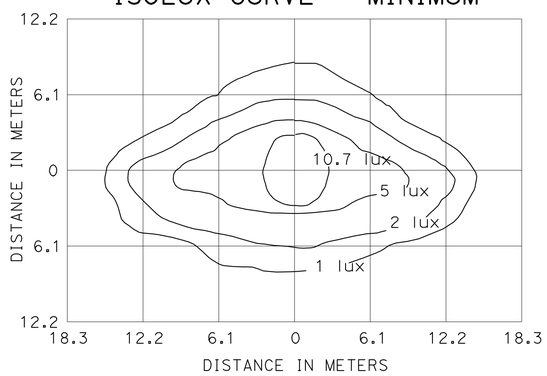

PENDANT SOFFIT LUMINAIRE TYPE III SHORT

5.2 m Mounting Height
LAMP OPERATED AT 5800 lm
70 W HIGH PRESSURE SODIUM LAMP
ANSI DESIGNATION S62

ISOLUX CURVE - MINIMUM

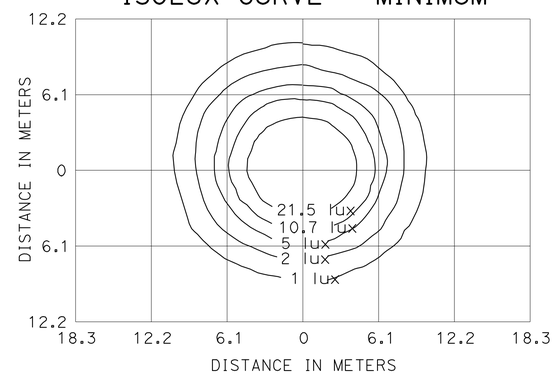

PENDANT SOFFIT LUMINAIRE

5.2 m Mounting Height
LAMP OPERATED AT 5800 lm
70 W HIGH PRESSURE SODIUM LAMP
ANSI DESIGNATION S62

ISOLUX CURVE - MINIMUM

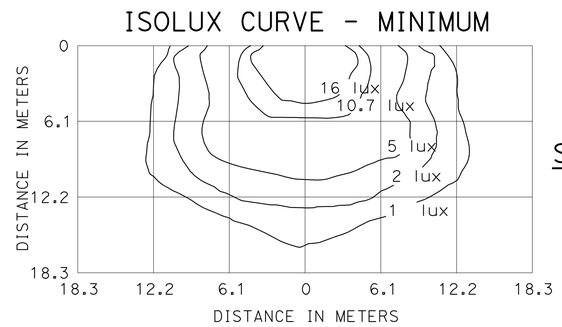

DETAIL ``W'' WALL LUMINAIRE

4.6 m Mounting Height
LAMP OPERATED AT 9500 lm
100 W HIGH PRESSURE SODIUM LAMP
ANSI DESIGNATION S54

ISOLUX CURVE - MINIMUM

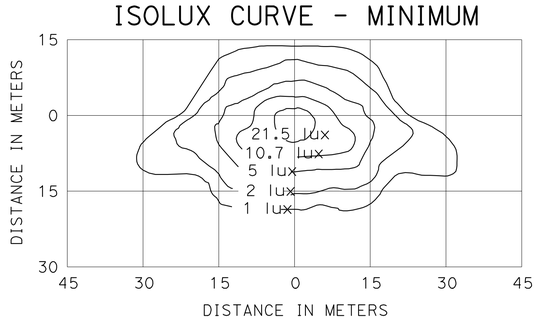

TYPE III MEDIUM CUTOFF

Cutoff Luminaire
9.1 m Mounting Height
LAMP OPERATED AT 16 000 lm
150 W HIGH PRESSURE SODIUM LAMP
ANSI DESIGNATION S55

ISOLUX CURVE - MINIMUM

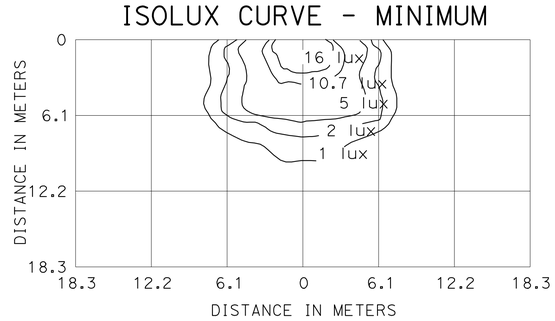

WALL LUMINAIRE

4.6 m Mounting Height
LAMP OPERATED AT 5800 lm
70 W HIGH PRESSURE SODIUM LAMP
ANSI DESIGNATION S62

ISOLUX CURVE - MINIMUM

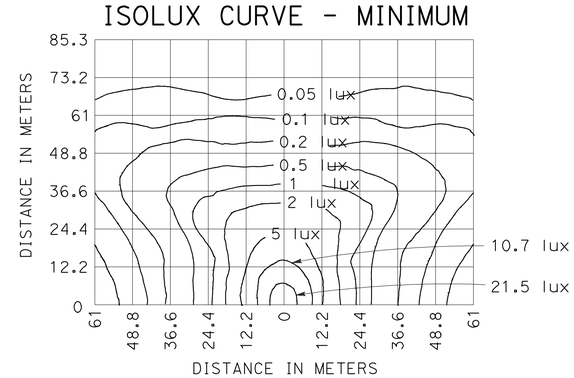

LOW PRESSURE SODIUM LUMINAIRE

12.2 m Mounting Height
LAMP OPERATED AT 33 000 lm
180 W LOW PRESSURE SODIUM LAMP

NOTE

Isolux diagrams show the minimum horizontal lux required.

STATE OF CALIFORNIA
DEPARTMENT OF TRANSPORTATION

ELECTRICAL SYSTEMS (ISOLUX DIAGRAMS)

NO SCALE

ALL DIMENSIONS ARE IN MILLIMETERS UNLESS OTHERWISE SHOWN

RSP ES-10 DATED OCTOBER 5, 2007 SUPERSEDES STANDARD PLAN ES-10 DATED JULY 1, 2004-PAGE 474 OF THE STANDARD PLANS BOOK DATED JULY 2004.

REVISED STANDARD PLAN RSP ES-10

2004 REVISED Std PLAN RSP ES-10

6-27-07

DIST	COUNTY	ROUTE	KILOMETER POST TOTAL PROJECT	SHEET NO.	TOTAL SHEETS
07	LA	5	50.8/58.0	707	869

REGISTERED CIVIL ENGINEER

October 5, 2007
PLANS APPROVAL DATE

REGISTERED PROFESSIONAL ENGINEER
Stanley P. Johnson
No. C57793
Exp. 03-31-08
CIVIL
STATE OF CALIFORNIA

The State of California or its officers or agents shall not be responsible for the accuracy or completeness of electronic copies of this plan sheet.

To get to the Caltrans web site, go to: http://www.dot.ca.gov

To accompany plans dated 5-3-10

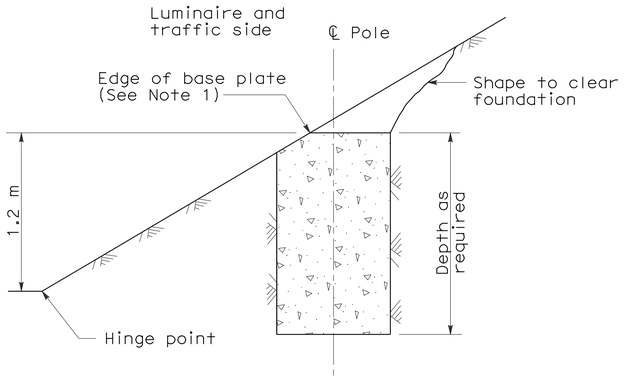

CUT SLOPES
STEEPER THAN 1:4
See Note 2

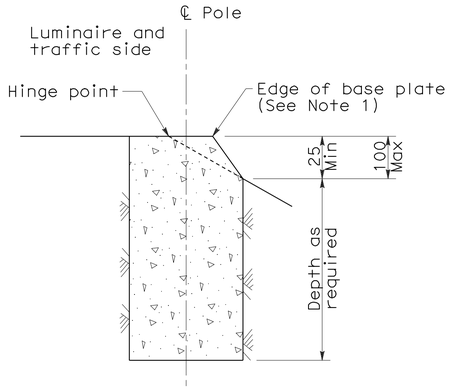

FILL SLOPES
STEEPER THAN 1:4
See Note 2

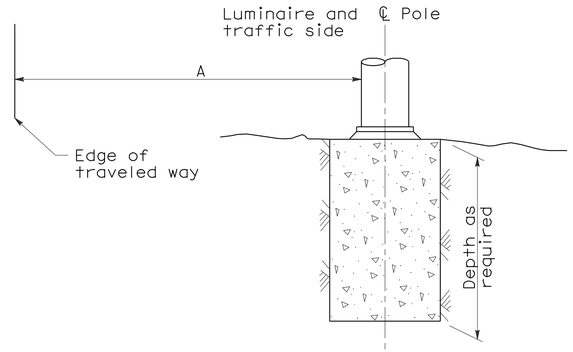

FLAT SECTIONS, CUT OR FILL SLOPES
1:4 OR FLATTER

STANDARD TYPE	SETBACK (DIMENSION A)
32	9 m Min
31, 36-20A	6 m Min
15, 15D, 15-SB, 21, 21D, 30	Mast Arm Length (Min)

FOUNDATIONS ADJACENT TO ALL ROADWAYS EXCEPT IN SIDEWALK, MEDIAN AND ISLAND AREAS

NOTES:

1. Where a portion of the foundation is above grade, the top edges shall have a 25 mm chamfer.
2. Horizontal setbacks on cut and fill slopes steeper than 1:4 shall not exceed the distance shown for flat sections.

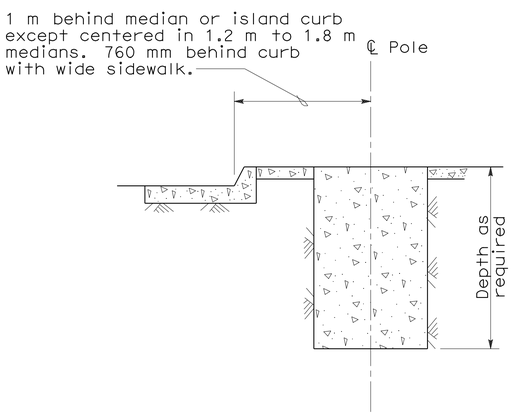

MEDIAN, ISLAND
OR WIDE SIDEWALK
(2 m wide and wider)

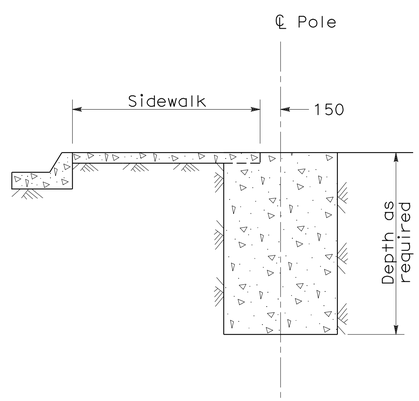

NARROW SIDEWALK
(Less than 2 m wide)

FOUNDATIONS IN SIDEWALK, MEDIAN AND ISLAND AREAS

STATE OF CALIFORNIA
DEPARTMENT OF TRANSPORTATION

ELECTRICAL SYSTEMS (FOUNDATION INSTALLATIONS)

NO SCALE

ALL DIMENSIONS ARE IN MILLIMETERS UNLESS OTHERWISE SHOWN

RSP ES-11 DATED OCTOBER 5, 2007 SUPERSEDES STANDARD PLAN ES-11 DATED JULY 1, 2004-PAGE 475 OF THE STANDARD PLANS BOOK DATED JULY 2004.

REVISED STANDARD PLAN RSP ES-11

2004 REVISED Std PLAN RSP ES-11

10-1-07

DIST	COUNTY	ROUTE	KILOMETER POST TOTAL PROJECT	SHEET NO.	TOTAL SHEETS
07	LA	5	50.8/58.0	708	869

Caltrans Metric

REGISTERED ELECTRICAL ENGINEER

October 5, 2007
PLANS APPROVAL DATE

REGISTERED PROFESSIONAL ENGINEER Jeffery G. McRae No. E14512 Exp. 6-30-08 ELECTRICAL STATE OF CALIFORNIA

The State of California or its officers or agents shall not be responsible for the accuracy or completeness of electronic copies of this plan sheet.

To get to the Caltrans web site, go to: http://www.dot.ca.gov

To accompany plans dated 5-3-10

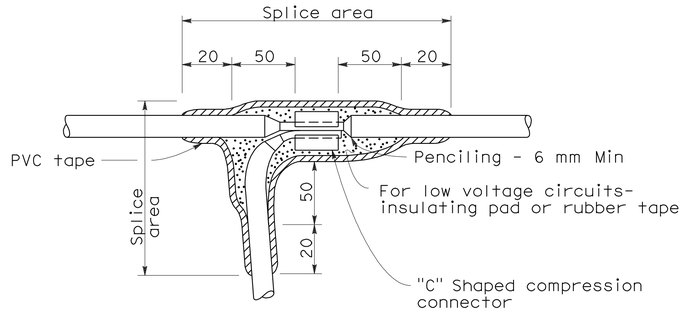

TYPE "C" SPLICE

Between 1 free-end and 1 through conductor

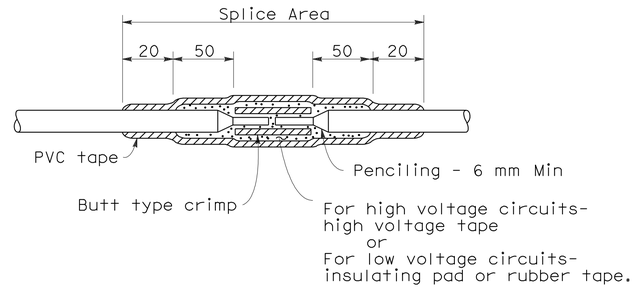

TYPE "S" SPLICE

Between 2 free-ends

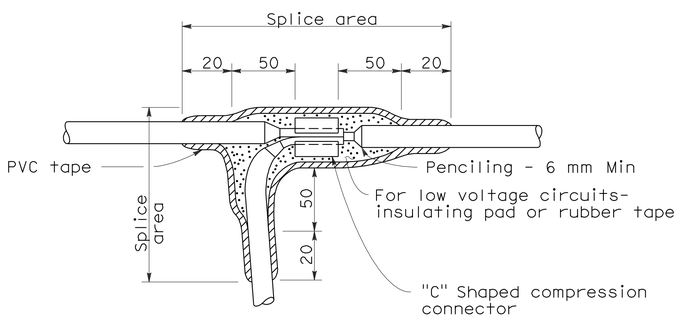

TYPE "T" SPLICE

For 3 free-ends

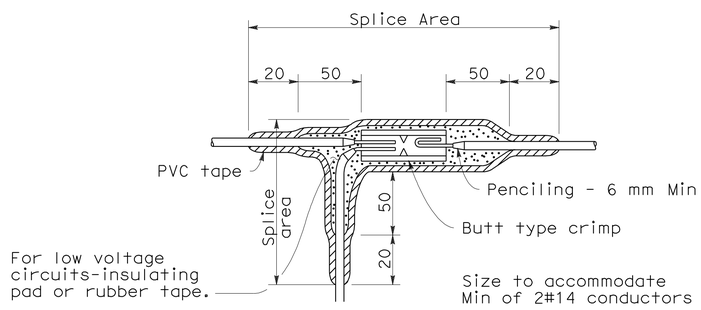

TYPE "ST" SPLICE

NOTES:

1. Dimensions are minimum.
2. Rubber tapes shall be rolled after application.

INSULATION METHODS

Low Voltage Circuits (0-600 V)

METHOD "B"

1. Completely cover the splice area with electrical insulating coating and allow to dry.
2. Apply 2 layers of electrical insulating pad with minimum thickness of 4 mm each layer or 2 layers, half lapped, synthetic oil resistant, self fusing rubber tape.
3. Apply 3 layers half lapped polyvinyl chloride tape.
4. Cover entire splice with electrical insulating coating and allow to dry.

High Voltage Circuits (Over 600 V)

1. Completely cover the splice area with electrical insulating coating and allow to dry.
2. Apply high voltage tape to a minimum thickness equal to original insulation.
3. Apply 3 layers half lapped polyvinyl chloride tape.
4. Cover entire splice with electrical insulating coating and allow to dry.

STATE OF CALIFORNIA
DEPARTMENT OF TRANSPORTATION

ELECTRICAL SYSTEMS (SPLICING DETAILS)

NO SCALE

ALL DIMENSIONS ARE IN MILLIMETERS UNLESS OTHERWISE SHOWN

RSP ES-13A DATED OCTOBER 5, 2007 SUPERSEDES STANDARD PLAN ES-13A DATED JULY 1, 2004-PAGE 478 OF THE STANDARD PLANS BOOK DATED JULY 2004.

REVISED STANDARD PLAN RSP ES-13A

2004 REVISED Std PLAN RSP ES-13A

6-27-07

DIST	COUNTY	ROUTE	KILOMETER POST TOTAL PROJECT	SHEET NO.	TOTAL SHEETS
07	LA	5	50.8/58.0	709	869

Caltrans Metric

REGISTERED ELECTRICAL ENGINEER

October 5, 2007
PLANS APPROVAL DATE

REGISTERED PROFESSIONAL ENGINEER Jeffery G. McRae No. E14512 Exp. 6-30-08 ELECTRICAL STATE OF CALIFORNIA

The State of California or its officers or agents shall not be responsible for the accuracy or completeness of electronic copies of this plan sheet.

To get to the Caltrans web site, go to: http://www.dot.ca.gov

To accompany plans dated 5-3-10

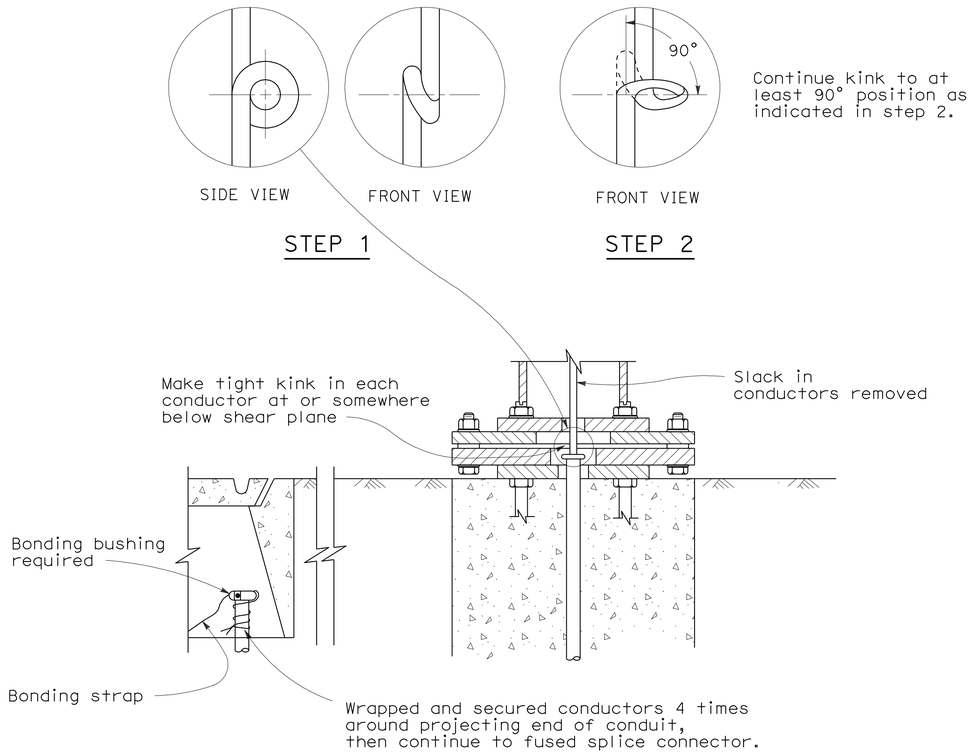

KINKING DETAIL FOR SLIP BASE STANDARDS

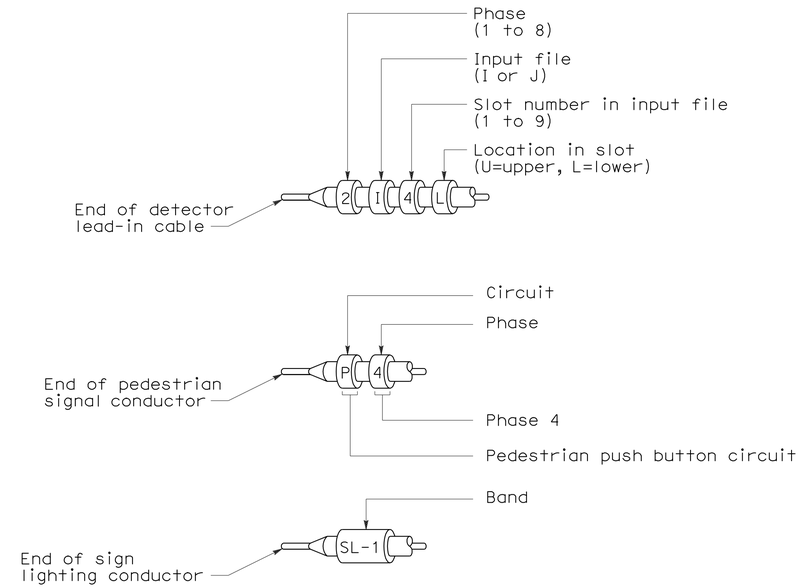

TYPICAL BANDING OF CONDUCTOR ENDS

Primary lines of multiple ballasts shall be provided with fused connectors.
Fuse ratings shall be as noted below.

CIRCUIT VOLTAGE	FUSE VOLTAGE RATING	FUSE CURRENT RATING																
		HPS LAMP BALLAST								LOW PRESSURE SODIUM BALLAST					INDUCTION SIGN LIGHTING	SINGLE PHASE (TWO WIRE) TRANSFORMERS (PRIMARY SIDE)		
		70 W	100 W	150 W	200 W	250 W	310 W	400 W	1000 W	35 W	55 W	90 W	135 W	180 W	85 W	1 kVA	2 kVA	3 kVA
120 V	250 V	5	5	5	5	5	5	5	-	5	5	5	5	5	5	10	20	30
240 V	250 V	5	5	5	5	5	5	5	5	3	3	3	5	5	5	6	10	20
480 V	500-600 V	5	5	5	5	5	5	5	5	2	2	2	3	3	1*	3	6	10

* See Revised Standard Plan RSP ES-15D, Type SC3 Control.

FUSE RATINGS FOR FUSED CONNECTORS

LUMINAIRE BALLAST FUSING

STATE OF CALIFORNIA
DEPARTMENT OF TRANSPORTATION

ELECTRICAL SYSTEMS (WIRING DETAILS AND FUSE RATINGS)

NO SCALE

ALL DIMENSIONS ARE IN MILLIMETERS UNLESS OTHERWISE SHOWN

RSP ES-13B DATED OCTOBER 5, 2007 SUPERSEDES STANDARD PLAN ES-13B DATED JULY 1, 2004-PAGE 479 OF THE STANDARD PLANS BOOK DATED JULY 2004.

REVISED STANDARD PLAN RSP ES-13B

2004 REVISED Std PLAN RSP ES-13B

10-1-07

DIST	COUNTY	ROUTE	KILOMETER POST TOTAL PROJECT	SHEET NO.	TOTAL SHEETS
07	LA	5	50.8/58.0	710	869

Caltrans Metric

REGISTERED ELECTRICAL ENGINEER

October 5, 2007
PLANS APPROVAL DATE

REGISTERED PROFESSIONAL ENGINEER Jeffery G. McRae No. E14512 Exp. 6-30-08 ELECTRICAL STATE OF CALIFORNIA

The State of California or its officers or agents shall not be responsible for the accuracy or completeness of electronic copies of this plan sheet.

To get to the Caltrans web site, go to: http://www.dot.ca.gov

To accompany plans dated 5-3-10

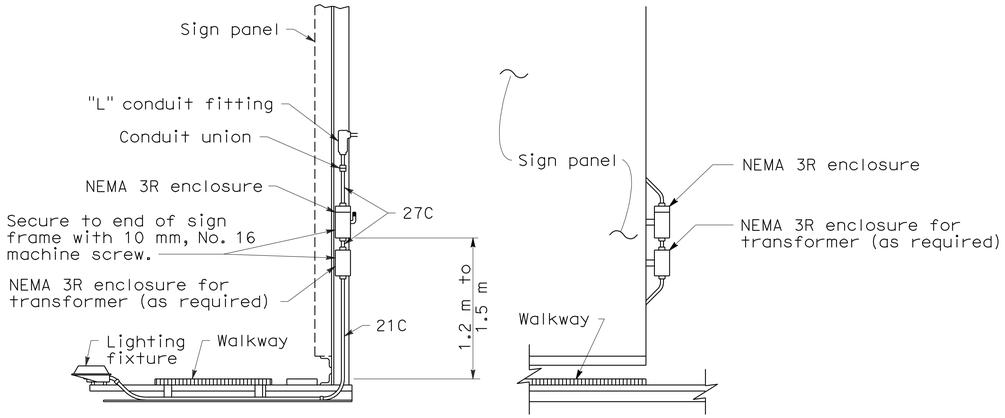

SIDE VIEW FRONT VIEW

TYPICAL SIGN ILLUMINATION EQUIPMENT INSTALLATION FOR OVERHEAD SIGNS BRIDGE MOUNTED

Contactor and test switch enclosure shall be readily accessible from the sign walkway.

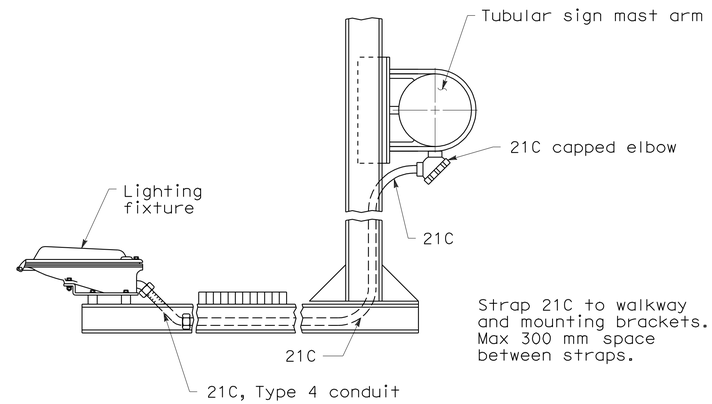

TYPICAL SIGN ILLUMINATION EQUIPMENT INSTALLATION FOR OVERHEAD SIGNS TUBULAR

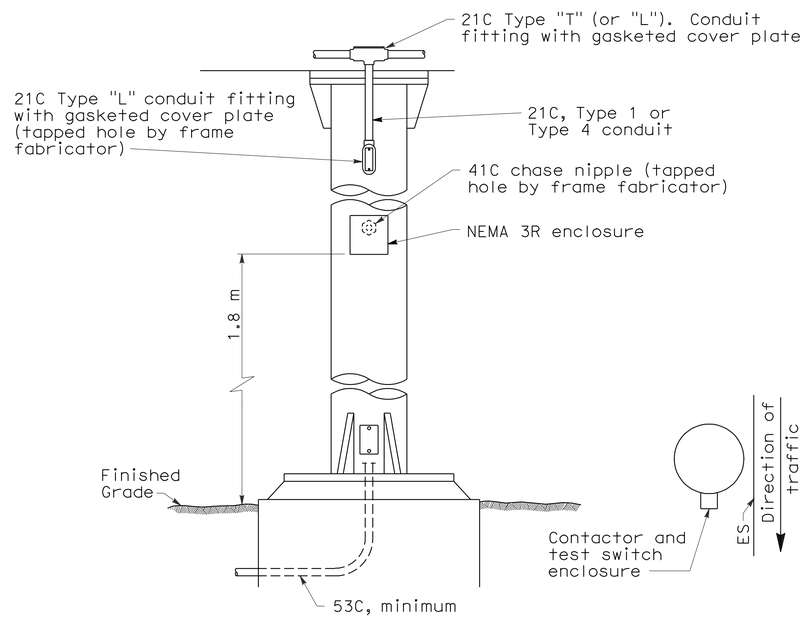

TYPICAL SIGN ILLUMINATION EQUIPMENT INSTALLATION FOR OVERHEAD SIGNS ROUND POST

NOTES:

1. Type 4 conduit shall be secured to the nearest walkway bracket using one-hole galvanized malleable iron or steel straps and brass machine screws tapped into the bracket.
2. See Overhead Signs Standard Plans for overhead signs and frame jucture details for photoelectric unit installation.
3. Enclosures and straps shall be secured by 6 mm maximum size screws.

STATE OF CALIFORNIA
DEPARTMENT OF TRANSPORTATION

ELECTRICAL SYSTEMS (SIGN ILLUMINATION EQUIPMENT)

NO SCALE

ALL DIMENSIONS ARE IN MILLIMETERS UNLESS OTHERWISE SHOWN

RSP ES-15C DATED OCTOBER 5, 2007 SUPERSEDES STANDARD PLAN ES-15C DATED JULY 1, 2004-PAGE 485 OF THE STANDARD PLANS BOOK DATED JULY 2004.

REVISED STANDARD PLAN RSP ES-15C

2004 REVISED Std PLAN RSP ES-15C

6-27-07

DIST	COUNTY	ROUTE	KILOMETER POST TOTAL PROJECT	SHEET NO.	TOTAL SHEETS
07	LA	5	50.8/58.0	711	869

Caltrans Metric

REGISTERED ELECTRICAL ENGINEER

October 5, 2007
PLANS APPROVAL DATE

REGISTERED PROFESSIONAL ENGINEER Jeffery G. McRae No. E14512 Exp. 6-30-08 ELECTRICAL STATE OF CALIFORNIA

The State of California or its officers or agents shall not be responsible for the accuracy or completeness of electronic copies of this plan sheet.

To get to the Caltrans web site, go to: http://www.dot.ca.gov

To accompany plans dated 5-3-10

2004 REVISED Std PLAN RSP ES-15D

NOTES: (FOR LIGHTING AND SIGN ILLUMINATION CONTROL)

1. The ballast voltages of lighting fixtures and luminaires shall match line service voltages.
2. Voltage rating of photoelectric controls shall conform to the service voltage indicated on the plans.
3. Terminal strip shall be provided for wiring to fixtures.
4. Type SC1A, SC2A, SC3A controls are similar to Types SC1, SC2, SC3 controls respectively except test switch and wiring are not required.

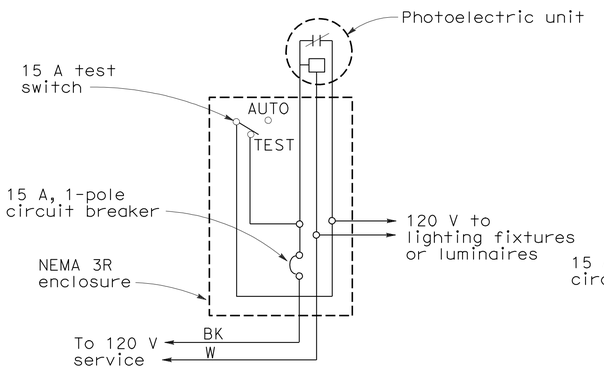

TYPE LC1 CONTROL

For 120 V unswitched circuit with no more than 800 W load.

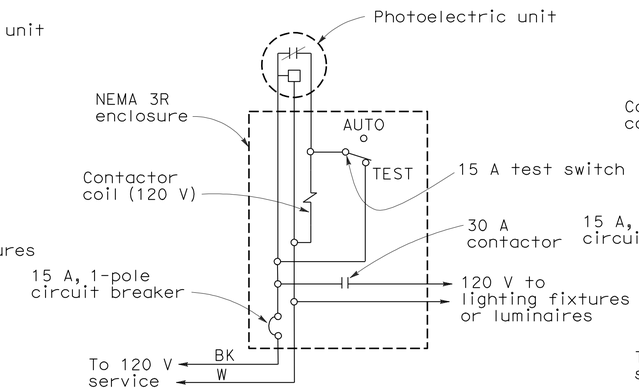

TYPE LC2 CONTROL

For 120 V unswitched circuit

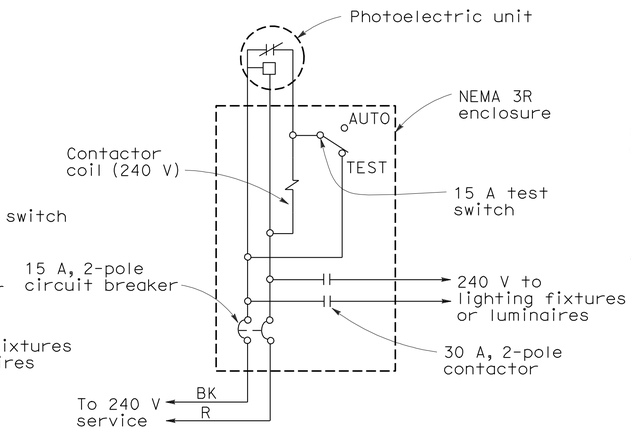

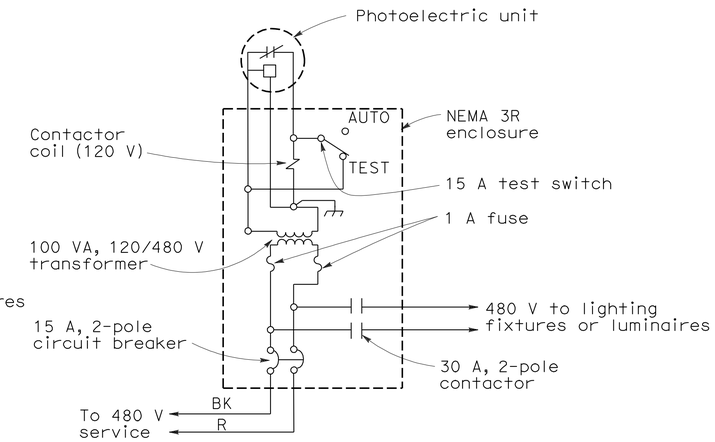

TYPE LC3 CONTROL

For 240 V and 480 V unswitched circuit

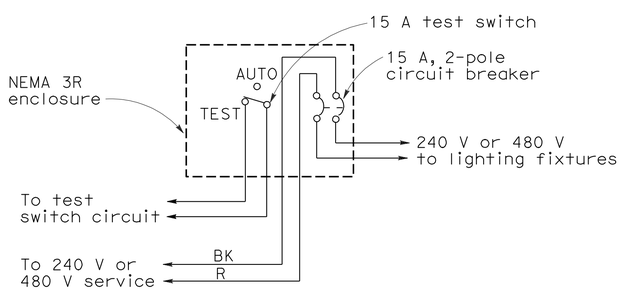

TYPE SC1 CONTROL

For 240 V or 480 V switched circuit, see Note 4 for Type SC1A

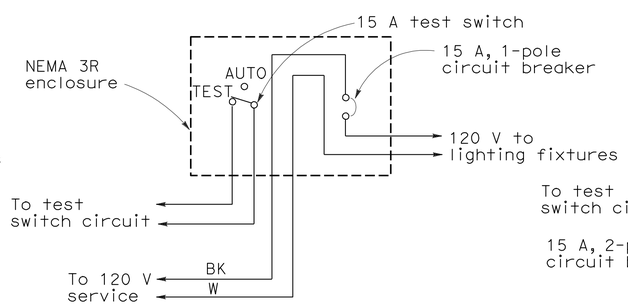

TYPE SC2 CONTROL

For 120 V switched circuit, see Note 4 for Type SC2A

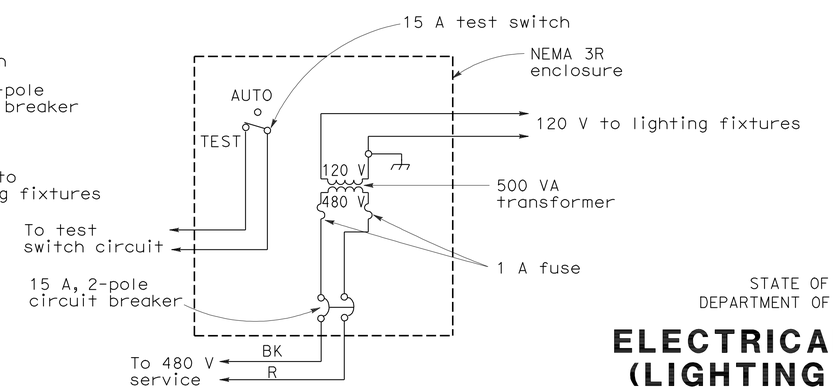

TYPE SC3 CONTROL

For 480 V switched sign circuit, see Note 4 for Type SC3A

STATE OF CALIFORNIA
DEPARTMENT OF TRANSPORTATION

ELECTRICAL SYSTEMS (LIGHTING AND SIGN ILLUMINATION CONTROL)

NO SCALE

ALL DIMENSIONS ARE IN MILLIMETERS UNLESS OTHERWISE SHOWN

RSP ES-15D DATED OCTOBER 5, 2007 SUPERSEDES RSP ES-15D DATED APRIL 28, 2005 AND STANDARD PLAN ES-15D DATED JULY 1, 2004-PAGE 486 OF THE STANDARD PLANS BOOK DATED JULY 2004.

REVISED STANDARD PLAN RSP ES-15D

10-1-07

DIST	COUNTY	ROUTE	KILOMETER POST TOTAL PROJECT	SHEET NO.	TOTAL SHEETS
07	LA	5	50.8/58.0	712	869

Caltrans Metric

REGISTERED CIVIL ENGINEER

January 24, 2005
PLANS APPROVAL DATE

REGISTERED PROFESSIONAL ENGINEER
Tillat Sattar
No. C42892
Exp. 03-31-2006
CIVIL
STATE OF CALIFORNIA

The State of California or its officers or agents shall not be responsible for the accuracy or completeness of electronic copies of this plan sheet.

To get to the Caltrans web site, go to: http://www.dot.ca.gov

To accompany plans dated 5-3-10

Pole Type	Pole Data				Base Plate Data				"d" 610 mm ø CIDH Pile (m)	Structural Steel kg plus 3.5% Galvanizing
	Height "h" (m)	Min OD (mm)		Thickness (mm)	"C" (mm)	Thickness (mm)	Anchor Bolts (mm)			
		BASE	TOP				SIZE	BC=BOLT CIRCLE		
CCTV 25	7.62	187	98	4.55	305	25.4	25 x 920 x 102	267	1.83	180
CCTV 30	9.14	203	98	4.55	305	25.4	25 x 920 x 102	279	2.13	215
CCTV 35	10.67	219	98	4.55	305	25.4	25 x 920 x 102	305	2.13	250
CCTV 40	12.19	238	98	4.55	330	25.4	32 x 920 x 102	330	2.13	295
CCTV 45	13.72	254	98	4.55	330	25.4	32 x 920 x 102	343	2.44	340

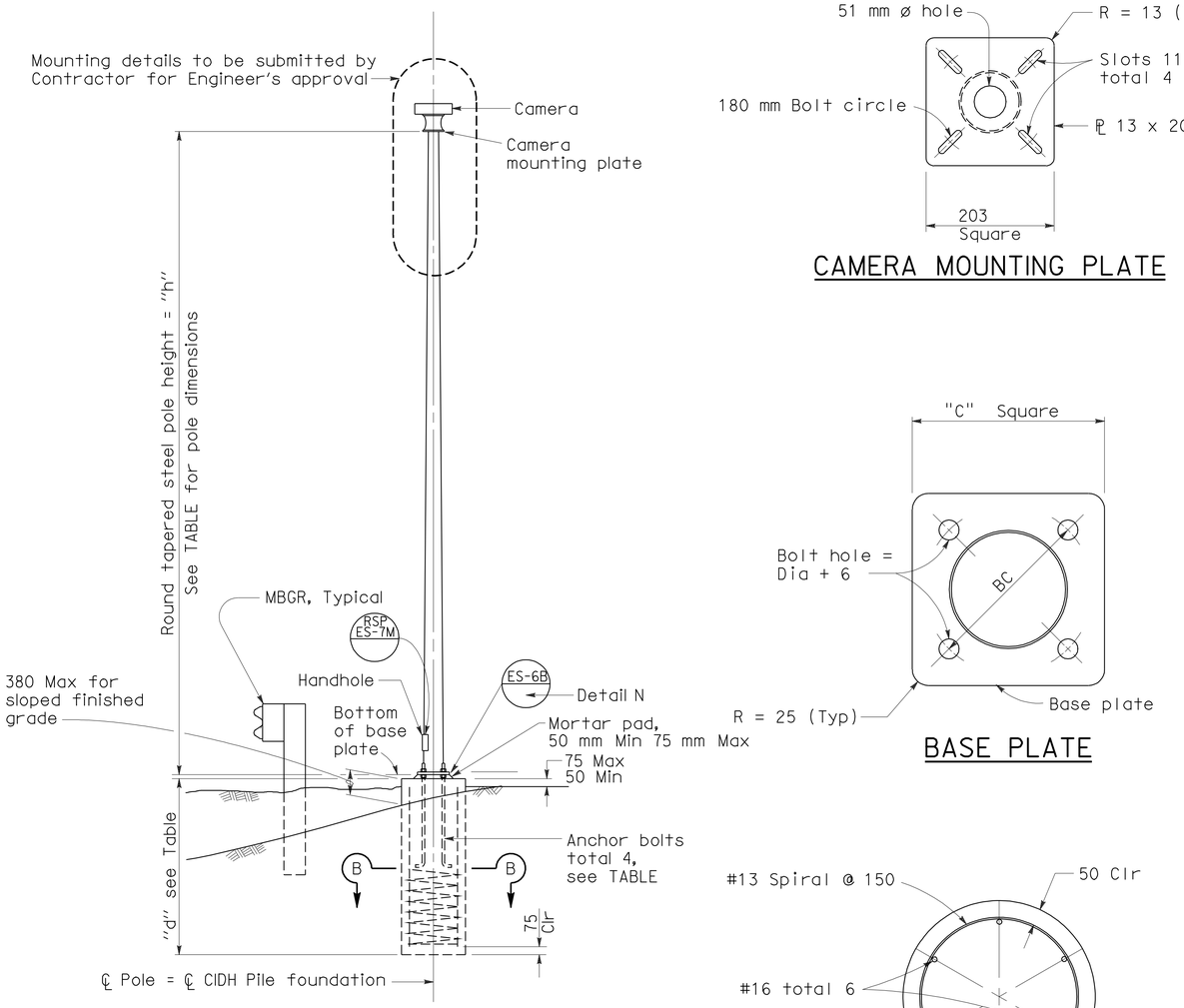

ELEVATION

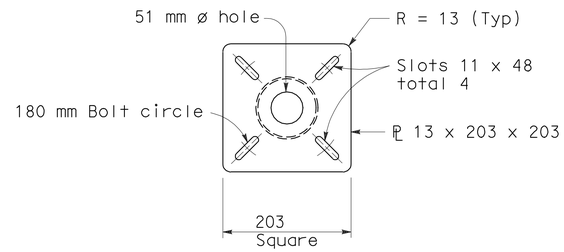

CAMERA MOUNTING PLATE

BASE PLATE

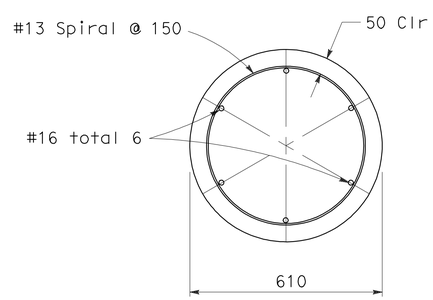

SECTION B-B

GENERAL NOTES:

SPECIFICATIONS

Design : AASHTO Standard specifications for structural supports for highway signs, luminaires and traffic signals dated 2001.

LOADING

Wind Loadings : 161km/h

UNIT STRESSES

Structural Steel : fy = 330 MPa tapered steel tube
fy = 250 MPa unless otherwise noted
Anchor bolts = A307
Reinforced Concrete : f'c = 25 MPa
fy = 415 MPa

NOTES:

1. The Contractor shall verify controlling field dimensions before ordering or fabricating any material.
2. All steel shall be galvanized after fabrication.
3. During pole erection, the post shall be raked as necessary with the use of leveling nuts to provide a plumb pole axis.

STATE OF CALIFORNIA
DEPARTMENT OF TRANSPORTATION

ELECTRICAL SYSTEMS (CLOSED CIRCUIT TELEVISION POLE DETAILS)

NO SCALE

ALL DIMENSIONS ARE IN MILLIMETERS UNLESS OTHERWISE SHOWN

RSP ES-16A DATED JANUARY 24, 2005 SUPERSEDES STANDARD PLAN ES-16A DATED JULY 1, 2004-PAGE 487 OF THE STANDARD PLANS BOOK DATED JULY 2004.

REVISED STANDARD PLAN RSP ES-16A

2004 REVISED Std PLAN RSP ES-16A

DIST	COUNTY	ROUTE	KILOMETER POST TOTAL PROJECT	SHEET No	TOTAL SHEETS
07	LA	5	50.8/58.0	713	869

REGISTERED CIVIL ENGINEER 6-25-08 DATE

5-3-10
PLANS APPROVAL DATE

REGISTERED PROFESSIONAL ENGINEER XIAODONG CHEN No. C 58858 Exp. 6-30-11 CIVIL STATE OF CALIFORNIA

The State of California or its officers or agents shall not be responsible for the accuracy or completeness of electronic copies of this plan sheet.

Legend:

- Indicates new structure
- Indicates existing structure
- Minimum vertical clearance
- Indicates bridge removal (portion)
- * Match existing grade and cross slope
- ** For Stage 1 & Stage 2 construction, see "STAGED CONSTRUCTION" sheet.

Note:

For Index to Plans, Standard Plans, Quantities and General Notes, see "INDEX TO PLANS" sheet.

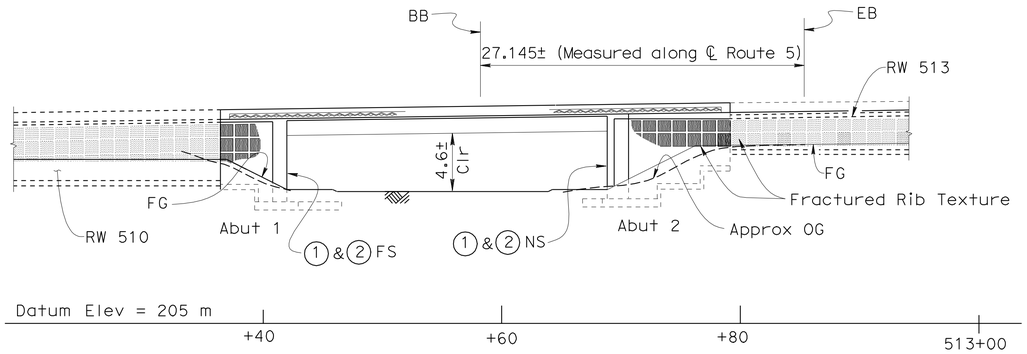

ELEVATION

1:250

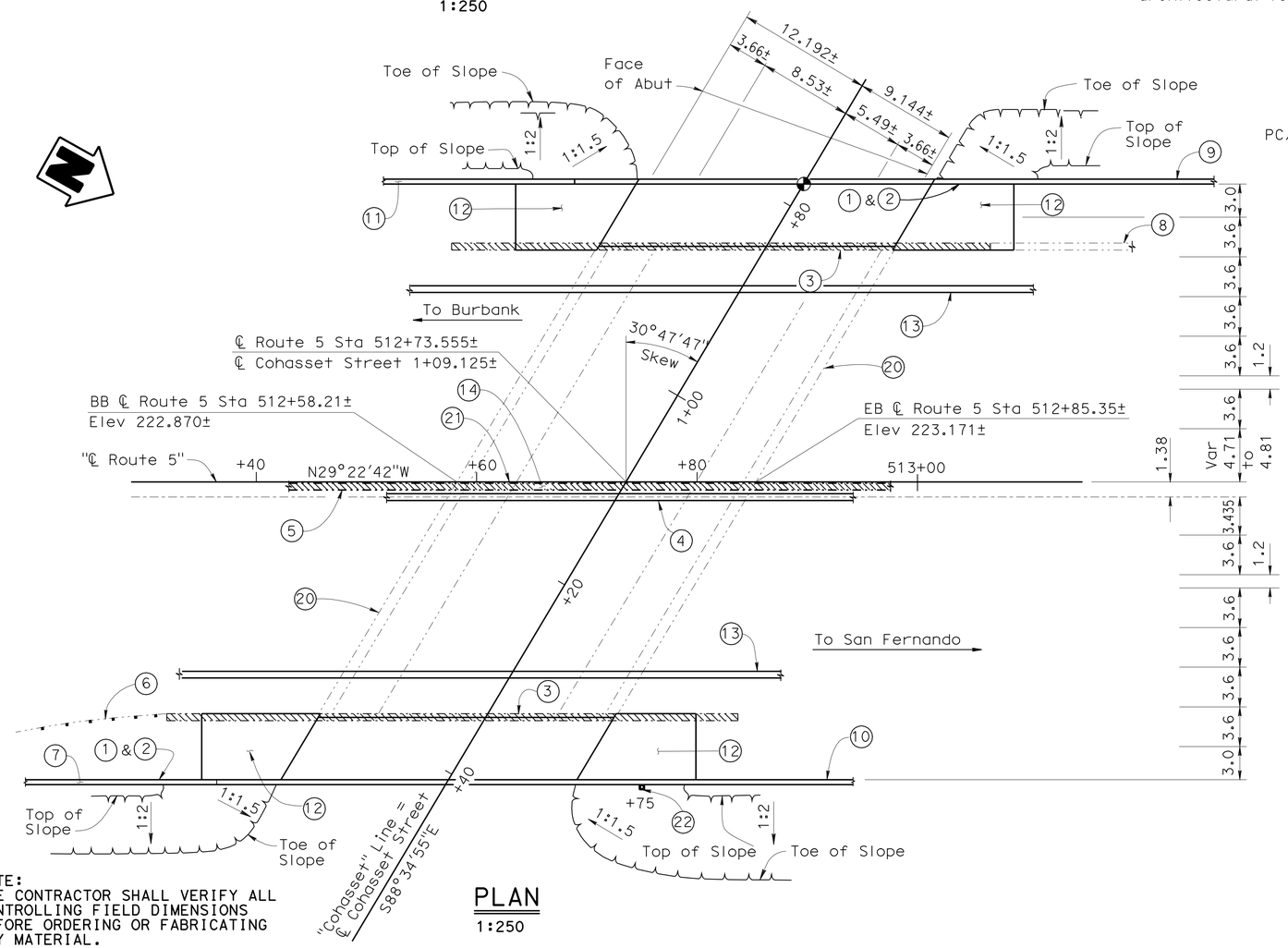

PLAN

1:250

NOTE:
THE CONTRACTOR SHALL VERIFY ALL CONTROLLING FIELD DIMENSIONS BEFORE ORDERING OR FABRICATING ANY MATERIAL.

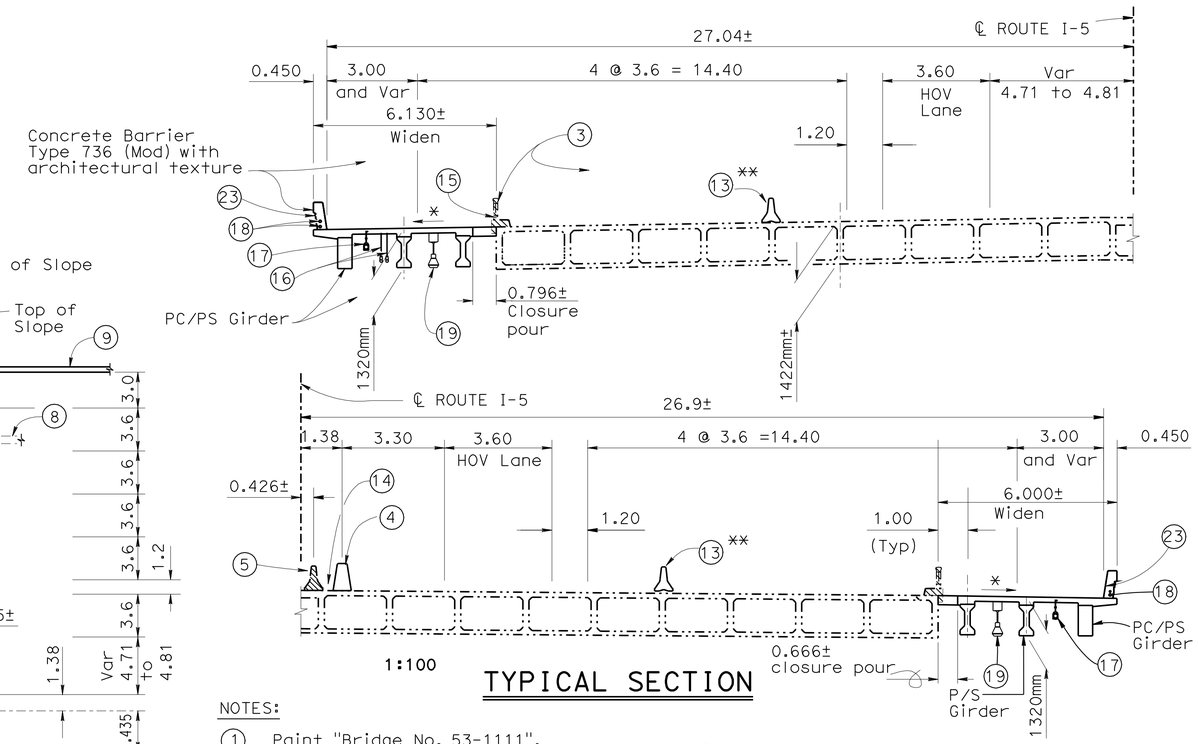

1:100

TYPICAL SECTION

NOTES:

1. Paint "Bridge No. 53-1111".
2. Paint "Cohasset Street Undercrossing".
3. Remove existing railing.
4. Concrete Barrier Type 60AR.
5. Remove existing Median Barrier Type 50A (Mod), See "Road Plans".
6. Remove existing MBGR, see "Road Plans".
7. Retaining Wall 510, see "Road Plans".
8. Remove existing Sound Wall on barrier, see "Road Plans".
9. Retaining Wall 513, see "Retaining Wall No. 513 Plans".
10. Retaining Wall 512, see "Road plans".
11. Retaining Wall 509, see "Road Plans".
12. Structure Approach Type N(9D).
13. Temporary Railing (Type K), see "Road Plans".
14. Deck slope correction, with Polyester Concrete Overlay.
15. Remove existing communication conduits, see "Road Plans".
16. 2-91 mm ø communication conduits, see" Road Plans".
17. 1-NPS3 water supply line on each side.
18. 1-53 mm ø sprinkler control conduit on each side.
19. Pendant soffit light, see "Road Plans".
20. Clean expansion joint and replace with new Joint Seal (MR-13 mm).
21. Clean longitudinal joint and replace with Type AL Seal.
22. Install Lighting Standard Foundation Type 21 (Future) See "Road Plans"
23. 1-53 c mt ø electrical conduits each side, see "Road Plans".

Caltrans Metric

Fritz Hoffman 6-25-08
DESIGN ENGINEER

	BY	CHECKED
DESIGN	Xiaodong Chen	G. R-Gutierrez
DETAILS	M. Slayton/BJ/DE	Xiaodong Chen
QUANTITIES	G. R-Gutierrez	Ryan Odell

LOAD & RESISTANCE FACTOR DESIGN — LIVE LOADING: HL93 W/"LOW-BOY"; PERMIT DESIGN VEHICLE

	BY	CHECKED
LAYOUT	M. Slayton	Xiaodong Chen
SPECIFICATIONS	M. Pan	PLANS AND SPECS COMPARED

STATE OF CALIFORNIA
DEPARTMENT OF TRANSPORTATION

DIVISION OF ENGINEERING SERVICES
STRUCTURE DESIGN
DESIGN BRANCH 6

BRIDGE NO. 53-1111
KILOMETER POST 51.27

COHASSET STREET UC (WIDEN)
GENERAL PLAN

ALL DIMENSIONS ARE IN METERS UNLESS OTHERWISE SHOWN

ORIGINAL SCALE IN MILLIMETERS FOR REDUCED PLANS 0 10 20 30 40 50 60 70 80 90 100

CU 07
EA 1218V1

DISREGARD PRINTS BEARING EARLIER REVISION DATES

REVISION DATES: 11-24-05 11-28-05 3-14-06 2-6-07 8-11-07 3-13-08 4-8-08 4-14-08 4-28-08 7-14-09

SHEET 1 OF 21

FILE => 53-1111-a-gp.dgn

STRUCTURES DESIGN GENERAL PLAN SHEET (METRIC) (REV.07-24-06)

USERNAME => friehard DATE PLOTTED => 03-MAY-2010 TIME PLOTTED => 12:34

DIST	COUNTY	ROUTE	KILOMETER POST TOTAL PROJECT	SHEET No	TOTAL SHEETS
07	LA	5	50.8/58.0	714	869

Xiaodong Chen 6-25-08
REGISTERED CIVIL ENGINEER DATE

5-3-10
PLANS APPROVAL DATE

REGISTERED PROFESSIONAL ENGINEER XIAODONG CHEN No. C 58858 Exp. 6-30-11 CIVIL STATE OF CALIFORNIA

The State of California or its officers or agents shall not be responsible for the accuracy or completeness of electronic copies of this plan sheet.

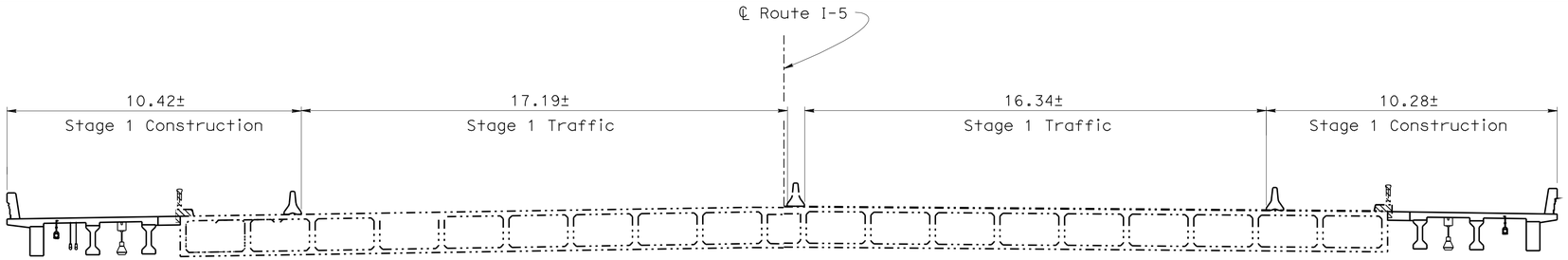

STAGE 1
1:100

Notes:

* For traffic handling, see "Road Plans".

For circled number notes and dimensions not shown, see "TYPICAL SECTION" on "GENERAL PLAN NO.1" sheet.

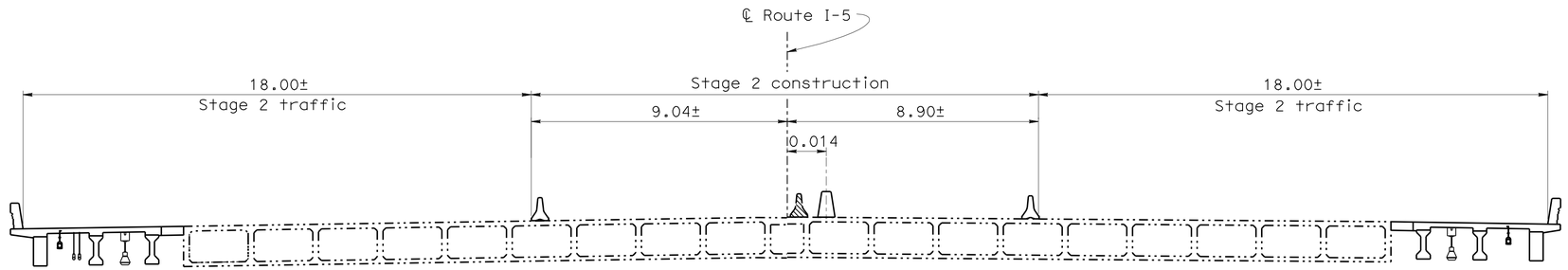

STAGE 2
1:100

LEGEND:

Indicates new structure

Indicates existing structure

Indicates bridge removal (portion)

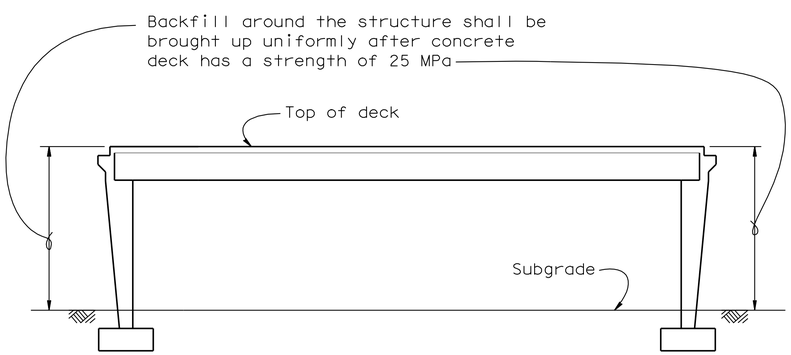

BACKFILL DIAGRAM
No Scale

NOTE:
THE CONTRACTOR SHALL VERIFY ALL CONTROLLING FIELD DIMENSIONS BEFORE ORDERING OR FABRICATING ANY MATERIAL.

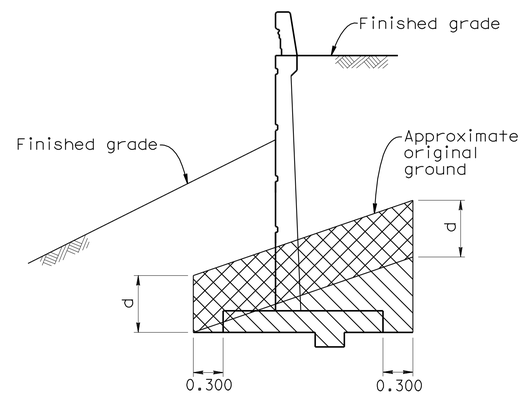

RETAINING WALL

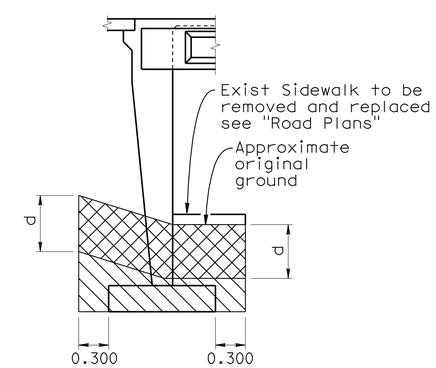

ABUTMENT

NOTES:

d = 0.900 m for left side (Type Y-1)
d = 0.450 m for right side (Type Y-2)

LIMITS OF PAYMENT FOR STRUCTURE EXCAVATION (AERIALLY DEPOSITED LEAD)
No scale

LEGEND:

Indicates structure excavation

Indicates structure excavation (Type Y-1 or Y-2) (Aerially deposited lead)

Caltrans Metric

	BY	CHECKED
DESIGN	G. R-Gutierrez	Xiaodong Chen
DETAILS	Bruno Jenko/DE	Xiaodong Chen
QUANTITIES	G. R-Gutierrez	Ryan Odell

STATE OF CALIFORNIA
DEPARTMENT OF TRANSPORTATION

DIVISION OF ENGINEERING SERVICES
STRUCTURE DESIGN
DESIGN BRANCH 6

BRIDGE NO. 53-1111
KILOMETER POST 51.27

COHASSET STREET UC (WIDEN)
STAGED CONSTRUCTION

ALL DIMENSIONS ARE IN METERS UNLESS OTHERWISE SHOWN

ORIGINAL SCALE IN MILLIMETERS FOR REDUCED PLANS 0 10 20 30 40 50 60 70 80 90 100

CU 07
EA 1218V1

DISREGARD PRINTS BEARING EARLIER REVISION DATES

REVISION DATES: 11-24-05 7-14-06 3-14-06 2-6-07 8-14-07 8-18-07 4-8-08 6-16-08 6-20-08 6-12-08

SHEET 2 OF 21

FILE => 53-1111-a-stage-const.dgn

STRUCTURES DESIGN DETAIL SHEET (METRIC) (REV.03-17-04)

USERNAME => trlenard DATE PLOTTED => 03-MAY-2010 TIME PLOTTED => 12:34

DIST	COUNTY	ROUTE	KILOMETER POST TOTAL PROJECT	SHEET No	TOTAL SHEETS
07	LA	5	50.8/58.0	715	869

Xiaodong Chen 6-25-08
REGISTERED CIVIL ENGINEER DATE

5-3-10
PLANS APPROVAL DATE

REGISTERED PROFESSIONAL ENGINEER Xiaodong Chen No. C58858 Exp. 6-30-11 CIVIL STATE OF CALIFORNIA

The State of California or its officers or agents shall not be responsible for the accuracy or completeness of electronic copies of this plan sheet.

SPREAD FOOTING DATA TABLE

Support Location	Allowable Bearing Capacity, q (all)	Nominal Bearing Resistance q(n)
Abutment 1	239 kPa	N/A
Abutment 2	239 kPa	N/A

GENERAL NOTES
LOAD FACTOR DESIGN

DESIGN: CALTRANS BRIDGE DESIGN SPECIFICATIONS
LFD Version April 2000
(1996 AASHTO with Interims and Revision by Caltrans)

SEISMIC DESIGN: CALTRANS SEISMIC DESIGN CRITERIA (SDC)
Version 1.4, June 2006

DEAD LOAD: Includes 1675 Pa for Future Wearing Surface

LIVE LOAD: HS20-44 and Alternative and Permit Design Load

SEISMIC LOAD: Site specific ARS as shown

REINFORCED CONCRETE: f_y = 420 MPa

Transverse Deck Slabs (Working Stress):
f_s = 138 MPa
f_c = 9 MPa
n = 10
f'_c = 25 MPa (except as shown on Concrete Strength & Type Limits Diagram)

PRESTRESSED CONCRETE: See "Prestressing Notes" on "PRESTRESSED I GIRDER" sheet

QUANTITIES

REMOVE CONCRETE DECK SURFACE	30	m^2
PREPARE CONCRETE BRIDGE DECK SURFACE	30	m^2
BRIDGE REMOVAL (PORTION), LOCATION A	LUMP	SUM
STRUCTURE EXCAVATION (BRIDGE)	274	m^3
STRUCTURE EXCAVATION (TYPE Y-1)	101	m^3
STRUCTURE EXCAVATION (TYPE Y-2) (AERIALLY DEPOSITED LEAD)	50	m^3
STRUCTURE BACKFILL (BRIDGE)	615	m^3
NPS 3 SUPPLY LINE (BRIDGE)	55	m
STRUCTURAL CONCRETE, BRIDGE FOOTING	80	m^3
STRUCTURAL CONCRETE, BRIDGE	380	m^3
STRUCTURAL CONCRETE, APPROACH SLAB (TYPE N)	66	m^3
FRACTURED RIB TEXTURE	110	m^2
DRILL AND BOND DOWEL	74	m
CLEAN EXPANSION JOINT	124	m
FURNISH PRECAST PRESTRESSED CONCRETE GIRDER (25 M - 30 M)	6	EA
ERECT PRECAST PRESTRESSED CONCRETE GIRDER	6	EA
FURNISH POLYESTER CONCRETE OVERLAY	2	m^3
PLACE POLYESTER CONCRETE OVERLAY	30	m^2
JOINT SEAL (TYPE AL)	27	m
JOINT SEAL (MR 13 mm)	130	m
BAR REINFORCING STEEL (BRIDGE) n	50 300	kg
CONCRETE BARRIER (TYPE 736 MODIFIED)	87	m
CONCRETE BARRIER (TYPE 60AR)	28	m

NOTE:
THE CONTRACTOR SHALL VERIFY ALL CONTROLLING FIELD DIMENSIONS BEFORE ORDERING OR FABRICATING ANY MATERIAL.

STANDARD PLANS DATED JULY 2004

SHEET NO.	TITLE
A10A	ACRONYMS AND ABBREVIATIONS (A-L)
A10B	ACRONYMS AND ABBREVIATIONS (M-Z)
A10C	SYMBOLS (SHEET 1 of 2)
A10D	SYMBOLS (SHEET 2 of 2)
A62C	LIMITS OF PAYMENT FOR EXCAVATION AND BACKFILL BRIDGE
A76A	CONCRETE BARRIER TYPE 60
B0-1	BRIDGE DETAILS
B0-3	BRIDGE DETAILS
B0-5	BRIDGE DETAILS
B3-1	RETAINING WALL TYPE 1
B3-8	RETAINING WALL DETAILS NO.1
RSP B6-10	UTILITY OPENINGS, T-BEAM
RSP B6-21	JOINT SEAL (MAXIMUM RAITING = 50 mm)
B11-56	CONCRETE BARRIER TYPE 736
B14-3	COMMUNICATION AND SPRINKLER CONTROL CONDUITS (CONDUIT LESS THAN SIZE 103)
B14-4	WATER SUPPLY LINE (BRIDGE) (PIPE SIZES LESS THAN NPS4)
B14-5	WATER SUPPLY LINE (DETAILS) (PIPE SIZES LESS THAN NPS4)
ES-6A	ELECTRICAL SYSTEMS (LIGHTING STANDARS TYPES 15 AND 21)
ES-9E	ELECTRICAL SYSTEMS (ELECTRICAL DETAILS STRUCTURE INSTALLATIONS)

STANDARD PLAN SHEET NO.
DETAIL NO.

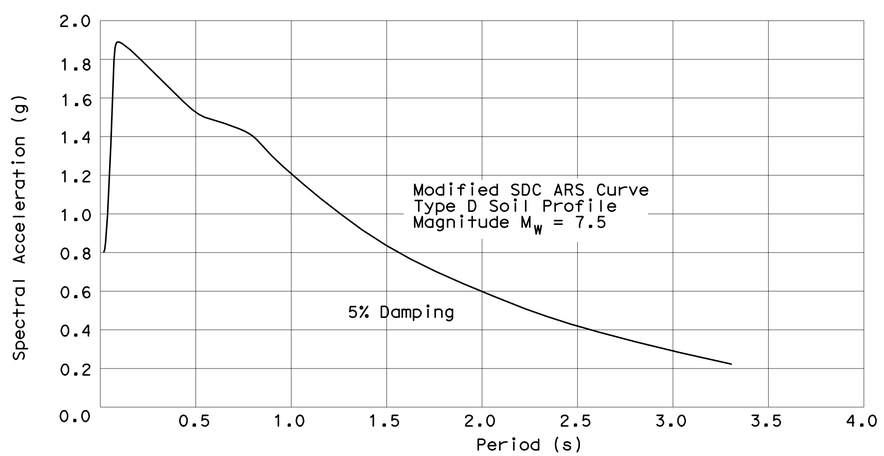

SITE SPECIFIC ACCELERATION RESPONSE SPECTRA CURVE

INDEX TO PLANS

SHEET NO.	TITLE
1.	GENERAL PLAN NO.1
2.	STAGED CONSTRUCTION
3.	INDEX TO PLANS
4.	FOUNDATION PLAN
5	ABUTMENT LAYOUT
6.	ABUTMENT DETAILS NO. 1
7.	ABUTMENT DETAILS NO. 2
8.	ABUTMENT DETAILS NO. 3
9.	ABUTMENT DETAILS NO.4
10.	RETAINING WALL DETAILS NO.1
11.	RETAINING WALL DETAILS NO.2
12.	TYPICAL SECTION
13.	GIRDER LAYOUT
14.	REMOVAL DETAILS
15.	ARCHITECTURAL DETAILS
16.	PRESTRESSED I GIRDER
17.	STRUCTURE APPROACH DRAINAGE DETAILS
18.	STRUCTURE APPROACH TYPE N(9D)
19.	LOG OF TEST BORINGS 1 OF 3
20.	LOG OF TEST BORINGS 2 OF 3
21.	LOG OF TEST BORINGS 3 OF 3

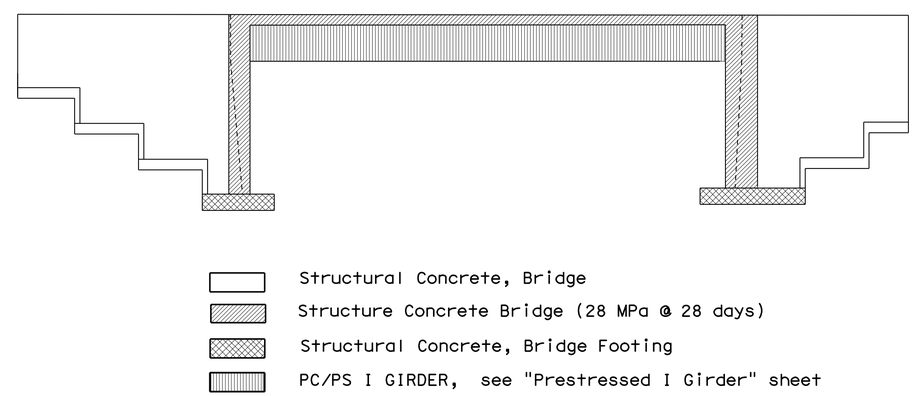

CONCRETE STRENGTH AND TYPE LIMITS
No Scale

Caltrans Metric

	BY	CHECKED
DESIGN	Xiaodong Chen	G. R-Gutierrez
DETAILS	Bruno Jenko	G. R-Gutierrez
QUANTITIES	G. R-Gutierrez	Ryan Odell

STATE OF CALIFORNIA
DEPARTMENT OF TRANSPORTATION

DIVISION OF ENGINEERING SERVICES
STRUCTURE DESIGN
DESIGN BRANCH 6

BRIDGE NO. 53-1111
KILOMETER POST 51.27

COHASSET STREET UC (WIDEN)
INDEX TO PLANS

ALL DIMENSIONS ARE IN MILLIMETERS UNLESS OTHERWISE SHOWN

ORIGINAL SCALE IN MILLIMETERS FOR REDUCED PLANS 0 10 20 30 40 50 60 70 80 90 100

CU 07
EA 1218V1

DISREGARD PRINTS BEARING EARLIER REVISION DATES

REVISION DATES: 8-18-07 11-16-07 4-8-08 6-17-08 7-14-09

SHEET 3 OF 21

FILE => 53-1111-b-itp.dgn

STRUCTURES DESIGN DETAIL SHEET (METRIC) (REV.03-17-04)

USERNAME => trrichard DATE PLOTTED => 03-MAY-2010 TIME PLOTTED => 12:34

DIST	COUNTY	ROUTE	KILOMETER POST TOTAL PROJECT	SHEET No	TOTAL SHEETS
07	LA	5	50.8/58.0	716	869

Xiaodong Chen 6-25-08
REGISTERED CIVIL ENGINEER DATE

5-3-10
PLANS APPROVAL DATE

REGISTERED PROFESSIONAL ENGINEER Xiaodong Chen No. C58858 Exp. 6-30-11 CIVIL STATE OF CALIFORNIA

The State of California or its officers or agents shall not be responsible for the accuracy or completeness of electronic copies of this plan sheet.

Caltrans Metric

NOTE: TREE DIAMETERS ARE SHOWN ON LEVEL 54, CONSTRUCTION CLASS.

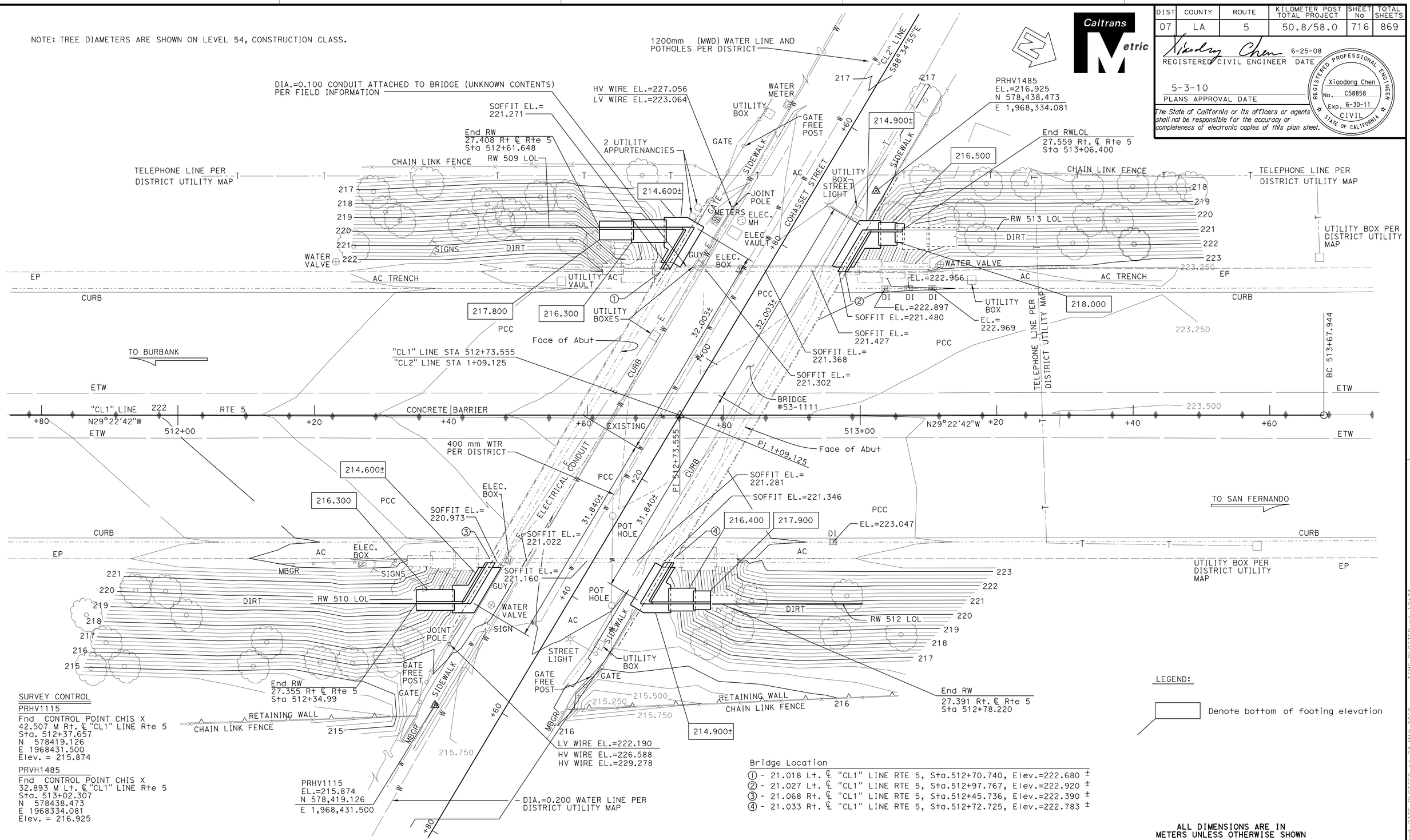

SURVEY CONTROL

PRHV1115
Fnd CONTROL POINT CHIS X
42.507 M Rt. ℄ "CL1" LINE Rte 5
Sta. 512+37.657
N 578419.126
E 1968431.500
Elev. = 215.874

PRVH1485
Fnd CONTROL POINT CHIS X
32.893 M Lt. ℄ "CL1" LINE Rte 5
Sta. 513+02.307
N 578438.473
E 1968334.081
Elev. = 216.925

LEGEND:

Denote bottom of footing elevation

Bridge Location

① - 21.018 Lt. ℄ "CL1" LINE RTE 5, Sta.512+70.740, Elev.=222.680 ±
② - 21.027 Lt. ℄ "CL1" LINE RTE 5, Sta.512+97.767, Elev.=222.920 ±
③ - 21.068 Rt. ℄ "CL1" LINE RTE 5, Sta.512+45.736, Elev.=222.390 ±
④ - 21.033 Rt. ℄ "CL1" LINE RTE 5, Sta.512+72.725, Elev.=222.783 ±

ALL DIMENSIONS ARE IN METERS UNLESS OTHERWISE SHOWN

PRELIMINARY INVESTIGATION SECTION

SCALE	VERT. DATUM NAVD88	PHOTOGRAMMETRY AS OF:			
1:250	HORZ. DATUM NAD83 (1991.35)	SURVEYED	BY N. JONES 01/2004	DRAFTED	BY T.ZOLNIKOVA 02/2004
ALIGNMENT TIES DIST.TRAVERSE SHEET		FIELD CHECKED	BY	CHECKED	BY F.BANDA 02/2004

	BY	CHECKED
DESIGN	X. Chen	G. R-Gutierrez
DETAILS	D. Elliott	G. R-Gutierrez
QUANTITIES	G. R-Gutierrez	R. Odell

STATE OF CALIFORNIA
DEPARTMENT OF TRANSPORTATION

DIVISION OF STRUCTURES
STRUCTURE DESIGN 6

BRIDGE NO. 53-1111
KILOMETER POST 51.27

COHASSET STREET UC (WIDEN)
FOUNDATION PLAN

STRUCTURES FOUNDATION PLAN SHEET (METRIC) (REV.12-1-01)

ORIGINAL SCALE IN MILLIMETERS FOR REDUCED PLANS 0 10 20 30 40 50 60 70 80 90 100

CU 07
EA 1218V1

DISREGARD PRINTS BEARING EARLIER REVISION DATES

REVISION DATES (PRELIMINARY STAGE ONLY): 02/23/04 8-11-07 8-16-07 9-2-07 7-14-09

SHEET 4 OF 21

FILE => 53-1111-e-fp.dgn

USERNAME => trrlenard DATE PLOTTED => 03-MAY-2010 TIME PLOTTED => 12:34

DIST	COUNTY	ROUTE	KILOMETER POST TOTAL PROJECT	SHEET No	TOTAL SHEETS
07	LA	5	50.8/58.0	717	869

Xiaodong Chen 6-25-08
REGISTERED CIVIL ENGINEER DATE

5-3-10
PLANS APPROVAL DATE

REGISTERED PROFESSIONAL ENGINEER Xiaodong Chen No. C58858 Exp. 6-30-11 CIVIL STATE OF CALIFORNIA

The State of California or its officers or agents shall not be responsible for the accuracy or completeness of electronic copies of this plan sheet.

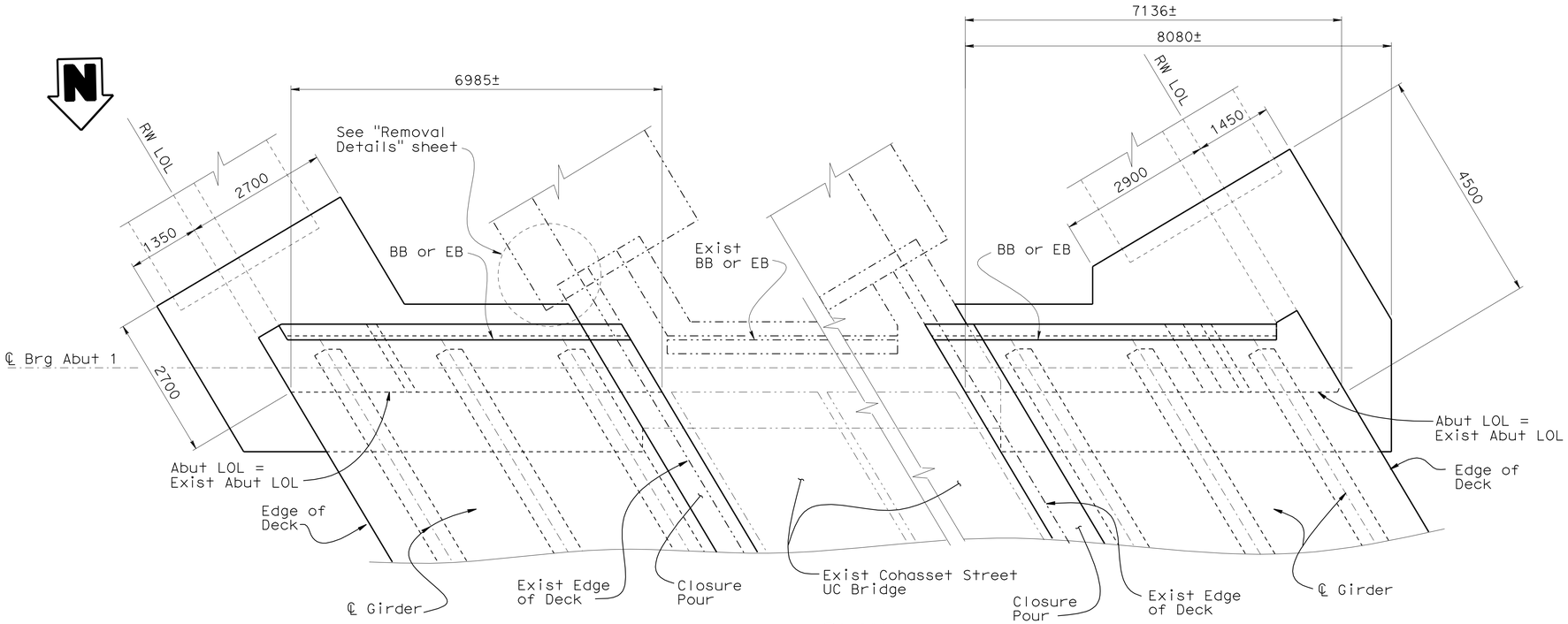

PLAN
1:50

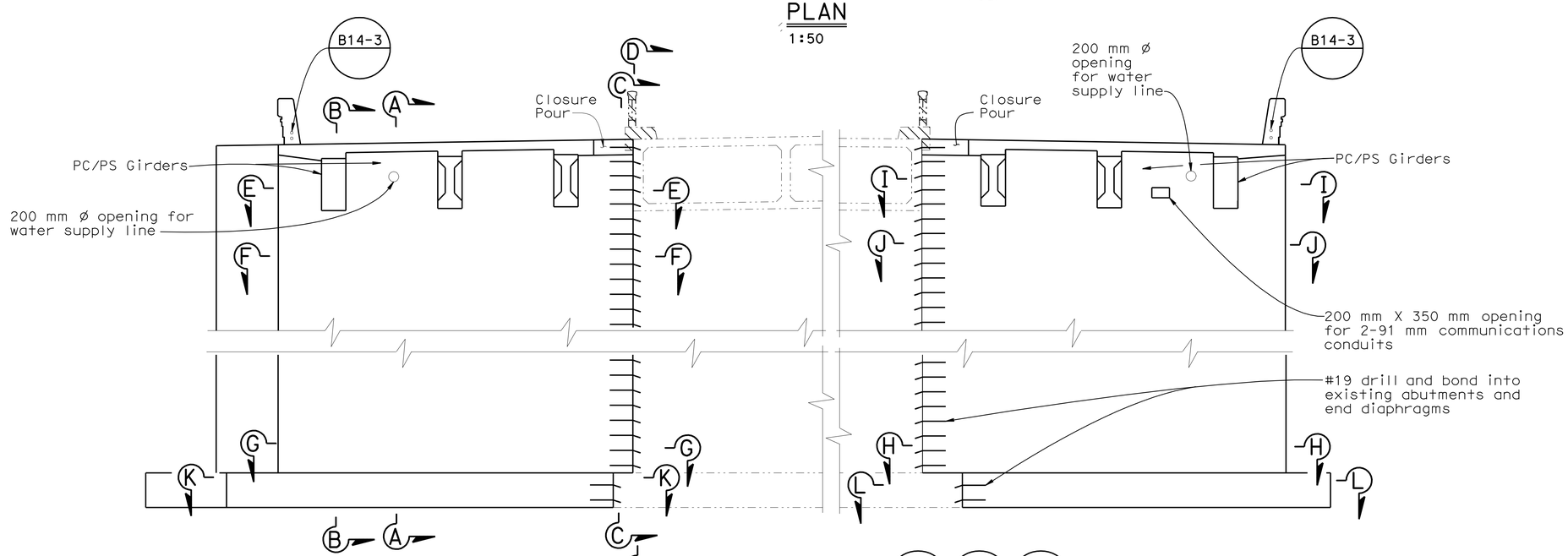

ELEVATION
1:50

B6-10 U-11 | B14-4 | B14-5

LEGEND:

——— Indicates new structure

—·—·— Indicates existing structure

▨ Indicates bridge removal (portion)

NOTES:

1. Abutment 1 shown, Abutment 2 similar.
2. For SECTION A-A through SECTION D-D, see "ABUTMENT DETAILS NO. 1" sheet.
3. For SECTION E-E through SECTION H-H, see "ABUTMENT DETAILS NO. 2" sheet.
4. For SECTION K-K and SECTION L-L, see "ABUTMENT DETAILS NO. 3" sheet.

NOTE:
THE CONTRACTOR SHALL VERIFY ALL CONTROLLING FIELD DIMENSIONS BEFORE ORDERING OR FABRICATING ANY MATERIAL.

Caltrans Metric

	BY	CHECKED
DESIGN	Xiaodong Chen	G. R-Gutierrez
DETAILS	Bruno Jenko	G. R-Gutierrez
QUANTITIES	G. R-Gutierrez	Ryan Odell

STATE OF CALIFORNIA
DEPARTMENT OF TRANSPORTATION

DIVISION OF ENGINEERING SERVICES
STRUCTURE DESIGN
DESIGN BRANCH 6

BRIDGE NO. 53-1111
KILOMETER POST 51.27

COHASSET STREET UC (WIDEN)
ABUTMENT LAYOUT

ALL DIMENSIONS ARE IN MILLIMETERS UNLESS OTHERWISE SHOWN

ORIGINAL SCALE IN MILLIMETERS FOR REDUCED PLANS 0 10 20 30 40 50 60 70 80 90 100

CU 07
EA 1218V1

DISREGARD PRINTS BEARING EARLIER REVISION DATES

REVISION DATES: 10-12-07 | 3-11-08 | 3-14-08 | 7-14-09

SHEET 5 OF 21

FILE => 53-1111-f-abut_layout01.dgn

STRUCTURES DESIGN DETAIL SHEET (METRIC) (REV.03-17-04)

USERNAME => trlenard DATE PLOTTED => 03-MAY-2010 TIME PLOTTED => 12:34

DIST	COUNTY	ROUTE	KILOMETER POST TOTAL PROJECT	SHEET No	TOTAL SHEETS
07	LA	5	50.8/58.0	718	869

REGISTERED CIVIL ENGINEER 6-25-08 DATE

5-3-10
PLANS APPROVAL DATE

REGISTERED PROFESSIONAL ENGINEER Xiaodong Chen No. C58858 Exp. 6-30-11 CIVIL STATE OF CALIFORNIA

The State of California or its officers or agents shall not be responsible for the accuracy or completeness of electronic copies of this plan sheet.

LEGEND:

——— Indicates new structure

—·—·— Indicates existing structure

NOTE:

* Place parallel to ℄ Girder & space along ℄ Brg Abut

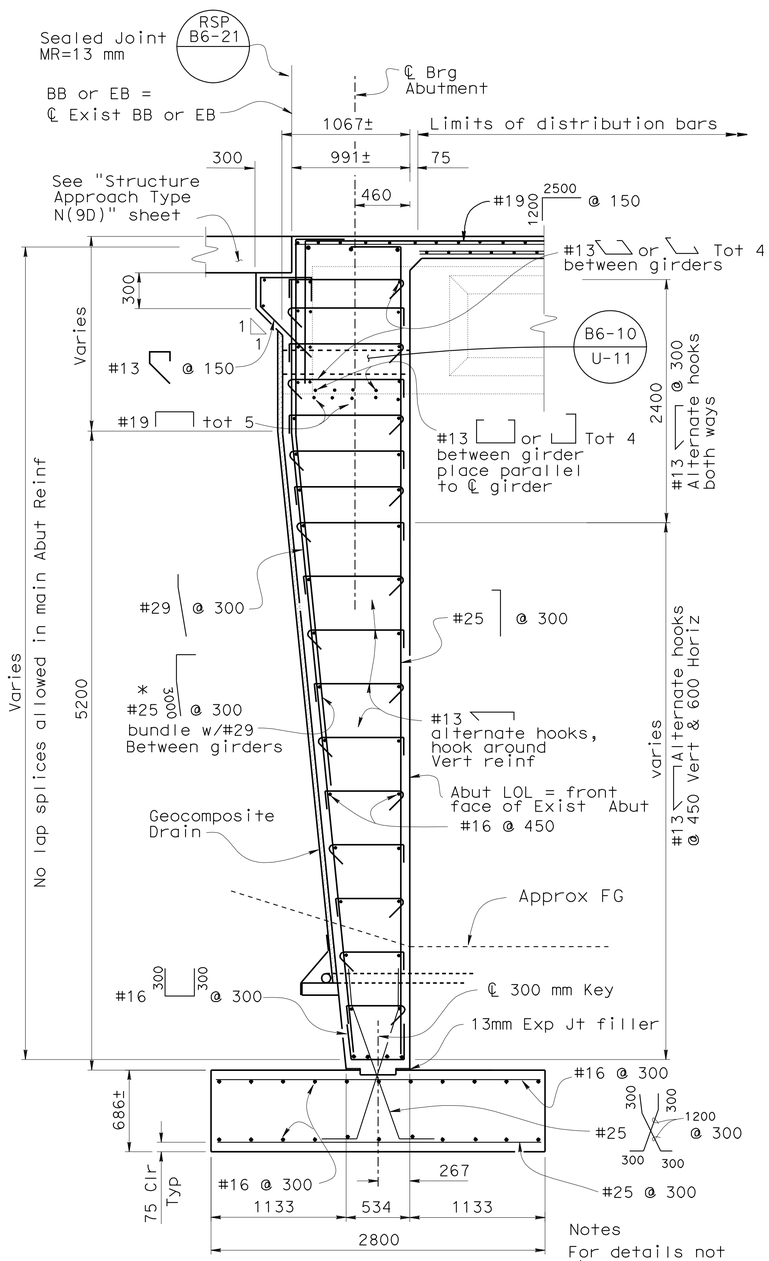

Notes

For details not shown, see Section B-B

For reinforcement not shown, see Section E-E on "Abutment Details No.2" sheet.

SECTION A-A

1:25

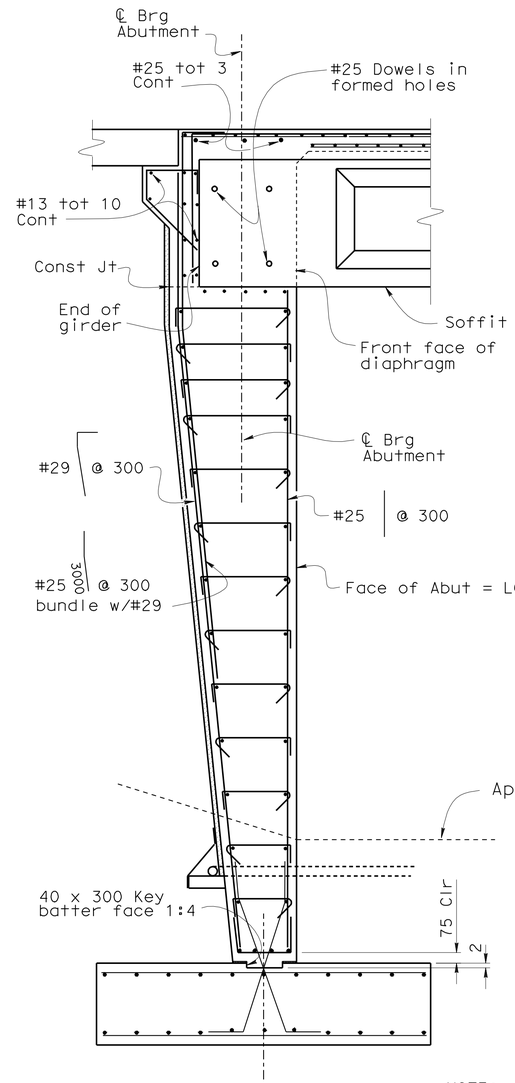

NOTE:

For details not shown, see Section A-A

SECTION B-B

1:25

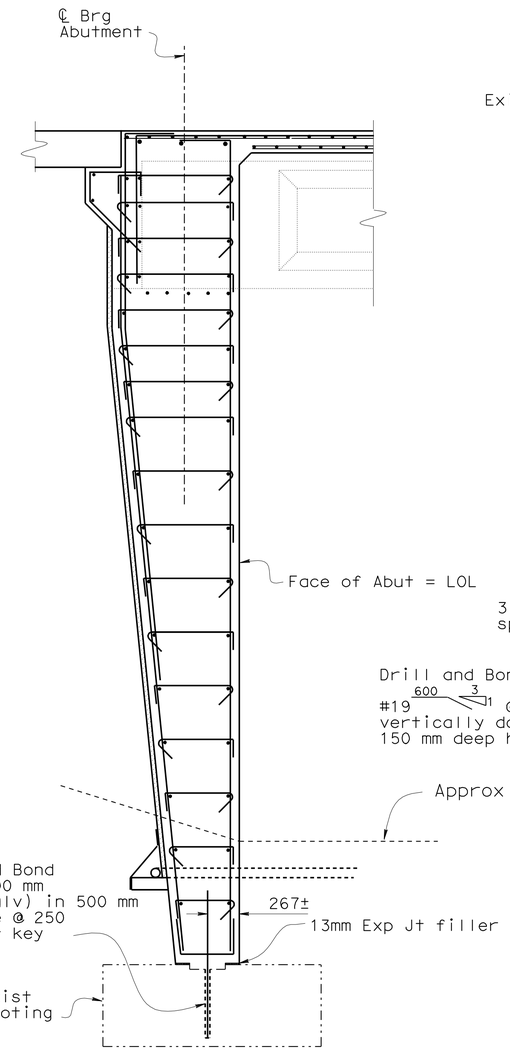

NOTE:

For details not shown, see Section A-A

SECTION C-C

1:25

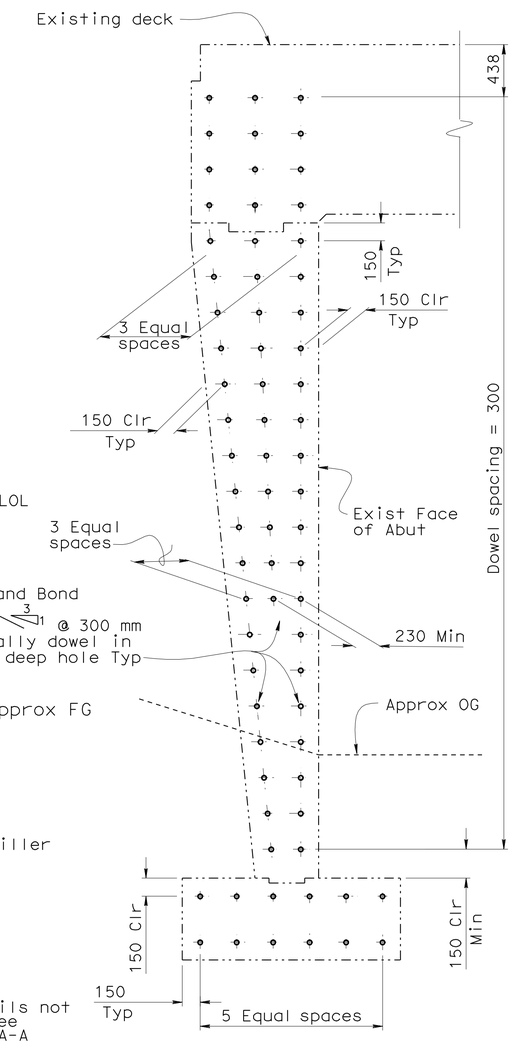

SECTION D-D

1:25

NOTE:
THE CONTRACTOR SHALL VERIFY ALL CONTROLLING FIELD DIMENSIONS BEFORE ORDERING OR FABRICATING ANY MATERIAL.

DESIGN	BY Xiaodong Chen	CHECKED G. R-Gutierrez	
DETAILS	BY Bruno Jenko	CHECKED G. R-Gutierrez	
QUANTITIES	BY G. R-Gutierrez	CHECKED Ryan Odell	

STATE OF CALIFORNIA
DEPARTMENT OF TRANSPORTATION

DIVISION OF ENGINEERING SERVICES
STRUCTURE DESIGN
DESIGN BRANCH 6

BRIDGE NO. 53-1111
KILOMETER POST 51.27

COHASSET STREET UC (WIDEN)
ABUTMENT DETAILS NO. 1

Caltrans Metric

ALL DIMENSIONS ARE IN MILLIMETERS UNLESS OTHERWISE SHOWN

ORIGINAL SCALE IN MILLIMETERS FOR REDUCED PLANS 0 10 20 30 40 50 60 70 80 90 100

CU 07
EA 1218V1

DISREGARD PRINTS BEARING EARLIER REVISION DATES

REVISION DATES 10-19-07 3-11-08 4-8-08 7-14-09

SHEET 6 OF 21

FILE => 53-1111-f-abutdet01.dgn

STRUCTURES DESIGN DETAIL SHEET (METRIC) (REV.03-17-04)

USERNAME => trienard DATE PLOTTED => 03-MAY-2010 TIME PLOTTED => 12:34

DIST	COUNTY	ROUTE	KILOMETER POST TOTAL PROJECT	SHEET No	TOTAL SHEETS
07	LA	5	50.8/58.0	719	869

Xiaodong Chen 6-25-08
REGISTERED CIVIL ENGINEER DATE

5-3-10
PLANS APPROVAL DATE

REGISTERED PROFESSIONAL ENGINEER Xiaodong Chen No. C58858 Exp. 6-30-11 CIVIL STATE OF CALIFORNIA

The State of California or its officers or agents shall not be responsible for the accuracy or completeness of electronic copies of this plan sheet.

LEGEND:

——— Indicates new structure

-·-·-·- Indicates existing structure

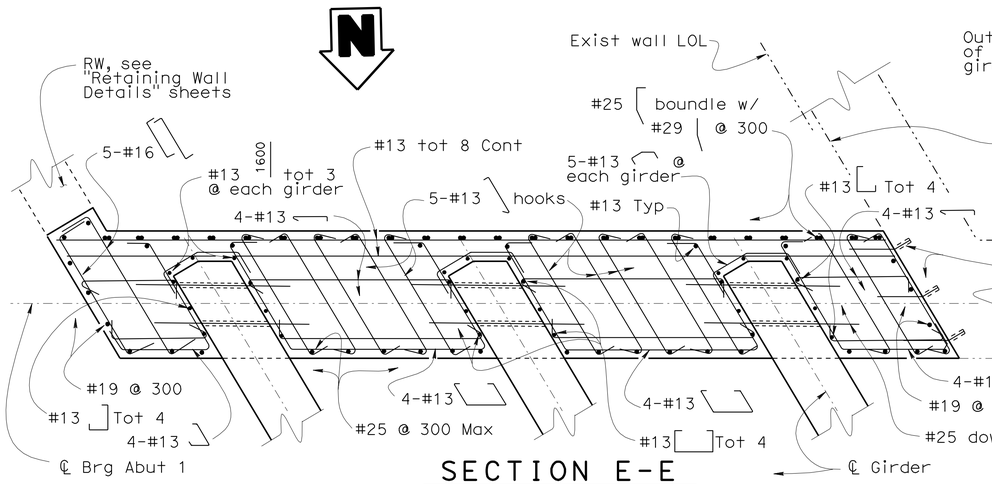

SECTION E-E
1:25

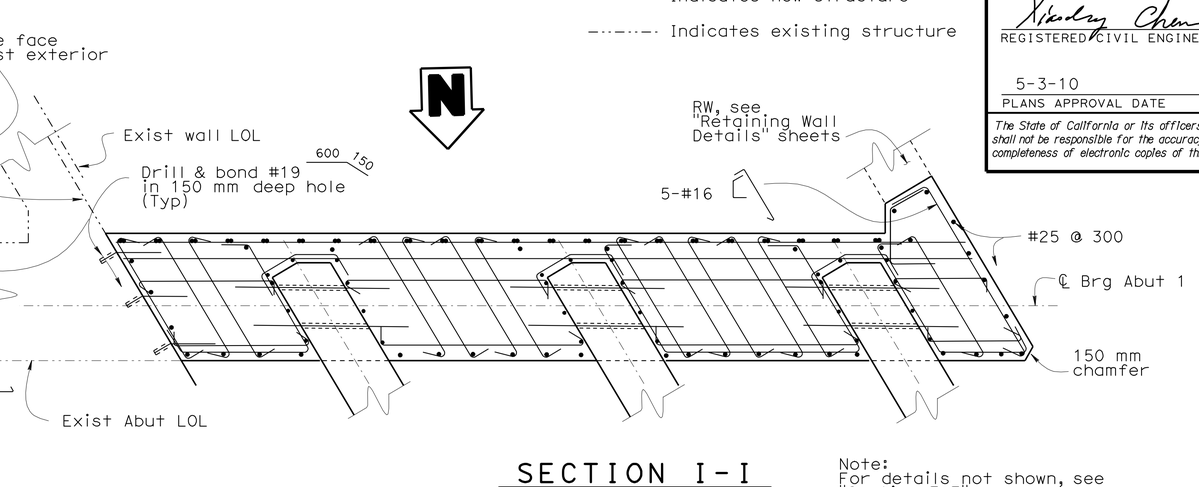

SECTION I-I
1:25

Note:
For details not shown, see "Section E-E"

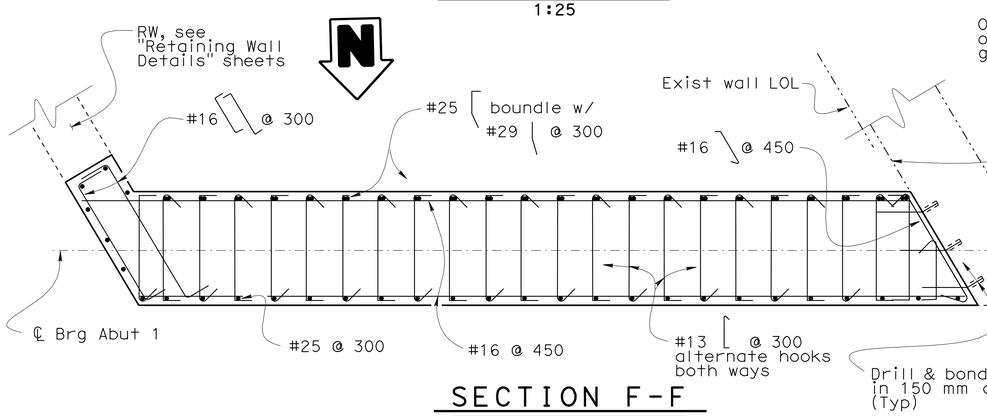

SECTION F-F
1:25

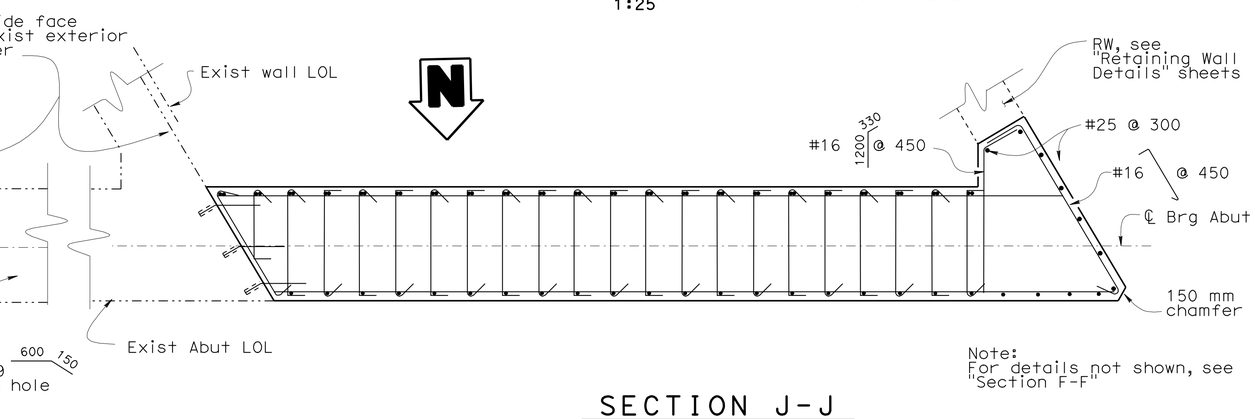

Note:
For details not shown, see "Section F-F"

SECTION J-J
1:25

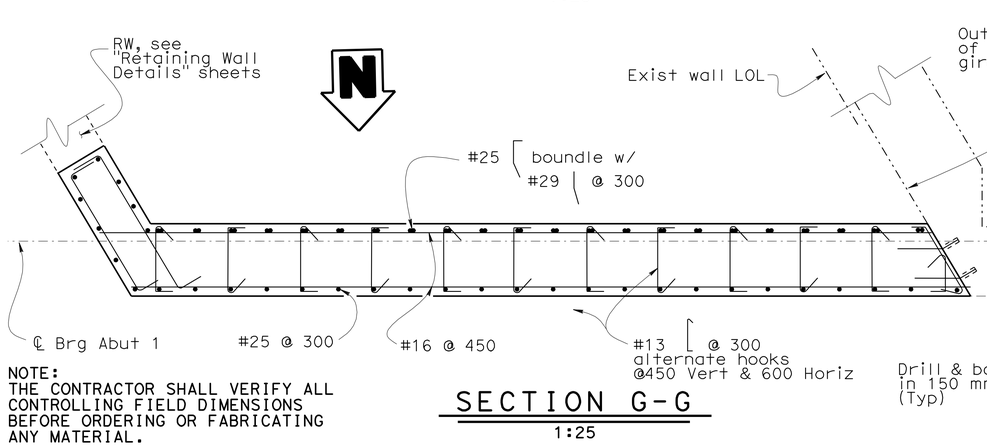

SECTION G-G
1:25

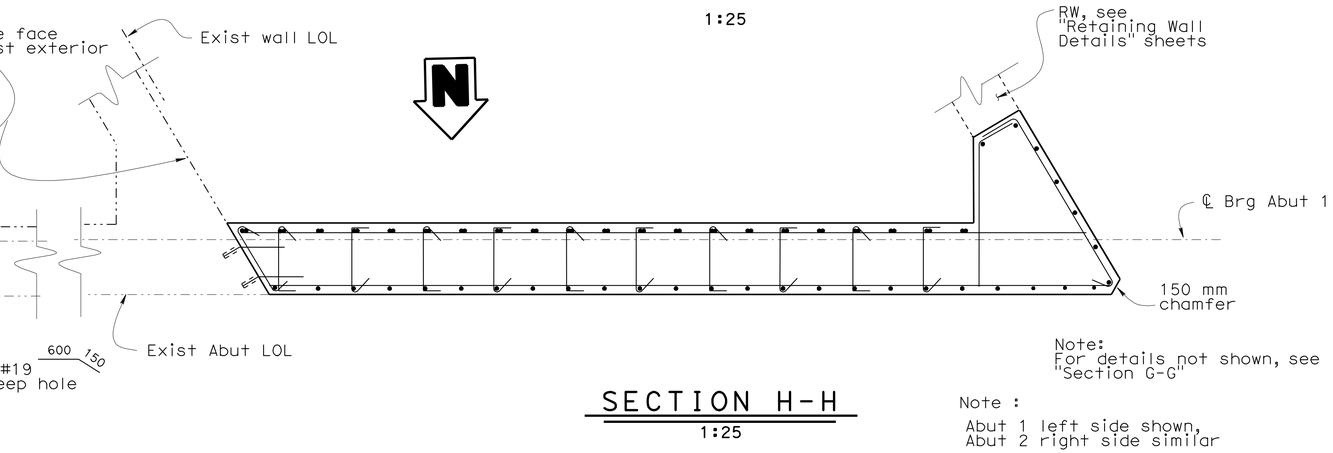

Note:
For details not shown, see "Section G-G"

SECTION H-H
1:25

Note :
Abut 1 left side shown,
Abut 2 right side similar

NOTE:
THE CONTRACTOR SHALL VERIFY ALL CONTROLLING FIELD DIMENSIONS BEFORE ORDERING OR FABRICATING ANY MATERIAL.

Caltrans Metric

ALL DIMENSIONS ARE IN MILLIMETERS UNLESS OTHERWISE SHOWN

ORIGINAL SCALE IN MILLIMETERS FOR REDUCED PLANS 0 10 20 30 40 50 60 70 80 90 100

	BY	CHECKED
DESIGN	Xiaodong Chen	G. R-Gutierrez
DETAILS	Bruno Jenko	G. R-Gutierrez
QUANTITIES	G. R-Gutierrez	Ryan Odell

STATE OF CALIFORNIA
DEPARTMENT OF TRANSPORTATION

DIVISION OF ENGINEERING SERVICES
STRUCTURE DESIGN
DESIGN BRANCH 6

CU 07
EA 1218V1

BRIDGE NO. 53-1111
KILOMETER POST 51.27

COHASSET STREET UC (WIDEN)
ABUTMENT DETAILS NO. 2

DISREGARD PRINTS BEARING EARLIER REVISION DATES

REVISION DATES: 10-18-07 11-18-07 3-14-08 7-15-09

SHEET 7 OF 21

FILE => 53-1111-f-abutdet02.dgn

STRUCTURES DESIGN DETAIL SHEET (METRIC) (REV.03-17-04)

USERNAME => trienard DATE PLOTTED => 03-MAY-2010 TIME PLOTTED => 12:34

DIST	COUNTY	ROUTE	KILOMETER POST TOTAL PROJECT	SHEET No	TOTAL SHEETS
07	LA	5	50.8/58.0	720	869

REGISTERED CIVIL ENGINEER — DATE 6-25-08

5-3-10
PLANS APPROVAL DATE

REGISTERED PROFESSIONAL ENGINEER — Xiaodong Chen — No. C58858 — Exp. 6-30-11 — CIVIL — STATE OF CALIFORNIA

The State of California or its officers or agents shall not be responsible for the accuracy or completeness of electronic copies of this plan sheet.

LEGEND:

Indicates new structure

Indicates existing structure

Indicates expansion joint filler material

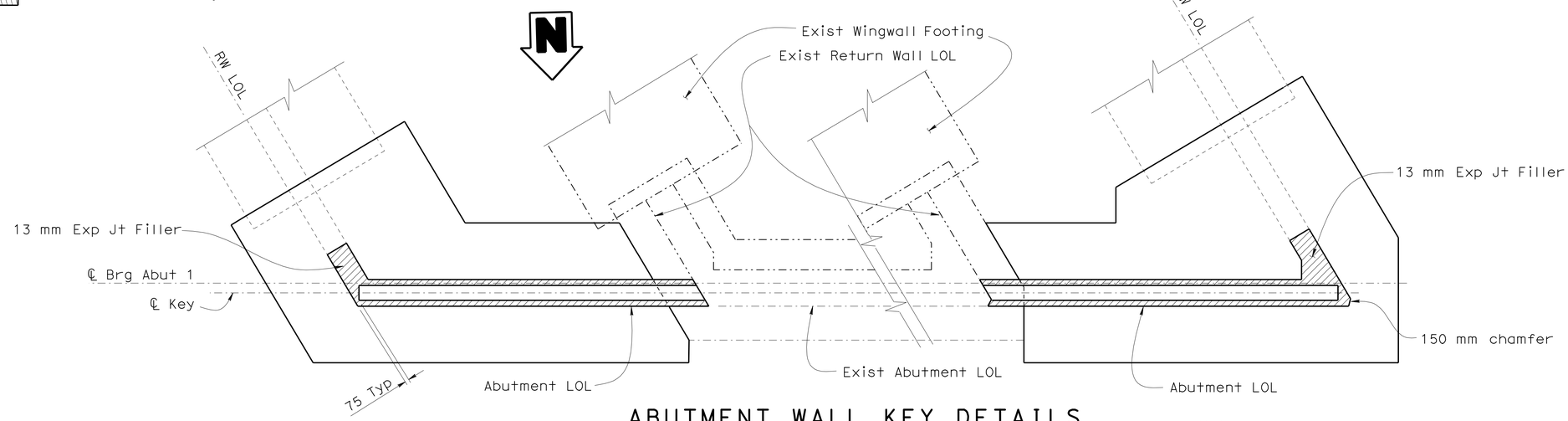

ABUTMENT WALL KEY DETAILS

1:50

Note:
Abut 1 shown, Abut 2 similar.

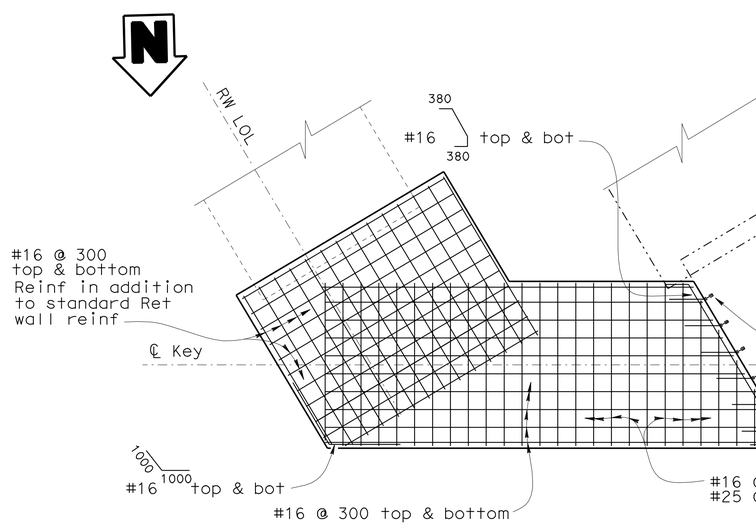

SECTION K-K

1:50

Note:
Abut 1 shown, Abut 2 similar.

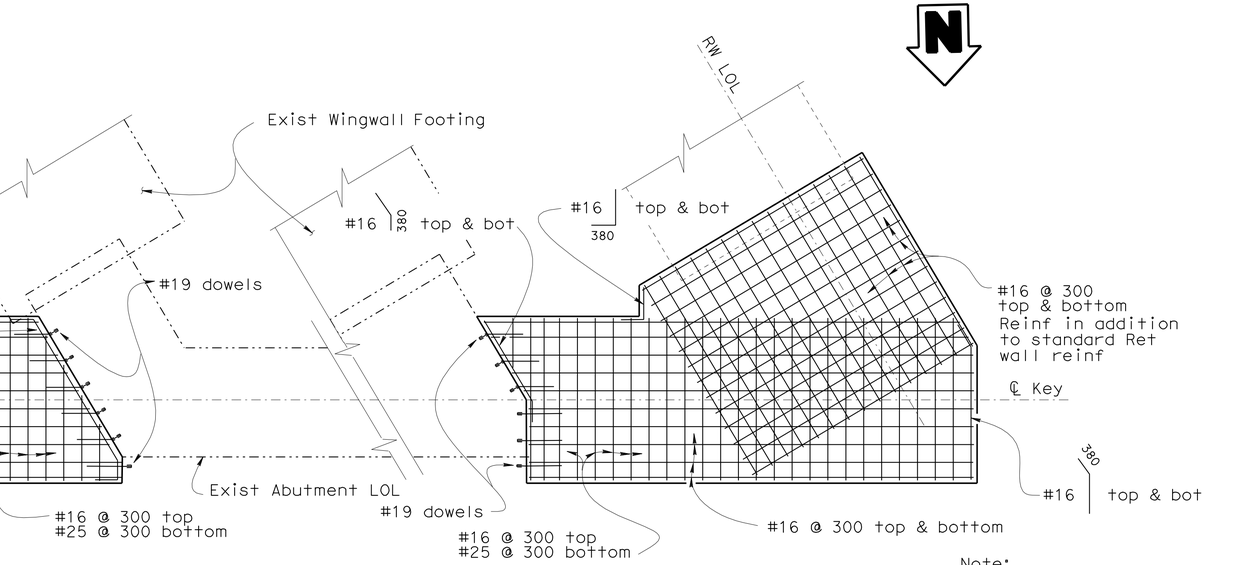

SECTION L-L

1:50

Note:
Abut 1 shown, Abut 2 similar.

NOTE:
THE CONTRACTOR SHALL VERIFY ALL CONTROLLING FIELD DIMENSIONS BEFORE ORDERING OR FABRICATING ANY MATERIAL.

	BY	CHECKED
DESIGN	Xiaodong Chen	G. R-Gutierrez
DETAILS	Bruno Jenko	G. R-Gutierrez
QUANTITIES	G. R-Gutierrez	Ryan Odell

STATE OF CALIFORNIA
DEPARTMENT OF TRANSPORTATION

DIVISION OF ENGINEERING SERVICES
STRUCTURE DESIGN
DESIGN BRANCH 6

CU 07
EA 1218V1

BRIDGE NO. 53-1111
KILOMETER POST 51.27

COHASSET STREET UC (WIDEN)
ABUTMENT DETAILS NO. 3

ALL DIMENSIONS ARE IN MILLIMETERS UNLESS OTHERWISE SHOWN

ORIGINAL SCALE IN MILLIMETERS FOR REDUCED PLANS 0 10 20 30 40 50 60 70 80 90 100

DISREGARD PRINTS BEARING EARLIER REVISION DATES — REVISION DATES 10-19-07 11-19-07 7-15-09

SHEET 8 OF 21

FILE => 53-1111-f-abutdet03.dgn

STRUCTURES DESIGN DETAIL SHEET (METRIC) (REV.03-17-04)

USERNAME => trlenard DATE PLOTTED => 03-MAY-2010 TIME PLOTTED => 12:35

DIST	COUNTY	ROUTE	KILOMETER POST TOTAL PROJECT	SHEET No	TOTAL SHEETS
07	LA	5	50.8/58.0	721	869

REGISTERED CIVIL ENGINEER 6-25-08 DATE

5-3-10
PLANS APPROVAL DATE

REGISTERED PROFESSIONAL ENGINEER XIAODONG CHEN No. C 58858 Exp. 6-30-11 CIVIL STATE OF CALIFORNIA

The State of California or its officers or agents shall not be responsible for the accuracy or completeness of electronic copies of this plan sheet.

LEGEND:

——— Indicates new structure

-·-·-·- Indicates existing structure

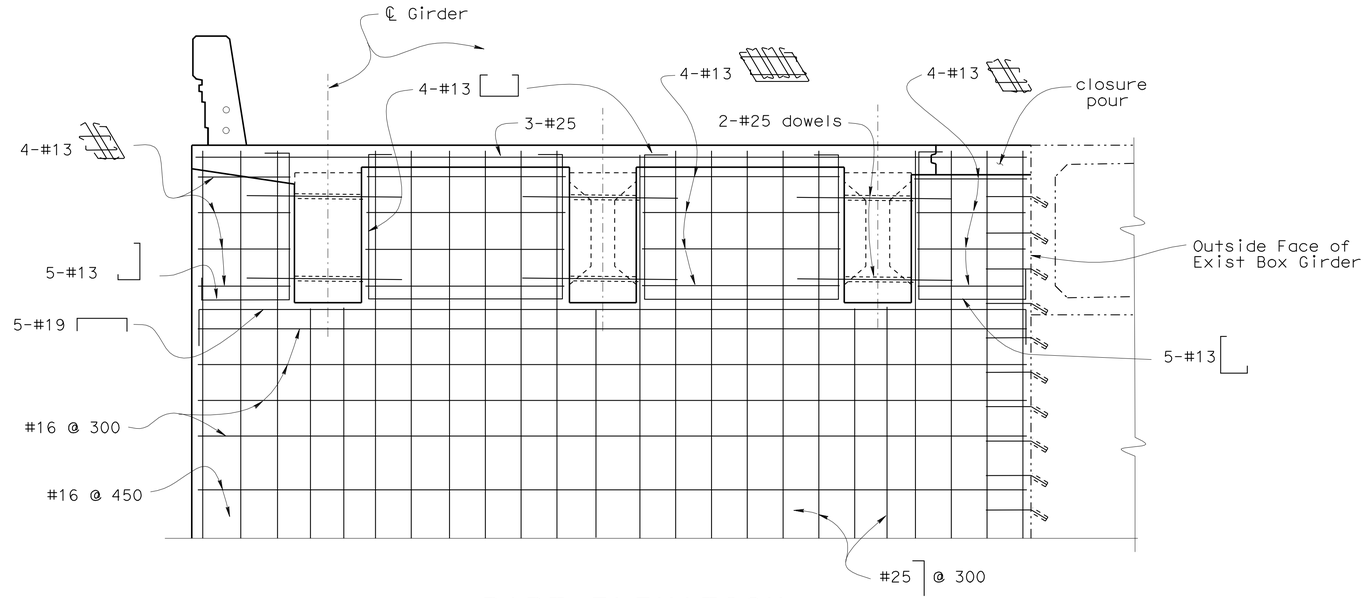

PART ELEVATION

1:25

NOTES:

1. Left side widening shown, right side widening similar.
2. Utility openings in abutment not shown.

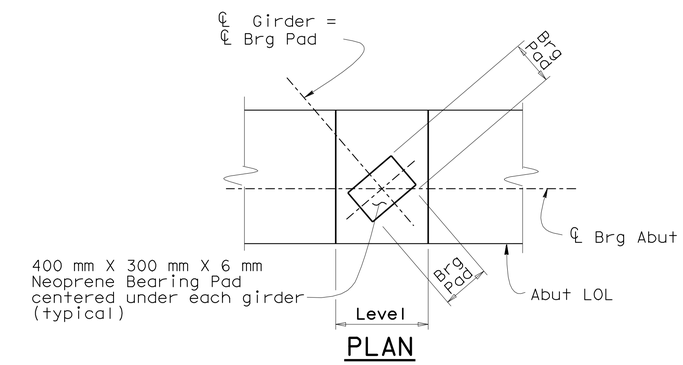

PLAN

BEARING PAD DETAIL (ABUTMENTS)

1:25

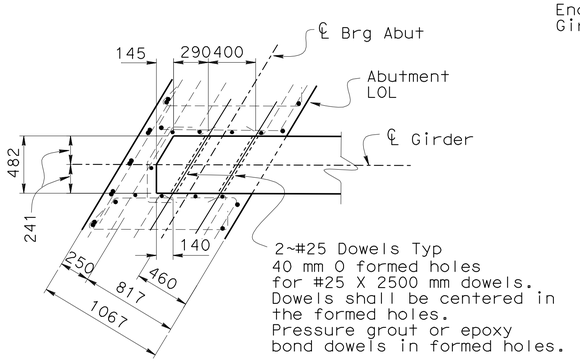

PLAN

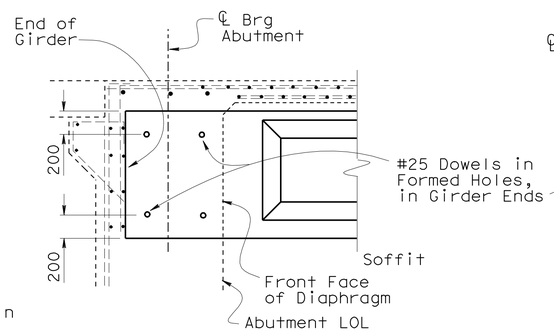

ELEVATION

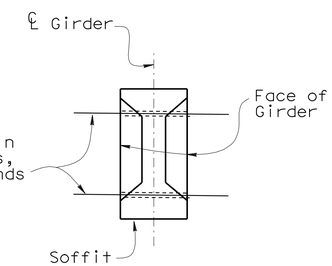

SECTION

GIRDER END DETAILS

1:25

NOTE:
THE CONTRACTOR SHALL VERIFY ALL CONTROLLING FIELD DIMENSIONS BEFORE ORDERING OR FABRICATING ANY MATERIAL.

Caltrans Metric

	BY	CHECKED
DESIGN	Xiaodong Chen	G. R-Gutierrez
DETAILS	Bruno Jenko	G. R-Gutierrez
QUANTITIES	G. R-Gutierrez	Ryan Odell

STATE OF CALIFORNIA DEPARTMENT OF TRANSPORTATION

DIVISION OF ENGINEERING SERVICES STRUCTURE DESIGN
DESIGN BRANCH 6

BRIDGE NO. 53-1111
KILOMETER POST 51.27

COHASSET STREET UC (WIDEN)
ABUTMENT DETAILS NO. 4

ALL DIMENSIONS ARE IN MILLIMETERS UNLESS OTHERWISE SHOWN

ORIGINAL SCALE IN MILLIMETERS FOR REDUCED PLANS 0 10 20 30 40 50 60 70 80 90 100

CU 07
EA 1218V1

DISREGARD PRINTS BEARING EARLIER REVISION DATES 10-19-07 1-8-08 7-15-09

REVISION DATES

SHEET 9 OF 21

FILE => 53-1111-f-abutdet04.dgn

STRUCTURES DESIGN DETAIL SHEET (METRIC) (REV.03-17-04)

USERNAME => trlenard DATE PLOTTED => 03-MAY-2010 TIME PLOTTED => 12:43

DIST	COUNTY	ROUTE	KILOMETER POST TOTAL PROJECT	SHEET No	TOTAL SHEETS
07	LA	5	50.8/58.0	722	869

REGISTERED CIVIL ENGINEER — DATE 6-25-08

5-3-10
PLANS APPROVAL DATE

REGISTERED PROFESSIONAL ENGINEER — Xiaodong Chen — No. C58858 — Exp. 6-30-11 — CIVIL — STATE OF CALIFORNIA

The State of California or its officers or agents shall not be responsible for the accuracy or completeness of electronic copies of this plan sheet.

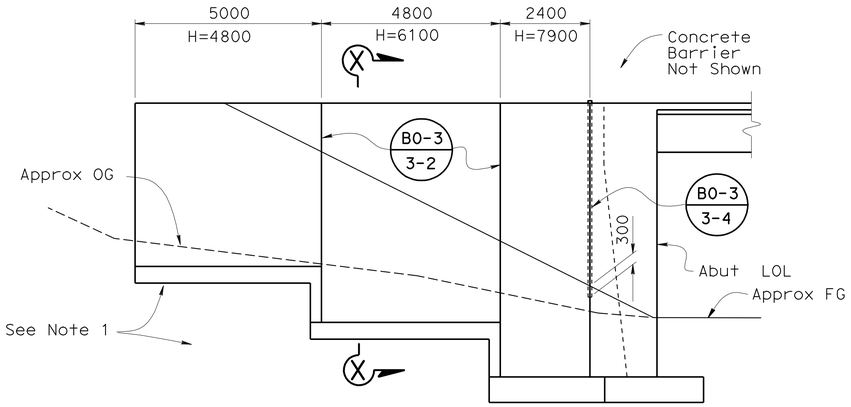

MIRRORED ELEVATION ABUTMENT 1 LEFT

B3-1 B3-8 Step

1:80

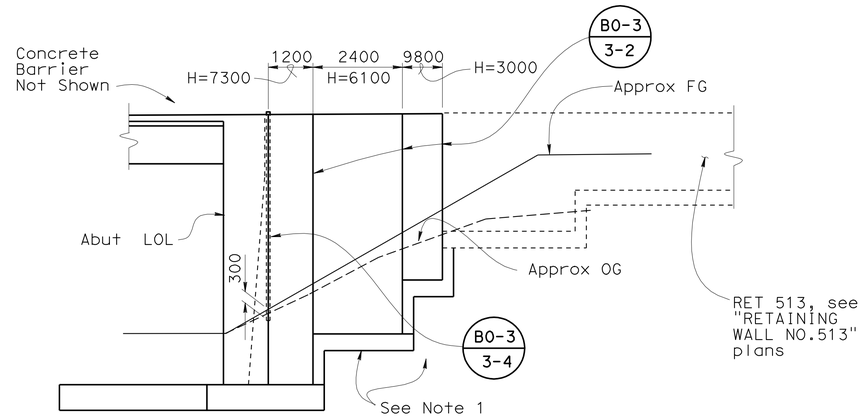

MIRRORED ELEVATION ABUTMENT 2 LEFT

B3-1 B3-8 Step

1:80

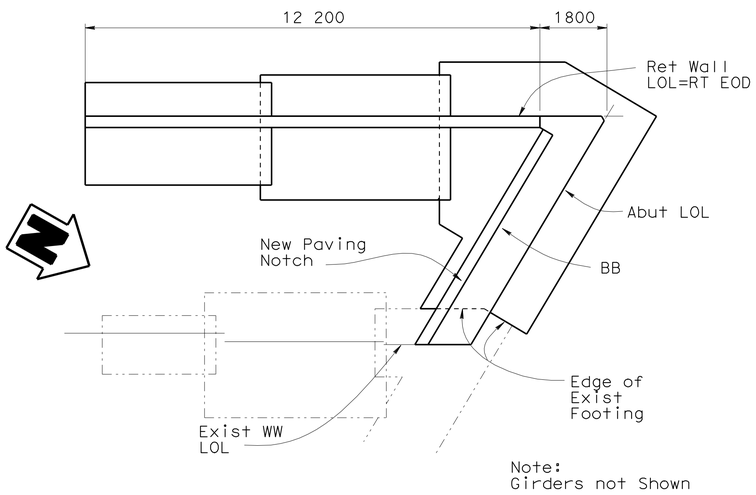

PLAN ABUTMENT 1 LEFT

1:80

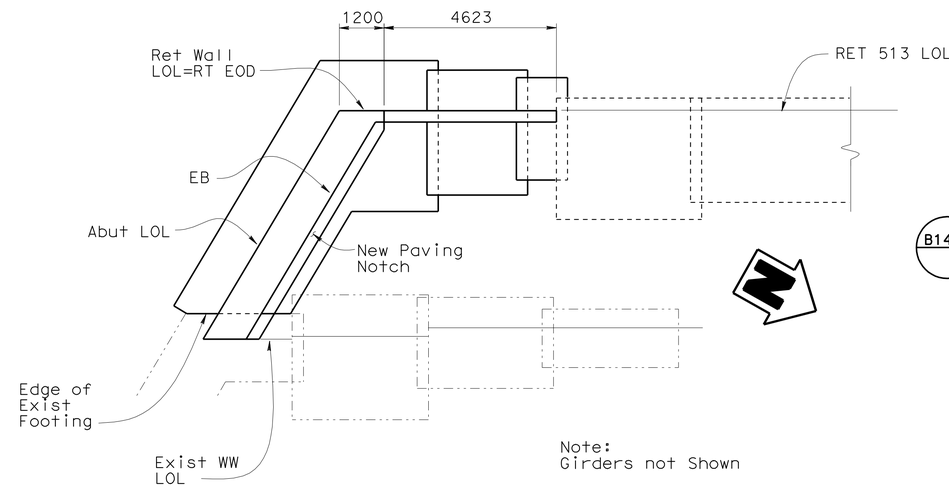

PLAN ABUTMENT 2 LEFT

1:80

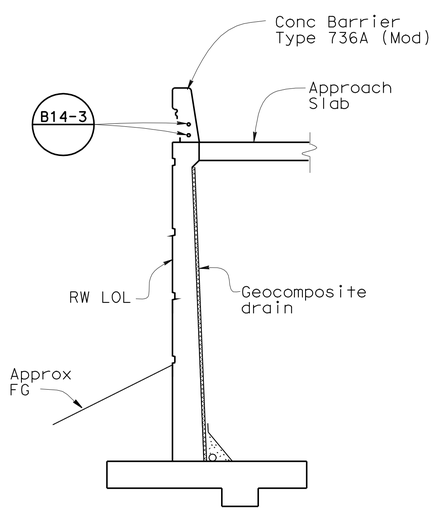

SECTION X-X

B3-1 B3-8 B11-56

1:50

LEGEND:

——— Indicates new structure

—·—·— Indicates existing structure

NOTES:

1. For footing elevations, see "FOUNDATION PLAN" sheet.
2. For architectural treatment, see "ARCHITECTURAL DETAILS" sheet.

NOTE:
THE CONTRACTOR SHALL VERIFY ALL CONTROLLING FIELD DIMENSIONS BEFORE ORDERING OR FABRICATING ANY MATERIAL.

Caltrans Metric

	BY	CHECKED
DESIGN	Xiaodong Chen	G. R-Gutierrez
DETAILS	Bruno Jenko	G. R-Gutierrez
QUANTITIES	G. R-Gutierrez	Xiaodong Chen

STATE OF CALIFORNIA
DEPARTMENT OF TRANSPORTATION

DIVISION OF ENGINEERING SERVICES
STRUCTURE DESIGN
DESIGN BRANCH 6

BRIDGE NO. 53-1111
KILOMETER POST 51.27

COHASSET STREET UC (WIDEN)
RETAINING WALL DETAILS NO. 1

ALL DIMENSIONS ARE IN MILLIMETERS UNLESS OTHERWISE SHOWN

ORIGINAL SCALE IN MILLIMETERS FOR REDUCED PLANS 0 10 20 30 40 50 60 70 80 90 100

CU 07
EA 1218V1

DISREGARD PRINTS BEARING EARLIER REVISION DATES

REVISION DATES: 10-13-07 11-16-07 3-11-08 4-28-08 7-15-09

SHEET 10 OF 21

FILE => 53-1111-g-rw-01.dgn

STRUCTURES DESIGN DETAIL SHEET (METRIC) (REV.03-17-04)

USERNAME => friehard DATE PLOTTED => 03-MAY-2010 TIME PLOTTED => 12:43

DIST	COUNTY	ROUTE	KILOMETER POST TOTAL PROJECT	SHEET No	TOTAL SHEETS
07	LA	5	50.8/58.0	723	869

Xiaodong Chen 6-25-08
REGISTERED CIVIL ENGINEER DATE

5-3-10
PLANS APPROVAL DATE

REGISTERED PROFESSIONAL ENGINEER Xiaodong Chen No. C58858 Exp. 6-30-11 CIVIL STATE OF CALIFORNIA

The State of California or its officers or agents shall not be responsible for the accuracy or completeness of electronic copies of this plan sheet.

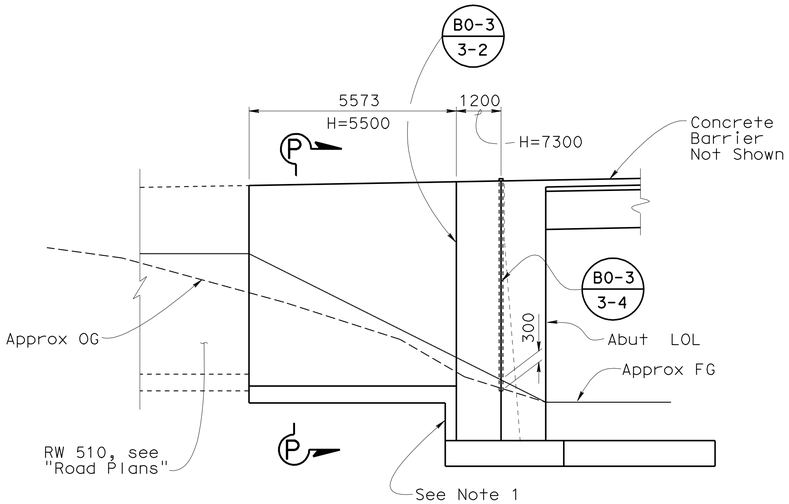

ELEVATION ABUTMENT 1 RIGHT

B3-1 B3-8 Step

1:80

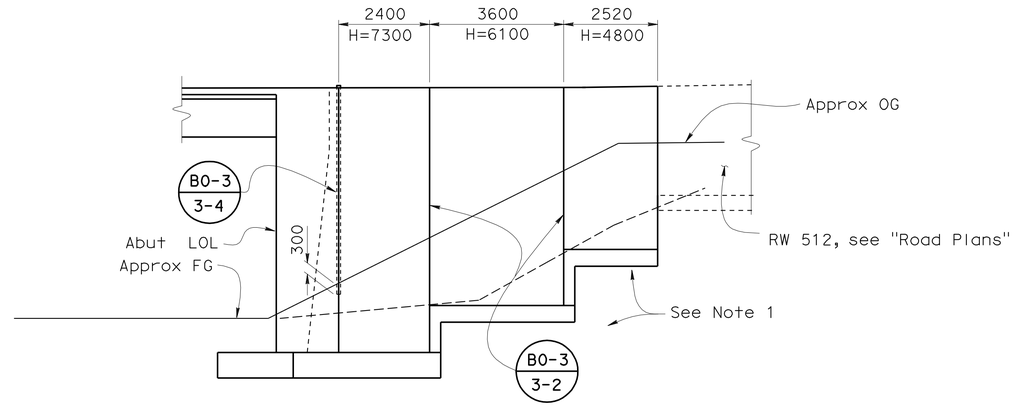

ELEVATION ABUTMENT 2 RIGHT

B3-1 B3-8 Step

1:80

LEGEND:

——— Indicates new structure

-·-·-·- Indicates existing structure

NOTES:

1. For footing elevations, see "FOUNDATION PLAN" sheet.
2. For architecutural treatment, see "ARCHITECTURAL DETAILS" sheet.

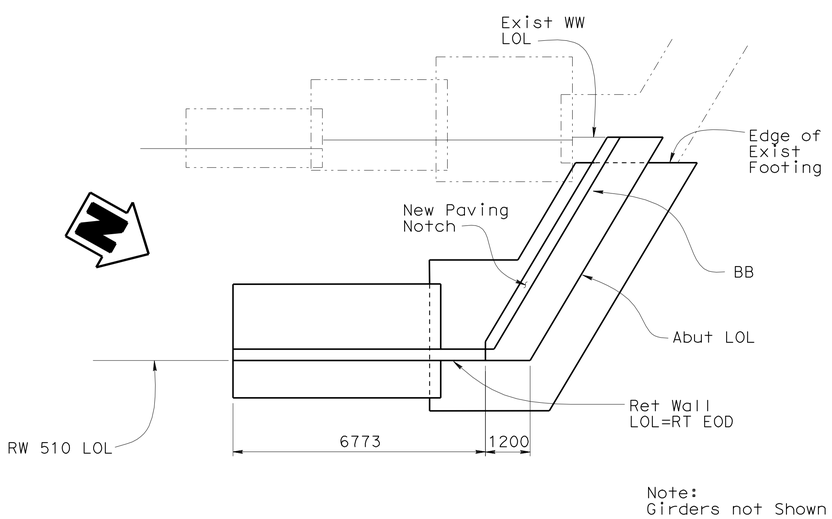

PLAN ABUTMENT 1 RIGHT

1:80

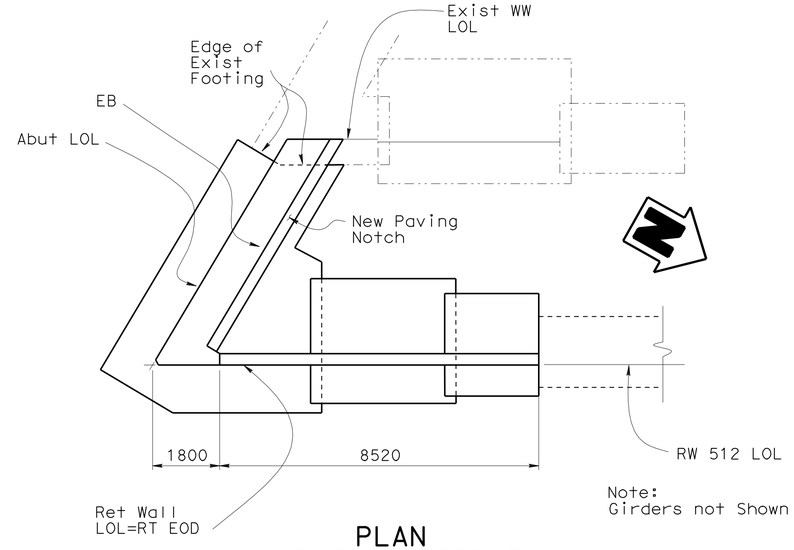

PLAN ABUTMENT 2 RIGHT

1:80

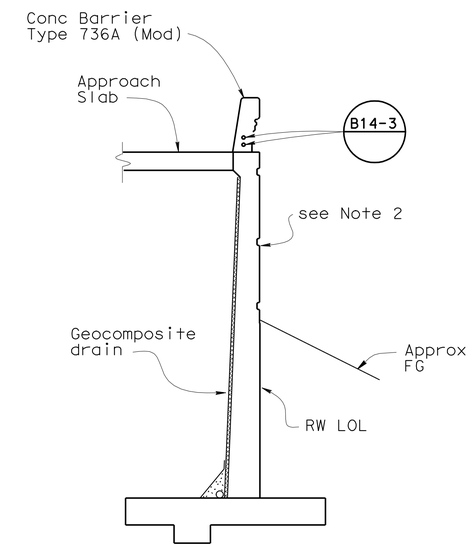

SECTION P-P

B3-1 B3-8 B11-56

1:50

NOTE:
THE CONTRACTOR SHALL VERIFY ALL CONTROLLING FIELD DIMENSIONS BEFORE ORDERING OR FABRICATING ANY MATERIAL.

Caltrans Metric

ALL DIMENSIONS ARE IN MILLIMETERS UNLESS OTHERWISE SHOWN

ORIGINAL SCALE IN MILLIMETERS FOR REDUCED PLANS 0 10 20 30 40 50 60 70 80 90 100

	BY	CHECKED
DESIGN	Xiaodong Chen	G. R-Gutierrez
DETAILS	Bruno Jenko	G. R-Gutierrez
QUANTITIES	G. R-Gutierrez	Ryan Odell

STATE OF CALIFORNIA
DEPARTMENT OF TRANSPORTATION

DIVISION OF ENGINEERING SERVICES
STRUCTURE DESIGN
DESIGN BRANCH 6

CU 07
EA 1218V1

BRIDGE NO. 53-1111
KILOMETER POST 51.27

COHASSET STREET UC (WIDEN)
RETAINING WALL DETAILS NO. 2

DISREGARD PRINTS BEARING EARLIER REVISION DATES

REVISION DATES: 10-31-07 11-16-07 3-14-08 4-14-08 4-28-08 7-15-09

SHEET 11 OF 21

FILE => 53-1111-g-rw-02.dgn

STRUCTURES DESIGN DETAIL SHEET (METRIC) (REV.03-17-04)

USERNAME => trienard DATE PLOTTED => 03-MAY-2010 TIME PLOTTED => 12:43

DIST	COUNTY	ROUTE	KILOMETER POST TOTAL PROJECT	SHEET No	TOTAL SHEETS
07	LA	5	50.8/58.0	724	869

REGISTERED CIVIL ENGINEER 6-25-08 DATE

5-3-10
PLANS APPROVAL DATE

REGISTERED PROFESSIONAL ENGINEER Xiaodong Chen No. C58858 Exp. 6-30-11 CIVIL STATE OF CALIFORNIA

The State of California or its officers or agents shall not be responsible for the accuracy or completeness of electronic copies of this plan sheet.

NOTES:

1. Left side widening reinforcement shown, right side similar.
2. Minor adjustment may be made in dowel spacing to clear main reinforcement.
3. For additional longitudinal deck reinforcement, see "GIRDER LAYOUT" sheet.
4. Match existing grade and cross slope.
5. Match existing grade and cross slope on left side.

LEGEND:

- Indicates new structure
- Indicates existing structure
- Indicates remove concrete deck surface
- Indicates bridge removal (portion)

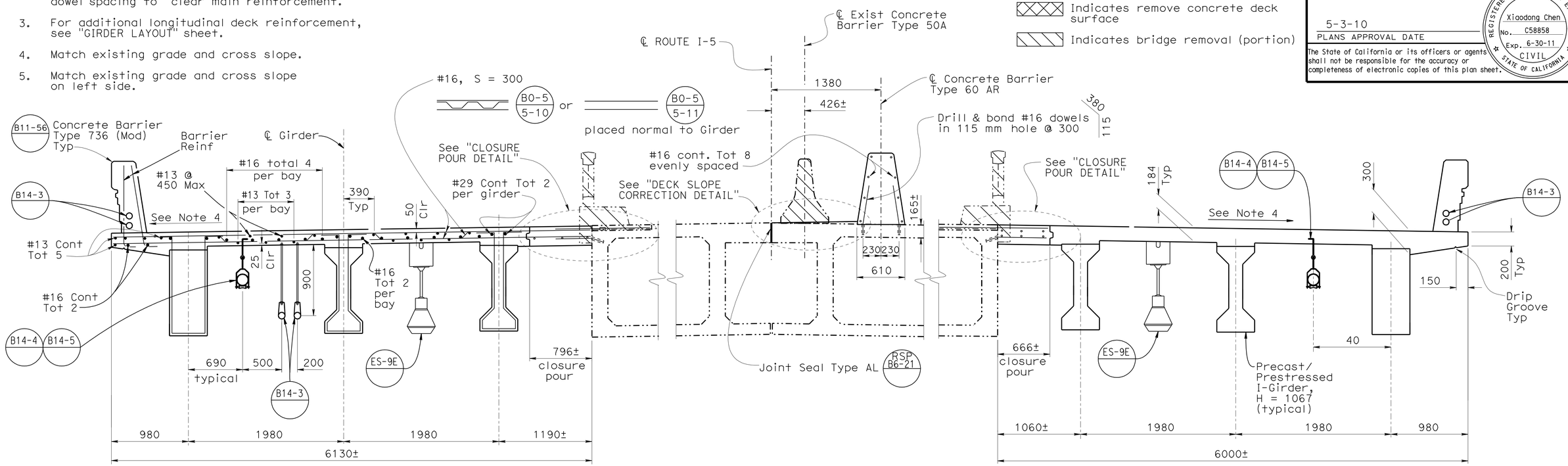

PART TYPICAL SECTION

1:25

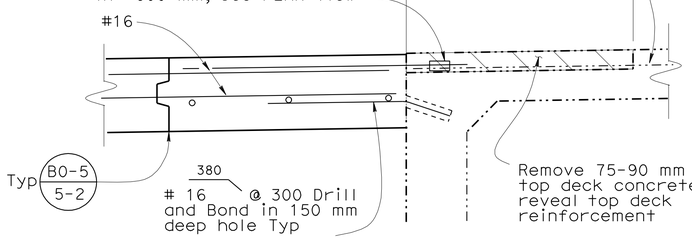

ELEVATION

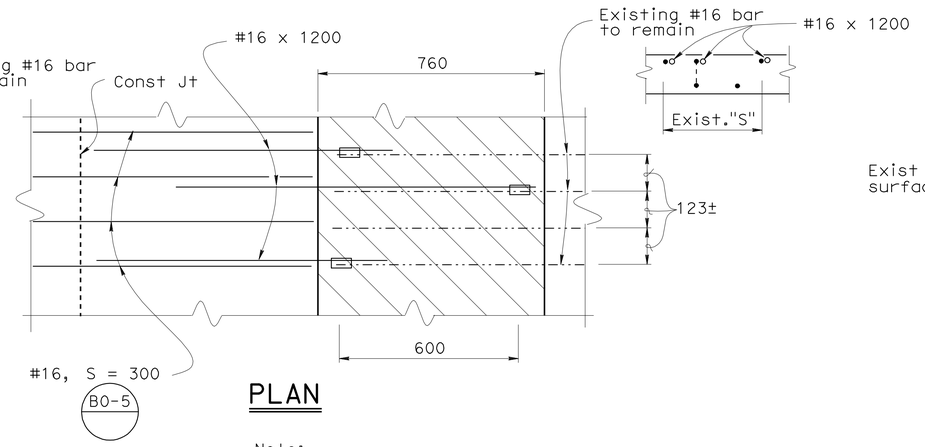

PLAN

Note:
Left closure pour shown, right similar

CLOSURE POUR DETAIL

1:10

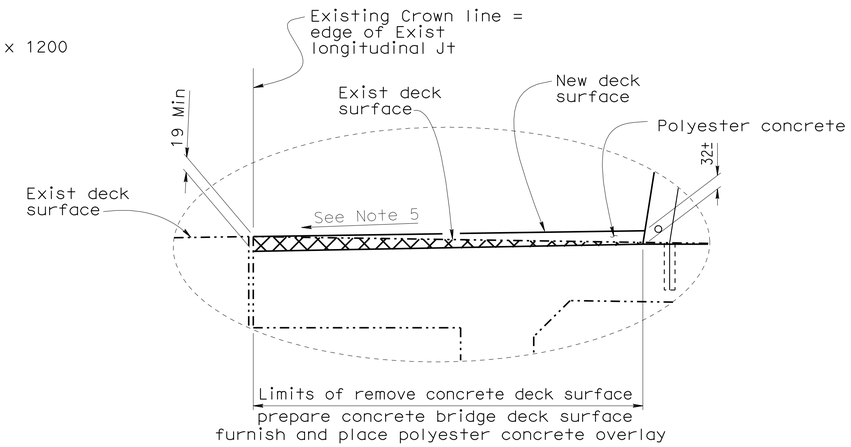

DECK SLOPE CORRECTION DETAIL

No Scale

DESIGN	BY X. Chen	CHECKED G. R-Gutierrez	
DETAILS	BY Bruno Jenko/DE	CHECKED G. R-Gutierrez	
QUANTITIES	BY G. R-Gutierrez	CHECKED R. Odell	

STATE OF CALIFORNIA DEPARTMENT OF TRANSPORTATION

DIVISION OF ENGINEERING SERVICES STRUCTURE DESIGN DESIGN BRANCH 6

BRIDGE NO. 53-1111
KILOMETER POST 51.27

COHASSET STREET UC (WIDEN)
TYPICAL SECTION

Caltrans Metric

ALL DIMENSIONS ARE IN MILLIMETERS UNLESS OTHERWISE SHOWN

ORIGINAL SCALE IN MILLIMETERS FOR REDUCED PLANS 0 10 20 30 40 50 60 70 80 90 100

CU 07
EA 1218V1

DISREGARD PRINTS BEARING EARLIER REVISION DATES

REVISION DATES: 9-24-07 11-19-07 3-14-08 4-8-08 4-18-08 4-28-08 4-29-08 5-29-08 6-12-08 7-15-09

SHEET 12 OF 21

FILE => 53-1111-k-ts01.dgn

STRUCTURES DESIGN DETAIL SHEET (METRIC) (REV.03-17-04)

USERNAME => trlenard DATE PLOTTED => 03-MAY-2010 TIME PLOTTED => 12:43

DIST	COUNTY	ROUTE	KILOMETER POST TOTAL PROJECT	SHEET No	TOTAL SHEETS
07	LA	5	50.8/58.0	725	869

REGISTERED CIVIL ENGINEER — DATE 6-25-08

5-3-10
PLANS APPROVAL DATE

REGISTERED PROFESSIONAL ENGINEER — Xiaodong Chen — No. C58858 — Exp. 6-30-11 — CIVIL — STATE OF CALIFORNIA

The State of California or its officers or agents shall not be responsible for the accuracy or completeness of electronic copies of this plan sheet.

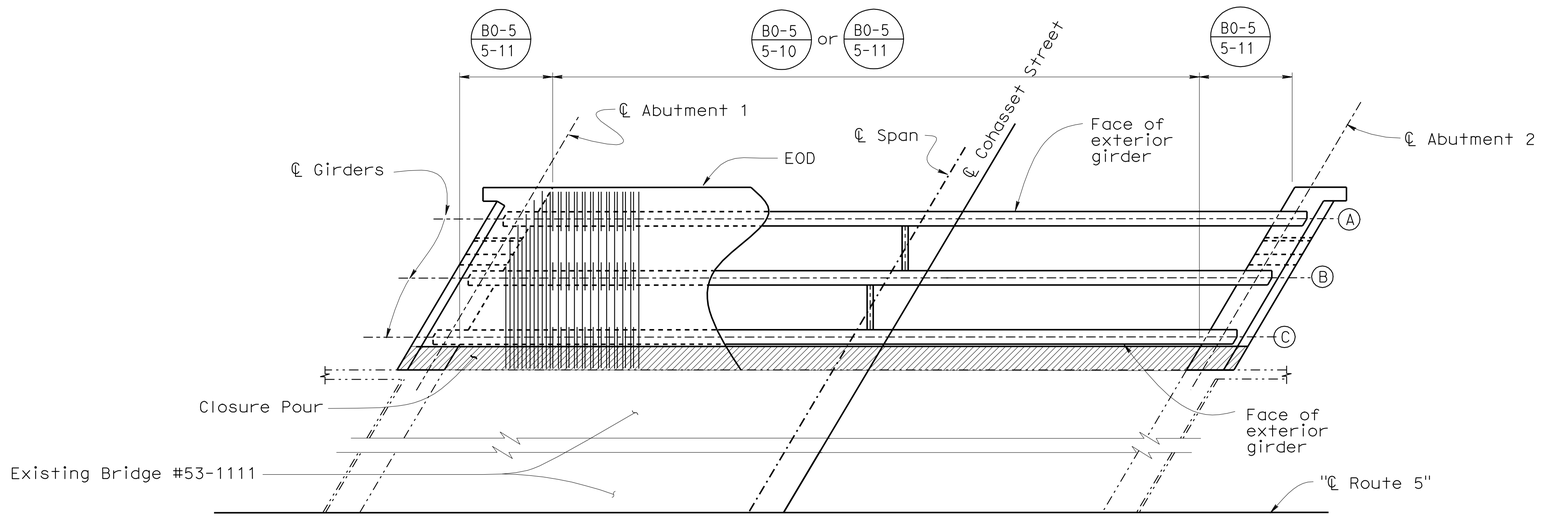

GIRDER LAYOUT

1:100

NOTES:

1. Left side shown, right side similar.
2. Extend transverse reinforcement 600 mm into the abutment diaphragm.

LEGEND:

- Indicates new structure
- Indicates existing structure
- Indicates bridge removal (portion)

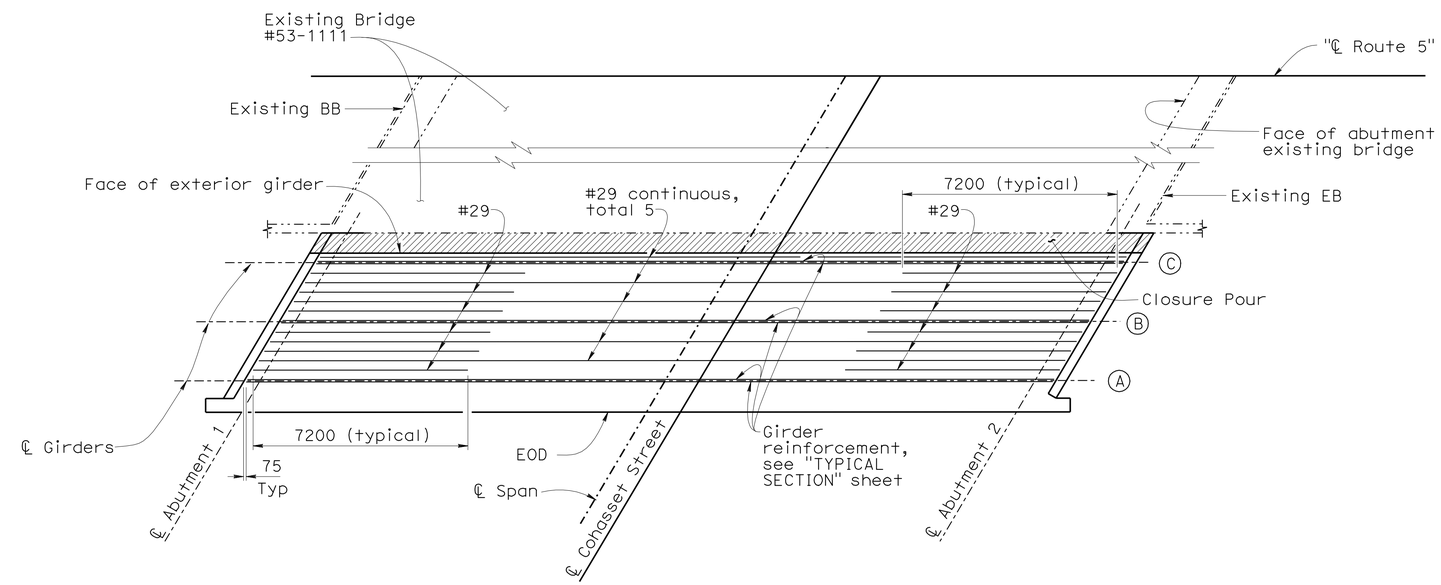

ADDITIONAL GIRDER REINFORCEMENT

1:100

NOTE:
Right side shown, left side similar

NOTE:
THE CONTRACTOR SHALL VERIFY ALL CONTROLLING FIELD DIMENSIONS BEFORE ORDERING OR FABRICATING ANY MATERIAL.

Caltrans Metric

	BY	CHECKED
DESIGN	Xiaodong Chen	G. R-Gutierrez
DETAILS	Bruno Jenko/DE	G. R-Gutierrez
QUANTITIES	G. R-Gutierrez	Ryan Odell

STATE OF CALIFORNIA
DEPARTMENT OF TRANSPORTATION

DIVISION OF ENGINEERING SERVICES
STRUCTURE DESIGN
DESIGN BRANCH 6

BRIDGE NO. 53-1111
KILOMETER POST

COHASSET STREET UC (WIDEN)
GIRDER LAYOUT

ALL DIMENSIONS ARE IN MILLIMETERS UNLESS OTHERWISE SHOWN

ORIGINAL SCALE IN MILLIMETERS FOR REDUCED PLANS 0 10 20 30 40 50 60 70 80 90 100

CU 07
EA 1218V1

DISREGARD PRINTS BEARING EARLIER REVISION DATES

REVISION DATES: 5-18-07 8-13-07 8-16-07 10-12-07 11-21-07 4-8-08 4-28-08 5-28-08 6-10-08 7-15-09

SHEET 13 OF 21

FILE => 53-1111-1-g-lo01.dgn

STRUCTURES DESIGN DETAIL SHEET (METRIC) (REV.03-17-04)

USERNAME => trlenard DATE PLOTTED => 03-MAY-2010 TIME PLOTTED => 12:43

DIST	COUNTY	ROUTE	KILOMETER POST TOTAL PROJECT	SHEET No	TOTAL SHEETS
07	LA	5	50.8/58.0	726	869

Xiaodong Chen 6-25-08
REGISTERED CIVIL ENGINEER DATE

5-3-10
PLANS APPROVAL DATE

REGISTERED PROFESSIONAL ENGINEER Xiaodong Chen No. C58858 Exp. 6-30-11 CIVIL STATE OF CALIFORNIA

The State of California or its officers or agents shall not be responsible for the accuracy or completeness of electronic copies of this plan sheet.

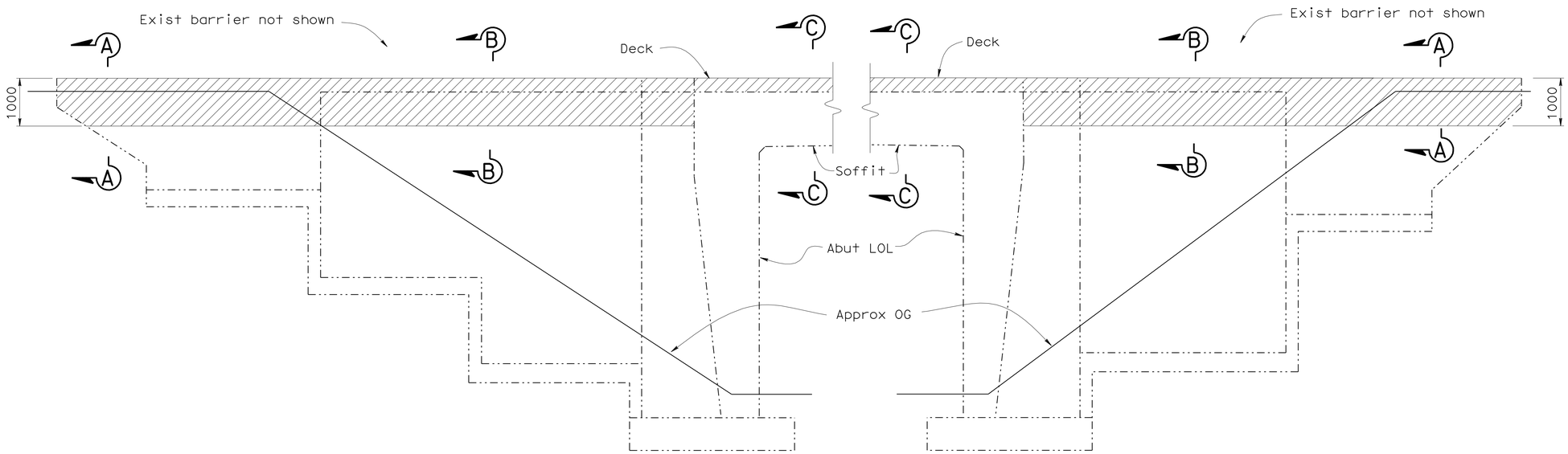

WINGWALL ELEVATION

No scale

LEGEND:

Indicates new structure

Indicates existing structure

Indicates bridge removal (portion)

NOTE:

Northeast & southwest wingwall shown, southeast & northwest wingwall similar.

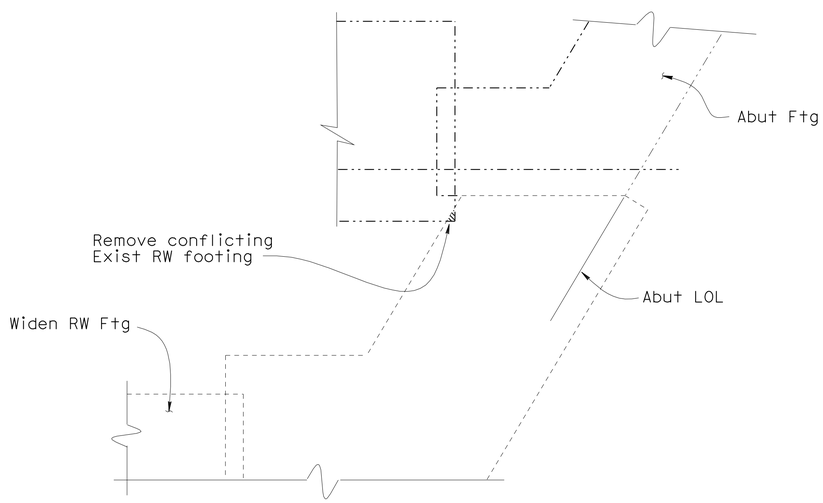

PART PLAN - FOOTING

No scale

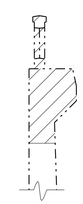

SECTION A-A

1:40

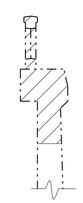

SECTION B-B

1:40

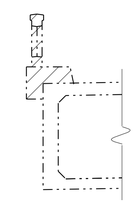

SECTION C-C

1:40

NOTE:
THE CONTRACTOR SHALL VERIFY ALL CONTROLLING FIELD DIMENSIONS BEFORE ORDERING OR FABRICATING ANY MATERIAL.

Caltrans Metric

	BY	CHECKED
DESIGN	Xiaodong Chen	G. R-Gutierrez
DETAILS	Bruno Jenko	G. R-Gutierrez
QUANTITIES	G. R-Gutierrez	Ryan Odell

STATE OF CALIFORNIA
DEPARTMENT OF TRANSPORTATION

DIVISION OF ENGINEERING SERVICES
STRUCTURE DESIGN
DESIGN BRANCH 6

BRIDGE NO. 53-1111
KILOMETER POST

COHASSET STREET UC (WIDEN)
REMOVAL DETAILS

ALL DIMENSIONS ARE IN MILLIMETERS UNLESS OTHERWISE SHOWN

ORIGINAL SCALE IN MILLIMETERS FOR REDUCED PLANS 0 10 20 30 40 50 60 70 80 90 100

CU 07
EA 1218V1

DISREGARD PRINTS BEARING EARLIER REVISION DATES 10-19-07 7-15-09

REVISION DATES

SHEET 14 OF 21

FILE => 53-1111-m-miscdt01.dgn

STRUCTURES DESIGN DETAIL SHEET (METRIC) (REV.03-17-04)

USERNAME => trlenard DATE PLOTTED => 03-MAY-2010

DIST	COUNTY	ROUTE	KILOMETER POST TOTAL PROJECT	SHEET No	TOTAL SHEETS
07	LA	5	50.8/58.0	727	869

Xiaodong Chen 6-25-08
REGISTERED CIVIL ENGINEER DATE

5-3-10
PLANS APPROVAL DATE

REGISTERED PROFESSIONAL ENGINEER Xiaodong Chen No. C58858 Exp. 6-30-11 CIVIL STATE OF CALIFORNIA

The State of California or its officers or agents shall not be responsible for the accuracy or completeness of electronic copies of this plan sheet.

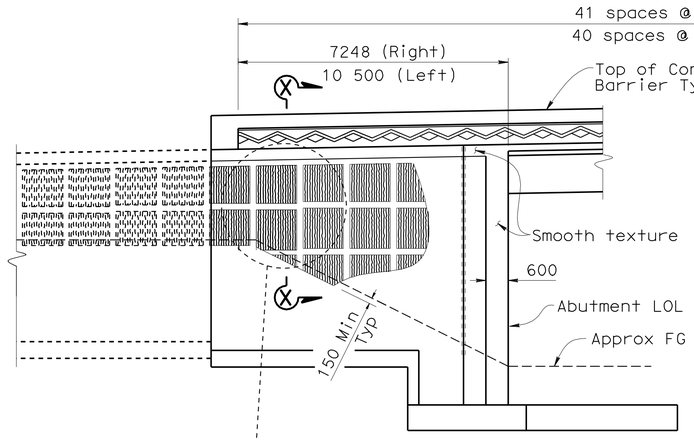

Abut 1 Retaining Wall right side shown, left side similar.

ELEVATION
Scale 1:80

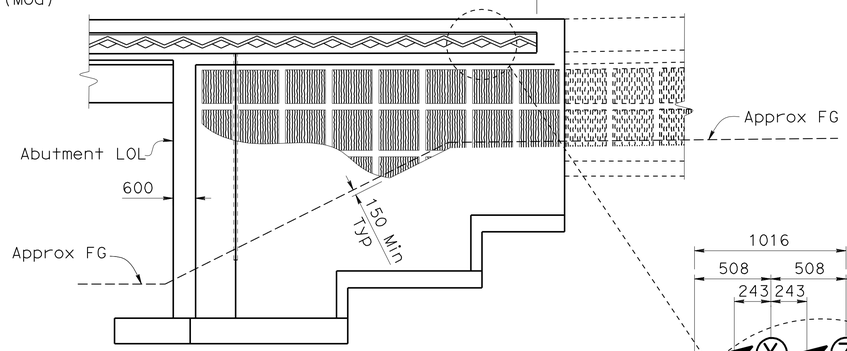

Abut 2 Retaining Wall Rt side shown, Lt side similar.

ELEVATION
Scale 1:80

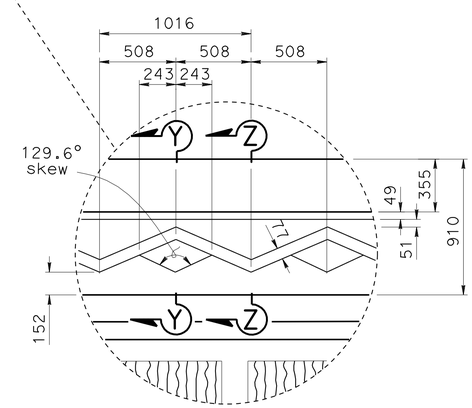

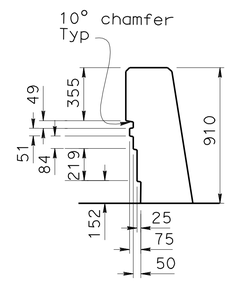

SECTION Y-Y
1:20

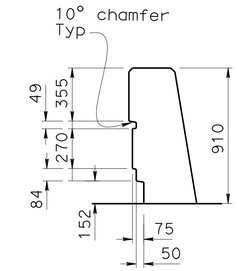

SECTION Z-Z
1:20

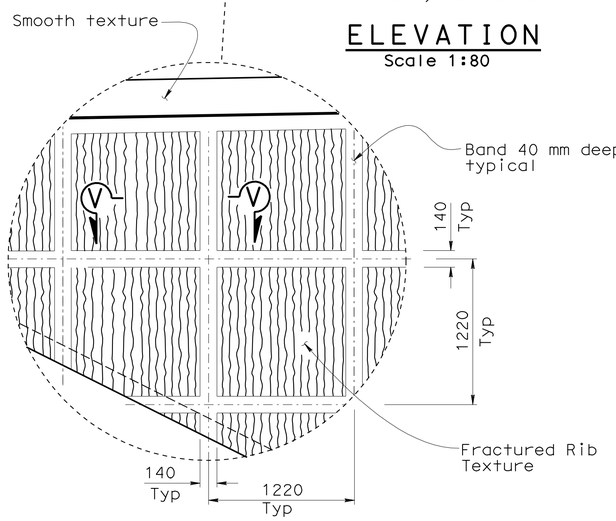

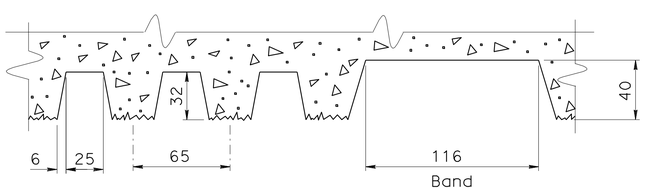

SECTION V-V
FRACTURED RIB TEXTURE & BAND
1:2

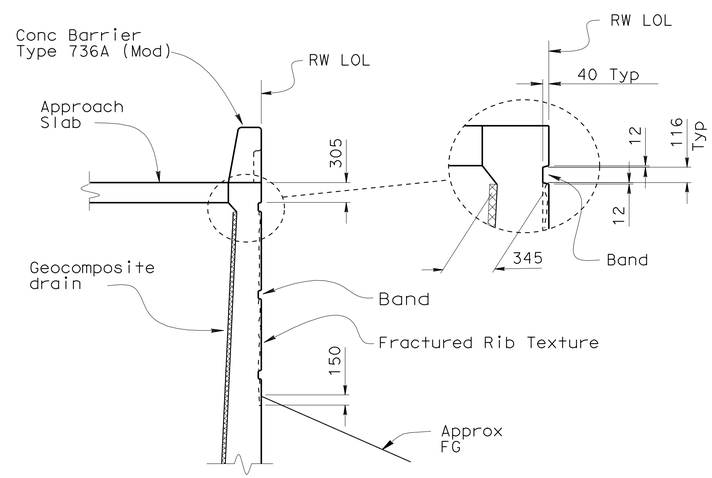

SECTION X-X
1:40

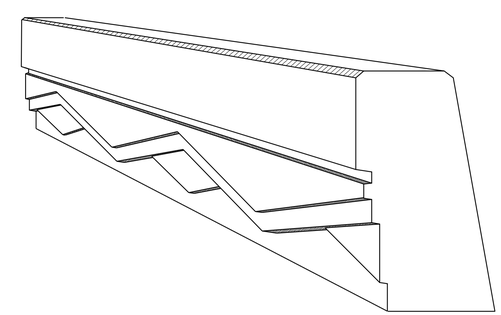

PERSPECTIVE VIEW
No scale

NOTE:
THE CONTRACTOR SHALL VERIFY ALL CONTROLLING FIELD DIMENSIONS BEFORE ORDERING OR FABRICATING ANY MATERIAL.

Caltrans Metric

	BY	CHECKED
DESIGN	Xiaodong Chen	G. R-Gutierrez
DETAILS	Bruno Jenko	G. R-Gutierrez
QUANTITIES	G. R-Gutierrez	Ryan Odell

STATE OF CALIFORNIA
DEPARTMENT OF TRANSPORTATION

DIVISION OF ENGINEERING SERVICES
STRUCTURE DESIGN
DESIGN BRANCH 6

BRIDGE NO. 53-1111
KILOMETER POST 51.27

COHASSET STREET UC (WIDEN)
ARCHITECTURAL DETAILS

ALL DIMENSIONS ARE IN MILLIMETERS UNLESS OTHERWISE SHOWN

ORIGINAL SCALE IN MILLIMETERS FOR REDUCED PLANS 0 10 20 30 40 50 60 70 80 90 100

CU 07
EA 1218V1

DISREGARD PRINTS BEARING EARLIER REVISION DATES

REVISION DATES: 10-31-07, 11-16-07, 3-14-08, 4-14-08, 6-16-08, 7-15-09

SHEET 15 OF 21

FILE => 53-1111-n-arch-det.dgn

STRUCTURES DESIGN DETAIL SHEET (METRIC) (REV.03-17-04)

USERNAME => trlenard DATE PLOTTED => 03-MAY-2010 TIME PLOTTED => 12:43

DIST.	COUNTY	ROUTE	KILOMETER POST TOTAL PROJECT	SHEET NO.	TOTAL SHEETS
07	LA	5	50.8/58.0	728	869

Caltrans Metric

Xiaodong Chen 6-25-08
REGISTERED ENGINEER - CIVIL

5-3-10
PLANS APPROVAL DATE

REGISTERED PROFESSIONAL ENGINEER XIAODONG CHEN No. C58858 Exp. 6-30-11 CIVIL STATE OF CALIFORNIA

The State of California or its officers or agents shall not be responsible for the accuracy or completeness of electronic copies of this plan sheet.

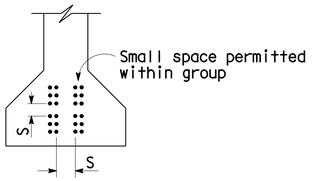

CLEARANCES FOR PRETENSIONED STRANDS

1. Strands may be bundled in groups consisting of 3 vertically 2 horizontally, and separated at the ends.
2. The min distance "S" between groups or individual strands is 40 mm for 9.5 mm strands, 45 mm for 11 and 13 mm strands and 50 mm for 15 mm strands.
3. "S" is measured between centers of adjacent strands.
4. Approval of Engineer is required for deviation.

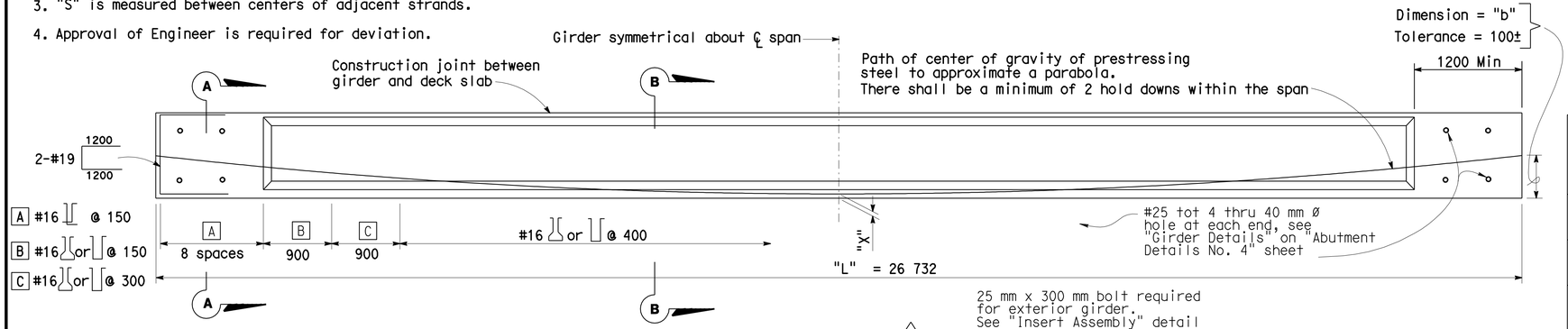

ELEVATION 2

Note :

Details shown are for pretensioned girders. The Contractor may submit details for post-tensioning which shall meet the approval of the Engineer.

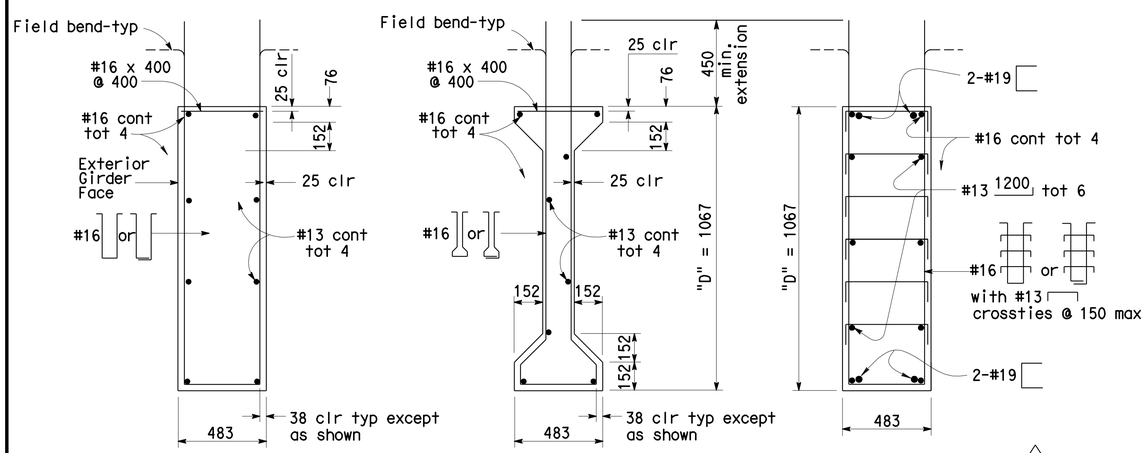

SECTION B-B

SECTION A-A 2

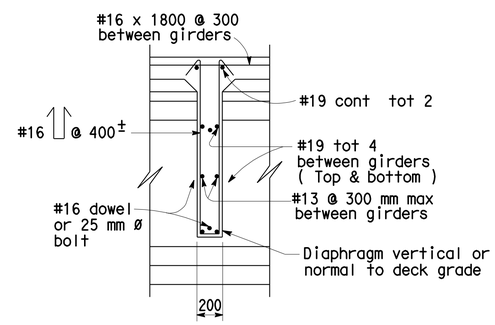

SECTION C-C

NOTE:
THE CONTRACTOR SHALL VERIFY ALL CONTROLLING FIELD DIMENSIONS BEFORE ORDERING OR FABRICATING ANY MATERIAL.

PRESTRESSING NOTES

Concrete strength : f'_{ci} is at time of initial stressing, f'_c is at 28 days, MPa.
Deflection components : Informational - to be used in setting screed line elevations.

Screed line elevations for deck concrete will be determined by the Engineer.

Contractor may interpolate "P" and "X" values between limits shown, as approved by the Engineer.

"b"	Girder location or designation and length L = M	P = Working force in (kN)		Concrete Strength MPa		Deflection Components (mm)	
		"X" mm		f'_{ci}	f'_c	1 Deck DL	2 Rail DL
533	A	100	4460	39	34	41	27
		150	4800	34	35	40	27
508	B	100	3350	37	38	47	9
		150	3600	37	43	45	8
508	C	100	2750	29	36	40	0
		150	3000	30	40	38	0

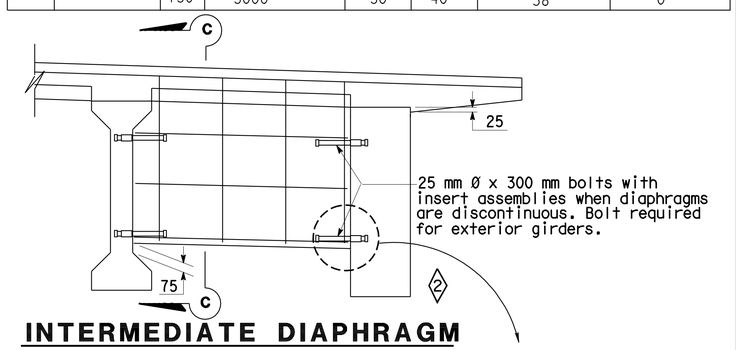

INTERMEDIATE DIAPHRAGM

INSERT ASSEMBLY

NO SCALE

SPECIAL DETAIL

NO SCALE
ALL DIMENSIONS ARE IN MILLIMETERS UNLESS OTHERWISE SHOWN

STANDARD DRAWING					
RELEASE DATE REVISED	DESIGN	BY ROBERT K. DOWELL	CHECKED A.W. DEETER	RELEASED BY Shannon L. Rock	
FILE NO. xs1-120	DETAILS	BY R. YEE	CHECKED A.W. DEETER		
	SUBMITTED	BY ALVIN W. DEETER	DRAWING DATE 4/98	OFFICE CHIEF	

1 Deleted detail
2 Revised detail

STATE OF CALIFORNIA
DEPARTMENT OF TRANSPORTATION

DIVISION OF ENGINEERING SERVICES

BRIDGE NO. 53-1111
KILOMETER POST 51.27

COHASSET STREET UC (WIDEN)
PRESTRESSED I GIRDER

DS OSD 2147A (METRIC) (REV. 2/25/97)

ORIGINAL SCALE IN MILLIMETERS FOR REDUCED PLANS 0 10 20 30 40 50 60 70 80 90 100

CU 07
EA 1218V1

DISREGARD PRINTS BEARING EARLIER REVISION DATES
REVISION DATES (PRELIMINARY STAGE ONLY) 8-11-07 8-15-07 11-21-07 7-15-09

SHEET 16 OF 21

USERNAME => trlenard

DATE PLOTTED => 03-MAY-2010 TIME PLOTTED => 12:43

53-1111-q-psigrder

DIST.	COUNTY	ROUTE	KILOMETER POST TOTAL PROJECT	SHEET NO.	TOTAL SHEETS
07	LA	5	50.8/58.0	729	869

Caltrans Metric

Xiaodong Chen 6-25-08
REGISTERED ENGINEER - CIVIL

5-3-10
PLANS APPROVAL DATE

REGISTERED PROFESSIONAL ENGINEER XIAODONG CHEN No. C58858 Exp. 6-30-11 CIVIL STATE OF CALIFORNIA

The State of California or its officers or agents shall not be responsible for the accuracy or completeness of electronic copies of this plan sheet.

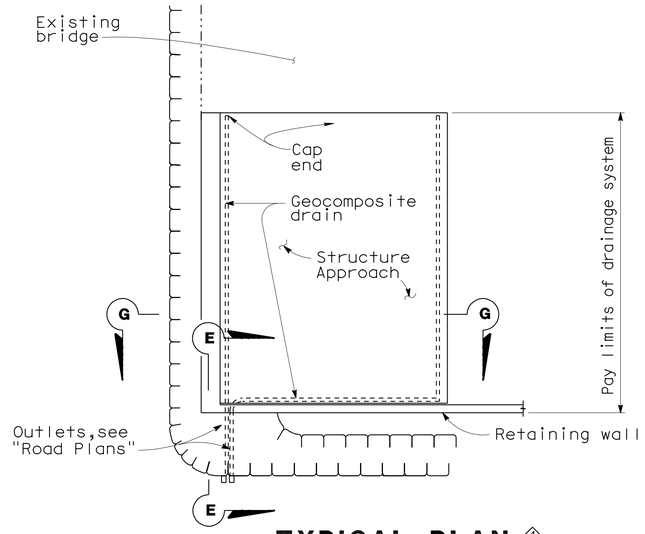

TYPICAL PLAN ◇1

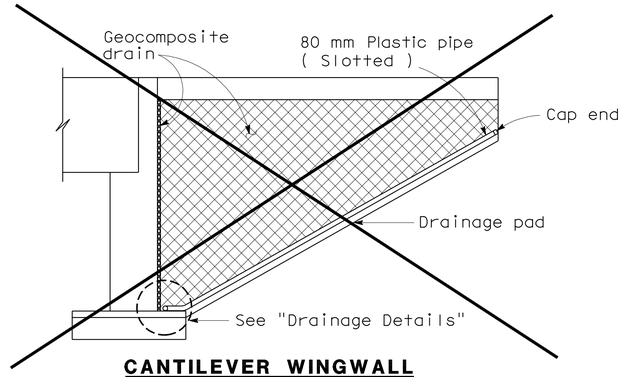

CANTILEVER WINGWALL SECTION F-F

◇2

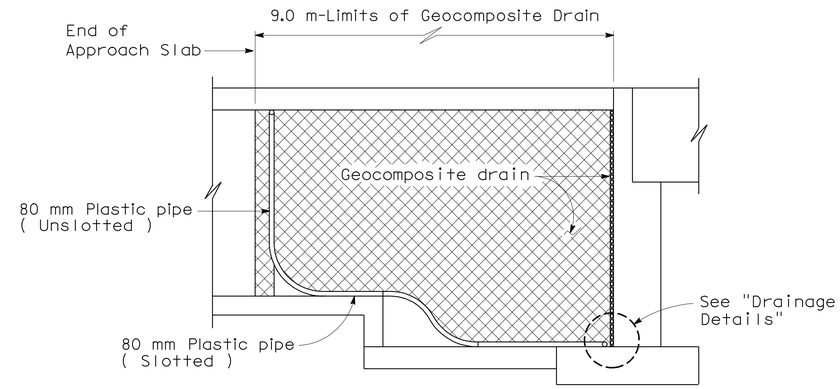

RETAINING WALL WINGWALL SECTION G-G

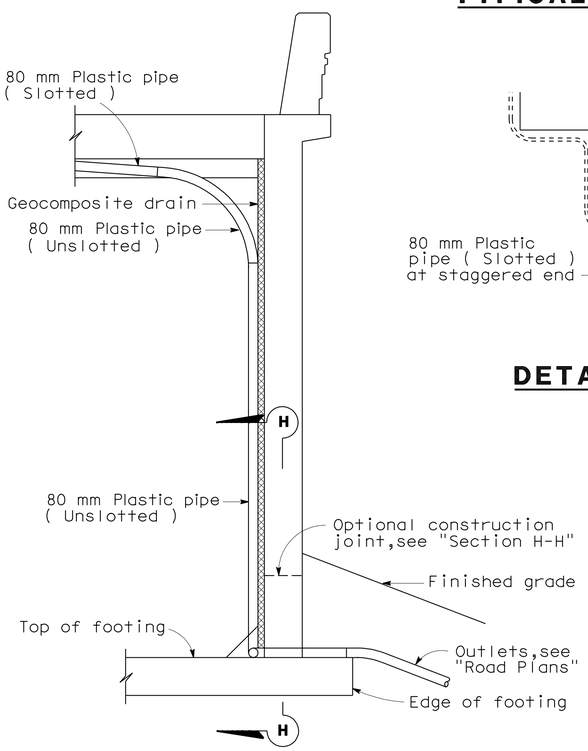

SECTION E-E ◇1

NOTE: Bends and junctions in 80 mm plastic pipe are 750 mm radius min.

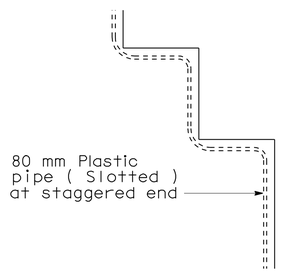

DETAIL B

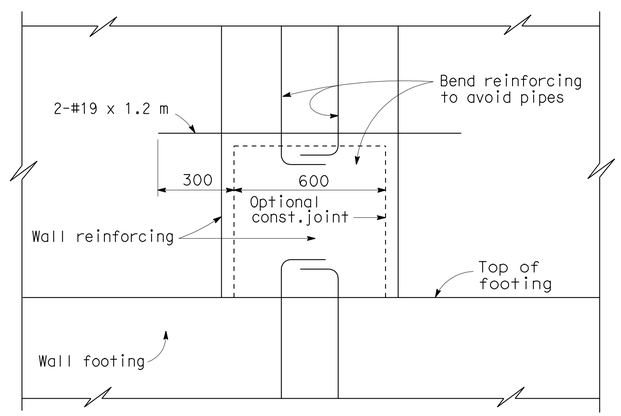

SECTION H-H

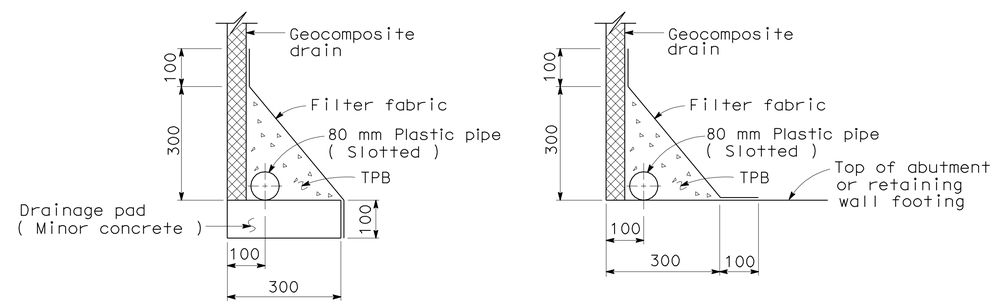

WITHOUT FOOTING

WITH FOOTING

DRAINAGE DETAILS

NOTE:
THE CONTRACTOR SHALL VERIFY ALL CONTROLLING FIELD DIMENSIONS BEFORE ORDERING OR FABRICATING ANY MATERIAL.

NO SCALE

ALL DIMENSIONS ARE IN MILLIMETERS UNLESS OTHERWISE SHOWN

STANDARD DRAWING

RELEASE DATE 4/23/98	DESIGN BY M. TRAFFALIS	CHECKED E. THORKILDSEN	RELEASED BY	
FILE NO. xs3-110	DETAILS BY R. YEE	CHECKED E. THORKILDSEN	OFFICE CHIEF	
	SUBMITTED BY M. HA	DRAWING DATE 4/98		

DS OSD 2147A (METRIC) (REV. 2/25/97)

◇1 Revised detail
◇2 Detail does not apply

STATE OF CALIFORNIA DEPARTMENT OF TRANSPORTATION

DIVISION OF ENGINEERING SERVICES

ORIGINAL SCALE IN MILLIMETERS FOR REDUCED PLANS 0 10 20 30 40 50 60 70 80 90 100

CU 07
EA 1218V1

BRIDGE NO. 53-1111
KILOMETER POST 52.06

COHASSET STREET UC (WIDEN)

STRUCTURE APPROACH DRAINAGE DETAILS

DISREGARD PRINTS BEARING EARLIER REVISION DATES

REVISION DATES (PRELIMINARY STAGE ONLY) 3-11-08 4-16-08 7-15-09

SHEET 17 OF 21

USERNAME => trlenard

53-1111-s-sadd.dgn

DATE PLOTTED => 03-MAY-2010 TIME PLOTTED => 12:43

DIST.	COUNTY	ROUTE	KILOMETER POST TOTAL PROJECT	SHEET NO.	TOTAL SHEETS
07	LA	5	50.8/58.0	730	869

Caltrans Metric

Xiaodong Chen 6-25-08
REGISTERED ENGINEER - CIVIL

5-3-10
PLANS APPROVAL DATE

REGISTERED PROFESSIONAL ENGINEER Xiaodong Chen No. C58858 Exp. 6-30-11 CIVIL STATE OF CALIFORNIA

The State of California or its officers or agents shall not be responsible for the accuracy or completeness of electronic copies of this plan sheet.

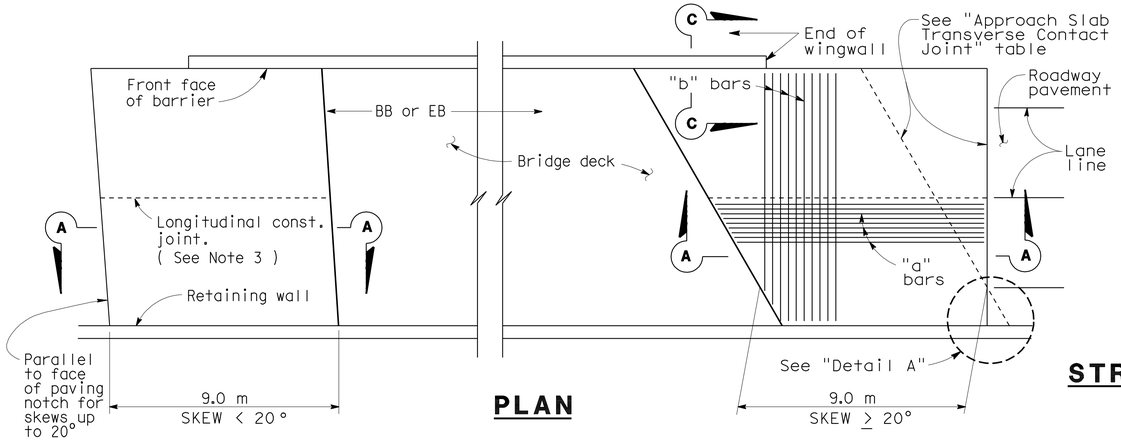

PLAN

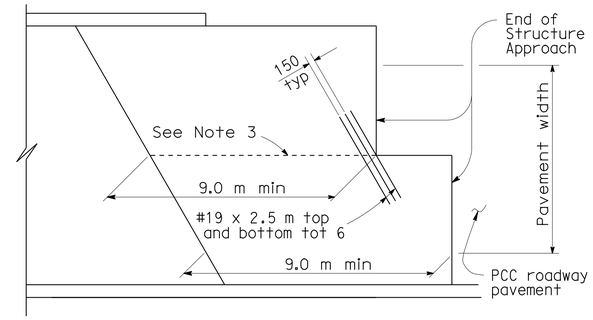

STRUCTURE APPROACH - END STAGGER DETAIL

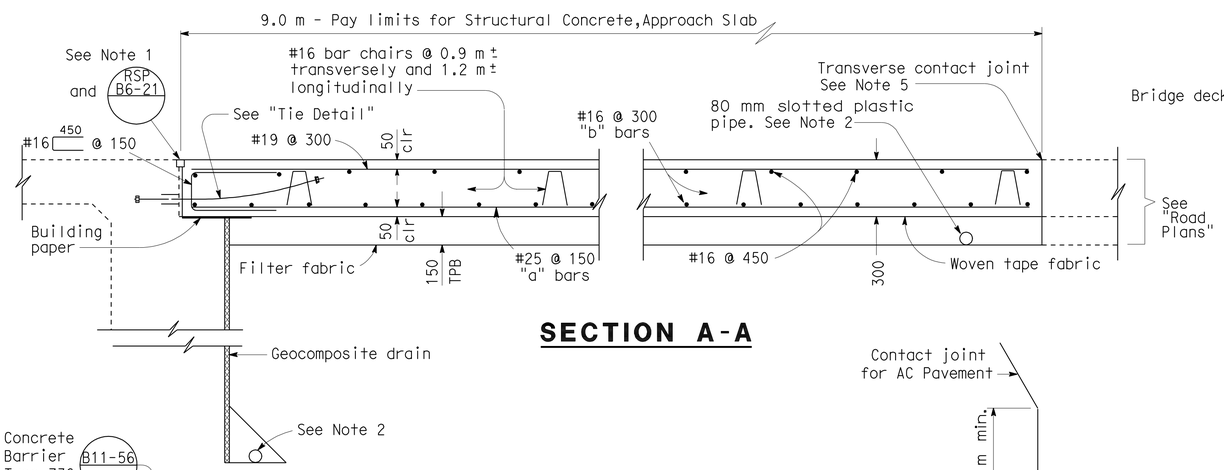

SECTION A-A

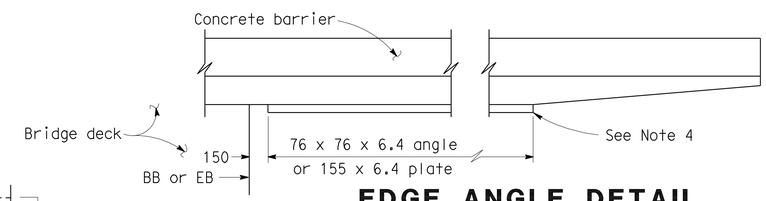

EDGE ANGLE DETAIL

APPROACH SLAB TRANSVERSE CONTACT JOINT		
APPROACH SKEW	WITH AC ROADWAY PAVEMENT	WITH PCC ROADWAY PAVEMENT
< 20°	Parallel to face of paving notch	Parallel to face of paving notch
20°- 45°	Parallel to face of P N use (Detail A)	Stagger lines 7.2 m to 10.8 m apart
> 45°	Parallel to face of P N use (Detail A)	Stagger at each lane line

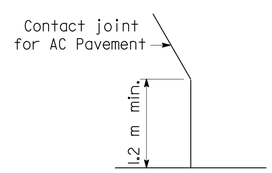

DETAIL A

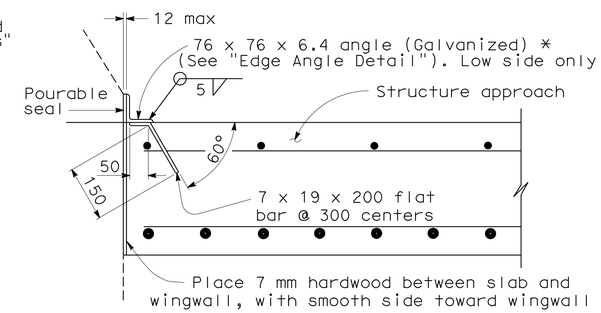

*(TO BE USED WITH TYPE 25 OR TYPE 27 CONCRETE BARRIER)

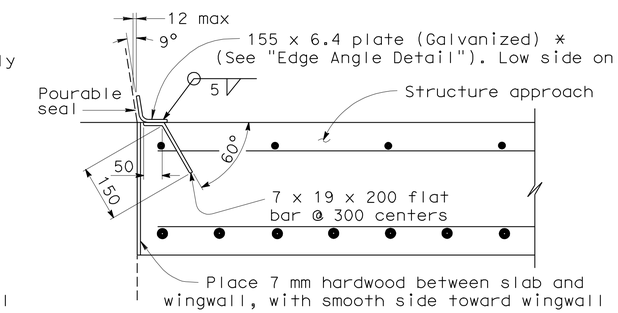

*(TO BE USED WITH TYPE 732 OR TYPE 736 CONCRETE BARRIER)

DETAIL B

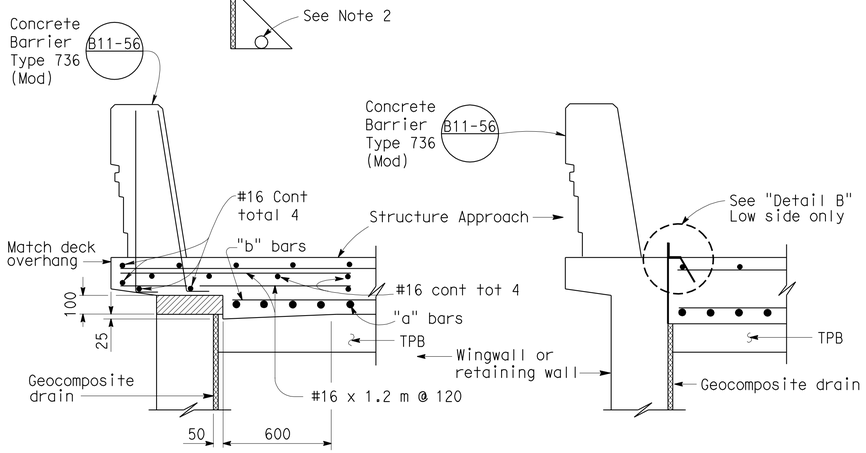

① TYPE E-1 ① TYPE E-2

SECTION C-C

(Type E-1 to be used,unless otherwise shown on plans)

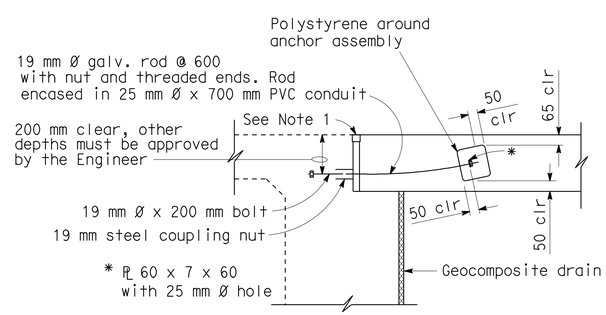

TIE DETAIL

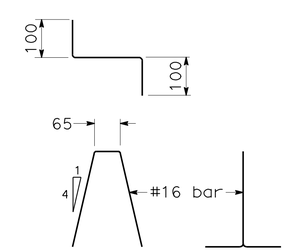

BAR CHAIR DETAIL

NO SCALE

NOTES:

1. For details not noted or shown,see Structure Plans.
2. For drainage details,see "Structure Approach Drainage Details" sheet.
3. Longitudinal construction joints,when permitted by the Engineer,shall be located on lane lines.
4. End angle or plate at beginning of barrier transition, end of wingwall or end of structure approach, as applicable.
5. For transverse contact joint with new PCC paving, refer to Standard Plan P10.
6. At the contractor's option,approach slab transverse reinforcement may be placed parallel to paving notch. Spacing of transverse reinforcement is measured along ℄ roadway.

Polystyrene to be removed.

ALL DIMENSIONS ARE IN MILLIMETERS UNLESS OTHERWISE SHOWN

STANDARD DRAWING					
RELEASE DATE 3/14/05	DESIGN	BY M. TRAFFALIS	CHECKED E. THORKILDSEN	RELEASED BY	
FILE NO. xs3-180	DETAILS	BY R. YEE	CHECKED E. THORKILDSEN		
	SUBMITTED	BY M. HA	DRAWING DATE 4/98	OFFICE CHIEF	

① Revised detail

STATE OF CALIFORNIA DEPARTMENT OF TRANSPORTATION

DIVISION OF ENGINEERING SERVICES

BRIDGE NO. 53-1111

KILOMETER POST 51.27

COHASSET STREET UC (WIDEN)

STRUCTURE APPROACH TYPE N(9D)

DS OSD 2147A (METRIC) (REV. 2/25/97)

ORIGINAL SCALE IN MILLIMETERS FOR REDUCED PLANS 0 10 20 30 40 50 60 70 80 90 100

CU 07
EA 1218V1

DISREGARD PRINTS BEARING EARLIER REVISION DATES

REVISION DATES (PRELIMINARY STAGE ONLY) 3-11-08 4-16-08 7-15-09

SHEET 18 OF 21

USERNAME => trlenard

53-1111-s-sat9d.dg

DATE PLOTTED => 03-MAY-2010 TIME PLOTTED => 12:44

DIST	COUNTY	ROUTE	KILOMETER POST TOTAL PROJECT	SHEET No	TOTAL SHEETS
07	LA	5	50.8/58.0	731	869

REGISTERED CIVIL ENGINEER 12-20-07

5-3-10
PLANS APPROVAL DATE

REGISTERED PROFESSIONAL ENGINEER Qiang Huang No. C055671 Exp. 12-31-08 CIVIL STATE OF CALIFORNIA

The State of California or its officers or agents shall not be responsible for the accuracy or completeness of electronic copies of this plan sheet.

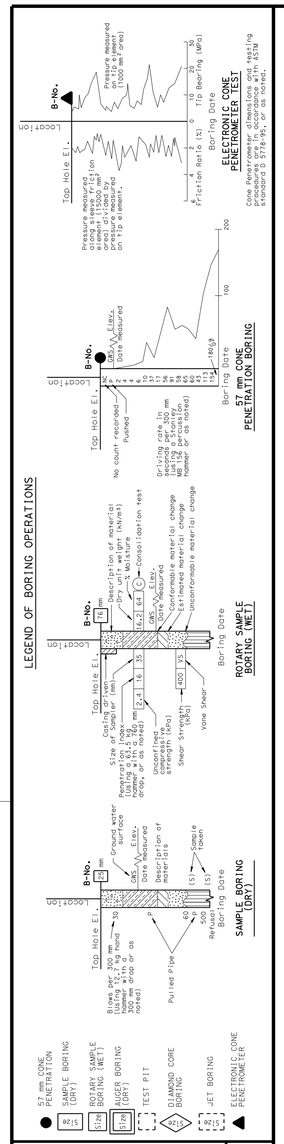

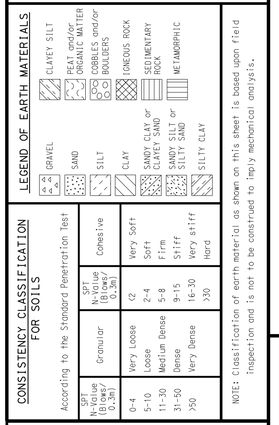

NOTE: Classification of earth material as shown on this sheet is based upon field inspection and is not to be construed to imply mechanical analysis.

OGS CIVIL LOG OF TEST BORINGS SHEET (METRIC) (REV. 4/04)

BENCH MARK

SURVEY CONTROL

PRHV1115
Fnd CONTROL POINT CHIS X
42.507 M Rt. ℄ "CL1" LINE Rte 5
Sta. 512+37.657
N 578419.126
E 1968431.500
Elev. = 215.874

PRVH1485
Fnd CONTROL POINT CHIS X
32.893 M Lt. ℄ "CL1" LINE Rte 5
Sta. 513+02.307
N 578438.473
E 1968334.081
Elev. = 216.925

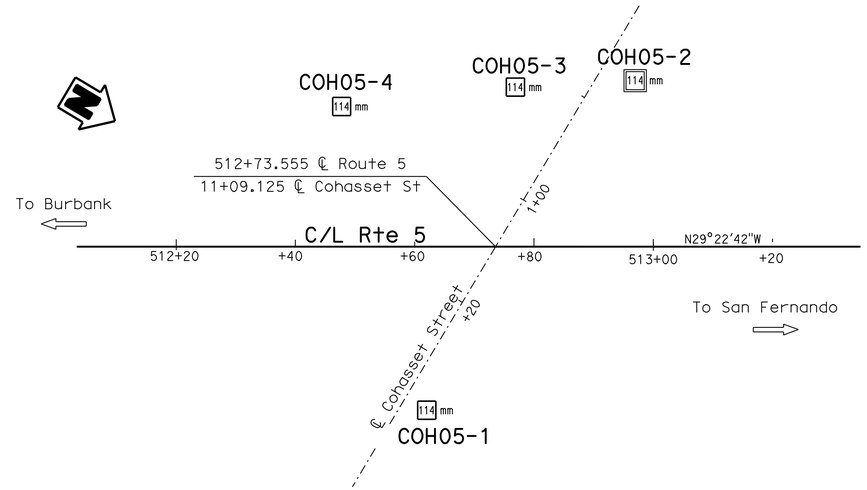

PLAN
1:500

Note: No ground water encountered during field investigation.

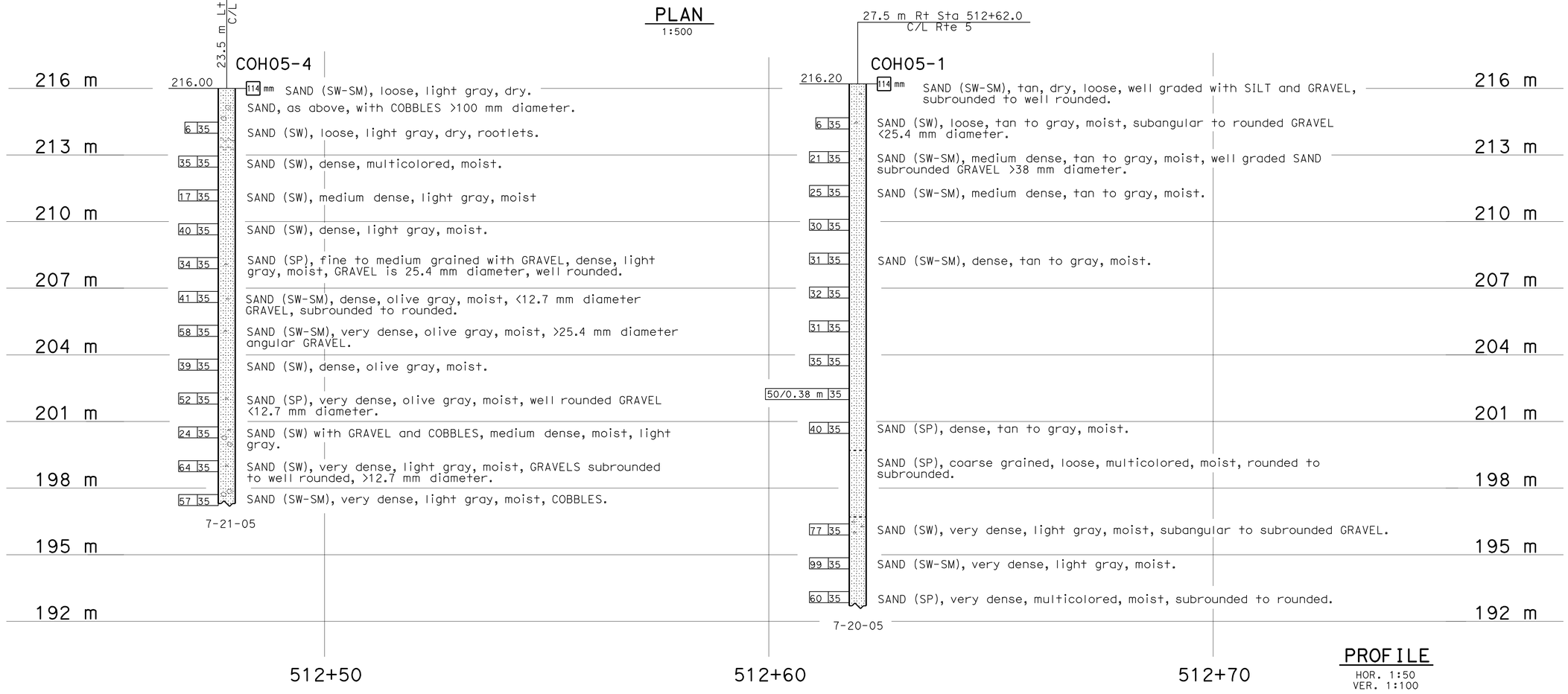

PROFILE
HOR. 1:50
VER. 1:100

Caltrans Metric	GEOTECHNICAL SERVICES	FIELD INVESTIGATION BY:	STATE OF CALIFORNIA DEPARTMENT OF TRANSPORTATION	DIVISION OF ENGINEERING SERVICES STRUCTURE DESIGN	BRIDGE NO. 53-1111	COHASSET STREET UC (WIDEN)
	DRAWN BY W. Tang 11/05, I.G-Remmen 3/06			DESIGN BRANCH	KILOMETER POST 51.27	LOG OF TEST BORINGS 1 OF 3
	CHECKED BY B. Bertucci	B. Bertucci, C. Kark				

ALL DIMENSIONS ARE IN METERS UNLESS OTHERWISE SHOWN

ORIGINAL SCALE IN MILLIMETERS FOR REDUCED PLANS 0 10 20 30 40 50 60 70 80 90 100

CU 07
EA 1218V1

DISREGARD PRINTS BEARING EARLIER REVISION DATES

REVISION DATES (PRELIMINARY STAGE ONLY) 04-16-07 10-26-07 11-26-07 7-15-09

SHEET 19 OF 21

FILE => 53-1111-z-lotb1of3.dgn

USERNAME => trhenard DATE PLOTTED => 03-MAY-2010 TIME PLOTTED => 12:56

DIST	COUNTY	ROUTE	KILOMETER POST TOTAL PROJECT	SHEET No	TOTAL SHEETS
07	LA	5	50.8/58.0	732	869

REGISTERED CIVIL ENGINEER 12-20-07

5-3-10
PLANS APPROVAL DATE

REGISTERED PROFESSIONAL ENGINEER
Qiang Huang
No. C055671
Exp. 12-31-08
CIVIL
STATE OF CALIFORNIA

The State of California or its officers or agents shall not be responsible for the accuracy or completeness of electronic copies of this plan sheet.

FOR PLAN VIEW, SEE
"LOG OF TEST BORINGS" 1 OF 3

Note: No ground water encountered during field investigation.

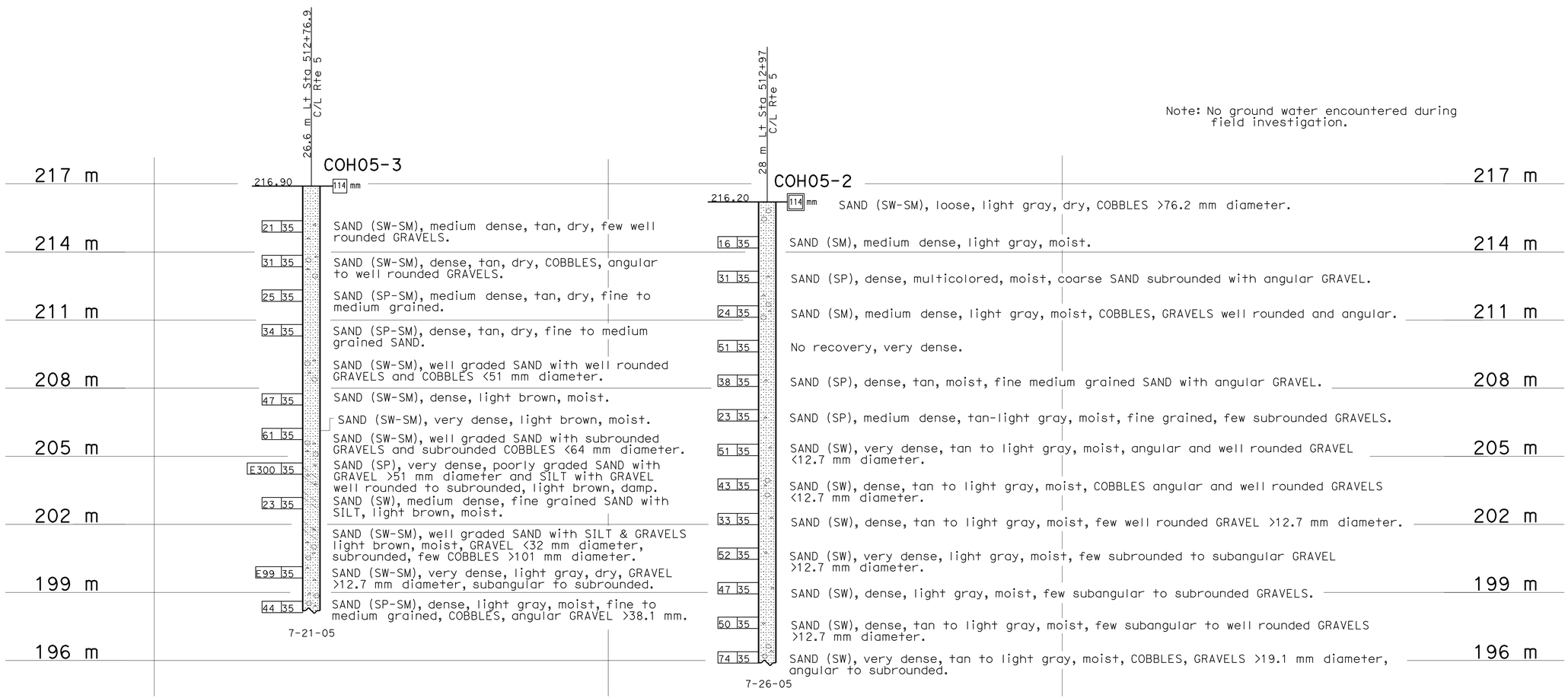

PROFILE
HOR. 1:100
VER. 1:100

LEGEND OF BORING OPERATIONS

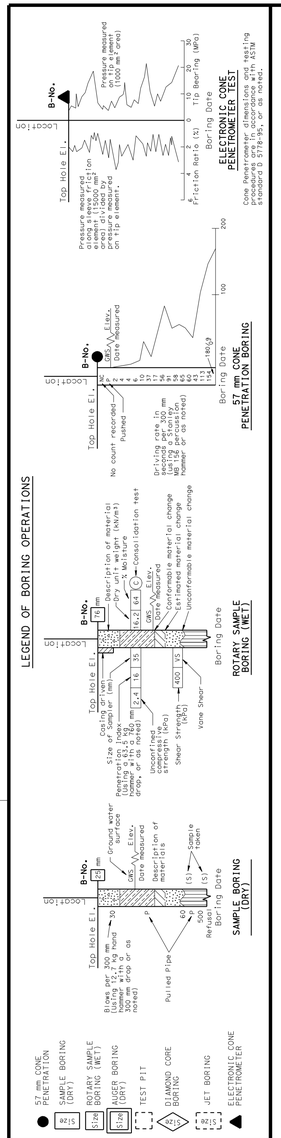

LEGEND OF EARTH MATERIALS

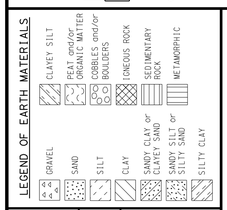

CONSISTENCY CLASSIFICATION FOR SOILS

According to the Standard Penetration Test

SPT N-Value (Blows/0.3m)	Granular	SPT N-Value (Blows/0.3m)	Cohesive
0-4	Very Loose	<2	Very Soft
5-10	Loose	2-4	Soft
11-30	Medium Dense	5-8	Firm
31-50	Dense	9-15	Stiff
>50	Very Dense	16-30	Very stiff
		>30	Hard

NOTE: Classification of earth material as shown on this sheet is based upon field inspection and is not to be construed to imply mechanical analysis.

OGS CIVIL LOG OF TEST BORINGS SHEET (METRIC) (REV. 4/04)

Caltrans Metric

GEOTECHNICAL SERVICES	
DRAWN BY	W. Tang 11/05, I.G-Remmen 3/06
CHECKED BY	B. Bertucci

FIELD INVESTIGATION BY: B. Bertucci, C. Kark

STATE OF CALIFORNIA DEPARTMENT OF TRANSPORTATION

DIVISION OF ENGINEERING SERVICES STRUCTURE DESIGN
DESIGN BRANCH

BRIDGE NO. 53-1111
KILOMETER POST 51.27

COHASSET STREET UC (WIDEN)
LOG OF TEST BORINGS 2 OF 3

ALL DIMENSIONS ARE IN METERS UNLESS OTHERWISE SHOWN

ORIGINAL SCALE IN MILLIMETERS FOR REDUCED PLANS 0 10 20 30 40 50 60 70 80 90 100

CU 07
EA 1218V1

DISREGARD PRINTS BEARING EARLIER REVISION DATES

REVISION DATES (PRELIMINARY STAGE ONLY) 04-16-07 10-26-07 11-06-07 12-20-07 7-15-09

SHEET 20 OF 21

FILE => 53-1111-z-lotb2of3.dgn

USERNAME => trmikest DATE PLOTTED => 04-MAY-2010 TIME PLOTTED => 05:57

I-081-3(6)

FED. ROAD DIV. NO.	STATE	PROJ. NO.	FISCAL YEAR	SHEET NO.	TOTAL SHEETS
7	CAL.			401	448

DIST.	COUNTY	ROUTE	SECTION	SHEET NO.	TOTAL SHEETS
VII	L.A.	4	~~B-Kb~~	8	8

BRIDGE ENGINEER — CIVIL ENGINEER — LICENSE 5585

DATE APPROVED AUGUST 18 1958

To accompany plans dated 5-3-10

DIVISION OF ENGINEERING SERVICES - GEOTECHNICAL SERVICES

As-Built Log of Test Borings sheet is considered an informational document only. As such, the State of California registration seal with signature, license number and registration certificate expiration date confirm that this is a true and accurate copy of the original document. This drawing is available and presented only for the convenience of any bidder, contractor or other interested party.

DIST.	COUNTY	ROUTE	KILOMETER POST-TOTAL PROJECT	Sheet No.	Total Sheets
07	LA	5	50.8/58.0	733	869

12/20/07

REGISTERED CIVIL ENGINEER

REGISTERED PROFESSIONAL ENGINEER — Qiang Huang — No. C055671 — Exp. 12-31-08 — CIVIL — STATE OF CALIFORNIA

COHASSET STREET UC (WIDEN)

LOG OF TEST BORINGS 3 OF 3

NOTE: A COPY OF THIS LOG OF TEST BORINGS IS AVAILABLE AT OFFICE OF STRUCTURE MAINTENANCE AND INVESTIGATIONS, SACRAMENTO, CALIFORNIA

CU: 07
EA: 121811

BRIDGE No. 53-1111

Sheet of

Revisions made to this Log of Test Borings from the As-Built 1957 Log of Test Borings are the addition of the following table and notes:

Boring	Station	Offset from C/L Rte 5
B-1	512+38.8	18.5 m Rt.
B-3	512+72.0	19.5 m Lt.
B-2	512+40.8	23.5 m Rt.
B-4	512+97.0	20.7 m Lt.

Notes:
1. See the General Plan and/or Foundation Plan for Metric Stationing.
2. The Office of Geotechnical Design produced the data presented in the table above. The data are the metric locations for the As-Built Log of Test Borings referenced to the "SD-15R" Line. This table is presented on this sheet for the convenience of any bidder, contractor or other interested party

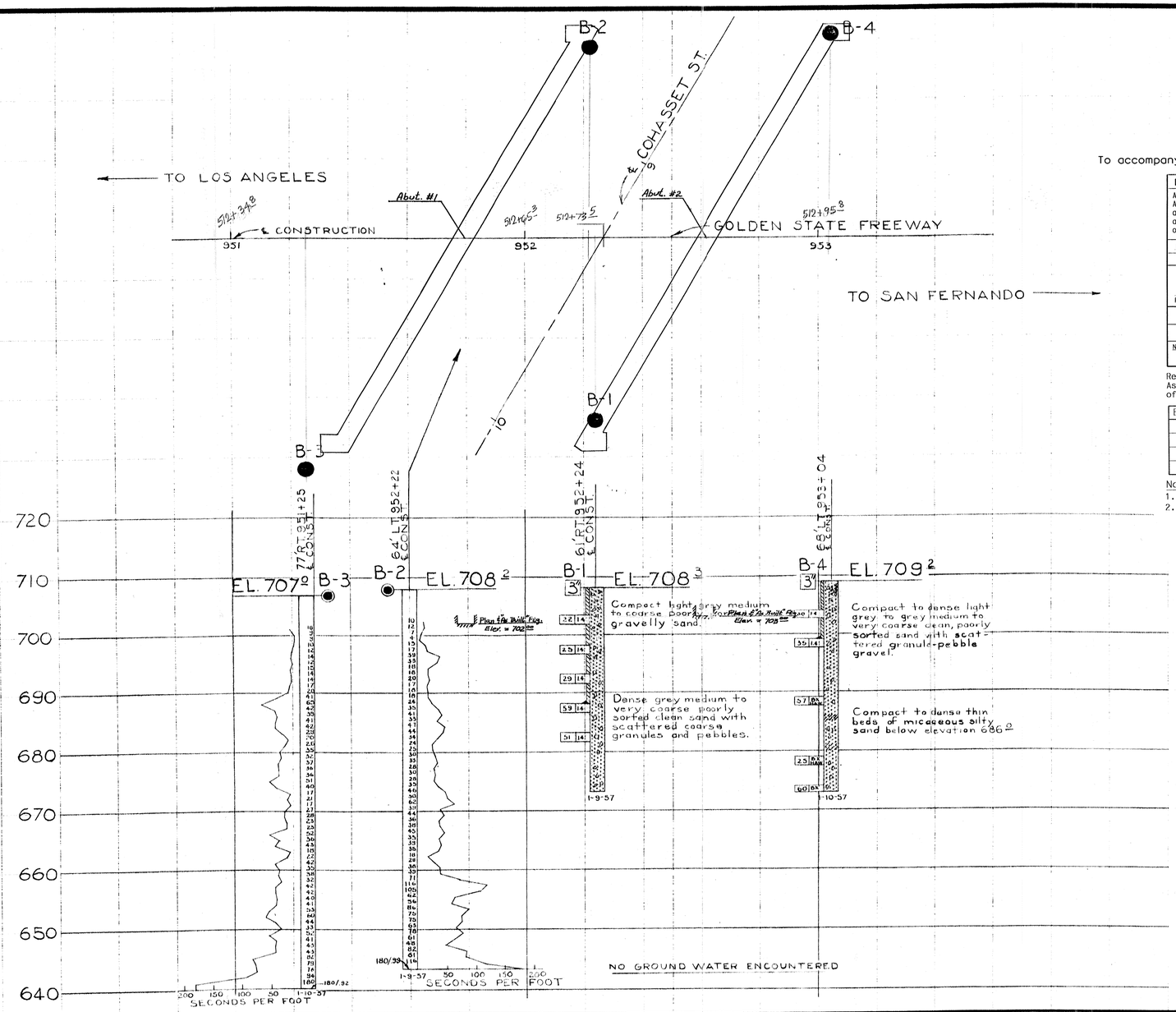

BM 102-LA-54
FD. L&T ON PCC CURB S. SIDE
COHASSET ST. & GLENOAKS
ELEV. = 701.945

AS BUILT
CORRECTIONS BY Alvin W. Deeter
DATE June 26, 1961
59-TVC59-E1

BRIDGE DEPARTMENT

FIELD STUDY	GOLDSCHMIDT	1-10-57
DRAWN	LEUTSCHER	2-25-57
CHECKED		2-25-57

Approved Recommended by — Engineering Geologist — Materials Engineer — Bridge Engineer

CLASSIFICATION OF MATERIAL BASED ON STANDARD GRADE SIZE LIMITS

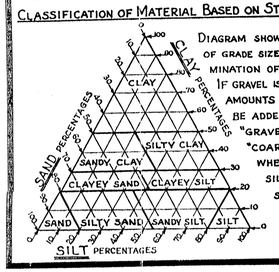

DIAGRAM SHOWING THE BASIS FOR ESTIMATES OF GRADE SIZE DISTRIBUTION USED IN DETERMINATION OF CLASS NAMES.

IF GRAVEL IS PRESENT IN APPRECIABLE AMOUNTS THE TERM "GRAVELLY" MAY BE ADDED TO THE CLASS NAME, VIZ. "GRAVELLY SAND". THE TERMS "COARSE", "MEDIUM" AND "FINE" WHEN USED TO DESCRIBE SAND, SILT AND GRAVEL REFER TO STANDARD GRADE SIZE LIMITS.

LEGEND OF EARTH MATERIALS

- GRAVEL
- SAND
- SILT
- CLAY
- SANDY CLAY OR CLAYEY SAND
- SANDY SILT OR SILTY SAND
- SILTY CLAY OR CLAYEY SILT
- PEAT AND/OR ORGANIC MATTER
- FILL MATERIAL
- IGNEOUS ROCK
- SEDIMENTARY ROCK
- METAMORPHIC ROCK

LEGEND OF BORING OPERATIONS

- PLAN OF ANY BORING
- PENETROMETER
- 2¼" CONE PENETROMETER
- SAMPLER BORING (DRY)
- ROTARY BORING (WET)
- AUGER BORING (DRY)
- JET BORING
- CORE BORING
- TEST PIT

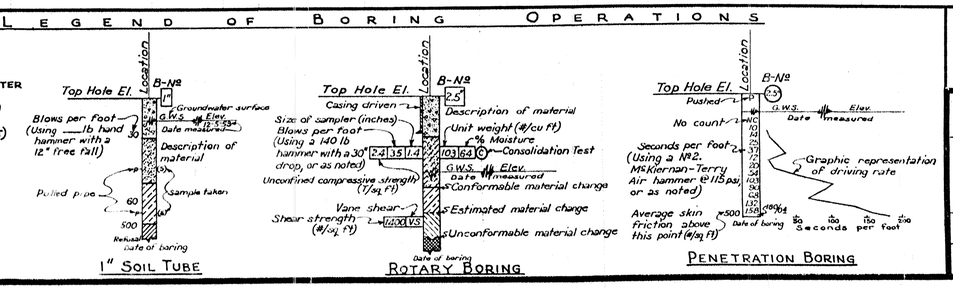

NOTES

The contractor's attention is directed to Section 2, Article (c) of the Standard Specifications and to the Special Provisions accompanying this set of plans.

Classification of earth material as shown on this sheet is based upon field inspection and is not to be construed to imply mechanical analysis.

STATE OF CALIFORNIA
DEPARTMENT OF PUBLIC WORKS
DIVISION OF HIGHWAYS

COHASSET ST. UNDERCROSSING

LOG OF TEST BORINGS

SCALE HORIZ. 1"=20' VERT. 1"=10' | BRIDGE 53-1111 | FILE E-53 | DRAWING C-3928-8

DRAWING C 3928 16

53-1111-z-1otb3of3.tif

DIST	COUNTY	ROUTE	KILOMETER POST TOTAL PROJECT	SHEET No	TOTAL SHEETS
07	LA	5	50.8/58.0	734	869

Fritz Hoffman 6-25-08
REGISTERED CIVIL ENGINEER DATE

5-3-10
PLANS APPROVAL DATE

REGISTERED PROFESSIONAL ENGINEER F. H. HOFFMAN No. C46401 Exp. 3-31-11 CIVIL STATE OF CALIFORNIA

The State of California or its officers or agents shall not be responsible for the accuracy or completeness of electronic copies of this plan sheet.

Legend:

- Indicates existing structure
- Indicates new construction
- Indicates point of Minimum Vertical Clearance
- Indicates bridge removal (portion)

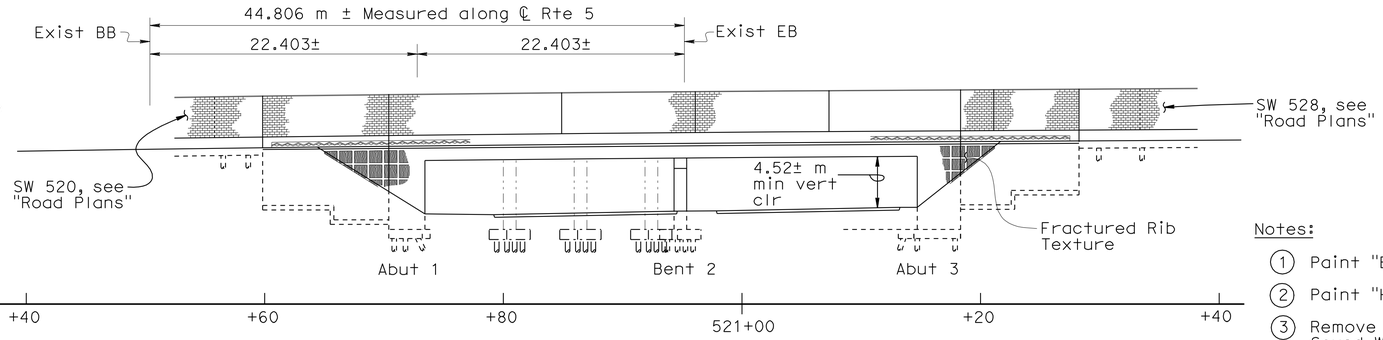

ELEVATION
1:250

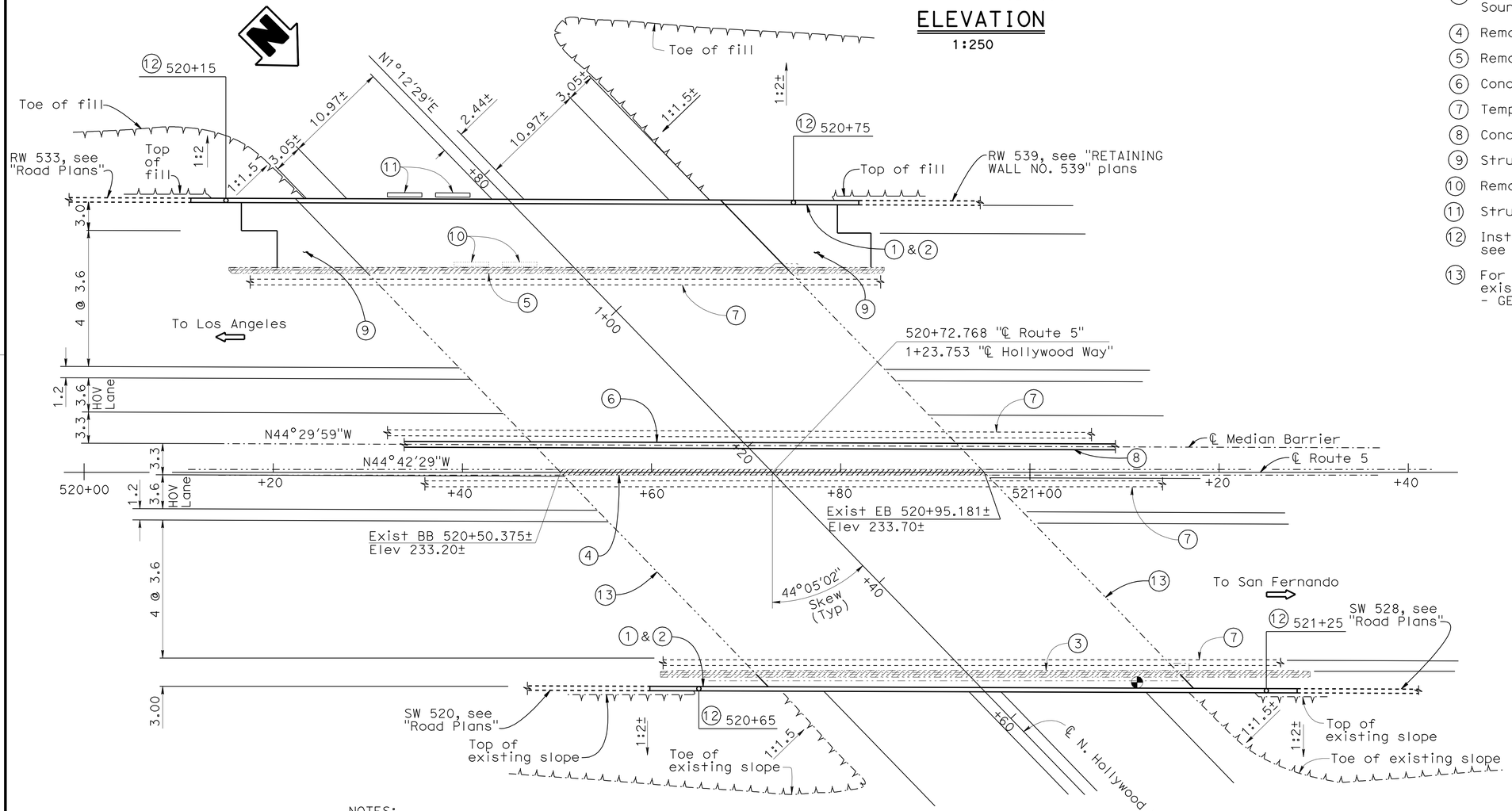

PLAN
1:250

Notes:

1. Paint "Bridge No. 53-1112"
2. Paint "Hollywood Way Undercrossing"
3. Remove existing Concrete Barrier Type 27 (Mod), Sound Wall and Curb
4. Remove existing Concrete Barrier Type 50 (Mod)
5. Remove existing Concrete Railing & Curb
6. Concrete Barrier Type 60AR
7. Temporary Railing Type K, see "Road Plans"
8. Concrete Barrier Type 60C, see "Road Plans"
9. Structure Approach Type N(9D)
10. Remove Existing Structure Mounted Signs, see "Road Plans"
11. Structure Mounted Signs, see "Road Plans"
12. Install Type 21 Lighting Standard Foundation (Future), see "Road Plans"
13. For Joint Seal and Approach Slab Replacement on existing bridge, see "BRIDGE APPROACH SLAB REPLACEMENT - GENERAL PLAN No.1" sheet

QUANTITIES

REMOVE CONCRETE DECK SURFACE	135	m^2
PREPARE CONCRETE BRIDGE DECK SURFACE	135	m^2
BRIDGE REMOVAL (PORTION), LOCATION B	LUMP	SUM
STRUCTURE EXCAVATION (BRIDGE)	390	m^3
STRUCTURE EXCAVATION (TYPE Y-1) (AERIALLY DEPOSITED LEAD)	90	m^3
STRUCTURE BACKFILL (BRIDGE)	800	m^3
NPS 2.5 SUPPLY LINE (BRIDGE)	90	m
FURNISH PILING (CLASS 625) (ALTERNATIVE W)	200	m
DRIVE PILE (CLASS 625) (ALTERNATIVE W)	16	EA
FURNISH PILING (CLASS 400) (ALTERNATIVE W)	910	m
DRIVE PILE (CLASS 400) (ALTERNATIVE W)	69	EA
PRESTRESSING (TRANSVERSE)	LUMP	SUM
STRUCTURAL CONCRETE, BRIDGE FOOTING	68	m^3
STRUCTURAL CONCRETE, BRIDGE	380	m^3
STRUCTURAL CONCRETE, APPROACH SLAB (TYPE N)	41	m^3
FRACTURED RIB TEXTURE	90	m^2
DRILL AND BOND DOWEL	97	m
CLEAN EXPANSION JOINT	45	m
FURNISH PRECAST PRESTRESSED CONCRETE GIRDER (20 M - 25 M)	8	EA
FURNISH PRECAST PRESTRESSED CONCRETE BOX GIRDER (20 M - 25 M)	2	EA
ERECT PRECAST PRESTRESSED CONCRETE GIRDER	8	EA
ERECT PRECAST PRESTRESSED CONCRETE BOX GIRDER	2	EA
FURNISH POLYESTER CONCRETE OVERLAY	4	m^3
PLACE POLYESTER CONCRETE OVERLAY	135	m^2
CORE CONCRETE (0 - 50 MM)	12	m
CORE CONCRETE (51 MM - 100 MM)	3	m
SOUND WALL (MASONRY BLOCK)	260	m^2
JOINT SEAL (TYPE AL)	44	m
JOINT SEAL (MR 25 MM)	26	m
BAR REINFORCING STEEL (BRIDGE)	65 700	kg
MISCELLANEOUS METAL (BRIDGE)	280	kg
CONCRETE BARRIER (TYPE 736 MODIFIED)	123	m
CONCRETE BARRIER (TYPE 60AR)	45	m

NOTE:
THE CONTRACTOR SHALL VERIFY ALL CONTROLLING FIELD DIMENSIONS BEFORE ORDERING OR FABRICATING ANY MATERIAL.

NOTES:

For PILE DATA TABLE and TYPICAL SECTION see "GENERAL PLAN NO. 2" sheet

For INDEX TO PLANS, and GENERAL NOTES, see "INDEX TO PLANS" sheet.

Caltrans Metric

Fritz Hoffman 6-25-08
DESIGN ENGINEER

	BY	CHECKED			
DESIGN	M.Friedheim/D.Alvarez	C. Udarbe/R. Coria	LOAD FACTOR DESIGN	LIVE LOADING: HS20-44 AND ALTERNATIVE AND PERMIT DESIGN LOAD	
DETAILS	Dale Kubochi/DP	M. Friedheim/T. Bui	LAYOUT	D. Kubochi	M. Friedheim
QUANTITIES	M.F./U.I./R.C.	M.M./E.H./A.T.	SPECIFICATIONS	M. Pan	PLANS AND SPECS COMPARED

ALL DIMENSIONS ARE IN METERS UNLESS OTHERWISE SHOWN

ORIGINAL SCALE IN MILLIMETERS FOR REDUCED PLANS 0 10 20 30 40 50 60 70 80 90 100

STATE OF CALIFORNIA
DEPARTMENT OF TRANSPORTATION

DIVISION OF ENGINEERING SERVICES
STRUCTURE DESIGN
DESIGN BRANCH 6

CU 07
EA 1218V1

BRIDGE NO. 53-1112
KILOMETER POST 52.06

HOLLYWOOD WAY UC (WIDEN)
GENERAL PLAN NO.1

DISREGARD PRINTS BEARING EARLIER REVISION DATES

REVISION DATES: 2-24-05 4-19-08 4-22-08 6-13-08 7-15-09 5-30-07 11-15-07 11-26-07 1-18-08 2-28-08

SHEET 1 OF 34

FILE => 53-1112-a-gp01.dgn

STRUCTURES DESIGN GENERAL PLAN SHEET (METRIC) (REV.03-17-04)

USERNAME => tfriehard DATE PLOTTED => 03-MAY-2010 TIME PLOTTED => 12:56

DIST	COUNTY	ROUTE	KILOMETER POST TOTAL PROJECT	SHEET No	TOTAL SHEETS
07	LA	5	50.8/58.0	735	869

REGISTERED CIVIL ENGINEER 6-25-08 DATE

5-3-10
PLANS APPROVAL DATE

REGISTERED PROFESSIONAL ENGINEER F. H. HOFFMAN No. C46401 Exp. 3-31-11 CIVIL STATE OF CALIFORNIA

The State of California or its officers or agents shall not be responsible for the accuracy or completeness of electronic copies of this plan sheet.

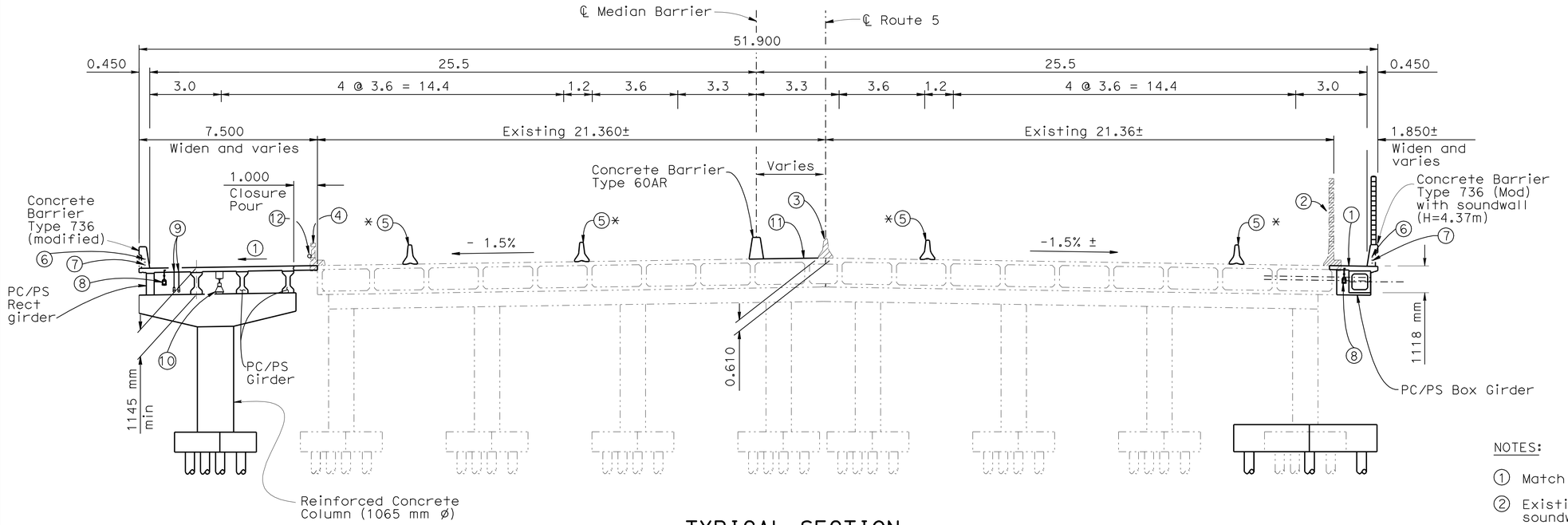

TYPICAL SECTION

1:100

* For staged construction details, see "STAGED CONSTRUCTION" sheet

PILE DATA TABLE

LOCATION	PILE TYPE	DESIGN LOAD (kN)	NOMINAL RESISTANCE		DESIGN TIP ELEVATION (m)	SPECIFIED TIP ELEVATION (m)
			COMPRESSION (kN)	TENSION (kN)		
Abut 1	360 mm Class 400, Alt "W"	400	800	N/A	212.7 (a)	212.7
Bent 2	360 mm Class 625, Alt "W"	N/A	1250	590	212.8 (a) 214.0 (b)	212.8
Abut 3	360 mm Class 400, Alt "W"	400	800	N/A	212.7 (a)	212.7

Note:
Pile tip elevations are controlled by (a) Compression (b) Tension

NOTES:

1. Match existing grade and cross slope.
2. Existing Concrete Barrier Type 27 (Mod) with soundwall & curb to be removed.
3. Existing Concrete Barrier Type 50 to be removed. Refinish bridge deck.
4. Existing Concrete Railing & curb to be removed.
5. Temporary Railing Type K, see Road Plans.
6. 1 - 53mm Sprinkler Control Conduit each side. see "Road Plans".
7. 2 - 53 mm ø electrical conduits each side, see "Road Plans".
8. 1 - NPS 2.5 water supply line each side.
9. 2 - 91 mm ø communication conduits.
10. Pendant soffit light, see "Road Plans".
11. Deck slope correction with polyester concrete overlay.
12. Remove existing communication conduits, see "Road Plans".

LEGEND:

-·-·-·- Indicates existing structure

——— Indicates new construction

▨ Indicates bridge removal (portion)

NOTE:
THE CONTRACTOR SHALL VERIFY ALL CONTROLLING FIELD DIMENSIONS BEFORE ORDERING OR FABRICATING ANY MATERIAL.

Caltrans Metric

DESIGN ENGINEER 6-25-08

	BY	CHECKED			
DESIGN	M. Friedheim/D.A.	C. Udarbe/R.C.	LOAD FACTOR DESIGN	LIVE LOADING: HS20-44 AND ALTERNATIVE AND PERMIT DESIGN LOAD	
DETAILS	Dale Kubochi / B.J.	M. Friedheim	LAYOUT	D. Kubochi	M. Friedheim
QUANTITIES	M.F./U.I./R.C.	M.M./E.H./A.T.	SPECIFICATIONS	M. Pan	PLANS AND SPECS COMPARED M. Pan

ALL DIMENSIONS ARE IN METERS UNLESS OTHERWISE SHOWN

ORIGINAL SCALE IN MILLIMETERS FOR REDUCED PLANS 0 10 20 30 40 50 60 70 80 90 100

STATE OF CALIFORNIA DEPARTMENT OF TRANSPORTATION

DIVISION OF ENGINEERING SERVICES STRUCTURE DESIGN
DESIGN BRANCH 6

CU 07
EA 1218V1

BRIDGE NO. 53-1112
KILOMETER POST 52.06

HOLLYWOOD WAY UC (WIDEN)
GENERAL PLAN NO.2

DISREGARD PRINTS BEARING EARLIER REVISION DATES

REVISION DATES: 12-13-07 12-14-07 12-21-06 2-28-08 4-18-08 6-13-08 7-15-09 11-09-07 11-16-07 11-26-07

SHEET 2 OF 34

FILE => 53-1112-a-gp02.dgn

STRUCTURES DESIGN GENERAL PLAN SHEET (METRIC) (REV.03-17-04)

USERNAME => friehard DATE PLOTTED => 03-MAY-2010 TIME PLOTTED => 12:56

DIST	COUNTY	ROUTE	KILOMETER POST TOTAL PROJECT	SHEET No	TOTAL SHEETS
07	LA	5	50.8/58.0	736	869

REGISTERED CIVIL ENGINEER — DATE 6-25-08

5-3-10
PLANS APPROVAL DATE

REGISTERED PROFESSIONAL ENGINEER — F. H. HOFFMAN — No. C46401 — Exp. 3-31-11 — CIVIL — STATE OF CALIFORNIA

The State of California or its officers or agents shall not be responsible for the accuracy or completeness of electronic copies of this plan sheet.

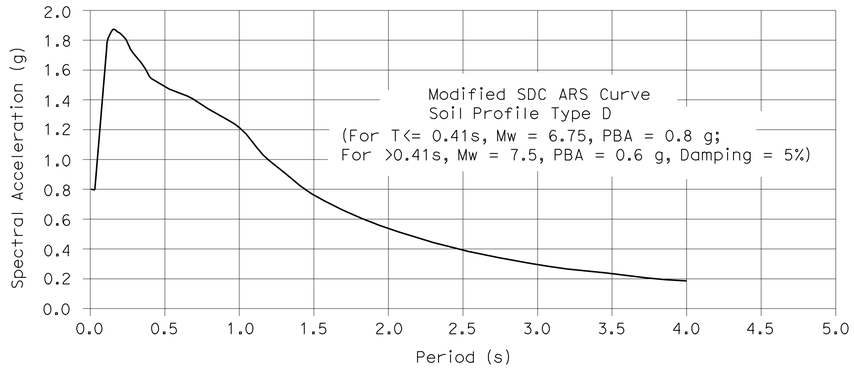

SITE SPECIFIC ACCELERATION RESPONSE SPECTRA CURVE

GENERAL NOTES
LOAD FACTOR DESIGN

DESIGN: CALTRANS BRIDGE DESIGN SPECIFICATIONS
LFD Version April 2000 (1996 AASHTO with Interims and Revisions by Caltrans)

SEISMIC DESIGN: CALTRANS SEISMIC DESIGN CRITERIA (SDC) Version 1.4, June 2006

DEAD LOAD: Includes 1675 Pa for Future Wearing Surface

Includes 10% of the additional deck dead load between girders for Stay-in-Place deck forms for steel or precast girder structures

LIVE LOAD: HS20-44 and Alternative and Permit Design Load

SEISMIC LOAD: **Site specific ARS curve**

REINFORCED CONCRETE: f_y = 420 MPa
f'_c = 25 MPa (except as shown on Concrete Strength & Type Limits Diagram)

Transverse Deck Slabs (Working Stress):
f_s = 138 MPa
f_c = 9 MPa
n = 10

PILES: See "PILE DATA TABLE" on "GENERAL PLAN NO. 2" sheet

Structural Steel: ASTM A709/A709M, Grade 36 [250]

INDEX TO PLANS

SHEET NO	TITLE
1	GENERAL PLAN NO. 1
2	GENERAL PLAN NO. 2
3	INDEX TO PLANS
4	STAGED CONSTRUCTION
5	FOUNDATION PLAN
6	ABUTMENT 1 LAYOUT
7	ABUTMENT 3 LAYOUT
8	ABUTMENT DETAILS NO. 1
9	ABUTMENT DETAILS NO. 2
10	ABUTMENT DETAILS NO. 3
11	ABUTMENT DETAILS NO. 4
12	ABUTMENT DETAILS NO. 5
13	BENT LAYOUT
14	BENT DETAILS NO. 1
15	BENT DETAILS NO. 2
16	BENT DETAILS NO. 3
17	BENT DETAILS NO. 4
18	TYPICAL SECTION NO. 1
19	TYPICAL SECTION NO. 2
20	GIRDER LAYOUT
21	DECK REINFORCEMENT
22	PRESTRESSED I GIRDER NO. 1
23	PRESTRESSED I GIRDER NO. 2
24	PRESTRESSED BOX GIRDER
25	ARCHITECTURAL DETAILS
26	SOUNDWALL - MASONRY BLOCK ON BRIDGE
27	RETAINING WALL TYPE 1SWB
28	SOUNDWALL - MASONRY BLOCK WITH BARRIER ON RETAINING WALL DETAILS No. 1
29	SOUNDWALL - MASONRY BLOCK WITH BARRIER ON RETAINING WALL DETAILS No. 2
30	STRUCTURE APPROACH TYPE N(9D)
31	STRUCTURE APPROACH DRAINAGE DETAILS
32	LOG OF TEST BORINGS 1 OF 2
33	LOG OF TEST BORINGS 2 OF 2
34	LOG OF TEST BORINGS 3 OF 3

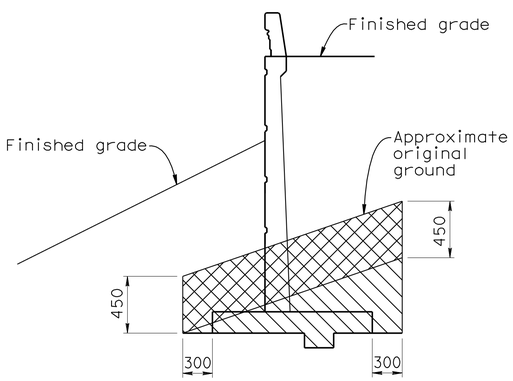

RETAINING WALL

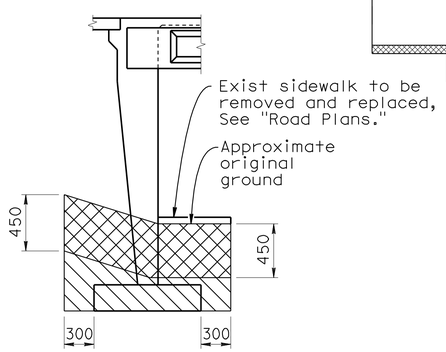

ABUTMENT

LIMITS OF PAYMENT FOR STRUCTURE EXCAVATION (AERIALLY DEPOSITED LEAD)

No scale

LEGEND:

Indicates structure excavation

Indicates structure excavation (Type Y-1) (Aerially deposited lead)

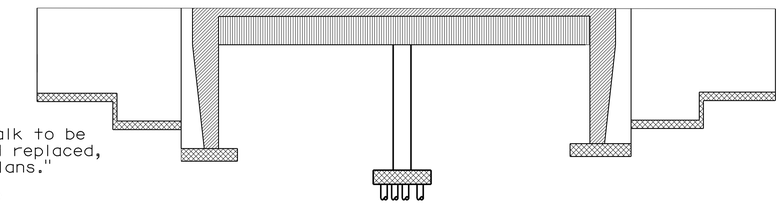

Structural Concrete, Bridge
Structure Concrete, Bridge (28 MPa at 28 days)
Structural Concrete, Bridge Footing
PC/PS GIRDER, see "Prestressed I Girder" sheets

CONCRETE STRENGTH AND TYPE LIMITS

No Scale

STANDARD PLANS DATED JULY, 2004

SHEET NO	TITLE
A10A	Acronyms and Abreviations (A-L)
A10B	Acronyms and Abreviations (M-Z)
A62C	Limits of Payment for Excavation and Backfill Bridge
A76A	Concrete Barrier Type 60
B0-1	Bridge Details
B0-3	Bridge Details
B0-5	Bridge Details
B2-5	Pile Details Class 400 and Class 625
B3-1	Retaining Wall Type 1 - H=1200 Through 9100 mm
B3-8	Retaining Wall Details No.1
RSP B6-21	Joint Seal (Maximum Movement Rating = 50 mm)
B7-1	Box Girder Details
B11-56	Concrete Barrier Type 736
B14-3	Communication And Sprinkler Control Conduits (Conduit Less Than Size 103)
B14-4	Water Supply Line (Bridge) (Pipe Sizes Less Than NPS 4)
B14-5	Water Supply Line (Details) (Pipe Sizes Less Than NPS 4)
ES-6A	Electrical Systems (Lighting Standards Types 15 and 21)
ES-9E	Electrical Systems (Electrical Details, Structure Installations)

STANDARD PLAN SHEET NO.
DETAIL NO.

Caltrans Metric

	BY	CHECKED
DESIGN	M. Friedheim	C. Udarbe/T. Bui
DETAILS	L. Wang	M. Friedheim
QUANTITIES	M.F./U.I./R.C.	M.M./E.H./A.T.

STATE OF CALIFORNIA
DEPARTMENT OF TRANSPORTATION

DIVISION OF ENGINEERING SERVICES
STRUCTURE DESIGN
DESIGN BRANCH 6

BRIDGE NO. 53-1112
KILOMETER POST 52.06

HOLLYWOOD WAY UC (WIDEN)
INDEX TO PLANS

ALL DIMENSIONS ARE IN MILLIMETERS UNLESS OTHERWISE SHOWN

ORIGINAL SCALE IN MILLIMETERS FOR REDUCED PLANS 0 10 20 30 40 50 60 70 80 90 100

CU 07
EA 1218V1

DISREGARD PRINTS BEARING EARLIER REVISION DATES
REVISION DATES: 11-26-07 11-26-07 12-13-07 1-18-08 6-13-08 7-15-09

SHEET 3 OF 34

FILE => 53-1112-b-itp.dgn

STRUCTURES DESIGN DETAIL SHEET (METRIC) (REV.03-17-04)

USERNAME => trlenard DATE PLOTTED => 03-MAY-2010 TIME PLOTTED => 12:56

DIST	COUNTY	ROUTE	KILOMETER POST TOTAL PROJECT	SHEET No	TOTAL SHEETS
07	LA	5	50.8/58.0	737	869

REGISTERED CIVIL ENGINEER — DATE 6-25-08

5-3-10
PLANS APPROVAL DATE

REGISTERED PROFESSIONAL ENGINEER — F. H. HOFFMAN — No. C46401 — Exp. 3-31-11 — CIVIL — STATE OF CALIFORNIA

The State of California or its officers or agents shall not be responsible for the accuracy or completeness of electronic copies of this plan sheet.

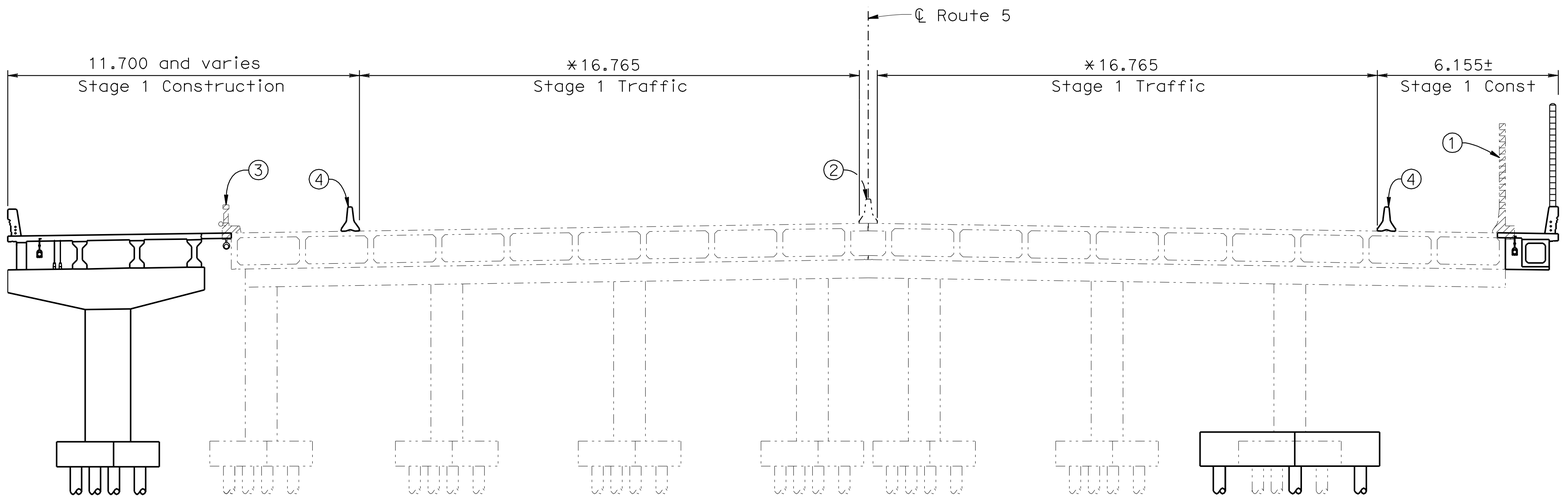

STAGE 1
1:100

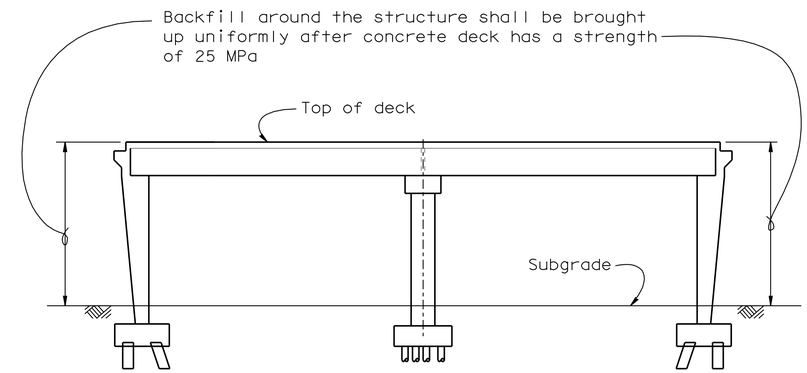

BACKFILL DIAGRAM
No Scale

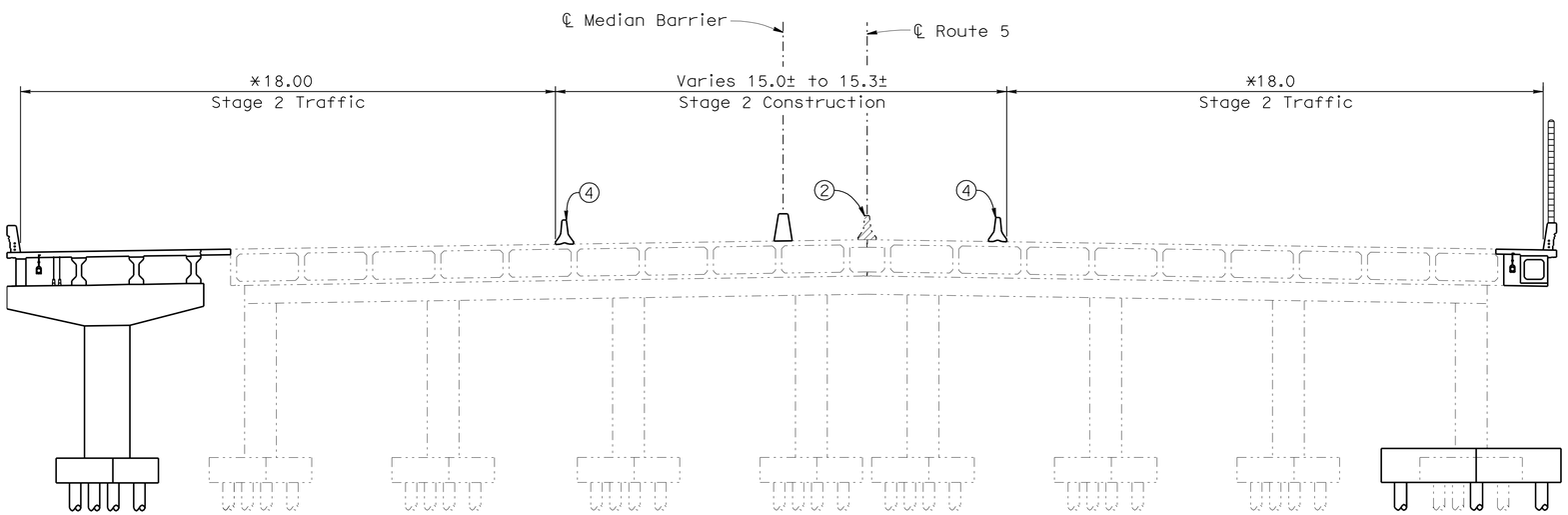

STAGE 2
1:100

Notes:

1. Existing Concrete Barrier Type 27 (Mod) with soundwall & curb to be removed.
2. Existing Concrete Barrier Type 50 to be removed.
3. Existing Concrete Railing & curb to be removed.
4. Temporary Railing Type K, see "Road Plans".

Indicates existing structure
Indicates new construction
Indicates bridge removal (portion)
* For traffic handling, see "Road Plans".

NOTE:
THE CONTRACTOR SHALL VERIFY ALL CONTROLLING FIELD DIMENSIONS BEFORE ORDERING OR FABRICATING ANY MATERIAL.

Caltrans Metric

ALL DIMENSIONS ARE IN METERS UNLESS OTHERWISE SHOWN

ORIGINAL SCALE IN MILLIMETERS FOR REDUCED PLANS 0 10 20 30 40 50 60 70 80 90 100

	BY	CHECKED
DESIGN	Xiaodong Chen	M. Friedheim
DETAILS	Roelina Martinez / BJ	M. Friedheim
QUANTITIES	M.F./U.I./R.C.	M.M./E.H./A.T.

STATE OF CALIFORNIA
DEPARTMENT OF TRANSPORTATION

DIVISION OF ENGINEERING SERVICES
STRUCTURE DESIGN
DESIGN BRANCH 6

CU 07
EA 1218V1

BRIDGE NO. 53-1112
KILOMETER POST 52.06

HOLLYWOOD WAY UC (WIDEN)
STAGED CONSTRUCTION

DISREGARD PRINTS BEARING EARLIER REVISION DATES

REVISION DATES: 5-31-07 11-27-07 11-28-07 12-13-07 12-14-07 12-26-07 2-28-08 4-18-08 6-17-08 7-15-09

SHEET 4 OF 34

FILE => 53-1112-c-sc.dgn

STRUCTURES DESIGN DETAIL SHEET (METRIC) (REV.03-17-04)

USERNAME => friehard DATE PLOTTED => 03-MAY-2010 TIME PLOTTED => 12:56

DIST	COUNTY	ROUTE	KILOMETER POST TOTAL PROJECT	SHEET No	TOTAL SHEETS
07	LA	5	50.8/58.0	738	869

Caltrans Metric

Fritz Hoffman 6-25-08
REGISTERED CIVIL ENGINEER

5-3-10
PLANS APPROVAL DATE

REGISTERED PROFESSIONAL ENGINEER F. H. HOFFMAN No. C46401 Exp. 3-31-11 CIVIL STATE OF CALIFORNIA

The State of California or its officers or agents shall not be responsible for the accuracy or completeness of electronic copies of this plan sheet.

Notes:

[ ] - Indicates bottom of footing elevation.

New abutment footing elevations to be adjusted as necessary so that top of new footing matches top of existing footing

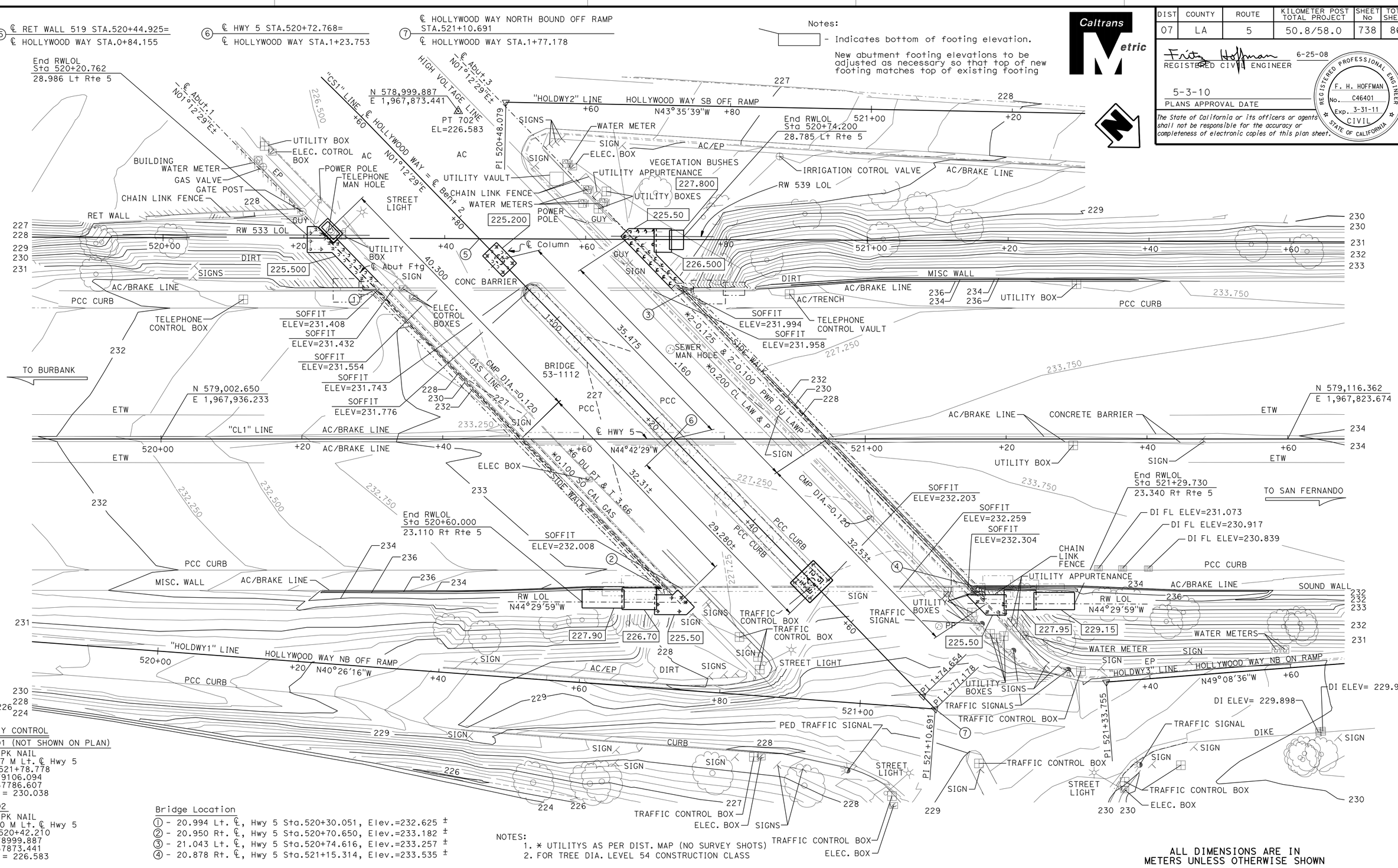

SURVEY CONTROL

PT-701 (NOT SHOWN ON PLAN)
Fnd PK NAIL
33.567 M Lt. ℄ Hwy 5
Sta. 521+78.778
N 579106.094
E 1967786.607
Elev. = 230.038

PT-702
Fnd PK NAIL
46.570 M Lt. ℄ Hwy 5
Sta. 520+42.210
N 578999.887
E 1967873.441
Elev. = 226.583

Bridge Location
① - 20.994 Lt. ℄, Hwy 5 Sta.520+30.051, Elev.=232.625 ±
② - 20.950 Rt. ℄, Hwy 5 Sta.520+70.650, Elev.=233.182 ±
③ - 21.043 Lt. ℄, Hwy 5 Sta.520+74.616, Elev.=233.257 ±
④ - 20.878 Rt. ℄, Hwy 5 Sta.521+15.314, Elev.=233.535 ±

NOTES:
1. * UTILITYS AS PER DIST. MAP (NO SURVEY SHOTS)
2. FOR TREE DIA. LEVEL 54 CONSTRUCTION CLASS

ALL DIMENSIONS ARE IN METERS UNLESS OTHERWISE SHOWN

PRELIMINARY INVESTIGATION SECTION

SCALE	VERT.DATUM NAVD88	PHOTOGRAMMETRY AS OF:			
1:250	HORZ.DATUM NAD83(1991.35)	SURVEYED	BY J.BORDEN 1-04	DRAFTED	BY N.KELLEY 7-04
ALIGNMENT TIES	DIST.TRAVERSE SHEET	FIELD CHECKED	BY	CHECKED	BY F.BANDA 7-04

	BY	CHECKED
DESIGN	M. Friedheim/D.Alvarez	C. Udarbe/R. Coria
DETAILS	D. Pato / BJ	M. Friedheim/D.A./E.H.
QUANTITIES	M.F./U.I./R.C.	M.M./E.H./A.T.

STATE OF CALIFORNIA DEPARTMENT OF TRANSPORTATION

DIVISION OF STRUCTURES
STRUCTURE DESIGN 6

BRIDGE NO. 53-1112
KILOMETER POST 52.06

HOLLYWOOD WAY UC (WIDEN)
FOUNDATION PLAN

STRUCTURES FOUNDATION PLAN SHEET (METRIC) (REV. 4/20/00)

ORIGINAL SCALE IN MILLIMETERS FOR REDUCED PLANS 0 10 20 30 40 50 60 70 80 90 100

CU 07
EA 1218V1

DISREGARD PRINTS BEARING EARLIER REVISION DATES

REVISION DATES (PRELIMINARY STAGE ONLY) 7-13-04 6-18-06 7-15-09 12-14-07 12-18-01 1-2-05 1-17-08 1-28-08 2-28-08 3-25-08

SHEET 5 OF 34

FILE => 53-1112-e-fp.dgn

USERNAME => friehard DATE PLOTTED => 03-MAY-2010 TIME PLOTTED => 12:56

DIST	COUNTY	ROUTE	KILOMETER POST TOTAL PROJECT	SHEET No	TOTAL SHEETS
07	LA	5	50.8/58.0	739	869

REGISTERED CIVIL ENGINEER — DATE 6-25-08

5-3-10
PLANS APPROVAL DATE

REGISTERED PROFESSIONAL ENGINEER — F. H. HOFFMAN — No. C46401 — Exp. 3-31-11 — CIVIL — STATE OF CALIFORNIA

The State of California or its officers or agents shall not be responsible for the accuracy or completeness of electronic copies of this plan sheet.

LEGEND:
- Indicates new structure
- Indicates existing structure
- Indicates bridge removal (portion)
- Indicates vertical pile
- Indicates 3:1 battered pile

Notes:
1. For "Section A-A", "Section B-B", "Section P-P" and "Section F-F", see "Abutment Details No.1" sheet.
2. For "Section C-C" and "Section D-D" and "Section E-E" see "Abutment Details No. 3" sheet
3. For Section G-G, see "Abutment Details No. 2" sheet

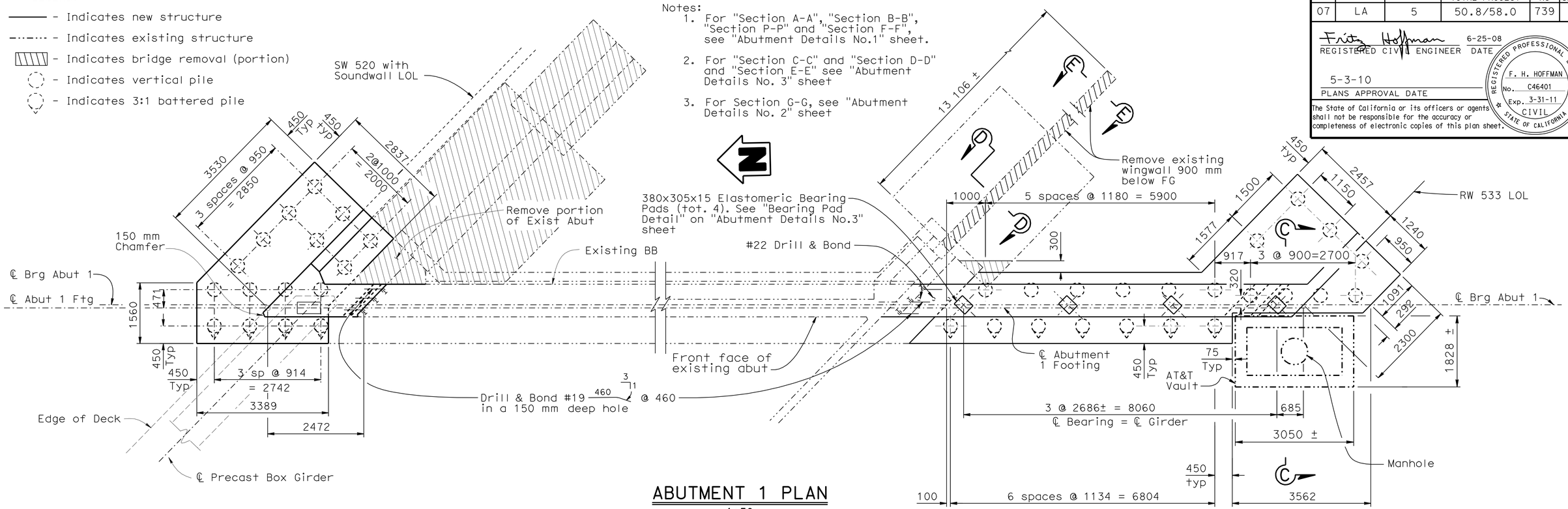

ABUTMENT 1 PLAN
1:50

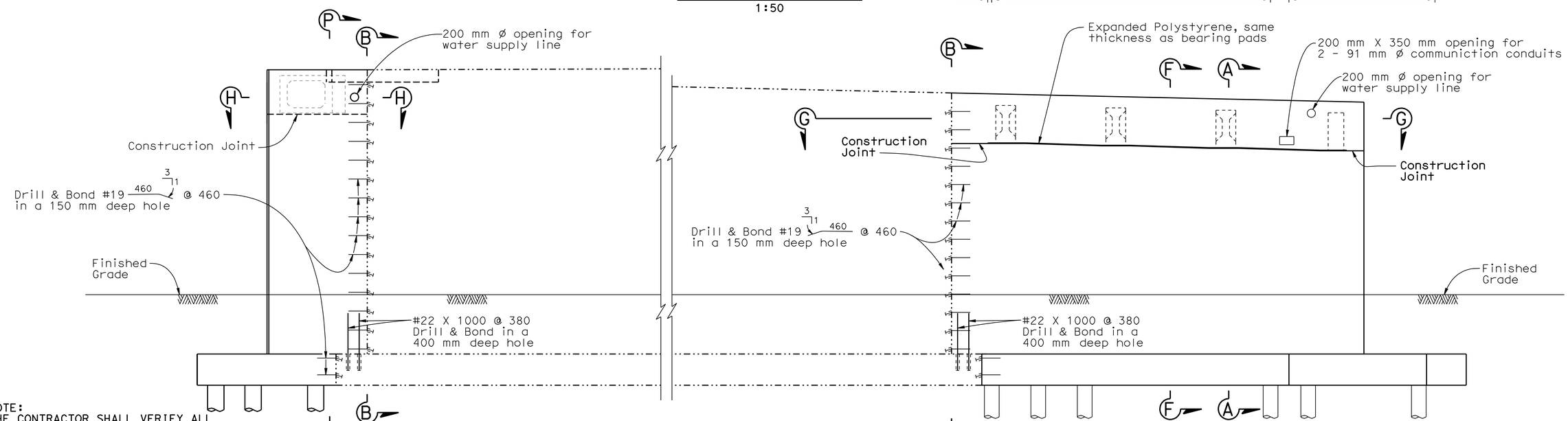

ABUTMENT 1 ELEVATION
1:50

Note:
All piles not shown.

NOTE:
THE CONTRACTOR SHALL VERIFY ALL CONTROLLING FIELD DIMENSIONS BEFORE ORDERING OR FABRICATING ANY MATERIAL.

	BY	CHECKED
DESIGN	M.Friedheim/D.Alvarez	C. Udarbe/R. Coria
DETAILS	Dale Kubochi/DP	M.Friedheim/D.Alvarez
QUANTITIES	M.F./U.I./R.C.	M.M./E.H./A.T.

STATE OF CALIFORNIA
DEPARTMENT OF TRANSPORTATION

DIVISION OF ENGINEERING SERVICES
STRUCTURE DESIGN
DESIGN BRANCH 6

BRIDGE NO. 53-1112
KILOMETER POST 52.06

HOLLYWOOD WAY UC (WIDEN)
ABUTMENT 1 LAYOUT

ALL DIMENSIONS ARE IN MILLIMETERS UNLESS OTHERWISE SHOWN

ORIGINAL SCALE IN MILLIMETERS FOR REDUCED PLANS 0 10 20 30 40 50 60 70 80 90 100

CU 07
EA 1218V1

DISREGARD PRINTS BEARING EARLIER REVISION DATES

REVISION DATES: 1-9-07, 11-28-07, 12-06-07, 12-18-07, 6-19-08, 7-15-09

SHEET 6 OF 34

FILE => 53-1112-f-abt-lo1.dgn

STRUCTURES DESIGN DETAIL SHEET (METRIC) (REV.03-17-04)

USERNAME => trienard DATE PLOTTED => 03-MAY-2010 TIME PLOTTED => 12:57

DIST	COUNTY	ROUTE	KILOMETER POST TOTAL PROJECT	SHEET No	TOTAL SHEETS
07	LA	5	50.8/58.0	740	869

REGISTERED CIVIL ENGINEER — DATE 6-25-08

5-3-10
PLANS APPROVAL DATE

The State of California or its officers or agents shall not be responsible for the accuracy or completeness of electronic copies of this plan sheet.

REGISTERED PROFESSIONAL ENGINEER — F. H. HOFFMAN — No. C46401 — Exp. 3-31-11 — CIVIL — STATE OF CALIFORNIA

Legend:
- Indicates new structure
- Indicates existing structure
- Indicates bridge removal (portion)
- Indicates vertical pile
- Indicates 3:1 battered pile

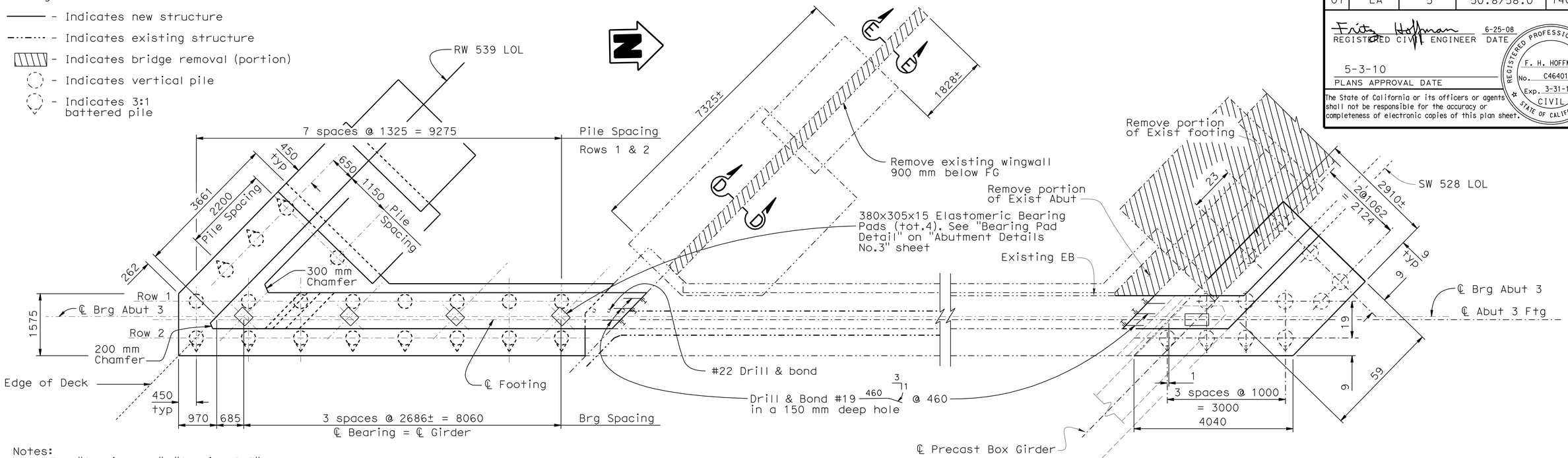

ABUTMENT 3 PLAN
1:50

Notes:
1. For "Section A-A", "Section B-B", "Section P-P" and "Section F-F", see "Abutment Details No.1" sheet
2. For Sections D-D and E-E, see "Abutment Details No. 3" sheet
3. For Section G-G, see "Abutment Details No. 2" sheet

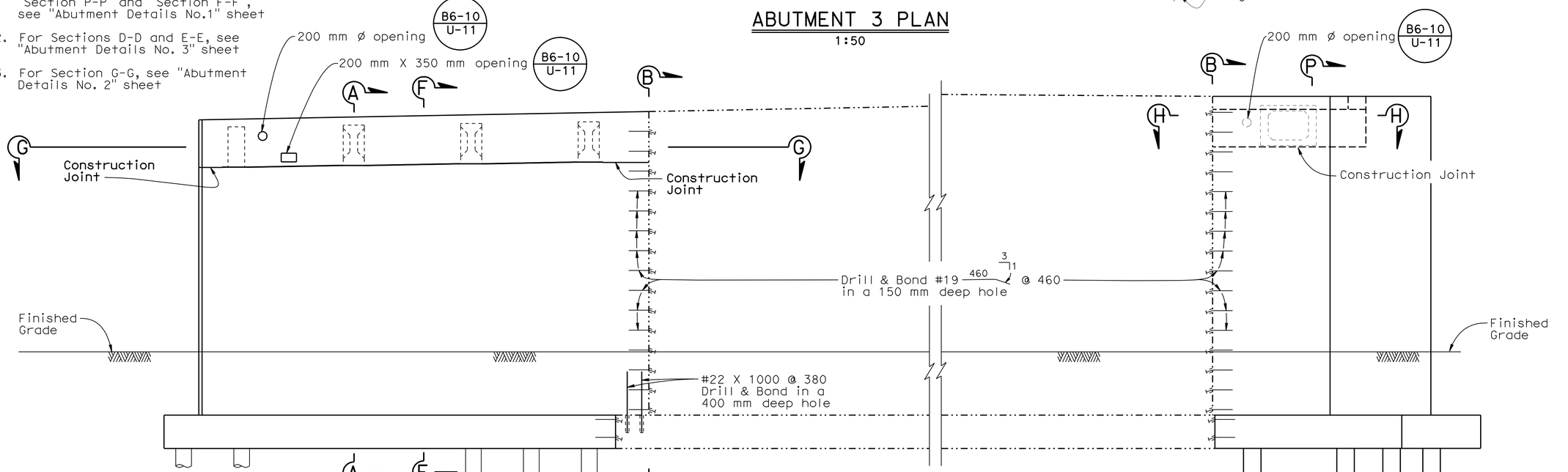

ABUTMENT 3 ELEVATION
1:50

Note:
All piles not shown.

NOTE:
THE CONTRACTOR SHALL VERIFY ALL CONTROLLING FIELD DIMENSIONS BEFORE ORDERING OR FABRICATING ANY MATERIAL.

	BY	CHECKED
DESIGN	M.Friedheim/D.Alvarez	C. Udarbe/R. Coria
DETAILS	D. Pato/S. Ng	M.Friedheim/D.Alvarez
QUANTITIES	M.F./U.I./R.C.	M.M./E.H./A.T.

STATE OF CALIFORNIA
DEPARTMENT OF TRANSPORTATION

DIVISION OF ENGINEERING SERVICES
STRUCTURE DESIGN
DESIGN BRANCH 6

BRIDGE NO. 53-1112
KILOMETER POST 52.06

HOLLYWOOD WAY UC (WIDEN)
ABUTMENT 3 LAYOUT

ALL DIMENSIONS ARE IN MILLIMETERS UNLESS OTHERWISE SHOWN

ORIGINAL SCALE IN MILLIMETERS FOR REDUCED PLANS 0 10 20 30 40 50 60 70 80 90 100

CU 07
EA 1218V1

DISREGARD PRINTS BEARING EARLIER REVISION DATES — REVISION DATES 7-26-07 12-06-07 12-18-07 1-12-08 6-19-08 7-15-09

SHEET 7 OF 34

FILE => 53-1112-f-abt-lo3.dgn

STRUCTURES DESIGN DETAIL SHEET (METRIC) (REV.03-17-04)

USERNAME => trlenard DATE PLOTTED => 03-MAY-2010 TIME PLOTTED => 12:57

DIST	COUNTY	ROUTE	KILOMETER POST TOTAL PROJECT	SHEET No	TOTAL SHEETS
07	LA	5	50.8/58.0	741	869

REGISTERED CIVIL ENGINEER — DATE 6-25-08

5-3-10
PLANS APPROVAL DATE

REGISTERED PROFESSIONAL ENGINEER F. H. HOFFMAN No. C46401 Exp. 3-31-11 CIVIL STATE OF CALIFORNIA

The State of California or its officers or agents shall not be responsible for the accuracy or completeness of electronic copies of this plan sheet.

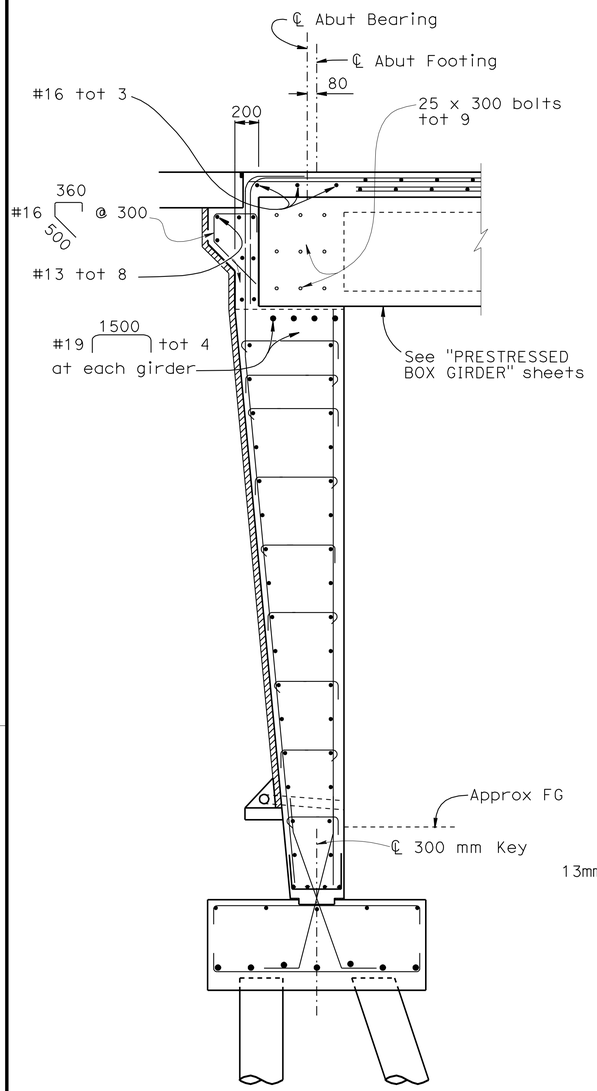

SECTION P-P

1:25

For details not shown see Section F-F.

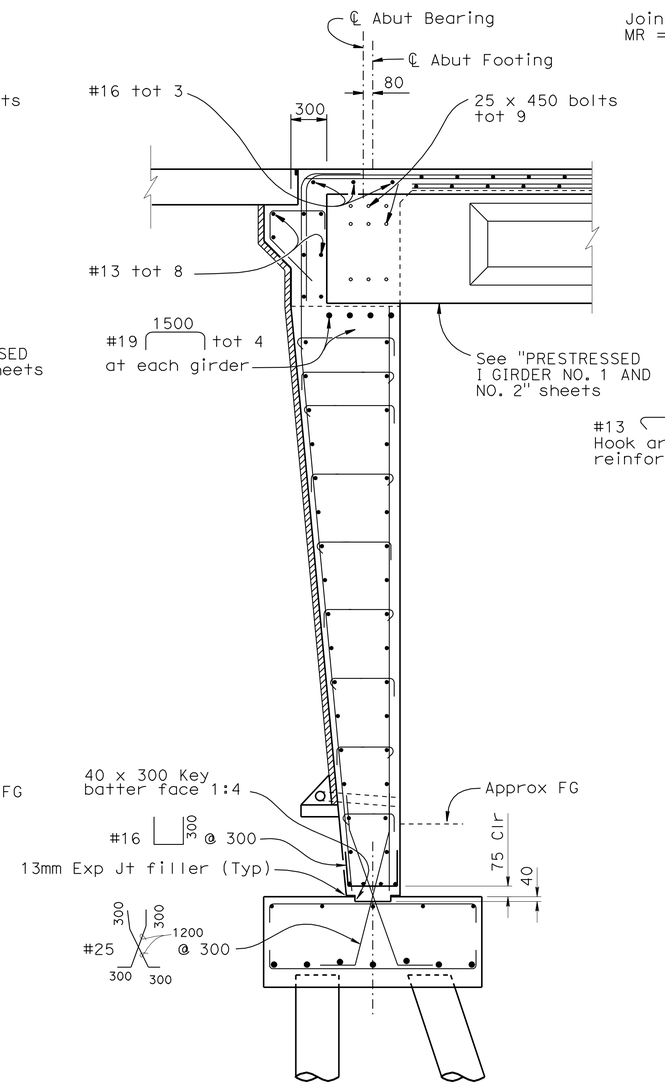

SECTION A-A

1:25

For details not shown see Section F-F.

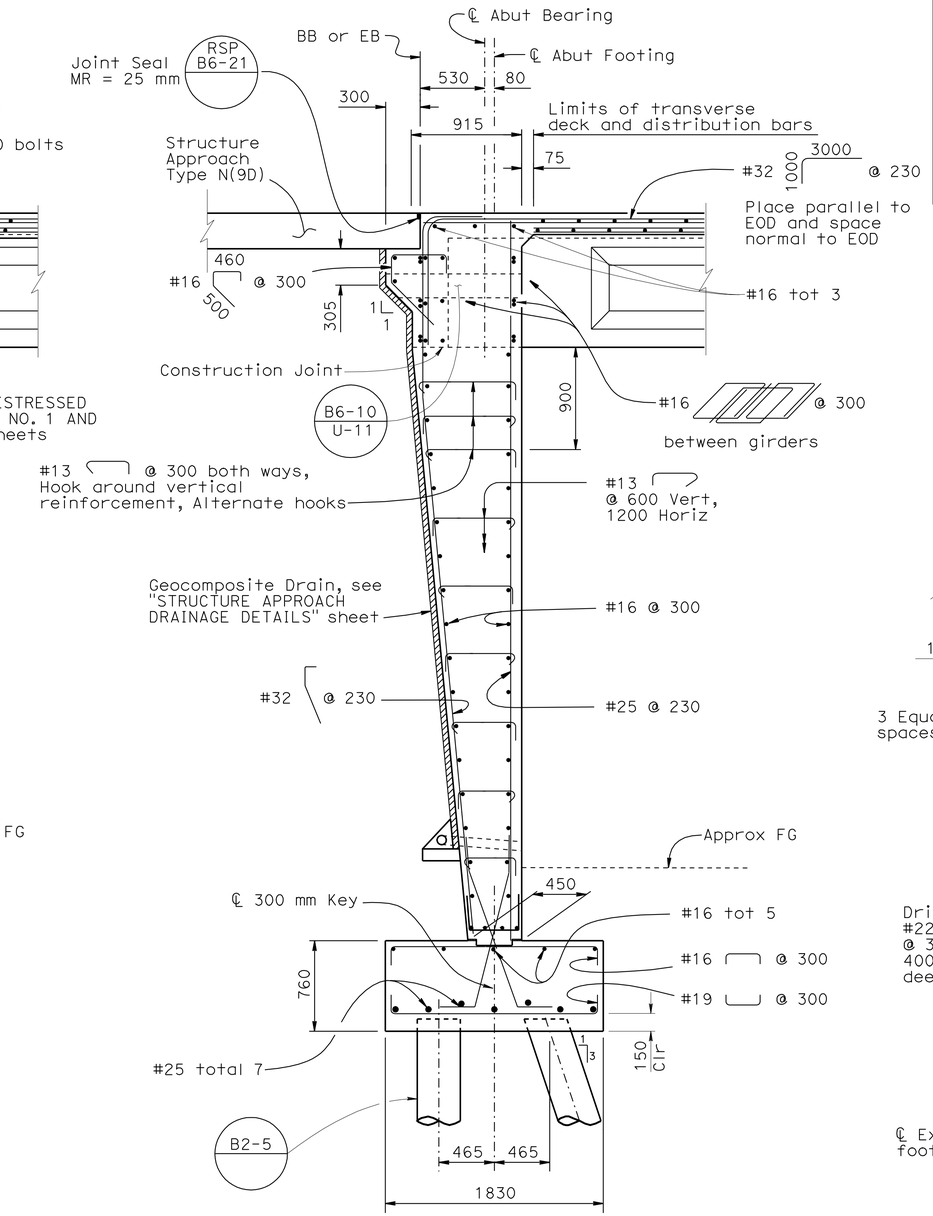

SECTION F-F

1:25

For details not shown see Section A-A.

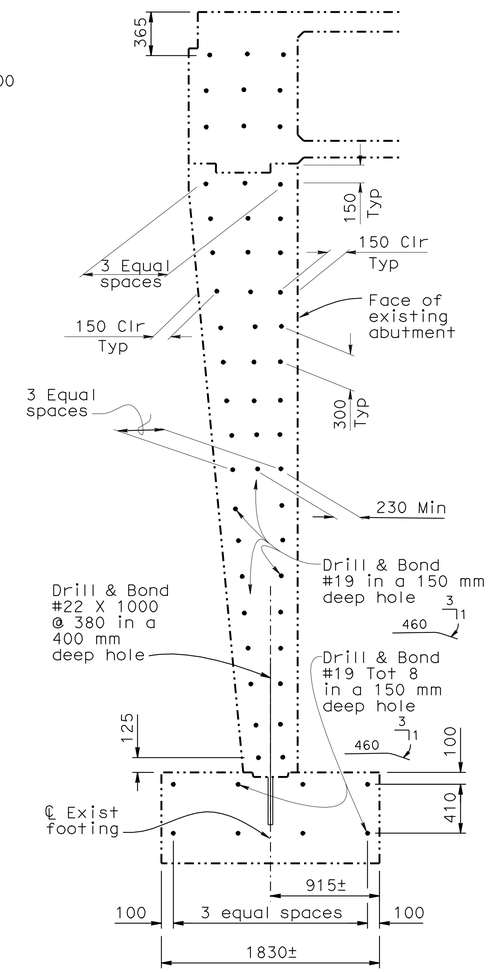

SECTION B-B

1:25

LEGEND :

——— Indicates new structure

-·-·-·- Indicates existing structure

DESIGN	BY M.Friedheim/D.Alvarez	CHECKED C. Udarbe/R. Coria
DETAILS	BY Bruno Jenko	CHECKED M.Friedheim/D.Alvarez
QUANTITIES	BY M. Friedheim/R. Coria	CHECKED M. Moore/A. Tern

STATE OF CALIFORNIA DEPARTMENT OF TRANSPORTATION

DIVISION OF ENGINEERING SERVICES STRUCTURE DESIGN

DESIGN BRANCH 6

BRIDGE NO. 53-1112

KILOMETER POST 52.06

HOLLYWOOD WAY UC (WIDEN)

ABUTMENT DETAILS NO.1

ALL DIMENSIONS ARE IN MILLIMETERS UNLESS OTHERWISE SHOWN

ORIGINAL SCALE IN MILLIMETERS FOR REDUCED PLANS 0 10 20 30 40 50 60 70 80 90 100

CU 07
EA 1218V1

DISREGARD PRINTS BEARING EARLIER REVISION DATES

REVISION DATES: 2-1-07 | 07-15-09 | 12-14-07 | 12-14-07 | 12-14-07 | 12-28-07 | 1-12-08 | 1-21-08 | 4-18-08 | 6-18-08

SHEET 8 OF 34

FILE => 53-1112-g-abt-det1.dgn

STRUCTURES DESIGN DETAIL SHEET (METRIC) (REV.03-17-04)

USERNAME => trlenard DATE PLOTTED => 03-MAY-2010 TIME PLOTTED => 13:03

DIST	COUNTY	ROUTE	KILOMETER POST TOTAL PROJECT	SHEET No	TOTAL SHEETS
07	LA	5	50.8/58.0	742	869

REGISTERED CIVIL ENGINEER — DATE 6-25-08

5-3-10
PLANS APPROVAL DATE

REGISTERED PROFESSIONAL ENGINEER — F. H. HOFFMAN — No. C46401 — Exp. 3-31-11 — CIVIL — STATE OF CALIFORNIA

The State of California or its officers or agents shall not be responsible for the accuracy or completeness of electronic copies of this plan sheet.

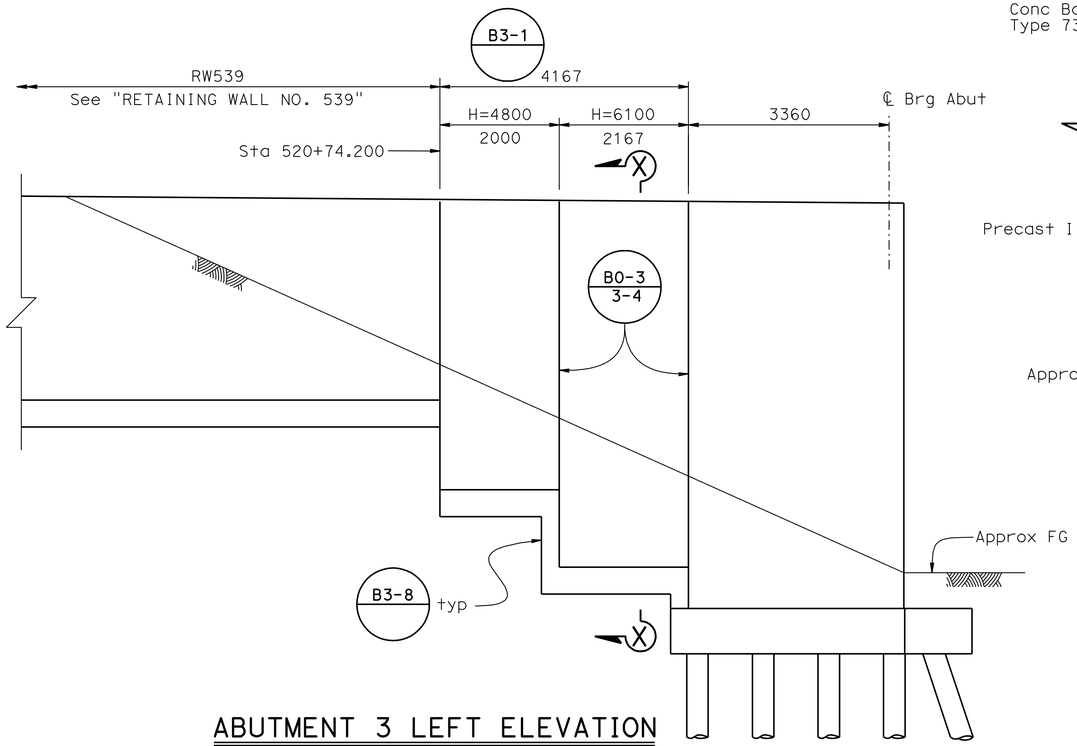

ABUTMENT 3 LEFT ELEVATION
1:50

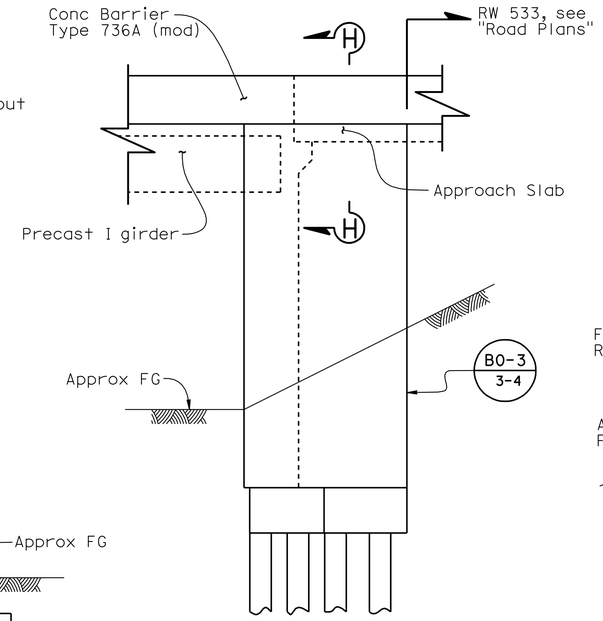

ABUTMENT 1
LEFT ELEVATION
1:50

Note
For Section H-H, see
"Abutment Details No. 3" sheet

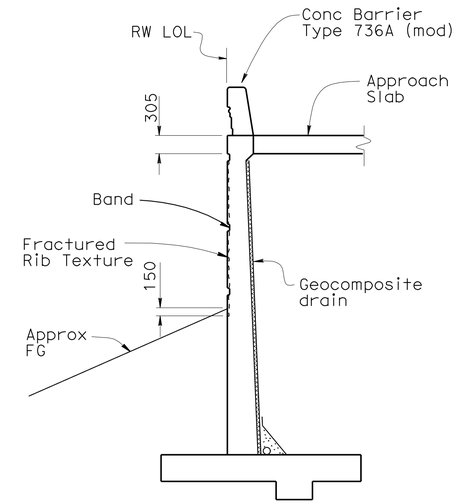

SECTION X-X B3-1 B3-8 B11-56
1:50

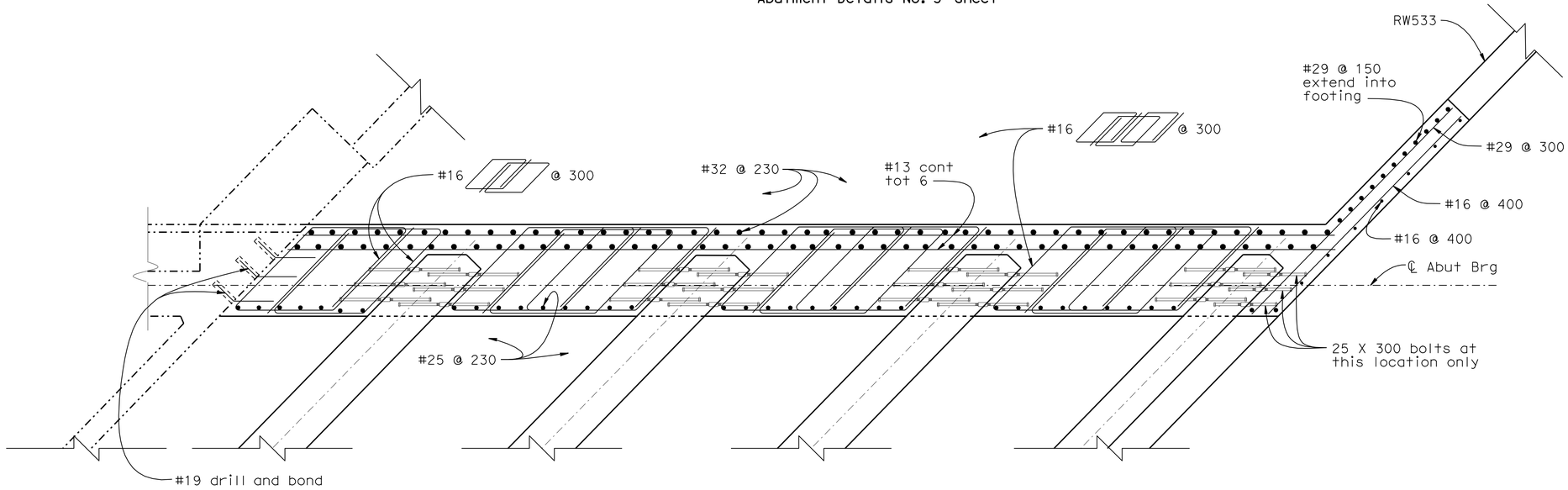

SECTION G-G
1:25

Note:
Abut 1 shown, Abut 3 similar.

Caltrans Metric

	BY	CHECKED
DESIGN	M.Friedheim/D.Alvarez	C. Udarbe/R. Coria
DETAILS	S. Evans	M.Friedheim/D.Alvarez
QUANTITIES	M.F./U.I./R.C.	M.M./E.H./A.T.

STATE OF CALIFORNIA
DEPARTMENT OF TRANSPORTATION

DIVISION OF ENGINEERING SERVICES
STRUCTURE DESIGN
DESIGN BRANCH 6

BRIDGE NO. 53-1112
KILOMETER POST 52.06

HOLLYWOOD WAY UC (WIDEN)
ABUTMENT DETAILS NO.2

ALL DIMENSIONS ARE IN MILLIMETERS UNLESS OTHERWISE SHOWN

ORIGINAL SCALE IN MILLIMETERS FOR REDUCED PLANS 0 10 20 30 40 50 60 70 80 90 100

CU 07
EA 1218V1

DISREGARD PRINTS BEARING EARLIER REVISION DATES

REVISION DATES: 12-14-07 12-18-07 6-18-08 7-15-09

SHEET 9 OF 34

FILE => 53-1112-g-abt-det2.dgn

STRUCTURES DESIGN DETAIL SHEET (METRIC) (REV.03-17-04)

USERNAME => rtrienard DATE PLOTTED => 03-MAY-2010 TIME PLOTTED => 13:03

DIST	COUNTY	ROUTE	KILOMETER POST TOTAL PROJECT	SHEET No	TOTAL SHEETS
07	LA	5	50.8/58.0	743	869

REGISTERED CIVIL ENGINEER 6-25-08 DATE

5-3-10
PLANS APPROVAL DATE

REGISTERED PROFESSIONAL ENGINEER F. H. HOFFMAN No. C46401 Exp. 3-31-11 CIVIL STATE OF CALIFORNIA

The State of California or its officers or agents shall not be responsible for the accuracy or completeness of electronic copies of this plan sheet.

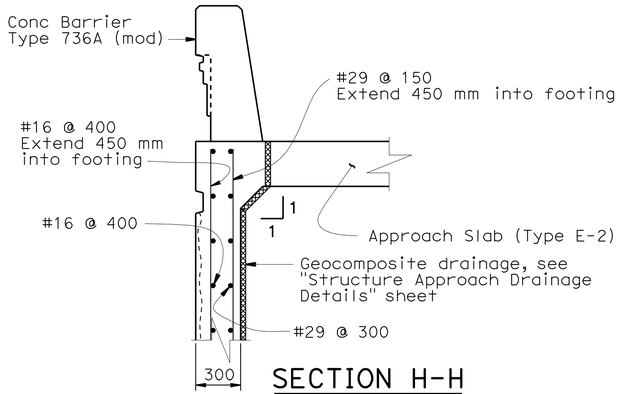

SECTION H-H
1:20

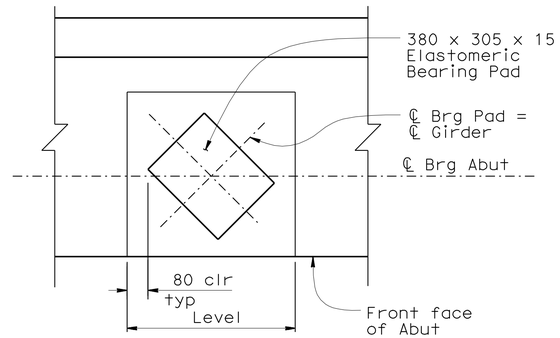

BEARING PAD DETAIL
(ABUT 1 LT & ABUT 3 LT ONLY)
No Scale
(Similar at Bent 2)

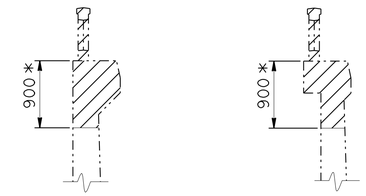

* Denotes limits of removal

SECTION E-E
1:40

SECTION D-D
1:40

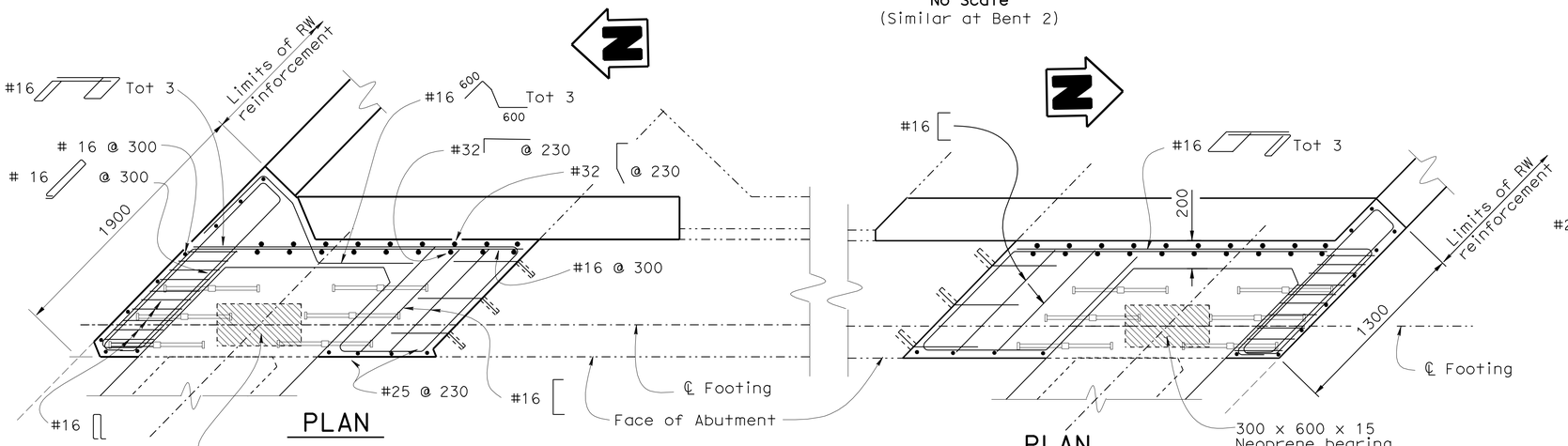

PLAN

PLAN

Note:
For details not shown,
see "ABUTMENT 1 RT DIAPHRAGM
REINFORCEMENT"

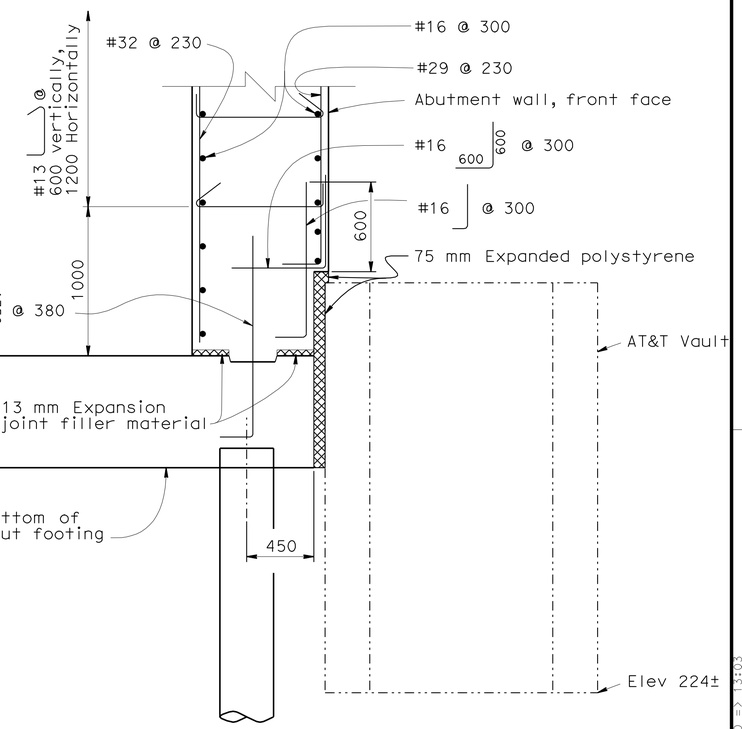

SECTION C-C
1:20

Note: For top of wall details at this location, see sections "A-A" and "F-F" on "ABUTMENT DETAILS NO. 1" sheet.

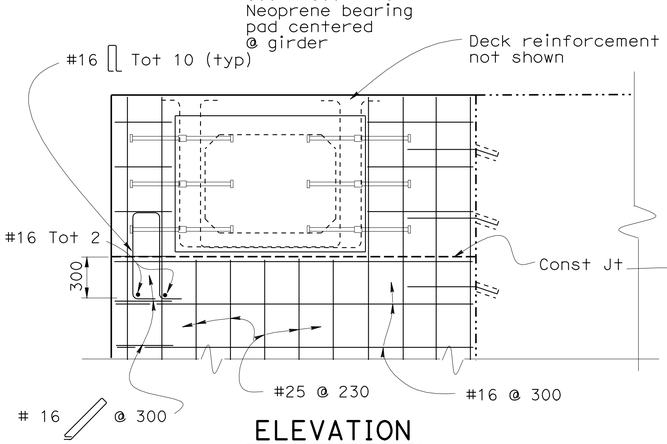

ELEVATION

ABUTMENT 1 RT DIAPHRAGM REINFORCEMENT
1:20

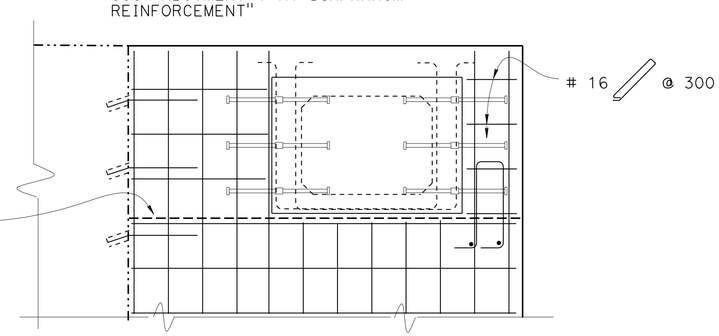

ELEVATION

ABUTMENT 3 RT DIAPHRAGM REINFORCEMENT
1:20

LEGEND :

Indicates new structure

Indicates existing structure

Limits of bridge removal (portion)

NOTE:
THE CONTRACTOR SHALL VERIFY ALL CONTROLLING FIELD DIMENSIONS BEFORE ORDERING OR FABRICATING ANY MATERIAL.

Caltrans Metric

	BY	CHECKED
DESIGN	M.Friedheim/D.Alvarez	C. Udarbe/R. Coria
DETAILS	S. Evans / BJ	M.Friedheim/D.Alvarez
QUANTITIES	M.F./U.I./R.C.	M.M./E.H./A.T.

STATE OF CALIFORNIA
DEPARTMENT OF TRANSPORTATION

DIVISION OF ENGINEERING SERVICES
STRUCTURE DESIGN
DESIGN BRANCH 6

CU 07
EA 1218V1

BRIDGE NO. 53-1112
KILOMETER POST 52.06

HOLLYWOOD WAY UC (WIDEN)
ABUTMENT DETAILS NO.3

ALL DIMENSIONS ARE IN MILLIMETERS UNLESS OTHERWISE SHOWN

ORIGINAL SCALE IN MILLIMETERS FOR REDUCED PLANS 0 10 20 30 40 50 60 70 80 90 100

DISREGARD PRINTS BEARING EARLIER REVISION DATES

REVISION DATES: 8-1-07 12-11-07 12-14-07 6-19-08 7-15-09

SHEET 10 OF 34

FILE => 53-1112-g-abt-det3.dgn

STRUCTURES DESIGN DETAIL SHEET (METRIC) (REV.03-17-04)

USERNAME => TFrenard DATE PLOTTED => 03-MAY-2010 TIME PLOTTED => 13:03

DIST	COUNTY	ROUTE	KILOMETER POST TOTAL PROJECT	SHEET No	TOTAL SHEETS
07	LA	5	50.8/58.0	744	869

REGISTERED CIVIL ENGINEER — DATE 6-25-08

5-3-10
PLANS APPROVAL DATE

REGISTERED PROFESSIONAL ENGINEER — F. H. HOFFMAN — No. C46401 — Exp. 3-31-11 — CIVIL — STATE OF CALIFORNIA

The State of California or its officers or agents shall not be responsible for the accuracy or completeness of electronic copies of this plan sheet.

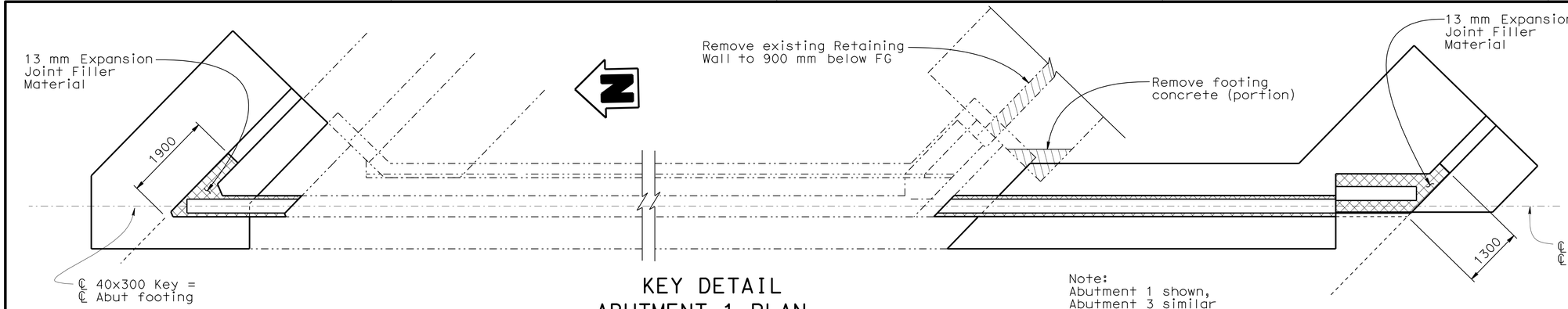

Note:
Abutment 1 shown,
Abutment 3 similar

KEY DETAIL
ABUTMENT 1 PLAN
1:50

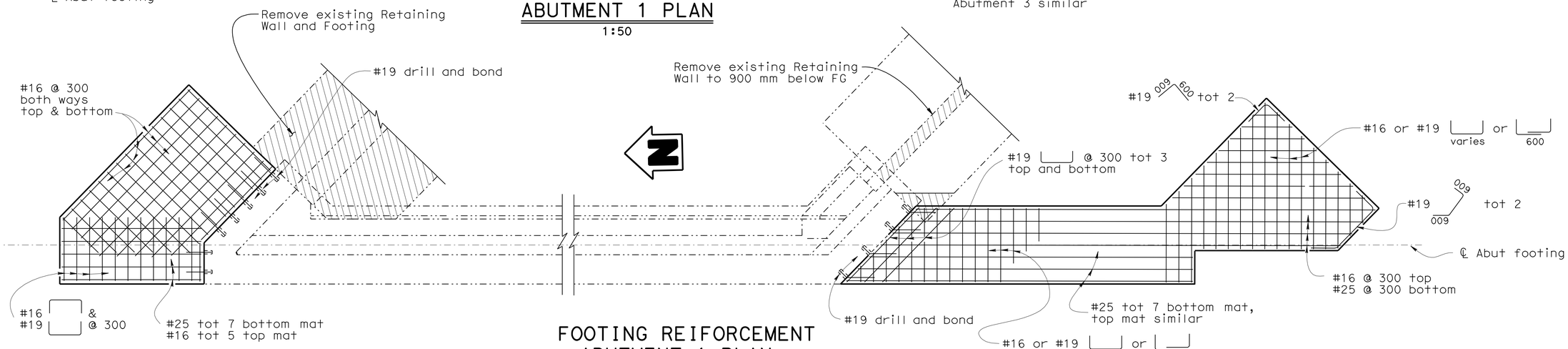

FOOTING REIFORCEMENT
ABUTMENT 1 PLAN
1:50

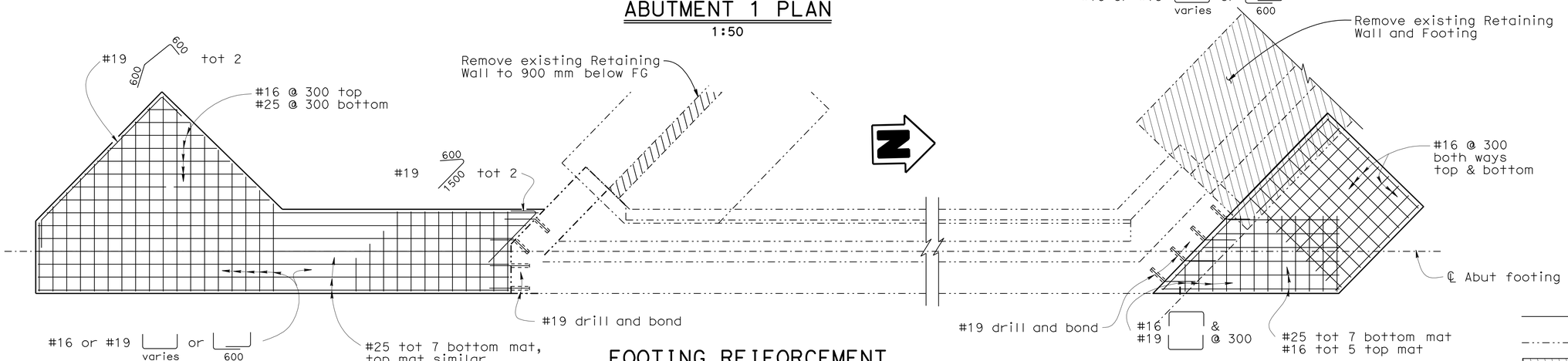

FOOTING REIFORCEMENT
ABUTMENT 3 PLAN
1:50

NOTE:
THE CONTRACTOR SHALL VERIFY ALL CONTROLLING FIELD DIMENSIONS BEFORE ORDERING OR FABRICATING ANY MATERIAL.

LEGEND
- Indicates new structure
- Indicates existing structure
- Limits of Bridge Removal (portion)
- Indicates Expansion Joint Filler Material

Caltrans Metric

	BY	CHECKED
DESIGN	M.Friedheim/D.Alvarez	C. Udarbe/R. Coria
DETAILS	Bruno Jenko	M.Friedheim/D.Alvarez
QUANTITIES	M.F./U.I./R.C.	M.M./E.H./A.T.

STATE OF CALIFORNIA
DEPARTMENT OF TRANSPORTATION

DIVISION OF ENGINEERING SERVICES
STRUCTURE DESIGN
DESIGN BRANCH 6

BRIDGE NO. 53-1112
KILOMETER POST 52.06

HOLLYWOOD WAY UC (WIDEN)
ABUTMENT DETAILS NO.4

ALL DIMENSIONS ARE IN MILLIMETERS UNLESS OTHERWISE SHOWN

ORIGINAL SCALE IN MILLIMETERS FOR REDUCED PLANS 0 10 20 30 40 50 60 70 80 90 100

CU 07
EA 1218V1

DISREGARD PRINTS BEARING EARLIER REVISION DATES

REVISION DATES: 1-12-08, 6-13-08, 7-15-09

SHEET 11 OF 34

FILE => 53-1112-g-abt-det4.dgn

STRUCTURES DESIGN DETAIL SHEET (METRIC) (REV.03-17-04)

USERNAME => trienard DATE PLOTTED => 03-MAY-2010 TIME PLOTTED => 13:03

DIST	COUNTY	ROUTE	KILOMETER POST TOTAL PROJECT	SHEET No	TOTAL SHEETS
07	LA	5	50.8/58.0	745	869

REGISTERED CIVIL ENGINEER — DATE 6-25-08

5-3-10
PLANS APPROVAL DATE

REGISTERED PROFESSIONAL ENGINEER — F. H. HOFFMAN — No. C46401 — Exp. 3-31-11 — CIVIL — STATE OF CALIFORNIA

The State of California or its officers or agents shall not be responsible for the accuracy or completeness of electronic copies of this plan sheet.

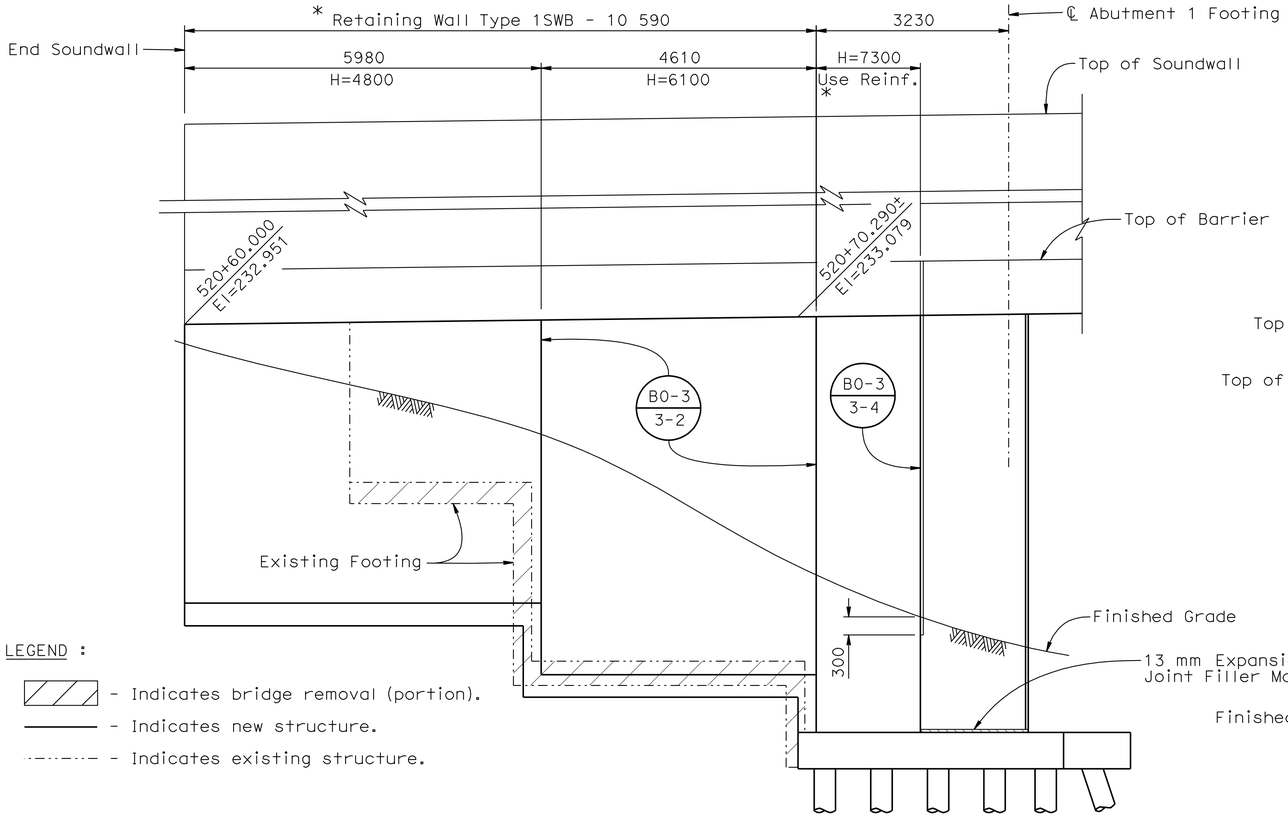

LEGEND :

- Indicates bridge removal (portion).
- Indicates new structure.
- Indicates existing structure.

ELEVATION - ABUT.1 RIGHT
1:50

Note:

1. For "RETAINING WALL TYPE 1 SWB" details, see "RETAINING WALL TYPE 1 SWB" sheet.
2. Architectural texture not shown, see "ARCHITECTURAL DETAILS" sheet for details.

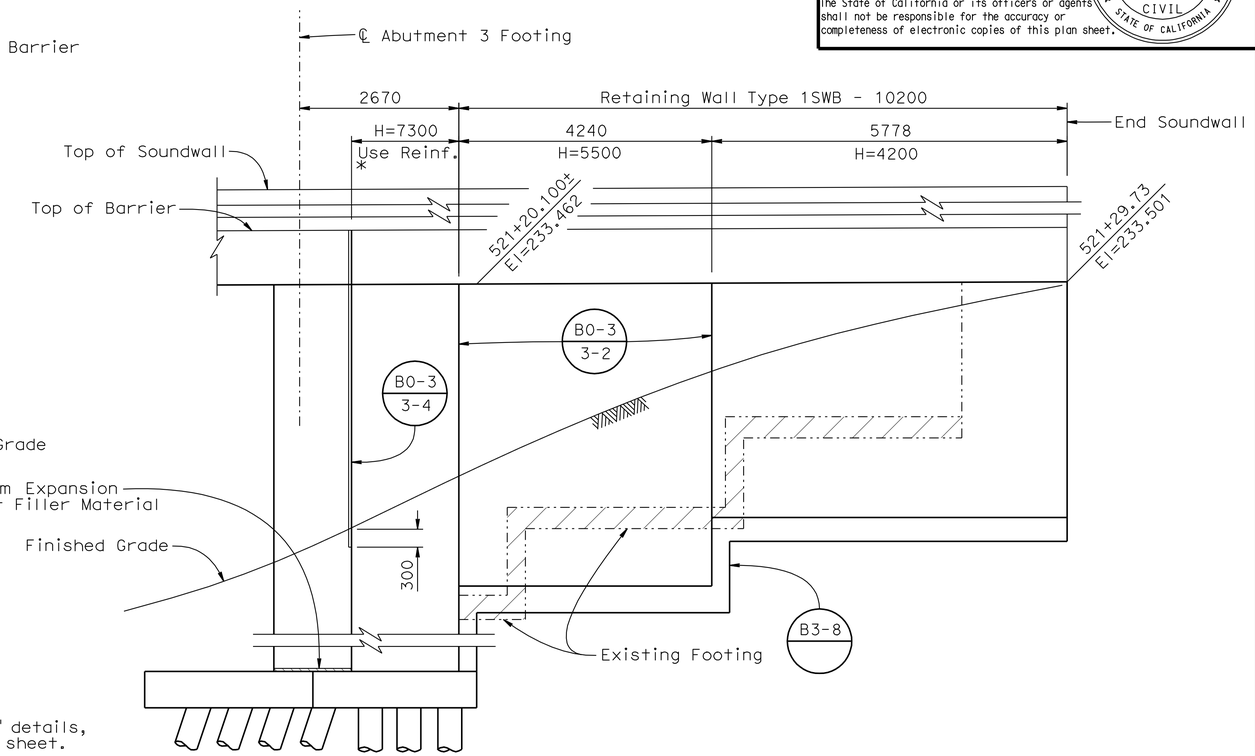

ELEVATION - ABUT.3 RIGHT
1:50

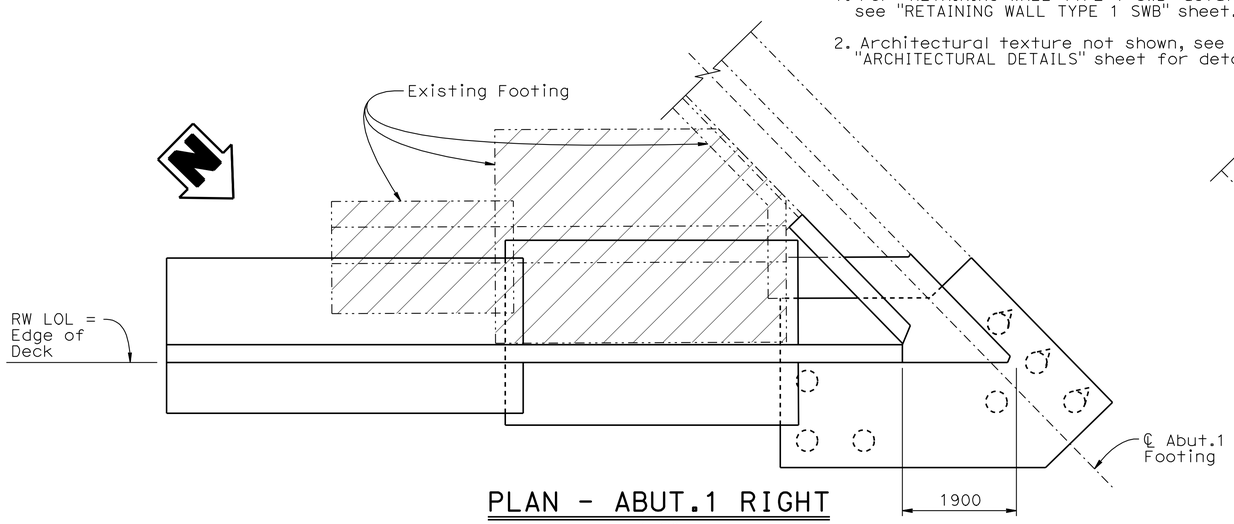

PLAN - ABUT.1 RIGHT
1:50

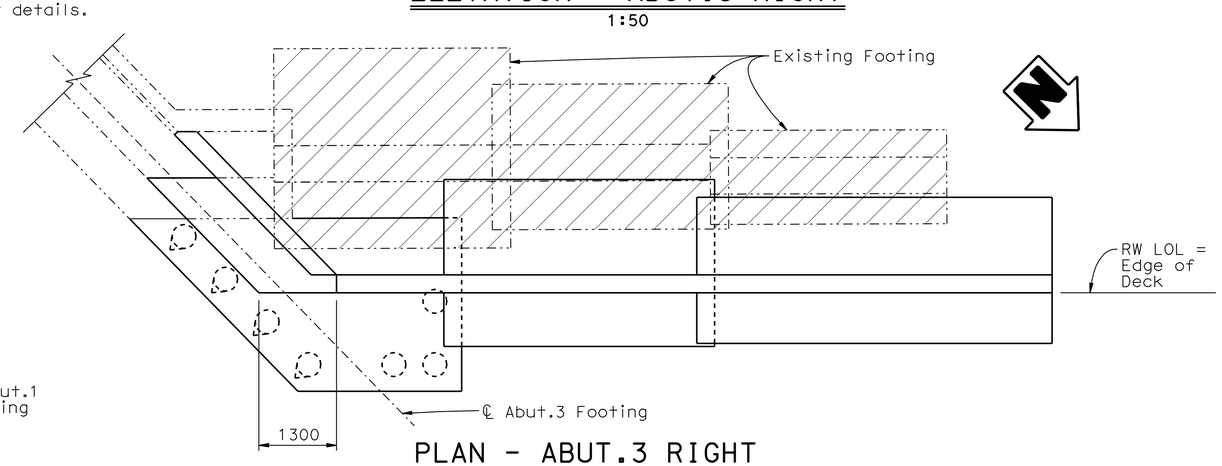

PLAN - ABUT.3 RIGHT
1:50

DESIGN	BY Elijah Hall	CHECKED Sherman Stake
DETAILS	BY George Zweier	CHECKED Elijah Hall
QUANTITIES	BY Ubong Inyang	CHECKED Elijah Hall

STATE OF CALIFORNIA
DEPARTMENT OF TRANSPORTATION

DIVISION OF ENGINEERING SERVICES
STRUCTURE DESIGN
DESIGN BRANCH 6

BRIDGE NO. 53-1112
KILOMETER POST 52.06

HOLLYWOOD WAY UC (WIDEN)
ABUTMENT DETAILS NO.5

ALL DIMENSIONS ARE IN MILLIMETERS UNLESS OTHERWISE SHOWN

ORIGINAL SCALE IN MILLIMETERS FOR REDUCED PLANS 0 10 20 30 40 50 60 70 80 90 100

CU 07
EA 1218V1

DISREGARD PRINTS BEARING EARLIER REVISION DATES

REVISION DATES: 07-26-06 1-18-08 1-28-08 3-28-08 6-19-08 7-15-09

SHEET 12 OF 34

FILE => 53-1112-g-abt-det5.dgn

STRUCTURES DESIGN DETAIL SHEET (METRIC) (REV.03-17-04)

USERNAME => friehard DATE PLOTTED => 03-MAY-2010 TIME PLOTTED => 13:03

DIST	COUNTY	ROUTE	KILOMETER POST TOTAL PROJECT	SHEET No	TOTAL SHEETS
07	LA	5	50.8/58.0	746	869

REGISTERED CIVIL ENGINEER 6-25-08 DATE

5-3-10
PLANS APPROVAL DATE

REGISTERED PROFESSIONAL ENGINEER F. H. HOFFMAN No. C46401 Exp. 3-31-11 CIVIL STATE OF CALIFORNIA

The State of California or its officers or agents shall not be responsible for the accuracy or completeness of electronic copies of this plan sheet.

LEGEND:
- Indicates new structure
- Indicates existing structure
- Indicates bridge removal (portion)

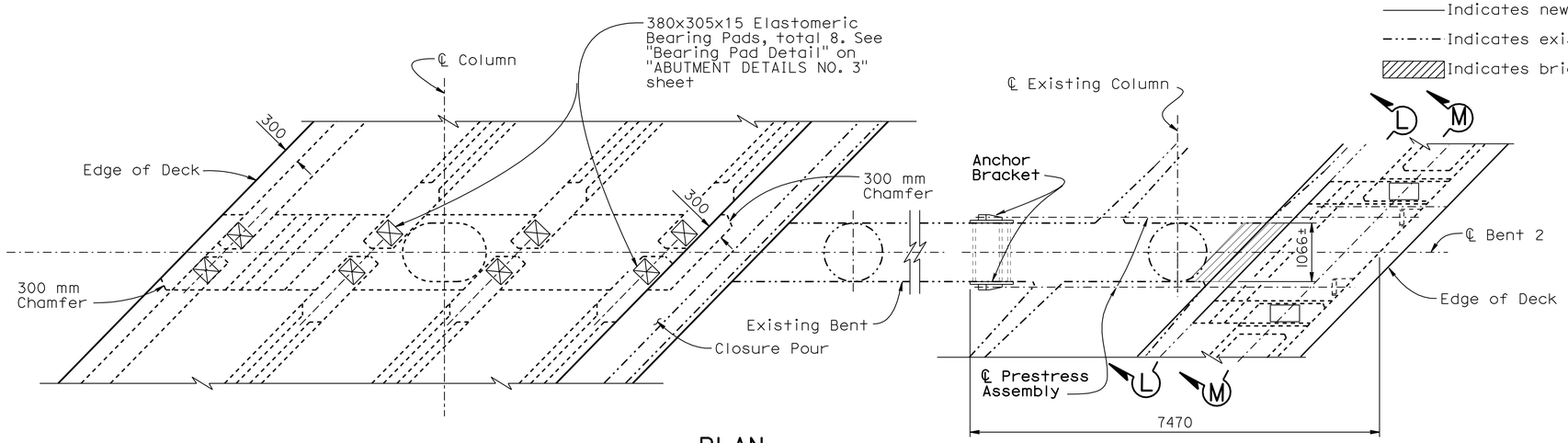

PLAN
1:50

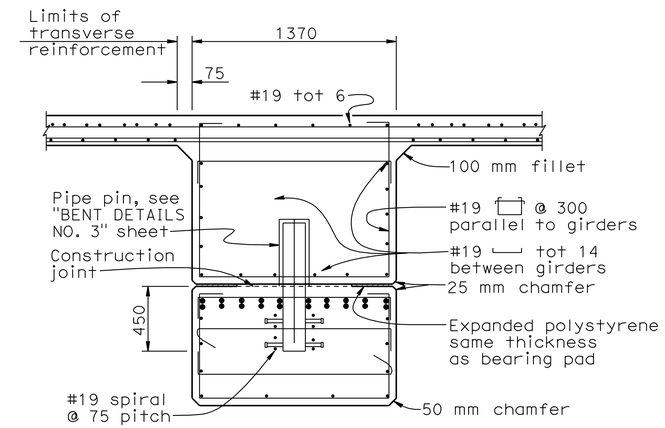

SECTION I-I
1:20

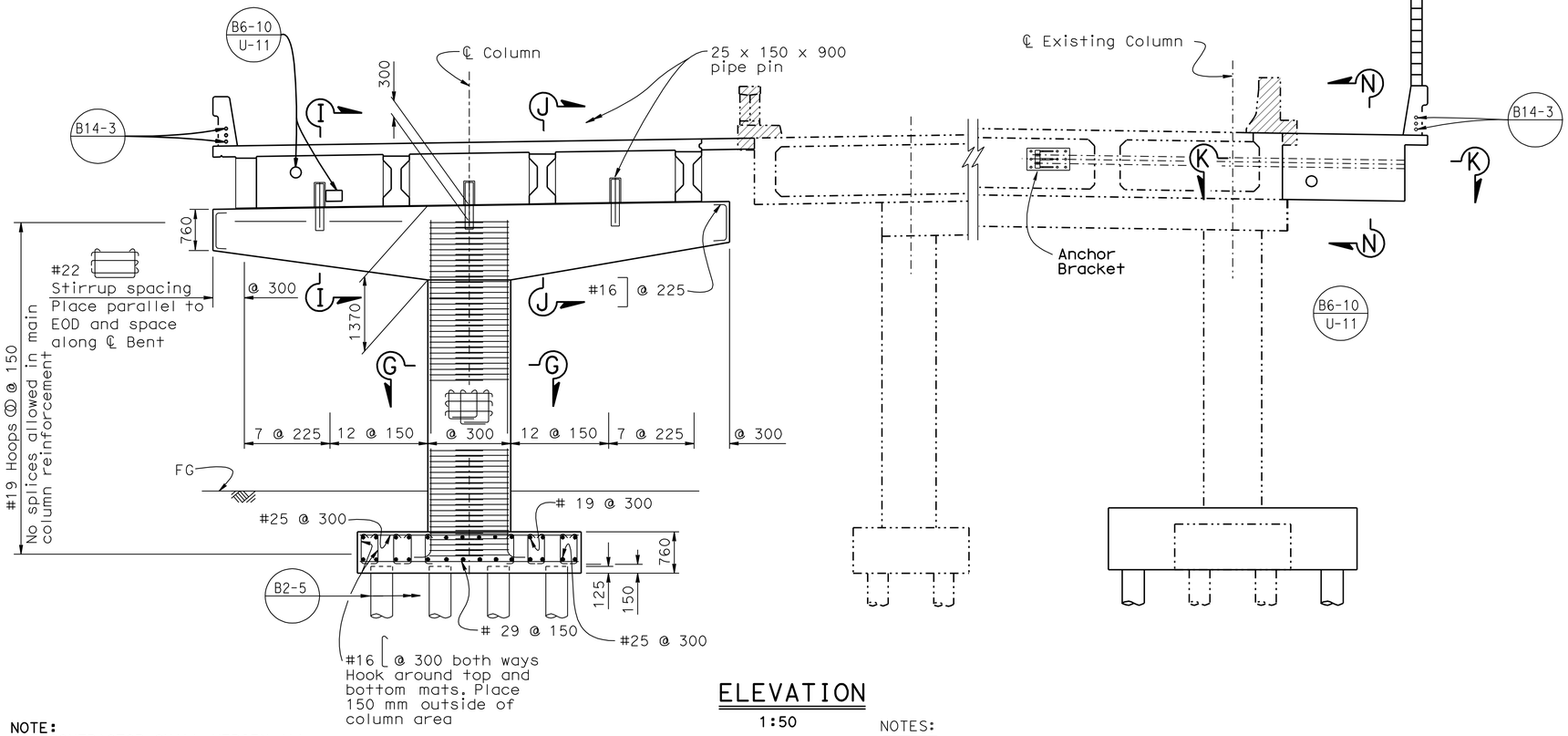

ELEVATION
1:50

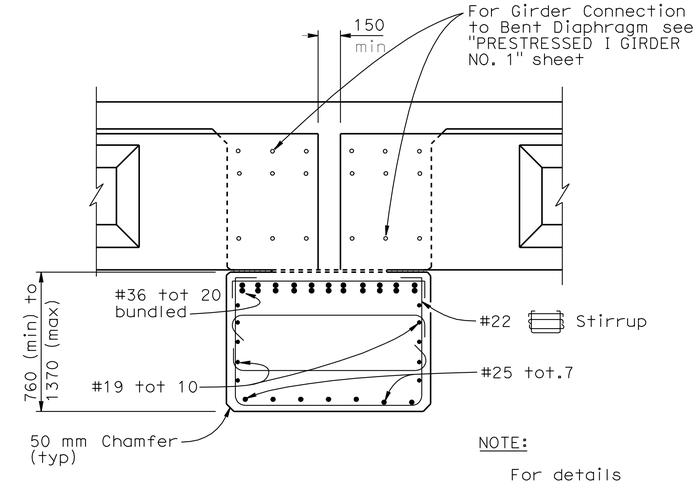

SECTION J-J
1:20

NOTE:
For details not shown, see "Section I-I".

NOTE:
THE CONTRACTOR SHALL VERIFY ALL CONTROLLING FIELD DIMENSIONS BEFORE ORDERING OR FABRICATING ANY MATERIAL.

NOTES:
For "Sections G-G & H-H", see "Bent Details No.1" sheet.
For "Sections K-K,L-L,M-M,N-N & View K-K", see "Bent Details No.2" sheet.

	BY	CHECKED
DESIGN	M.Friedheim/D.Alvarez	C. Udarbe/R. Coria
DETAILS	D. Pato / BJ	M.Friedheim/D.Alvarez
QUANTITIES	M.Friedheim/R. Coria	M. Moore/Ae Tern

STATE OF CALIFORNIA
DEPARTMENT OF TRANSPORTATION

DIVISION OF ENGINEERING SERVICES
STRUCTURE DESIGN
DESIGN BRANCH 6

BRIDGE NO. 53-1112
KILOMETER POST 52.06

HOLLYWOOD WAY UC (WIDEN)
BENT LAYOUT

Caltrans Metric

ALL DIMENSIONS ARE IN MILLIMETERS UNLESS OTHERWISE SHOWN

ORIGINAL SCALE IN MILLIMETERS FOR REDUCED PLANS 0 10 20 30 40 50 60 70 80 90 100

CU 07
EA 1218V1

DISREGARD PRINTS BEARING EARLIER REVISION DATES

REVISION DATES: 2-15-07 11-29-07 12-11-07 12-12-07 12-28-07 1-3-08 2-28-08 4-18-08 6-18-08 7-15-09

SHEET 13 OF 34

FILE => 53-1112-h-b-lo.dgn

STRUCTURES DESIGN DETAIL SHEET (METRIC) (REV.03-17-04)

USERNAME => friehard DATE PLOTTED => 03-MAY-2010 TIME PLOTTED => 13:03

DIST	COUNTY	ROUTE	KILOMETER POST TOTAL PROJECT	SHEET No	TOTAL SHEETS
07	LA	5	50.8/58.0	747	869

REGISTERED CIVIL ENGINEER — DATE 6-25-08

5-3-10
PLANS APPROVAL DATE

REGISTERED PROFESSIONAL ENGINEER F. H. HOFFMAN No. C46401 Exp. 3-31-11 CIVIL STATE OF CALIFORNIA

The State of California or its officers or agents shall not be responsible for the accuracy or completeness of electronic copies of this plan sheet.

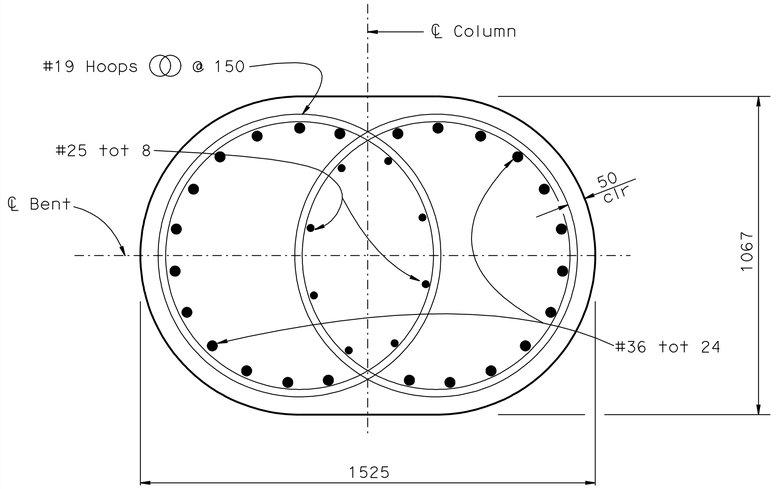

SECTION G-G
1:10

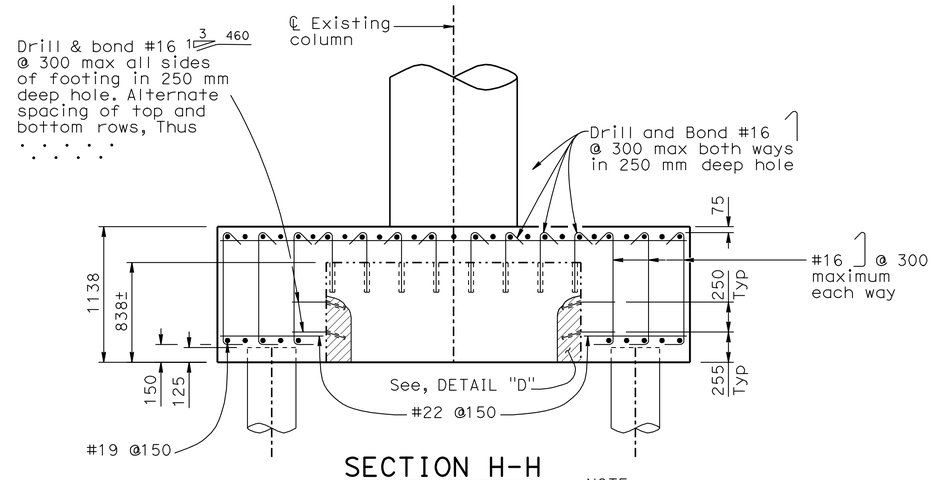

SECTION H-H
1:25

NOTE:
For DETAIL D, see "BENT DETAILS NO. 3" sheet.

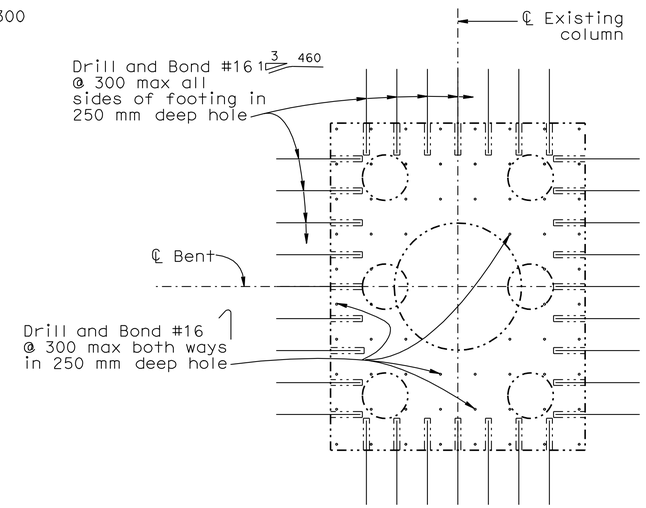

DRILL AND BOND, PLAN VIEW EXISTING FOOTING - RIGHT SIDE
1:25

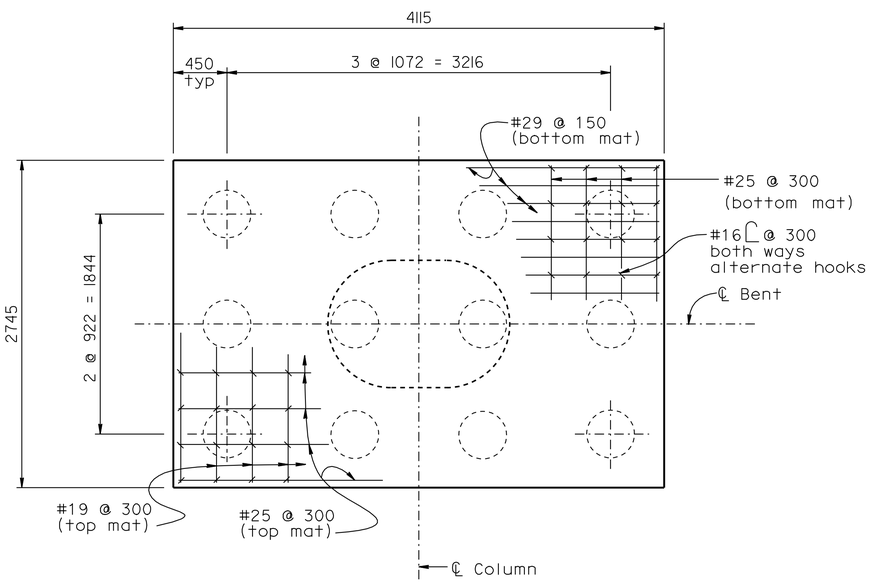

FOOTING PLAN - LEFT SIDE
1:25

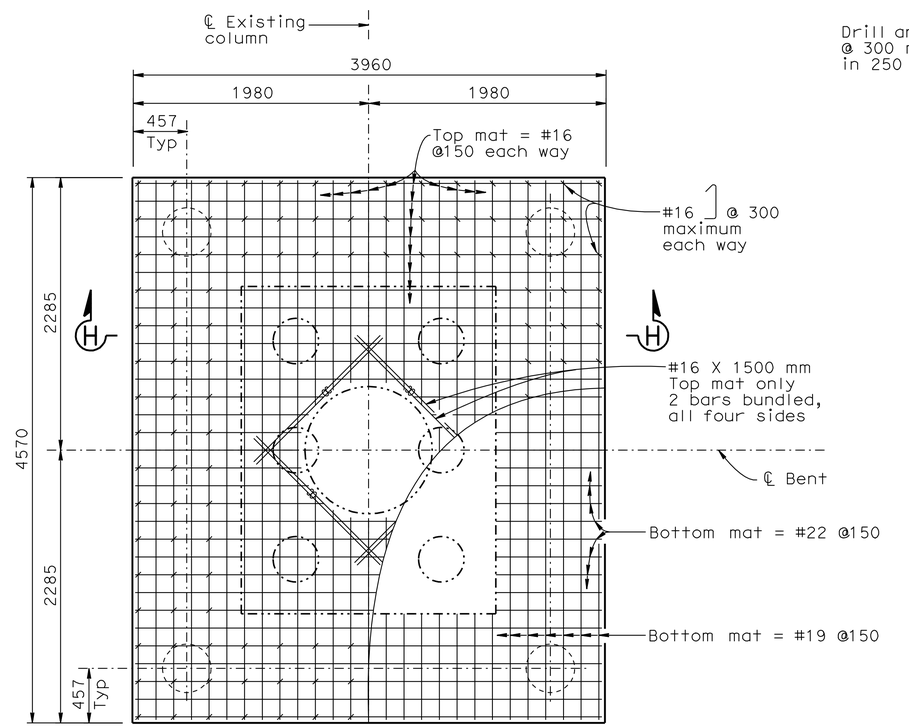

FOOTING PLAN - RIGHT SIDE
1:25

LEGEND:

- Indicates limits of removal
- Indicates existing structure
- Indicates new construction
- Indicates bundled reinforcement steel

NOTE:
THE CONTRACTOR SHALL VERIFY ALL CONTROLLING FIELD DIMENSIONS BEFORE ORDERING OR FABRICATING ANY MATERIAL.

Caltrans Metric

ALL DIMENSIONS ARE IN MILLIMETERS UNLESS OTHERWISE SHOWN

ORIGINAL SCALE IN MILLIMETERS FOR REDUCED PLANS 0 10 20 30 40 50 60 70 80 90 100

	BY	CHECKED
DESIGN	M. Friedheim/D. Alvarez	C. Udarbe/T. Bui/ RC
DETAILS	D. Pato/BJ/S. Ng	M. Friedheim/D. Alvarez
QUANTITIES	M. Friedheim/R. Corio	M. Moore/A. Tern

STATE OF CALIFORNIA DEPARTMENT OF TRANSPORTATION

DIVISION OF ENGINEERING SERVICES STRUCTURE DESIGN
DESIGN BRANCH 6

CU 07
EA 1218V1

BRIDGE NO. 53-1112
KILOMETER POST 52.06

HOLLYWOOD WAY UC (WIDEN)
BENT DETAILS NO.1

DISREGARD PRINTS BEARING EARLIER REVISION DATES

REVISION DATES: 2-15-07 12-06-07 12-14-07 12-12-07 2-6-08 6-19-08 7-15-09

SHEET 14 OF 34

STRUCTURES DESIGN DETAIL SHEET (METRIC) (REV.03-17-04)

FILE => 53-1112-h-bntdet1.dgn

USERNAME => rtrenord DATE PLOTTED => 03-MAY-2010 TIME PLOTTED => 13:03

DIST	COUNTY	ROUTE	KILOMETER POST TOTAL PROJECT	SHEET No	TOTAL SHEETS
07	LA	5	50.8/58.0	748	869

REGISTERED CIVIL ENGINEER — DATE 6-25-08

5-3-10
PLANS APPROVAL DATE

REGISTERED PROFESSIONAL ENGINEER — F. H. HOFFMAN — No. C46401 — Exp. 3-31-11 — CIVIL — STATE OF CALIFORNIA

The State of California or its officers or agents shall not be responsible for the accuracy or completeness of electronic copies of this plan sheet.

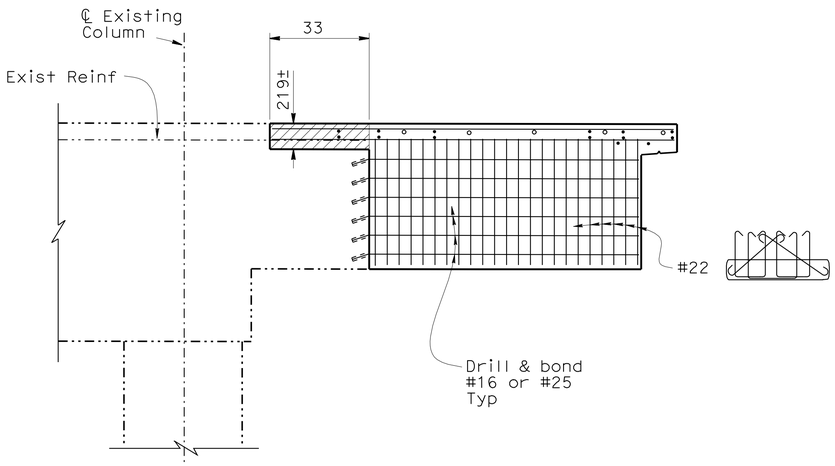

PART BENT SECTION - RIGHT SIDE
1:25

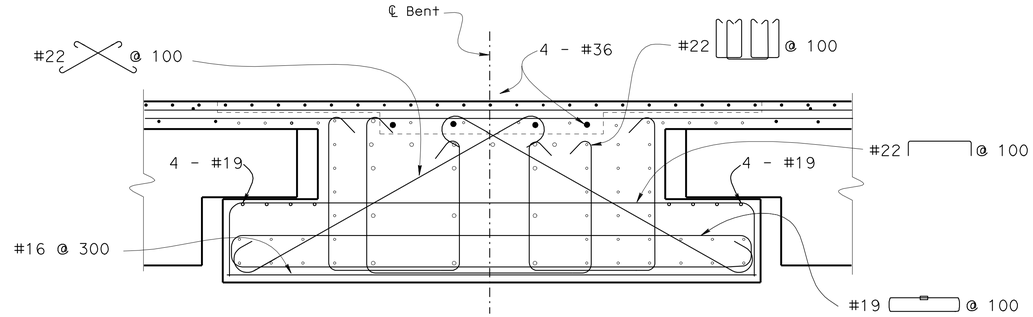

SECTION M-M
1:20

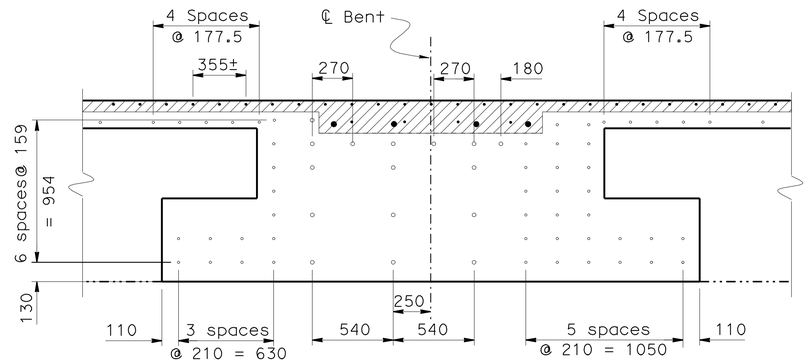

SECTION L-L
(DOWELS LAYOUT)
1:20

NOTES:
- ◦ - indicates 130 mm deep hole for 49-#16 (2250)
- ◦ - indicates 300 mm deep hole for 16-#25 (2420)
- • or . - indicates spliced existing rebars
- ▨ - indicates bridge removal, portion Mechanically service splice all rebar in concrete removal area

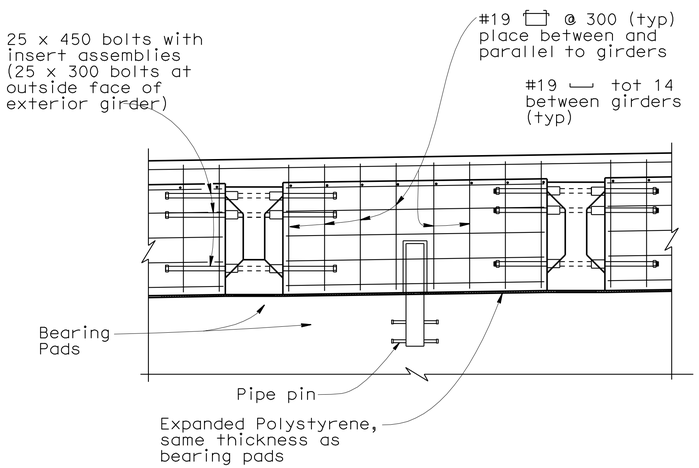

BENT ELEVATION - LEFT SIDE
1:25

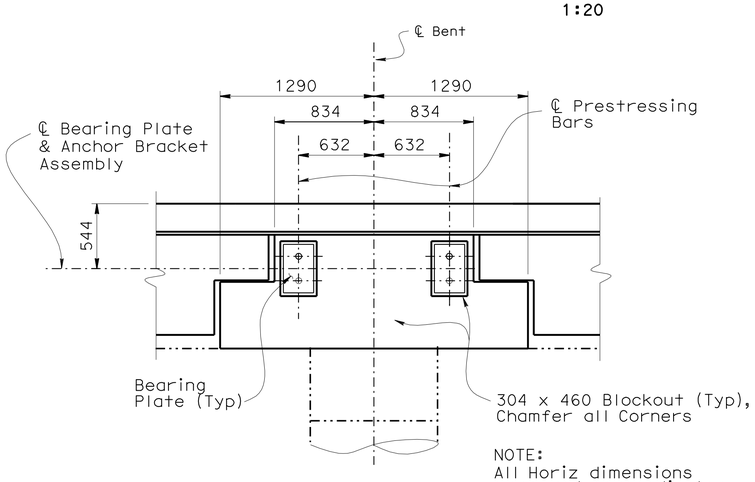

NOTE:
All Horiz dimensions measured perpendicular to ℄ Bent

VIEW N-N
1:25

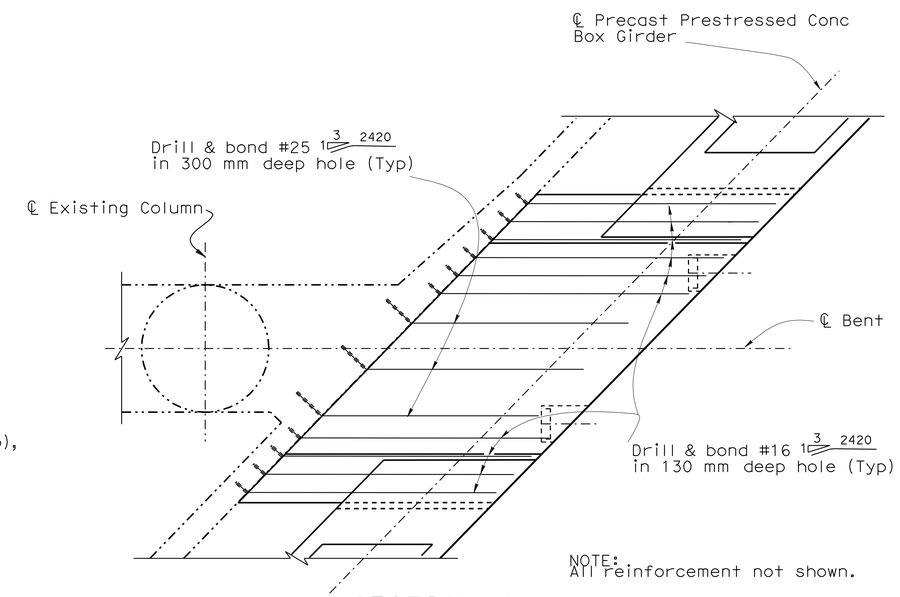

NOTE:
All reinforcement not shown.

SECTION K-K
1:25

Caltrans Metric

ALL DIMENSIONS ARE IN MILLIMETERS UNLESS OTHERWISE SHOWN

ORIGINAL SCALE IN MILLIMETERS FOR REDUCED PLANS: 0 10 20 30 40 50 60 70 80 90 100

	BY	CHECKED
DESIGN	M. Friedheim/D. Alvarez	C. Udarbe/T. Bui/ RC
DETAILS	D. Pato/BJ/ S. Ng	M. Friedheim/D. Alvarez
QUANTITIES	M. Friedheim/R. Coria	M. Moore/A. Tern

STATE OF CALIFORNIA
DEPARTMENT OF TRANSPORTATION

DIVISION OF ENGINEERING SERVICES
STRUCTURE DESIGN
DESIGN BRANCH 6

CU 07
EA 1218V1

BRIDGE NO. 53-1112
KILOMETER POST 52.06

HOLLYWOOD WAY UC (WIDEN)
BENT DETAILS NO.2

DISREGARD PRINTS BEARING EARLIER REVISION DATES

REVISION DATES: 12-11-07 2-15-08 6-13-08 7-15-09

SHEET 15 OF 34

FILE => 53-1112-h-bntdet2.dgn

STRUCTURES DESIGN DETAIL SHEET (METRIC) (REV.03-17-04)

USERNAME => friehard DATE PLOTTED => 03-MAY-2010 TIME PLOTTED => 13:03

DIST	COUNTY	ROUTE	KILOMETER POST TOTAL PROJECT	SHEET No	TOTAL SHEETS
07	LA	5	50.8/58.0	749	869

REGISTERED CIVIL ENGINEER 6-25-08 DATE

5-3-10
PLANS APPROVAL DATE

REGISTERED PROFESSIONAL ENGINEER F. H. HOFFMAN No. C46401 Exp. 3-31-11 CIVIL STATE OF CALIFORNIA

The State of California or its officers or agents shall not be responsible for the accuracy or completeness of electronic copies of this plan sheet.

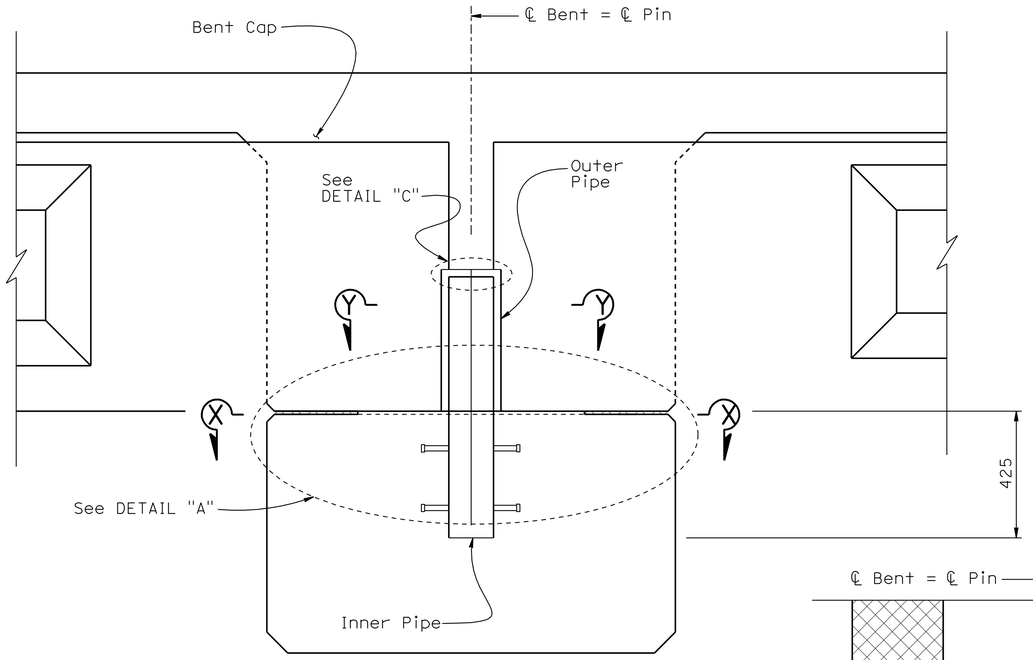

SECTION I-I
1:10

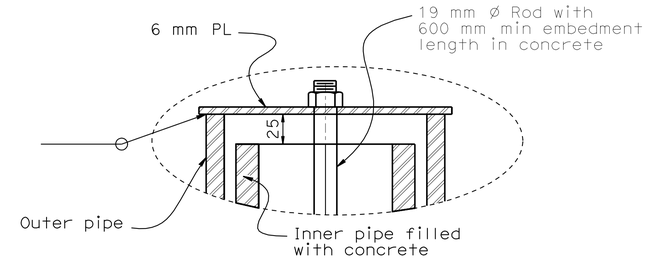

DETAIL "C"
1:2.5

NOTES:
1. Outer Pipe to seat tightly against 6 mm thick rubber gasket placed on concrete
2. Adjust spacing of main bent cap reinforcement to allow placing of pipe pin (25 mm clearance)
3. Pipe shall be Galvanized Structural Steel

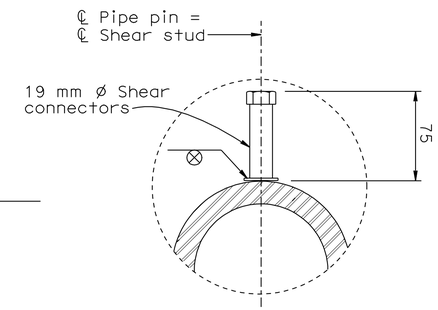

DETAIL "B"
1:2.5

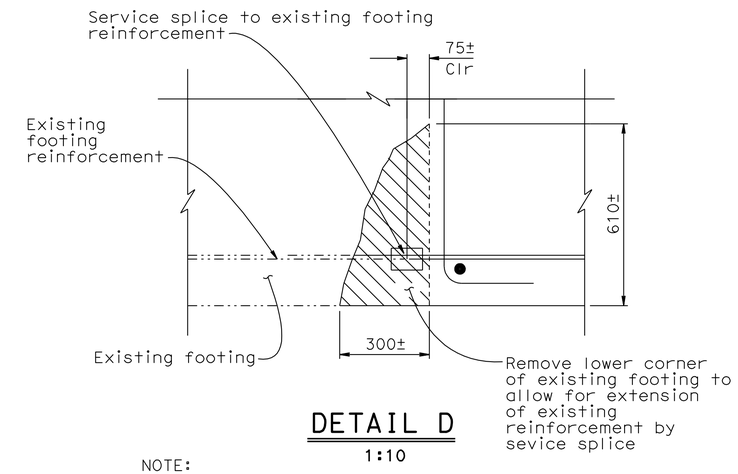

DETAIL D
1:10

NOTE:
For DETAIL D, see "BENT DETAILS NO. 1" sheet

NOTE A:
Dimension may be increased up to 300 mm at contractor's option

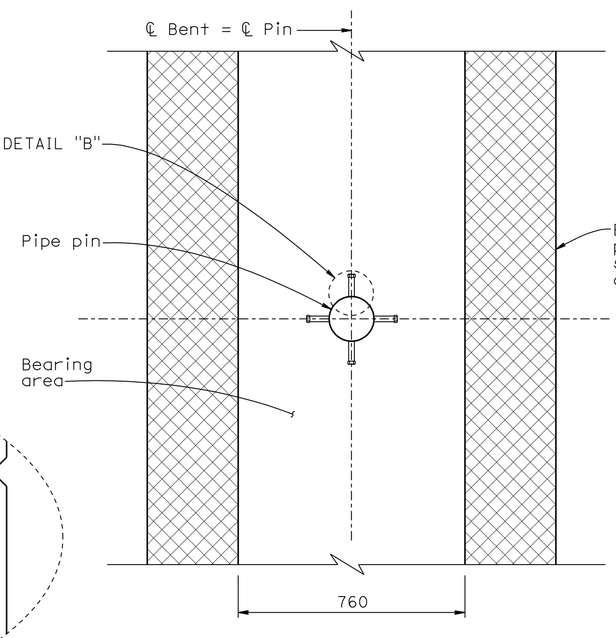

SECTION X-X
1:10

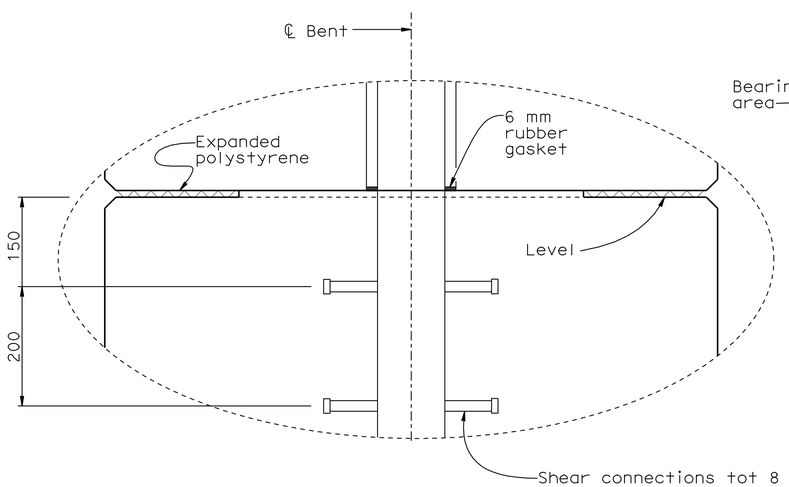

DETAIL "A"
1:5

NOTE:
THE CONTRACTOR SHALL VERIFY ALL CONTROLLING FIELD DIMENSIONS BEFORE ORDERING OR FABRICATING ANY MATERIAL.

LEGEND:

1 —— Indicates New Structure
2 —·—·— Indicates Existing Structure
3 Indicates Bridge Removal (Portion)
4 Indicates Expanded Polystyrene
5 Indicates Steel

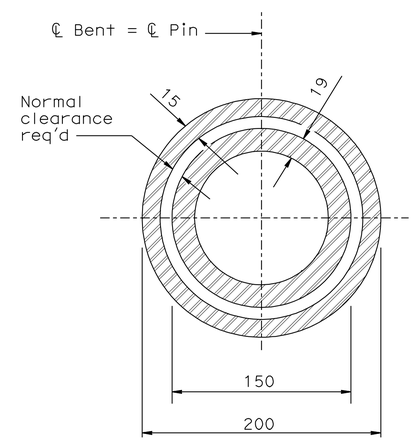

SECTION Y-Y
1:2.5

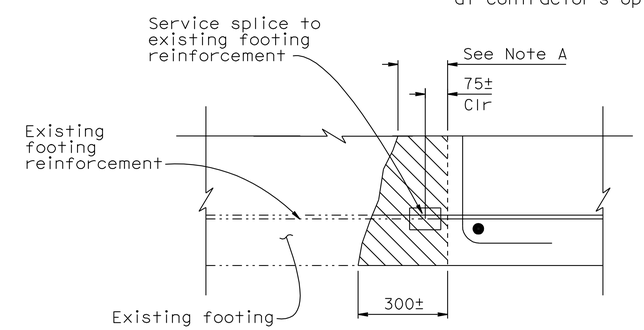

ALTERNATIVE DETAIL D
1:10

DESIGN	BY M. Friedheim/D. Alvarez	CHECKED C. Udarbe/T. Bui/RC	
DETAILS	BY L. Wang	CHECKED M. Friedheim/D. Alvarez	
QUANTITIES	BY M. Friedheim/R. Coria	CHECKED M. Moore/A. Tern	

STATE OF CALIFORNIA
DEPARTMENT OF TRANSPORTATION

DIVISION OF ENGINEERING SERVICES
STRUCTURE DESIGN
DESIGN BRANCH 6

BRIDGE NO. 53-1112
KILOMETER POST 52.06

HOLLYWOOD WAY UC (WIDEN)
BENT DETAILS NO.3

Caltrans Metric

ALL DIMENSIONS ARE IN MILLIMETERS UNLESS OTHERWISE SHOWN

ORIGINAL SCALE IN MILLIMETERS FOR REDUCED PLANS 0 10 20 30 40 50 60 70 80 90 100

CU 07
EA 1218V1

DISREGARD PRINTS BEARING EARLIER REVISION DATES

REVISION DATES: 12-01-07 12-12-07 12-14-07 12-14-07 06-19-08 07-15-09

SHEET 16 OF 34

FILE => 53-1112-h-bntdet3.dgn

STRUCTURES DESIGN DETAIL SHEET (METRIC) (REV.03-17-04)

USERNAME => friehard DATE PLOTTED => 03-MAY-2010 TIME PLOTTED => 13:03

DIST	COUNTY	ROUTE	KILOMETER POST TOTAL PROJECT	SHEET No	TOTAL SHEETS
07	LA	5	50.8/58.0	750	869

REGISTERED CIVIL ENGINEER — DATE 6-25-08

5-3-10
PLANS APPROVAL DATE

REGISTERED PROFESSIONAL ENGINEER — F. H. HOFFMAN — No. C46401 — Exp. 3-31-11 — CIVIL — STATE OF CALIFORNIA

The State of California or its officers or agents shall not be responsible for the accuracy or completeness of electronic copies of this plan sheet.

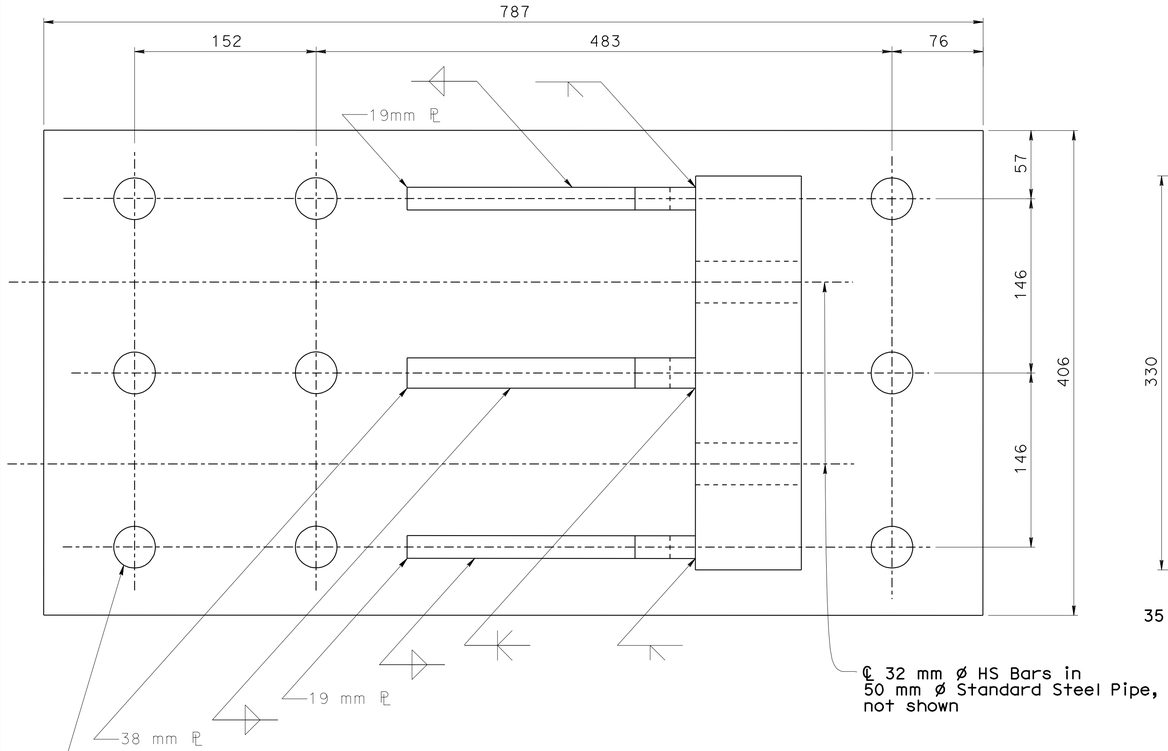

38 mm ø cored hole for 35 mm ø Threaded HS Bar, total 9. Bars shall be continuous through 51 mm ø cored holes into existing girders with anchor brackets on each side of pier wall. Rods shall be fasten to brackets with hex nuts and cut washers. Rods, nuts, and washers shall be galvanized. (Threads excluded from the shear plane.)

PLAN VIEW

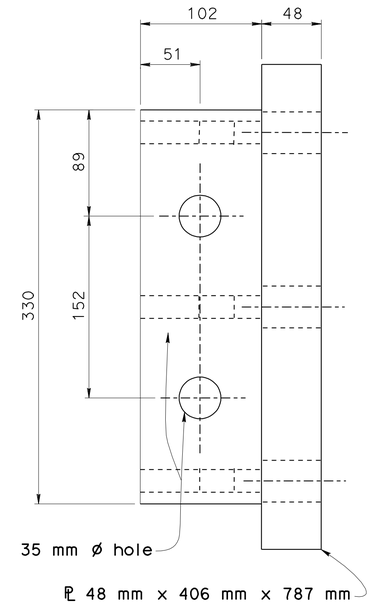

SIDE VIEW

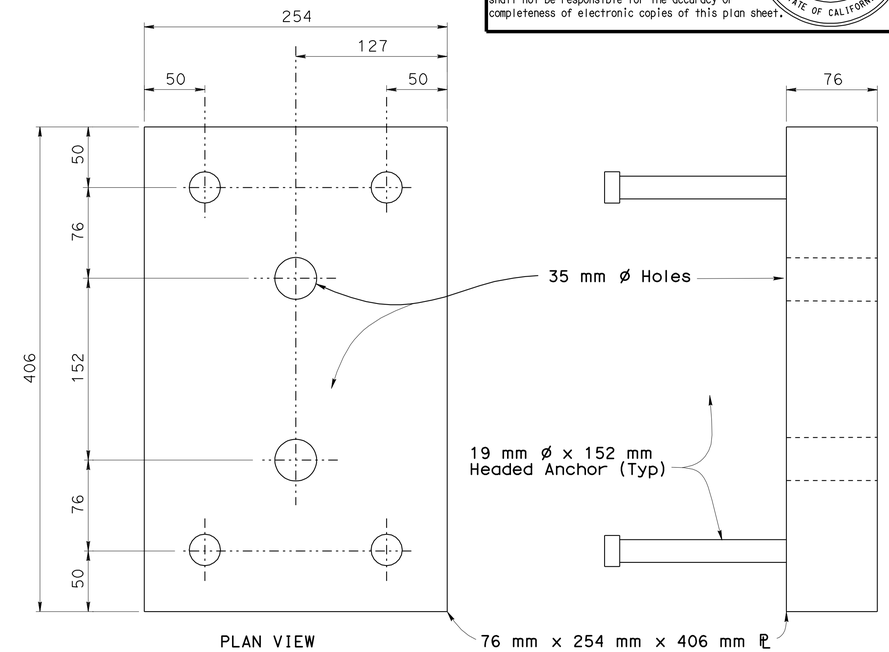

PLAN VIEW

SIDE VIEW

BEARING PLATE DETAILS

1:2.5

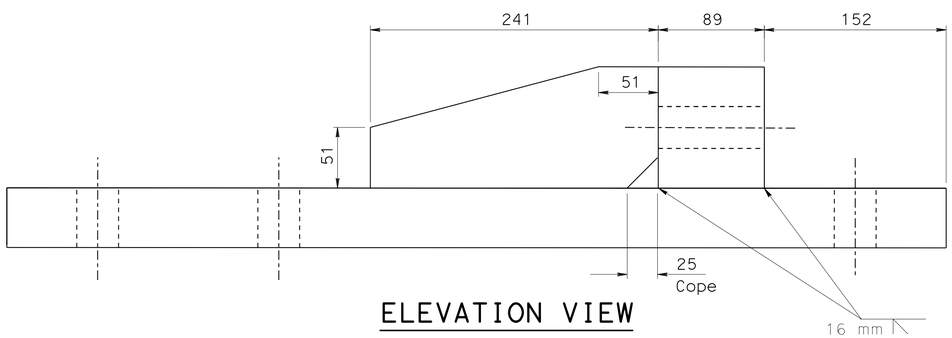

ELEVATION VIEW

ANCHOR BRACKET

1:2.5

NOTES:

1. All Brackets, Plates, and Hardware shall be Galvanized after fabrication
2. Seal Weld all Open Joints

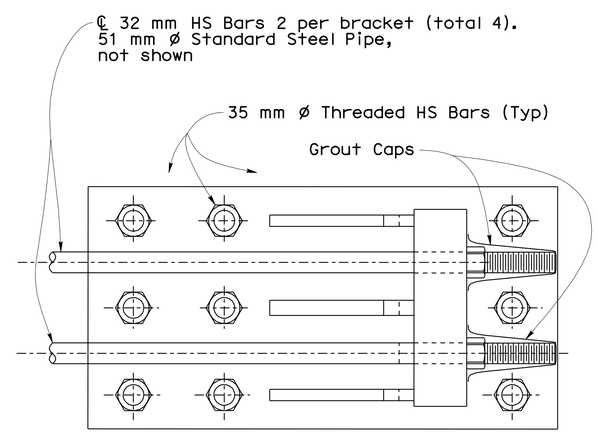

ANCHOR BRACKET ASSEMBLY

1:5

PRESTRESSING NOTES

Prestressing Bars: 32 mm ø bars (tot 4) shall meet ASTM Designation A 722

Bars shall be encased in 51 mm ø galvanized standard steel pipe with sealed galvanized grout cap then grouted

Provisions shall be made for elastic shortening during prestressing

Concrete: f'_c = 28 Mpa @ 28 days

f'_{ci} = 25 Mpa @ time of stressing

Working Force (KN): KN = 1800 KN (total force after losses)

The total losses in prestressing bars due to creep, shrinkage and elastic shortening of concrete and relaxing of prestressing steel shall be assumed to be 152 MPa

Sequence: Bars on both sides of pier cap shall be stressed simultaneously in the following order: top bars then bottom bars

NOTE:
THE CONTRACTOR SHALL VERIFY ALL CONTROLLING FIELD DIMENSIONS BEFORE ORDERING OR FABRICATING ANY MATERIAL.

Caltrans Metric

ALL DIMENSIONS ARE IN MILLIMETERS UNLESS OTHERWISE SHOWN

ORIGINAL SCALE IN MILLIMETERS FOR REDUCED PLANS 0 10 20 30 40 50 60 70 80 90 100

	BY	CHECKED
DESIGN	David Alvarez	Tony Skreslet
DETAILS	George Zweier	David Alvarez
QUANTITIES	Hernan Perez	David Alvarez

STATE OF CALIFORNIA
DEPARTMENT OF TRANSPORTATION

DIVISION OF ENGINEERING SERVICES
STRUCTURE DESIGN
DESIGN BRANCH 6

CU 07
EA 1218V1

BRIDGE NO. 53-1112
KILOMETER POST 52.06

HOLLYWOOD WAY UC (WIDEN)
BENT DETAILS NO.4

DISREGARD PRINTS BEARING EARLIER REVISION DATES → 1-2-08 06-19-08 07-15-09

REVISION DATES

SHEET 17 OF 34

FILE => 53-1112-h-bntdet4.dgn

STRUCTURES DESIGN DETAIL SHEET (METRIC) (REV.03-17-04)

USERNAME => ttrrlcht DATE PLOTTED => 03-MAY-2010 TIME PLOTTED => 13:38

DIST	COUNTY	ROUTE	KILOMETER POST TOTAL PROJECT	SHEET No	TOTAL SHEETS
07	LA	5	50.8/58.0	751	869

REGISTERED CIVIL ENGINEER — DATE 6-25-08

5-3-10
PLANS APPROVAL DATE

REGISTERED PROFESSIONAL ENGINEER — F. H. HOFFMAN — No. C46401 — Exp. 3-31-11 — CIVIL — STATE OF CALIFORNIA

The State of California or its officers or agents shall not be responsible for the accuracy or completeness of electronic copies of this plan sheet.

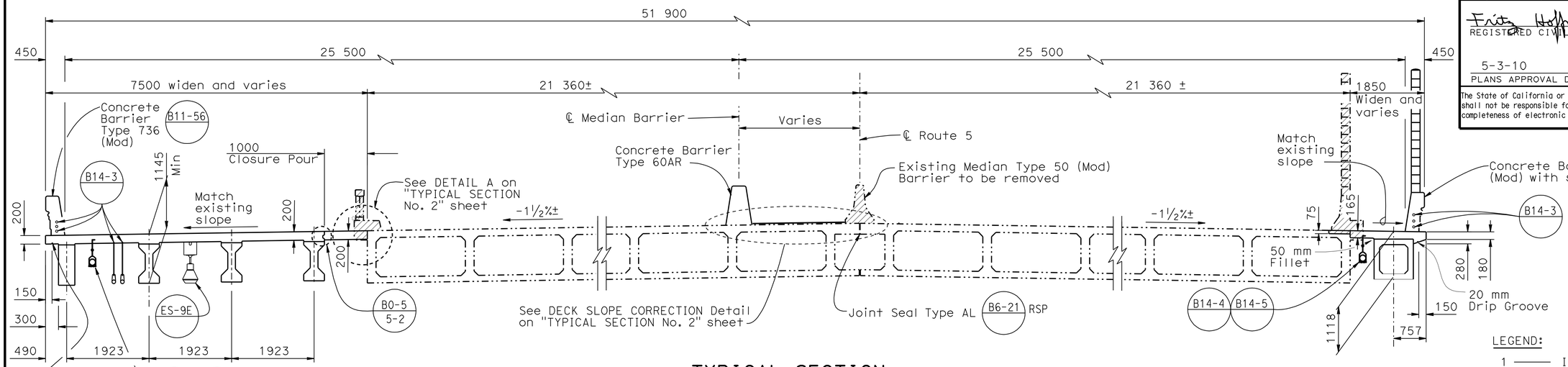

TYPICAL SECTION

1:50

LEGEND:

1 ——— Indicates new structure

2 —·—·— Indicates existing structure

3 ▨ Indicates limits of bridge removal (portion)

NOTES:
For "Part Typical Section - Right Widening" see "TYPICAL SECTION No. 2" sheet.

▨ - Indicates bridge removal portion

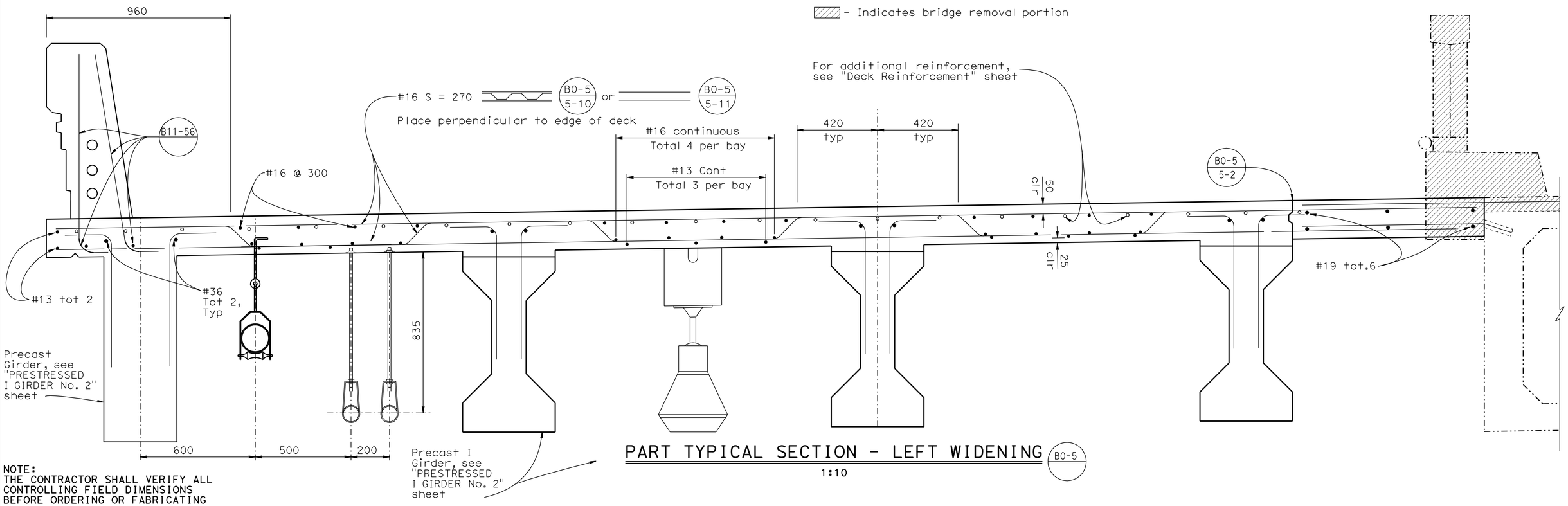

PART TYPICAL SECTION - LEFT WIDENING

1:10

B0-5

NOTE:
THE CONTRACTOR SHALL VERIFY ALL CONTROLLING FIELD DIMENSIONS BEFORE ORDERING OR FABRICATING ANY MATERIAL.

	BY	CHECKED
DESIGN	M. Friedheim/D. Alvarez	C. Udarbe/T. Bui/RC
DETAILS	D. Pato/BJ/S. Ng	M. Friedheim/D. Alvarez
QUANTITIES	M. Friedheim/R. Coria	M. Moore/A. Tern

STATE OF CALIFORNIA
DEPARTMENT OF TRANSPORTATION

DIVISION OF ENGINEERING SERVICES
STRUCTURE DESIGN
DESIGN BRANCH 6

BRIDGE NO. 53-1112
KILOMETER POST 52.06

HOLLYWOOD WAY UC (WIDEN)
TYPICAL SECTION NO.1

Caltrans Metric

ALL DIMENSIONS ARE IN MILLIMETERS UNLESS OTHERWISE SHOWN

ORIGINAL SCALE IN MILLIMETERS FOR REDUCED PLANS 0 10 20 30 40 50 60 70 80 90 100

CU 07
EA 1218V1

DISREGARD PRINTS BEARING EARLIER REVISION DATES

REVISION DATES: 10-14-06 | 11-02-07 | 11-08-07 | 11-20-07 | 12-19-07 | 12-26-07 | 2-28-08 | 4-18-08 | 06-18-08 | 07-15-08

SHEET 18 OF 34

FILE => 53-1112-k-typ.dgn

STRUCTURES DESIGN DETAIL SHEET (METRIC) (REV.03-17-04)

USERNAME => trrright DATE PLOTTED => 03-MAY-2010 TIME PLOTTED => 13:39

DIST	COUNTY	ROUTE	KILOMETER POST TOTAL PROJECT	SHEET No	TOTAL SHEETS
07	LA	5	50.8/58.0	752	869

REGISTERED CIVIL ENGINEER — DATE 6-25-08

5-3-10
PLANS APPROVAL DATE

REGISTERED PROFESSIONAL ENGINEER F. H. HOFFMAN No. C46401 Exp. 3-31-11 CIVIL STATE OF CALIFORNIA

The State of California or its officers or agents shall not be responsible for the accuracy or completeness of electronic copies of this plan sheet.

NOTES:

1. All existing bar reinforcing shall be retained and protected during concrete removal. The hooked portion of existing transverse steel may be removed or bent downward to facilitate splicing.
2. Minor adjustment may be made in dowel spacing to clear main reinforcement.
3. Match existing grade and cross slope.
4. Match existing grade and cross slope on right side.
5. Saw cut 19 mm deep into polyester concrete overlay before applying Type AL seal

LEGEND:

- Indicates new structure
- Indicates existing structure
- Indicates bridge removal (portion)
- Indicates concrete deck removal

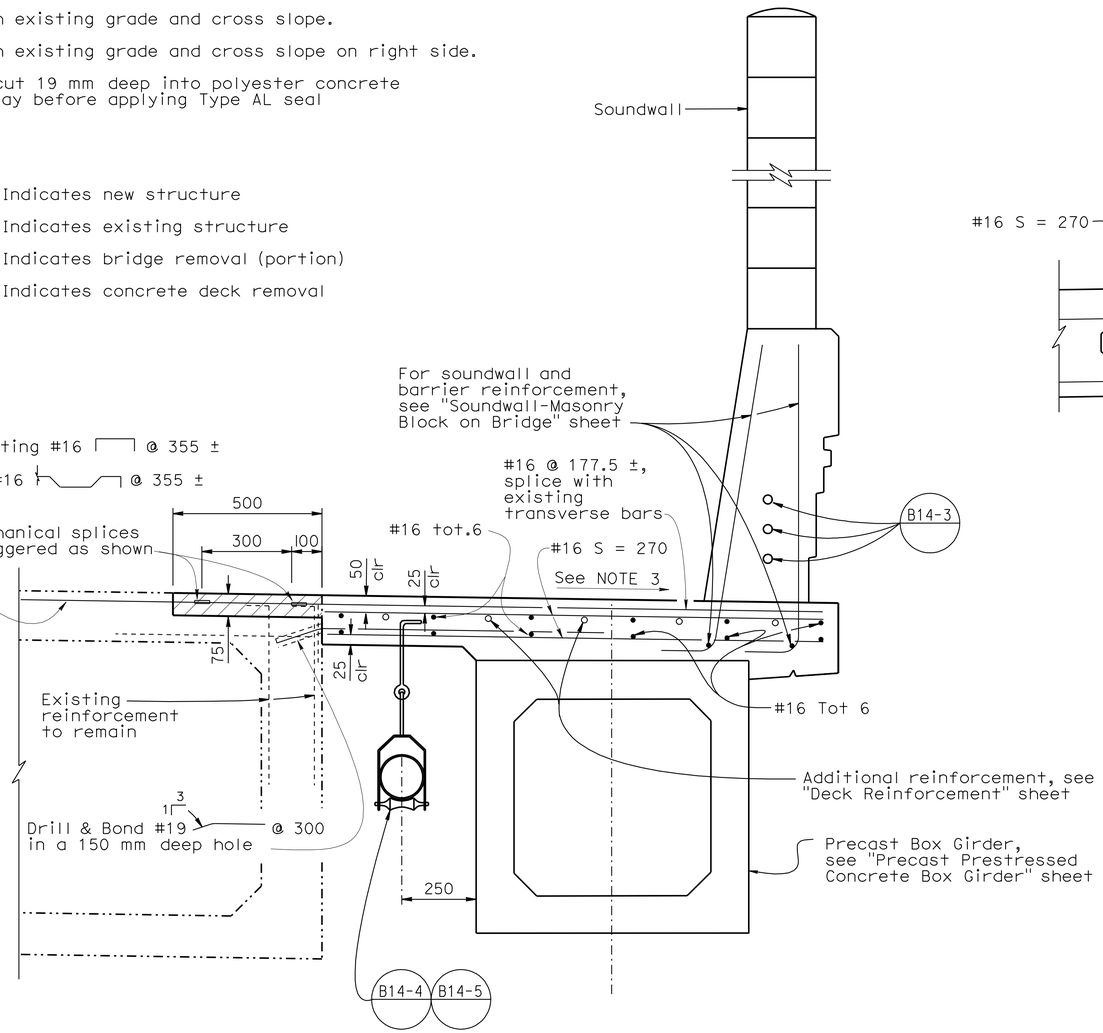

PART TYPICAL SECTION - RIGHT WIDENING (B0-5)

1:10

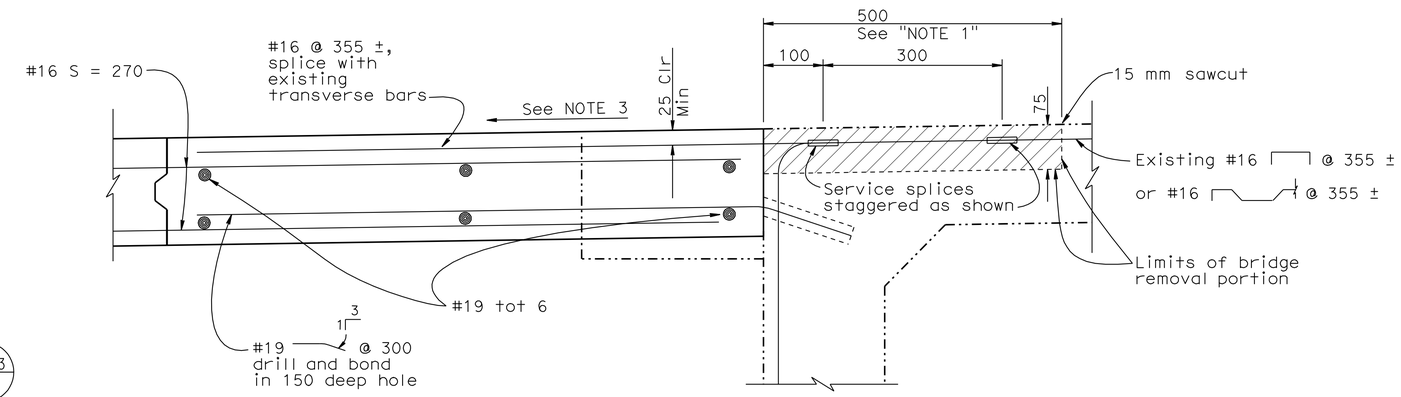

DETAIL A

1:5

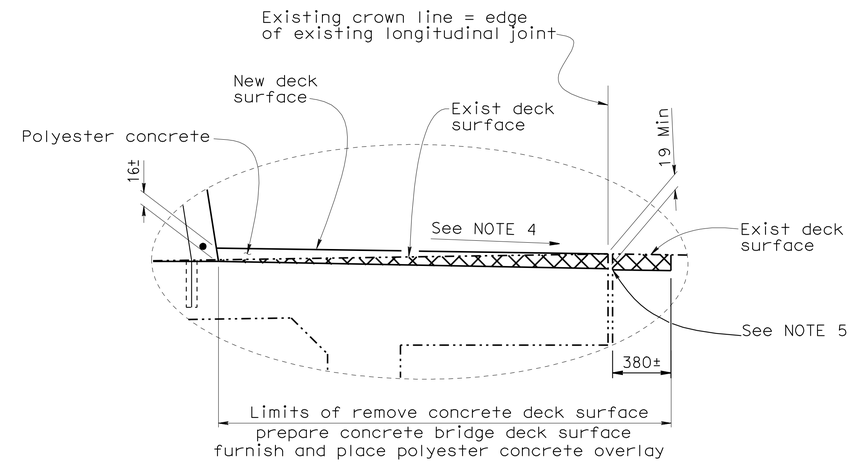

DECK SLOPE CORRECTION

No scale

NOTE:
THE CONTRACTOR SHALL VERIFY ALL CONTROLLING FIELD DIMENSIONS BEFORE ORDERING OR FABRICATING ANY MATERIAL.

Caltrans Metric

	BY	CHECKED
DESIGN	M. Friedheim/D. Alvarez	C. Udarbe/T. Bui/ RC
DETAILS	D. Pato/BJ/S. Ng	M. Friedheim/D. Alvarez
QUANTITIES	M. Friedheim/R. Corio	M. Moore/ A. Tern

STATE OF CALIFORNIA DEPARTMENT OF TRANSPORTATION

DIVISION OF ENGINEERING SERVICES STRUCTURE DESIGN
DESIGN BRANCH 6

BRIDGE NO. 53-1112
KILOMETER POST 52.06

HOLLYWOOD WAY UC (WIDEN)
TYPICAL SECTION NO.2

ALL DIMENSIONS ARE IN MILLIMETERS UNLESS OTHERWISE SHOWN

ORIGINAL SCALE IN MILLIMETERS FOR REDUCED PLANS 0 10 20 30 40 50 60 70 80 90 100

CU 07
EA 1218V1

DISREGARD PRINTS BEARING EARLIER REVISION DATES

REVISION DATES: 6-28-07 11-06-07 11-09-07 2-28-08 6-18-08 6-18-08 7-15-09

SHEET 19 OF 34

FILE => 53-1112-k-typ2.dgn

STRUCTURES DESIGN DETAIL SHEET (METRIC) (REV.03-17-04)

USERNAME => trrright DATE PLOTTED => 03-MAY-2010 TIME PLOTTED => 13:39

DIST	COUNTY	ROUTE	KILOMETER POST TOTAL PROJECT	SHEET No	TOTAL SHEETS
07	LA	5	50.8/58.0	753	869

REGISTERED CIVIL ENGINEER — DATE 6-25-08

5-3-10
PLANS APPROVAL DATE

REGISTERED PROFESSIONAL ENGINEER — F. H. HOFFMAN — No. C46401 — Exp. 3-31-11 — CIVIL — STATE OF CALIFORNIA

The State of California or its officers or agents shall not be responsible for the accuracy or completeness of electronic copies of this plan sheet.

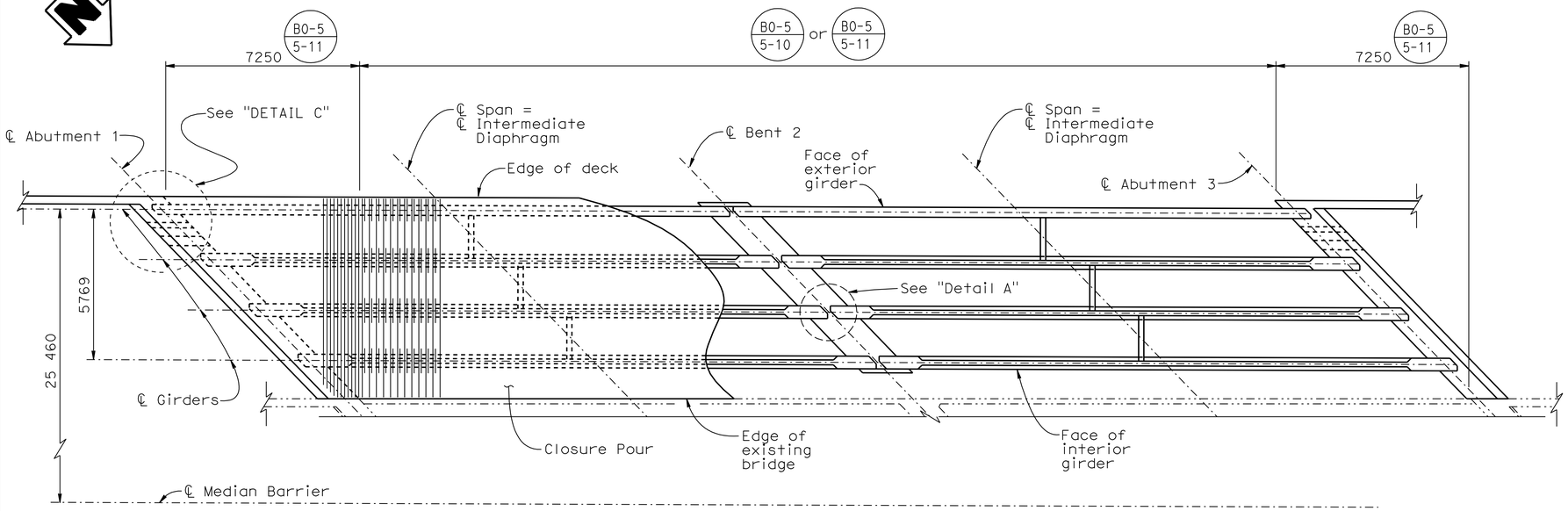

GIRDER LAYOUT - LEFT WIDENING
1:100

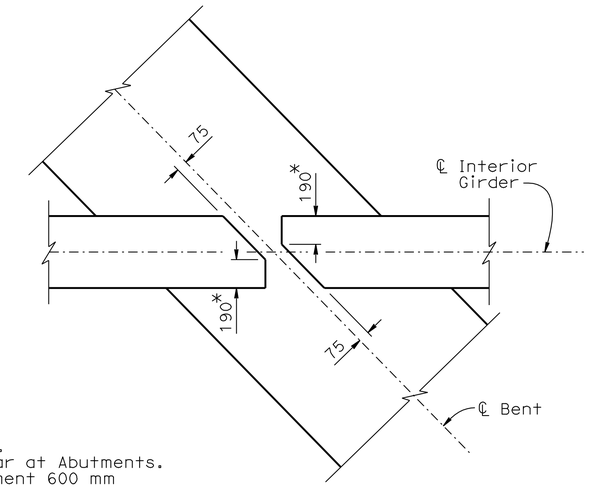

DETAIL A
1:20

Notes:

* - 150 mm for exterior girders.
1. Girder chamfer details similar at Abutments.
2. Extend transverse reinforcement 600 mm into the abutment diaphragm.

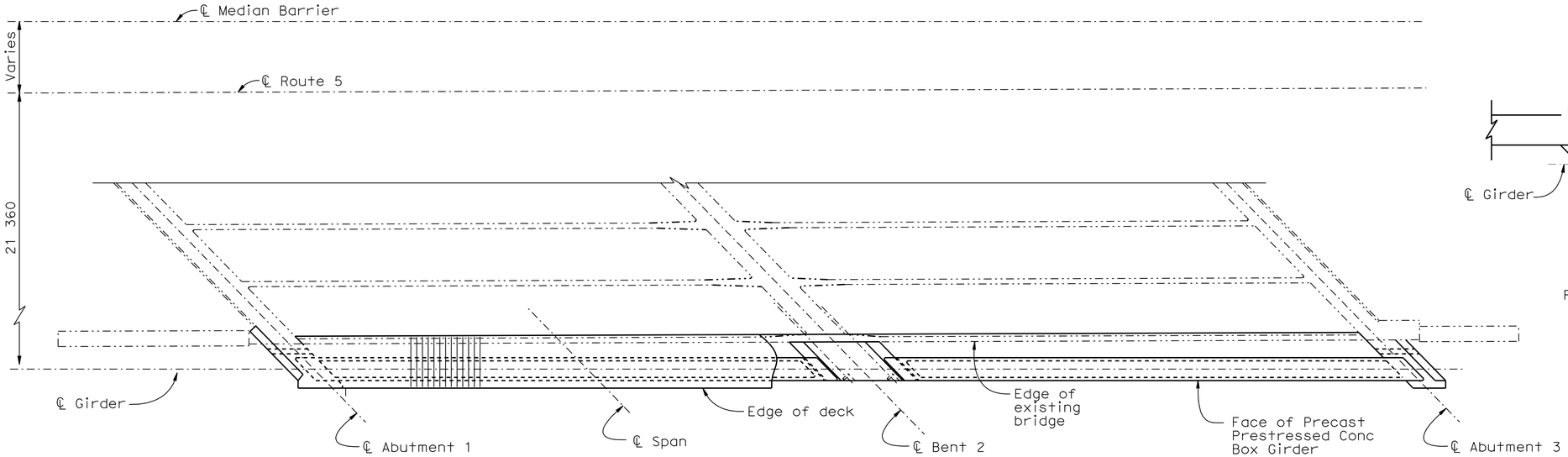

GIRDER LAYOUT - RIGHT WIDENING
1:100

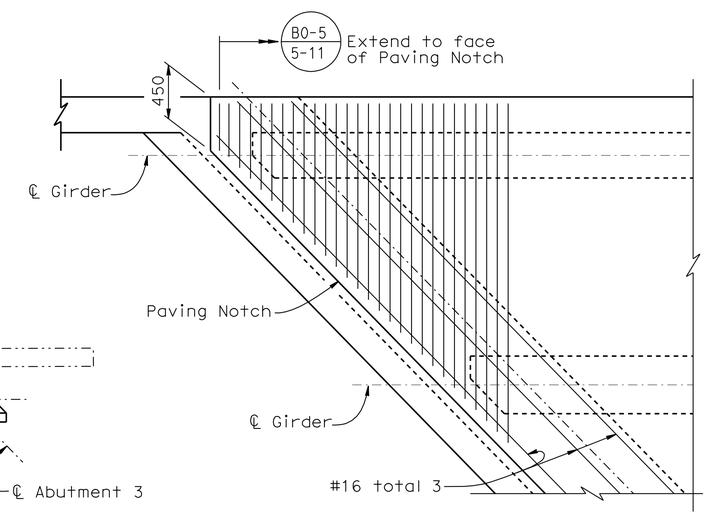

DETAIL C
1:25

NOTE:
THE CONTRACTOR SHALL VERIFY ALL CONTROLLING FIELD DIMENSIONS BEFORE ORDERING OR FABRICATING ANY MATERIAL.

Caltrans Metric

ALL DIMENSIONS ARE IN MILLIMETERS UNLESS OTHERWISE SHOWN

ORIGINAL SCALE IN MILLIMETERS FOR REDUCED PLANS 0 10 20 30 40 50 60 70 80 90 100

	BY	CHECKED
DESIGN	M. Friedheim/D. Alvarez	C. Udarbe/T.Bui/RC
DETAILS	D. Pato/BJ/S. Ng	M. Friedheim/D. Alvarez
QUANTITIES	M. Friedheim/R. Corio	M. Moore/A. Tern

STATE OF CALIFORNIA
DEPARTMENT OF TRANSPORTATION

DIVISION OF ENGINEERING SERVICES
STRUCTURE DESIGN
DESIGN BRANCH 6

CU 07
EA 1218V1

BRIDGE NO. 53-1112
KILOMETER POST 52.06

HOLLYWOOD WAY UC (WIDEN)
GIRDER LAYOUT

DISREGARD PRINTS BEARING EARLIER REVISION DATES

REVISION DATES: 3-6-07 | 12-14-07 | 12-18-07 | 12-28-08 | 1-12-09 | 6-19-09 | 7-15-09

SHEET 20 OF 34

FILE => 53-1112-1-gdrlyt.dgn

STRUCTURES DESIGN DETAIL SHEET (METRIC) (REV.03-17-04)

USERNAME => trrrlchf DATE PLOTTED => 03-MAY-2010 TIME PLOTTED => 13:39

DIST	COUNTY	ROUTE	KILOMETER POST TOTAL PROJECT	SHEET No	TOTAL SHEETS
07	LA	5	50.8/58.0	754	869

REGISTERED CIVIL ENGINEER — DATE 6-25-08

5-3-10
PLANS APPROVAL DATE

REGISTERED PROFESSIONAL ENGINEER — F. H. HOFFMAN — No. C46401 — Exp. 3-31-11 — CIVIL — STATE OF CALIFORNIA

The State of California or its officers or agents shall not be responsible for the accuracy or completeness of electronic copies of this plan sheet.

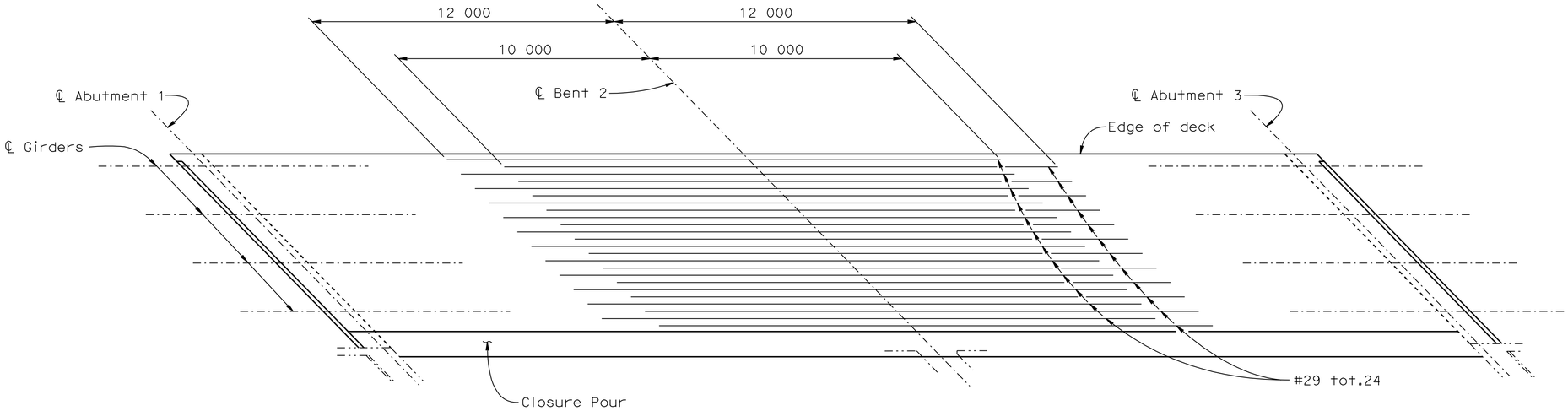

TOP REINFORCEMENT - LEFT WIDENING

1:100

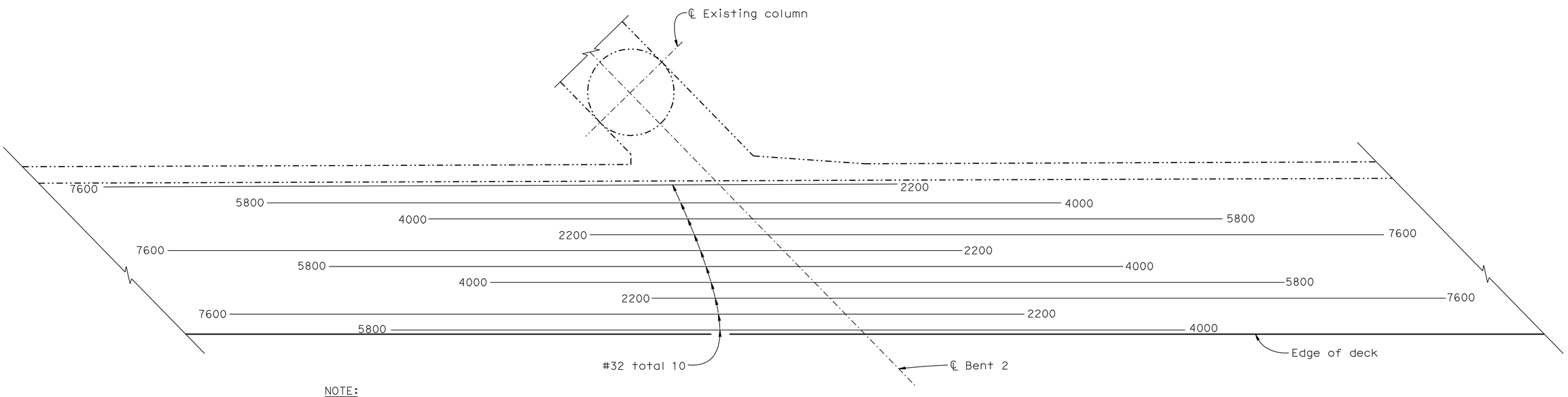

NOTE:

Numbers at ends of bars indicate distance in millimeters from ℄ of Bent.

TOP REINFORCEMENT - RIGHT WIDENING

1:25

Caltrans Metric

ALL DIMENSIONS ARE IN MILLIMETERS UNLESS OTHERWISE SHOWN

ORIGINAL SCALE IN MILLIMETERS FOR REDUCED PLANS 0 10 20 30 40 50 60 70 80 90 100

	BY	CHECKED
DESIGN	M. Friedheim/D. Alvarez	C. Udarbe/T. Bui/RC
DETAILS	D. Pato/BJ/S. Ng	M. Friedheim/D. Alvarez
QUANTITIES	M. Friedheim/R. Coria	M. Moore/A. Tern

STATE OF CALIFORNIA
DEPARTMENT OF TRANSPORTATION

DIVISION OF ENGINEERING SERVICES
STRUCTURE DESIGN
DESIGN BRANCH 6

CU 07
EA 1218V1

BRIDGE NO. 53-1112
KILOMETER POST 52.06

HOLLYWOOD WAY UC (WIDEN)
DECK REINFORCEMENT

DISREGARD PRINTS BEARING EARLIER REVISION DATES → 8-22-07 12-3-07 7-15-09

REVISION DATES

SHEET 21 OF 34

FILE => 53-1112-1-gdrref.dgn

STRUCTURES DESIGN DETAIL SHEET (METRIC) (REV.03-17-04)

USERNAME => trrright DATE PLOTTED => 03-MAY-2010 TIME PLOTTED => 13:33

DIST	COUNTY	ROUTE	KILOMETER POST TOTAL PROJECT	SHEET No	TOTAL SHEETS
07	LA	5	50.8/58.0	755	869

REGISTERED CIVIL ENGINEER 6-25-08 DATE

5-3-10
PLANS APPROVAL DATE

REGISTERED PROFESSIONAL ENGINEER F. H. HOFFMAN No. C46401 Exp. 3-31-11 CIVIL STATE OF CALIFORNIA

The State of California or its officers or agents shall not be responsible for the accuracy or completeness of electronic copies of this plan sheet.

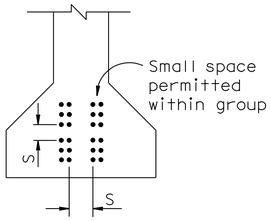

CLEARANCES FOR PRETENSIONED STRANDS

No scale

1. Strands may be bundled in groups consisting of 3 vertically 2 horizontally, and separated at the ends.
2. The min distance "S" between groups or individual strands is 40 mm for 9.5 mm strands, 45 mm for 11 and 13 mm strands and 50 mm for 15 mm strands.
3. "S" is measured between centers of adjacent strands.
4. Approval of Engineer is required for deviation.

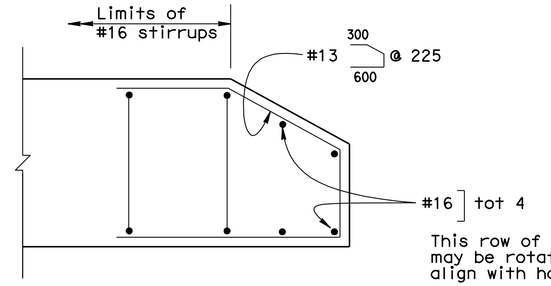

GIRDER END REINFORCEMENT

No scale

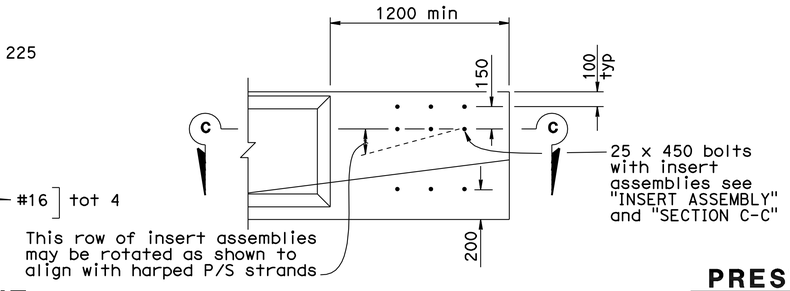

GIRDER END DETAIL

No scale

PRESTRESSING NOTES

Working force: The force required at center of span after all losses.

Concrete strength: f'_{ci} is at time of initial stressing, f'_c is at 28 days, MPa.

Deflection components: Informational - to be used in setting screed line elevations.

Screed line elevations for deck concrete will be determined by the Engineer.

Contractor may interpolate "P" and "X" values between limits shown, as approved by the Engineer.

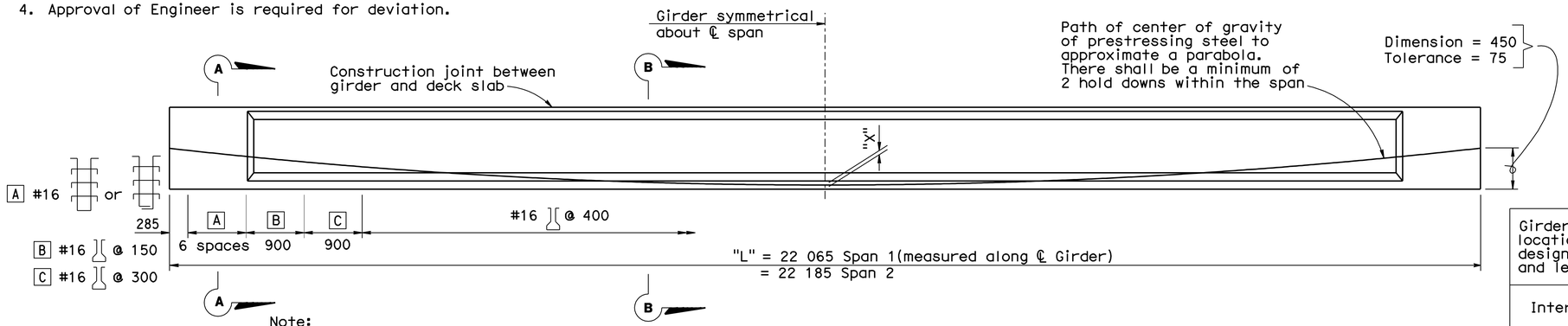

Note:
Details shown are for pretensioned girders. The Contractor may submit details for post-tensioning which shall meet the approval of the Engineer.

ELEVATION INTERIOR GIRDERS

No scale

Girder location or designation and length	P = Working force in (kN) "X"		Concrete Strength f'_{ci}	Concrete Strength f'_c	Deflection Components (mm) ① Deck DL	Deflection Components (mm) ② Rail DL
Interior	100	2400	38 MPa	48 MPa	28	2
	150	2600				

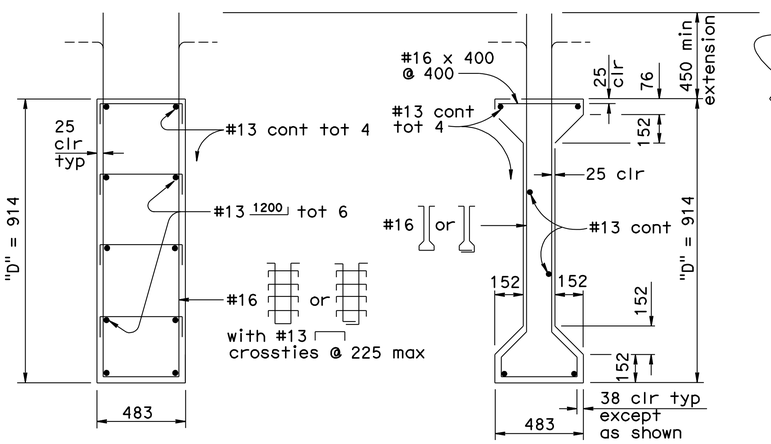

SECTION A-A

No scale

SECTION B-B

No scale

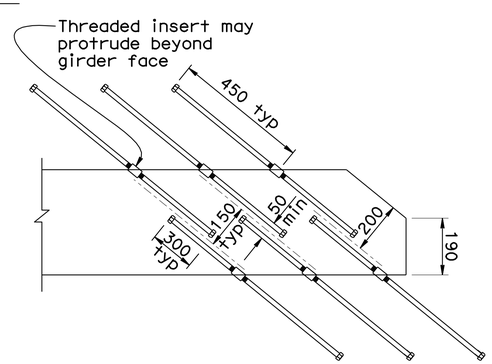

SECTION C-C

No scale

Note:
Alternatively, a single insert assembly may be substituted for two assemblies placed offset as shown above

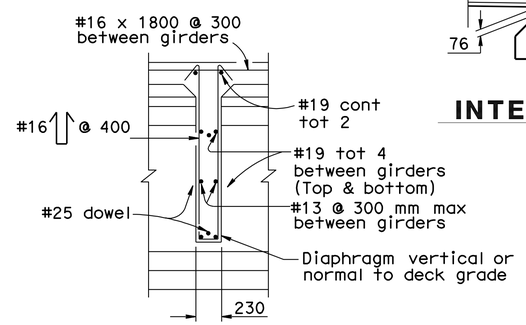

SECTION E-E

No scale

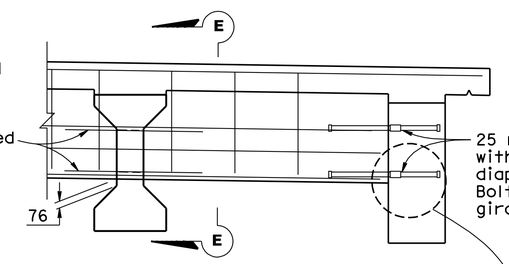

INTERMEDIATE DIAPHRAGM

No scale

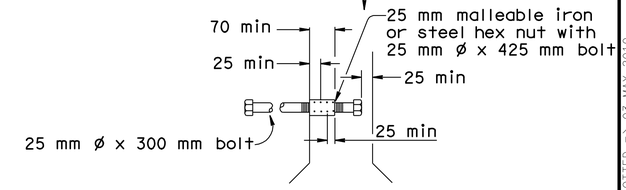

INSERT ASSEMBLY

No scale

Caltrans Metric

	BY	CHECKED
DESIGN	M. Friedheim	C. Udarbe/T. Bui
DETAILS	L. Wang	M. Friedheim
QUANTITIES	M. Friedheim	M. Moore

STATE OF CALIFORNIA DEPARTMENT OF TRANSPORTATION

DIVISION OF ENGINEERING SERVICES STRUCTURE DESIGN DESIGN BRANCH 6

BRIDGE NO. 53-1112
KILOMETER POST 52.06

HOLLYWOOD WAY UC (WIDEN)
PRESTRESSED I GIRDER NO. 1

ALL DIMENSIONS ARE IN MILLIMETERS UNLESS OTHERWISE SHOWN

ORIGINAL SCALE IN MILLIMETERS FOR REDUCED PLANS 0 10 20 30 40 50 60 70 80 90 100

CU 07
EA 1218V1

DISREGARD PRINTS BEARING EARLIER REVISION DATES

REVISION DATES 11-06-07 11-15-07 11-16-07 11-30-07 7-15-09

SHEET 22 OF 34

FILE => 53-1112-q-psigder01.dgn

STRUCTURES DESIGN DETAIL SHEET (METRIC) (REV.03-17-04)

USERNAME => trrright DATE PLOTTED => 03-MAY-2010 TIME PLOTTED => 13:39

DIST	COUNTY	ROUTE	KILOMETER POST TOTAL PROJECT	SHEET No	TOTAL SHEETS
07	LA	5	50.8/58.0	756	869

REGISTERED CIVIL ENGINEER — DATE 6-25-08

5-3-10
PLANS APPROVAL DATE

REGISTERED PROFESSIONAL ENGINEER — F. H. HOFFMAN — No. C46401 — Exp. 3-31-11 — CIVIL — STATE OF CALIFORNIA

The State of California or its officers or agents shall not be responsible for the accuracy or completeness of electronic copies of this plan sheet.

Girder location or designation and length	P = Working force in (kN) "X"		Concrete Strength f'_{ci}	f'_c	Deflection Components (mm) ① Deck DL	② Rail DL
Exterior	75	2150	38 MPa	48 MPa	16	3
	130	2400				

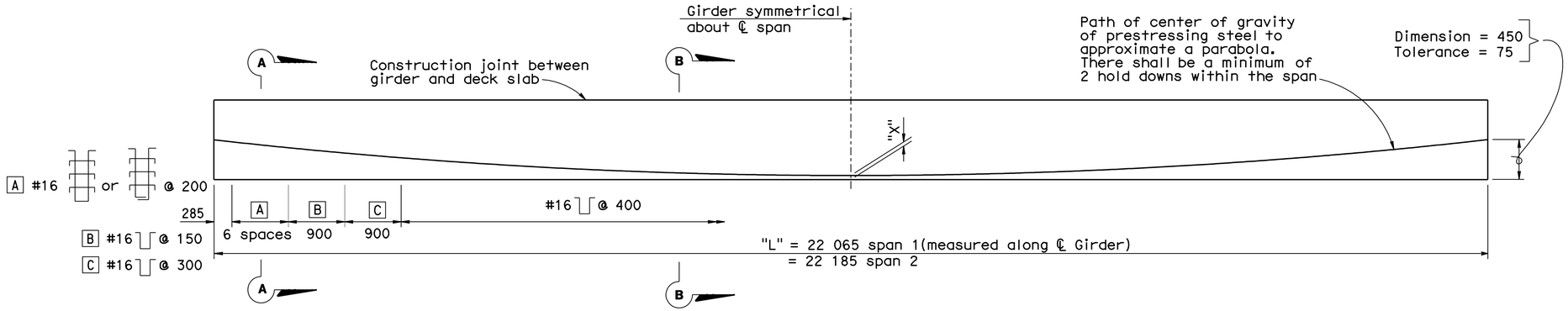

Note:
Details shown are for pretensioned girders. The Contractor may submit details for post-tensioning which shall meet the approval of the Engineer.

ELEVATION EXTERIOR GIRDER
No scale

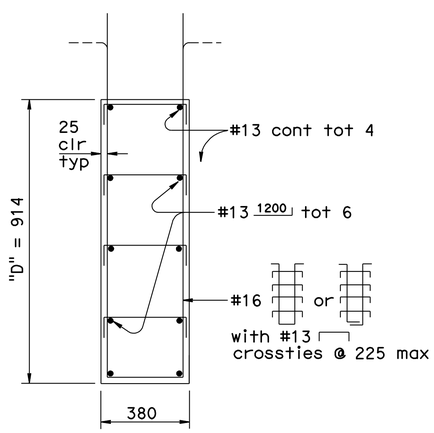

SECTION A-A
No scale

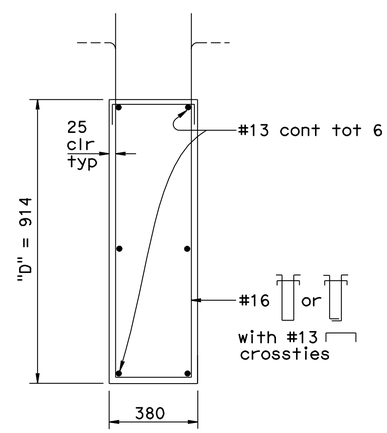

SECTION B-B
No scale

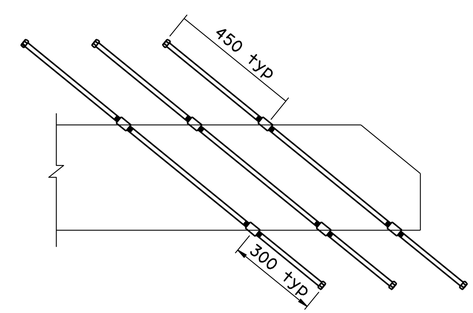

Note:
For details not shown, see "PRESRESSED I GIRDER NO. 1" sheet

SECTION C-C
No scale

Note:
For girder end reinforcement, see "PRESTRESSED I GIRDER NO. 1" sheet

DESIGN	BY M. Friedheim	CHECKED C. Udarbe/T. Bui	
DETAILS	BY L. Wang	CHECKED M. Friedheim	
QUANTITIES	BY M. Friedheim	CHECKED M. Moore	

STATE OF CALIFORNIA
DEPARTMENT OF TRANSPORTATION

DIVISION OF ENGINEERING SERVICES
STRUCTURE DESIGN
DESIGN BRANCH 6

BRIDGE NO. 53-1112
KILOMETER POST 52.06

HOLLYWOOD WAY UC (WIDEN)
PRESTRESSED I GIRDER NO. 2

Caltrans Metric

ALL DIMENSIONS ARE IN MILLIMETERS UNLESS OTHERWISE SHOWN

ORIGINAL SCALE IN MILLIMETERS FOR REDUCED PLANS 0 10 20 30 40 50 60 70 80 90 100

CU 07
EA 1218V1

DISREGARD PRINTS BEARING EARLIER REVISION DATES

REVISION DATES: 11-14-07 11-16-07 11-30-07 06-19-08 07-15-09

SHEET 23 OF 34

FILE => 53-1112-q-psigder02.dgn

STRUCTURES DESIGN DETAIL SHEET (METRIC) (REV.03-17-04)

USERNAME => ttrrlchf DATE PLOTTED => 03-MAY-2010 TIME PLOTTED => 13:39

DIST	COUNTY	ROUTE	KILOMETER POST TOTAL PROJECT	SHEET No	TOTAL SHEETS
07	LA	5	50.8/58.0	757	869

REGISTERED CIVIL ENGINEER 6-25-08 DATE

5-3-10
PLANS APPROVAL DATE

REGISTERED PROFESSIONAL ENGINEER F. H. HOFFMAN No. C46401 Exp. 3-31-11 CIVIL STATE OF CALIFORNIA

The State of California or its officers or agents shall not be responsible for the accuracy or completeness of electronic copies of this plan sheet.

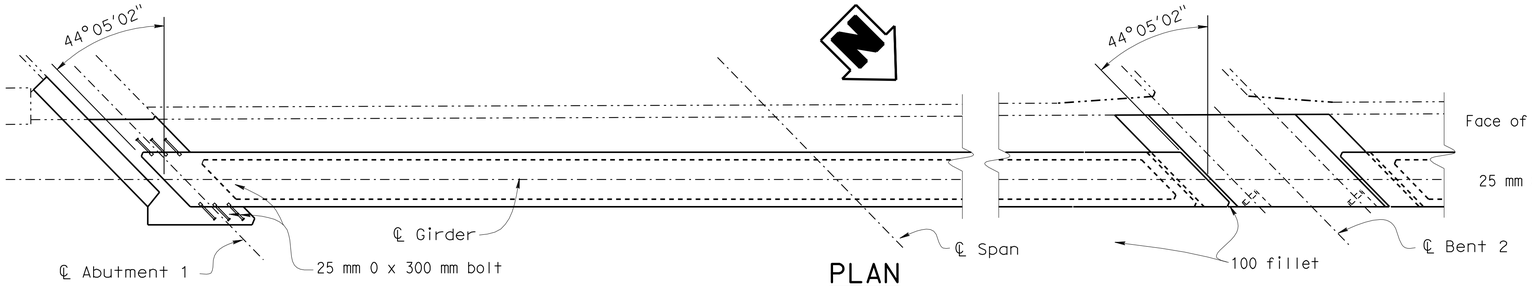

PLAN
1:50

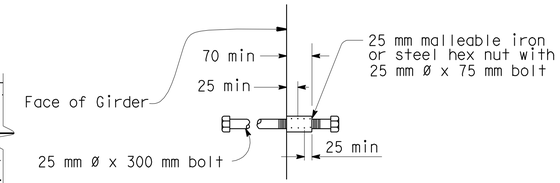

INSERT ASSEMBLY
NO SCALE

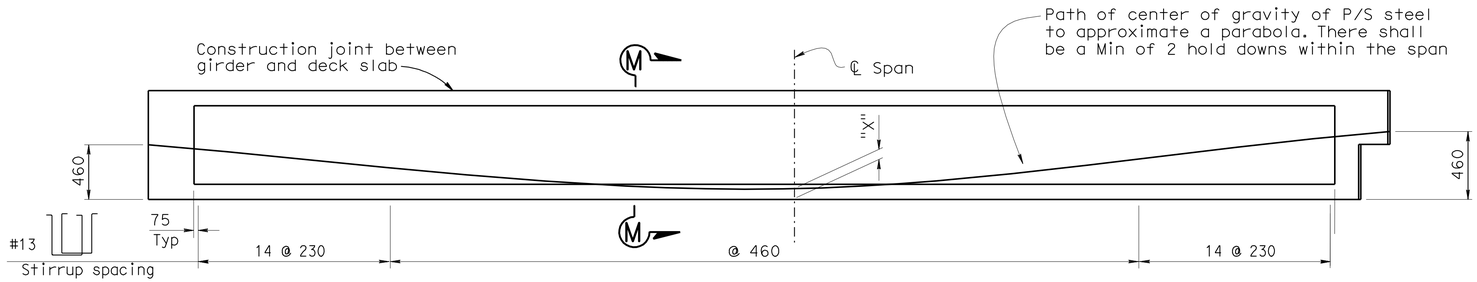

LONGITUDINAL SECTION
Horiz : 1:50
Vert : 1:25

Note:
Details shown are for pretensioned girders. The Contractor may submit details for post-tensioning which shall meet the approval of the Engineer.

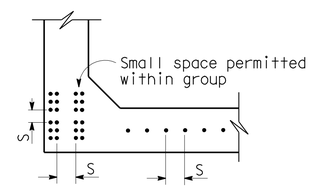

CLEARANCES FOR PRETENSIONED STRANDS

1. Strands may be bundled in groups consisting of 3 vertically 2 horizontally, and separated at the ends.
2. The min distance "S" between groups or individual strands is 45 mm for 13 mm strands and 50 mm for 15 mm strands.
3. "S" is measured between centers of adjacent strands.
4. Approval of Engineer is required for deviation.

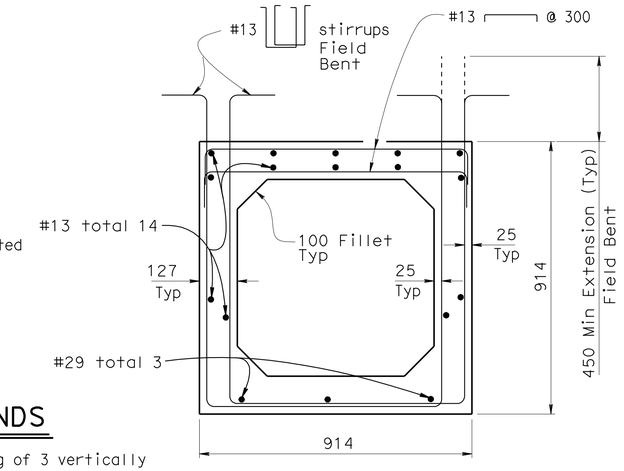

SECTION M-M
1:10

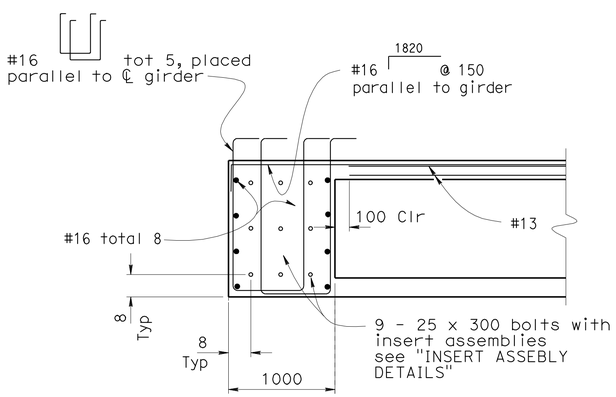

GIRDER END DIAPHRAGM (ABUTMENT 1 & 3)
1:20

NOTE:
THE CONTRACTOR SHALL VERIFY ALL CONTROLLING FIELD DIMENSIONS BEFORE ORDERING OR FABRICATING ANY MATERIAL.

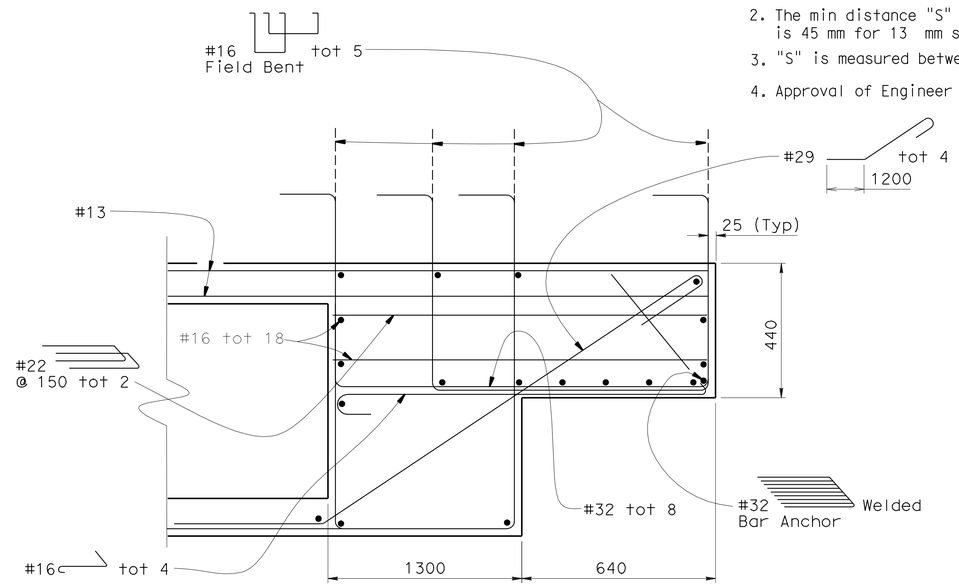

GIRDER END NOTCHED (BENT 2)
1:10

PRESTRESSING NOTES

Working force : The force required at center of span after all losses.
Concrete strength : f'_{ci} is at time of initial stressing,
f'_c is at 28 days, MPa.
Deflection components : Informational - to be used in setting screed line elevations.

Screed line elevations for deck concrete will be determined by the Engineer.

Contractor may interpolate "P" and "X" values between limits shown, as approved by the Engineer.

Girder location or designation and length	P = Working force in (kN)		Concrete Strength		Deflection Components (mm)	
	"X"		f'_{ci}	f'_c	(1) Deck DL	(2) Rail DL
SPAN 1 20.81 m	100	2400	28.0 MPa	45.0 MPa	14	3
	150	2600				
SPAN 2 21.12 m	100	2400	28.0 MPa	45.0 MPa	14	3
	150	2600				

Caltrans Metric

	BY	CHECKED
DESIGN	D. Alvarez	R. Coria
DETAILS	Bruno Jenko	R. Coria
QUANTITIES	X. Chen	H.Perez

STATE OF CALIFORNIA
DEPARTMENT OF TRANSPORTATION

DIVISION OF ENGINEERING SERVICES
STRUCTURE DESIGN
DESIGN BRANCH 6

BRIDGE NO. 53-1112
KILOMETER POST 52.06

HOLLYWOOD WAY UC (WIDEN)
PRESTRESSED BOX GIRDER

ALL DIMENSIONS ARE IN MILLIMETERS UNLESS OTHERWISE SHOWN

ORIGINAL SCALE IN MILLIMETERS FOR REDUCED PLANS 0 10 20 30 40 50 60 70 80 90 100

CU 07
EA 1218V1

DISREGARD PRINTS BEARING EARLIER REVISION DATES
REVISION DATES: 1-28-08 1-29-08 2-28-08 03-31-08 07-15-09

SHEET 24 OF 34

FILE => 53-1112-q-zpsboxge.dgn

STRUCTURES DESIGN DETAIL SHEET (METRIC) (REV.03-17-04)

USERNAME => trrichf DATE PLOTTED => 03-MAY-2010 TIME PLOTTED => 13:40

DIST	COUNTY	ROUTE	KILOMETER POST TOTAL PROJECT	SHEET No	TOTAL SHEETS
07	LA	5	50.8/58.0	758	869

REGISTERED CIVIL ENGINEER — DATE 6-25-08

5-3-10
PLANS APPROVAL DATE

REGISTERED PROFESSIONAL ENGINEER — F. H. HOFFMAN — No. C46401 — Exp. 3-31-11 — CIVIL — STATE OF CALIFORNIA

The State of California or its officers or agents shall not be responsible for the accuracy or completeness of electronic copies of this plan sheet.

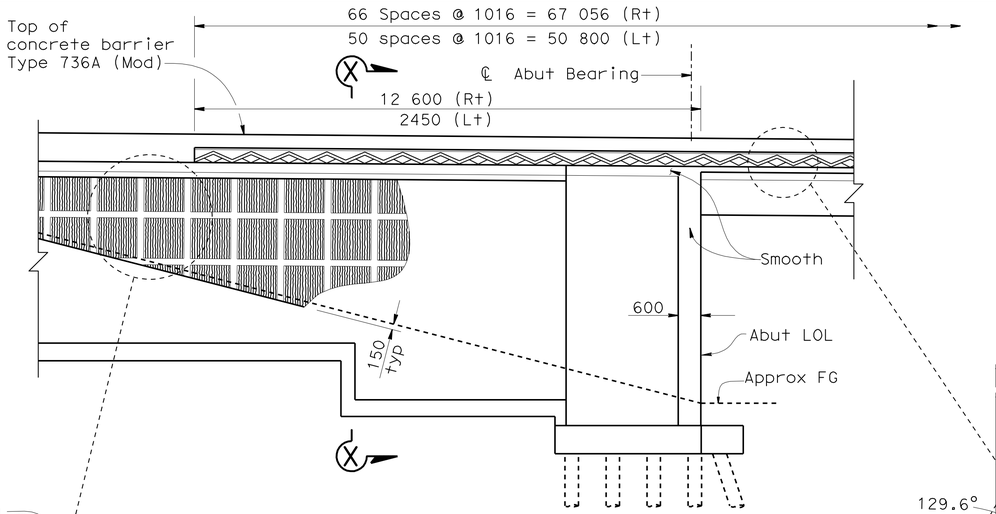

Abut 1 right shown, others similar.

ELEVATION
1:80

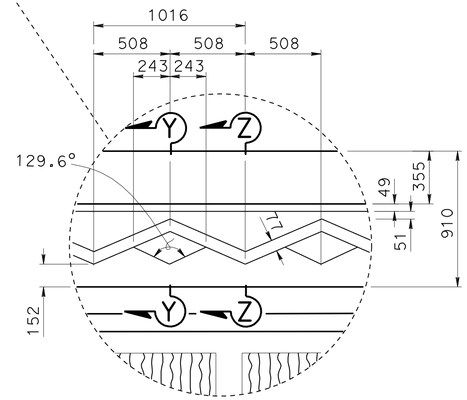

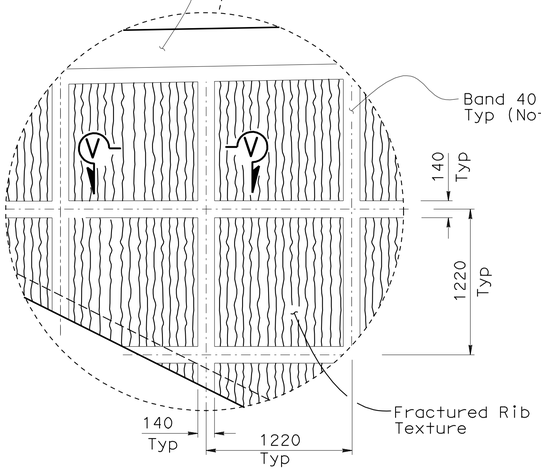

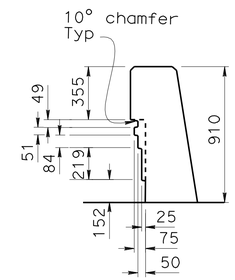

SECTION Y-Y
1:20

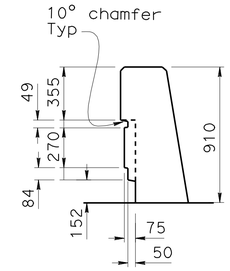

SECTION Z-Z
1:20

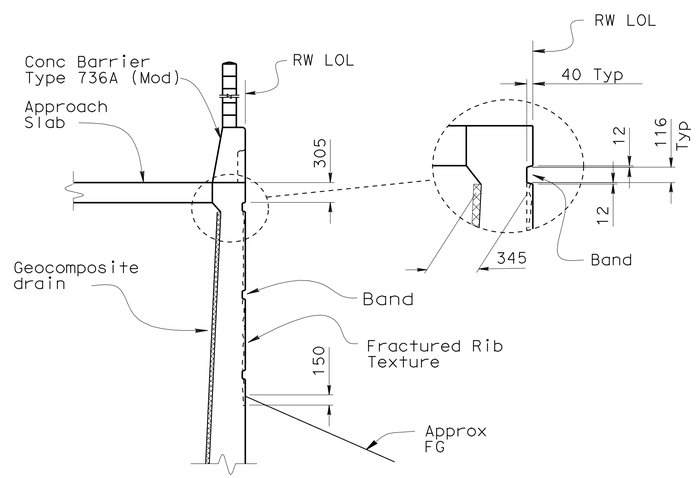

SECTION X-X
1:40

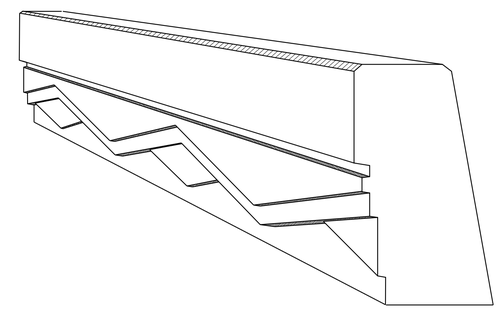

PERSPECTIVE VIEW
No scale

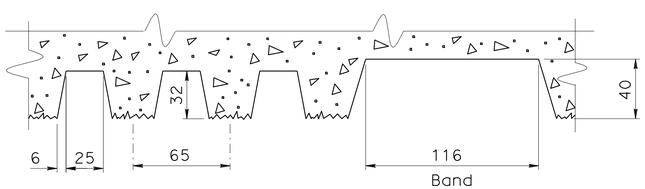

SECTION V-V
FRACTURED RIB TEXTURE & BAND
1:50

NOTE:
THE CONTRACTOR SHALL VERIFY ALL CONTROLLING FIELD DIMENSIONS BEFORE ORDERING OR FABRICATING ANY MATERIAL.

DESIGN	BY Xiaodong Chen	CHECKED M. Friedheim
DETAILS	BY L. Wang	CHECKED M. Friedheim
QUANTITIES	BY M.Friedheim/U.Inyaug	CHECKED M. Moore/E. Hall

STATE OF CALIFORNIA
DEPARTMENT OF TRANSPORTATION

DIVISION OF ENGINEERING SERVICES
STRUCTURE DESIGN
DESIGN BRANCH 6

BRIDGE NO. 53-1112
KILOMETER POST 52.06

HOLLYWOOD WAY UC (WIDEN)
ARCHITECTURAL DETAILS

ALL DIMENSIONS ARE IN MILLIMETERS UNLESS OTHERWISE SHOWN

ORIGINAL SCALE IN MILLIMETERS FOR REDUCED PLANS 0 10 20 30 40 50 60 70 80 90 100

CU 07
EA 1218V1

DISREGARD PRINTS BEARING EARLIER REVISION DATES 12-18-07 6-20-08 7-15-09

REVISION DATES

SHEET 25 OF 34

FILE => 53-1112-r-arch-det-new.dgn

STRUCTURES DESIGN DETAIL SHEET (METRIC) (REV.03-17-04)

USERNAME => trrichf DATE PLOTTED => 03-MAY-2010 TIME PLOTTED => 13:40

DIST	COUNTY	ROUTE	KILOMETER POST TOTAL PROJECT	SHEET No	TOTAL SHEETS
07	LA	5	50.8/58.0	759	869

Fritz Hoffman 6-25-08
REGISTERED CIVIL ENGINEER DATE

5-3-10
PLANS APPROVAL DATE

REGISTERED PROFESSIONAL ENGINEER F. H. HOFFMAN No. C46401 Exp. 3-31-11 CIVIL STATE OF CALIFORNIA

The State of California or its officers or agents shall not be responsible for the accuracy or completeness of electronic copies of this plan sheet.

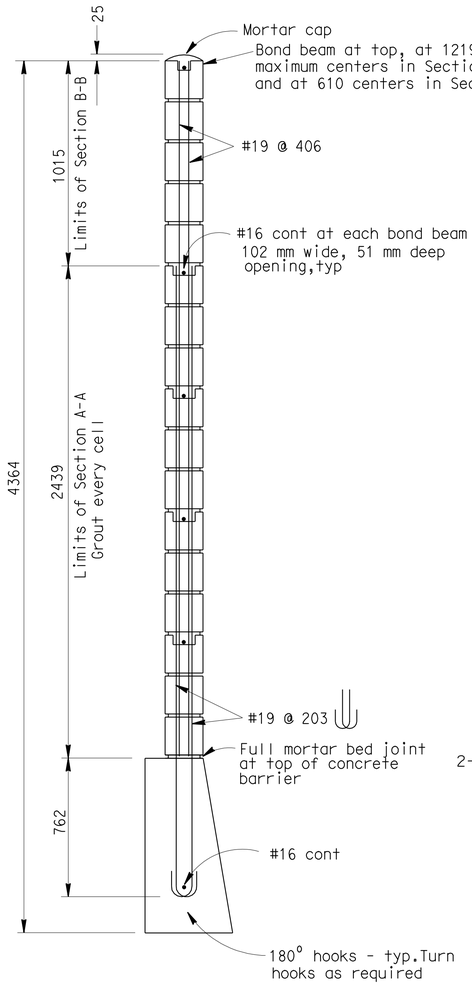

SOUND WALL SECTION

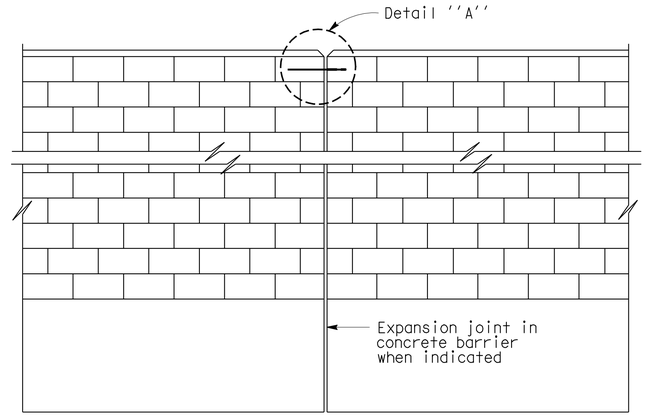

ALIGNMENT KEY DETAIL

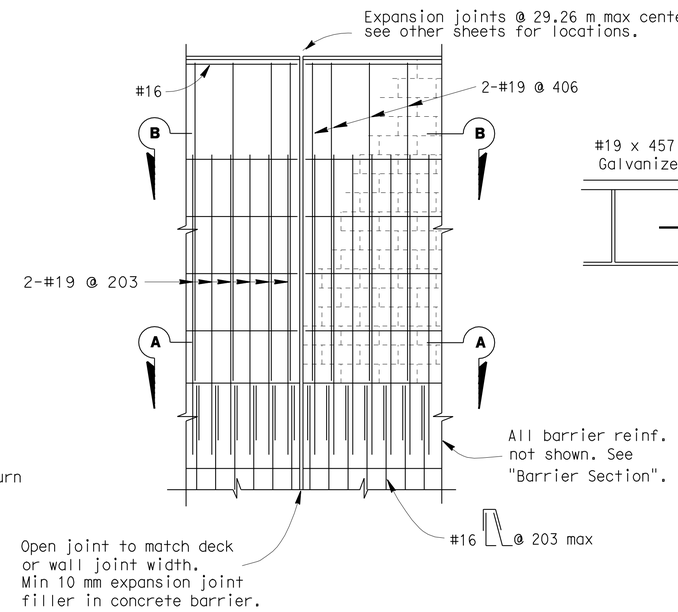

DECK AND WALL JOINT ELEVATION

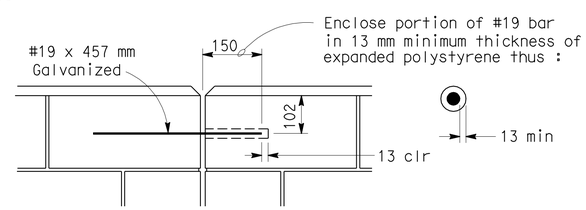

DETAIL A

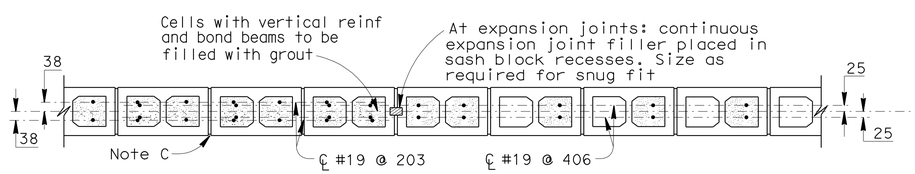

SECTION A-A

SECTION B-B

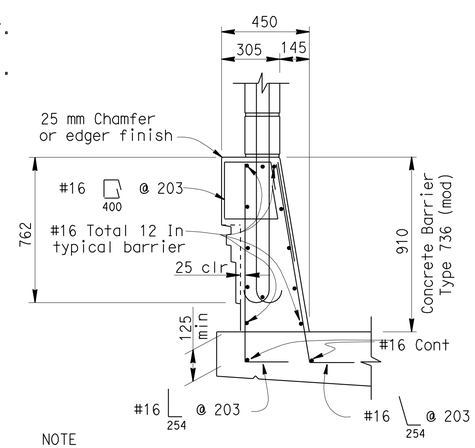

NOTE

For dimensions and reinforcement not shown, see Std. Plan B11-56

BARRIER SECTION

GENERAL NOTES

Note A: For type of block, type of block bond and joint finish, see other sheets.

Note B: When blocks are laid in stacked bond, ladder type, galvanized joint reinforcement shall be provided. A minimum of 2 - 3.76 mm wires continuous at 1219 maximum to be used. Locate reinforcement in joints that are at the approximate midpoint between bond beams.

Note C: Horizontal joints shall be tooled concave or may be weathered. Vertical joints shall be tooled concave or may be raked.

Note D: All masonry to be high strength unless otherwise noted.

Note E: Class 2 concrete to be used for barrier.

Note F: Expansion joints in concrete barrier and masonry block to match deck joints and at ends of wing walls.

Note G: Expansion joints in Sound Wall (Masonry Block) shall be at each support, center of span, and at ends of each wingwall.

Note H: For dimesions and reinforcement not shown see "Typical Section" sheet.

DESIGN NOTES

DESIGN

Uniform Building Code,1997 Edition and the Bridge Design Specifications.

DESIGN WIND LOAD

1772 Pa

DESIGN SEISMIC LOAD

2.0 Dead load

REINFORCED CONCRETE

f'c = 22.41 Mpa
fy = 413.7 MPa

CONCRETE MASONRY

HIGH STRENGTH

f'm = 17.24 MPa
fy = 413.7 MPa

LOAD FACTORS AND LOAD COMBINATIONS

Load Factor Design (LFD)

Group A: βD +1.7 E + 1.7 SC
Group B: βD +1.7 E + 1.3 W
Group C: βD +1.3 E + 1.0 EQE
Group D: βD +1.3 E + 1.0 EQD
Group E: βD +1.1 E + 0.85 (EQE + EQD)

Where : β = 0.9 or 1.2, whichever controls in design
D = Dead load
E = Lateral earth pressure
SC = Live load surcharge
W = Wind load
EQD = Seismic dead load
EQE = Seismic earth load

STRENGTH REDUCTION FACTORS, Ø

Reinforced Concrete :

For flexure ..... Ø = 0.90
For shear ..... Ø = 0.85

Concrete masonry:

For flexure ..... Ø = 0.80
For shear ..... Ø = 0.60

Note 1:

Barrier, Deck and Concrete Masonry are designed by the Strength Design Method.

NO SCALE
ALL DIMENSIONS ARE IN MILLIMETERS UNLESS OTHERWISE SHOWN

Caltrans Metric

NOTE:
THE CONTRACTOR SHALL VERIFY ALL CONTROLLING FIELD DIMENSIONS BEFORE ORDERING OR FABRICATING ANY MATERIAL.

ALL DIMENSIONS ARE IN MILLIMETERS UNLESS OTHERWISE SHOWN

	BY	CHECKED
DESIGN	D.Alvarez	X. Chen
DETAILS	M. Slayton	X. Chen
QUANTITIES	U. Luyang	E. Hall

ORIGINAL SCALE IN MILLIMETERS FOR REDUCED PLANS 0 10 20 30 40 50 60 70 80 90 100

STATE OF CALIFORNIA
DEPARTMENT OF TRANSPORTATION

DIVISION OF ENGINEERING SERVICES
STRUCTURE DESIGN
DESIGN BRANCH 6

CU 07
EA 1218V1

BRIDGE NO. 53-1112
KILOMETER POST 52.06

HOLLYWOOD WAY UC (WIDEN)

SOUNDWALL - MASONRY BLOCK ON BRIDGE

DISREGARD PRINTS BEARING EARLIER REVISION DATES 10/31/08 7-15-09

REVISION DATES

SHEET 26 OF 34

FILE => 53-1112-s-swdet1.dgn

STRUCTURES DESIGN DETAIL SHEET (METRIC) (REV.03-17-04)

USERNAME => trrichf DATE PLOTTED => 03-MAY-2010 TIME PLOTTED => 13:40

DIST.	COUNTY	ROUTE	KILOMETER POST TOTAL PROJECT	SHEET NO.	TOTAL SHEETS
07	LA	5	50.8/58.0	760	869

REGISTERED ENGINEER - CIVIL 6-25-08

5-3-10
PLANS APPROVAL DATE

REGISTERED PROFESSIONAL ENGINEER F. H. HOFFMAN No. C46401 Exp. 3-31-11 CIVIL STATE OF CALIFORNIA

The State of California or its officers or agents shall not be responsible for the accuracy or completeness of electronic copies of this plan sheet.

Caltrans Metric

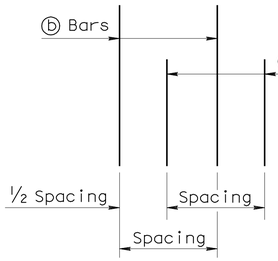

DETAIL B

No Scale

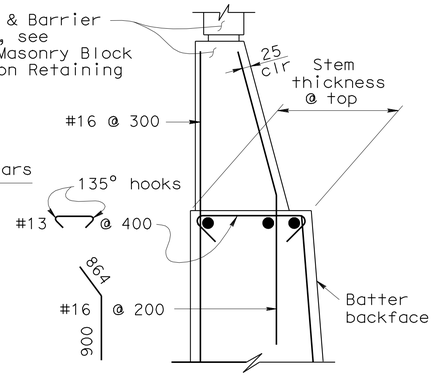

DETAIL A WITHOUT HAUNCH

No Scale

GENERAL NOTES

1. For soundwall and retaining wall architectural finish or texture, see details elsewhere in project plans.
2. For details not shown and drainage notes, see B3-8
3. Footing cover, 450 mm minimum.
4. Limit of no splicing rebars = H/3
5. Increasing stem thickness not permitted:

✳ ⓐ & ⓑ bars are bundled together.

✳✳ Alternate ⓐ & ⓑ bars are shown in "Detail B".

Cont = Continuous.

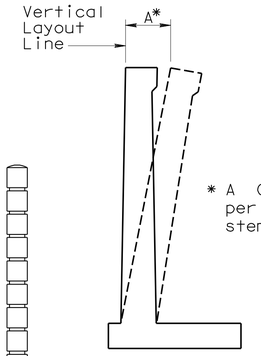

* A Offset = 12 mm per 3000 mm of wall stem height

WALL OFFSET

No Scale

Values for offsetting forms to be determined by the Engineer.

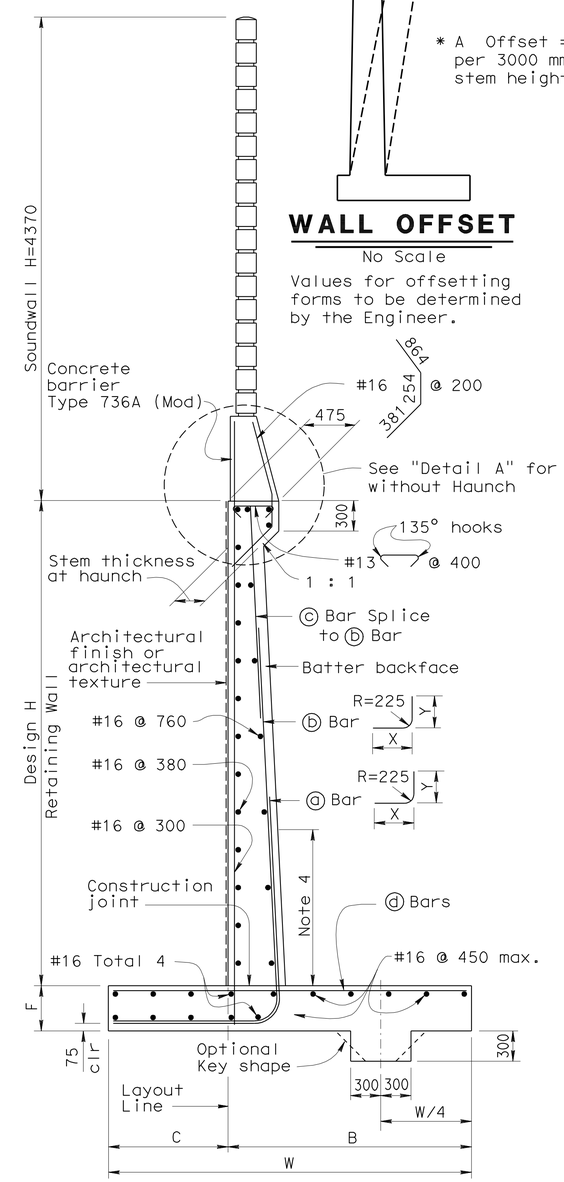

SPREAD FOOTING SECTION

No Scale

DESIGN DATA

DESIGN: Load Factor Design (LFD)

CONCRETE: Reinforced Concrete, f'c = 25 MPa
fy = 420 MPa

LOADING CASE:
Level ground with 11.5 KPa Live Load Surcharge and 4875 mm Soundwall

Seismic Load	= 0.3 Dead Load
Wind Load	= 1435 Pa
Dead Load of Soundwall	= 20.6 kN/m
Dead Load of Barrier	= 5.4 kN/m

SEISMIC LOAD: SOIL
Kh = 0.3g
Kv = 0.0
Kae : Mononobe-Okabe Method

SOIL: $\emptyset = 34°$ $\gamma = 19\ kN/m^3$
Equivalent fluid pressure:
= 5.6 KPa/m for determination of toe pressure
= 4.2 KPa/m for determination of heel pressure

LOAD COMBINATIONS:

EXTERNAL STABILITY: (For Overturning, Sliding)

Group 1: D + E + SC
Group 2 : D + E + SC + W
Group 3 : D + PYM

INTERNAL STABILITY (LFD): (For Member Design)

Group A : βD + 1.7E + 1.7SC
Group B : βD + 1.7E + 1.3W
Group C (stem) : 1.0D + 1.0E + 1.0EQD + 1.0EQE
Group C (footing) : D + PYM

Where : β = 1.0 or 1.3 whichever controls design
D = Dead Load
E = Lateral Earth Pressure
SC = Live Load Surcharge
W = Wind Load
EQD = Seismic Dead Load
EQE = Seismic Lateral Earth Pressure
PYM = Probable Yield Moment (1.3 x Nominal Yield Moment of Stem)

ALL DIMENSIONS ARE IN MILLIMETERS UNLESS OTHERWISE SHOWN

ALTERNATIVE B: (VARIABLE TOP OF WALL THICKNESS) TABLE OF REINFORCING STEEL DIMENSIONS AND DATA

	Stem With Haunch						Stem Without Haunch						
Design H	2400	3000	3600	4200	4800	5500	6100	6700	7300	7900	8500	9100	9800
W	2450	2600	2800	3100	3450	3950	4200	4900	5000	5650	6100	6250	6650
C	850	850	900	1050	1150	1300	1400	1600	1650	1900	2050	2050	2300
B	1600	1750	1900	2050	2300	2650	2800	3300	3350	3750	4050	4200	4350
F Spread Footing	380	380	380	380	450	450	550	600	700	850	900	1000	1050
Batter	0	0	0	0	0	0	0	0	0	100:2	100:4	100:4	100:4
Stem Thickness @ Top							475	610	610	610	610	610	610
Stem Thickness @ Haunch	305	305	305	305	380	380							
ⓐ Bars			#19@300✳✳	#16@150✳	#29@450✳✳	#29@300✳✳	#29@300✳✳	#29@300✳✳	#22@150✳	#22@150✳	#22@150✳	#29@225✳	#36@300✳✳
X			Cont	Cont	Cont	Cont	Cont	Cont	Cont	Cont	Cont	Cont	Cont
Y			1700	1700	2600	2600	2600	2600	2900	3350	3800	4100	4400
ⓑ Bars	#16@225	#19@225	#19@300✳✳	#16@150✳	#29@450✳✳	#29@300✳✳	#29@300✳✳	#29@300✳✳	#22@150✳	#22@150✳	#22@150✳	#29@225✳	#36@300✳✳
X	Cont	Cont	Cont	Cont	Cont	Cont	Cont	Cont	1700	1850	2300	2300	2450
Y	Cont	Cont	Cont	Cont	3500	3500	3650	3650	5350	6100	6550	7300	7300
ⓒ Bars					#22@450	#22@300	#22@300	#22@300	#19@300	#19@300	#19@300	#22@450	#22@300
ⓓ Bars	#16@300	#16@225	#16@225	#19@225	#19@225	#29@300	#29@300	#22@150	#19@150	#22@150	#22@150	#29@225	#29@225
Ultimate Bearing Capacity Req'd Kpa	265	310	350	365	430	430	510	505	585	605	640	740	770

1 - Removed Table

STANDARD DRAWING

RELEASE DATE 2/25/03	DESIGN BY Madon Sah	CHECKED Overcomer Hor	RELEASED BY Roberto Ercelle OFFICE CHIEF
FILE NO. xs14-220	DETAILS BY A R Dudsak	CHECKED J C Moese	
	SUBMITTED BY Overcomer Hor	DRAWING DATE 2/94	

STATE OF CALIFORNIA DEPARTMENT OF TRANSPORTATION

DIVISION OF ENGINEERING SERVICES

BRIDGE NO. 53-1112
KILOMETER POST 52.06

HOLLYWOOD WAY UC (WIDEN)
RETAINING WALL TYPE 1SWB

DS OSD 2147A (METRIC) (REV. X/XX/XX)

ORIGINAL SCALE IN MILLIMETERS FOR REDUCED PLANS 0 10 20 30 40 50 60 70 80 90 100

CU 07
EA 1218V1

DISREGARD PRINTS BEARING EARLIER REVISION DATES

REVISION DATES (PRELIMINARY STAGE ONLY) 1-17-08 6-20-08 7-15-09

SHEET 27 OF 34

USERNAME =>53-1112-u-rtwswt1swb.dgn

DATE PLOTTED -> 03-MAY-2010 TIME PLOTTED -> 13:40

trrichf

DIST.	COUNTY	ROUTE	KILOMETER POST TOTAL PROJECT	SHEET NO.	TOTAL SHEETS
07	LA	5	50.8/58.0	761	869

Caltrans Metric

Fritz Hoffman 6-25-08
REGISTERED ENGINEER - CIVIL

5-3-10
PLANS APPROVAL DATE

REGISTERED PROFESSIONAL ENGINEER F. H. HOFFMAN No. C46401 Exp. 3-31-11 CIVIL STATE OF CALIFORNIA

The State of California or its officers or agents shall not be responsible for the accuracy or completeness of electronic copies of this plan sheet.

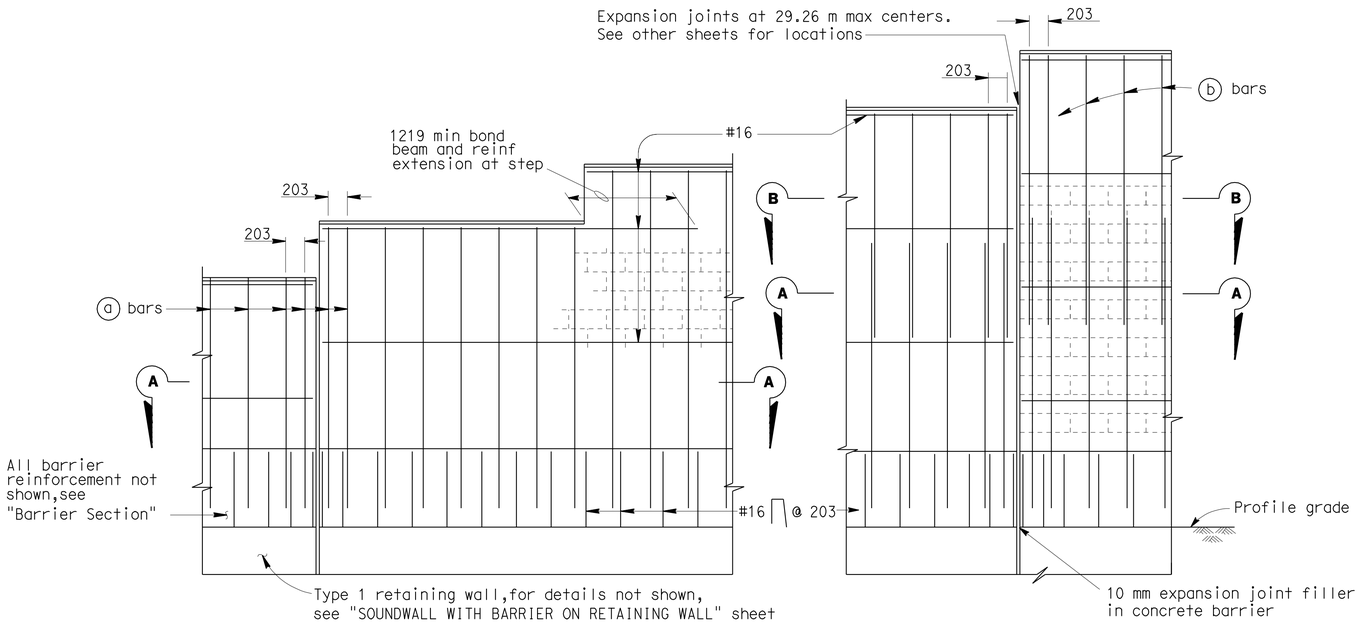

PART ELEVATIONS

SOUNDWALL REINFORCEMENT TABLE

Maximum H	(a) bars @ 406 max	(b) bars @ 406 max	"y"	f'm (MPa)	Compressive Strength of CMU (MPa)	Maximum H
1930	#13	———	———	10.34	13.1	1930
2540	#13	———	———	10.34	13.1	2540
3150	#13	———	———	10.34	13.1	3150
3759	#16	#13	1524	10.34	13.1	3759
4369	#19	#13	2134	10.34	13.1	4369
4978	#19	#13	2743	17.24	25.6	4978

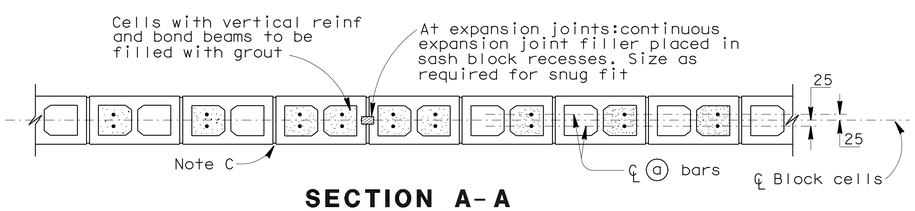

SECTION A-A

For details not shown,see other details

H=1930 THRU H=3150

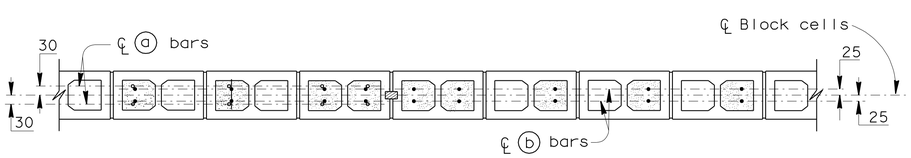

SECTION A-A

SECTION B-B

For details not shown,see other details

H=3759 THRU H=4978

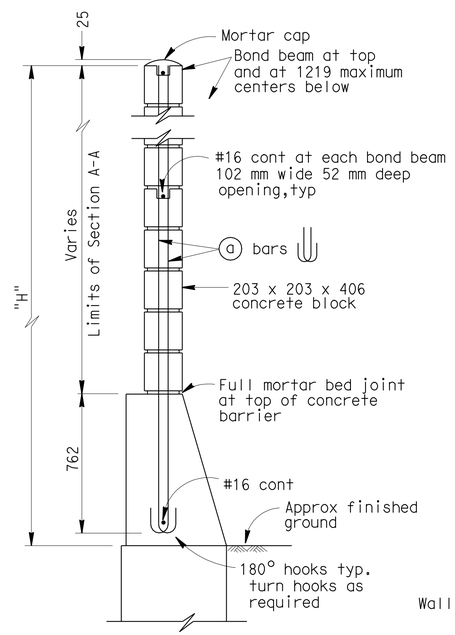

H=1930 THRU H=3150

For details not shown,see H=3759 thru H=4978

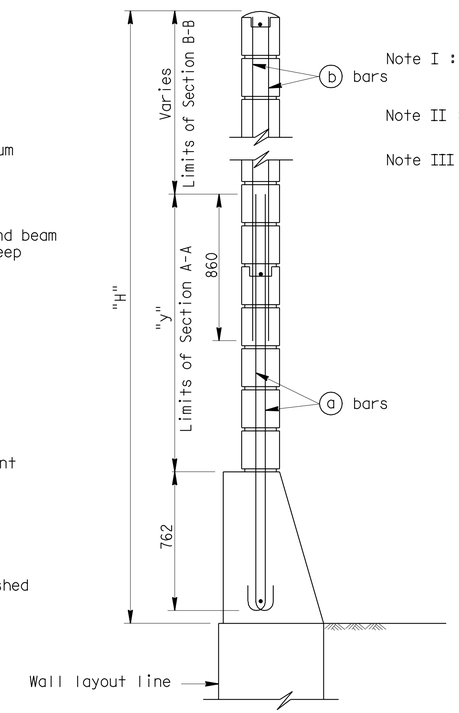

H=3759 THRU H=4978

For details not shown,see H=1930 thru H=3150

TYPICAL SECTIONS

Note I : For details not shown,see "SOUNDWALL MASONRY BLOCK WITH BARRIER ON RETAINING WALL - DETAILS NO.2" sheet.

Note II : Slope ground at traffic side of barrier to drain. Maximum slope ±10%.

Note III: See "SOUNDWALL MASONRY BLOCK - MISCELLANEOUS DETAILS" sheet for other details.

GENERAL NOTES

Note A: For type of block and joint finish, see other sheets.

Note B: When blocks are laid in stacked bond, ladder type, galvanized joint reinforcement shall be provided. A minimum of 2-3.76 mm wire continuous at 1219 mm maximum to be used. Locate reinforcement in joints that are at the approximate midpoint between bond beams.

Note C: Horizontal joints shall be tooled concave or may be weathered.
Vertical joints shall be tooled concave or may be raked.

Note D: For intermediate wall heights that are between the "H's" given. Use the tabular information for the next higher "H".

Note E: Masonry strengths are listed in "SOUNDWALL REINFORCEMENT TABLE".

Note F: Class 2 concrete to be used for the barrier.

NO SCALE

ALL DIMENSIONS ARE IN MILLIMETERS UNLESS OTHERWISE SHOWN

HOLLYWOOD WAY UC (WIDEN)

SOUNDWALL - MASONRY BLOCK WITH BARRIER ON RETAINING WALL

DETAILS NO. 1

STANDARD DRAWING					
RELEASE DATE 7/3/03	DESIGN	BY D. DUNRUD	CHECKED W.C. WALKER	RELEASED BY Roberto Lovalle OFFICE CHIEF
FILE NO. xs15-130-1	DETAILS	BY R. YEE	CHECKED W.C. WALKER	
	SUBMITTED	BY D. DUNRUD	DRAWING DATE 11/94	

DS OSD 2147A (METRIC) (REV. 2/25/97)

STATE OF CALIFORNIA DEPARTMENT OF TRANSPORTATION

DIVISION OF ENGINEERING SERVICES

BRIDGE NO. 53-1112
KILOMETER POST 52.06

ORIGINAL SCALE IN MILLIMETERS FOR REDUCED PLANS 0 10 20 30 40 50 60 70 80 90 100

CU 07
EA 1218V1

DISREGARD PRINTS BEARING EARLIER REVISION DATES 10-30-08 7-15-09

REVISION DATES (PRELIMINARY STAGE ONLY)

SHEET 28 OF 34

USERNAME => trrichf

53-1112-v-sow1xs15

DATE PLOTTED => 03-MAY-2010 TIME PLOTTED => 13:41

DIST.	COUNTY	ROUTE	KILOMETER POST TOTAL PROJECT	SHEET NO.	TOTAL SHEETS
07	LA	5	50.8/58.0	762	869

Caltrans Metric

Fritz Hoffman 6-25-08
REGISTERED ENGINEER - CIVIL

5-3-10
PLANS APPROVAL DATE

REGISTERED PROFESSIONAL ENGINEER F. H. HOFFMAN No. C46401 Exp. 3-31-11 CIVIL STATE OF CALIFORNIA

The State of California or its officers or agents shall not be responsible for the accuracy or completeness of electronic copies of this plan sheet.

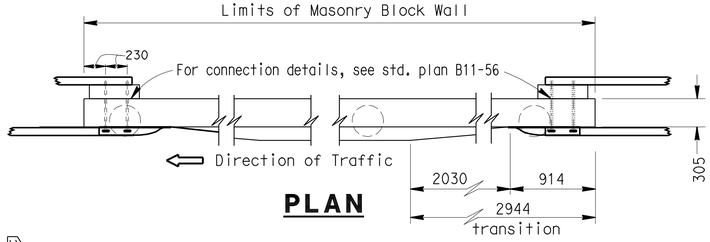

PLAN

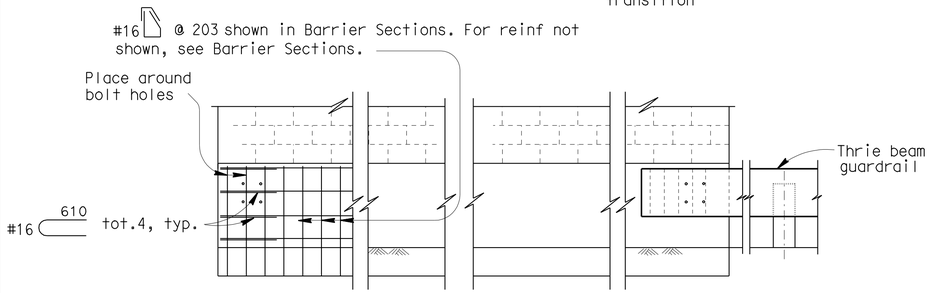

ELEVATION

METAL BEAM GUARDRAIL ANCHORAGE

For details not shown, see std. plan B11-56.

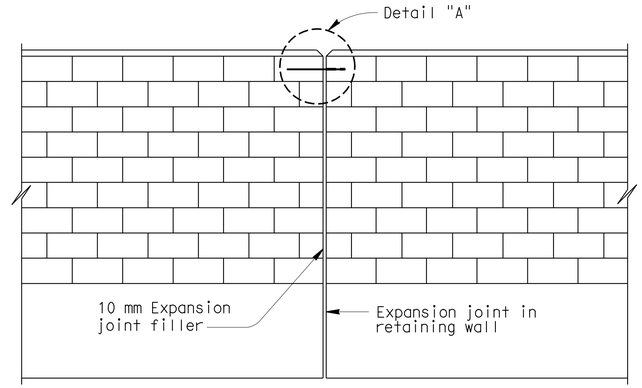

ALIGNMENT KEY DETAIL

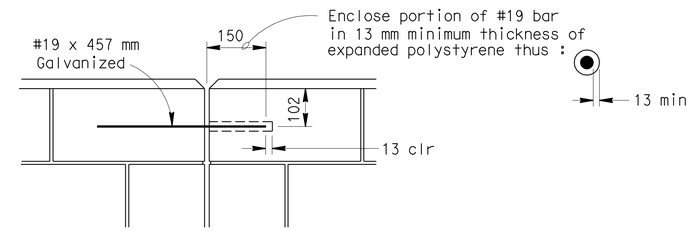

DETAIL A

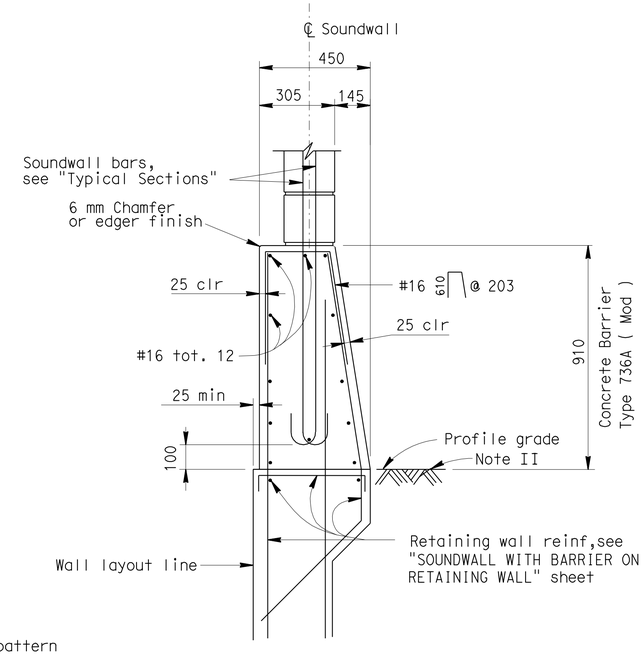

BARRIER SECTION

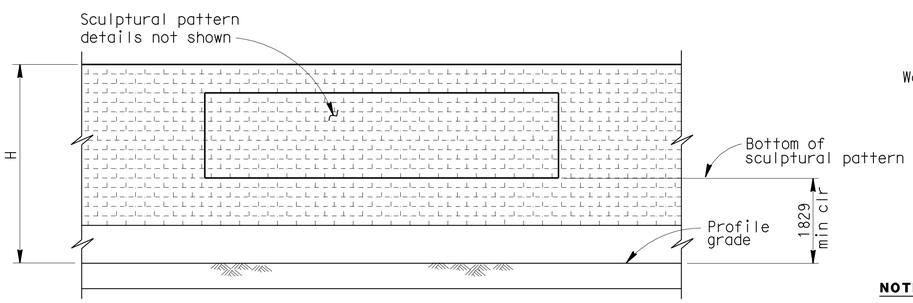

CLEARANCE DETAIL

DESIGN NOTES

DESIGN

Uniform Building Code,1997 Edition and the Bridge Design Specifications.

DESIGN WIND LOAD

1293 Pa

DESIGN SEISMIC LOAD

0.57 Dead load

REINFORCED CONCRETE

f'c = 22.408 Mpa
fy = 413.688 MPa

CONCRETE MASONRY

REGULAR STRENGTH	HIGH STRENGTH	
f'm = 10.34 MPa	f'm = 13.79 MPa	f'm = 17.24 MPa
f_b = 3.41 MPa	f_b = 4.55 MPa	f_b = 5.72 MPa
fs = 165.5 MPa	fs = 165.5 MPa	fs = 165.5 MPa
n = 25.8	n = 19.3	n = 15.5

LOAD FACTORS AND LOAD COMBINATIONS

Working Stress Design (WSD) Percentage of unit stress

Group 1: D + E + SC 100%
Group 2: D + W + SC + E 100%
Group 3: D + 0.71 EQD + E 100%

Where:

D = Dead load
E = Lateral earth pressure
SC = Live load surcharge
W = Wind load
EQD = Seismic dead load

Load Factor Design (LFD)

Group A: βD +1.7 E + 1.7 SC
Group B: βD +1.7 E + 1.3 W
Group C: βD +1.3 E + 1.0 EQE
Group D: βD +1.3 E + 1.0 EQD
Group E: βD +1.1 E + 0.85 (EQE + EQD)

Where : β = 0.9 or 1.2, whichever controls in design
D = Dead load
E = Lateral earth pressure
SC = Live load surcharge
W = Wind load
EQD = Seismic dead load
EQE = Seismic earth load

STRENGTH REDUCTION FACTORS, Ø

Reinforced concrete:
For flexure ---------- Ø=0.90
For shear ---------- Ø=0.85

Concrete masonry:
For flexure ---------- Ø=0.80
For shear ---------- Ø=0.60

Foundations :
See "RETAINING WALL WITH SOUNDWALL" sheets.

NOTES:

I : For details not shown,see "RETAINING WALL WITH SOUNDWALL" sheets.

II : Slope ground at traffic side of barrier to drain. Maximum slope ±10%. See Standard Plan B11-56, Note D.

NO SCALE

ALL DIMENSIONS ARE IN MILLIMETERS UNLESS OTHERWISE SHOWN

HOLLYWOOD WAY UC (WIDEN)

SOUNDWALL - MASONRY BLOCK WITH BARRIER ON RETAINING WALL

DETAILS NO. 2

STANDARD DRAWING				
RELEASE DATE 9/8/03	DESIGN BY D. DUNRUD	CHECKED W.C. WALKER	RELEASED BY Roberto Lovalle OFFICE CHIEF
FILE NO. xs15-130-2	DETAILS BY R. YEE	CHECKED W.C. WALKER	
	SUBMITTED BY D. DUNRUD	DRAWING DATE 11/94	

STATE OF CALIFORNIA DEPARTMENT OF TRANSPORTATION

DIVISION OF ENGINEERING SERVICES

BRIDGE NO. 53-1112
KILOMETER POST 52.06

CU 07
EA 1218V1

DISREGARD PRINTS BEARING EARLIER REVISION DATES 10-30-08 7-15-09

SHEET 29 OF 34

DS OSD 2147A (METRIC) (REV. 2/25/97)

ORIGINAL SCALE IN MILLIMETERS FOR REDUCED PLANS 0 10 20 30 40 50 60 70 80 90 100

USERNAME => trrichf

53-1112-v-sow2xs15-

DATE PLOTTED => 03-MAY-2010 TIME PLOTTED => 13:41

DIST.	COUNTY	ROUTE	KILOMETER POST TOTAL PROJECT	SHEET NO.	TOTAL SHEETS
07	LA	5	50.8/58.0	763	869

Caltrans Metric

Fritz Hoffman 6-25-08
REGISTERED ENGINEER - CIVIL

5-3-10
PLANS APPROVAL DATE

REGISTERED PROFESSIONAL ENGINEER F. H. HOFFMAN No. C46401 Exp. 3-31-11 CIVIL STATE OF CALIFORNIA

The State of California or its officers or agents shall not be responsible for the accuracy or completeness of electronic copies of this plan sheet.

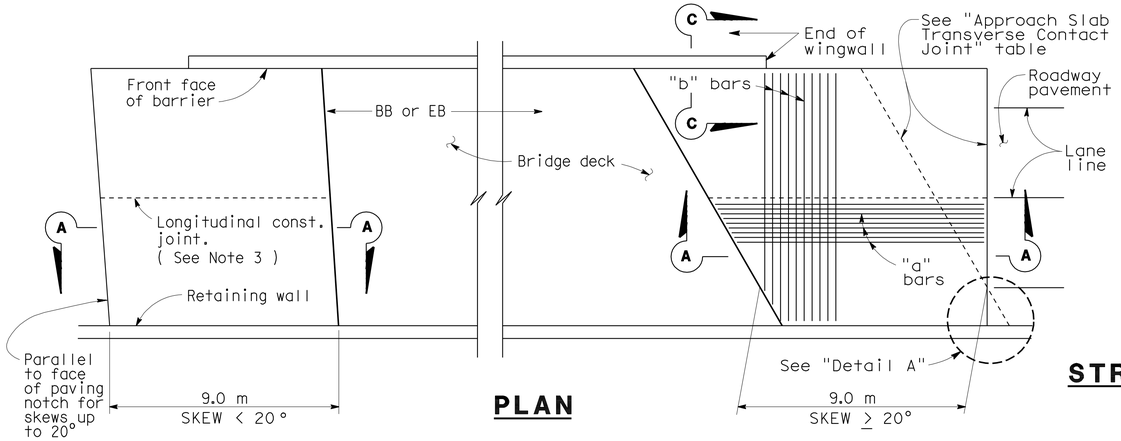

PLAN

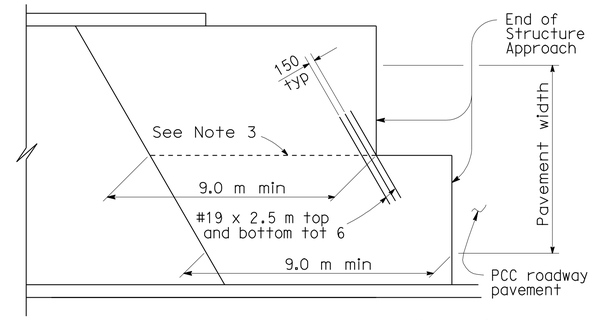

STRUCTURE APPROACH - END STAGGER DETAIL

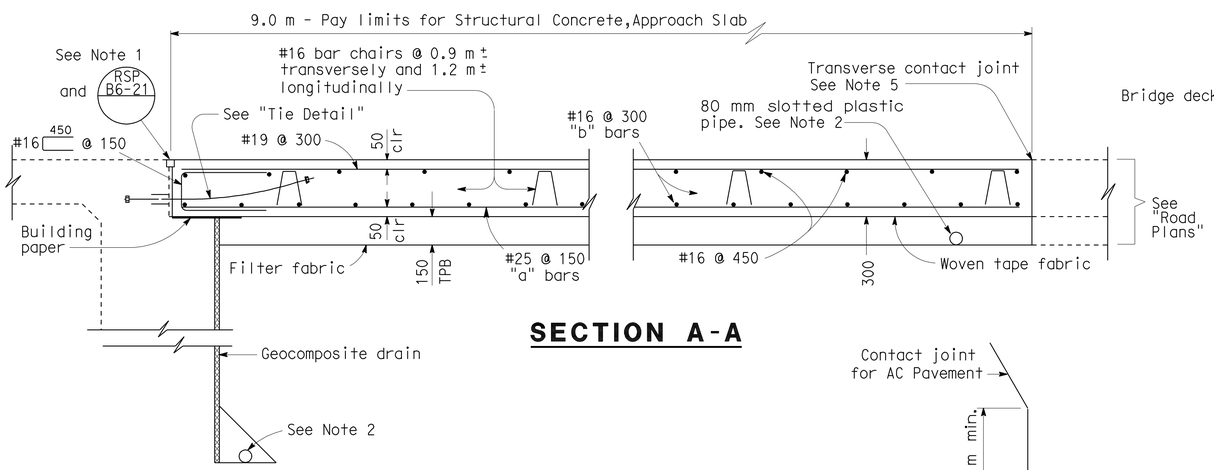

SECTION A-A

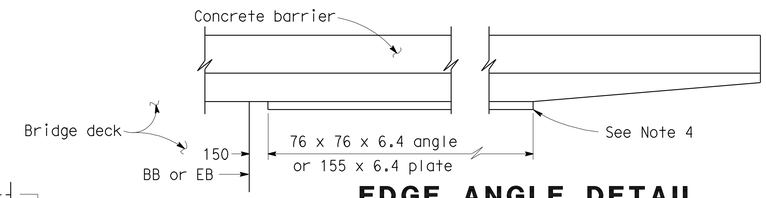

EDGE ANGLE DETAIL

APPROACH SLAB TRANSVERSE CONTACT JOINT		
APPROACH SKEW	WITH AC ROADWAY PAVEMENT	WITH PCC ROADWAY PAVEMENT
< 20°	Parallel to face of paving notch	Parallel to face of paving notch
20°- 45°	Parallel to face of P N use (Detail A)	Stagger lines 7.2 m to 10.8 m apart
> 45°	Parallel to face of P N use (Detail A)	Stagger at each lane line

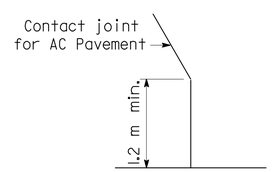

DETAIL A

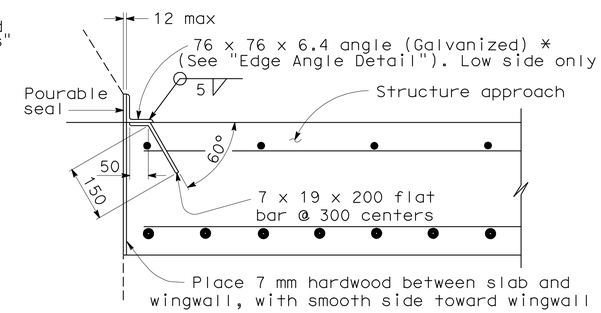

*(TO BE USED WITH TYPE 25 OR TYPE 27 CONCRETE BARRIER)

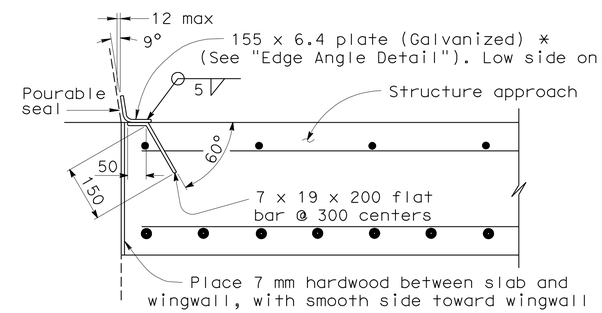

*(TO BE USED WITH TYPE 732 OR TYPE 736 CONCRETE BARRIER)

DETAIL B

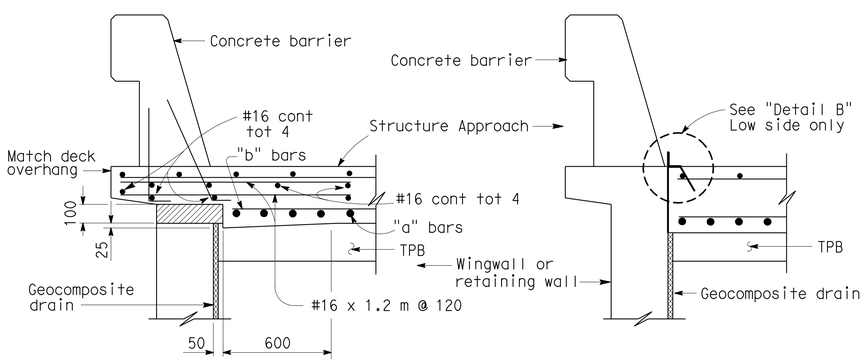

1 TYPE E-1

1 TYPE E-2

SECTION C-C

(Type E-1 to be used,unless otherwise shown on plans)

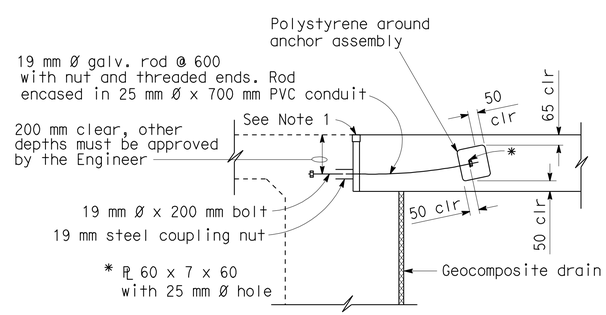

TIE DETAIL

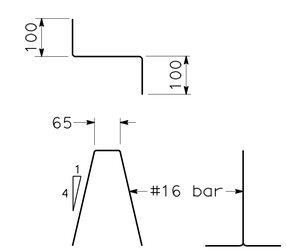

BAR CHAIR DETAIL

NO SCALE

NOTES:

1. For details not noted or shown,see Structure Plans.
2. For drainage details,see "Structure Approach Drainage Details" sheet.
3. Longitudinal construction joints,when permitted by the Engineer,shall be located on lane lines.
4. End angle or plate at beginning of barrier transition, end of wingwall or end of structure approach, as applicable.
5. For transverse contact joint with new PCC paving, refer to Standard Plan P10.
6. At the contractor's option,approach slab transverse reinforcement may be placed parallel to paving notch. Spacing of transverse reinforcement is measured along ℄ roadway.

Polystyrene to be removed.

ALL DIMENSIONS ARE IN MILLIMETERS UNLESS OTHERWISE SHOWN

STANDARD DRAWING					
RELEASE DATE 3/14/05	DESIGN	BY M. TRAFFALIS	CHECKED E. THORKILDSEN	RELEASED BY	
FILE NO. xs3-180	DETAILS	BY R. YEE	CHECKED E. THORKILDSEN		
	SUBMITTED	BY M. HA	DRAWING DATE 4/98	OFFICE CHIEF	

1 Revised Detail

STATE OF CALIFORNIA DEPARTMENT OF TRANSPORTATION

DIVISION OF ENGINEERING SERVICES

BRIDGE NO. 53-1112

KILOMETER POST 52.06

HOLLYWOOD WAY UC (WIDEN)

STRUCTURE APPROACH TYPE N(9D)

DS OSD 2147A (METRIC) (REV. 2/25/97)

ORIGINAL SCALE IN MILLIMETERS FOR REDUCED PLANS 0 10 20 30 40 50 60 70 80 90 100

CU 07
EA 1218V1

DISREGARD PRINTS BEARING EARLIER REVISION DATES

REVISION DATES (PRELIMINARY STAGE ONLY) 11-14-07 10-17-08 7-15-09

SHEET 30 OF 34

USERNAME => trrichf

53-1112-v-strappr.dgn

DATE PLOTTED => 03-MAY-2010 TIME PLOTTED => 13:41

DIST.	COUNTY	ROUTE	KILOMETER POST TOTAL PROJECT	SHEET NO.	TOTAL SHEETS
07	LA	5	50.8/58.0	764	869

Caltrans Metric

Fritz Hoffman 6-25-08
REGISTERED ENGINEER - CIVIL

5-3-10
PLANS APPROVAL DATE

REGISTERED PROFESSIONAL ENGINEER F. H. HOFFMAN No. C46401 Exp. 3-31-11 CIVIL STATE OF CALIFORNIA

The State of California or its officers or agents shall not be responsible for the accuracy or completeness of electronic copies of this plan sheet.

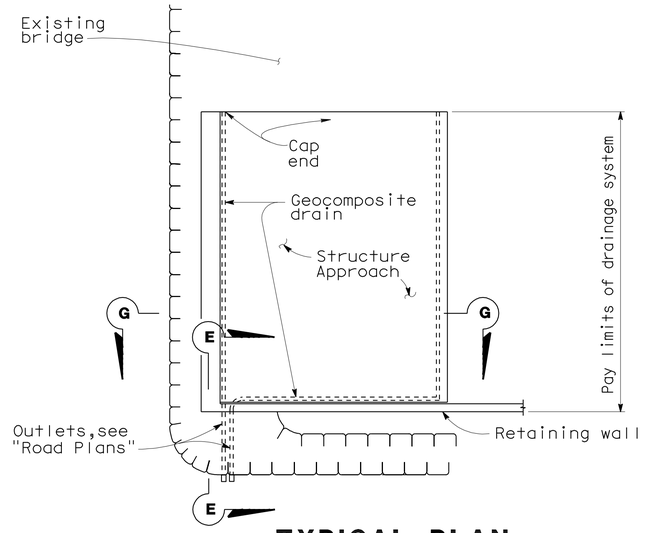

TYPICAL PLAN

*For pipe layout at staggered end, see "Detail B".

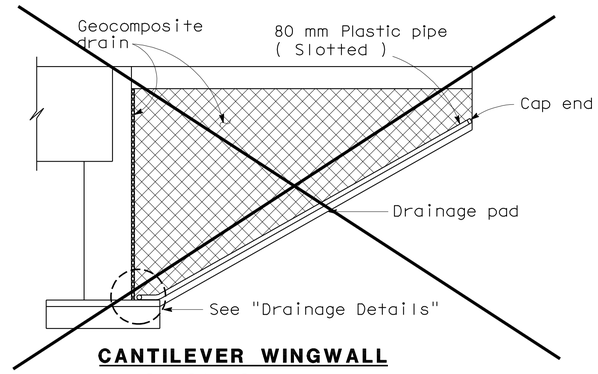

CANTILEVER WINGWALL SECTION F-F

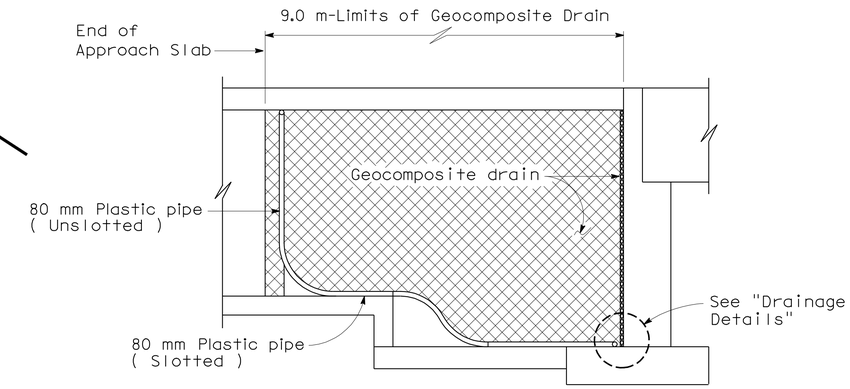

RETAINING WALL WINGWALL SECTION G-G

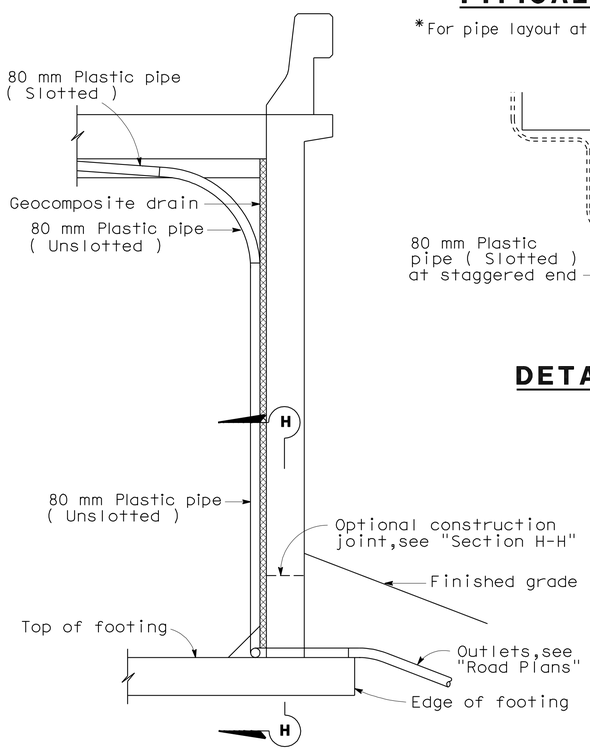

SECTION E-E

NOTE: Bends and junctions in 80 mm plastic pipe are 750 mm radius min.

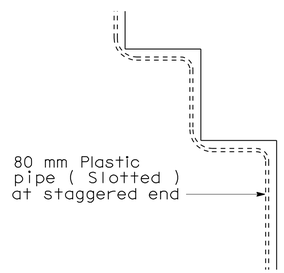

DETAIL B

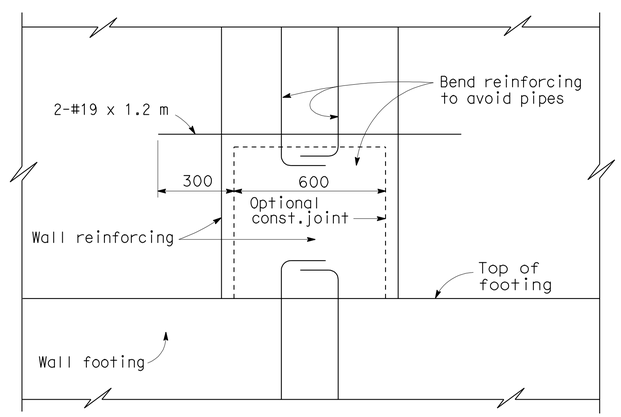

SECTION H-H

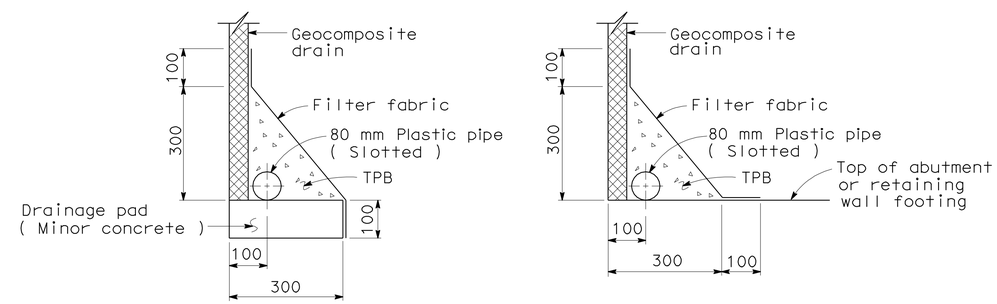

WITHOUT FOOTING

WITH FOOTING

DRAINAGE DETAILS

NOTE:
THE CONTRACTOR SHALL VERIFY ALL CONTROLLING FIELD DIMENSIONS BEFORE ORDERING OR FABRICATING ANY MATERIAL.

NO SCALE
ALL DIMENSIONS ARE IN MILLIMETERS UNLESS OTHERWISE SHOWN

STANDARD DRAWING					
RELEASE DATE 4/23/98	DESIGN	BY M. TRAFFALIS	CHECKED E. THORKILDSEN	RELEASED BY	
FILE NO. xs3-110	DETAILS	BY R. YEE	CHECKED E. THORKILDSEN	OFFICE CHIEF	
	SUBMITTED	BY M. HA	DRAWING DATE 4/98		

DS OSD 2147A (METRIC) (REV. 2/25/97)

STATE OF CALIFORNIA DEPARTMENT OF TRANSPORTATION

DIVISION OF ENGINEERING SERVICES

CU 07
EA 1218V1

BRIDGE NO. 53-1112
KILOMETER POST 52.06

HOLLYWOOD WAY UC (WIDEN)

STRUCTURE APPROACH DRAINAGE DETAILS

ORIGINAL SCALE IN MILLIMETERS FOR REDUCED PLANS 0 10 20 30 40 50 60 70 80 90 100

DISREGARD PRINTS BEARING EARLIER REVISION DATES

REVISION DATES (PRELIMINARY STAGE ONLY) 7-1-07 6-13-08 10-31-08 7-16-09

SHEET 31 OF 34

USERNAME => trrichf

53-1112-w-sadd.dgn

DATE PLOTTED => 03-MAY-2010 TIME PLOTTED => 13:41

DIST	COUNTY	ROUTE	KILOMETER POST TOTAL PROJECT	SHEET No	TOTAL SHEETS
07	LA	5	50.8/58.0	765	869

REGISTERED CIVIL ENGINEER 12-20-07

5-3-10
PLANS APPROVAL DATE

REGISTERED PROFESSIONAL ENGINEER
Qiang Huang
No. C055671
Exp. 12-31-08
CIVIL
STATE OF CALIFORNIA

The State of California or its officers or agents shall not be responsible for the accuracy or completeness of electronic copies of this plan sheet.

BENCH MARK

SURVEY CONTROL

PT-701 (NOT SHOWN ON PLAN)
Fnd PK NAIL
33.567 M Lt. ℄ Hwy 5
Sta. 521+78.778
N 579106.094
E 1967786.607
Elev. = 230.038

PT-702
Fnd PK NAIL
46.570 M Lt. ℄ Hwy 5
Sta. 520+42.210
N 578999.887
E 1967873.441
Elev. = 226.583

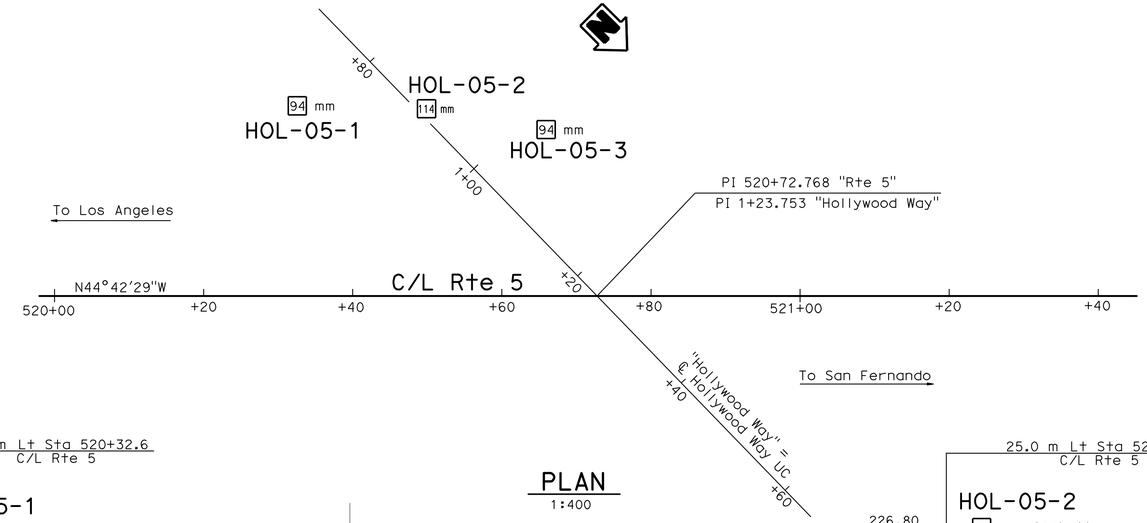

PLAN
1:400

Note: No ground water encountered during field investigation.

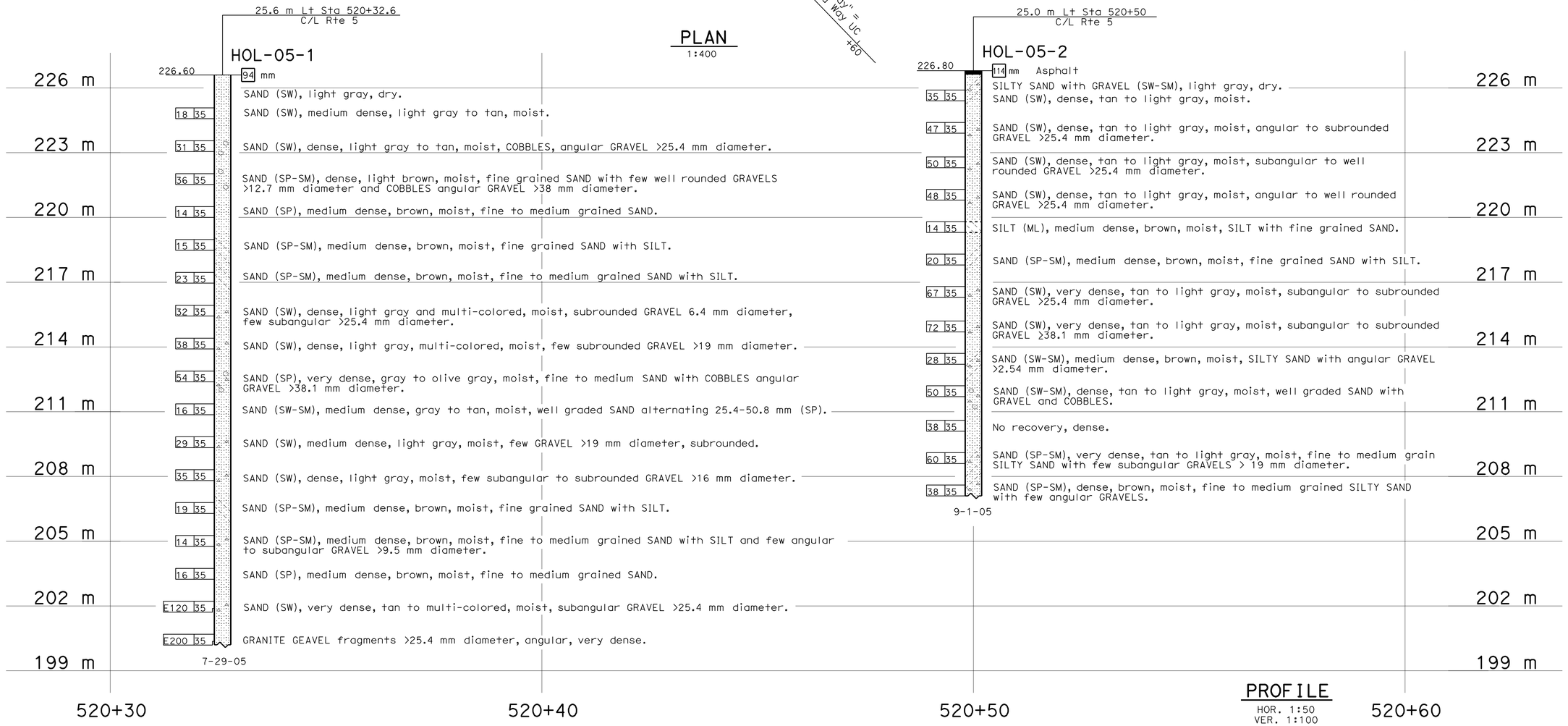

PROFILE
HOR. 1:50
VER. 1:100

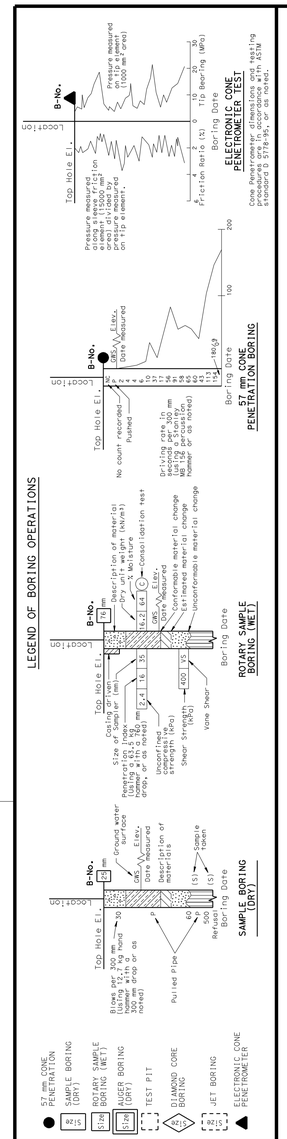

LEGEND OF BORING OPERATIONS

LEGEND OF EARTH MATERIALS: GRAVEL, SAND, SILT, CLAY, SANDY CLAY or CLAYEY SAND, SANDY SILT or SILTY SAND, SILTY CLAY, CLAYEY SILT, PEAT and/or ORGANIC MATTER, COBBLES and/or BOULDERS, IGNEOUS ROCK, SEDIMENTARY ROCK, METAMORPHIC

CONSISTENCY CLASSIFICATION FOR SOILS

According to the Standard Penetration Test			
SPT N-Value (Blows/0.3m)	Granular	SPT N-Value (Blows/0.3m)	Cohesive
0-4	Very Loose	<2	Very Soft
5-10	Loose	2-4	Soft
11-30	Medium Dense	5-8	Firm
31-50	Dense	9-15	Stiff
>50	Very Dense	16-30	Very stiff
		>30	Hard

NOTE: Classification of earth material as shown on this sheet is based upon field inspection and is not to be construed to imply mechanical analysis.

OGS CIVIL LOG OF TEST BORINGS SHEET (METRIC) (REV. 4/04)

Caltrans Metric

GEOTECHNICAL SERVICES	
DRAWN BY	W. Tang 12/05
CHECKED BY	B. Bertucci

FIELD INVESTIGATION BY: B. Bertucci/C. Kark

STATE OF CALIFORNIA DEPARTMENT OF TRANSPORTATION

DIVISION OF ENGINEERING SERVICES STRUCTURE DESIGN
DESIGN BRANCH 6

BRIDGE NO. 53-1112
KILOMETER POST 52.06

HOLLYWOOD WAY UNDERCROSSING (WIDEN)
LOG OF TEST BORINGS 1 OF 3

ALL DIMENSIONS ARE IN METERS UNLESS OTHERWISE SHOWN

ORIGINAL SCALE IN MILLIMETERS FOR REDUCED PLANS 0 10 20 30 40 50 60 70 80 90 100

CU 07
EA 1218V1

DISREGARD PRINTS BEARING EARLIER REVISION DATES

REVISION DATES (PRELIMINARY STAGE ONLY): 10-31-07 12-20-07 10-30-08 7-16-09

SHEET 32 OF 34

FILE => 53-1112-z-lotb1of3.dgn

USERNAME => trrrichf DATE PLOTTED => 03-MAY-2010 TIME PLOTTED => 13:42

DIST	COUNTY	ROUTE	KILOMETER POST TOTAL PROJECT	SHEET No	TOTAL SHEETS
07	LA	5	50.8/58.0	766	869

REGISTERED CIVIL ENGINEER 12-20-07

5-3-10
PLANS APPROVAL DATE

REGISTERED PROFESSIONAL ENGINEER
Qiang Huang
No. C055671
Exp. 12-31-08
CIVIL
STATE OF CALIFORNIA

The State of California or its officers or agents shall not be responsible for the accuracy or completeness of electronic copies of this plan sheet.

FOR PLAN VIEW, SEE
"LOG OF TEST BORINGS" 1 OF 3

Note: No ground water encountered during field investigation.

22.4 m Lt Sta 520+66
C/L Rte 5

HOL-05-3

226.90

94 mm		Asphalt
		SAND (SW), light gray, dry.
46	35	SAND (SW), dense, tan to light gray, moist, subangular to well rounded GRAVEL >38 mm diameter.
62	35	SAND (SW), very dense, tan to light gray, moist, subrounded to well rounded GRAVEL >12.7 mm diameter.
43	35	SAND (SP), dense, light brown, moist, fine to medium grained, subangular to subrounded GRAVEL >19 mm diameter.
28	35	SAND (SP), medium dense, tan to light brown, moist, fine to medium grained, subangular to subrounded GRAVEL.
26	35	SAND (SP-SM), medium dense, brown, moist, fine to medium grained SAND with SILT.
27	35	SAND (SP-SM), medium dense, brown, moist, fine to medium grain SAND with SILT.
46	35	SAND (SW), dense, tan to light gray, moist, COBBLES.
59	35	SAND (SW), very dense, tan to light gray, moist, subangular GRAVEL >38 mm diameter.
51	35	SAND (SP), very dense, tan to light gray, moist, fine to medium grained SAND with angular GRAVEL mostly 9.5 mm diameter.
E120	35	GRAVEL (GP), very dense, multi-colored, moist, angular to subangular GRAVEL >25.4 mm diameter.
73	35	SAND (SW), very dense, light gray, moist.
58	35	SAND (SP), very dense, light gray, moist, few angular GRAVEL >12.7 mm diameter.
41	35	SAND (SP), dense, brown, moist, fine to medium grained SAND with angular GRAVEL and COBBLES.

7-29-05

226 m
223 m
220 m
217 m
214 m
211 m
208 m
205 m

520+60 520+70 520+80

PROFILE
HOR. 1:50
VER. 1:100

LEGEND OF BORING OPERATIONS

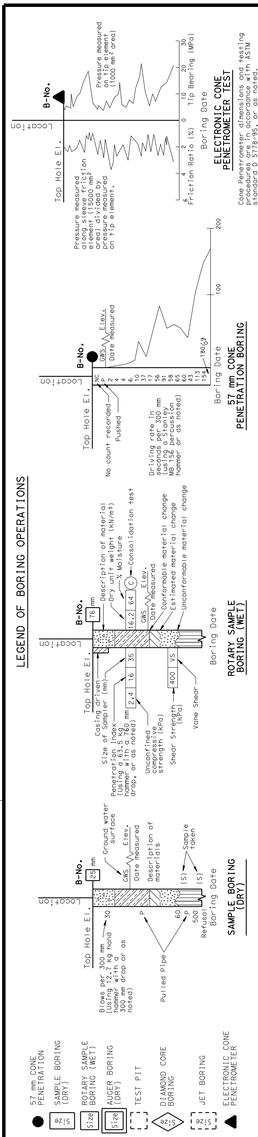

LEGEND OF EARTH MATERIALS

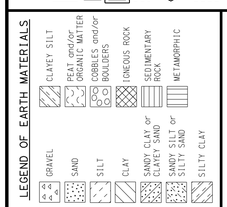

CONSISTENCY CLASSIFICATION FOR SOILS

According to the Standard Penetration Test

SPT N-Value (Blows/0.3m)	Granular	SPT N-Value (Blows/0.3m)	Cohesive
0-4	Very Loose	<2	Very Soft
5-10	Loose	2-4	Soft
11-30	Medium Dense	5-8	Firm
31-50	Dense	9-15	Stiff
>50	Very Dense	16-30	Very stiff
		>30	Hard

NOTE: Classification of earth material as shown on this sheet is based upon field inspection and is not to be construed to imply mechanical analysis.

OGS CIVIL LOG OF TEST BORINGS SHEET (METRIC) (REV. 4/04)

Caltrans Metric

GEOTECHNICAL SERVICES	
DRAWN BY	W. Tang 12/05
CHECKED BY	B. Bertucci

FIELD INVESTIGATION BY: B. Bertucci/C. Kark

STATE OF CALIFORNIA DEPARTMENT OF TRANSPORTATION

DIVISION OF ENGINEERING SERVICES STRUCTURE DESIGN
DESIGN BRANCH 6

BRIDGE NO. 53-1112
KILOMETER POST 52.06

HOLLYWOOD WAY UNDERCROSSING (WIDEN)
LOG OF TEST BORINGS 2 OF 3

ALL DIMENSIONS ARE IN METERS UNLESS OTHERWISE SHOWN

ORIGINAL SCALE IN MILLIMETERS FOR REDUCED PLANS 0 10 20 30 40 50 60 70 80 90 100

CU 07
EA 1218V1

DISREGARD PRINTS BEARING EARLIER REVISION DATES

REVISION DATES (PRELIMINARY STAGE ONLY): 10-31-07 12-28-07 10-30-08 7-16-09

SHEET 33 OF 34

FILE => 53-1112-z-1otb2of3.dgn

USERNAME => trrichf DATE PLOTTED => 03-MAY-2010 TIME PLOTTED => 13:42

I-081-3(6)

FED. ROAD DIV. NO.	STATE	PROJ. NO.	FISCAL YEAR	SHEET NO.	TOTAL SHEETS
7	CAL.			411	448

DIST.	COUNTY	ROUTE	SECTION	SHEET NO.	TOTAL SHEETS
VII	L.A.	~~4~~	~~Ln.A.~~	10	10

BRIDGE ENGINEER — CIVIL ENGINEER—LICENSE 5385

DATE APPROVED AUGUST 15 1958

BRIDGE DEPARTMENT

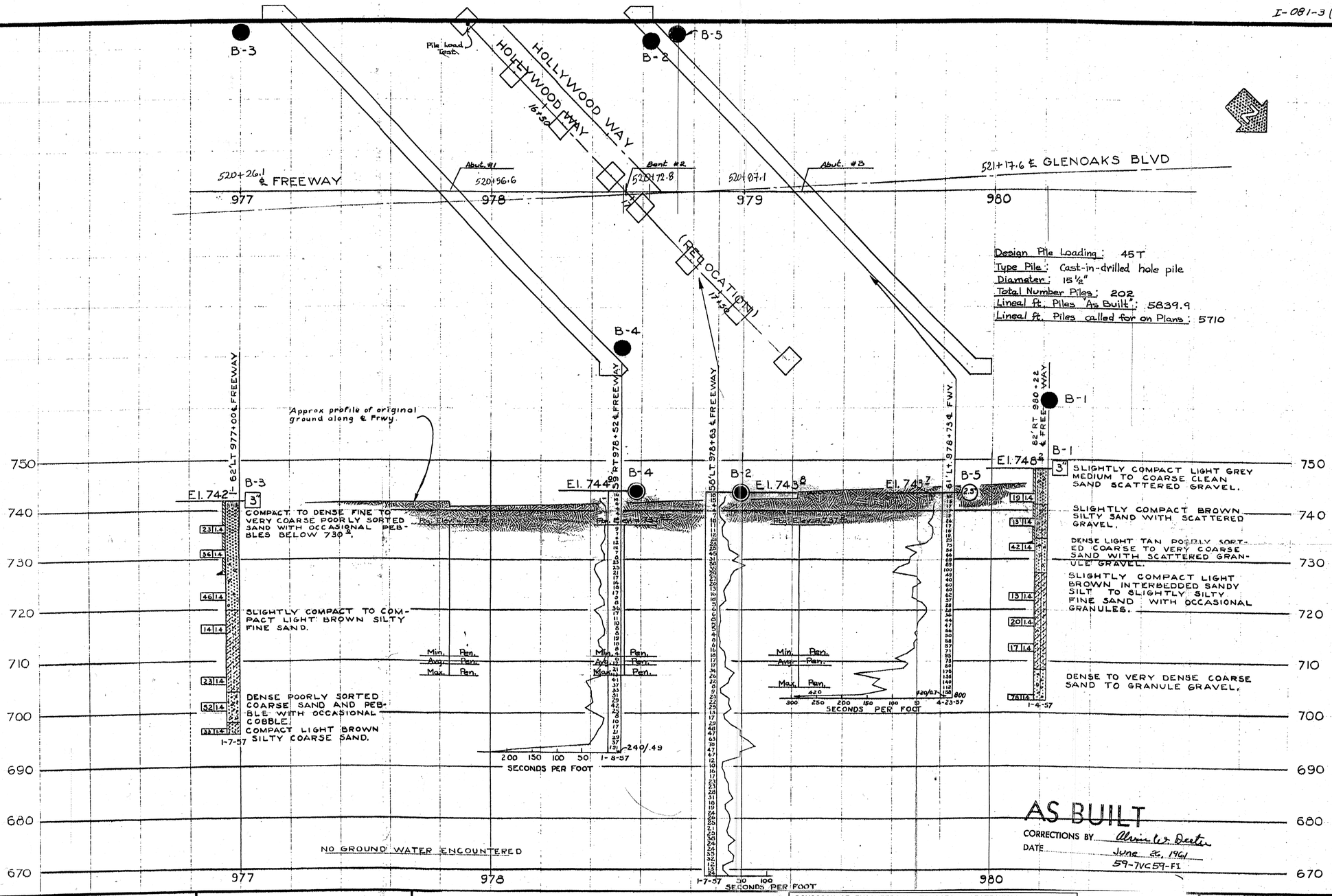

Design Pile Loading: 45T
Type Pile: Cast-in-drilled hole pile
Diameter: 15½"
Total Number Piles: 202
Lineal ft. Piles "As Built": 5839.9
Lineal ft. Piles called for on Plans: 5710

B.M 105-LA-54
FD. LA. CITY MON. ON
℄ GLENOAKS BLVD. 27'
N.W. OF HOLLYWOOD
WAY 1950 El.=742.612
REF. LAFB 10688-9
El=742.613

AS BUILT
CORRECTIONS BY Alvin W. Dertz
DATE June 5, 1961
59-TVC59-F1

FIELD STUDY	GOLDSCHMIDT 1-8-57
DRAWN	BEUTCHER 2-25-57
CHECKED	

Approval Recommended by: Engineering Geologist

Approved Foundation Report

CLASSIFICATION OF MATERIAL BASED ON STANDARD GRADE SIZE LIMITS

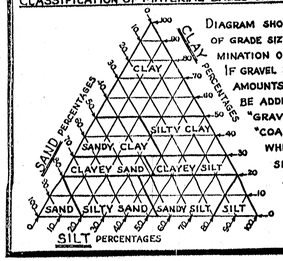

DIAGRAM SHOWING THE BASIS FOR ESTIMATES OF GRADE SIZE DISTRIBUTION USED IN DETERMINATION OF CLASS NAMES.

IF GRAVEL IS PRESENT IN APPRECIABLE AMOUNTS THE TERM "GRAVELLY" MAY BE ADDED TO THE CLASS NAME, VIZ. "GRAVELLY SAND." THE TERMS "COARSE", "MEDIUM" AND "FINE" WHEN USED TO DESCRIBE SAND, SILT AND GRAVEL REFER TO STANDARD GRADE SIZE LIMITS.

LEGEND OF EARTH MATERIALS

- GRAVEL
- SAND
- SILT
- CLAY
- SANDY CLAY OR CLAYEY SAND
- SANDY SILT OR SILTY SAND
- SILTY CLAY OR CLAYEY SILT
- PEAT AND/OR ORGANIC MATTER
- FILL MATERIAL
- IGNEOUS ROCK
- SEDIMENTARY ROCK
- METAMORPHIC ROCK

Revisions made to this Log of Test Borings from the original 1957 Log of Test Borings are the addition of the following table and notes:

Boring	Station	Offset from C/L Rte 5
B-1	521+24.0	25.0 m Rt.
B-3	520+73.7	17.7 m Lt.
B-2	520+26.1	18.9 m Lt.
B-4	520+72.5	18.0 m Rt.
B-5	520+76.2	18.6 m Lt.

Notes:
1. See the General Plan and/or Foundation Plan for Metric Stationing.
2. Structure Design produced the data presented in the table above. The data are the metric locations for the As-Built Test Borings referenced to the proposed new structure location. This table is presented on the As-Built Log of Test Boring sheet for the convenience of any bidder, contractor or other interested party.

DIVISION OF ENGINEERING SERVICES - GEOTECHNICAL SERVICES

As-Built Log of Test Borings sheet is considered an informational document only. As such, the State of California registration seal with signature, license number and registration certificate expiration date confirm that this is a true and accurate copy of the original document. This drawing is available and presented only for the convenience of any bidder, contractor or other interested party.

DIST.	COUNTY	ROUTE	KILOMETER POST-TOTAL PROJECT	Sheet No.	Total Sheets
07	LA	5	50.8/58.0	767	869

12/20/07
REGISTERED CIVIL ENGINEER

REGISTERED PROFESSIONAL ENGINEER — Qiang Huang — No. C055671 — Exp. 12-31-08 — CIVIL — STATE OF CALIFORNIA

HOLLYWOOD WAY UNDERCROSSING (WIDEN)

LOG OF TEST BORINGS 3 OF 3

NOTE: A COPY OF THIS LOG OF TEST BORINGS IS AVAILABLE AT OFFICE OF STRUCTURE MAINTENANCE AND INVESTIGATIONS, SACRAMENTO, CALIFORNIA

CU: 07
EA: 121811

BRIDGE No. 53-1112

Sheet 31 of 31

To accompany plans dated 5-3-10

NOTES

The contractor's attention is directed to Section 2, Article (c) of the Standard Specifications and to the Special Provisions accompanying this set of plans.

Classification of earth material as shown on this sheet is based upon field inspection and is not to be construed to imply mechanical analysis.

STATE OF CALIFORNIA
DEPARTMENT OF PUBLIC WORKS
DIVISION OF HIGHWAYS

HOLLYWOOD WAY U.C.

LOG OF TEST BORINGS

HORIZ. 1" = 20' VERT. 1" = 10' | BRIDGE 53-1112 | FILE E-52 | DRAWING C-3929-10

413

53-1112-z-1otb3of3.tif

PRE DRAW 3929 a

DIST	COUNTY	ROUTE	KILOMETER POST TOTAL PROJECT	SHEET No	TOTAL SHEETS
07	LA	5	50.8/58.0	768	869

REGISTERED CIVIL ENGINEER — DATE 6-25-08

5-3-10
PLANS APPROVAL DATE

REGISTERED PROFESSIONAL ENGINEER — XIAODONG CHEN — No. 58858 — Exp. 6-30-11 — CIVIL — STATE OF CALIFORNIA

The State of California or its officers or agents shall not be responsible for the accuracy or completeness of electronic copies of this plan sheet.

QUANTITIES:

BRIDGE REMOVAL (PORTION), LOCATION D	LUMP SUM
NPS 3 SUPPLY LINE (BRIDGE)	20 m
CONCRETE BARRIER (TYPE 60A.6 MODIFIED)	20 m

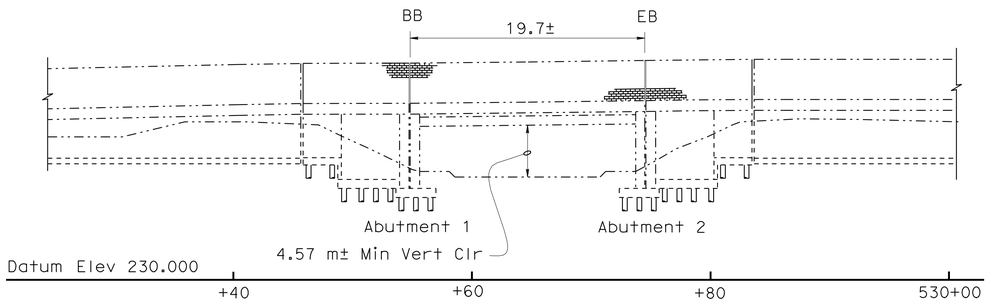

ELEVATION
1:250

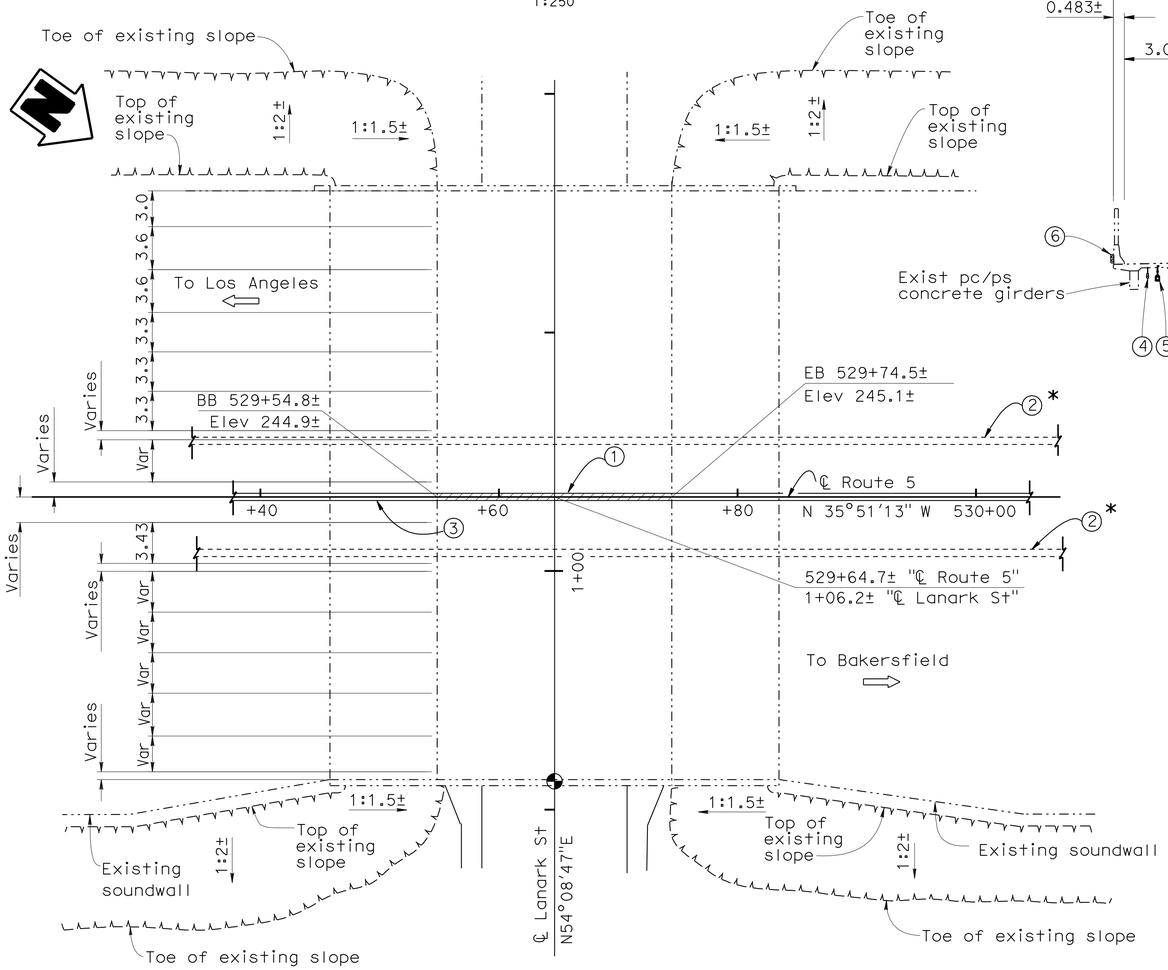

PLAN
1:250

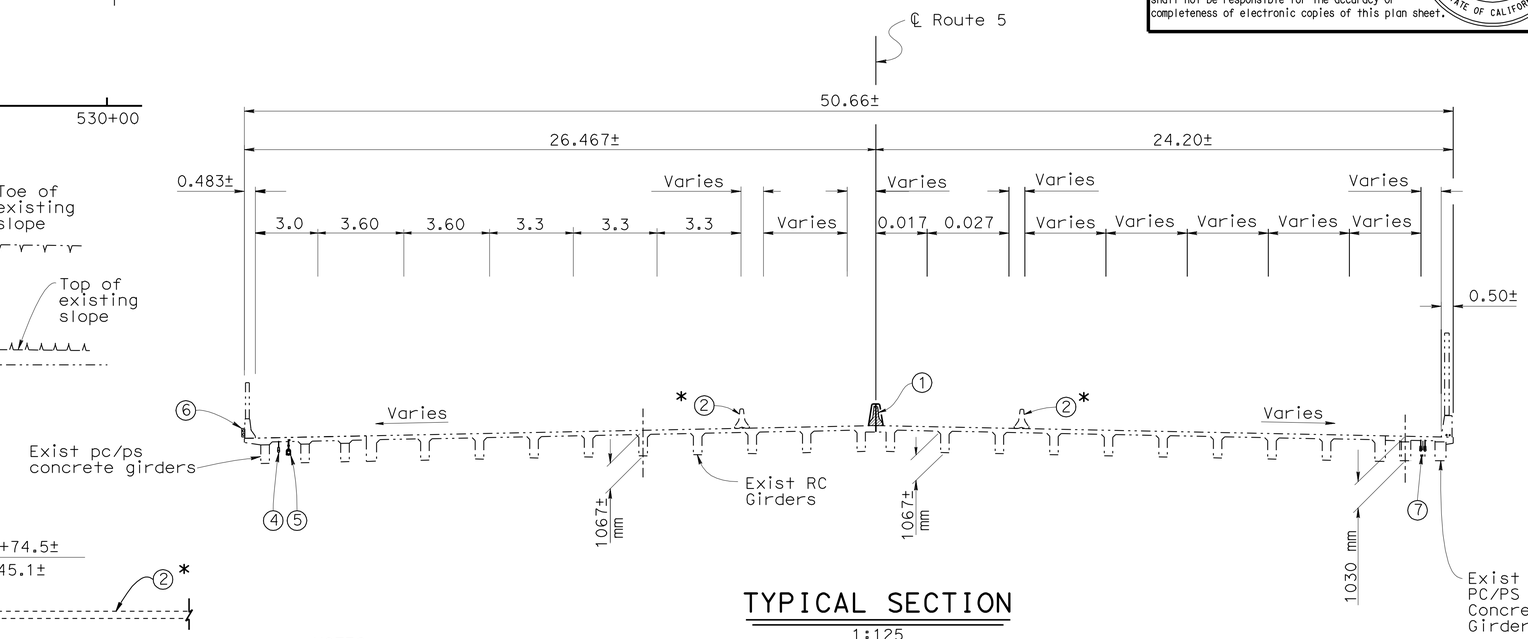

TYPICAL SECTION
1:125

NOTES:

1. Remove existing Concrete Barrier Type 50A (Mod), see "Road Plans", and replace with Concrete Barrier Type 60A.6 (Mod)
2. Temporary Railing (Type K), see "Road Plans"
3. Remove and replace concrete barrier, see "Road Plans"
4. 1 - 53 mm ø sprinkler control conduit, see "Road Plans"
5. 1 - NPS 3 water supply line
6. Replace existing communication conduit with 2 - 91 mm ø communiation conduits, see "Road Plans"
7. Existing communications conduits, see "Road Plans"

LEGEND:

- Indicates new structure
- Indicates existing structure
- Indicates bridge removal (portion)
- * For stage construction, see "Stage construction" sheet

INDEX TO PLANS

SHEET No.	SHEET TITLE
1	GENERAL PLAN
2	STAGED CONSTRUCTION
3	BARRIER DETAILS
4	BARRIER - CONCRETE TYPE 60A AND 60SA MODIFIED

STANDARD PLANS DATED JULY 2004

A10A	ACRONYMS AND ABBREVIATIONS (A-L)
A10B	ACRONYMS AND ABBREVIATIONS (M-Z)
A10C	SYMBOLS (SHEET 1 OF 2)
A10D	SYMBOLS (SHEET 2 OF 2)
B14-3	COMMUNICATION AND SPRINKLER CONTROL CONDUITS (CONDUITS LESS THAN SIZE 103)
B14-4	WATER SUPPLY LINE (BRIDGE) (PIPE SIZE LESS THAN NSP 4)

STANDARD PLAN SHEET No.
DETAIL No.

NOTE:
THE CONTRACTOR SHALL VERIFY ALL CONTROLLING FIELD DIMENSIONS BEFORE ORDERING OR FABRICATING ANY MATERIAL.

LANARK STREET UNDERCROSSING
BARRIER REPLACEMENT
GENERAL PLAN

Caltrans Metric

Fritz Hoffman 6-25-08
DESIGN ENGINEER

	BY	CHECKED
DESIGN	David Alvarez	Elijah Hall
DETAILS	S. Schenck	Elijah Hall
QUANTITIES	Herman Perez	Elijah Hall

LOAD FACTOR DESIGN — LIVE LOADING: HS20-44 AND ALTERNATIVE AND PERMIT DESIGN LOAD
LAYOUT — BY S. Schenck — CHECKED David Alvarez
SPECIFICATIONS — BY — PLANS AND SPECS COMPARED

STATE OF CALIFORNIA
DEPARTMENT OF TRANSPORTATION

DIVISION OF ENGINEERING SERVICES
STRUCTURE DESIGN
DESIGN BRANCH 6

BRIDGE NO. 53-1113
KILOMETER POST

ALL DIMENSIONS ARE IN METERS UNLESS OTHERWISE SHOWN

ORIGINAL SCALE IN MILLIMETERS FOR REDUCED PLANS: 0 10 20 30 40 50 60 70 80 90 100

CU 07
EA 1218V1

DISREGARD PRINTS BEARING EARLIER REVISION DATES

REVISION DATES: 10-21-05 | 3-14-06 | 5-1-07 | 1-3-08 | 03-06-08 | 4-16-08 | 4-29-08 | 4-29-08 | 7-16-09

SHEET 1 OF 4

FILE => 53-1113-a-gp.dgn

STRUCTURES DESIGN GENERAL PLAN SHEET (METRIC) (REV.03-17-04)

USERNAME => trrichf DATE PLOTTED => 03-MAY-2010 TIME PLOTTED => 13:42

DIST	COUNTY	ROUTE	KILOMETER POST TOTAL PROJECT	SHEET No	TOTAL SHEETS
07	LA	5	50.8/58.0	769	869

REGISTERED CIVIL ENGINEER 6-25-08 DATE

5-3-10
PLANS APPROVAL DATE

REGISTERED PROFESSIONAL ENGINEER XIAODONG CHEN No. C 58858 Exp. 6-30-11 CIVIL STATE OF CALIFORNIA

The State of California or its officers or agents shall not be responsible for the accuracy or completeness of electronic copies of this plan sheet.

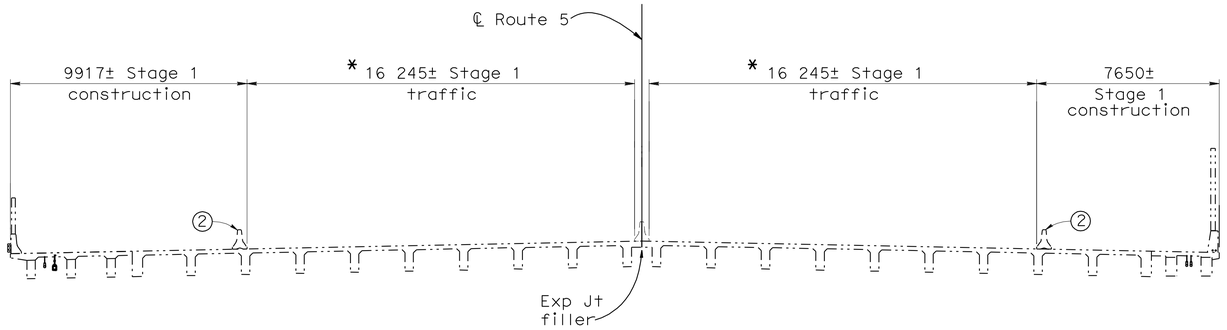

STAGE 1 (T3)
1:125

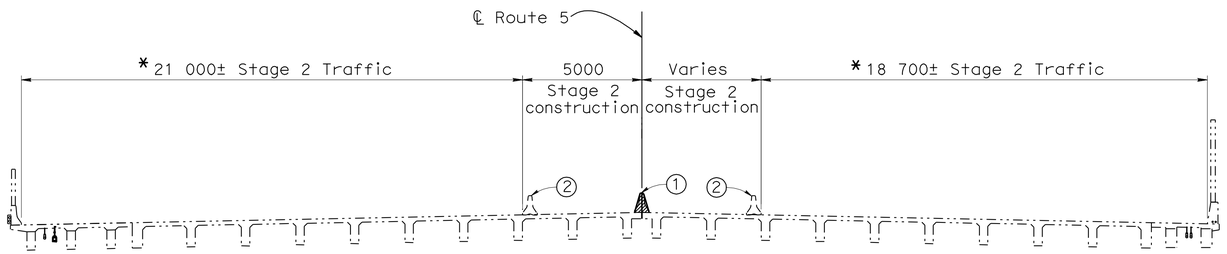

STAGE 2 (T3) (A76A)
1:125

NOTES:

1. Remove existing Concrete Barrier Type 50A (Mod) and replace with Concrete Barrier Type 60A.6
2. Temporary Railing (Type K), see Road Plans

LEGEND:

- Indicates new structure
- Indicates existing structure
- Indicates bridge removal (portion)
- * For traffic handling, see "Road Plans"

GENERAL NOTES
LOAD FACTOR DESIGN

DESIGN: CALTRANS BRIDGE DESIGN SPECIFICATIONS
LFD Version April 2000
(1996 AASHTO with Interims and Revision by Caltrans)

REINFORCING STEEL: f_y = 420 MPa
Transverse Deck Slabs (Working Stress):
f_s = 138 MPa
f_c = 9 MPa
n = 10
f'_c = 25 MPa (except as shown on Concrete Strength & Type Limits Diagram)

Caltrans Metric

	BY	CHECKED
DESIGN	Xiaodong Chen	Elijah Hall
DETAILS	Roelina Martinez	Elijah Hall
QUANTITIES	Hernan Perez	Elijah Hall

STATE OF CALIFORNIA
DEPARTMENT OF TRANSPORTATION

DIVISION OF ENGINEERING SERVICES
STRUCTURE DESIGN
DESIGN BRANCH 6

BRIDGE NO. 53-1113
KILOMETER POST

LANARK STREET UNDERCROSSING
BARRIER REPLACEMENT
STAGED CONSTRUCTION

ALL DIMENSIONS ARE IN MILLIMETERS UNLESS OTHERWISE SHOWN

ORIGINAL SCALE IN MILLIMETERS FOR REDUCED PLANS 0 10 20 30 40 50 60 70 80 90 100

CU 07
EA 1218V1

DISREGARD PRINTS BEARING EARLIER REVISION DATES → 7-14-08 4-16-08 7-16-09

REVISION DATES

SHEET 2 OF 4

FILE => 53-1113-b-sc.dgn

STRUCTURES DESIGN DETAIL SHEET (METRIC) (REV.03-17-04)

USERNAME => trrichf DATE PLOTTED => 03-MAY-2010 TIME PLOTTED => 13:42

DIST	COUNTY	ROUTE	KILOMETER POST TOTAL PROJECT	SHEET No	TOTAL SHEETS
07	LA	5	50.8/58.0	770	869

REGISTERED CIVIL ENGINEER 6-25-08 DATE

5-3-10
PLANS APPROVAL DATE

REGISTERED PROFESSIONAL ENGINEER Xiaodong Chen No. 58858 Exp. 6-30-11 CIVIL STATE OF CALIFORNIA

The State of California or its officers or agents shall not be responsible for the accuracy or completeness of electronic copies of this plan sheet.

LEGEND:

Indicates new structure

Indicates existing structure

Indicated bridge removal (portion)

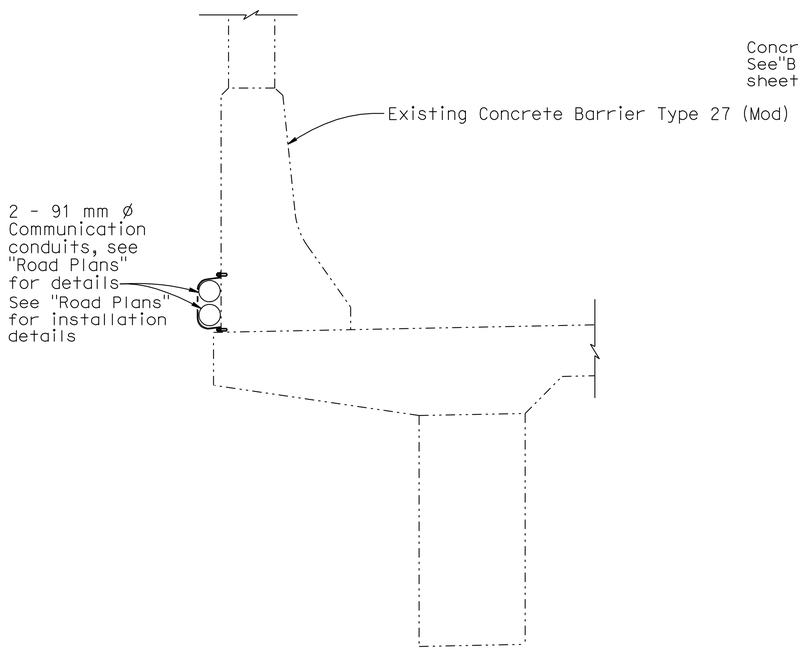

COMMUNICATION CONDUIT DETAIL
1:10

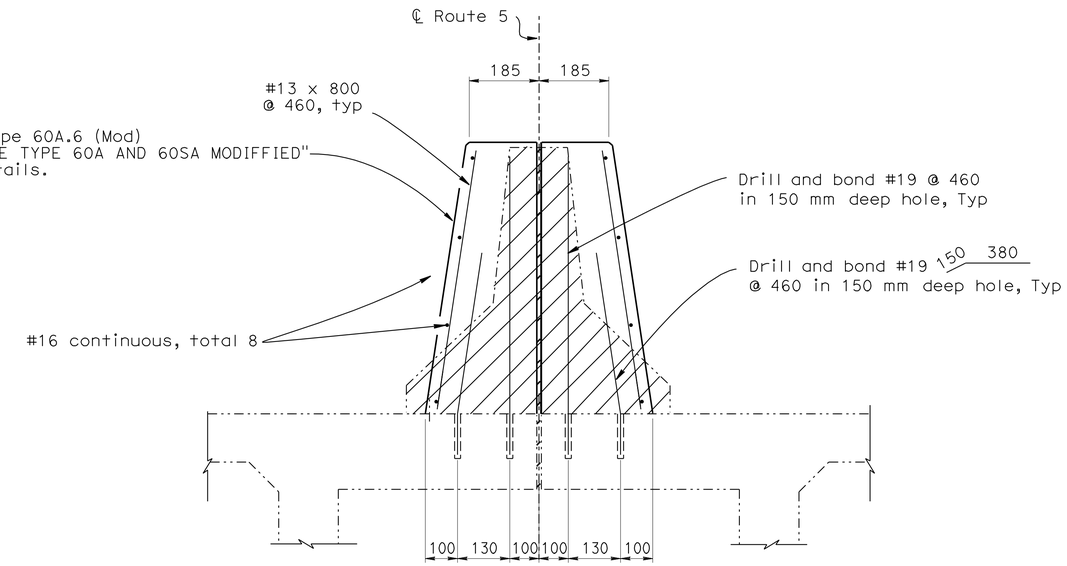

CONCRETE BARRIER TYPE 60A.6 (MOD) A76A
1:10

NOTE:
Existing reinforcement not shown. Existing reinforcement to remain.

NOTE:
THE CONTRACTOR SHALL VERIFY ALL CONTROLLING FIELD DIMENSIONS BEFORE ORDERING OR FABRICATING ANY MATERIAL.

Caltrans Metric

ALL DIMENSIONS ARE IN MILLIMETERS UNLESS OTHERWISE SHOWN

ORIGINAL SCALE IN MILLIMETERS FOR REDUCED PLANS 0 10 20 30 40 50 60 70 80 90 100

	BY	CHECKED
DESIGN	David Alvarez	Elijah Hall
DETAILS	Roelina Martinez	Elijah Hall
QUANTITIES	Herman Perez	Elijah Hall

STATE OF CALIFORNIA
DEPARTMENT OF TRANSPORTATION

DIVISION OF ENGINEERING SERVICES
STRUCTURE DESIGN
DESIGN BRANCH 6

CU 07
EA 1218V1

BRIDGE NO. 53-1113
KILOMETER POST

LANARK STREET UNDERCROSSING
BARRIER REPLACEMENT
BARRIER DETAILS

DISREGARD PRINTS BEARING EARLIER REVISION DATES

REVISION DATES: 3-24-07 1-14-08 03-05-08 5-20-08 7-16-09

SHEET 3 OF 4

FILE => 53-1113-t-bardet.dgn

STRUCTURES DESIGN DETAIL SHEET (METRIC) (REV.03-17-04)

USERNAME => trlenard DATE PLOTTED => 03-MAY-2010 TIME PLOTTED => 13:20

DIST.	COUNTY	ROUTE	KILOMETER POST TOTAL PROJECT	SHEET NO.	TOTAL SHEETS
07	LA	5	50.8/58.0	771	869

Caltrans Metric

Xiaodong Chen 6-25-08
REGISTERED ENGINEER - CIVIL

5-3-10
PLANS APPROVAL DATE

REGISTERED PROFESSIONAL ENGINEER XIAODONG CHEN No. C58858 Exp. 6-30-11 CIVIL STATE OF CALIFORNIA

The State of California or its officers or agents shall not be responsible for the accuracy or completeness of electronic copies of this plan sheet.

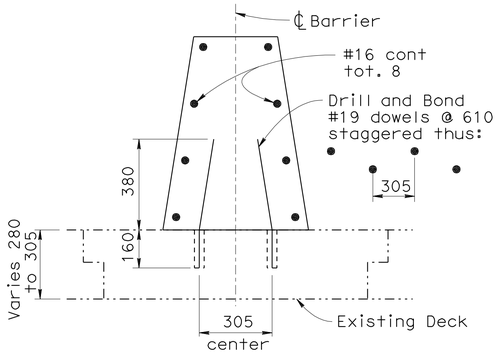

MODIFIED TYPE 60SA.1 OR 60A.1

SEE NOTE 10 FOR RESPECTIVE BARRIER DIMENSIONS

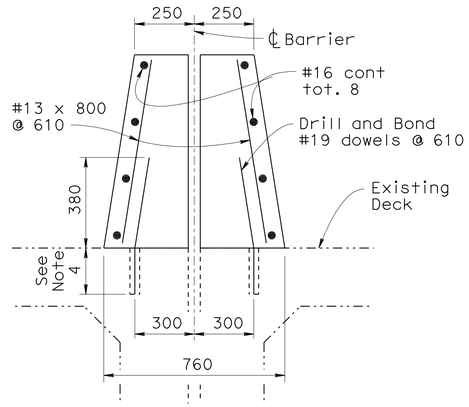

MODIFIED TYPE 60SA.4 OR 60A.4

ONLY VERTICAL DIMENSION VARIES ACCORDING TO RESPECTIVE BARRIER HEIGHT. SEE NOTE 10.

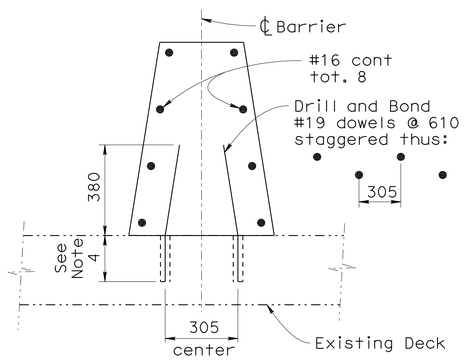

MODIFIED TYPE 60SA.2 OR 60A.2

SEE NOTE 10 FOR RESPECTIVE BARRIER DIMENSIONS

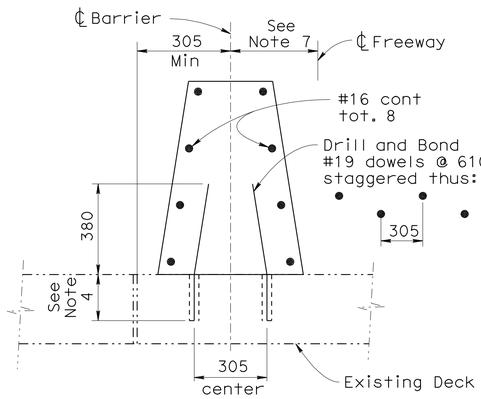

MODIFIED TYPE 60SA.5 OR 60A.5

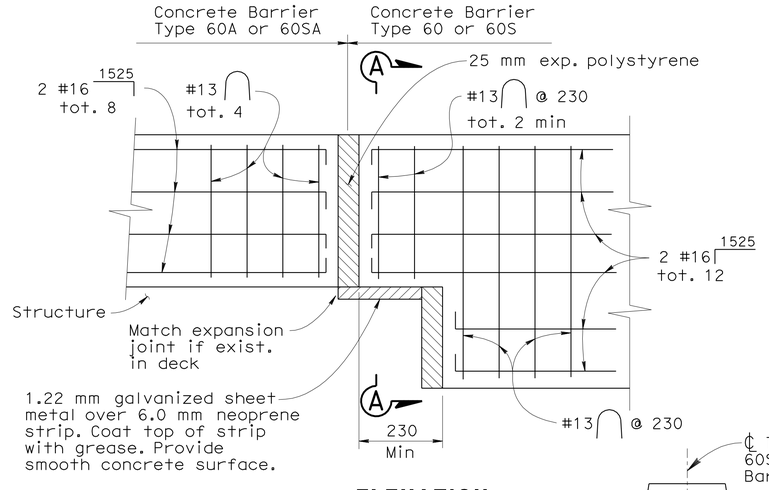

ELEVATION

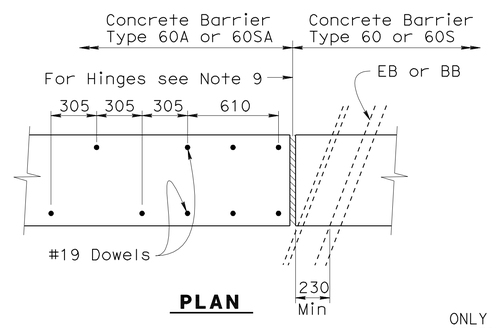

PLAN

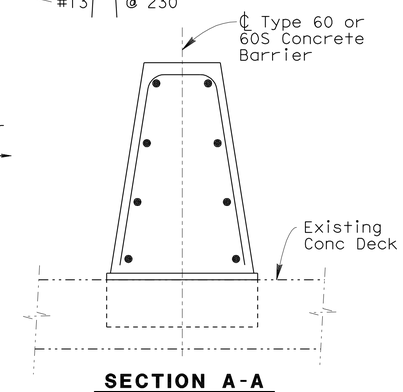

SECTION A-A

MODIFIED TYPE 60A.1

ONLY VERTICAL DIMENSION VARIES ACCORDING TO RESPECTIVE BARRIER HEIGHT. SEE NOTE 10.

CONNECTION TO STRUCTURE AT EXPANSION JOINTS

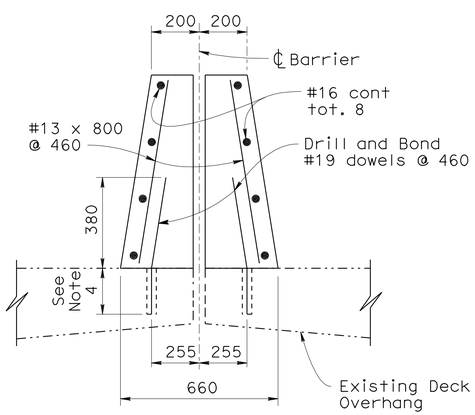

MODIFIED TYPE 60SA.3 OR 60A.3

ONLY VERTICAL DIMENSION VARIES ACCORDING TO RESPECTIVE BARRIER HEIGHT. SEE NOTE 10.

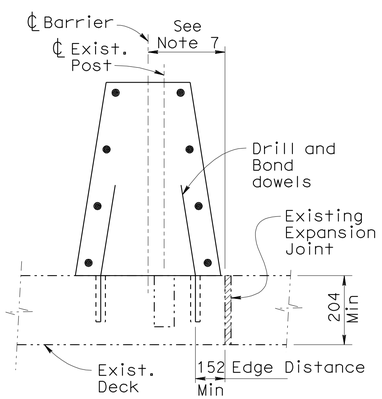

EXISTING POST HOLE

TYPE 1

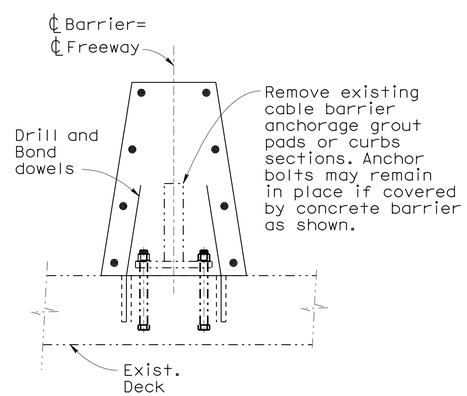

AT BOLTED ANCHORAGE PLATE

TYPE 2

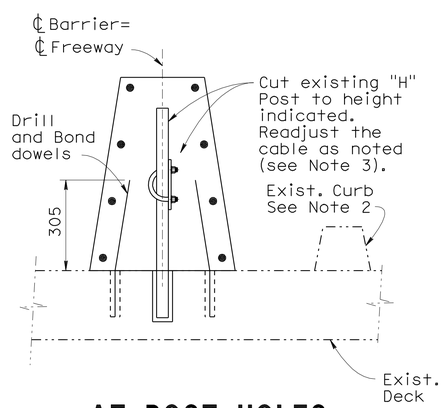

AT POST HOLES

TYPE 3

ASSUMED EXISTING ANCHORAGE CONDITIONS AND DETAILS

NOTES:

1. Transverse expansion joints in concrete barrier shall match all deck joints.
2. Remove all existing curbs and dikes.
3. Existing components of Cable Barrier may be altered and incorporated in Concrete Barriers as indicated. The existing Cable Barrier shall be removed when it is not on the centerline of the new Concrete Barrier.
4. Depth of drilled hole equals depth of slab minus 40 mm, up to 150 mm maximum.
5. Minor adjustments may be made in dowel spacing to clear main reinforcement.
6. Transitions to match adjacent "Type 60A" Barrier shall have minimum flare of 20:1 off the structure.
7. ℄ Barrier is either left, right, or on ℄ of freeway.
8. The Contractor shall verify all dependent dimensions in the field.
9. Barrier to be doweled on either side of deck joints. On skewed hinges, place sheet metal detail across joint and adjust dowels.
10. Barrier Dimensions-Type 60A & Type 60SA, See sketch below.

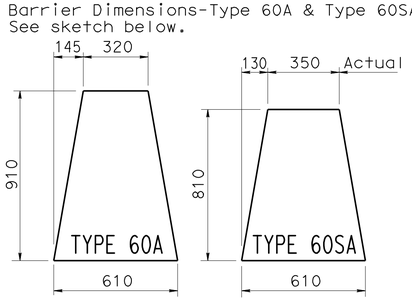

NO SCALE

ALL DIMENSIONS ARE IN MILLIMETERS UNLESS OTHERWISE SHOWN

STANDARD DRAWING					
RELEASE DATE 8/26/03	DESIGN	BY Ralph Bishop	CHECKED Bob Anderson	RELEASED BY Roberto Lucelle OFFICE CHIEF	
FILE NO. xs16-100	DETAILS	BY L. Charlot	CHECKED Ralph Bishop		
	SUBMITTED	BY Ralph Bishop	DRAWING DATE 6/99		

DS OSD 2147A (METRIC) (REV. 2/25/97)

ORIGINAL SCALE IN MILLIMETERS FOR REDUCED PLANS 0 10 20 30 40 50 60 70 80 90 100

STATE OF CALIFORNIA DEPARTMENT OF TRANSPORTATION

DIVISION OF ENGINEERING SERVICES

CU 07
EA 1218V1

BRIDGE NO. 53-1113
KILOMETER POST

LANARK STREET UNDERCROSSING

BARRIER REPLACEMENT

BARRIER - CONCRETE TYPE 60A AND 60SA MODIFIED

DISREGARD PRINTS BEARING EARLIER REVISION DATES

REVISION DATES (PRELIMINARY STAGE ONLY) 5-12-08 7-16-09

SHEET 4 OF 4

USERNAME => trlenard

53-1113-t-bardet02

DATE PLOTTED => 03-MAY-2010 TIME PLOTTED => 13:20

DIST	COUNTY	ROUTE	KILOMETER POST TOTAL PROJECT	SHEET No	TOTAL SHEETS
07	LA	5	50.8/58.0	772	869

REGISTERED CIVIL ENGINEER — DATE 6-25-08

5-3-10
PLANS APPROVAL DATE

REGISTERED PROFESSIONAL ENGINEER — XIAODONG CHEN — No. 58858 — Exp. 6-30-11 — CIVIL — STATE OF CALIFORNIA

The State of California or its officers or agents shall not be responsible for the accuracy or completeness of electronic copies of this plan sheet.

QUANTITIES:

BRIDGE REMOVAL (PORTION), LOCATION E	LUMP	SUM
STRUCTURAL CONCRETE, BRIDGE	25	m^3
DRILL AND BOND DOWEL	257	m
REFINISH BRIDGE DECK	7	m^2
BAR REINFORCING STEEL (BRIDGE)	5 900	kg
CONCRETE BARRIER (TYPE 736 MODIFIED)	169	m
CONCRETE BARRIER (TYPE 60A.6 MODIFIED)	29	m
NPS 3 SUPPLY LINE (BRIDGE)	28	m

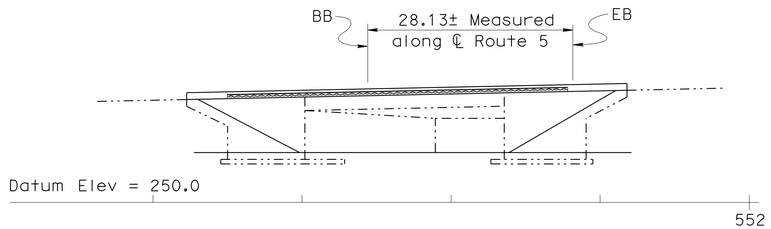

ELEVATION
1:400

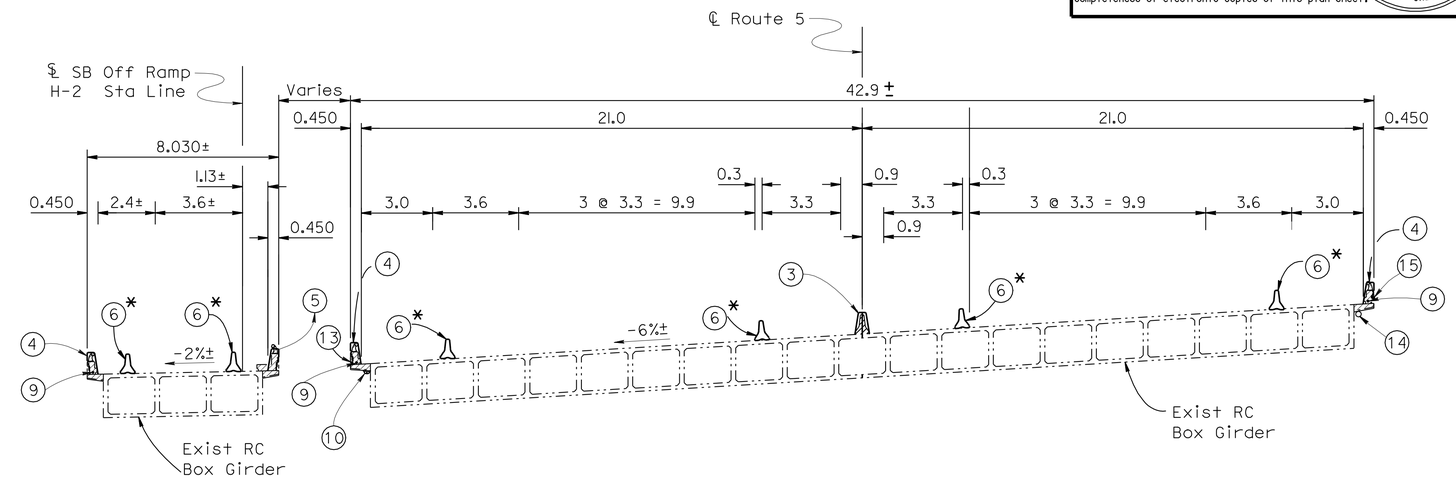

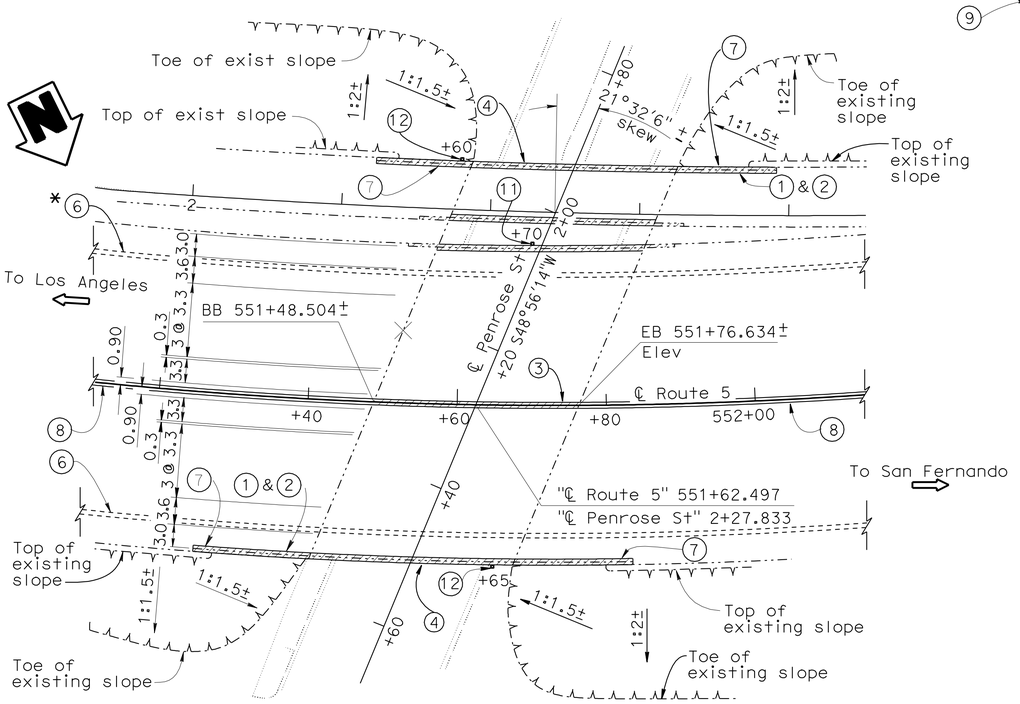

PLAN
1:400

ROUTE 5

R = 609.601±
Δ = 47°09'27"±
T = 266.059±
L = 501.734±

NOTE:
THE CONTRACTOR SHALL VERIFY ALL CONTROLLING FIELD DIMENSIONS BEFORE ORDERING OR FABRICATING ANY MATERIAL.

Notes:

1. Paint "Br. No. 53-1116"
2. Paint " Penrose St UC"
3. Remove existing Concrete Barrier Type 50A (Mod) and replace with Concrete Barrier Type 60A.6 (Mod)
4. Remove existing Barrier Railing Type 1 and replace with Concrete Barrier Type 736 (Mod)
5. Remove existing Barrier Railing Type 2 and replace with Concrete Barrier Type 736 (Mod)
6. Temporary Railing (Type K), see "Road Plans"
7. Remove existing barrier and replace with Concrete Barrier Type 736AR (Mod)
8. Remove and replace concrete barrier, see "Road Plans"
9. 1 - 53 mm ø electrical conduit on each side of bridge and left side of on ramp, see "Road Plans"
10. 2 - 91 mm ø communication conduits, see "Road Plans"
11. Install Type 21 Lighting Standard Foundation, see "Road Plans"
12. Install Type 21 Lighting Standard Foundation (Future), see "Road Plans"
13. Remove existing communication conduit, see "Road Plans"
14. 1 - NPS 3 Supply Line (bridge)
15. 1 - 53 mm sprinkler control conduit, see "Road Plans"

Legend:

——— Indicates new structure
—·—·— Indicates existing structure
▨ Indicates bridge removal (portion)
* For stage construction, see "Staged Construction" sheet

TYPICAL SECTION
1:125

INDEX TO PLANS

SHEET No.	SHEET TITLE
1	GENERAL PLAN
2	STAGED CONSTRUCTION
3	BARRIER DETAILS
4	ARCHITECTURAL DETAILS
5	BARRIER - CONCRETE TYPE 61A AND 61SA MODIFIED

STANDARD PLANS DATED JULY 2004

A10A	ACRONYMS AND ABBREVIATIONS (A-L)
A10B	ACRONYMS AND ABBREVIATIONS (M-Z)
A10C	SYMBOLS (SHEET 1 OF 2)
A10D	SYMBOLS (SHEET 2 OF 2)
B11-56	CONCRETE BARRIER TYPE 736
B14-3	COMMUNICATION AND SPRINKLER CONTROL
B14-4	WATER SUPPLY LINE (BRIDGE)
	PIPE SIZE LESS THAN NSP 4)

STANDARD PLAN SHEET No.
DETAIL No.

Caltrans Metric

Fritz Hoffman 6-25-08
DESIGN ENGINEER

	BY	CHECKED		
DESIGN	Hilario Tuazon	Elijah Hall	LOAD FACTOR DESIGN	LIVE LOADING: HS20-44 AND ALTERNATIVE AND PERMIT DESIGN LOAD
DETAILS	S. Schenck	Elijah Hall	LAYOUT	BY S. Schenck — CHECKED A. Salimi
QUANTITIES	Hernan Perez	Elijah Hall	SPECIFICATIONS	BY M. Pan — PLANS AND SPECS COMPARED

ALL DIMENSIONS ARE IN METERS UNLESS OTHERWISE SHOWN

ORIGINAL SCALE IN MILLIMETERS FOR REDUCED PLANS 0 10 20 30 40 50 60 70 80 90 100

STATE OF CALIFORNIA
DEPARTMENT OF TRANSPORTATION

DIVISION OF ENGINEERING SERVICES
STRUCTURE DESIGN
DESIGN BRANCH 6

CU 07
EA 1218V1

BRIDGE NO. 53-1116
KILOMETER POST

PENROSE STREET UNDERCROSSING
BARRIER REPLACEMENT
GENERAL PLAN

DISREGARD PRINTS BEARING EARLIER REVISION DATES

REVISION DATES: 3-8-05 10-28-05 3-14-06 5-22-07 1-15-08 3-5-08 4-16-08 6-12-08 7-16-09

SHEET 1 OF 5

STRUCTURES DESIGN GENERAL PLAN SHEET (METRIC) (REV.03-17-04)

FILE => 53-1116-a-gp.dgn

USERNAME => trlenard DATE PLOTTED => 03-MAY-2010 TIME PLOTTED => 13:20

DIST	COUNTY	ROUTE	KILOMETER POST TOTAL PROJECT	SHEET No	TOTAL SHEETS
07	LA	5	50.8/58.0	773	869

REGISTERED CIVIL ENGINEER — DATE 6-25-08

5-3-10
PLANS APPROVAL DATE

REGISTERED PROFESSIONAL ENGINEER — XIAODONG CHEN — No. 58858 — Exp. 6-30-11 — CIVIL — STATE OF CALIFORNIA

The State of California or its officers or agents shall not be responsible for the accuracy or completeness of electronic copies of this plan sheet.

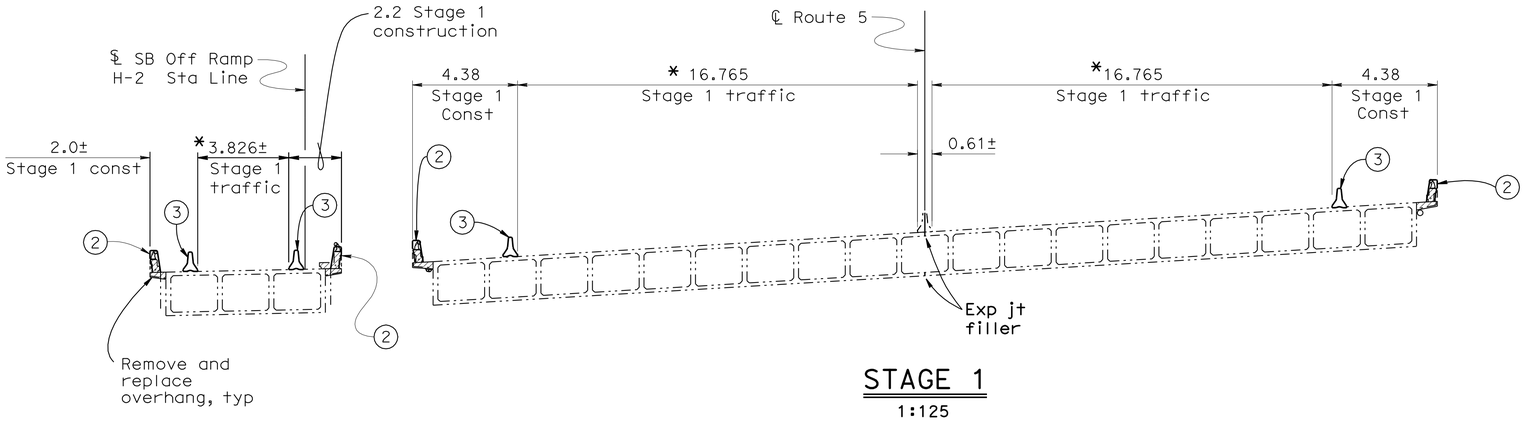

STAGE 1
1:125

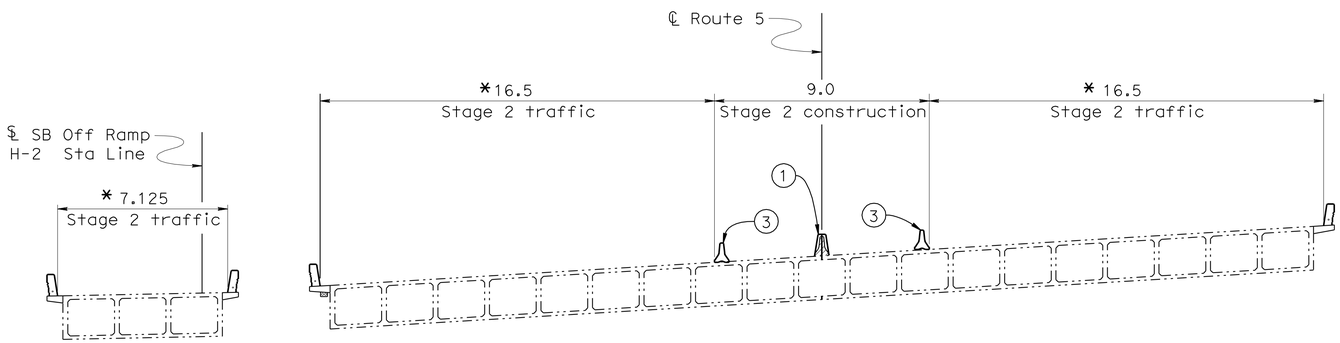

STAGE 2
1:125

NOTES:

1. Remove existing Concrete Barrier Type 50A (Mod) and replace with Concrete Barrier Type 60A.6 (Mod)
2. Remove existing barrier and replace with Concrete Barrier Type 736 (Mod)
3. Temporary Railing (Type K), see "Road Plans"

LEGEND:

- Indicates new structure
- Indicates existing structure
- Indicates bridge removal (portion)
- * For traffic handling, see "Road Plans"

GENERAL NOTES
LOAD FACTOR DESIGN

DESIGN: CALTRANS BRIDGE DESIGN SPECIFICATIONS
LFD Version April 2000
(1996 AASHTO with Interims and Revision by Caltrans)

REINFORCING STEEL: f_y = 420 MPa
Transverse Deck Slabs (Working Stress):
f_s = 138 MPa
f_c = 9 MPa
n = 10
f'_c = 25 MPa (except as shown on Concrete Strength & Type Limits Diagram)

NOTE:
THE CONTRACTOR SHALL VERIFY ALL CONTROLLING FIELD DIMENSIONS BEFORE ORDERING OR FABRICATING ANY MATERIAL.

Caltrans Metric

ALL DIMENSIONS ARE IN METERS UNLESS OTHERWISE SHOWN

ORIGINAL SCALE IN MILLIMETERS FOR REDUCED PLANS 0 10 20 30 40 50 60 70 80 90 100

	BY	CHECKED
DESIGN	Xiaodong Chen	Elijah Hall
DETAILS	Roelina Martinez	Elijah Hall
QUANTITIES	Hernan Perez	Elijah Hall

STATE OF CALIFORNIA
DEPARTMENT OF TRANSPORTATION

DIVISION OF ENGINEERING SERVICES
STRUCTURE DESIGN
DESIGN BRANCH 6

CU 07
EA 1218V1

BRIDGE NO. 53-1116
KILOMETER POST

PENROSE STREET UNDERCROSSING
BARRIER REPLACEMENT
STAGED CONSTRUCTION

DISREGARD PRINTS BEARING EARLIER REVISION DATES

REVISION DATES: 1-15-08, 3-5-08, 4-18-08, 4-30-08, 7-16-09

SHEET 2 OF 5

FILE => 53-1116-b-sc.dgn

STRUCTURES DESIGN DETAIL SHEET (METRIC) (REV.03-17-04)

USERNAME => trienard DATE PLOTTED => 04-MAY-2010 TIME PLOTTED => 05:11

DIST	COUNTY	ROUTE	KILOMETER POST TOTAL PROJECT	SHEET No	TOTAL SHEETS
07	LA	5	50.8/58.0	774	869

REGISTERED CIVIL ENGINEER 6-25-08 DATE

5-3-10
PLANS APPROVAL DATE

REGISTERED PROFESSIONAL ENGINEER XIAODONG CHEN No. C 58858 Exp. 6-30-11 CIVIL STATE OF CALIFORNIA

The State of California or its officers or agents shall not be responsible for the accuracy or completeness of electronic copies of this plan sheet.

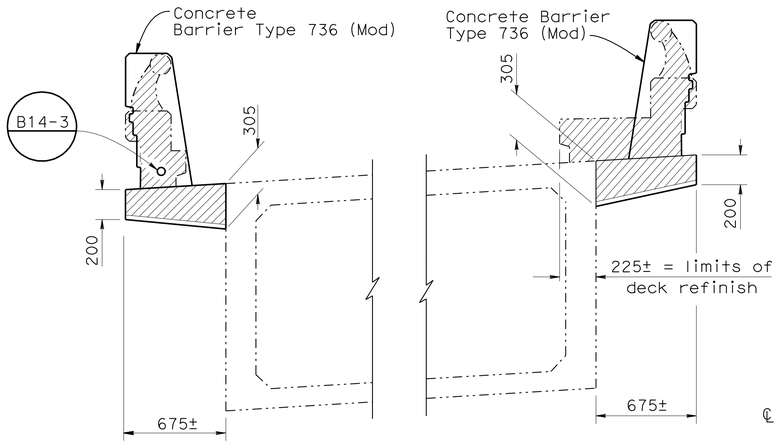

CONCRETE BARRIER REPLACE (OFF RAMP)

1:20

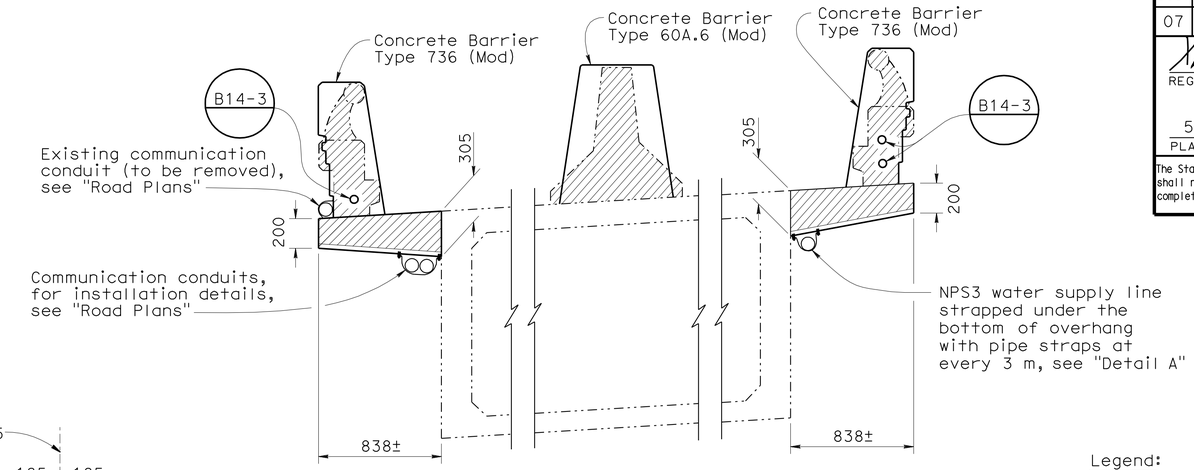

CONCRETE BARRIER REPLACE (BRIDGE)

1:20

Legend:

- Indicates existing structure
- Indicates bridge removal (portion)
- Indicates new structure

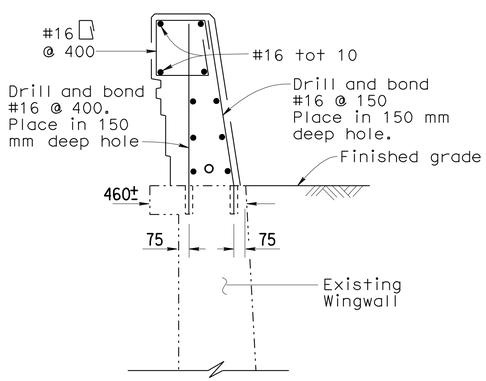

TYPE 736AR (MOD)

No Scale

B11-56 B14-3

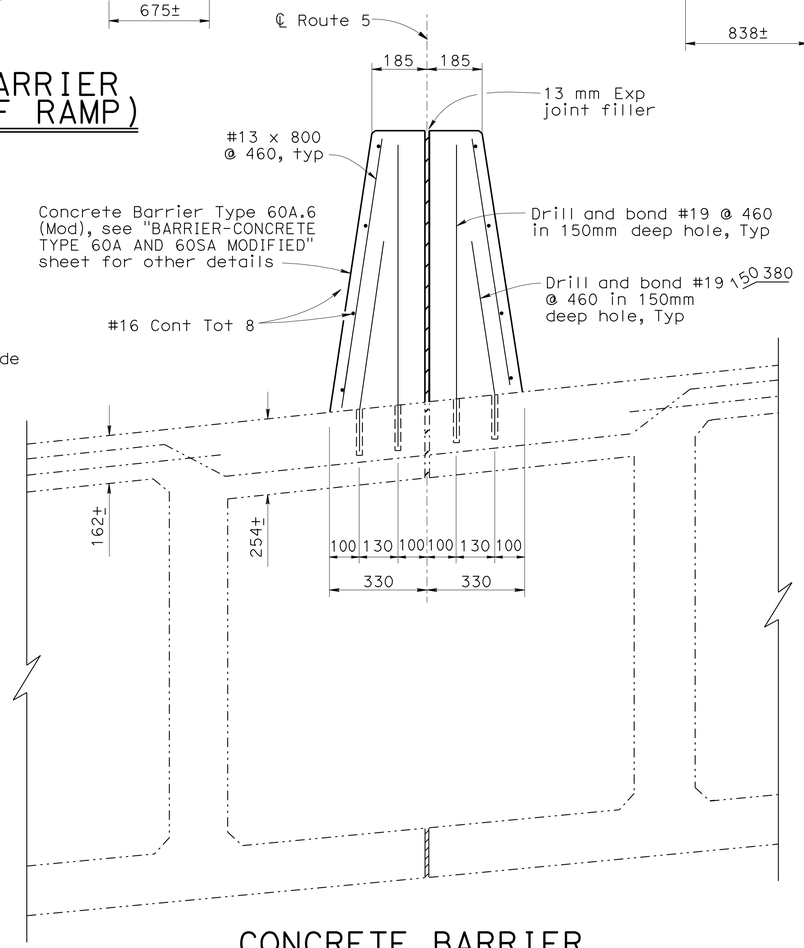

CONCRETE BARRIER TYPE 60A.6 (MOD)

1:10

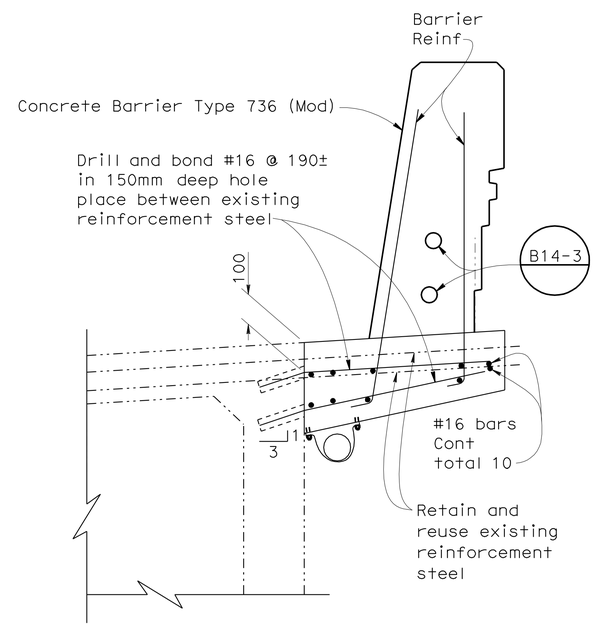

CONCRETE BARRIER TYPE 736 (MOD)- TYPICAL

B11-56

1:10

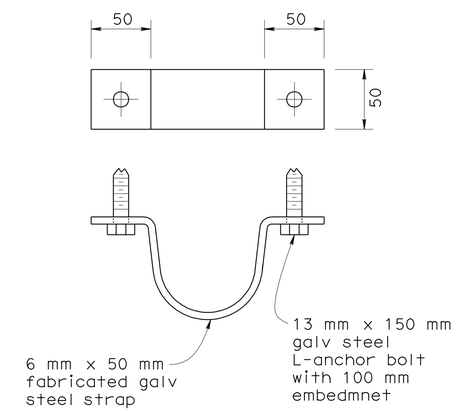

DETAIL A

1:2.5

NOTE:
THE CONTRACTOR SHALL VERIFY ALL CONTROLLING FIELD DIMENSIONS BEFORE ORDERING OR FABRICATING ANY MATERIAL.

Caltrans Metric

	BY	CHECKED
DESIGN	Hilario Tuazon	Xiaodong Chen
DETAILS	Roelina Martinez	Hilario Tuazon
QUANTITIES	Hernan Perez	Elijah Hall

STATE OF CALIFORNIA DEPARTMENT OF TRANSPORTATION

DIVISION OF ENGINEERING SERVICES STRUCTURE DESIGN

DESIGN BRANCH 6

BRIDGE NO. 53-1116

KILOMETER POST

PENROSE STREET UNDERCROSSING

BARRIER REPLACEMENT

BARRIER DETAILS

ALL DIMENSIONS ARE IN MILLIMETERS UNLESS OTHERWISE SHOWN

ORIGINAL SCALE IN MILLIMETERS FOR REDUCED PLANS 0 10 20 30 40 50 60 70 80 90 100

CU 07
EA 1218V1

DISREGARD PRINTS BEARING EARLIER REVISION DATES

REVISION DATES: 1-15-08 3-14-08 4-16-08 4-30-08 7-16-09

SHEET 3 OF 5

FILE => 53-1116-1-bardet1.dgn

STRUCTURES DESIGN DETAIL SHEET (METRIC) (REV.03-17-04)

USERNAME => friehard DATE PLOTTED => 03-MAY-2010 TIME PLOTTED => 13:20

DIST	COUNTY	ROUTE	KILOMETER POST TOTAL PROJECT	SHEET No	TOTAL SHEETS
07	LA	5	50.8/58.0	775	869

Xiaodong Chen 6-25-08
REGISTERED CIVIL ENGINEER DATE

5-3-10
PLANS APPROVAL DATE

REGISTERED PROFESSIONAL ENGINEER
Xiaodong Chen
No. C58858
Exp. 6-30-11
CIVIL
STATE OF CALIFORNIA

The State of California or its officers or agents shall not be responsible for the accuracy or completeness of electronic copies of this plan sheet.

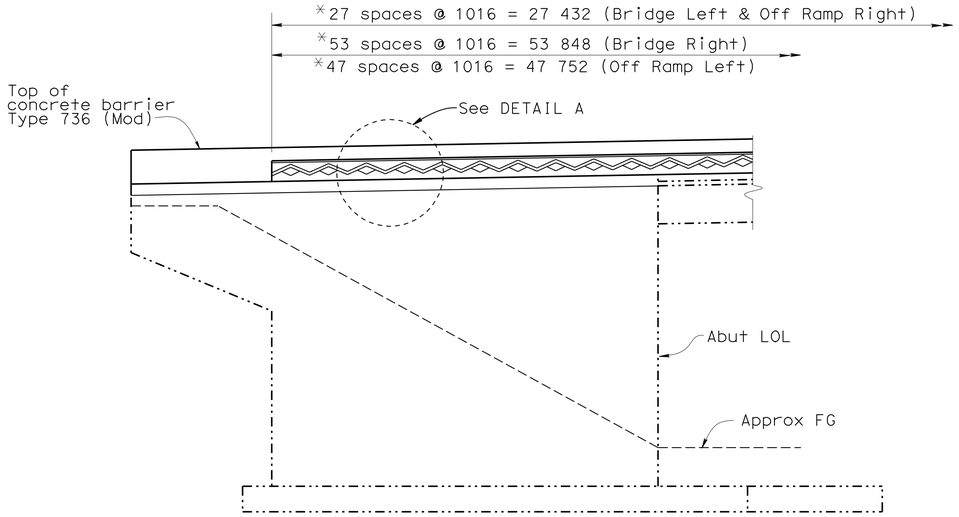

ELEVATION
1:80

NOTE:
* Architectural texture is placed symetrical to the ℄ of Penrose Street Undercrossing

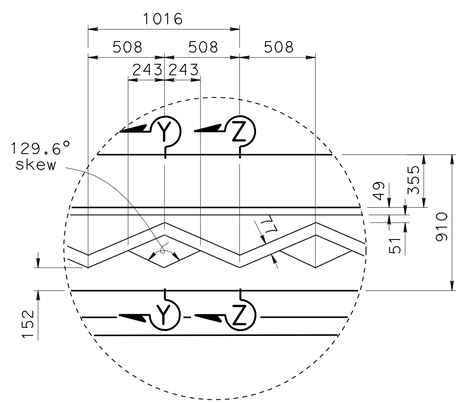

DETAIL A
No scale

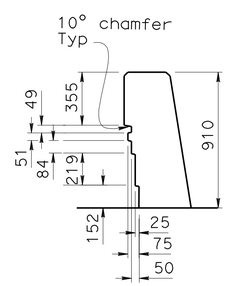

SECTION Y-Y
1:20

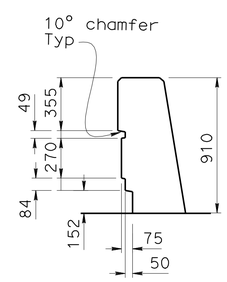

SECTION Z-Z
1:20

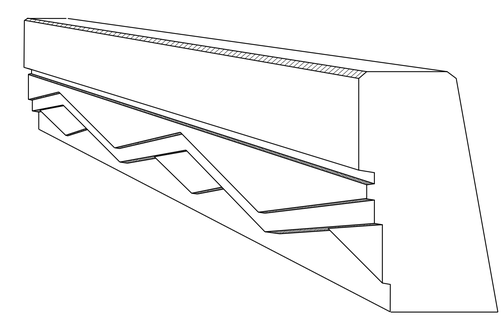

PERSPECTIVE VIEW
No scale

NOTE:
THE CONTRACTOR SHALL VERIFY ALL CONTROLLING FIELD DIMENSIONS BEFORE ORDERING OR FABRICATING ANY MATERIAL.

Caltrans Metric

	BY	CHECKED
DESIGN	Xiaodong Chen	G. R-Gutierrez
DETAILS	Bruno Jenko	G. R-Gutierrez
QUANTITIES	G. R-Gutierrez	Xiaodong Chen

STATE OF CALIFORNIA
DEPARTMENT OF TRANSPORTATION

DIVISION OF ENGINEERING SERVICES
STRUCTURE DESIGN
DESIGN BRANCH 6

BRIDGE NO. 53-1116
KILOMETER POST

PENROSE STREET UNDERCROSSING
BARRIER REPLACEMENT
ARCHITECTURAL DETAILS

ALL DIMENSIONS ARE IN MILLIMETERS UNLESS OTHERWISE SHOWN

ORIGINAL SCALE IN MILLIMETERS FOR REDUCED PLANS 0 10 20 30 40 50 60 70 80 90 100

CU 07
EA 1218V1

DISREGARD PRINTS BEARING EARLIER REVISION DATES

REVISION DATES: 10-31-07 11-16-07 3-26-08 7-16-09

SHEET 4 OF 5

FILE => 53-1116-u-archdet.dgn

STRUCTURES DESIGN DETAIL SHEET (METRIC) (REV.03-17-04)

USERNAME => ttrienard DATE PLOTTED => 03-MAY-2010 TIME PLOTTED => 13:20

DIST.	COUNTY	ROUTE	KILOMETER POST TOTAL PROJECT	SHEET NO.	TOTAL SHEETS
07	LA	5	50.8/58.0	776	869

Caltrans Metric

Xiaodong Chen 6-25-08
REGISTERED ENGINEER - CIVIL

5-3-10
PLANS APPROVAL DATE

REGISTERED PROFESSIONAL ENGINEER XIAODONG CHEN No. C58858 Exp. 6-30-11 CIVIL STATE OF CALIFORNIA

The State of California or its officers or agents shall not be responsible for the accuracy or completeness of electronic copies of this plan sheet.

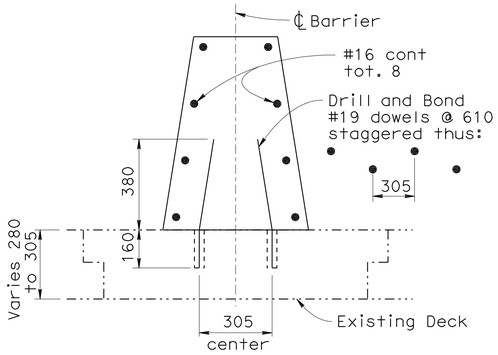

MODIFIED TYPE 60SA.1 OR 60A.1

SEE NOTE 10 FOR RESPECTIVE BARRIER DIMENSIONS

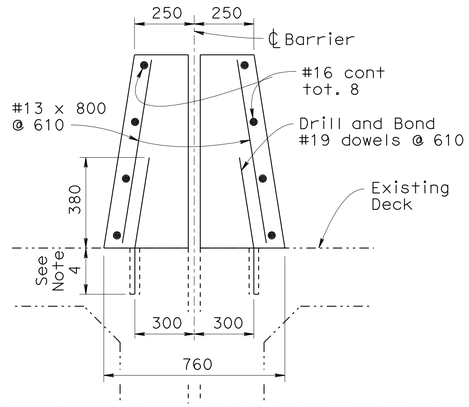

MODIFIED TYPE 60SA.4 OR 60A.4

ONLY VERTICAL DIMENSION VARIES ACCORDING TO RESPECTIVE BARRIER HEIGHT. SEE NOTE 10.

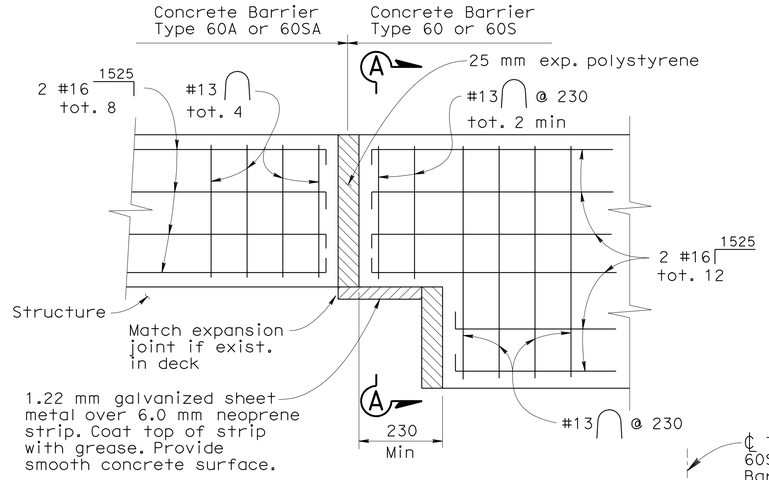

ELEVATION

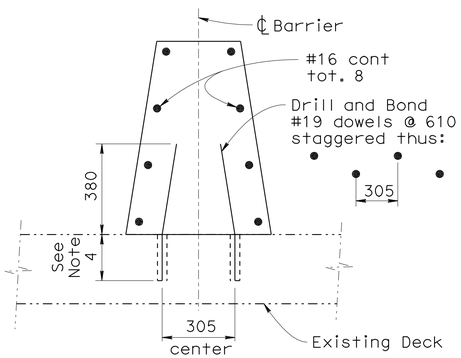

MODIFIED TYPE 60SA.2 OR 60A.2

SEE NOTE 10 FOR RESPECTIVE BARRIER DIMENSIONS

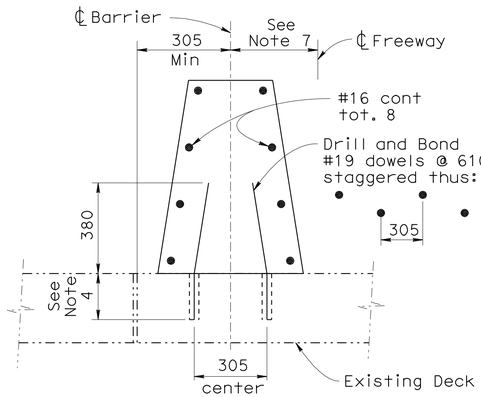

MODIFIED TYPE 60SA.5 OR 60A.5

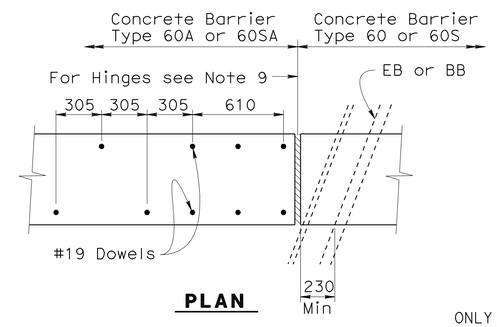

PLAN

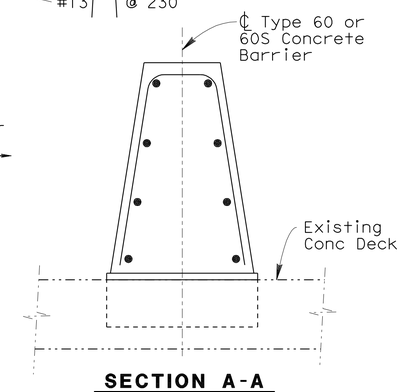

SECTION A-A

MODIFIED TYPE 60A.1

ONLY VERTICAL DIMENSION VARIES ACCORDING TO RESPECTIVE BARRIER HEIGHT. SEE NOTE 10.

CONNECTION TO STRUCTURE AT EXPANSION JOINTS

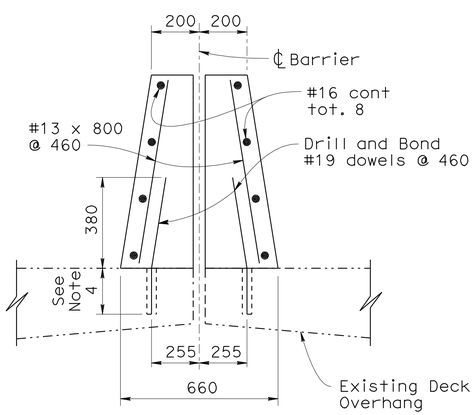

MODIFIED TYPE 60SA.3 OR 60A.3

ONLY VERTICAL DIMENSION VARIES ACCORDING TO RESPECTIVE BARRIER HEIGHT. SEE NOTE 10.

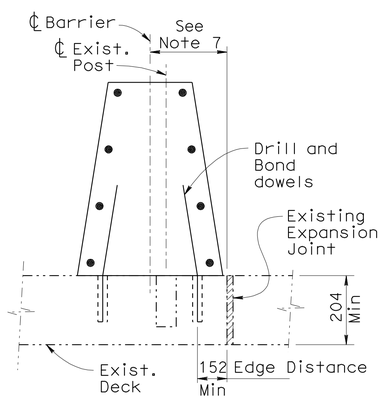

EXISTING POST HOLE

TYPE 1

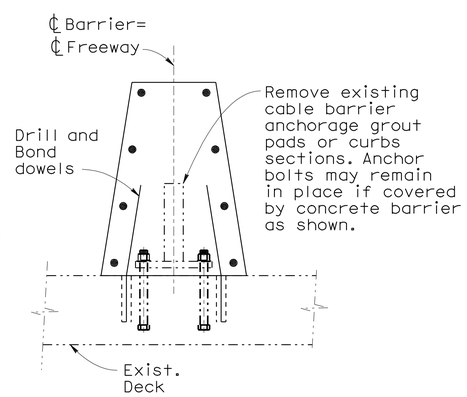

AT BOLTED ANCHORAGE PLATE

TYPE 2

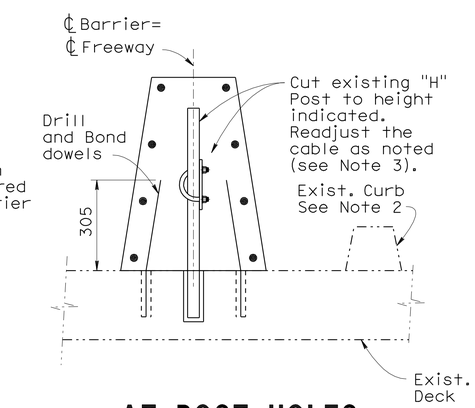

AT POST HOLES

TYPE 3

ASSUMED EXISTING ANCHORAGE CONDITIONS AND DETAILS

NOTES:

1. Transverse expansion joints in concrete barrier shall match all deck joints.
2. Remove all existing curbs and dikes.
3. Existing components of Cable Barrier may be altered and incorporated in Concrete Barriers as indicated. The existing Cable Barrier shall be removed when it is not on the centerline of the new Concrete Barrier.
4. Depth of drilled hole equals depth of slab minus 40 mm, up to 150 mm maximum.
5. Minor adjustments may be made in dowel spacing to clear main reinforcement.
6. Transitions to match adjacent "Type 60A" Barrier shall have minimum flare of 20:1 off the structure.
7. ℄ Barrier is either left, right, or on ℄ of freeway.
8. The Contractor shall verify all dependent dimensions in the field.
9. Barrier to be doweled on either side of deck joints. On skewed hinges, place sheet metal detail across joint and adjust dowels.
10. Barrier Dimensions-Type 60A & Type 60SA, See sketch below.

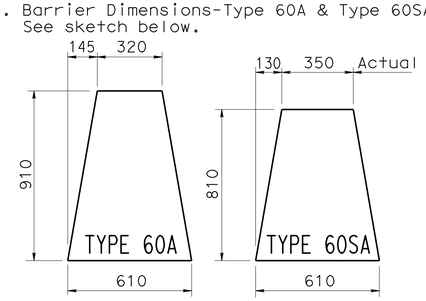

NO SCALE

ALL DIMENSIONS ARE IN MILLIMETERS UNLESS OTHERWISE SHOWN

STANDARD DRAWING					
RELEASE DATE 8/26/03	DESIGN	BY Ralph Bishop	CHECKED Bob Anderson	RELEASED BY Roberto Lucelle OFFICE CHIEF	
FILE NO. xs16-100	DETAILS	BY L. Charlot	CHECKED Ralph Bishop		
	SUBMITTED	BY Ralph Bishop	DRAWING DATE 6/99		

DS OSD 2147A (METRIC) (REV. 2/25/97)

STATE OF CALIFORNIA DEPARTMENT OF TRANSPORTATION

DIVISION OF ENGINEERING SERVICES

CU 07
EA 1218V1

BRIDGE NO. 53-1116
KILOMETER POST

PENROSE STREET UNDERCROSSING

BARRIER REPLACEMENT

BARRIER - CONCRETE TYPE 60A AND 60SA MODIFIED

DISREGARD PRINTS BEARING EARLIER REVISION DATES 5-12-08 7-16-09

REVISION DATES (PRELIMINARY STAGE ONLY)

SHEET 5 OF 5

ORIGINAL SCALE IN MILLIMETERS FOR REDUCED PLANS 0 10 20 30 40 50 60 70 80 90 100

USERNAME => trlenard

DATE PLOTTED => 03-MAY-2010 TIME PLOTTED => 13:20

53-1116-u-xs16100.

DIST	COUNTY	ROUTE	KILOMETER POST TOTAL PROJECT	SHEET No	TOTAL SHEETS
07	LA	5	50.8/58.0	777	869

REGISTERED CIVIL ENGINEER — DATE 6-25-08

5-3-10
PLANS APPROVAL DATE

REGISTERED PROFESSIONAL ENGINEER — XIAODONG CHEN No. 58858 Exp. 6-30-11 CIVIL — STATE OF CALIFORNIA

The State of California or its officers or agents shall not be responsible for the accuracy or completeness of electronic copies of this plan sheet.

QUANTITIES

BRIDGE REMOVAL (PORTION), LOCATION F	LUMP SUM	
STRUCTURAL CONCRETE, BRIDGE	25	m^3
DRILL AND BOND DOWEL	247	m
BAR REINFORCING STEEL (BRIDGE)	4 700	kg
CONCRETE BARRIER (TYPE 736 MODIFIED)	163	m
CONCRETE BARRIER (TYPE 60A.6 MODIFIED)	55	m

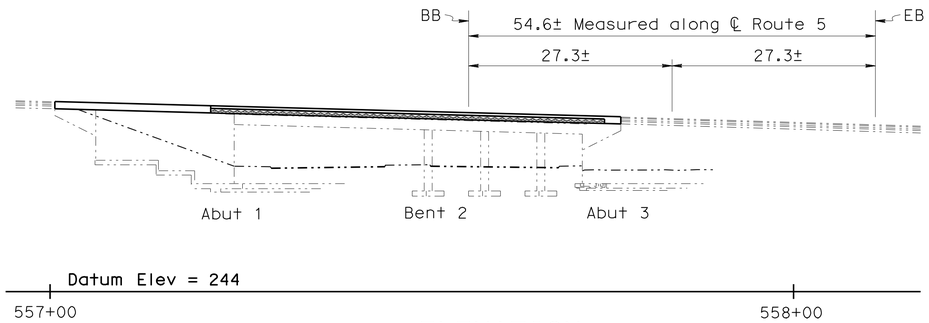

ELEVATION
1:400

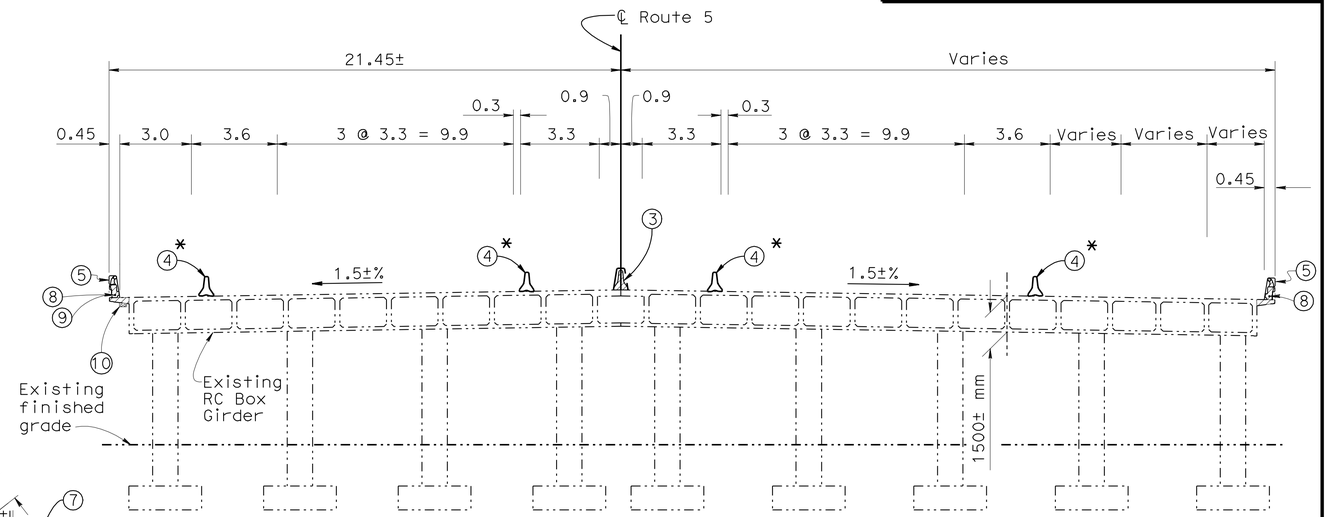

TYPICAL SECTION
1:125

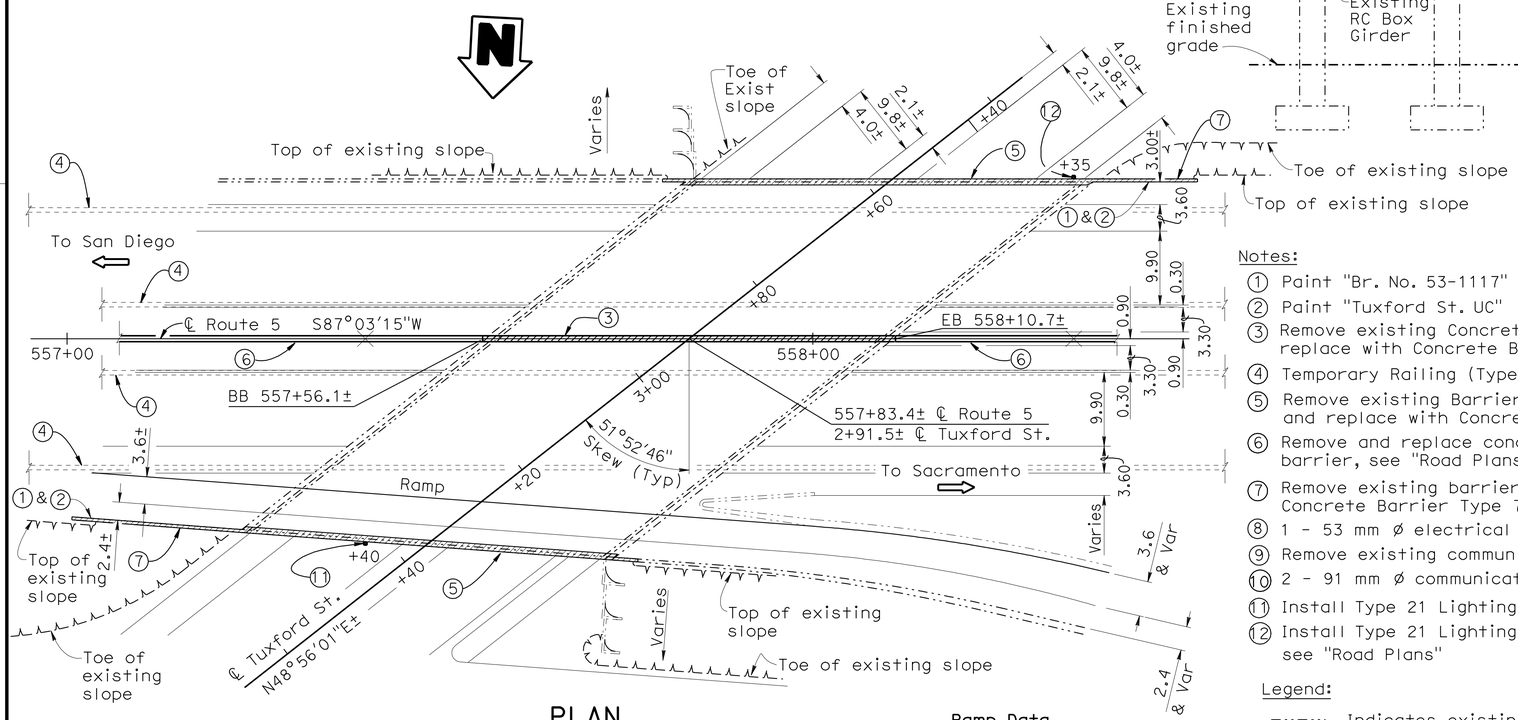

PLAN
1:400

Ramp Data
R= 800′
Δ= 21°27′11"
T= 151.55′
L= 299.54′

Notes:

1. Paint "Br. No. 53-1117"
2. Paint "Tuxford St. UC"
3. Remove existing Concrete Barrier Type 50 (Mod) and replace with Concrete Barrier Type 60A.6 (Mod)
4. Temporary Railing (Type K), see "Road Plans"
5. Remove existing Barrier Railing Type 1 and replace with Concrete Barrier Type 736 (Mod)
6. Remove and replace concrete barrier, see "Road Plans"
7. Remove existing barrier and replace with Concrete Barrier Type 736AR (Mod)
8. 1 - 53 mm ø electrical conduit each side, see "Road Plans"
9. Remove existing communication conduit, see "Road Plans"
10. 2 - 91 mm ø communication conduits, see "Road Plans"
11. Install Type 21 Lighting Standard Foundation, see "Road Plans"
12. Install Type 21 Lighting Standard Foundation (Future), see "Road Plans"

Legend:

- Indicates existing structure
- Indicates new structure
- Indicates bridge removal (portion)
- * For stage construction, see "Stage Construction" sheet

INDEX TO PLANS

SHEET NO.	SHEET TITLE
1	GENERAL PLAN
2	STAGED CONSTRUCTION
3	BARRIER DETAILS
4	ARCHITECTURAL DETAILS
5	BARRIER - CONCRETE TYPE 60A AND 60SA MODIFIED

STANDARD PLANS DATED JULY 2004

A10A	ACRONYMS AND ABBREVIATIONS (A-L)
A10B	ACRONYMS AND ABBREVIATIONS (M-Z)
A10C	SYMBOLS (SHEET 1 OF 2)
A10D	SYMBOLS (SHEET 2 OF 2)
A76A	CONCRETE BARRIER TYPE 60
B11-56	CONCRETE BARRIER TYPE 736
B14-3	COMMUNICATION AND SPRINKLER CONTROL CONDUITS (CONDUIT LESS THAN SIZE 103)
ES-6A	ELECTRICAL SYSTEMS (LIGHTING STANDARDS TYPE 15 AND 21)

STANDARD PLAN SHEET NO.
DETAIL NO.

NOTE:
THE CONTRACTOR SHALL VERIFY ALL CONTROLLING FIELD DIMENSIONS BEFORE ORDERING OR FABRICATING ANY MATERIAL.

Caltrans Metric

DESIGN ENGINEER 6-25-08

	BY	CHECKED
DESIGN	David Alvarez	Elijah Hall
DETAILS	D. Kubochi	Elijah Hall
QUANTITIES	Hernan Deer	Elijah Hall

LOAD FACTOR DESIGN — LIVE LOADING: HS20-44 AND ALTERNATIVE AND PERMIT DESIGN LOAD
LAYOUT — BY David Alvarez — CHECKED David Alvarez
SPECIFICATIONS — BY — PLANS AND SPECS COMPARED

STATE OF CALIFORNIA
DEPARTMENT OF TRANSPORTATION

DIVISION OF ENGINEERING SERVICES
STRUCTURE DESIGN
DESIGN BRANCH 6

BRIDGE NO. 53-1117
KILOMETER POST

TUXFORD STREET UNDERCROSSING
BARRIER REPLACEMENT AND WIDEN
GENERAL PLAN

ALL DIMENSIONS ARE IN METERS UNLESS OTHERWISE SHOWN

ORIGINAL SCALE IN MILLIMETERS FOR REDUCED PLANS 0 10 20 30 40 50 60 70 80 90 100

CU 07
EA 1218V1

DISREGARD PRINTS BEARING EARLIER REVISION DATES

REVISION DATES: 10-27-05 06-17-08 7-16-08 5-2-07 5-11-07 1-14-08 03-14-08 4-16-08 4-22-08 4-28-08

SHEET 1 OF 5

FILE => 53-1117-a-gp.dgn

STRUCTURES DESIGN GENERAL PLAN SHEET (METRIC) (REV.03-17-04)

USERNAME => trlenard DATE PLOTTED => 03-MAY-2010 TIME PLOTTED => 13:21

DIST	COUNTY	ROUTE	KILOMETER POST TOTAL PROJECT	SHEET No	TOTAL SHEETS
07	LA	5	50.8/58.0	778	869

Xiaodong Chen 6-25-08
REGISTERED CIVIL ENGINEER DATE

5-3-10
PLANS APPROVAL DATE

REGISTERED PROFESSIONAL ENGINEER
XIAODONG CHEN
No. 58858
Exp. 6-30-11
CIVIL
STATE OF CALIFORNIA

The State of California or its officers or agents shall not be responsible for the accuracy or completeness of electronic copies of this plan sheet.

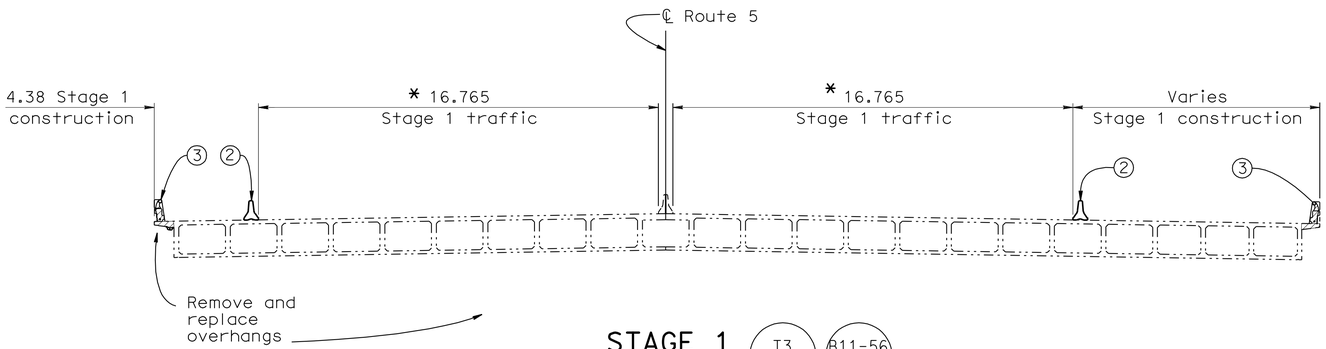

STAGE 1
1:125
T3 B11-56

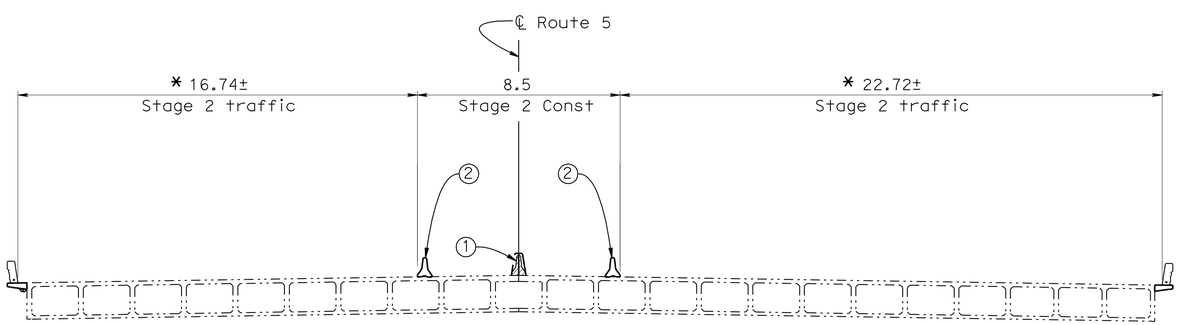

STAGE 2
1:125
T3 A76A

Notes:

1. Remove existing Concrete Barrier Type 50A (Mod) and replace with Concrete Barrier Type 60A (Mod)
2. Temporary Railing (Type K), see "Road Plans"
3. Remove existing Barrier Railing Type 1 and replace with Concrete Barrier Type 736

Legend:

- Indicates existing structure
- Indicates new structure
- Indicates bridge removal (portion)
- * For traffic handling, see "Road Plans"

GENERAL NOTES
LOAD FACTOR DESIGN

DESIGN: CALTRANS BRIDGE DESIGN SPECIFICATIONS LFD Version April 2000 (1996 AASHTO with Interims and Revision by Caltrans)

REINFORCING STEEL: f_y = 420 MPa

Transverse Deck Slabs (Working Stress):

f_s = 138 MPa
f_c = 9 MPa
n = 10
f'_c = 25 MPa (except as shown on Concrete Strength & Type Limits Diagram)

USERNAME => friehard DATE PLOTTED => 03-MAY-2010 TIME PLOTTED => 13:21

Caltrans Metric

	BY	CHECKED
DESIGN	Xiaodong Chen	Elijah Hall
DETAILS	Roelina Martinez	Elijah Hall
QUANTITIES	Hernan Perez	Elijah Hall

STATE OF CALIFORNIA
DEPARTMENT OF TRANSPORTATION

DIVISION OF ENGINEERING SERVICES
STRUCTURE DESIGN
DESIGN BRANCH 6

BRIDGE NO. 53-1117
KILOMETER POST

TUXFORD STREET UNDERCROSSING
BARRIER REPLACEMENT AND WIDEN
STAGED CONSTRUCTION

ALL DIMENSIONS ARE IN METERS UNLESS OTHERWISE SHOWN

ORIGINAL SCALE IN MILLIMETERS FOR REDUCED PLANS 0 10 20 30 40 50 60 70 80 90 100

CU 07
EA 1218V1

DISREGARD PRINTS BEARING EARLIER REVISION DATES

REVISION DATES: 5-23-07 5-31-07 1-11-07 08-11-08 4-18-08 4-28-08 7-16-09

SHEET 2 OF 5

FILE => 53-1117-b-sc.dgn

STRUCTURES DESIGN DETAIL SHEET (METRIC) (REV.03-17-04)

DIST	COUNTY	ROUTE	KILOMETER POST TOTAL PROJECT	SHEET No	TOTAL SHEETS
07	LA	5	50.8/58.0	779	869

REGISTERED CIVIL ENGINEER — DATE 6-25-08

5-3-10
PLANS APPROVAL DATE

The State of California or its officers or agents shall not be responsible for the accuracy or completeness of electronic copies of this plan sheet.

REGISTERED PROFESSIONAL ENGINEER — Xiaodong Chen — No. 58858 — Exp. 6-30-11 — CIVIL — STATE OF CALIFORNIA

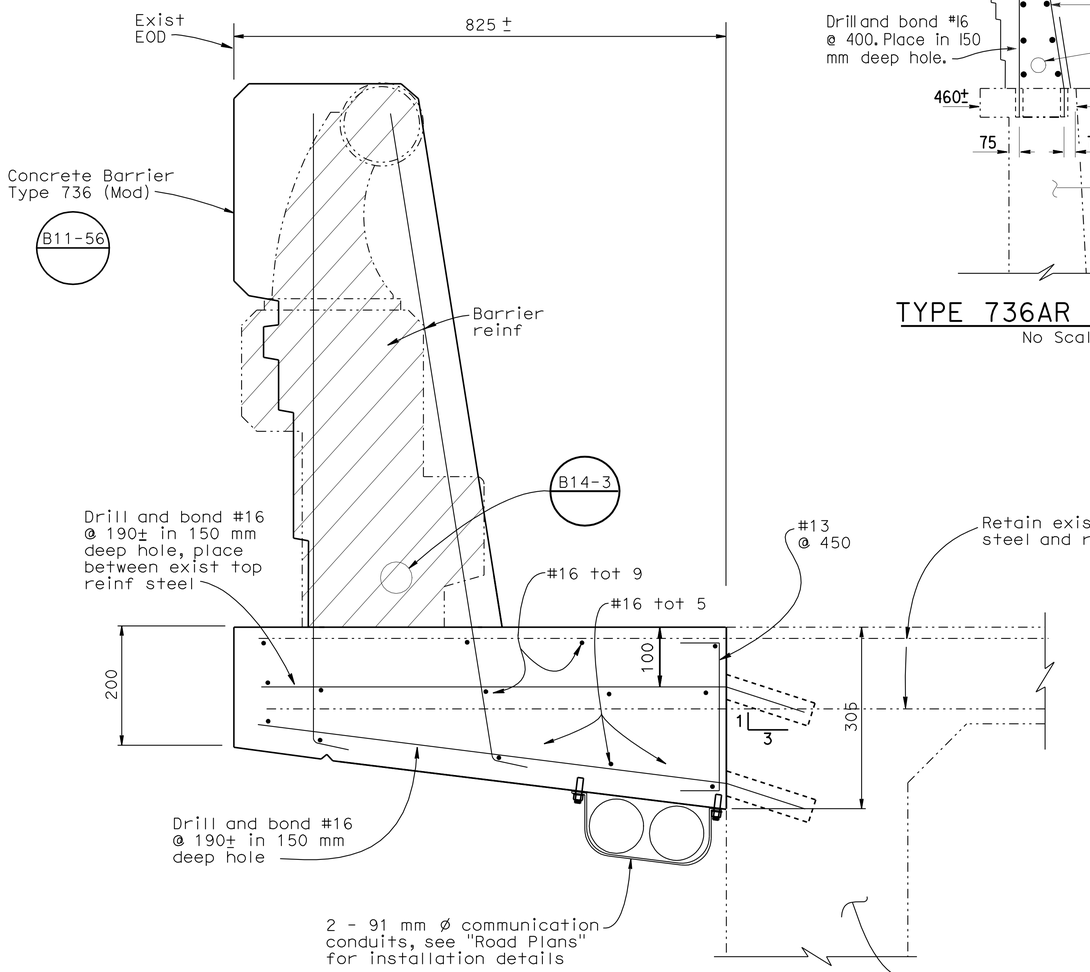

CONCRETE BARRIER TYPE 736
1:5

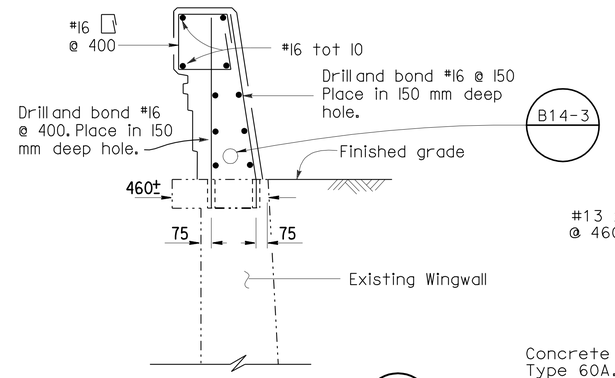

TYPE 736AR (MOD) B11-56
No Scale

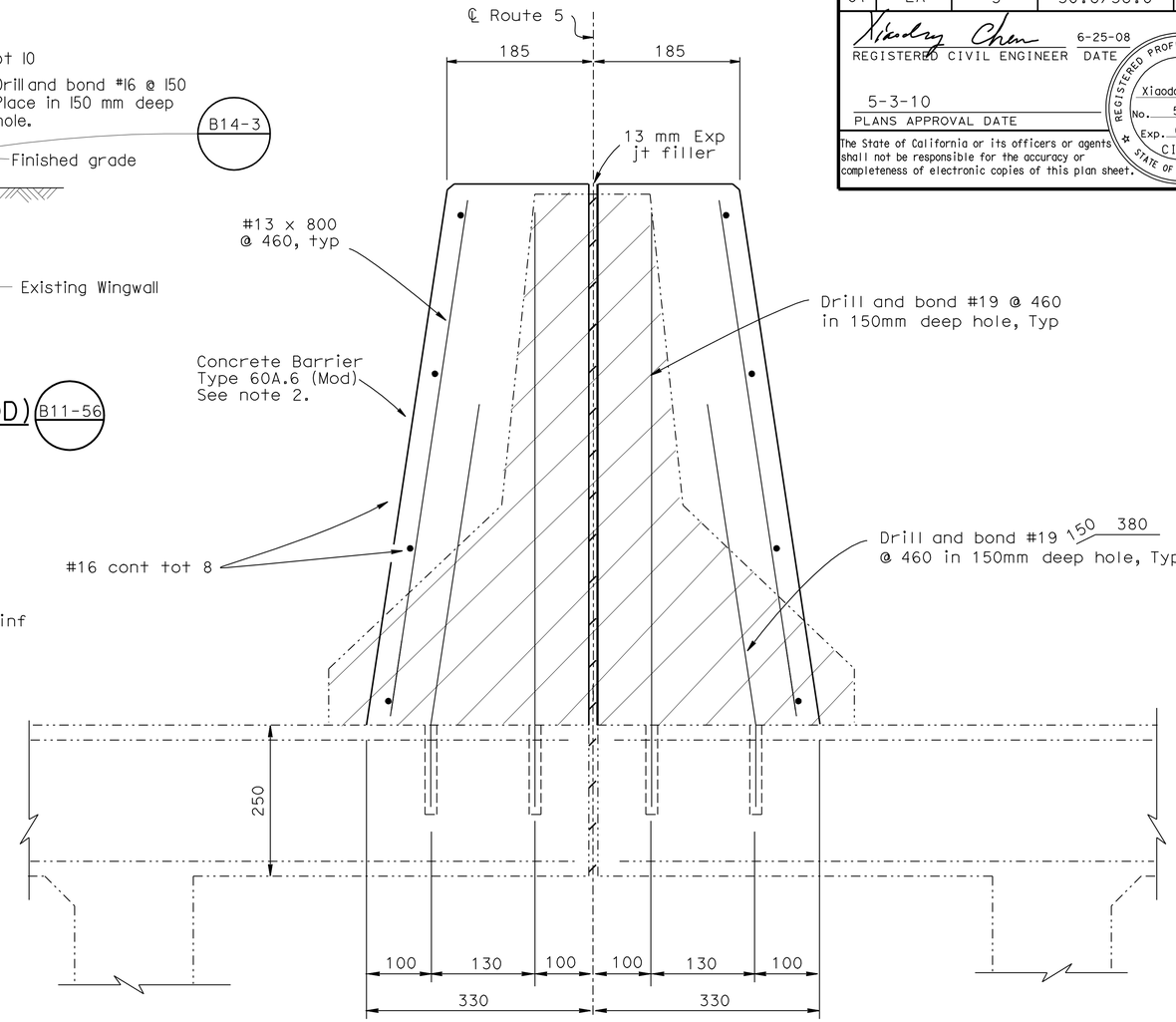

CONCRETE BARRIER TYPE 60A.6 (MOD)
NO SCALE

Notes:

1. Left barrier shown, right barrier similar.
2. See "BARRIER - CONCRETE TYPE 60A AND 60SA MODIFIED" for other details

LEGEND

- Indicates new structure
- Indicates existing structure
- Indicates bridge removal (portion)

NOTE:
THE CONTRACTOR SHALL VERIFY ALL CONTROLLING FIELD DIMENSIONS BEFORE ORDERING OR FABRICATING ANY MATERIAL.

TUXFORD STREET UNDERCROSSING
BARRIER REPLACEMENT AND WIDEN
BARRIER DETAILS

Caltrans Metric

	BY	CHECKED
DESIGN	David Alvarez	Elijah Hall
DETAILS	Roelina Martinez	Elijah Hall
QUANTITIES	Hernan Perez	Elijah Hall

STATE OF CALIFORNIA
DEPARTMENT OF TRANSPORTATION

DIVISION OF ENGINEERING SERVICES
STRUCTURE DESIGN
DESIGN BRANCH 6

BRIDGE NO. 53-1117
KILOMETER POST

ALL DIMENSIONS ARE IN MILLIMETERS UNLESS OTHERWISE SHOWN

ORIGINAL SCALE IN MILLIMETERS FOR REDUCED PLANS 0 10 20 30 40 50 60 70 80 90 100

CU 07
EA 1218V1

DISREGARD PRINTS BEARING EARLIER REVISION DATES

REVISION DATES: 3-21-07 12-14-07 03-14-08 4-16-08 4-28-08 7-16-09

SHEET 3 OF 5

FILE => 53-1117-t-barr11.dgn

STRUCTURES DESIGN DETAIL SHEET (METRIC) (REV.03-17-04)

USERNAME => trienard DATE PLOTTED => 03-MAY-2010 TIME PLOTTED => 13:21

DIST	COUNTY	ROUTE	KILOMETER POST TOTAL PROJECT	SHEET No	TOTAL SHEETS
07	LA	5	50.8/58.0	780	869

Xiaodong Chen 6-25-08
REGISTERED CIVIL ENGINEER DATE

5-3-10
PLANS APPROVAL DATE

REGISTERED PROFESSIONAL ENGINEER XIAODONG CHEN No. 58858 Exp. 6-30-11 CIVIL STATE OF CALIFORNIA

The State of California or its officers or agents shall not be responsible for the accuracy or completeness of electronic copies of this plan sheet.

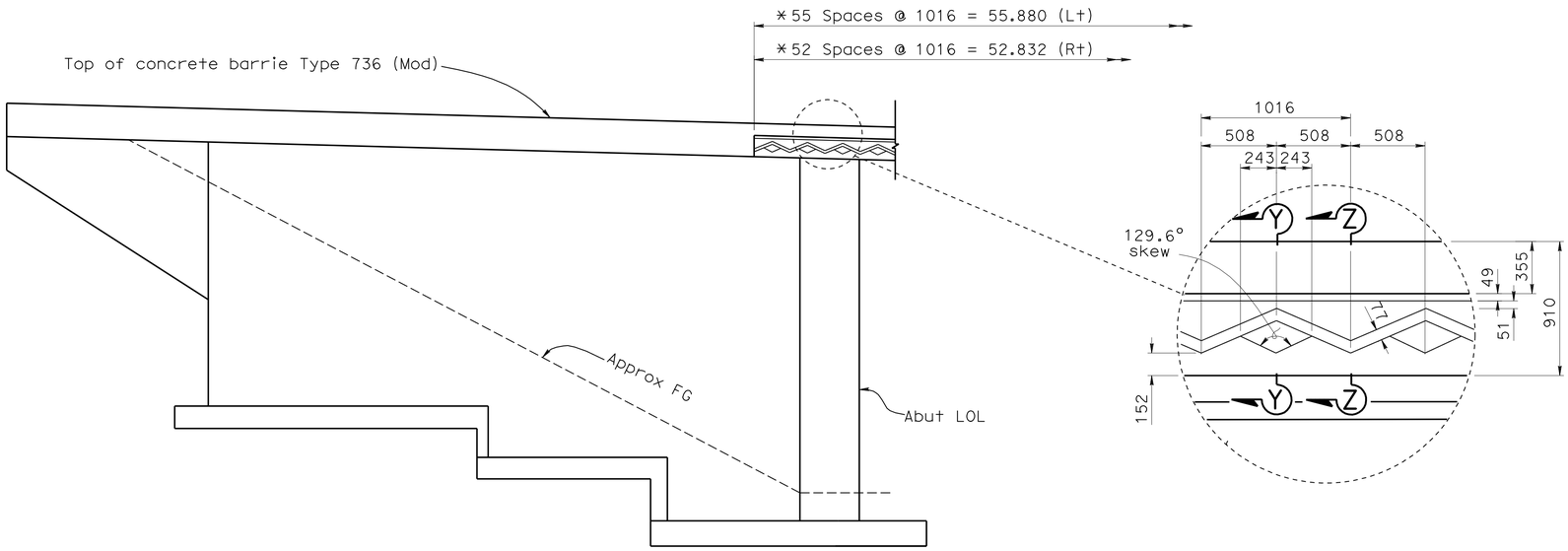

ELEVATION
1:80

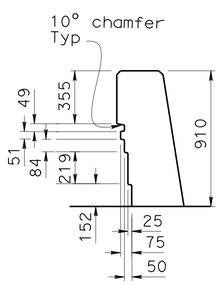

SECTION Y-Y
1:20

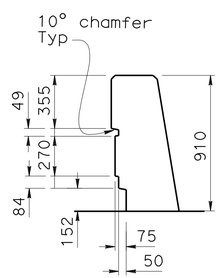

SECTION Z-Z
1:20

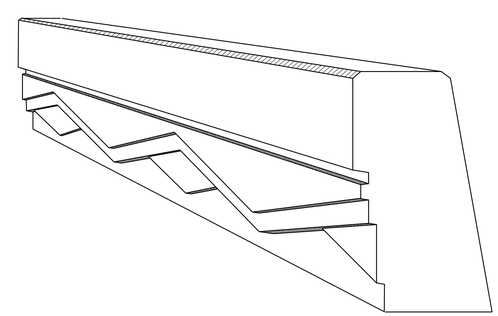

PERSPECTIVE VIEW
No scale

Note:

* Architectural texture is placed symetrical to the ℄ of Tuxford Street

Caltrans Metric

	BY	CHECKED
DESIGN	Dave Alvareze	Elijah Hall
DETAILS	Kamal Chonkria	Elijah Hall
QUANTITIES	Hernan Perez	Elijah Hall

STATE OF CALIFORNIA
DEPARTMENT OF TRANSPORTATION

DIVISION OF ENGINEERING SERVICES
STRUCTURE DESIGN
DESIGN BRANCH

BRIDGE NO. 53-1117
KILOMETER POST

TUXFORD STREET UNDERCROSSING
BARRIER REPLACEMENT AND WIDEN
ARCHITECTURAL DETAILS

ALL DIMENSIONS ARE IN MILLIMETERS UNLESS OTHERWISE SHOWN

ORIGINAL SCALE IN MILLIMETERS FOR REDUCED PLANS 0 10 20 30 40 50 60 70 80 90 100

CU 07
EA 1218V1

DISREGARD PRINTS BEARING EARLIER REVISION DATES

REVISION DATES: ~~03-11-08~~ 7-16-09

SHEET 4 OF 5

FILE => 53-1117-u-arch.dgn

STRUCTURES DESIGN DETAIL SHEET (METRIC) (REV.03-17-04)

USERNAME => trlenard DATE PLOTTED => 03-MAY-2010 TIME PLOTTED => 13:21

DIST.	COUNTY	ROUTE	KILOMETER POST TOTAL PROJECT	SHEET NO.	TOTAL SHEETS
07	LA	5	50.8/58.0	781	869

Xiaodong Chen 6-25-08
REGISTERED ENGINEER - CIVIL

5-3-10
PLANS APPROVAL DATE

REGISTERED PROFESSIONAL ENGINEER XIAODONG CHEN No. C58858 Exp. 6-30-11 CIVIL STATE OF CALIFORNIA

The State of California or its officers or agents shall not be responsible for the accuracy or completeness of electronic copies of this plan sheet.

Caltrans Metric

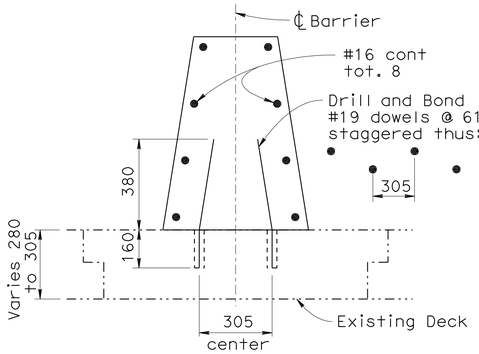

MODIFIED TYPE 60SA.1 OR 60A.1

SEE NOTE 10 FOR RESPECTIVE BARRIER DIMENSIONS

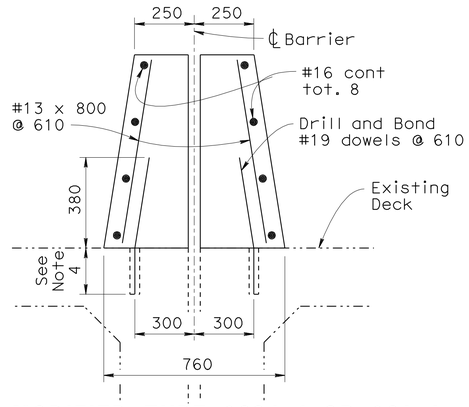

MODIFIED TYPE 60SA.4 OR 60A.4

ONLY VERTICAL DIMENSION VARIES ACCORDING TO RESPECTIVE BARRIER HEIGHT. SEE NOTE 10.

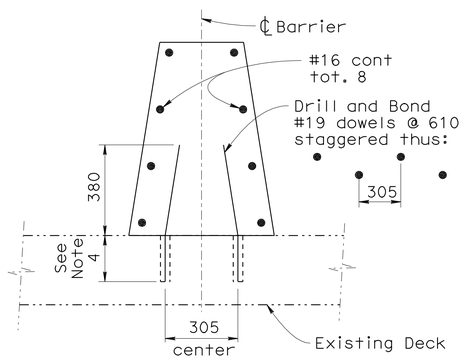

MODIFIED TYPE 60SA.2 OR 60A.2

SEE NOTE 10 FOR RESPECTIVE BARRIER DIMENSIONS

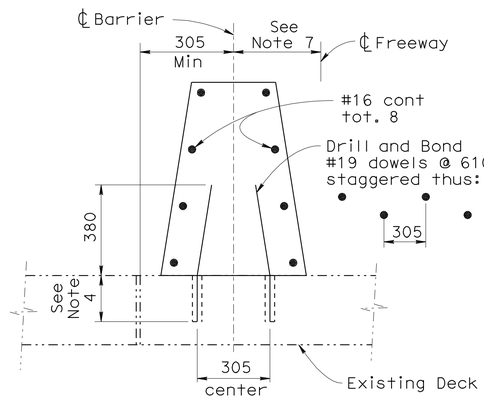

MODIFIED TYPE 60SA.5 OR 60A.5

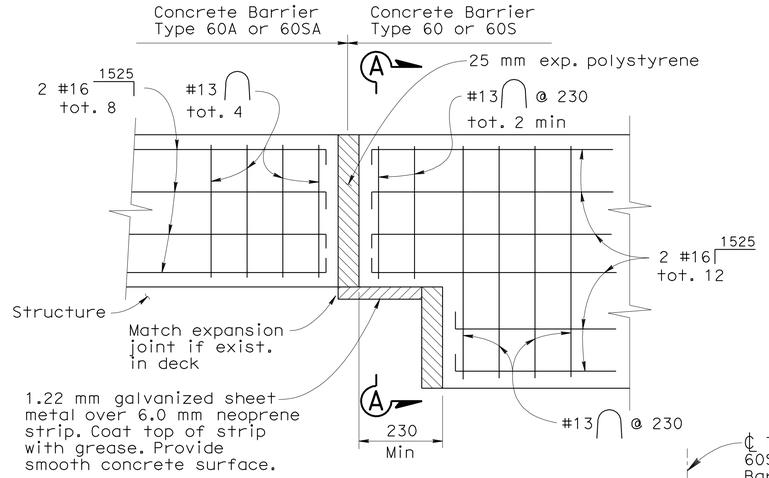

ELEVATION

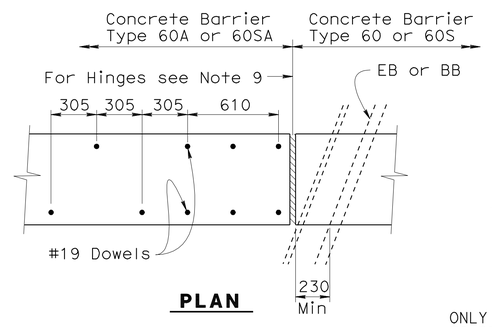

PLAN

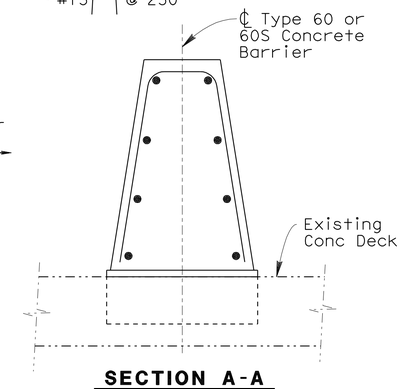

SECTION A-A

MODIFIED TYPE 60A.1

ONLY VERTICAL DIMENSION VARIES ACCORDING TO RESPECTIVE BARRIER HEIGHT. SEE NOTE 10.

CONNECTION TO STRUCTURE AT EXPANSION JOINTS

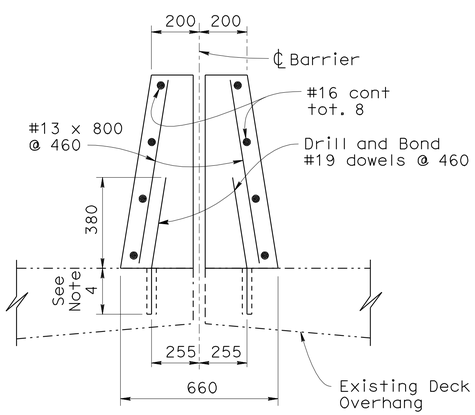

MODIFIED TYPE 60SA.3 OR 60A.3

ONLY VERTICAL DIMENSION VARIES ACCORDING TO RESPECTIVE BARRIER HEIGHT. SEE NOTE 10.

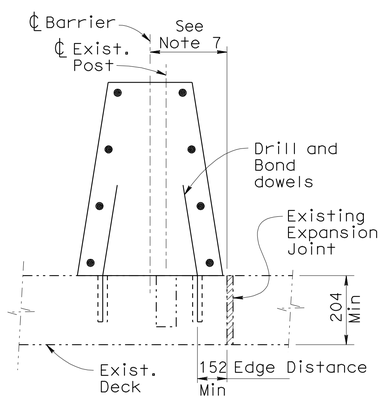

EXISTING POST HOLE

TYPE 1

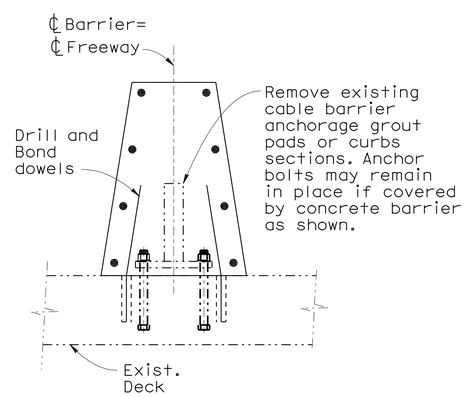

AT BOLTED ANCHORAGE PLATE

TYPE 2

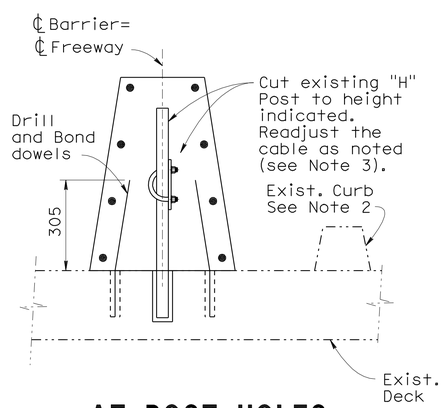

AT POST HOLES

TYPE 3

ASSUMED EXISTING ANCHORAGE CONDITIONS AND DETAILS

NOTES:

1. Transverse expansion joints in concrete barrier shall match all deck joints.
2. Remove all existing curbs and dikes.
3. Existing components of Cable Barrier may be altered and incorporated in Concrete Barriers as indicated. The existing Cable Barrier shall be removed when it is not on the centerline of the new Concrete Barrier.
4. Depth of drilled hole equals depth of slab minus 40 mm, up to 150 mm maximum.
5. Minor adjustments may be made in dowel spacing to clear main reinforcement.
6. Transitions to match adjacent "Type 60A" Barrier shall have minimum flare of 20:1 off the structure.
7. ℄ Barrier is either left, right, or on ℄ of freeway.
8. The Contractor shall verify all dependent dimensions in the field.
9. Barrier to be doweled on either side of deck joints. On skewed hinges, place sheet metal detail across joint and adjust dowels.
10. Barrier Dimensions-Type 60A & Type 60SA, See sketch below.

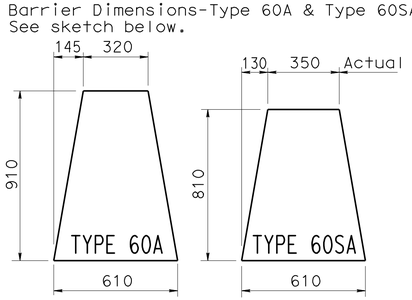

NO SCALE
ALL DIMENSIONS ARE IN MILLIMETERS UNLESS OTHERWISE SHOWN

TUXFORD STREET UNDERCROSSING

BARRIER - CONCRETE TYPE 60A AND 60SA MODIFIED

BARRIER DETAILS NO. 2

STANDARD DRAWING				
RELEASE DATE 8/26/03	DESIGN	BY Ralph Bishop	CHECKED Bob Anderson	RELEASED BY Roberto Lucelle OFFICE CHIEF
FILE NO. xs16-100	DETAILS	BY L. Charlot	CHECKED Ralph Bishop	
	SUBMITTED	BY Ralph Bishop	DRAWING DATE 6/99	

STATE OF CALIFORNIA DEPARTMENT OF TRANSPORTATION

DIVISION OF ENGINEERING SERVICES

BRIDGE NO. 53-1117
KILOMETER POST

CU 07
EA 1218V1

DISREGARD PRINTS BEARING EARLIER REVISION DATES

REVISION DATES (PRELIMINARY STAGE ONLY): 5-12-08 7-16-09

SHEET 5 OF 5

DS OSD 2147A (METRIC) (REV. 2/25/97)

ORIGINAL SCALE IN MILLIMETERS FOR REDUCED PLANS 0 10 20 30 40 50 60 70 80 90 100

USERNAME => trlenard

DATE PLOTTED => 03-MAY-2010 TIME PLOTTED => 13:21

53-1117-t-barr12.d

DIST	COUNTY	ROUTE	KILOMETER POST TOTAL PROJECT	SHEET No	TOTAL SHEETS
07	LA	5	50.8/58.0	782	869

REGISTERED CIVIL ENGINEER 6-25-08 DATE

5-3-10
PLANS APPROVAL DATE

REGISTERED PROFESSIONAL ENGINEER XIAODONG CHEN No. C 58858 Exp. 6-30-11 CIVIL STATE OF CALIFORNIA

The State of California or its officers or agents shall not be responsible for the accuracy or completeness of electronic copies of this plan sheet.

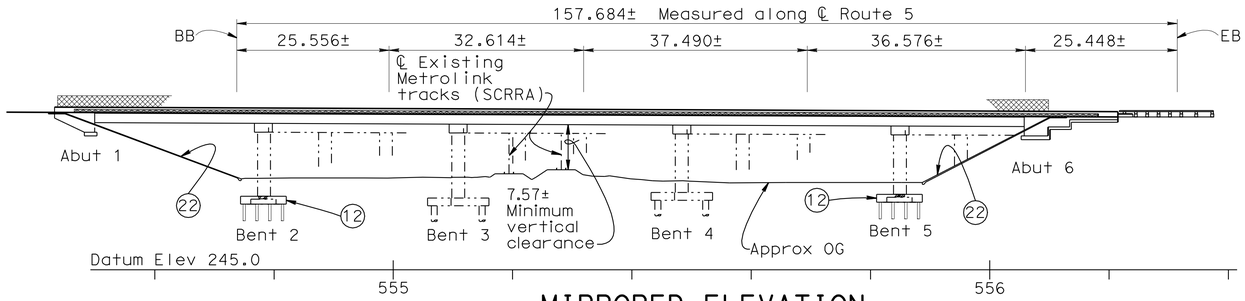

MIRRORED ELEVATION

1:500

LEGEND:

- Limits of Bridge Removal, (portion)
- Indicates existing structure
- Indicates new structure
- Minimum Vertical Clearance on widened structure.
- ** For Stage Construction, see "GENERAL PLAN NO.2" sheet

NOTES:

1. Paint "Bridge No. 54-1134".
2. Paint "Sun Valley Overhead".
3. MBGR, see "Road Plans".
4. Remove existing MBGR, see "Road Plans".
5. Remove existing Median Type 50 (Mod) Barrier and replace with Concrete Barrier Type 60AR.
6. Remove existing Barrier Railing Type 1 and replace with Concrete Barrier Type 736 (Mod).
7. Remove existing Barrier Railing Type 2.
8. Temporary Railing (Type K), see "Road Plans".
9. Cross slope to match existing bridge deck.
10. Remove portion of existing column casings at Bent 2 & 5.
11. Chain Link Railing Type 7 (modified).
12. Strengthen footing.
13. Remove and replace portion of existing bent cap.
14. Remove and replace overhang and portion of existing deck.
15. Concrete Barrier Type 736 (Mod).
16. Strengthen existing composite steel girders by post-tensioning.
17. Deck Drains - Type C.
18. Remove exising communication conduits, see "Road Plans".
19. 2 - Size 91 communication counduits, see "Road Plans".
20. Add restrainer assembly at Bents 2, 3, 4, & 5.
21. Remove existing joint seals (water stop to remain.) Clean expansion joint 150 mm deep and install new joint seals after bridge widening.
22. Slope paving.
23. Remove existing Type 1 Deck Drains and replace with Deck Drains - Type C
24. Replace existing MBGR, see "Road Plans".
25. 1-53 mm ø electrical conduit each side, see "Road Plans".
26. Install Type 21 Lighting Standard Foundation, see "Road Plans".
27. 1-41 mm ø electrical conduit, see "Road Plans".
28. For joint seal and approach slab replacement on existing bridge at abutments, see "BRIDGE APPROACH SLAB REPLACEMENT-GENERAL PLAN NO. 2" SHEET.

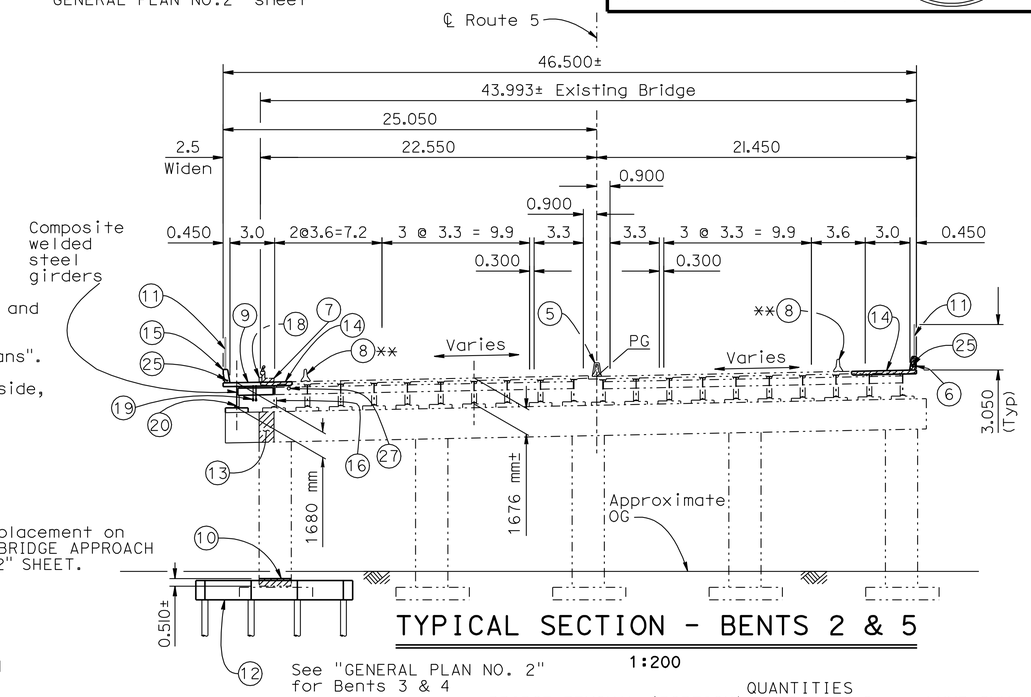

TYPICAL SECTION - BENTS 2 & 5

1:200

See "GENERAL PLAN NO. 2" for Bents 3 & 4

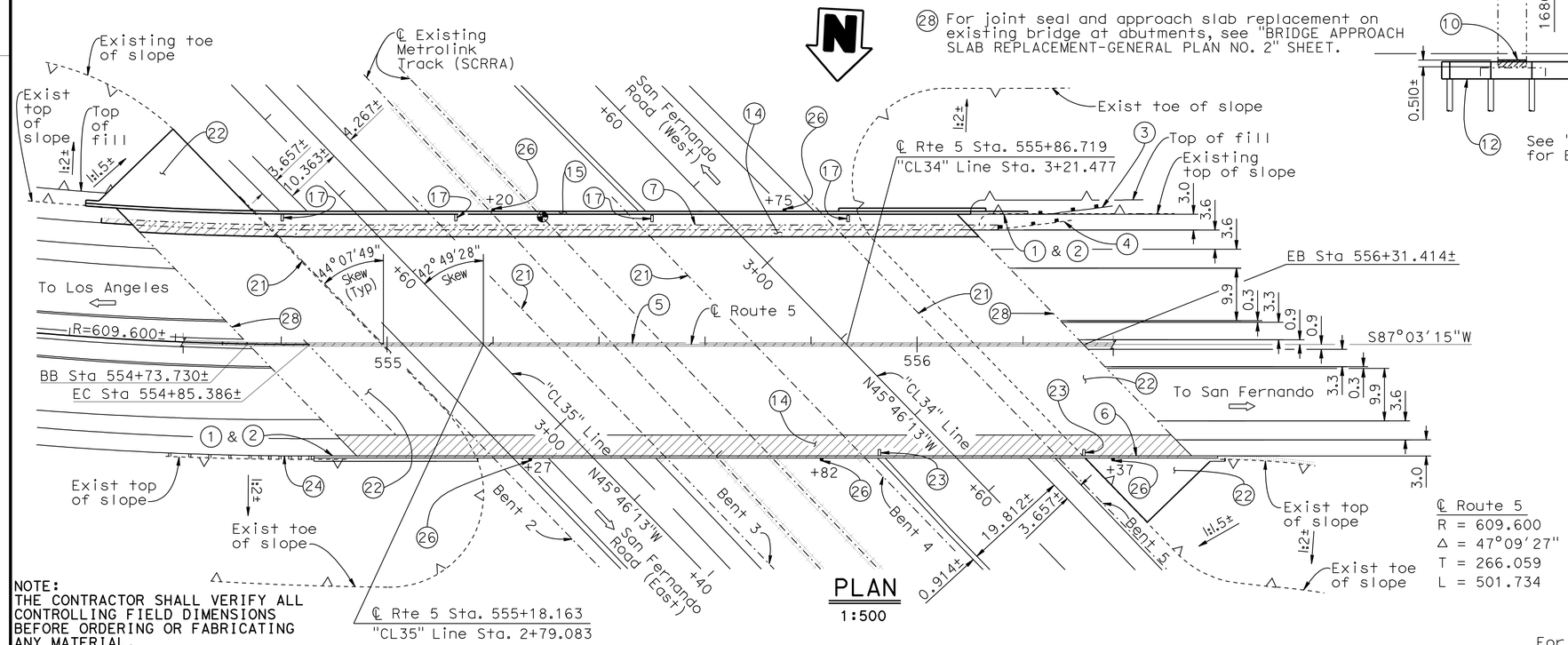

PLAN

1:500

℄ Route 5
R = 609.600
Δ = 47°09'27"
T = 266.059
L = 501.734

QUANTITIES

BRIDGE REMOVAL (PORTION), LOCATION C	LUMP	SUM
STRUCTURE EXCAVATION (BRIDGE)	330	m^3
STRUCTURE EXCAVATION (TYPE Y-2) (AERIALLY DEPOSITED LEAD)	40	m^3
STRUCTURE BACKFILL (BRIDGE)	245	m^3
HOT MIX ASPHALT (TYPE B)	4	TONN
FURNISH PILING (CLASS 900) (ALTERNATIVE W)	233	m
DRIVE PILE (CLASS 900) (ALTERNATIVE W)	21	EA
PRESTRESSING	LUMP	SUM
STRUCTURAL CONCRETE, BRIDGE FOOTING	112	m^3
STRUCTURAL CONCRETE, BRIDGE	470	m^3
DRILL AND BOND DOWEL	145	m
CLEAN EXPANSION JOINT	210	m
JOINT SEAL (MR 25 MM)	194	m
JOINT SEAL (MR 13 MM)	26	m
JOINT SEAL (MR 50 MM)	65	m
BAR REINFORCING STEEL (BRIDGE)	70 300	kg
HEADED BAR REINFORCEMENT	184	EA
FURNISH STRUCTURAL STEEL (BRIDGE)	69 300	kg
ERECT STRUCTURAL STEEL (BRIDGE)	69 300	kg
CLEAN AND PAINT STRUCTURAL STEEL	LUMP	SUM
SPOT BLAST CLEAN AND PAINT UNDERCOAT	4	m^2
WORK AREA MONITORING	LUMP	SUM
SLOPE PAVING (CONCRETE)	205	m^3
MISCELLANEOUS METAL (RESTRAINER - CABLE TYPE)	440	kg
MISCELLANEOUS METAL (BRIDGE)	1 650	kg
BRIDGE DECK DRAINAGE SYSTEM	1 870	kg
CHAIN LINK RAILING (TYPE 7 MODIFIED)	345	m
CONCRETE BARRIER (TYPE 736 MODIFIED)	345	m
CONCRETE BARRIER (TYPE 60AR)	158	m

For "INDEX TO PLANS" and "GENERAL NOTES", see "INDEX TO PLANS" sheet.

NOTE:
THE CONTRACTOR SHALL VERIFY ALL CONTROLLING FIELD DIMENSIONS BEFORE ORDERING OR FABRICATING ANY MATERIAL.

Caltrans Metric

Fritz Hoffman 6-25-08
DESIGN ENGINEER

	BY	CHECKED
DESIGN	Vivian Dang	Marc Friedheim
DETAILS	J. Ramirez/RM	Marc Friedheim
QUANTITIES	Vivian Dang	Marc Friedheim

LOAD FACTOR DESIGN	LIVE LOADING: HS20-44 AND ALTERNATIVE AND PERMIT DESIGN LOAD		
LAYOUT	BY J. Ramirez	CHECKED X. Chen	
SPECIFICATIONS	BY M. Pan	PLANS AND SPECS COMPARED	

STATE OF CALIFORNIA
DEPARTMENT OF TRANSPORTATION

DIVISION OF ENGINEERING SERVICES
STRUCTURE DESIGN
DESIGN BRANCH 6

CU 07
EA 1218V1

BRIDGE NO. 53-1134
KILOMETER POST 55.6

SUN VALLEY OH (WIDEN)

GENERAL PLAN NO. 1

ALL DIMENSIONS ARE IN METERS UNLESS OTHERWISE SHOWN

ORIGINAL SCALE IN MILLIMETERS FOR REDUCED PLANS 0 10 20 30 40 50 60 70 80 90 100

DISREGARD PRINTS BEARING EARLIER REVISION DATES

REVISION DATES: 11-14-05 5-31-07 8-28-07 2-26-08 4-3-08 4-29-08 5-28-08 6-17-08 7-16-09

SHEET 1 OF 33

FILE => 53-1134-a-gp1.dgn

STRUCTURES DESIGN GENERAL PLAN SHEET (METRIC) (REV.03-17-04)

USERNAME => trrichard DATE PLOTTED => 03-MAY-2010 TIME PLOTTED => 13:21

DIST	COUNTY	ROUTE	KILOMETER POST TOTAL PROJECT	SHEET No	TOTAL SHEETS
07	LA	5	50.8/58.0	783	869

REGISTERED CIVIL ENGINEER — DATE 6-25-08

5-3-10
PLANS APPROVAL DATE

REGISTERED PROFESSIONAL ENGINEER — XIAODONG CHEN — No. C 58858 — Exp. 6-30-11 — CIVIL — STATE OF CALIFORNIA

The State of California or its officers or agents shall not be responsible for the accuracy or completeness of electronic copies of this plan sheet.

LEGEND:

Indicates existing structure

Indicates new structure

Limits of bridge removal (portion)

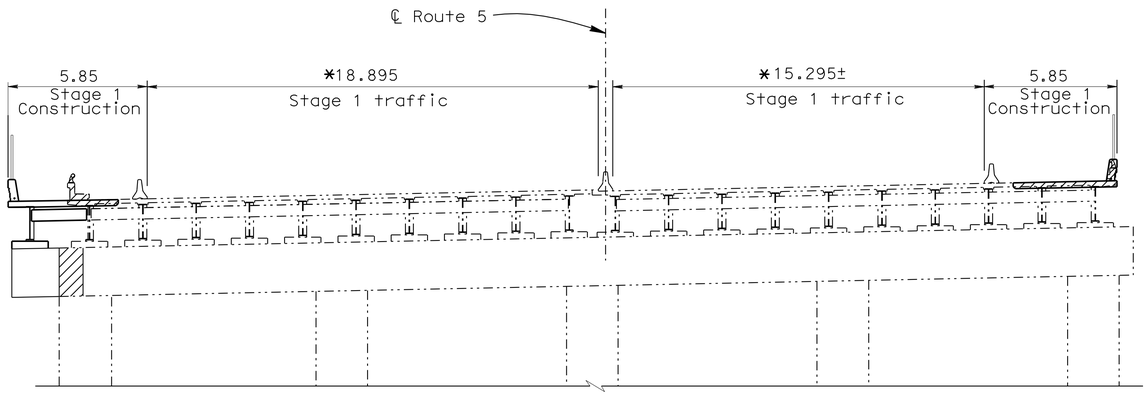

STAGE 1
1:125

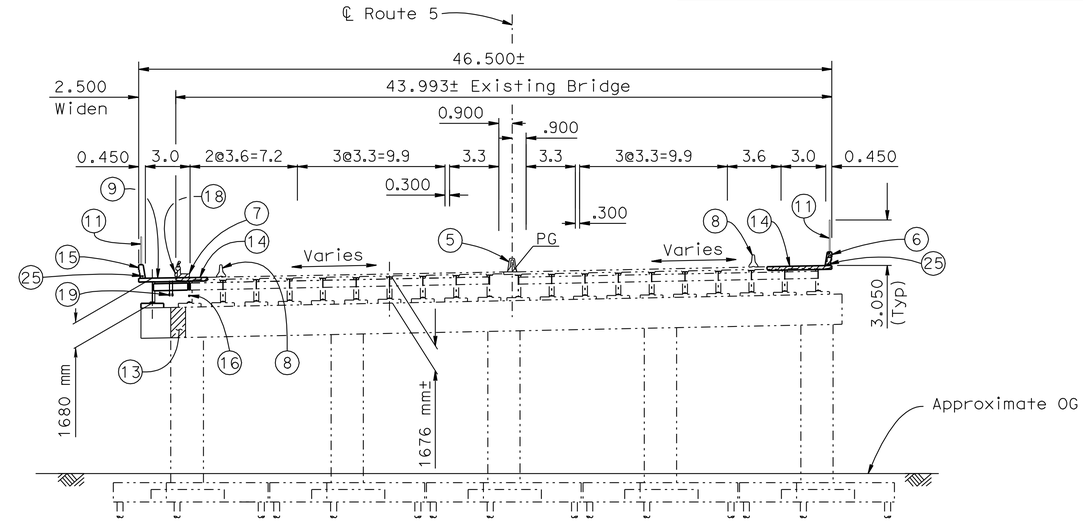

NOTE:
For circled number notes, see "GENERAL PLAN NO. 1" sheet.

TYPICAL SECTION - BENTS 3 & 4
1:200

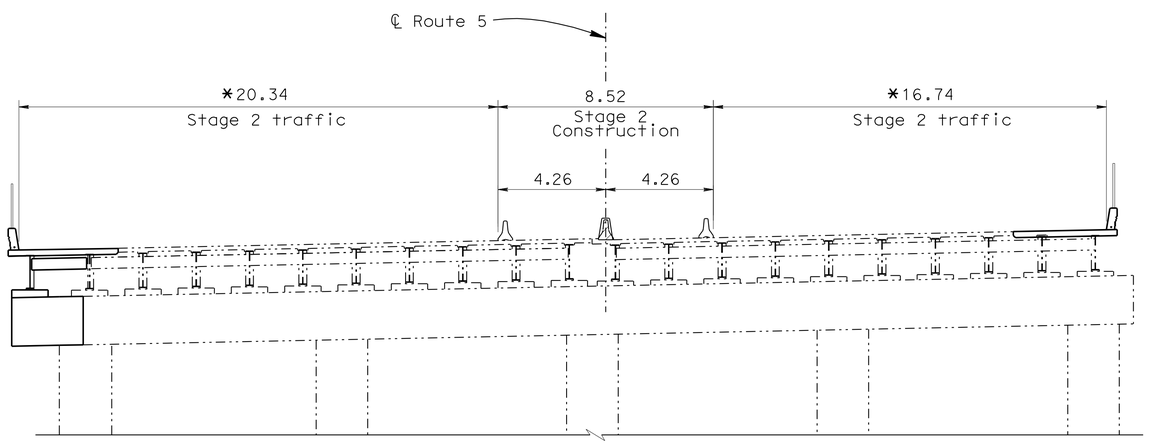

NOTE:
* For traffic handling, see "Road Plans".

STAGE 2
1:125

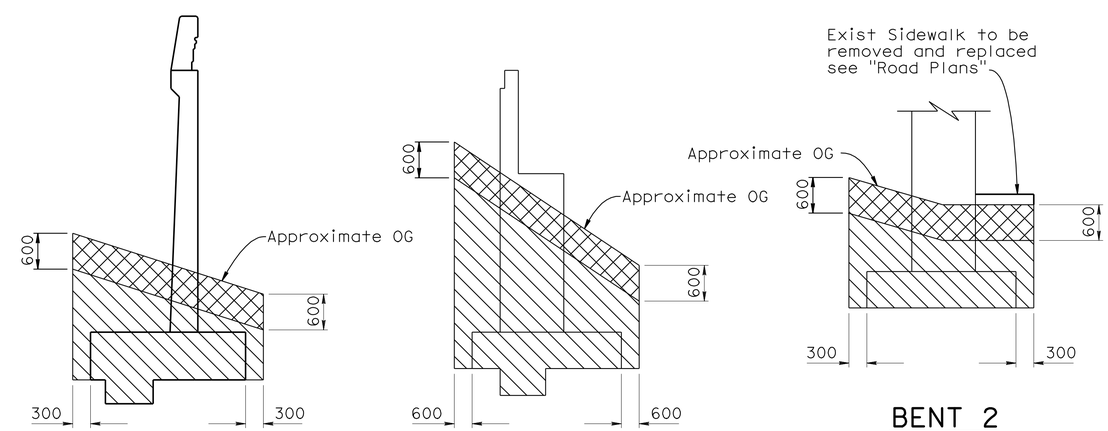

RETAINING WALL

ABUTMENT

BENT 2

LEGEND:

Indicates structure excavation

Indicates structure excavation (Type Y-1) (Aerially deposited lead)

LIMITS OF PAYMENT FOR STRUCTURE EXCAVATION (AERIALLY DEPOSITED LEAD)

No scale

NOTE:
THE CONTRACTOR SHALL VERIFY ALL CONTROLLING FIELD DIMENSIONS BEFORE ORDERING OR FABRICATING ANY MATERIAL.

Caltrans Metric

DESIGN ENGINEER — 6-25-08

	BY	CHECKED			
DESIGN	Vivian Dang	Marc Friedheim	LOAD FACTOR DESIGN	LIVE LOADING: HS20-44 AND ALTERNATIVE AND PERMIT DESIGN LOAD	
DETAILS	J. Ramirez/RM	Marc Friedheim	LAYOUT	J. Ramirez	X. Chen
QUANTITIES	Vivian Dang	Marc Friedheim	SPECIFICATIONS		PLANS AND SPECS COMPARED

ALL DIMENSIONS ARE IN METERS UNLESS OTHERWISE SHOWN

ORIGINAL SCALE IN MILLIMETERS FOR REDUCED PLANS 0 10 20 30 40 50 60 70 80 90 100

STATE OF CALIFORNIA
DEPARTMENT OF TRANSPORTATION

DIVISION OF ENGINEERING SERVICES
STRUCTURE DESIGN
DESIGN BRANCH 6

CU 07
EA 1218V1

BRIDGE NO. 53-1134
KILOMETER POST 55.6

SUN VALLEY OH (WIDEN)
GENERAL PLAN NO. 2

DISREGARD PRINTS BEARING EARLIER REVISION DATES → REVISION DATES: 8-21-06, 11-8-06, 5-31-07, 04-08-08, 6-21-08, 7-16-09

SHEET 2 OF 33

FILE => 53-1134-a-gp2.dgn

STRUCTURES DESIGN GENERAL PLAN SHEET (METRIC) (REV.03-17-04)

USERNAME => trienard DATE PLOTTED => 03-MAY-2010 TIME PLOTTED => 13:21

DIST	COUNTY	ROUTE	KILOMETER POST TOTAL PROJECT	SHEET No	TOTAL SHEETS
07	LA	5	50.8/58.0	784	869

Xiaodong Chen 6-25-08
REGISTERED CIVIL ENGINEER DATE

5-3-10
PLANS APPROVAL DATE

REGISTERED PROFESSIONAL ENGINEER XIAODONG CHEN No. C 58858 Exp. 6-30-11 CIVIL STATE OF CALIFORNIA

The State of California or its officers or agents shall not be responsible for the accuracy or completeness of electronic copies of this plan sheet.

SPREAD FOOTING DATA TABLE

Support Location	Allowable Bearing Capacity, q (all)	Nominal Bearing Resistance q(n)
Abutment 1	239 kPa	N/A
Abutment 6	239 kPa	N/A

GENERAL NOTES
LOAD FACTOR DESIGN

DESIGN: CALTRANS BRIDGE DESIGN SPECIFICATIONS LFD Version April 2000 (1996 AASHTO with Interims and Revision by Caltrans)

SEISMIC DESIGN: CALTRANS SEISMIC DESIGN CRITERIA (SDC) Version 1.4, June 2006

DEAD LOAD: Includes 1.68 KPa for future wearing surface

LIVE LOAD: HS20-44 and alternative and permit design load

SEISMIC LOAD: Site specific ARS as shown

EXISTING STRUCTURAL STEEL: f_y = 228 MPa

NEW STRUCTURAL STEEL: f_y = 345 MPa

HS ROD: ASTM A449

EXISTING CONCRETE: f'c = 35 MPa

NEW CONCRETE: f'c = 28 MPa

EXISTING REINFORCING STEEL: f_y = 275 MPa

NEW REINFORCING STEEL: f_y = 425 MPa

Transverse Deck Slabs (Working Stress):
f_s = 140 MPa
f_c = 8 MPa
n = 10

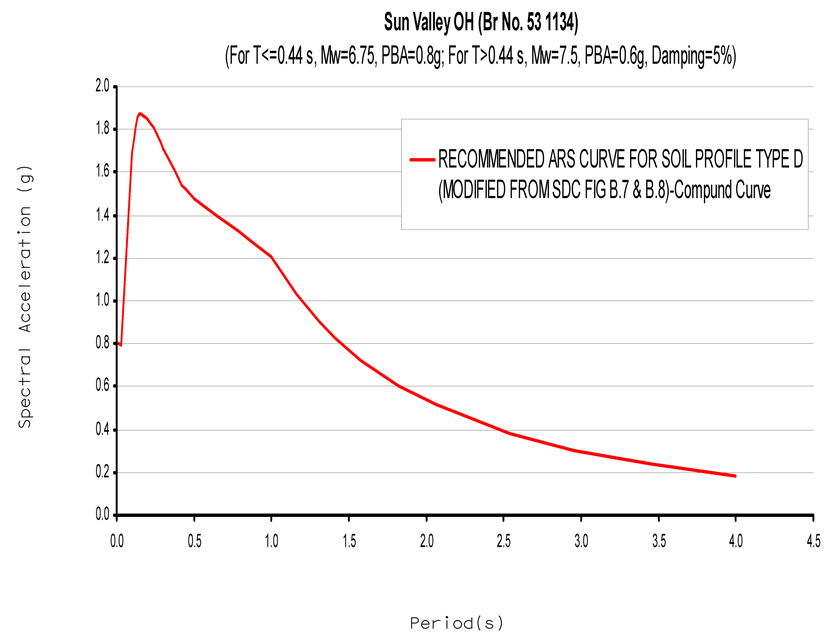

ACCELERATION RESPONSE SPECTRA CURVE

INDEX TO PLANS

Sheet No.	Sheet Title
1	GENERAL PLAN NO. 1
2	GENERAL PLAN NO. 2
3	INDEX TO PLANS
4	FOUNDATION PLAN NO. 1
5	FOUNDATION PLAN NO. 2
6	ABUTMENT 1 LAYOUT
7	ABUTMENT 6 LAYOUT
8	ABUTMENT DETAILS NO. 1
9	ABUTMENT DETAILS NO. 2
10	ABUTMENT DETAILS NO. 3
11	ABUTMENT DETAILS NO. 4
12	BENT DETAILS
13	BENT PEDESTAL DETAILS
14	BENT 2 FOOTING
15	BENT 5 FOOTING
16	FOOTING DETAILS
17	TYPICAL SECTION
18	GIRDER LAYOUT
19	GIRDER DETAILS NO. 1
20	GIRDER DETAILS NO. 2
21	GIRDER DETAILS NO. 3
22	STRENGTHENING DETAILS NO. 1
23	STRENGTHENING DETAILS NO. 2
24	DECK DETAILS
25	DECK DRAIN - TYPE C
26	DECK DRAIN DETAILS
27	RESTRAINER DETAILS
28	CHAIN LINK RAILING TYPE 7 MODIFIED
29	SLOPE PAVING
30	ARCHITECTURAL DETAILS
31	LOG OF TEST BORINGS 1 OF 3
32	LOG OF TEST BORINGS 2 OF 3
33	LOG OF TEST BORINGS 3 OF 3

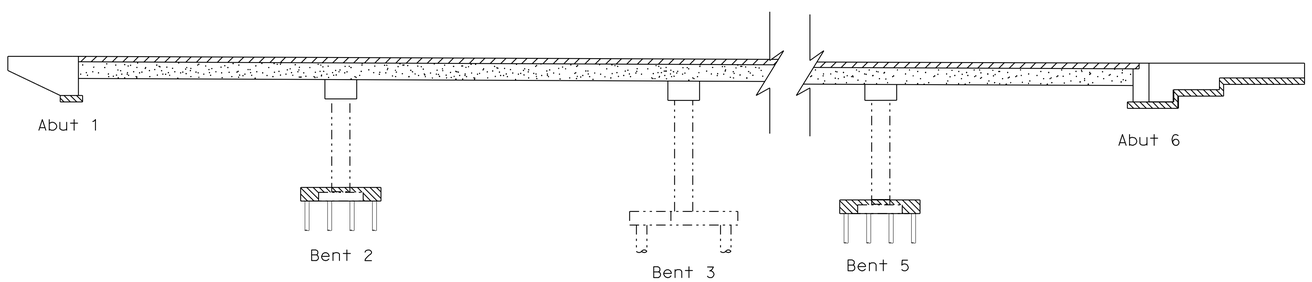

CONCRETE STRENGTH AND TYPE LIMITS

No Scale

- Structural Concrete, Bridge (28 MPa at 28 days)
- Stuctural Concrete, Bridge
- Structural Concrete, Bridge Footing
- Composite welded steel girders

PILE DATA TABLE

Location	Pile Type	Design Loading (Service)	Nominal Resistance		Design Tip Elevation (m)	Specified Tip Elevation
			Compression	Tension		
Bent 2 Column 1	Class 900 Alt. "W"	850 kN	1700 kN	200 kN	245.7 (a) 247.6 (b)	245.7
Bent 5 Column 1	Class 900 Alt. "W"	850 kN	1700 kN	200 kN	246.3 (a) 247.2 (b)	246.3

Note:
Design Tip Elevation is controlled by (a) compression, (b) tension

STANDARD PLANS DATED JULY 2004

A10A	ACRONYMS AND ABBREVIATIONS
A10B	ACRONYMS AND ABBREVIATIONS
A62C	LIMITS OF PAYMENT FOR EXCAVATION AND BACKFILL - BRIDGE
A76A	CONCRETE BARRIER TYPE 60
B0-1	BRIDGE DETAILS
B0-3	BRIDGE DETAILS
B0-5	BRIDGE DETAILS
B0-13	BRIDGE DETAILS
B2-8	PILE DETAILS CLASS 900
B6-10	UTILITY OPENINGS, T-BEAM
RSP B6-21	JOINT SEALS (MAXIMUM MOVEMENT RATING = 50 mm)
B11-56	CONCRETE BARRIER TYPE 736
B14-3	COMMUNICATION AND SPRINKLER CONTROL CONDUITS (CONDUIT LESS THAN SIZE 103)
ES-6A	ELECTRICAL SYSTEMS (LIGHTING STANDARDS TYPE 15 AND 21)
ES-9B	ELECTRICAL SYSTEMS (ELECTRICAL DETAILS STRUCTURE INSTALLATIONS)

STANDARD PLAN SHEET NO.
DETAIL NO.

NOTE:
THE CONTRACTOR SHALL VERIFY ALL CONTROLLING FIELD DIMENSIONS BEFORE ORDERING OR FABRICATING ANY MATERIAL.

Caltrans Metric

	BY	CHECKED
DESIGN	Vivian Dang	Marc Friedheim
DETAILS	Roelina Martinez	Marc Friedheim
QUANTITIES	Vivian Dang	Marc Friedheim

STATE OF CALIFORNIA
DEPARTMENT OF TRANSPORTATION

DIVISION OF ENGINEERING SERVICES
STRUCTURE DESIGN
DESIGN BRANCH 6

BRIDGE NO. 53-1134
KILOMETER POST 55.6

SUN VALLEY OH (WIDEN)
INDEX TO PLANS

ALL DIMENSIONS ARE IN MILLIMETERS UNLESS OTHERWISE SHOWN

ORIGINAL SCALE IN MILLIMETERS FOR REDUCED PLANS 0 10 20 30 40 50 60 70 80 90 100

CU 07
EA 1218V1

DISREGARD PRINTS BEARING EARLIER REVISION DATES

REVISION DATES: 8-21-06 11-6-06 3-26-07 8-28-07 11-29-07 03-11-08 04-28-08 06-13-08 7-16-09

SHEET 3 OF 33

FILE => 53-1134-a-itp-r.dgn

STRUCTURES DESIGN DETAIL SHEET (METRIC) (REV.03-17-04)

USERNAME => trlenard DATE PLOTTED => 03-MAY-2010 TIME PLOTTED => 13:22

NO	R	Δ	T	L
(A)	609.601	47°9'27"	266.059	501.734

DIST	COUNTY	ROUTE	KILOMETER POST TOTAL PROJECT	SHEET No	TOTAL SHEETS
07	LA	5	50.8/58.0	785	869

Caltrans Metric

Xiaodong Chen 6-25-08
REGISTERED CIVIL ENGINEER DATE

5-3-10
PLANS APPROVAL DATE

REGISTERED PROFESSIONAL ENGINEER Xiaodong Chen No. C 58858 Exp. 6-30-11 CIVIL STATE OF CALIFORNIA

The State of California or its officers or agents shall not be responsible for the accuracy or completeness of electronic copies of this plan sheet.

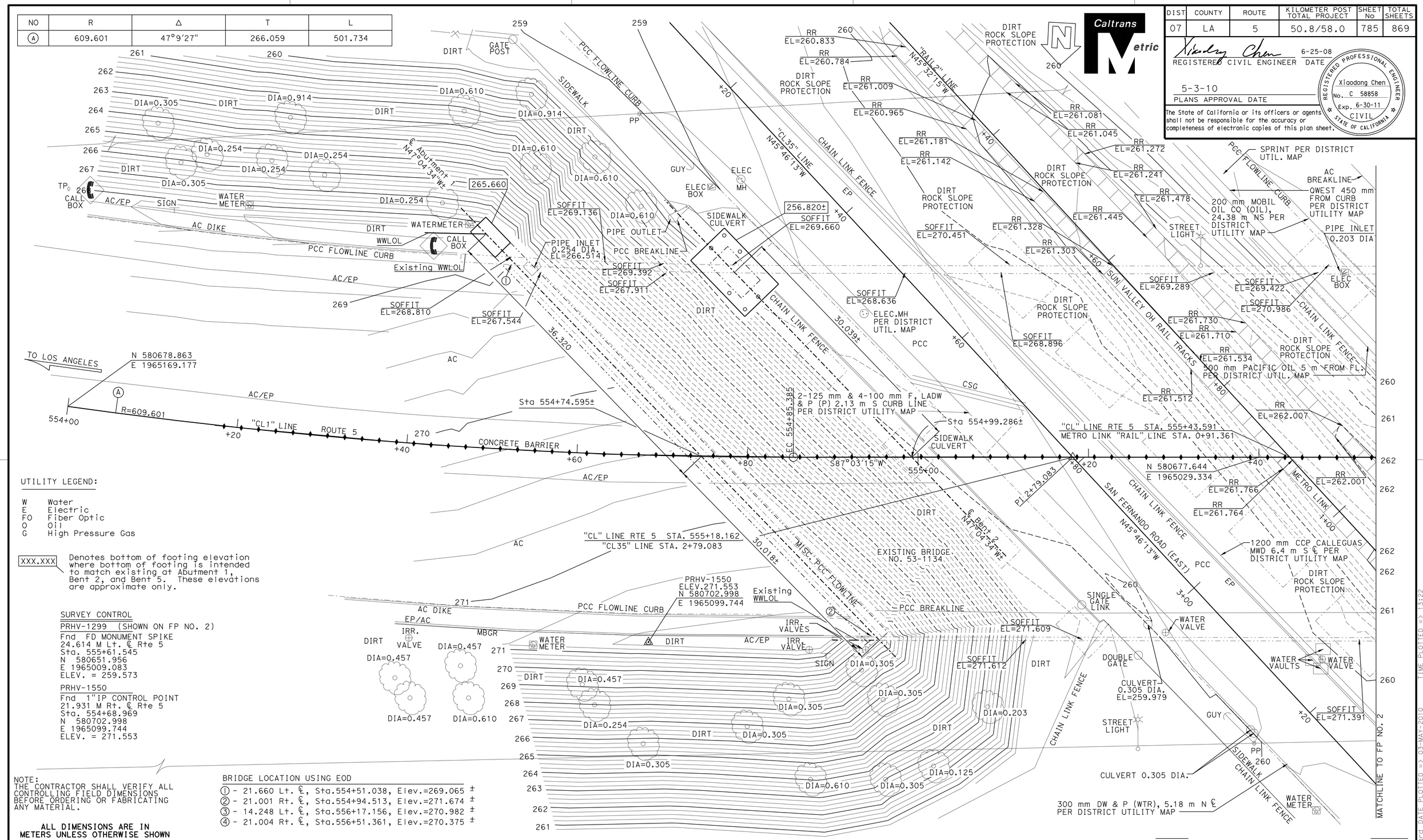

UTILITY LEGEND:

W Water
E Electric
FO Fiber Optic
O Oil
G High Pressure Gas

XXX.XXX Denotes bottom of footing elevation where bottom of footing is intended to match existing at Abutment 1, Bent 2, and Bent 5. These elevations are approximate only.

SURVEY CONTROL

PRHV-1299 (SHOWN ON FP NO. 2)
Fnd FD MONUMENT SPIKE
24.614 M Lt. ℄ Rte 5
Sta. 555+61.545
N 580651.956
E 1965009.083
ELEV. = 259.573

PRHV-1550
Fnd 1"IP CONTROL POINT
21.931 M Rt. ℄ Rte 5
Sta. 554+68.969
N 580702.998
E 1965099.744
ELEV. = 271.553

NOTE:
THE CONTRACTOR SHALL VERIFY ALL CONTROLLING FIELD DIMENSIONS BEFORE ORDERING OR FABRICATING ANY MATERIAL.

ALL DIMENSIONS ARE IN METERS UNLESS OTHERWISE SHOWN

BRIDGE LOCATION USING EOD
① - 21.660 Lt. ℄, Sta.554+51.038, Elev.=269.065 ±
② - 21.001 Rt. ℄, Sta.554+94.513, Elev.=271.674 ±
③ - 14.248 Lt. ℄, Sta.556+17.156, Elev.=270.982 ±
④ - 21.004 Rt. ℄, Sta.556+51.361, Elev.=270.375 ±

PRELIMINARY INVESTIGATION SECTION

SCALE	VERT. DATUM NAVD 88	PHOTOGRAMMETRY AS OF:		
1:200	HORZ. DATUM NAD 83 (1991.35)	SURVEYED	BY DISTRICT	DRAFTED BY F. BANDA 4/05
ALIGNMENT TIES	DIST TRAVERSE SHEET	FIELD CHECKED	BY	CHECKED BY T. ZOLNIKOVA 4/05

	BY	CHECKED
DESIGN	Vivian Dang	Marc Friedheim
DETAILS	Roelina Martinez	Marc Friedheim
QUANTITIES	Vivian Dang	Marc Friedheim

STATE OF CALIFORNIA
DEPARTMENT OF TRANSPORTATION

DIVISION OF STRUCTURES
STRUCTURE DESIGN 6

BRIDGE NO. 53-1134
KILOMETER POST 55.65

SUN VALLEY OH (WIDEN)
FOUNDATION PLAN NO. 1

STRUCTURES FOUNDATION PLAN SHEET (METRIC) (REV.12-1-01)

ORIGINAL SCALE IN MILLIMETERS FOR REDUCED PLANS 0 10 20 30 40 50 60 70 80 90 100

CU 07
EA 1218V1

DISREGARD PRINTS BEARING EARLIER REVISION DATES

REVISION DATES (PRELIMINARY STAGE ONLY) 4-16-05 5-16-05 5-18-05 6-16-05 11-04-05 11-09-05 8-26-06 8-29-07 7-16-09

SHEET 4 OF 33

USERNAME => trienard DATE PLOTTED => 03-MAY-2010 TIME PLOTTED => 13:22

FILE => 53-1134-e-fp101.dgn

DIST	COUNTY	ROUTE	KILOMETER POST TOTAL PROJECT	SHEET No	TOTAL SHEETS
07	LA	5	50.8/58.0	786	869

Xiaodong Chen 6-25-08
REGISTERED CIVIL ENGINEER DATE

5-3-10
PLANS APPROVAL DATE

REGISTERED PROFESSIONAL ENGINEER XIAODONG CHEN No. C 58858 Exp. 6-30-11 CIVIL STATE OF CALIFORNIA

The State of California or its officers or agents shall not be responsible for the accuracy or completeness of electronic copies of this plan sheet.

Caltrans Metric

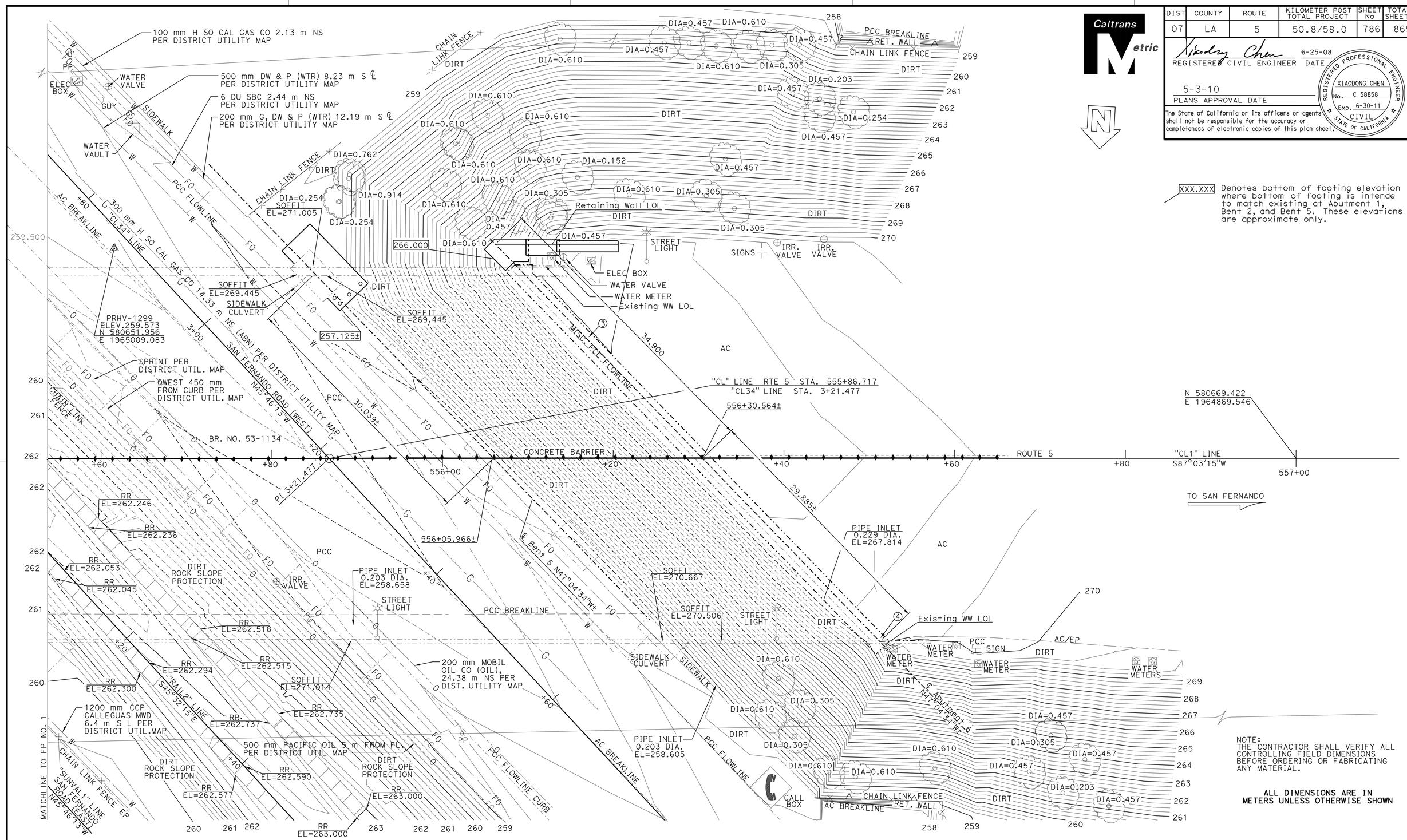

XXX.XXX Denotes bottom of footing elevation where bottom of footing is intende to match existing at Abutment 1, Bent 2, and Bent 5. These elevations are approximate only.

NOTE:
THE CONTRACTOR SHALL VERIFY ALL CONTROLLING FIELD DIMENSIONS BEFORE ORDERING OR FABRICATING ANY MATERIAL.

ALL DIMENSIONS ARE IN METERS UNLESS OTHERWISE SHOWN

PRELIMINARY INVESTIGATION SECTION

SCALE 1:200	VERT. DATUM NAVD 88	PHOTOGRAMMETRY AS OF:	
	HORZ. DATUM NAD 83 (1991.35)	SURVEYED BY DISTRICT	DRAFTED BY F. BANDA 4/05
ALIGNMENT TIES DIST TRAVERSE SHEET		FIELD CHECKED BY	CHECKED BY T. ZOLNIKOVA 4/05

STRUCTURES FOUNDATION PLAN SHEET (METRIC) (REV.12-1-01)

	BY	CHECKED
DESIGN	Vivian Dang	Marc Friedheim
DETAILS	Roelina Martinez	Marc Friedheim
QUANTITIES	Vivian Dang	Marc Friedheim

STATE OF CALIFORNIA DEPARTMENT OF TRANSPORTATION

DIVISION OF STRUCTURES STRUCTURE DESIGN 6

CU 07
EA 1218V1

BRIDGE NO. 53-1134
KILOMETER POST 55.65

SUN VALLEY OH
FOUNDATION PLAN NO. 2

DISREGARD PRINTS BEARING EARLIER REVISION DATES

REVISION DATES (PRELIMINARY STAGE ONLY): 4/18/05 5/10/05 5/18/05 6/10/05 11/09/05 11/09/05 6-21-06 8-28-07 9-19-07 7-16-09

SHEET 5 OF 33

ORIGINAL SCALE IN MILLIMETERS FOR REDUCED PLANS 0 10 20 30 40 50 60 70 80 90 100

FILE => 53-1134-e-fp102.dgn

USERNAME => trlenard DATE PLOTTED => 03-MAY-2010 TIME PLOTTED => 13:22

DIST	COUNTY	ROUTE	KILOMETER POST TOTAL PROJECT	SHEET No	TOTAL SHEETS
07	LA	5	50.8/58.0	787	869

REGISTERED CIVIL ENGINEER 6-25-08 DATE

5-3-10
PLANS APPROVAL DATE

REGISTERED PROFESSIONAL ENGINEER XIAODONG CHEN No. C 58858 Exp. 6-30-11 CIVIL STATE OF CALIFORNIA

The State of California or its officers or agents shall not be responsible for the accuracy or completeness of electronic copies of this plan sheet.

LEGEND:

- Limits of bridge removal (portion)
- Indicates pervious material
- Indicates new structure
- Indicates existing structure
- Indicates expanded polystyrene

NOTES:

1. For SECTION B-B, see "ABUTMENT DETAILS NO. 2" sheet.
2. Abutment 1 TYPICAL SECTION shown, Abutment 6 is similar.
3. After removal of abutment corner concrete, reinforcement shall be burned back 25 mm clear of finished surface and finished with grout.

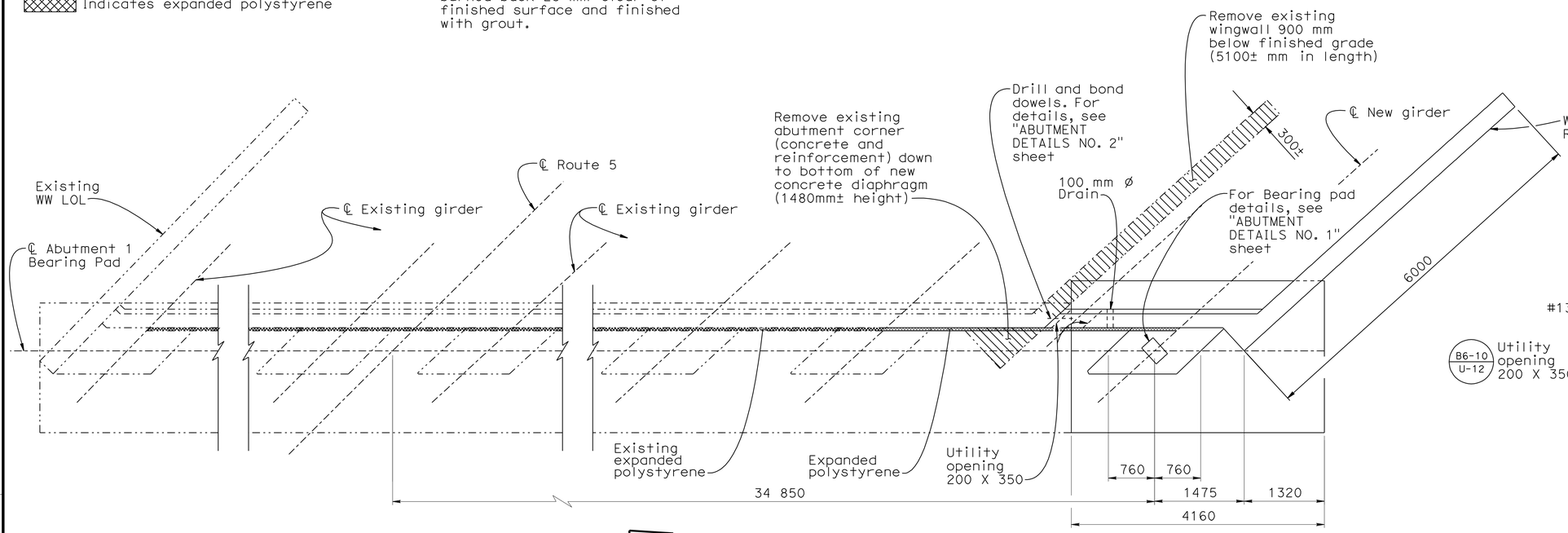

PLAN
1:40

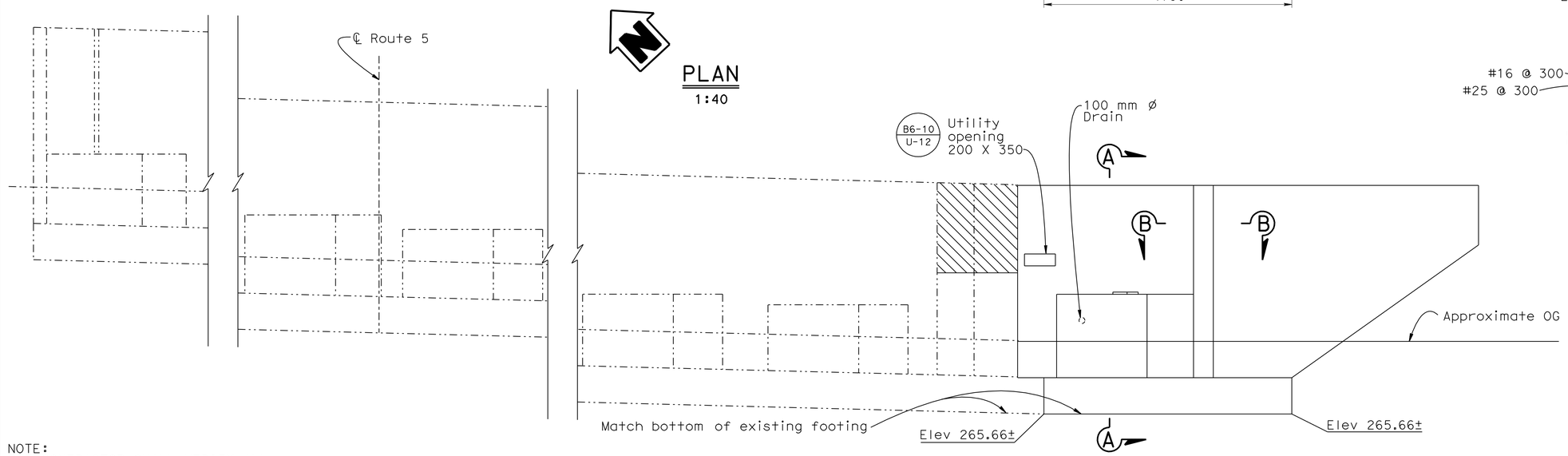

ELEVATION
1:40

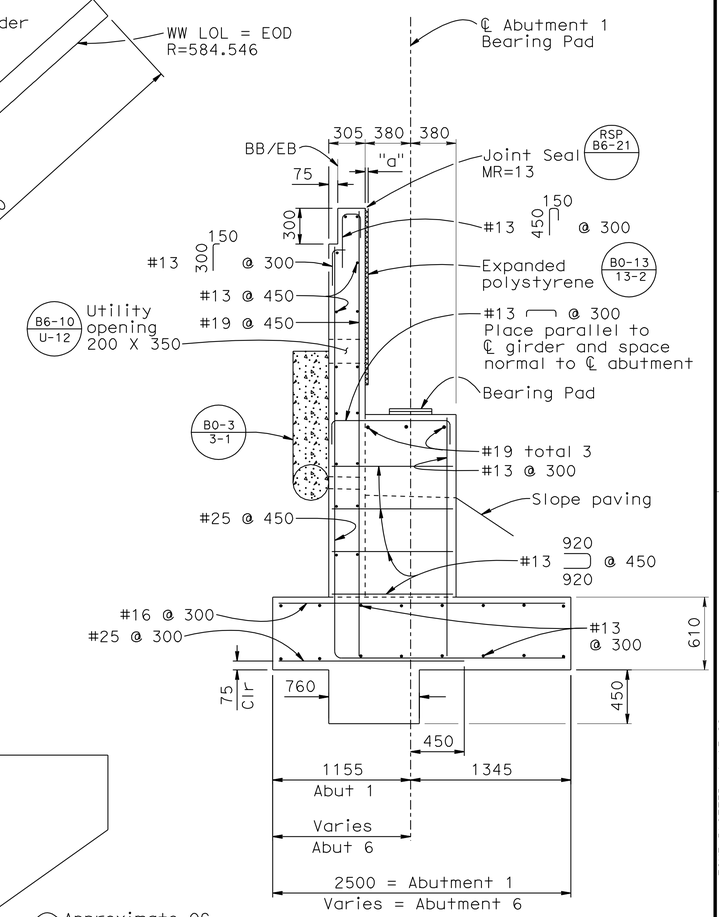

SECTION A - A
1:25

NOTE:
THE CONTRACTOR SHALL VERIFY ALL CONTROLLING FIELD DIMENSIONS BEFORE ORDERING OR FABRICATING ANY MATERIAL.

Caltrans Metric

	BY	CHECKED
DESIGN	Vivian Dang	Marc Friedheim
DETAILS	Roelina Martinez	Marc Friedheim
QUANTITIES	Vivian Dang	Marc Friedheim

STATE OF CALIFORNIA
DEPARTMENT OF TRANSPORTATION

DIVISION OF ENGINEERING SERVICES
STRUCTURE DESIGN
DESIGN BRANCH 6

BRIDGE NO. 53-1134
KILOMETER POST 55.6

SUN VALLEY OH (WIDEN)
ABUTMENT 1 LAYOUT

ALL DIMENSIONS ARE IN MILLIMETERS UNLESS OTHERWISE SHOWN

ORIGINAL SCALE IN MILLIMETERS FOR REDUCED PLANS 0 10 20 30 40 50 60 70 80 90 100

CU 07
EA 1218V1

DISREGARD PRINTS BEARING EARLIER REVISION DATES

REVISION DATES: 8-21-06 9-7-06 11-9-06 12-19-06 4-2-08 7-16-09

SHEET 6 OF 33

FILE => 53-1134-f-abut1.dgn

STRUCTURES DESIGN DETAIL SHEET (METRIC) (REV.03-17-04)

USERNAME => friehard DATE PLOTTED => 03-MAY-2010 TIME PLOTTED => 13:22

DIST	COUNTY	ROUTE	KILOMETER POST TOTAL PROJECT	SHEET No	TOTAL SHEETS
07	LA	5	50.8/58.0	788	869

REGISTERED CIVIL ENGINEER — DATE 6-25-08

5-3-10
PLANS APPROVAL DATE

REGISTERED PROFESSIONAL ENGINEER — XIAODONG CHEN — No. C 58858 — Exp. 6-30-11 — CIVIL — STATE OF CALIFORNIA

The State of California or its officers or agents shall not be responsible for the accuracy or completeness of electronic copies of this plan sheet.

NOTES:

1. For SECTION A-A, see "ABUTMENT 1 LAYOUT" sheet.
2. For drill and bond detail, see "ABUTMENT DETAILS NO. 2" sheet.

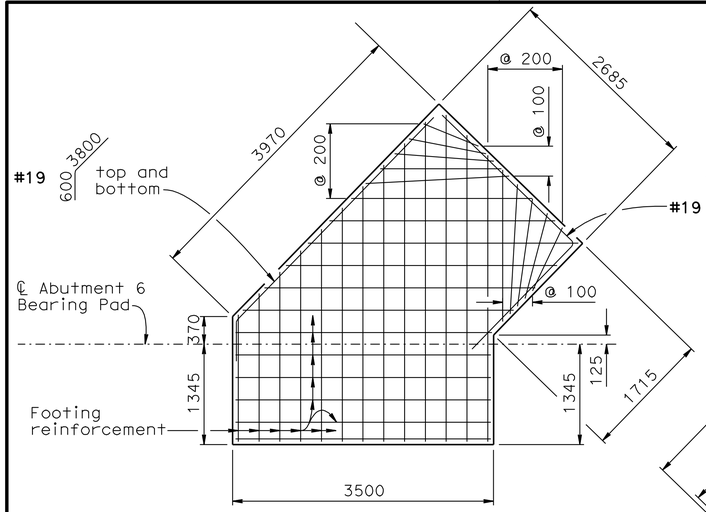

ABUTMENT 6 FOOTING REINFORCEMENT DETAILS

1:40

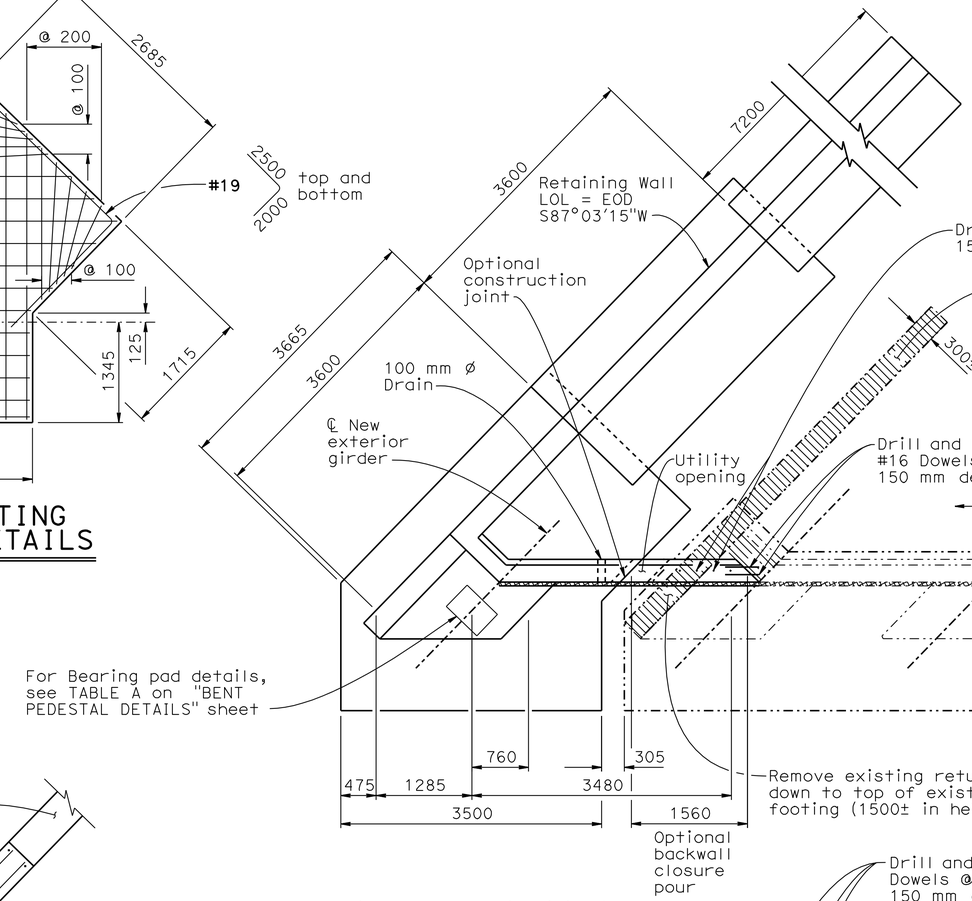

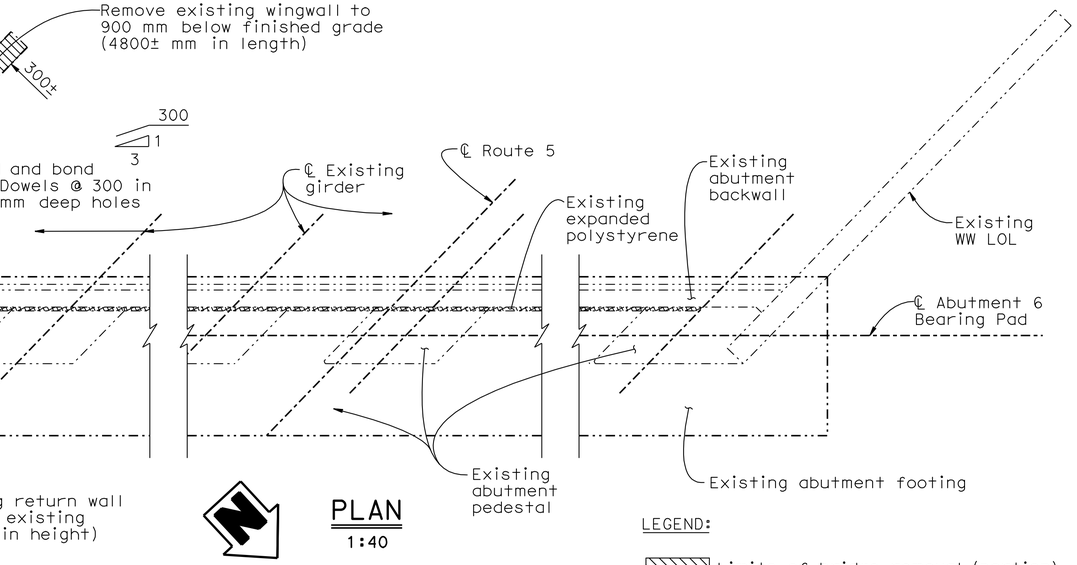

PLAN

1:40

LEGEND:

- Limits of bridge removal (portion)
- Indicates new structure
- Indicates existing structure
- Indicates expanded polystyrene

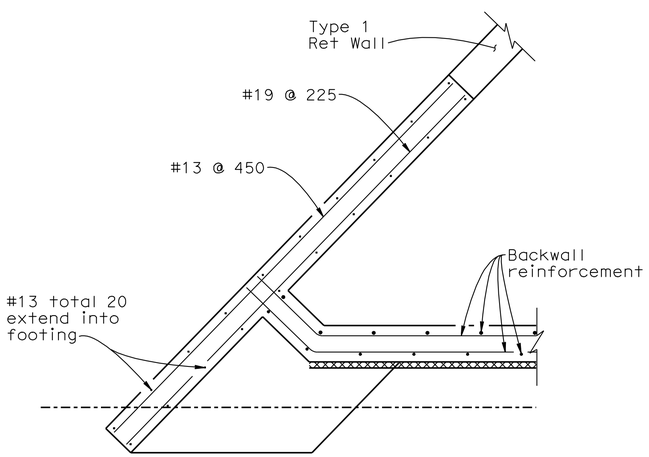

SECTION X - X

1:25

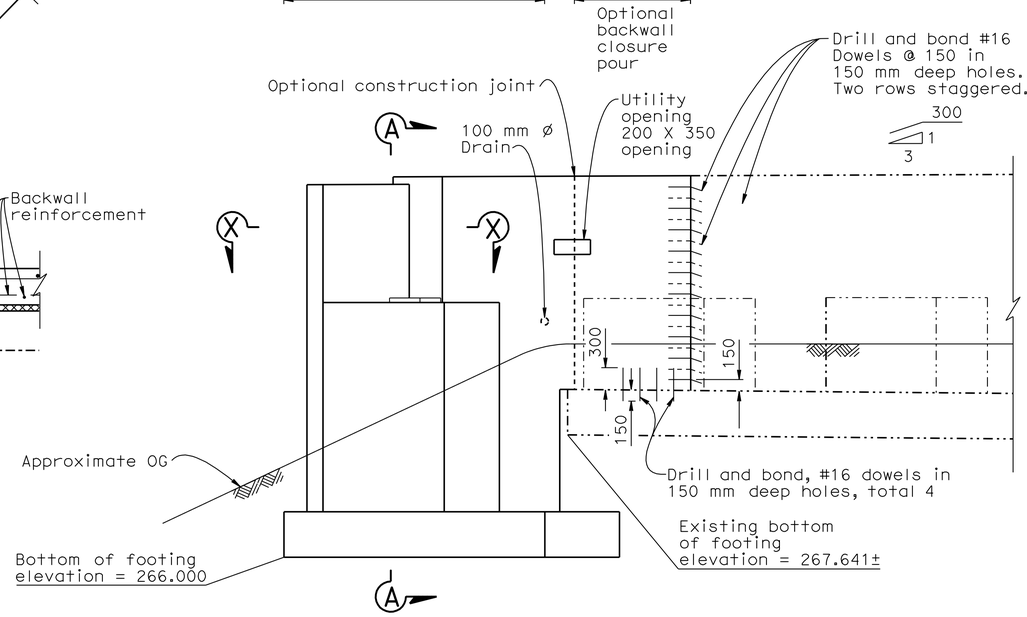

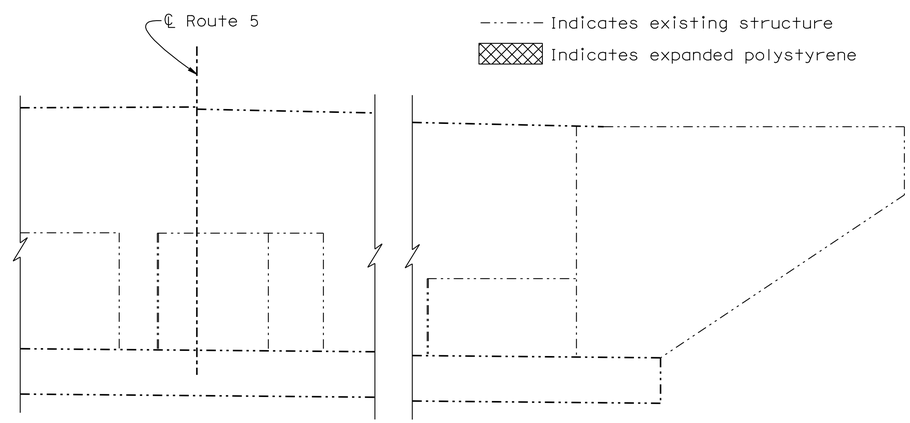

ELEVATION

1:40

NOTE:
THE CONTRACTOR SHALL VERIFY ALL CONTROLLING FIELD DIMENSIONS BEFORE ORDERING OR FABRICATING ANY MATERIAL.

Caltrans Metric

	BY	CHECKED
DESIGN	Vivian Dang	Marc Friedheim
DETAILS	Roelina Martinez	Marc Friedheim
QUANTITIES	Vivian Dang	Marc Friedheim

STATE OF CALIFORNIA
DEPARTMENT OF TRANSPORTATION

DIVISION OF ENGINEERING SERVICES
STRUCTURE DESIGN
DESIGN BRANCH 6

BRIDGE NO. 53-1134
KILOMETER POST 55.6

SUN VALLEY OH (WIDEN)
ABUTMENT 6 LAYOUT

ALL DIMENSIONS ARE IN MILLIMETERS UNLESS OTHERWISE SHOWN

ORIGINAL SCALE IN MILLIMETERS FOR REDUCED PLANS 0 10 20 30 40 50 60 70 80 90 100

CU 07
EA 1218V1

DISREGARD PRINTS BEARING EARLIER REVISION DATES

REVISION DATES: 2-16-07 | 4-3-07 | 8-28-07 | 9-11-07 | 10-18-07 | 4-2-08 | 7-16-09

SHEET 7 OF 33

FILE => 53-1134-f-abut6.dgn

STRUCTURES DESIGN DETAIL SHEET (METRIC) (REV.03-17-04)

USERNAME => rfriehard DATE PLOTTED => 03-MAY-2010 TIME PLOTTED => 13:22

DIST	COUNTY	ROUTE	KILOMETER POST TOTAL PROJECT	SHEET No	TOTAL SHEETS
07	LA	5	50.8/58.0	789	869

REGISTERED CIVIL ENGINEER 6-25-08 DATE

5-3-10
PLANS APPROVAL DATE

REGISTERED PROFESSIONAL ENGINEER Xiaodong Chen No. C 58858 Exp. 6-30-11 CIVIL STATE OF CALIFORNIA

The State of California or its officers or agents shall not be responsible for the accuracy or completeness of electronic copies of this plan sheet.

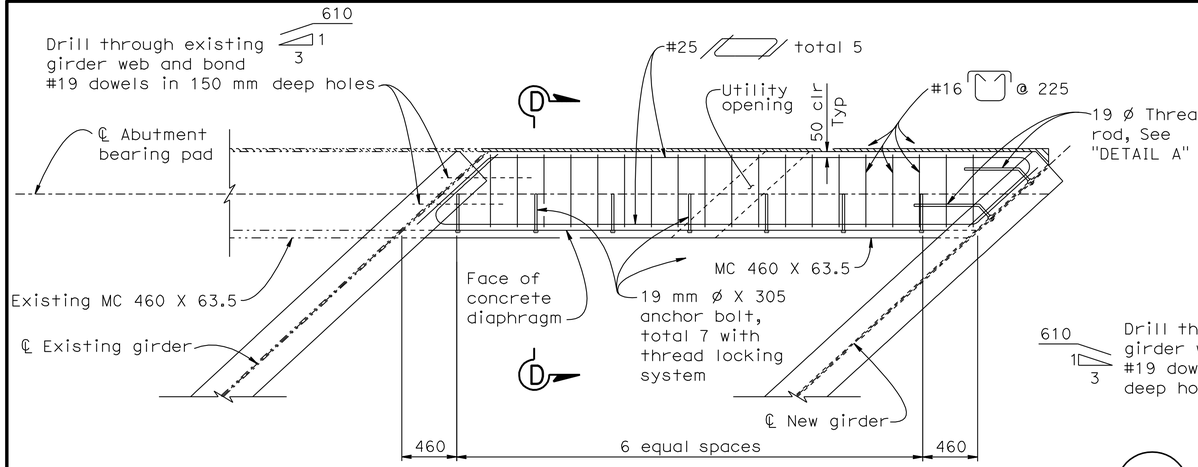

PLAN VIEW OF END DIAPHRAGM

1:25

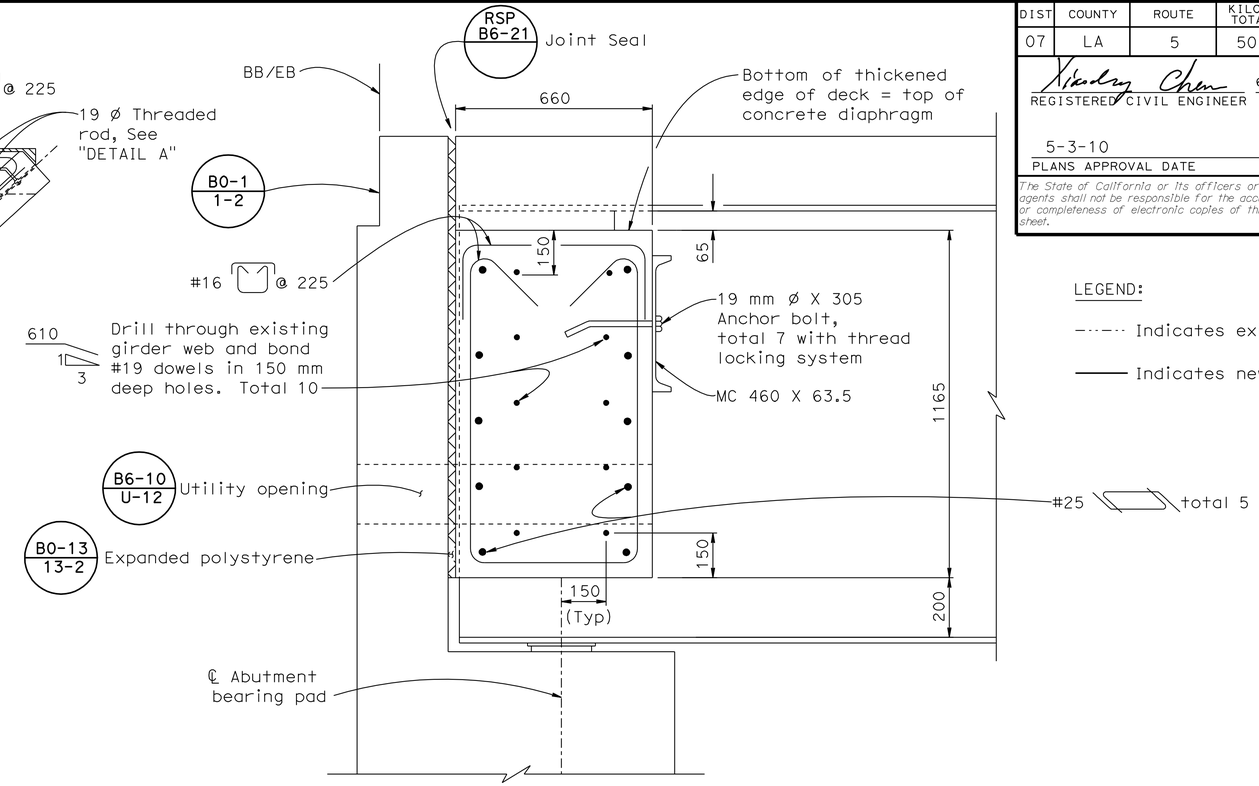

SECTION D-D

1:10

LEGEND:

-·-·- Indicates existing structure

——— Indicates new structure

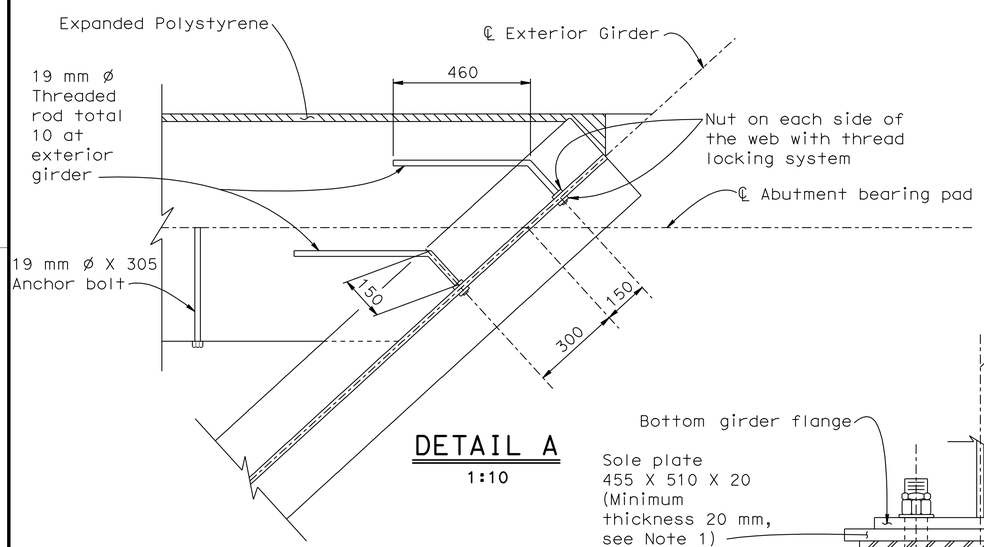

DETAIL A

1:10

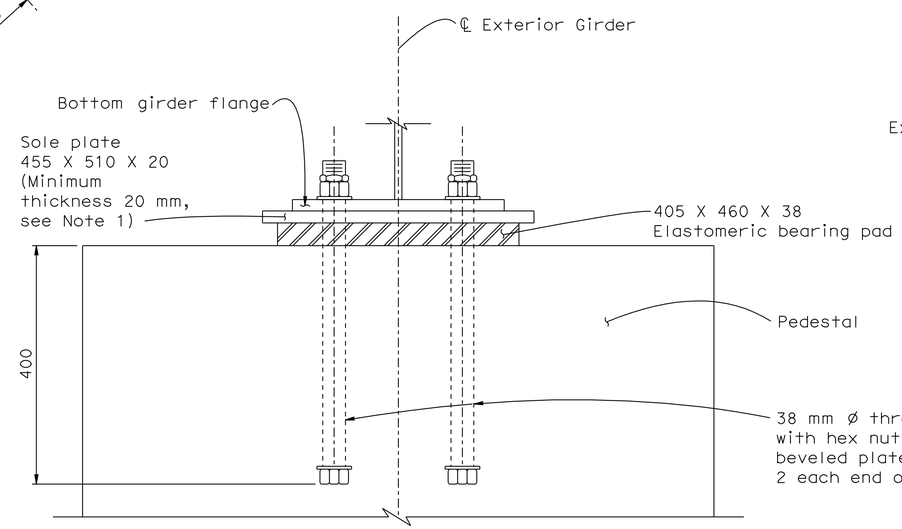

SECTION C-C

1:5

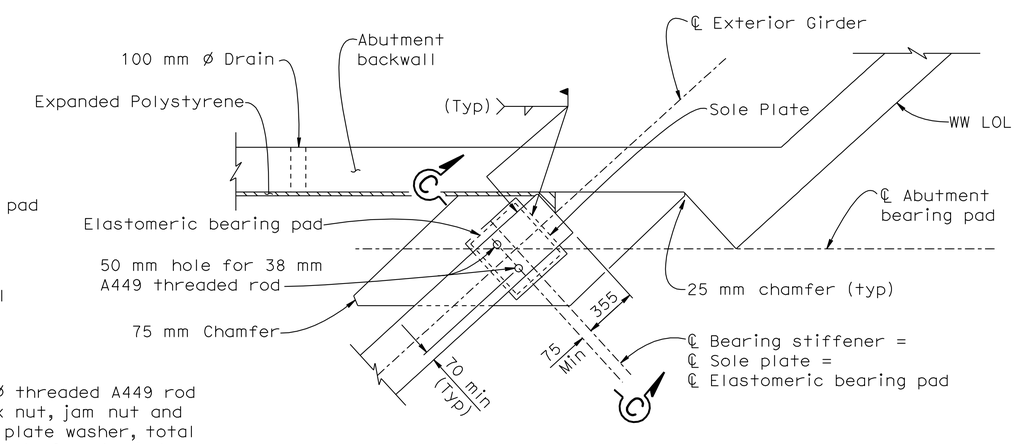

ABUTMENT BEARING PAD DETAILS

1:20

NOTE:
Abutment 1 shown. Applicable details to be used at Abutment 6 as required.

NOTES:

1. If a girder has a grade of 1% or more, bevel the sole plate to provide a level bearing plane.
2. Elastomeric bearing pad shall be placed on a level surface. Bearing pads shall be affixed to the top of concrete pedestals using epoxy.

NOTE:
THE CONTRACTOR SHALL VERIFY ALL CONTROLLING FIELD DIMENSIONS BEFORE ORDERING OR FABRICATING ANY MATERIAL.

Caltrans Metric

	BY	CHECKED
DESIGN	Vivian Dang	Marc Friedheim
DETAILS	Roelina Martinez	Marc Friedheim
QUANTITIES	Vivian Dang	Marc Friedheim

STATE OF CALIFORNIA
DEPARTMENT OF TRANSPORTATION

DIVISION OF ENGINEERING SERVICES
STRUCTURE DESIGN
DESIGN BRANCH 6

BRIDGE NO. 53-1134
KILOMETER POST 55.6

SUN VALLEY OH (WIDEN)
ABUTMENT DETAILS NO. 1

ALL DIMENSIONS ARE IN MILLIMETERS UNLESS OTHERWISE SHOWN

ORIGINAL SCALE IN MILLIMETERS FOR REDUCED PLANS 0 10 20 30 40 50 60 70 80 90 100

CU 07
EA 1218V1

DISREGARD PRINTS BEARING EARLIER REVISION DATES

REVISION DATES: 9-15-06 11-15-06 1-2-07 8-29-07 4-3-08 7-16-09

SHEET 8 OF 33

FILE => 53-1134-f-abutdet1.dgn

STRUCTURES DESIGN DETAIL SHEET (METRIC) (REV.03-17-04)

USERNAME => trlenard DATE PLOTTED => 03-MAY-2010 TIME PLOTTED => 13:22

DIST	COUNTY	ROUTE	KILOMETER POST TOTAL PROJECT	SHEET No	TOTAL SHEETS
07	LA	5	50.8/58.0	790	869

REGISTERED CIVIL ENGINEER 6-25-08 DATE

5-3-10
PLANS APPROVAL DATE

REGISTERED PROFESSIONAL ENGINEER Xiaodong Chen No. C 58858 Exp. 6-30-11 CIVIL STATE OF CALIFORNIA

The State of California or its officers or agents shall not be responsible for the accuracy or completeness of electronic copies of this plan sheet.

LEGEND:

- Indicates new structure
- Indicates existing structure
- Indicates expanded polystyrene

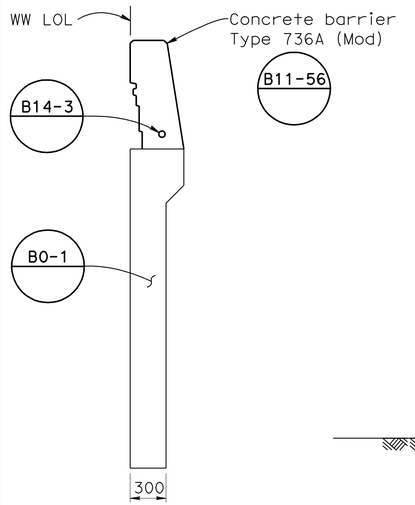

SECTION E - E
1:25

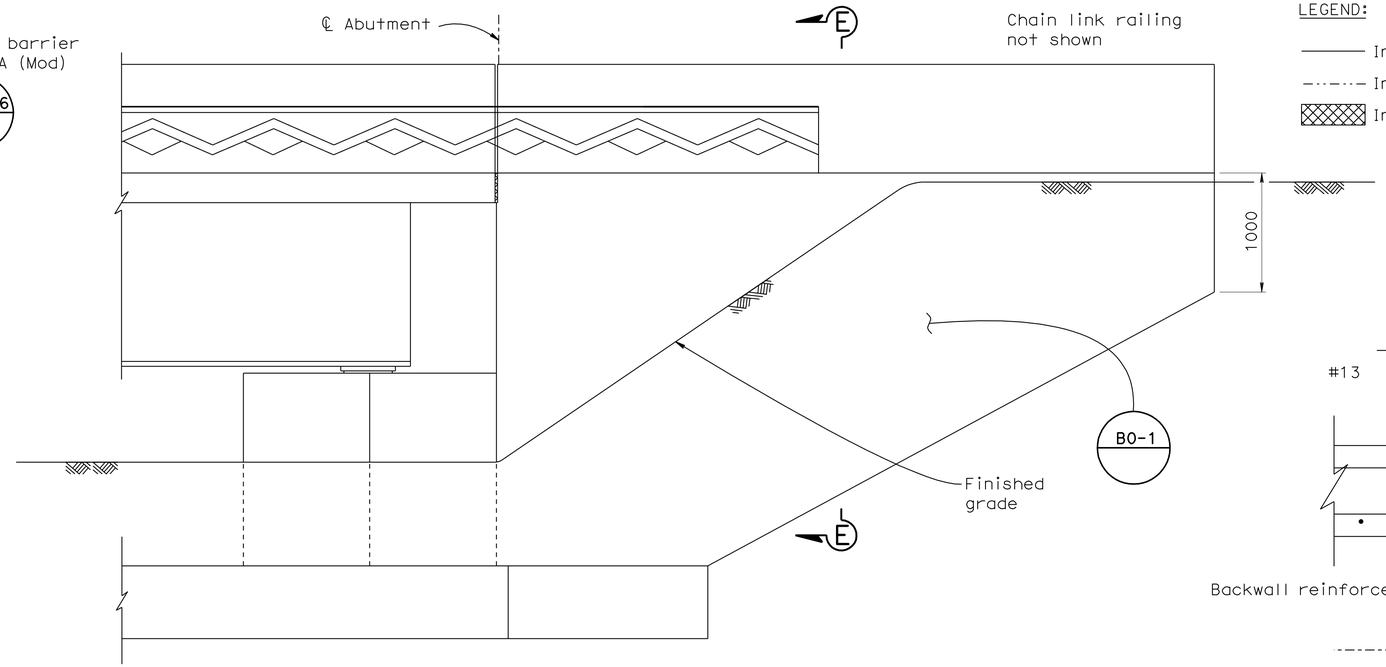

WINGWALL ELEVATION - ABUTMENT 1 LEFT
1:25

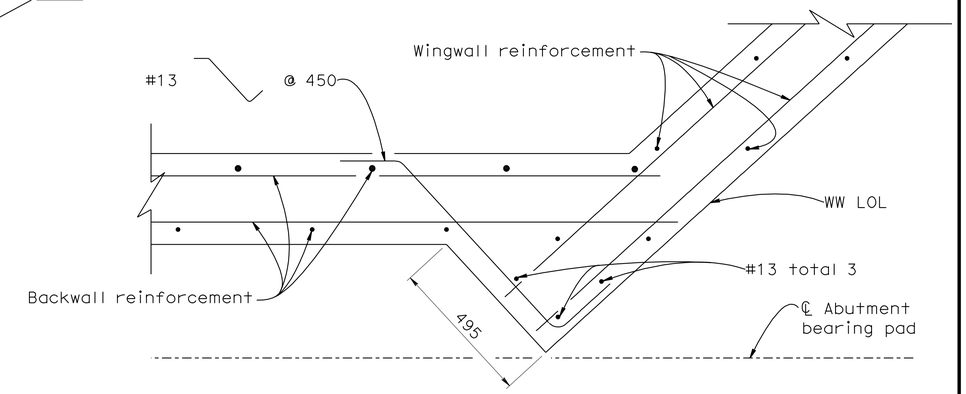

SECTION B-B
1:10

For SECTION B-B, see "ABUTMENT 1 LAYOUT" sheet.

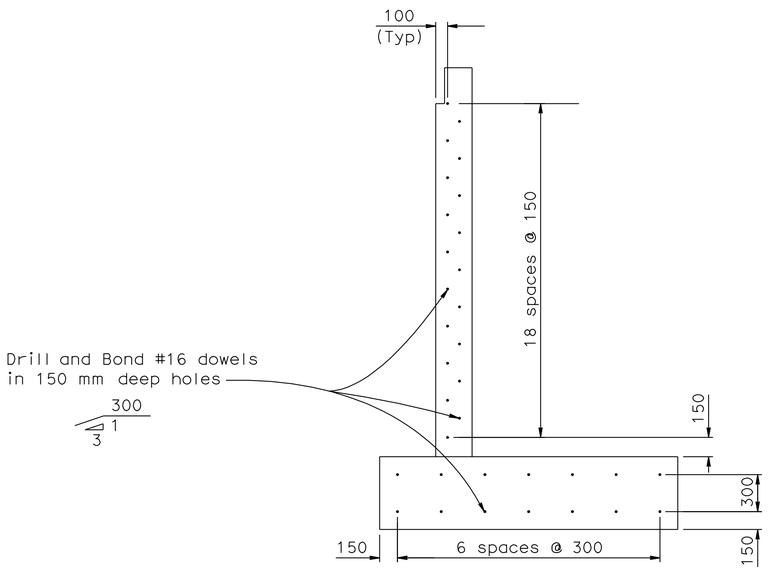

SECTION F - F
1:25

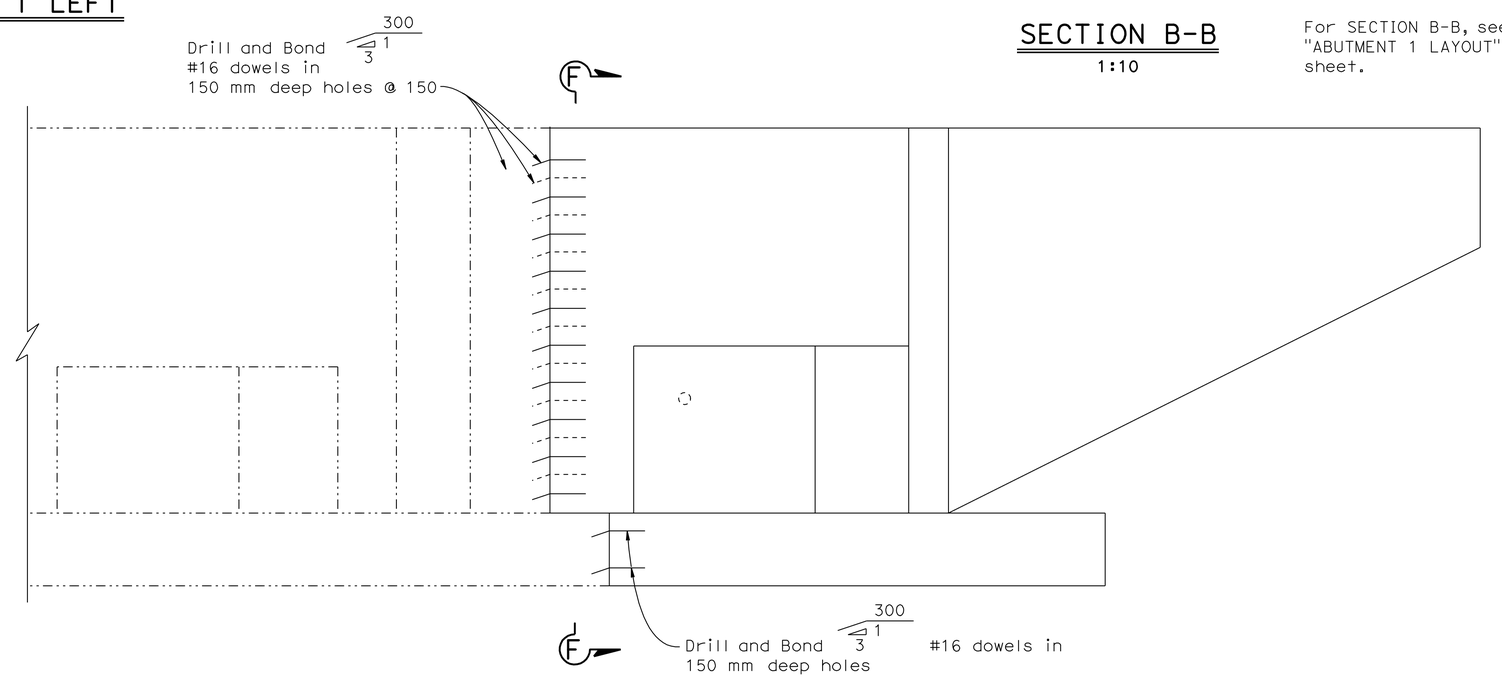

DRILL AND BOND DETAIL
1:25

NOTE:
THE CONTRACTOR SHALL VERIFY ALL CONTROLLING FIELD DIMENSIONS BEFORE ORDERING OR FABRICATING ANY MATERIAL.

	BY	CHECKED
DESIGN	Vivian Dang	Marc Friedheim
DETAILS	Roelina Martinez	Marc Friedheim
QUANTITIES	Vivian Dang	Marc Friedheim

STATE OF CALIFORNIA DEPARTMENT OF TRANSPORTATION

DIVISION OF ENGINEERING SERVICES STRUCTURE DESIGN
DESIGN BRANCH 6

BRIDGE NO. 53-1134
KILOMETER POST 55.6

SUN VALLEY OH (WIDEN)
ABUTMENT DETAILS NO. 2

ALL DIMENSIONS ARE IN MILLIMETERS UNLESS OTHERWISE SHOWN

ORIGINAL SCALE IN MILLIMETERS FOR REDUCED PLANS 0 10 20 30 40 50 60 70 80 90 100

CU 07
EA 1218V1

DISREGARD PRINTS BEARING EARLIER REVISION DATES

REVISION DATES: 8-21-06 9-7-06 11-13-06 1-3-07 8-29-07 8/29/08 7-16-09

SHEET 9 OF 33

FILE => 53-1134-f-abutdet2.dgn

STRUCTURES DESIGN DETAIL SHEET (METRIC) (REV.03-17-04)

USERNAME => trlenard DATE PLOTTED => 03-MAY-2010 TIME PLOTTED => 13:22

DIST	COUNTY	ROUTE	KILOMETER POST TOTAL PROJECT	SHEET No	TOTAL SHEETS
07	LA	5	50.8/58.0	791	869

REGISTERED CIVIL ENGINEER 6-25-08 DATE

5-3-10
PLANS APPROVAL DATE

REGISTERED PROFESSIONAL ENGINEER Xiaodong Chen No. C 58858 Exp. 6-30-11 CIVIL STATE OF CALIFORNIA

The State of California or its officers or agents shall not be responsible for the accuracy or completeness of electronic copies of this plan sheet.

LEGEND:

——— Indicates new structure

—··—··— Indicates existing structure

Indicates expanded polystyrene

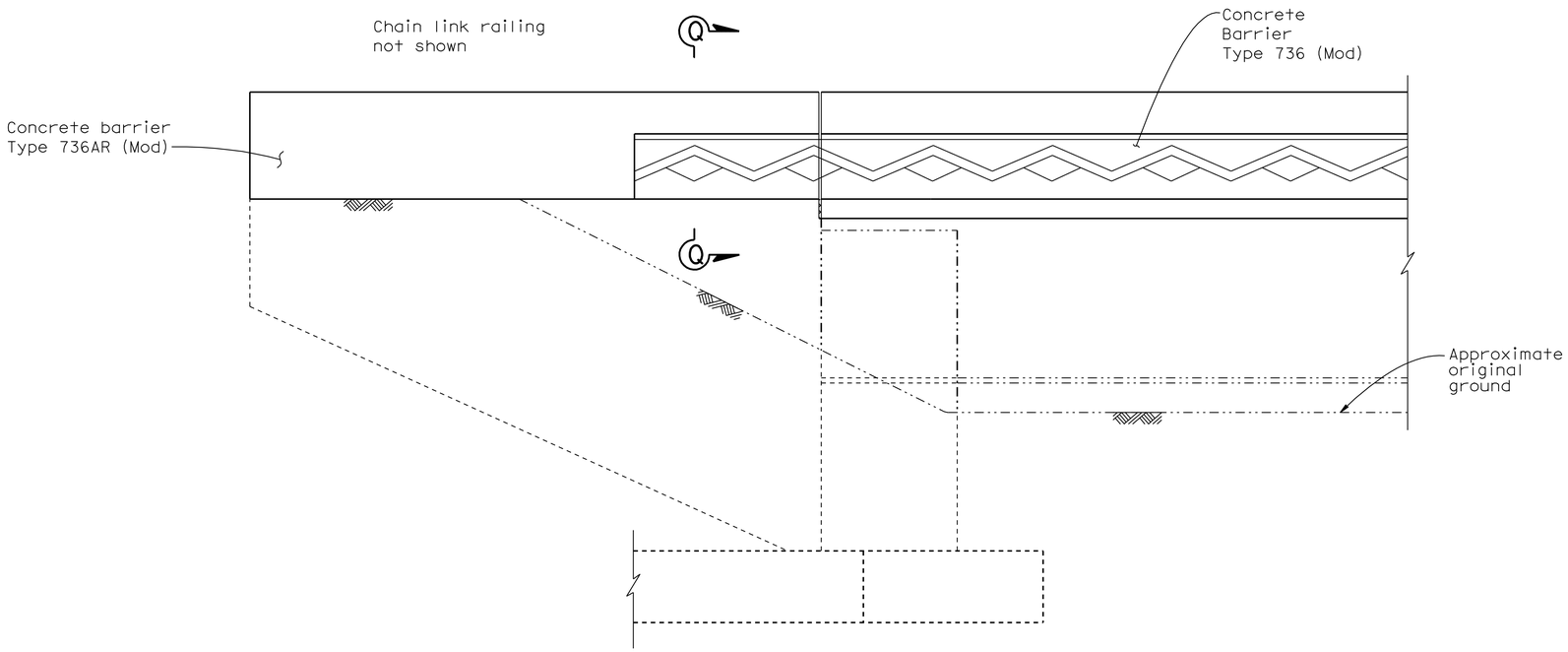

EXISTING
WINGWALL ELEVATION
ABUTMENT 1 RIGHT

1:25

NOTE:

Abutment 1 right shown,
Abutment 6 right similar

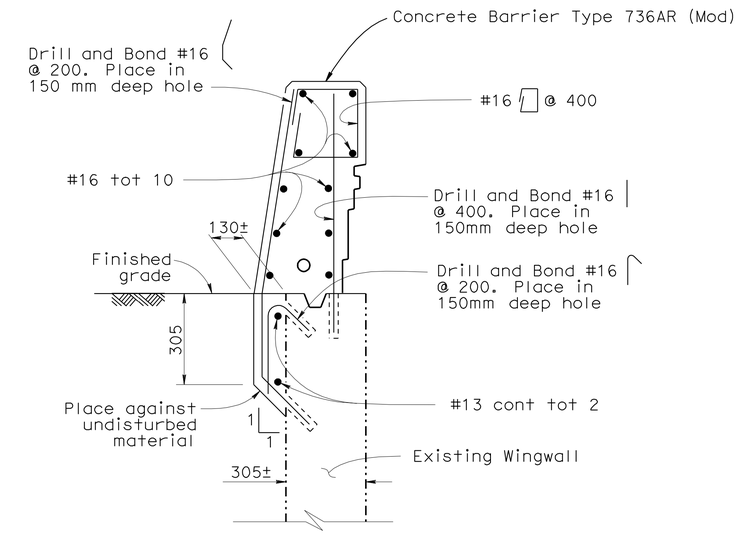

SECTION Q - Q

1:10

B14-3 B11-56

NOTE:
THE CONTRACTOR SHALL VERIFY ALL CONTROLLING FIELD DIMENSIONS BEFORE ORDERING OR FABRICATING ANY MATERIAL.

Caltrans Metric

	BY	CHECKED
DESIGN	Vivian Dang	Marc Friedheim
DETAILS	Seth Evans	Marc Friedheim
QUANTITIES	Vivian Dang	Marc Friedheim

STATE OF CALIFORNIA
DEPARTMENT OF TRANSPORTATION

DIVISION OF ENGINEERING SERVICES
STRUCTURE DESIGN
DESIGN BRANCH 6

BRIDGE NO. 53-1134
KILOMETER POST 55.6

SUN VALLEY OH (WIDEN)
ABUTMENT DETAILS NO. 3

ALL DIMENSIONS ARE IN MILLIMETERS UNLESS OTHERWISE SHOWN

ORIGINAL SCALE IN MILLIMETERS FOR REDUCED PLANS 0 10 20 30 40 50 60 70 80 90 100

CU 07
EA 1218V1

DISREGARD PRINTS BEARING EARLIER REVISION DATES

REVISION DATES: 9-19-07 4-3-08 4-21-08 4-29-08 7-16-09

SHEET 10 OF 33

FILE => 53-1134-f-abutdet3.dgn

STRUCTURES DESIGN DETAIL SHEET (METRIC) (REV.03-17-04)

USERNAME => trrright DATE PLOTTED => 03-MAY-2010 TIME PLOTTED => 13:49

DIST	COUNTY	ROUTE	KILOMETER POST TOTAL PROJECT	SHEET No	TOTAL SHEETS
07	LA	5	50.8/58.0	792	869

REGISTERED CIVIL ENGINEER — DATE 6-25-08

5-3-10
PLANS APPROVAL DATE

REGISTERED PROFESSIONAL ENGINEER — Xiaodong Chen — No. C 58858 — Exp. 6-30-11 — CIVIL — STATE OF CALIFORNIA

The State of California or its officers or agents shall not be responsible for the accuracy or completeness of electronic copies of this plan sheet.

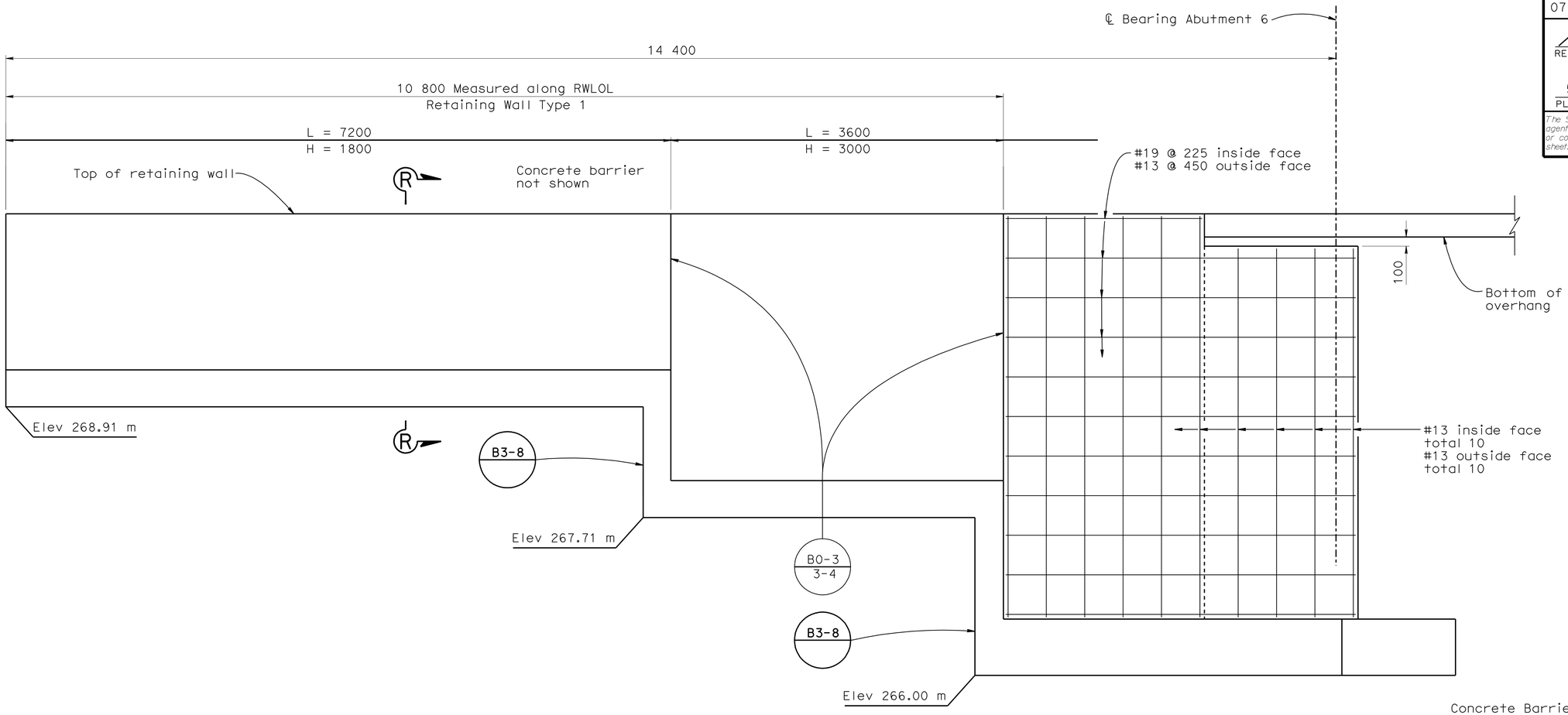

RETAINING WALL ELEVATION - ABUTMENT 6 LEFT

1:25

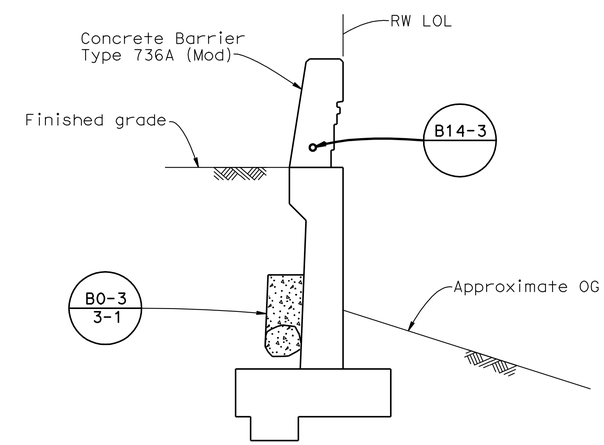

SECTION R - R

1:25

NOTE:
THE CONTRACTOR SHALL VERIFY ALL CONTROLLING FIELD DIMENSIONS BEFORE ORDERING OR FABRICATING ANY MATERIAL.

Caltrans Metric

	BY	CHECKED
DESIGN	Vivian Dang	Marc Friedheim
DETAILS	Seth Evans	Marc Friedheim
QUANTITIES	Vivian Dang	Marc Friedheim

STATE OF CALIFORNIA
DEPARTMENT OF TRANSPORTATION

DIVISION OF ENGINEERING SERVICES
STRUCTURE DESIGN
DESIGN BRANCH 6

CU 07
EA 1218V1

BRIDGE NO. 53-1134
KILOMETER POST 55.6

SUN VALLEY OH (WIDEN)
ABUTMENT DETAILS NO. 4

ALL DIMENSIONS ARE IN MILLIMETERS UNLESS OTHERWISE SHOWN

ORIGINAL SCALE IN MILLIMETERS FOR REDUCED PLANS 0 10 20 30 40 50 60 70 80 90 100

DISREGARD PRINTS BEARING EARLIER REVISION DATES → 11-29-07 4-2-08 4-29-08 7-16-09

REVISION DATES

SHEET 11 OF 33

FILE => 53-1134-f-abutdet4.dgn

STRUCTURES DESIGN DETAIL SHEET (METRIC) (REV.03-17-04)

USERNAME => trrichf DATE PLOTTED => 03-MAY-2010 TIME PLOTTED => 13:49

DIST	COUNTY	ROUTE	KILOMETER POST TOTAL PROJECT	SHEET No	TOTAL SHEETS
07	LA	5	50.8/58.0	793	869

REGISTERED CIVIL ENGINEER — DATE 6-25-08

5-3-10
PLANS APPROVAL DATE

REGISTERED PROFESSIONAL ENGINEER — Xiaodong Chen — No. C 58858 — Exp. 6-30-11 — CIVIL — STATE OF CALIFORNIA

The State of California or its officers or agents shall not be responsible for the accuracy or completeness of electronic copies of this plan sheet.

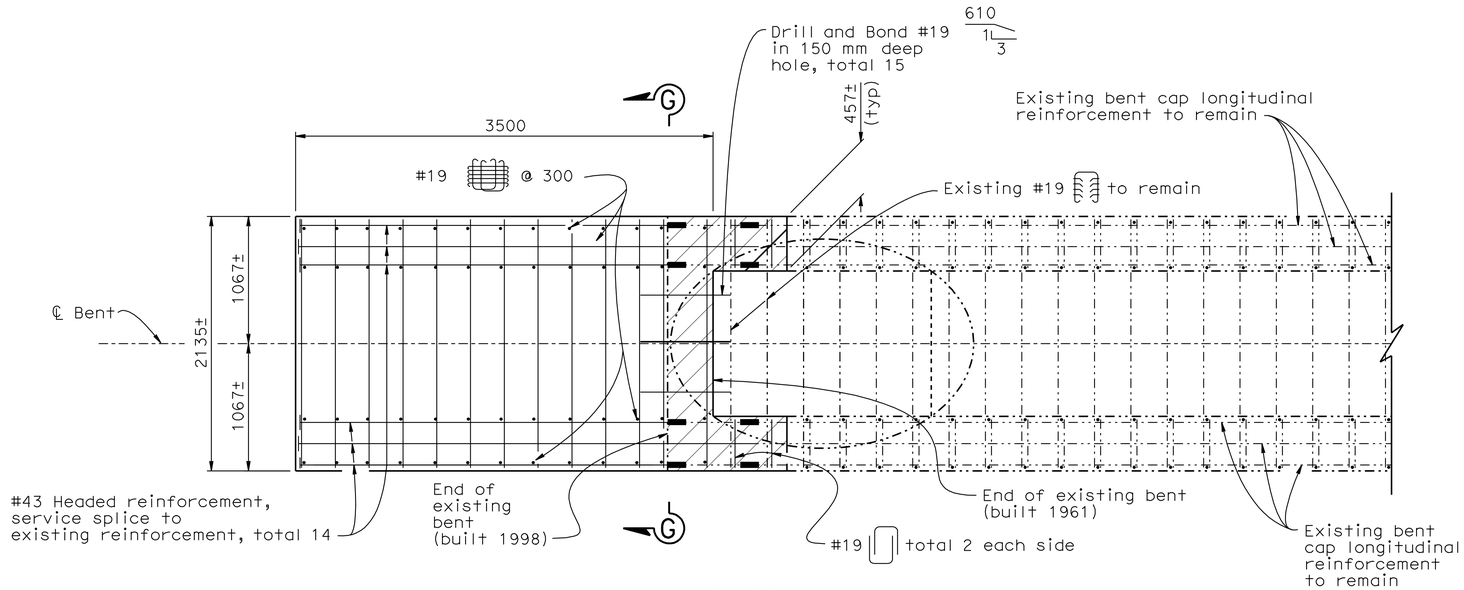

PARTIAL PLAN

1:25

NOTE:

1. Cross slope to match existing.

LEGEND:

- Limits of bridge removal (portion)
- Indicates existing structure
- Indicates new structure

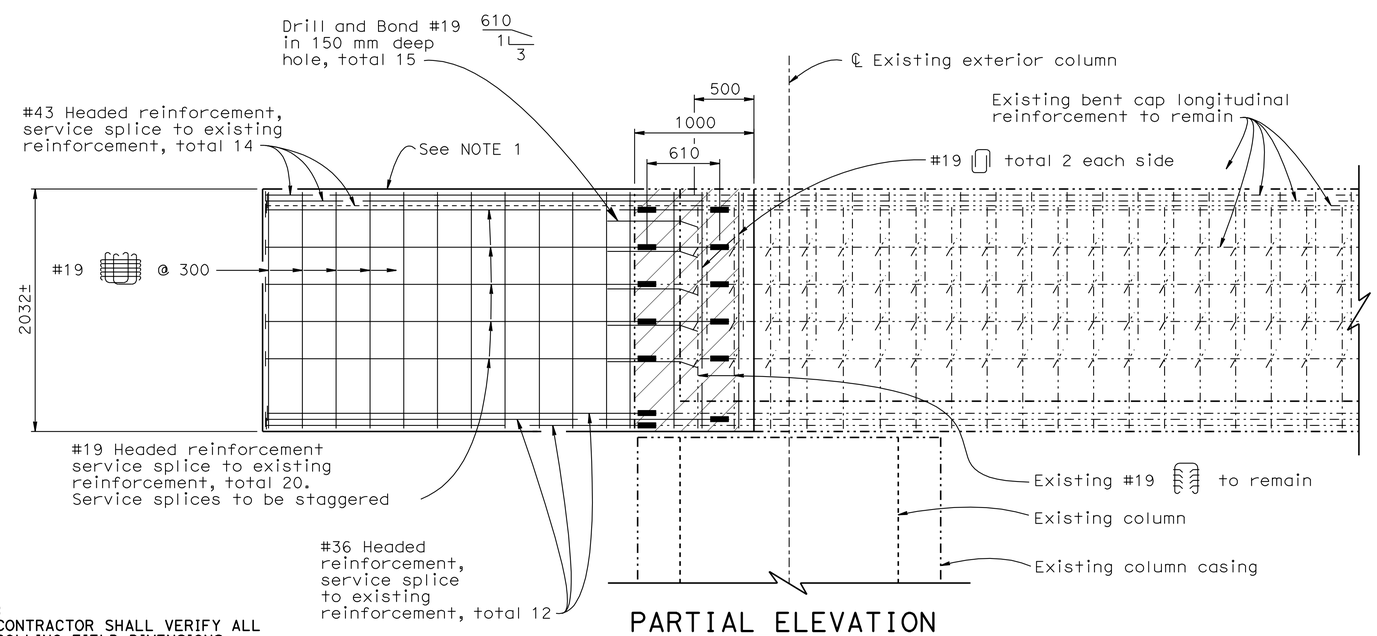

PARTIAL ELEVATION

1:25

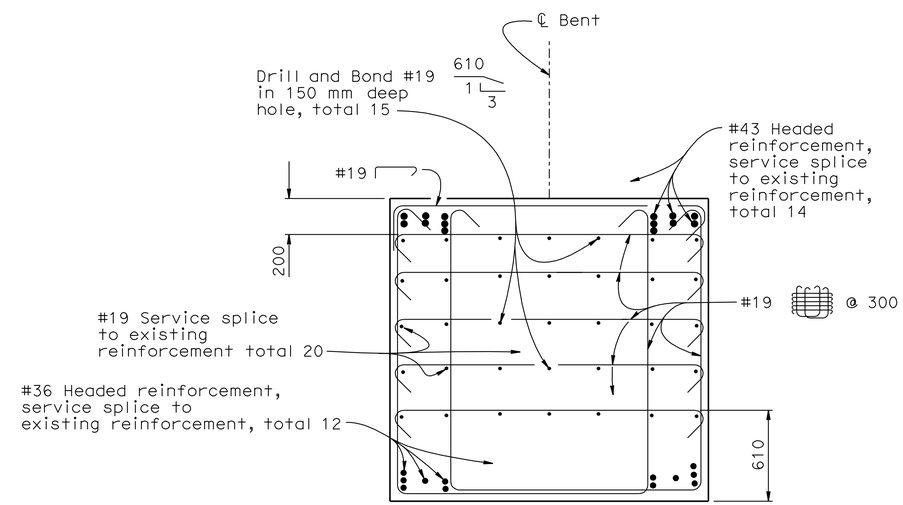

SECTION G - G

1:20

NOTE:
THE CONTRACTOR SHALL VERIFY ALL CONTROLLING FIELD DIMENSIONS BEFORE ORDERING OR FABRICATING ANY MATERIAL.

	BY	CHECKED
DESIGN	Vivian Dang	Marc Friedheim
DETAILS	Roelina Martinez	Marc Friedheim
QUANTITIES	Vivian Dang	Marc Friedheim

STATE OF CALIFORNIA
DEPARTMENT OF TRANSPORTATION

DIVISION OF ENGINEERING SERVICES
STRUCTURE DESIGN
DESIGN BRANCH 6

BRIDGE NO. 53-1134
KILOMETER POST 55.6

SUN VALLEY OH (WIDEN)
BENT DETAILS

ALL DIMENSIONS ARE IN MILLIMETERS UNLESS OTHERWISE SHOWN

ORIGINAL SCALE IN MILLIMETERS FOR REDUCED PLANS 0 10 20 30 40 50 60 70 80 90 100

CU 07
EA 1218V1

DISREGARD PRINTS BEARING EARLIER REVISION DATES

REVISION DATES: 6-9-06 | 6-27-06 | 9-26-06 | 11-13-06 | 8-29-07 | 9-19-07 | 7-16-09

SHEET 12 OF 33

FILE => 53-1134-hbent1.dgn

STRUCTURES DESIGN DETAIL SHEET (METRIC) (REV.03-17-04)

USERNAME => trright DATE PLOTTED => 03-MAY-2010 TIME PLOTTED => 13:49

DIST	COUNTY	ROUTE	KILOMETER POST TOTAL PROJECT	SHEET No	TOTAL SHEETS
07	LA	5	50.8/58.0	794	869

REGISTERED CIVIL ENGINEER — DATE 6-25-08

5-3-10
PLANS APPROVAL DATE

REGISTERED PROFESSIONAL ENGINEER — XIAODONG CHEN — No. C 58858 — Exp. 6-30-11 — CIVIL — STATE OF CALIFORNIA

The State of California or its officers or agents shall not be responsible for the accuracy or completeness of electronic copies of this plan sheet.

NOTES

1. If a girder has a grade of 1% or more, bevel the sole plate to provide a level bearing plane.
2. Steel reinforced Elastomeric Bearing Pad shall be placed on a level surface. Bearing pads shall be affixed to the top of concrete pedestals using epoxy.

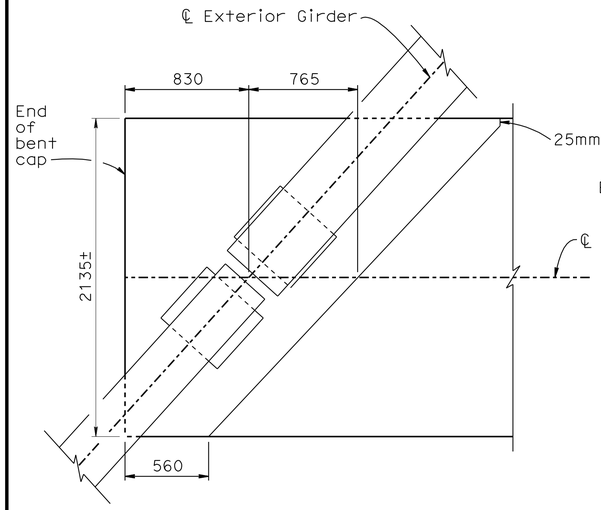

PLAN - BENT PEDESTAL

No scale

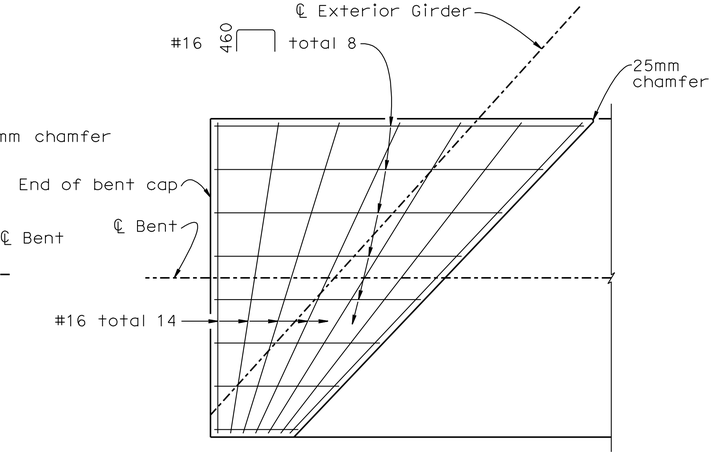

SECTION H-H

No scale

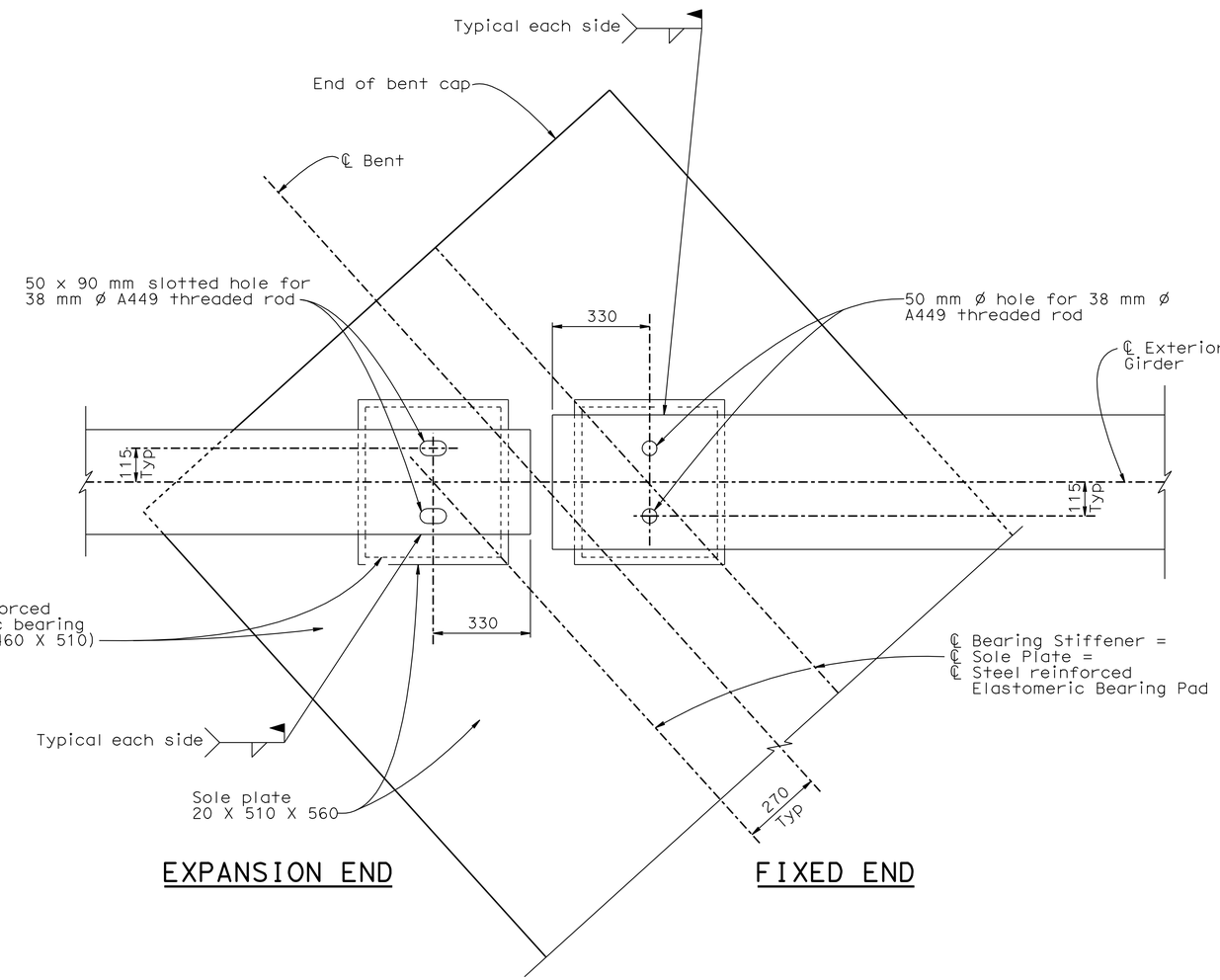

BENT BEARING DETAILS

1:10

NOTE:

Bent 2 shown. Applicable details to be used at other bents as required.

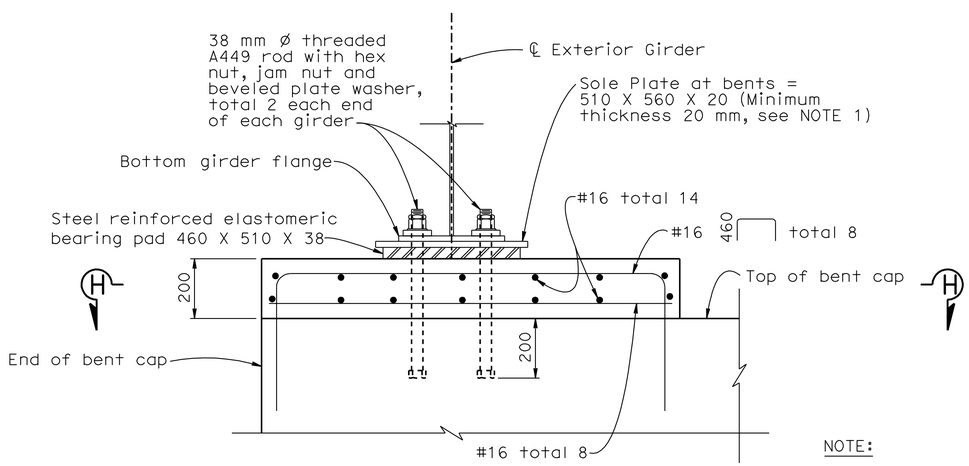

ELEVATION - BENT PEDESTAL

1:10

NOTE:

The contractor may adjust location of 38 mm ø anchor rod to avoid main bent cap reinforcement with the approval of the Engineer.

NOTE:
THE CONTRACTOR SHALL VERIFY ALL CONTROLLING FIELD DIMENSIONS BEFORE ORDERING OR FABRICATING ANY MATERIAL.

Caltrans Metric

	BY	CHECKED
DESIGN	Vivian Dang	Marc Friedheim
DETAILS	Roelina Martinez	Marc Friedheim
QUANTITIES	Vivian Dang	Marc Friedheim

STATE OF CALIFORNIA
DEPARTMENT OF TRANSPORTATION

DIVISION OF ENGINEERING SERVICES
STRUCTURE DESIGN
DESIGN BRANCH 6

BRIDGE NO. 53-1134
KILOMETER POST 55.6

SUN VALLEY OH (WIDEN)
BENT PEDESTAL DETAILS

ALL DIMENSIONS ARE IN MILLIMETERS UNLESS OTHERWISE SHOWN

ORIGINAL SCALE IN MILLIMETERS FOR REDUCED PLANS 0 10 20 30 40 50 60 70 80 90 100

CU 07
EA 1218V1

DISREGARD PRINTS BEARING EARLIER REVISION DATES

REVISION DATES: 6-29-06 8-23-06 11-13-06 9-7-07 10-18-07 4-3-08 7-16-09

SHEET 13 OF 33

STRUCTURES DESIGN DETAIL SHEET (METRIC) (REV.03-17-04)

FILE => 53-1134-hbentdet1.dgn

USERNAME => trrright DATE PLOTTED => 03-MAY-2010 TIME PLOTTED => 13:49

DIST	COUNTY	ROUTE	KILOMETER POST TOTAL PROJECT	SHEET No	TOTAL SHEETS
07	LA	5	50.8/58.0	795	869

REGISTERED CIVIL ENGINEER 6-25-08 DATE

5-3-10
PLANS APPROVAL DATE

REGISTERED PROFESSIONAL ENGINEER Xiaodong Chen No. C 58858 Exp. 6-30-11 CIVIL STATE OF CALIFORNIA

The State of California or its officers or agents shall not be responsible for the accuracy or completeness of electronic copies of this plan sheet.

NOTES:

1. Footing reinforcement symmetrical about ℄ of column.
2. For removal of existing column casing at Column No. 1, Bent 2, see "FOOTING DETAILS" sheet
3. For 'DETAIL B', see "FOOTING DETAILS" sheet.

LEGEND:

- Limits of bridge removal (portion)
- Indicates existing structure
- Indicates new structure

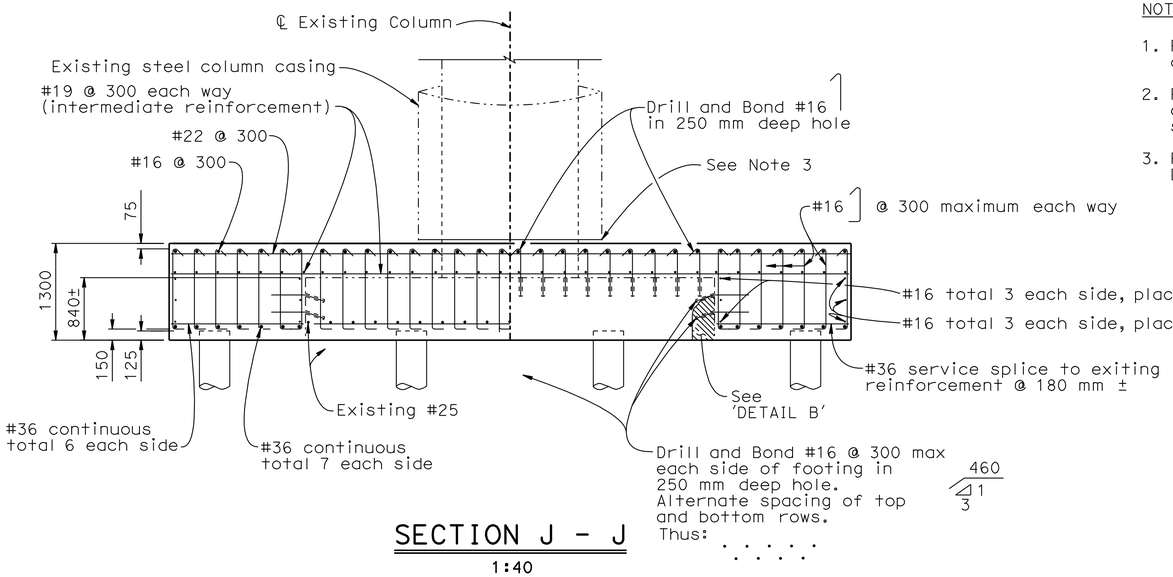

SECTION J - J

1:40

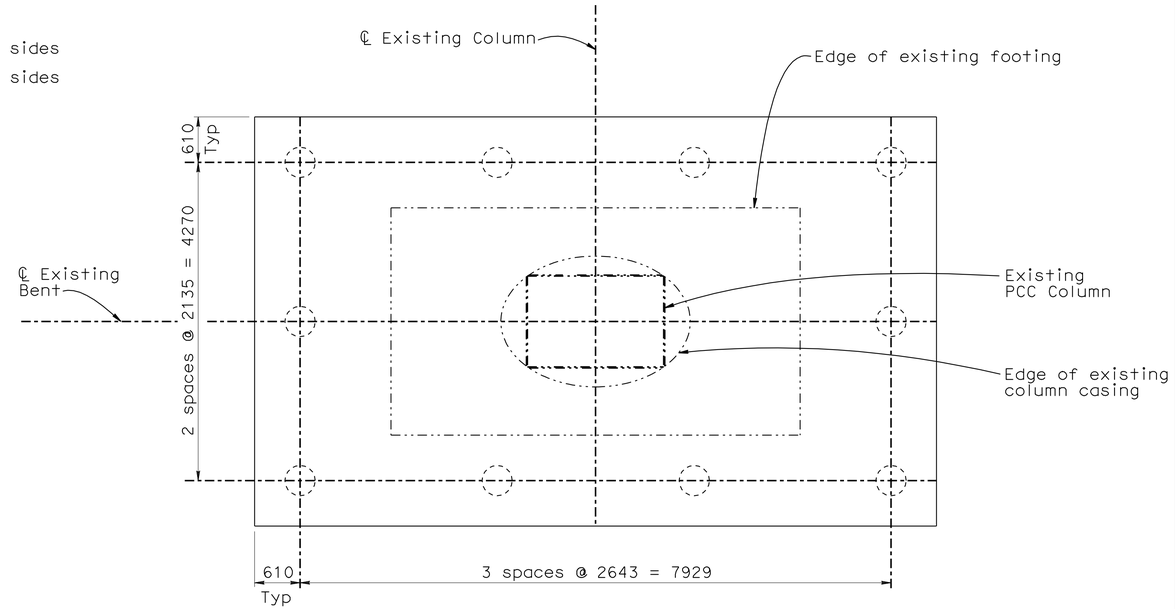

PILE LAYOUT

1:40

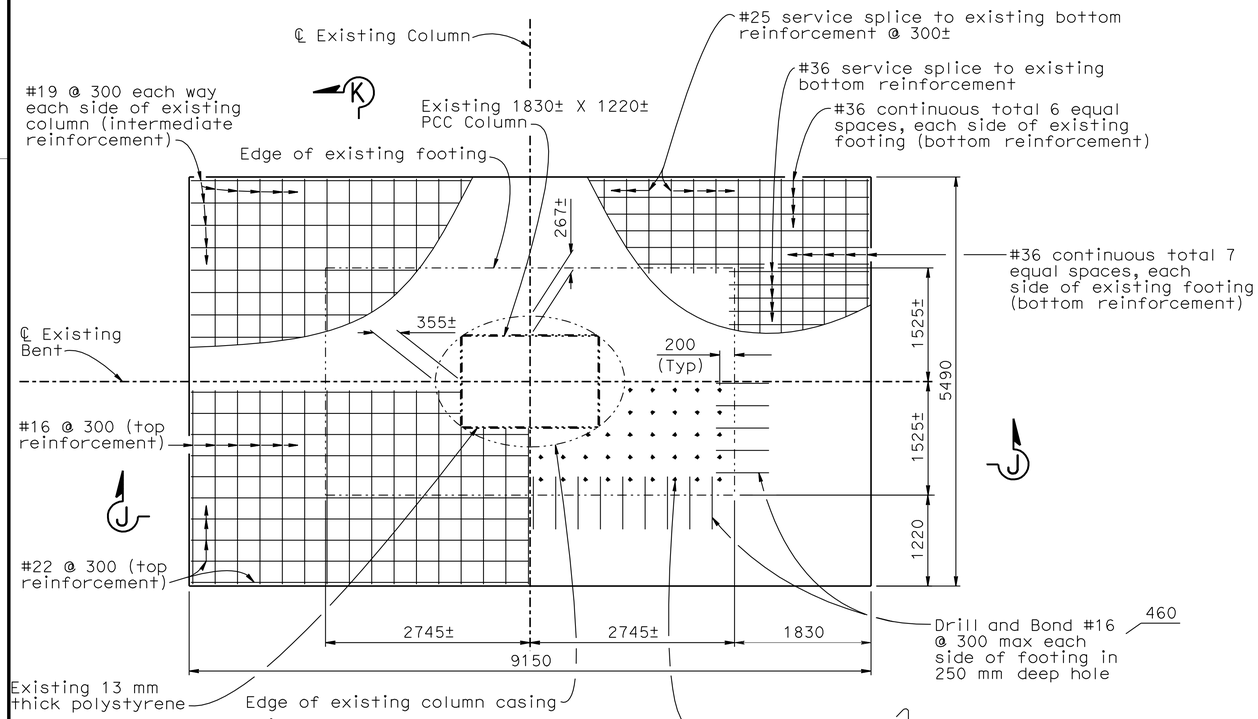

PLAN

1:40

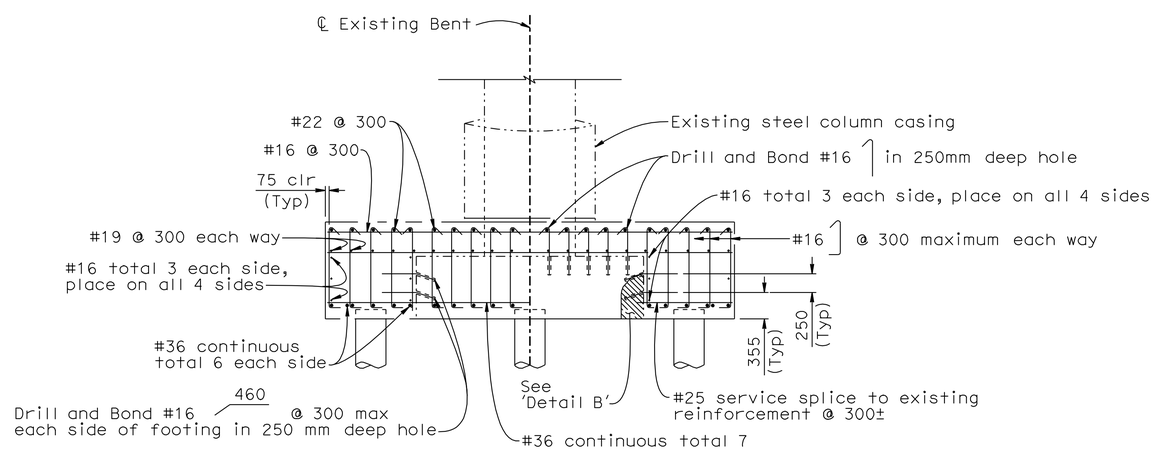

SECTION K - K

1:40

NOTE:
THE CONTRACTOR SHALL VERIFY ALL CONTROLLING FIELD DIMENSIONS BEFORE ORDERING OR FABRICATING ANY MATERIAL.

Caltrans Metric

	BY	CHECKED
DESIGN	Vivian Dang	Marc Friedheim
DETAILS	Roelina Martinez	Marc Friedheim
QUANTITIES	Vivian Dang	Marc Friedheim

STATE OF CALIFORNIA
DEPARTMENT OF TRANSPORTATION

DIVISION OF ENGINEERING SERVICES
STRUCTURE DESIGN
DESIGN BRANCH 6

BRIDGE NO. 53-1134
KILOMETER POST 55.6

SUN VALLEY OH (WIDEN)
BENT 2 FOOTING

ALL DIMENSIONS ARE IN MILLIMETERS UNLESS OTHERWISE SHOWN

ORIGINAL SCALE IN MILLIMETERS FOR REDUCED PLANS 0 10 20 30 40 50 60 70 80 90 100

CU 07
EA 1218V1

DISREGARD PRINTS BEARING EARLIER REVISION DATES

REVISION DATES: 8-8-08 6-12-06 8-17-07 9-4-07 7-16-09

SHEET 14 OF 33

FILE => 53-1134-hbentfoot2.dgn

STRUCTURES DESIGN DETAIL SHEET (METRIC) (REV.03-17-04)

USERNAME => trfright DATE PLOTTED => 03-MAY-2010 TIME PLOTTED => 13:50

DIST	COUNTY	ROUTE	KILOMETER POST TOTAL PROJECT	SHEET No	TOTAL SHEETS
07	LA	5	50.8/58.0	796	869

REGISTERED CIVIL ENGINEER 6-25-08 DATE

5-3-10
PLANS APPROVAL DATE

REGISTERED PROFESSIONAL ENGINEER Xiaodong Chen No. C 58858 Exp. 6-30-11 CIVIL STATE OF CALIFORNIA

The State of California or its officers or agents shall not be responsible for the accuracy or completeness of electronic copies of this plan sheet.

NOTES:

1. Footing reinforcement symmetrical about ℄ of column.
2. For removal of existing column casing at Column No. 1, Bent 5, see "FOOTING DETAILS" sheet
3. For 'DETAIL B', see "FOOTING DETAILS" sheet.

LEGEND:

- Limits of bridge removal (portion)
- Indicates existing structure
- Indicates new structure

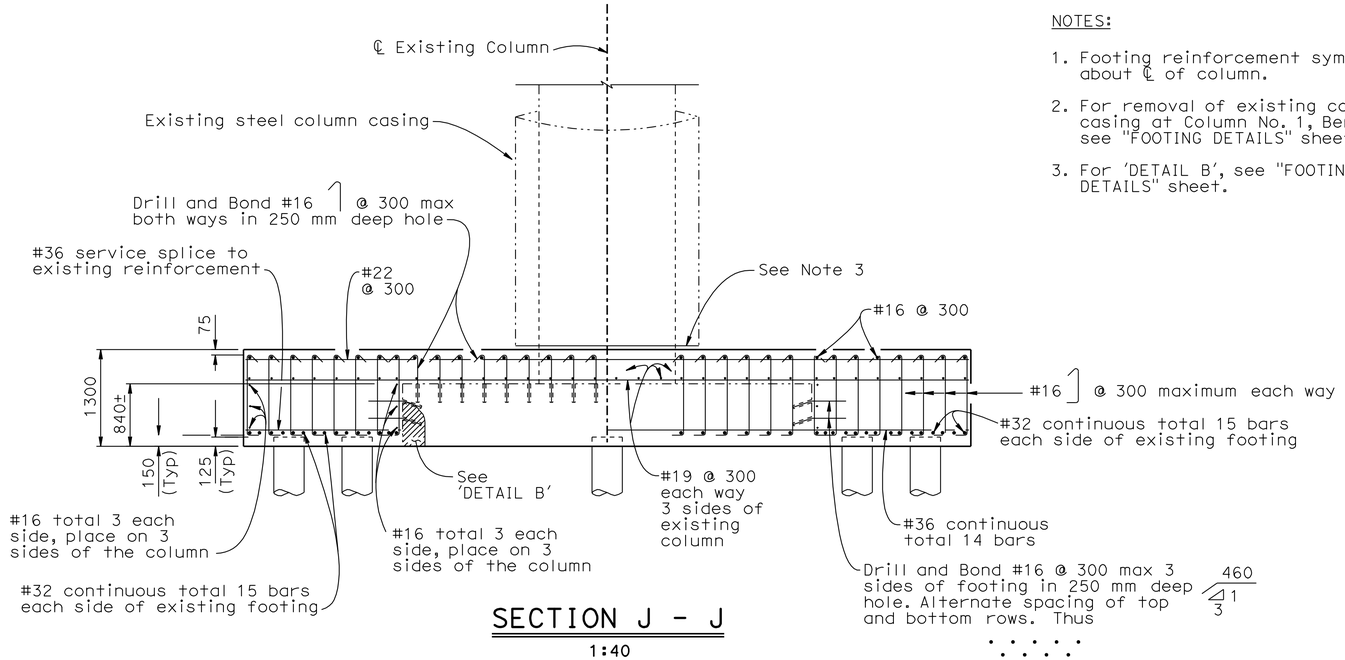

SECTION J - J
1:40

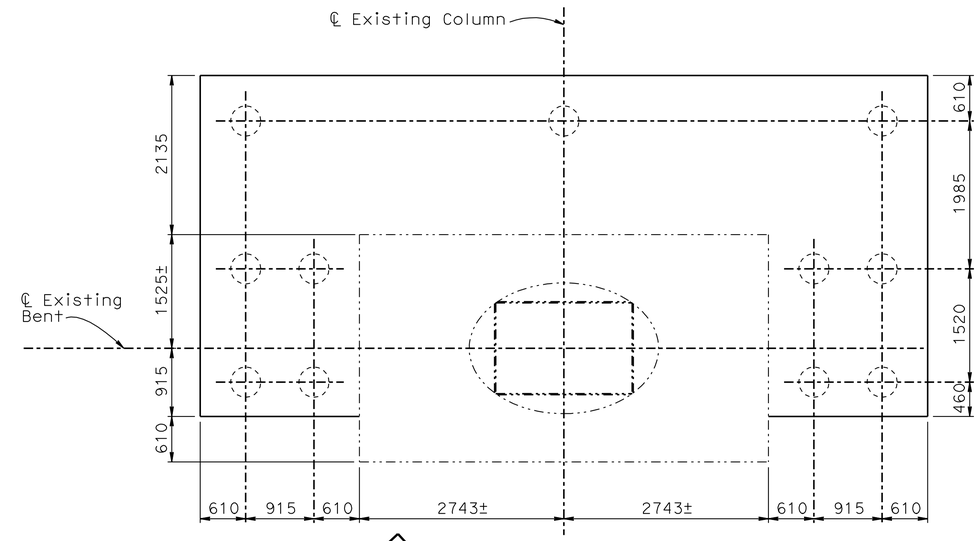

PILE LAYOUT
1:40

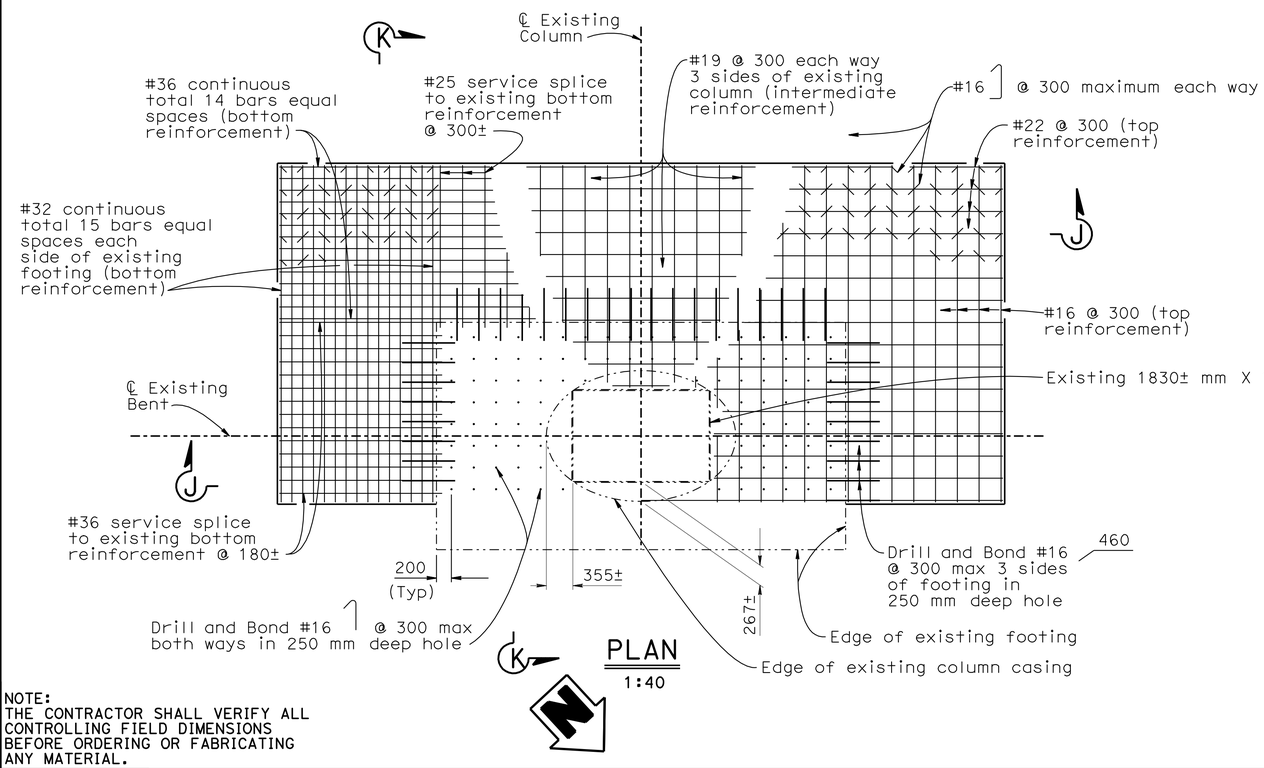

PLAN
1:40

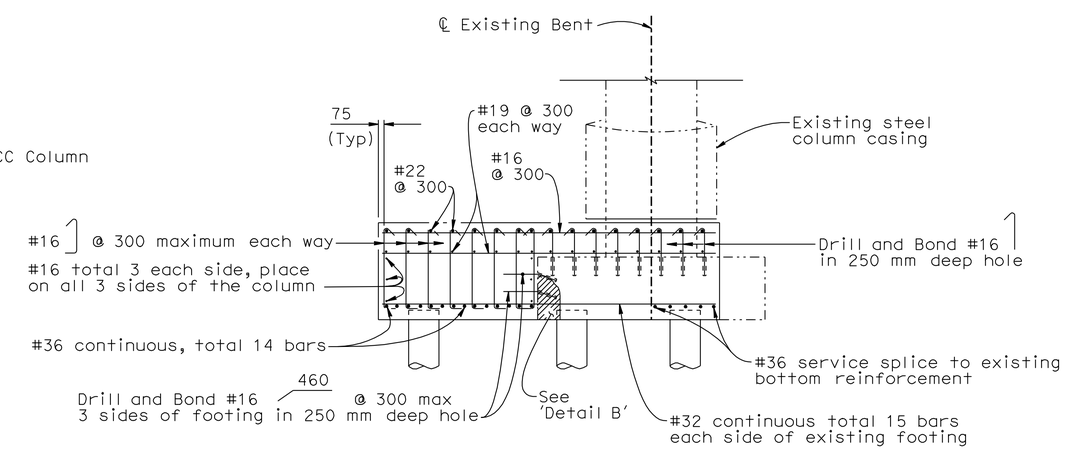

SECTION K - K
1:40

NOTE:
THE CONTRACTOR SHALL VERIFY ALL CONTROLLING FIELD DIMENSIONS BEFORE ORDERING OR FABRICATING ANY MATERIAL.

Caltrans Metric

	BY	CHECKED
DESIGN	Vivian Dang	Marc Friedheim
DETAILS	Roelina Martinez	Marc Friedheim
QUANTITIES	Vivian Dang	Marc Friedheim

STATE OF CALIFORNIA
DEPARTMENT OF TRANSPORTATION

DIVISION OF ENGINEERING SERVICES
STRUCTURE DESIGN
DESIGN BRANCH 6

BRIDGE NO. 53-1134
KILOMETER POST 55.6

SUN VALLEY OH (WIDEN)
BENT 5 FOOTING

ALL DIMENSIONS ARE IN MILLIMETERS UNLESS OTHERWISE SHOWN

ORIGINAL SCALE IN MILLIMETERS FOR REDUCED PLANS 0 10 20 30 40 50 60 70 80 90 100

CU 07
EA 1218V1

DISREGARD PRINTS BEARING EARLIER REVISION DATES

REVISION DATES: 8-21-07 9-2-07 9-19-07 7-16-09

SHEET 15 OF 33

FILE => 53-1134-hbentfoot5.dgn

STRUCTURES DESIGN DETAIL SHEET (METRIC) (REV.03-17-04)

USERNAME => trrichf DATE PLOTTED => 03-MAY-2010 TIME PLOTTED => 13:50

DIST	COUNTY	ROUTE	KILOMETER POST TOTAL PROJECT	SHEET No	TOTAL SHEETS
07	LA	5	50.8/58.0	797	869

REGISTERED CIVIL ENGINEER 6-25-08 DATE

5-3-10
PLANS APPROVAL DATE

REGISTERED PROFESSIONAL ENGINEER Xiaodong Chen No. C 58858 Exp. 6-30-11 CIVIL STATE OF CALIFORNIA

The State of California or its officers or agents shall not be responsible for the accuracy or completeness of electronic copies of this plan sheet.

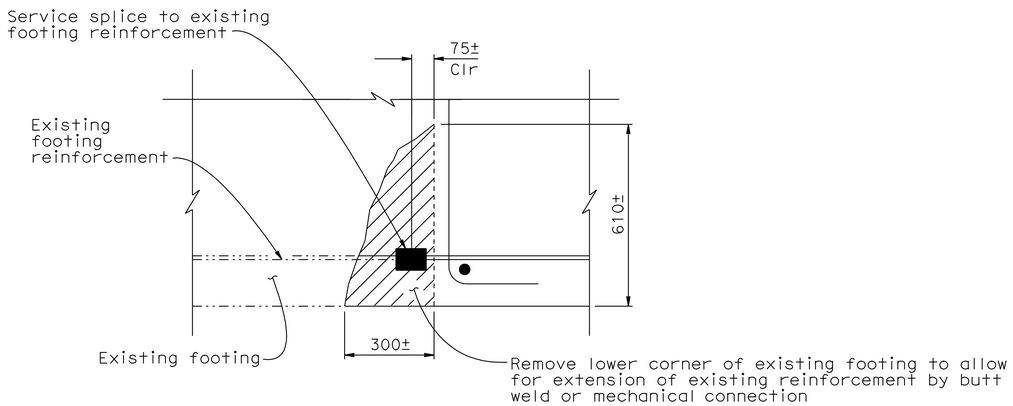

DETAIL B

1:10

NOTE A:
Dimension may be increased up to 300 mm at contractor's option

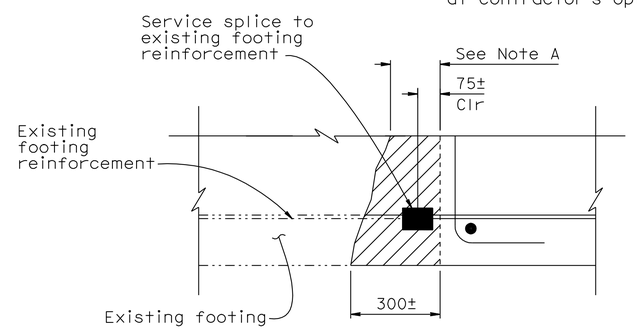

ALTERNATIVE DETAIL B

1:10

LEGEND:

- Limits of bridge removal (portion)
- Indicates existing structure
- Indicates new structure

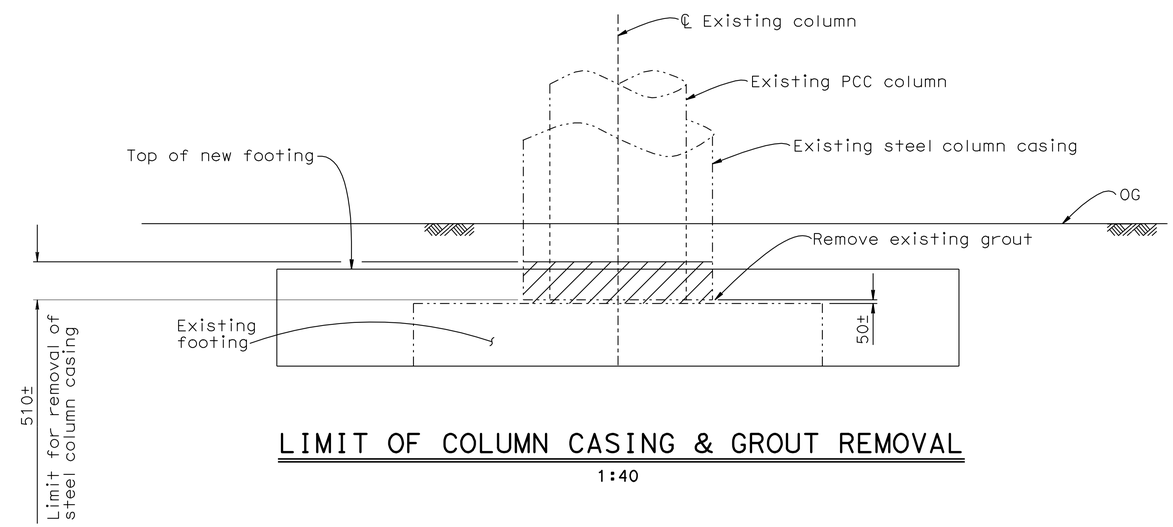

LIMIT OF COLUMN CASING & GROUT REMOVAL

1:40

NOTE:
THE CONTRACTOR SHALL VERIFY ALL CONTROLLING FIELD DIMENSIONS BEFORE ORDERING OR FABRICATING ANY MATERIAL.

Caltrans Metric

	BY	CHECKED
DESIGN	Vivian Dang	Marc Friedheim
DETAILS	Roelina Martinez	Marc Friedheim
QUANTITIES	Vivian Dang	Marc Friedheim

ALL DIMENSIONS ARE IN MILLIMETERS UNLESS OTHERWISE SHOWN

ORIGINAL SCALE IN MILLIMETERS FOR REDUCED PLANS 0 10 20 30 40 50 60 70 80 90 100

STATE OF CALIFORNIA DEPARTMENT OF TRANSPORTATION

DIVISION OF ENGINEERING SERVICES STRUCTURE DESIGN
DESIGN BRANCH 6

CU 07
EA 1218V1

BRIDGE NO. 53-1134
KILOMETER POST 55.6

SUN VALLEY OH (WIDEN)
FOOTING DETAILS

DISREGARD PRINTS BEARING EARLIER REVISION DATES

REVISION DATES: 3-11-09 9-24-09 4-22-09 7-16-09

SHEET 16 OF 33

FILE => 53-1134-hbentfootdet.dgn

STRUCTURES DESIGN DETAIL SHEET (METRIC) (REV.03-17-04)

USERNAME => trright DATE PLOTTED => 03-MAY-2010 TIME PLOTTED => 13:50

DIST	COUNTY	ROUTE	KILOMETER POST TOTAL PROJECT	SHEET No	TOTAL SHEETS
07	LA	5	50.8/58.0	798	869

REGISTERED CIVIL ENGINEER — DATE 6-25-08

5-3-10
PLANS APPROVAL DATE

REGISTERED PROFESSIONAL ENGINEER — XIAODONG CHEN — No. C 58858 — Exp. 6-30-11 — CIVIL — STATE OF CALIFORNIA

The State of California or its officers or agents shall not be responsible for the accuracy or completeness of electronic copies of this plan sheet.

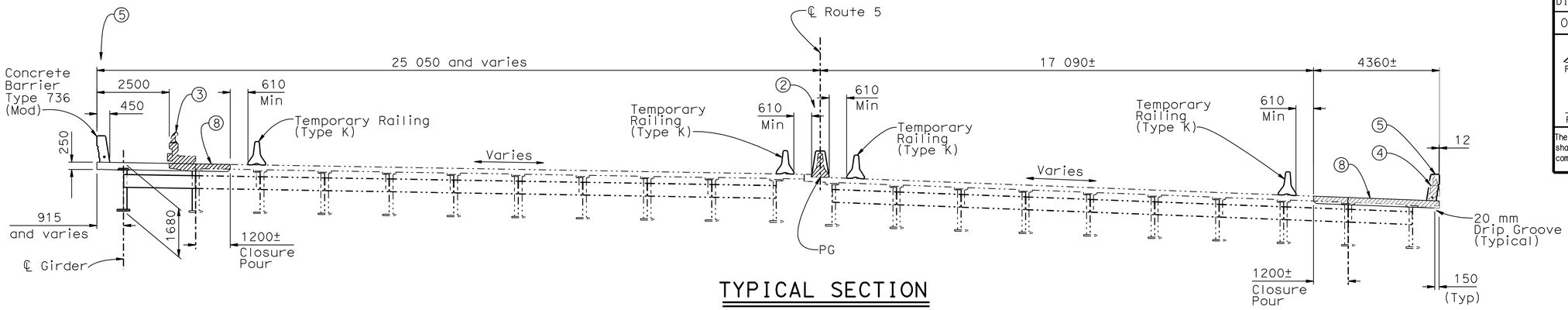

TYPICAL SECTION

1:80

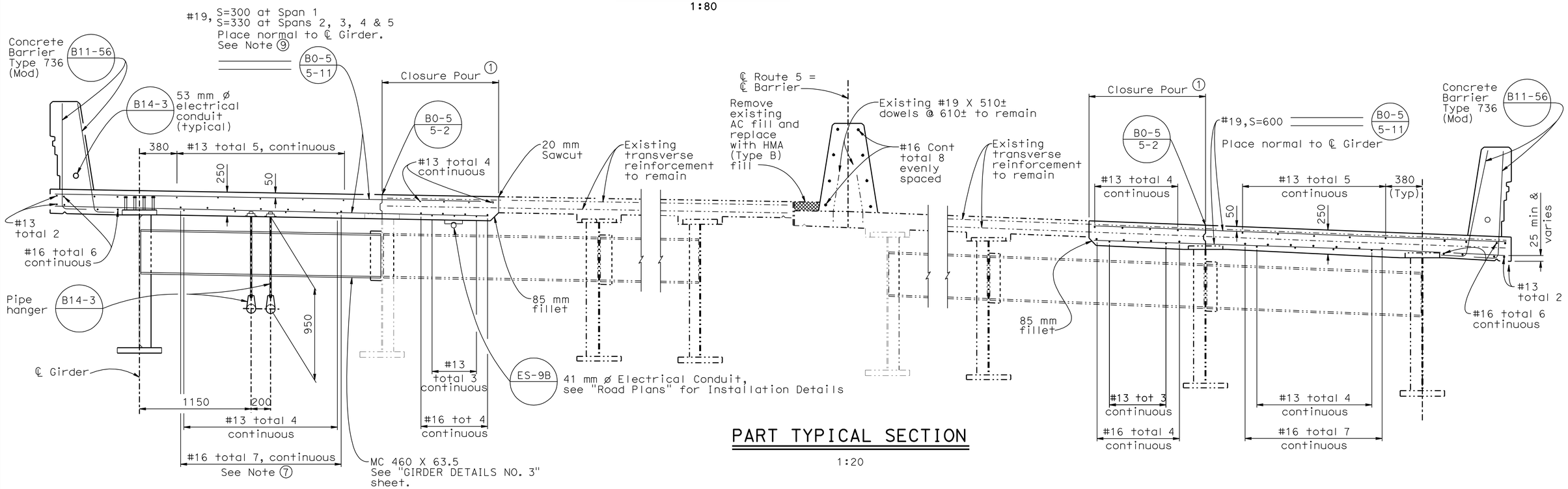

PART TYPICAL SECTION

1:20

NOTES

1. Closure pour concrete shall not be placed until 15 days after adjacent deck pours are completed.
2. Remove and replace existing median Type 50A.2 Barrier with Concrete Barrier Type 60AR.
3. Existing Barrier railing Type 2, overhang and partial deck to be removed.
4. Remove and replace existing Barrier Railing Type 1 with Concrete Barrier Type 736.
5. Chain Link Railing Type 7(Mod) not shown.
6. For girder layout, see "GIRDER LAYOUT" sheet.
7. Typical for Spans 2, 3, 4, and 5. Additional #16 continuous in span 1 only, total 4
8. Concrete deck shall conform to existing deck grades and cross slope.
9. For details at Abutment corners, see "DECK DETAILS" sheet

LEGEND:

- Indicates existing structure
- Limits of bridge removal (portion). Existing steel girders and shear connectors to remain.
- Indicates new structure
- Replace fill

NOTE:
THE CONTRACTOR SHALL VERIFY ALL CONTROLLING FIELD DIMENSIONS BEFORE ORDERING OR FABRICATING ANY MATERIAL.

Caltrans Metric

	BY	CHECKED
DESIGN	Vivian Dang	Marc Friedheim
DETAILS	Roelina Martinez	Marc Friedheim
QUANTITIES	Vivian Dang	Marc Friedheim

STATE OF CALIFORNIA
DEPARTMENT OF TRANSPORTATION

DIVISION OF ENGINEERING SERVICES
STRUCTURE DESIGN
DESIGN BRANCH 6

BRIDGE NO. 53-1134
KILOMETER POST 55.6

SUN VALLEY OH (WIDEN)
TYPICAL SECTION

ALL DIMENSIONS ARE IN MILLIMETERS UNLESS OTHERWISE SHOWN

ORIGINAL SCALE IN MILLIMETERS FOR REDUCED PLANS 0 10 20 30 40 50 60 70 80 90 100

CU 07
EA 1218V1

DISREGARD PRINTS BEARING EARLIER REVISION DATES

REVISION DATES: 4-21-06 | 5-2-06 | 1-8-07 | 9-2-07 | 9-19-07 | 4-3-08 | 4-29-08 | 7-16-09

SHEET 17 OF 33

FILE => 53-1134-k-typsec.dgn

STRUCTURES DESIGN DETAIL SHEET (METRIC) (REV.03-17-04)

USERNAME => trrichf DATE PLOTTED => 03-MAY-2010 TIME PLOTTED => 13:50

DIST	COUNTY	ROUTE	KILOMETER POST TOTAL PROJECT	SHEET No	TOTAL SHEETS
07	LA	5	50.8/58.0	799	869

REGISTERED CIVIL ENGINEER — DATE 6-25-08

5-3-10
PLANS APPROVAL DATE

REGISTERED PROFESSIONAL ENGINEER — XIAODONG CHEN — No. C 58858 — Exp. 6-30-11 — CIVIL — STATE OF CALIFORNIA

The State of California or its officers or agents shall not be responsible for the accuracy or completeness of electronic copies of this plan sheet.

NOTES:

1. For stud connector details, see "GIRDER DETAILS NO. 2" sheet.
2. For DETAIL C, see "GIRDER DETAILS NO. 3" sheet.
3. See As-Built plans for Girders Ⓐ Ⓕ Ⓓ Ⓒ and Ⓗ.

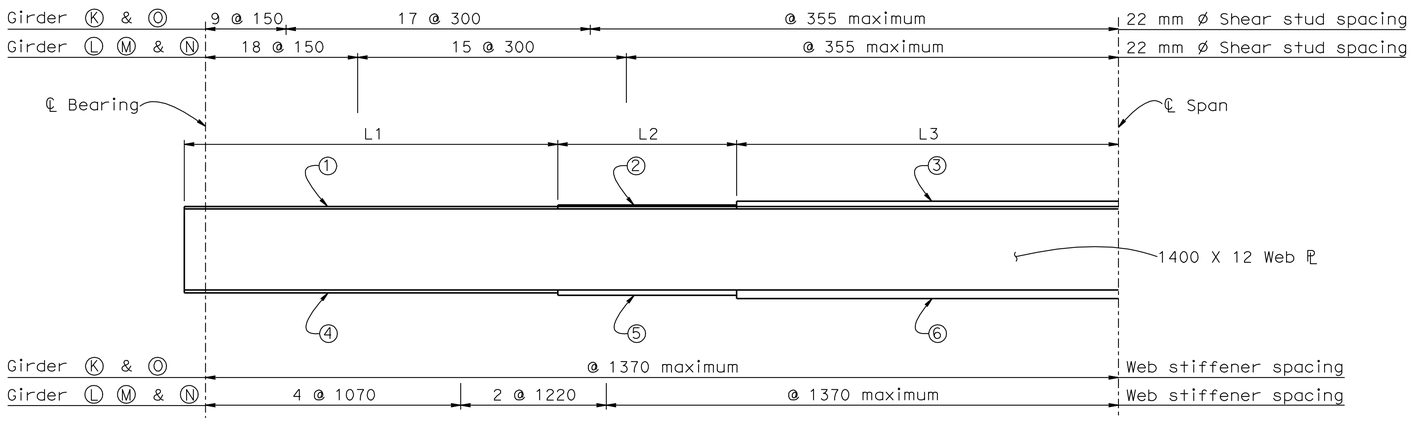

GIRDER ELEVATION

Scale 1:50

PLATE GIRDER DATA										
Girder	Dimensions (m)			Flange Plate Schedule (mm)						
	L1	L2	L3	PLATE ①	PLATE ②	PLATE ③	PLATE ④	PLATE ⑤	PLATE ⑥
K	5.40	2.50	5.20	19 X 355	19 X 355	19 X 355	19 X 355	29 X 355	42 X 355
L	6.26	3.00	7.00	16 X 355	26 X 355	32 X 355	26 X 458	35 X 458	45 X 458
M	8.90	3.00	6.80	32 X 355	42 X 355	51 X 355	38 X 458	48 X 458	57 X 458
N	8.84	3.00	6.40	32 X 355	42 X 355	51 X 355	38 X 458	48 X 458	57 X 458
O	3.10	3.10	6.41	16 X 355	16 X 355	16 X 355	19 X 355	19 X 355	29 X 355

Note: Girder elevations are symmetrical about the ℄ span.

Legend:

-·-·-·- Indicates existing structure

——— Indicates new structure

Exp Indicates expansion bearings

Fix Indicates fixed bearings

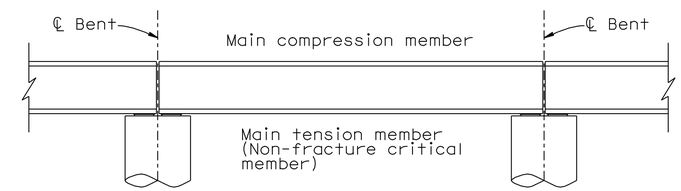

MAIN MEMBER DESIGNATIONS (ALL SPANS)

No scale

NOTE:
Tension and compression zones extend to the middle depth of the web

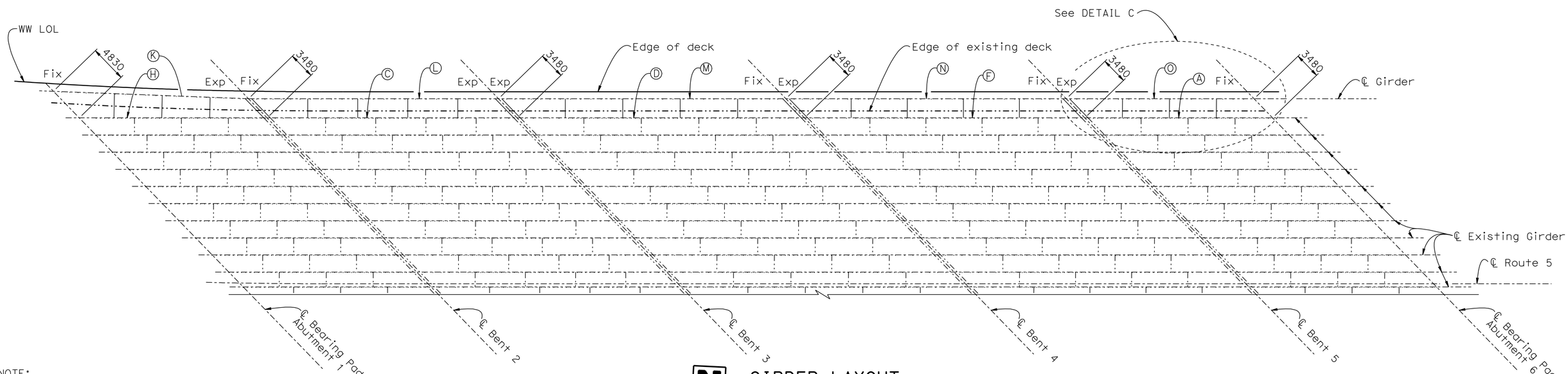

NOTE:
THE CONTRACTOR SHALL VERIFY ALL CONTROLLING FIELD DIMENSIONS BEFORE ORDERING OR FABRICATING ANY MATERIAL.

GIRDER LAYOUT

1:250

	BY	CHECKED
DESIGN	Vivian Dang	Marc Friedheim
DETAILS	Roelina Martinez	Marc Friedheim
QUANTITIES	Vivian Dang	Marc Friedheim

STATE OF CALIFORNIA
DEPARTMENT OF TRANSPORTATION

DIVISION OF ENGINEERING SERVICES
STRUCTURE DESIGN
DESIGN BRANCH 6

BRIDGE NO. 53-1134
KILOMETER POST 55.6

SUN VALLEY OH (WIDEN)
GIRDER LAYOUT

ALL DIMENSIONS ARE IN MILLIMETERS UNLESS OTHERWISE SHOWN

ORIGINAL SCALE IN MILLIMETERS FOR REDUCED PLANS 0 10 20 30 40 50 60 70 80 90 100

CU 07
EA 1218V1

DISREGARD PRINTS BEARING EARLIER REVISION DATES

REVISION DATES: 9-26-08 9-11-09 4-1-10 7-16-09

SHEET 18 OF 33

FILE => 53-1134-1-girderlo.dgn

STRUCTURES DESIGN DETAIL SHEET (METRIC) (REV.03-17-04)

USERNAME => trrichf DATE PLOTTED => 03-MAY-2010 TIME PLOTTED => 13:50

DIST	COUNTY	ROUTE	KILOMETER POST TOTAL PROJECT	SHEET No	TOTAL SHEETS
07	LA	5	50.8/58.0	800	869

Xiaodong Chen 6-25-08
REGISTERED CIVIL ENGINEER DATE

5-3-10
PLANS APPROVAL DATE

REGISTERED PROFESSIONAL ENGINEER
XIAODONG CHEN
No. C 58858
Exp. 6-30-11
CIVIL
STATE OF CALIFORNIA

The State of California or its officers or agents shall not be responsible for the accuracy or completeness of electronic copies of this plan sheet.

Legend:
Indicates existing structure
Indicates new structure

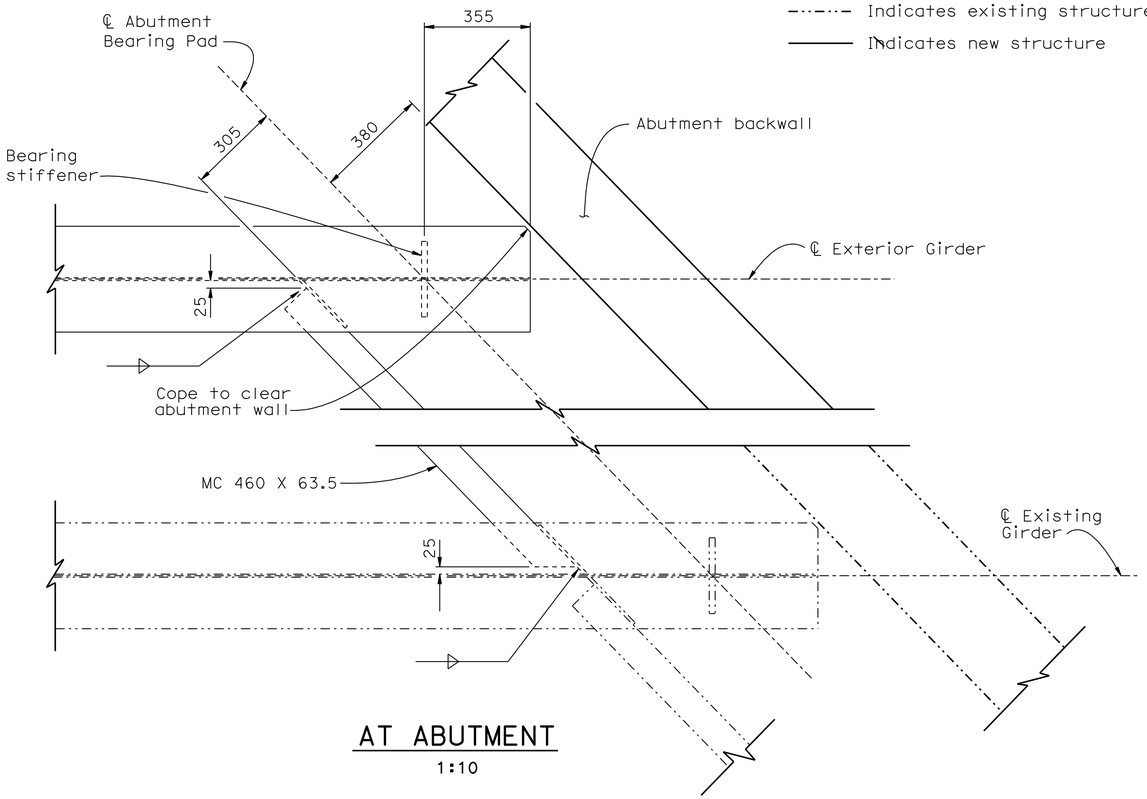

AT ABUTMENT
1:10

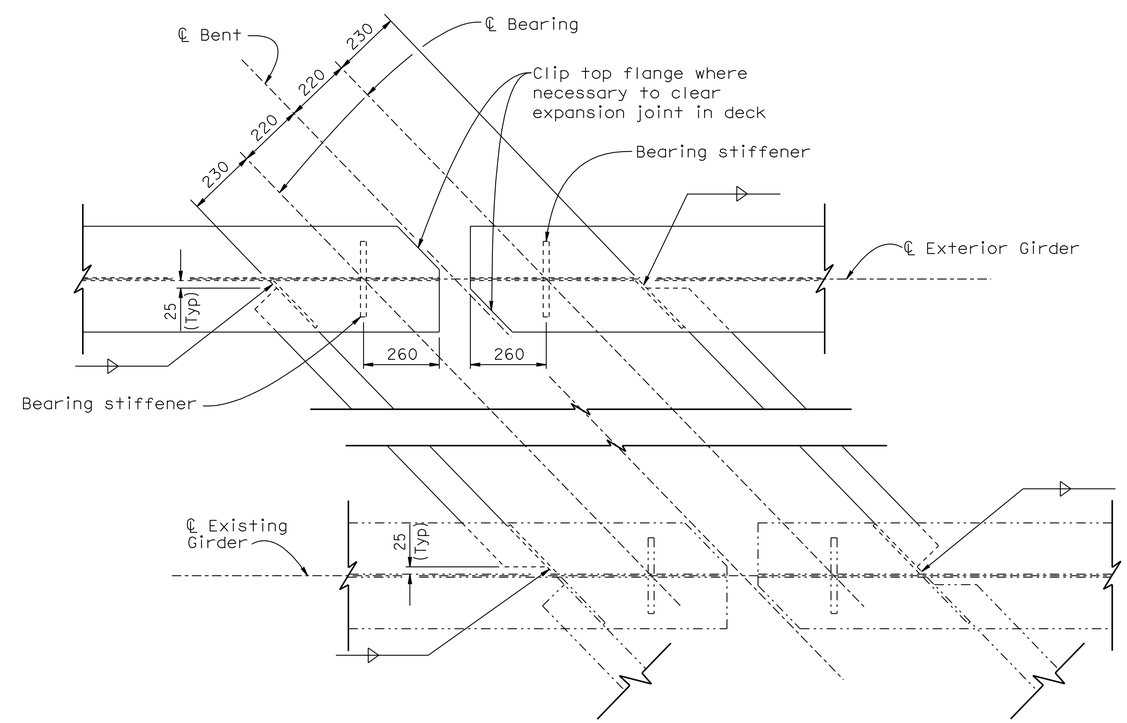

AT BENT
1:10

END DIAPHRAGM CONNECTIONS

NOTE:
THE CONTRACTOR SHALL VERIFY ALL CONTROLLING FIELD DIMENSIONS BEFORE ORDERING OR FABRICATING ANY MATERIAL.

Caltrans Metric

	BY	CHECKED
DESIGN	Vivian Dang	Marc Friedheim
DETAILS	Roelina Martinez	Marc Friedheim
QUANTITIES	Vivian Dang	Marc Friedheim

STATE OF CALIFORNIA
DEPARTMENT OF TRANSPORTATION

DIVISION OF ENGINEERING SERVICES
STRUCTURE DESIGN
DESIGN BRANCH 6

BRIDGE NO. 53-1134
KILOMETER POST 55.6

SUN VALLEY OH (WIDEN)
GIRDER DETAILS NO. 1

ALL DIMENSIONS ARE IN MILLIMETERS UNLESS OTHERWISE SHOWN

ORIGINAL SCALE IN MILLIMETERS FOR REDUCED PLANS 0 10 20 30 40 50 60 70 80 90 100

CU 07
EA 1218V1

DISREGARD PRINTS BEARING EARLIER REVISION DATES

REVISION DATES: 9-26-06 9-19-07 9-19-07 7-16-09

SHEET 19 OF 33

FILE => 53-1134-1-girdet1.dgn

STRUCTURES DESIGN DETAIL SHEET (METRIC) (REV.03-17-04)

USERNAME => frrichf DATE PLOTTED => 03-MAY-2010 TIME PLOTTED =>