Dist	COUNTY	ROUTE	POST MILES TOTAL PROJECT	SHEET No.	TOTAL SHEETS
06	Kin	198	R15.4/R16.0	1	63

STATE OF CALIFORNIA

DEPARTMENT OF TRANSPORTATION

ACNHP-P198(068)E

PROJECT PLANS FOR CONSTRUCTION ON

STATE HIGHWAY

IN KINGS COUNTY
IN AND NEAR HANFORD
FROM 0.3 MILE WEST TO 0.3 MILE EAST OF HANFORD ARMONA ROAD UNDERCROSSING

TO BE SUPPLEMENTED BY STANDARD PLANS DATED MAY 2010

INDEX OF PLANS

SHEET No.	DESCRIPTION
1	TITLE AND LOCATION MAP
2-3	TYPICAL CROSS SECTIONS
4-6	LAYOUTS
7	PROFILE AND SUPERELEVATION DIAGRAM
8-9	CONSTRUCTION DETAILS
10	CONSTRUCTION AREA SIGNS
11-13	STAGE CONSTRUCTION PLANS
14-20	TRAFFIC HANDLING PLANS AND QUANTITIES
21-22	PAVEMENT DELINEATION PLANS AND QUANTITIES
23-24	SUMMARY OF QUANTITIES
25-26	EROSION CONTROL PLAN AND QUANTITIES
27-28	ELECTRICAL PLANS
29-52	REVISED STANDARD PLANS

STRUCTURE PLANS

53-63	HANFORD ARMONA DECK REHABILITATION

THE STANDARD PLANS LIST APPLICABLE TO THIS CONTRACT IS INCLUDED IN THE NOTICE TO BIDDERS AND SPECIAL PROVISIONS BOOK.

LOCATION MAP

END CONSTRUCTION
Sta 854+50 PM R16.0

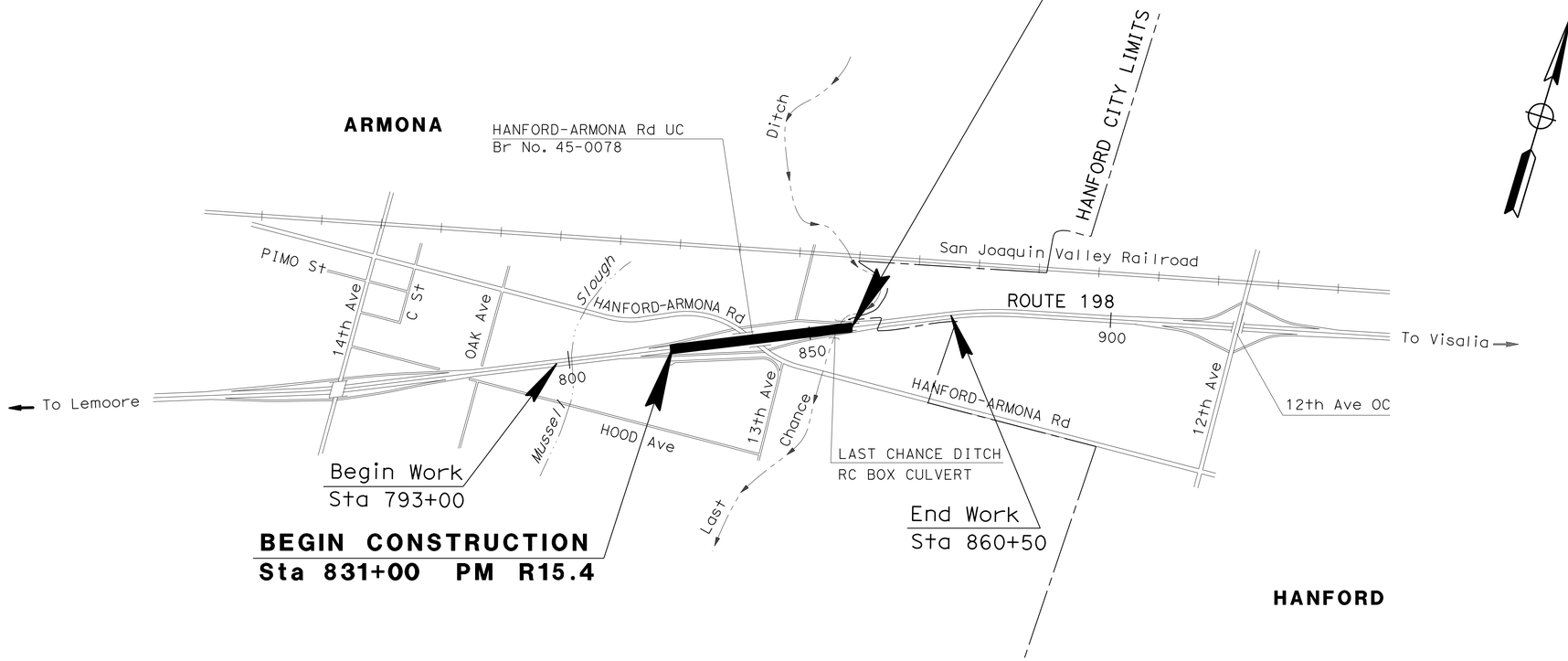

NO SCALE

1-20-15
PROJECT ENGINEER DATE
REGISTERED CIVIL ENGINEER

January 20, 2015
PLANS APPROVAL DATE

REGISTERED PROFESSIONAL ENGINEER
MADJID SADATMANSOORI
No. 66244
Exp. 6/30/16
CIVIL
STATE OF CALIFORNIA

THE STATE OF CALIFORNIA OR ITS OFFICERS OR AGENTS SHALL NOT BE RESPONSIBLE FOR THE ACCURACY OR COMPLETENESS OF SCANNED COPIES OF THIS PLAN SHEET.

PROJECT MANAGER Jim Heinen

DESIGN ENGINEER Sanku G Mohan

THE CONTRACTOR SHALL POSSESS THE CLASS (OR CLASSES) OF LICENSE AS SPECIFIED IN THE "NOTICE TO BIDDERS."

CONTRACT No.	06-462214
PROJECT ID	0614000172

LAST REVISION 01-15-15

DATE PLOTTED => 07-APR-2015
TIME PLOTTED => 08:42

Dist	COUNTY	ROUTE	POST MILES TOTAL PROJECT	SHEET No.	TOTAL SHEETS
06	Kin	198	R15.4/R16.0	2	63

REGISTERED CIVIL ENGINEER 1-15-15 DATE

1-20-15
PLANS APPROVAL DATE

REGISTERED PROFESSIONAL ENGINEER MADJID SADATMANSOORI No. 66244 Exp. 6/30/16 CIVIL STATE OF CALIFORNIA

THE STATE OF CALIFORNIA OR ITS OFFICERS OR AGENTS SHALL NOT BE RESPONSIBLE FOR THE ACCURACY OR COMPLETENESS OF SCANNED COPIES OF THIS PLAN SHEET.

NOTES:

1. DIMENSIONS OF THE PAVEMENT STRUCTURES (STRUCTURAL SECTIONS) ARE SUBJECT TO TOLERANCES SPECIFIED IN THE STANDARD SPECIFICATIONS.
2. EXACT LOCATIONS AND TYPE OF HMA DIKES ARE SHOWN ON THE LAYOUTS AND SUMMARY OF QUANTITIES SHEETS.
3. FOR BRIDGE, APPROACH SLAB AND CONCRETE BARRIER (TYPE 60A Mod) DETAILS, SEE STRUCTURAL PLAN SHEETS.
4. FOR ACCURATE RIGHT OF WAY DATA, CONTACT RIGHT OF WAY ENGINEERING AT THE DISTRICT OFFICE.
5. SUPERELEVATION AS SHOWN OR AS DIRECTED BY THE ENGINEER.

ABBREVIATIONS:

AITS	ALTERNATIVE INLINE TERMINAL SYSTEM
S/C	SAW CUT LINE

DESIGN DESIGNATION

ADT 2014	35,500	DHV 2024	4,600
ADT 2034	60,000	DHV 2034	6,000
		D	65%
		T	4%

PAVEMENT CLIMATE REGION

INLAND VALLEY

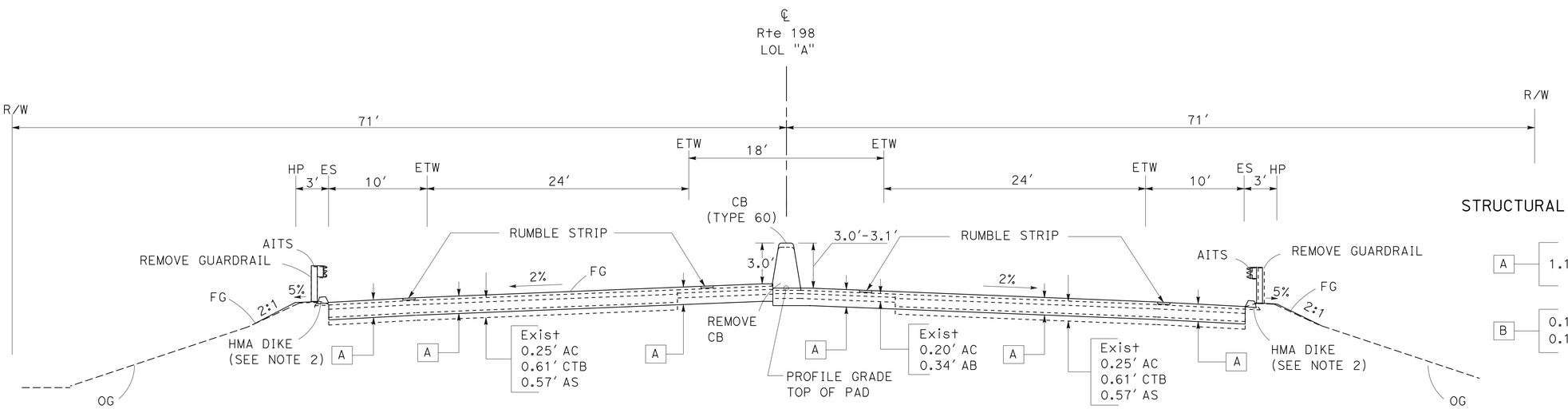

ROUTE 198

Sta 843+41.59 TO Sta 845+05.40

Sta 839+85.00 TO Sta 841+50.27

STRUCTURAL SECTION NOTES:

A — 1.15′ HMA (TYPE A)

B — 0.15′ COLD PLANE AC
0.15′ HMA (TYPE A)

TYPICAL CROSS SECTIONS

NO SCALE

X-1

REVISED BY | DATE REVISED

MADJID SADATMANSOORI | MADJID SADATMANSOORI

CALCULATED-DESIGNED BY | CHECKED BY

FUNCTIONAL SUPERVISOR: SANKU G. MOHAN

STATE OF CALIFORNIA - DEPARTMENT OF TRANSPORTATION

Caltrans® DESIGN

LAST REVISION 01-15-15 | DATE PLOTTED => 07-APR-2015 | TIME PLOTTED => 08:42

Dist	COUNTY	ROUTE	POST MILES TOTAL PROJECT	SHEET No.	TOTAL SHEETS
06	Kin	198	R15.4/R16.0	3	63

REGISTERED CIVIL ENGINEER 1-15-15 DATE

1-20-15
PLANS APPROVAL DATE

REGISTERED PROFESSIONAL ENGINEER MADJID SADATMANSOORI No. 66244 Exp. 6/30/16 CIVIL STATE OF CALIFORNIA

THE STATE OF CALIFORNIA OR ITS OFFICERS OR AGENTS SHALL NOT BE RESPONSIBLE FOR THE ACCURACY OR COMPLETENESS OF SCANNED COPIES OF THIS PLAN SHEET.

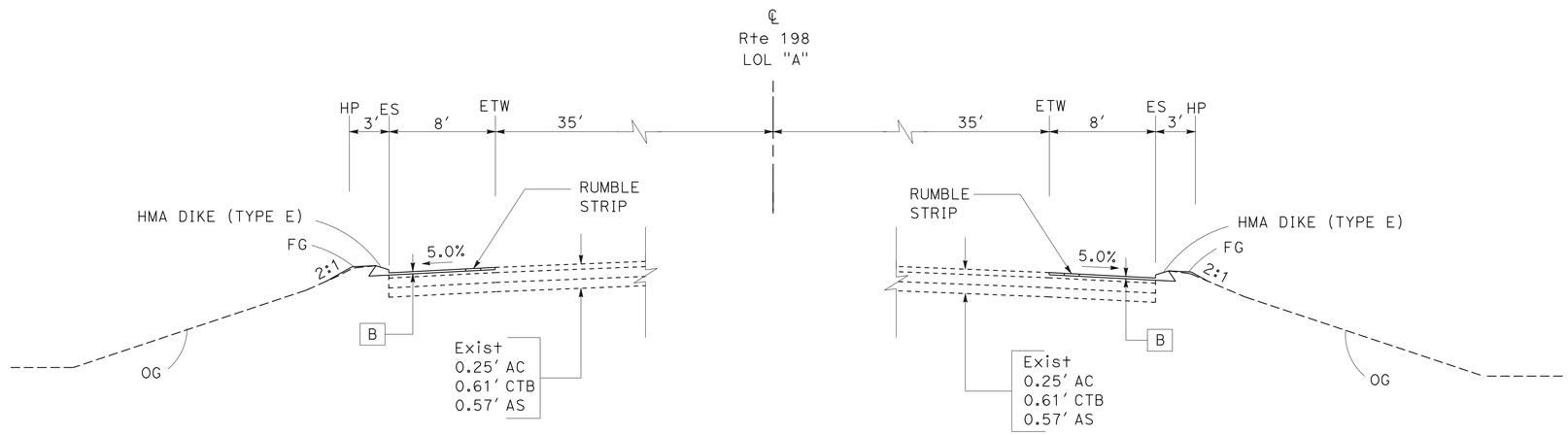

ROUTE 198
WB

Sta 845+05.40 TO Sta 854+00.00
Sta 834+50.00 TO Sta 839+85.00

ROUTE 198
EB

Sta 845+05.40 TO Sta 850+50.00
Sta 831+00.00 TO Sta 839+85.00

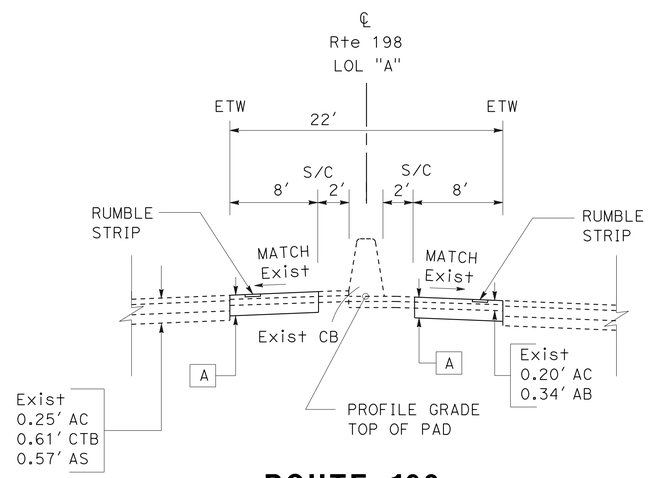

ROUTE 198

Sta 845+05.40 TO Sta 850+50.00
Sta 836+00.00 TO Sta 839+85.00

TYPICAL CROSS SECTIONS

NO SCALE

X-2

REVISED BY	DATE REVISED
MADJID SADATMANSOORI	MADJID SADATMANSOORI

CALCULATED-DESIGNED BY / CHECKED BY

FUNCTIONAL SUPERVISOR: SANKU G. MOHAN

STATE OF CALIFORNIA - DEPARTMENT OF TRANSPORTATION
Caltrans®
DESIGN

LAST REVISION 01-15-15 | DATE PLOTTED => 07-APR-2015 | TIME PLOTTED => 08:42

Dist	COUNTY	ROUTE	POST MILES TOTAL PROJECT	SHEET No.	TOTAL SHEETS
06	Kin	198	R15.4/R16.0	4	63

REGISTERED CIVIL ENGINEER 1-15-15 DATE

1-20-15
PLANS APPROVAL DATE

REGISTERED PROFESSIONAL ENGINEER MADJID SADATMANSOORI No. 66244 Exp. 6/30/16 CIVIL STATE OF CALIFORNIA

THE STATE OF CALIFORNIA OR ITS OFFICERS OR AGENTS SHALL NOT BE RESPONSIBLE FOR THE ACCURACY OR COMPLETENESS OF SCANNED COPIES OF THIS PLAN SHEET.

NOTES:

1. FOR ACCURATE RIGHT OF WAY DATA, CONTACT RIGHT OF WAY ENGINEERING AT THE DISTRICT OFFICE.
2. UTILITY LOCATIONS ARE APPROXIMATE, AND HAVE NOT BEEN POSITIVELY LOCATED EXACT LOCATIONS TO BE DETERMINED BY THE ENGINEER IN THE FIELD.

ABBREVIATION:

TR TRANSITION RAILING

LEGEND:

DIRECTION OF TRAFFIC

CONCRETE BARRIER (TYPE 60A)

CONCRETE BARRIER (TYPE 60)

COLD PLANE AC Pvmt (0.15')

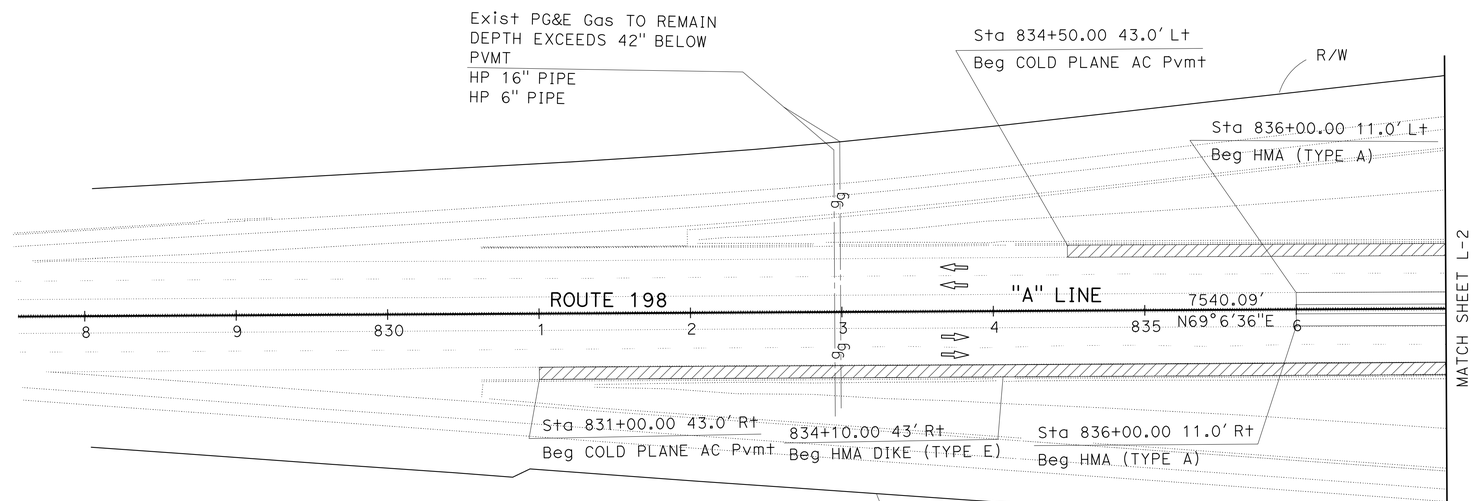

SCALE: 1"=50'

LAYOUT L-1

REVISED BY	DATE REVISED

CALCULATED-DESIGNED BY: MADJID SADATMANSOORI
CHECKED BY: MADJID SADATMANSOORI

FUNCTIONAL SUPERVISOR: SANKU G. MOHAN

STATE OF CALIFORNIA - DEPARTMENT OF TRANSPORTATION
Caltrans
DESIGN

LAST REVISION 01-15-15
DATE PLOTTED => 07-APR-2015
TIME PLOTTED => 08:42

Dist	COUNTY	ROUTE	POST MILES TOTAL PROJECT	SHEET No.	TOTAL SHEETS
06	Kin	198	R15.4/R16.0	5	63

REGISTERED CIVIL ENGINEER 1-15-15 DATE

1-20-15
PLANS APPROVAL DATE

REGISTERED PROFESSIONAL ENGINEER MADJID SADATMANSOORI No. 66244 Exp. 6/30/16 CIVIL STATE OF CALIFORNIA

THE STATE OF CALIFORNIA OR ITS OFFICERS OR AGENTS SHALL NOT BE RESPONSIBLE FOR THE ACCURACY OR COMPLETENESS OF SCANNED COPIES OF THIS PLAN SHEET.

NOTES:

1. FOR ACCURATE RIGHT OF WAY DATA, CONTACT RIGHT OF WAY ENGINEERING AT THE DISTRICT OFFICE.
2. UTILITY LOCATIONS ARE APPROXIMATE, AND HAVE NOT BEEN POSITIVELY LOCATED EXACT LOCATIONS TO BE DETERMINED BY THE ENGINEER IN THE FIELD.

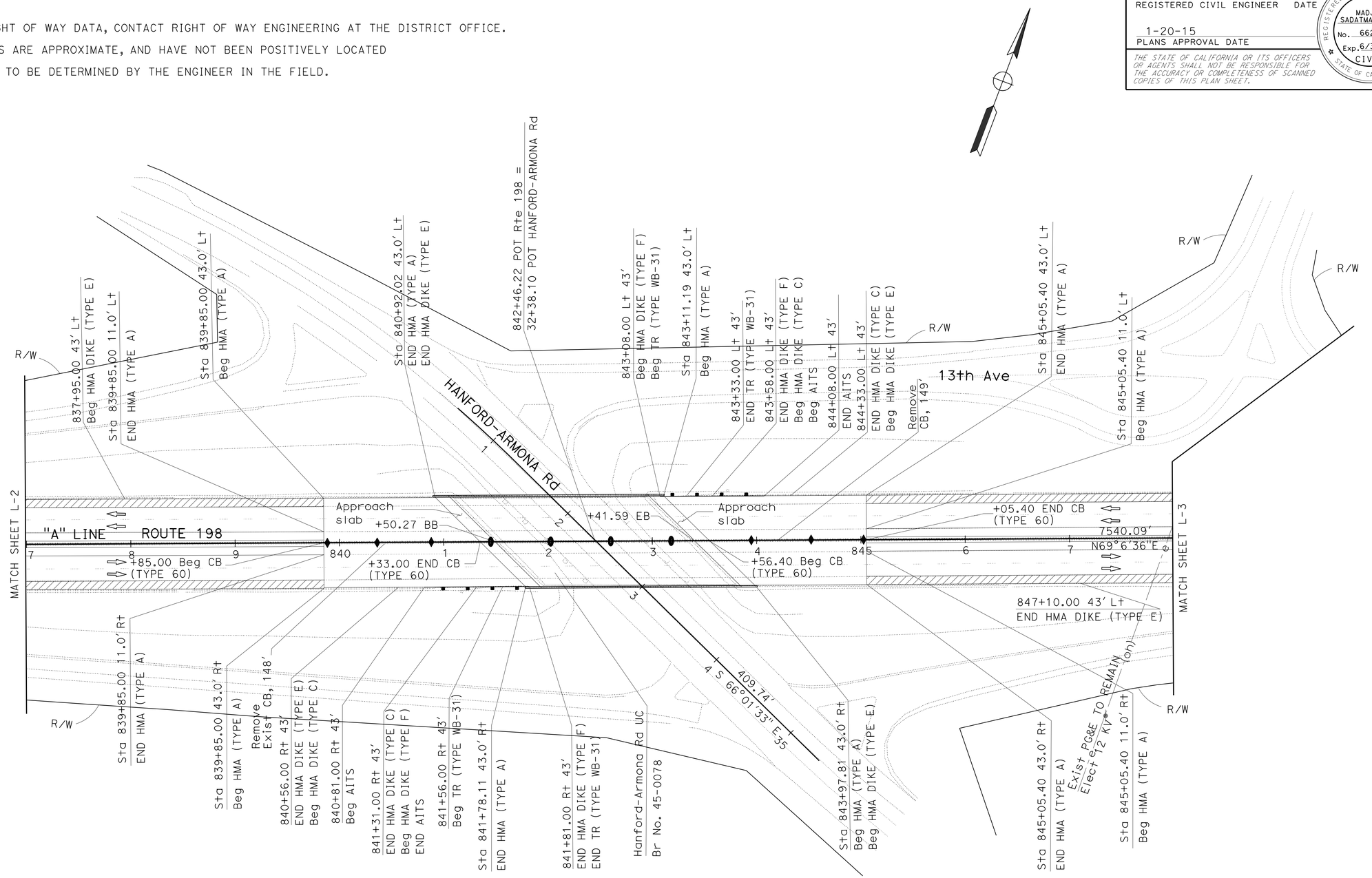

LAYOUT L-2

SCALE: 1"=50'

STATE OF CALIFORNIA - DEPARTMENT OF TRANSPORTATION
Caltrans® DESIGN

FUNCTIONAL SUPERVISOR: SANKU G. MOHAN
CALCULATED-DESIGNED BY: MADJID SADATMANSOORI
CHECKED BY: MADJID SADATMANSOORI
REVISED BY
DATE REVISED

LAST REVISION 01-15-15
DATE PLOTTED => 07-APR-2015
TIME PLOTTED => 08:42

Dist	COUNTY	ROUTE	POST MILES TOTAL PROJECT	SHEET No.	TOTAL SHEETS
06	Kin	198	R15.4/R16.0	6	63

REGISTERED CIVIL ENGINEER 1-15-15 DATE

1-20-15
PLANS APPROVAL DATE

REGISTERED PROFESSIONAL ENGINEER
MADJID SADATMANSOORI
No. 66244
Exp. 6/30/16
CIVIL
STATE OF CALIFORNIA

THE STATE OF CALIFORNIA OR ITS OFFICERS OR AGENTS SHALL NOT BE RESPONSIBLE FOR THE ACCURACY OR COMPLETENESS OF SCANNED COPIES OF THIS PLAN SHEET.

NOTES:

1. FOR ACCURATE RIGHT OF WAY DATA, CONTACT RIGHT OF WAY ENGINEERING AT THE DISTRICT OFFICE.
2. UTILITY LOCATIONS ARE APPROXIMATE, AND HAVE NOT BEEN POSITIVELY LOCATED EXACT LOCATIONS TO BE DETERMINED BY THE ENGINEER IN THE FIELD.

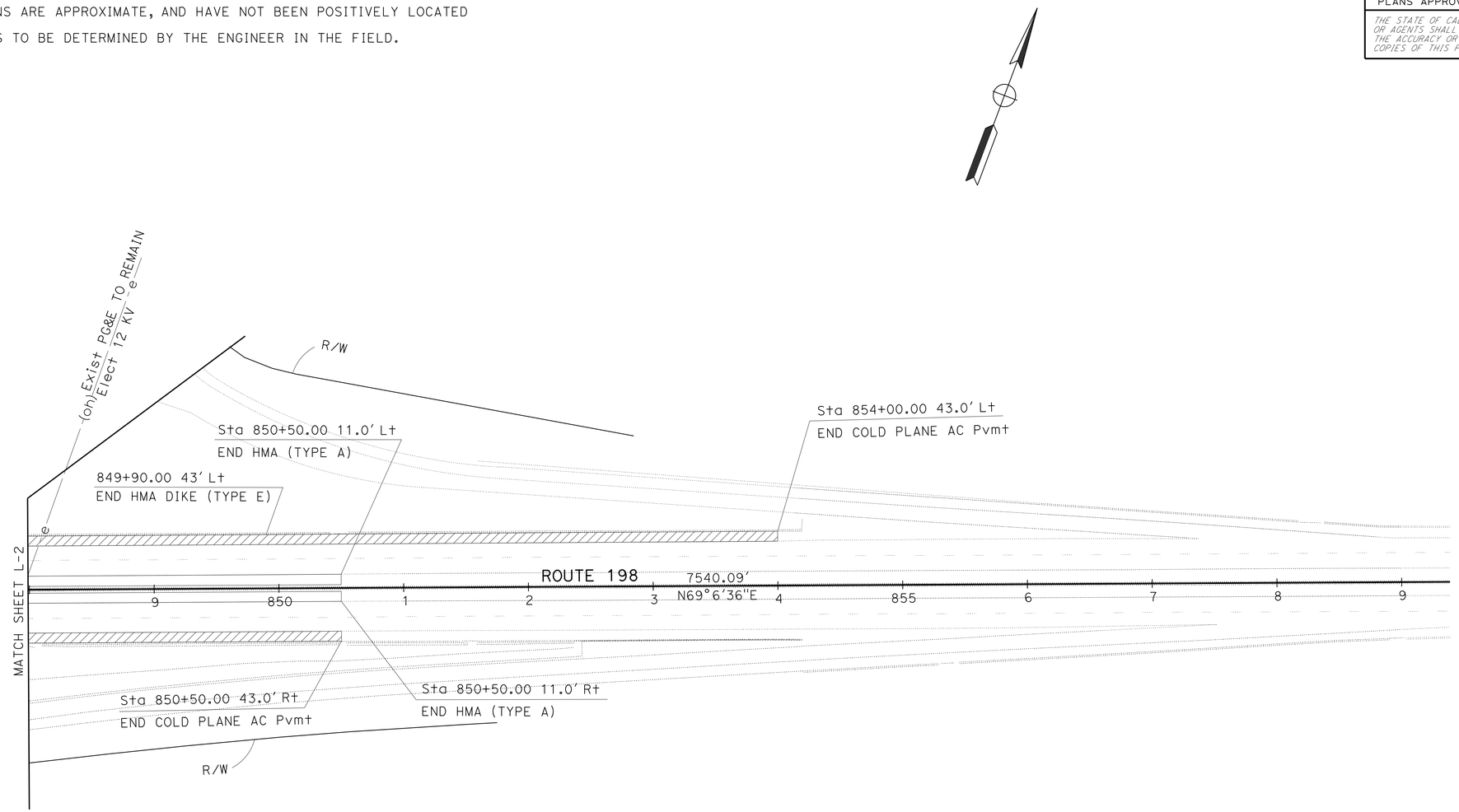

LAYOUT L-3

SCALE: 1"=50'

STATE OF CALIFORNIA - DEPARTMENT OF TRANSPORTATION
Caltrans
DESIGN

FUNCTIONAL SUPERVISOR: SANKU G. MOHAN

CALCULATED-DESIGNED BY: MADJID SADATMANSOORI
CHECKED BY:

REVISED BY:
DATE REVISED:

LAST REVISION 01-15-15
DATE PLOTTED => 07-APR-2015
TIME PLOTTED => 08:42

Dist	COUNTY	ROUTE	POST MILES TOTAL PROJECT	SHEET No.	TOTAL SHEETS
06	Kin	198	R15.4/R16.0	7	63

REGISTERED CIVIL ENGINEER 1-15-15 DATE

1-20-15
PLANS APPROVAL DATE

REGISTERED PROFESSIONAL ENGINEER MADJID SADATMANSOORI No. 66244 Exp. 6/30/16 CIVIL STATE OF CALIFORNIA

THE STATE OF CALIFORNIA OR ITS OFFICERS OR AGENTS SHALL NOT BE RESPONSIBLE FOR THE ACCURACY OR COMPLETENESS OF SCANNED COPIES OF THIS PLAN SHEET.

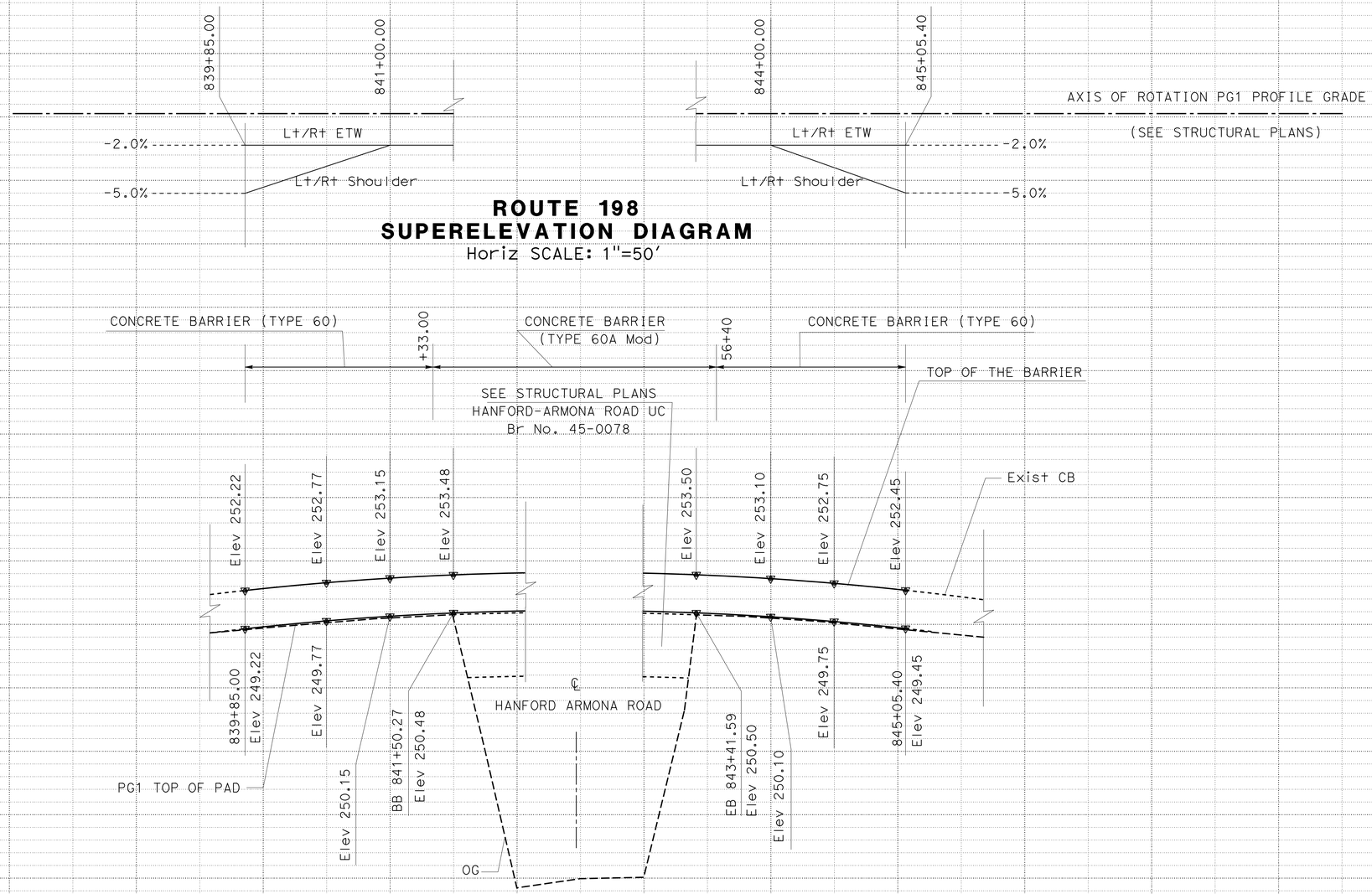

ROUTE 198 SUPERELEVATION DIAGRAM

Horiz SCALE: 1"=50'

ROUTE 198 PROFILE

PG1 PROFILE GRADE
TOP OF THE PAD

Horiz SCALE: 1"=50'
Vert SCALE: 1"=5'

PROFILE AND SUPERELEVATION DIAGRAM

PS-1

STATION		840+00	841+00	842+00	843+00	844+00	845+00	TOTAL
CY	Exc							
	Emb							

STATE OF CALIFORNIA - DEPARTMENT OF TRANSPORTATION
Caltrans® DESIGN

FUNCTIONAL SUPERVISOR: SANKU G. MOHAN

CALCULATED-DESIGNED BY: MADJID SADATMANSOORI
CHECKED BY: MADJID SADATMANSOORI

REVISED BY / DATE REVISED

LAST REVISION 01-15-15 DATE PLOTTED => 07-APR-2015 TIME PLOTTED => 08:42

Dist	COUNTY	ROUTE	POST MILES TOTAL PROJECT	SHEET No.	TOTAL SHEETS
06	Kin	198	R15.4/R16.0	8	63

REGISTERED CIVIL ENGINEER 1-15-15 DATE

1-20-15
PLANS APPROVAL DATE

REGISTERED PROFESSIONAL ENGINEER MADJID SADATMANSOORI No. 66244 Exp. 6/30/16 CIVIL STATE OF CALIFORNIA

THE STATE OF CALIFORNIA OR ITS OFFICERS OR AGENTS SHALL NOT BE RESPONSIBLE FOR THE ACCURACY OR COMPLETENESS OF SCANNED COPIES OF THIS PLAN SHEET.

NOTES:

1. FOR TRANSITION TAPER LENGTHS SEE LAYOUT SHEETS.

ABBREVIATIONS:

DIAMETER OF PIPE	d
WIDTH OF FLARED END SECTION OPENING	w

LEGEND:

HMA (TYPE A)

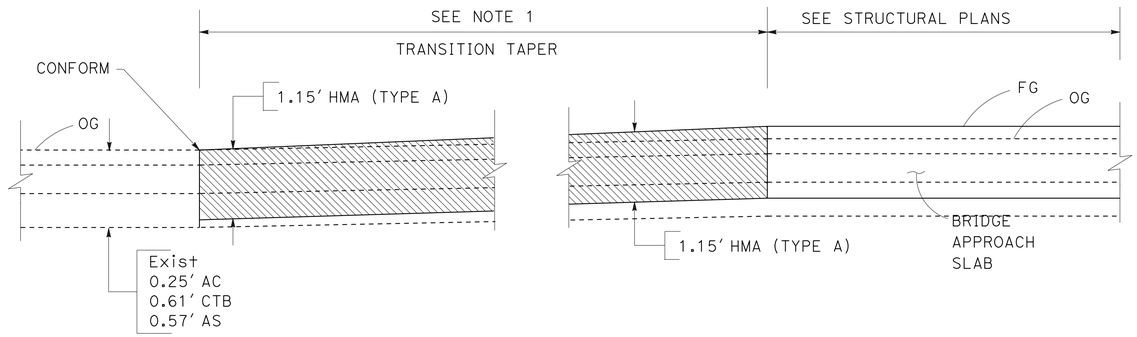

TYPICAL HMA (TYPE A) PAVEMENT TRANSITION TAPER APPROACH SLAB CONFORM

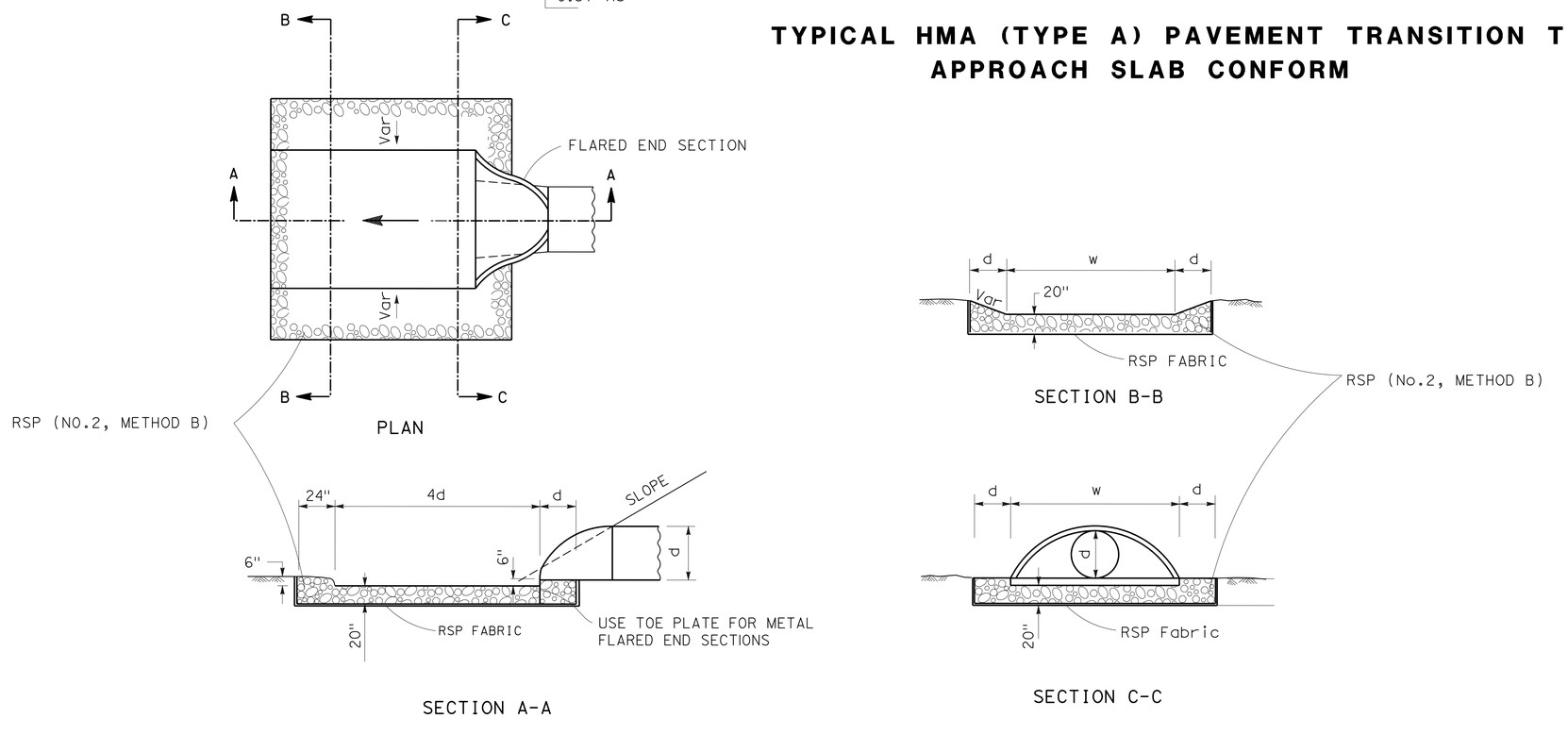

RSP (ROCK SLOPE PROTECTION)

CONSTRUCTION DETAILS

NO SCALE

C-1

STATE OF CALIFORNIA - DEPARTMENT OF TRANSPORTATION
Caltrans
DESIGN

FUNCTIONAL SUPERVISOR: SANKU G. MOHAN

CALCULATED-DESIGNED BY: MADJID SADATMANSOORI
CHECKED BY: MADJID SADATMANSOORI

REVISED BY
DATE REVISED

LAST REVISION 01-15-15 | DATE PLOTTED => 07-APR-2015 | TIME PLOTTED => 08:43

Dist	COUNTY	ROUTE	POST MILES TOTAL PROJECT	SHEET No.	TOTAL SHEETS
06	Kin	198	R15.4/R16.0	9	63

REGISTERED CIVIL ENGINEER 1-15-15 DATE

1-20-15
PLANS APPROVAL DATE

REGISTERED PROFESSIONAL ENGINEER
MADJID SADATMANSOORI
No. 66244
Exp. 6/30/16
CIVIL
STATE OF CALIFORNIA

THE STATE OF CALIFORNIA OR ITS OFFICERS OR AGENTS SHALL NOT BE RESPONSIBLE FOR THE ACCURACY OR COMPLETENESS OF SCANNED COPIES OF THIS PLAN SHEET.

NOTE:

1. USE 15'-7½" LENGTH RAIL.

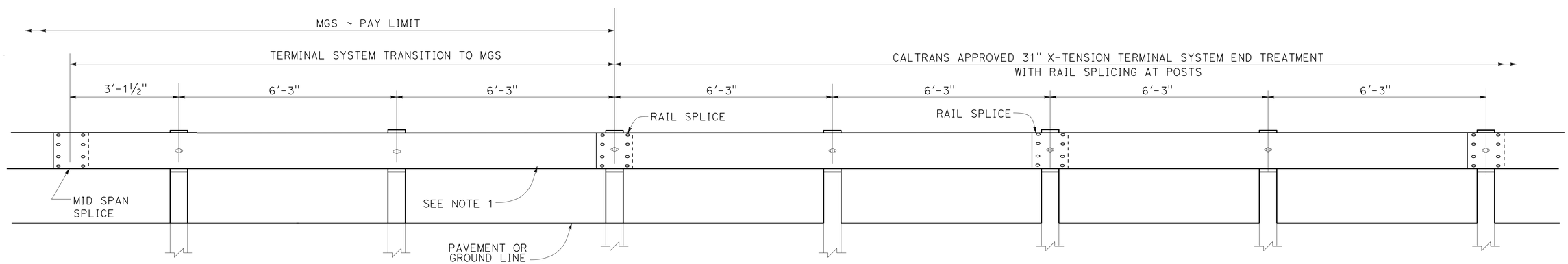

TRANSITION DETAIL FOR 31" X-TENSION TERMINAL SYSTEM END TREATMENT WITH RAIL SPLICING AT POSTS TO MIDWEST GUARDRAIL SYSTEM

CONSTRUCTION DETAILS

NO SCALE

C-2

STATE OF CALIFORNIA - DEPARTMENT OF TRANSPORTATION
Caltrans DESIGN

FUNCTIONAL SUPERVISOR: SANKU G. MOHAN

CALCULATED-DESIGNED BY: MADJID SADATMANSOORI
CHECKED BY: MADJID SADATMANSOORI

REVISED BY
DATE REVISED

LAST REVISION 01-15-15
DATE PLOTTED => 07-APR-2015
TIME PLOTTED => 08:43

Dist	COUNTY	ROUTE	POST MILES TOTAL PROJECT	SHEET No.	TOTAL SHEETS
06	Kin	198	R15.4/R16.0	10	63

Hassan Taha 1-15-15
REGISTERED CIVIL ENGINEER DATE

1-20-15
PLANS APPROVAL DATE

REGISTERED PROFESSIONAL ENGINEER
HASSAN M. TAHA
No. 60130
Exp. 06/30/16
CIVIL
STATE OF CALIFORNIA

THE STATE OF CALIFORNIA OR ITS OFFICERS OR AGENTS SHALL NOT BE RESPONSIBLE FOR THE ACCURACY OR COMPLETENESS OF SCANNED COPIES OF THIS PLAN SHEET.

STATIONARY MOUNTED CONSTRUCTION AREA SIGNS

SIGN No.	SIGN CODE	SIGN MESSAGE	PANEL SIZE	No. OF POST AND SIZE	No. OF SIGNS
A	W20-1	ROAD WORK AHEAD	48" x 48"	1 - 6" x 6"	4
B	G20-2	END ROAD WORK	36" x 18"	1 - 4" x 4"	4

NOTES:

1. ALL TEMPORARY WARNING SIGNS SHALL HAVE BLACK LEGEND ON FLUORESCENT ORANGE BACKGROUND
2. EXACT SIGN LOCATIONS TO BE DETERMINED BY THE ENGINEER
3. FOR ADDITIONAL CONSTRUCTION AREA SIGNS, REFER TO TRAFFIC HANDLING PLANS

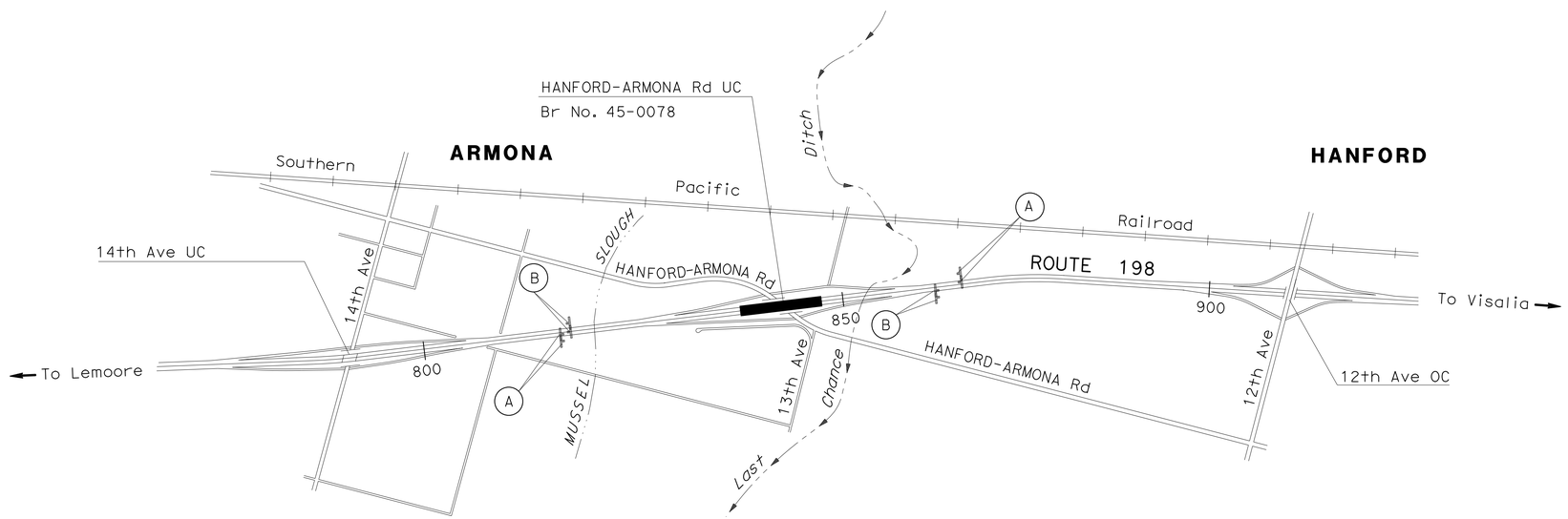

APPROVED FOR CONSTRUCTION AREA SIGN WORK ONLY

CONSTRUCTION AREA SIGNS

NO SCALE

CS-1

STATE OF CALIFORNIA - DEPARTMENT OF TRANSPORTATION
Caltrans® **TRAFFIC DESIGN**

FUNCTIONAL SUPERVISOR: MOHAMMED QATAMI
CALCULATED-DESIGNED BY: VANIK POGOSYAN
CHECKED BY: HASSAN TAHA
REVISED BY
DATE REVISED

LAST REVISION 01-15-15
DATE PLOTTED => 07-APR-2015
TIME PLOTTED => 08:43

Dist	COUNTY	ROUTE	POST MILES TOTAL PROJECT	SHEET No.	TOTAL SHEETS
06	Kin	198	R15.4/R16.0	11	63

REGISTERED CIVIL ENGINEER 1-15-15 DATE

1-20-15
PLANS APPROVAL DATE

REGISTERED PROFESSIONAL ENGINEER MADJID SADATMANSOORI No. 66244 Exp. 6/30/16 CIVIL STATE OF CALIFORNIA

THE STATE OF CALIFORNIA OR ITS OFFICERS OR AGENTS SHALL NOT BE RESPONSIBLE FOR THE ACCURACY OR COMPLETENESS OF SCANNED COPIES OF THIS PLAN SHEET.

NOTE:

FOR MORE INFORMATION SEE TRAFFIC HANDLING PLANS AND STAGE CONSTRUCTION DETAIL PLANS .

CONSTRUCTION:

1. COLD PLANE AND PLACE OVERLAY 8′ OUTSIDE SHOULDERS FROM Sta 834+50.00 Lt 43′ TO Sta 841+06.27 Lt 43′ Sta 842+97.19 Lt 43′ TO Sta 854+00.00 Lt 43′ AND Sta 831+00.00 Rt 43′ TO Sta 841+49.18 Rt 43′ Sta 843+83.81 Rt 43′ TO Sta 850+50.00 Rt 43′"A" LINE Rte 198 .
2. REMOVE AC DIKES UP TO THE BRIDGE BARRIER ON BOTH EB AND WB.
3. PLACE 10" CORRUGATED STEEL PIPE DOWNDRAINS, SEE SHEET Q-2 AND STANDARD PLAN D87A, FOR LOCATIONS AND DETAILS.
4. CONSTRUCT 8′ INSIDE SHOULDERS FROM Sta 836+00.00 Lt/Rt TO Sta 839+85.00 Lt/Rt Sta 845+05.40 Lt/Rt TO Sta 850+50.00 Lt/Rt "A" LINE OF Rte 198 .

TRAFFIC:

1. Rte 198 ALL RAMP TRAFFIC TO REMAIN OPEN DURING CONSTRUCTION.

LEGEND:

- DIRECTION OF TRAFFIC
- CONSTRUCT THIS STAGE
- CONSTRUCTED PREVIOUS STAGES
- (#) CONSTRUCTION NOTES NUMBER
- DRAINAGE RSP
- CONCRETE BARRIER (TYPE 60A)
- CONCRETE BARRIER (TYPE 60)

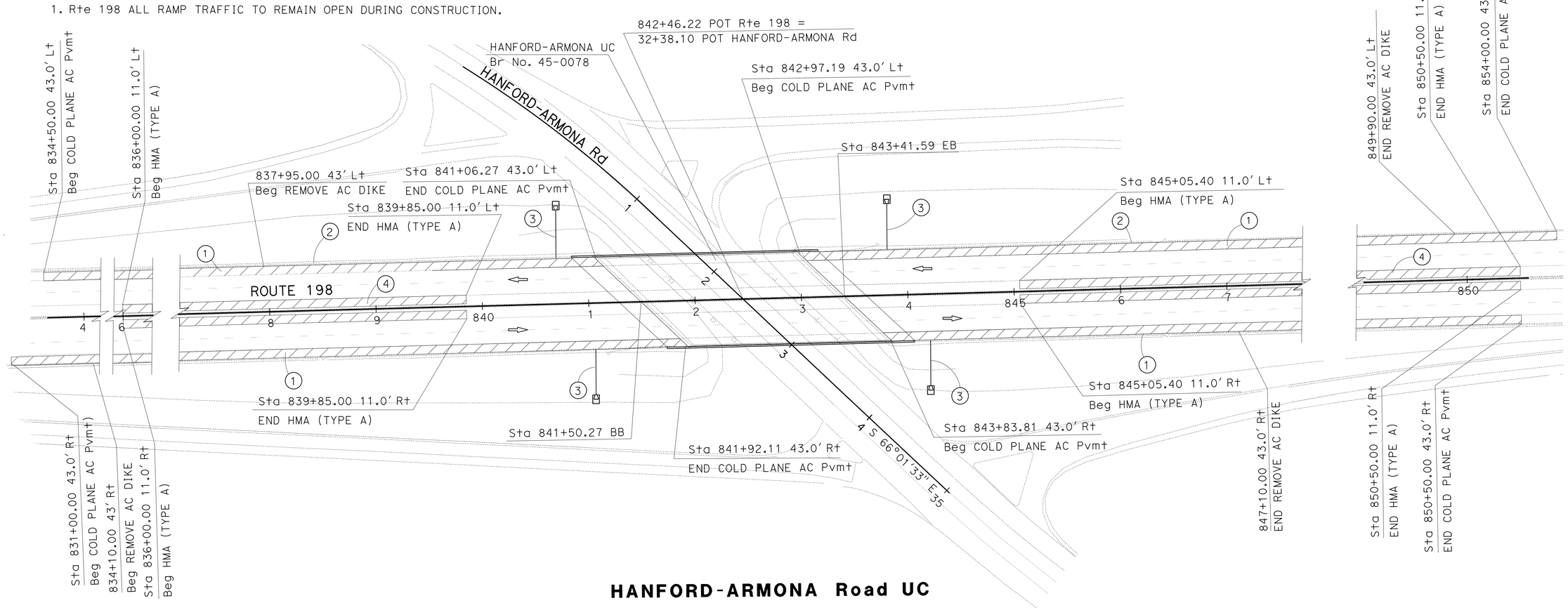

HANFORD-ARMONA Road UC

STAGE CONSTRUCTION PLAN
(STAGE 1, PHASE 1)

APPROVED FOR STAGE CONSTRUCTION WORK ONLY

SCALE: 1"=50′

SC-1

STATE OF CALIFORNIA - DEPARTMENT OF TRANSPORTATION
Caltrans® **DESIGN**

FUNCTIONAL SUPERVISOR: SANKU G. MOHAN

CALCULATED-DESIGNED BY: MADJID SADATMANSOORI
CHECKED BY: MADJID SADATMANSOORI

REVISED BY
DATE REVISED

LAST REVISION 01-15-15 | DATE PLOTTED => 07-APR-2015 | TIME PLOTTED => 08:43

Dist	COUNTY	ROUTE	POST MILES TOTAL PROJECT	SHEET No.	TOTAL SHEETS
06	Kin	198	R15.4/R16.0	12	63

REGISTERED CIVIL ENGINEER 1-15-15 DATE

1-20-15
PLANS APPROVAL DATE

REGISTERED PROFESSIONAL ENGINEER MADJID SADATMANSOORI No. 66244 Exp. 6/30/16 CIVIL STATE OF CALIFORNIA

THE STATE OF CALIFORNIA OR ITS OFFICERS OR AGENTS SHALL NOT BE RESPONSIBLE FOR THE ACCURACY OR COMPLETENESS OF SCANNED COPIES OF THIS PLAN SHEET.

NOTE:

FOR MORE INFORMATION SEE TRAFFIC HANDLING PLANS AND STAGE CONSTRUCTION DETAIL PLANS .

CONSTRUCTION:

1. REMOVE CONCRETE BARRIER (TYPE 60) FROM Sta 839+85.00 TO Sta 845+05.40 "A" LINE Rte 198 .
2. REHABILITATE BRIDGE DECK AND PLACE CONCRETE BARRIER (TYPE 60) FROM Sta 839+85.00 TO Sta 845+05.40 "A" LINE Rte 198 .
3. PLACE HMA (TYPE A) TRANSITIONS TO APPROACH SLABS.

TRAFFIC:

1. Rte 198 ALL RAMP TRAFFIC TO REMAIN OPEN DURING CONSTRUCTION.
2. TRAFFIC TO REMAIN OPEN ON ONE LANE IN EACH DIRECTION, DURING THIS STAGE.

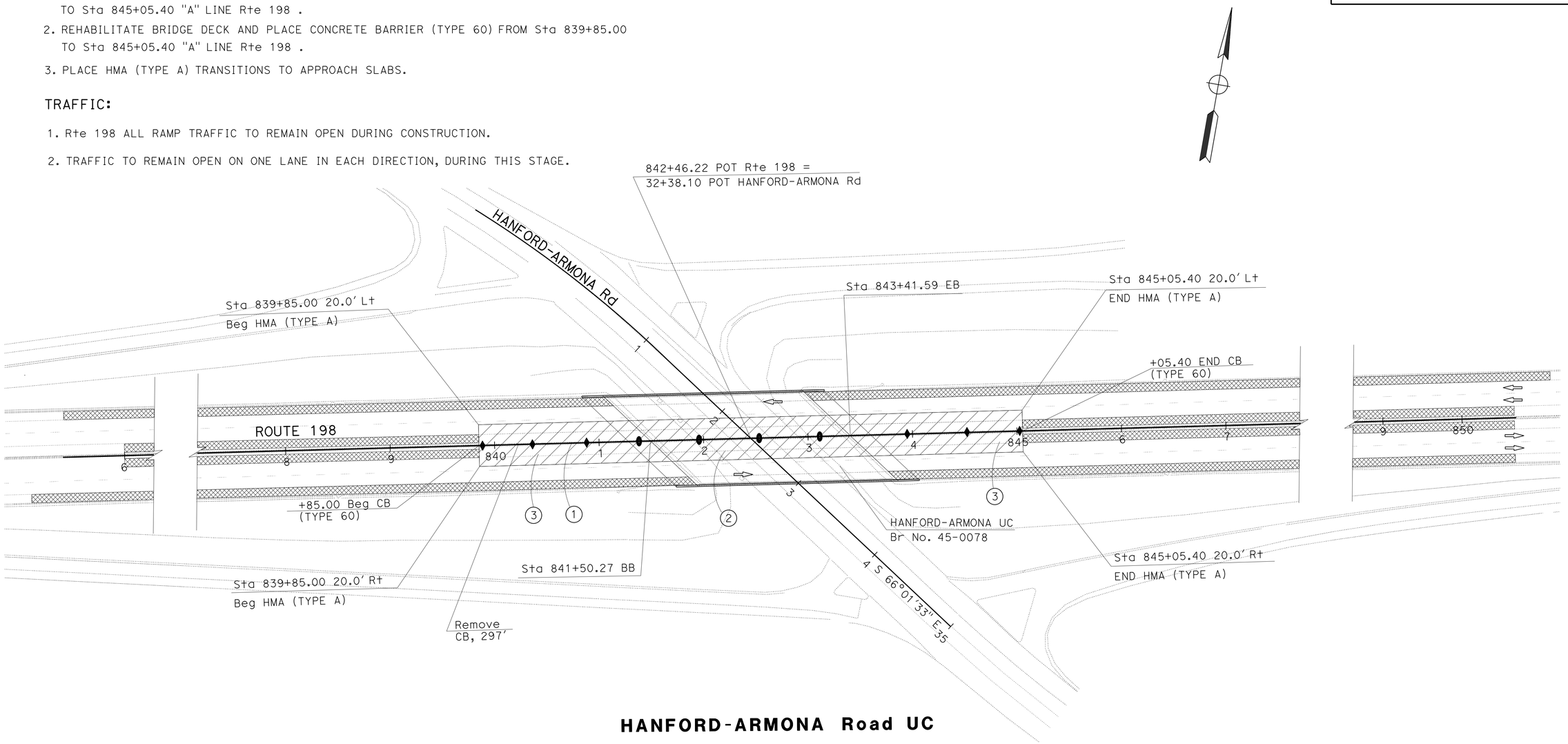

HANFORD-ARMONA Road UC

STAGE CONSTRUCTION PLAN
(STAGE 1, PHASE 2)

APPROVED FOR STAGE CONSTRUCTION WORK ONLY

SCALE: 1"=50'

SC-2

STATE OF CALIFORNIA - DEPARTMENT OF TRANSPORTATION
Caltrans
DESIGN

FUNCTIONAL SUPERVISOR: SANKU G. MOHAN

CALCULATED-DESIGNED BY: MADJID SADATMANSOORI
CHECKED BY: MADJID SADATMANSOORI

REVISED BY
DATE REVISED

LAST REVISION 01-15-15
DATE PLOTTED => 07-APR-2015
TIME PLOTTED => 08:43

Dist	COUNTY	ROUTE	POST MILES TOTAL PROJECT	SHEET No.	TOTAL SHEETS
06	Kin	198	R15.4/R16.0	13	63

REGISTERED CIVIL ENGINEER 1-15-15 DATE

1-20-15
PLANS APPROVAL DATE

REGISTERED PROFESSIONAL ENGINEER MADJID SADATMANSOORI No. 66244 Exp. 6/30/16 CIVIL STATE OF CALIFORNIA

THE STATE OF CALIFORNIA OR ITS OFFICERS OR AGENTS SHALL NOT BE RESPONSIBLE FOR THE ACCURACY OR COMPLETENESS OF SCANNED COPIES OF THIS PLAN SHEET.

NOTE:

FOR MORE INFORMATION SEE TRAFFIC HANDLING PLANS
AND STAGE CONSTRUCTION DETAIL PLANS .

CONSTRUCTION:

1. REHABILITATE BRIDGE, CONSTRUCT OUTSIDE LANE AND SHOULDERS FROM Sta 839+85.00 Lt/Rt TO Sta 845+05.40 Lt/Rt "A" LINE Rte 198 .
2. REMOVE Exist GUARDRAIL. CONSTRUCT ALTERNATIVE INLINE TERMINAL SYSTEMS, MGS, AND DIKES ON BRIDGE APPROACHES. SEE STANDARD PLANS A77L2, A77N3 AND QUANTITY SHEETS.
3. CONSTRUCT HMA DIKES AND SHOULDERS RUMBLE STRIPS.

TRAFFIC:

1. Rte 198 ALL RAMP TRAFFIC TO REMAIN OPEN DURING CONSTRUCTION.
2. TRAFFIC TO REMAIN OPEN ON MEDIAN DETOUR LANES DURING STAGE 2 CONSTRUCTION. ONE LANE TO BE OPEN IN EACH DIRECTION.

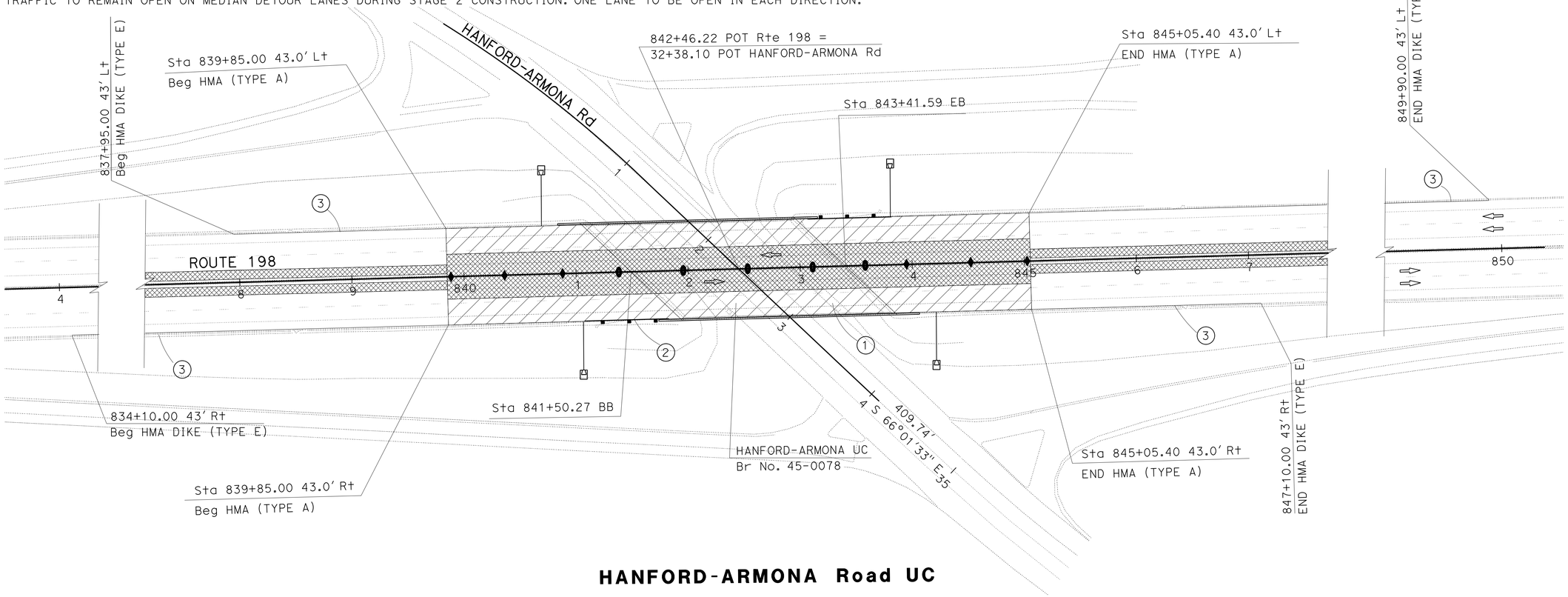

HANFORD-ARMONA Road UC

APPROVED FOR STAGE CONSTRUCTION WORK ONLY

STAGE CONSTRUCTION PLAN
(STAGE 2)

SCALE: 1"=50'

SC-3

STATE OF CALIFORNIA - DEPARTMENT OF TRANSPORTATION
Caltrans
DESIGN

FUNCTIONAL SUPERVISOR: SANKU G. MOHAN
CALCULATED-DESIGNED BY: MADJID SADATMANSOORI
CHECKED BY: MADJID SADATMANSOORI
REVISED BY
DATE REVISED

LAST REVISION 01-15-15
DATE PLOTTED => 07-APR-2015
TIME PLOTTED => 08:43

Dist	COUNTY	ROUTE	POST MILES TOTAL PROJECT	SHEET No.	TOTAL SHEETS
06	Kin	198	R15.4/R16.0	14	63

Hassan Taha 01-15-15
REGISTERED CIVIL ENGINEER DATE

1-20-15
PLANS APPROVAL DATE

REGISTERED PROFESSIONAL ENGINEER
HASSAN M. TAHA
No. 60130
Exp. 06/30/16
CIVIL
STATE OF CALIFORNIA

THE STATE OF CALIFORNIA OR ITS OFFICERS OR AGENTS SHALL NOT BE RESPONSIBLE FOR THE ACCURACY OR COMPLETENESS OF SCANNED COPIES OF THIS PLAN SHEET.

LEGEND:

- Temp RAILING (TYPE K)
- CHANNELIZERS (SURFACE MOUNTED)
- CONSTRUCTION AREA SIGN No.
- Temp CRASH CUSHION
- LANE REDUCTION ARROW
- TEMPORARY TRAFFIC STRIPE DETAIL NUMBER
- REMOVE THERMOPLASTIC OR PAINTED TRAFFIC STRIPE

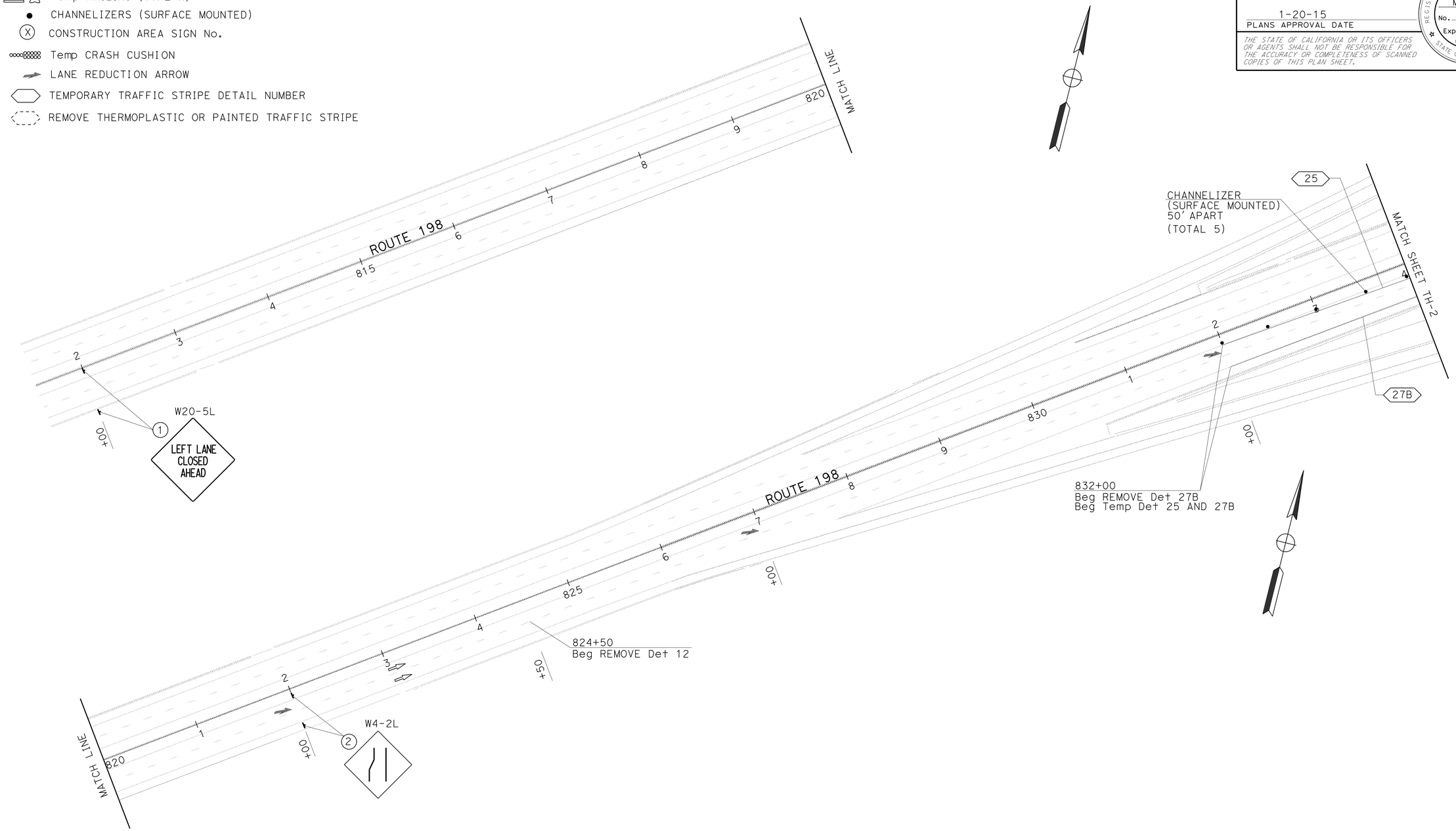

TRAFFIC HANDLING PLAN
(STAGE 1)

SCALE: 1" = 50'

TH-1

APPROVED FOR TRAFFIC HANDLING WORK ONLY

STATE OF CALIFORNIA - DEPARTMENT OF TRANSPORTATION
Caltrans® **TRAFFIC DESIGN**

FUNCTIONAL SUPERVISOR: MOHAMMED QATAMI
CALCULATED-DESIGNED BY: VANIK POGOSYAN
CHECKED BY: HASSAN TAHA
REVISED BY
DATE REVISED

LAST REVISION 01-15-15 | DATE PLOTTED => 07-APR-2015 | TIME PLOTTED => 08:43

Dist	COUNTY	ROUTE	POST MILES TOTAL PROJECT	SHEET No.	TOTAL SHEETS
06	Kin	198	R15.4/R16.0	15	63

Hassan Taha 01-15-15
REGISTERED CIVIL ENGINEER DATE

1-20-15
PLANS APPROVAL DATE

REGISTERED PROFESSIONAL ENGINEER HASSAN M. TAHA No. 60130 Exp. 06/30/16 CIVIL STATE OF CALIFORNIA

THE STATE OF CALIFORNIA OR ITS OFFICERS OR AGENTS SHALL NOT BE RESPONSIBLE FOR THE ACCURACY OR COMPLETENESS OF SCANNED COPIES OF THIS PLAN SHEET.

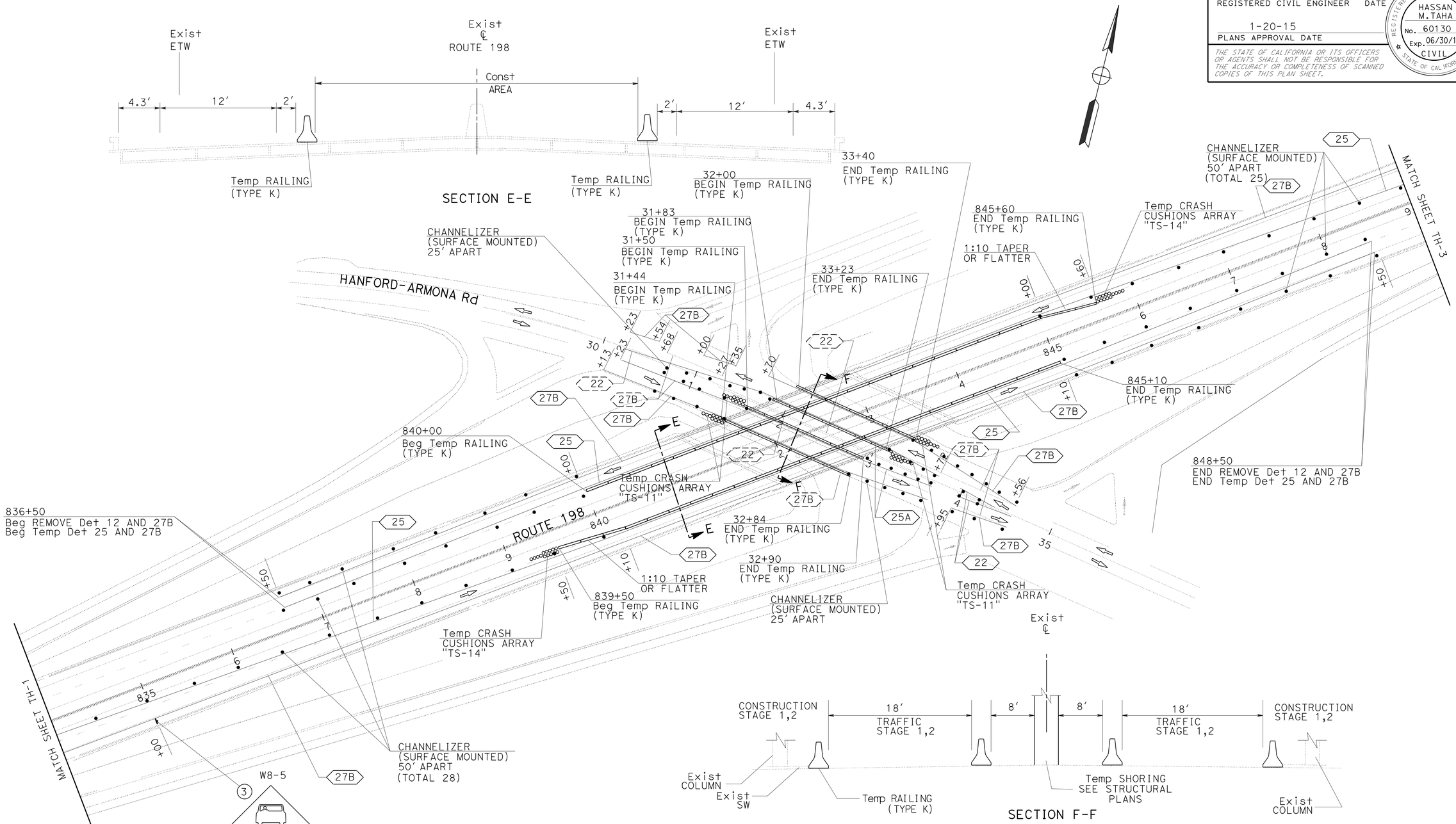

TRAFFIC HANDLING PLAN
(STAGE 1, PHASE 2)

SCALE: 1" = 50′

TH-2

APPROVED FOR TRAFFIC HANDLING WORK ONLY

STATE OF CALIFORNIA - DEPARTMENT OF TRANSPORTATION
Caltrans® TRAFFIC DESIGN

FUNCTIONAL SUPERVISOR: MOHAMMED QATAMI
CALCULATED-DESIGNED BY: VANIK POGOSYAN
CHECKED BY: HASSAN TAHA
REVISED BY
DATE REVISED

LAST REVISION 01-15-15
DATE PLOTTED => 07-APR-2015
TIME PLOTTED => 08:43

Dist	COUNTY	ROUTE	POST MILES TOTAL PROJECT	SHEET No.	TOTAL SHEETS
06	Kin	198	R15.4/R16.0	16	63

Hassan Taha 01-15-15
REGISTERED CIVIL ENGINEER DATE

1-20-15
PLANS APPROVAL DATE

REGISTERED PROFESSIONAL ENGINEER
HASSAN M. TAHA
No. 60130
Exp. 06/30/16
CIVIL
STATE OF CALIFORNIA

THE STATE OF CALIFORNIA OR ITS OFFICERS OR AGENTS SHALL NOT BE RESPONSIBLE FOR THE ACCURACY OR COMPLETENESS OF SCANNED COPIES OF THIS PLAN SHEET.

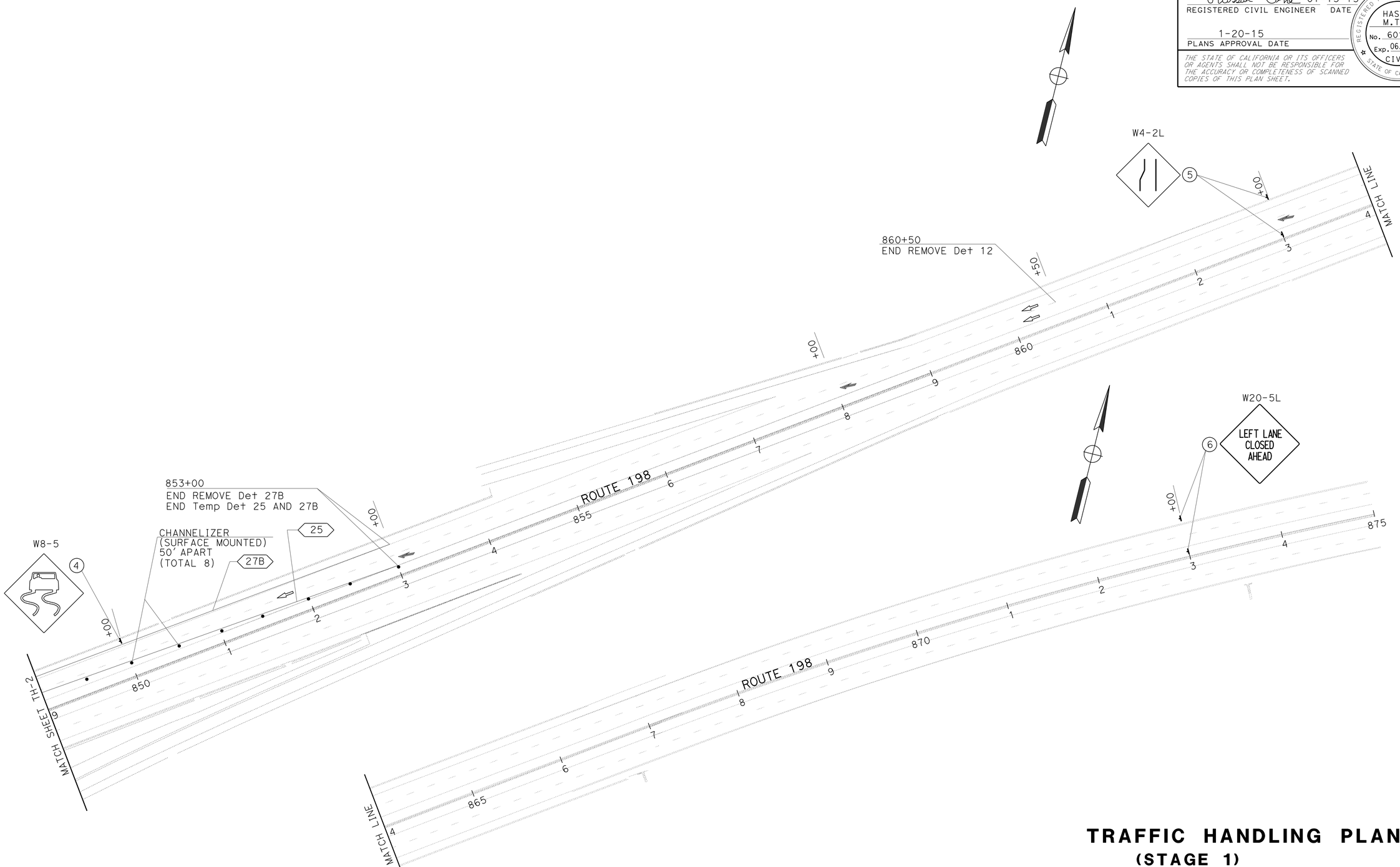

TRAFFIC HANDLING PLAN
(STAGE 1)

SCALE: 1" = 50'

TH-3

APPROVED FOR TRAFFIC HANDLING WORK ONLY

STATE OF CALIFORNIA - DEPARTMENT OF TRANSPORTATION
Caltrans®
TRAFFIC DESIGN

FUNCTIONAL SUPERVISOR: MOHAMMED QATAMI
CALCULATED-DESIGNED BY: VANIK POGOSYAN
CHECKED BY: HASSAN TAHA
REVISED BY
DATE REVISED

LAST REVISION 01-15-15
DATE PLOTTED => 07-APR-2015
TIME PLOTTED => 08:43

Dist	COUNTY	ROUTE	POST MILES TOTAL PROJECT	SHEET No.	TOTAL SHEETS
06	Kin	198	R15.4/R16.0	17	63

Hassan Taha 01-15-15
REGISTERED CIVIL ENGINEER DATE

1-20-15
PLANS APPROVAL DATE

REGISTERED PROFESSIONAL ENGINEER
HASSAN M. TAHA
No. 60130
Exp. 06/30/16
CIVIL
STATE OF CALIFORNIA

THE STATE OF CALIFORNIA OR ITS OFFICERS OR AGENTS SHALL NOT BE RESPONSIBLE FOR THE ACCURACY OR COMPLETENESS OF SCANNED COPIES OF THIS PLAN SHEET.

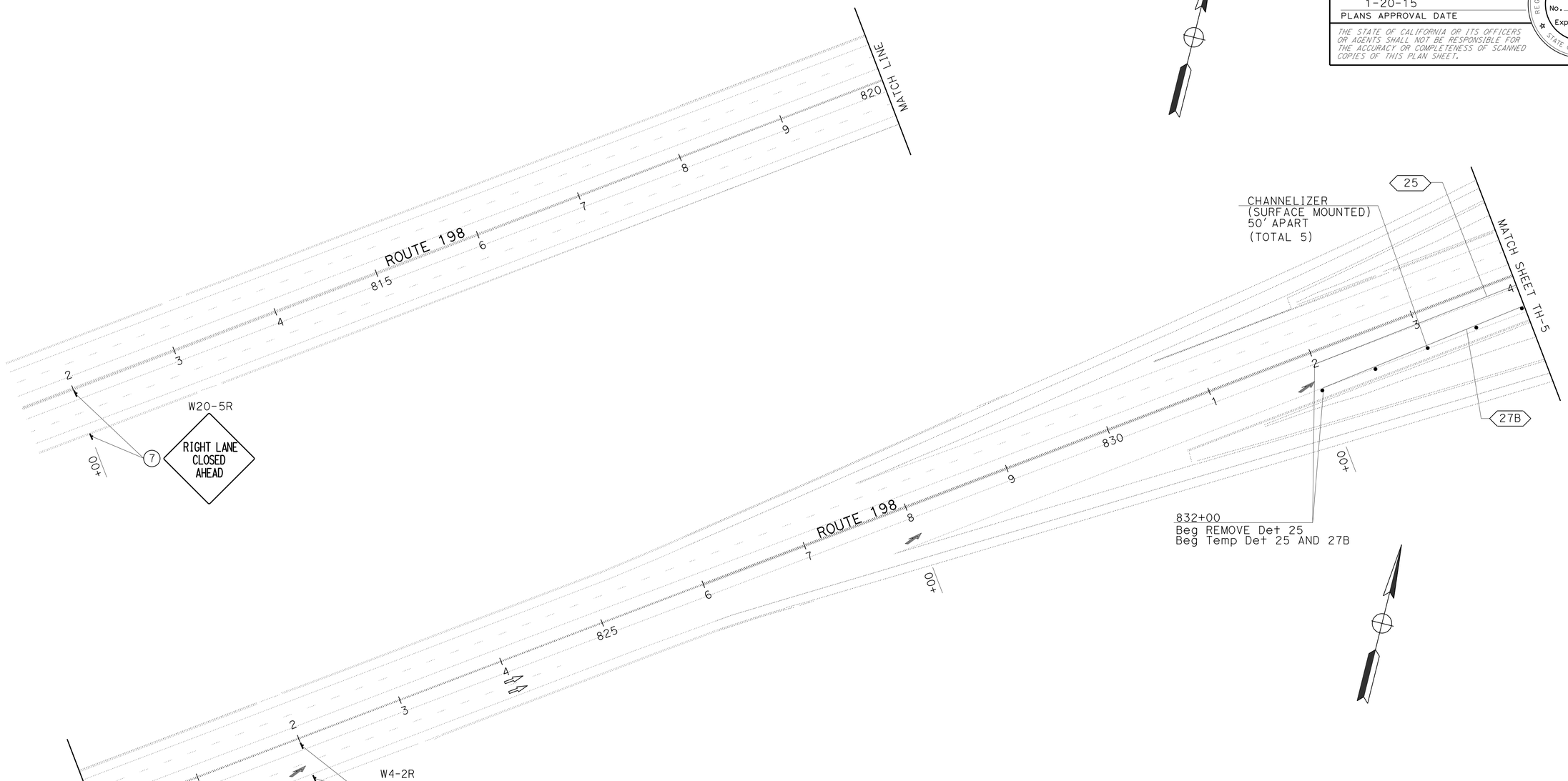

TRAFFIC HANDLING PLAN
(STAGE 2)

SCALE: 1" = 50'

TH-4

APPROVED FOR TRAFFIC HANDLING WORK ONLY

STATE OF CALIFORNIA - DEPARTMENT OF TRANSPORTATION
Caltrans
TRAFFIC DESIGN

FUNCTIONAL SUPERVISOR: MOHAMMED QATAMI
CALCULATED-DESIGNED BY: VANIK POGOSYAN
CHECKED BY: HASSAN TAHA
REVISED BY
DATE REVISED

LAST REVISION 01-15-15
DATE PLOTTED => 07-APR-2015
TIME PLOTTED => 08:43

Dist	COUNTY	ROUTE	POST MILES TOTAL PROJECT	SHEET No.	TOTAL SHEETS
06	Kin	198	R15.4/R16.0	18	63

Hassan Taha 01-15-15
REGISTERED CIVIL ENGINEER DATE

1-20-15
PLANS APPROVAL DATE

REGISTERED PROFESSIONAL ENGINEER HASSAN M. TAHA No. 60130 Exp. 06/30/16 CIVIL STATE OF CALIFORNIA

THE STATE OF CALIFORNIA OR ITS OFFICERS OR AGENTS SHALL NOT BE RESPONSIBLE FOR THE ACCURACY OR COMPLETENESS OF SCANNED COPIES OF THIS PLAN SHEET.

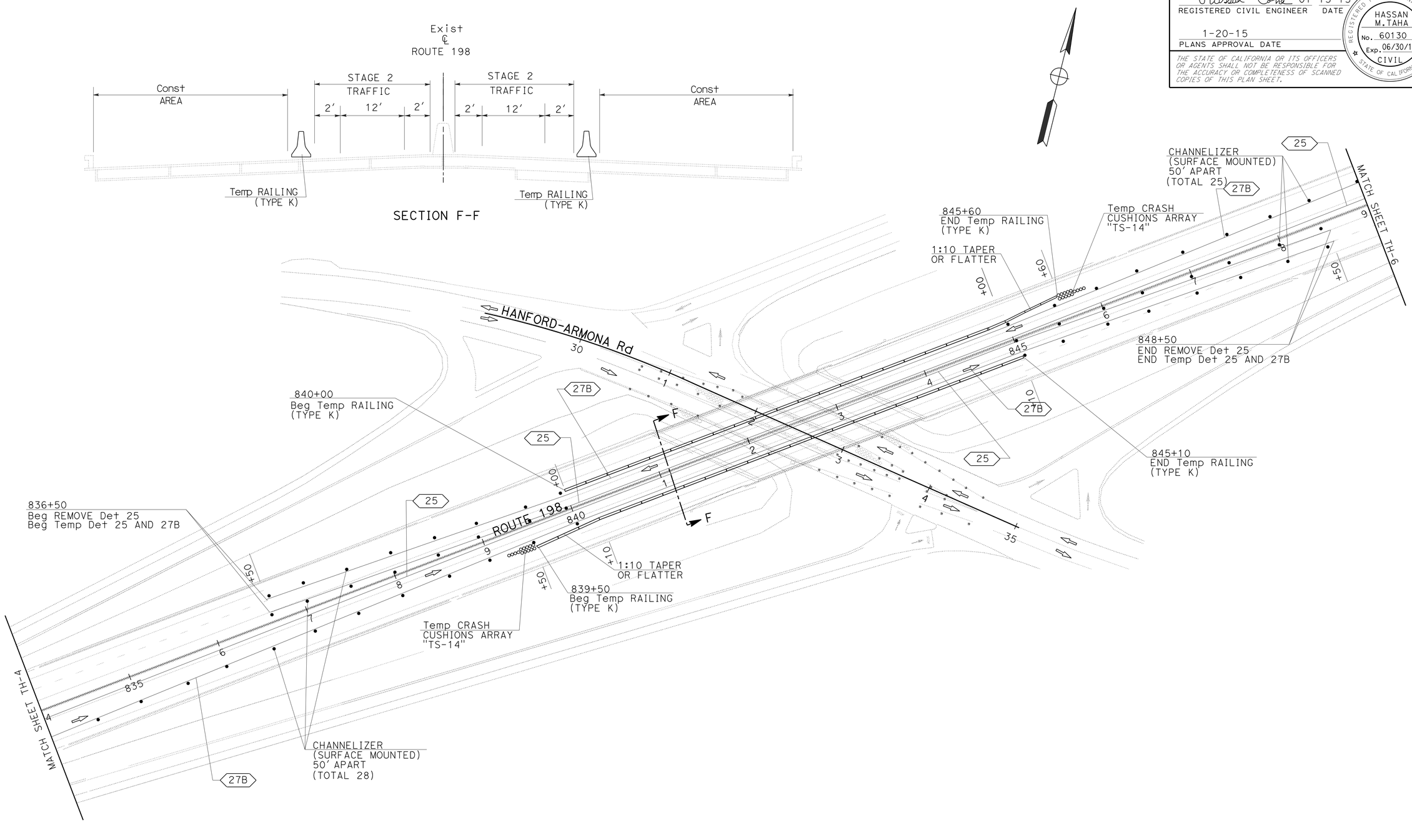

TRAFFIC HANDLING PLAN
(STAGE 2)

SCALE: 1" = 50′

TH-5

APPROVED FOR TRAFFIC HANDLING WORK ONLY

STATE OF CALIFORNIA - DEPARTMENT OF TRANSPORTATION
Caltrans® **TRAFFIC DESIGN**

FUNCTIONAL SUPERVISOR: MOHAMMED QATAMI
CALCULATED-DESIGNED BY: VANIK POGOSYAN
CHECKED BY: HASSAN TAHA
REVISED BY
DATE REVISED

LAST REVISION 01-15-15 | DATE PLOTTED => 07-APR-2015 | TIME PLOTTED => 08:43

Dist	COUNTY	ROUTE	POST MILES TOTAL PROJECT	SHEET No.	TOTAL SHEETS
06	Kin	198	R15.4/R16.0	19	63

Hassan Taha 01-15-15
REGISTERED CIVIL ENGINEER DATE

1-20-15
PLANS APPROVAL DATE

REGISTERED PROFESSIONAL ENGINEER
HASSAN M. TAHA
No. 60130
Exp. 06/30/16
CIVIL
STATE OF CALIFORNIA

THE STATE OF CALIFORNIA OR ITS OFFICERS OR AGENTS SHALL NOT BE RESPONSIBLE FOR THE ACCURACY OR COMPLETENESS OF SCANNED COPIES OF THIS PLAN SHEET.

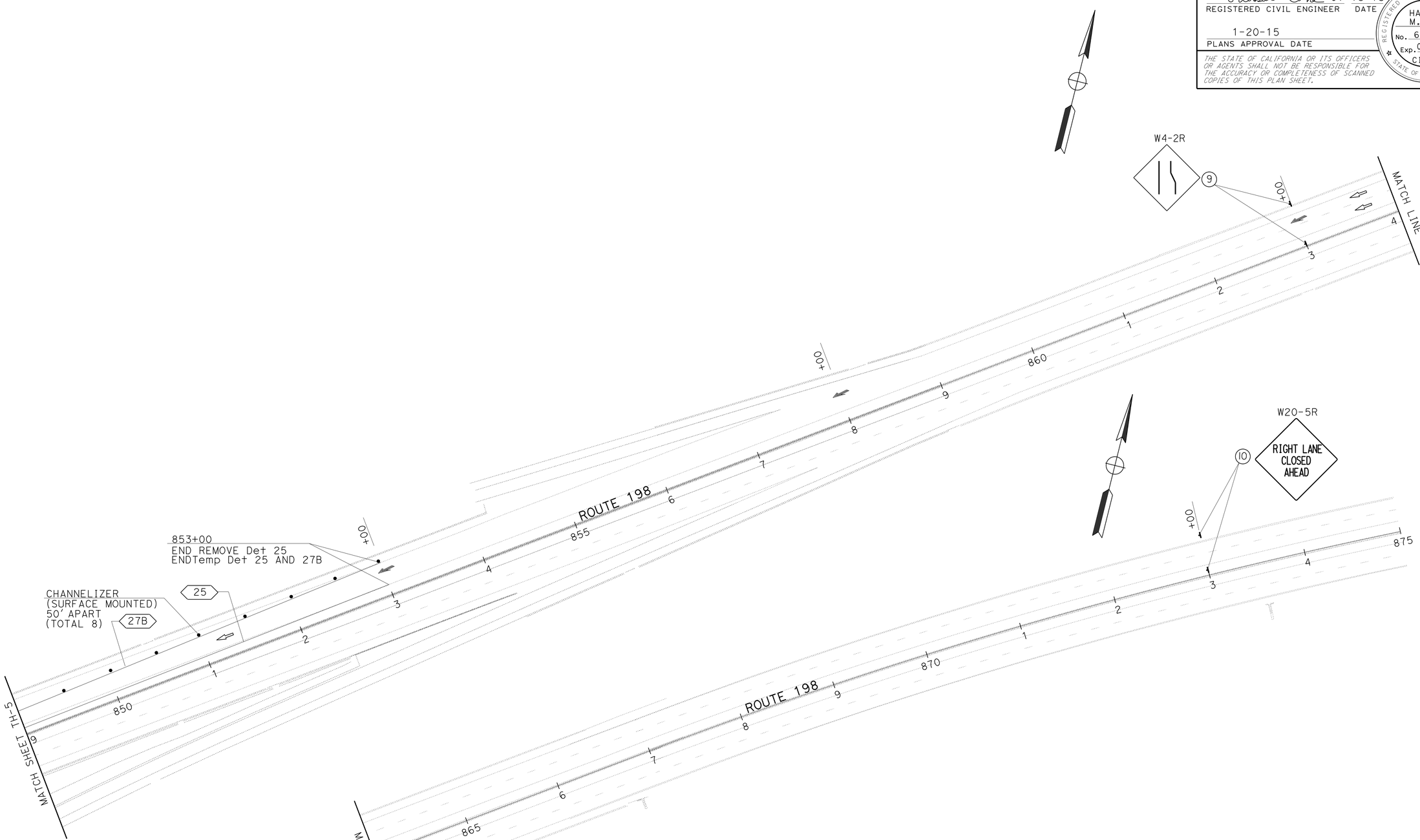

TRAFFIC HANDLING PLAN
(STAGE 2)

SCALE: 1" = 50'

TH-6

APPROVED FOR TRAFFIC HANDLING WORK ONLY

STATE OF CALIFORNIA - DEPARTMENT OF TRANSPORTATION
Caltrans
TRAFFIC DESIGN

FUNCTIONAL SUPERVISOR: MOHAMMED QATAMI
CALCULATED-DESIGNED BY: VANIK POGOSYAN
CHECKED BY: HASSAN TAHA
REVISED BY
DATE REVISED

LAST REVISION 01-15-15
DATE PLOTTED => 07-APR-2015
TIME PLOTTED => 08:43

Dist	COUNTY	ROUTE	POST MILES TOTAL PROJECT	SHEET No.	TOTAL SHEETS
06	Kin	198	R15.4/R16.0	20	63

Hassan Taha 01-15-15
REGISTERED CIVIL ENGINEER DATE

1-20-15
PLANS APPROVAL DATE

REGISTERED PROFESSIONAL ENGINEER HASSAN M. TAHA No. 60130 Exp. 06/30/16 CIVIL STATE OF CALIFORNIA

THE STATE OF CALIFORNIA OR ITS OFFICERS OR AGENTS SHALL NOT BE RESPONSIBLE FOR THE ACCURACY OR COMPLETENESS OF SCANNED COPIES OF THIS PLAN SHEET.

TEMPORARY PAVEMENT DELINEATION

SHEET No.	LOCATION STA TO STA	DETAIL No.	TEMPORARY PAVEMENT MARKER	REMOVE PAVEMENT MARKER	REMOVE THERMO PLASTIC TRAFFIC STRIPE		TEMPORARY TRAFFIC STRIPE (TAPE)	TEMPORARY PAVEMENT MARKING (TAPE)	
					WHITE	YELLOW (HAZARDOUS WASTE)			
			EA	EA	LF	LF	LF	DESCRIPTION	SQFT
TH-1 TO TH-2	824+50 TO 848+50	12		51	600			12-TYPE VI ARROW	504
	832+00 TO 848+50	25	35				1650		
		27B			1650		1650		
TH-2 TO TH-3	836+50 TO 860+50	12		51	600				
	836+50 TO 853+00	25	35				1650		
		27B			1650		1650		
TH-2	30+13 TO 33+72	27B					359		
	30+23 to 30+68	22		3		90			
	30+23 TO 33+72	27B					349		
		25A	16				349		
		27B			349		349		
	30+23 TO 30+54	27B					31		
	30+68 TO 31+27	27B			59				
	31+00 TO 31+35	27B					35		
	31+27 TO 33+72	22		11		490			
	31+70 TO 34+56	27B			286		286		
	33+95 TO 34+56	22	4	4		122	61		
		27B			61		61		
TH-4 TO TH-5	832+00 TO 848+50	25		35		1650			
		25	35				1650		
		27B					1650		
TH-5 TO TH-6	836+50 TO 853+00	25		35		1650			
		25	35				1650		
		27B					1650		
		TOTAL	160	190	5255	4002	15080		504

TEMPORARY RAILING (TYPE K)

SHEET No.	STA TO STA	LF
TH-2	839+50 TO 845+10	560
	840+00 TO 845+60	560
	32+00 TO 33+40	140
	31+83 TO 33+23	140
	31+50 TO 32+90	140
	31+44 TO 32+84	140
TH-5	839+50 TO 845+10	560
	840+00 TO 845+60	560
TH-2	31+00 TO 34+00	610
TOTAL		3410

CONSTRUCTION AREA SIGNS (TRAFFIC HANDLING)

SHEET No.	SIGN No.	SIGN CODE	SIGN MESSAGE	PANEL SIZE	No. OF POST AND SIZE	No. OF SIGNS
TH-1	1	W20-5L	LEFT LANE CLOSED AHEAD	36" x 36"	1-4" x 4"	2
	2	W4-2L	LEFT LANE ENDS	36" x 36"	1-4" x 4"	2
TH-2	3	W8-5	SLIPPERY WHEN WET	36" x 36"	1-4" x 4"	1
TH-3	4	W8-5	SLIPPERY WHEN WET	36" x 36"	1-4" x 4"	1
	5	W4-2L	LEFT LANE ENDS	36" x 36"	1-4" x 4"	2
	6	W20-5L	LEFT LANE CLOSED AHEAD	36" x 36"	1-4" x 4"	2
TH-4	7	W20-5R	RIGHT LANE CLOSED AHEAD	36" x 36"	1-4" x 4"	2
	8	W4-2R	RIGHT LANE ENDS	36" x 36"	1-4" x 4"	2
TH-6	9	W4-2R	RIGHT LANE ENDS	36" x 36"	1-4" x 4"	2
	10	W20-5R	RIGHT LANE CLOSED AHEAD	36" x 36"	1-4" x 4"	2

CHANNELIZER (SURFACE MOUNTED)

SHEET No.	EA
TH-1	5
TH-2	97
TH-3	8
TH-4	5
TH-5	53
TH-6	8
TOTAL	176

TEMPORARY CRASH CUSHION MODULE

SHEET No.	EA
TH-2	72
TH-5	28
TOTAL	100

TRAFFIC HANDLING QUANTITIES

THQ-1

STATE OF CALIFORNIA - DEPARTMENT OF TRANSPORTATION
Caltrans® TRAFFIC DESIGN

FUNCTIONAL SUPERVISOR: MOHAMMED QATAMI
CALCULATED-DESIGNED BY: VANIK POGOSYAN
CHECKED BY: HASSAN TAHA
REVISED BY
DATE REVISED

LAST REVISION 01-15-15
DATE PLOTTED => 07-APR-2015
TIME PLOTTED => 08:43

Dist	COUNTY	ROUTE	POST MILES TOTAL PROJECT	SHEET No.	TOTAL SHEETS
06	Kin	198	R15.4/R16.0	21	63

Hassan Taha 01-15-15
REGISTERED CIVIL ENGINEER DATE

1-20-15
PLANS APPROVAL DATE

REGISTERED PROFESSIONAL ENGINEER
HASSAN M. TAHA
No. 60130
Exp. 06/30/16
CIVIL
STATE OF CALIFORNIA

THE STATE OF CALIFORNIA OR ITS OFFICERS OR AGENTS SHALL NOT BE RESPONSIBLE FOR THE ACCURACY OR COMPLETENESS OF SCANNED COPIES OF THIS PLAN SHEET.

LEGEND

XX TRAFFIC STRIPE DETAIL No.

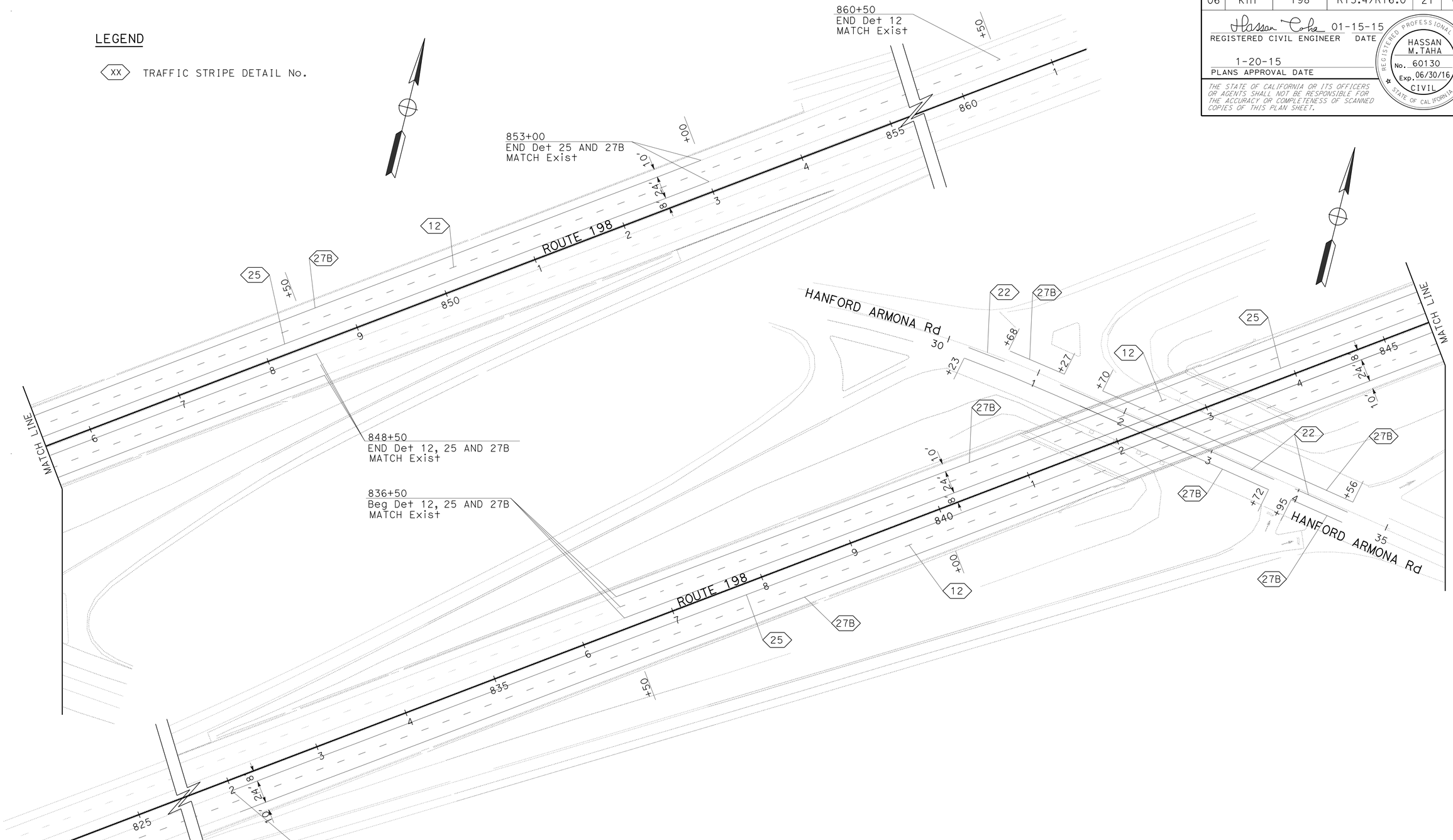

APPROVED FOR PAVEMENT DELINEATION WORK ONLY

PAVEMENT DELINEATION PLAN

SCALE: 1" = 50'

PD-1

STATE OF CALIFORNIA - DEPARTMENT OF TRANSPORTATION
Caltrans® **TRAFFIC DESIGN**

FUNCTIONAL SUPERVISOR: MOHAMMED QATAMI
CALCULATED-DESIGNED BY: VANIK POGOSYAN
CHECKED BY: HASSAN TAHA
REVISED BY
DATE REVISED

LAST REVISION 01-15-15
DATE PLOTTED => 07-APR-2015
TIME PLOTTED => 08:43

Dist	COUNTY	ROUTE	POST MILES TOTAL PROJECT	SHEET No.	TOTAL SHEETS
06	Kin	198	R15.4/R16.0	22	63

Hassan Taha 01-15-15
REGISTERED CIVIL ENGINEER DATE

1-20-15
PLANS APPROVAL DATE

REGISTERED PROFESSIONAL ENGINEER HASSAN M. TAHA No. 60130 Exp. 06/30/16 CIVIL STATE OF CALIFORNIA

THE STATE OF CALIFORNIA OR ITS OFFICERS OR AGENTS SHALL NOT BE RESPONSIBLE FOR THE ACCURACY OR COMPLETENESS OF SCANNED COPIES OF THIS PLAN SHEET.

PAVEMENT DELINEATION QUANTITIES

SHEET No.	LOCATION	DETAIL No.	PAVEMENT MARKER (RETROREFLECTIVE)			THERMOPLASTIC TRAFFIC STRIPE		
			TYPE D Yellow (Two-Way)	TYPE G Clear (One-Way)	TYPE H Yellow (One-Way)	4" YELLOW	4" WHITE	4" BROKEN (36'-12')
	STA TO STA			EA	EA	LF	LF	LF
PD-1	824+50 TO 848+50	12		51				2400
	832+00 TO 848+50	25			35	1650		
		27B					1650	
	836+50 TO 860+50	12		51				2400
	836+50 TO 853+00	25			35	1650		
		27B					1650	
	30+23 TO 30+68	22	6			90		
	30+23 TO 33+72	27B					349	
	30+68 TO 31+27	27B					59	
	31+27 TO 33+72	22	24			490		
	31+70 TO 34+56	27B					286	
	33+95 TO 34+56	22	8			122		
	33+95 TO 34+56	27B					61	
		SUB TOTAL	38	102	70	4002	4055	4800
		TOTAL		210		8057		4800

PAVEMENT DELINEATION QUANTITIES

PDQ-1

REVISED BY	DATE REVISED

CALCULATED-DESIGNED BY	CHECKED BY
VANIK POGOSYAN	HASSAN TAHA

FUNCTIONAL SUPERVISOR
MOHAMMED QATAMI

STATE OF CALIFORNIA - DEPARTMENT OF TRANSPORTATION
Caltrans® TRAFFIC DESIGN

LAST REVISION 01-15-15 | DATE PLOTTED => 07-APR-2015 | TIME PLOTTED => 08:43

Dist	COUNTY	ROUTE	POST MILES TOTAL PROJECT	SHEET No.	TOTAL SHEETS
06	Kin	198	R15.4/R16.0	23	63

REGISTERED CIVIL ENGINEER 1-15-15 DATE

1-20-15
PLANS APPROVAL DATE

REGISTERED PROFESSIONAL ENGINEER MADJID SADATMANSOORI No. 66244 Exp. 6/30/16 CIVIL STATE OF CALIFORNIA

THE STATE OF CALIFORNIA OR ITS OFFICERS OR AGENTS SHALL NOT BE RESPONSIBLE FOR THE ACCURACY OR COMPLETENESS OF SCANNED COPIES OF THIS PLAN SHEET.

ROADWAY QUANTITIES

	PHASE	STATION	DESCRIPTION	HOT MIX ASPHALT (TYPE A)	COLD PLANE AC Pvmt	ROADWAY EXCAVATION	EMBANKMENT (N)	TACK COAT	CONCRETE BARRIER (TYPE 60)	REMOVE CONCRETE BARRIER
				TON	SQYD	CY	CY	TON	LF	LF
STAGE 1	1	"A" Sta 834+50.00 Lt TO Sta 840+92.02 Lt	OUTSIDE SHOULDER WB	56	571			0.04		
		"A" Sta 843+11.19 Lt TO Sta 854+00.00 Lt	OUTSIDE SHOULDER WB	91	934			0.07		
		"A" Sta 831+00.00 Rt TO Sta 841+49.18 Rt	OUTSIDE SHOULDER EB	94	968			0.06		
		"A" Sta 843+97.81 Rt TO Sta 850+50.00 Rt	OUTSIDE SHOULDER EB	57	580			0.04		
	1	"A" Sta 836+00.00 Lt/Rt TO Sta 839+85.00 Lt/Rt	INSIDE SHOULDERS	665		344		0.45		
	2	"A" Sta 839+85.00 Lt/Rt TO Sta 845+05.40 Lt/Rt	BRIDGE APPROACH	1086		560	365	0.74	297	297
	1	"A" Sta 845+05.40 Lt/Rt TO Sta 850+50.00 Lt/Rt	INSIDE SHOULDERS	875		452		0.59		
			STAGE 1 SUB-TOTAL	2924		1356		1.99		
STAGE 2										
		"A" Sta 839+85.00 Lt/Rt TO Sta 845+05.40 Lt/Rt	BRIDGE APPROACH	971		501		0.65		
			STAGE 2 SUB-TOTAL	971		501		0.65		
		FROM DIKE TABLE		48						
		TOTAL		3,943	3,053	1,857		2.64	297	297

(N) NOT A SEPARATE PAY ITEM, FOR INFORMATION ONLY.

SUMMARY OF QUANTITIES

Q-1

STATE OF CALIFORNIA - DEPARTMENT OF TRANSPORTATION
Caltrans DESIGN

FUNCTIONAL SUPERVISOR: SANKU G. MOHAN
CALCULATED-DESIGNED BY: MADJID SADATMANSOORI
CHECKED BY: MADJID SADATMANSOORI
REVISED BY
DATE REVISED

LAST REVISION 01-15-15
DATE PLOTTED => 07-APR-2015
TIME PLOTTED => 08:43

Dist	COUNTY	ROUTE	POST MILES TOTAL PROJECT	SHEET No.	TOTAL SHEETS
06	Kin	198	R15.4/R16.0	24	63

REGISTERED CIVIL ENGINEER 1-15-15 DATE

1-20-15
PLANS APPROVAL DATE

REGISTERED PROFESSIONAL ENGINEER MADJID SADATMANSOORI No. 66244 Exp. 6/30/16 CIVIL STATE OF CALIFORNIA

THE STATE OF CALIFORNIA OR ITS OFFICERS OR AGENTS SHALL NOT BE RESPONSIBLE FOR THE ACCURACY OR COMPLETENESS OF SCANNED COPIES OF THIS PLAN SHEET.

RUMBLE STRIP (GROUND-IN INDENTATIONS)

LOCATION	Sta	REMARK
"A" Sta 834+50.00 Lt TO Sta 840+92.02 Lt	7	OUTSIDE SHOULDER
"A" Sta 843+11.19 Lt TO Sta 854+00.00 Lt	11	
"A" Sta 831+00.00 Rt TO Sta 841+78.11 Rt	11	
"A" Sta 843+97.81 Rt TO Sta 850+50.00 Rt	7	
"A" Sta 836+00.00 TO Sta 841+35.00 Rt/Lt	12	INSIDE SHOULDER
"A" Sta 843+58.00 TO Sta 850+50.00 Rt/Lt	14	
TOTAL	62	

TEMPORARY WATER POLLUTION CONTROL

DESCRIPTION	UNIT	QUANTITY
TEMPORARY FIBER ROLLS *	LF	835
TEMPORARY CONCRETE WASHOUT	LS	LS

* PLACE TEMPORARY FIBER ROLLS AT THE SAME LOCATIONS INDICATED FOR FIBER ROLLS.

HMA DIKE

STATION	STAGE	PLACE HMA DIKE			HMA * (TYPE A)	REMOVE AC DIKE
		TYPE E	TYPE F	TYPE C		
		LF	LF	LF	TON	LF
"A" Sta 837+95.00 Lt TO Sta 840+92.02 Lt	1	297			7.1	297
"A" Sta 844+33.00 Lt TO Sta 849+90.00 Lt	1	557			14.7	557
"A" Sta 834+10.00 Rt TO Sta 840+56.00 Rt	1	646			16.8	646
"A" Sta 843+97.81 Rt TO Sta 847+10.00 Rt	1	312			7.6	312
"A" Sta 843+08.00 Lt TO Sta 843+58.00 Lt	2		50		0.9	75
"A" Sta 841+31.00 Rt TO Sta 841+81.00 Rt	2		50		0.9	75
"A" Sta 840+56.00 Rt TO Sta 841+31.00 Rt	2			75		
"A" Sta 843+58.00 Lt TO Sta 844+33.00 Lt	2			75		
TOTAL		1,812	100	150	48	1,962

* QUANTITIES INCLUDED IN THE ROADWAY QUANTITIES TABLE.

DRAINAGE

LOCATION	10" CORRUGATED STEEL PIPE DOWNDRAIN	10" TAPERED INLET	ANCHOR ASSEMBLY	RSP		STAGE	PHASE
				FABRIC (CLASS 8)	(No. 2, METHOD B)		
	LF	EA	EA	SQYD	CY		
"A" Sta 840+70.00 Lt	44	1	4	5	1.5	1	1
"A" Sta 843+82.00 Lt	44	1	4	5	1.5	1	1
"A" Sta 841+05.00 Rt	44	1	4	5	1.5	1	1
"A" Sta 844+20.00 Rt	44	1	4	5	1.5	1	1
TOTAL	176	4	16	20	6		

MIDWEST GUARDRAIL SYSTEM

STATION	STAGE	REMOVE GRAURDRAIL	TREATED WOOD WASTE	REMOVE TERMINAL SYSTEM (N)	TRANSITION RAILING (TYPE WB-31)	MGS (STEEL POST)	ALTERNATIVE IN-LINE TERMINAL SYSTEM	MBGR LAYOUT (N)	VEGETATION CONTROL (MINOR CONCRETE)
		LF	LB	EA	EA	LF	EA	TYPE	SQYD
"A" Sta 840+81.00 TO 841+81.00 Rt	2	75	1900	1	1	25	1	12A	35
"A" Sta 843+08.00 TO 844+08.00 Lt	2	75	1900	1	1	25	1	12A	35
TOTAL		150	3,800		2	50	2		70

(N) NOT A SEPARATE PAY ITEM. FOR INFORMATION PURPOSES ONLY.

TEMPORARY DRAINAGE INLET PROTECTION

STATION	EA
"A" Sta 836+49.00 Rt 43'	1
TOTAL	1

SUMMARY OF QUANTITIES

Q-2

REVISED BY | DATE REVISED
MADJID SADATMANSOORI | MADJID SADATMANSOORI
CALCULATED-DESIGNED BY | CHECKED BY
FUNCTIONAL SUPERVISOR
SANKU G. MOHAN
STATE OF CALIFORNIA - DEPARTMENT OF TRANSPORTATION
Caltrans
DESIGN

LAST REVISION 01-15-15 | DATE PLOTTED => 07-APR-2015 | TIME PLOTTED => 08:43

Dist	COUNTY	ROUTE	POST MILES TOTAL PROJECT	SHEET No.	TOTAL SHEETS
06	Kin	198	R15.4/R16.0	25	63

1-15-15
LICENSED LANDSCAPE ARCHITECT

1-20-15
PLANS APPROVAL DATE

LICENSED LANDSCAPE ARCHITECT KEVIN GALLO No. 5555 Date 12/31/15 Renewal Date 01/25/12 Date STATE OF CALIFORNIA

THE STATE OF CALIFORNIA OR ITS OFFICERS OR AGENTS SHALL NOT BE RESPONSIBLE FOR THE ACCURACY OR COMPLETENESS OF SCANNED COPIES OF THIS PLAN SHEET.

EROSION CONTROL TYPE 1 (N)

SEQUENCE	ITEM	MATERIAL DESCRIPTION	MATERIAL TYPE	APPLICATION RATE	REMARKS
STEP 1	BONDED FIBER MATRIX	FIBER		2500 LB/ACRE FOR SLOPES ≤ 4:1 (Horiz:Vert) 3000 LB/ACRE FOR SLOPES > 4:1 and ≤ 3:1 (Horiz:Vert) 3500 LB/ACRE FOR SLOPES > 3:1 and ≤ 2:1 (Horiz:Vert) 4000 LB/ACRE FOR SLOPES > 2:1 and ≤ 1:1 (Horiz:Vert) 4500 LB/ACRE FOR SLOPES > 1:1 (Horiz:Vert)	APPLICATION RATE IS FOR FIBER AND TACKIFIER COMBINED
		TACKIFIER			
STEP 2	BONDED FIBER MATRIX	FIBER		500 LB/ACRE	
		TACKIFIER			
		SEED	MIX	32.7 LB/ACRE	

(N) NOT A SEPARATE PAY ITEM, FOR INFORMATION ONLY.

SEED MIX (N)

BOTANICAL NAME (COMMON NAME)	PERCENT GERMINATION (MINIMUM)	POUNDS PURE LIVE SEED SEED PER ACRE (SLOPE MEASUREMENT)
Eshosholzia californica (California Poppy)	70	4.8
Lasthenia glabrata (Goldfields)	55	2.3
Layla platyglossa (Tiddy Tips)	50	2.9
Lotus purchianus (Purshings Lotus)	50	1.2
Lupinus bicolor (Pygmy Leaved Lupine)	50	1.2
Nassella pulchra (deawned) (Purple Needle Grass)	40	1.0
Trifolium gacillentum (Pin Point Clover)	50	4.3
Vulpia octoflora (Six Week Fescue)	50	15

(N) NOT A SEPARATE PAY ITEM, FOR INFORMATION ONLY.

EROSION CONTROL QUANTITIES

EROSION CONTROL (TYPE 1)				
SHEET	LOCATION STATION	L†	R†	EROSION CONTROL (BONDED FIBER MATRIX) ACRE
EC-1	"A" Sta 839+37.00 TO Sta 841+10.00	X		0.05
	"A" Sta 839+38.00 TO Sta 841+95.00		X	0.07
	"A" Sta 843+08.00 TO Sta 845+55.00	X		0.08
	"A" Sta 843+75.00 TO Sta 845+56.00		X	0.04
			TOTAL	0.24

FIBER ROLLS

SEQUENCE	ITEM	MATERIAL DESCRIPTION	MATERIAL TYPE	REMARKS	UNIT	QTY
IN BONDED FIBER MATRIX AREAS FIBER ROLLS MUST BE INSTALLED BEFORE BONDED FIBER MATRIX.	FIBER ROLL	FIBER ROLL	STRAW FILL 8" TO 10" Dia	TYPE 1 FIBER ROLL INSTALLATION	LF	835

EROSION CONTROL LEGEND AND QUANTITIES

ECL-1

APPROVED FOR EROSION CONTROL WORK ONLY

STATE OF CALIFORNIA - DEPARTMENT OF TRANSPORTATION
Caltrans® LANDSCAPE ARCHITECTURE
SENIOR LANDSCAPE ARCHITECT: BRAD COLE
CALCULATED-DESIGNED BY: RAYMOND SEGURA
CHECKED BY: KEVIN GALLO
REVISED BY
DATE REVISED

LAST REVISION 01-15-15
DATE PLOTTED => 07-APR-2015
TIME PLOTTED => 08:43

Dist	COUNTY	ROUTE	POST MILES TOTAL PROJECT	SHEET No.	TOTAL SHEETS
06	Kin	198	R15.4/R16.0	26	63

1-15-15
LICENSED LANDSCAPE ARCHITECT

1-20-15
PLANS APPROVAL DATE

LICENSED LANDSCAPE ARCHITECT KEVIN GALLO No. 2525 12/31/15 Renewal Date Date STATE OF CALIFORNIA

THE STATE OF CALIFORNIA OR ITS OFFICERS OR AGENTS SHALL NOT BE RESPONSIBLE FOR THE ACCURACY OR COMPLETENESS OF SCANNED COPIES OF THIS PLAN SHEET.

NOTE:

FOR ACCURATE RIGHT OF WAY DATA, CONTACT RIGHT OF WAY ENGINEERING AT THE DISTRICT OFFICE.

LEGEND

EROSION CONTROL TYPE 1

FR FIBER ROLL

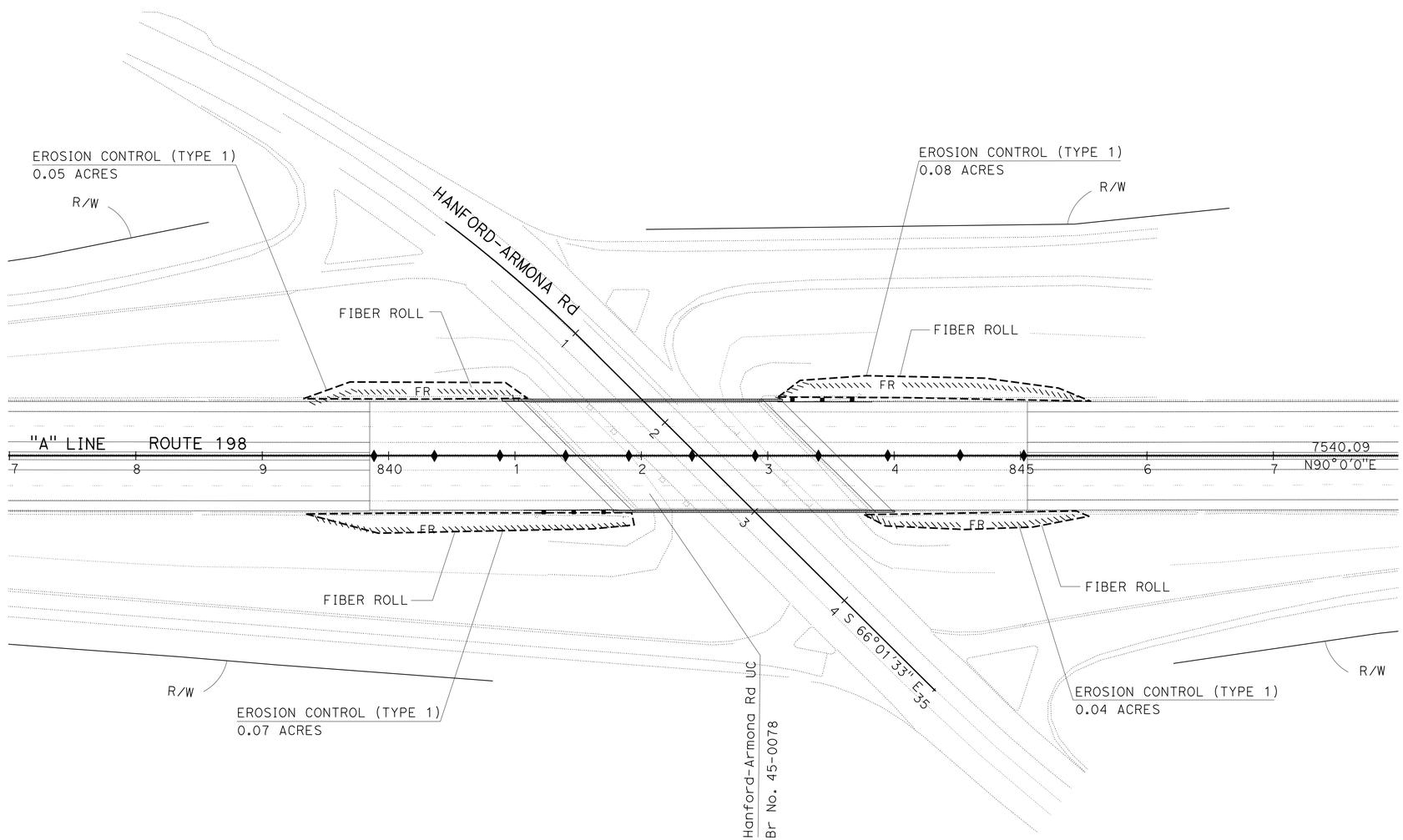

EROSION CONTROL PLAN

SCALE: 1"=50'

EC-1

APPROVED FOR EROSION CONTROL WORK ONLY

STATE OF CALIFORNIA - DEPARTMENT OF TRANSPORTATION
Caltrans® LANDSCAPE ARCHITECTURE

SENIOR LANDSCAPE ARCHITECT: BRAD COLE
CALCULATED-DESIGNED BY: RAYMOND SEGURA
CHECKED BY: KEVIN GALLO
REVISED BY
DATE REVISED

LAST REVISION 01-15-15
DATE PLOTTED => 07-APR-2015
TIME PLOTTED => 08:43

Dist	COUNTY	ROUTE	POST MILES TOTAL PROJECT	SHEET No.	TOTAL SHEETS
06	Kin	198	R15.4/R16.0	27	63

REGISTERED ELECTRICAL ENGINEER 01-15-15 DATE

1-20-15
PLANS APPROVAL DATE

REGISTERED PROFESSIONAL ENGINEER HASHIM KHALID No. 18054 Exp. 6/30/15 ELECTRICAL STATE OF CALIFORNIA

THE STATE OF CALIFORNIA OR ITS OFFICERS OR AGENTS SHALL NOT BE RESPONSIBLE FOR THE ACCURACY OR COMPLETENESS OF SCANNED COPIES OF THIS PLAN SHEET.

NOTES:

1. ALL PULL BOXES MUST BE No. 5(T)(E) UNLESS OTHERWISE NOTED.
2. FOR ACCURATE RIGHT OF WAY DATA, CONTACT RIGHT OF WAY ENGINEERING AT THE DISTRICT OFFICE.

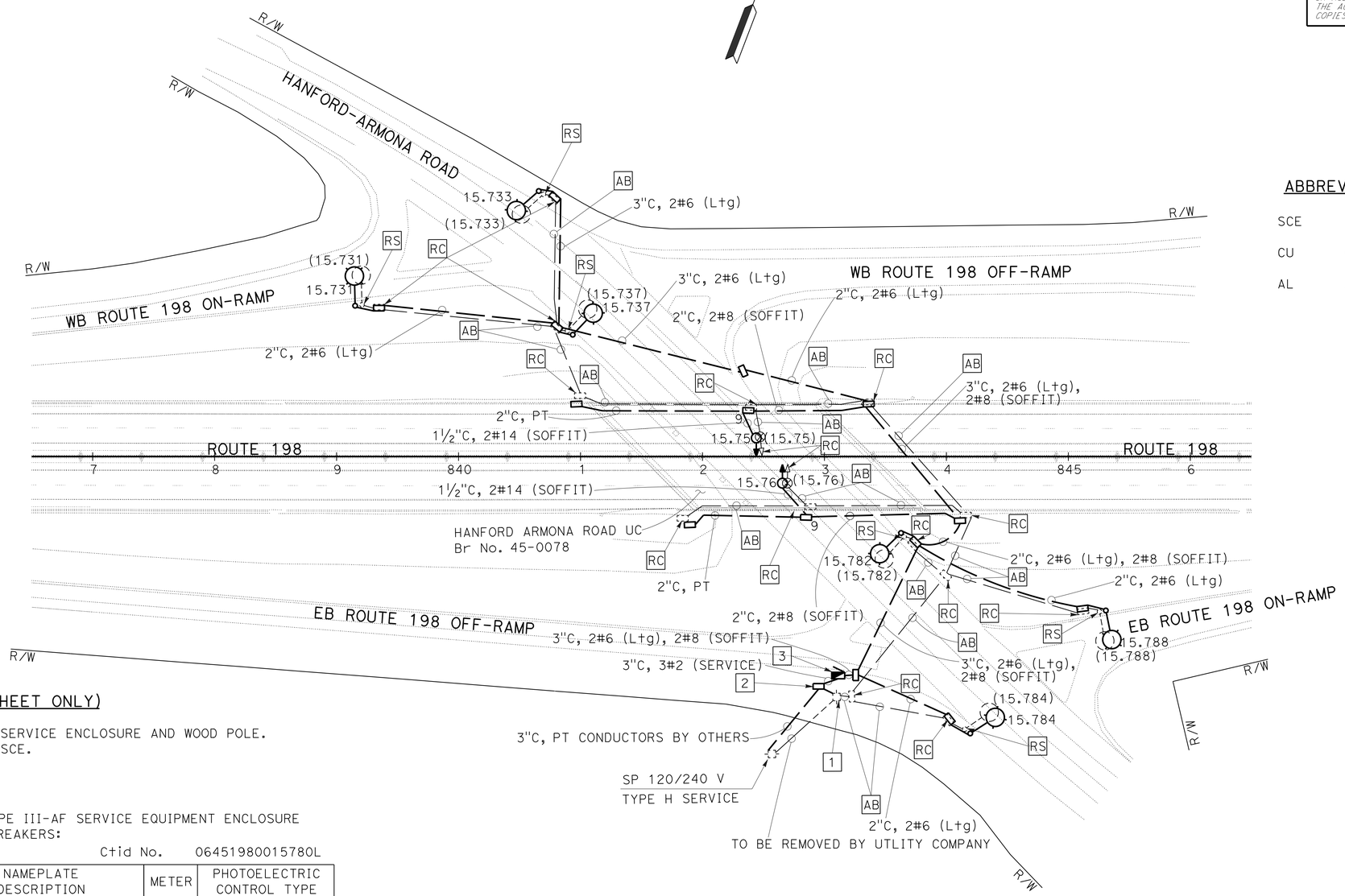

ABBREVIATIONS:

SCE	SOUTHERN CALIFORNIA EDISON
CU	COPPER
AL	ALUMINUM

LEGEND: (FOR THIS SHEET ONLY)

1. RC Exist TYPE A SERVICE SERVICE ENCLOSURE AND WOOD POLE. COORDINATE REMOVAL WITH SCE.
2. SCE APPROVED PB.
3. 120/240 V, 1Ø, 3-WIRE, TYPE III-AF SERVICE EQUIPMENT ENCLOSURE WITH FOLLOWING CIRCUIT BREAKERS:

Ctid No. 06451980015780L

AMPERES	VOLTS	POLES	NAMEPLATE DESCRIPTION	METER	PHOTOELECTRIC CONTROL TYPE
100	240	2	MAIN BREAKER	YES	-
40	240	2	HIGHWAY LIGHTING	YES	V
40	240	2	SOFFIT	YES	V
15	120	1	LIGHTING CONTROL	YES	-
40	240	2	SPARE	YES	-
15	120	1	SPARE	YES	-
-	-	6	SPACE	-	-

APPROVED FOR ELECTRICAL WORK ONLY

SCALE: 1" = 50'

MODIFY LIGHTING

E-1

REVISED BY	G.S.BAINS
DATE REVISED	12-24-14
CALCULATED-DESIGNED BY	GURVINDERJIT S. BAINS
CHECKED BY	HASHIM M. KHALID
FUNCTIONAL SUPERVISOR	ALI BAKHDOUD

STATE OF CALIFORNIA - DEPARTMENT OF TRANSPORTATION
Caltrans® ELECTRICAL DESIGN

LAST REVISION 12-24-14 | DATE PLOTTED => 07-APR-2015 | TIME PLOTTED => 15:22

Dist	COUNTY	ROUTE	POST MILES TOTAL PROJECT	SHEET No.	TOTAL SHEETS
06	Kin	198	R15.4/R16.0	28	63

REGISTERED ELECTRICAL ENGINEER 01-15-15 DATE

1-20-15
PLANS APPROVAL DATE

REGISTERED PROFESSIONAL ENGINEER HASHIM KHALID No. 18054 Exp. 6/30/15 ELECTRICAL STATE OF CALIFORNIA

THE STATE OF CALIFORNIA OR ITS OFFICERS OR AGENTS SHALL NOT BE RESPONSIBLE FOR THE ACCURACY OR COMPLETENESS OF SCANNED COPIES OF THIS PLAN SHEET.

NOTE:

THE QUANTITIES IN THIS TABLE ARE NOT SEPARATE PAY ITEMS, FOR INFORMATION ONLY.
FOR COMPLETE ELECTRICAL WORK, SEE ELECTRICAL PLANS.

MODIFY LIGHTING

SHEET No.	PULL BOX 5(T)(E)	PULL BOX UTILITY	PULL BOX NO.9	TYPE 15 STANDARD FOUNDATION	STANDARD- TYPE 15	SOFFIT	TYPE III-AF SERVICE FOUNDATION	TYPE III-A SERVICE ENCLOSURE	1-1/2" CONDUIT (TYPE 1)	2" CONDUIT (TYPE 1)	3" CONDUIT (TYPE 1)	2" CONDUIT (TYPE 3)	3" CONDUIT (TYPE 3)	NO. 8 CONDUCTOR (G) (CU)	NO. 8 CONDUCTOR (AL)	NO. 6 CONDUCTOR (AL)
	EA								LF							
E-1	12	1	2	6	6	2	1	1	100	520	10	580	500	2000	1150	2350

ELECTRICAL QUANTITIES

E-2

STATE OF CALIFORNIA - DEPARTMENT OF TRANSPORTATION
Caltrans® ELECTRICAL DESIGN

FUNCTIONAL SUPERVISOR: ALI BAKHDOUD
CALCULATED-DESIGNED BY: GURVINDERJIT S. BAINS
CHECKED BY: HASHIM M. KHALID
REVISED BY: G.S.BAINS
DATE REVISED: 12-24-14

LAST REVISION 12-24-14 | DATE PLOTTED => 07-APR-2015 | TIME PLOTTED => 15:22

M

Maint	MAINTENANCE
Max	MAXIMUM
MB	METAL BEAM
MBB	METAL BEAM BARRIER
MBGR	METAL BEAM GUARD RAILING
Med	MEDIAN
MGS	MIDWEST GUARDRAIL SYSTEM
MH	MANHOLE
Min	MINIMUM
Misc	MISCELLANEOUS
Misc I & S	MISCELLANEOUS IRON AND STEEL
Mkr	MARKER
Mod	MODIFIED,
	MODIFY
Mon	MONUMENT
MP	METAL PLATE
MPGR	METAL PLATE GUARD RAILING
MR	MOVEMENT RATING
MSE	MECHANICALLY STABILIZED EMBANKMENT
Mt	MOUNTAIN, MOUNT
Mtl	MATERIAL
MVP	MAINTENANCE VEHICLE PULLOUT

N

N	NORTH
NB	NORTHBOUND
No.	NUMBER (MUST HAVE PERIOD)
Nos.	NUMBERS (MUST HAVE PERIOD)
NPS	NOMINAL PIPE SIZE
NS	NEAR SIDE
NSP	NEW STANDARD PLAN
NTS	NOT TO SCALE

O

Oblr	OBLITERATE
OC	OVERCROSSING
OD	OUTSIDE DIAMETER
OF	OUTSIDE FACE
OG	ORIGINAL GROUND
OGAC	OPEN GRADED ASPHALT CONCRETE
OGFC	OPEN GRADED FRICTION COURSE
OH	OVERHEAD
OHWM	ORDINARY HIGH WATER MARK
O-O	OUT TO OUT
Opp	OPPOSITE
OSD	OVERSIDE DRAIN

P

P	PAGE
PAP	PERFORATED ALUMINUM PIPE
PB	PULL BOX
PC	POINT OF CURVATURE,
	PRECAST
PCC	POINT OF COMPOUND CURVE,
	PORTLAND CEMENT CONCRETE
PCMS	PORTABLE CHANGEABLE MESSAGE SIGN
PCP	PERFORATED CONCRETE PIPE,
	PRESTRESSED CONCRETE PIPE
PCVC	POINT OF COMPOUND VERTICAL CURVE
PEC	PERMIT TO ENTER AND CONSTRUCT
Ped	PEDESTRIAN
Ped OC	PEDESTRIAN OVERCROSSING
Ped UC	PEDESTRIAN UNDERCROSSING
Perm Mtl	PERMEABLE MATERIAL

P continued

PG	PROFILE GRADE
PI	POINT OF INTERSECTION
PJP	PARTIAL JOINT PENETRATION
Pkwy	PARKWAY
ℙL,PL	PLATE
P/L	PROPERTY LINE
PM	POST MILE,
	TIME FROM NOON TO MIDNIGHT
PN	PAVING NOTCH
POC	POINT OF HORIZONTAL CURVE
POT	POINT OF TANGENT
POVC	POINT OF VERTICAL CURVE
PP	PIPE PILE,
	PLASTIC PIPE,
	POWER POLE
PPL	PREFORMED PERMEABLE LINER
PPP	PERFORATED PLASTIC PIPE
PRC	POINT OF REVERSE CURVE
PRF	PAVEMENT REINFORCING FABRIC
PRVC	POINT OF REVERSE VERTICAL CURVE
PS&E	PLANS, SPECIFICATIONS AND ESTIMATES
PS, P/S	PRESTRESSED
PSP	PERFORATED STEEL PIPE
PT	POINT OF TANGENCY
PVC	POLYVINYL CHLORIDE
Pvmt	PAVEMENT

Q

Qty	QUANTITY

R

R	RADIUS
R & D	REMOVE AND DISPOSE
R & S	REMOVE AND SALVAGE
R/C	RATE OF CHANGE
RCA	REINFORCED CONCRETE ARCH
RCB	REINFORCED CONCRETE BOX
RCP	REINFORCED CONCRETE PIPE
RCPA	REINFORCED CONCRETE PIPE ARCH
Rd	ROAD
Reinf	REINFORCED,
	REINFORCEMENT,
	REINFORCING
Rel	RELOCATE
Repl	REPLACEMENT
Ret	RETAINING
Rev	REVISED, REVISION
Rdwy	ROADWAY
RHMA	RUBBERIZED HOT MIX ASPHALT
Riv	RIVER
RM	ROAD-MIXED
RP	RADIUS POINT,
	REFERENCE POINT
RR	RAILROAD
RSP	ROCK SLOPE PROTECTION,
	REVISED STANDARD PLAN
Rt	RIGHT
Rte	ROUTE
RW	REDWOOD,
	RETAINING WALL
R/W	RIGHT OF WAY
Rwy	RAILWAY

S

S	SOUTH,
	SUPPLEMENT
SAE	STRUCTURE APPROACH EMBANKMENT
Salv	SALVAGE
SAPP	STRUCTURAL ALUMINUM PLATE PIPE
SB	SOUTHBOUND
SC	SAND CUSHION
SCSP	SLOTTED CORRUGATED STEEL PIPE
SD	STORM DRAIN
Sec	SECOND,
	SECTION
Sep	SEPARATION
SG	SUBGRADE
Shld	SHOULDER
Sht	SHEET
Sim	SIMILAR
℄	STATION LINE
SM	SELECTED MATERIAL
Spec	SPECIAL,
	SPECIFICATIONS
SPP	SLOTTED PLASTIC PIPE
SS	SLOPE STAKE
SSBM	STRAP AND SADDLE BRACKET METHOD
SSD	STRUCTURAL SECTION DRAIN
SSPA	STRUCTURAL STEEL PLATE ARCH
SSPP	STRUCTURAL STEEL PLATE PIPE
SSPPA	STRUCTURAL STEEL PLATE PIPE ARCH
SSRP	STEEL SPIRAL RIB PIPE
St	STREET
Sta	STATION
STBB	SINGLE THRIE BEAM BARRIER
Std	STANDARD
Str	STRUCTURE
Surf	SURFACING
SW	SIDEWALK,
	SOUND WALL
Swr	SEWER
Sym	SYMMETRICAL
S4S	SURFACE 4 SIDES

T

T	SEMI-TANGENT
Tan	TANGENT
TBB	THRIE BEAM BARRIER
Tbr	TIMBER
TC	TOP OF CURB
TCB	TRAFFIC CONTROL BOX
TCE	TEMPORARY CONSTRUCTION EASEMENT
Tel	TELEPHONE
Temp	TEMPORARY
TG	TOP OF GRADE
Tot	TOTAL
TP	TELEPHONE POLE
TPB	TREATED PERMEABLE BASE
TPM	TREATED PERMEABLE MATERIAL
Trans	TRANSITION

T continued

TS	TRANSVERSE,
	TRAFFIC SIGNAL,
	TUBULAR STEEL
Typ	TYPICAL

U

UC	UNDERCROSSING
UD	UNDERDRAIN
UG	UNDERGROUND
UON	UNLESS OTHERWISE NOTED
UP	UNDERPASS

V

V	VALVE,
	DESIGN SPEED
Var	VARIABLE,
	VARIES
VC	VERTICAL CURVE
VCP	VITRIFIED CLAY PIPE
Vert	VERTICAL
Via	VIADUCT
Vol	VOLUME

W

W	WEST,
	WIDTH
WB	WESTBOUND
WH	WEEP HOLE
WM	WIRE MESH
WS	WATER SURFACE
WSP	WELDED STEEL PIPE
Wt	WEIGHT
WV	WATER VALVE
WW	WINGWALL
WWLOL	WINGWALL LAYOUT LINE

X

X Sec	CROSS SECTION
Xing	CROSSING

Y

Yr	YEAR
Yrs	YEARS

Dist	COUNTY	ROUTE	POST MILES TOTAL PROJECT	SHEET No.	TOTAL SHEETS
06	Kin	198	R15.4/R16.0	29	63

Grace M. Tsushima
REGISTERED CIVIL ENGINEER

July 19, 2013
PLANS APPROVAL DATE

REGISTERED PROFESSIONAL ENGINEER Grace M. Tsushima No. C49814 Exp. 9-30-14 CIVIL STATE OF CALIFORNIA

THE STATE OF CALIFORNIA OR ITS OFFICERS OR AGENTS SHALL NOT BE RESPONSIBLE FOR THE ACCURACY OR COMPLETENESS OF SCANNED COPIES OF THIS PLAN SHEET.

TO ACCOMPANY PLANS DATED 1-20-15

2010 REVISED STANDARD PLAN RSP A10B

UNIT OF MEASUREMENT SYMBOLS:

Some of the symbols used in the project plan quantity tables and in the Bid Item List are:

TABLE A

SYMBOL USED	DEFINITIONS
ACRE	ACRE
CF	CUBIC FOOT
CY	CUBIC YARD
EA	EACH
GAL	GALLON
LB	POUND
LF	LINEAR FOOT
SQFT	SQUARE FOOT
SQYD	SQUARE YARD
STA	100 FEET
TAB	TABLET
TON	2,000 POUNDS

Some of the symbols used in the plans other than in the project plan quantity tables are:

TABLE B

SYMBOL USED	DEFINITIONS
ksi	KIPS PER SQUARE INCH
ksf	KIPS PER SQUARE FOOT
psi	POUNDS PER SQUARE INCH
psf	POUNDS PER SQUARE FOOT
lb/ft^3, pcf	POUNDS PER CUBIC FOOT
tsf	TONS PER SQUARE FOOT
mph, MPH *	MILES PER HOUR
ø	NOMINAL DIAMETER
oz	OUNCE
lb	POUND
kip	1,000 POUNDS
cal	CALORIE
ft	FOOT OR FEET
gal	GALLON

* For use on a sign panel only

STATE OF CALIFORNIA
DEPARTMENT OF TRANSPORTATION

ABBREVIATIONS (SHEET 2 OF 2)

NO SCALE

RSP A10B DATED JULY 19, 2013 SUPERSEDES STANDARD PLAN A10B DATED MAY 20, 2011 - PAGE 2 OF THE STANDARD PLANS BOOK DATED 2010.

REVISED STANDARD PLAN RSP A10B

6-7-13

Dist	COUNTY	ROUTE	POST MILES TOTAL PROJECT	SHEET No.	TOTAL SHEETS
06	Kin	198	R15.4/R16.0	30	63

REGISTERED CIVIL ENGINEER

April 20, 2012
PLANS APPROVAL DATE

REGISTERED PROFESSIONAL ENGINEER
Roberta L. McLaughlin
No. C40375
Exp. 3-31-13
CIVIL
STATE OF CALIFORNIA

THE STATE OF CALIFORNIA OR ITS OFFICERS OR AGENTS SHALL NOT BE RESPONSIBLE FOR THE ACCURACY OR COMPLETENESS OF SCANNED COPIES OF THIS PLAN SHEET.

TO ACCOMPANY PLANS DATED 1-20-15

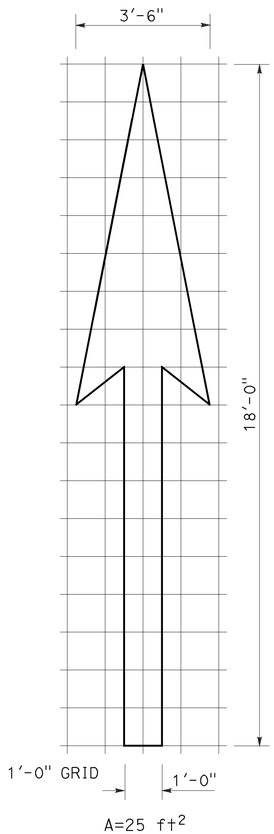

A=25 ft^2

TYPE I 18'-0" ARROW

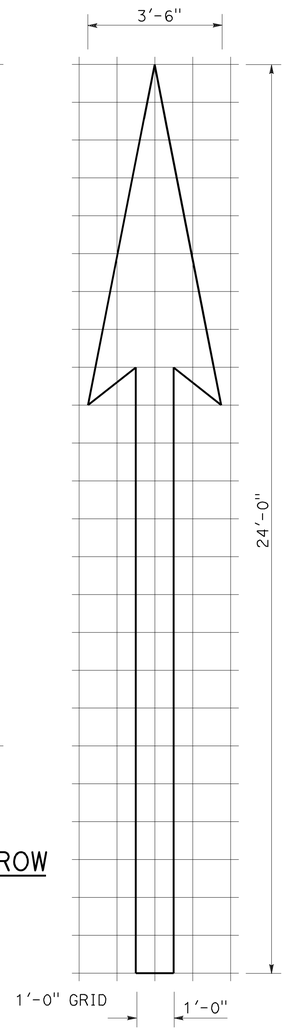

A=31 ft^2

TYPE I 24'-0" ARROW

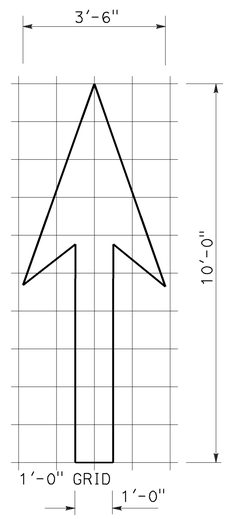

A=14 ft^2

TYPE I 10'-0" ARROW

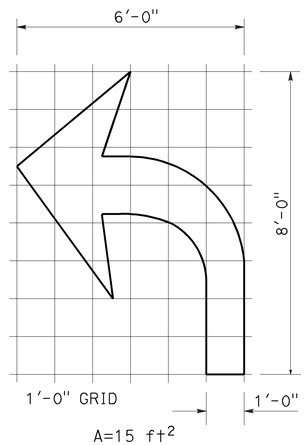

A=15 ft^2

TYPE IV (L) ARROW

(For Type IV (R) arrow, use mirror image)

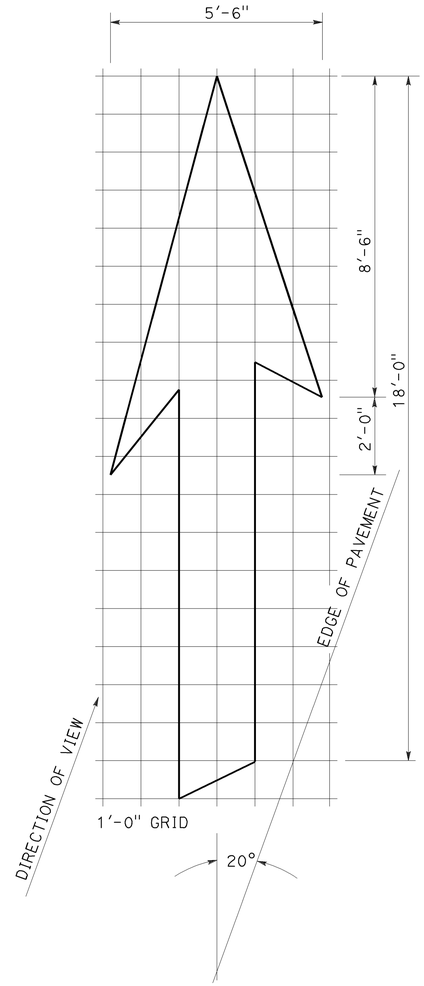

A=42 ft^2

TYPE VI ARROW

Right lane drop arrow
(For left lane, use mirror image)

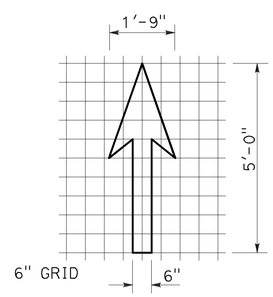

A=3.5 ft^2

BIKE LANE ARROW

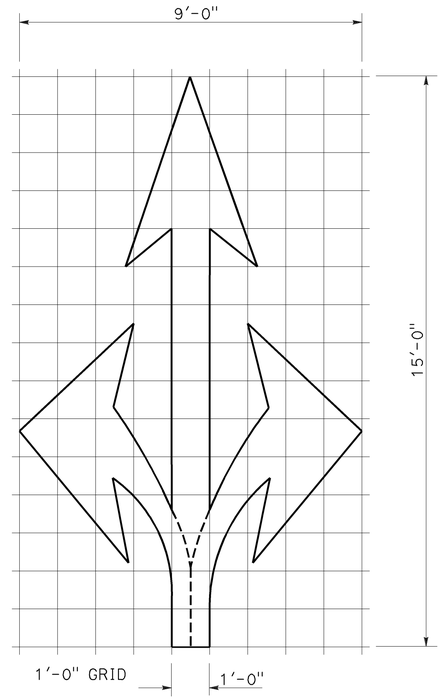

A=36 ft^2

TYPE VIII ARROW

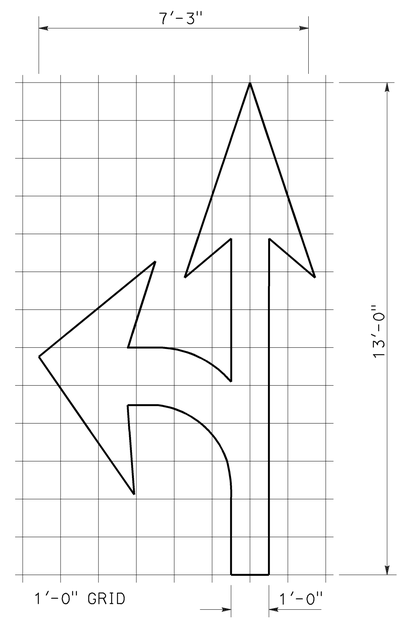

A=27 ft^2

TYPE VII (L) ARROW

(For Type VII (R) arrow, use mirror image)

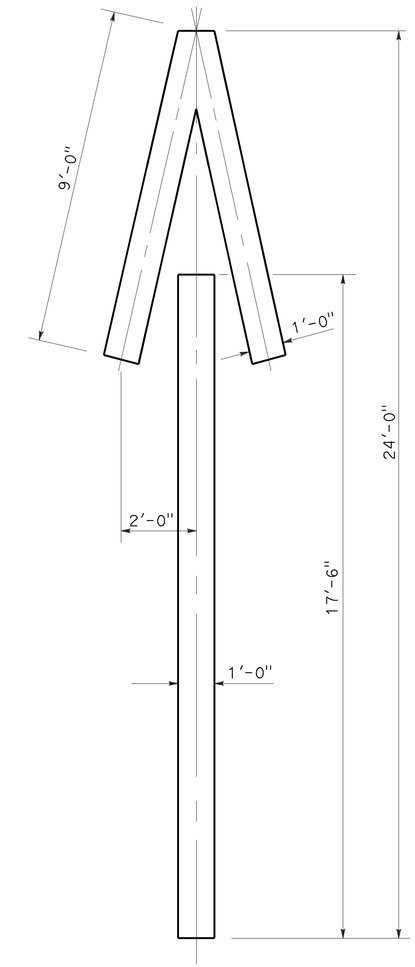

A=33 ft^2

TYPE V ARROW

NOTE:
Minor variations in dimensions may be accepted by the Engineer.

STATE OF CALIFORNIA
DEPARTMENT OF TRANSPORTATION

PAVEMENT MARKINGS ARROWS

NO SCALE

RSP A24A DATED APRIL 20, 2012 SUPERSEDES STANDARD PLAN A24A DATED MAY 20, 2011 - PAGE 13 OF THE STANDARD PLANS BOOK DATED 2010.

REVISED STANDARD PLAN RSP A24A

2010 REVISED STANDARD PLAN RSP A24A

3-14-12

Dist	COUNTY	ROUTE	POST MILES TOTAL PROJECT	SHEET No.	TOTAL SHEETS
06	Kin	198	R15.4/R16.0	31	63

Randell D. Hiatt
REGISTERED CIVIL ENGINEER

July 19, 2013
PLANS APPROVAL DATE

REGISTERED PROFESSIONAL ENGINEER
Randell D. Hiatt
No. C50200
Exp. 6-30-15
CIVIL
STATE OF CALIFORNIA

THE STATE OF CALIFORNIA OR ITS OFFICERS OR AGENTS SHALL NOT BE RESPONSIBLE FOR THE ACCURACY OR COMPLETENESS OF SCANNED COPIES OF THIS PLAN SHEET.

TO ACCOMPANY PLANS DATED 1-20-15

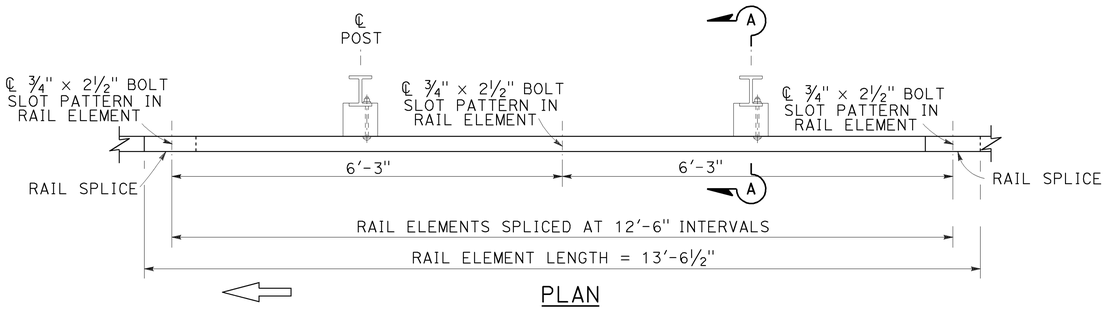

PLAN

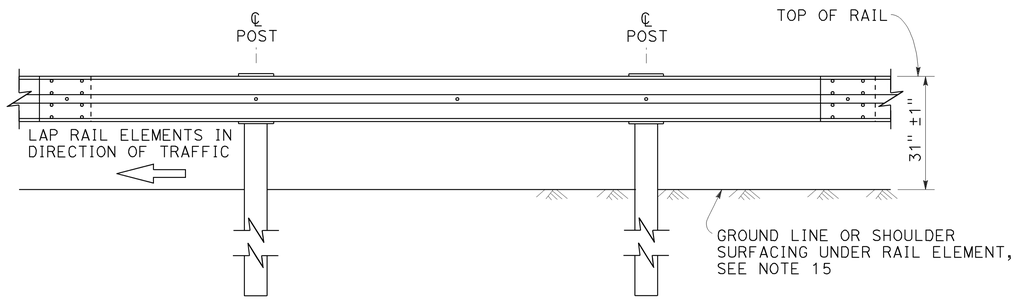

ELEVATION

MIDWEST GUARDRAIL SYSTEM WITH STEEL POSTS AND NOTCHED WOOD OR NOTCHED RECYCLED PLASTIC BLOCKS

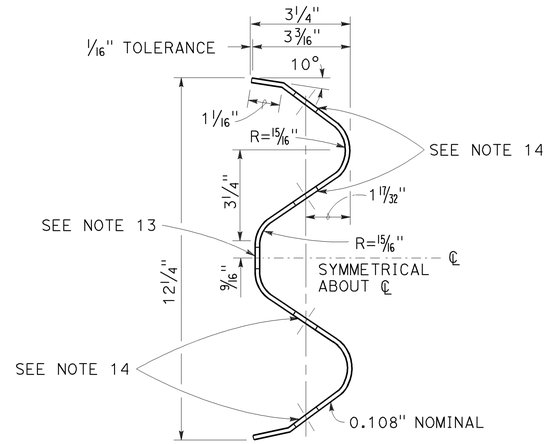

SECTION THRU RAIL ELEMENT

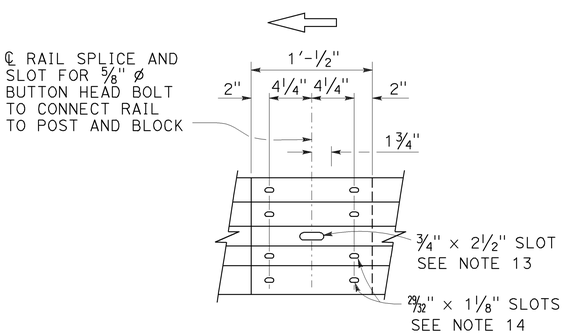

ELEVATION

RAIL ELEMENT SPLICE DETAIL

a) Connect the over lapped end of the rail elements with ⅝" ø × 1⅜" button head oval shoulder splice bolts inserted into the 29⁄32" × 1⅛" slots and bolted together with ⅝" ø recessed hex nuts. Recess of hex nut points toward rail element. A total of 8 bolts and nuts are to be used at each rail splice connection.

b) The ends of the rail elements are to be overlapped in the direction of traffic (see details).

c) Where end cap is to be attached to the end of a rail element, a total of 4 of the above described splice bolts and nuts are to be used.

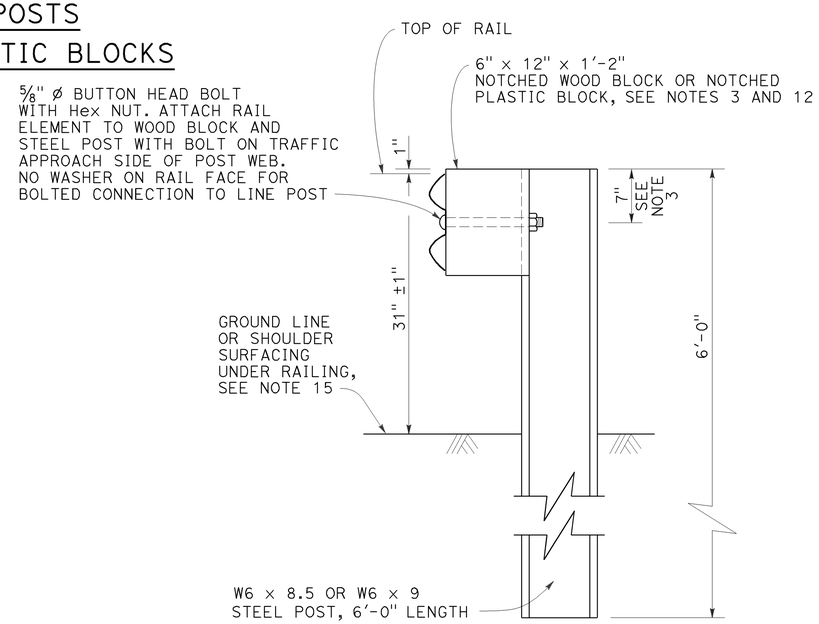

SECTION A-A

TYPICAL STEEL LINE POST INSTALLATION

See Note 4

NOTES:

1. For details of wood post installations, see Revised Standard Plan RSP A77L1.
2. For details of standard hardware used to construct MGS, see Revised Standard Plan RSP A77M1.
3. For details of steel posts and notched wood blocks used to construct MGS, see Revised Standard Plan RSP A77N2.
4. For additional installation details, see Revised Standard Plan RSP A77N3.
5. MGS post spacing to be 6'-3" center to center, except as otherwise noted.
6. For MGS typical layouts, see the A77P, A77Q and A77R Series of Standard Plans.
7. If railing is connected to terminal system end treatment, use 31" height terminal system end treatment.
8. For MGS end anchor details, see Revised Standard Plans RSP A77S1 and RSP A77T2.
9. For details of MGS transition to bridge railing, see Revised Standard Plan RSP A77U4.
10. For additional details of MGS connection to bridge railings, see Revised Standard Plans RSP A77U1, RSP A77U2 and RSP A77V1.
11. For dike positioning and MGS delineation details, see Revised Standard Plan RSP A77N4.
12. Notched face of block faces steel post.
13. Slotted hole for bolted connection of rail element to block and post. See "Section Thru Rail Element".
14. Slotted holes for splice bolts to overlap ends of rail element. See "Section Thru Rail Element".
15. Install posts in soil.

STATE OF CALIFORNIA
DEPARTMENT OF TRANSPORTATION

MIDWEST GUARDRAIL SYSTEM STANDARD RAILING SECTION (STEEL POST WITH NOTCHED WOOD OR NOTCHED RECYCLED PLASTIC BLOCK)

NO SCALE

RSP A77L2 DATED JULY 19, 2013 SUPPLEMENTS THE STANDARD PLANS BOOK DATED 2010.

REVISED STANDARD PLAN RSP A77L2

2010 REVISED STANDARD PLAN RSP A77L2

7-3-13

Dist	COUNTY	ROUTE	POST MILES TOTAL PROJECT	SHEET No.	TOTAL SHEETS
06	Kin	198	R15.4/R16.0	32	63

Randell D. Hiatt
REGISTERED CIVIL ENGINEER

July 19, 2013
PLANS APPROVAL DATE

REGISTERED PROFESSIONAL ENGINEER
Randell D. Hiatt
No. C50200
Exp. 6-30-15
CIVIL
STATE OF CALIFORNIA

THE STATE OF CALIFORNIA OR ITS OFFICERS OR AGENTS SHALL NOT BE RESPONSIBLE FOR THE ACCURACY OR COMPLETENESS OF SCANNED COPIES OF THIS PLAN SHEET.

TO ACCOMPANY PLANS DATED 1-20-15

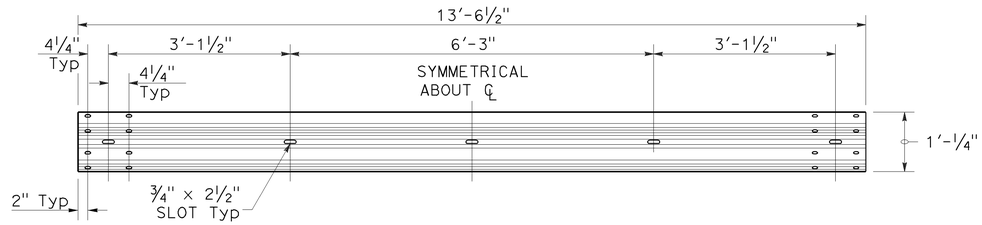

TYPICAL RAIL ELEMENT

NOTE:

1. Slotted holes for splice bolts to overlap ends of rail element.

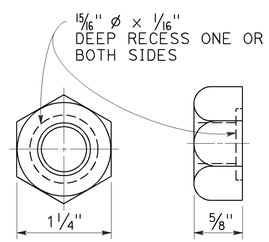

⅝" ø RECESS NUT

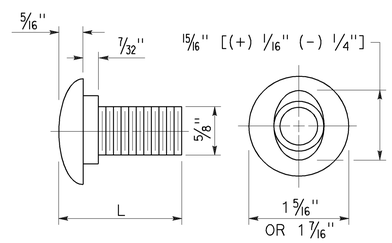

⅝" ø BUTTON HEAD BOLT

BUTTON HEAD BOLT

L	THREAD LENGTH
1⅜"	FULL THREAD LENGTH
2"	FULL THREAD LENGTH
10"	4" Min THREAD LENGTH
18"	4" Min THREAD LENGTH
20"	4" Min THREAD LENGTH
22"	4" Min THREAD LENGTH
26"	4" Min THREAD LENGTH
36"	4" Min THREAD LENGTH
** 2¾"	2" Min THREAD LENGTH
** 19"	4" Min THREAD LENGTH

** For nested rail applications.

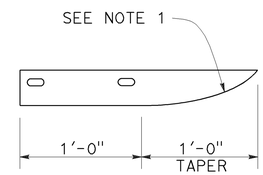

PLAN

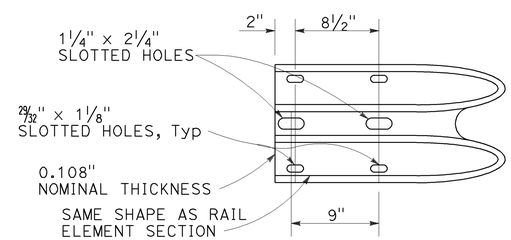

ELEVATION

END CAP
(TYPE A)

STATE OF CALIFORNIA
DEPARTMENT OF TRANSPORTATION

MIDWEST GUARDRAIL SYSTEM STANDARD HARDWARE

NO SCALE

RSP A77M1 DATED JULY 19, 2013 SUPPLEMENTS THE STANDARD PLANS BOOK DATED 2010.

REVISED STANDARD PLAN RSP A77M1

2010 REVISED STANDARD PLAN RSP A77M1

7-3-13

Dist	COUNTY	ROUTE	POST MILES TOTAL PROJECT	SHEET No.	TOTAL SHEETS
06	Kin	198	R15.4/R16.0	33	63

Randell D. Hiatt
REGISTERED CIVIL ENGINEER

November 15, 2013
PLANS APPROVAL DATE

REGISTERED PROFESSIONAL ENGINEER
Randell D. Hiatt
No. C50200
Exp. 6-30-15
CIVIL
STATE OF CALIFORNIA

THE STATE OF CALIFORNIA OR ITS OFFICERS OR AGENTS SHALL NOT BE RESPONSIBLE FOR THE ACCURACY OR COMPLETENESS OF SCANNED COPIES OF THIS PLAN SHEET.

TO ACCOMPANY PLANS DATED 1-20-15

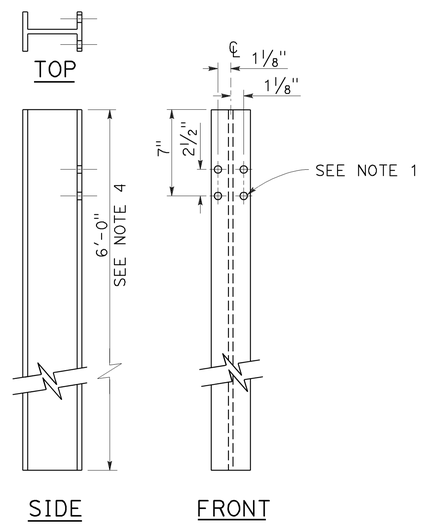

W6 x 9 OR W6 x 8.5
STEEL POST
See Note 4

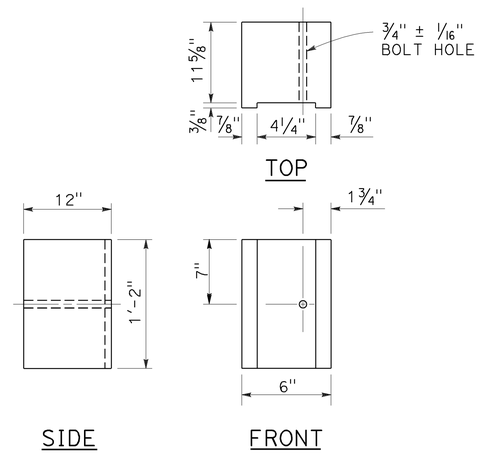

6" x 12"
NOTCHED WOOD BLOCK
See Notes 2 and 3

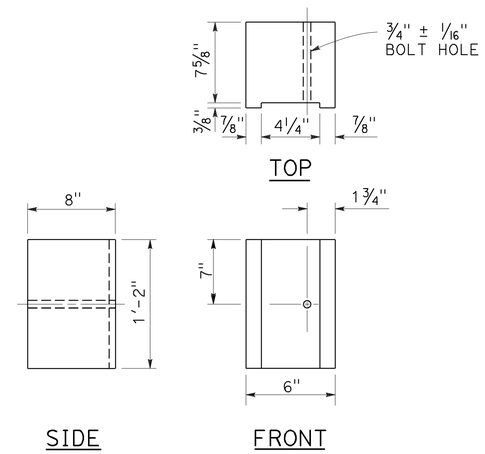

6" x 8"
NOTCHED WOOD BLOCK
Only for use with metal beam guard railing. See Note 5

NOTES:

1. All holes in steel post shall be 13/16" Dia maximum.
2. Dimensions shown for wood block are nominal.
3. Notched face of block faces steel post.
4. 6'-0" length posts to be used for typical roadway installation. See Revised Standard Plan RSP A77N3.
5. See Revised Standard Plan RSP A77L3 for use of 6" x 8" and 8" x 8" notched wood blocks.
6. This post and 8" x 12" block combination to be used for line post sections of MGS on narrow roadways and where strengthened line post sections of MGS are warranted to shield fixed objects.

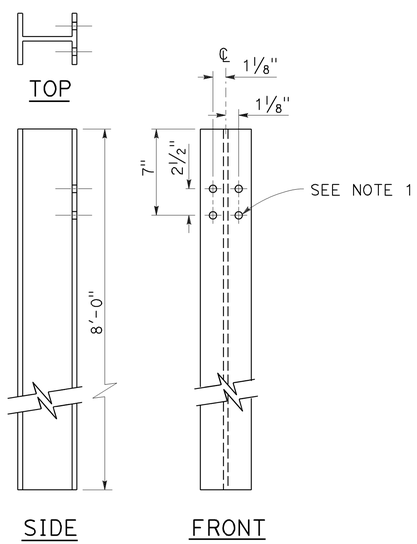

W6 x 15
STEEL POST
See Note 6

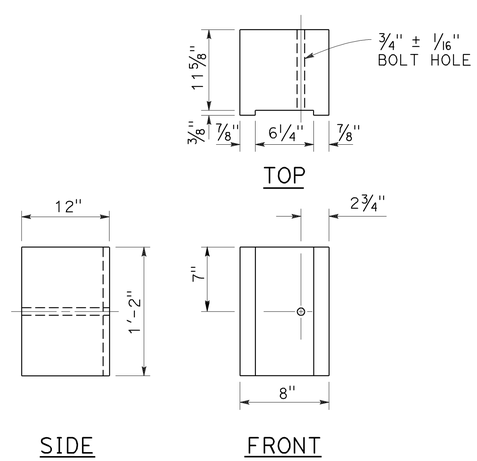

8" x 12"
NOTCHED WOOD BLOCK
See Notes 2 and 3

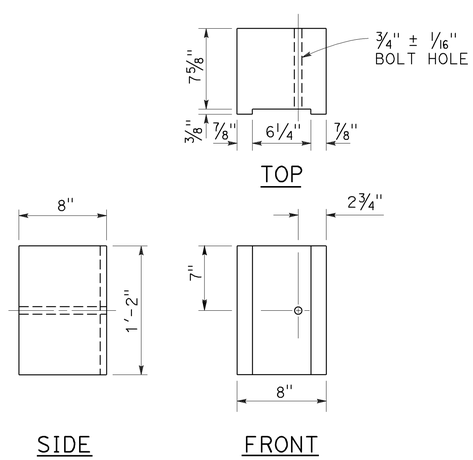

8" x 8"
NOTCHED WOOD BLOCK
Only for use with metal beam guard railing. See Note 5

STATE OF CALIFORNIA
DEPARTMENT OF TRANSPORTATION

MIDWEST GUARDRAIL SYSTEM STEEL POST AND NOTCHED WOOD BLOCK DETAILS

NO SCALE

RSP A77N2 DATED NOVEMBER 15, 2013 SUPERSEDES RSP A77N2
DATED JULY 19, 2013 THAT SUPPLEMENTS THE STANDARD PLANS BOOK DATED 2010.

REVISED STANDARD PLAN RSP A77N2

2010 REVISED STANDARD PLAN RSP A77N2

10-29-13

Dist	COUNTY	ROUTE	POST MILES TOTAL PROJECT	SHEET No.	TOTAL SHEETS
06	Kin	198	R15.4/R16.0	34	63

Randell D. Hiatt
REGISTERED CIVIL ENGINEER

November 15, 2013
PLANS APPROVAL DATE

REGISTERED PROFESSIONAL ENGINEER
Randell D. Hiatt
No. C50200
Exp. 6-30-15
CIVIL
STATE OF CALIFORNIA

THE STATE OF CALIFORNIA OR ITS OFFICERS OR AGENTS SHALL NOT BE RESPONSIBLE FOR THE ACCURACY OR COMPLETENESS OF SCANNED COPIES OF THIS PLAN SHEET.

TO ACCOMPANY PLANS DATED 1-20-15

2010 REVISED STANDARD PLAN RSP A77N3

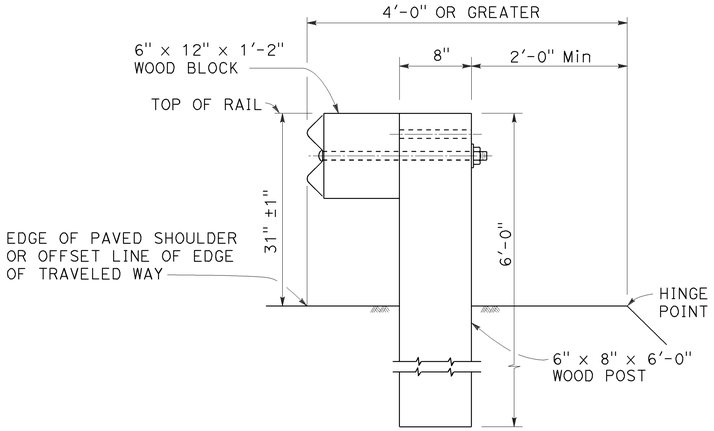

DETAIL A

TYPICAL ROADWAY INSTALLATION

See Note 1

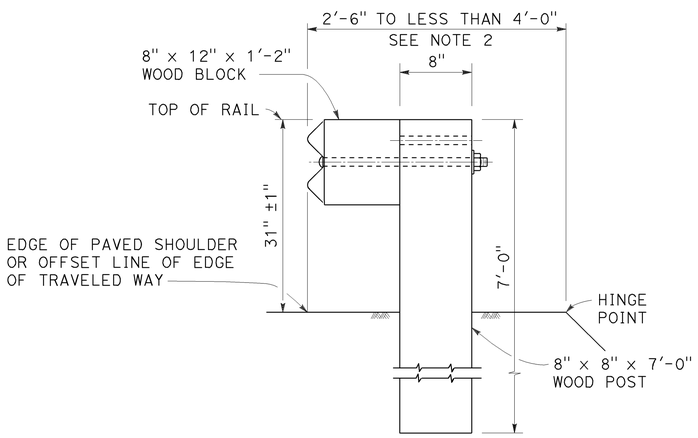

DETAIL B

NARROW ROADWAY INSTALLATION

See Note 1

POST EMBEDMENT

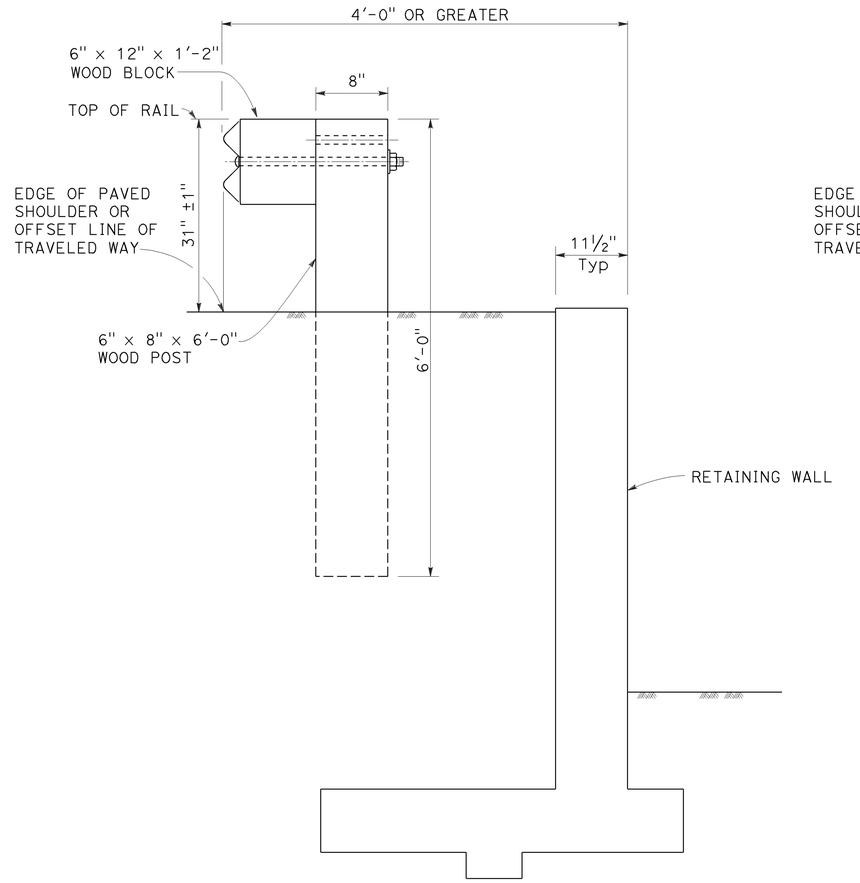

DETAIL C

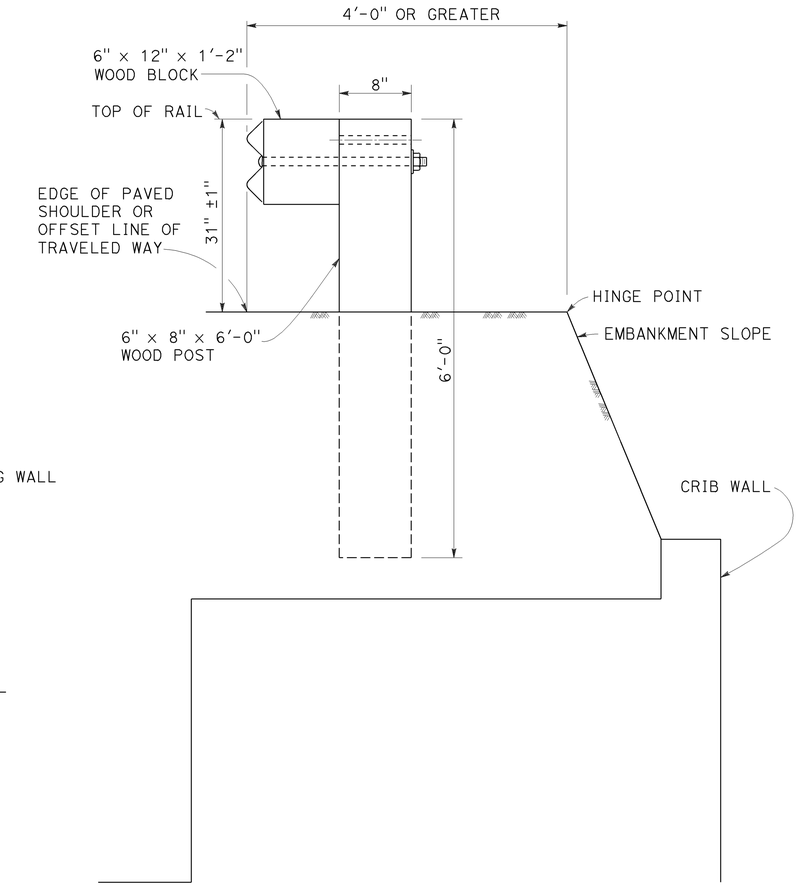

DETAIL D

INSTALLATION AT EARTH RETAINING WALLS

NOTES:

1. These installation details also applicable to steel line post installations. For Detail A, C, and D, where steel line post installations are constructed, W6 x 8.5 or W6 x 9 steel post, 6'-0" in length, with 6" x 12" x 1'-2" notched wood blocks or notched recycled plastic blocks are to be used in place of the size of wood post and wood block shown. For Detail B, where steel line post installations are constructed, W6 x 15 steel post, 8'-0" in length, with 8" x 12" x 1'-2" notched wood blocks or notched recycled plastic blocks are to be used in place of the size of wood post and wood block shown. For additional installation details, see Revised Standard Plan RSP A77L1 and RSP A77L2.
2. Where the distance between the face of the rail and the hinge point is less than 2'-6", see the Project Plans for special details.
3. For dike positioning with MGS installations, see Revised Standard Plan RSP A77N4.

STATE OF CALIFORNIA
DEPARTMENT OF TRANSPORTATION

MIDWEST GUARDRAIL SYSTEM TYPICAL LINE POST EMBEDMENT AND HINGE POINT OFFSET DETAILS

NO SCALE

RSP A77N3 DATED NOVEMBER 15, 2013 SUPERSEDES RSP A77N3 DATED JULY 19, 2013 THAT SUPPLEMENTS THE STANDARD PLANS BOOK DATED 2010.

REVISED STANDARD PLAN RSP A77N3

Dist	COUNTY	ROUTE	POST MILES TOTAL PROJECT	SHEET No.	TOTAL SHEETS
06	Kin	198	R15.4/R16.0	35	63

Randell D. Hiatt
REGISTERED CIVIL ENGINEER

July 19, 2013
PLANS APPROVAL DATE

REGISTERED PROFESSIONAL ENGINEER
Randell D. Hiatt
No. C50200
Exp. 6-30-15
CIVIL
STATE OF CALIFORNIA

THE STATE OF CALIFORNIA OR ITS OFFICERS OR AGENTS SHALL NOT BE RESPONSIBLE FOR THE ACCURACY OR COMPLETENESS OF SCANNED COPIES OF THIS PLAN SHEET.

TO ACCOMPANY PLANS DATED 1-20-15

NOTES:

1. When necessary to place dike more than 7" in front of face of MGS, only Type C dike may be used. For dike details, see Revised Standard Plan RSP A87B.
2. For standard railing post embedment, see Revised Standard Plan RSP A77N3.
3. MGS delineation to be used where shown on the Project Plans.
4. When dike or curb is placed under MGS, the maximum height of the dike or curb shall be 6". Mountable dike should not be used. For dike and curb details, see Revised Standard Plans RSP A87A and RSP A87B.
5. For details of typical distance between the face of rail and hinge point, see Revised Standard Plan RSP A77N3.
6. For steel line posts, use 1/4 - 20 self-tapping screws in 0.22" diameter holes or 1/4" bolts in 9/32" diameter holes.

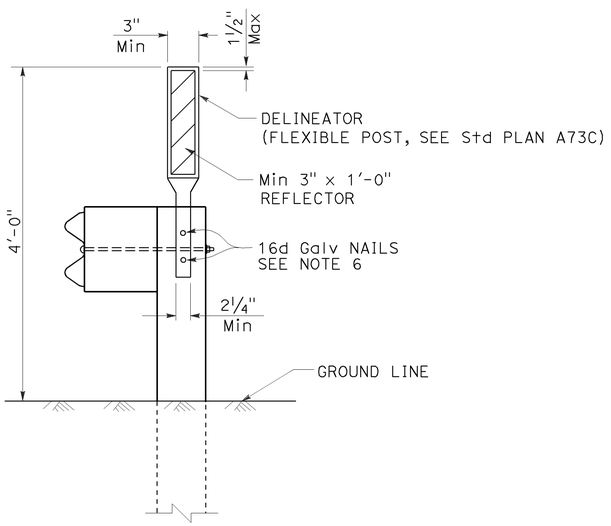

MGS DELINEATION
See Note 3

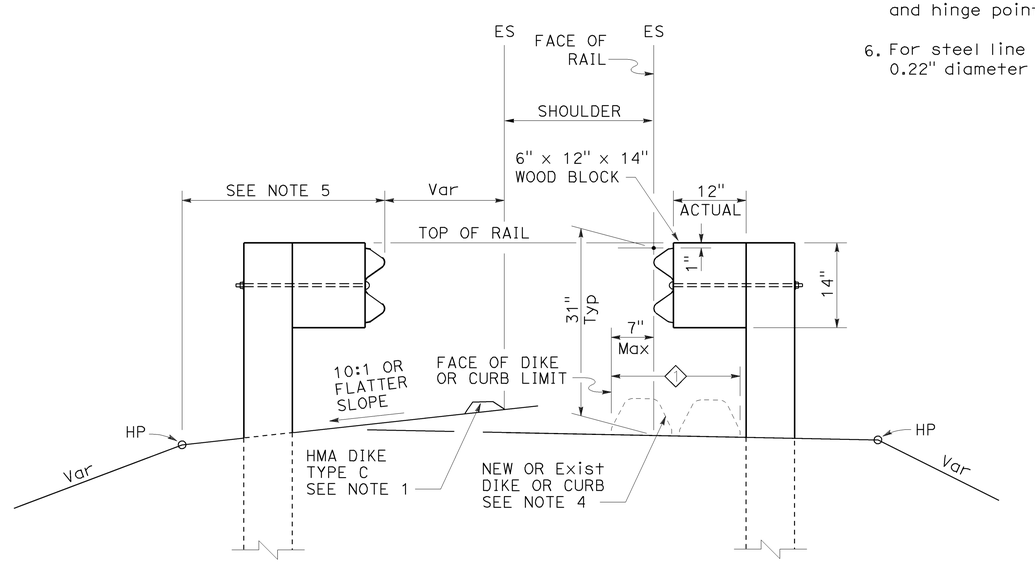

DIKE POSITIONING
See Note 1

1 PERMISSIBLE DIKE OR CURB PLACEMENT AREA

STATE OF CALIFORNIA
DEPARTMENT OF TRANSPORTATION

MIDWEST GUARDRAIL SYSTEM TYPICAL RAILING DELINEATION AND DIKE POSITIONING DETAILS

NO SCALE

RSP A77N4 DATED JULY 19, 2013 SUPPLEMENTS THE STANDARD PLANS BOOK DATED 2010.

REVISED STANDARD PLAN RSP A77N4

2010 REVISED STANDARD PLAN RSP A77N4

7-10-13

Dist	COUNTY	ROUTE	POST MILES TOTAL PROJECT	SHEET No.	TOTAL SHEETS
06	Kin	198	R15.4/R16.0	36	63

Randell D. Hiatt
REGISTERED CIVIL ENGINEER

July 19, 2013
PLANS APPROVAL DATE

REGISTERED PROFESSIONAL ENGINEER
Randell D. Hiatt
No. C50200
Exp. 6-30-15
CIVIL
STATE OF CALIFORNIA

THE STATE OF CALIFORNIA OR ITS OFFICERS OR AGENTS SHALL NOT BE RESPONSIBLE FOR THE ACCURACY OR COMPLETENESS OF SCANNED COPIES OF THIS PLAN SHEET.

TO ACCOMPANY PLANS DATED 1-20-15

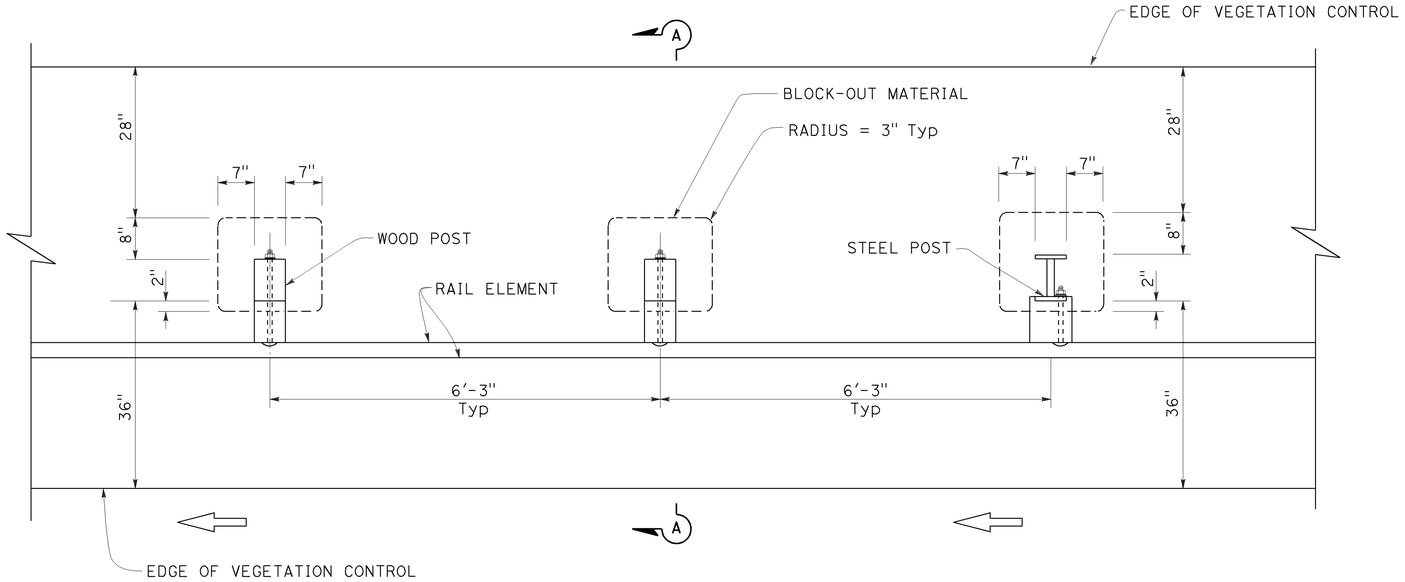

PLAN

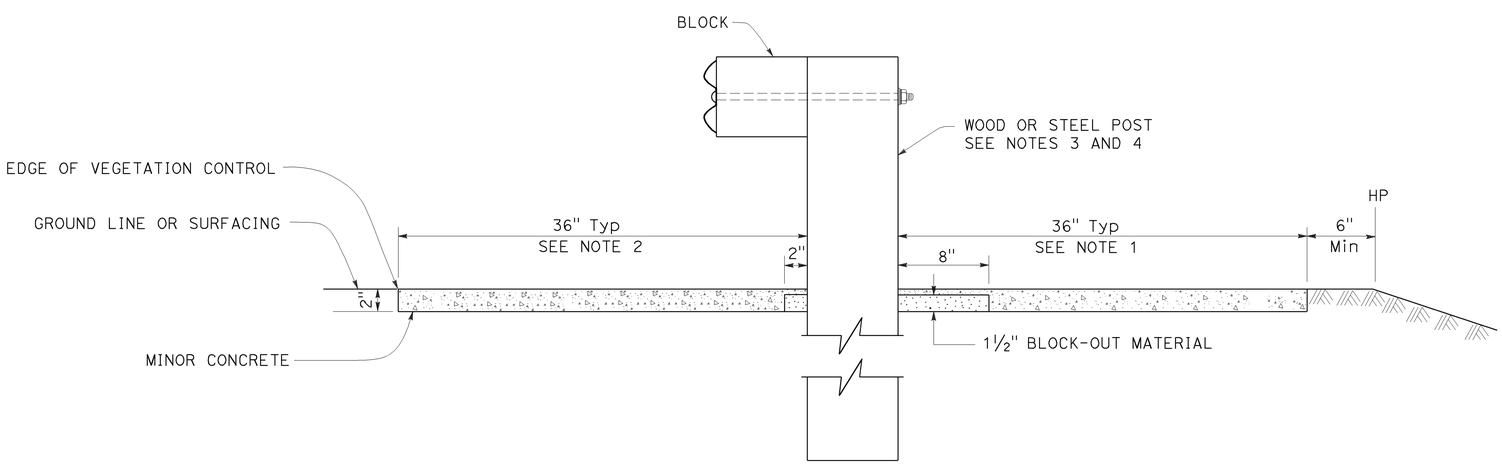

SECTION A-A

NOTES:

1. Where the distance between back of post and hinge point is less than 42", construct vegetation control to 6" from hinge point while maintaining the 8" block-out at back of post. If the 8" block-out at back of post can not be maintained, construct vegetation control flush with the back edge of post.
2. Where dike is constructed under railing, construct vegetation control to back edge of dike. Where paved shoulder is constructed within 36" in front of the post, construct vegetation control to the edge of paved shoulder.
3. For wood post sizes, see Revised Standard Plan RSP A77N1.
4. For steel post sizes, see Revised Standard Plan RSP A77N2.
5. For details not shown, see Revised Standard Plans RSP A77L1 and RSP A77L2.

STATE OF CALIFORNIA
DEPARTMENT OF TRANSPORTATION

MIDWEST GUARDRAIL SYSTEM TYPICAL VEGETATION CONTROL STANDARD RAILING SECTION

NO SCALE

RSP A77N5 DATED JULY 19, 2013 SUPPLEMENTS THE STANDARD PLANS BOOK DATED 2010.

REVISED STANDARD PLAN RSP A77N5

2010 REVISED STANDARD PLAN RSP A77N5

7-3-13

Dist	COUNTY	ROUTE	POST MILES TOTAL PROJECT	SHEET No.	TOTAL SHEETS
06	Kin	198	R15.4/R16.0	37	63

Randell D. Hiatt
REGISTERED CIVIL ENGINEER

July 19, 2013
PLANS APPROVAL DATE

REGISTERED PROFESSIONAL ENGINEER
Randell D. Hiatt
No. C50200
Exp. 6-30-15
CIVIL
STATE OF CALIFORNIA

THE STATE OF CALIFORNIA OR ITS OFFICERS OR AGENTS SHALL NOT BE RESPONSIBLE FOR THE ACCURACY OR COMPLETENESS OF SCANNED COPIES OF THIS PLAN SHEET.

TO ACCOMPANY PLANS DATED 1-20-15

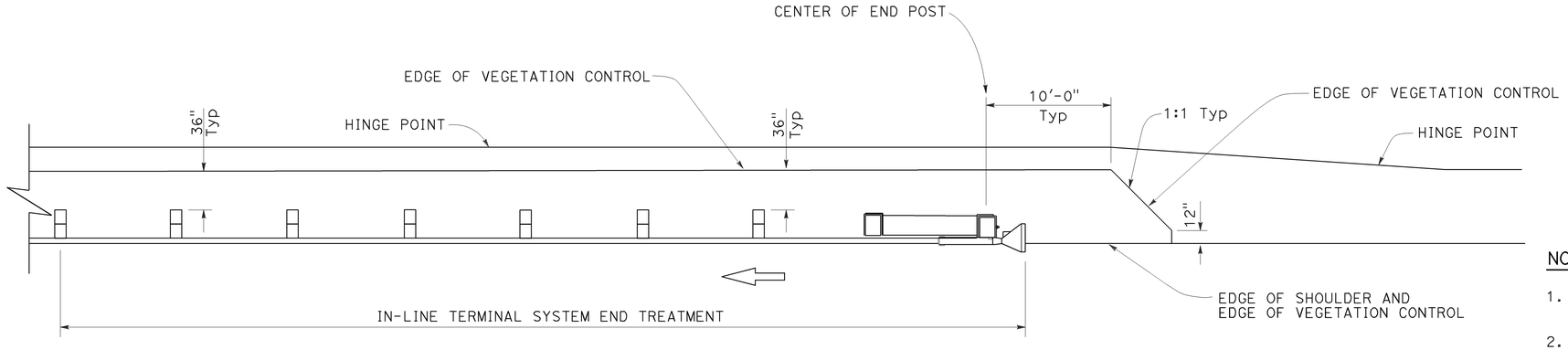

PLAN

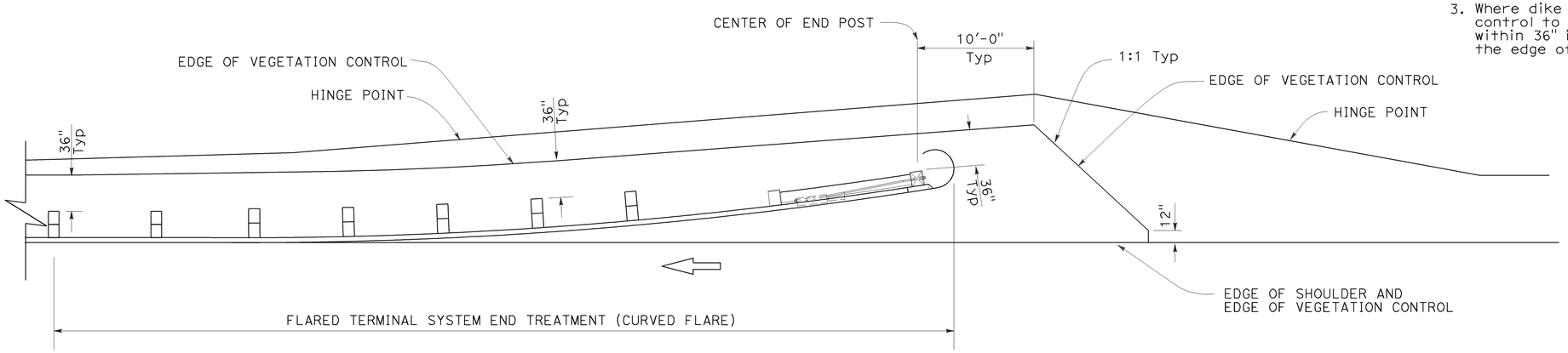

PLAN

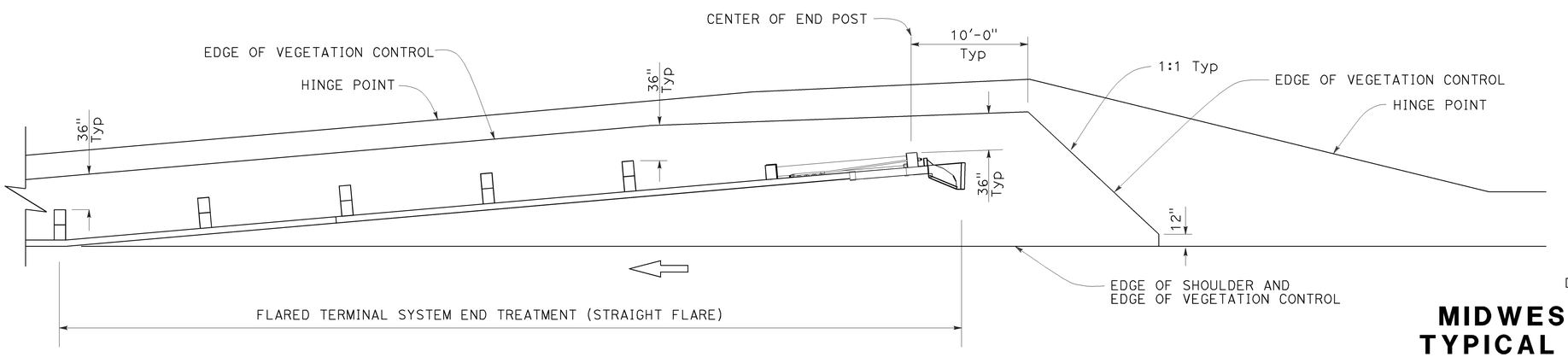

PLAN

NOTES:

1. See Revised Standard Plan RSP A77N5 for additional vegetation control details.
2. Where the distance between back of post and hinge point is less than 42", construct vegetation control to 6" from hinge point while maintaining the 8" block-out at back of post. If the 8" block-out at back of post can not be maintained, construct vegetation control flush with the back edge of post.
3. Where dike is constructed under railing, construct vegetation control to back edge of dike. Where paved shoulder is constructed within 36" in front of the post, construct vegetation control to the edge of paved shoulder.

STATE OF CALIFORNIA
DEPARTMENT OF TRANSPORTATION

MIDWEST GUARDRAIL SYSTEM TYPICAL VEGETATION CONTROL FOR TERMINAL SYSTEM END TREATMENTS

NO SCALE

RSP A77N6 DATED JULY 19, 2013 SUPPLEMENTS THE STANDARD PLANS BOOK DATED 2010.

REVISED STANDARD PLAN RSP A77N6

2010 REVISED STANDARD PLAN RSP A77N6

6-12-13

Dist	COUNTY	ROUTE	POST MILES TOTAL PROJECT	SHEET No.	TOTAL SHEETS
06	Kin	198	R15.4/R16.0	38	63

Randell D. Hiatt
REGISTERED CIVIL ENGINEER

July 19, 2013
PLANS APPROVAL DATE

REGISTERED PROFESSIONAL ENGINEER
Randell D. Hiatt
No. C50200
Exp. 6-30-15
CIVIL
STATE OF CALIFORNIA

THE STATE OF CALIFORNIA OR ITS OFFICERS OR AGENTS SHALL NOT BE RESPONSIBLE FOR THE ACCURACY OR COMPLETENESS OF SCANNED COPIES OF THIS PLAN SHEET.

TO ACCOMPANY PLANS DATED 1-20-15

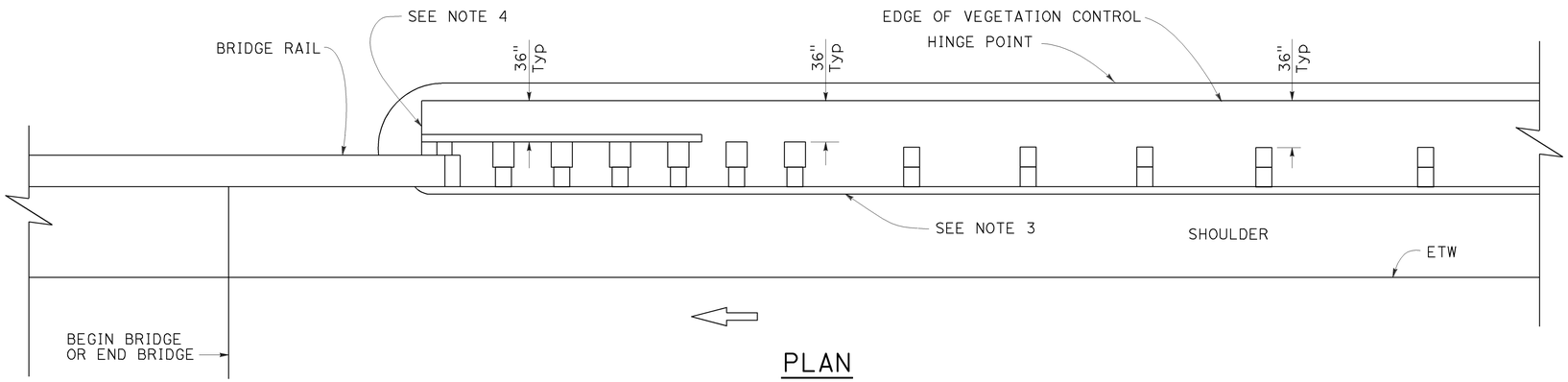

PLAN

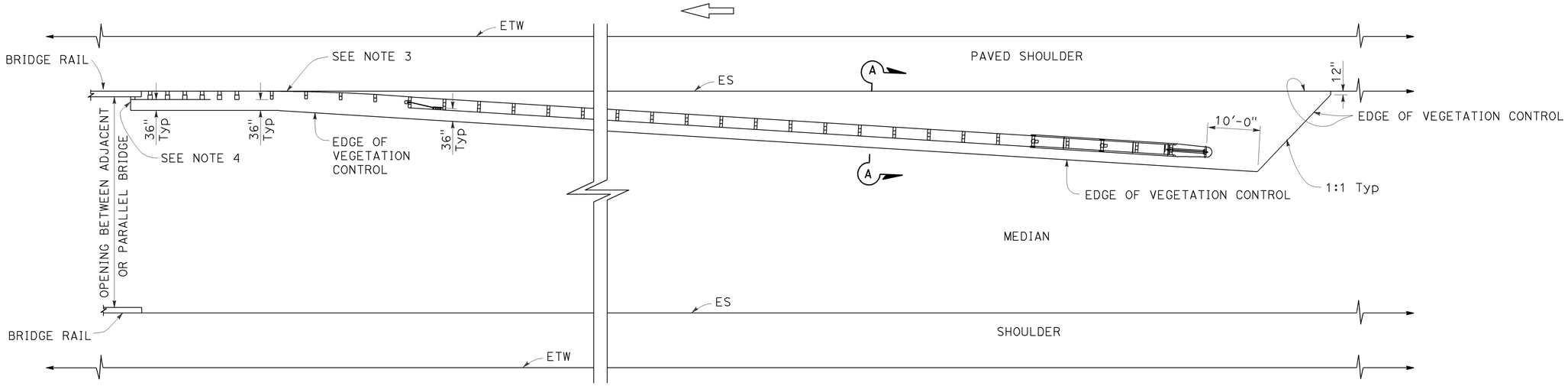

PLAN

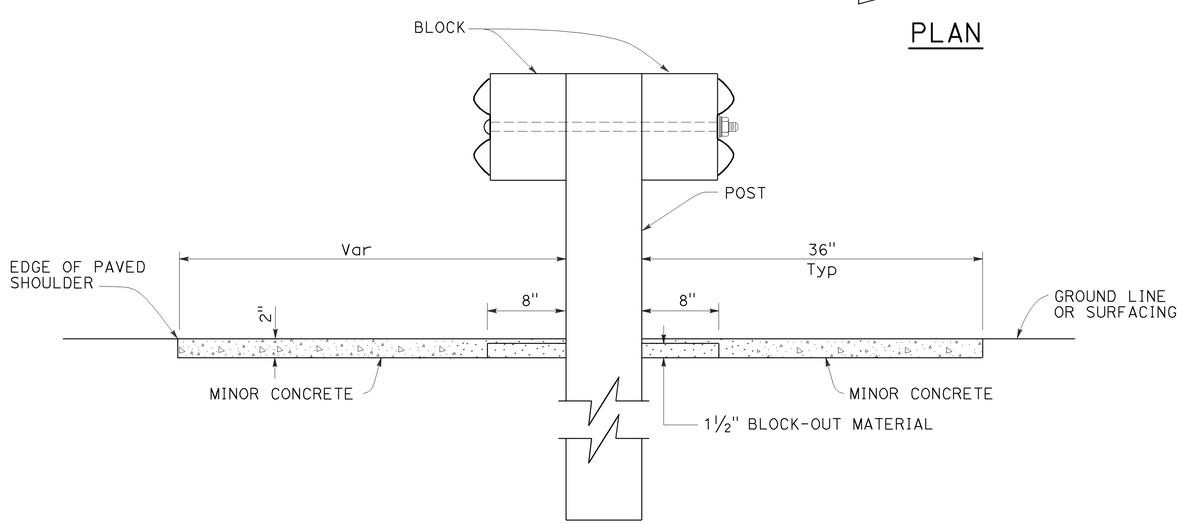

SECTION A-A

NOTES:

1. See Revised Standard Plan RSP A77N5 for additional vegetation control details.
2. Where the distance between back of post and hinge point is less than 42", construct vegetation control to 6" from hinge point while maintaining the 8" block-out at back of post. If the 8" block-out at back of post can not be maintained, construct vegetation control flush with the back edge of post.
3. Where dike is constructed under railing, construct vegetation control to back edge of dike. Where paved shoulder is constructed within 36" in front of the post, construct vegetation control to the edge of paved shoulder.
4. End vegetation control at end of backside rail element.

STATE OF CALIFORNIA
DEPARTMENT OF TRANSPORTATION

MIDWEST GUARDRAIL SYSTEM TYPICAL VEGETATION CONTROL AT STRUCTURE APPROACH

NO SCALE

RSP A77N7 DATED JULY 19, 2013 SUPPLEMENTS THE STANDARD PLANS BOOK DATED 2010.

REVISED STANDARD PLAN RSP A77N7

2010 REVISED STANDARD PLAN RSP A77N7

6-12-13

Dist	COUNTY	ROUTE	POST MILES TOTAL PROJECT	SHEET No.	TOTAL SHEETS
06	Kin	198	R15.4/R16.0	39	63

Randell D. Hiatt
REGISTERED CIVIL ENGINEER

July 19, 2013
PLANS APPROVAL DATE

REGISTERED PROFESSIONAL ENGINEER
Randell D. Hiatt
No. C50200
Exp. 6-30-15
CIVIL
STATE OF CALIFORNIA

THE STATE OF CALIFORNIA OR ITS OFFICERS OR AGENTS SHALL NOT BE RESPONSIBLE FOR THE ACCURACY OR COMPLETENESS OF SCANNED COPIES OF THIS PLAN SHEET.

TO ACCOMPANY PLANS DATED 1-20-15

2010 REVISED STANDARD PLAN RSP A77Q1

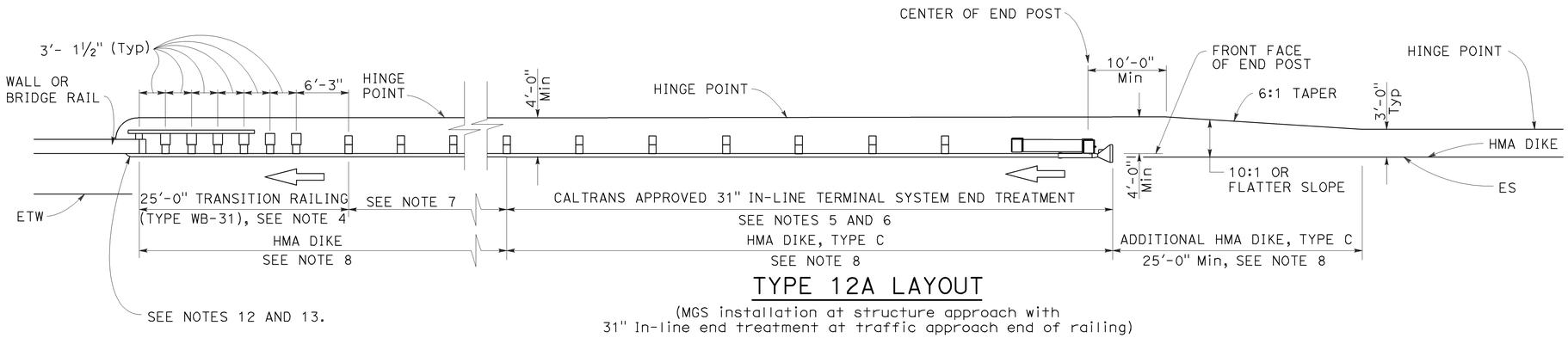

TYPE 12A LAYOUT

(MGS installation at structure approach with
31" In-line end treatment at traffic approach end of railing)
See Notes 9

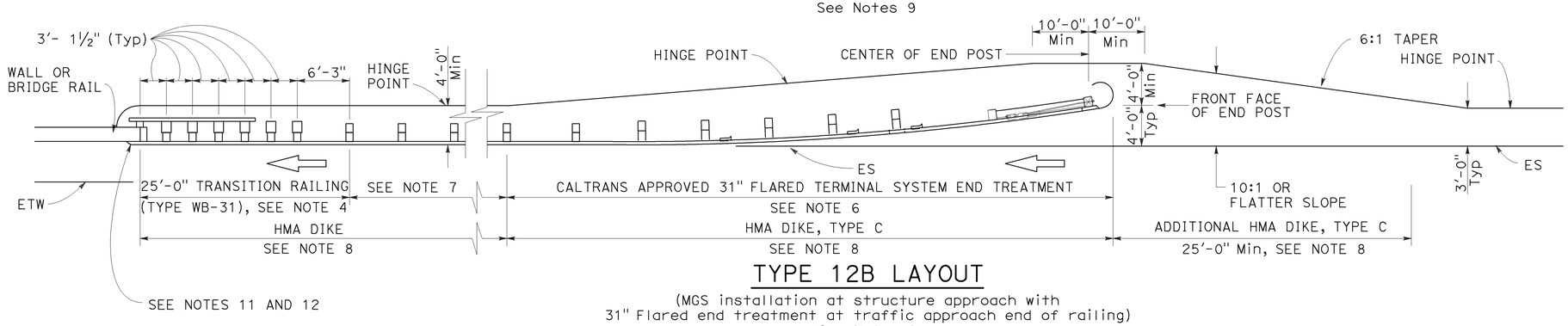

TYPE 12B LAYOUT

(MGS installation at structure approach with
31" Flared end treatment at traffic approach end of railing)
See Notes 9

NOTES:

1. Line post, blocks and hardware to be used are shown on Revised Standard Plans RSP A77L1, RSP A77L2, RSP A77M1, RSP A77N1 and RSP A77N2.
2. MGS post spacing to be 6'-3" center to center, except as otherwise noted.
3. Except as noted, line posts are 6" x 8" x 6'-0" wood with 6" x 12" x 1'-2" wood blocks. W6 x 8.5 or W6 x 9 steel posts, 6'-0" in length, with 6" x 12" x 1'-2" notched wood blocks or plastic blocks may be used for 6" x 8" x 6'-0" wood posts with 6" x 12" x 1'-2" wood blocks where applicable and when specified.
4. For Transition Railing (Type WB-31) details for Types 12A and 12B Layouts, see Revised Standard Plan RSP A77U4.
5. 31" in-line terminal system end treatments are used where site conditions will not accommodate a 31" flared end treatment.
6. The type 31" of terminal system end treatment to be used will be shown on the Project Plans.
7. Dependent on site conditions (embankment height, side slopes, or other fixed objects), it may be advisable to construct additional guard railing (a length equal to multiples of 12'-6" with 6'-3" post spacing) between the transition railing and end treatment. A 12.5 degree angle of departure can be drawn on the Project Plans from the edge of traveled way through the outer most point of the fixed object to determine the additional length of railing needed.
8. Where placement of dike is required with guard railing installations, see Revised Standard Plan RSP A77N4 for dike positioning details.
9. Type 12A or Type 12B Layouts are typically used:
   a. To the right of approaching traffic, at the end of a structure, on two-lane conventional highway where the roadbed width across the structure is less than 40 feet.
   b. To the left of approaching traffic, at the end of a structure, on two-lane conventional highway where the roadbed width across the structure is less than 40 feet.
   c. To the right of approaching traffic at the end of each structure on multilane freeways or expressways with separate adjacent or parallel bridges.
   d. To the right of approaching traffic at the end of the structure on multilane freeways or expressways with decked median on the bridge.
10. See Revised Standard Plan RSP A77Q3 for typical layout used left of approaching traffic at the ends of each structure on multilane freeways or expressways with separate adjacent or parallel bridges.
11. For additional details of typical connections to bridge rail, see Connection Detail AA on Revised Standard Plans RSP A77U1 and RSP A77U2 and Connection Detail FF on Revised Standard Plans RSP A77V1 and RSP A77V2.
12. For additional details of a typical connection to walls or abutments, see Revised Standard Plan RSP A77U3.

STATE OF CALIFORNIA
DEPARTMENT OF TRANSPORTATION

MIDWEST GUARDRAIL SYSTEM TYPICAL LAYOUTS FOR STRUCTURE APPROACH

NO SCALE

RSP A77Q1 DATED JULY 19, 2013 SUPPLEMENTS THE STANDARD PLANS BOOK DATED 2010.

REVISED STANDARD PLAN RSP A77Q1

Dist	COUNTY	ROUTE	POST MILES TOTAL PROJECT	SHEET No.	TOTAL SHEETS
06	Kin	198	R15.4/R16.0	40	63

Randell D. Hiatt
REGISTERED CIVIL ENGINEER

January 23, 2015
PLANS APPROVAL DATE

REGISTERED PROFESSIONAL ENGINEER
Randell D. Hiatt
No. C50200
Exp. 6-30-15
CIVIL
STATE OF CALIFORNIA

THE STATE OF CALIFORNIA OR ITS OFFICERS OR AGENTS SHALL NOT BE RESPONSIBLE FOR THE ACCURACY OR COMPLETENESS OF SCANNED COPIES OF THIS PLAN SHEET.

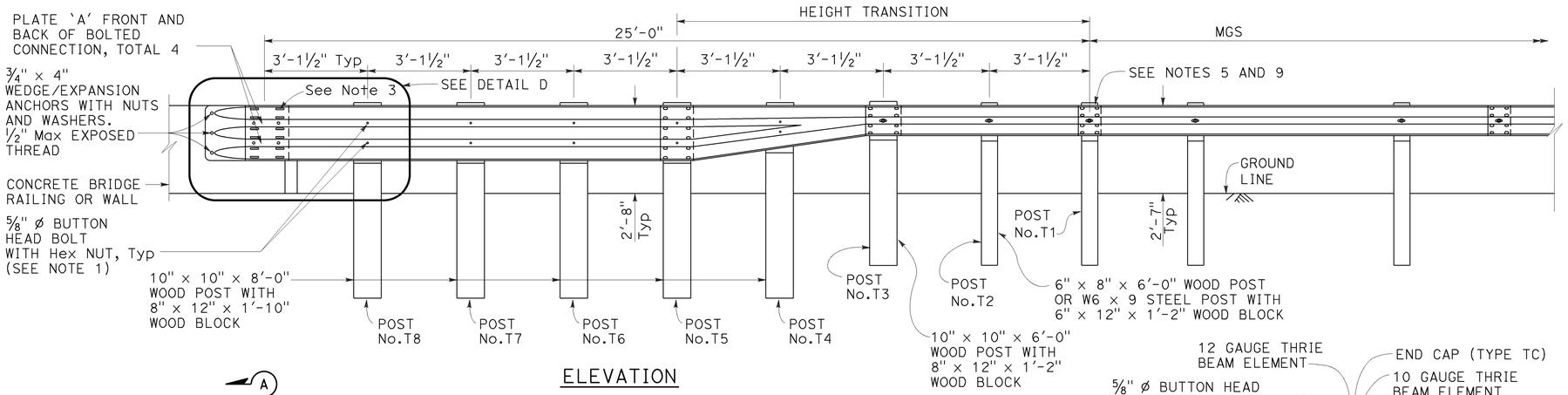

ELEVATION

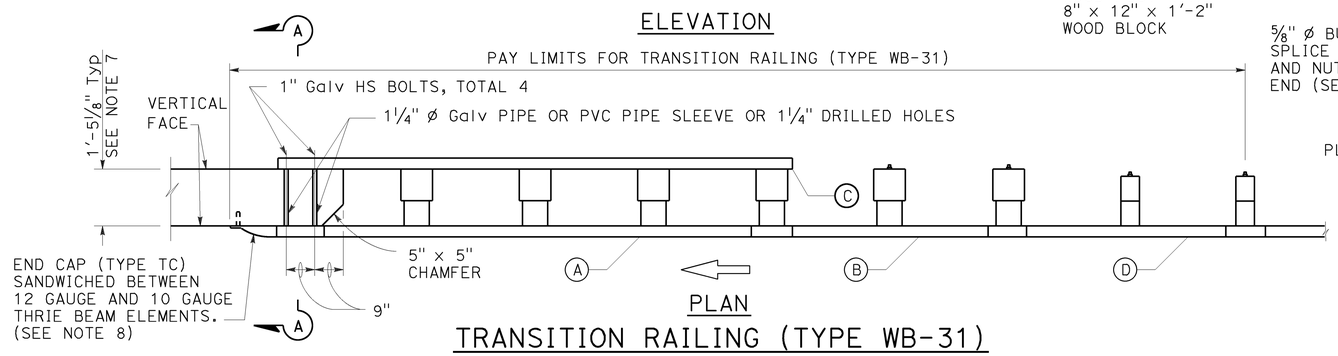

PLAN

TRANSITION RAILING (TYPE WB-31)

(No Blockout Attachment)

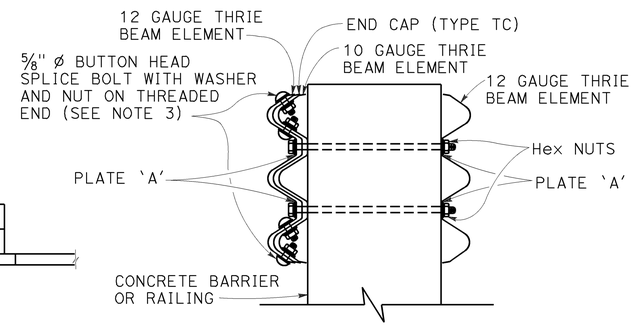

SECTION A-A

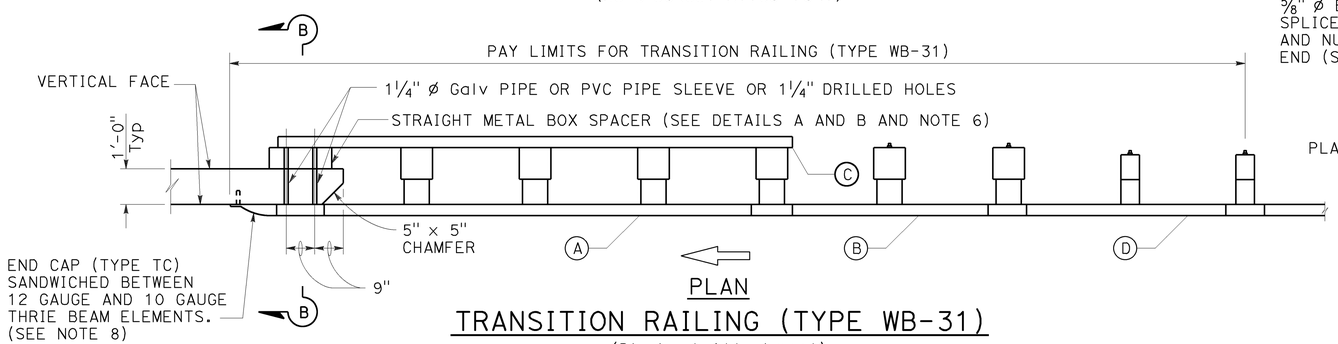

PLAN

TRANSITION RAILING (TYPE WB-31)

(Blockout Attachment)

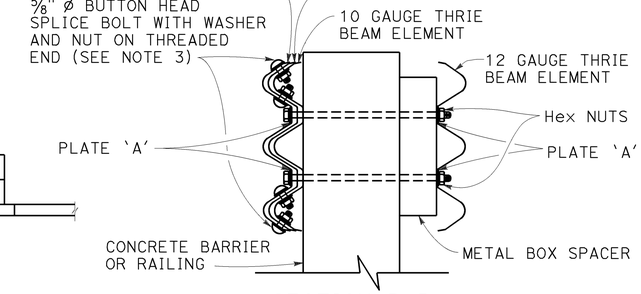

SECTION B-B

NOTES:

TO ACCOMPANY PLANS DATED 1-20-15

1. Use 5/8" ø Button head bolts and hex nuts for connections to posts. No washer on rail face for bolted connections to post.
2. The nested rail elements, end cap, and 'W' beam to thrie beam element may be spliced together prior to bolting the elements to the wood post and concrete barrier or railing.
3. Exterior splice bolt holes for rail element splices at Post No. T5 and the connection to the concrete barrier or railing shall be the standard 29/32" x 1 1/8" slot size. Interior splice bolt holes at these locations may be increased up to 1 1/4" ø. Only the top 4 and the bottom 4 splice bolts with washers and nuts are required for rail splices at Post No. T5 and the connection to the concrete barrier or railing.
4. The top elevation of Posts No. T2 through No. T7 shall not project more than 1" above the top elevation of the rail element.
5. Typically, the railing connected to Transition Railing (Type WB-31) will be either standard railing section of MGS with height transition ratio of 150:1 or a Caltrans approved 31" end treatment attached to Post No. T1.
6. The depth of the metal box spacer varies from the 9 1/8" to 1 1/2" and is dependent on the width of the concrete railing or wall. The combined dimension for the depth of the metal box spacer plus the width of railing or wall is typically 21 1/8". Where the space between the backside of the concrete railing or wall and the rear thrie beam element is less than 1 1/2", metal plates similar to Plate 'A' are to be used as spacers.
7. Where the width of the concrete railing or wall is greater than 17 1/8", wood blocks are to be used to fill the space created between the backside of Posts No. T5 through No. T8 and the rear thrie beam element. These wood blocks shall be 8" in width and 1'-2" in length. The dimension between the front thrie beam element and the rear thrie beam element is to match the width of the concrete railing or wall.
8. End cap may be installed over 12 gauge and 10 gauge thrie beam elements where transition railing is installed on the departure end of bridge railing.
9. Conform standard railing section height to 31" at Post No. T1 using height transition ratio of 150:1.

LEGEND:

(A) NESTED THRIE BEAM ELEMENTS (ONE 12 GAUGE ELEMENT NESTED OVER ONE 10 GAUGE ELEMENT).

(B) ONE ASYMMETRICAL 10 GAUGE "W" BEAM TO THRIE BEAM ELEMENT.

(C) ONE 12 GAUGE THRIE BEAM ELEMENT.

(D) ONE 10 GAUGE "W" BEAM RAIL ELEMENT (7'-3 1/2" LENGTH)

10 GAUGE = 0.138" THICK
12 GAUGE = 0.108" THICK

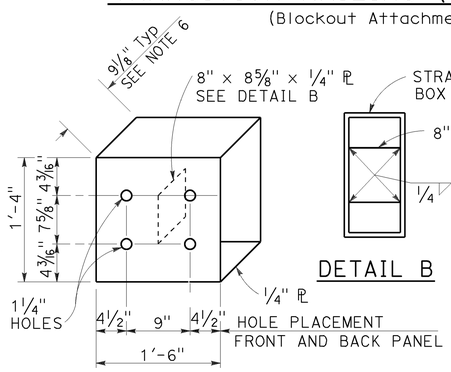

DETAIL A

STRAIGHT METAL BOX SPACER

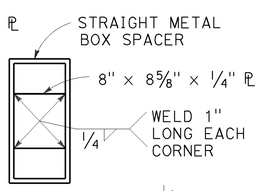

DETAIL B

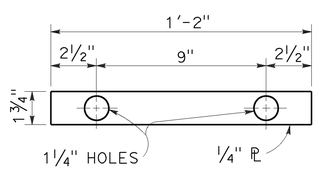

DETAIL C

PLATE 'A'

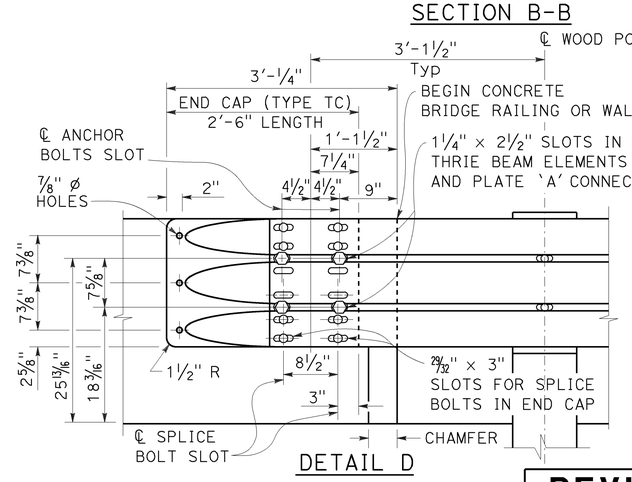

DETAIL D

STATE OF CALIFORNIA
DEPARTMENT OF TRANSPORTATION

MIDWEST GUARDRAIL SYSTEM TRANSITION RAILING (TYPE WB-31)

NO SCALE

RSP A77U4 DATED JANUARY 23, 2015 SUPERSEDES RSP A77U4 DATED NOVEMBER 15, 2013 AND RSP A77U4 DATED JULY 19, 2013 THAT SUPPLEMENTS THE STANDARD PLANS BOOK DATED 2010.

REVISED STANDARD PLAN RSP A77U4

2010 REVISED STANDARD PLAN RSP A77U4

1-8-15

Dist	COUNTY	ROUTE	POST MILES TOTAL PROJECT	SHEET No.	TOTAL SHEETS
06	Kin	198	R15.4/R16.0	41	63

Gregory A. Balzer
LICENSED LANDSCAPE ARCHITECT

July 19, 2013
PLANS APPROVAL DATE

LICENSED LANDSCAPE ARCHITECT
Gregory A. Balzer 2576
Gregory A. Balzer
6-28-13
Renewal Date
2-28-15
Renewal Date
7-19-13
Date
STATE OF CALIFORNIA

THE STATE OF CALIFORNIA OR ITS OFFICERS OR AGENTS SHALL NOT BE RESPONSIBLE FOR THE ACCURACY OR COMPLETENESS OF SCANNED COPIES OF THIS PLAN SHEET.

TO ACCOMPANY PLANS DATED 1-20-15

A

AB	AGGREGATE BASE
ABS	ACRYLONITRILE-BUTADIENE-STYRENE
AC	ASPHALT CONCRETE
ACC	ARMOR-CLAD CONDUCTORS
Adj	ADJACENT/ADJUSTABLE
AIC	AUXILIARY IRRIGATION CONTROLLER
Alt	ALTERNATIVE
AMEND	AMENDMENT
ARV	AIR RELEASE VALVE
AUTO	AUTOMATIC
AUX	AUXILIARY
AVB	ATMOSPHERIC VACUUM BREAKER

B

B&B	BALLED AND BURLAPPED
B/B	BRASS/BRONZE
B/B/PL	BRASS/BRONZE/PLASTIC
B/PL	BRASS/PLASTIC
BFM	BONDED FIBER MATRIX
Bit Ctd	BITUMINOUS COATED
BP	BOOSTER PUMP
BPA	BACKFLOW PREVENTER ASSEMBLY
BPE	BACKFLOW PREVENTER ENCLOSURE
BV	BALL VALVE

C

C	CONDUIT
CAP	CORRUGATED ALUMINUM PIPE
CARV	COMBINATION AIR RELEASE VALVE
CB	COUPLING BAND
CCA	CAM COUPLER ASSEMBLY
CEC	CONTROLLER ENCLOSURE CABINET
CHDPE	CORRUGATED HIGH DENSITY POLYETHYLENE
CL	CHAIN LINK
CNC	CONTROL AND NEUTRAL CONDUCTORS
Conc	CONCRETE
CP	COPPER PIPE
CS	COMPOST SOCK
CSP	CORRUGATED STEEL PIPE
CST	CENTER STRIP
CV	CHECK VALVE

D

Dia	DIAMETER
DIP	DUCTILE IRON PIPE
DIT	DRIP IRRIGATION TUBING
DG	DECOMPOSED GRANITE
DN	DIAMETER NOMINAL
DVA	DRIP VALVE ASSEMBLY

E

EC	EROSION CONTROL
ECTC	EROSION CONTROL TECHNOLOGY COUNCIL
Elect	ELECTRIC/ELECTRICAL
Elev	ELEVATION
ELL	ELBOW
ENCL	ENCLOSURE
EP	EDGE OF PAVEMENT
ES	EDGE OF SHOULDER
EST	END STRIP
ESTB	ESTABLISHMENT
ETW	EDGE OF TRAVELED WAY

F

F	FULL CIRCLE
F/P	FULL/PART CIRCLE
FCV	FLOW CONTROL VALVE
FERT	FERTILIZER
FG	FINISHED GRADE
FH	FLEXIBLE HOSE
FIPT	FEMALE IRON PIPE THREAD
FIS	FERTILIZER INJECTOR SYSTEM
FL	FLOW LINE
FR	FIBER ROLL
FS	FLOW SENSOR
FSC	FLOW SENSOR CABLE
FV	FLUSH VALVE

G

Galv	GALVANIZED
GARV	GARDEN VALVE
GARVA	GARDEN VALVE ASSEMBLY
GM	GRAVEL MULCH
GPH	GALLONS PER HOUR
GPM	GALLONS PER MINUTE
GSP	GALVANIZED STEEL PIPE
GV	GATE VALVE

H

H	HALF CIRCLE
HDPE	HIGH DENSITY POLYETHYLENE
HP	HORSEPOWER/HINGE POINT
HPL	HIGH PRESSURE LINE
Hwy	HIGHWAY

I

IC	IRRIGATION CONTROLLER
ICC	IRRIGATION CONTROLLER(S) IN CONTROLLER ENCLOSURE CABINET
ID	INSIDE DIAMETER
IFS	IRRIGATION FILTRATION SYSTEM
IPS	IRON PIPE SIZE
IPT	IRON PIPE THREAD
Irr	IRRIGATION

L

L	LENGTH

M

Max	MAXIMUM
MBGR	METAL BEAM GUARD RAILING
MCV	MANUAL CONTROL VALVE
MIC	MASTER IRRIGATION CONTROLLER
Min	MINIMUM
MIPT	MALE IRON PIPE THREAD
Misc	MISCELLANEOUS
Mtl	MATERIAL
MVP	MAINTENANCE VEHICLE PULLOUT

N

NCN	NO COMMON NAME
NL	NOZZLE LINE
No.	NUMBER
NPT	NATIONAL PIPE THREAD

O

O/C	ON CENTER
OD	OUTSIDE DIAMETER
OL	OVERLAP

P

P	PART CIRCLE
PB	PULL BOX
PCC	PORTLAND CEMENT CONCRETE
PE	POLYETHYLENE
Pkt	PACKET
PL	PLASTIC
PLS	PURE LIVE SEED
PLT	PLANT/PLANTING
PLT ESTB	PLANT ESTABLISHMENT
PM	POST MILE
PR	PRESSURE RATED
PRLV	PRESSURE RELIEF VALVE
PRV	PRESSURE REGULATING VALVE
PVC	POLYVINYL CHLORIDE
Pvmt	PAVEMENT

Q

Q	QUARTER CIRCLE
QCV	QUICK COUPLING VALVE

R

R	RADIUS
RCP	REINFORCED CONCRETE PIPE
RCV	REMOTE CONTROL VALVE
RCVM	REMOTE CONTROL VALVE (MASTER)
RCVMF	REMOTE CONTROL VALVE (MASTER) W/FLOW SENSOR
RCVP	REMOTE CONTROL VALVE W/PRESSURE REGULATOR
RCW	RECYCLED WATER
RECP	ROLLED EROSION CONTROL PRODUCT
REQ	REQUIRED
RICS	REMOTE IRRIGATION CONTROL SYSTEM
R/W	RIGHT OF WAY

S

S	SLIP
SCH	SCHEDULE
SF	STATE-FURNISHED
Shld	SHOULDER
Sq	SQUARE
SST	SIDE STRIP
Sta	STATION
Std	STANDARD
SW	SIDEWALK/SOUND WALL

T

T	THIRD CIRCLE/THREAD
TLS	TRUCK LOADING STANDPIPE
TQ	THREE QUARTER CIRCLE
TRM	TURF REINFORCEMENT MAT
TT	TWO-THIRDS CIRCLE
TWSA	TREE WELL SPRINKLER ASSEMBLY
Typ	TYPICAL

U

UG	UNDERGROUND

W

W	WIDTH
W/	WITH
WM	WATER METER
WS	WYE STRAINER
WSA	WYE STRAINER ASSEMBLY
WSP	WELDED STEEL PIPE
WWM	WELDED WIRE MESH

NOTE:

For additional abbreviations, see Standard Plans A10A and A10B.

STATE OF CALIFORNIA
DEPARTMENT OF TRANSPORTATION

LANDSCAPE AND EROSION CONTROL ABBREVIATIONS

NO SCALE

RSP H1 DATED JULY 19, 2013 SUPERSEDES STANDARD PLAN H1 DATED MAY 20, 2011 - PAGE 218 OF THE STANDARD PLANS BOOK DATED 2010.

REVISED STANDARD PLAN RSP H1

2010 REVISED STANDARD PLAN RSP H1

6-28-13

Dist	COUNTY	ROUTE	POST MILES TOTAL PROJECT	SHEET No.	TOTAL SHEETS
06	Kin	198	R15.4/R16.0	42	63

REGISTERED CIVIL ENGINEER

July 19, 2013
PLANS APPROVAL DATE

REGISTERED PROFESSIONAL ENGINEER
Gurinderpal Bhullar
No. C48815
Exp. 9-30-14
CIVIL
STATE OF CALIFORNIA

THE STATE OF CALIFORNIA OR ITS OFFICERS OR AGENTS SHALL NOT BE RESPONSIBLE FOR THE ACCURACY OR COMPLETENESS OF SCANNED COPIES OF THIS PLAN SHEET.

TO ACCOMPANY PLANS DATED 1-20-15

2010 REVISED STANDARD PLAN RSP T9

TABLE 1

TAPER LENGTH CRITERIA AND CHANNELIZING DEVICE SPACING

SPEED (S)	MINIMUM TAPER LENGTH * FOR WIDTH OF OFFSET 12 FEET (W)				MAXIMUM CHANNELIZING DEVICE SPACING		
					X	Y	Z **
	TANGENT 2L	MERGING L	SHIFTING L/2	SHOULDER L/3	TAPER	TANGENT	CONFLICT
mph	ft	ft	ft	ft	ft	ft	ft
20	160	80	40	27	20	40	10
25	250	125	63	42	25	50	12
30	360	180	90	60	30	60	15
35	490	245	123	82	35	70	17
40	640	320	160	107	40	80	20
45	1080	540	270	180	45	90	22
50	1200	600	300	200	50	100	25
55	1320	660	330	220	55	110	27
60	1440	720	360	240	60	120	30
65	1560	780	390	260	65	130	32
70	1680	840	420	280	70	140	35

* - For other offsets, use the following merging taper length formula for L:
For speed of 40 mph or less, $L = WS^2/60$
For speed of 45 mph or more, $L = WS$

Where: L = Taper length in feet
W = Width of offset in feet
S = Posted speed limit, off-peak 85th-percentile speed prior to work starting, or the anticipated operating speed in mph

** - Use for taper and tangent sections where there are no pavement markings or where there is a conflict between existing pavement markings and channelizers (CA).

TABLE 2

LONGITUDINAL BUFFER SPACE AND FLAGGER STATION SPACING

SPEED *	Min D **	DOWNGRADE Min D ***		
		-3%	-6%	-9%
mph	ft	ft	ft	ft
20	115	116	120	126
25	155	158	165	173
30	200	205	215	227
35	250	257	271	287
40	305	315	333	354
45	360	378	400	427
50	425	446	474	507
55	495	520	553	593
60	570	598	638	686
65	645	682	728	785
70	730	771	825	891

* - Speed is posted speed limit, off-peak 85th-percentile speed prior to work starting, or the anticipated operating speed in mph

** - Longitudinal buffer space or flagger station spacing

*** - Use on sustained downgrade steeper than -3 percent and longer than 1 mile.

TABLE 3

ADVANCE WARNING SIGN SPACING

ROAD TYPE	DISTANCE BETWEEN SIGNS *		
	A	B	C
	ft	ft	ft
URBAN - 25 mph OR LESS	100	100	100
URBAN - MORE THAN 25 mph TO 40 mph	250	250	250
URBAN - MORE THAN 40 mph	350	350	350
RURAL	500	500	500
EXPRESSWAY / FREEWAY	1000	1500	2640

* - The distances are approximate, are intended for guidance purposes only, and should be applied with engineering judgment. These distances should be adjusted by the Engineer for field conditions, if necessary, by increasing or decreasing the recommmended distances.

STATE OF CALIFORNIA
DEPARTMENT OF TRANSPORTATION

TRAFFIC CONTROL SYSTEM TABLES FOR LANE AND RAMP CLOSURES

NO SCALE

RSP T9 DATED JULY 19, 2013 SUPERSEDES RSP T9 DATED APRIL 19, 2013 THAT SUPPLEMENTS THE STANDARD PLANS BOOK DATED 2010.

REVISED STANDARD PLAN RSP T9

4-30-13

Dist	COUNTY	ROUTE	POST MILES TOTAL PROJECT	SHEET No.	TOTAL SHEETS
06	Kin	198	R15.4/R16.0	43	63

REGISTERED CIVIL ENGINEER

April 19, 2013
PLANS APPROVAL DATE

REGISTERED PROFESSIONAL ENGINEER Gurinderpal Bhullar No. C48815 Exp. 9-30-14 CIVIL STATE OF CALIFORNIA

THE STATE OF CALIFORNIA OR ITS OFFICERS OR AGENTS SHALL NOT BE RESPONSIBLE FOR THE ACCURACY OR COMPLETENESS OF SCANNED COPIES OF THIS PLAN SHEET.

TO ACCOMPANY PLANS DATED 1-20-15

NOTES:

See Revised Standard Plan RSP T9 for tables.

Use cone spacing X for taper segment, Y for tangent segment or Z for conflict situations, as approriate, per Table 1, unless X, Y, or Z cone spacing is shown on this sheet.

Unless otherwise specified in the special provisions, all temporary warning signs shall have black legend on fluorescent orange background.

California codes are designated by (CA). Otherwise, Federal (MUTCD) codes are shown.

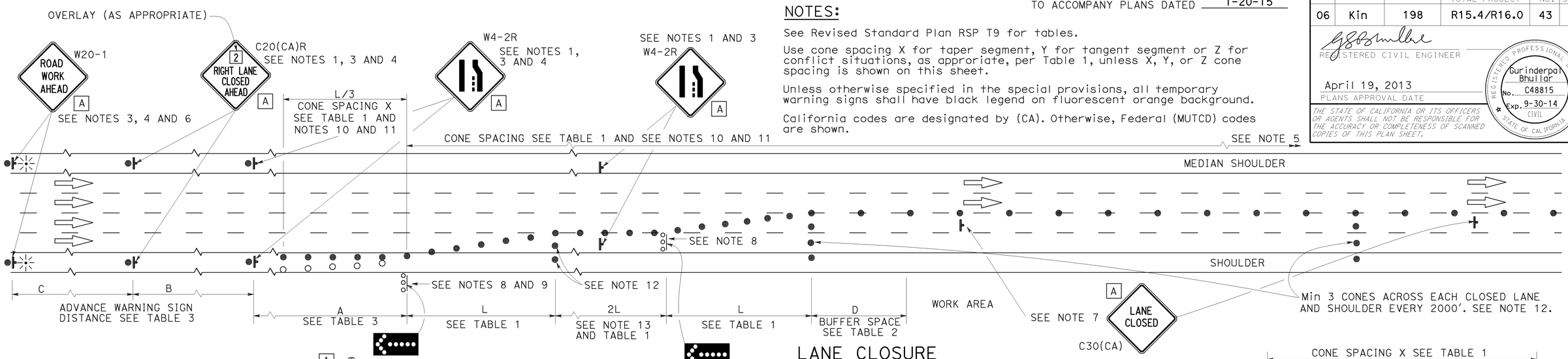

LANE CLOSURE

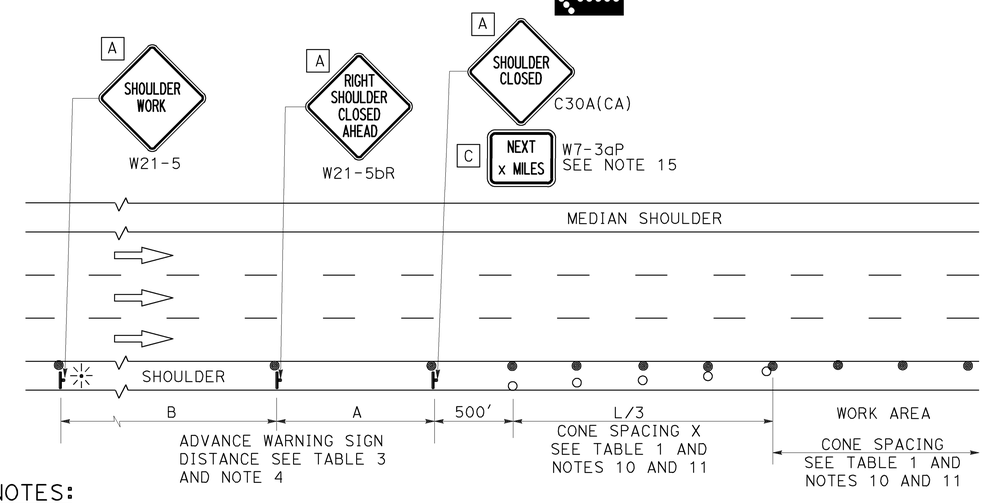

SHOULDER CLOSURE

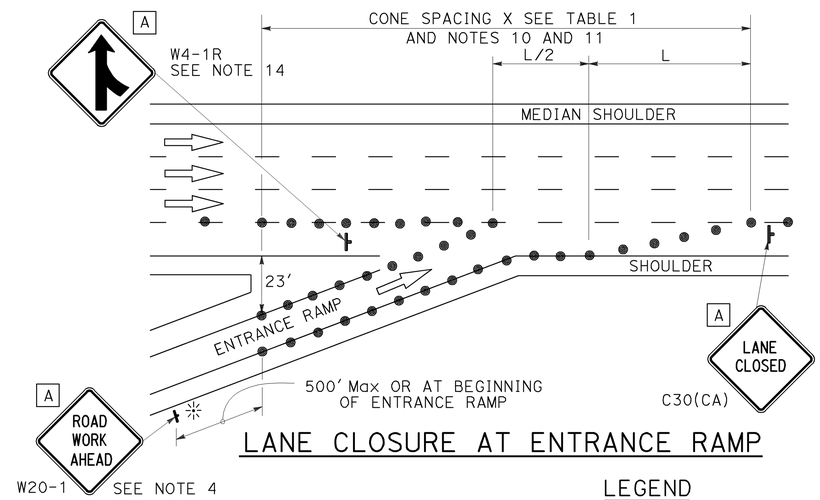

LANE CLOSURE AT ENTRANCE RAMP

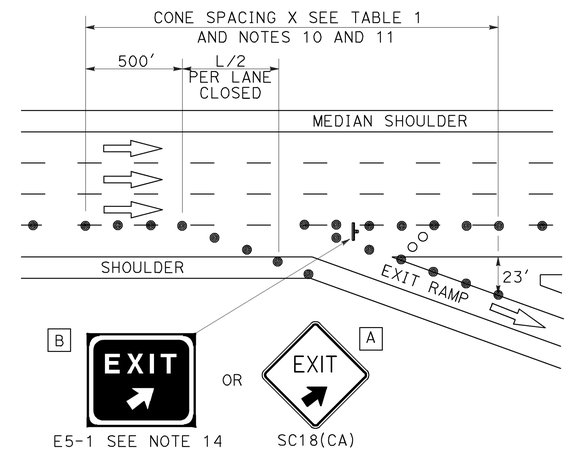

LANE CLOSURE AT EXIT RAMP

NOTES:

1. Median lane closures shall conform to the details as shown except that C20(CA)L and W4-2L signs shall be used.
2. At least one person shall be assigned to provide full time maintenance of traffic control devices for lane closures.
3. Duplicate sign installations are not required:
   a) On opposite shoulder if at least one-half of the available lanes remain open to traffic.
   b) In the median if the width of the median shoulder is less than 8' and the outside lanes are to be closed.
4. Each advance warning sign on each side of the roadway shall be equipped with at least two flags for daytime closure. Each flag shall be at least 16" x 16" in size and shall be orange or fluorescent red-orange in color. Flashing beacons shall be placed at the locations indicated for lane closure during hours of darkness.
5. A G20-2 "END ROAD WORK" sign, with minimum size of 48" x 24" as appropriate, shall be placed at the end of the lane closure unless the end of work area is obvious or ends within a larger project's limits.
6. If the W20-1 sign would follow within 2000' of a stationary W20-1 or G20-1 "ROAD WORK NEXT _____ MILES", use a C20(CA) sign for the first advance warning sign.
7. Place a C30(CA) sign every 2000' throughout length of lane closure.
8. One flashing arrow sign for each lane closed. The flashing arrow signs shall be Type I.
9. A minimum 1500' of sight distance shall be provided where possible for vehicles approaching the first flashing arrow sign. Lane closures shall not begin at top of crest vertical curve or on a horizontal curve.
10. All cones used for lane closures during the hours of darkness shall be fitted with retroreflective bands (or sleeves) as specified in the specifications.
11. Portable delineators, placed at one-half the spacing indicated for traffic cones may be used instead of cones for daytime closures only.
12. Unless otherwise specified in the special provisions, a minimum of 3 cones shall be placed transversely across each closed lane and shoulder at each location where a taper across a traffic lane ends and every 2000' as shown on the "Lane Closure" detail. Two Type II barricades may be used instead of the 3 cones. The transverse alignment of the cones or barricades on the closed shoulder may be shifted from the transverse alignment to provide access to the work.
13. Unless otherwise specified in the special provisions, the 2L tangent shown along lane lines shall be used between the L tapers required for each closed traffic lane.
14. Unless otherwise specified in the special provisions, the E5-1 or SC18(CA) and W4-1 signs shall be used as shown.
15. A W7-3aP "NEXT____ MILES" plaque must be used if theshoulder closure extends beyond the distance that can be perceived by road users.

LEGEND

- TRAFFIC CONE
- TRAFFIC CONE (OPTIONAL TAPER)
- TEMPORARY TRAFFIC CONTROL SIGN
- FLASHING ARROW SIGN (FAS)
- FAS SUPPORT OR TRAILER
- PORTABLE FLASHING BEACON

SIGN PANEL SIZE (Min)

A	48" x 48"
B	72" x 60"
C	36" x 30"

STATE OF CALIFORNIA
DEPARTMENT OF TRANSPORTATION

TRAFFIC CONTROL SYSTEM FOR LANE CLOSURE ON FREEWAYS AND EXPRESSWAYS

NO SCALE

RSP T10 DATED APRIL 19, 2013 SUPERSEDES STANDARD PLAN T10 DATED MAY 20, 2011 - PAGE 237 OF THE STANDARD PLANS BOOK DATED 2010.

REVISED STANDARD PLAN RSP T10

2010 REVISED STANDARD PLAN RSP T10

12-18-12

Dist	COUNTY	ROUTE	POST MILES TOTAL PROJECT	SHEET No.	TOTAL SHEETS
06	Kin	198	R15.4/R16.0	44	63

REGISTERED CIVIL ENGINEER

April 19, 2013
PLANS APPROVAL DATE

REGISTERED PROFESSIONAL ENGINEER Gurinderpal Bhullar No. C48815 Exp. 9-30-14 CIVIL STATE OF CALIFORNIA

THE STATE OF CALIFORNIA OR ITS OFFICERS OR AGENTS SHALL NOT BE RESPONSIBLE FOR THE ACCURACY OR COMPLETENESS OF SCANNED COPIES OF THIS PLAN SHEET.

TO ACCOMPANY PLANS DATED 1-20-15

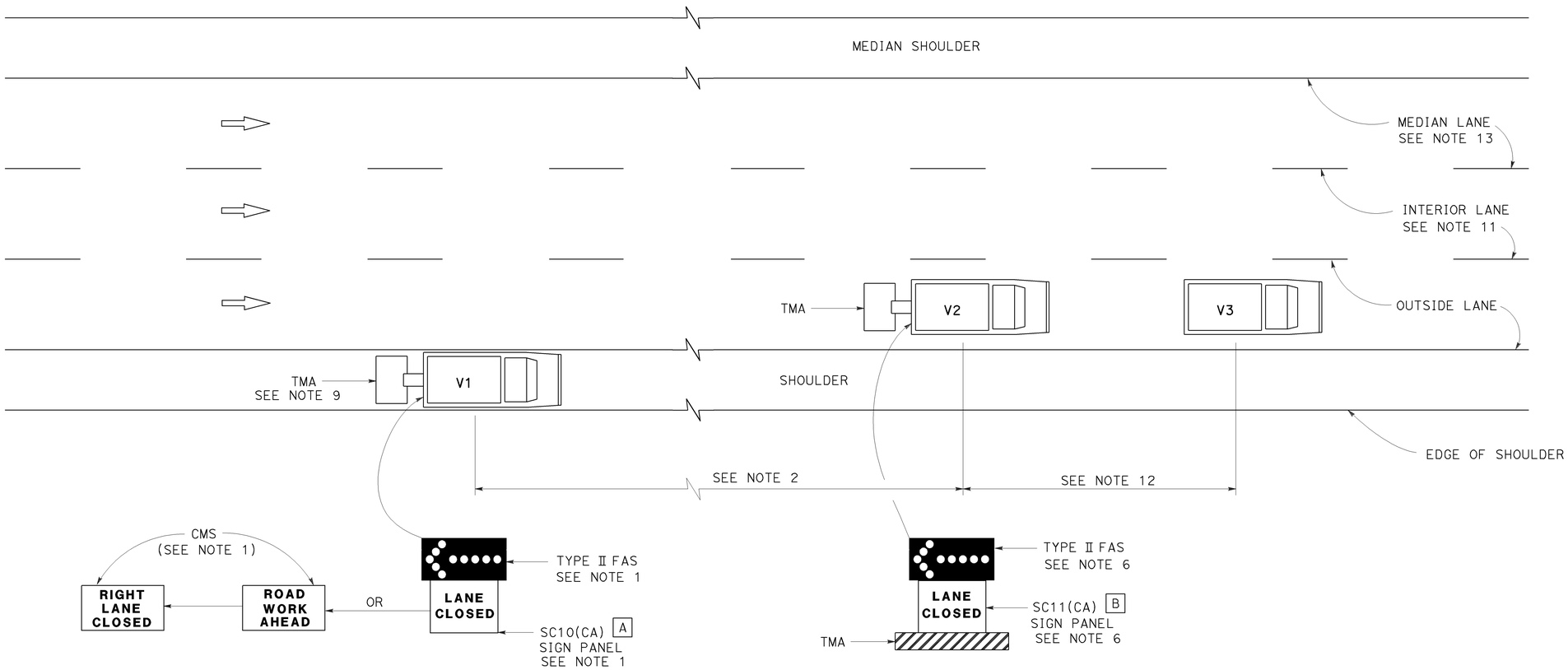

MOVING LANE CLOSURE ON MEDIAN LANE OR OUTSIDE LANE OF MULTILANE HIGHWAYS

SIGN PANEL SIZE (Min)

A 66" x 36"

B 54" x 42"

LEGEND

V1	SIGN VEHICLE
V2	SHADOW VEHICLE
V3	WORK/APPLICATION VEHICLE
	FLASHING ARROW SIGN (FAS)
CMS	CHANGEABLE MESSAGE SIGN
TMA	TRUCK-MOUNTED ATTENUATOR

NOTES:

1. Either a changeable message sign or a SC10(CA) sign panel and a Type II flashing arrow sign shall be mounted on the rear of sign vehicle V1. The changeable message sign shall be sequenced to show the "ROAD WORK AHEAD" message first, followed by the "RIGHT LANE CLOSED" message. For median lane closure, the flashing arrow symbol shall be reversed with the arrowhead on the right and the changeable message sign shall show "LEFT LANE CLOSED".
2. If traffic queues develop, sign vehicle V1 should be positioned upstream from the end of queue. Sign vehicle V1 shall be positioned where highly visible when shoulders are not available.
3. A minimum sight distance of 1500′ should be provided in advance of sign vehicle V1.
4. Sign vehicle V1 should remain at the beginning of horizontal or vertical curves until the other vehicles (V2 and V3) are far enough beyond the curve to resume the minimum sight distance of 1500′.
5. Vehicle-mounted sign panels shall have Type III or above retroreflective sheeting, black on white, or black on fluorescent orange, with 6" minimum series D letters per Caltrans sign specifications.
6. Shadow vehicle V2 shall be equipped with a truck-mounted attenuator. The sign panel shown and a Type II flashing arrow sign shall be mounted on the rear of shadow vehicle V2. For median lane closure the flashing arrow sign symbol shall be displayed with the arrowhead on the right.
7. All vehicles used for lane closures shall be equipped with two-way radios, and the vehicle operators shall maintain communication during the work or application operation.
8. All vehicles shall be equipped with flashing or rotating amber lights.
9. If sign vehicle V1 encroaches into the traffic lane due to insufficient shoulder width, sign vehicle V1 shall be equipped with a truck-mounted attenuator. Sign vehicle V1 shall stay as close to the edge of shoulder as practicable.
10. Where workers would be on foot in the work area, a stationary type lane closure (Revised Standard Plan T10, T11, etc., as applicable) shall be used instead of this plan.
11. For moving lane closure on interior lane of multilane highways, use Revised Standard Plan T16.
12. The spacing between work vehicle(s) and the shadow vehicles, and between each shadow vehicle should be minimized to deter road users from driving in between.
13. When the work/application vehicle V3 occupies the median lane, sign vehicle V1 should drive in the median shoulder and indicate left lane closed ahead.

STATE OF CALIFORNIA
DEPARTMENT OF TRANSPORTATION

TRAFFIC CONTROL SYSTEM FOR MOVING LANE CLOSURE ON MULTILANE HIGHWAYS

NO SCALE

RSP T15 DATED APRIL 19, 2013 SUPERSEDES STANDARD PLAN T15
DATED MAY 20, 2011 - PAGE 243 OF THE STANDARD PLANS BOOK DATED 2010.

REVISED STANDARD PLAN RSP T15

2010 REVISED STANDARD PLAN RSP T15

12-18-12

Dist	COUNTY	ROUTE	POST MILES TOTAL PROJECT	SHEET No.	TOTAL SHEETS
06	Kin	198	R15.4/R16.0	45	63

REGISTERED CIVIL ENGINEER

November 15, 2013
PLANS APPROVAL DATE

REGISTERED PROFESSIONAL ENGINEER Tillat Satter No. C42892 Exp. 3-31-14 CIVIL STATE OF CALIFORNIA

THE STATE OF CALIFORNIA OR ITS OFFICERS OR AGENTS SHALL NOT BE RESPONSIBLE FOR THE ACCURACY OR COMPLETENESS OF SCANNED COPIES OF THIS PLAN SHEET.

TO ACCOMPANY PLANS DATED 1-20-15

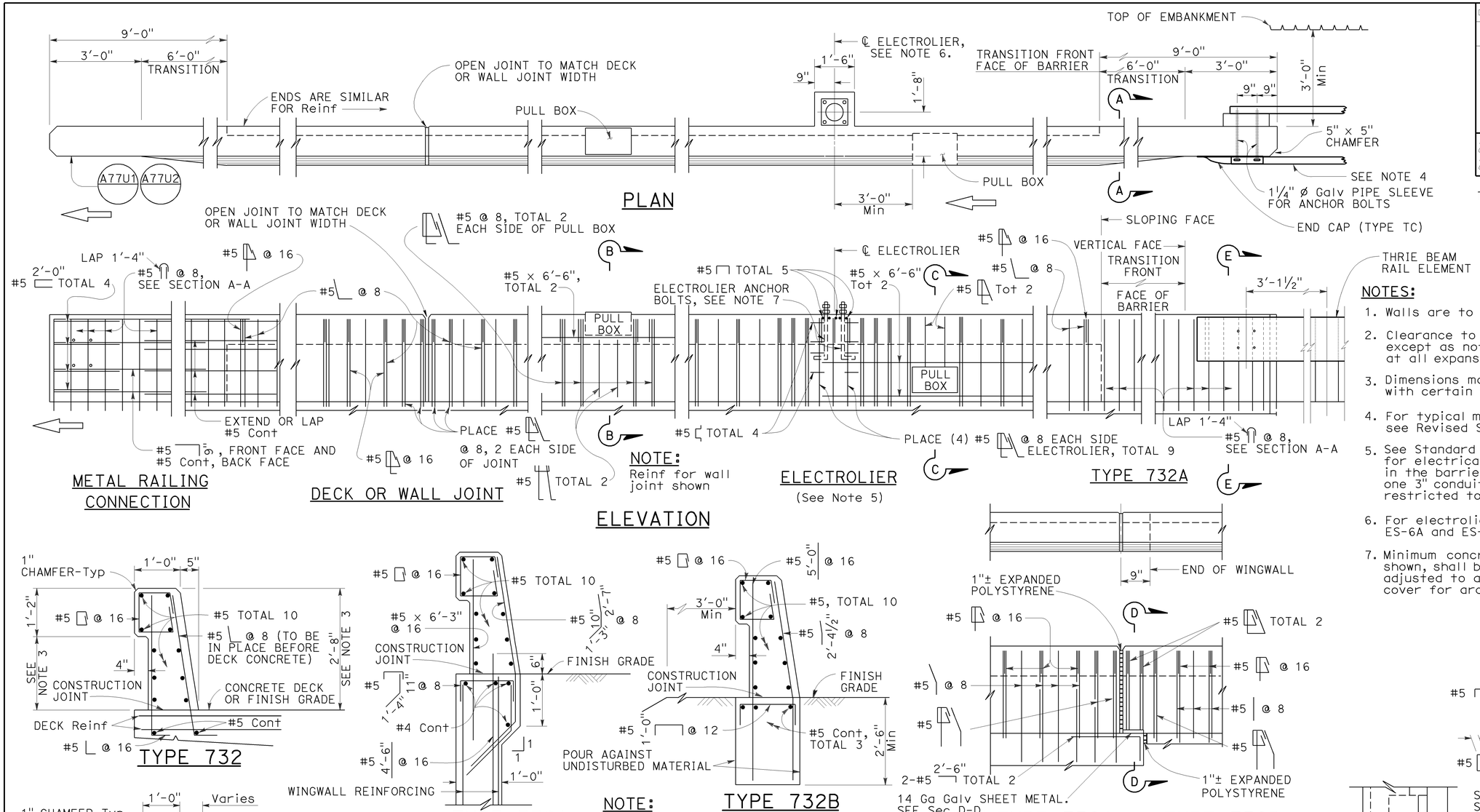

NOTES:

1. Walls are to be backfilled before barrier is placed.
2. Clearance to reinforcing steel in barrier to be 1", except as noted. Longitudinal reinforcement to stop at all expansion joints.
3. Dimensions may vary with roadway cross slope and with certain thickness of surfacing. See Project Plans.
4. For typical metal railing connection details not shown, see Revised Standard Plans RSP A77U1 and RSP A77U2.
5. See Standard Plans ES-9A, ES-9B, ES-9C, ES-9D and ES-9E for electrical details. The maximum number of conduits in the barrier is limited to two 2" conduits along with one 3" conduit. When a 3" conduit is used, it is restricted to the base of the barrier.
6. For electrolier mounting details, See Standard Plans ES-6A and ES-6B.
7. Minimum concrete edge distance, to the reinforcing shown, shall be maintained. Edge distance may be adjusted to accommodate increase in concrete cover for architectual treatment.

NOTE: Types 732A and 732B are similar to Type 732 except as noted.

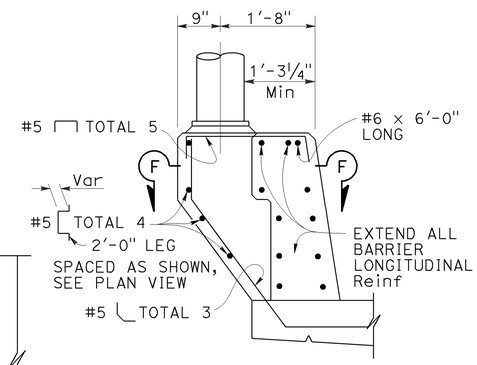

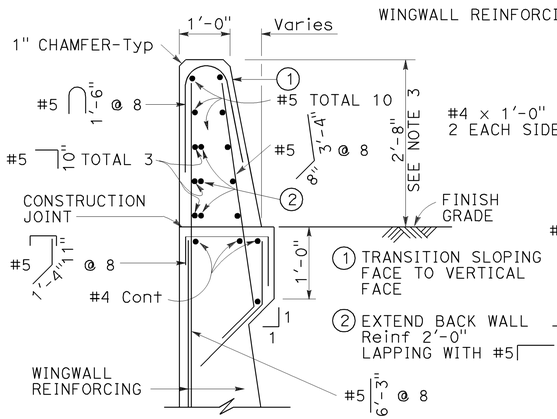

Details shown for barrier anchorage to Type 732A. Anchorage for barrier Types 732 and 732A are similar to their respective details.

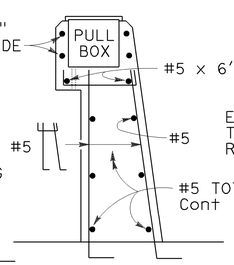

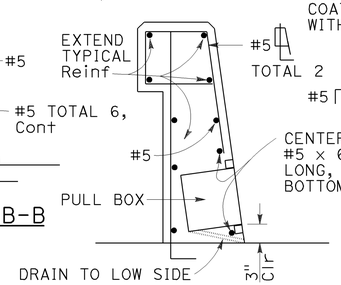

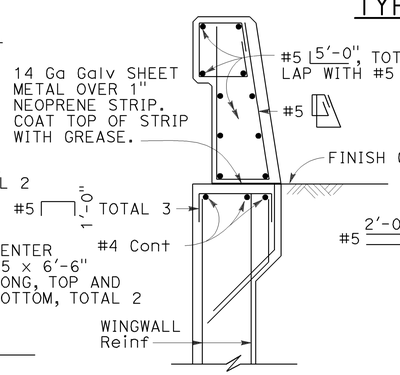

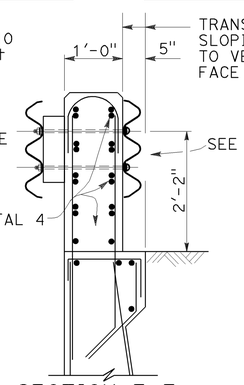

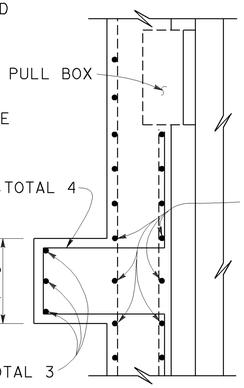

STATE OF CALIFORNIA
DEPARTMENT OF TRANSPORTATION

CONCRETE BARRIER TYPE 732

NO SCALE

RSP B11-55 DATED NOVEMBER 15, 2013 SUPERSEDES RSP B11-55 DATED JULY 19, 2013 AND STANDARD PLAN B11-55 DATED MAY 20, 2011 - PAGE 297 OF THE STANDARD PLANS BOOK DATED 2010.

REVISED STANDARD PLAN RSP B11-55

2010 REVISED STANDARD PLAN RSP B11-55

10-4-13

Dist	COUNTY	ROUTE	POST MILES TOTAL PROJECT	SHEET No.	TOTAL SHEETS
06	Kin	198	R15.4/R16.0	46	63

Theresa Gabriel
REGISTERED ELECTRICAL ENGINEER

July 19, 2013
PLANS APPROVAL DATE

REGISTERED PROFESSIONAL ENGINEER
Theresa Aziz Gabriel
No. E15129
Exp. 6-30-14
ELECTRICAL
STATE OF CALIFORNIA

THE STATE OF CALIFORNIA OR ITS OFFICERS OR AGENTS SHALL NOT BE RESPONSIBLE FOR THE ACCURACY OR COMPLETENESS OF SCANNED COPIES OF THIS PLAN SHEET.

TO ACCOMPANY PLANS DATED 1-20-15

LEGEND:

- AB — ABANDON. IF APPLIED TO CONDUIT, REMOVE CONDUCTORS
- BC — INSTALL PULL BOX IN EXISTING CONDUIT RUN
- BP — PEDESTRIAN BARRICADE, TYPE AS INDICATED ON PLAN
- CB — INSTALL CONDUIT INTO EXISTING PULL BOX
- CC — CONNECT NEW AND EXISTING CONDUIT. REMOVE EXISTING CONDUCTORS AND INSTALL CONDUCTORS AS INDICATED
- CF — CONDUIT TO REMAIN FOR FUTURE USE. REMOVE CONDUCTORS. INSTALL PULL TAPE
- DH — DETECTOR HANDHOLE
- FA — FOUNDATION TO BE ABANDONED
- IS — INSTALL SIGN ON SIGNAL MAST ARM
- NS — NO SLIP BASE ON STANDARD
- PEC — PHOTOELECTRIC CONTROL
- PEU — PHOTOELECTRIC UNIT
- RC — EQUIPMENT OR MATERIAL TO BE REMOVED AND BECOME THE PROPERTY OF THE CONTRACTOR
- RE — REMOVE ELECTROLIER, FUSES AND BALLAST. TAPE ENDS OF CONDUCTORS
- RL — RELOCATE EQUIPMENT
- RR — REMOVE AND REUSE EQUIPMENT
- RS — REMOVE AND SALVAGE EQUIPMENT
- SC — SPLICE NEW TO EXISTING CONDUCTORS
- SD — SERVICE DISCONNECT
- TSP — TELEPHONE SERVICE POINT

ABBREVIATIONS

APS	ACCESSIBLE PEDESTRIAN SIGNAL
BBS	BATTERY BACKUP SYSTEM
BC	BOLT CIRCLE
BPB	BICYCLE PUSH BUTTON
C	CONDUIT
CB	CIRCUIT BREAKER
CCTV	CLOSED CIRCUIT TELEVISION
Ckt	CIRCUIT
CMS	CHANGEABLE MESSAGE SIGN
Ctid	CALTRANS IDENTIFICATION
Comm	COMMUNICATION
DLC	LOOP DETECTOR LEAD-IN CABLE
EMS	EXTINGUISHABLE MESSAGE SIGN
EVUC	EMERGENCY VEHICLE UNIT CABLE
EVUD	EMERGENCY VEHICLE UNIT DETECTOR
FB	FLASHING BEACON
FBCA	FLASHING BEACON CONTROL ASSEMBLY
FBS	FLASHING BEACON WITH SLIP BASE
FO	FIBER OPTIC
G	EQUIPMENT GROUNDING CONDUCTOR
GB	GROUND BUS
GFCI	GROUND FAULT CIRCUIT INTERRUPTER
HAR	HIGHWAY ADVISORY RADIO
Hex	HEXAGONAL
HPS	HIGH PRESSURE SODIUM
IISNS	INTERNALLY ILLUMINATED STREET NAME SIGN
ISL	INDUCTION SIGN LIGHTING
LED	LIGHT EMITTING DIODE
LMA	LUMINAIRE MAST ARM
LPS	LOW PRESSURE SODIUM
Ltg	LIGHTING
Lum	LUMINAIRE
M	METERED
MAT	MAST ARM MOUNTING TOP ATTACHMENT
MAS	MAST ARM MOUNTING SIDE ATTACHMENT
M/M	MULTIPLE TO MULTIPLE TRANSFORMER
Mtg	MOUNTING
MV	MERCURY VAPOR LIGHTING FIXTURE
MVDS	MICROWAVE VEHICLE DETECTION SYSTEM
N	NEUTRAL (GROUNDED CONDUCTOR)
NB	NEUTRAL BUS
NC	NORMALLY CLOSE
NO	NORMALLY OPEN
P	CIRCUIT BREAKER'S POLE
PB	PULL BOX
PBA	PUSH BUTTON ASSEMBLY
PEC	PHOTOELECTRIC CONTROL
Ped	PEDESTRIAN
PEU	PHOTOELECTRIC UNIT
PT	CONDUIT WITH PULL TAPE
RE	RELOCATED EQUIPMENT
RM	RAMP METERING
RWIS	ROADSIDE WEATHER INFORMATION SYSTEM
SB	SLIP BASE
SIC	SIGNAL INTERCONNECT CABLE
Sig	SIGNAL
SMA	SIGNAL MAST ARM
SNS	STREET NAME SIGN
SP	SERVICE POINT
TDC	TELEPHONE DEMARCATION CABINET
TMS	TRAFFIC MONITORING STATION
TOS	TRAFFIC OPERATIONS SYSTEM
Veh	VEHICLE
VIVDS	VIDEO IMAGE VEHICLE DETECTION SYSTEM
WIM	WEIGH-IN-MOTION
Xfmr	TRANSFORMER

SOFFIT AND WALL MOUNTED LUMINAIRES

- PENDANT, 70 W HPS UNLESS OTHERWISE SPECIFIED
- FLUSH, 70 W HPS UNLESS OTHERWISE SPECIFIED
- WALL SURFACE, 70 W HPS UNLESS OTHERWISE SPECIFIED
- EXISTING SOFFIT OR WALL LUMINAIRE TO REMAIN UNMODIFIED
- EXISTING SOFFIT OR WALL LUMINAIRE TO BE MODIFIED AS SPECIFIED

NOTE:
Arrow indicates "street side" of luminaire.

COMMONLY USED SYMBOLS FOR UNITED STATES CUSTOMARY UNITS OF MEASUREMENT:

SYMBOL USED	DEFINITIONS
Ω	OHMS
min	MINUTE
s	SECOND
bps	BITS PER SECOND
Bps	BYTES PER SECOND
A	AMPERE
V	VOLT
V(dc)	VOLT (DIRECT CURRENT)
V(ac)	VOLT (ALTERNATING CURRENT)
FC	FOOT - CANDLE
W	WATTS
VA	VOLT-AMPERE
M	MEGA
k	KILO
m	MILLI
μ	MICRO
P	PICO
Hz	HERTZ

MISCELLANEOUS ELECTROLIERS

NEW	EXISTING	
		LUMINAIRE ON WOOD POLE
		NON-STANDARD ELECTROLIER (SEE PROJECT NOTES OR PROJECT PLANS)
		CITY ELECTROLIER
		ELECTROLIER FOUNDATION (FUTURE INSTALLATION)

NOTES:

1. HPS luminaires shall be 310 W HPS when installed on Type 21, 21D, 30, 31 and 32 Standards, unless otherwise specified. HPS luminaires shall be 200 W when installed on other type standards or poles, unless otherwise specified.
2. LED luminaires shall be 235 W when installed on Type 21, 21D, 30, 31 and 32 Standards, unless otherwise specified. LED luminaires shall be 165 W when installed on other type standards or poles, unless otherwise specified.
3. Luminaires shall be the cutoff type, ANSI Type III medium cutoff lighting distribution, unless otherwise specified.

STANDARD ELECTROLIER

NEW	EXISTING	STANDARD TYPE
		15
		15D
		15 STRUCTURE
		15D STRUCTURE
		21
		21D
		21 STRUCTURE
		21D STRUCTURE
		30
		31
		32

STATE OF CALIFORNIA
DEPARTMENT OF TRANSPORTATION

ELECTRICAL SYSTEMS (LEGEND AND ABBREVIATIONS)

NO SCALE

RSP ES-1A DATED JULY 19, 2013 SUPERSEDES STANDARD PLAN ES-1A DATED MAY 20, 2011 - PAGE 425 OF THE STANDARD PLANS BOOK DATED 2010.

REVISED STANDARD PLAN RSP ES-1A

2010 REVISED STANDARD PLAN RSP ES-1A

7-15-13

Dist	COUNTY	ROUTE	POST MILES TOTAL PROJECT	SHEET No.	TOTAL SHEETS
06	Kin	198	R15.4/R16.0	47	63

Theresa Gabriel
REGISTERED ELECTRICAL ENGINEER

July 19, 2013
PLANS APPROVAL DATE

REGISTERED PROFESSIONAL ENGINEER Theresa Aziz Gabriel No. E15129 Exp. 6-30-14 ELECTRICAL STATE OF CALIFORNIA

THE STATE OF CALIFORNIA OR ITS OFFICERS OR AGENTS SHALL NOT BE RESPONSIBLE FOR THE ACCURACY OR COMPLETENESS OF SCANNED COPIES OF THIS PLAN SHEET.

TO ACCOMPANY PLANS DATED 1-20-15

CONDUIT

NEW	EXISTING	
		LIGHTING CONDUIT, UNLESS OTHERWISE INDICATED OR NOTED
		TRAFFIC SIGNAL CONDUIT
C	c	COMMUNICATION CONDUIT
T	t	TELEPHONE CONDUIT
F	f	FIRE ALARM CONDUIT
FO	fo	FIBER OPTIC CONDUIT
		CONDUIT TERMINATION
R	r	CONDUIT RISER ATTACHED TO THE STRUCTURE OR SERVICE POLE

SERVICE EQUIPMENT

NEW	EXISTING	
OH	oh	OVERHEAD LINES
U	U	WOOD POLE, "U" INDICATES UTILITY OWNED
		POLE GUY WITH ANCHOR
		UTILITY TRANSFORMER - GROUND MOUNTED
III	III	SERVICE EQUIPMENT ENCLOSURE TYPE. DOOR INDICATES FRONT OF ENCLOSURE
T	t	TELEPHONE DEMARCATION CABINET

POLE-MOUNTED SERVICE DESIGNATION

TYPE H SERVICE, 28'-10" — TYPE OF INSTALLATION AND POLE HEIGHT ABOVE GRADE

FLASHING BEACON

NEW	EXISTING	
R	R	FLASHING BEACON (ONE VEHICLE SIGNAL HEAD WITH BACKPLATE AND VISOR) "R" INDICATES RED INDICATION, "Y" INDICATES YELLOW INDICATION
Y Y	Y Y	FLASHING BEACON WITH TYPE 15-FBS STANDARD AND A SIGN.
R R	R R	FLASHING BEACON WITH TYPES 9, 9A OR 9B SIGN UNLESS OTHERWISE SPECIFIED OR INDICATED

SIGNAL EQUIPMENT

NEW	EXISTING	
C	C	PEDESTRIAN SIGNAL HEAD "C" INDICATES COUNTDOWN PEDESTRIAN HEAD
		PUSH BUTTON ASSEMBLY POST
		PEDESTRIAN BARRICADE
		VEHICLE SIGNAL HEAD (WITH BACKPLATE AND 3-SECTIONS: RED, YELLOW AND GREEN)
		VEHICLE SIGNAL HEAD WITH ANGLE VISOR
PV	PV	MODIFICATIONS OF BASIC SYMBOL: "L" INDICATES ALL NON-ARROW SECTIONS LOUVERED "LG" INDICATES LOUVERED GREEN SECTION ONLY "PV" INDICATES ALL 12" SECTIONS PROGRAMMED VISIBILITY "8" INDICATES ALL 8" SECTIONS (ONLY WHEN SPECIFIED)
		VEHICLE SIGNAL HEAD CONSISTING OF RED, YELLOW AND GREEN LEFT ARROW SECTIONS
		VEHICLE SIGNAL HEAD CONSISTING OF RED AND YELLOW SECTIONS WITH AN UP GREEN ARROW SECTION
		VEHICLE SIGNAL HEAD (5 SECTION) CONSISTING OF RED, YELLOW AND GREEN SECTIONS WITH YELLOW AND GREEN RIGHT ARROW SECTIONS
		TYPE 15TS STANDARD WITH VEHICLE SIGNAL HEAD AND LUMINAIRE
		TYPE 21TS STANDARD WITH VEHICLE SIGNAL HEAD AND LUMINAIRE
		STANDARD WITH LUMINAIRE AND SIGNAL MAST ARMS AND ATTACHED VEHICLE SIGNAL HEADS
		TYPE 1 STANDARD WITH ATTACHED VEHICLE SIGNAL HEADS
		STANDARD WITH A SIGNAL MAST ARM, ATTACHED VEHICLE SIGNAL HEADS AND INTERNALLY ILLUMINATED STREET NAME SIGN
		CONTROLLER ASSEMBLY. DOOR INDICATES FRONT OF CABINET

SIGNAL EQUIPMENT Cont

NEW	EXISTING	
		GUARD POST
		TYPE 1 STANDARD WITH RAMP METERING SIGN
		OPTICAL DETECTOR FOR THE EMERGENCY VEHICLE DETECTION SYSTEM

NOTES:

1. All signal sections shall be 12" unless shown otherwise.
2. Signal heads shall be provided with backplates unless shown otherwise.

ILLUMINATED OVERHEAD SIGN

NEW	EXISTING	
		SINGLE POST, SINGLE ILLUMINATED SIGN, BALANCED BUTTERFLY
		SINGLE POST, DOUBLE ILLUMINATED SIGN, BALANCED BUTTERFLY
		SINGLE POST, SINGLE ILLUMINATED SIGN, FULL CANTILEVER
		DOUBLE POST, SINGLE ILLUMINATED SIGN
		SINGLE ILLUMINATED SIGN MOUNTED ON STRUCTURE
		DOUBLE POST, SINGLE ILLUMINATED SIGN WITH ELECTROLIER

STATE OF CALIFORNIA
DEPARTMENT OF TRANSPORTATION

ELECTRICAL SYSTEMS (LEGEND AND ABBREVIATIONS)

NO SCALE

RSP ES-1B DATED JULY 19, 2013 SUPERSEDES STANDARD PLAN ES-1B DATED MAY 20, 2011 - PAGE 426 OF THE STANDARD PLANS BOOK DATED 2010.

REVISED STANDARD PLAN RSP ES-1B

2010 REVISED STANDARD PLAN RSP ES-1B

7-15-13

Dist	COUNTY	ROUTE	POST MILES TOTAL PROJECT	SHEET No.	TOTAL SHEETS
06	Kin	198	R15.4/R16.0	48	63

Theresa Gabriel
REGISTERED ELECTRICAL ENGINEER

July 19, 2013
PLANS APPROVAL DATE

REGISTERED PROFESSIONAL ENGINEER
Theresa Aziz Gabriel
No. E15129
Exp. 6-30-14
ELECTRICAL
STATE OF CALIFORNIA

THE STATE OF CALIFORNIA OR ITS OFFICERS OR AGENTS SHALL NOT BE RESPONSIBLE FOR THE ACCURACY OR COMPLETENESS OF SCANNED COPIES OF THIS PLAN SHEET.

TO ACCOMPANY PLANS DATED 1-20-15

2010 REVISED STANDARD PLAN RSP ES-1C

EQUIPMENT IDENTIFICATION

ILLUMINATED SIGN IDENTIFICATION NUMBER:

SIGN No. 12345

10 ISL SCI 1.0

- SIGN NUMBER - PLACE ON POST OR STRUCTURE
- TRANSFORMER RATING (kVA)
- LIGHTING CONTROL TYPE
- NUMBER AND TYPE OF FIXTURES

DO NOT PLACE ON STANDARD OR STRUCTURE

ELECTROLIER OR EQUIPMENT IDENTIFICATION NUMBER:

12345 - 15'-0"

- MAST ARM LENGTH, IF SHOWN. DO NOT PLACE ON STANDARD OR STRUCTURE
- EQUIPMENT NUMBER - PLACE ON STANDARD OR STRUCTURE. EXISTING EQUIPMENT NUMBERS ARE SHOWN IN PARENTHESIS

CONDUIT AND CONDUCTOR IDENTIFICATION:

1½"C, 2#10, 15#14, 2 DLC, 12P#18

- PAIR
- NUMBER AND SIZE OF CONDUCTORS AND CABLES
- SIZE OF CONDUIT IN INCHES

ø1, ø2, ø2P, etc.	TRAFFIC PHASE IDENTIFICATION FOR SIGNAL FACES, DETECTORS AND PHASE DIAGRAMS
1 2 3	LEGEND NUMBERS
A B C	EQUIPMENT, SIGNAL POLES, INSTALLATION OR ITEMS
1 2 3	CONDUIT RUN NUMBERS

SIGNAL AND LIGHTING STANDARD (TYPICAL DESIGNATION):

19A - 3 - 100

- WIND VELOCITY = 100 mph
- CASE 3 ARM LOADING
- STANDARD TYPE
- STANDARD PLAN SHEET NUMBER
- DETAIL, NUMBER, SECTION, TYPE OR ELEVATION

MISCELLANEOUS EQUIPMENT

NEW	EXISTING	
CMS	cms	CHANGEABLE MESSAGE SIGN
		CLOSED CIRCUIT TELEVISION CAMERA
		HIGHWAY ADVISORY RADIO POLE AND ANTENNA
EMS	ems	EXTINGUISHABLE MESSAGE SIGN
M V	m v	DETECTION DEVICE M = MICROWAVE SENSOR V = VIDEO IMAGE SENSOR

WIRING DIAGRAM LEGEND

- EXTERNAL CONDUCTOR
- CONDUCTOR OR BUS
- TIE POINT
- CONTACTOR COIL
- CONTACTOR, NO CONTACT
- TERMINAL BLOCKS
- CONTACTOR, NC CONTACT
- ENCLOSURE BOND
- GROUNDING ELECTRODE
- CIRCUIT BREAKER
- RECEPTACLE

PULL BOXES

NEW	EXISTING	
		PULL BOX, No. 5 UNLESS OTHERWISE INDICATED OR NOTED
3	9A(21)	PULL BOX, ADDITIONAL DESIGNATIONS OR DESCRIPTIONS

3 No. 3½ PULL BOX
5 No. 5 PULL BOX
6 No. 6 PULL BOX
7 No. 7 (CEILING PULL BOX)
8 No. 8 (PENDANT SOFFIT PULL BOX)
9 No. 9 PULL BOX
9A No. 9A PULL BOX

(C) COMMUNICATIONS PULL BOX
(E) PULL BOX WITH EXTENSION
(S) SPRINKLER CONTROL PULL BOX
(21) ANCHOR BOLTS AND CONDUIT FOR FUTURE INSTALLATION OF TYPE 21 STANDARD
(T) TRAFFIC PULL BOX

VEHICLE DETECTORS

5 J 9 U

- VEHICLE DETECTOR DESIGNATION
- U = UPPER
  L = LOWER
- SLOT NUMBER IN INPUT FILE
- INPUT FILE (I OR J)
- PHASE

NEW	EXISTING	
		TYPE A DETECTOR LOOP. OUTLINE OF SAWCUT SHOWN
		TYPE B DETECTOR LOOP. OUTLINE OF SAWCUT SHOWN
		TYPE C DETECTOR LOOP. OUTLINE OF SAWCUT SHOWN
		TYPE D DETECTOR LOOP. OUTLINE OF SAWCUT SHOWN
		TYPE E DETECTOR LOOP. OUTLINE OF SAWCUT SHOWN
		TYPE Q DETECTOR LOOP. OUTLINE OF SAWCUT SHOWN
		MAGNETIC DETECTOR
DH	dh	DETECTOR HANDHOLE
		MICROWAVE OR VIDEO DETECTION ZONE

STATE OF CALIFORNIA
DEPARTMENT OF TRANSPORTATION

ELECTRICAL SYSTEMS (LEGEND AND ABBREVIATIONS)

NO SCALE

RSP ES-1C DATED JULY 19, 2013 SUPERSEDES STANDARD PLAN ES-1C DATED MAY 20, 2011 - PAGE 427 OF THE STANDARD PLANS BOOK DATED 2010.

REVISED STANDARD PLAN RSP ES-1C

DIST	COUNTY	ROUTE	POST MILES TOTAL PROJECT	SHEET NO.	TOTAL SHEETS
06	Kin	198	R15.4/R16.0	49	63

Theresa Gabriel
REGISTERED ELECTRICAL ENGINEER

July 19, 2013
PLANS APPROVAL DATE

REGISTERED PROFESSIONAL ENGINEER
Theresa Aziz Gabriel
No. E15129
Exp. 6-30-14
ELECTRICAL
STATE OF CALIFORNIA

THE STATE OF CALIFORNIA OR ITS OFFICERS OR AGENTS SHALL NOT BE RESPONSIBLE FOR THE ACCURACY OR COMPLETENESS OF SCANNED COPIES OF THIS PLAN SHEET.

TO ACCOMPANY PLANS DATED 1-20-15

2010 REVISED STANDARD PLAN RSP ES-8B

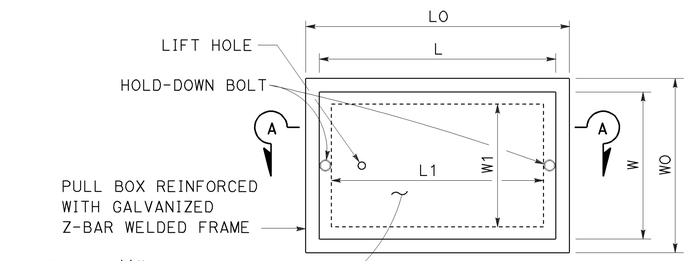

TOP VIEW

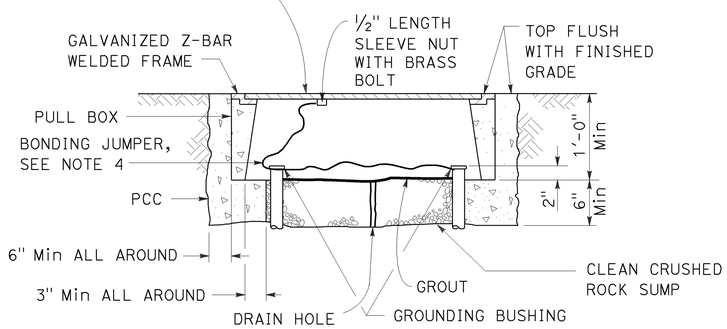

SECTION A-A

No. 3½(T), No. 5(T) AND No. 6(T) TRAFFIC PULL BOX

NOTES:

1. Traffic pull box shall be provided with steel cover and special concrete footing. Steel cover shall have embossed non-skid pattern.
2. Steel reinforcing shall be as regularly used in the standard products of the respective manufacturer.
3. Pull box covers shall be marked as follows: "SERVICE" Service circuits between service point and service disconnect; "SPRINKLER-CONTROL" Sprinkler control circuits, 50 V or less; "CALTRANS" On all pull boxes, except pull boxes marked "SPRINKLER-CONTROL"; and "TELEPHONE" Telephone service.
   - A) No. 3½(T) pull box.
     - 1) "SIGNAL" - Traffic signal circuits with or without lighting or sign lighting circuits.
     - 2) "LIGHTING" - Lighting or sign lighting circuits where voltage is under 600 V.
   - B) No. 5(T) or 6(T) pull box.
     - 1) "TRAFFIC SIGNAL" - Traffic signal circuits with or without lighting or sign lighting circuits.
     - 2) "LIGHTING" - Lighting or sign lighting circuits where voltage is under 600 V.
     - 3) "LIGHTING-HIGH VOLTAGE" - Lighting or sign lighting circuits where voltage is above 600 V.
     - 4) "IRRIGATION" - Circuits to irrigation controller 120 V or more.
     - 5) "RAMP METER" - Ramp meter circuits.
     - 6) "COUNT STATION" - Count or speed monitor circuits.
     - 7) "COMMUNICATION" - Communication circuits.
     - 8) "TOS COMMUNICATIONS" - TOS communications line.
     - 9) "TOS POWER" - TOS power.
     - 10) "TDC POWER" - Telephone demarcation cabinet power.
     - 11) "CCTV" - Closed circuit television circuits.
     - 12) "TMS" - Traffic monitoring station circuits.
     - 13) "CMS" - Changeable message sign circuits.
     - 14) "HAR" - Highway advisory radio circuits.
     - 15) "BOOSTER PUMP" - Booster pump circuit.
4. Bonding jumper for metal covers shall be 3' long, minimum.
5. The nominal dimensions of the opening in which the cover sets shall be the same as the cover dimensions except the length and width dimensions shall be ⅛" greater.
6. Covers and boxes shall be interchangeable with California standard male and female gages. When interchanged with a standard male or female gage, the top surfaces shall be flush within ⅛".

DIMENSION TABLE

PULL BOX	PULL BOX						COVER				
	MINIMUM * THICKNESS	MINIMUM DEPTH BOX AND EXTENSION	WO	LO	L1	W1	L **	W **	R	EDGE THICKNESS	EDGE TAPER
No. 3½(T)	1½"	1'-0"	1'-5"± 1"	1'-8⅞"±	1'-2½"±	10⅝"± 1"	1'-8"±	1'-1¾"±	0"	½"	NONE
No. 5(T)	1¾"	1'-0"	1'-11½"± 1"	2'-5½"±	1'-7"±	1'-1"± 1"	2'-3"±	1'-4"±	0"	½"	NONE
No. 6(T)	2"	1'-0"	2'-6"± 1"	2'-11½"±	1'-11½"±	1'-5"± 1"	2'-9"±	1'-8"±	0"	½"	NONE

* EXCLUDING CONDUIT WEB ** TOP DIMENSION

STATE OF CALIFORNIA
DEPARTMENT OF TRANSPORTATION

ELECTRICAL SYSTEMS (TRAFFIC PULL BOX)

NO SCALE

RSP ES-8B DATED JULY 19, 2013 SUPERSEDES RSP ES-8B DATED JANUARY 20, 2012 THAT SUPPLEMENTS THE STANDARD PLANS BOOK DATED 2010.

REVISED STANDARD PLAN RSP ES-8B

7-15-13

Dist	COUNTY	ROUTE	POST MILES TOTAL PROJECT	SHEET No.	TOTAL SHEETS
06	Kin	198	R15.4/R16.0	50	63

Theresa Gabriel
REGISTERED ELECTRICAL ENGINEER

July 19, 2013
PLANS APPROVAL DATE

REGISTERED PROFESSIONAL ENGINEER
Theresa Aziz Gabriel
No. E15129
Exp. 6-30-14
ELECTRICAL
STATE OF CALIFORNIA

THE STATE OF CALIFORNIA OR ITS OFFICERS OR AGENTS SHALL NOT BE RESPONSIBLE FOR THE ACCURACY OR COMPLETENESS OF SCANNED COPIES OF THIS PLAN SHEET.

TO ACCOMPANY PLANS DATED 1-20-15

2010 REVISED STANDARD PLAN RSP ES-10A

ISOFOOTCANDLE CURVE - MINIMUM

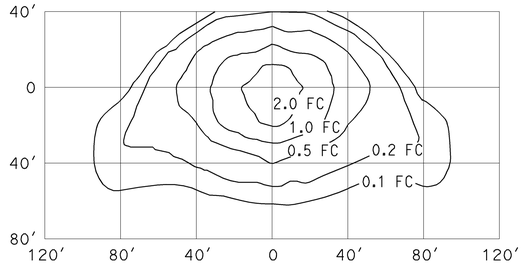

TYPE III MEDIUM CUTOFF

Cutoff Luminaire
34′ Mounting Height
Lamp operated at 22,000 lm
200-W high pressure sodium lamp
ANSI Designation S66

ISOFOOTCANDLE CURVE - MINIMUM

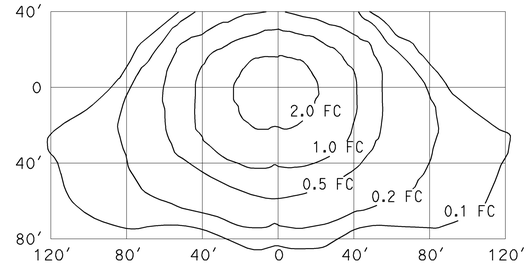

TYPE III MEDIUM CUTOFF

Cutoff Luminaire
40′ Mounting Height
Lamp operated at 37,000 lm
310-W high pressure sodium lamp
ANSI Designation S67

ISOFOOTCANDLE CURVE - MINIMUM

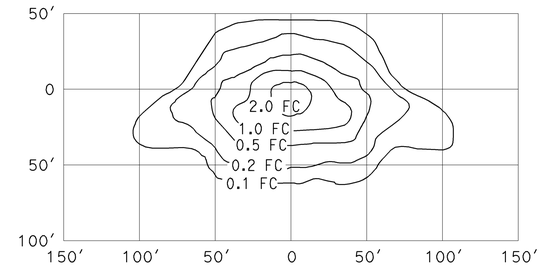

TYPE III MEDIUM CUTOFF

Cutoff Luminaire
30′ Mounting Height
Lamp operated at 16,000 lm
150-W high pressure sodium lamp
ANSI Designation S55

ISOFOOTCANDLE CURVE - MINIMUM

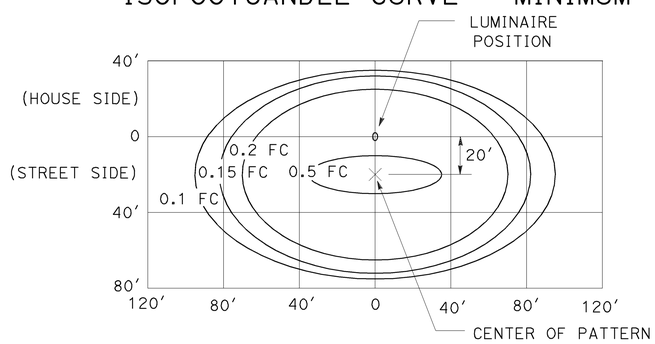

LED LUMINAIRE ROADWAY 1

165-W at 34′ Mounting Height

ISOFOOTCANDLE CURVE - MINIMUM

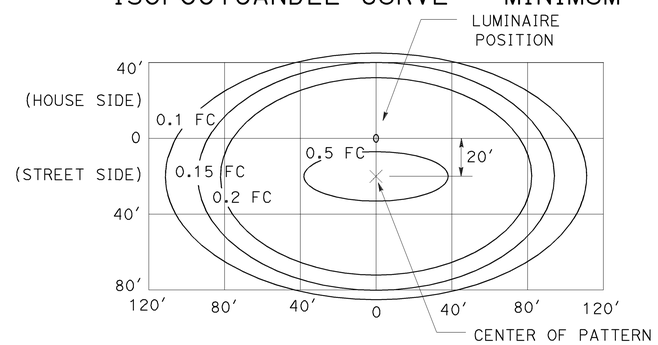

LED LUMINAIRE ROADWAY 2

235-W at 40′ Mounting Height

ISOFOOTCANDLE CURVE - MINIMUM

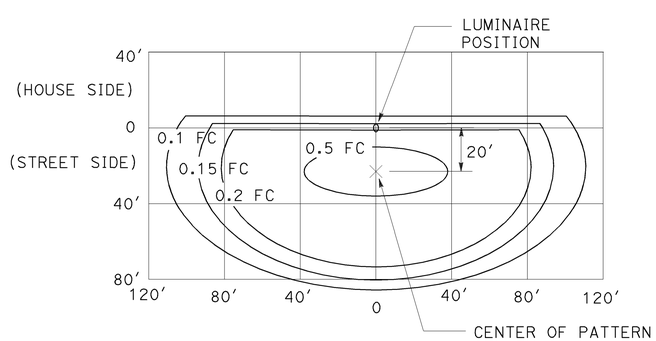

LED LUMINAIRE ROADWAY 3

235-W at 40′ Mounting Height
with back side control

ISOFOOTCANDLE CURVE - MINIMUM

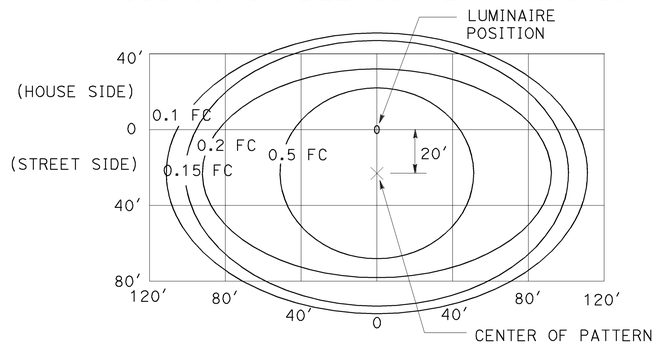

LED LUMINAIRE ROADWAY 4

300-W at 40′ Mounting Height

ISOFOOTCANDLE CURVE - MINIMUM

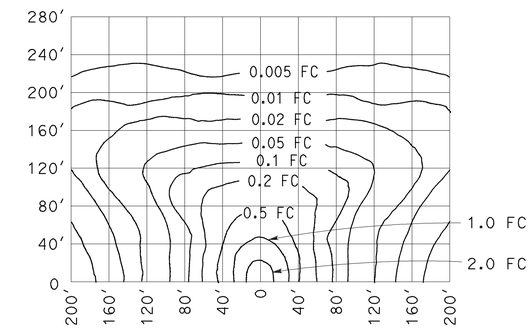

LOW PRESSURE SODIUM LUMINAIRE

40′ Mounting Height
Lamp operated at 33,000 lm
180-W low pressure sodium lamp

STATE OF CALIFORNIA
DEPARTMENT OF TRANSPORTATION

ELECTRICAL SYSTEMS (ISOFOOTCANDLE DIAGRAMS)

NO SCALE

RSP ES-10A DATED JULY 19, 2013 SUPERSEDES RSP ES-10A DATED JULY 20, 2012 THAT SUPPLEMENTS THE STANDARD PLANS BOOK DATED 2010.

REVISED STANDARD PLAN RSP ES-10A

Dist	COUNTY	ROUTE	POST MILES TOTAL PROJECT	SHEET No.	TOTAL SHEETS
06	Kin	198	R15.4/R16.0	51	63

Jeffery G. McRae
REGISTERED ELECTRICAL ENGINEER

July 20, 2012
PLANS APPROVAL DATE

REGISTERED PROFESSIONAL ENGINEER
Jeffery G. McRae
No. E14512
Exp. 6-30-14
ELECTRICAL
STATE OF CALIFORNIA

THE STATE OF CALIFORNIA OR ITS OFFICERS OR AGENTS SHALL NOT BE RESPONSIBLE FOR THE ACCURACY OR COMPLETENESS OF SCANNED COPIES OF THIS PLAN SHEET.

TO ACCOMPANY PLANS DATED 1-20-15

ISOFOOTCANDLE CURVE - MINIMUM

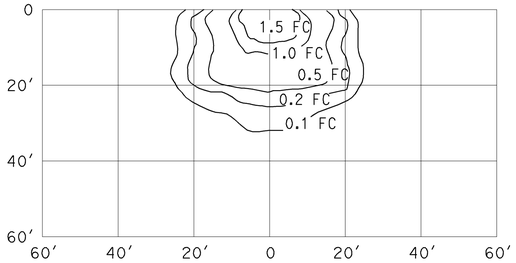

WALL LUMINAIRE
15′ Mounting Height
Lamp operated at 5,800 lm
70-W high pressure sodium lamp
ANSI Designation S62

ISOFOOTCANDLE CURVE - MINIMUM

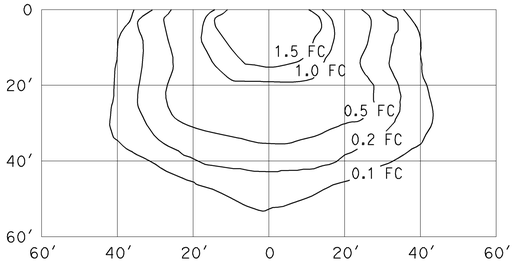

WALL LUMINAIRE
15′ Mounting Height
Lamp operated at 9,500 lm
100-W high pressure sodium lamp
ANSI Designation S54

ISOFOOTCANDLE CURVE - MINIMUM

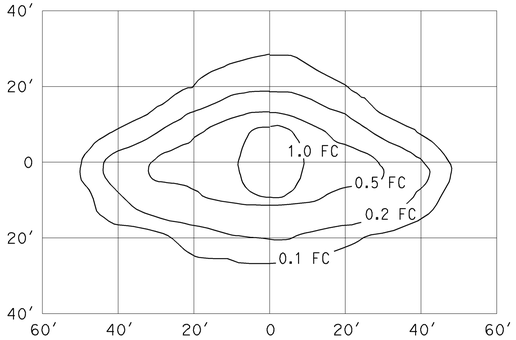

PENDANT SOFFIT LUMINAIRE
TYPE III SHORT
17′ Mounting Height
Lamp operated at 5,800 lm
70-W high pressure sodium lamp
ANSI Designation S62

ISOFOOTCANDLE CURVE - MINIMUM

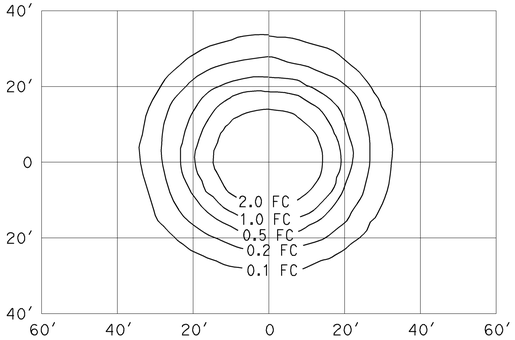

PENDANT SOFFIT LUMINAIRE
17′ Mounting Height
Lamp operated at 5,800 lm
70-W high pressure sodium lamp
ANSI Designation S62

ISOFOOTCANDLE CURVE - MINIMUM

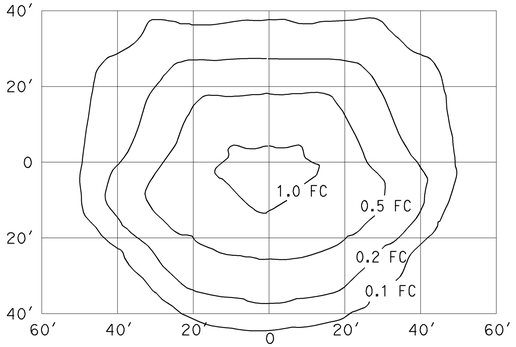

FLUSH SOFFIT LUMINAIRE
17′ Mounting Height
Lamp operated at 5,800 lm
70-W high pressure sodium lamp
ANSI Designation S62

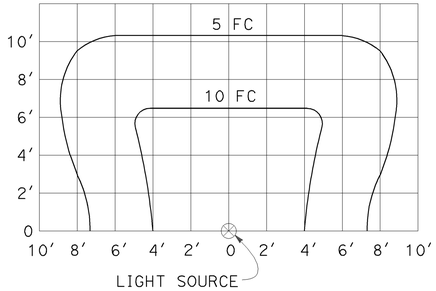

SIGN LIGHTING FIXTURE
ISOFOOTCANDLE DIAGRAM

NOTES:

1. Curves represent the minimum footcandle (FC) of initial illumination on a 10′-0" x 20′-0" panel.
2. The FC shown are with the fixture attached to the light fixture mounting channel which places the center of the source 4′-8" in front of panel and 1′-0" below the bottom edge.
3. Applicable lamp: 85-W fluorescent phosphor coated induction lamp.

STATE OF CALIFORNIA
DEPARTMENT OF TRANSPORTATION

ELECTRICAL SYSTEMS (ISOFOOTCANDLE DIAGRAMS)

NO SCALE

RSP ES-10B DATED JULY 20, 2012 SUPPLEMENTS THE STANDARD PLANS BOOK DATED 2010.

REVISED STANDARD PLAN RSP ES-10B

2010 REVISED STANDARD PLAN RSP ES-10B

Dist	COUNTY	ROUTE	POST MILES TOTAL PROJECT	SHEET No.	TOTAL SHEETS
06	Kin	198	R15.4/R16.0	52	63

REGISTERED CIVIL ENGINEER

July 19, 2013
PLANS APPROVAL DATE

REGISTERED PROFESSIONAL ENGINEER
Stanley P. Johnson
No. C57793
Exp. 3-31-14
CIVIL
STATE OF CALIFORNIA

THE STATE OF CALIFORNIA OR ITS OFFICERS OR AGENTS SHALL NOT BE RESPONSIBLE FOR THE ACCURACY OR COMPLETENESS OF SCANNED COPIES OF THIS PLAN SHEET.

TO ACCOMPANY PLANS DATED 1-20-15

STANDARD TYPE	SETBACK (DIMENSION A)
32	30'-0" (Min)
31	20'-0" (Min)
15, 15D, 15-SB, 21, 21D, 30	ARM LENGTH (Min)

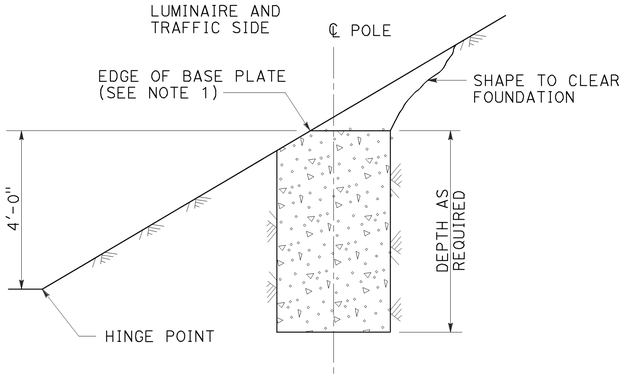

CUT SLOPES
STEEPER THAN 4:1,
LESS THAN 2:1
DETAIL A-1
See Note 2 and 3

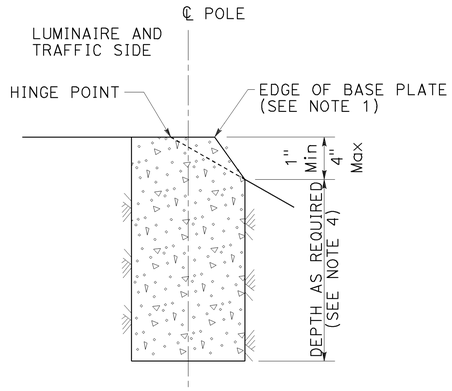

FILL SLOPES
STEEPER THAN 4:1,
LESS THAN 2:1
DETAIL A-2
See Note 2 and 3

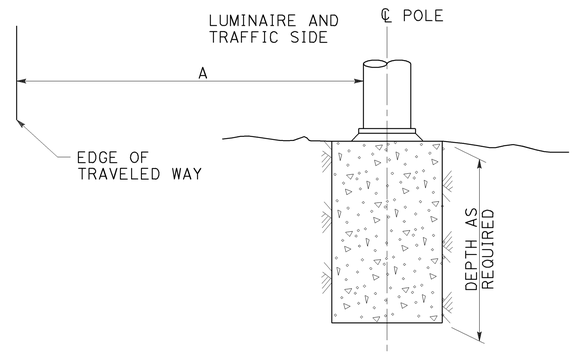

FLAT SECTIONS, CUT OR FILL SLOPES
4:1 OR FLATTER
DETAIL A-3
See Note 2

FOUNDATIONS ADJACENT TO ALL ROADWAYS EXCEPT
IN SIDEWALK, MEDIAN AND ISLAND AREAS
DETAIL A

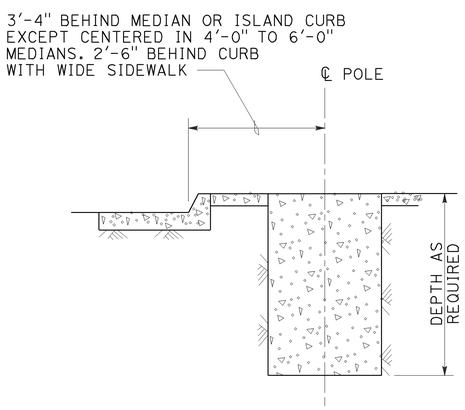

MEDIAN, ISLAND
OR WIDE SIDEWALK
DETAIL B-1
7' Wide and wider

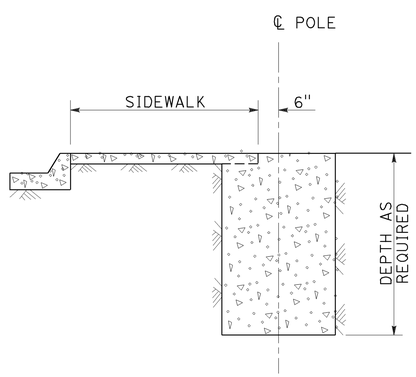

NARROW SIDEWALK
DETAIL B-2
Less than 7' wide

FOUNDATIONS IN SIDEWALK, MEDIAN AND ISLAND AREAS
DETAIL B

NOTES:

1. Where a portion of the foundation is above grade, the top edges shall have a 1" chamfer.
2. Slopes shall be horizontal to vertical ratio (Horizontal : Vertical).
3. Horizontal setbacks on cut and fill slopes steeper than 4:1 shall not exceed the distance shown for flat sections.
4. CIDH embedment depth shall be increased beyond standard depths by the diameter of the CIDH.

STATE OF CALIFORNIA
DEPARTMENT OF TRANSPORTATION

ELECTRICAL SYSTEMS (FOUNDATION INSTALLATIONS)

NO SCALE

RSP ES-11 DATED JULY 19, 2013 SUPERSEDES STANDARD PLAN ES-11
DATED MAY 20, 2011 - PAGE 488 OF THE STANDARD PLANS BOOK DATED 2010.

REVISED STANDARD PLAN RSP ES-11

2010 REVISED STANDARD PLAN RSP ES-11

7-9-13

DIST	COUNTY	ROUTE	POST MILES TOTAL PROJECT	SHEET No.	TOTAL SHEETS
06	Kin	198	R15.4/R16.0	53	63

REGISTERED CIVIL ENGINEER — DATE 11-12-14

1-20-15
PLANS APPROVAL DATE

REGISTERED PROFESSIONAL ENGINEER — DON NGUYEN-TAN — No. C 57510 — Exp. 12-31-15 — CIVIL — STATE OF CALIFORNIA

The State of California or its officers or agents shall not be responsible for the accuracy or completeness of electronic copies of this plan sheet.

LEGEND

1. Replace existing barrier railing with Concrete Barrier (Type 732)
2. Existing 1½"± AC surfacing
3. Replace existing median barrier with Conc Barrier (Type 60A)
4. Temporary Railing (Type K), see Roadway Plans
5. Paint "Hanford Armona Road UC"
6. Paint "Br No. 45-0078"
7. Guard Rail see Roadway Plans
8. Structural Concrete Approach Slab (Type R) (10D)
9. Place Paving Notch Extension
10. Place Joint Seal
11. Salvage Metal Bridge Railing
12. Install 1½" conduit to re-establish existing soffit lighting. See roadway plans.

Indicates existing structure

Approximate point of minimum vertical clearance

Indicates limits of Bridge Removal (Portion), and constuct new reinforced concrete deck.

NOTES:

1. For Quantities, see "DECK CONTOURS" sheet.
2. For "INDEX TO PLANS", "STANDARD PLANS" list, and "GENERAL NOTES", see "ABUTMENT DETAILS No. 1" sheet.

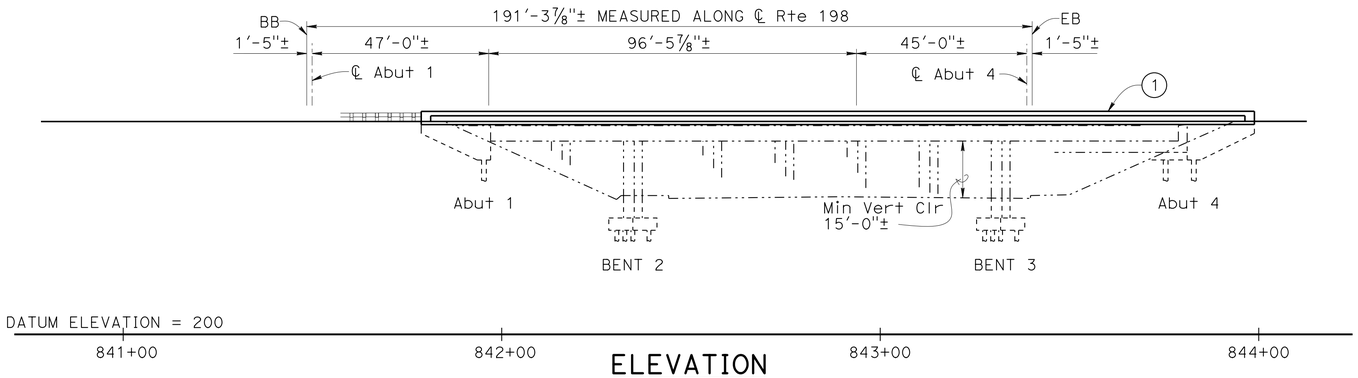

ELEVATION
1" = 20'

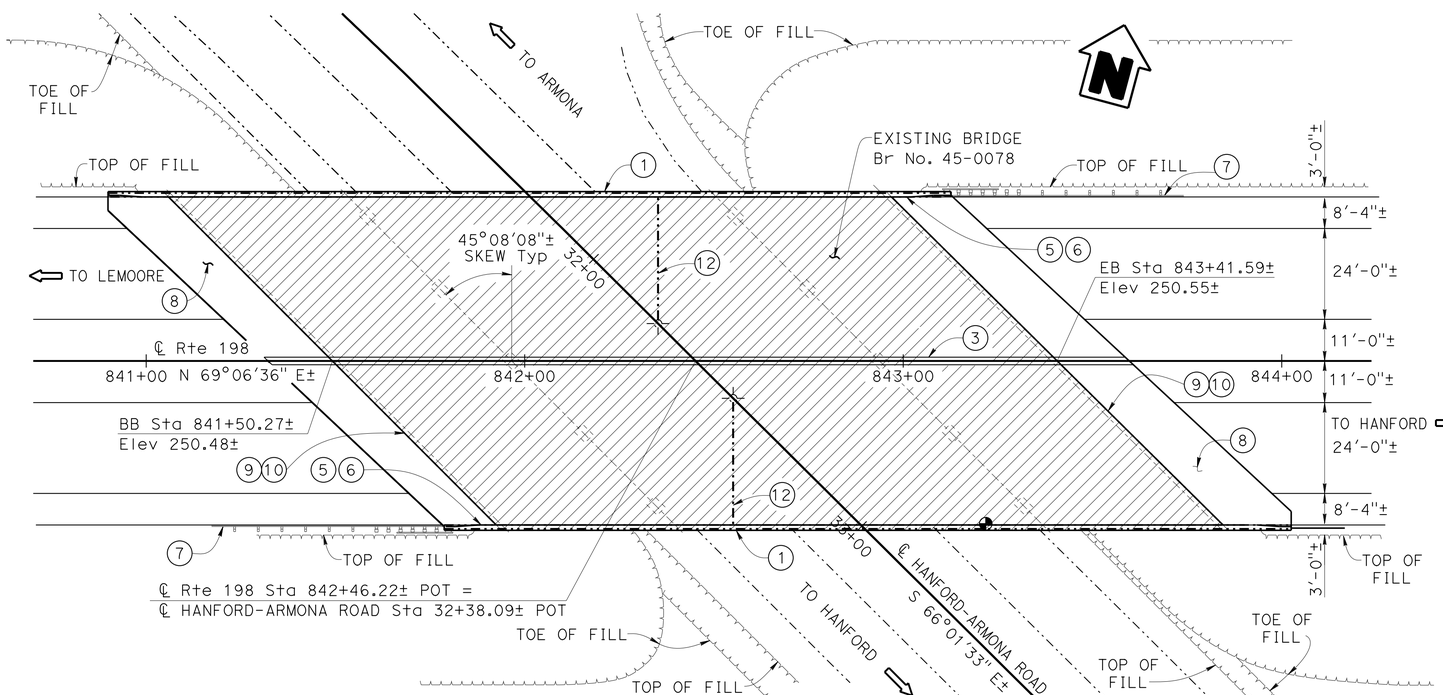

PLAN
1" = 20'

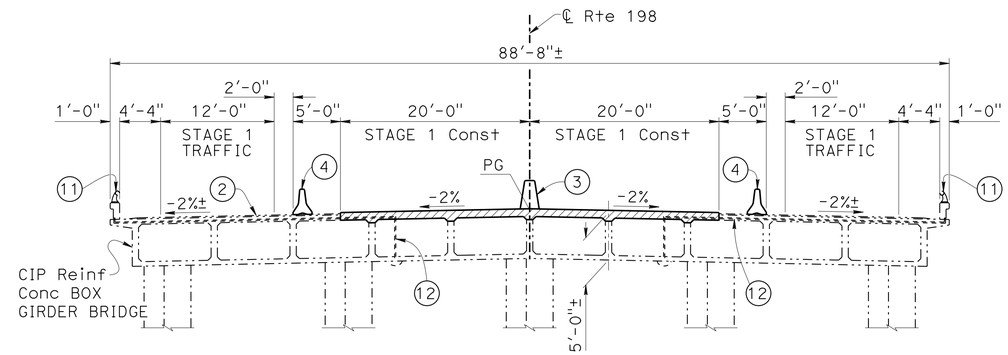

STAGE 1 CONSTRUCTION

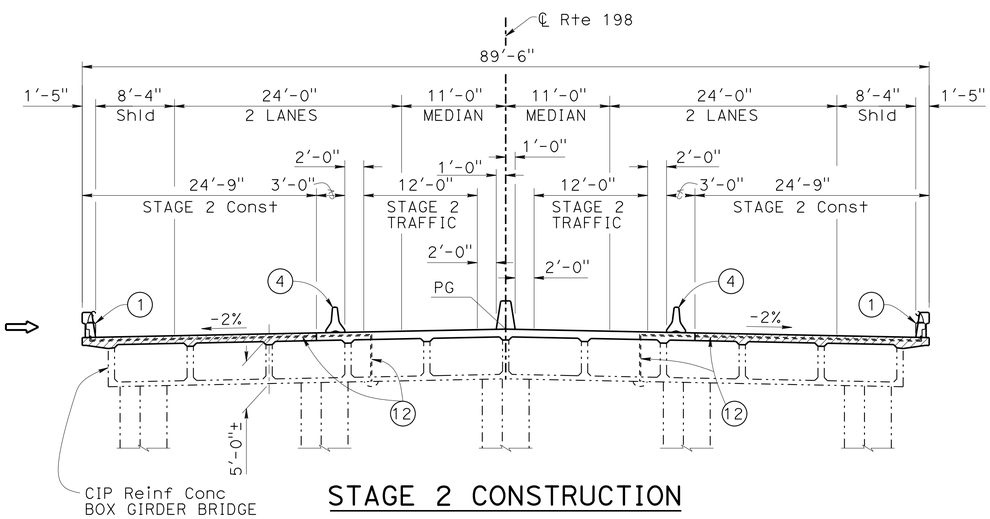

STAGE 2 CONSTRUCTION

TYPICAL SECTION
⅛" = 1'-0"

NOTE:
VERIFY ALL CONTROLLING FIELD DIMENSIONS BEFORE ORDERING OR FABRICATING ANY MATERIAL.

GARY BLAKESLEY
DESIGN ENGINEER

	BY	CHECKED
DESIGN	D. NGUYEN-TAN	H. TUAZON
DETAILS	P. SILVA	H. TUAZON
QUANTITIES	D. ALVAREZ	H. TUAZON

LOAD & RESISTANCE FACTOR DESIGN — LIVE LOADING: HL93-W/"LOW-BOY" AND PERMIT DESIGN VEHICLE

LAYOUT — BY D. NGUYEN-TAN — CHECKED H. TUAZON

SPECIFICATIONS — BY S. NELAPATLA — PLANS AND SPECS COMPARED D. NGUYEN-TAN

ORIGINAL SCALE IN INCHES FOR REDUCED PLANS 0 1 2 3

STATE OF CALIFORNIA
DEPARTMENT OF TRANSPORTATION

DIVISION OF ENGINEERING SERVICES
STRUCTURE DESIGN
DESIGN BRANCH 6

BRIDGE NO. 45-0078
POST MILE R15.75

HANFORD ARMONA RD UC DECK REHAB
GENERAL PLAN

UNIT: 3591
PROJECT NUMBER & PHASE: 0614000172-1
CONTRACT NO.: 06-462214

DISREGARD PRINTS BEARING EARLIER REVISION DATES

REVISION DATES: 4-24-12 — 01-16-15 — 11-18-14

SHEET 1 OF 11

USERNAME => s115755 DATE PLOTTED => 07-APR-2015 TIME PLOTTED => 10:20

STRUCTURES DESIGN GENERAL PLAN SHEET (ENGLISH) (REV.09-01-10)

FILE => 45-0078-a-gp01.dgn

NOTE:

VPI = POINT OF VERTICAL INTERSECTION

NOTE:
VERIFY ALL CONTROLLING FIELD DIMENSIONS
BEFORE ORDERING OR FABRICATING ANY MATERIAL.

DIST	COUNTY	ROUTE	POST MILES TOTAL PROJECT	SHEET No.	TOTAL SHEETS
06	Kin	198	R15.4/R16.0	54	63

REGISTERED CIVIL ENGINEER 11-12-14 DATE

1-20-15
PLANS APPROVAL DATE

REGISTERED PROFESSIONAL ENGINEER
DON NGUYEN-TAN
No. C 57510
Exp. 12-31-15
CIVIL
STATE OF CALIFORNIA

The State of California or its officers or agents shall not be responsible for the accuracy or completeness of scanned copies of this plan sheet.

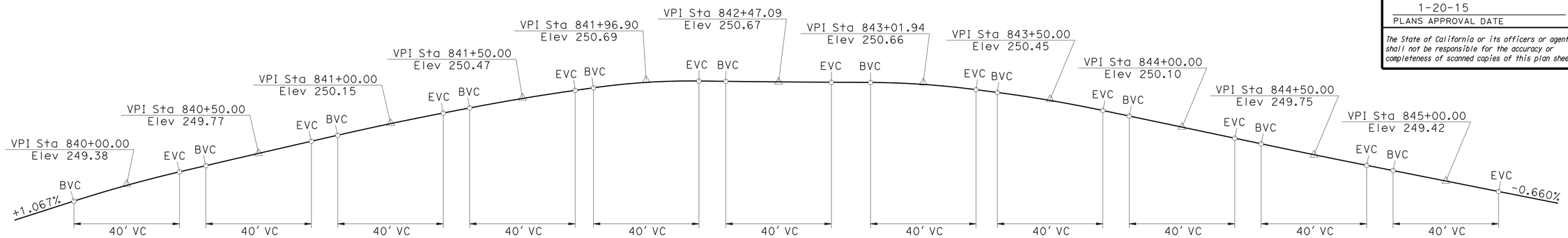

PROFILE GRADE

Horz: 1"=20'-0"
Vert: 1½"=1'-0"

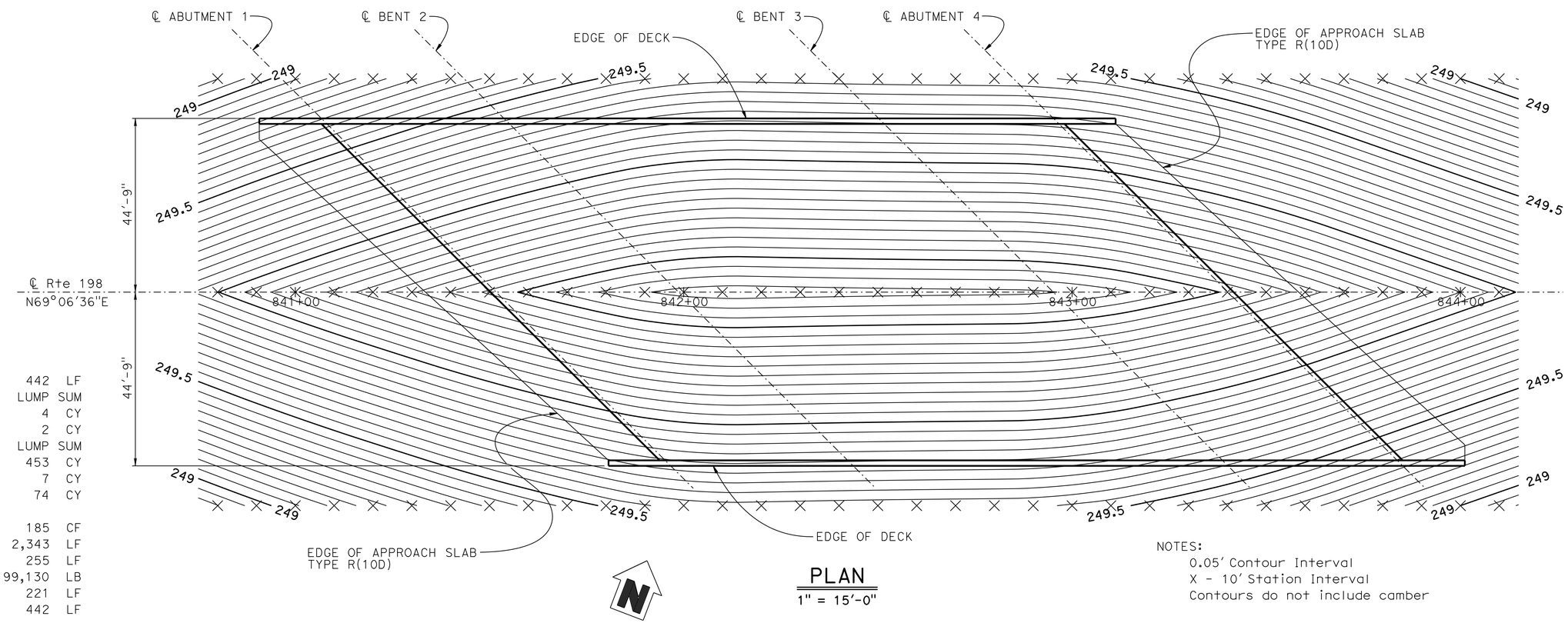

PLAN

1" = 15'-0"

NOTES:
0.05' Contour Interval
X - 10' Station Interval
Contours do not include camber

QUANTITIES

SALVAGE METAL BRIDGE RAILING	442	LF
BRIDGE REMOVAL (PORTION)	LUMP	SUM
STRUCTURE EXCAVATION (BRIDGE)	4	CY
STRUCTURE BACKFILL (BRIDGE)	2	CY
TEMPORARY SUPPORT	LUMP	SUM
STRUCTURAL CONCRETE, BRIDGE	453	CY
AGGREGATE BASE (APPROACH SLAB)	7	CY
STRUCTURAL CONCRETE, APPROACH SLAB (TYPE R)	74	CY
PAVING NOTCH EXTENSION	185	CF
DRILL AND BOND DOWEL	2,343	LF
JOINT SEAL (MR 1")	255	LF
BAR REINFORCING STEEL (BRIDGE)	199,130	LB
CONCRETE BARRIER (TYPE 60A)	221	LF
CONCRETE BARRIER (TYPE 732)	442	LF

	BY	CHECKED
DESIGN	D. NGUYEN-TAN	H. TUAZON
DETAILS	D. PATO	H. TUAZON
QUANTITIES	D. ALVAREZ	H. TUAZON

STATE OF CALIFORNIA
DEPARTMENT OF TRANSPORTATION

DIVISION OF ENGINEERING SERVICES
STRUCTURE DESIGN
DESIGN BRANCH 6

BRIDGE NO. 45-0078
POST MILE R15.75

HANFORD ARMONA RD UC DECK REHAB
DECK CONTOURS

STRUCTURES DESIGN DETAIL SHEET (ENGLISH) (REV. 09-01-10)

ORIGINAL SCALE IN INCHES FOR REDUCED PLANS 0 1 2 3

UNIT: 3591
PROJECT NUMBER & PHASE: 0614000172-1
CONTRACT NO.: 06-462214

DISREGARD PRINTS BEARING EARLIER REVISION DATES

REVISION DATES 8-08-14 8-15-14 11-03-14 01-16-15

SHEET 2 OF 11

FILE => 45-0078-d-dc01.dgn

USERNAME => s119755 DATE PLOTTED => 07-APR-2015 TIME PLOTTED => 10:21

DIST	COUNTY	ROUTE	POST MILES TOTAL PROJECT	SHEET No	TOTAL SHEETS
06	Kin	198	R15.4/R16.0	55	63

REGISTERED CIVIL ENGINEER — DATE 11-12-14

1-20-15
PLANS APPROVAL DATE

The State of California or its officers or agents shall not be responsible for the accuracy or completeness of electronic copies of this plan sheet.

REGISTERED PROFESSIONAL ENGINEER — DON NGUYEN-TAN — No. C 57510 — Exp. 12-31-15 — CIVIL — STATE OF CALIFORNIA

To get to the Caltrans web site, go to: http://www.dot.ca.gov

NOTE:
Structure Approach & Paving Notch Extension not shown

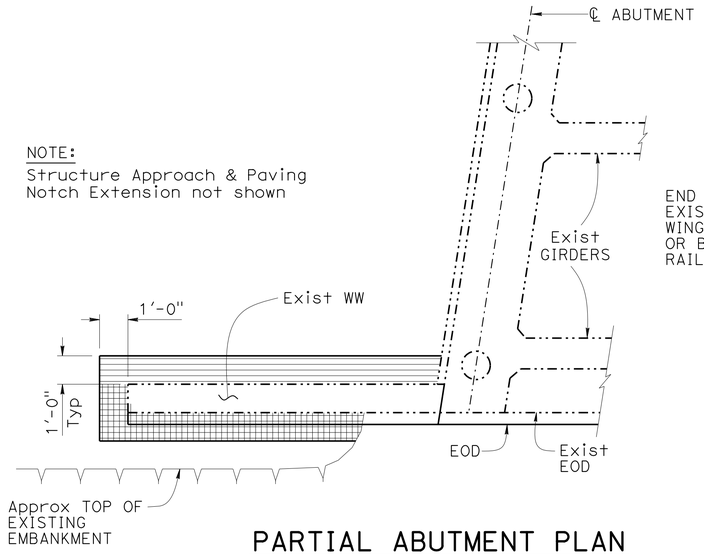

PARTIAL ABUTMENT PLAN

3/8" = 1'-0"

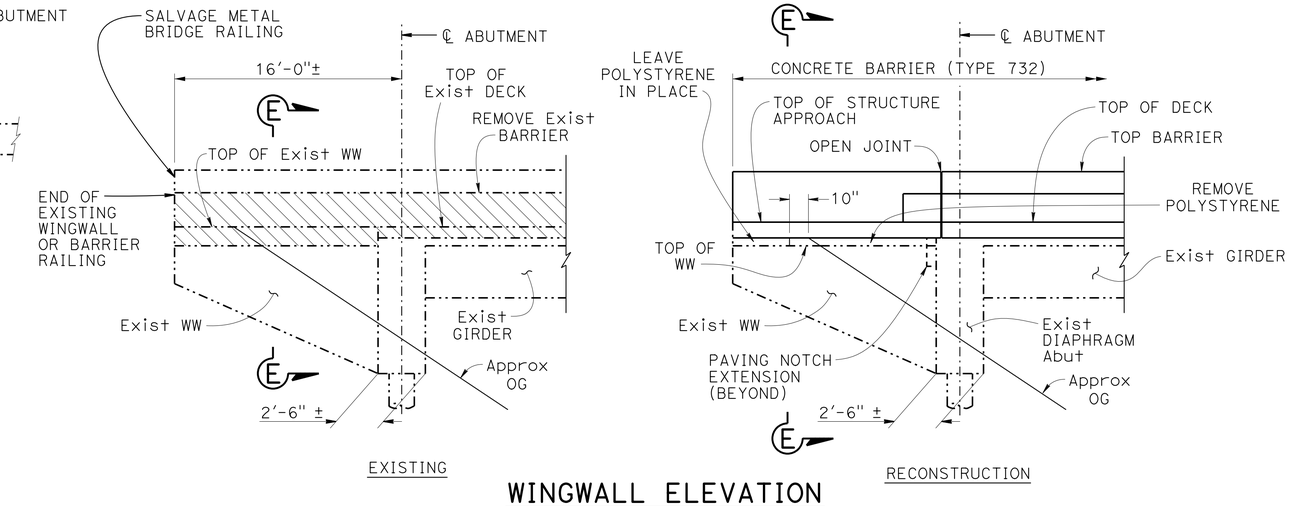

WINGWALL ELEVATION

NO SCALE

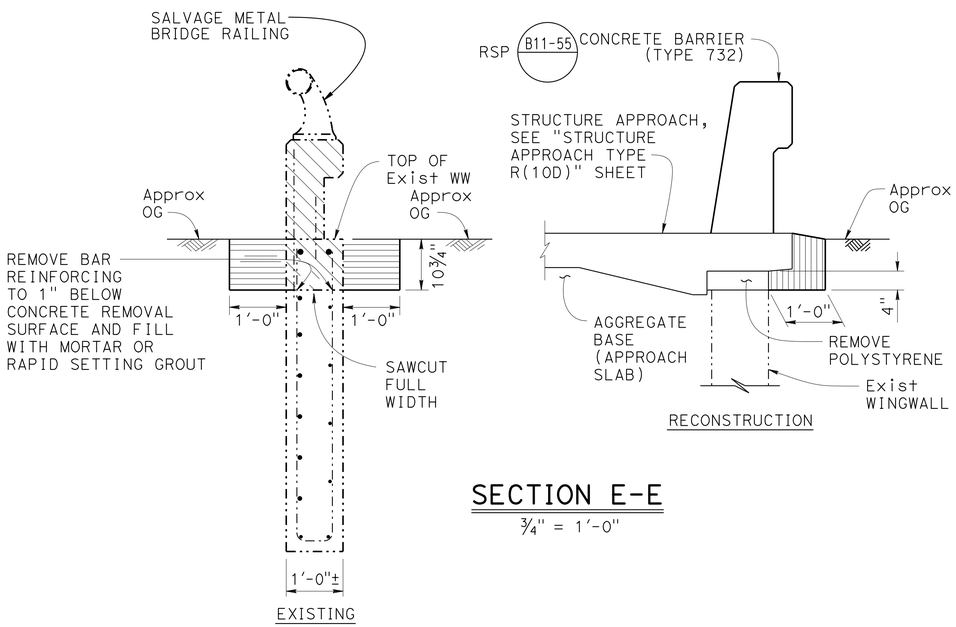

SECTION E-E

3/4" = 1'-0"

INDEX TO PLANS

SHEET NO.	TITLE
1.	GENERAL PLAN
2.	DECK CONTOURS
3.	ABUTMENT DETAILS NO. 1
4.	ABUTMENT DETAILS NO. 2
5.	TYPICAL SECTION NO. 1
6.	TYPICAL SECTION NO. 2
7.	GIRDER REINFORCEMENT
8.	STAGE CONSTRUCTION NO. 1
9.	STAGE CONSTRUCTION NO. 2
10.	STAGE CONSTRUCTION NO. 3
11.	STRUCTURE APPROACH TYPE R(10D)

GENERAL NOTES
LOAD AND RESISTANCE FACTOR DESIGN

DESIGN OF NEW STRUCTURE CONPONENTS; DECK
AASHTO LRFD Bridge Design Specifications, 2012, and the California Amendments dated January 2014

DEAD LOAD:
Does not include provisions for future wearing surface.

LIVE LOADING:
HL93 with "low boy" and Permit Design Vehicle.

SEISMIC:
No seismic analysis was performed.

REINFORCED CONCRETE:
f_y = 60,000 psi
f_c = 4,000 psi

2010 STANDARD PLANS

	A10A	ABBREVIATIONS (SHEET 1 OF 2)
RSP	A10B	ABBREVIATIONS (SHEET 2 OF 2)
	A10C	LINES AND SYMBOLS (SHEET 1 OF 3)
	A10D	LINES AND SYMBOLS (SHEET 2 OF 3)
	A10E	LINES AND SYMBOLS (SHEET 3 OF 3)
	A76A	CONCRETE BARRIER TYPE 60
	A76B	CONCRETE BARRIER TYPE 60
	B0-1	BRIDGE DETAILS
	B0-5	BRIDGE DETAILS
	B6-21	JOINT SEALS (MAXIMUM MOVEMENT RATING = 2")
RSP	B11-55	CONCRETE BARRIER TYPE 732

LEGEND:

- Denotes new construction
- Denotes existing structure
- Denotes Bridge Removal (Portion)
- Denotes limits of payment for Structure Excavation
- Denotes limits of payment for Structure Backfill

REVISED STANDARD PLAN → RSP — STANDARD PLAN SHEET No. / DETAIL No.

NOTE:
VERIFY ALL CONTROLLING FIELD DIMENSIONS BEFORE ORDERING OR FABRICATING ANY MATERIAL.

	BY	CHECKED
DESIGN	D. NGUYEN-TAN	H. TUAZON
DETAILS	P. SILVA	H. TUAZON
QUANTITIES	D. ALVAREZ	H. TUAZON

STATE OF CALIFORNIA — DEPARTMENT OF TRANSPORTATION

DIVISION OF ENGINEERING SERVICES — STRUCTURE DESIGN — DESIGN BRANCH 6

BRIDGE NO. 45-0078 — POST MILE R15.75

HANFORD ARMONA RD UC DECK REHAB
ABUTMENT DETAILS NO. 1

STRUCTURES DESIGN DETAIL SHEET (ENGLISH) (REV. 10/25/05)

ORIGINAL SCALE IN INCHES FOR REDUCED PLANS 0 1 2 3

UNIT: 3591
PROJECT NUMBER & PHASE: 0614000172-1 CONTRACT NO.: 06-462214

DISREGARD PRINTS BEARING EARLIER REVISION DATES — REVISION DATES 12-6-11 11-07-14 10-30-14 — SHEET 3 OF 11

FILE => 45-0078-f-adt1_gp.dgn

USERNAME => s115755 DATE PLOTTED => 07-APR-2015 TIME PLOTTED => 10:21

DIST	COUNTY	ROUTE	POST MILES TOTAL PROJECT	SHEET No	TOTAL SHEETS
06	Kin	198	R15.4/R16.0	56	63

REGISTERED CIVIL ENGINEER 11-12-14 DATE

1-20-15
PLANS APPROVAL DATE

REGISTERED PROFESSIONAL ENGINEER DON NGUYEN-TAN No. C 57510 Exp. 12-31-15 CIVIL STATE OF CALIFORNIA

The State of California or its officers or agents shall not be responsible for the accuracy or completeness of electronic copies of this plan sheet.

To get to the Caltrans web site, go to: http://www.dot.ca.gov

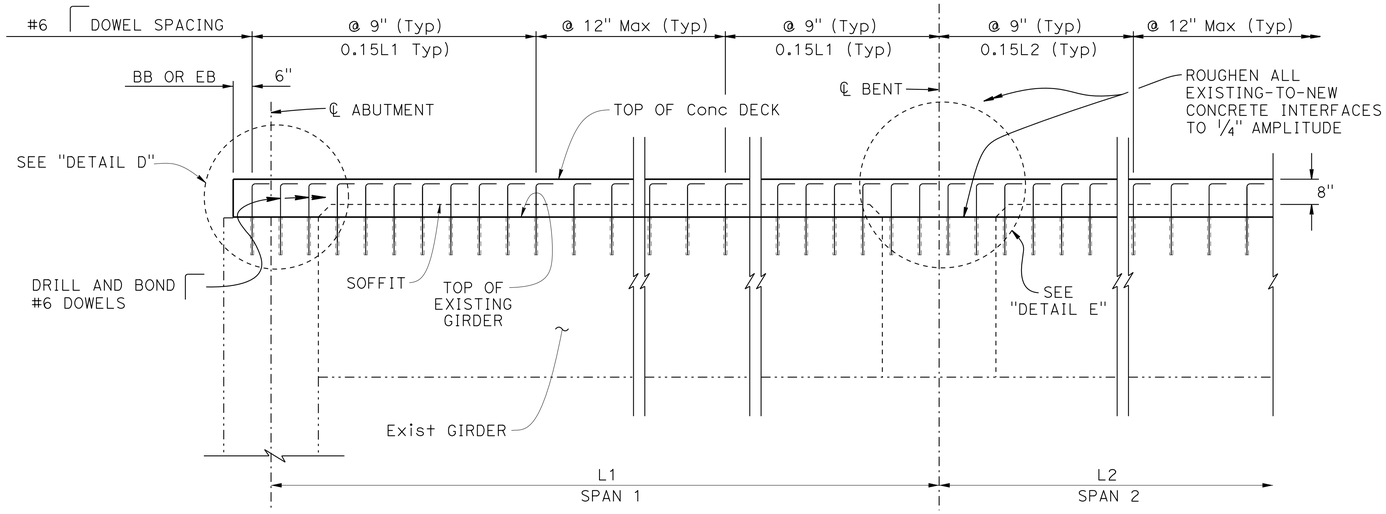

SECTION AT ABUTMENT

NO SCALE

Notes:

1. Approach Slab and Paving Notch Extension not shown
2. For bar reinforcement, see "TYPICAL SECTION NO. 2" sheet.

L1, L2 = Span Length (℄ abutment to ℄ bent or ℄ bent to ℄ bent)

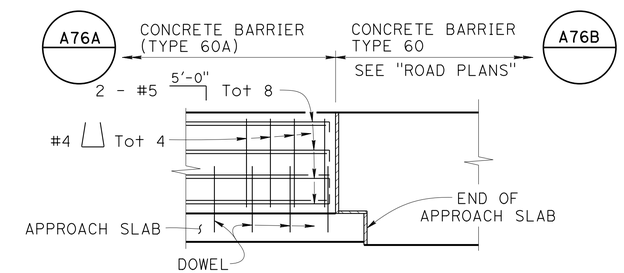

ELEVATION

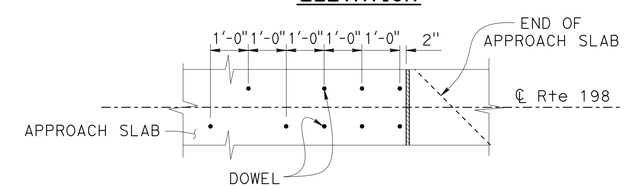

PLAN

CONNECTION TO APPROACH SLAB

1/2" = 1'-0"

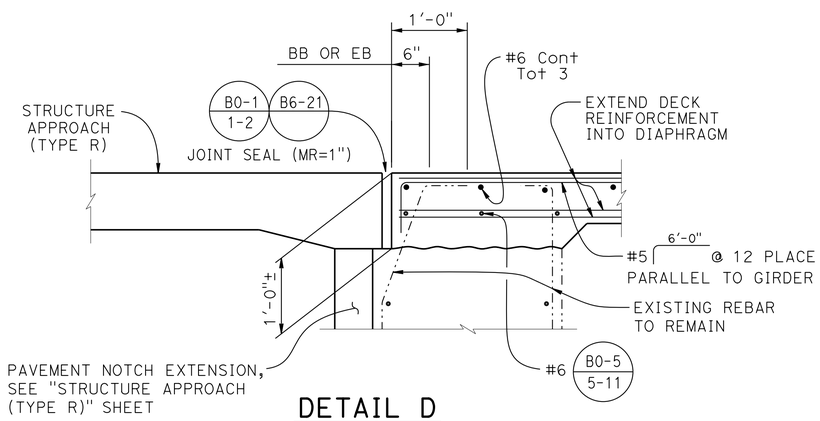

DETAIL D

1" = 1'-0"

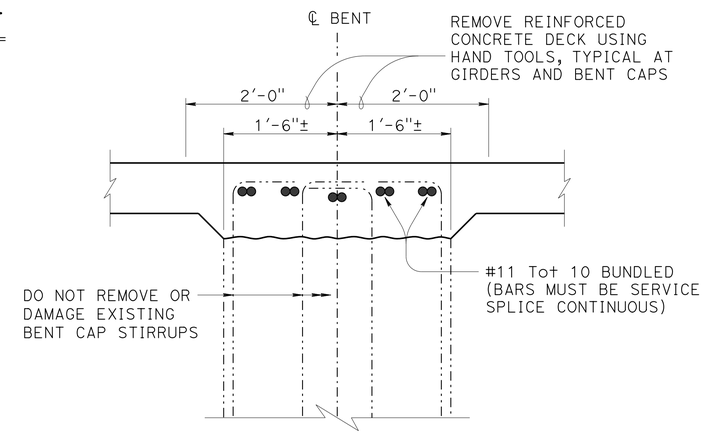

DETAIL E

1" = 1'-0"

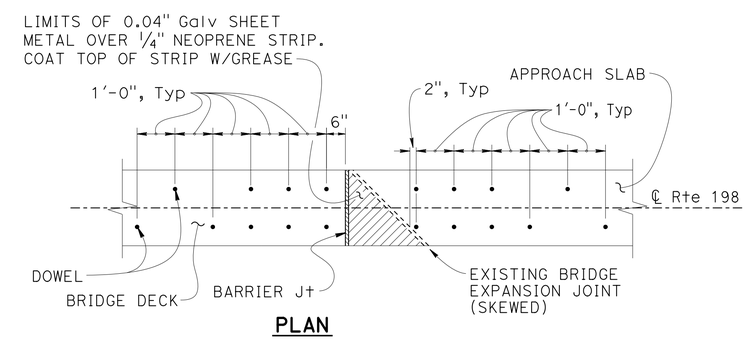

PLAN

DOWEL SPACING AT EXPANSION JOINT

1/2" = 1'-0"

JOINT SEAL TABLE		
LOCATION	APPROX LENGTH (FT)	EXISTING WATER STOP
HANFORD ARMONA Rd UC	254	NO

LEGEND:

- Indictates existing structure
- Indictates new structure

NOTES:

1. Match expansion joints gaps in concrete barrier with that of deck joints.
2. Minor adjustments may be made in dowel spacing to clear main reinforcement.
3. Barrier to be doweled on both sides of bridge expansion joints.
4. For Concrete Barrier Type 60A details not shown, see STANDARD PLAN A76A.

NOTE:
VERIFY ALL CONTROLLING FIELD DIMENSIONS BEFORE ORDERING OR FABRICATING ANY MATERIAL.

	BY	CHECKED
DESIGN	D. NGUYEN-TAN	H. TUAZON
DETAILS	Y. FENG	H. TUAZON
QUANTITIES	G. REYES-GUTIERREZ	H. TUAZON

STATE OF CALIFORNIA
DEPARTMENT OF TRANSPORTATION

DIVISION OF ENGINEERING SERVICES
STRUCTURE DESIGN
DESIGN BRANCH 6

BRIDGE NO. 45-0078
POST MILE R15.75

HANFORD ARMONA RD UC DECK REHAB
ABUTMENT DETAILS NO. 2

STRUCTURES DESIGN DETAIL SHEET (ENGLISH) (REV. 10/25/05)

ORIGINAL SCALE IN INCHES FOR REDUCED PLANS 0 1 2 3

UNIT: 3591
PROJECT NUMBER & PHASE: 0614000172-1
CONTRACT NO.: 06-462214

DISREGARD PRINTS BEARING EARLIER REVISION DATES

REVISION DATES 9-28-11 10-31-14 1-12-14

SHEET 4 OF 11

FILE => 45-0078-f-adt2.dgn

USERNAME => s115755 DATE PLOTTED => 07-APR-2015 TIME PLOTTED => 10:21

DIST	COUNTY	ROUTE	POST MILES TOTAL PROJECT	SHEET No	TOTAL SHEETS
06	Kin	198	R15.4/R16.0	57	63

REGISTERED CIVIL ENGINEER 11-12-14 DATE

1-20-15
PLANS APPROVAL DATE

REGISTERED PROFESSIONAL ENGINEER
DON NGUYEN-TAN
No. C 57510
Exp. 12-31-15
CIVIL
STATE OF CALIFORNIA

The State of California or its officers or agents shall not be responsible for the accuracy or completeness of electronic copies of this plan sheet.

To get to the Caltrans web site, go to: http://www.dot.ca.gov

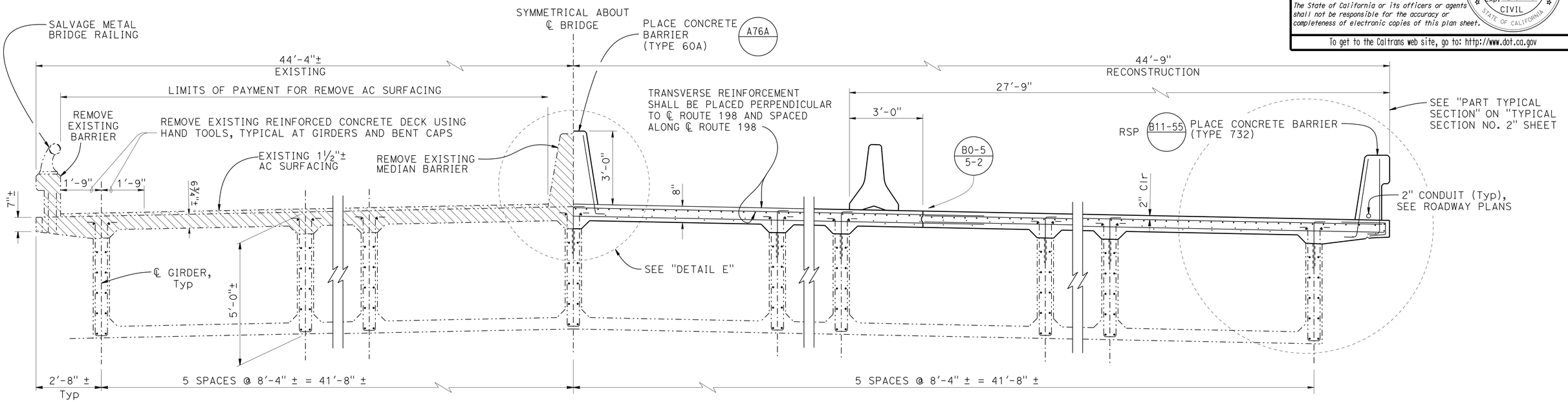

TYPICAL SECTION

½" = 1'-0"

LEGEND

- Denotes new construction
- Denotes existing structure
- Denotes Bridge Removal (Portion)

NOTES:

1.

2.

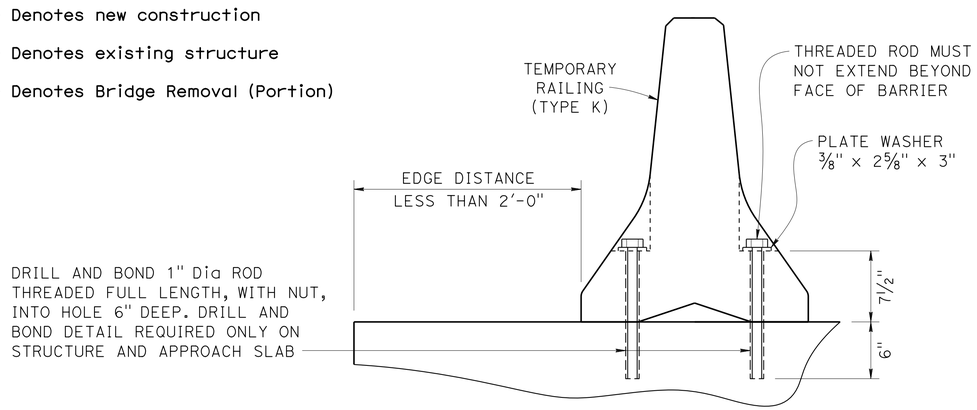

TYPE K RAILING ATTACHMENT DETAILS

1½" = 1'-0"

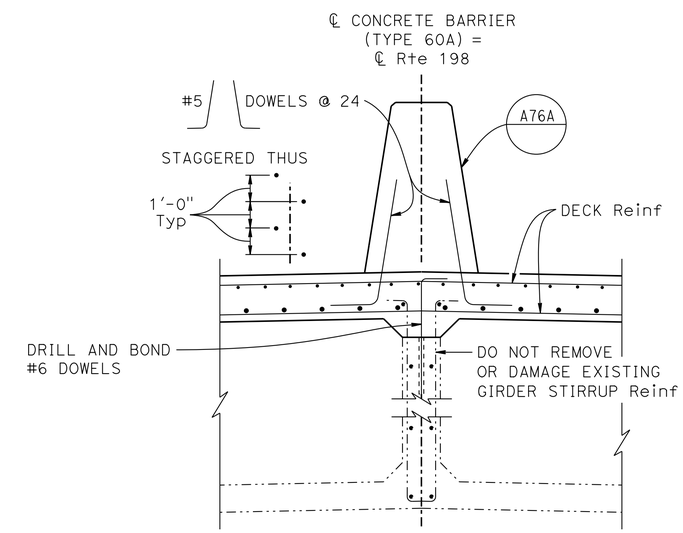

DETAIL E

¾" = 1'-0"

NOTE:
VERIFY ALL CONTROLLING FIELD DIMENSIONS BEFORE ORDERING OR FABRICATING ANY MATERIAL.

	BY	CHECKED
DESIGN	D. NGUYEN-TAN	H. TUAZON
DETAILS	P. SILVA	H. TUAZON
QUANTITIES	G. REYES-GUTIERREZ	H. TUAZON

STATE OF CALIFORNIA
DEPARTMENT OF TRANSPORTATION

DIVISION OF ENGINEERING SERVICES
STRUCTURE DESIGN
DESIGN BRANCH 6

BRIDGE NO. 45-0078
POST MILE R15.75

HANFORD ARMONA RD UC DECK REHAB
TYPICAL SECTION NO. 1

STRUCTURES DESIGN DETAIL SHEET (ENGLISH) (REV. 10/25/05)

ORIGINAL SCALE IN INCHES FOR REDUCED PLANS 0 1 2 3

UNIT: 3591
PROJECT NUMBER & PHASE: 0614000172-1
CONTRACT NO.: 06-462214

DISREGARD PRINTS BEARING EARLIER REVISION DATES

REVISION DATES: 12-6-11 | 10-31-14 | 01-16-15

SHEET 5 OF 11

FILE => 45-0078-k-ts1.dgn

USERNAME => s115755 DATE PLOTTED => 07-APR-2015 TIME PLOTTED => 10:21

DIST	COUNTY	ROUTE	POST MILES TOTAL PROJECT	SHEET No	TOTAL SHEETS
06	Kin	198	R15.4/R16.0	58	63

REGISTERED CIVIL ENGINEER 11-12-14 DATE

1-20-15
PLANS APPROVAL DATE

REGISTERED PROFESSIONAL ENGINEER DON NGUYEN-TAN No. C 57510 Exp. 12-31-15 CIVIL STATE OF CALIFORNIA

The State of California or its officers or agents shall not be responsible for the accuracy or completeness of electronic copies of this plan sheet.

To get to the Caltrans web site, go to: http://www.dot.ca.gov

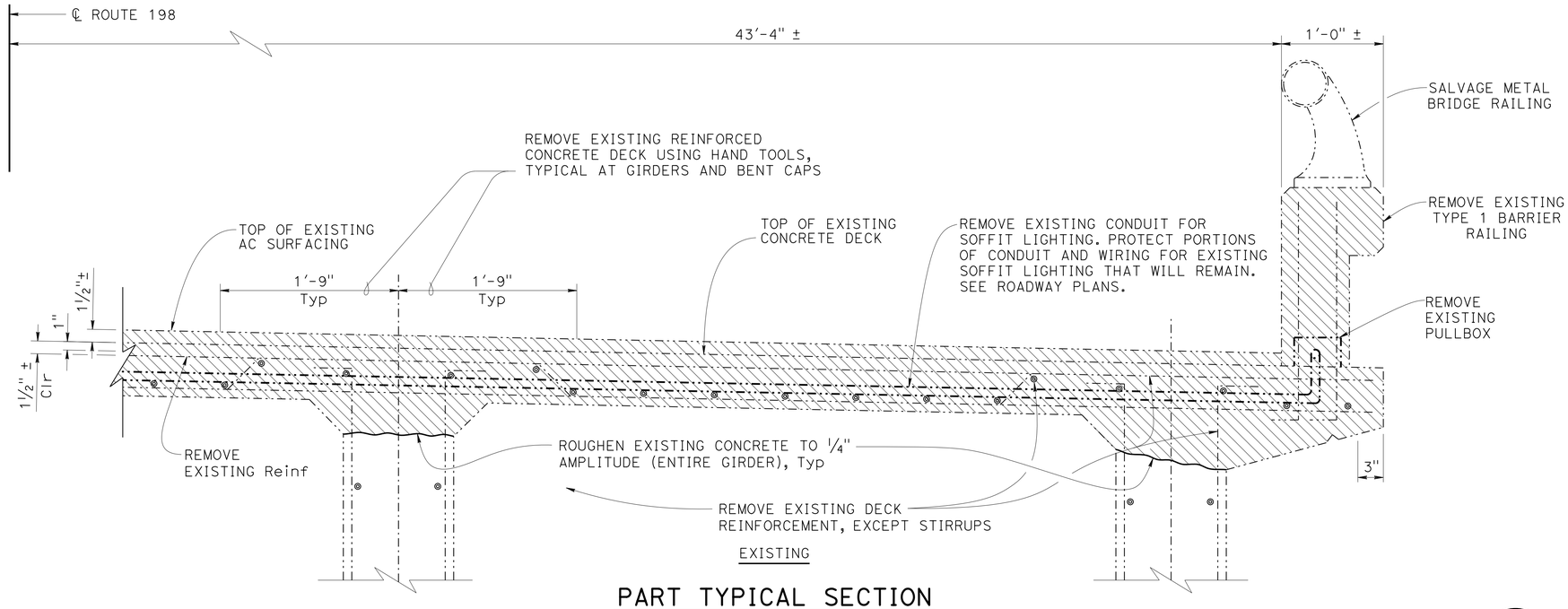

PART TYPICAL SECTION

1½" = 1'-0"

LEGEND

- Denotes new construction
- Denotes existing structure
- Denotes Bridge Removal (Portion)

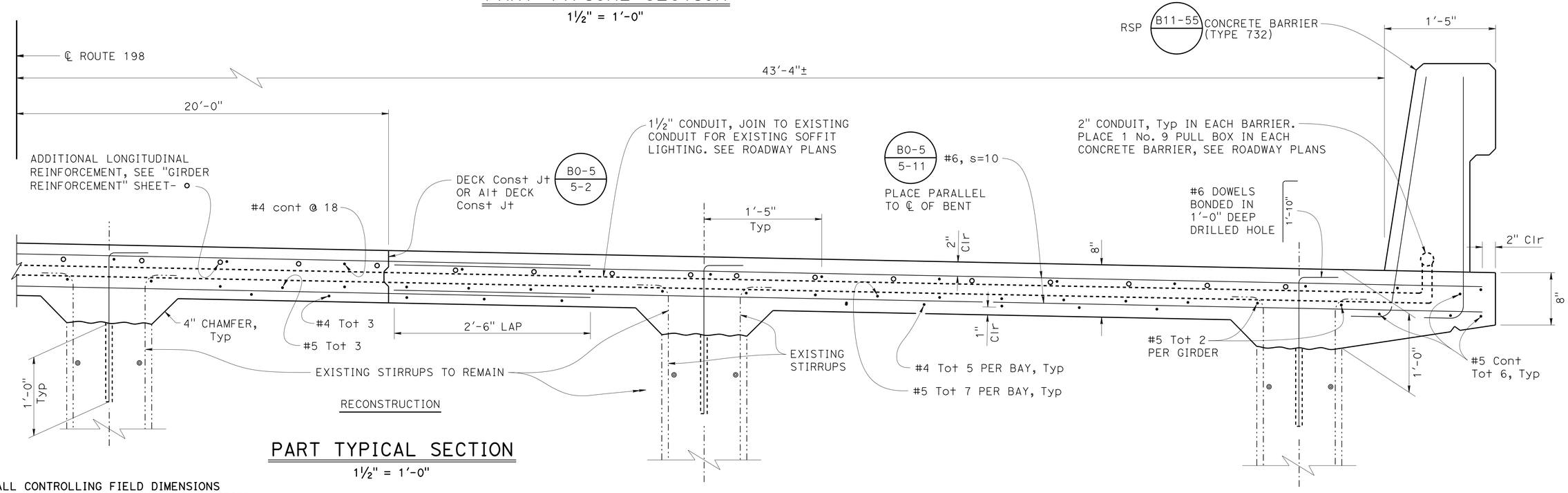

PART TYPICAL SECTION

1½" = 1'-0"

NOTE:
VERIFY ALL CONTROLLING FIELD DIMENSIONS BEFORE ORDERING OR FABRICATING ANY MATERIAL.

DESIGN	BY D. NGUYEN-TAN	CHECKED H. TUAZON	
DETAILS	BY P. SILVA	CHECKED H. TUAZON	
QUANTITIES	BY G. REYES-GUTIERREZ	CHECKED H. TUAZON	

STATE OF CALIFORNIA
DEPARTMENT OF TRANSPORTATION

DIVISION OF ENGINEERING SERVICES
STRUCTURE DESIGN
DESIGN BRANCH 6

BRIDGE NO. 45-0078
POST MILE R15.75

HANFORD ARMONA RD UC DECK REHAB
TYPICAL SECTION NO. 2

STRUCTURES DESIGN DETAIL SHEET (ENGLISH) (REV. 10/25/05)

ORIGINAL SCALE IN INCHES FOR REDUCED PLANS 0 1 2 3

UNIT: 3591
PROJECT NUMBER & PHASE: 0614000172-1
CONTRACT NO.: 06-462214

DISREGARD PRINTS BEARING EARLIER REVISION DATES

REVISION DATES 10-21-11 10-31-14 01-16-15

SHEET 6 OF 11

FILE => 45-0078-k-ts2.dgn

USERNAME => s115755 DATE PLOTTED => 07-APR-2015 TIME PLOTTED => 10:21

DIST	COUNTY	ROUTE	POST MILES TOTAL PROJECT	SHEET No	TOTAL SHEETS
06	Kin	198	R15.4/R16.0	59	63

REGISTERED CIVIL ENGINEER 11-12-14 DATE

1-20-15
PLANS APPROVAL DATE

REGISTERED PROFESSIONAL ENGINEER
DON NGUYEN-TAN
No. C 57510
Exp. 12-31-15
CIVIL
STATE OF CALIFORNIA

The State of California or its officers or agents shall not be responsible for the accuracy or completeness of electronic copies of this plan sheet.

To get to the Caltrans web site, go to: http://www.dot.ca.gov

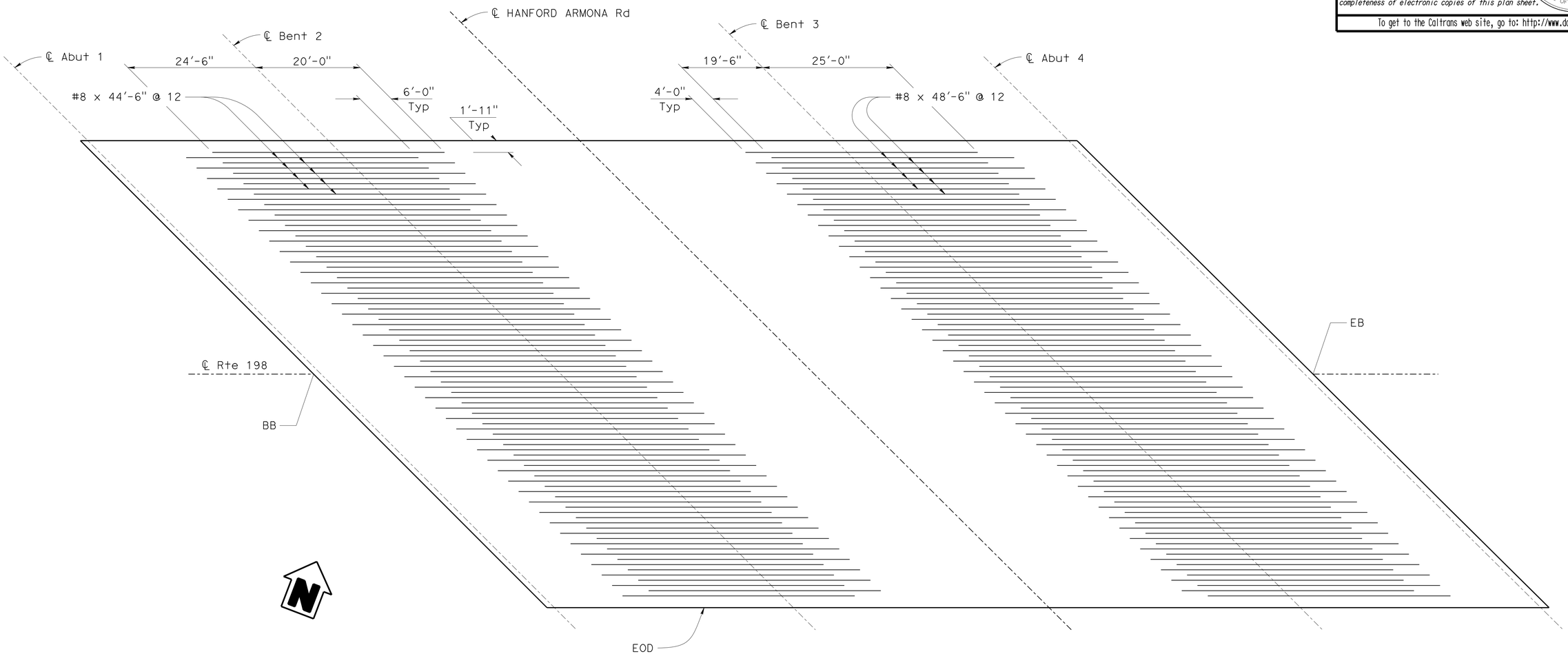

ADDITIONAL TOP REINFORCEMENT

1" = 10'-0"

NOTE:
VERIFY ALL CONTROLLING FIELD DIMENSIONS
BEFORE ORDERING OR FABRICATING ANY MATERIAL.

	BY	CHECKED
DESIGN	D. NGUYEN-TAN	H. TUAZON
DETAILS	P. SILVA	H. TUAZON
QUANTITIES	G. REYES-GUTIERREZ	H. TUAZON

STATE OF CALIFORNIA
DEPARTMENT OF TRANSPORTATION

DIVISION OF ENGINEERING SERVICES
STRUCTURE DESIGN
DESIGN BRANCH 6

BRIDGE NO. 45-0078
POST MILE R15.75

HANFORD ARMONA RD UC DECK REHAB
GIRDER REINFORCEMENT

STRUCTURES DESIGN DETAIL SHEET (ENGLISH) (REV. 10/25/05)

ORIGINAL SCALE IN INCHES FOR REDUCED PLANS 0 1 2 3

UNIT: 3591
PROJECT NUMBER & PHASE: 0614000172-1
CONTRACT NO.: 06-462214

DISREGARD PRINTS BEARING EARLIER REVISION DATES

REVISION DATES: 1-22-14

SHEET 7 OF 11

FILE => 45-0078-o-grnf01.dgn

USERNAME => s115755 DATE PLOTTED => 07-APR-2015 TIME PLOTTED => 10:21

DIST	COUNTY	ROUTE	POST MILES TOTAL PROJECT	SHEET No	TOTAL SHEETS
06	Kin	198	R15.4/R16.0	60	63

REGISTERED CIVIL ENGINEER 11-12-14 DATE

1-20-15
PLANS APPROVAL DATE

REGISTERED PROFESSIONAL ENGINEER DON NGUYEN-TAN No. C 57510 Exp. 12-31-15 CIVIL STATE OF CALIFORNIA

The State of California or its officers or agents shall not be responsible for the accuracy or completeness of electronic copies of this plan sheet.

To get to the Caltrans web site, go to: http://www.dot.ca.gov

NOTES:

1. For limits of traffic lanes and traffic control, see "ROAD PLANS".
2. ASL = Active Support Load, see table in "STAGE CONSTRUCTION NO. 2" sheet.
3. P = Support load.

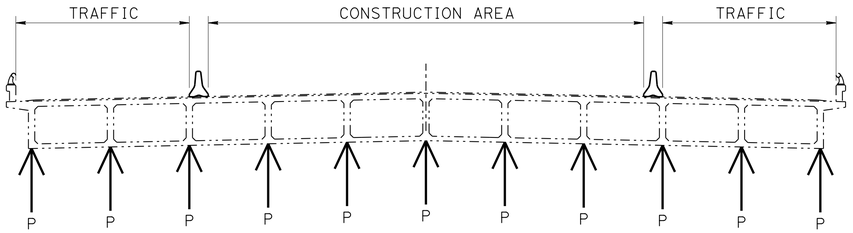

STAGE 1a

NO SCALE

STAGE 1a

1. Install Temp railing on Rte 198.
2. Install temporary supports.
3. Jack superstructure and cap beams; P = ASL.
4. Lock off jacks.
5. Readjust jacks at all temporary supports after 24 hrs; P = ASL.

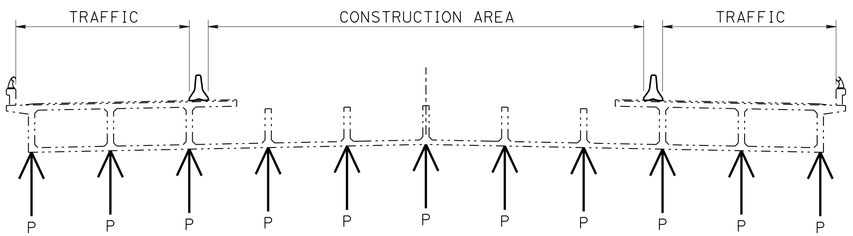

STAGE 1b

NO SCALE

STAGE 1b

1. Remove portion of existing deck.
2. Readjust jacks at temporary support bents A, C, and E; P = ASL.
3. Check for settlement at temporary support bents B & D. If settlement occurs, raise temporary support an equal amount to the amount of settlement.

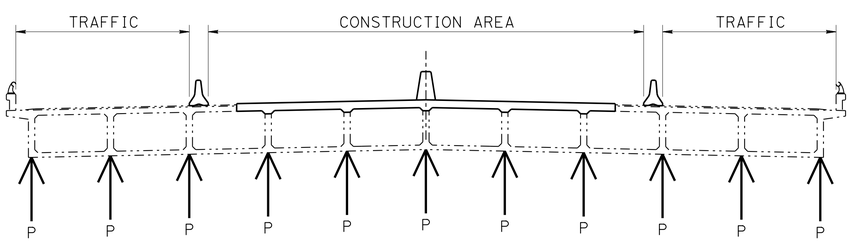

STAGE 1c

NO SCALE

STAGE 1c

1. Construct portion of new deck.
2. Construct median barrier railing.
3. Readjust jacks at temporary support bents A, C, and E; P = ASL.
4. Check for settlement at temporary support bents B & D. If settlement occurs, raise temporary support an equal amount to the amount of settlement.

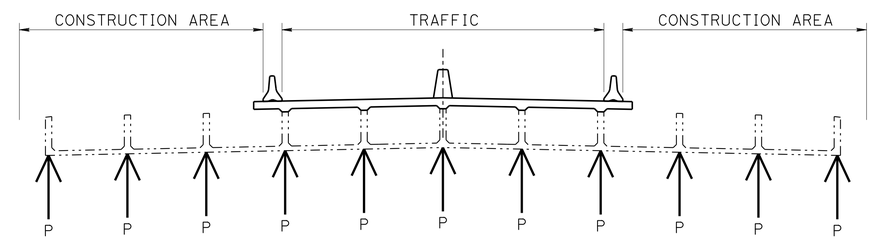

STAGE 2a

NO SCALE

STAGE 2a

1. Install Temp railing and apply traffic control on Rte 198.
2. Remove portion of existing deck.
3. Readjust jacks at temporary support bents A, C, and E; P = ASL.
4. Check for settlement at temporary support bents B & D. If settlement occurs, raise temporary support an equal amount to the amount of settlement.

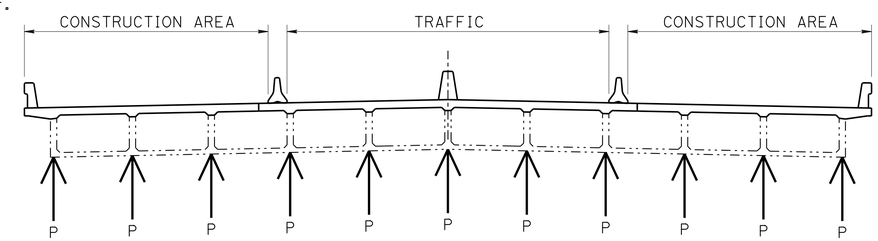

STAGE 2b

NO SCALE

STAGE 2b

1. Construct portion of new deck.
2. Construct barrier railing.
3. Remove temporary supports per Specifications.

NOTE:
VERIFY ALL CONTROLLING FIELD DIMENSIONS
BEFORE ORDERING OR FABRICATING ANY MATERIAL.

	BY	CHECKED
DESIGN	D. NGUYEN-TAN	H. TUAZON
DETAILS	P. SILVA	H. TUAZON
QUANTITIES	D. ALVAREZ	H. TUAZON

STATE OF CALIFORNIA
DEPARTMENT OF TRANSPORTATION

DIVISION OF ENGINEERING SERVICES
STRUCTURE DESIGN
DESIGN BRANCH 6

BRIDGE NO. 45-0078
POST MILE R15.75

HANFORD ARMONA RD UC DECK REHAB
STAGE CONSTRUCTION NO. 1

STRUCTURES DESIGN DETAIL SHEET (ENGLISH) (REV. 10/25/05)

ORIGINAL SCALE IN INCHES FOR REDUCED PLANS 0 1 2 3

UNIT: 3591
PROJECT NUMBER & PHASE: 0614000172-1
CONTRACT NO.: 06-462214

DISREGARD PRINTS BEARING EARLIER REVISION DATES

REVISION DATES: 1-20-14 4-30-14

SHEET 8 OF 11

FILE => 45-0078-q-stgcnst01.dgn

USERNAME => s115755 DATE PLOTTED => 07-APR-2015 TIME PLOTTED => 10:21

DIST	COUNTY	ROUTE	POST MILES TOTAL PROJECT	SHEET No	TOTAL SHEETS
06	Kin	198	R15.4/R16.0	61	63

REGISTERED CIVIL ENGINEER 11-12-14 DATE

1-20-15
PLANS APPROVAL DATE

REGISTERED PROFESSIONAL ENGINEER DON NGUYEN-TAN No. C 57510 Exp. 12-31-15 CIVIL STATE OF CALIFORNIA

The State of California or its officers or agents shall not be responsible for the accuracy or completeness of electronic copies of this plan sheet.

To get to the Caltrans web site, go to: http://www.dot.ca.gov

NOTES AND ASSUMPTIONS:

1. Live Load = 3 lanes of HL93
   Dead Load = Box girder superstructure + barrier rails.
2. Provide Active Support Load (ASL) under each ℄ girder. See "STAGE CONSTRUCTION NO. 1" sheet for jacking, readjustment, and removal information.
3. Design and construct temporary supports to be capable of supporting dead and live load.

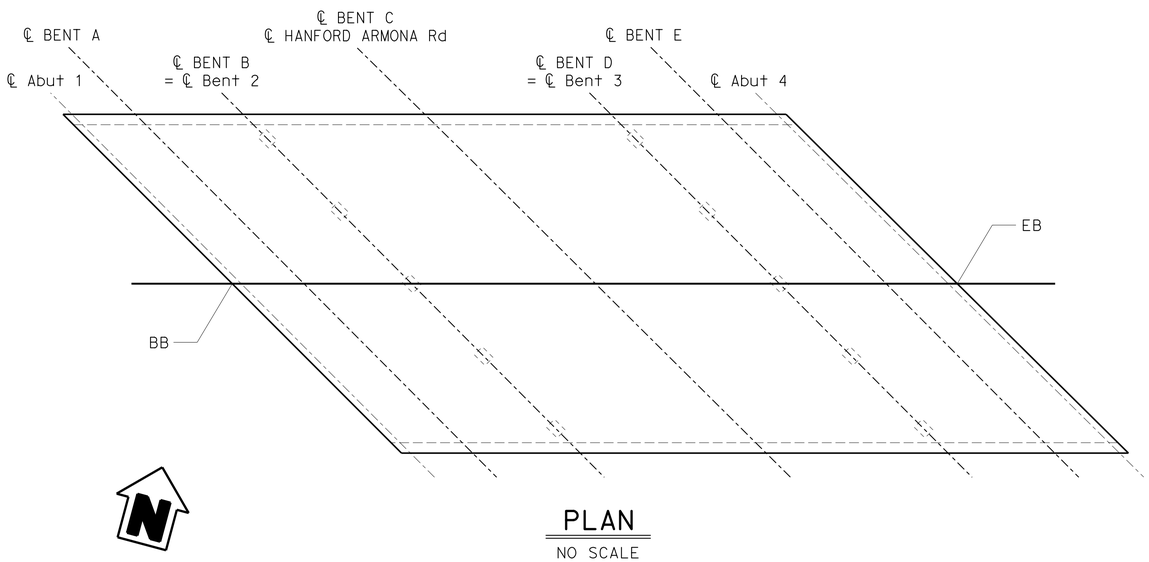

PLAN
NO SCALE
1" = 20'

TEMPORARY SUPPORT	LOCATION	UNFACTORED DEAD LOAD (Kips/GIRDER)	UNFACTORED LIVE LOAD+IM (Kips/GIRDER)	ACTIVE SUPPORT LOAD (Kips/GIRDER)
BENT A	SPAN 1	31.2	31.2	20.8
BENT B	BENT 2	157	41.5	144
BENT C	SPAN 2	58.9	46	39.2
BENT D	BENT 3	157	41.1	144
BENT E	SPAN 3	30.1	30.7	20.1

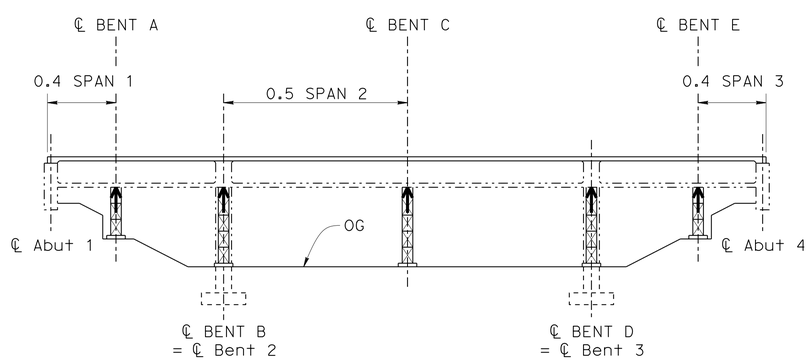

ELEVATION
NO SCALE

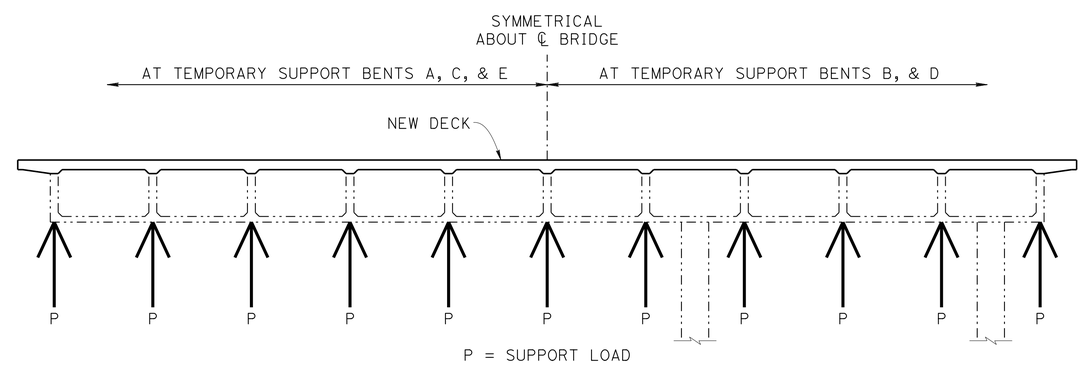

TYPICAL SECTION AT
TEMPORARY SUPPORT LOCATIONS
NO SCALE

NOTE:
VERIFY ALL CONTROLLING FIELD DIMENSIONS
BEFORE ORDERING OR FABRICATING ANY MATERIAL.

	BY	CHECKED
DESIGN	D. NGUYEN-TAN	H. TUAZON
DETAILS	P. SILVA	H. TUAZON
QUANTITIES	D. ALVAREZ	H. TUAZON

STATE OF CALIFORNIA
DEPARTMENT OF TRANSPORTATION

DIVISION OF ENGINEERING SERVICES
STRUCTURE DESIGN
DESIGN BRANCH 6

BRIDGE NO. 45-0078
POST MILE R15.75

HANFORD ARMONA RD UC DECK REHAB
STAGE CONSTRUCTION NO. 2

STRUCTURES DESIGN DETAIL SHEET (ENGLISH) (REV. 10/25/05)

ORIGINAL SCALE IN INCHES FOR REDUCED PLANS 0 1 2 3

UNIT: 3591
PROJECT NUMBER & PHASE: 0614000172-1
CONTRACT NO.: 06-462214

DISREGARD PRINTS BEARING EARLIER REVISION DATES

REVISION DATES 11-12-14 10-28-14

SHEET 9 OF 11

FILE => 45-0078-q-stgcnst02.dgn

USERNAME => s115755 DATE PLOTTED => 07-APR-2015 TIME PLOTTED => 10:21

DIST	COUNTY	ROUTE	POST MILES TOTAL PROJECT	SHEET No	TOTAL SHEETS
06	Kin	198	R15.4/R16.0	62	63

REGISTERED CIVIL ENGINEER 11-12-14 DATE

1-20-15
PLANS APPROVAL DATE

REGISTERED PROFESSIONAL ENGINEER
DON NGUYEN-TAN
No. C 57510
Exp. 12-31-15
CIVIL
STATE OF CALIFORNIA

The State of California or its officers or agents shall not be responsible for the accuracy or completeness of electronic copies of this plan sheet.

To get to the Caltrans web site, go to: http://www.dot.ca.gov

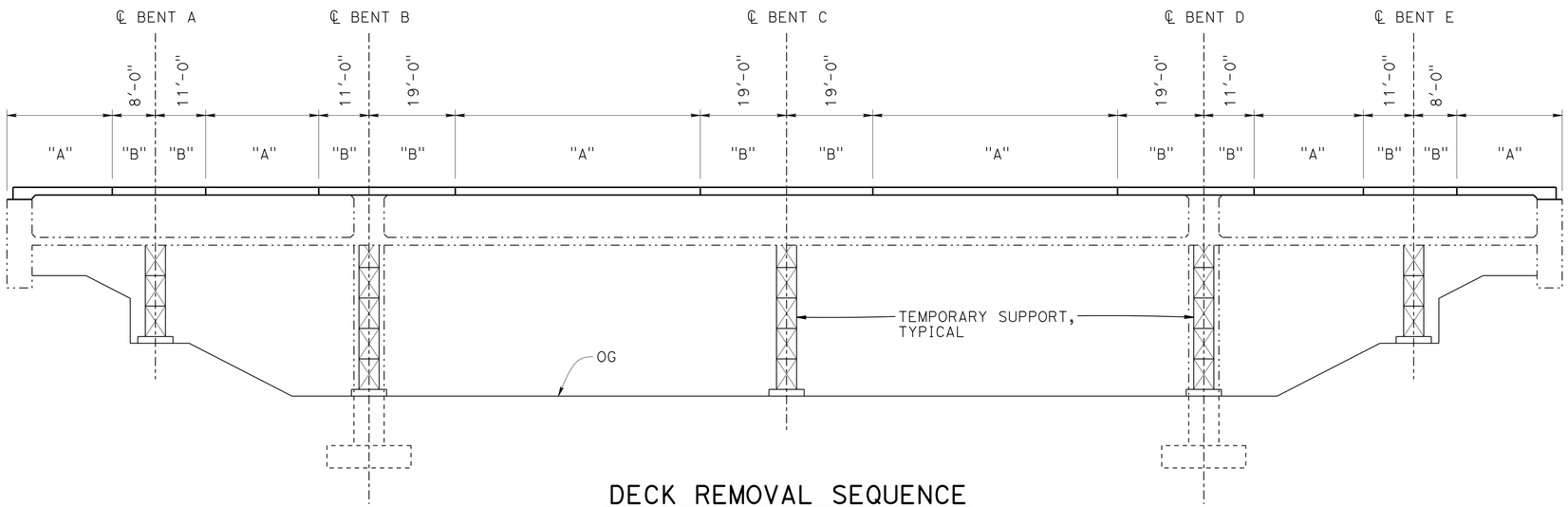

DECK REMOVAL SEQUENCE

NO SCALE

DECK REMOVAL SEQUENCE
(APPLIES TO STAGES 1b & 2a):

STEP 1. Remove deck portions labeled "A".

STEP 2. Remove existing formwork inside box girder cells.
Do not leave debris inside box girder cells prior to proceeding to the next step.

STEP 3. Remove deck portions labeled "B".

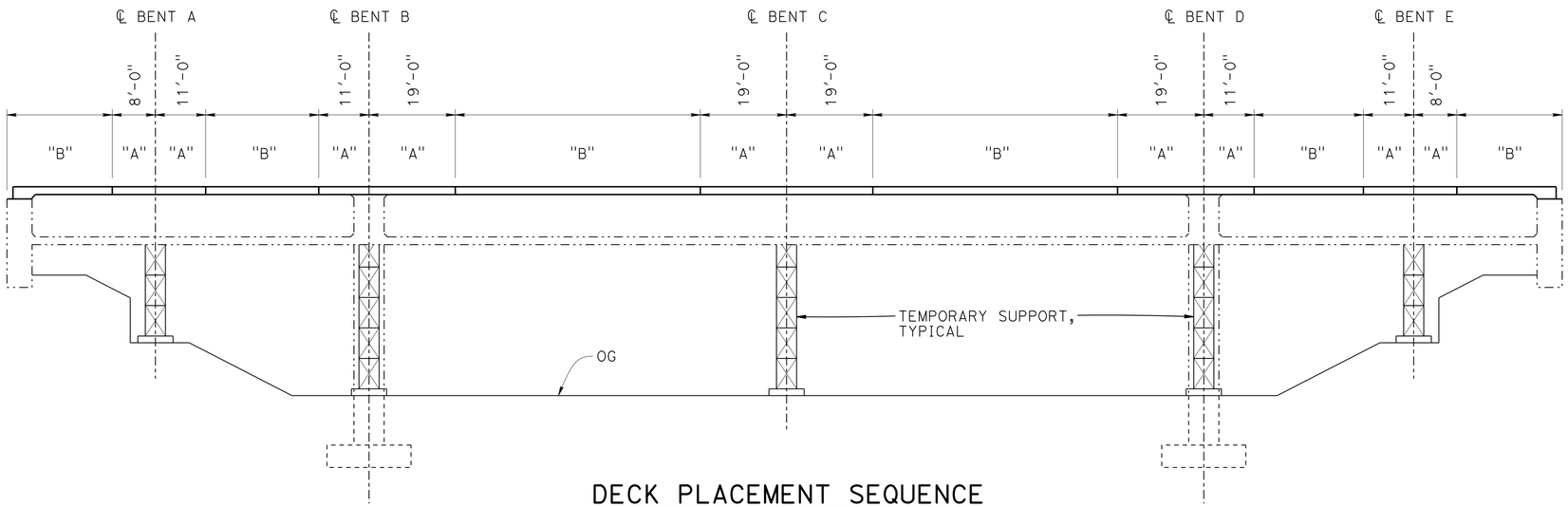

DECK PLACEMENT SEQUENCE

NO SCALE

DECK PLACEMENT SEQUENCE
(APPLIES TO STAGES 1c & 2b):

STEP 1. Place deck portions labeled "A".
Do not install formwork in portions labeled "B" until STEP 2 is complete.

STEP 2. Allow deck to cure 7 days and concrete strength to reach 3500 psi.

STEP 3. Place remaining portions of deck labeled "B".

NOTE:
VERIFY ALL CONTROLLING FIELD DIMENSIONS
BEFORE ORDERING OR FABRICATING ANY MATERIAL.

	BY	CHECKED
DESIGN	D. NGUYEN-TAN	H. TUAZON
DETAILS	P. SILVA	H. TUAZON
QUANTITIES	D. ALVAREZ	H. TUAZON

STATE OF CALIFORNIA
DEPARTMENT OF TRANSPORTATION

DIVISION OF ENGINEERING SERVICES
STRUCTURE DESIGN
DESIGN BRANCH 6

BRIDGE NO. 45-0078
POST MILE R15.75

HANFORD ARMONA RD UC DECK REHAB
STAGE CONSTRUCTION NO. 3

STRUCTURES DESIGN DETAIL SHEET (ENGLISH) (REV. 09-01-10)

ORIGINAL SCALE IN INCHES FOR REDUCED PLANS 0 1 2 3

UNIT: 3591
PROJECT NUMBER & PHASE: 0614000172-1
CONTRACT NO.: 06-462214

DISREGARD PRINTS BEARING EARLIER REVISION DATES

REVISION DATES 05-14 10-28-14

SHEET 10 OF 11

FILE => 45-0078-q-stgcnst03.dgn

USERNAME => s115755 DATE PLOTTED => 07-APR-2015 TIME PLOTTED => 10:21

DIST	COUNTY	ROUTE	POST MILES TOTAL PROJECT	SHEET No	TOTAL SHEETS
06	Kin	198	R15.4/R16.0	63	63

REGISTERED CIVIL ENGINEER 11-12-14 DATE

1-20-15
PLANS APPROVAL DATE

REGISTERED PROFESSIONAL ENGINEER DON NGUYEN-TAN No. C 57510 Exp. 12-31-15 CIVIL STATE OF CALIFORNIA

The State of California or its officers or agents shall not be responsible for the accuracy or completeness of electronic copies of this plan sheet.

To get to the Caltrans web site, go to: http://www.dot.ca.gov

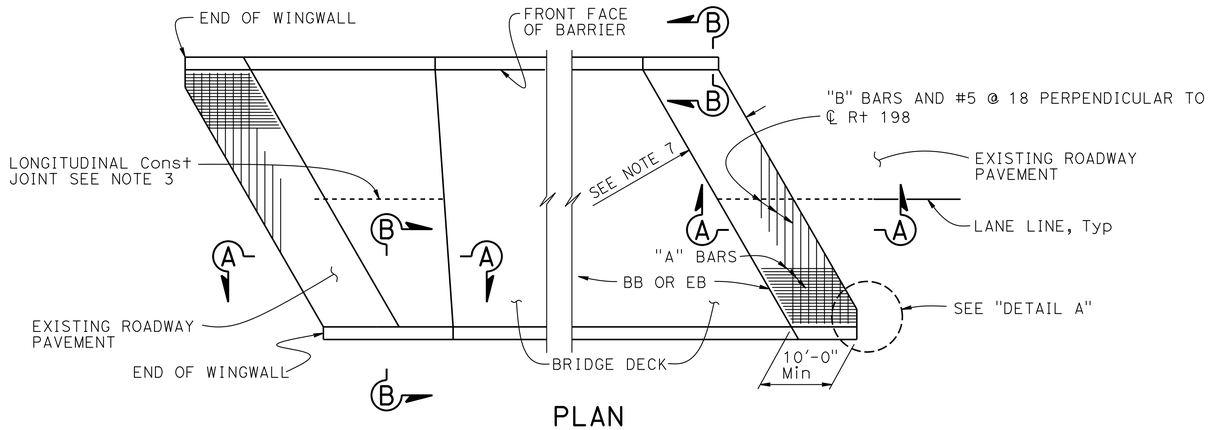

PLAN
NO SCALE

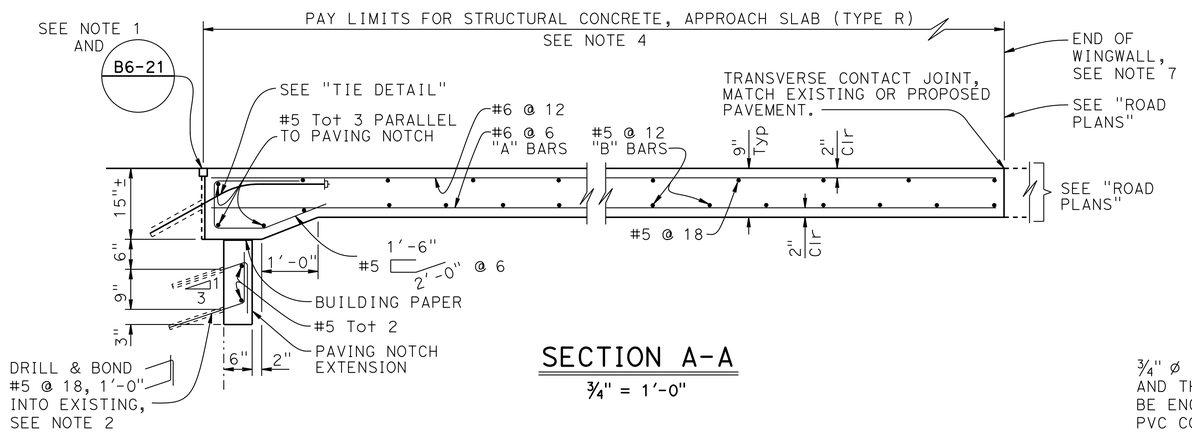

SECTION A-A
¾" = 1'-0"

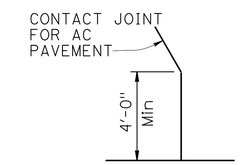

DETAIL A
NO SCALE

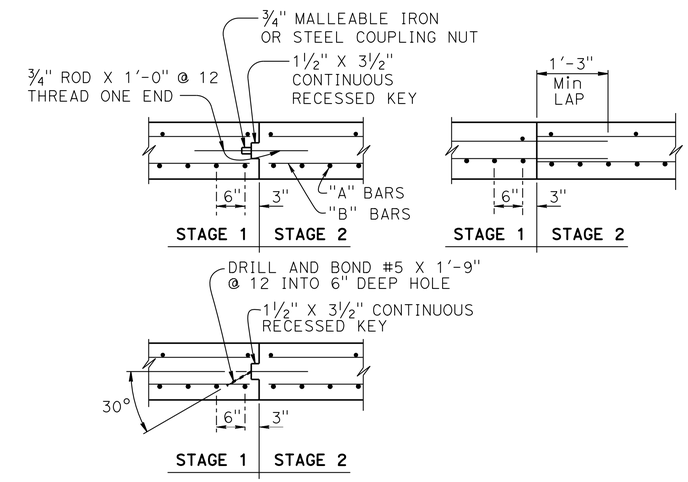

LONGITUDINAL CONSTRUCTION JOINT ALTERNATIVES
¾" = 1'-0"

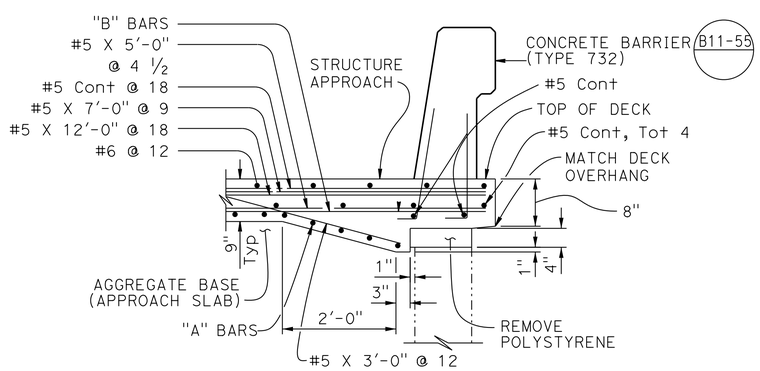

SECTION B-B
¾" = 1'-0"

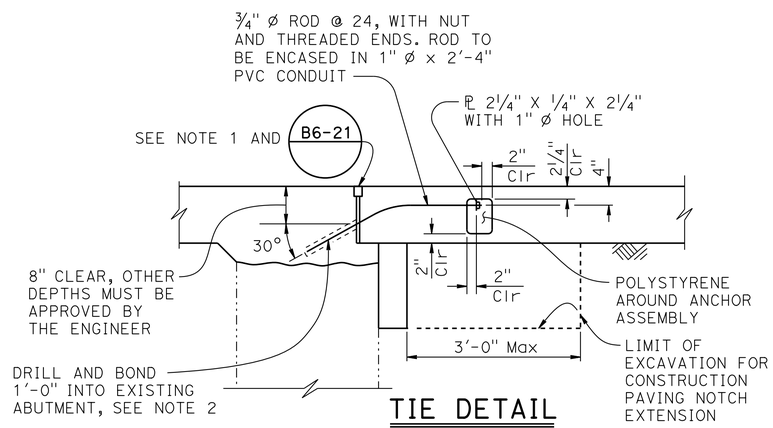

TIE DETAIL
¾" = 1'-0"

NOTE:
VERIFY ALL CONTROLLING FIELD DIMENSIONS BEFORE ORDERING OR FABRICATING ANY MATERIAL.

NOTES:

1. For details not noted or shown, see Structure Plans. Adjust bar reinforcement to clear a sawcut for sealed joint, when required.
2. Space to avoid existing main reinforcement.
3. Longitudinal construction joints, when permitted by the Engineer, shall be located on lane lines.
4. Transverse contact joint must be a minimum of 5' from an existing or constructed weakened plane joint.
5. Couplers are required for stage construction.
6. End plate at end of structure approach.
7. Approach Slab Limits may be extended beyond the end of wingwall to provide a slab width that is constant.

	BY	CHECKED
DESIGN	D. NGUYEN-TAN	H. TUAZON
DETAILS	P. SILVA	H. TUAZON
QUANTITIES	D. ALVAREZ	H. TUAZON

STATE OF CALIFORNIA
DEPARTMENT OF TRANSPORTATION

DIVISION OF ENGINEERING SERVICES
STRUCTURE DESIGN
DESIGN BRANCH 6

BRIDGE NO. 45-0078
POST MILE R15.75

HANFORD ARMONA RD UC DECK REHAB
STRUCTURE APPROACH TYPE R(10D)

STRUCTURES DESIGN DETAIL SHEET (ENGLISH) (REV. 10/25/05)

ORIGINAL SCALE IN INCHES FOR REDUCED PLANS 0 1 2 3

UNIT: 3591
PROJECT NUMBER & PHASE: 0614000172-1
CONTRACT NO.: 06-462214

DISREGARD PRINTS BEARING EARLIER REVISION DATES
REVISION DATES 1-22-14 10-31-14

SHEET 11 OF 11

FILE => 45-0078-s-sadd.dgn

USERNAME => s115755 DATE PLOTTED => 07-APR-2015 TIME PLOTTED => 10:21