ACSTP-P033(079)E

Dist	COUNTY	ROUTE	POST MILES TOTAL PROJECT	SHEET No.	TOTAL SHEETS
06	Fre	33	10.9/11.1	1	104

STATE OF CALIFORNIA
DEPARTMENT OF TRANSPORTATION

PROJECT PLANS FOR CONSTRUCTION ON
STATE HIGHWAY

IN FRESNO COUNTY
NEAR COALINGA
FROM 0.1 MILE WEST TO 0.1 MILE EAST
OF JACALITOS CREEK BRIDGE

TO BE SUPPLEMENTED BY STANDARD PLANS DATED 2010

INDEX OF PLANS

SHEET No.	DESCRIPTION
1	TITLE AND LOCATION MAP
2-3	TYPICAL CROSS SECTIONS
4	LAYOUT
5	PROFILE AND SUPERELEVATION DIAGRAM
6-8	CONSTRUCTION DETAILS
9	TEMPORARY WATER POLLUTION CONTROL PLAN
10-13	DRAINAGE PLAN, PROFILES, DETAILS, AND QUANTITIES
14	UTILITY PLAN
15	CONSTRUCTION AREA SIGNS
16-18	STAGE CONSTRUCTION
19-22	TRAFFIC HANDLING PLAN AND QUANTITIES
23	PAVEMENT DELINEATION AND SIGN PLAN AND QUANTITIES
24-25	SUMMARY OF QUANTITIES
26-28	EROSION CONTROL LEGEND, PLAN, AND QUANTITIES
29-39	ELECTRICAL PLANS, DETAILS, AND QUANTITIES
40-49	STRUCTURES SPECIAL DESIGN (TEMPORARY WOOD POLES)
50-89	REVISED STANDARD PLANS

STRUCTURE PLANS

90-104 JACALITOS CREEK BRIDGE (REPLACE) Br No. 42-0441

THE STANDARD PLANS LIST APPLICABLE TO THIS CONTRACT IS INCLUDED IN THE NOTICE TO BIDDERS AND SPECIAL PROVISIONS BOOK.

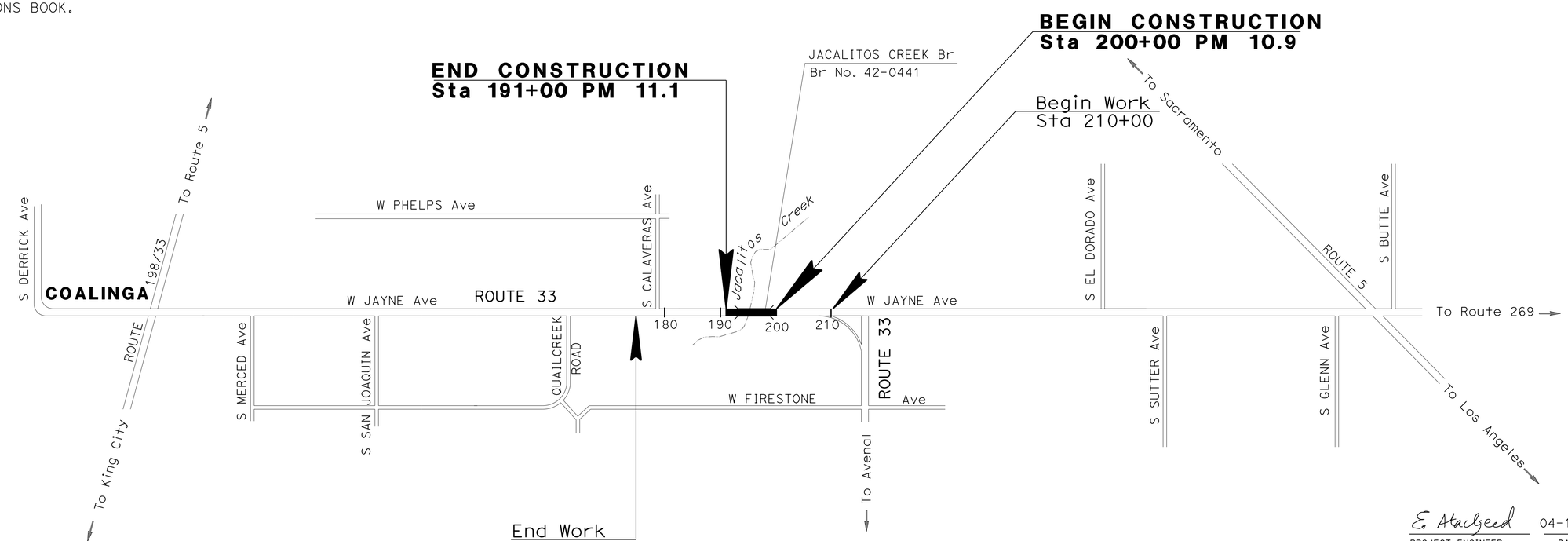

NO SCALE

E. Ataelgeed 04-15-14
PROJECT ENGINEER DATE
REGISTERED CIVIL ENGINEER

April 28, 2014
PLANS APPROVAL DATE

REGISTERED PROFESSIONAL ENGINEER
Eltahir K. Ataelgeed
No. 76374
Exp. 12/31/14
CIVIL
STATE OF CALIFORNIA

THE STATE OF CALIFORNIA OR ITS OFFICERS OR AGENTS SHALL NOT BE RESPONSIBLE FOR THE ACCURACY OR COMPLETENESS OF SCANNED COPIES OF THIS PLAN SHEET.

THE CONTRACTOR SHALL POSSESS THE CLASS (OR CLASSES) OF LICENSE AS SPECIFIED IN THE "NOTICE TO BIDDERS."

PROJECT MANAGER	SUZIE HOLDRIDGE
DESIGN ENGINEER	ABDUL BAKER

CONTRACT No.	06-432604
PROJECT ID	0600020388

LAST REVISION 04-25-14
DATE PLOTTED => 27-AUG-2014
TIME PLOTTED => 14:07

Dist	COUNTY	ROUTE	POST MILES TOTAL PROJECT	SHEET No.	TOTAL SHEETS
06	Fre	33	10.9/11.1	2	104

E. Ataelgeed 04-15-14
REGISTERED CIVIL ENGINEER DATE

4-28-14
PLANS APPROVAL DATE

REGISTERED PROFESSIONAL ENGINEER Eltahir K. Ataelgeed No. 76374 Exp. 12/31/14 CIVIL STATE OF CALIFORNIA

THE STATE OF CALIFORNIA OR ITS OFFICERS OR AGENTS SHALL NOT BE RESPONSIBLE FOR THE ACCURACY OR COMPLETENESS OF SCANNED COPIES OF THIS PLAN SHEET.

NOTES:

1. DIMENSIONS OF THE PAVEMENT STRUCTURES (STRUCTURAL SECTIONS) ARE SUBJECT TO TOLERANCES SPECIFIED IN THE STANDARD SPECIFICATIONS.
2. SUPERELEVATIONS ARE SHOWN ON THE SUPERELEVATION DIAGRAMS.
3. EXACT LOCATIONS AND TYPES OF HMA DIKES, SAFETY EDGES AND MGS ARE SHOWN ON THE LAYOUT AND SUMMARY OF QUANTITIES SHEETS.
4. EXACT LOCATIONS OF STORAGE DITCHES ARE SHOWN ON DRAINAGE PLAN.
5. FOR LOCATIONS OF VEGETATION CONTROL (MINOR CONCRETE), SEE SUMMARY OF QUANTITIES SHEET.

DESIGN DESIGNATION

ADT (2035)	14,800
TI	10.5
V	55 MPH
T	15%

PAVEMENT CLIMATE REGION

INLAND VALLEY

ABBREVIATION:

RAC - RUBBERIZED ASPHALT CONCRETE

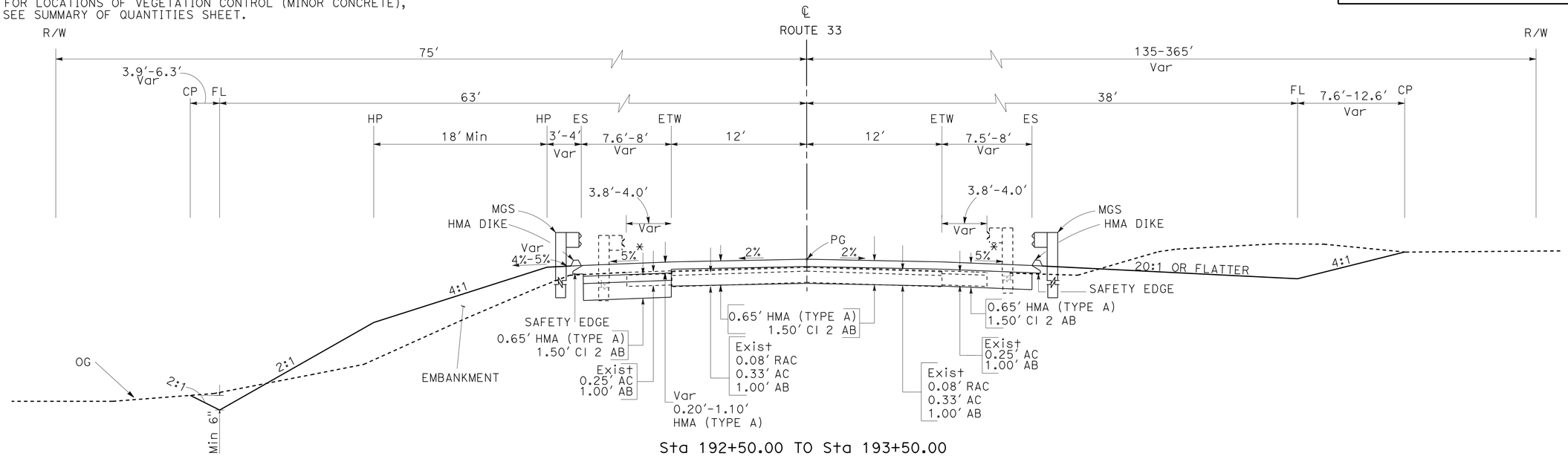

Sta 192+50.00 TO Sta 193+50.00
Sta 197+80.50 TO Sta 198+50.00
* SHOULDER SLOPE TRANSITIONS TO 2% ON THE BRIDGE.

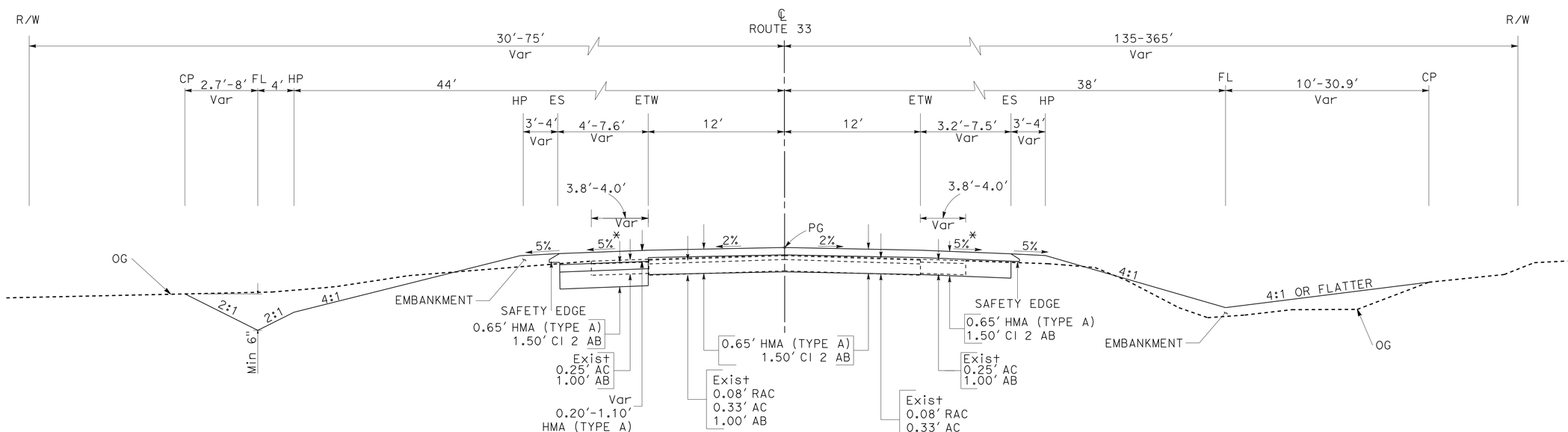

ROUTE 33

Sta 191+00.00 TO Sta 192+50.00
* SHOULDER SLOPE TRANSITIONS TO 2% ON THE BRIDGE.

TYPICAL CROSS SECTIONS

NO SCALE

X-1

REVISED BY	DATE REVISED
PKD	04-21-14

CALCULATED-DESIGNED BY: PAWANJIT DHILLON
CHECKED BY: ELTAHIR ATAELGEED
FUNCTIONAL SUPERVISOR: ABDUL BAKER

STATE OF CALIFORNIA - DEPARTMENT OF TRANSPORTATION
Caltrans
DESIGN

LAST REVISION 02-25-14
DATE PLOTTED => 27-AUG-2014
TIME PLOTTED => 14:07

Dist	COUNTY	ROUTE	POST MILES TOTAL PROJECT	SHEET No.	TOTAL SHEETS
06	Fre	33	10.9/11.1	3	104

E. Ataelgeed 04-15-14
REGISTERED CIVIL ENGINEER DATE

4-28-14
PLANS APPROVAL DATE

REGISTERED PROFESSIONAL ENGINEER Eltahir K. Ataelgeed No. 76374 Exp. 12/31/14 CIVIL STATE OF CALIFORNIA

THE STATE OF CALIFORNIA OR ITS OFFICERS OR AGENTS SHALL NOT BE RESPONSIBLE FOR THE ACCURACY OR COMPLETENESS OF SCANNED COPIES OF THIS PLAN SHEET.

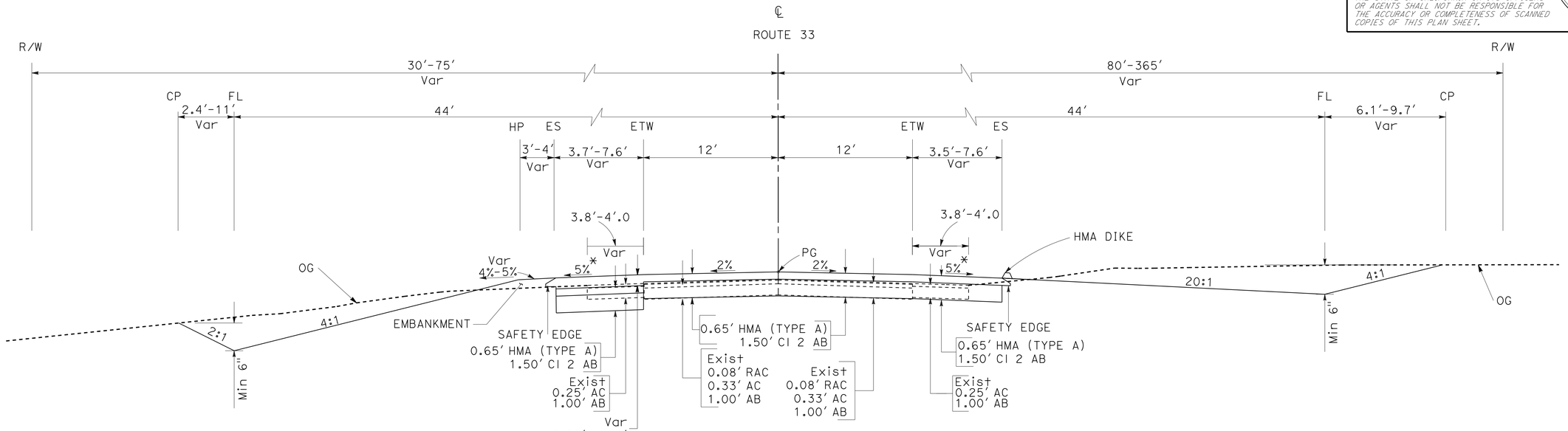

ROUTE 33

Sta 198+50.00 TO Sta 200+00.00

* SHOULDER SLOPE TRANSITIONS TO 2% ON THE BRIDGE.

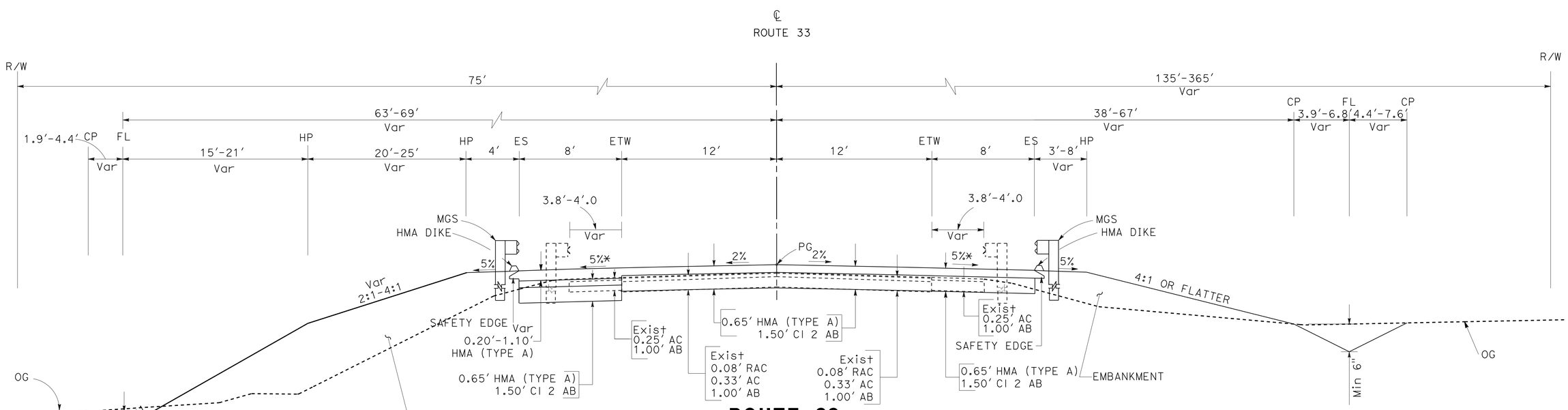

ROUTE 33

Sta 193+50.00 TO Sta 195+40.35
Sta 197+23.65 TO Sta 197+80.50

* SHOULDER SLOPE TRANSITIONS TO 2% ON THE BRIDGE.

TYPICAL CROSS SECTIONS

X-2

NO SCALE

REVISED BY | DATE REVISED
PAWANJIT DHILLON
ELTAHIR ATAELGEED
CALCULATED-DESIGNED BY | CHECKED BY
FUNCTIONAL SUPERVISOR
ABDUL BAKER

STATE OF CALIFORNIA - DEPARTMENT OF TRANSPORTATION
Caltrans
DESIGN

LAST REVISION 02-25-14 | DATE PLOTTED => 27-AUG-2014 | TIME PLOTTED => 14:07

Dist	COUNTY	ROUTE	POST MILES TOTAL PROJECT	SHEET No.	TOTAL SHEETS
06	Fre	33	10.9/11.1	4	104

E. Ataelgeed 04-15-14
REGISTERED CIVIL ENGINEER DATE

4-28-14
PLANS APPROVAL DATE

REGISTERED PROFESSIONAL ENGINEER Eltahir K. Ataelgeed No. 76374 Exp. 12/31/14 CIVIL STATE OF CALIFORNIA

THE STATE OF CALIFORNIA OR ITS OFFICERS OR AGENTS SHALL NOT BE RESPONSIBLE FOR THE ACCURACY OR COMPLETENESS OF SCANNED COPIES OF THIS PLAN SHEET.

NOTES:

1. FOR ACCURATE RIGHT OF WAY DATA, CONTACT RIGHT OF WAY ENGINEERING AT THE DISTRICT OFFICE.
2. SEE SHEET D-1 AND DP-1 FOR MORE INFORMATION ABOUT STORAGE DITCHES.
3. SEE SHEET D-1 FOR LOCATIONS OF ROCK SLOPE PROTECTION.
4. SEE SHEET Q-2 FOR LOCATIONS OF VEGETATION CONTROL (MINOR CONCRETE).

ABBREVIATIONS:

AFTS: ALTERNATIVE FLARED TERMINAL SYSTEM

APDD: ALTERNATIVE PIPE DOWNDRAIN

SPW: SHEET PILE WALL

LEGEND:

ROCK SLOPE PROTECTION (1/2 T, METHOD B)

ROCK SLOPE PROTECTION (1/4 T, METHOD B)

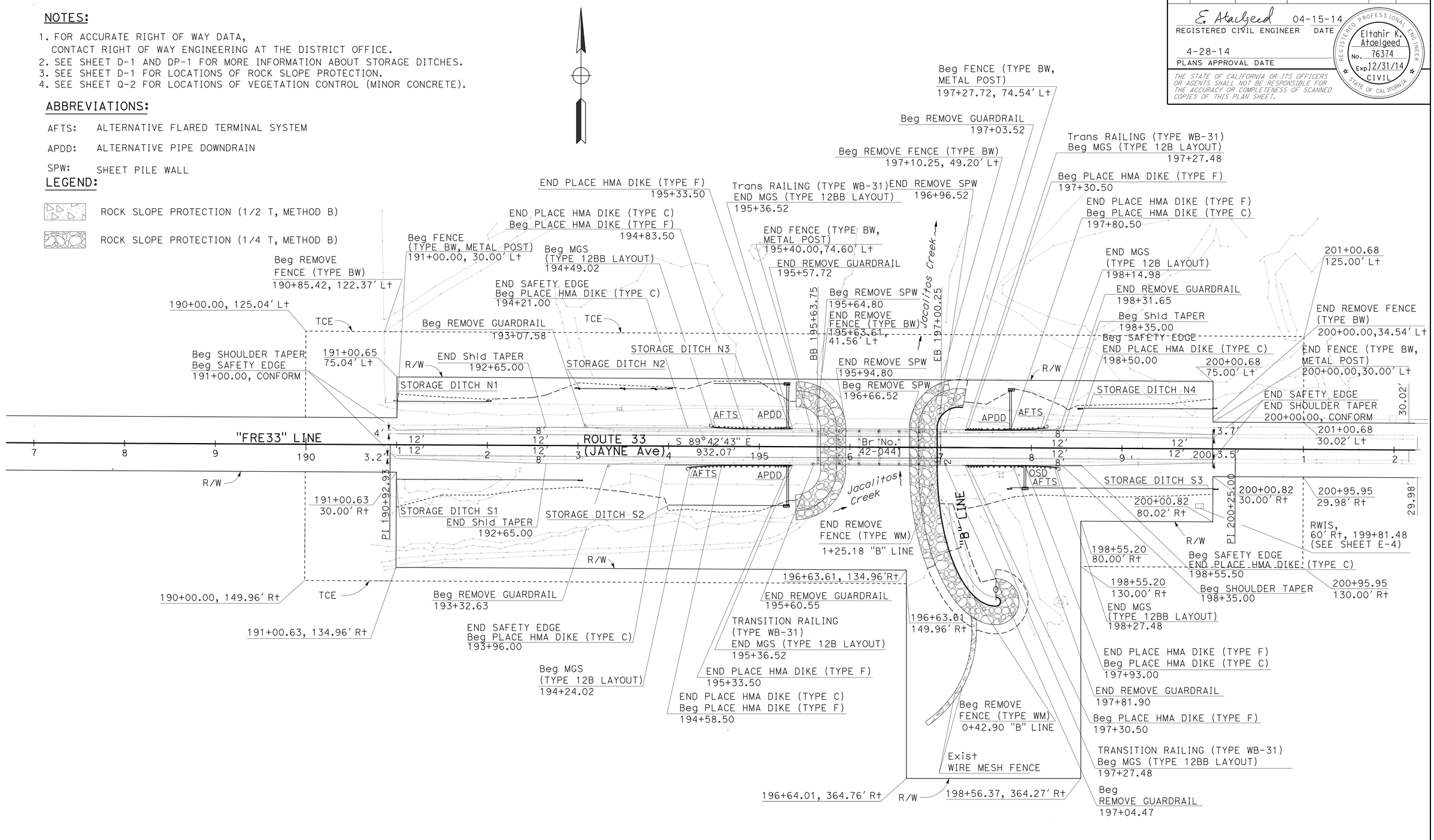

LAYOUT

SCALE: 1"=50'

L-1

REVISED BY	DATE REVISED
PAWANJIT DHILLON	ELTAHIR ATAELGEED
CALCULATED-DESIGNED BY	CHECKED BY
FUNCTIONAL SUPERVISOR	ABDUL BAKER

STATE OF CALIFORNIA - DEPARTMENT OF TRANSPORTATION
Caltrans
DESIGN

LAST REVISION 04-25-14 | DATE PLOTTED => 27-AUG-2014 | TIME PLOTTED => 14:07

Dist	COUNTY	ROUTE	POST MILES TOTAL PROJECT	SHEET No.	TOTAL SHEETS
06	Fre	33	10.9/11.1	5	104

E. Ataelgeed 04-15-14
REGISTERED CIVIL ENGINEER DATE

4-28-14
PLANS APPROVAL DATE

REGISTERED PROFESSIONAL ENGINEER
Eltahir K. Ataelgeed
No. 76374
Exp. 12/31/14
CIVIL
STATE OF CALIFORNIA

THE STATE OF CALIFORNIA OR ITS OFFICERS OR AGENTS SHALL NOT BE RESPONSIBLE FOR THE ACCURACY OR COMPLETENESS OF SCANNED COPIES OF THIS PLAN SHEET.

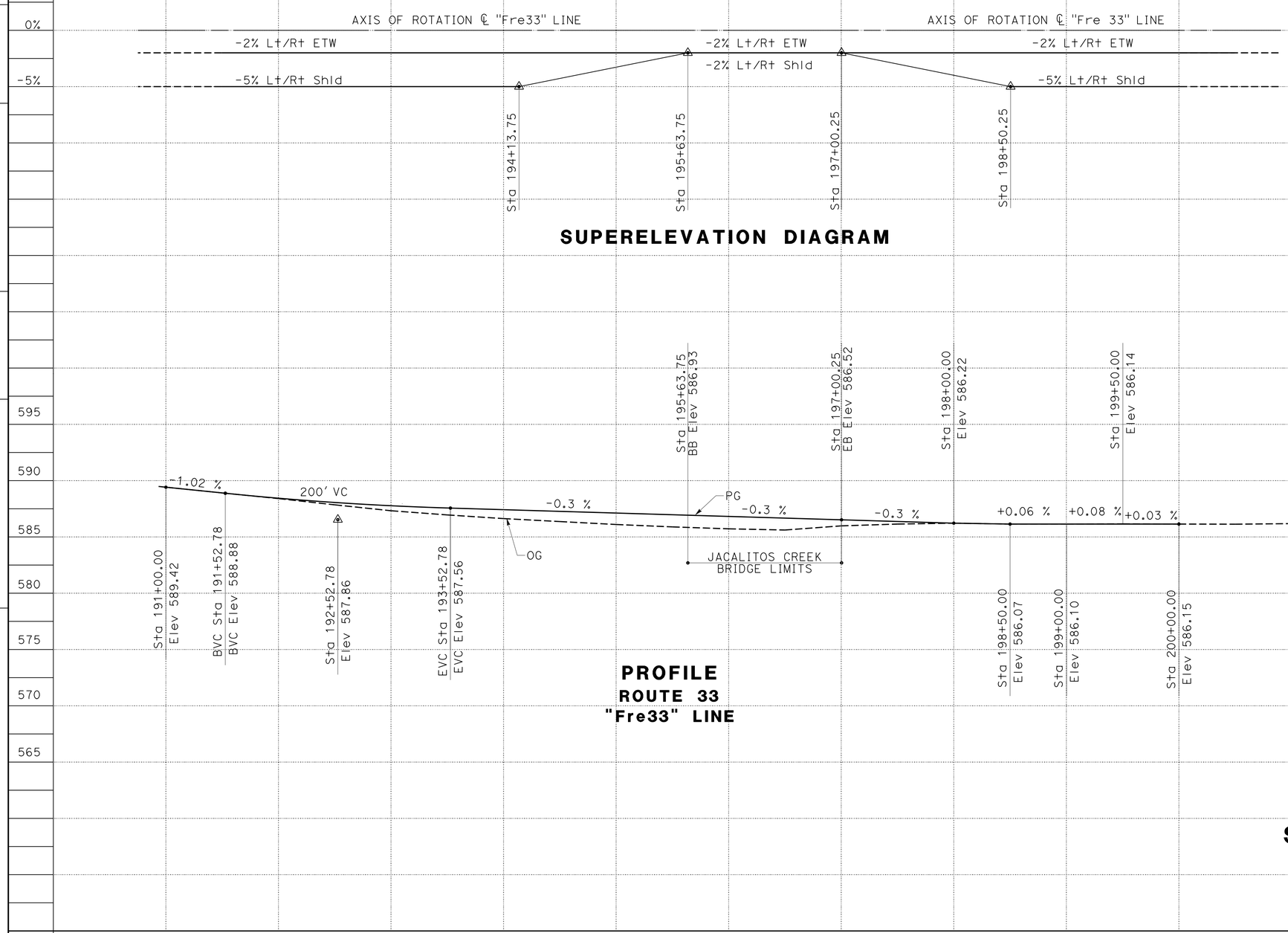

PROFILE AND SUPERELEVATION DIAGRAM

SCALE: Horiz 1"=50'
Vert 1"=5'

PS-1

STATION		191+00	192+00	193+00	194+00	195+00	196+00	197+00	198+00	199+00	200+00	201+00	202+00	203+00	204+00	TOTAL
CY	Exc	← 4,862 →														
	Emb	← 3,837 →														

STATE OF CALIFORNIA - DEPARTMENT OF TRANSPORTATION
Caltrans
DESIGN

FUNCTIONAL SUPERVISOR: ABDUL BAKER
CALCULATED-DESIGNED BY: ELTAHIR ATAELGEED
CHECKED BY: ABDUL BAKER
REVISED BY
DATE REVISED

LAST REVISION 04-25-14
DATE PLOTTED => 27-AUG-2014
TIME PLOTTED => 14:07

Dist	COUNTY	ROUTE	POST MILES TOTAL PROJECT	SHEET No.	TOTAL SHEETS
06	Fre	33	10.9/11.1	6	104

E. Ataelgeed 04-15-14
REGISTERED CIVIL ENGINEER DATE

4-28-14
PLANS APPROVAL DATE

REGISTERED PROFESSIONAL ENGINEER Eltahir K. Ataelgeed No. 76374 Exp. 12/31/14 CIVIL STATE OF CALIFORNIA

THE STATE OF CALIFORNIA OR ITS OFFICERS OR AGENTS SHALL NOT BE RESPONSIBLE FOR THE ACCURACY OR COMPLETENESS OF SCANNED COPIES OF THIS PLAN SHEET.

NOTES:

1. SEE SHEET C-2 FOR SECTIONS A-A, B-B, C-C, D-D AND DETAIL A.
2. SEE Std PLAN FOR ADDITIONAL INFORMATION ON MARKERS.
3. xx=GV, FOR GATE VALVE MARKER, xx=AP FOR ANGLE POINT MARKER.

LEGEND:

- ROCK SLOPE PROTECTION (1/2 T, METHOD B)
- ROCK SLOPE PROTECTION (1/4 T, METHOD B)
- ROCK SLOPE PROTECTION (No. 1, METHOD B)

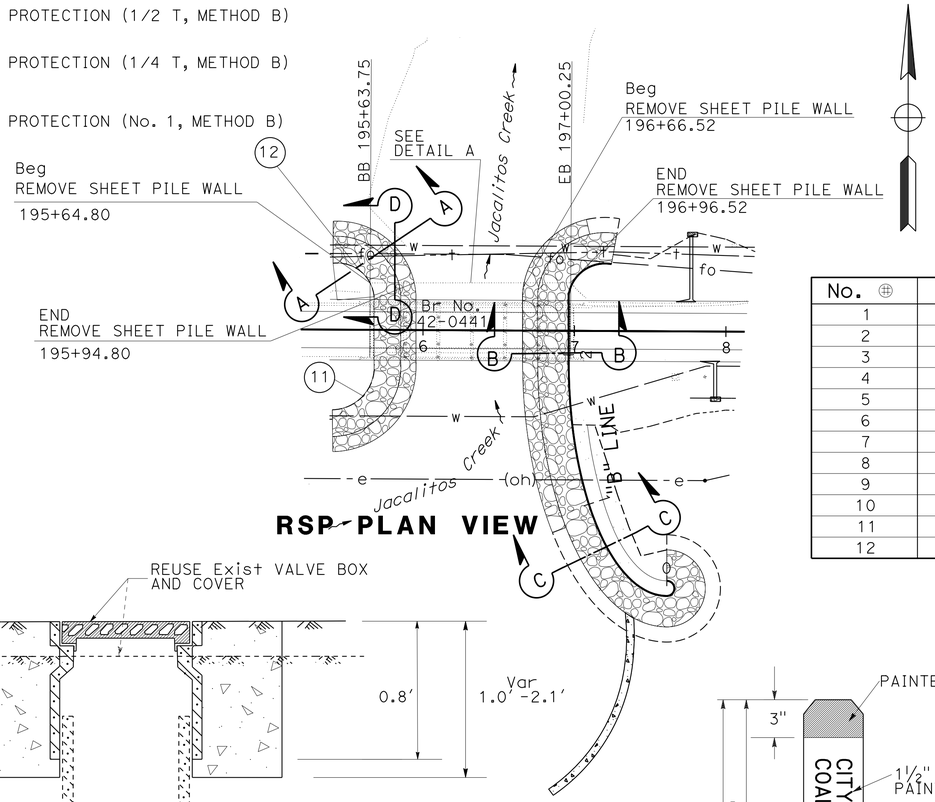

RSP PLAN VIEW

CURVE DATA

No. ⊕	R	Δ	T	L
1	5′	90°00′00"	5.00′	7.85′
2	5′	90°04′19"	5.01′	7.86′
3	30′	26°19′53"	6.92′	13.59′
4	45′	17°23′55"	6.85′	13.59′
5	75′	12°23′57"	8.13′	16.19′
6	116′	7°30′54"	7.63′	15.24′
7	183′	9°51′24"	15.76′	31.43′
8	285′	9°03′45"	22.56′	45.02′
9	358′	7°11′59"	22.54′	45.02′
10	24′	92°12′50"	25.16′	38.95′
11	28′	92°31′55"	29.58′	45.71′
12	24′	92°20′40"	25.46′	39.39′

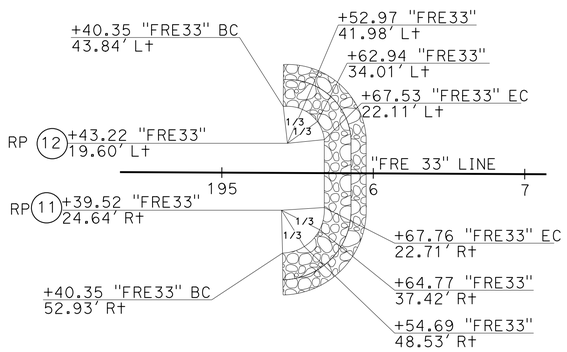

CURVES (11), (12)

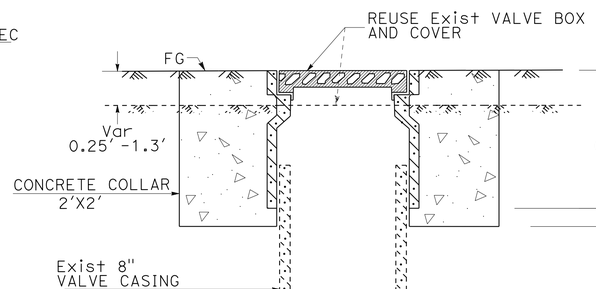

ADJUST UTILITY COVER TO GRADE

Sta 198+05.31
Sta 192+73.45

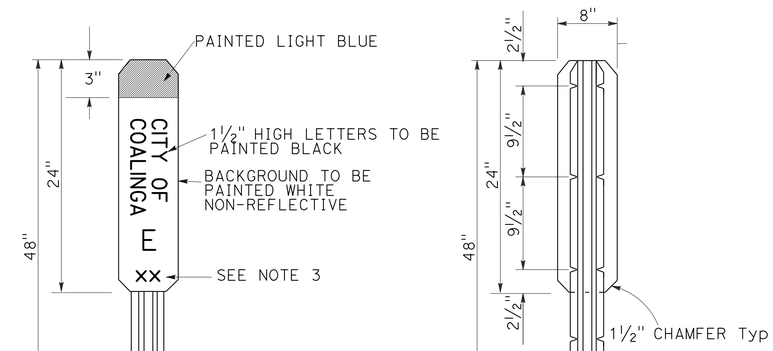

SPECIAL MARKER

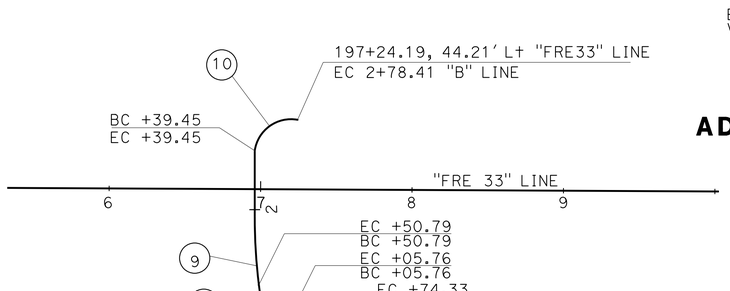

"B" LINE ALIGNMENT

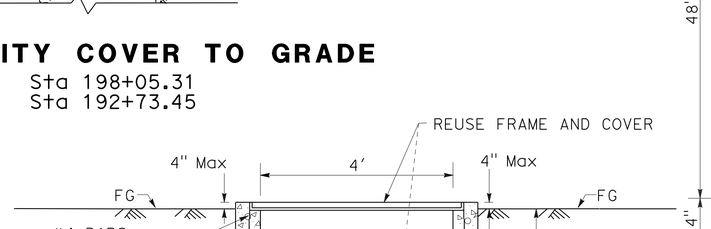

ADJUST UTILITY COVER TO GRADE

Sta 197+66.25

CONSTRUCTION DETAILS
C-1

NO SCALE

STATE OF CALIFORNIA - DEPARTMENT OF TRANSPORTATION
Caltrans DESIGN

FUNCTIONAL SUPERVISOR: ABDUL BAKER
CALCULATED-DESIGNED BY: ELTAHIR ATAELGEED
CHECKED BY: PAWANJIT DHILLON
REVISED BY
DATE REVISED

LAST REVISION 04-25-14
DATE PLOTTED => 27-AUG-2014
TIME PLOTTED => 14:07

Dist	COUNTY	ROUTE	POST MILES TOTAL PROJECT	SHEET No.	TOTAL SHEETS
06	Fre	33	10.9/11.1	7	104

E. Ataelgeed 04-15-14
REGISTERED CIVIL ENGINEER DATE

4-28-14
PLANS APPROVAL DATE

REGISTERED PROFESSIONAL ENGINEER
Eltahir K. Ataelgeed
No. 76374
Exp. 12/31/14
CIVIL
STATE OF CALIFORNIA

THE STATE OF CALIFORNIA OR ITS OFFICERS OR AGENTS SHALL NOT BE RESPONSIBLE FOR THE ACCURACY OR COMPLETENESS OF SCANNED COPIES OF THIS PLAN SHEET.

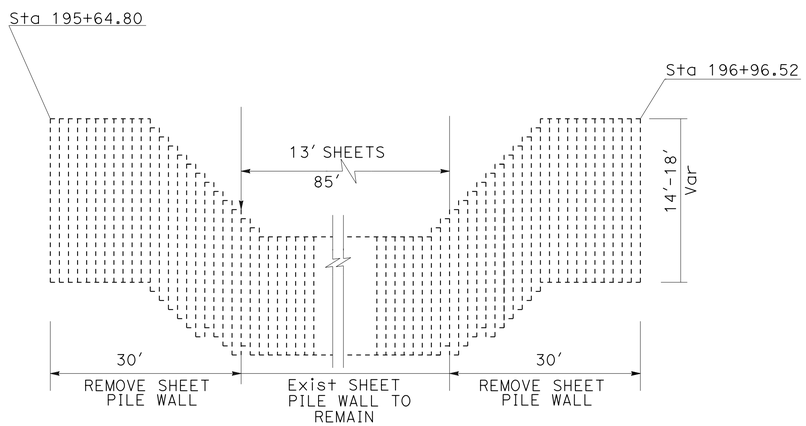

DETAIL A

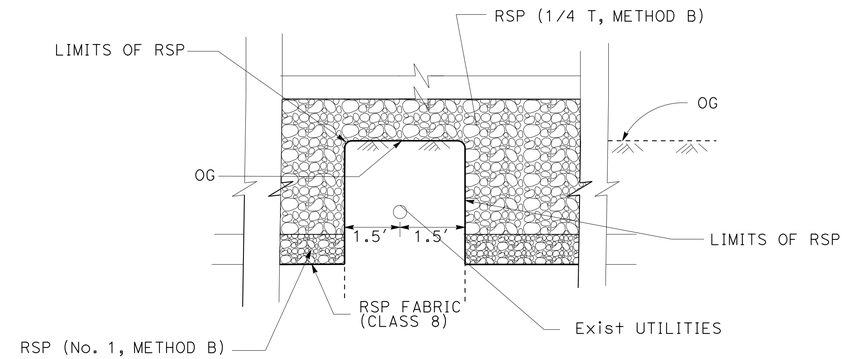

SECTION A-A

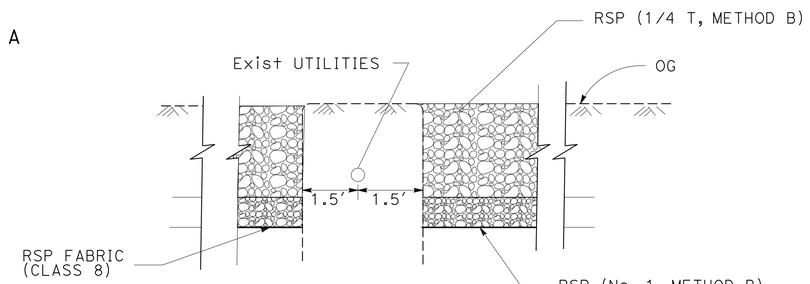

SECTION D-D

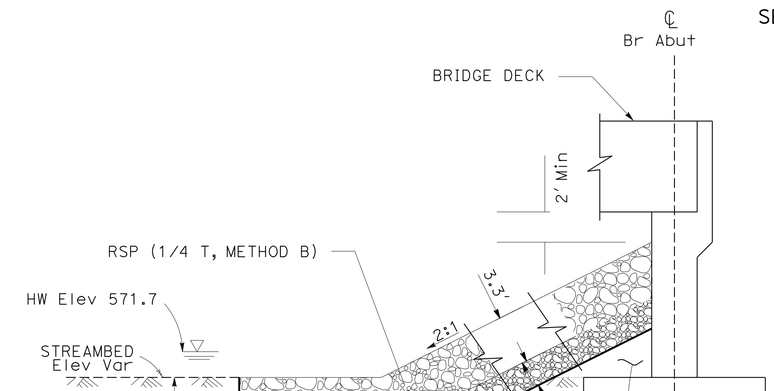

SECTION B-B

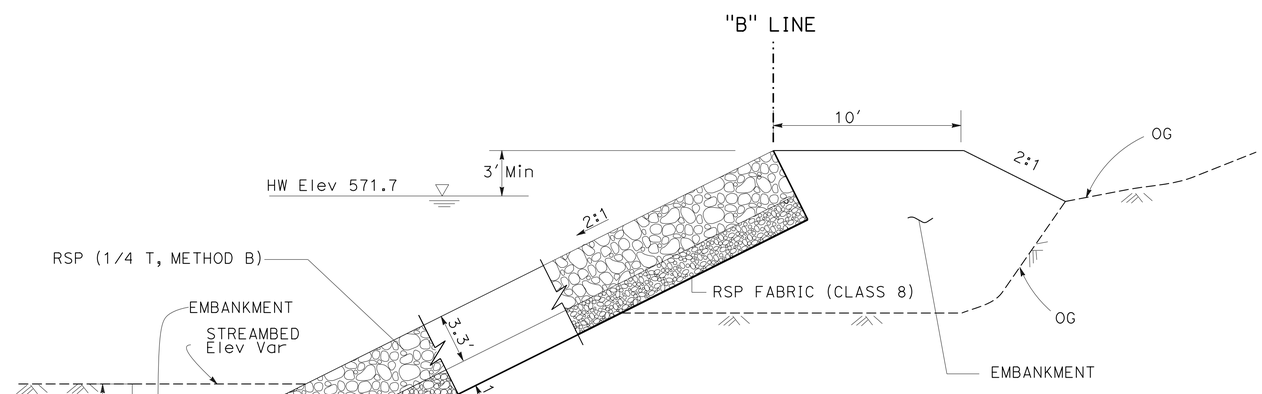

SECTION C-C

CONSTRUCTION DETAILS C-2

NO SCALE

STATE OF CALIFORNIA - DEPARTMENT OF TRANSPORTATION
Caltrans® DESIGN
FUNCTIONAL SUPERVISOR: ABDUL BAKER
CALCULATED-DESIGNED BY: PAWANJIT DHILLON
CHECKED BY: ELTAHIR ATAELGEED
REVISED BY
DATE REVISED

LAST REVISION 04-25-14
DATE PLOTTED => 27-AUG-2014
TIME PLOTTED => 14:07

Dist	COUNTY	ROUTE	POST MILES TOTAL PROJECT	SHEET No.	TOTAL SHEETS
06	Fre	33	10.9/11.1	8	104

E. Ataelgeed 04-15-14
REGISTERED CIVIL ENGINEER DATE

4-28-14
PLANS APPROVAL DATE

REGISTERED PROFESSIONAL ENGINEER
Eltahir K. Ataelgeed
No. 76374
Exp. 12/31/14
CIVIL
STATE OF CALIFORNIA

THE STATE OF CALIFORNIA OR ITS OFFICERS OR AGENTS SHALL NOT BE RESPONSIBLE FOR THE ACCURACY OR COMPLETENESS OF SCANNED COPIES OF THIS PLAN SHEET.

NOTE:
USE 15'-7½" LENGTH RAIL.

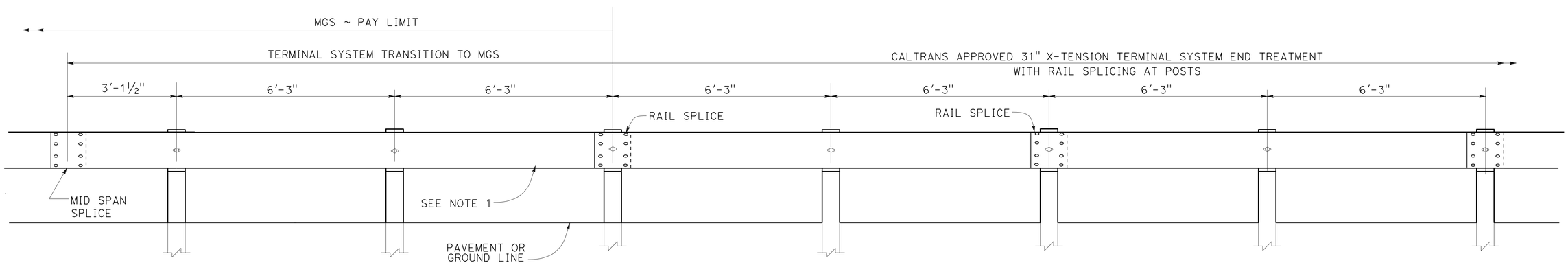

TRANSITION DETAIL FOR 31" X-TENSION TERMINAL SYSTEM END TREATMENT WITH RAIL SPLICING AT POSTS TO MIDWEST GUARDRAIL SYSTEM

CONSTRUCTION DETAILS

NO SCALE

C-3

STATE OF CALIFORNIA - DEPARTMENT OF TRANSPORTATION
Caltrans
DESIGN

FUNCTIONAL SUPERVISOR: ABDUL BAKER
CALCULATED-DESIGNED BY: PAWANJIT DHILLON
CHECKED BY: ELTAHIR ATAELGEED
REVISED BY
DATE REVISED

LAST REVISION 02-25-14
DATE PLOTTED => 27-AUG-2014
TIME PLOTTED => 14:07

Dist	COUNTY	ROUTE	POST MILES TOTAL PROJECT	SHEET No.	TOTAL SHEETS
06	Fre	33	10.9/11.1	9	104

E. Ataelgeed 04-15-14
REGISTERED CIVIL ENGINEER DATE

4-28-14
PLANS APPROVAL DATE

REGISTERED PROFESSIONAL ENGINEER
Eltahir K. Ataelgeed
No. 76374
Exp. 12/31/14
CIVIL
STATE OF CALIFORNIA

THE STATE OF CALIFORNIA OR ITS OFFICERS OR AGENTS SHALL NOT BE RESPONSIBLE FOR THE ACCURACY OR COMPLETENESS OF SCANNED COPIES OF THIS PLAN SHEET.

NOTES:

1. FOR ACCURATE RIGHT OF WAY DATA, CONTACT RIGHT OF WAY ENGINEERING AT THE DISTRICT OFFICE.
2. EXACT LOCATION OF TEMPORARY FIBER ROLLS TO BE DETERMINED BY THE ENGINEER.

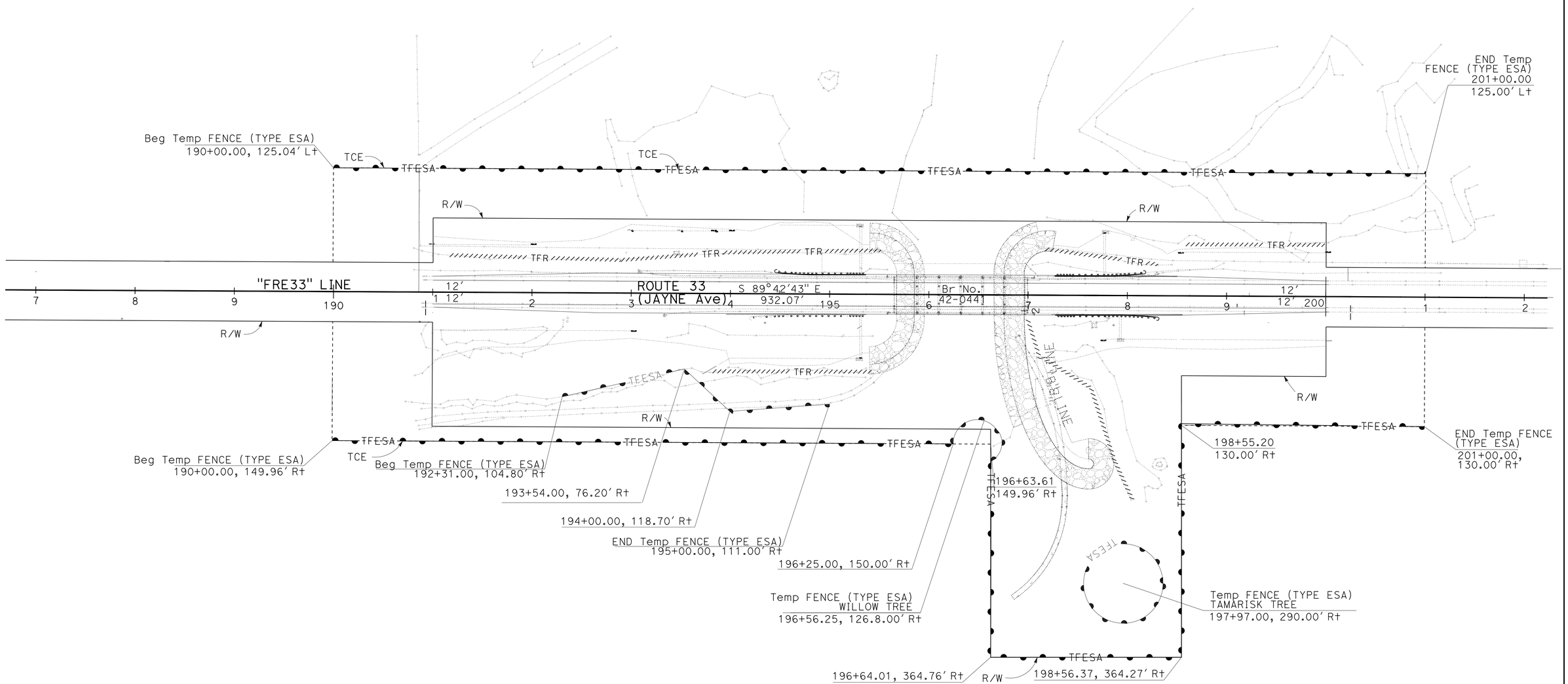

TEMPORARY WATER POLLUTION CONTROL PLAN
WPC-1

SCALE: 1"=50′

APPROVED FOR TEMPORARY WATER POLLUTION CONTROL WORK ONLY

STATE OF CALIFORNIA - DEPARTMENT OF TRANSPORTATION
Caltrans
DESIGN

FUNCTIONAL SUPERVISOR: ABDUL BAKER
CALCULATED-DESIGNED BY: PAWANJIT DHILLON
CHECKED BY: ELTAHIR ATAELGEED
REVISED BY
DATE REVISED

LAST REVISION 04-25-14
DATE PLOTTED => 27-AUG-2014
TIME PLOTTED => 14:07

Dist	COUNTY	ROUTE	POST MILES TOTAL PROJECT	SHEET No.	TOTAL SHEETS
06	Fre	33	10.9/11.1	10	104

E. Ataelgeed 04-15-14
REGISTERED CIVIL ENGINEER DATE

4-28-14
PLANS APPROVAL DATE

REGISTERED PROFESSIONAL ENGINEER Eltahir K. Ataelgeed No. 76374 Exp. 12/31/14 CIVIL STATE OF CALIFORNIA

THE STATE OF CALIFORNIA OR ITS OFFICERS OR AGENTS SHALL NOT BE RESPONSIBLE FOR THE ACCURACY OR COMPLETENESS OF SCANNED COPIES OF THIS PLAN SHEET.

NOTE:

FOR ACCURATE RIGHT OF WAY DATA,
CONTACT RIGHT OF WAY ENGINEERING AT THE DISTRICT OFFICE.

ABBREVIATION:

SFES: STEEL FLARED END SECTION

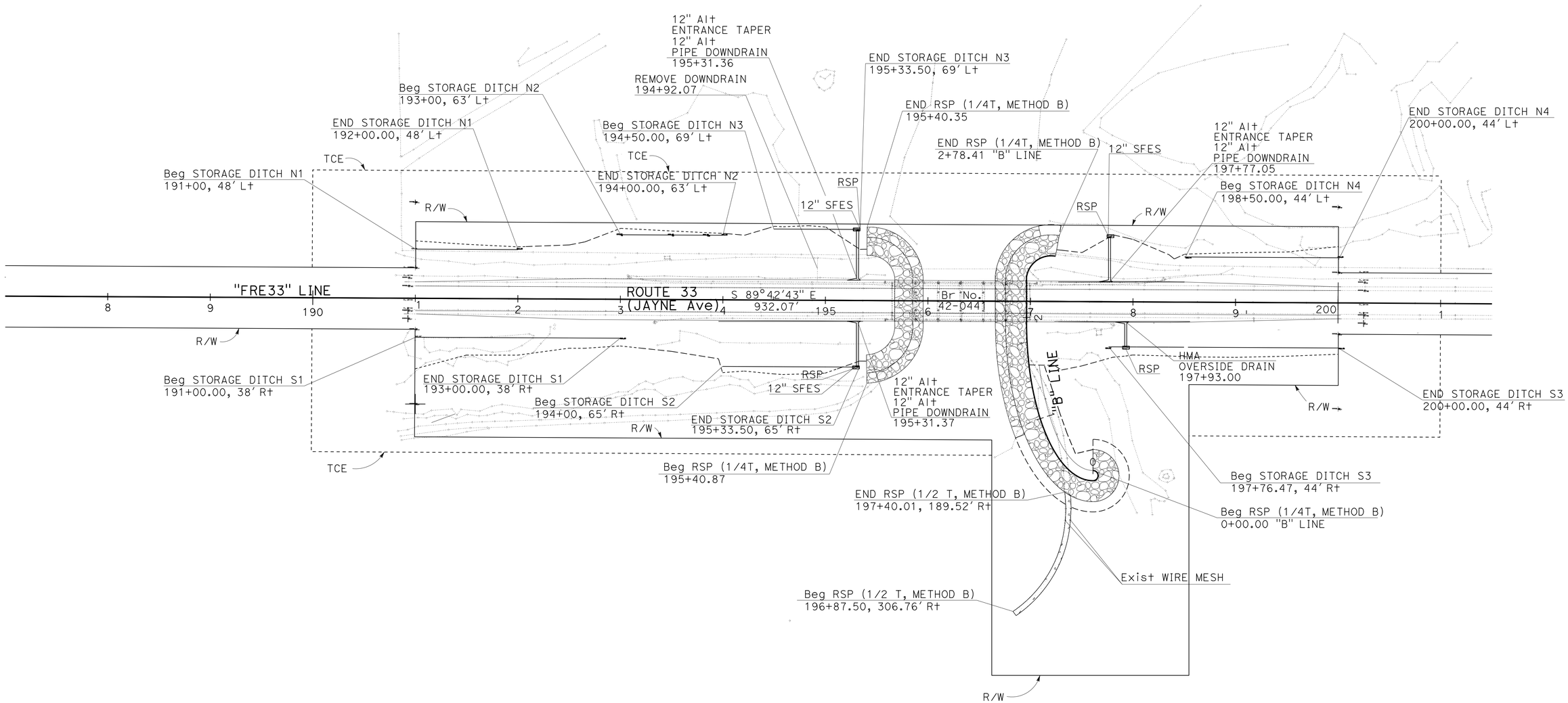

DRAINAGE PLAN
D-1

SCALE: 1"=50'

APPROVED FOR DRAINAGE WORK ONLY

STATE OF CALIFORNIA - DEPARTMENT OF TRANSPORTATION
Caltrans
DESIGN

FUNCTIONAL SUPERVISOR: ABDUL BAKER
CALCULATED-DESIGNED BY: PAWANJIT DHILLON
CHECKED BY: ELTAHIR ATAELGEED
REVISED BY
DATE REVISED

LAST REVISION 04-25-14
DATE PLOTTED => 27-AUG-2014
TIME PLOTTED => 14:07

Dist	COUNTY	ROUTE	POST MILES TOTAL PROJECT	SHEET No.	TOTAL SHEETS
06	Fre	33	10.9/11.1	11	104

E Ataelgeed 04-15-14
REGISTERED CIVIL ENGINEER DATE

4-28-14
PLANS APPROVAL DATE

REGISTERED PROFESSIONAL ENGINEER Eltahir K. Ataelgeed No. 76374 Exp 12/31/14 CIVIL STATE OF CALIFORNIA

THE STATE OF CALIFORNIA OR ITS OFFICERS OR AGENTS SHALL NOT BE RESPONSIBLE FOR THE ACCURACY OR COMPLETENESS OF SCANNED COPIES OF THIS PLAN SHEET.

NOTE:

ALL STATIONS, OFFSETS AND CORRESPONDING SHOWN LEADER LINES ARE TO THE FLOW LINE UNLESS OTHERWISE SHOWN.

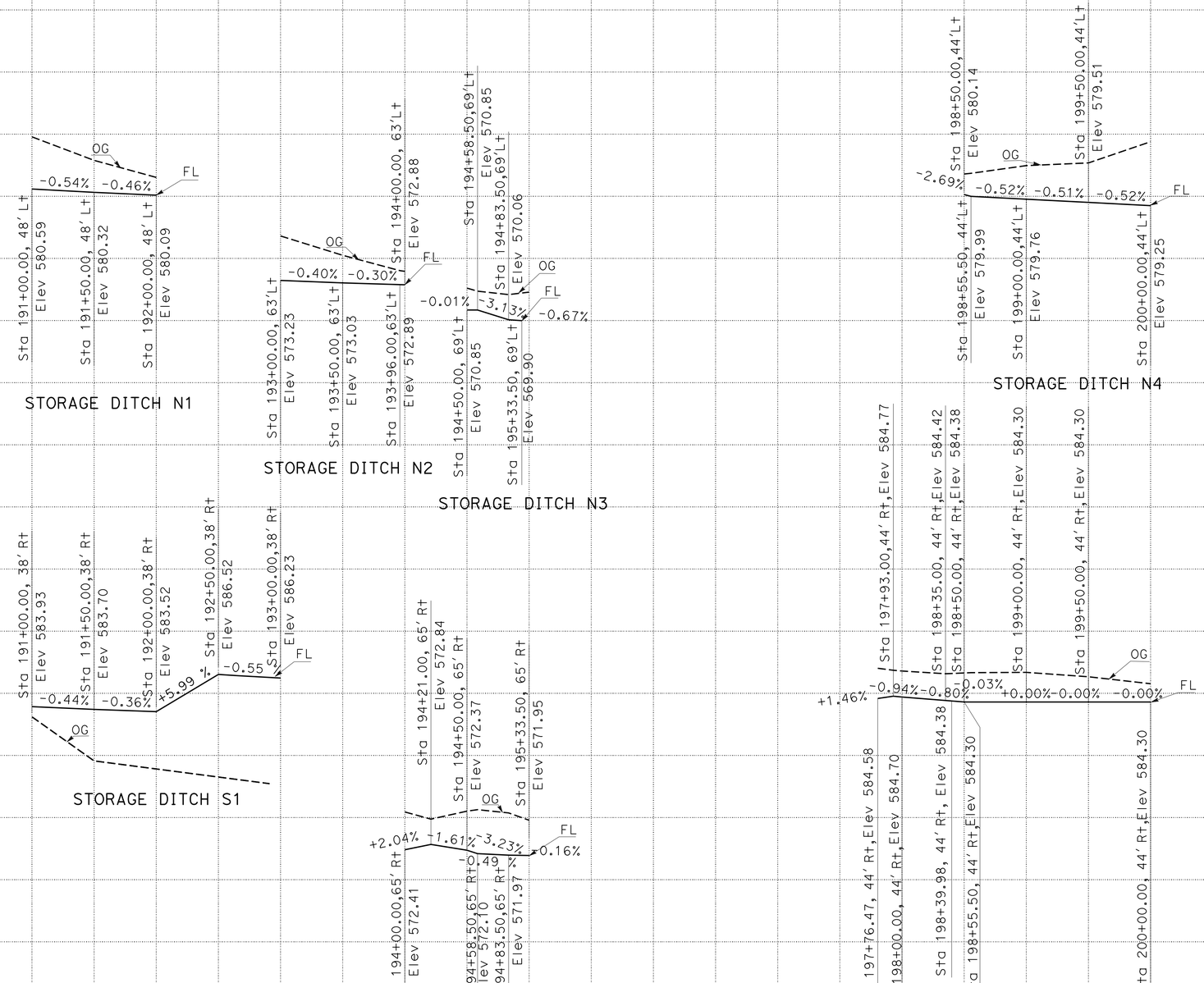

DRAINAGE PROFILES
DP-1

SCALE:Horiz 1"=50'
Vert 1"=50'

REVISED BY	DATE REVISED

CALCULATED-DESIGNED BY: PAWANJIT DHILLON
CHECKED BY: ELTAHIR ATAELGEED
FUNCTIONAL SUPERVISOR: ABDUL BAKER

STATE OF CALIFORNIA - DEPARTMENT OF TRANSPORTATION
Caltrans DESIGN

LAST REVISION 04-25-14 | DATE PLOTTED => 27-AUG-2014 | TIME PLOTTED => 14:07

Dist	COUNTY	ROUTE	POST MILES TOTAL PROJECT	SHEET No.	TOTAL SHEETS
06	Fre	33	10.9/11.1	12	104

E. Ataelgeed 04-15-14
REGISTERED CIVIL ENGINEER DATE

4-28-14
PLANS APPROVAL DATE

REGISTERED PROFESSIONAL ENGINEER
Eltahir K. Ataelgeed
No. 76374
Exp. 12/31/14
CIVIL
STATE OF CALIFORNIA

THE STATE OF CALIFORNIA OR ITS OFFICERS OR AGENTS SHALL NOT BE RESPONSIBLE FOR THE ACCURACY OR COMPLETENESS OF SCANNED COPIES OF THIS PLAN SHEET.

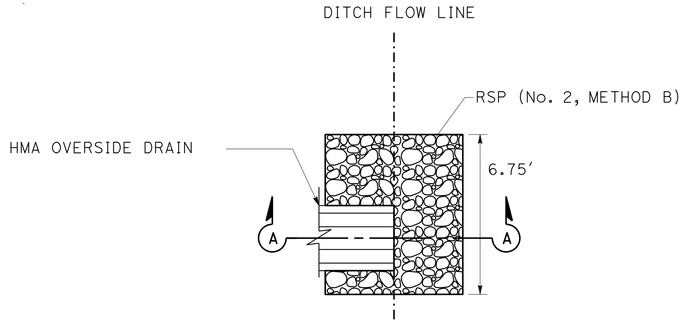

RSP AT THE HMA OVERSIDE DRAIN

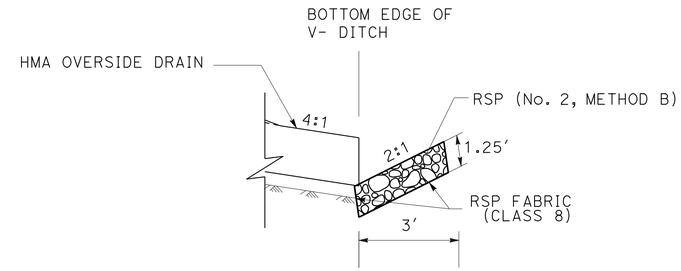

SECTION A-A

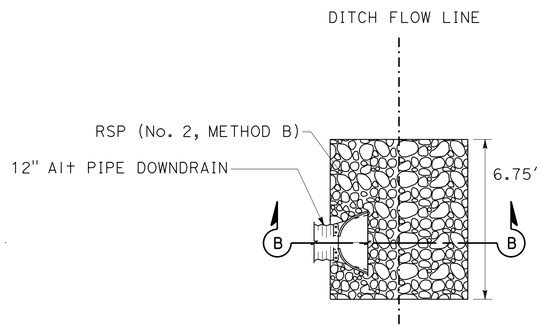

RSP AT THE 12" ALTERNATIVE PIPE DOWNDRAINS

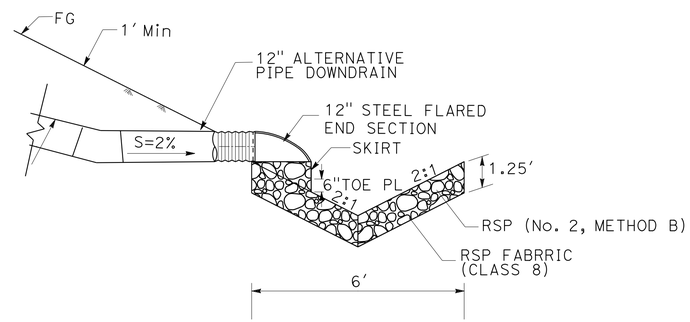

SECTION B-B

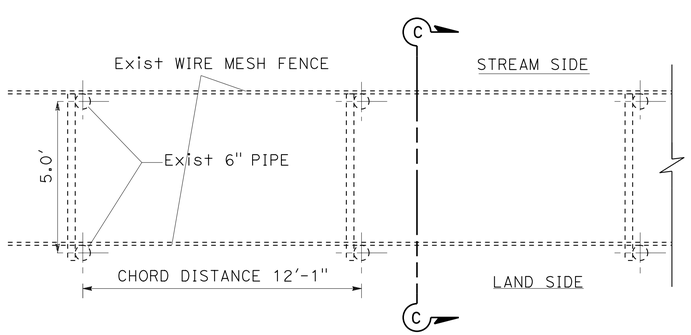

PLAN

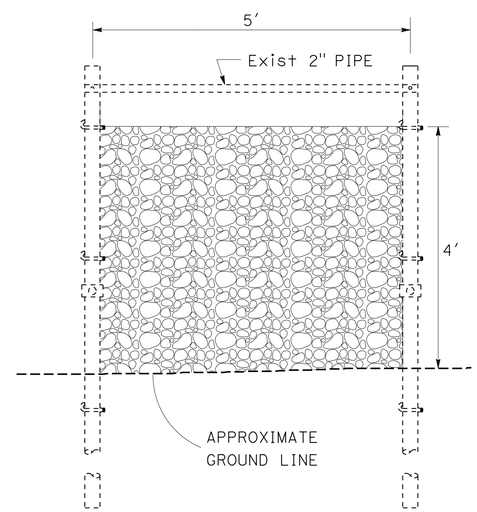

SECTION C-C

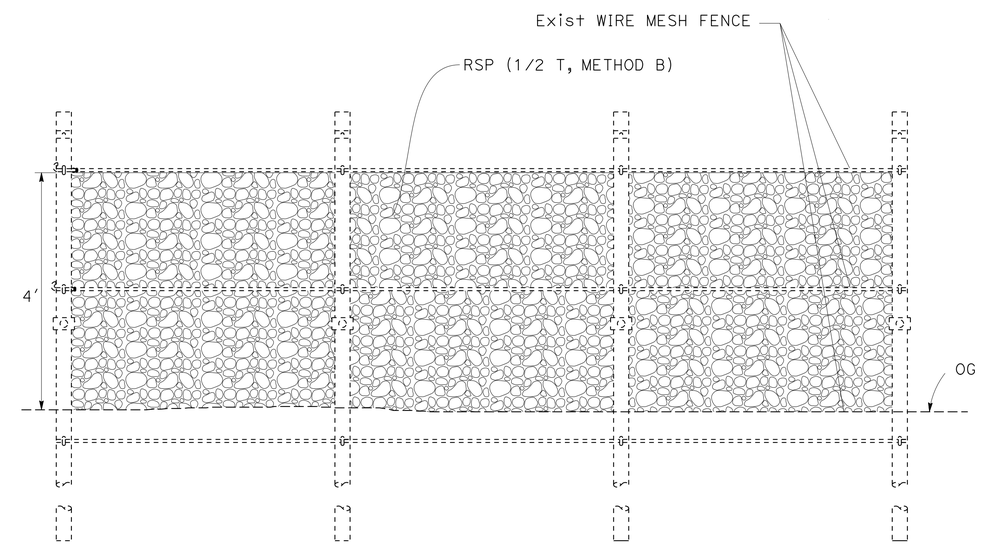

ELEVATION

RSP WITHIN Exist WIRE MESH

DRAINAGE DETAILS

NO SCALE **DD-1**

STATE OF CALIFORNIA - DEPARTMENT OF TRANSPORTATION
Caltrans®
DESIGN
FUNCTIONAL SUPERVISOR: ABDUL BAKER
CALCULATED-DESIGNED BY: PAWANJIT DHILLON
CHECKED BY: ELTAHIR ATAELGEED
REVISED BY
DATE REVISED

LAST REVISION 04-25-14 | DATE PLOTTED => 27-AUG-2014 | TIME PLOTTED => 14:07

Dist	COUNTY	ROUTE	POST MILES TOTAL PROJECT	SHEET No.	TOTAL SHEETS
06	Fre	33	10.9/11.1	13	104

E. Ataelgeed 04-15-14
REGISTERED CIVIL ENGINEER DATE

4-28-14
PLANS APPROVAL DATE

REGISTERED PROFESSIONAL ENGINEER Eltahir K. Ataelgeed No. 76374 Exp. 12/31/14 CIVIL STATE OF CALIFORNIA

THE STATE OF CALIFORNIA OR ITS OFFICERS OR AGENTS SHALL NOT BE RESPONSIBLE FOR THE ACCURACY OR COMPLETENESS OF SCANNED COPIES OF THIS PLAN SHEET.

DRAINAGE QUANTITIES

STATION	RSP FABRIC (CLASS 8)	RSP (1/4 T, METHOD B)	RSP (No. 2, METHOD B)	RSP (No. 1, METHOD B)	12" Alt PIPE DOWNDRAIN	PLACE HMA (Misc AREA)	RSP (1/2 T, METHOD B)	REMOVE DOWNDRAIN	12" STEEL FLARED END SECTION	ROADWAY EXCAVATION *	EMBANKMENT (N)*	12" Alt ENTRANCE TAPER	DESCRIPTION
	SQYD	CY	CY	CY	LF	SQYD	CY	EA	EA	CY	CY	EA	
"Fre33" LINE 195+31.37 Rt	6.9		2.2		42				1			1	12" Alt PIPE DOWNDRAIN
"Fre33" LINE 197+93.00 Rt	5.7		1.8			6.7							OVERSIDE DRAIN (HMA)
"Fre33" LINE 194+92.07 Lt								1					12" CMP DOWNDRAIN
"Fre33" LINE 195+31.36 Lt	6.9		2.2		46				1			1	12"Alt PIPE DOWNDRAIN
"Fre33" LINE 197+77.05 Lt	6.9		2.2		47				1			1	12" Alt PIPE DOWNDRAIN
"Fre33" LINE 195+40.87 TO 195+40.35	739	409		223						812	329		BRIDGE ABUTMENT
"B" LINE 0+00.00 TO 2+78.41	1220	936		436						1086	123		BRIDGE ABUTMENT
"Fre33" LINE 196+87.50 TO 197+40.01 Rt							110						BETWEEN Exist WIRE MESH
TOTAL	1985.4	1345	8.4	659	135	6.7	110	1	3	1898	452	3	

* QUANTITY IS INCLUDED IN ROADWAY QUANTITIES ON SHEET Q-1.
(N) NOT A SEPARATE PAY ITEM, FOR INFORMATION ONLY

ALTERNATIVE PIPE DOWNDRAIN (ALLOWABLE PIPE MATERIAL AND PROTECTION)

CSP		PLASTIC
THICKNESS (Inches)	POLYMERIC Ctd	ALL PLASTIC PIPE MUST BE BURIED
0.109	YES	

DRAINAGE QUANTITIES
DQ-1

REVISED BY | DATE REVISED
PAWANJIT DHILLON | ELTAHIR ATAELGEED
CALCULATED-DESIGNED BY | CHECKED BY
FUNCTIONAL SUPERVISOR: ABDUL BAKER
STATE OF CALIFORNIA - DEPARTMENT OF TRANSPORTATION
Caltrans® DESIGN

LAST REVISION 04-27-14 | DATE PLOTTED => 27-AUG-2014 TIME PLOTTED => 14:07

Dist	COUNTY	ROUTE	POST MILES TOTAL PROJECT	SHEET No.	TOTAL SHEETS
06	Fre	33	10.9/11.1	14	104

E. Atagleed 04-15-14
REGISTERED CIVIL ENGINEER DATE

4-28-14
PLANS APPROVAL DATE

REGISTERED PROFESSIONAL ENGINEER Eltahir K. Atagelgeed No. 76374 Exp. 12/31/14 CIVIL STATE OF CALIFORNIA

THE STATE OF CALIFORNIA OR ITS OFFICERS OR AGENTS SHALL NOT BE RESPONSIBLE FOR THE ACCURACY OR COMPLETENESS OF SCANNED COPIES OF THIS PLAN SHEET.

NOTES:

1. FOR ACCURATE RIGHT OF WAY DATA, CONTACT RIGHT OF WAY ENGINEERING AT THE DISTRICT OFFICE.
2. INSTALL SPECIAL MARKERS AS DIRECTED BY THE ENGINEER.

ABBREVIATIONS:

AT&T AMERICAN TELEPHONE AND TELEGRAPH

PG&E PACIFIC GAS AND ELECTRIC

UTILITY OWNERS

—— - e —— —— -(oh)— PG&E

- —— w —— —— —— w —— CITY OF COALINGA

—— - - t —— —— - - t —— AT&T

—— fo —— —— —— fo —— AT&T

LEGEND:

⊗ POTHOLE LOCATION

⊗ POTHOLE NUMBER

- - - - - - - - - RELOCATE FROM

———— RELOCATE TO

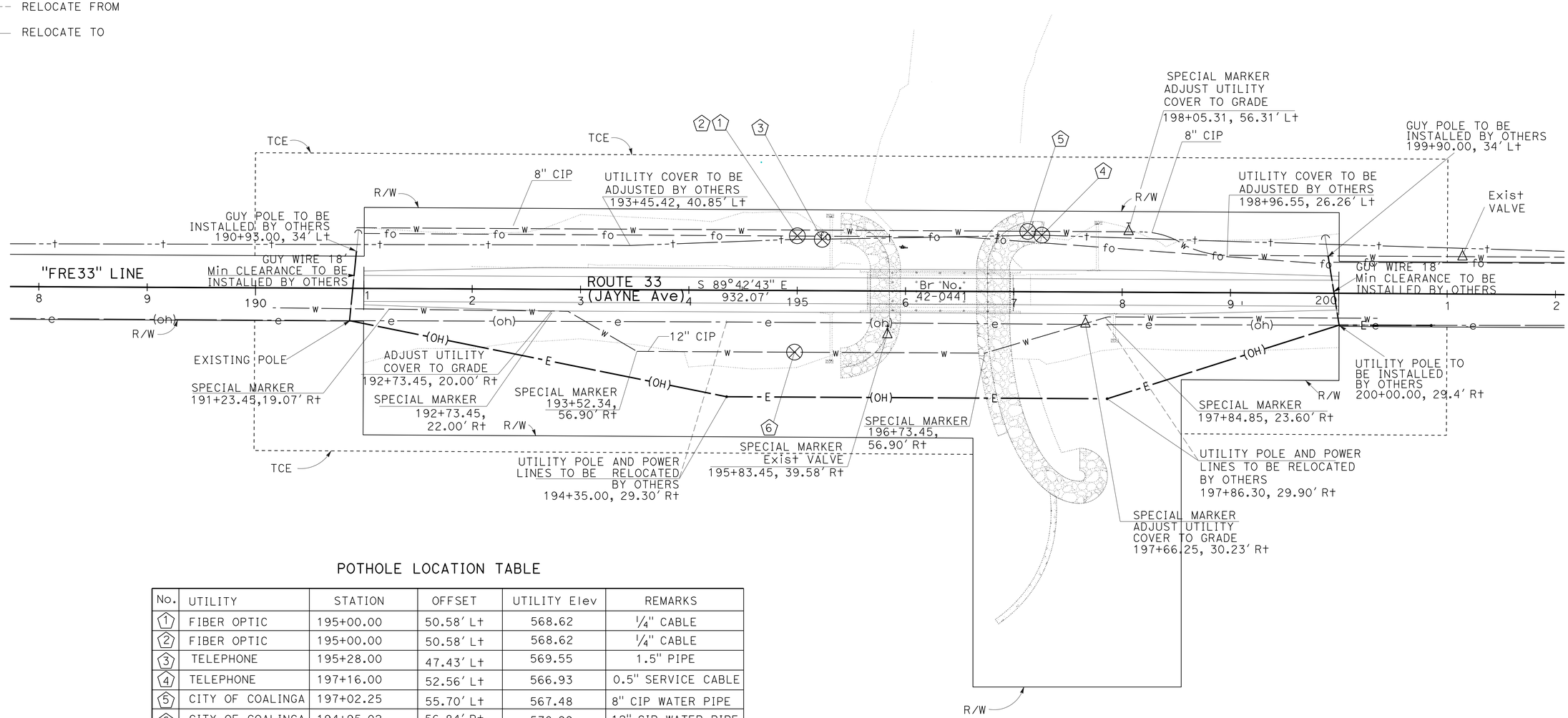

POTHOLE LOCATION TABLE

No.	UTILITY	STATION	OFFSET	UTILITY Elev	REMARKS
1	FIBER OPTIC	195+00.00	50.58' Lt	568.62	1/4" CABLE
2	FIBER OPTIC	195+00.00	50.58' Lt	568.62	1/4" CABLE
3	TELEPHONE	195+28.00	47.43' Lt	569.55	1.5" PIPE
4	TELEPHONE	197+16.00	52.56' Lt	566.93	0.5" SERVICE CABLE
5	CITY OF COALINGA	197+02.25	55.70' Lt	567.48	8" CIP WATER PIPE
6	CITY OF COALINGA	194+95.02	56.84' Rt	570.99	12" CIP WATER PIPE

THIS PLAN ACCURATE FOR UTILITY WORK ONLY

UTILITY PLAN

SCALE: 1"=50'

U-1

REVISED BY | DATE REVISED | CALCULATED-DESIGNED BY | CHECKED BY | FUNCTIONAL SUPERVISOR

STATE OF CALIFORNIA - DEPARTMENT OF TRANSPORTATION

Caltrans

LAST REVISION 02-25-14 | DATE PLOTTED => 29-AUG-2014 | TIME PLOTTED => 10:49

Dist	COUNTY	ROUTE	POST MILES TOTAL PROJECT	SHEET No.	TOTAL SHEETS
06	Fre	33	10.9/11.1	15	104

REGISTERED CIVIL ENGINEER 04-24-14 DATE

4-28-14
PLANS APPROVAL DATE

REGISTERED PROFESSIONAL ENGINEER
KAMRUL KHAN
No. 74112
Exp 06/30/15
CIVIL
STATE OF CALIFORNIA

THE STATE OF CALIFORNIA OR ITS OFFICERS OR AGENTS SHALL NOT BE RESPONSIBLE FOR THE ACCURACY OR COMPLETENESS OF SCANNED COPIES OF THIS PLAN SHEET.

NOTES:

1. EXACT SIGN LOCATIONS TO BE DETERMINED BY THE ENGINEER.
2. FOR ADDITIONAL CONSTRUCTION AREA SIGNS, REFER TO TRAFFIC HANDLING PLANS.

STATIONARY MOUNTED CONSTRUCTION AREA SIGNS

SIGN No.	SIGN CODE	SIGN MESSAGE	PANEL SIZE	No. OF POST AND SIZE	No. OF SIGNS
A	W20-1	ROAD WORK AHEAD	36" x 36"	1 - 4" x 6"	3
B	G20-2	END ROAD WORK	36" x 18"	1 - 4" x 4"	2

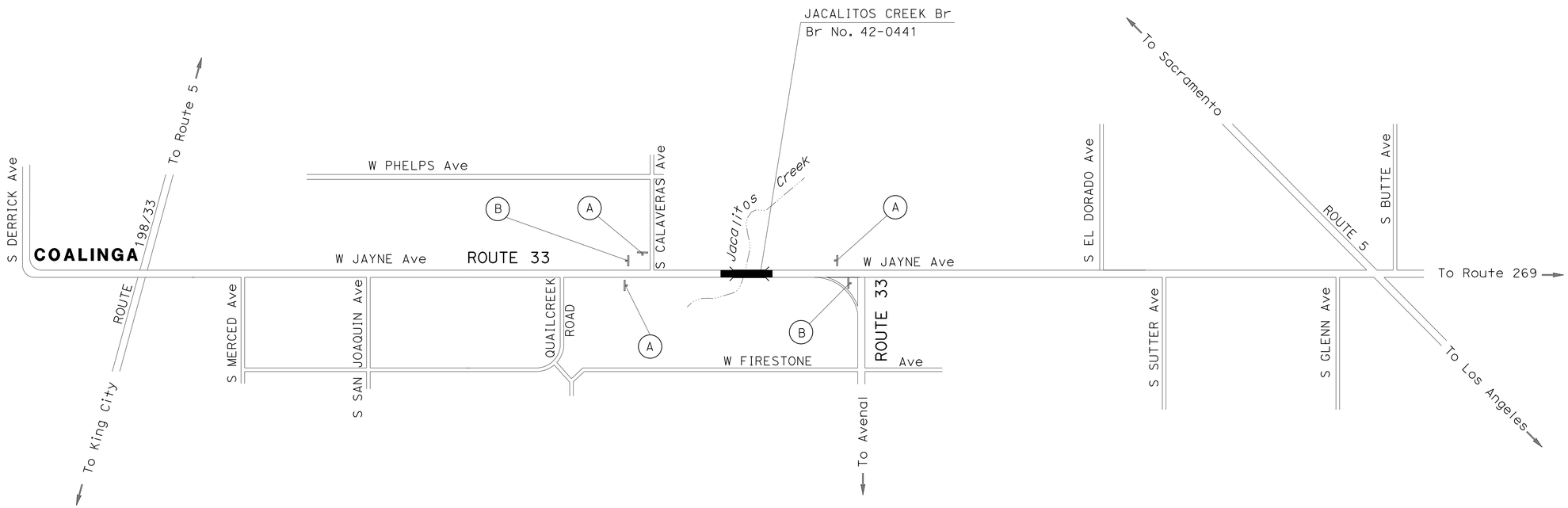

CONSTRUCTION AREA SIGNS

NO SCALE

CS-1

APPROVED FOR CONSTRUCTION AREA SIGN WORK ONLY

STATE OF CALIFORNIA - DEPARTMENT OF TRANSPORTATION
Caltrans
TRAFFIC DESIGN

FUNCTIONAL SUPERVISOR: MOHAMMED QATAMI
CALCULATED-DESIGNED BY: KAMRUL KHAN
CHECKED BY: HASSAN TAHA
REVISED BY
DATE REVISED

LAST REVISION 04-24-14
DATE PLOTTED => 27-AUG-2014
TIME PLOTTED => 14:07

Dist	COUNTY	ROUTE	POST MILES TOTAL PROJECT	SHEET No.	TOTAL SHEETS
06	Fre	33	10.9/11.1	16	104

E. Ataelgeed 04-15-14
REGISTERED CIVIL ENGINEER DATE

4-28-14
PLANS APPROVAL DATE

REGISTERED PROFESSIONAL ENGINEER Eltahir K. Ataelgeed No. 76374 Exp. 12/31/14 CIVIL STATE OF CALIFORNIA

THE STATE OF CALIFORNIA OR ITS OFFICERS OR AGENTS SHALL NOT BE RESPONSIBLE FOR THE ACCURACY OR COMPLETENESS OF SCANNED COPIES OF THIS PLAN SHEET.

NOTES:

1. FOR ACCURATE RIGHT OF WAY DATA, CONTACT RIGHT OF WAY ENGINEERING AT THE DISTRICT OFFICE.
2. FOR INFORMATION NOT SHOWN, SEE TYPICAL CROSS SECTIONS SHEETS.

STAGE 1A

1- REMOVE GUARDRAIL
2- WIDEN NORTHBOUND SHOULDER FROM Sta 191+00.00 TO Sta 200+00.00
3- SEE TRAFFIC HANDLING PLANS FOR K-RAIL INSTALLATION.
4- INSTALL TEMPORARY RAILING (TYPE K) TO REPLACE THE REMOVED GUARDRAIL

LEGEND:

WORK AREA

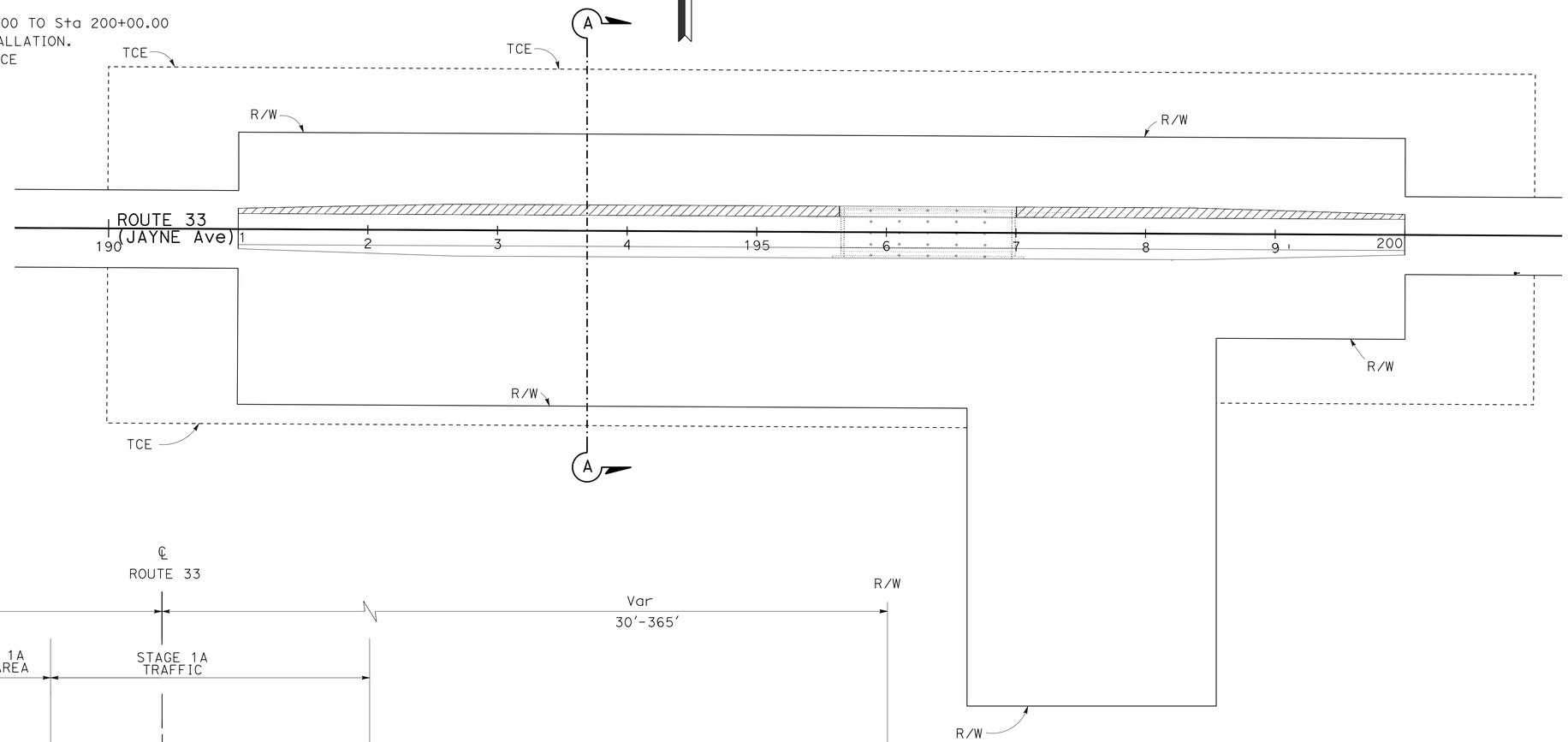

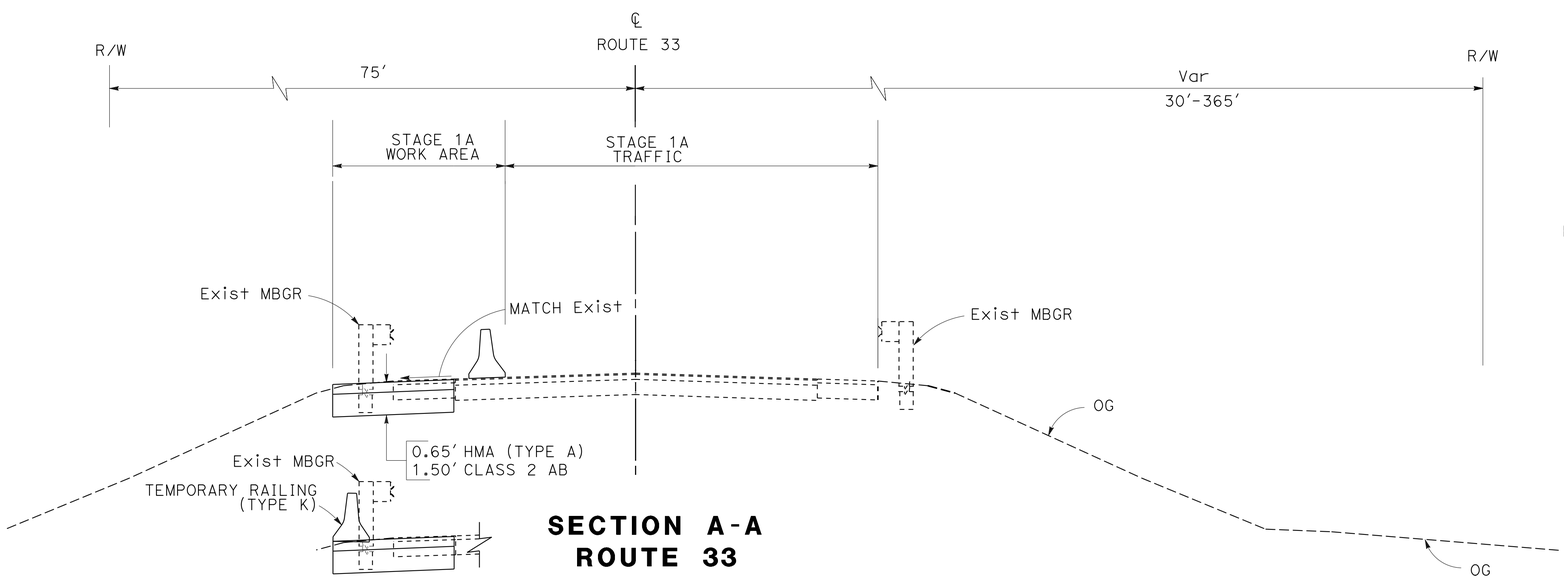

SECTION A-A
ROUTE 33
Sta 191+00.00 TO Sta 200+00.00

APPROVED FOR STAGE CONSTRUCTION WORK ONLY

NO SCALE

STAGE CONSTRUCTION

STAGE 1A

SC-1

STATE OF CALIFORNIA - DEPARTMENT OF TRANSPORTATION
Caltrans
DESIGN

FUNCTIONAL SUPERVISOR: ABDUL BAKER
CALCULATED-DESIGNED BY: PAWANJIT DHILLON
CHECKED BY: ELTAHIR ATAELGEED
REVISED BY
DATE REVISED

LAST REVISION 04-14-14
DATE PLOTTED => 27-AUG-2014
TIME PLOTTED => 14:07

Dist	COUNTY	ROUTE	POST MILES TOTAL PROJECT	SHEET No.	TOTAL SHEETS
06	Fre	33	10.9/11.1	17	104

E. Ataelgeed 04-15-14
REGISTERED CIVIL ENGINEER DATE

4-28-14
PLANS APPROVAL DATE

REGISTERED PROFESSIONAL ENGINEER
Eltahir K. Ataelgeed
No. 76374
Exp. 12/31/14
CIVIL
STATE OF CALIFORNIA

THE STATE OF CALIFORNIA OR ITS OFFICERS OR AGENTS SHALL NOT BE RESPONSIBLE FOR THE ACCURACY OR COMPLETENESS OF SCANNED COPIES OF THIS PLAN SHEET.

NOTE:

1. FOR ACCURATE RIGHT OF WAY DATA, CONTACT RIGHT OF WAY ENGINEERING AT THE DISTRICT OFFICE.

STAGE 1B

1. CONSTRUCT THE SOUTH SIDE OF ROADWAY.
2. CONSTRUCT ROCK SLOPE PROTECTION.

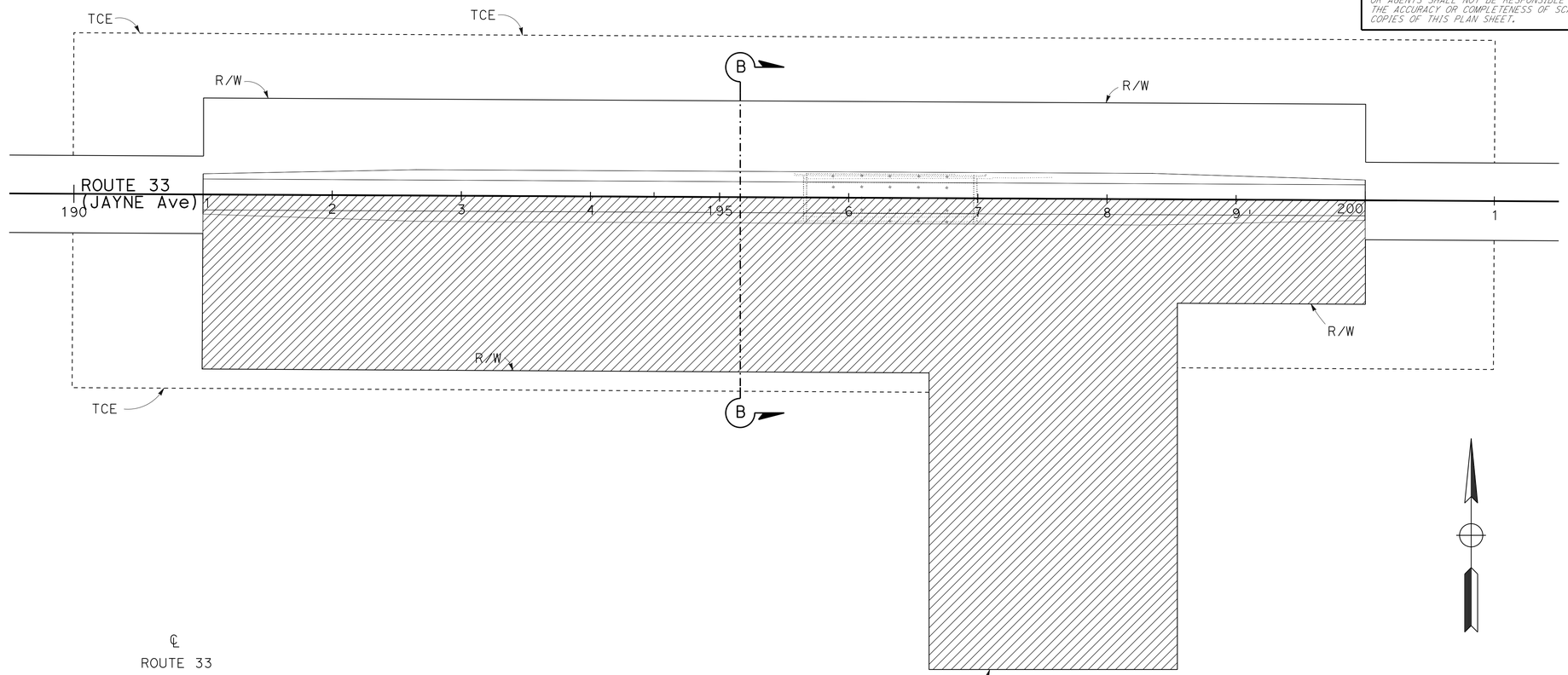

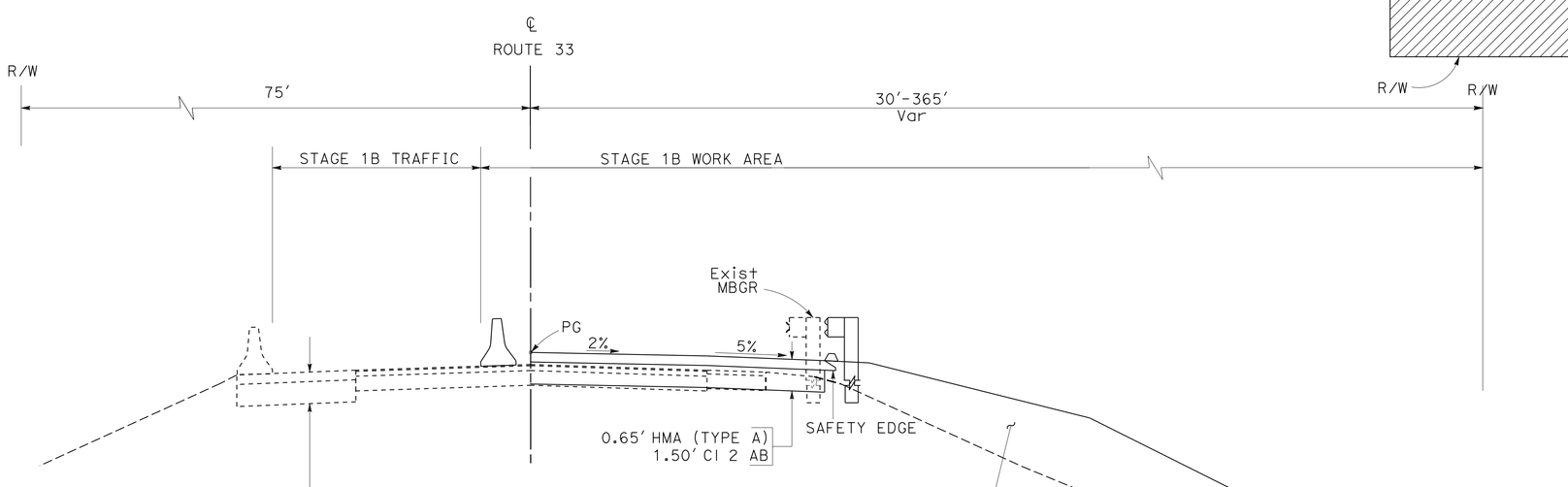

SECTION B-B
ROUTE 33
Sta 191+00.00 TO Sta 200+00.00

APPROVED FOR STAGE CONSTRUCTION WORK ONLY

NO SCALE

STAGE CONSTRUCTION

STAGE 1B

SC-2

STATE OF CALIFORNIA - DEPARTMENT OF TRANSPORTATION
Caltrans
DESIGN

FUNCTIONAL SUPERVISOR: ABDUL BAKER
CALCULATED-DESIGNED BY: PAWANJIT DHILLON
CHECKED BY: ELTAHIR ATAELGEED
REVISED BY: PKD
DATE REVISED: 04/14

LAST REVISION 03-26-14
DATE PLOTTED => 27-AUG-2014
TIME PLOTTED => 14:07

Dist	COUNTY	ROUTE	POST MILES TOTAL PROJECT	SHEET No.	TOTAL SHEETS
06	Fre	33	10.9/11.1	18	104

E. Ataelgeed 04-15-14
REGISTERED CIVIL ENGINEER DATE

4-28-14
PLANS APPROVAL DATE

REGISTERED PROFESSIONAL ENGINEER
Eltahir K. Ataelgeed
No. 76374
Exp. 12/31/14
CIVIL
STATE OF CALIFORNIA

THE STATE OF CALIFORNIA OR ITS OFFICERS OR AGENTS SHALL NOT BE RESPONSIBLE FOR THE ACCURACY OR COMPLETENESS OF SCANNED COPIES OF THIS PLAN SHEET.

NOTE:

1. FOR ACCURATE RIGHT OF WAY DATA, CONTACT RIGHT OF WAY ENGINEERING AT THE DISTRICT OFFICE.

STAGE 2:

1. COLD PLANE AC PAVEMENT, NB SHOULDER FROM Sta 191+60.00 TO 192+50.00, Sta 197+50.00 TO 198+00.00, THICKNESS 0.20'. EXACT LOCATION TO BE DETERMINED IN THE FIELD.
2. CONSTRUCT THE NORTH SIDE OF ROADWAY
3. CONSTRUCT ROCK SLOPE PROTECTION.

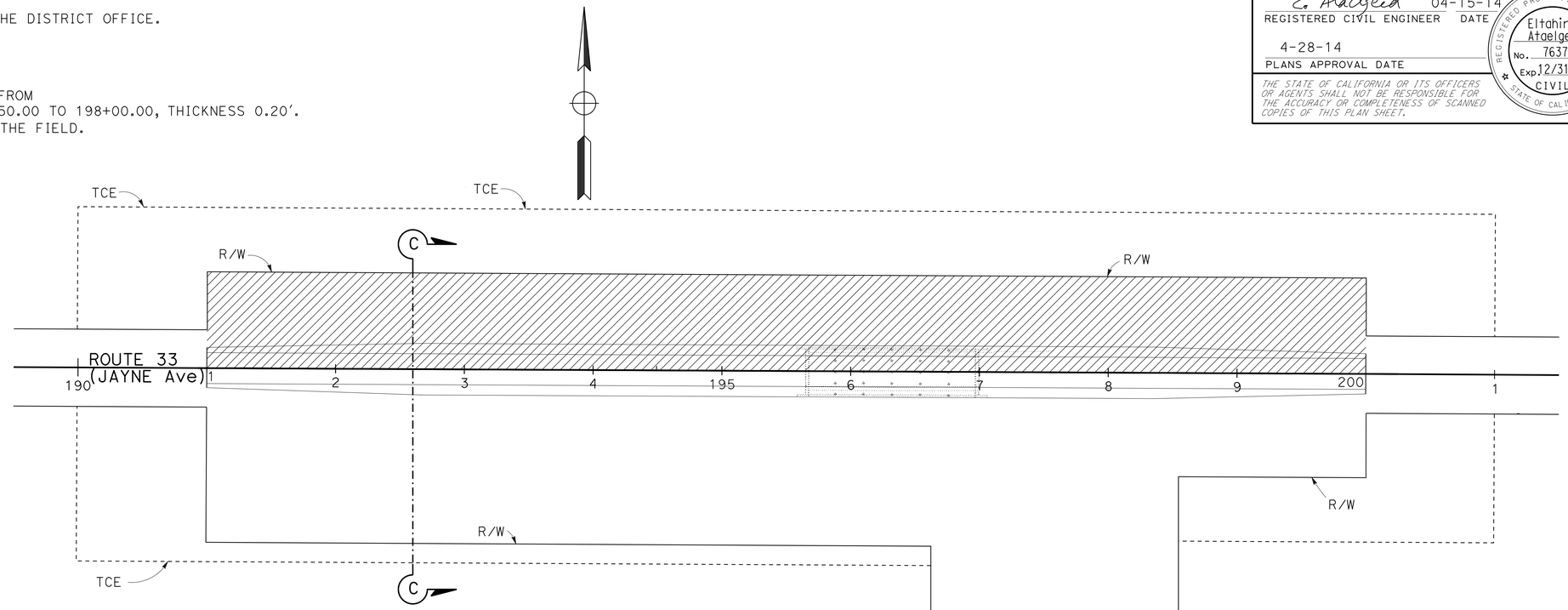

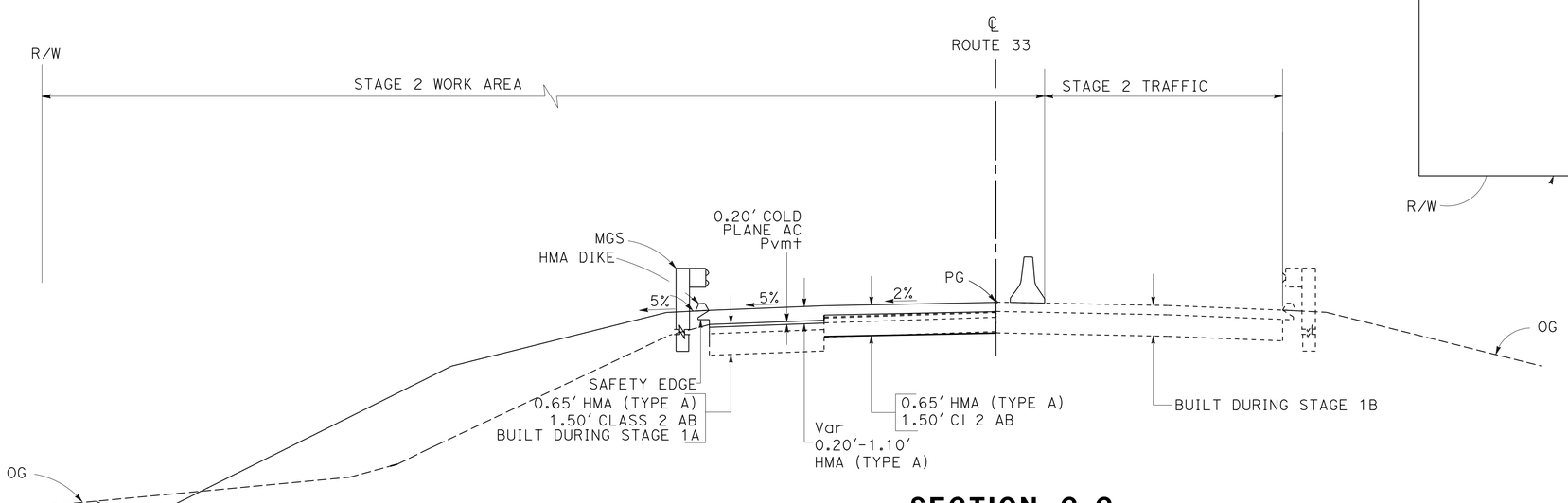

SECTION C-C
ROUTE 33

Sta 191+00.00 TO Sta 200+00.00

APPROVED FOR STAGE CONSTRUCTION WORK ONLY

NO SCALE

STAGE CONSTRUCTION

STAGE 2

SC-3

STATE OF CALIFORNIA - DEPARTMENT OF TRANSPORTATION
Caltrans
DESIGN

FUNCTIONAL SUPERVISOR: ABDUL BAKER
CALCULATED-DESIGNED BY: PAWANJIT DHILLON
CHECKED BY: ELTAHIR ATAELGEED
REVISED BY
DATE REVISED

LAST REVISION 04-27-14
DATE PLOTTED => 27-AUG-2014
TIME PLOTTED => 14:07

Dist	COUNTY	ROUTE	POST MILES TOTAL PROJECT	SHEET No.	TOTAL SHEETS
06	Fre	33	10.9/11.1	19	104

REGISTERED CIVIL ENGINEER 04-27-14 DATE

4-28-14
PLANS APPROVAL DATE

REGISTERED PROFESSIONAL ENGINEER KAMRUL KHAN No. 74112 Exp 06/30/15 CIVIL STATE OF CALIFORNIA

THE STATE OF CALIFORNIA OR ITS OFFICERS OR AGENTS SHALL NOT BE RESPONSIBLE FOR THE ACCURACY OR COMPLETENESS OF SCANNED COPIES OF THIS PLAN SHEET.

LEGEND:

- CONSTRUCT THIS STAGE
- Temp RAILING (TYPE K)
- STATIONARY MOUNTED CONSTRUCTION AREA SIGN
- SIGN MOUNTED ON POLE
- (xx) TEMPORARY TRAFFIC STRIPE DETAIL NUMBER
- (xx) CONSTRUCTION AREA SIGN NUMBER
- CHANNELIZER (SURFACE MOUNTED)
- TEMPORARY CRASH CUSHION MODULE (ARRAY TS14)
- (xx) REMOVE TRAFFIC STRIPE DETAIL NUMBER

NOTES:

1. SIGN LOCATIONS ARE APPROXIMATE.
   EXACT LOCATIONS TO BE DETERMINED BY THE ENGINEER.
2. FOR ADDITIONAL CONSTRUCTION AREA SIGNS, REFER TO SHEET CS-1

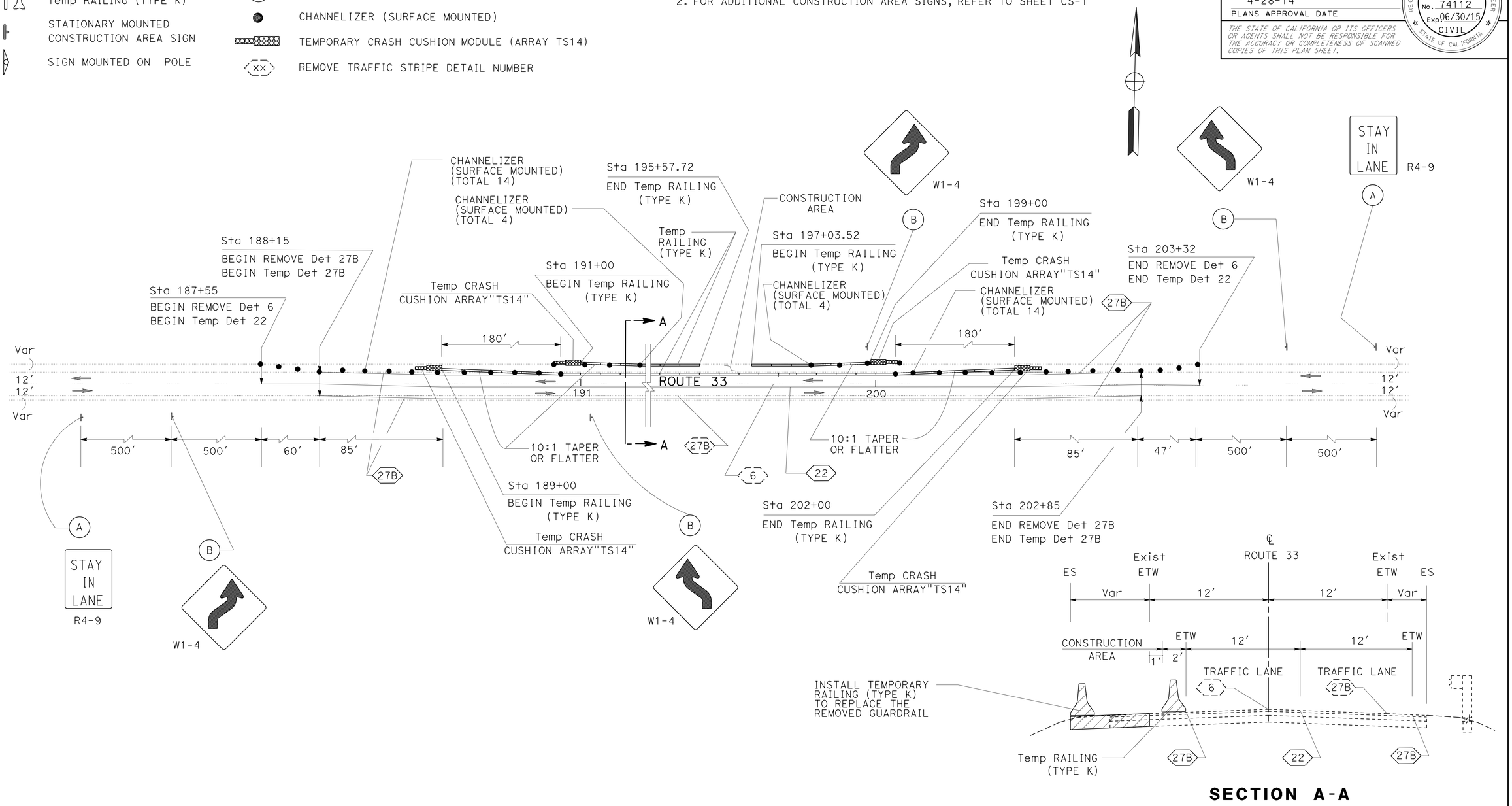

SECTION A-A

APPROVED FOR TRAFFIC HANDLING WORK ONLY

TRAFFIC HANDLING PLAN
STAGE 1A

NO SCALE

TH-1

STATE OF CALIFORNIA - DEPARTMENT OF TRANSPORTATION
Caltrans® **TRAFFIC DESIGN**

FUNCTIONAL SUPERVISOR: MOHAMMED QATAMI
CALCULATED-DESIGNED BY: KAMRUL KHAN
CHECKED BY: HASSAN TAHA
REVISED BY
DATE REVISED

LAST REVISION 04-27-14
DATE PLOTTED => 27-AUG-2014
TIME PLOTTED => 14:07

Dist	COUNTY	ROUTE	POST MILES TOTAL PROJECT	SHEET No.	TOTAL SHEETS
06	Fre	33	10.9/11.1	20	104

REGISTERED CIVIL ENGINEER 04-27-14 DATE

4-28-14
PLANS APPROVAL DATE

REGISTERED PROFESSIONAL ENGINEER KAMRUL KHAN No. 74112 Exp 06/30/15 CIVIL STATE OF CALIFORNIA

THE STATE OF CALIFORNIA OR ITS OFFICERS OR AGENTS SHALL NOT BE RESPONSIBLE FOR THE ACCURACY OR COMPLETENESS OF SCANNED COPIES OF THIS PLAN SHEET.

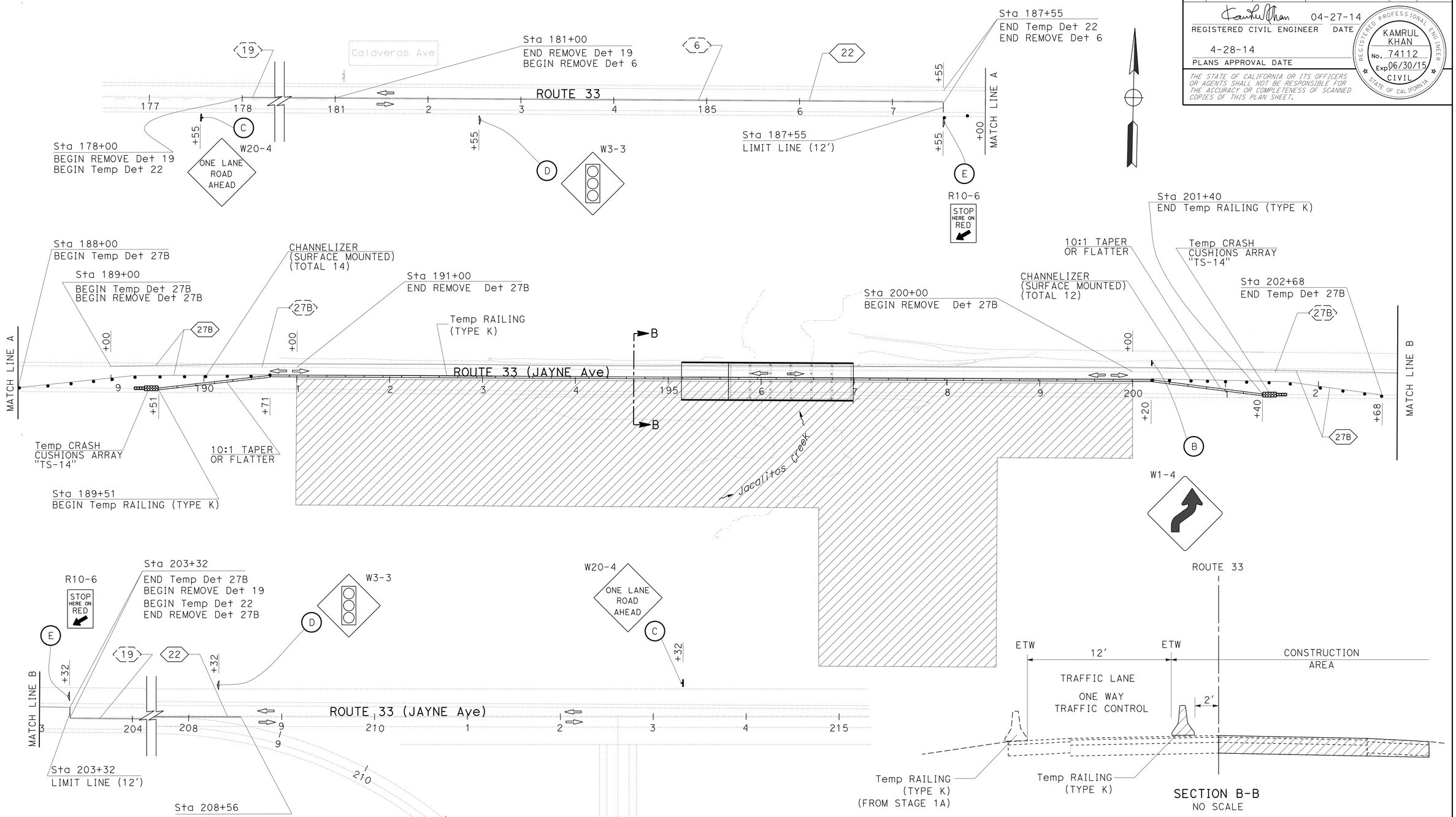

APPROVED FOR TRAFFIC HANDLING WORK ONLY

TRAFFIC HANDLING PLAN
STAGE 1B

SCALE:1"=50'

TH-2

STATE OF CALIFORNIA - DEPARTMENT OF TRANSPORTATION
Caltrans®
TRAFFIC DESIGN

FUNCTIONAL SUPERVISOR: MOHAMMED QATAMI
CALCULATED-DESIGNED BY: KAMRUL KHAN
CHECKED BY: HASSAN TAHA
REVISED BY
DATE REVISED

LAST REVISION 04-15-14
DATE PLOTTED => 27-AUG-2014
TIME PLOTTED => 14:07

Dist	COUNTY	ROUTE	POST MILES TOTAL PROJECT	SHEET No.	TOTAL SHEETS
06	Fre	33	10.9/11.1	21	104

REGISTERED CIVIL ENGINEER 04-27-14 DATE

4-28-14
PLANS APPROVAL DATE

REGISTERED PROFESSIONAL ENGINEER KAMRUL KHAN No. 74112 Exp 06/30/15 CIVIL STATE OF CALIFORNIA

THE STATE OF CALIFORNIA OR ITS OFFICERS OR AGENTS SHALL NOT BE RESPONSIBLE FOR THE ACCURACY OR COMPLETENESS OF SCANNED COPIES OF THIS PLAN SHEET.

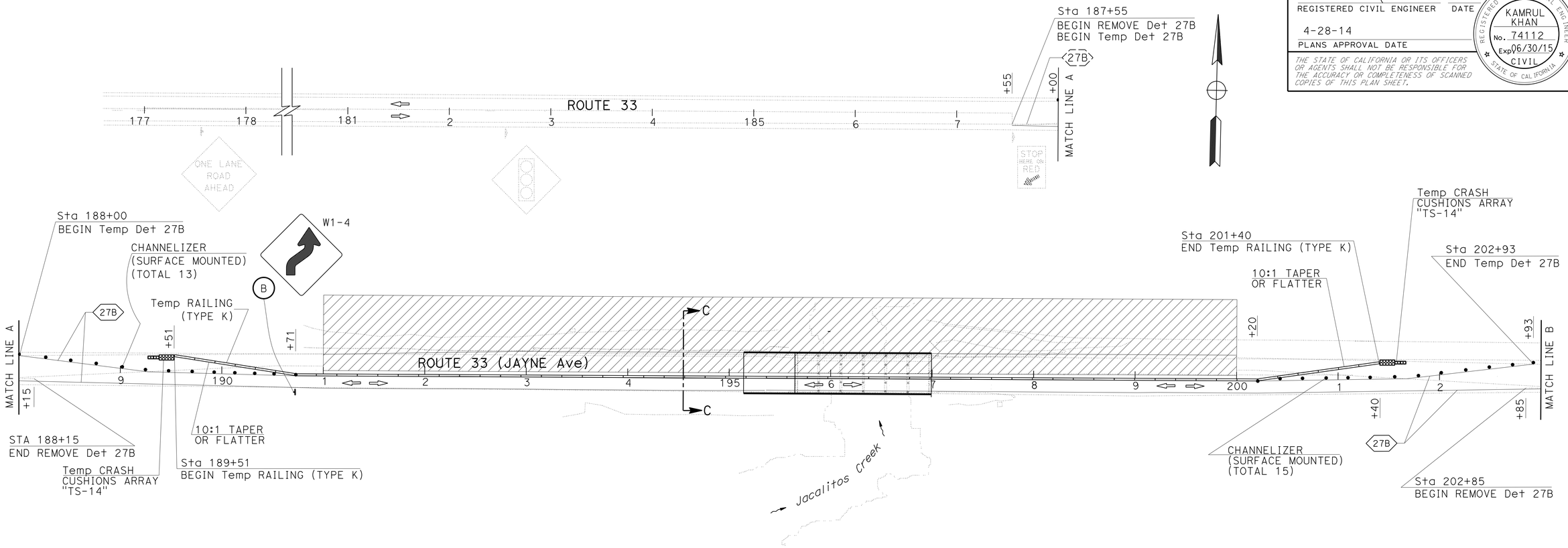

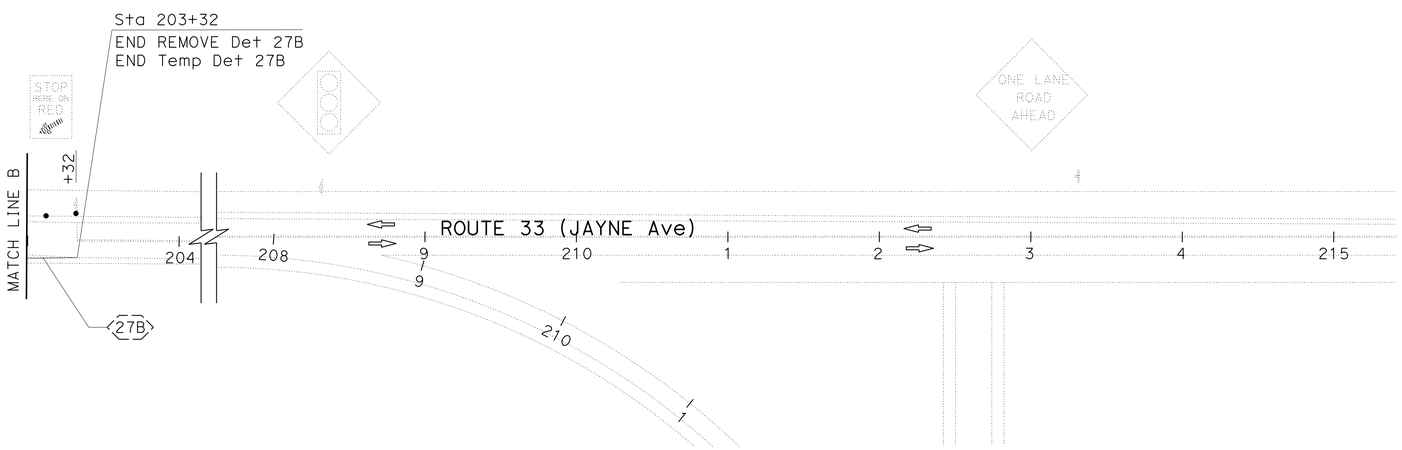

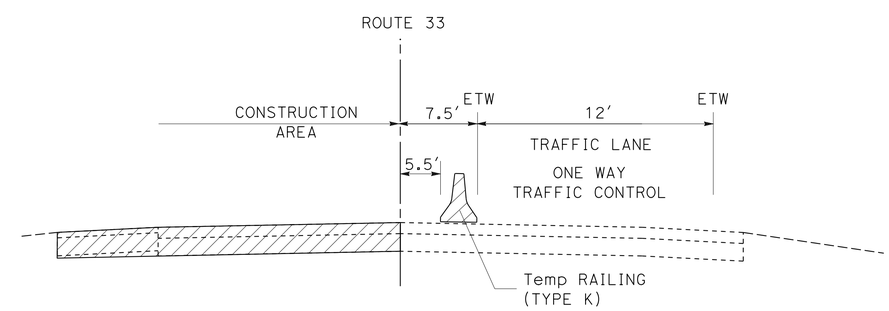

SECTION C-C
NO SCALE

TRAFFIC HANDLING PLAN
STAGE 2

APPROVED FOR TRAFFIC HANDLING WORK ONLY

SCALE: 1"=50'

TH-3

STATE OF CALIFORNIA - DEPARTMENT OF TRANSPORTATION
Caltrans
TRAFFIC DESIGN

FUNCTIONAL SUPERVISOR: MOHAMMED QATAMI
CALCULATED-DESIGNED BY: KAMRUL KHAN
CHECKED BY: HASSAN TAHA
REVISED BY
DATE REVISED

LAST REVISION 04-27-14
DATE PLOTTED => 27-AUG-2014
TIME PLOTTED => 14:07

Dist	COUNTY	ROUTE	POST MILES TOTAL PROJECT	SHEET No.	TOTAL SHEETS
06	Fre	33	10.9/11.1	22	104

REGISTERED CIVIL ENGINEER 04-27-14 DATE

4-28-14
PLANS APPROVAL DATE

REGISTERED PROFESSIONAL ENGINEER KAMRUL KHAN No. 74112 Exp. 06/30/15 CIVIL STATE OF CALIFORNIA

THE STATE OF CALIFORNIA OR ITS OFFICERS OR AGENTS SHALL NOT BE RESPONSIBLE FOR THE ACCURACY OR COMPLETENESS OF SCANNED COPIES OF THIS PLAN SHEET.

STATIONARY MOUNTED CONSTRUCTION AREA SIGNS (TRAFFIC HANDLING)

SIGN No.	SIGN CODE	SIGN MESSAGE	PANEL SIZE	No. OF POST AND SIZE	No. OF SIGNS
A	R4-9	AS SHOWN ON PLAN	24" x 30"	1-4" x 4"	2
B	W1-4	AS SHOWN ON PLAN	30" x 30"	1-4" x 4"	6
C	W20-4	AS SHOWN ON PLAN	36" x 36"	1-4" x 4"	2
D	W3-3	AS SHOWN ON PLAN	36" x 36"	MOUNT ON POLE	2
E	R10-6	AS SHOWN ON PLAN	36" x 24"	MOUNT ON POLE	2

NOTES:
1. EXACT SIGN LOCATIONS TO BE DETERMINED BY THE ENGINEER.
2. FOR ADDITIONAL CONSTRUCTION AREA SIGNS, REFER TO CONSTRUCTION AREA SIGNS SHEET CS-1.

TEMPORARY CRASH CUSHION MODULE

SHEET No.	EA
TH-1	56
TH-2	28
TH-3	28
TOTAL	112

CHANNELIZER (SURFACE MOUNTED)

SHEET No.	EA
TH-1	36
TH-2	26
TH-3	28
TOTAL	90

TEMPORARY RAILING (TYPE K)

SHEET No.	Sta TO Sta	LF
TH-1	191+00 TO 195+57.72	460
	197+03.52 TO 199+00	200
	189+00 TO 202+00	1300
TH-2	189+51 TO 201+40	1200
TH-3	189+51 TO 201+40	1200
	TOTAL	4360

TEMPORARY PAVEMENT DELINEATION

SHEET No.	LOCATION Sta TO Sta	DETAIL No.	REMOVE PAVEMENT MARKER	REMOVE THERMOPLASTIC TRAFFIC STRIPE	REMOVE YELLOW THERMOPLASTIC TRAFFIC STRIPE (HAZARDOUS WASTE)	TEMPORARY PAVEMENT MARKER	TEMPORARY TRAFFIC STRIPE (TAPE)	TEMPORARY PAVEMENT MARKING (TAPE)	
			EA	LF	LF	EA	LF	DESCRIPTION	SQFT
TH-1	187+55 TO 203+32	6	34		394				
	187+55 TO 203+32	22				134	1577		
	188+15 TO 202+85	27B		1470					
	188+15 TO 202+85	27B					1470		
	188+15 TO 202+85	27B					1470		
TH-2	178+00 TO 181+00	19	24		375			2-LIMIT LINE	24
	178+00 TO 187+55	22				82	955		
	189+00 TO 203+32	27B					1432		
	188+00 TO 202+68	27B					1468		
	181+00 TO 187+55	6	15		164				
	189+00 TO 191+00	27B		200					
	200+00 TO 203+32	27B		332					
	203+32 TO 208+56	19	37		655				
	203+32 TO 208+56	22				46	524		
TH-3	187+55 TO 188+15	27B		60					
	187+55 TO 203+32	27B					1577		
	188+00 TO 202+93	27B					1493		
	202+85 TO 203+32	27B		47					
		TOTAL	110	2109	1588	262	11966		24

TRAFFIC HANDLING QUANTITIES

THQ-1

REVISED BY | DATE REVISED
KAMRUL KHAN | HASSAN TAHA
CALCULATED-DESIGNED BY | CHECKED BY
FUNCTIONAL SUPERVISOR | MOHAMMED QATAMI

STATE OF CALIFORNIA - DEPARTMENT OF TRANSPORTATION
Caltrans® TRAFFIC DESIGN

LAST REVISION 04-27-14 | DATE PLOTTED => 27-AUG-2014 TIME PLOTTED => 14:08

Dist	COUNTY	ROUTE	POST MILES TOTAL PROJECT	SHEET No.	TOTAL SHEETS
06	Fre	33	10.9/11.1	23	104

REGISTERED CIVIL ENGINEER 04-27-14 DATE

4-28-14
PLANS APPROVAL DATE

REGISTERED PROFESSIONAL ENGINEER KAMRUL KHAN No. 74112 Exp 06/30/15 CIVIL STATE OF CALIFORNIA

THE STATE OF CALIFORNIA OR ITS OFFICERS OR AGENTS SHALL NOT BE RESPONSIBLE FOR THE ACCURACY OR COMPLETENESS OF SCANNED COPIES OF THIS PLAN SHEET.

LEGEND:

OBJECT MARKER

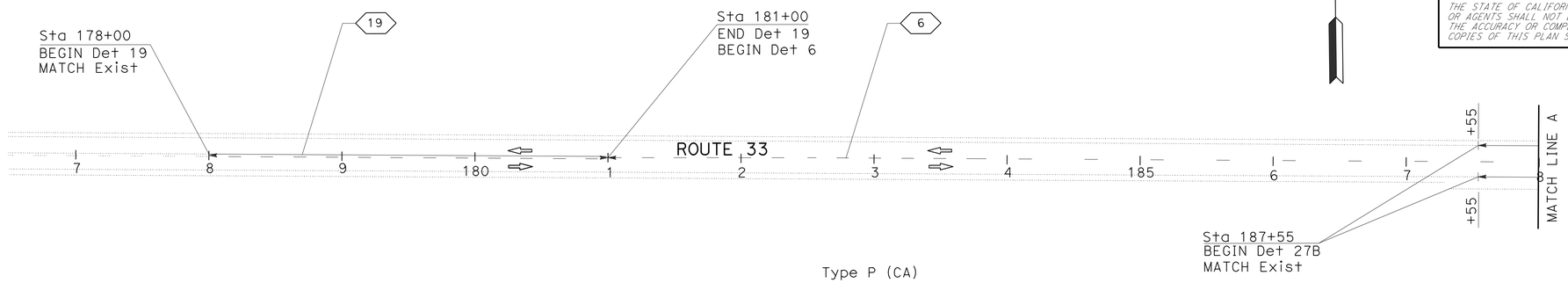

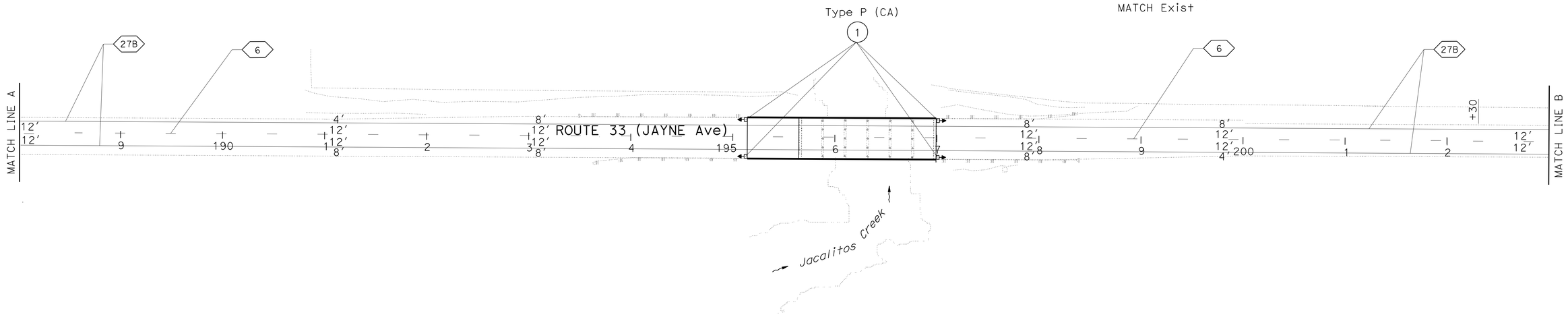

PAVEMENT DELINEATION QUANTITIES

LOCATION STA TO STA	DETAIL	PAVEMENT MARKER (RETRO-REFLECTIVE)		THERMOPLASTIC TRAFFIC STRIPE	
		TYPE D	TYPE H	4" SOLID	4" (BROKEN 36-12)
		EA	EA	LF	LF
178+00 TO 181+00	19	10	14	300	300
181+00 TO 203+32	6	48			2232
187+55 TO 203+32	27B			1577	
203+32 TO 207+56	19	12	19	424	424
187+55 TO 203+32	27B			1577	
207+56 TO 208+56	22	12		200	
SUBTOTAL		82	33	4078	2956
TOTAL		115		4078	2956

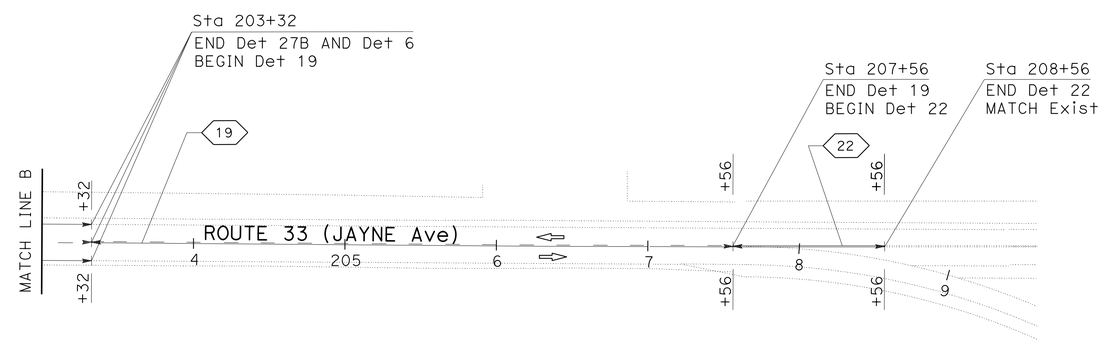

SIGN QUANTITIES

SHEET No.	SIGN No.	OBJECT MARKER (TYPE P)
		EA
PD-1	1	4

APPROVED FOR PAVEMENT DELINEATION AND SIGN WORK ONLY

PAVEMENT DELINEATION AND SIGN PLAN AND QUANTITIES

SCALE: 1"=50'

PD-1

STATE OF CALIFORNIA - DEPARTMENT OF TRANSPORTATION
Caltrans® TRAFFIC DESIGN

FUNCTIONAL SUPERVISOR: MOHAMMED QATAMI
CALCULATED-DESIGNED BY: KAMRUL KHAN
CHECKED BY: HASSAN TAHA
REVISED BY
DATE REVISED

LAST REVISION 04-24-14 | DATE PLOTTED => 27-AUG-2014 | TIME PLOTTED => 14:08

Dist	COUNTY	ROUTE	POST MILES TOTAL PROJECT	SHEET No.	TOTAL SHEETS
06	Fre	33	10.9/11.1	24	104

E. Ataelgeed 04-15-14
REGISTERED CIVIL ENGINEER DATE

4-28-14
PLANS APPROVAL DATE

REGISTERED PROFESSIONAL ENGINEER Eltahir K. Ataelgeed No. 76374 Exp. 12/31/14 CIVIL STATE OF CALIFORNIA

THE STATE OF CALIFORNIA OR ITS OFFICERS OR AGENTS SHALL NOT BE RESPONSIBLE FOR THE ACCURACY OR COMPLETENESS OF SCANNED COPIES OF THIS PLAN SHEET.

ROADWAY QUANTITIES

	LOCATION	ROADWAY EXCAVATION	EMBANKMENT (N)	CLASS 2 AB	HOT MIX ASPHALT (TYPE A)	TACK COAT	PLACE HMA DIKE (TYPE F)	PLACE HMA DIKE (TYPE C)	SAFETY EDGE (N)	COLD PLANE AC PAVEMENT	DESCRIPTION
		CY	CY	CY	TON	TON	LF	LF	LF	SQYD	
	191+00.00 TO 195+40.35	1,462	3,027								
	197+23.65 TO 200+00.00	1,502	358								
	191+00.00 TO 200+00.00			1,644	1,639.3						TRAVEL LANES AND SHOULDERS
"FRE 33 LINE" SB	197+93.00 R+				1.1						OVERSIDE DRAIN (HMA)
"FRE 33 LINE" SB	191+00.00 TO 193+96.00				5.5				296		SAFETY EDGE
"FRE 33 LINE" SB	198+55.50 TO 200+00.00				2.7				144.5		SAFETY EDGE
"FRE 33 LINE" SB	193+96.00 TO 194+58.50				0.5			62.5			HMA DIKE (TYPE C)
"FRE 33 LINE" SB	194+58.50 TO 195+33.50				1.0		75.0				HMA DIKE (TYPE F)
"FRE 33 LINE" SB	197+30.50 TO 197+93.00				0.8		62.5				HMA DIKE (TYPE F)
"FRE 33 LINE" SB	197+93.00 TO 198+55.50				0.5			62.5			HMA DIKE (TYPE C)
"FRE 33 LINE" NB	191+60.00 TO 192+50.00 197+50.00 TO 198+00.00					2.9				130	STAGE-2 SHOULDER COLD PLANING
"FRE 33 LINE" NB	191+00.00 TO 194+21.00				6.0				321		SAFETY EDGE
"FRE 33 LINE" NB	198+50.00 TO 200+00.00				2.8				150		SAFETY EDGE
"FRE 33 LINE" NB	194+21.00 TO 194+83.50				0.5			62.5			HMA DIKE (TYPE C)
"FRE 33 LINE" NB	194+83.50 TO 195+33.50				0.7		50				HMA DIKE (TYPE F)
"FRE 33 LINE" NB	197+30.50 TO 197+80.50				0.7		50				HMA DIKE (TYPE F)
"FRE 33 LINE" NB	197+80.50 TO 198+50.00				0.5			69.5			HMA DIKE (TYPE C)
	FROM DQ-1	1,898	452								EARTHWORK FROM DQ-1
	TOTAL	4,862	3,837	1,644	1,662.6	2.9	237.5	257		130	

(N) NOT A SEPARATE PAY ITEM, FOR INFORMATION ONLY

TEMPORARY WATER POLLUTION CONTROL QUANTITY

Temp Const ENTRANCE	Temp FIBER ROLL
EA	LF
2	1200

TEMPORARY FENCE (TYPE ESA)

STATION	LF	REMARKS
190+00.00 TO 201+00.00	1,100	NORTH TCE LINE
190+00.00 TO 201+00.00	1,496	SOUTH TCE LINE
192+31.00 TO 195+00.00	290	CREEKSIDE BRUSH
196+56.25	127	WILLOW TREE
197+97.00	251	TAMARISK TREE
TOTAL	3,264	

FENCE

STATION	FENCE (TYPE BW, METAL POST)	REMOVE FENCE (TYPE BW)	REMOVE FENCE (TYPE WM)
	LF	LF	LF
191+00.00, 30.00' Lt TO 195+40.00, 74.60' Lt	485		
197+27.72, 74.54' Lt TO 200+00.00, 30.00' Lt	318		
190+85.42, 122.37' Lt TO 195+63.61, 41.56' Lt		553	
197+10.25, 49.20' Lt TO 200+00.00, 34.54' Lt		310	
"B" LINE 0+42.90 TO 1+25.18			320
TOTAL	803	863	320

SUMMARY OF QUANTITIES

Q-1

REVISED BY | DATE REVISED
PAWANJIT DHILLON | ELTAHIR ATAELGEED
CALCULATED-DESIGNED BY | CHECKED BY
FUNCTIONAL SUPERVISOR: ABDUL BAKER
STATE OF CALIFORNIA - DEPARTMENT OF TRANSPORTATION
Caltrans DESIGN

LAST REVISION 04-27-14 | DATE PLOTTED => 27-AUG-2014 | TIME PLOTTED => 14:08

Dist	COUNTY	ROUTE	POST MILES TOTAL PROJECT	SHEET No.	TOTAL SHEETS
06	Fre	33	10.9/11.1	25	104

E. Ataelgeed 04-15-14
REGISTERED CIVIL ENGINEER DATE

4-28-14
PLANS APPROVAL DATE

REGISTERED PROFESSIONAL ENGINEER Eltahir K. Ataelgeed No. 76374 Exp. 12/31/14 CIVIL STATE OF CALIFORNIA

THE STATE OF CALIFORNIA OR ITS OFFICERS OR AGENTS SHALL NOT BE RESPONSIBLE FOR THE ACCURACY OR COMPLETENESS OF SCANNED COPIES OF THIS PLAN SHEET.

GUARDRAIL ITEMS

	STATION	TRANSITION RAILING (TYPE WB-31)	ALTERNATIVE FLARED TERMINAL SYSTEM	MIDWEST GUARDRAIL SYSTEM (STEEL POST)	REMOVE GUARDRAIL	LAYOUT (N)
		EA	EA	LF	LF	TYPE
"FRE33 LINE" SOUTHBOUND	193+32.63 TO 195+60.55				233	
	194+24.02 TO 194+61.52		1			12B
	194+61.52 TO 195+11.52			50		12B
	195+11.52 TO 195+36.52	1				12B
	197+04.47 TO 197+81.90				82	
	197+27.48 TO 197+52.48	1				12BB
	197+52.48 TO 197+89.98			37.5		12BB
	197+89.98 TO 198+27.48		1			12BB
"FRE33 LINE" NORTHBOUND	193+07.58 TO 195+57.72				254	
	194+49.02 TO 194+86.52		1			12BB
	194+86.52 TO 195+11.52			25		12BB
	195+11.52 TO 195+36.52	1				12BB
	197+03.52 TO 198+31.65				133	
	197+27.48 TO 197+52.48	1				12B
	197+52.48 TO 197+77.48			25		12B
	197+77.48 TO 198+14.98		1			12B
	TOTAL	4	4	137.5	702	

(N) NOT A SEPARATE PAY ITEM, FOR INFORMATION ONLY

ADJUST UTILITY COVER TO GRADE

LOCATION	STATION	QUANTITY
		EA
"FRE33 LINE" SOUTHBOUND	192+73.45, 20.00' Rt	1
	197+66.25, 30.23' Rt	1
"FRE33 LINE" NORTHBOUND	198+05.31, 56.31' Lt	1
	TOTAL	3

TREATED WOOD WASTE

	STATION	NUMBER OF POSTS (N)	WEIGHT
		EA	LB
"FRE33 LINE" SOUTHBOUND	193+32.63 TO 195+60.55	39	2,229
	197+04.47 TO 197+81.90	15	857
"FRE33 LINE" NORTHBOUND	197+03.52 TO 198+31.65	23	1,314
	193+07.58 TO 195+57.72	43	2,457
	TOTAL		6,857

(N) NOT A SEPARATE PAY ITEM, FOR INFORMATION ONLY

SPECIAL MARKER

STATION	QUANTITY
	EA
191+23.45, 19.07' Rt	1
192+73.45, 22.00' Rt	1
193+52.34, 56.90' Rt	1
195+83.45, 39.58' Rt	1
196+73.45, 56.90' Rt	1
197+66.25, 30.23' Rt	1
197+84.85, 23.60' Rt	1
198+05.31, 56.31' Lt	1
TOTAL	8

VEGETATION CONTROL (MINOR CONCRETE)

LOCATION	STATION	VEGETATION CONTROL (MINOR CONCRETE)
		SQYD
"FRE33 LINE" SOUTHBOUND	194+24.02 TO 195+36.52	75.3
	197+27.48 TO 198+27.48	64.1
"FRE33 LINE" NORTHBOUND	194+49.02 TO 195+36.52	51.9
	197+27.48 TO 198+14.98	58.0
	TOTAL	249.3

SUMMARY OF QUANTITIES

Q-2

STATE OF CALIFORNIA - DEPARTMENT OF TRANSPORTATION
Caltrans DESIGN
FUNCTIONAL SUPERVISOR: ABDUL BAKER
CALCULATED-DESIGNED BY: PAWANJIT DHILLON
CHECKED BY: ELTAHIR ATAELGEED
REVISED BY
DATE REVISED

LAST REVISION 04-27-14
DATE PLOTTED => 27-AUG-2014
TIME PLOTTED => 14:08

Dist	COUNTY	ROUTE	POST MILES TOTAL PROJECT	SHEET No.	TOTAL SHEETS
06	Fre	33	10.9/11.1	26	104

LICENSED LANDSCAPE ARCHITECT

4-28-14
PLANS APPROVAL DATE

LICENSED LANDSCAPE ARCHITECT
MICHAEL W. MILLS No. 4770
Expiration Date 11/30/14
Renewal Date 03/17/14
Date
STATE OF CALIFORNIA

THE STATE OF CALIFORNIA OR ITS OFFICERS OR AGENTS SHALL NOT BE RESPONSIBLE FOR THE ACCURACY OR COMPLETENESS OF SCANNED COPIES OF THIS PLAN SHEET.

EROSION CONTROL

SEQUENCE	ITEM	MATERIAL		APPLICATION RATE	REMARKS
		DESCRIPTION	TYPE		
STEP 1	COMPOST	COMPOST	MEDIUM	130 CY/ACRE	
STEP 2	ROLLED EROSION CONTROL PRODUCT (NETTING)	NETTING	TYPE A		
STEP 3	FIBER ROLLS	FIBER ROLL	8" TO 10" Dia		TYPE 1 FIBER ROLL INSTALLATION
STEP 4	HYDROSEED	SEED	MIX	36 LB/ACRE	
		FIBER	WOOD	500 LB/ACRE	
STEP 5	HYDROMULCH	FIBER	WOOD	1,500 LB/ACRE	
		TACKIFIER	PSYLLIUM	100 LB/ACRE	

SEED MIX

BOTANICAL NAME (COMMON NAME)	PERCENT GERMINATION (MINIMUM)	POUNDS PURE LIVE SEED PER ACRE (SLOPE MEASUREMENT)
ACHILLEA MILLEFOLIUM (WESTERN YARROW)	85	1
BROMUS CARINATUS (CALIFORNIA BROME)	80	25
ERIOGONUM FASCICULATUM (CALIFORNIA BUCKWHEAT)	20	2
ERIOPHYLLUM CONFERTIFLORUM (GOLDEN YARROW)	70	1
LOTUS SCOPARIUS (DEER LOTUS)	80	7

EROSION CONTROL LEGEND
ECL-1

REVISED BY | DATE REVISED
MICHAEL MILLS | CHARLES LARUE
CALCULATED-DESIGNED BY | CHECKED BY
SENIOR LANDSCAPE ARCHITECT
BRAD COLE
STATE OF CALIFORNIA - DEPARTMENT OF TRANSPORTATION
Caltrans® LANDSCAPE ARCHITECTURE

LAST REVISION 03-19-14
DATE PLOTTED => 27-AUG-2014
TIME PLOTTED => 14:08

Dist	COUNTY	ROUTE	POST MILES TOTAL PROJECT	SHEET No.	TOTAL SHEETS
06	Fre	33	10.9/11.1	27	104

LICENSED LANDSCAPE ARCHITECT

4-28-14

PLANS APPROVAL DATE

LICENSED LANDSCAPE ARCHITECT MICHAEL W. MILLS No. 4770 Signature 11/30/14 Renewal Date 03/17/14 Date STATE OF CALIFORNIA

THE STATE OF CALIFORNIA OR ITS OFFICERS OR AGENTS SHALL NOT BE RESPONSIBLE FOR THE ACCURACY OR COMPLETENESS OF SCANNED COPIES OF THIS PLAN SHEET.

NOTE:

FOR ACCURATE RIGHT OF WAY DATA, CONTACT RIGHT OF WAY ENGINEERING AT THE DISTRICT OFFICE.

LEGEND:

EROSION CONTROL
CUT AND FILL SLOPES BETWEEN 2:1 AND FLATTER

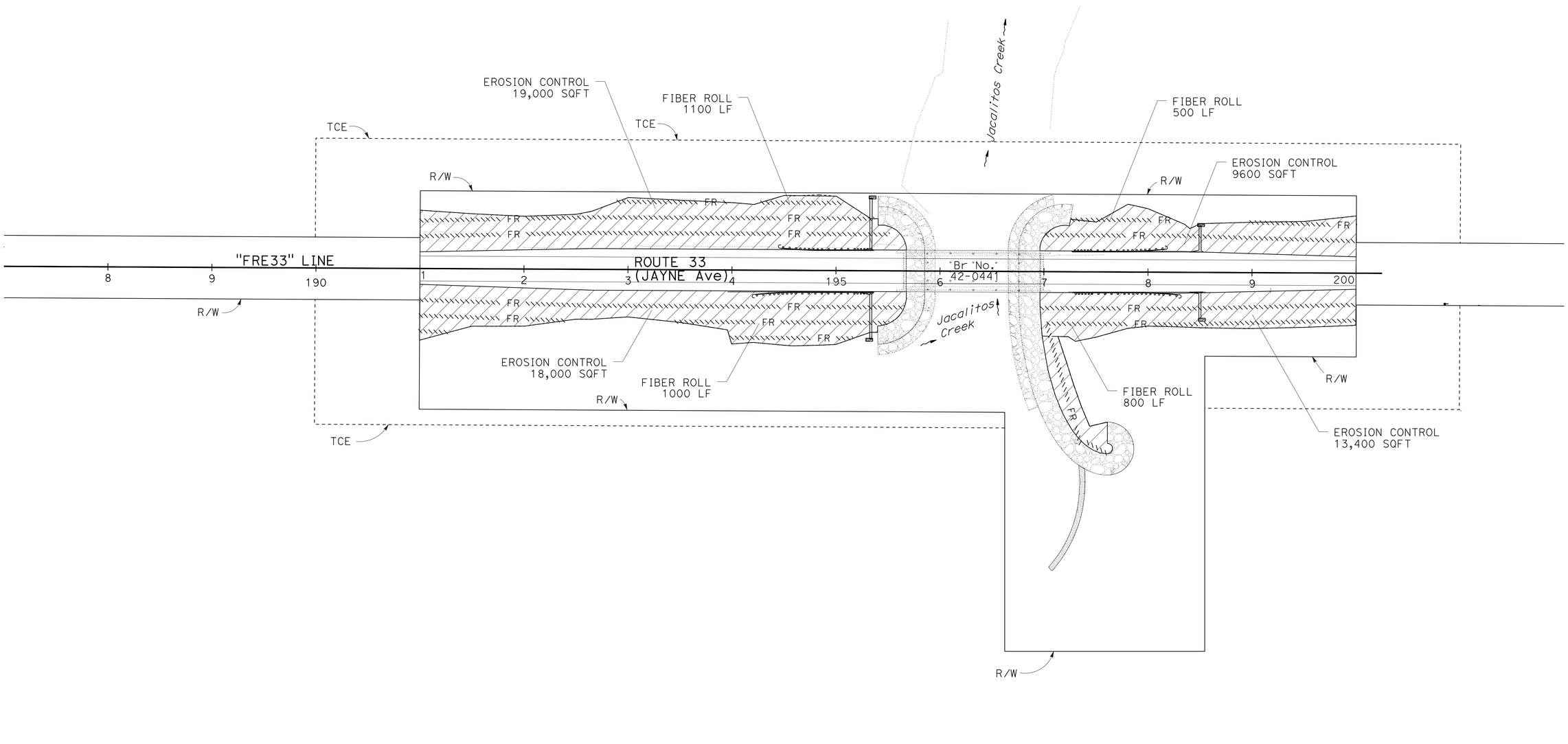

APPROVED FOR EROSION CONTROL WORK ONLY

EROSION CONTROL PLAN

SCALE: 1"=50'

EC-1

STATE OF CALIFORNIA - DEPARTMENT OF TRANSPORTATION
Caltrans® LANDSCAPE ARCHITECTURE

SENIOR LANDSCAPE ARCHITECT: BRAD COLE

CALCULATED-DESIGNED BY: MICHAEL MILLS
CHECKED BY: CHARLES LARUE

REVISED BY
DATE REVISED

LAST REVISION 03-17-14
DATE PLOTTED => 27-AUG-2014
TIME PLOTTED => 14:08

Dist	COUNTY	ROUTE	POST MILES TOTAL PROJECT	SHEET No.	TOTAL SHEETS
06	Fre	33	10.9/11.1	28	104

LICENSED LANDSCAPE ARCHITECT

4-28-14

PLANS APPROVAL DATE

LICENSED LANDSCAPE ARCHITECT MICHAEL W. MILLS No. 4770 Expiration Date 11/30/14 Renewal Date 03/17/14 Date STATE OF CALIFORNIA

THE STATE OF CALIFORNIA OR ITS OFFICERS OR AGENTS SHALL NOT BE RESPONSIBLE FOR THE ACCURACY OR COMPLETENESS OF SCANNED COPIES OF THIS PLAN SHEET.

EROSION CONTROL

SHEET	DESCRIPTION	COMPOST	ROLLED EROSION CONTROL PRODUCT (NETTING)	HYDROSEED	HYDROMULCH	FIBER ROLLS
		SQFT	SQFT	SQFT	SQFT	LF
EC-1	EROSION CONTROL	60,000	60,000	60,000	60,000	
	FIBER ROLLS					3400
	TOTAL	60,000	60,000	60,000	60,000	3400

EROSION CONTROL QUANTITIES
ECQ-1

REVISED BY | DATE REVISED

MICHAEL MILLS | CHARLES LARUE

CALCULATED-DESIGNED BY | CHECKED BY

SENIOR LANDSCAPE ARCHITECT | BRAD COLE

STATE OF CALIFORNIA - DEPARTMENT OF TRANSPORTATION

Caltrans® LANDSCAPE ARCHITECTURE

LAST REVISION 03-17-14 | DATE PLOTTED => 27-AUG-2014 | TIME PLOTTED => 14:08

Dist	COUNTY	ROUTE	POST MILES TOTAL PROJECT	SHEET No.	TOTAL SHEETS
06	Fre	33	10.9/11.1	29	104

REGISTERED ELECT ENGINEER 04-27-14 DATE

4-28-14
PLANS APPROVAL DATE

REGISTERED PROFESSIONAL ENGINEER HASHIM KHALID No. 18054 Exp. 6/30/15 ELECT STATE OF CALIFORNIA

THE STATE OF CALIFORNIA OR ITS OFFICERS OR AGENTS SHALL NOT BE RESPONSIBLE FOR THE ACCURACY OR COMPLETENESS OF SCANNED COPIES OF THIS PLAN SHEET.

LEGEND: (FOR SHEETS E-1 TO E-5)

1. POWER FOR TSS SHALL BE PROVIDED BY GENERATOR WITH A BACKUP GENERATOR, SEE DETAIL Y ON SHEET E-9.
2. DEPARTMENT-FURNISHED MODEL 2070E CONTROLLER ASSEMBLY. YOU MUST FURNISH UPS AND TEMPORARY FOUNDATION PLATFORM FOR MODEL 332L CABINET PER DETAIL E ON SHEET E-8.
3. FOR DETECTOR LOOP INSTALLATION, SEE DETAIL C ON SHEET E-7.
4. DETECTOR LOOP MUST HAVE 5 TURNS.
5. INSTALL GROUND ELECTRODE IN PB.
6. EQUIPMENT TO REMAIN FOR FUTURE USE.
7. TEMPORARY WOOD POLE, SEE DETAIL B ON SHEET E-7.
8. TEMPORARY WOOD POLE WITH FB, SEE DETAIL A ON SHEET E-7.
9. TEMPORARY WOOD POST SERVICE ENCLOSURE, SEE DETAIL G ON SHEET E-9.
10. TEMPORARY WOOD POLES WITH SIGNAL EQUIPMENT ON SPAN WIRE, SEE DETAIL D ON SHEET E-8.
11. TEMPORARY WOOD POLE WITH SIGNAL EQUIPMENT, SEE DETAIL F ON SHEET E-8.

NOTES:

1. OVERHEAD ENTRANCE CONDUIT FITTING MUST FORM A DRIP LOOP AT ENTRANCE FITTING.
2. ESTABLISH CONTINUOUS GROUND WITH SYSTEM GROUND TO ALL METAL PARTS IN SYSTEM BY BONDING JUMPERS AND CONDUITS.
3. SIGNS SHOWN ARE "CONSTRUCTION AREA SIGNS". SEE TRAFFIC HANDLING PLANS FOR DETAILS.

CONDUIT RUNS:

1. 1½"C, 3#4, 1#8 (G)
2. 1½"C, 2#6 (Sig), 2#8 (Ltg), 2#10 (FB E AND SIGN Ltg), 2#10 (FB W AND SIGN Ltg)
3. 1½"C, 2#6 (Sig), 4 DLC, 4-5CSC
4. 2"C, 4 DLC, 2#8 (Ltg), 4-5CSC, 2#10 (FB E AND SIGN Ltg), 2#10 (FB W AND SIGN Ltg)
5. 1½"C, 2 DLC, 2#8 (Ltg), 2-5CSC, 2#10 (FB W AND SIGN Ltg)
6. OVERHEAD MESSENGER WIRE- 2#8 (Ltg), 2 DLC, 2-5CSC, 2#10 (FB W AND SIGN Ltg)
7. 1½"C, 2 DLC, 2#8 (Ltg), 1-5CSC, 2#10 (FB W AND SIGN Ltg)
8. 1½"C, 1 DLC, 2#10 (FB W AND SIGN Ltg)
9. 1½"C, 2 DLC, 2#8 (Ltg), 2-5CSC, 2#10 (FB E AND SIGN Ltg)
10. 1½"C, 2 DLC, 2#8 (Ltg), 1-5CSC, 2#10 (FB E AND SIGN Ltg)
11. 1½"C, 1 DLC, 2#10 (FB E AND SIGN Ltg)
12. Exist 2"C, PT, ADD 2 DLC, 2#8 (Ltg), 2-5CSC, 2#10 (FB W AND SIGN Ltg)
13. Exist 1½"C, 2 DLC, 2#8 (Ltg), 1-5CSC, 2#10 (FB W AND SIGN Ltg), RC 2 DLC, 1-5CSC, ADD 2 DLC, 1-5CSC
14. Exist 1½"C, 1 DLC, 2#10 (FB W AND SIGN Ltg), RC 1 DLC, ADD 1 DLC
15. Exist 1½"C, 2 DLC, 2#8 (Ltg), 2-5CSC, 2#10 (FB E AND SIGN Ltg), RC 2 DLC, 2-5CSC, ADD 2 DLC, 2-5CSC
16. Exist 1½"C, 2 DLC, 2#8 (LTG), 1-5CSC, 2#10 (FB E AND SIGN Ltg), RC 2 DLC, 1-5CSC, ADD 2 DLC, 1-5CSC
17. Exist 1½"C, 1 DLC, 2#10 (FB E AND SIGN Ltg), RC 1 DLC, ADD 1 DLC
18. Exist 1½"C, 3#4, 1#8 (G)
19. Exist 1½"C, 2#6 (Sig), 2#8 (Ltg), 2#10 (FB E AND SIGN Ltg), 2#10 (FB W AND SIGN Ltg)
20. Exist 1½"C, 2#6 (Sig), 4 DLC, 4-5CSC, RC 4 DLC, 4-5CSC, ADD 4 DLC, 4-5CSC

ABBREVIATIONS:

PG&E - PACIFIC GAS AND ELECTRIC
UPS - UNINTERRUPTIBLE POWER SUPPLY
ATS - AUTOMATIC TRANSFER SWITCH

SYMBOLS:

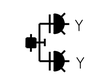

TEMPORARY WOOD POLE WITH FB.

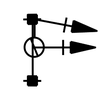
TEMPORARY WOOD POLES WITH SIGNAL EQUIPMENT ON SPAN WIRE.

TEMPORARY WOOD POLE WITH SIGNAL EQUIPMENT.

TEMPORARY WOOD POLE.

TEMPORARY WOOD POST WITH TYPE A SERVICE.

OH — OVERHEAD MESSENGER WIRE WITH CONDUCTORS AS NOTED IN THE PLAN. SEE SES SHEET FOR DETAILS.

—×— TEMPORARY 6' CL-6 FENCE WITH 4' GATE.

—— G —— FUEL LINE.

(G) GENERATOR WITH A GENERATOR BACKUP AND TRANSFER SWITCH.

(FUEL) FUEL TANK.

TEMPORARY SIGNAL SYSTEM
E-1

NO SCALE

REVISED BY | DATE REVISED
HASHIM M. KHALID | OMAR MENDOZA
CALCULATED-DESIGNED BY | CHECKED BY
FUNCTIONAL SUPERVISOR | ALI BAKHDOUD

STATE OF CALIFORNIA - DEPARTMENT OF TRANSPORTATION
Caltrans® ELECTRICAL DESIGN

LAST REVISION 04-27-14 | DATE PLOTTED => 27-AUG-2014 | TIME PLOTTED => 14:08

Dist	COUNTY	ROUTE	POST MILES TOTAL PROJECT	SHEET No.	TOTAL SHEETS
06	Fre	33	10.9/11.1	30	104

REGISTERED ELECT ENGINEER 04-27-14 DATE

4-28-14
PLANS APPROVAL DATE

REGISTERED PROFESSIONAL ENGINEER HASHIM KHALID No. 18054 Exp. 6/30/15 ELECT STATE OF CALIFORNIA

THE STATE OF CALIFORNIA OR ITS OFFICERS OR AGENTS SHALL NOT BE RESPONSIBLE FOR THE ACCURACY OR COMPLETENESS OF SCANNED COPIES OF THIS PLAN SHEET.

NOTES:

1. FOR ADDITIONAL NOTES AND SCHEDULES, SEE SHEET E-1.
2. FOR ACCURATE RIGHT OF WAY DATA, CONTACT RIGHT OF WAY ENGINEERING AT THE DISTRICT OFFICE.

Ø2 → ← Ø4

PHASE DIAGRAM
STEADY DEMAND SEQUENCE

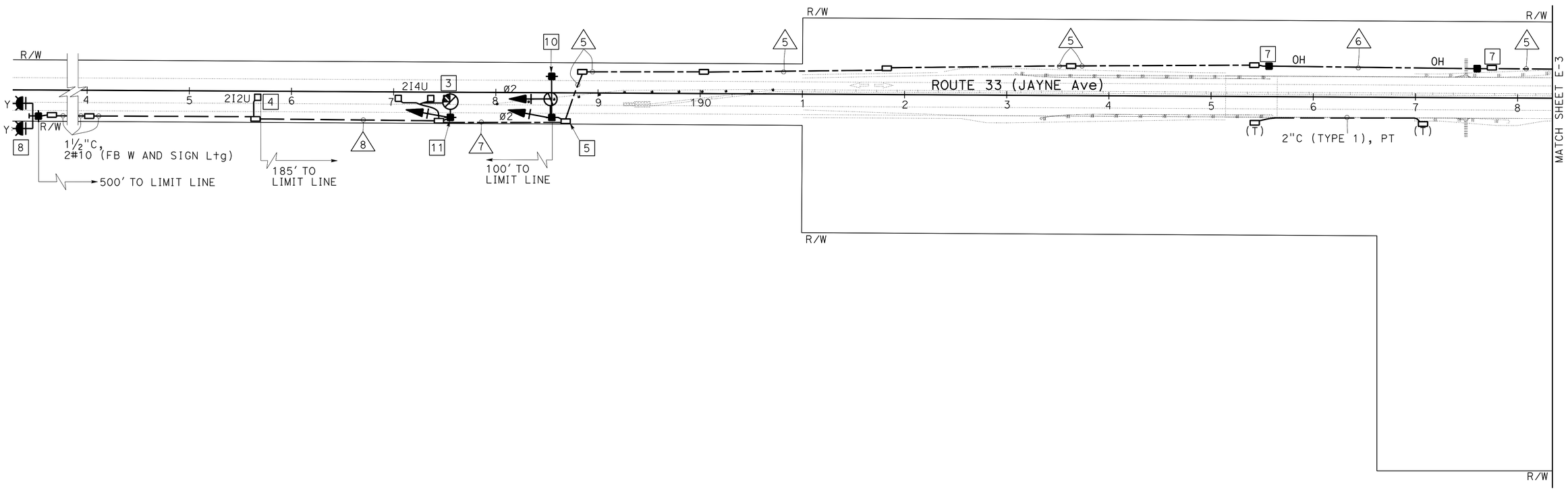

TEMPORARY SIGNAL SYSTEM
(STAGE 1-A)
E-2

APPROVED FOR ELECTRICAL WORK ONLY

SCALE: 1"=50'

STATE OF CALIFORNIA - DEPARTMENT OF TRANSPORTATION
Caltrans ELECTRICAL DESIGN

FUNCTIONAL SUPERVISOR: ALI BAKHDOUD
CALCULATED-DESIGNED BY: HASHIM M. KHALID
CHECKED BY: OMAR MENDOZA
REVISED BY
DATE REVISED

LAST REVISION 04-27-14
DATE PLOTTED => 27-AUG-2014
TIME PLOTTED => 14:08

Dist	COUNTY	ROUTE	POST MILES TOTAL PROJECT	SHEET No.	TOTAL SHEETS
06	Fre	33	10.9/11.1	31	104

REGISTERED ELECT ENGINEER 04-27-14 DATE

4-28-14
PLANS APPROVAL DATE

REGISTERED PROFESSIONAL ENGINEER HASHIM KHALID No. 18054 Exp. 6/30/15 ELECT STATE OF CALIFORNIA

THE STATE OF CALIFORNIA OR ITS OFFICERS OR AGENTS SHALL NOT BE RESPONSIBLE FOR THE ACCURACY OR COMPLETENESS OF SCANNED COPIES OF THIS PLAN SHEET.

NOTES:

1. FOR ADDITIONAL NOTES AND SCHEDULES, SEE SHEET E-1.
2. FOR ACCURATE RIGHT OF WAY DATA, CONTACT RIGHT OF WAY ENGINEERING AT THE DISTRICT OFFICE.

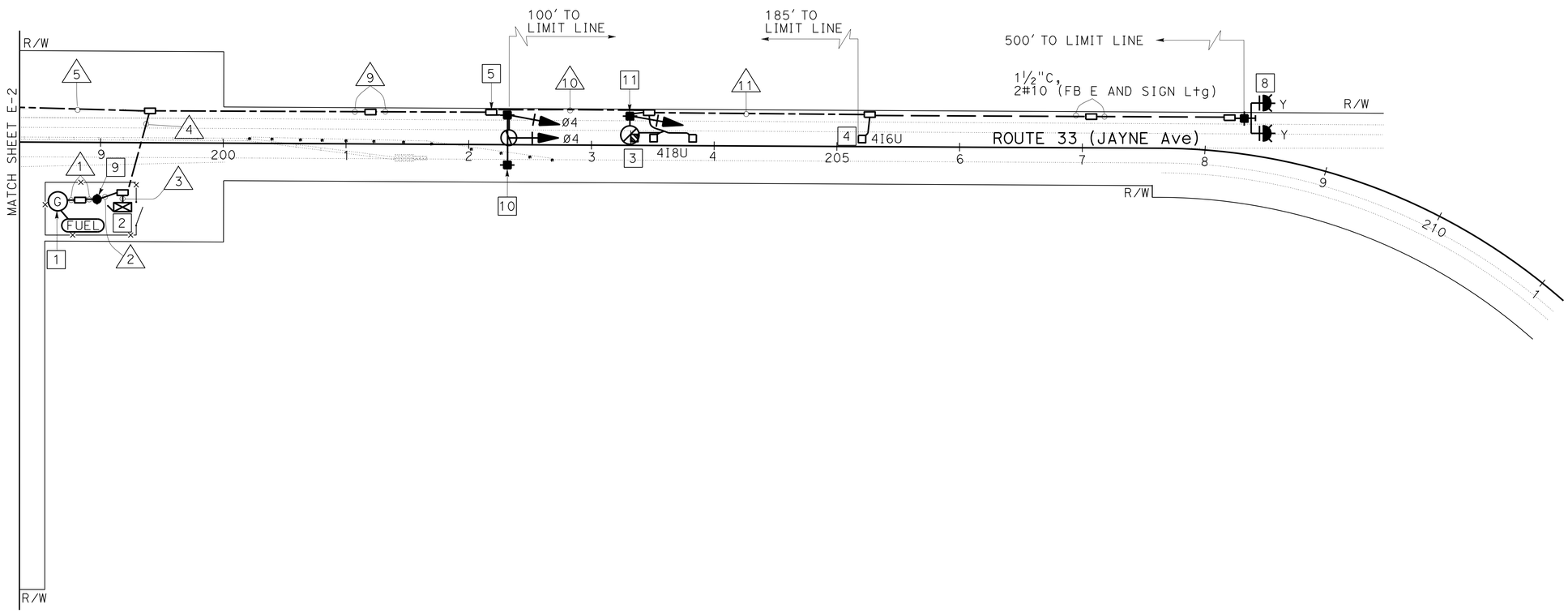

TEMPORARY SIGNAL SYSTEM
(STAGE 1-A)
E-3

APPROVED FOR ELECTRICAL WORK ONLY

SCALE: 1"=50'

STATE OF CALIFORNIA - DEPARTMENT OF TRANSPORTATION
Caltrans® ELECTRICAL DESIGN

FUNCTIONAL SUPERVISOR: ALI BAKHDOUD
CALCULATED-DESIGNED BY: HASHIM M. KHALID
CHECKED BY: OMAR MENDOZA
REVISED BY
DATE REVISED

LAST REVISION 04-27-14
DATE PLOTTED => 27-AUG-2014
TIME PLOTTED => 14:08

Dist	COUNTY	ROUTE	POST MILES TOTAL PROJECT	SHEET No.	TOTAL SHEETS
06	Fre	33	10.9/11.1	32	104

REGISTERED ELECT ENGINEER 04-27-14 DATE

4-28-14
PLANS APPROVAL DATE

REGISTERED PROFESSIONAL ENGINEER HASHIM KHALID No. 18054 Exp. 6/30/15 ELECT STATE OF CALIFORNIA

THE STATE OF CALIFORNIA OR ITS OFFICERS OR AGENTS SHALL NOT BE RESPONSIBLE FOR THE ACCURACY OR COMPLETENESS OF SCANNED COPIES OF THIS PLAN SHEET.

NOTES:

1. FOR ADDITIONAL NOTES AND SCHEDULES, SEE SHEET E-1.
2. FOR ACCURATE RIGHT OF WAY DATA, CONTACT RIGHT OF WAY ENGINEERING AT THE DISTRICT OFFICE.

Ø2 → ← Ø4

PHASE DIAGRAM
STEADY DEMAND SEQUENCE

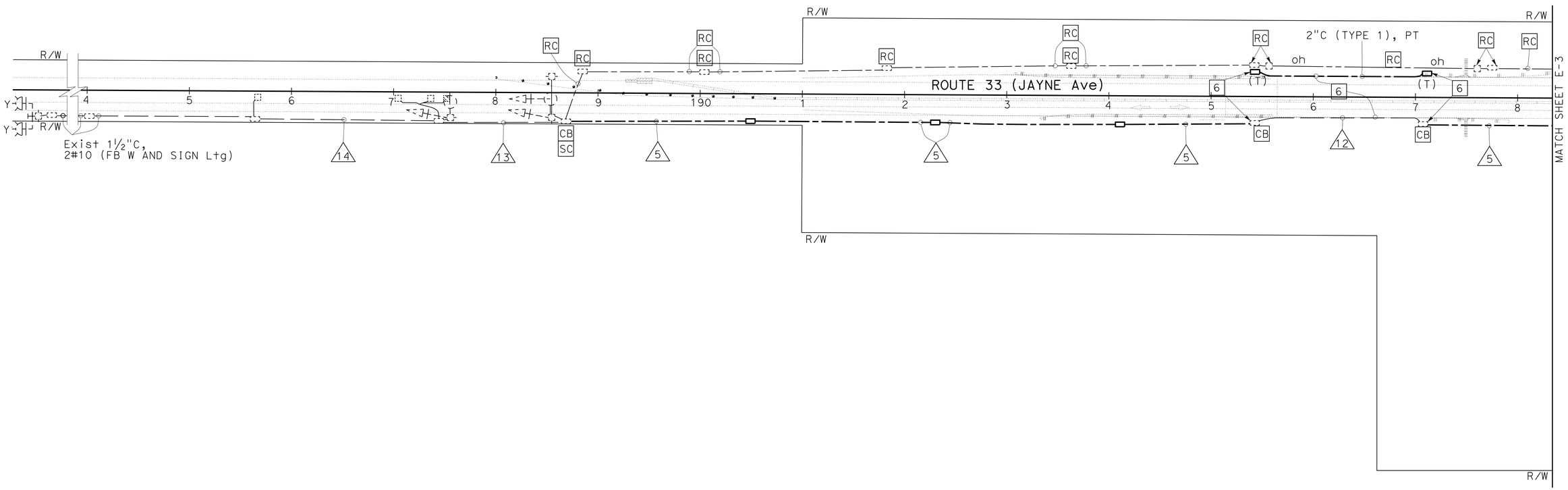

TEMPORARY SIGNAL SYSTEM
(STAGE 2)
E-4

SCALE: 1"=50'

APPROVED FOR ELECTRICAL WORK ONLY

HASHIM M. KHALID — OMAR MENDOZA — ALI BAKHDOUD

STATE OF CALIFORNIA - DEPARTMENT OF TRANSPORTATION
Caltrans® ELECTRICAL DESIGN

REVISED BY | DATE REVISED | CALCULATED-DESIGNED BY | CHECKED BY | FUNCTIONAL SUPERVISOR

LAST REVISION 04-27-14 | DATE PLOTTED => 27-AUG-2014 | TIME PLOTTED => 14:08

Dist	COUNTY	ROUTE	POST MILES TOTAL PROJECT	SHEET No.	TOTAL SHEETS
06	Fre	33	10.9/11.1	33	104

REGISTERED ELECT ENGINEER — DATE 04-27-14

PLANS APPROVAL DATE 4-28-14

REGISTERED PROFESSIONAL ENGINEER HASHIM KHALID No. 18054 Exp. 6/30/15 ELECT STATE OF CALIFORNIA

THE STATE OF CALIFORNIA OR ITS OFFICERS OR AGENTS SHALL NOT BE RESPONSIBLE FOR THE ACCURACY OR COMPLETENESS OF SCANNED COPIES OF THIS PLAN SHEET.

NOTES:

1. FOR ADDITIONAL NOTES AND SCHEDULES, SEE SHEET E-1.
2. FOR ACCURATE RIGHT OF WAY DATA, CONTACT RIGHT OF WAY ENGINEERING AT THE DISTRICT OFFICE.

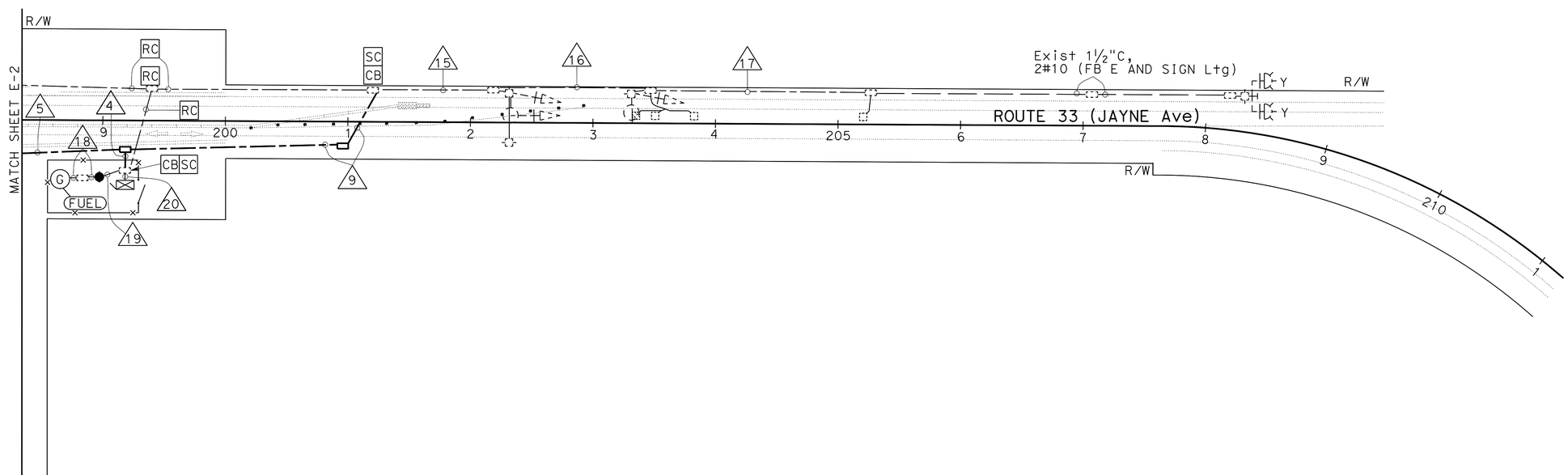

TEMPORARY SIGNAL SYSTEM
(STAGE 2)
E-5

APPROVED FOR ELECTRICAL WORK ONLY

SCALE: 1"=50'

STATE OF CALIFORNIA - DEPARTMENT OF TRANSPORTATION
Caltrans® ELECTRICAL DESIGN

FUNCTIONAL SUPERVISOR: ALI BAKHDOUD
CALCULATED-DESIGNED BY: HASHIM M. KHALID
CHECKED BY: OMAR MENDOZA
REVISED BY
DATE REVISED

LAST REVISION | DATE PLOTTED => 27-AUG-2014
04-27-14 | TIME PLOTTED => 14:08

Dist	COUNTY	ROUTE	POST MILES TOTAL PROJECT	SHEET No.	TOTAL SHEETS
06	Fre	33	10.9/11.1	34	104

REGISTERED ELECT ENGINEER 04-27-14 DATE

4-28-14
PLANS APPROVAL DATE

REGISTERED PROFESSIONAL ENGINEER HASHIM KHALID No. 18054 Exp. 6/30/15 ELECT STATE OF CALIFORNIA

THE STATE OF CALIFORNIA OR ITS OFFICERS OR AGENTS SHALL NOT BE RESPONSIBLE FOR THE ACCURACY OR COMPLETENESS OF SCANNED COPIES OF THIS PLAN SHEET.

LEGEND: (FOR THIS SHEET ONLY)

1 120/240 V, 1ø, 3-WIRE, TYPE III-AF SERVICE EQUIPMENT ENCLOSURE WITH THE FOLLOWING CIRCUIT BREAKERS:

Ctid No. 06420330000120T

AMPERES	VOLTS	POLES	NAMEPLATE	METER	PHOTOELECTRIC CONTROL TYPE
100	240	2	MAIN BREAKER	YES	——
20	120	1	RWIS	YES	——
20	240	2	SPARE	YES	——
15	120	1	SPARE	YES	——
——	——	6	SPACE	YES	——

2 TYPE VDS 30 POLE WITH RWIS, SEE SHEET E-10 FOR MORE DETAILS.

3 PULL BOX PER PG&E REQUIREMENTS.

NOTES:

FOR ACCURATE RIGHT OF WAY DATA, CONTACT RIGHT OF WAY ENGINEERING AT THE DISTRICT OFFICE.

ABBREVIATIONS:

VS - PRESENT WEATHER AND VISIBILITY SENSOR
RPU - REMOTE PROCESSING UNIT
VDS - VEHICLE DETECTION SYSTEM
MCB - 15 A, 1P, MAIN CB IN THE BREAKER BOX
ECB - 15 A, 1P, EQUIPMENT CB IN NEMA 3R ENCLOSURE
R - NEMA 15-15R DUPLEX RECEPTACLE
TB1 - 6 POSITION MINIMUM PHOENIX CONTACT #USK 10 OPEN CONSTRUCTION TERMINAL (OR EQUAL) BLOCK MOUNTED ON 9" DIM RAILING

SYMBOLS

RWIS ROADSIDE WEATHER INFORMATION SYSTEM
EARTH OR EQUIPMENT GROUND
SURGE PROTECTOR

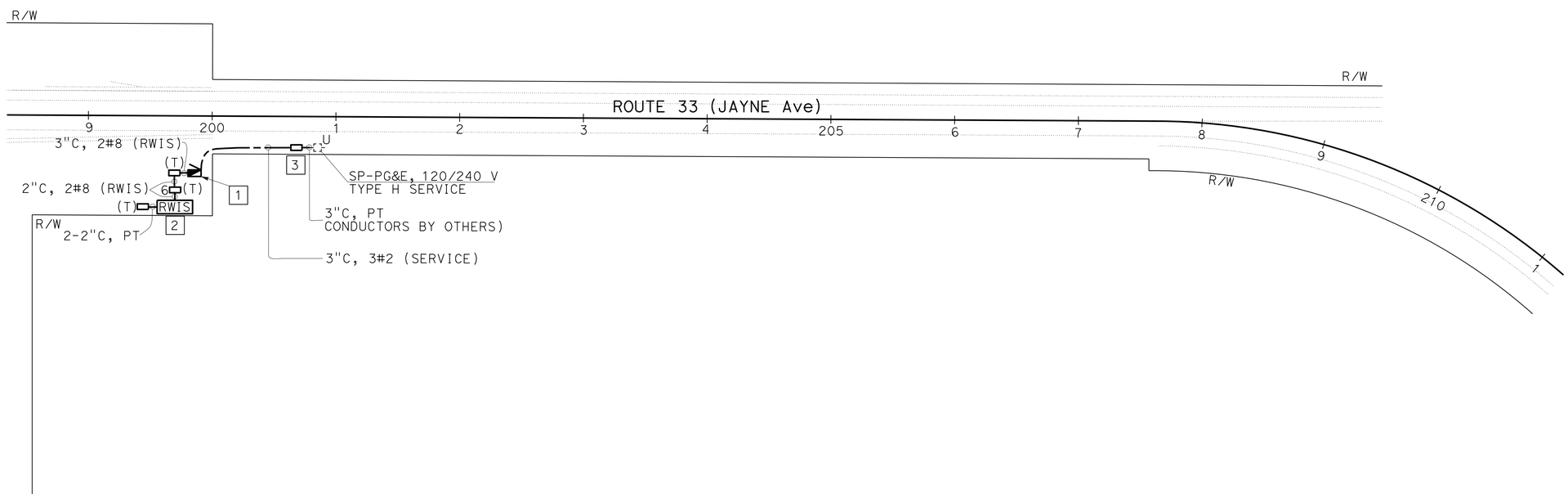

ROADSIDE WEATHER INFORMATION SYSTEM

E-6

APPROVED FOR ELECTRICAL WORK ONLY

SCALE: 1"=50'

STATE OF CALIFORNIA - DEPARTMENT OF TRANSPORTATION
Caltrans® ELECTRICAL DESIGN

FUNCTIONAL SUPERVISOR: ALI BAKHDOUD
CALCULATED-DESIGNED BY: HASHIM M. KHALID
CHECKED BY: OMAR MENDOZA
REVISED BY
DATE REVISED

LAST REVISION 04-27-14
DATE PLOTTED => 27-AUG-2014
TIME PLOTTED => 14:08

Dist	COUNTY	ROUTE	POST MILES TOTAL PROJECT	SHEET No.	TOTAL SHEETS
06	Fre	33	10.9/11.1	35	104

REGISTERED ELECT ENGINEER 04-27-14 DATE

4-28-14 PLANS APPROVAL DATE

REGISTERED PROFESSIONAL ENGINEER HASHIM KHALID No. 18054 Exp. 6/30/15 ELECT STATE OF CALIFORNIA

THE STATE OF CALIFORNIA OR ITS OFFICERS OR AGENTS SHALL NOT BE RESPONSIBLE FOR THE ACCURACY OR COMPLETENESS OF SCANNED COPIES OF THIS PLAN SHEET.

NOTE:

SEE SES PLANS FOR TEMPORARY WOOD POLE DETAILS.

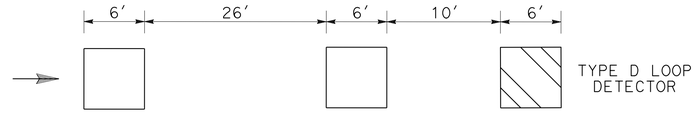

DETECTOR LOOP INSTALLATION

DETAIL C

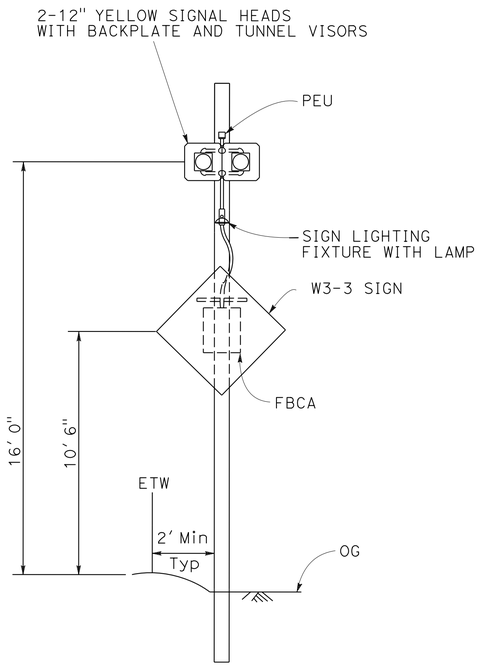

FRONT VIEW

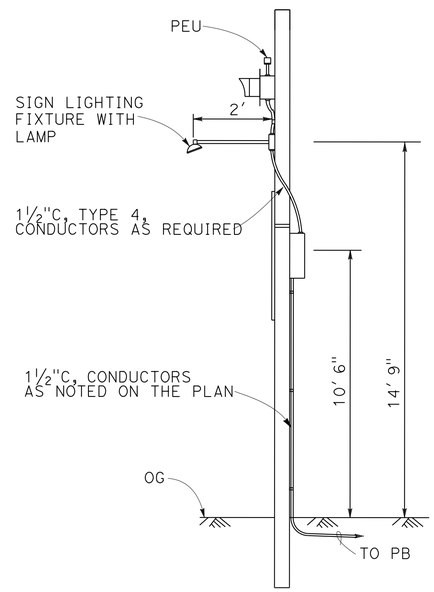

SIDE VIEW

TEMPORARY WOOD POLE WITH FB

DETAIL A

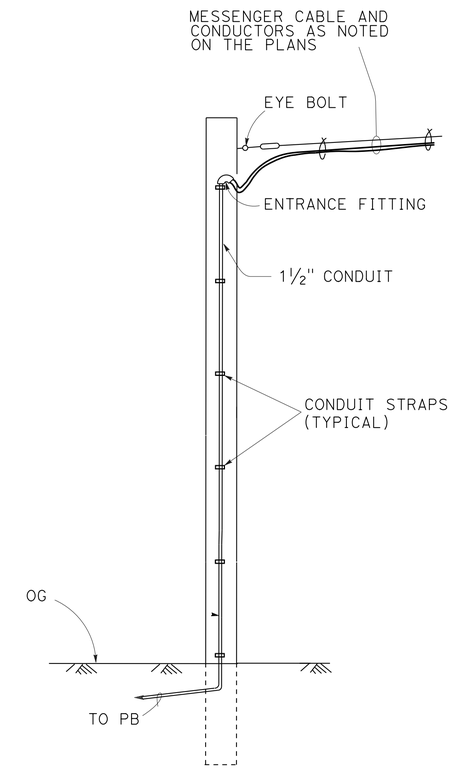

TEMPORARY WOOD POLE

DETAIL B

APPROVED FOR ELECTRICAL WORK ONLY

NO SCALE

ELECTRICAL DETAILS
E-7

REVISED BY	DATE REVISED

CALCULATED-DESIGNED BY	CHECKED BY
HASHIM M. KHALID	OMAR MENDOZA

FUNCTIONAL SUPERVISOR: ALI BAKHDOUD

STATE OF CALIFORNIA - DEPARTMENT OF TRANSPORTATION
Caltrans® **ELECTRICAL DESIGN**

LAST REVISION 04-27-14 | DATE PLOTTED => 27-AUG-2014 | TIME PLOTTED => 14:08

Dist	COUNTY	ROUTE	POST MILES TOTAL PROJECT	SHEET No.	TOTAL SHEETS
06	Fre	33	10.9/11.1	36	104

REGISTERED ELECT ENGINEER 04-27-14 DATE

4-28-14
PLANS APPROVAL DATE

REGISTERED PROFESSIONAL ENGINEER HASHIM KHALID No. 18054 Exp. 6/30/15 ELECT STATE OF CALIFORNIA

THE STATE OF CALIFORNIA OR ITS OFFICERS OR AGENTS SHALL NOT BE RESPONSIBLE FOR THE ACCURACY OR COMPLETENESS OF SCANNED COPIES OF THIS PLAN SHEET.

NOTE:

SEE SES PLANS FOR TEMPORARY WOOD POLE DETAILS.

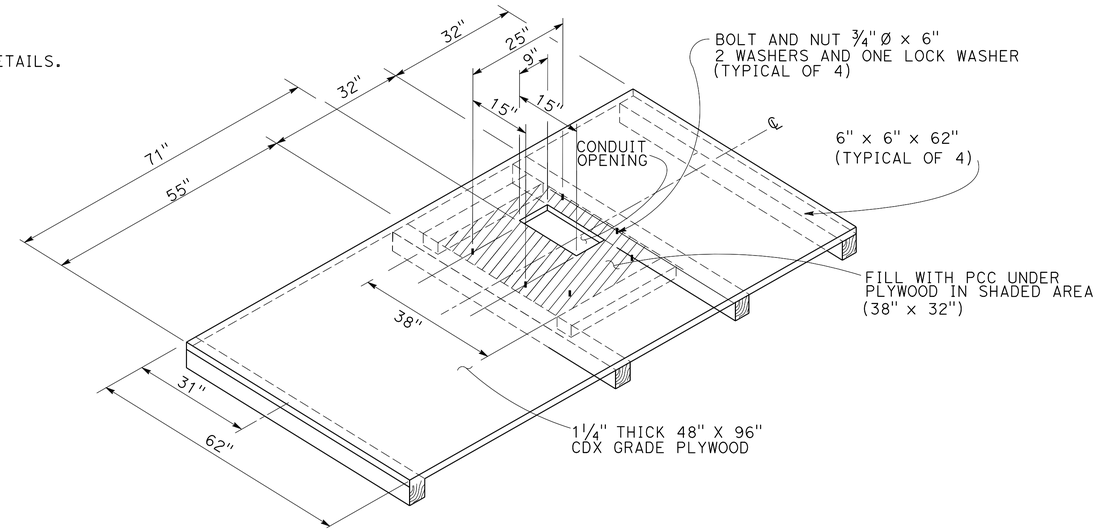

TEMPORARY FOUNDATION PLATFORM FOR MODEL 332L CABINET

DETAIL E

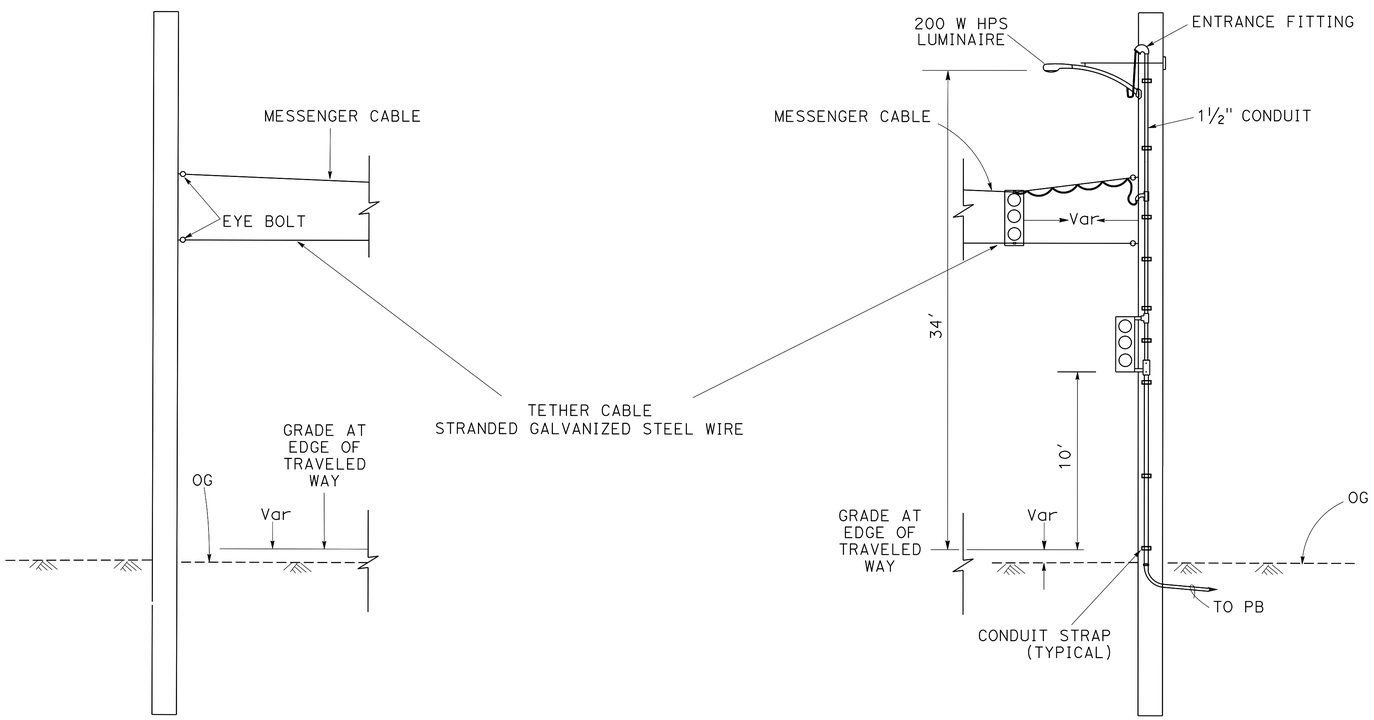

TEMPORARY WOOD POLES WITH SIGNAL EQUIPMENT ON SPAN WIRE

DETAIL D

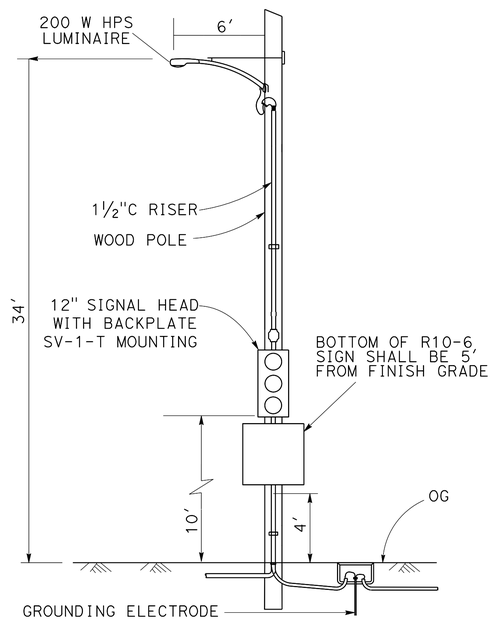

TEMPORARY WOOD POLE SIGNAL

DETAIL F

APPROVED FOR ELECTRICAL WORK ONLY

NO SCALE

ELECTRICAL DETAILS
E-8

STATE OF CALIFORNIA - DEPARTMENT OF TRANSPORTATION
Caltrans ELECTRICAL DESIGN

FUNCTIONAL SUPERVISOR: ALI BAKHDOUD
CALCULATED-DESIGNED BY: OMAR MENDOZA
CHECKED BY: HASHIM M. KHALID
REVISED BY
DATE REVISED

LAST REVISION 04-27-14
DATE PLOTTED => 27-AUG-2014
TIME PLOTTED => 14:08

Dist	COUNTY	ROUTE	POST MILES TOTAL PROJECT	SHEET No.	TOTAL SHEETS
06	Fre	33	10.9/11.1	37	104

REGISTERED ELECT ENGINEER 04-27-14 DATE

4-28-14
PLANS APPROVAL DATE

REGISTERED PROFESSIONAL ENGINEER HASHIM KHALID No. 18054 Exp. 6/30/15 ELECT STATE OF CALIFORNIA

THE STATE OF CALIFORNIA OR ITS OFFICERS OR AGENTS SHALL NOT BE RESPONSIBLE FOR THE ACCURACY OR COMPLETENESS OF SCANNED COPIES OF THIS PLAN SHEET.

NOTE:

SEE SES PLANS FOR TEMPORARY WOOD POLE DETAILS.

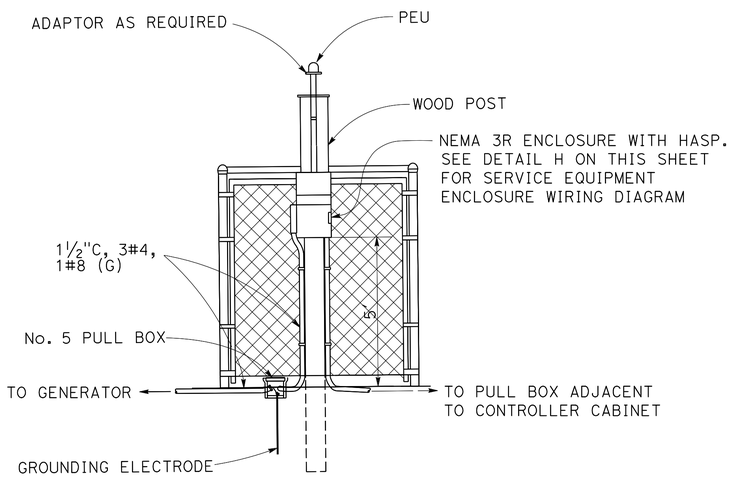

FRONT VIEW

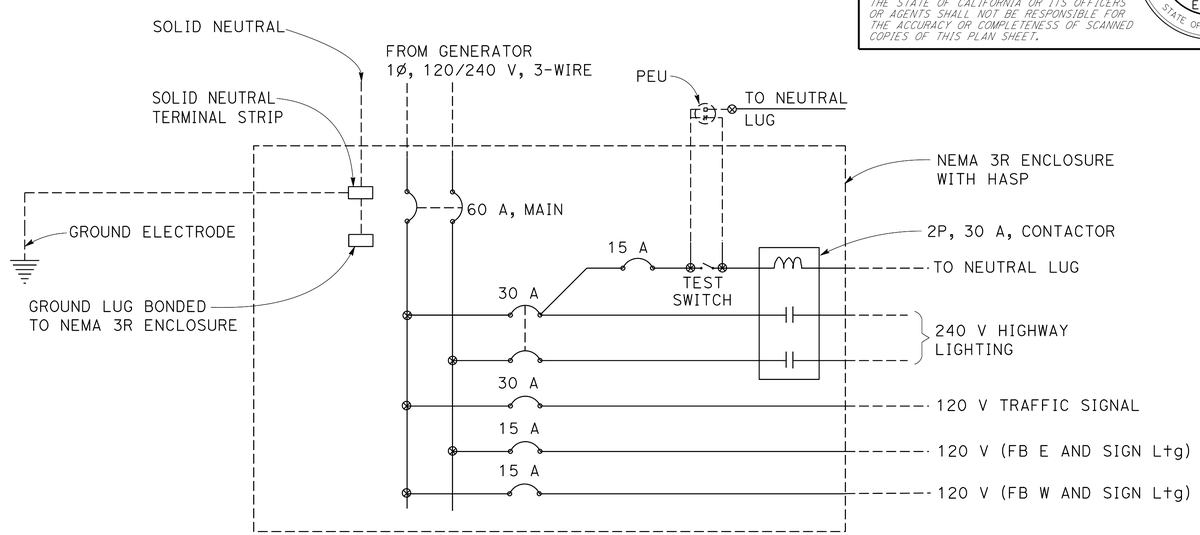

SERVICE EQUIPMENT ENCLOSURE WIRING DIAGRAM

DETAIL H

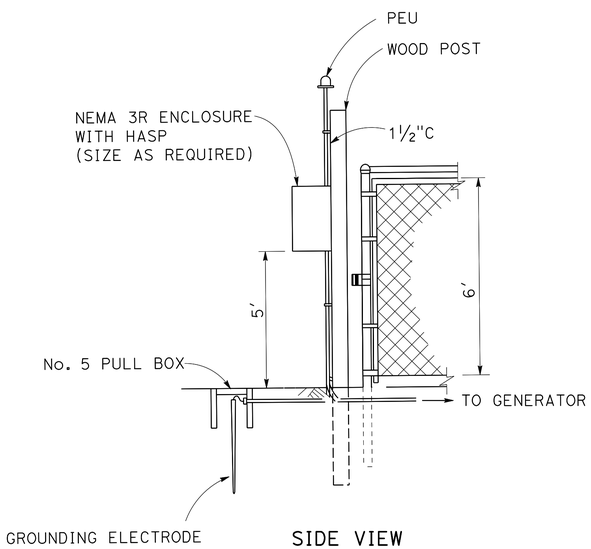

SIDE VIEW

SERVICE EQUIPMENT ENCLOSURE ON WOOD POLE

DETAIL G

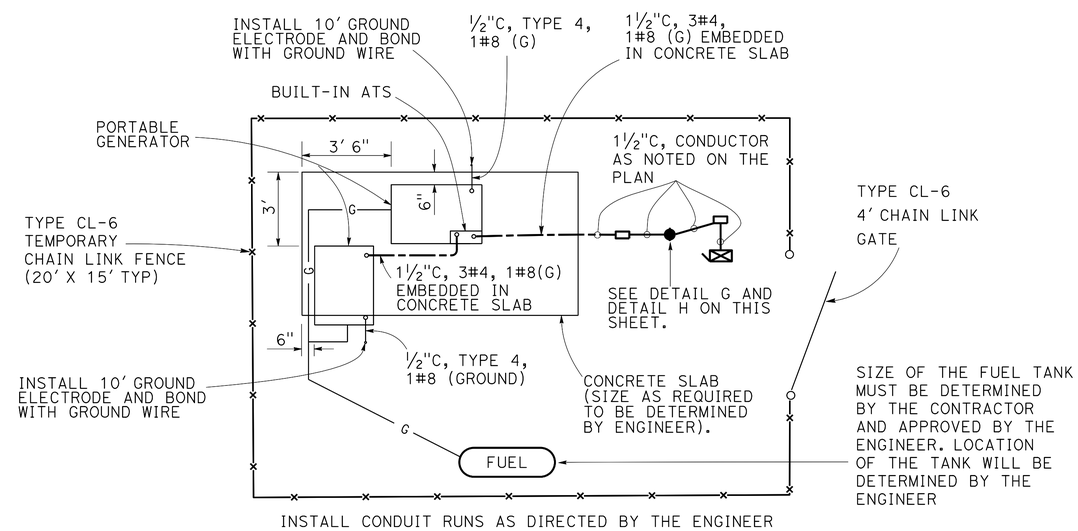

GENERATOR WITH BACKUP GENERATOR

DETAIL Y

APPROVED FOR ELECTRICAL WORK ONLY

NO SCALE

ELECTRICAL DETAILS
E-9

STATE OF CALIFORNIA - DEPARTMENT OF TRANSPORTATION
Caltrans® ELECTRICAL DESIGN

FUNCTIONAL SUPERVISOR: ALI BAKHDOUD
CALCULATED-DESIGNED BY: HASHIM M. KHALID
CHECKED BY: OMAR MENDOZA
REVISED BY / DATE REVISED

LAST REVISION 04-27-14 | DATE PLOTTED => 27-AUG-2014 | TIME PLOTTED => 14:08

Dist	COUNTY	ROUTE	POST MILES TOTAL PROJECT	SHEET No.	TOTAL SHEETS
06	Fre	33	10.9/11.1	38	104

REGISTERED ELECT ENGINEER 04-27-14 DATE

4-28-14
PLANS APPROVAL DATE

REGISTERED PROFESSIONAL ENGINEER HASHIM KHALID No. 18054 Exp. 6/30/15 ELECT STATE OF CALIFORNIA

THE STATE OF CALIFORNIA OR ITS OFFICERS OR AGENTS SHALL NOT BE RESPONSIBLE FOR THE ACCURACY OR COMPLETENESS OF SCANNED COPIES OF THIS PLAN SHEET.

LEGEND: (FOR THIS SHEET ONLY)

1 NEMA 3R ENCLOSURE WITH HINGED DOOR, PADLOCK HASP AND INTERIOR PANEL FOR POWER SUPPLY, RPU AND WIRELESS MODEM. SEE DETAILS B ON THIS SHEET.

NOTE:

SEE SHEET SES-10 FOR POLE AND FOUNDATION DETAILS.

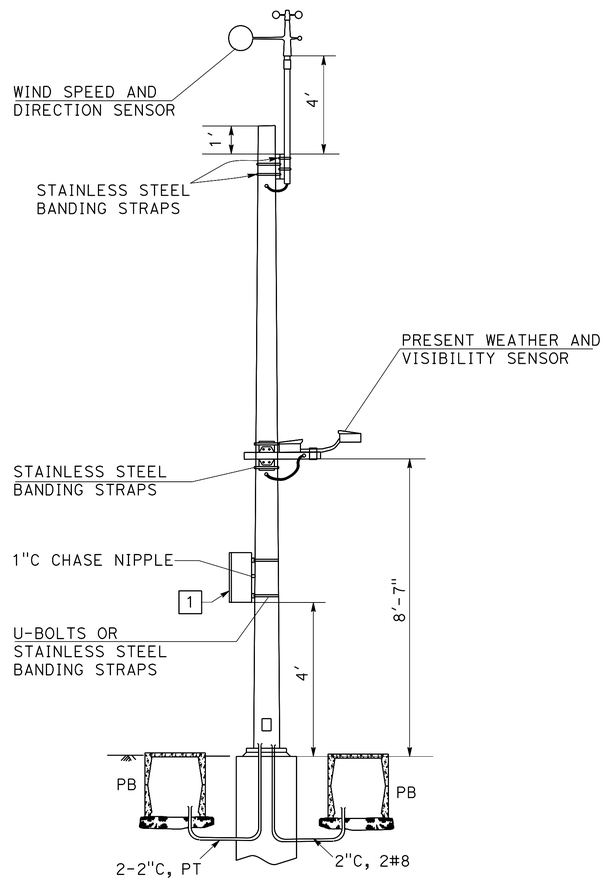

TYPE VDS 30 POLE WITH RWIS

DETAIL A

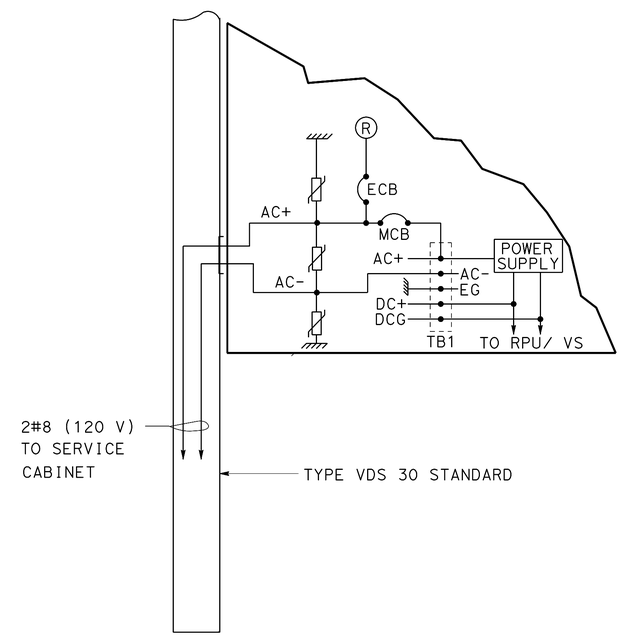

RWIS POWER CONNECTION

DETAIL B

APPROVED FOR ELECTRICAL WORK ONLY

NO SCALE

ELECTRICAL DETAILS
E-10

STATE OF CALIFORNIA - DEPARTMENT OF TRANSPORTATION
Caltrans® ELECTRICAL DESIGN

FUNCTIONAL SUPERVISOR: ALI BAKHDOUD
CALCULATED-DESIGNED BY: HASHIM M. KHALID
CHECKED BY: OMAR MENDOZA
REVISED BY
DATE REVISED

LAST REVISION 04-27-14 | DATE PLOTTED => 27-AUG-2014 | TIME PLOTTED => 14:08

Dist	COUNTY	ROUTE	POST MILES TOTAL PROJECT	SHEET No.	TOTAL SHEETS
06	Fre	33	10.9/11.1	39	104

REGISTERED ELECT ENGINEER 04-27-14 DATE

4-28-14
PLANS APPROVAL DATE

REGISTERED PROFESSIONAL ENGINEER HASHIM KHALID No. 18054 Exp. 6/30/15 ELECT STATE OF CALIFORNIA

THE STATE OF CALIFORNIA OR ITS OFFICERS OR AGENTS SHALL NOT BE RESPONSIBLE FOR THE ACCURACY OR COMPLETENESS OF SCANNED COPIES OF THIS PLAN SHEET.

NOTE:

ITEMS SHOWN IN TABLES ARE NOT A SEPARATE PAY ITEM, FOR INFORMATION ONLY.

TEMPORARY SIGNAL SYSTEM

SHEET No.	2"C, TYPE 1	1½"C, TYPE 3	No. 4 CONDUCTOR	No. 6 CONDUCTOR	No. 8 CONDUCTOR	No. 10 CONDUCTOR	No. 8 CONDUCTOR (G)	DLC	5CSC	OVERHEAD MESSENGER WIRE	TYPE A DETECTOR LOOP	TYPE D DETECTOR LOOP	No. 5 PB	No. 5(T) PB	TEMPORARY WOOD POLE WITH SIGNAL EQUIPMENT	TEMPORARY WOOD POLE WITH SIGNAL EQUIPMENT ON SPAN WIRE	TEMPORARY WOOD POLE	TEMPORARY WOOD POLE WITH FB	UPS	TEMPORARY FOUNDATION PLATFORM FOR MODEL 332L CABINET	TEMPORARY 6' CL-6' FENCE WITH 4' GATE
	LF											EA									
E-2	170	1400			2350	3350	1600	2530	2230	210	3	1	11	2	1	2	2	1			
E-3		1020	60	50	1180	2270	1100	1500	1200		3	1	9		1	2		1	1	1	1
E-4	170	800			1940	1940	970	2370	2070					2							
E-5		320			680	720	350	1400	1050												

ROADSIDE WEATHER INFORMATION SYSTEM

SHEET No.	2"C, TYPE 1	2"C, TYPE 3	3"C, TYPE 1	3 "C, TYPE 3	No. 2 CONDUCTOR	No. 8 CONDUCTOR	No. 8 CONDUCTOR (G)	No. 5(T) PB	TYPE 30 VCS POLE WITH RWIS	TYPE 30 VCS POLE FOUNDATION	SERVICE CABINET TYPE III-AF	SERVICE CABINET TYPE III-AF FOUNDATION	PB PER UTILITY REQUIREMENTS
E-6	LF							EA					
	20	10	10	100	300	60	30	3	1	1	1	1	1

ELECTRICAL QUANTITIES
E-11

STATE OF CALIFORNIA - DEPARTMENT OF TRANSPORTATION
Caltrans® ELECTRICAL DESIGN

FUNCTIONAL SUPERVISOR: ALI BAKHDOUD
CALCULATED-DESIGNED BY: OMAR MENDOZA
CHECKED BY: HASHIM M. KHALID
REVISED BY
DATE REVISED

LAST REVISION 04-27-14
DATE PLOTTED => 27-AUG-2014
TIME PLOTTED => 14:08

DIST	COUNTY	ROUTE	POST MILES TOTAL PROJECT	SHEET No.	TOTAL SHEETS
06	Fre	33	10.9/11.1	40	104

REGISTERED CIVIL ENGINEER — DATE 12/18/13

4-28-14
PLANS APPROVAL DATE

REGISTERED PROFESSIONAL ENGINEER — AIMAN MALAK — No. C73369 — Exp. 12-31-2014 — CIVIL — STATE OF CALIFORNIA

The State of California or its officers or agents shall not be responsible for the accuracy or completeness of electronic copies of this plan sheet.

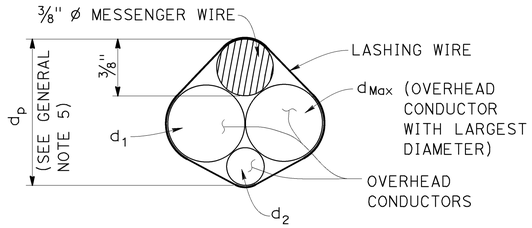

$d_p = 3/8" + d_{Max} + 0.30 * (d_1 + d_2 + \ldots d_n)$

PROJECTED DEPTH OF OVERHEAD BUNDLE, (d_p)

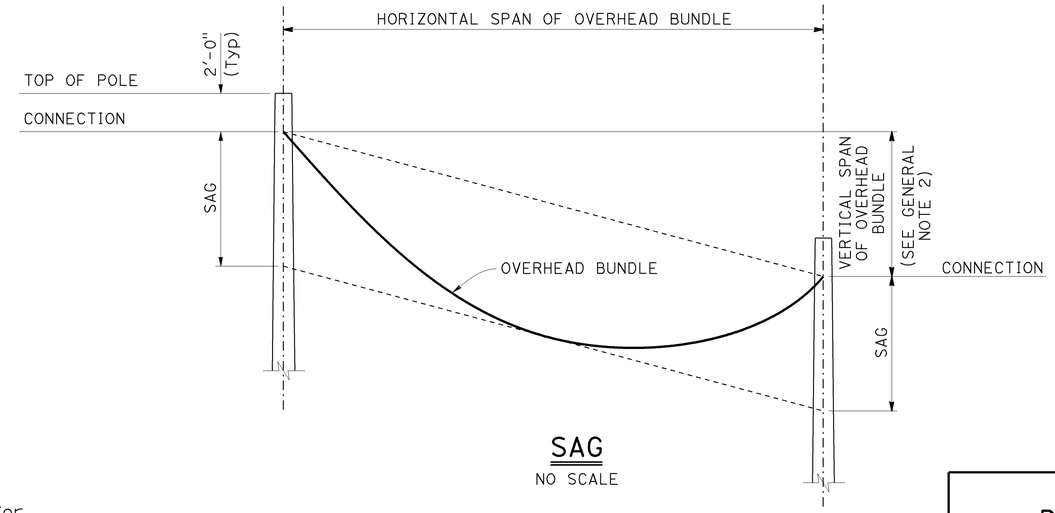

SAG

NO SCALE

Design: AASHTO Standard Specifications for Structural Supports for Highway Signs, Luminaires and Traffic Signals, Fifth Edition (LTS-5).

GROUP LOAD COMBINATIONS:

I Dead Load
II Dead Load + Wind Load
III Dead Load + 0.5 (Wind Load) + Ice Load
IV Fatigue: Not used

LOADING:

Wind Loading: 100 mph (3-second gust)
Wind Recurrence Interval: 10 years
Combined height, exposure, and elevated terrain factor = 1.05 (Exposure C, structure is not located on or over the top half of a ridge, hill, or escarpment)

Ice Loading: 3.0 psf on surfaces, 0.60 in radial thickness of ice at a unit weight of 60 pcf on overhead bundles

BASIC DESIGN VALUES:

Timber Poles: Fb = 1850 psi
Fv = 110 psi
Fcp = 230 psi
Fc = 950 psi
E = 1500 x 10^3 psi

DESIGN WIRE BREAKING STRENGTHS:

ASTM A475, Utilities Grade, 7 strand modified by termination efficiency factor of 0.8.

FOUNDATION DESIGN NOTES:

1. Pole embedment depth design is based on Broms' approximate procedure as described in Article 13.6 of AASHTO LTS-5.
2. Embedment depth is calculated based on following soil parameters,
   Cohesive Soil:
   Shear strength of soil c= 1500 psf.
   Cohesionless Soil:
   Ø = 30 deg, γ = 120 pcf.
   Soil assumed to be unsaturated.
3. An overload factor of 2.0 and an under capacity factor of 0.7 were used for safety factor of 2.86.
4. Allowable vertical bearing pressure at the end bearing of poles is 3000 psf at 6 feet of more embedment.

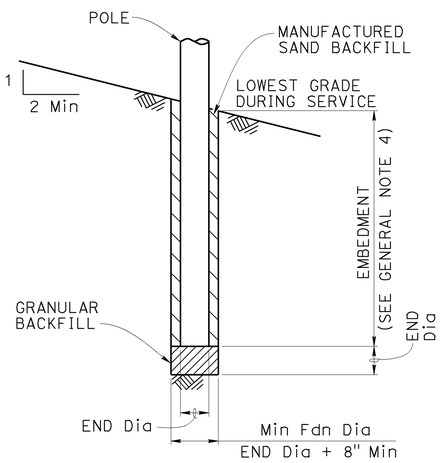

POLE FOUNDATION

GENERAL NOTES:

1. The messenger wire and any combination of overhead conductors must not exceed either a self weight of 3.0 lb/ft or the maximum d_p.
2. The maximum vertical span is 10% of the horizontal span.
3. For poles with adjacent unbalanced horizontal spans, the shortest horizontal span must be at least 50% of the largest horizontal span.
4. Add 2'-0" for slopes above 1V:4H.
5. For a pole supporting multiple spans, calculate d_p for each span and use the largest value.
6. Do not exceed the attachments shown.

DIAMETERS AND SELF WEIGHT OF OVERHEAD CONDUCTORS

CONDUCTOR OR CABLE TYPE	DIAMETER d (in)	WEIGHT w (plf)
3 CONDUCTOR SIGNAL CABLE (3CSC)	0.400	0.0980
5 CONDUCTOR SIGNAL CABLE (5CSC)	0.500	0.1560
9 CONDUCTOR SIGNAL CABLE (9CSC)	0.650	0.2760
12 CONDUCTOR SIGNAL CABLE (12CSC)	0.800	0.3970
28 CONDUCTOR SIGNAL CABLE (28CSC)	0.900	0.6490
1-#14	0.166	0.0235
1-#12	0.185	0.0330
1-#10	0.210	0.0476
1-#8	0.271	0.0774
1-#6	0.310	0.1130
1-#4	0.359	0.1690
1-#3	0.388	0.2080
1-#2	0.420	0.2560
1-#1	0.498	0.3340
6-CONDUCTOR SIGNAL INTERCONNECT CABLE (SIC)	0.350	0.0860
12-CONDUCTOR SIGNAL INTERCONNECT CABLE (SIC)	0.500	0.1440
DETECTOR LEAD-IN CABLE (DLC)	0.310	0.0440
12 to 48-STRAND FIBER OPTIC CABLE (48FOC)	0.424	0.0600
72-STRAND FIBER OPTIC CABLE (72FOC)	0.484	0.0770
96-STRAND FIBER OPTIC CABLE (96FOC)	0.535	0.1050
144-STRAND FIBER OPTIC CABLE (144FOC)	0.670	0.1890
3/8" Ø MESSENGER WIRE	0.375	0.2730

NO SCALE

NOTE:
THE CONTRACTOR SHALL VERIFY ALL CONTROLLING FIELD DIMENSIONS BEFORE ORDERING OR FABRICATING ANY MATERIAL.

BRANCH CHIEF DAVID NEUMANN	DESIGN	BY A MALAK	CHECKED T MARCHENKO
	DETAILS	BY H NGUYEN	CHECKED A MALAK
	QUANTITIES	BY	CHECKED

STATE OF CALIFORNIA
DEPARTMENT OF TRANSPORTATION

DIVISION OF ENGINEERING SERVICES
DESIGN AND TECHNICAL SERVICES
SPECIAL DESIGNS BRANCH
B

BRIDGE NO. N/A
POST MILE 10.9/11.1

TEMPORARY WOOD POLES
GENERAL NOTES

SES-1

STRUCTURES DESIGN SPECIAL DESIGN SHEET (ENGLISH) (REV. 09-01-10)

ORIGINAL SCALE IN INCHES FOR REDUCED PLANS 0 1 2 3

UNIT:
PROJECT NUMBER & PHASE: 0600020388
CONTRACT NO.: 06-432601

DISREGARD PRINTS BEARING EARLIER REVISION DATES
REVISION DATES 11/26/13

SHEET 1 OF 10

FILE => 06-432601-u-ses1.dgn

USERNAME => s128478 DATE PLOTTED => 30-APR-2014 TIME PLOTTED => 08:38

DIST	COUNTY	ROUTE	POST MILES TOTAL PROJECT	SHEET No.	TOTAL SHEETS
06	Fre	33	10.9/11.1	41	104

REGISTERED CIVIL ENGINEER — DATE 12-18-13

4-28-14
PLANS APPROVAL DATE

REGISTERED PROFESSIONAL ENGINEER ATMAN MALAK No. C73369 Exp. 12-31-2014 CIVIL STATE OF CALIFORNIA

The State of California or its officers or agents shall not be responsible for the accuracy or completeness of electronic copies of this plan sheet.

LEGEND

- Wood Pole No Attachments
- A Wood Pole with Attachments
- —OH— Overhead Bundle

POLE SELECTION TABLE

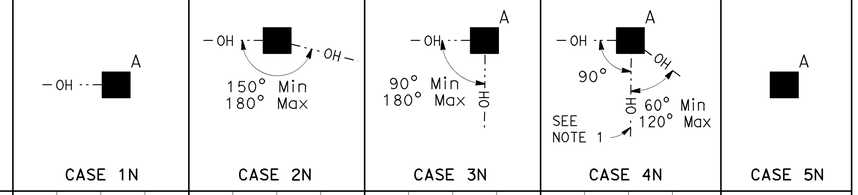

			CASE 1N				CASE 2N				CASE 3N				CASE 4N				CASE 5N
		MAXIMUM d_p	1"	1.5"	2.0"	2.5"	1"	1.5"	2.0"	2.5"	1.0"	1.5"	2.0"	2.5"	1"	1.5"	2.0"	2.5"	N/A
OVERHEAD BUNDLE HORIZONTAL SPAN (Max)	50'	MINIMUM POLE CLASS	H-1	H-2	H-2	H-2	4	3	2	1	H-2	H-2	H-3	H-3	H-4	H-4	H-4	H-5	CLASS 1 E = 10'
		POLE EMBEDMENT (E)	11'				10'				11'				12'				
	100'	MINIMUM POLE CLASS	H-2	H-3	H-4	H-5	1	H-1	H-2	H-3	H-4	H-5	H-5	H-6	H-5	H-5	H-6		
		POLE EMBEDMENT (E)	12'				11'				12'				12'				
	150'	MINIMUM POLE CLASS	H-4	H-5	H-6		H-1	H-2	H-3	H-5	H-6				H-6				
		POLE EMBEDMENT (E)	12'				12'				12'				12'				
	200'	MINIMUM POLE CLASS	H-5	H-6			H-2	H-3	H-5										
		POLE EMBEDMENT (E)	12'				12'												

1. CCTV camera assembly or vehicle detection system
2. Overhead bundle consisting of a 3/8" ϕ messenger wire and overhead conductors and lashing wire.
3. Luminaire with mast arm
4. Pedestrian pushbutton
5. Signal face with 3 indications or single sheet sign panel (10 SQFT Max)
6. Riser with weather head as required
7. Pull box as required
8. Grounding as required
9. Single section flashing beacon or single sheet sign panel (4 SQFT Max)
10. Single sheet sign panel (4' x 4' Max) or signal face with 3 indications
11. Flashing beacon control assembly
12. NEMA 3R enclosure, 26"(W) x 56"(H) x 12"(D) Max dimensions. Max weight including batteries, 450 lbs
13. 25' SQFT Max total photovoltaic panels mounted as shown as required
14. 2-section 12" flashing beacon

NOTES:

1. In addition to other restrictions on maximum horizontal span, this horizontal span must not exceed 100'.
2. Cases, 1N, 3N and 4N may substitute the attachments shown in Case 5N if the photovoltaic panel is not included.

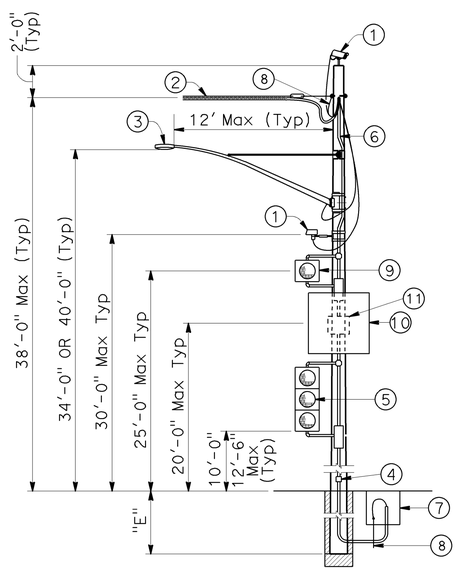

CASE 1N
POLE AT DEAD END WITH ATTACHMENTS
SEE NOTE 2

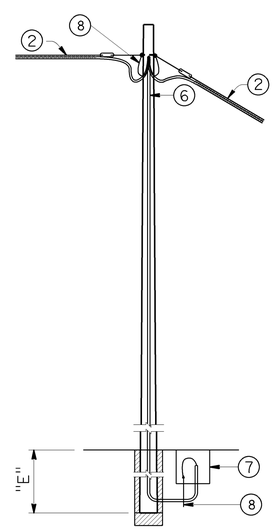

CASE 2N
POLE AT TANGENT WITHOUT ATTACHMENTS

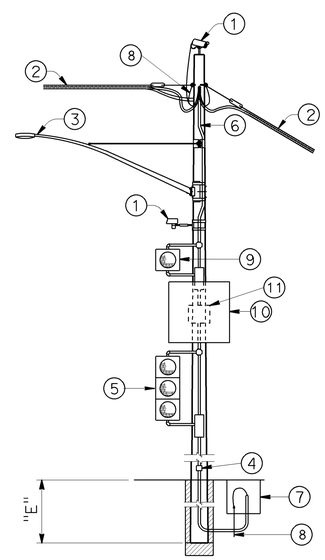

CASE 3N
POLE AT TANGENT OR CORNER WITH ATTACHMENTS
SEE NOTE 2

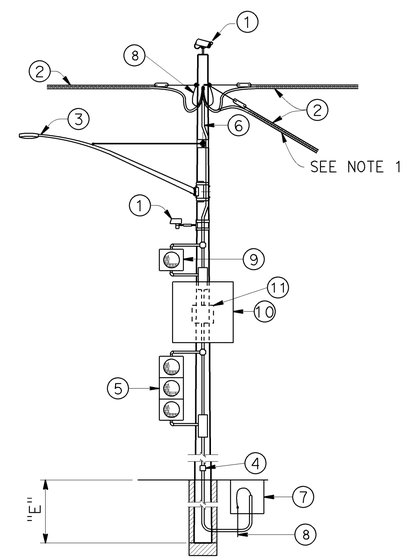

CASE 4N
POLE AT JUNCTION WITH ATTACHMENTS
SEE NOTE 2

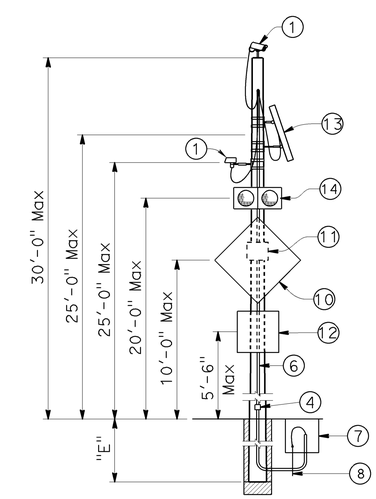

CASE 5N
POLE WITHOUT OVERHEAD BUNDLE WITH ATTACHMENTS

NOTE:
THE CONTRACTOR SHALL VERIFY ALL CONTROLLING FIELD DIMENSIONS BEFORE ORDERING OR FABRICATING ANY MATERIAL.

NO SCALE

BRANCH CHIEF: DAVID NEUMANN

	BY	CHECKED
DESIGN	A MALAK	T MARCHENKO
DETAILS	H NGUYEN	A MALAK
QUANTITIES		

STATE OF CALIFORNIA
DEPARTMENT OF TRANSPORTATION

DIVISION OF ENGINEERING SERVICES
DESIGN AND TECHNICAL SERVICES
SPECIAL DESIGNS BRANCH B

BRIDGE NO. N/A
POST MILE 10.9/11.1

TEMPORARY WOOD POLES
NON-GUYED - NO SIGNALS ON SPANS

SES-2

STRUCTURES DESIGN SPECIAL DESIGN SHEET (ENGLISH) (REV. 09-01-10)

ORIGINAL SCALE IN INCHES FOR REDUCED PLANS 0 1 2 3

UNIT:
PROJECT NUMBER & PHASE: 0600020388
CONTRACT NO.: 06-432601

DISREGARD PRINTS BEARING EARLIER REVISION DATES → 12/2/13

REVISION DATES | SHEET 2 | OF 10

FILE => 06-432601-u-ses2.dgn

USERNAME => s128478 DATE PLOTTED => 30-APR-2014 TIME PLOTTED => 08:38

DIST	COUNTY	ROUTE	POST MILES TOTAL PROJECT	SHEET No.	TOTAL SHEETS
06	Fre	33	10.9/11.1	42	104

REGISTERED CIVIL ENGINEER — DATE 12-18-13

4-28-14
PLANS APPROVAL DATE

The State of California or its officers or agents shall not be responsible for the accuracy or completeness of electronic copies of this plan sheet.

REGISTERED PROFESSIONAL ENGINEER — AIMAN MALAK — No. C73369 — Exp. 12-31-2014 — CIVIL — STATE OF CALIFORNIA

LEGEND

- A — Wood Pole with Attachments
- —OH··— Overhead Bundle
- Guy Anchor

POLE SELECTION TABLE

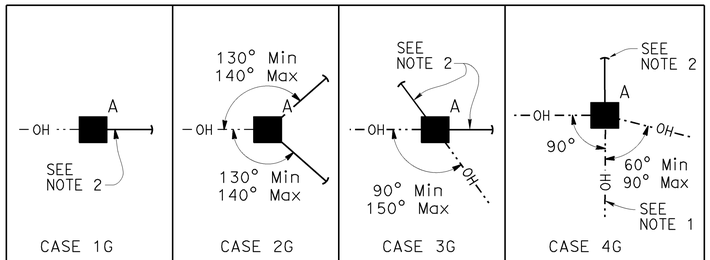

			CASE 1G				CASE 2G				CASE 3G				CASE 4G			
		MAXIMUM d_p	1"	1.5"	2.0"	2.5"	1"	1.5"	2.0"	2.5"	1"	1.5"	2.0"	2.5"	1"	1.5"	2.0"	2.5"
OVERHEAD BUNDLE HORIZONTAL SPAN (Max)	50′	MINIMUM POLE CLASS	H-1	H-1	H-2	H-2	1	1	1	1	1	1	1	H-1	H-2	H-2	H-3	H-3
		POLE EMBEDMENT (E)	10′				9′				9′				11′			
	100′	MINIMUM POLE CLASS	H-2	H-2	H-3	H-4	1	H-1	H-1	H-1	1	H-1	H-2	H-2	H-3	H-3	H-4	H-4
		POLE EMBEDMENT (E)	11′				9′				9′				12′			
	150′	MINIMUM POLE CLASS	H-3	H-3	H-4	H-5	H-1	H-1	H-2	H-2	H-2	H-3	H-3	H-3	H-4	H-5	H-5	H-6
		POLE EMBEDMENT (E)	11′				9′				9′				12′			
	220′	MINIMUM POLE CLASS	H-4	H-4	H-5	H-6	H-1	H-2	H-3	H-3	H-3	H-3	H-4	H-4	H-5	H-6		
		POLE EMBEDMENT (E)	11′				9′				9′				12′			

1. CCTV camera assembly or vehicle detection system
2. Overhead bundle consisting of a ⅜" ø messenger wire and overhead conductors and lashing wire.
3. Luminaire with mast arm
4. Pedestrian pushbutton
5. Signal face with 3 indications or single sheet sign panel (10 SQFT Max)
6. Riser with weather head as required
7. Pull box as required
8. Grounding as required
9. Single section flashing beacon or single sheet sign panel (4 SQFT Max)
10. Single sheet sign panel (4′ x 4′ Max) or signal face with 3 indications
11. Flashing beacon control assembly
12. ½" ø guy wire with white guy marker and strain insulator (for anchorage see "TEMPORARY WOOD POLES-DETAILS No. 2" sheet)

NOTE:
THE CONTRACTOR SHALL VERIFY ALL CONTROLLING FIELD DIMENSIONS BEFORE ORDERING OR FABRICATING ANY MATERIAL.

NOTES:

1. In addition to other restrictions on maximum horizontal span, this horizontal span must not exceed 100′.
2. Guy wire in line with opposing span ± 5°.

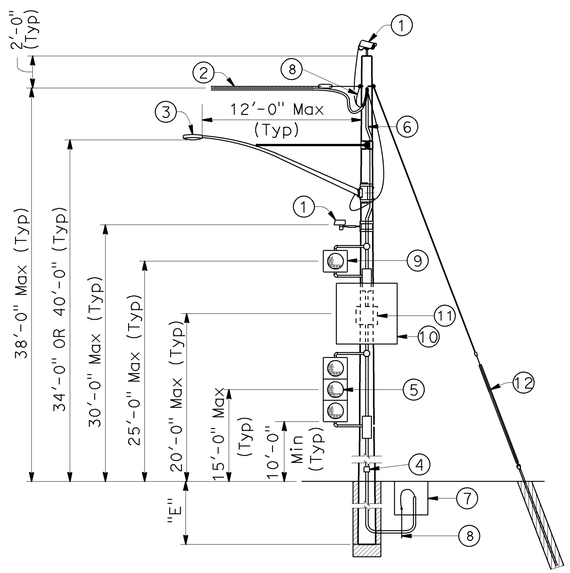

CASE 1G
POLE AT DEAD END
WITH ATTACHMENTS

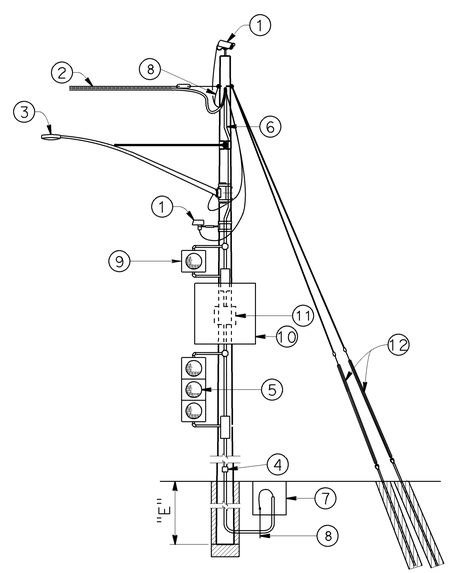

CASE 2G
POLE AT DEAD END
WITH ATTACHMENTS

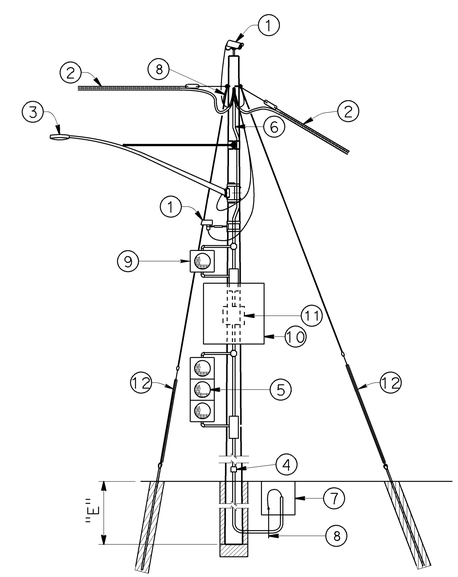

CASE 3G
POLE AT CORNER
WITH ATTACHMENTS

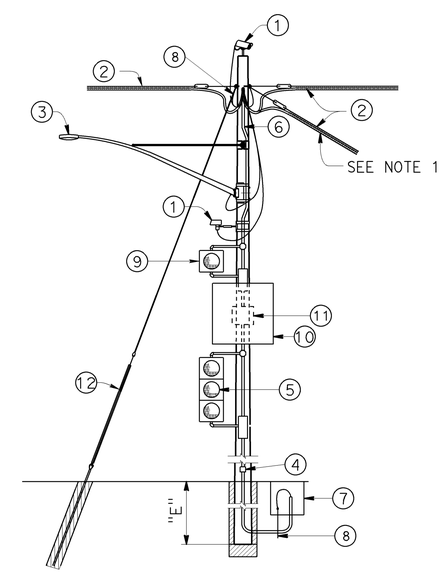

CASE 4G
POLE AT JUNCTION
WITH ATTACHMENTS

NO SCALE

BRANCH CHIEF DAVID NEUMANN	DESIGN	BY A MALAK	CHECKED T MARCHENKO
	DETAILS	BY H NGUYEN	CHECKED A MALAK
	QUANTITIES	BY	CHECKED

STATE OF CALIFORNIA
DEPARTMENT OF TRANSPORTATION

DIVISION OF ENGINEERING SERVICES
DESIGN AND TECHNICAL SERVICES
SPECIAL DESIGNS BRANCH — B

BRIDGE NO. N/A
POST MILE 10.9/11.1

TEMPORARY WOOD POLES
GUYED - NO SIGNAL ON SPANS

SES-3

STRUCTURES DESIGN SPECIAL DESIGN SHEET (ENGLISH) (REV. 09-01-10)

ORIGINAL SCALE IN INCHES FOR REDUCED PLANS 0 1 2 3

UNIT:
PROJECT NUMBER & PHASE: 0600020388
CONTRACT NO.: 06-432601

DISREGARD PRINTS BEARING EARLIER REVISION DATES

REVISION DATES 12/4/13

SHEET 3 OF 10

FILE => 06-432601-u-ses3.dgn

USERNAME => s128478 DATE PLOTTED => 30-APR-2014 TIME PLOTTED => 08:38

DIST	COUNTY	ROUTE	POST MILES TOTAL PROJECT	SHEET No.	TOTAL SHEETS
06	Fre	33	10.9/11.1	43	104

REGISTERED CIVIL ENGINEER 12-18-13 DATE

4-28-14
PLANS APPROVAL DATE

REGISTERED PROFESSIONAL ENGINEER AIMAN MALAK No. C73369 Exp. 12-31-2014 CIVIL STATE OF CALIFORNIA

The State of California or its officers or agents shall not be responsible for the accuracy or completeness of electronic copies of this plan sheet.

LEGEND

A — Wood Pole with Attachments

—··TS—··· Overhead Bundle with Signal Faces (See Note 1)

POLE SELECTION TABLE

A —··TS—··—

			CASE 1NT		
OVERHEAD BUNDLE HORIZONTAL SPAN (Max)	75'	MAXIMUM d_p	1"	1.5"	2.0"
		MINIMUM POLE CLASS	H-5	H-6	H-6
		POLE EMBEDMENT (E)	13'		

1. CCTV camera assembly or vehicle detection system
2. Overhead bundle consisting of a 3/8" ø messenger wire and overhead conductors and lashing wire
3. Luminaire with mast arm
4. Pedestrian pushbutton
5. Signal face with 3 indications or single sheet sign panel (10 SQFT Max)
6. Riser with weather head as required
7. Pull box as required
8. Grounding as required
9. 3/8" ø tether wire
10. Pedestrian signal head

NOTES:

1. Maximum of 2 SIGNAL FACES per span within the hatched regions indicated by "LOCATION OF SIGNAL FACES".

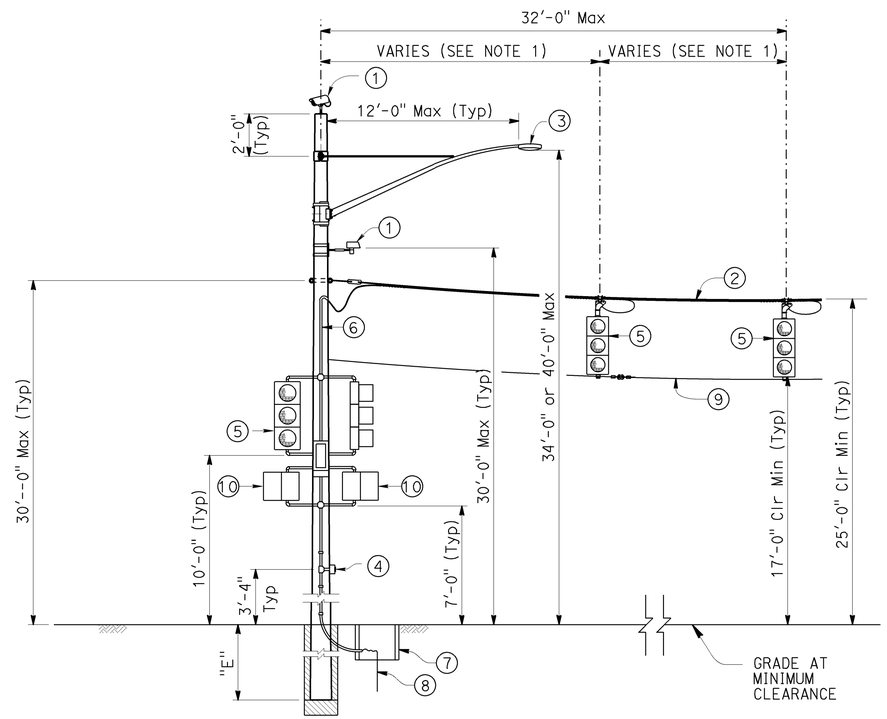

CASE 1NT
POLE AT DEAD END WITH ATTACHMENTS

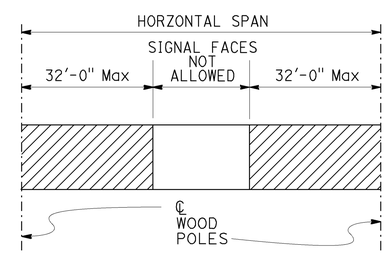

LOCATION OF SIGNAL FACES

NOTE:
THE CONTRACTOR SHALL VERIFY ALL CONTROLLING FIELD DIMENSIONS BEFORE ORDERING OR FABRICATING ANY MATERIAL.

NO SCALE

BRANCH CHIEF DAVID NEUMANN	DESIGN	BY A MALAK	CHECKED T MARCHENKO	STATE OF CALIFORNIA DEPARTMENT OF TRANSPORTATION	DIVISION OF ENGINEERING SERVICES DESIGN AND TECHNICAL SERVICES SPECIAL DESIGNS BRANCH B	BRIDGE NO. N/A
	DETAILS	BY H NGUYEN	CHECKED A MALAK			POST MILE 10.9/11.1
	QUANTITIES	BY	CHECKED			

TEMPORARY WOOD POLES
NON-GUYED - WITH SIGNAL FACES ON SPANS

SES-4

STRUCTURES DESIGN SPECIAL DESIGN SHEET (ENGLISH) (REV. 09-01-10)

ORIGINAL SCALE IN INCHES FOR REDUCED PLANS 0 1 2 3

UNIT: PROJECT NUMBER & PHASE: 0600020388 CONTRACT NO.: 06-432601

DISREGARD PRINTS BEARING EARLIER REVISION DATES 12/2/13

REVISION DATES

SHEET 4 OF 10

FILE => 06-432601-u-ses4.dgn

USERNAME => s128478 DATE PLOTTED => 30-APR-2014 TIME PLOTTED => 08:38

DIST	COUNTY	ROUTE	POST MILES TOTAL PROJECT	SHEET No.	TOTAL SHEETS
06	Fre	33	10.9/11.1	44	104

REGISTERED CIVIL ENGINEER 12-18-13 DATE

4-28-14
PLANS APPROVAL DATE

REGISTERED PROFESSIONAL ENGINEER ATMAN MALAK No. C73369 Exp. 12-31-2014 CIVIL STATE OF CALIFORNIA

The State of California or its officers or agents shall not be responsible for the accuracy or completeness of electronic copies of this plan sheet.

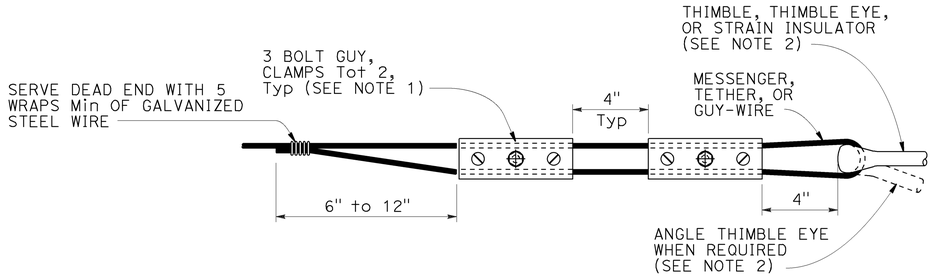

ALTERNATIVE TERMINATION OF MESSENGER WIRES USING GUY CLAMPS

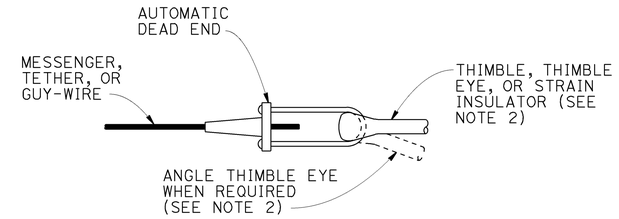

TERMINATION OF WIRES USING AUTOMATIC DEAD END

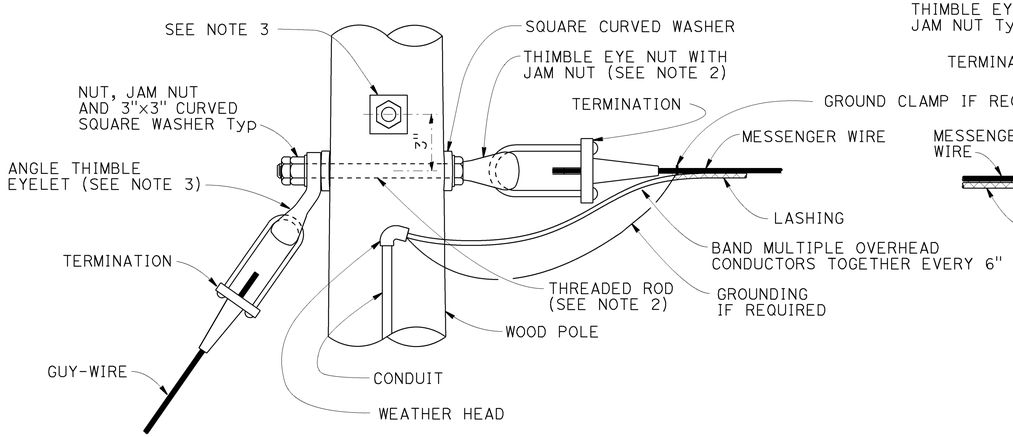

POLE AT DEAD END WITH GUY-WIRE CONNECTION

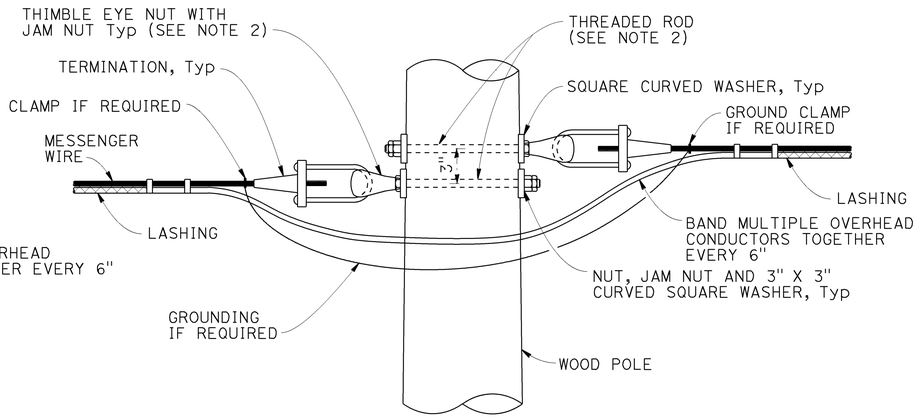

POLE AT TANGENT OR CORNER CONNECTION

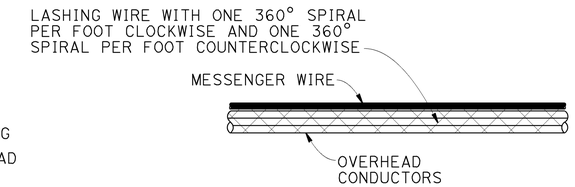

DOUBLE LASHING DETAIL

USE IF d_p IS GREATER THAN 1½"

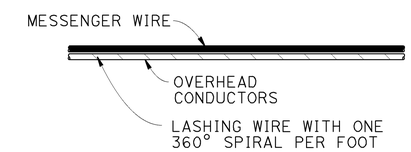

TYPICAL LASHING DETAIL

USE IF d_p IS 1½" OR LESS

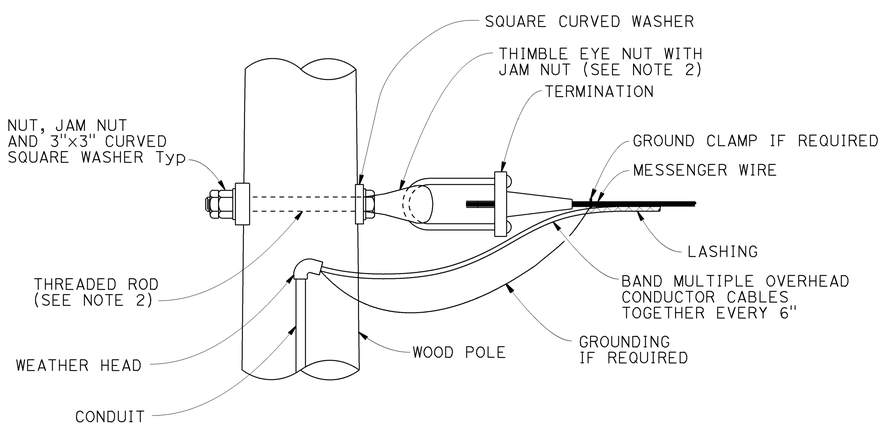

POLE AT DEAD END CONNECTION

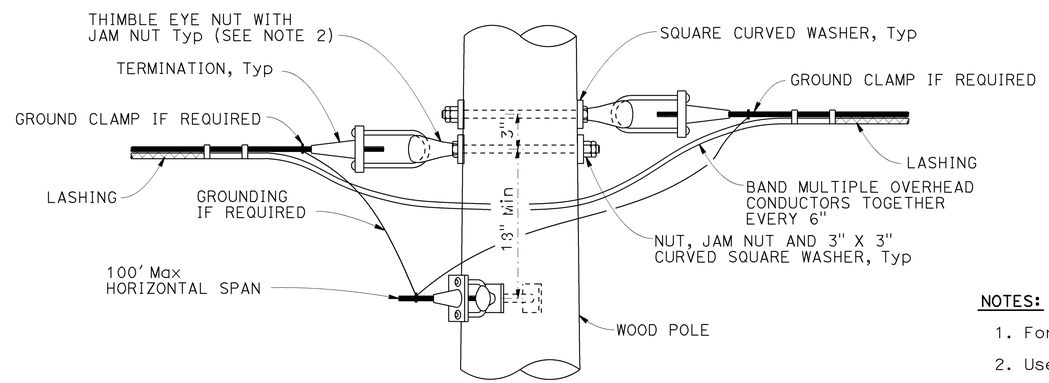

POLE AT JUNCTION CONNECTION

NOTES:

1. For guy wires use 3 clamps.
2. Use ⅝" dia except ¾" dia at guyed wires.
3. Install additional angle thimble eyelet at poles with two guy wires.

NOTE:
THE CONTRACTOR SHALL VERIFY ALL CONTROLLING FIELD DIMENSIONS BEFORE ORDERING OR FABRICATING ANY MATERIAL.

NO SCALE

BRANCH CHIEF DAVID NEUMANN	DESIGN	BY A MALAK	CHECKED T MARCHENKO
	DETAILS	BY H NGUYEN	CHECKED A MALAK
	QUANTITIES	BY	CHECKED

STATE OF CALIFORNIA
DEPARTMENT OF TRANSPORTATION

DIVISION OF ENGINEERING SERVICES
DESIGN AND TECHNICAL SERVICES
SPECIAL DESIGNS BRANCH
B

BRIDGE NO. N/A
POST MILE 10.9/11.1

TEMPORARY WOOD POLES
DETAILS No. 1

SES-5

STRUCTURES DESIGN SPECIAL DESIGN SHEET (ENGLISH) (REV. 09-01-10)

ORIGINAL SCALE IN INCHES FOR REDUCED PLANS 0 1 2 3

UNIT:
PROJECT NUMBER & PHASE: 0600020388
CONTRACT NO.: 06-432601

DISREGARD PRINTS BEARING EARLIER REVISION DATES 12/2/13

REVISION DATES | SHEET 5 | OF 10

FILE => 06-432601-u-ses5.dgn

USERNAME => s128478 DATE PLOTTED => 30-APR-2014 TIME PLOTTED => 08:38

DIST	COUNTY	ROUTE	POST MILES TOTAL PROJECT	SHEET No.	TOTAL SHEETS
06	Fre	33	10.9/11.1	45	104

REGISTERED CIVIL ENGINEER — DATE 12-18-13

4-28-14
PLANS APPROVAL DATE

REGISTERED PROFESSIONAL ENGINEER ATMAN MALAK No. C73369 Exp. 12-31-2014 CIVIL STATE OF CALIFORNIA

The State of California or its officers or agents shall not be responsible for the accuracy or completeness of electronic copies of this plan sheet.

NOTES:

1. Luminaire mast arms must be in compliance with Standard Plan ES-6D with noted modifications.
2. Verify pole dimensions at tie-rod attachment height. Fabricate 8" flat bar with "L" Dimension to maintain an open gap between flanges in finished installation.
3. Not all screw heads and bolt heads are shown for clarity.
4. Mast arm not shown for clarity.

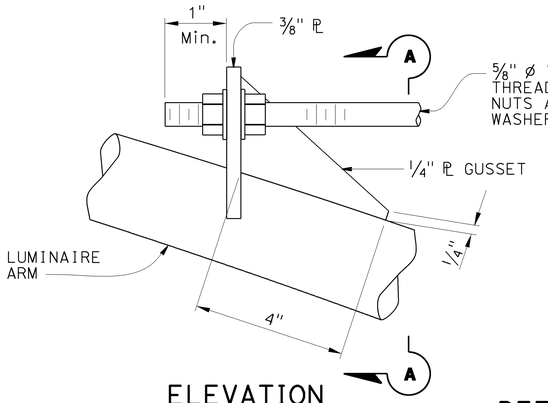

ELEVATION

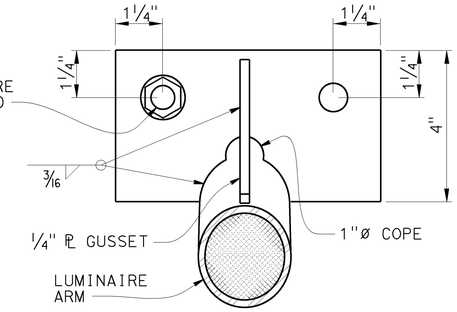

SECTION A-A

DETAIL A
TIE-ROD AT LUMINAIRE ARM
NO SCALE

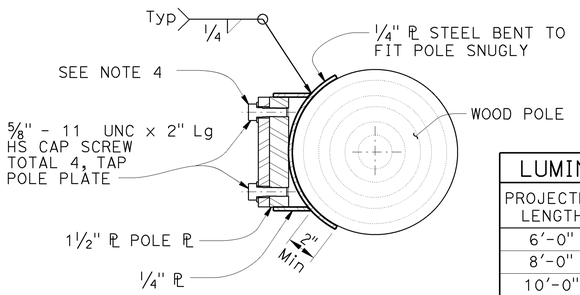

SECTION E-E

LUMINAIRE MAST ARM DATA			
PROJECTED LENGTH	N RISE	Min OD AT POLE	NOMINAL THICKNESS
6'-0"	2'-0"±	3 1/4"	0.1196"
8'-0"	2'-6"±	3 1/2"	
10'-0"	3'-3"±	3 7/8"	
12'-0"	4'-3"±		

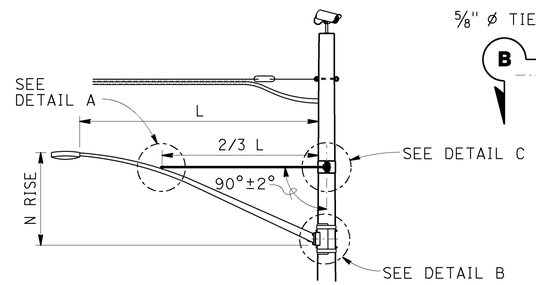

LUMINAIRE MAST ARM

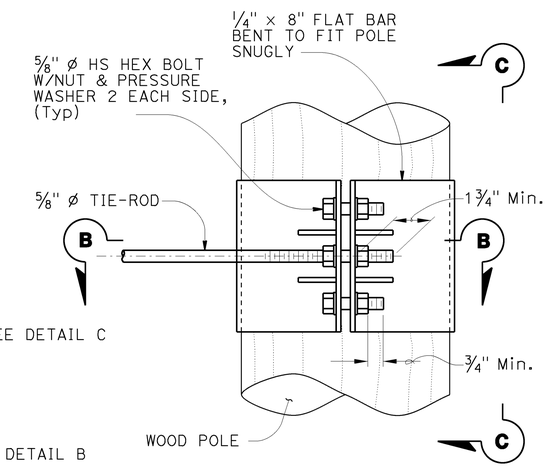

ELEVATION

NOTE:
Not all screw and bolt heads shown for clarity.

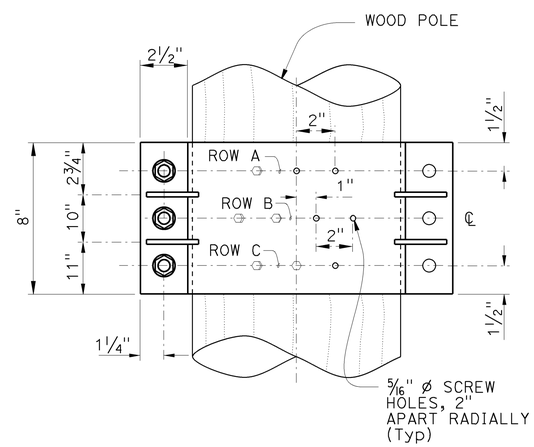

VIEW C-C

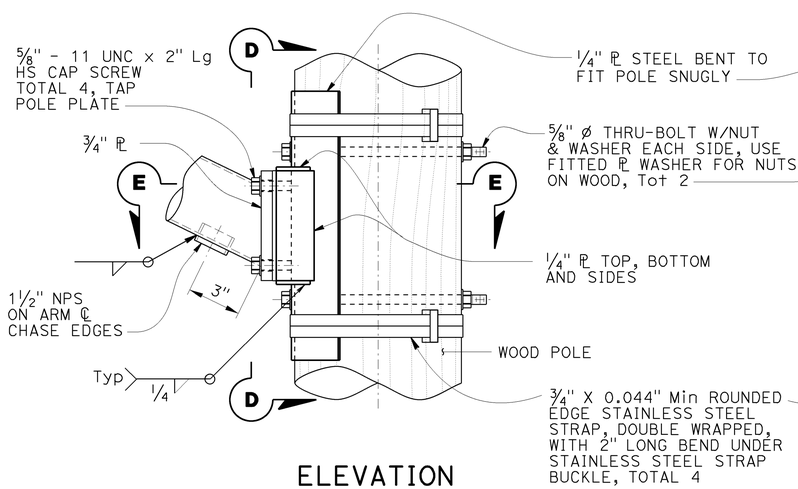

ELEVATION

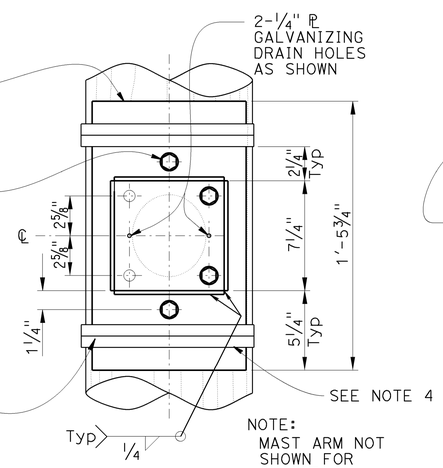

NOTE:
MAST ARM NOT SHOWN FOR CLARITY

VIEW D-D

DETAIL B
ARM CONNECTION DETAILS
NO SCALE

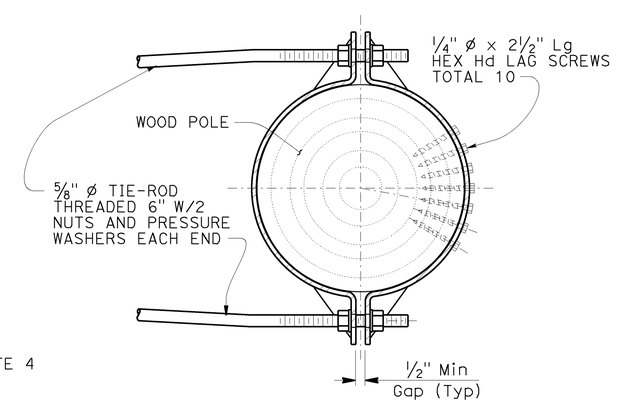

SECTION B-B

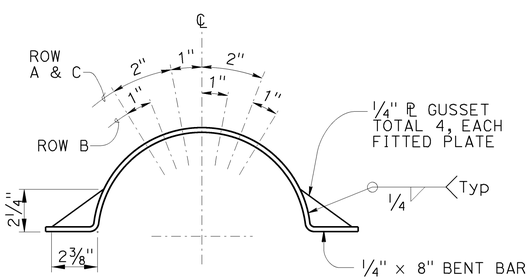

LAG SCREW AND GUSSET PLATE LAYOUT

DETAIL C
TIE-ROD AT POLE
NO SCALE

NOTE:
THE CONTRACTOR SHALL VERIFY ALL CONTROLLING FIELD DIMENSIONS BEFORE ORDERING OR FABRICATING ANY MATERIAL.

NO SCALE

BRANCH CHIEF DAVID NEUMANN	DESIGN	BY A MALAK	CHECKED T MARCHENKO
	DETAILS	BY H NGUYEN	CHECKED A MALAK
	QUANTITIES	BY	CHECKED

STATE OF CALIFORNIA
DEPARTMENT OF TRANSPORTATION

DIVISION OF ENGINEERING SERVICES
DESIGN AND TECHNICAL SERVICES
SPECIAL DESIGNS BRANCH
B

BRIDGE NO. N/A
POST MILE 10.9/11.1

TEMPORARY WOOD POLES
DETAILS No. 2

SES-6

STRUCTURES DESIGN SPECIAL DESIGN SHEET (ENGLISH) (REV. 09-01-10)

ORIGINAL SCALE IN INCHES FOR REDUCED PLANS 0 1 2 3

UNIT:
PROJECT NUMBER & PHASE: 0600020388
CONTRACT NO.: 06-432601

DISREGARD PRINTS BEARING EARLIER REVISION DATES

REVISION DATES 12/2/13

SHEET 6 OF 10

FILE => 06-432601-u-ses6.dgn

USERNAME => s128478 DATE PLOTTED => 30-APR-2014 TIME PLOTTED => 08:38

DIST	COUNTY	ROUTE	POST MILES TOTAL PROJECT	SHEET No.	TOTAL SHEETS
06	Fre	33	10.9/11.1	46	104

REGISTERED CIVIL ENGINEER — DATE 12-18-13

4-28-14
PLANS APPROVAL DATE

REGISTERED PROFESSIONAL ENGINEER — ATMAN MALAK — No. C73369 — Exp. 12-31-2014 — CIVIL — STATE OF CALIFORNIA

The State of California or its officers or agents shall not be responsible for the accuracy or completeness of electronic copies of this plan sheet.

NOTES:

1. Minimum allowable tension capacity "Qa" = 8,900 lbs.
2. Minimum installation torque "T" = 1780 lbs-ft.
3. Helical anchor detail may be used in place of expanded steel anchors.

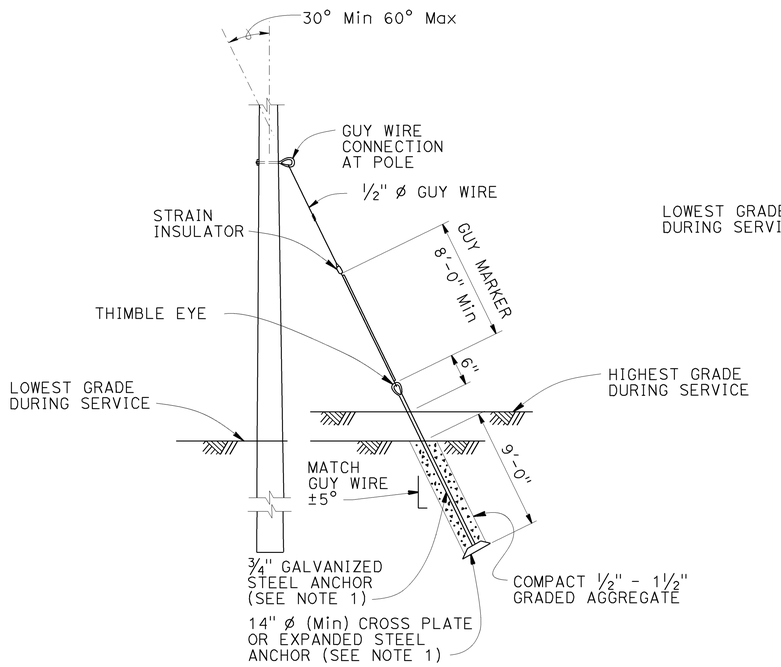

EXPANDED STEEL ANCHOR DETAIL

SEE NOTE 3

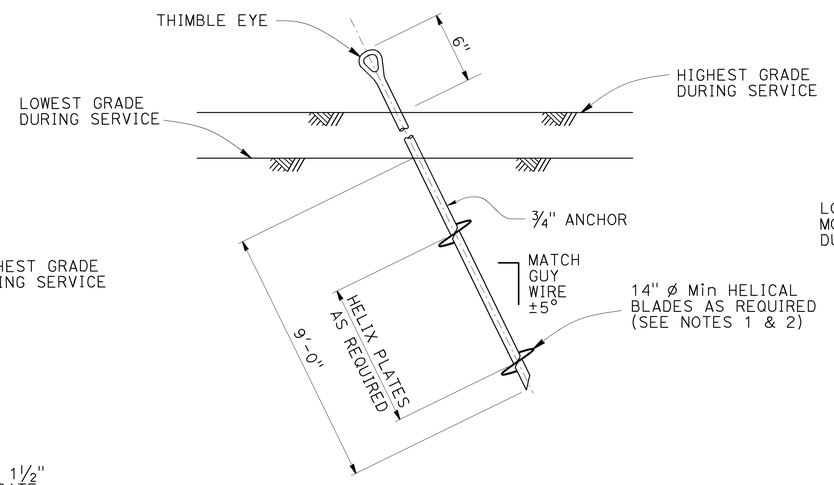

HELICAL ANCHOR DETAIL

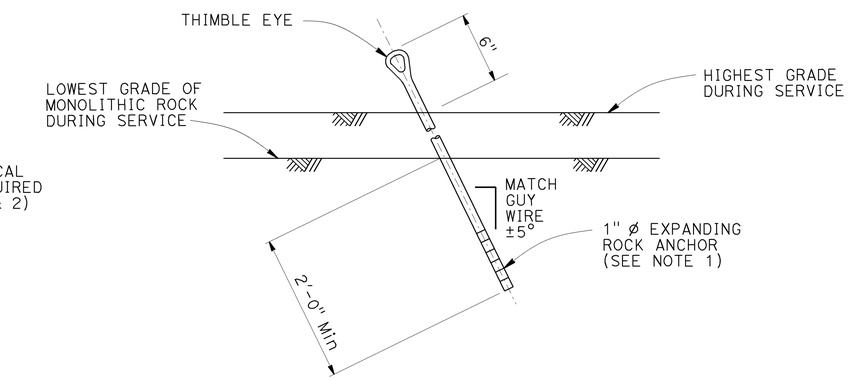

EXPANDING ROCK ANCHOR DETAIL

NOTE:
THE CONTRACTOR SHALL VERIFY ALL CONTROLLING FIELD DIMENSIONS BEFORE ORDERING OR FABRICATING ANY MATERIAL.

NO SCALE

BRANCH CHIEF DAVID NEUMANN	DESIGN	BY A MALAK	CHECKED T MARCHENKO
	DETAILS	BY H NGUYEN	CHECKED A MALAK
	QUANTITIES	BY	CHECKED

STATE OF CALIFORNIA
DEPARTMENT OF TRANSPORTATION

DIVISION OF ENGINEERING SERVICES
DESIGN AND TECHNICAL SERVICES
SPECIAL DESIGNS BRANCH
B

BRIDGE NO. N/A
POST MILE 10.9/11.1

TEMPORARY WOOD POLES
DETAILS No. 3

SES-7

STRUCTURES DESIGN SPECIAL DESIGN SHEET (ENGLISH) (REV. 09-01-10)

ORIGINAL SCALE IN INCHES FOR REDUCED PLANS 0 1 2 3

UNIT:
PROJECT NUMBER & PHASE: 0600020388
CONTRACT NO.: 06-432601

DISREGARD PRINTS BEARING EARLIER REVISION DATES

REVISION DATES 12/4/13 — SHEET 7 OF 10

FILE => 06-432601-u-ses7.dgn

USERNAME => s128478 DATE PLOTTED => 30-APR-2014 TIME PLOTTED => 08:38

DIST	COUNTY	ROUTE	POST MILES TOTAL PROJECT	SHEET No.	TOTAL SHEETS
06	Fre	33	10.9/11.1	47	104

REGISTERED CIVIL ENGINEER — DATE 12-18-13

4-28-14
PLANS APPROVAL DATE

REGISTERED PROFESSIONAL ENGINEER — ATMAN MALAK — No. C73369 — Exp. 12-31-2014 — CIVIL — STATE OF CALIFORNIA

The State of California or its officers or agents shall not be responsible for the accuracy or completeness of electronic copies of this plan sheet.

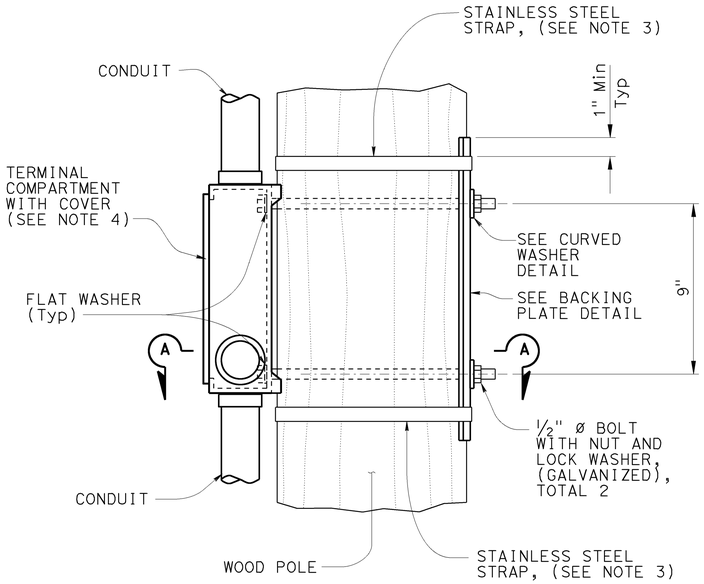

ELEVATION

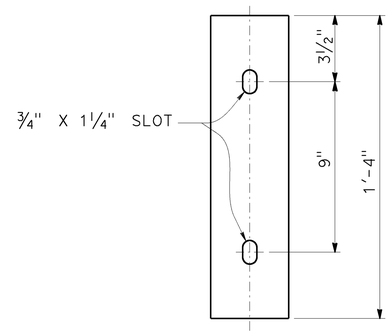

ELEVATION

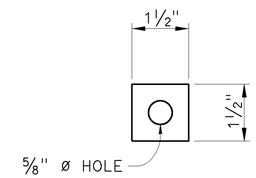

ELEVATION

PLAN

BACKING PLATE DETAIL

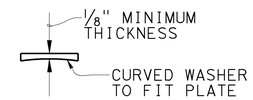

PLAN

CURVED WASHER DETAIL

NOTES:

1. Verify pole dimensions at terminal compartment for fabrication of backing plate and curved washer.
2. Backing plate to be galvanized after fabrication.
3. ¾" × 0.044" minimum, rounded edge stainless steel straps, double wrapped with 2" long bend under stainless steel strap buckle.
4. For details not shown see Standard Plan ES-4D.

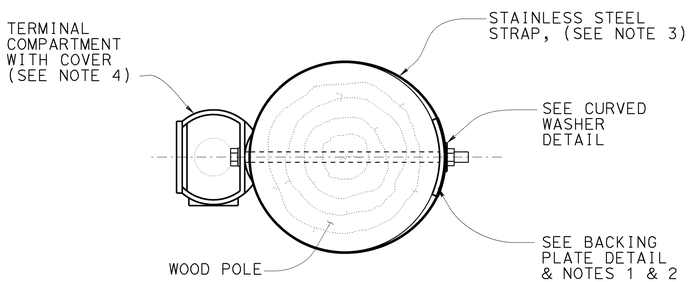

SECTION A-A

SIDE MOUNTING TERMINAL COMPARTMENT

NOTE:
THE CONTRACTOR SHALL VERIFY ALL CONTROLLING FIELD DIMENSIONS BEFORE ORDERING OR FABRICATING ANY MATERIAL.

NO SCALE

BRANCH CHIEF DAVID NEUMANN	DESIGN	BY A MALAK	CHECKED T MARCHENKO
	DETAILS	BY H NGUYEN	CHECKED A MALAK
	QUANTITIES	BY	CHECKED

STATE OF CALIFORNIA
DEPARTMENT OF TRANSPORTATION

DIVISION OF ENGINEERING SERVICES
DESIGN AND TECHNICAL SERVICES
SPECIAL DESIGNS BRANCH
B

BRIDGE NO. N/A
POST MILE 10.9/11.1

TEMPORARY WOOD POLES
DETAILS No. 4

SES-8

STRUCTURES DESIGN SPECIAL DESIGN SHEET (ENGLISH) (REV. 09-01-10)

ORIGINAL SCALE IN INCHES FOR REDUCED PLANS 0 1 2 3

UNIT:
PROJECT NUMBER & PHASE: 0600020388
CONTRACT NO.: 06-432601

DISREGARD PRINTS BEARING EARLIER REVISION DATES → 12/2/13

REVISION DATES | SHEET 8 | OF 10

FILE => 06-432601-u-ses8.dgn

USERNAME => s128478 DATE PLOTTED => 30-APR-2014 TIME PLOTTED => 08:38

DIST	COUNTY	ROUTE	POST MILES TOTAL PROJECT	SHEET No.	TOTAL SHEETS
06	Fre	33	10.9/11.1	48	104

REGISTERED CIVIL ENGINEER — DATE 12-18-13

4-28-14
PLANS APPROVAL DATE

The State of California or its officers or agents shall not be responsible for the accuracy or completeness of electronic copies of this plan sheet.

REGISTERED PROFESSIONAL ENGINEER — ATMAN MALAK — No. C73369 — Exp. 12-31-2014 — CIVIL — STATE OF CALIFORNIA

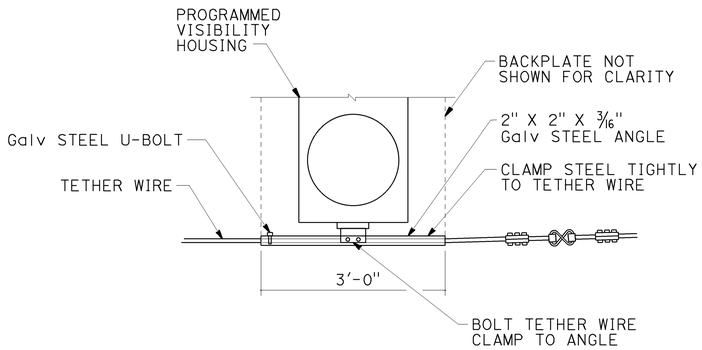

TETHER WIRE ATTACHMENT FOR PROGRAMMED VISIBILITY SIGNAL FACE

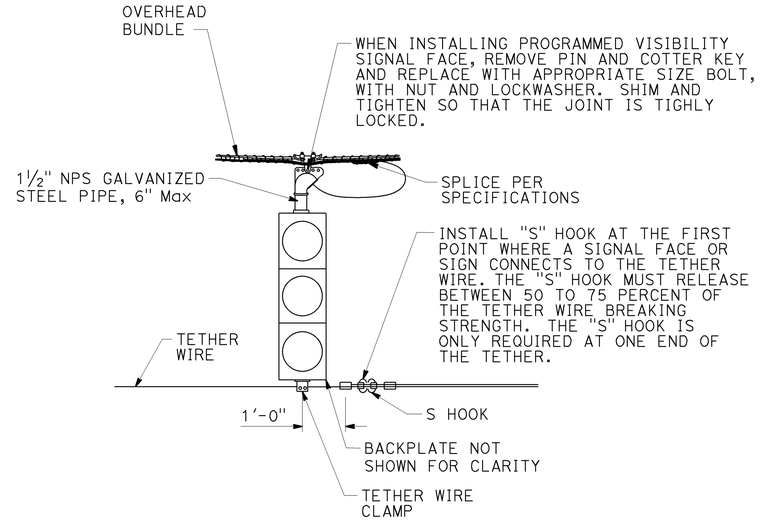

SIGNAL FACE SUPPORT

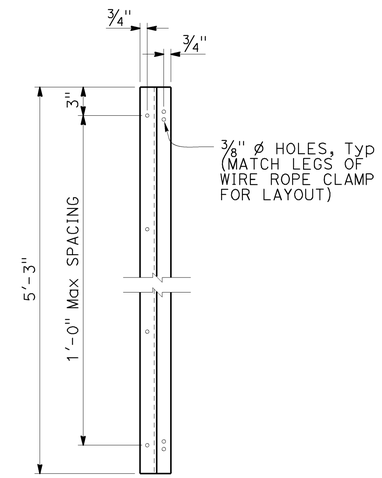

Z-BAR ELEVATION

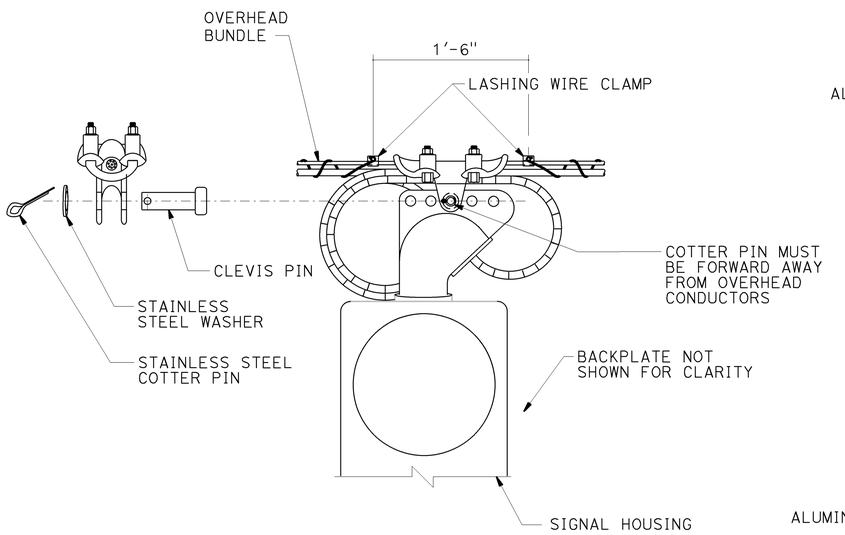

MESSENGER WIRE CLAMP COTTER PIN DETAIL

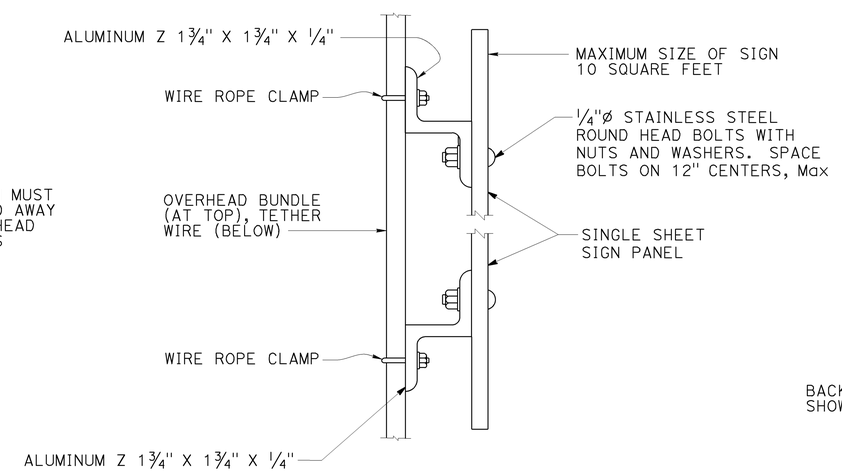

THE OVERLAPPED CONNECTION OF ADJUSTABLE HANGERS MUST USE A MINIMUM OF 2 BOLTS WITH A MINIMUM SPACING BETWEEN BOLTS OF 2"

SIGN MOUNTING DETAIL

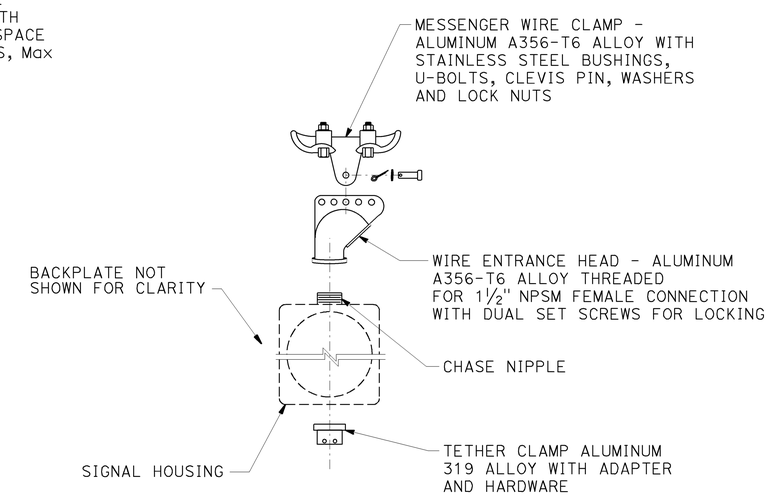

SIGNAL FACE SUPPORT EXPLODED VIEW

NOTE:
THE CONTRACTOR SHALL VERIFY ALL CONTROLLING FIELD DIMENSIONS BEFORE ORDERING OR FABRICATING ANY MATERIAL.

NO SCALE

BRANCH CHIEF DAVID NEUMANN	DESIGN	BY A MALAK	CHECKED T MARCHENKO
	DETAILS	BY H NGUYEN	CHECKED A MALAK
	QUANTITIES	BY	CHECKED

STATE OF CALIFORNIA
DEPARTMENT OF TRANSPORTATION

DIVISION OF ENGINEERING SERVICES
DESIGN AND TECHNICAL SERVICES
SPECIAL DESIGNS BRANCH — B

BRIDGE NO. N/A
POST MILE 10.9/11.1

TEMPORARY WOOD POLES
DETAILS No. 5

SES-9

STRUCTURES DESIGN SPECIAL DESIGN SHEET (ENGLISH) (REV. 09-01-10)

ORIGINAL SCALE IN INCHES FOR REDUCED PLANS 0 1 2 3

UNIT:
PROJECT NUMBER & PHASE: 0600020388
CONTRACT NO.: 06-432601

DISREGARD PRINTS BEARING EARLIER REVISION DATES → 12/2/13

REVISION DATES | SHEET 9 | OF 10

FILE => 06-432601-u-ses9.dgn

USERNAME => s128478 DATE PLOTTED => 30-APR-2014 TIME PLOTTED => 08:38

DIST	COUNTY	ROUTE	POST MILES TOTAL PROJECT	SHEET No.	TOTAL SHEETS
06	Fre	33	10.9/11.1	49	104

REGISTERED CIVIL ENGINEER — DATE 12-18-13

4-28-14
PLANS APPROVAL DATE

REGISTERED PROFESSIONAL ENGINEER — AIMAN MALAK — No. C73369 — Exp. 12-31-2014 — CIVIL — STATE OF CALIFORNIA

The State of California or its officers or agents shall not be responsible for the accuracy or completeness of electronic copies of this plan sheet.

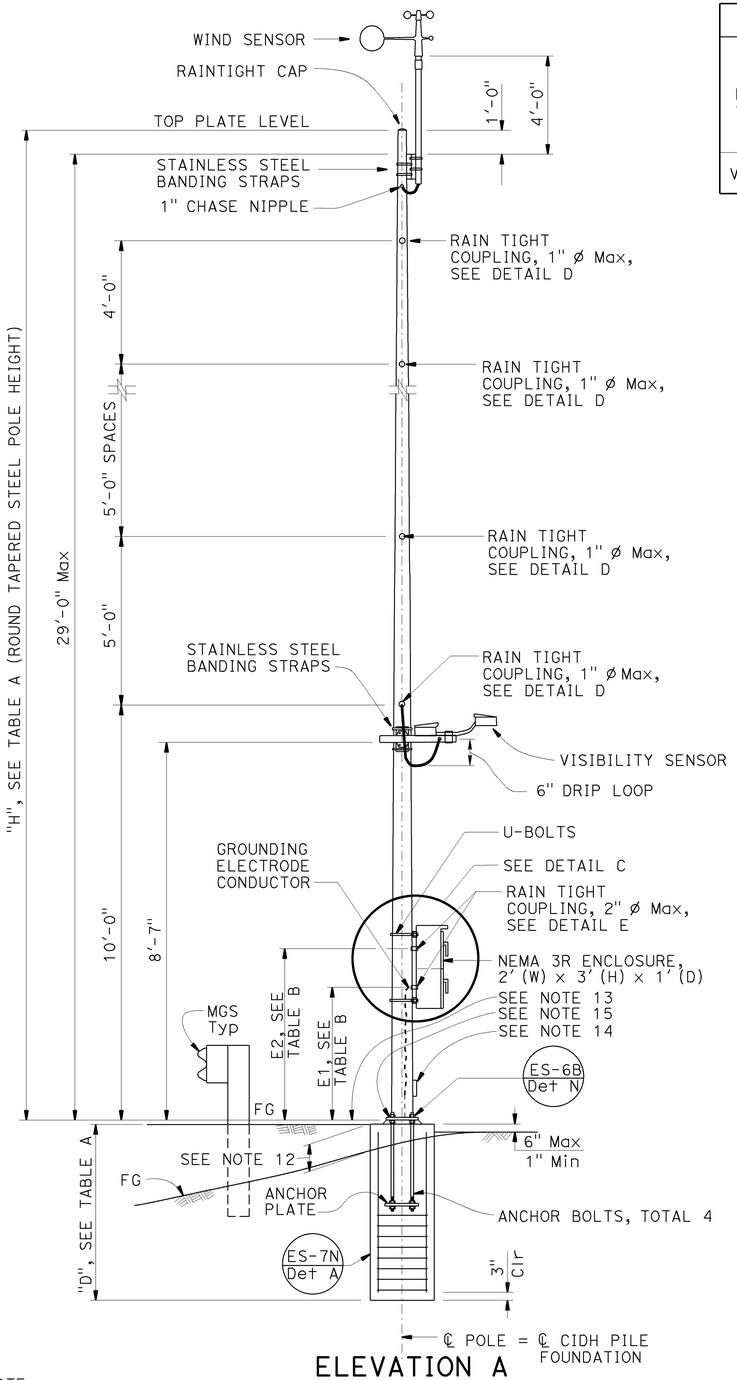

ELEVATION A

NOTE:
THE CONTRACTOR SHALL VERIFY ALL CONTROLLING FIELD DIMENSIONS BEFORE ORDERING OR FABRICATING ANY MATERIAL.

TABLE A

POLE TYPE	POLE DATA				BASE PLATE DATA				"D" 2'-6" ø CIDH Pile	
	HEIGHT "H"	Min OD		THICKNESS	"C"	THICKNESS	ANCHOR BOLTS SIZE	BC = BOLT CIRCLE	LEVEL GROUND	UP TO 2:1
		BASE	TOP							
VDS 30	30'	8"	3⅞"	.1793"	1'-1½"	1½"	1½"ø x 3'-0"	1'-1½"	11'-0"	13'-0"

TABLE B

POLE TYPE	COUPLING	
	E1(Max)	E2(Max)
VDS 30	3'-6"	4'-9"

TABLE C

SPREAD FOOTING		
GROUND	FOOTING SIZE (LENGTH x WIDTH x DEPTH)	REINFORCEMENT TOP & BOTTOM
LEVEL	8'-6" x 8'-6" x 2'-0"	12 - #5 EW
UP TO 2:1	10'-0" x 10'-0" x 2'-0"	15 - #5 EW

TABLE D - LIMITATION ON ATTACHMENTS *

LOCATION	MAXIMUM TOTAL EPA PER LEVEL (SQUARE FEET)	MAXIMUM TOTAL WEIGHT (lb)
ENCLOSURE	10	100
VISIBILITY SENSOR	4	100
WIND SENSOR **	2.5	50

* MAXIMUM HORIZONTAL EXTENT BEYOND POLE FACE IS 4 FEET.
** MAXIMUM EXTENT ABOVE TOP PLATE IS 3 FEET.

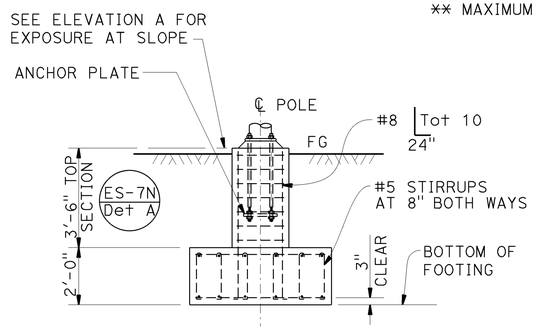

ALTERNATIVE FOOTING ELEVATION B

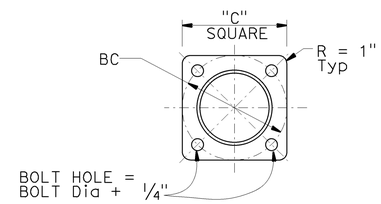

BASE PLATE DETAIL B

NOTES:

1. All steel shall be galvanized after fabrication.
2. During pole installation the post shall be raked as necessary with the use of leveling nuts to provide a plumb pole axis.
3. The foundation shall be treated as level ground condition if the slope inclination is flatter than 4 : 1 (Horizontal : Vertical).
4. For devices mounted and mounting heights, see TABLE B.
5. Design Specification: AASHTO Standard Specification for Structural support for highway signs, luminaires and traffic signal, Fifth Edition (LTS-5).
6. Wind Loadings: 100 mph (3-second gust).
7. Unit Stresses (Structural Steel):
   a. fy = 55,000 psi (tapered steel tube)
   b. fy = 50,000 psi (unless otherwise noted)
8. Anchor bolts: fy = 55,000 psi
9. Unit Stresses (Reinforced concrete):
   a. f'c = 3,600 psi
   b. fy = 60,000 psi
10. The Contractor shall verify all controlling field dimensions before ordering or fabricating any material.
11. When no barriers are used, the NEMA 3R enclosure shall be located on the downstream side and perpendicular to the roadway.
12. 1'-3" (Max) for sloped finished grade.
13. Bottom of base plate.
14. Handhole ES-7M Det B / ES-7M Det A
15. ES-70 Elev B
16. U-channel with bracket.

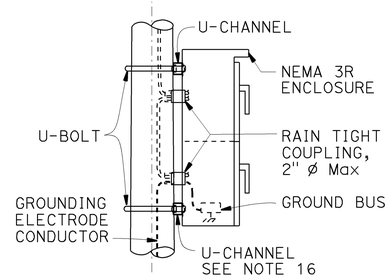

DETAIL C

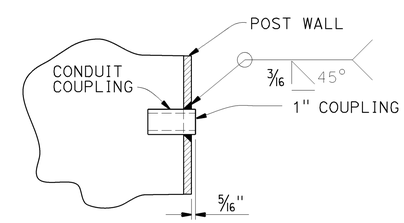

1" COUPLING DETAIL D

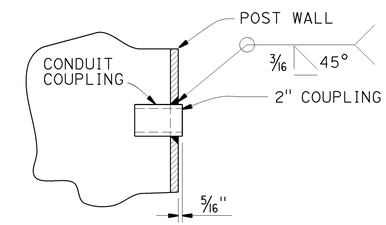

2" COUPLING DETAIL E

NO SCALE

BRANCH CHIEF	DAVID NEUMANN	DESIGN	BY A MALAK	CHECKED T MARCHENKO
		DETAILS	BY H NGUYEN	CHECKED A MALAK
		QUANTITIES	BY	CHECKED

STATE OF CALIFORNIA
DEPARTMENT OF TRANSPORTATION

DIVISION OF ENGINEERING SERVICES
DESIGN AND TECHNICAL SERVICES
SPECIAL DESIGNS BRANCH
B

BRIDGE NO. N/A
POST MILE 10.9/11.1

ELECTRICAL SYSTEMS
ROADSIDE WEATHER INFORMATION SYSTEM POLE DETAILS

SES-10

STRUCTURES DESIGN SPECIAL DESIGN SHEET (ENGLISH) (REV. 09-01-10)

ORIGINAL SCALE IN INCHES FOR REDUCED PLANS 0 1 2 3

UNIT:
PROJECT NUMBER & PHASE: 0600020388
CONTRACT NO.: 06-432601

DISREGARD PRINTS BEARING EARLIER REVISION DATES

REVISION DATES 12/9/13

SHEET 10 OF 10

FILE => 06-432601-u-ses10.dgn

USERNAME => s128478 DATE PLOTTED => 30-APR-2014 TIME PLOTTED => 08:38

M

Maint	MAINTENANCE
Max	MAXIMUM
MB	METAL BEAM
MBB	METAL BEAM BARRIER
MBGR	METAL BEAM GUARD RAILING
Med	MEDIAN
MGS	MIDWEST GUARDRAIL SYSTEM
MH	MANHOLE
Min	MINIMUM
Misc	MISCELLANEOUS
Misc I & S	MISCELLANEOUS IRON AND STEEL
Mkr	MARKER
Mod	MODIFIED, MODIFY
Mon	MONUMENT
MP	METAL PLATE
MPGR	METAL PLATE GUARD RAILING
MR	MOVEMENT RATING
MSE	MECHANICALLY STABILIZED EMBANKMENT
Mt	MOUNTAIN, MOUNT
Mtl	MATERIAL
MVP	MAINTENANCE VEHICLE PULLOUT

N

N	NORTH
NB	NORTHBOUND
No.	NUMBER (MUST HAVE PERIOD)
Nos.	NUMBERS (MUST HAVE PERIOD)
NPS	NOMINAL PIPE SIZE
NS	NEAR SIDE
NSP	NEW STANDARD PLAN
NTS	NOT TO SCALE

O

Oblr	OBLITERATE
OC	OVERCROSSING
OD	OUTSIDE DIAMETER
OF	OUTSIDE FACE
OG	ORIGINAL GROUND
OGAC	OPEN GRADED ASPHALT CONCRETE
OGFC	OPEN GRADED FRICTION COURSE
OH	OVERHEAD
OHWM	ORDINARY HIGH WATER MARK
O-O	OUT TO OUT
Opp	OPPOSITE
OSD	OVERSIDE DRAIN

P

P	PAGE
PAP	PERFORATED ALUMINUM PIPE
PB	PULL BOX
PC	POINT OF CURVATURE, PRECAST
PCC	POINT OF COMPOUND CURVE, PORTLAND CEMENT CONCRETE
PCMS	PORTABLE CHANGEABLE MESSAGE SIGN
PCP	PERFORATED CONCRETE PIPE, PRESTRESSED CONCRETE PIPE
PCVC	POINT OF COMPOUND VERTICAL CURVE
PEC	PERMIT TO ENTER AND CONSTRUCT
Ped	PEDESTRIAN
Ped OC	PEDESTRIAN OVERCROSSING
Ped UC	PEDESTRIAN UNDERCROSSING
Perm Mtl	PERMEABLE MATERIAL

P continued

PG	PROFILE GRADE
PI	POINT OF INTERSECTION
PJP	PARTIAL JOINT PENETRATION
Pkwy	PARKWAY
ℙ,PL	PLATE
P/L	PROPERTY LINE
PM	POST MILE, TIME FROM NOON TO MIDNIGHT
PN	PAVING NOTCH
POC	POINT OF HORIZONTAL CURVE
POT	POINT OF TANGENT
POVC	POINT OF VERTICAL CURVE
PP	PIPE PILE, PLASTIC PIPE, POWER POLE
PPL	PREFORMED PERMEABLE LINER
PPP	PERFORATED PLASTIC PIPE
PRC	POINT OF REVERSE CURVE
PRF	PAVEMENT REINFORCING FABRIC
PRVC	POINT OF REVERSE VERTICAL CURVE
PS&E	PLANS, SPECIFICATIONS AND ESTIMATES
PS, P/S	PRESTRESSED
PSP	PERFORATED STEEL PIPE
PT	POINT OF TANGENCY
PVC	POLYVINYL CHLORIDE
Pvmt	PAVEMENT

Q

Qty	QUANTITY

R

R	RADIUS
R & D	REMOVE AND DISPOSE
R & S	REMOVE AND SALVAGE
R/C	RATE OF CHANGE
RCA	REINFORCED CONCRETE ARCH
RCB	REINFORCED CONCRETE BOX
RCP	REINFORCED CONCRETE PIPE
RCPA	REINFORCED CONCRETE PIPE ARCH
Rd	ROAD
Reinf	REINFORCED, REINFORCEMENT, REINFORCING
Rel	RELOCATE
Repl	REPLACEMENT
Ret	RETAINING
Rev	REVISED, REVISION
Rdwy	ROADWAY
RHMA	RUBBERIZED HOT MIX ASPHALT
Riv	RIVER
RM	ROAD-MIXED
RP	RADIUS POINT, REFERENCE POINT
RR	RAILROAD
RSP	ROCK SLOPE PROTECTION, REVISED STANDARD PLAN
Rt	RIGHT
Rte	ROUTE
RW	REDWOOD, RETAINING WALL
R/W	RIGHT OF WAY
Rwy	RAILWAY

S

S	SOUTH, SUPPLEMENT
SAE	STRUCTURE APPROACH EMBANKMENT
Salv	SALVAGE
SAPP	STRUCTURAL ALUMINUM PLATE PIPE
SB	SOUTHBOUND
SC	SAND CUSHION
SCSP	SLOTTED CORRUGATED STEEL PIPE
SD	STORM DRAIN
Sec	SECOND, SECTION
Sep	SEPARATION
SG	SUBGRADE
Shld	SHOULDER
Sht	SHEET
Sim	SIMILAR
₤	STATION LINE
SM	SELECTED MATERIAL
Spec	SPECIAL, SPECIFICATIONS
SPP	SLOTTED PLASTIC PIPE
SS	SLOPE STAKE
SSBM	STRAP AND SADDLE BRACKET METHOD
SSD	STRUCTURAL SECTION DRAIN
SSPA	STRUCTURAL STEEL PLATE ARCH
SSPP	STRUCTURAL STEEL PLATE PIPE
SSPPA	STRUCTURAL STEEL PLATE PIPE ARCH
SSRP	STEEL SPIRAL RIB PIPE
St	STREET
Sta	STATION
STBB	SINGLE THRIE BEAM BARRIER
Std	STANDARD
Str	STRUCTURE
Surf	SURFACING
SW	SIDEWALK, SOUND WALL
Swr	SEWER
Sym	SYMMETRICAL
S4S	SURFACE 4 SIDES

T

T	SEMI-TANGENT
Tan	TANGENT
TBB	THRIE BEAM BARRIER
Tbr	TIMBER
TC	TOP OF CURB
TCB	TRAFFIC CONTROL BOX
TCE	TEMPORARY CONSTRUCTION EASEMENT
Tel	TELEPHONE
Temp	TEMPORARY
TG	TOP OF GRADE
Tot	TOTAL
TP	TELEPHONE POLE
TPB	TREATED PERMEABLE BASE
TPM	TREATED PERMEABLE MATERIAL
Trans	TRANSITION

T continued

TS	TRANSVERSE, TRAFFIC SIGNAL, TUBULAR STEEL
Typ	TYPICAL

U

UC	UNDERCROSSING
UD	UNDERDRAIN
UG	UNDERGROUND
UON	UNLESS OTHERWISE NOTED
UP	UNDERPASS

V

V	VALVE, DESIGN SPEED
Var	VARIABLE, VARIES
VC	VERTICAL CURVE
VCP	VITRIFIED CLAY PIPE
Vert	VERTICAL
Via	VIADUCT
Vol	VOLUME

W

W	WEST, WIDTH
WB	WESTBOUND
WH	WEEP HOLE
WM	WIRE MESH
WS	WATER SURFACE
WSP	WELDED STEEL PIPE
Wt	WEIGHT
WV	WATER VALVE
WW	WINGWALL
WWLOL	WINGWALL LAYOUT LINE

X

X Sec	CROSS SECTION
Xing	CROSSING

Y

Yr	YEAR
Yrs	YEARS

Dist	COUNTY	ROUTE	POST MILES TOTAL PROJECT	SHEET No.	TOTAL SHEETS
06	Fre	33	10.9/11.1	50	104

Grace M. Tsushima
REGISTERED CIVIL ENGINEER

July 19, 2013
PLANS APPROVAL DATE

REGISTERED PROFESSIONAL ENGINEER Grace M. Tsushima No. C49814 Exp. 9-30-14 CIVIL STATE OF CALIFORNIA

THE STATE OF CALIFORNIA OR ITS OFFICERS OR AGENTS SHALL NOT BE RESPONSIBLE FOR THE ACCURACY OR COMPLETENESS OF SCANNED COPIES OF THIS PLAN SHEET.

TO ACCOMPANY PLANS DATED 4-28-14

2010 REVISED STANDARD PLAN RSP A10B

UNIT OF MEASUREMENT SYMBOLS:

Some of the symbols used in the project plan quantity tables and in the Bid Item List are:

TABLE A

SYMBOL USED	DEFINITIONS
ACRE	ACRE
CF	CUBIC FOOT
CY	CUBIC YARD
EA	EACH
GAL	GALLON
LB	POUND
LF	LINEAR FOOT
SQFT	SQUARE FOOT
SQYD	SQUARE YARD
STA	100 FEET
TAB	TABLET
TON	2,000 POUNDS

Some of the symbols used in the plans other than in the project plan quantity tables are:

TABLE B

SYMBOL USED	DEFINITIONS
ksi	KIPS PER SQUARE INCH
ksf	KIPS PER SQUARE FOOT
psi	POUNDS PER SQUARE INCH
psf	POUNDS PER SQUARE FOOT
lb/ft^3, pcf	POUNDS PER CUBIC FOOT
tsf	TONS PER SQUARE FOOT
mph, MPH *	MILES PER HOUR
ø	NOMINAL DIAMETER
oz	OUNCE
lb	POUND
kip	1,000 POUNDS
cal	CALORIE
ft	FOOT OR FEET
gal	GALLON

* For use on a sign panel only

STATE OF CALIFORNIA
DEPARTMENT OF TRANSPORTATION

ABBREVIATIONS (SHEET 2 OF 2)

NO SCALE

RSP A10B DATED JULY 19, 2013 SUPERSEDES STANDARD PLAN A10B DATED MAY 20, 2011 - PAGE 2 OF THE STANDARD PLANS BOOK DATED 2010.

REVISED STANDARD PLAN RSP A10B

6-7-13

Dist	COUNTY	ROUTE	POST MILES TOTAL PROJECT	SHEET No.	TOTAL SHEETS
06	Fre	33	10.9/11.1	51	104

REGISTERED CIVIL ENGINEER

July 20, 2012
PLANS APPROVAL DATE

REGISTERED PROFESSIONAL ENGINEER
Roberta L. McLaughlin
No. C40375
Exp. 3-31-13
CIVIL
STATE OF CALIFORNIA

THE STATE OF CALIFORNIA OR ITS OFFICERS OR AGENTS SHALL NOT BE RESPONSIBLE FOR THE ACCURACY OR COMPLETENESS OF SCANNED COPIES OF THIS PLAN SHEET.

TO ACCOMPANY PLANS DATED 4-28-14

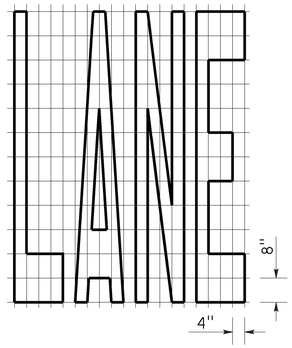

A=24 ft²

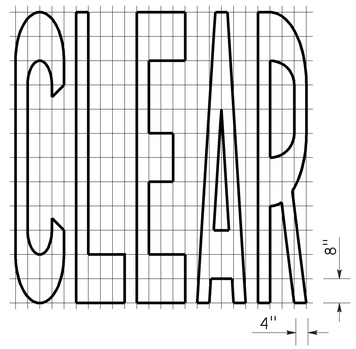

A=27 ft²

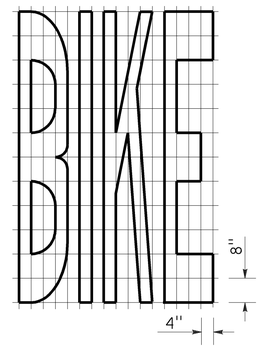

A=21 ft²

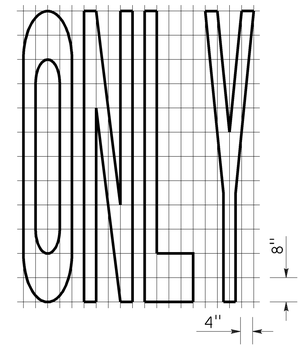

A=22 ft²

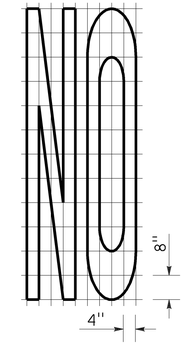

A=14 ft²

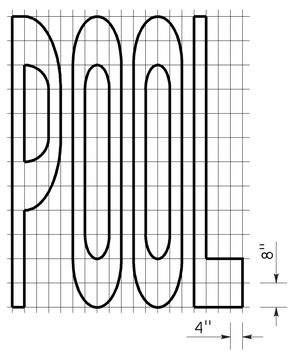

A=23 ft²

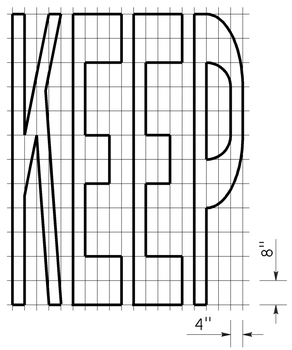

A=24 ft²

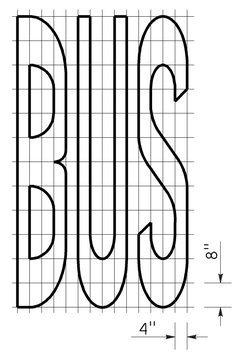

A=20 ft²

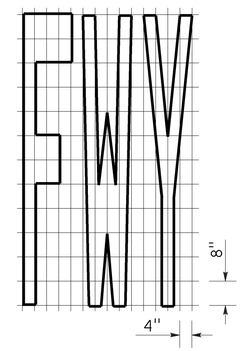

A=16 ft²

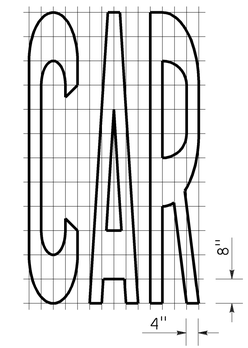

A=17 ft²

WORD MARKINGS			
ITEM	ft²	ITEM	ft²
LANE	24	NO	14
POOL	23	BIKE	21
CAR	17	BUS	20
CLEAR	27	ONLY	22
KEEP	24	FWY	16

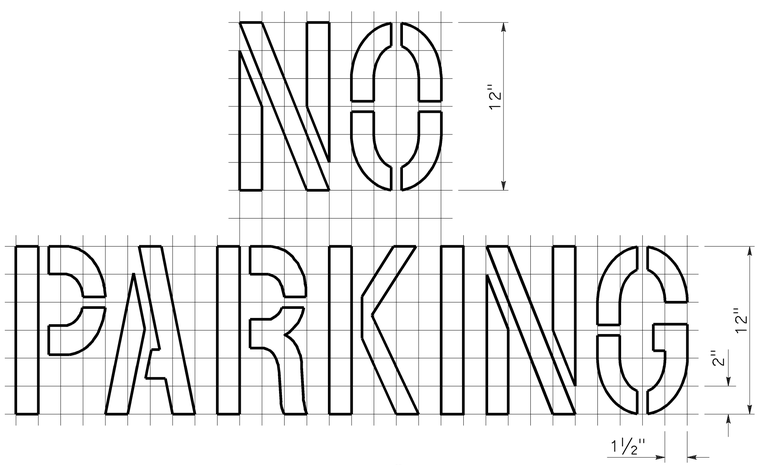

A=2 ft²
See Notes 6 and 7

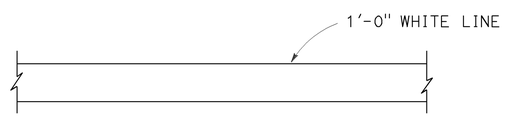

LIMIT LINE (STOP LINE)

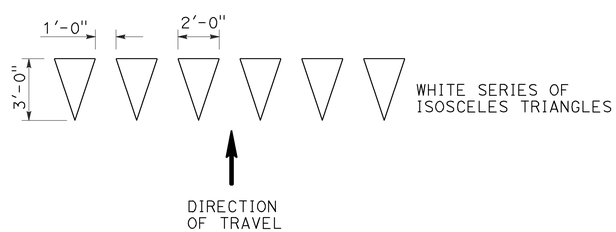

YIELD LINE

NOTES:

1. If a message consists of more than one word, it should read "UP", i.e., the first word should be nearest the driver.
2. The space between words should be at least four times the height of the characters for low speed roads, but not more than ten times the height of the characters. The space may be reduced appropriately where there is limited space because of local conditions.
3. Minor variations in dimensions may be accepted by the Engineer.
4. Portions of a letter, number or symbol may be separated by connecting segments not to exceed 2" in width.
5. The words "NO PARKING" pavement marking is to be used for parking facilities. For typical locations of markings, see Standard Plans A90A and A90B.
6. The words "NO PARKING", shall be painted in white letters no less than 1'-0" high on a contrasting background and located so that it is visible to traffic enforcement officials.

STATE OF CALIFORNIA
DEPARTMENT OF TRANSPORTATION

PAVEMENT MARKINGS WORDS, LIMIT AND YIELD LINES

NO SCALE

RSP A24E DATED JULY 20, 2012 SUPERSEDES STANDARD PLAN A24E
DATED MAY 20, 2011 - PAGE 17 OF THE STANDARD PLANS BOOK DATED 2010.

REVISED STANDARD PLAN RSP A24E

2010 REVISED STANDARD PLAN RSP A24E

6-12-12

Dist	COUNTY	ROUTE	POST MILES TOTAL PROJECT	SHEET No.	TOTAL SHEETS
06	Fre	33	10.9/11.1	52	104

Randell D. Hiatt
REGISTERED CIVIL ENGINEER

July 19, 2013
PLANS APPROVAL DATE

REGISTERED PROFESSIONAL ENGINEER
Randell D. Hiatt
No. C50200
Exp. 6-30-15
CIVIL
STATE OF CALIFORNIA

THE STATE OF CALIFORNIA OR ITS OFFICERS OR AGENTS SHALL NOT BE RESPONSIBLE FOR THE ACCURACY OR COMPLETENESS OF SCANNED COPIES OF THIS PLAN SHEET.

TO ACCOMPANY PLANS DATED 4-28-14

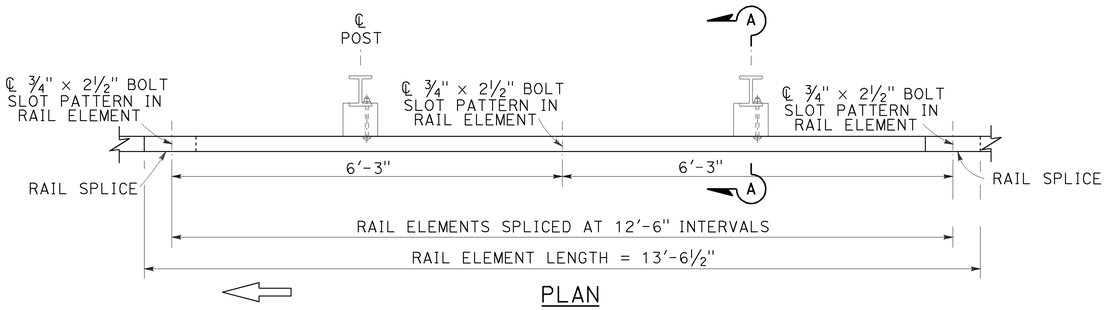

PLAN

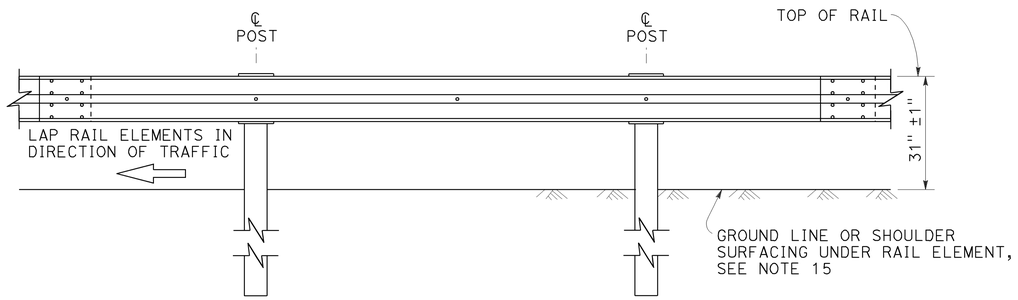

ELEVATION

MIDWEST GUARDRAIL SYSTEM WITH STEEL POSTS AND NOTCHED WOOD OR NOTCHED RECYCLED PLASTIC BLOCKS

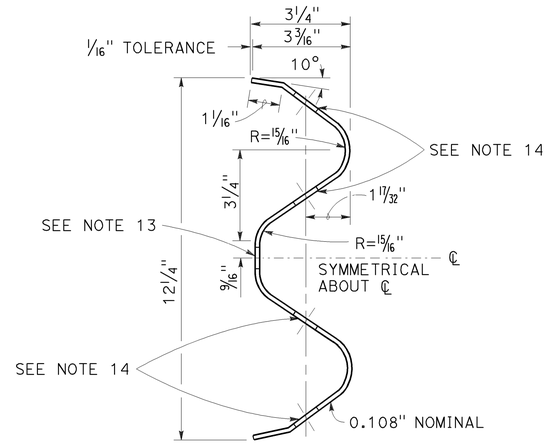

SECTION THRU RAIL ELEMENT

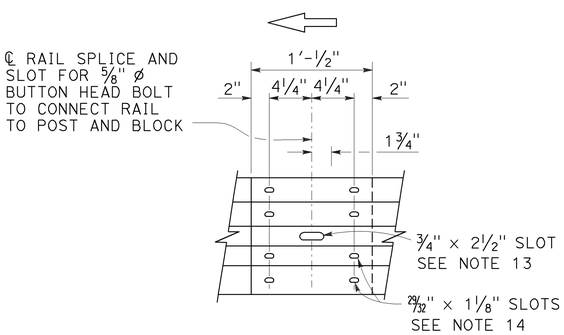

ELEVATION

RAIL ELEMENT SPLICE DETAIL

a) Connect the over lapped end of the rail elements with ⅝" ø × 1⅜" button head oval shoulder splice bolts inserted into the 29⁄32" × 1⅛" slots and bolted together with ⅝" ø recessed hex nuts. Recess of hex nut points toward rail element. A total of 8 bolts and nuts are to be used at each rail splice connection.

b) The ends of the rail elements are to be overlapped in the direction of traffic (see details).

c) Where end cap is to be attached to the end of a rail element, a total of 4 of the above described splice bolts and nuts are to be used.

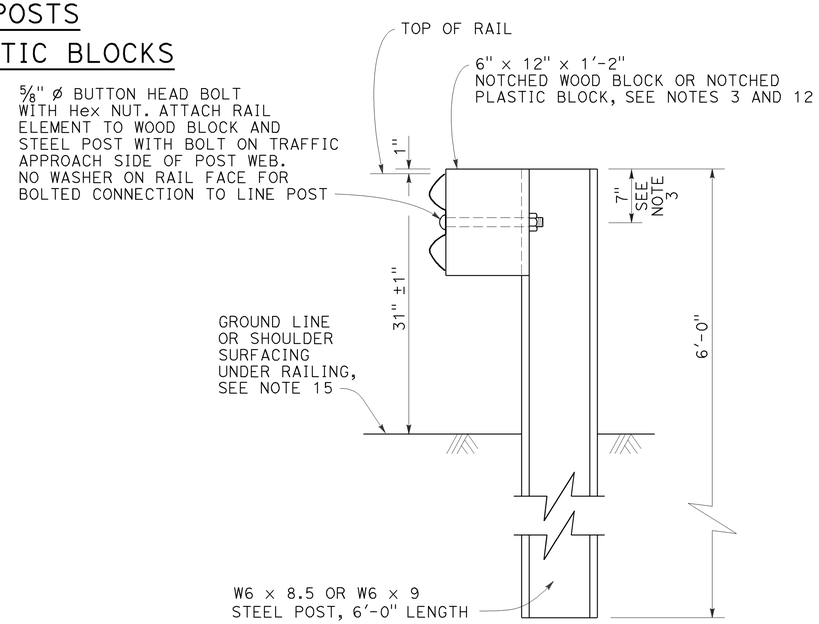

SECTION A-A

TYPICAL STEEL LINE POST INSTALLATION

See Note 4

NOTES:

1. For details of wood post installations, see Revised Standard Plan RSP A77L1.
2. For details of standard hardware used to construct MGS, see Revised Standard Plan RSP A77M1.
3. For details of steel posts and notched wood blocks used to construct MGS, see Revised Standard Plan RSP A77N2.
4. For additional installation details, see Revised Standard Plan RSP A77N3.
5. MGS post spacing to be 6'-3" center to center, except as otherwise noted.
6. For MGS typical layouts, see the A77P, A77Q and A77R Series of Standard Plans.
7. If railing is connected to terminal system end treatment, use 31" height terminal system end treatment.
8. For MGS end anchor details, see Revised Standard Plans RSP A77S1 and RSP A77T2.
9. For details of MGS transition to bridge railing, see Revised Standard Plan RSP A77U4.
10. For additional details of MGS connection to bridge railings, see Revised Standard Plans RSP A77U1, RSP A77U2 and RSP A77V1.
11. For dike positioning and MGS delineation details, see Revised Standard Plan RSP A77N4.
12. Notched face of block faces steel post.
13. Slotted hole for bolted connection of rail element to block and post. See "Section Thru Rail Element".
14. Slotted holes for splice bolts to overlap ends of rail element. See "Section Thru Rail Element".
15. Install posts in soil.

STATE OF CALIFORNIA
DEPARTMENT OF TRANSPORTATION

MIDWEST GUARDRAIL SYSTEM STANDARD RAILING SECTION (STEEL POST WITH NOTCHED WOOD OR NOTCHED RECYCLED PLASTIC BLOCK)

NO SCALE

RSP A77L2 DATED JULY 19, 2013 SUPPLEMENTS THE STANDARD PLANS BOOK DATED 2010.

REVISED STANDARD PLAN RSP A77L2

2010 REVISED STANDARD PLAN RSP A77L2

7-3-13

Dist	COUNTY	ROUTE	POST MILES TOTAL PROJECT	SHEET No.	TOTAL SHEETS
06	Fre	33	10.9/11.1	53	104

Randell D. Hiatt
REGISTERED CIVIL ENGINEER

July 19, 2013
PLANS APPROVAL DATE

REGISTERED PROFESSIONAL ENGINEER
Randell D. Hiatt
No. C50200
Exp. 6-30-15
CIVIL
STATE OF CALIFORNIA

THE STATE OF CALIFORNIA OR ITS OFFICERS OR AGENTS SHALL NOT BE RESPONSIBLE FOR THE ACCURACY OR COMPLETENESS OF SCANNED COPIES OF THIS PLAN SHEET.

TO ACCOMPANY PLANS DATED 4-28-14

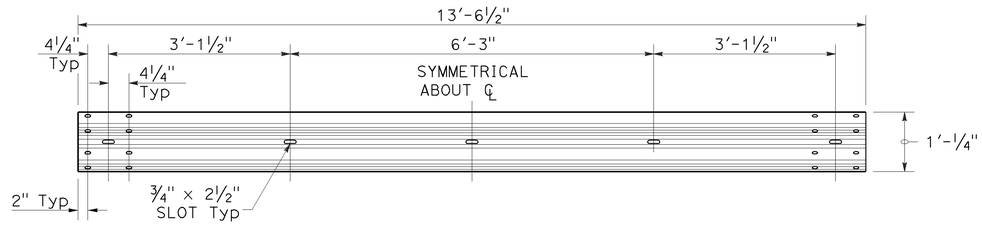

TYPICAL RAIL ELEMENT

NOTE:

1. Slotted holes for splice bolts to overlap ends of rail element.

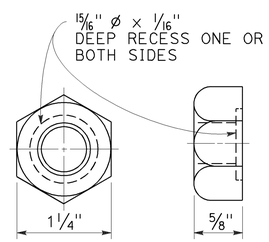

⅝" ø RECESS NUT

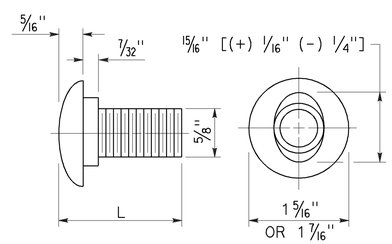

⅝" ø BUTTON HEAD BOLT

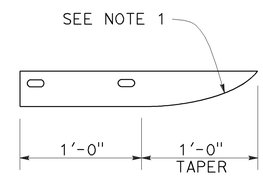

PLAN

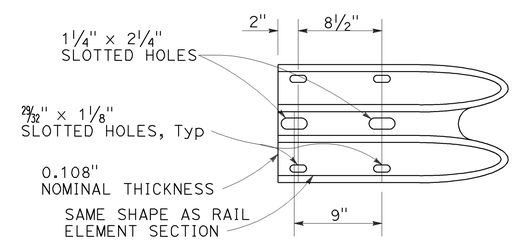

ELEVATION

END CAP
(TYPE A)

BUTTON HEAD BOLT

L	THREAD LENGTH
1⅜"	FULL THREAD LENGTH
2"	FULL THREAD LENGTH
10"	4" Min THREAD LENGTH
18"	4" Min THREAD LENGTH
20"	4" Min THREAD LENGTH
22"	4" Min THREAD LENGTH
26"	4" Min THREAD LENGTH
36"	4" Min THREAD LENGTH
** 2¾"	2" Min THREAD LENGTH
** 19"	4" Min THREAD LENGTH

** For nested rail applications.

STATE OF CALIFORNIA
DEPARTMENT OF TRANSPORTATION

MIDWEST GUARDRAIL SYSTEM STANDARD HARDWARE

NO SCALE

RSP A77M1 DATED JULY 19, 2013 SUPPLEMENTS THE STANDARD PLANS BOOK DATED 2010.

REVISED STANDARD PLAN RSP A77M1

2010 REVISED STANDARD PLAN RSP A77M1

7-3-13

Dist	COUNTY	ROUTE	POST MILES TOTAL PROJECT	SHEET No.	TOTAL SHEETS
06	Fre	33	10.9/11.1	54	104

Randell D. Hiatt
REGISTERED CIVIL ENGINEER

November 15, 2013
PLANS APPROVAL DATE

REGISTERED PROFESSIONAL ENGINEER
Randell D. Hiatt
No. C50200
Exp. 6-30-15
CIVIL
STATE OF CALIFORNIA

THE STATE OF CALIFORNIA OR ITS OFFICERS OR AGENTS SHALL NOT BE RESPONSIBLE FOR THE ACCURACY OR COMPLETENESS OF SCANNED COPIES OF THIS PLAN SHEET.

TO ACCOMPANY PLANS DATED 4-28-14

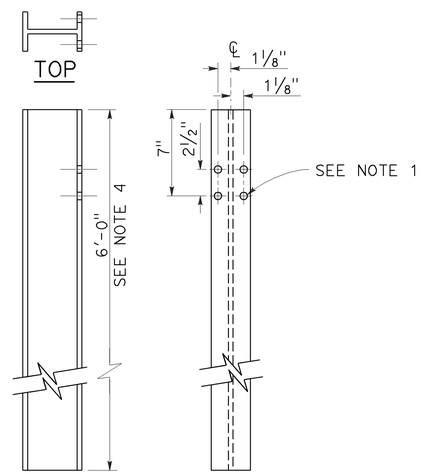

W6 x 9 OR W6 x 8.5
STEEL POST
See Note 4

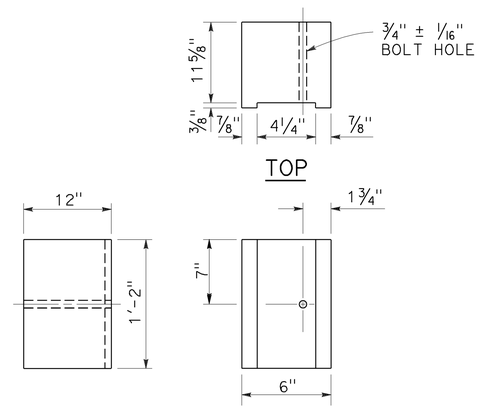

6" x 12"
NOTCHED WOOD BLOCK
See Notes 2 and 3

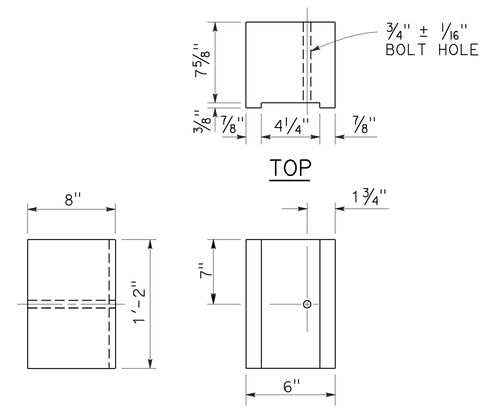

6" x 8"
NOTCHED WOOD BLOCK
Only for use with metal beam guard railing. See Note 5

NOTES:

1. All holes in steel post shall be 13/16" Dia maximum.
2. Dimensions shown for wood block are nominal.
3. Notched face of block faces steel post.
4. 6'-0" length posts to be used for typical roadway installation. See Revised Standard Plan RSP A77N3.
5. See Revised Standard Plan RSP A77L3 for use of 6" x 8" and 8" x 8" notched wood blocks.
6. This post and 8" x 12" block combination to be used for line post sections of MGS on narrow roadways and where strengthened line post sections of MGS are warranted to shield fixed objects.

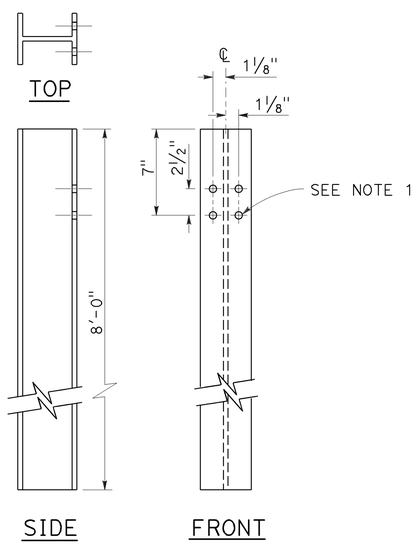

W6 x 15
STEEL POST
See Note 6

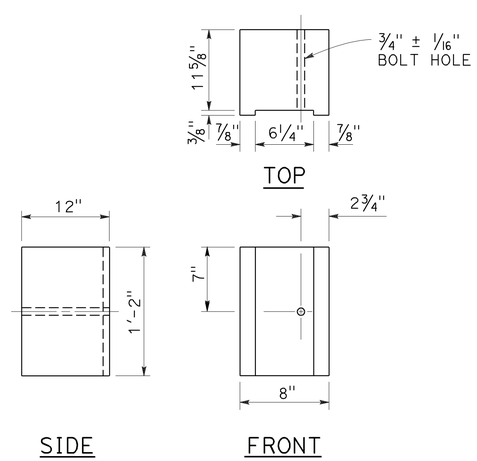

8" x 12"
NOTCHED WOOD BLOCK
See Notes 2 and 3

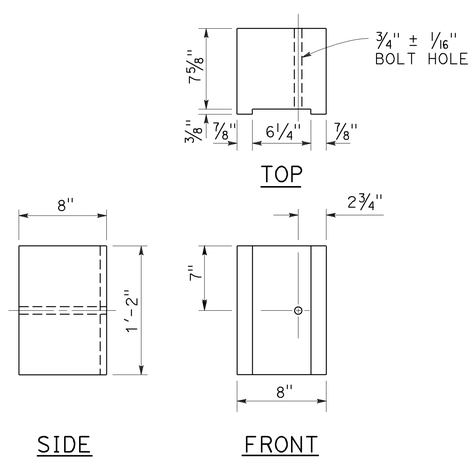

8" x 8"
NOTCHED WOOD BLOCK
Only for use with metal beam guard railing. See Note 5

STATE OF CALIFORNIA
DEPARTMENT OF TRANSPORTATION

MIDWEST GUARDRAIL SYSTEM STEEL POST AND NOTCHED WOOD BLOCK DETAILS

NO SCALE

RSP A77N2 DATED NOVEMBER 15, 2013 SUPERSEDES RSP A77N2
DATED JULY 19, 2013 THAT SUPPLEMENTS THE STANDARD PLANS BOOK DATED 2010.

REVISED STANDARD PLAN RSP A77N2

2010 REVISED STANDARD PLAN RSP A77N2

10-29-13

Dist	COUNTY	ROUTE	POST MILES TOTAL PROJECT	SHEET No.	TOTAL SHEETS
06	Fre	33	10.9/11.1	55	104

Randell D. Hiatt
REGISTERED CIVIL ENGINEER

November 15, 2013
PLANS APPROVAL DATE

REGISTERED PROFESSIONAL ENGINEER
Randell D. Hiatt
No. C50200
Exp. 6-30-15
CIVIL
STATE OF CALIFORNIA

THE STATE OF CALIFORNIA OR ITS OFFICERS OR AGENTS SHALL NOT BE RESPONSIBLE FOR THE ACCURACY OR COMPLETENESS OF SCANNED COPIES OF THIS PLAN SHEET.

TO ACCOMPANY PLANS DATED 4-28-14

2010 REVISED STANDARD PLAN RSP A77N3

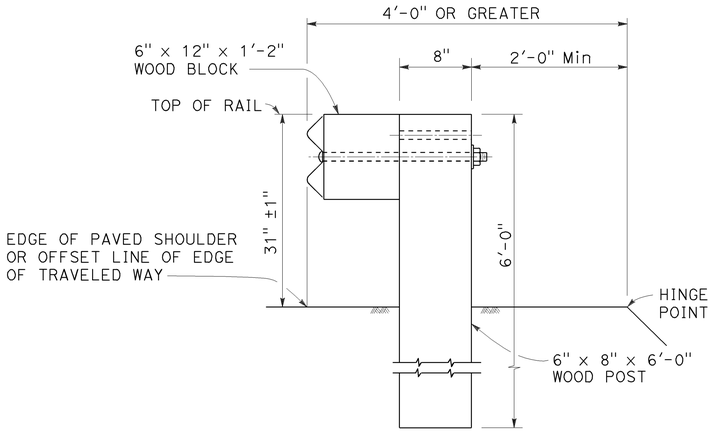

DETAIL A

TYPICAL ROADWAY INSTALLATION

See Note 1

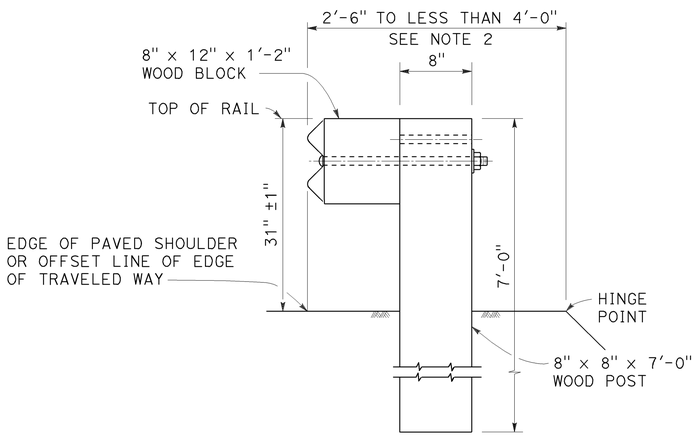

DETAIL B

NARROW ROADWAY INSTALLATION

See Note 1

POST EMBEDMENT

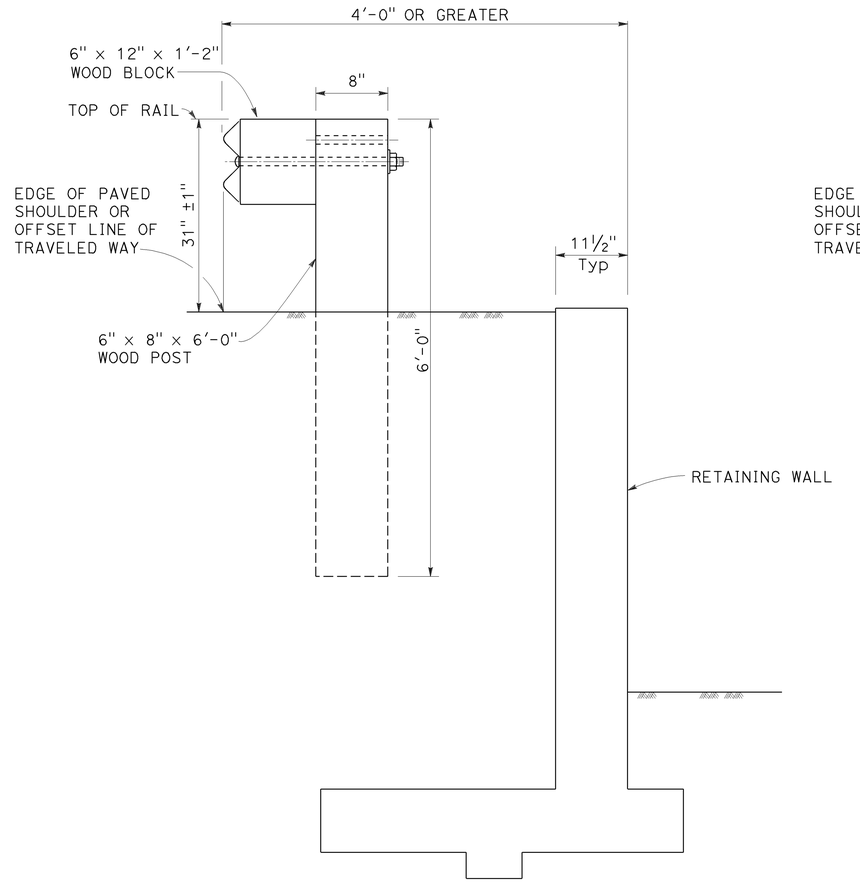

DETAIL C

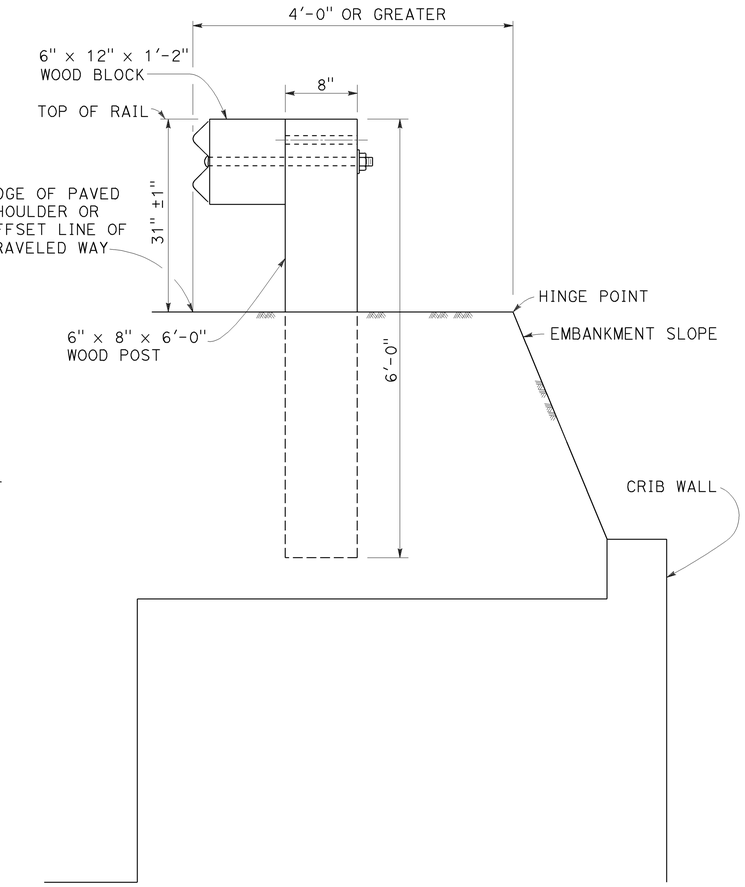

DETAIL D

INSTALLATION AT EARTH RETAINING WALLS

NOTES:

1. These installation details also applicable to steel line post installations. For Detail A, C, and D, where steel line post installations are constructed, W6 x 8.5 or W6 x 9 steel post, 6'-0" in length, with 6" x 12" x 1'-2" notched wood blocks or notched recycled plastic blocks are to be used in place of the size of wood post and wood block shown. For Detail B, where steel line post installations are constructed, W6 x 15 steel post, 8'-0" in length, with 8" x 12" x 1'-2" notched wood blocks or notched recycled plastic blocks are to be used in place of the size of wood post and wood block shown. For additional installation details, see Revised Standard Plan RSP A77L1 and RSP A77L2.
2. Where the distance between the face of the rail and the hinge point is less than 2'-6", see the Project Plans for special details.
3. For dike positioning with MGS installations, see Revised Standard Plan RSP A77N4.

STATE OF CALIFORNIA
DEPARTMENT OF TRANSPORTATION

MIDWEST GUARDRAIL SYSTEM TYPICAL LINE POST EMBEDMENT AND HINGE POINT OFFSET DETAILS

NO SCALE

RSP A77N3 DATED NOVEMBER 15, 2013 SUPERSEDES RSP A77N3
DATED JULY 19, 2013 THAT SUPPLEMENTS THE STANDARD PLANS BOOK DATED 2010.

REVISED STANDARD PLAN RSP A77N3

10-29-13

Dist	COUNTY	ROUTE	POST MILES TOTAL PROJECT	SHEET No.	TOTAL SHEETS
06	Fre	33	10.9/11.1	56	104

Randell D. Hiatt
REGISTERED CIVIL ENGINEER

July 19, 2013
PLANS APPROVAL DATE

REGISTERED PROFESSIONAL ENGINEER
Randell D. Hiatt
No. C50200
Exp. 6-30-15
CIVIL
STATE OF CALIFORNIA

THE STATE OF CALIFORNIA OR ITS OFFICERS OR AGENTS SHALL NOT BE RESPONSIBLE FOR THE ACCURACY OR COMPLETENESS OF SCANNED COPIES OF THIS PLAN SHEET.

TO ACCOMPANY PLANS DATED 4-28-14

NOTES:

1. When necessary to place dike more than 7" in front of face of MGS, only Type C dike may be used. For dike details, see Revised Standard Plan RSP A87B.
2. For standard railing post embedment, see Revised Standard Plan RSP A77N3.
3. MGS delineation to be used where shown on the Project Plans.
4. When dike or curb is placed under MGS, the maximum height of the dike or curb shall be 6". Mountable dike should not be used. For dike and curb details, see Revised Standard Plans RSP A87A and RSP A87B.
5. For details of typical distance between the face of rail and hinge point, see Revised Standard Plan RSP A77N3.
6. For steel line posts, use 1/4 - 20 self-tapping screws in 0.22" diameter holes or 1/4" bolts in 9/32" diameter holes.

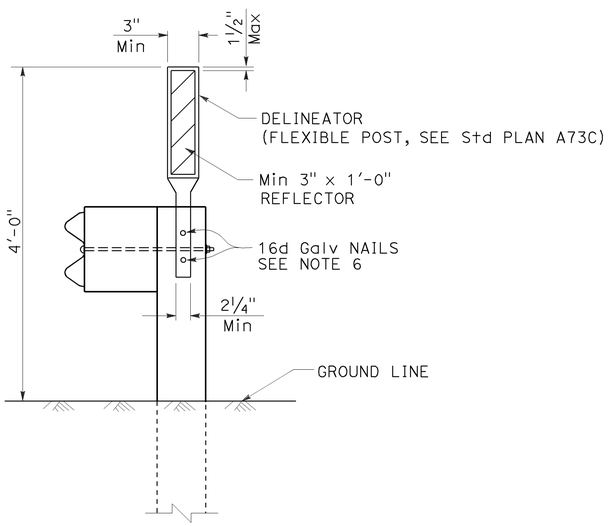

MGS DELINEATION

See Note 3

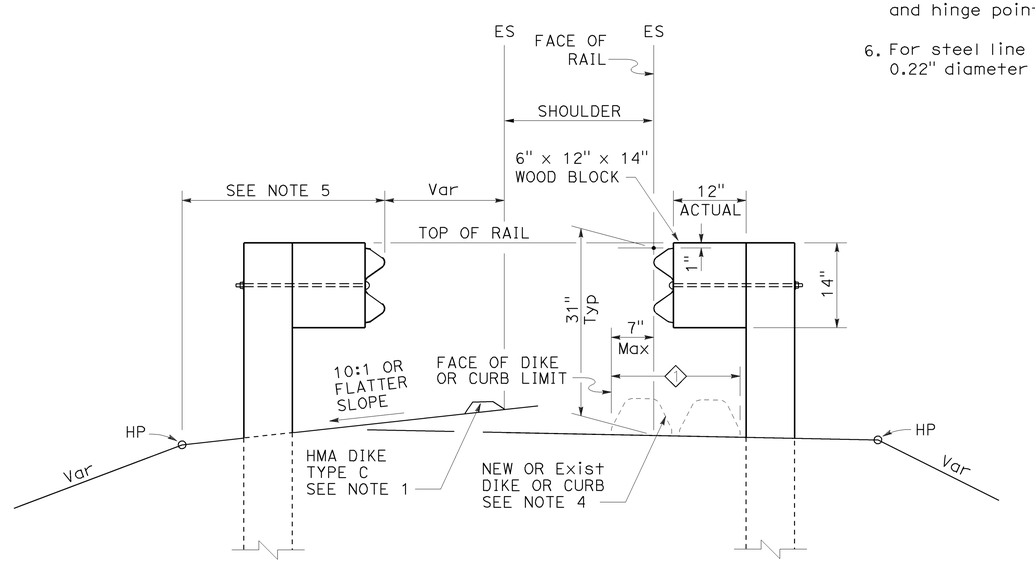

DIKE POSITIONING

See Note 1

1 PERMISSIBLE DIKE OR CURB PLACEMENT AREA

STATE OF CALIFORNIA
DEPARTMENT OF TRANSPORTATION

MIDWEST GUARDRAIL SYSTEM TYPICAL RAILING DELINEATION AND DIKE POSITIONING DETAILS

NO SCALE

RSP A77N4 DATED JULY 19, 2013 SUPPLEMENTS THE STANDARD PLANS BOOK DATED 2010.

REVISED STANDARD PLAN RSP A77N4

2010 REVISED STANDARD PLAN RSP A77N4

7-10-13

Dist	COUNTY	ROUTE	POST MILES TOTAL PROJECT	SHEET No.	TOTAL SHEETS
06	Fre	33	10.9/11.1	57	104

Randell D. Hiatt
REGISTERED CIVIL ENGINEER

July 19, 2013
PLANS APPROVAL DATE

REGISTERED PROFESSIONAL ENGINEER
Randell D. Hiatt
No. C50200
Exp. 6-30-15
CIVIL
STATE OF CALIFORNIA

THE STATE OF CALIFORNIA OR ITS OFFICERS OR AGENTS SHALL NOT BE RESPONSIBLE FOR THE ACCURACY OR COMPLETENESS OF SCANNED COPIES OF THIS PLAN SHEET.

TO ACCOMPANY PLANS DATED 4-28-14

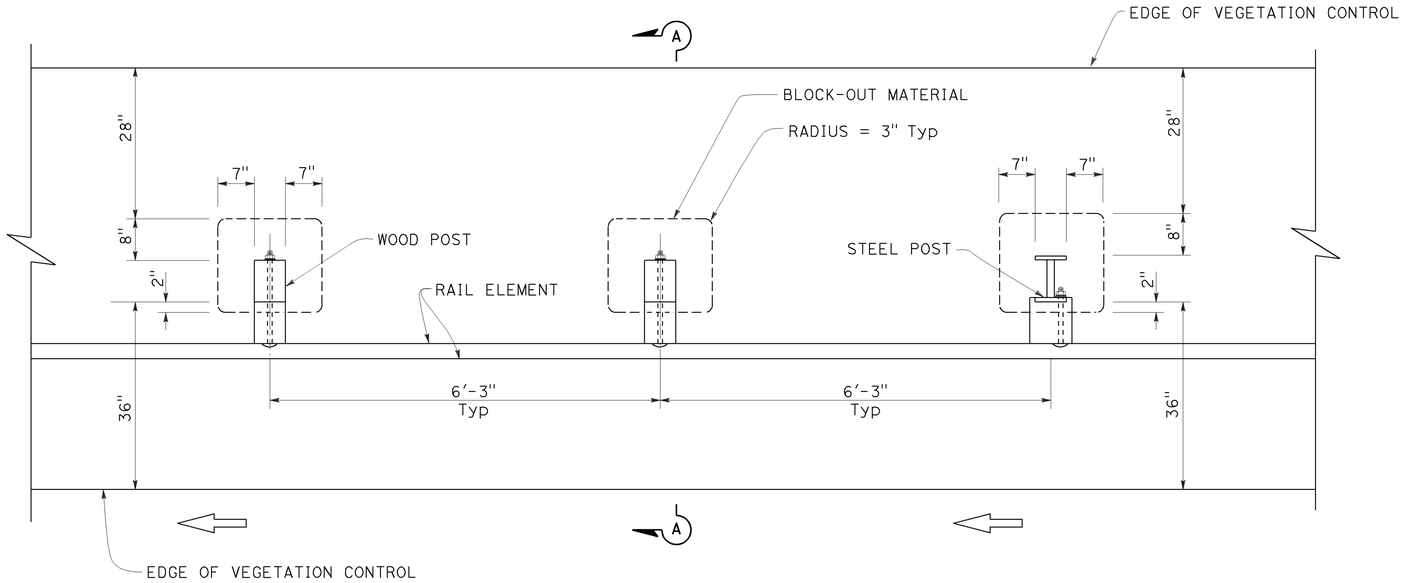

PLAN

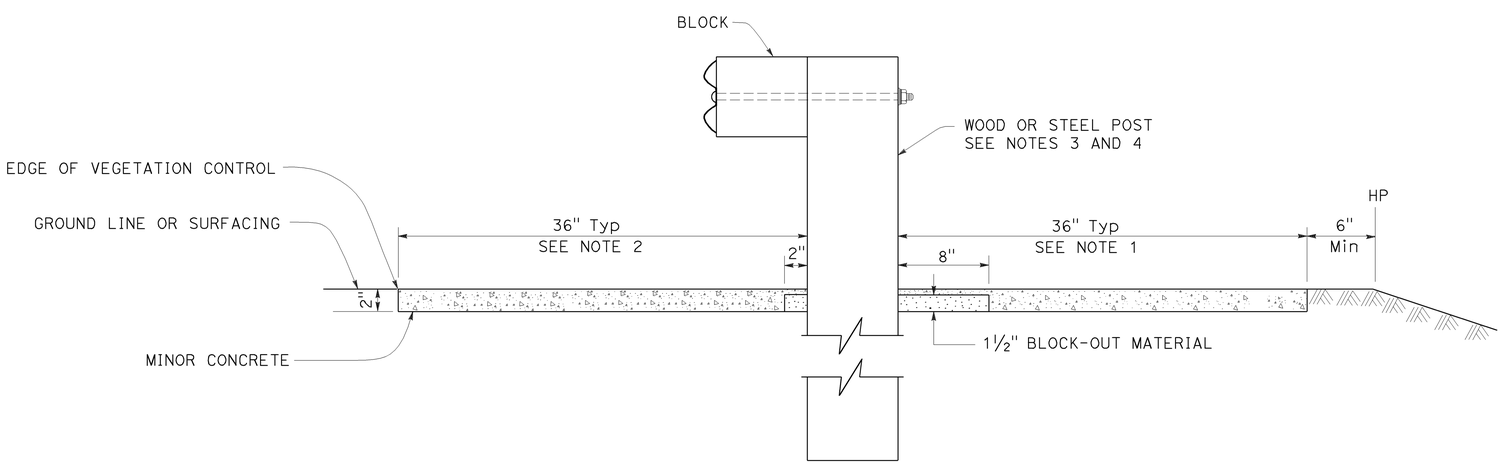

SECTION A-A

NOTES:

1. Where the distance between back of post and hinge point is less than 42", construct vegetation control to 6" from hinge point while maintaining the 8" block-out at back of post. If the 8" block-out at back of post can not be maintained, construct vegetation control flush with the back edge of post.
2. Where dike is constructed under railing, construct vegetation control to back edge of dike. Where paved shoulder is constructed within 36" in front of the post, construct vegetation control to the edge of paved shoulder.
3. For wood post sizes, see Revised Standard Plan RSP A77N1.
4. For steel post sizes, see Revised Standard Plan RSP A77N2.
5. For details not shown, see Revised Standard Plans RSP A77L1 and RSP A77L2.

STATE OF CALIFORNIA
DEPARTMENT OF TRANSPORTATION

MIDWEST GUARDRAIL SYSTEM TYPICAL VEGETATION CONTROL STANDARD RAILING SECTION

NO SCALE

RSP A77N5 DATED JULY 19, 2013 SUPPLEMENTS THE STANDARD PLANS BOOK DATED 2010.

REVISED STANDARD PLAN RSP A77N5

2010 REVISED STANDARD PLAN RSP A77N5

7-3-13

Dist	COUNTY	ROUTE	POST MILES TOTAL PROJECT	SHEET No.	TOTAL SHEETS
06	Fre	33	10.9/11.1	58	104

Randell D. Hiatt
REGISTERED CIVIL ENGINEER

July 19, 2013
PLANS APPROVAL DATE

REGISTERED PROFESSIONAL ENGINEER
Randell D. Hiatt
No. C50200
Exp. 6-30-15
CIVIL
STATE OF CALIFORNIA

THE STATE OF CALIFORNIA OR ITS OFFICERS OR AGENTS SHALL NOT BE RESPONSIBLE FOR THE ACCURACY OR COMPLETENESS OF SCANNED COPIES OF THIS PLAN SHEET.

TO ACCOMPANY PLANS DATED 4-28-14

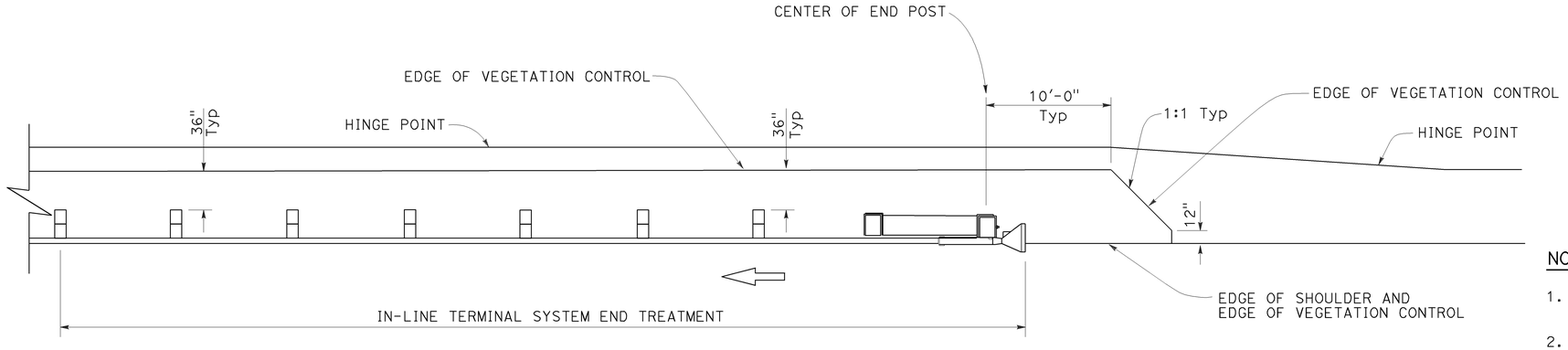

PLAN

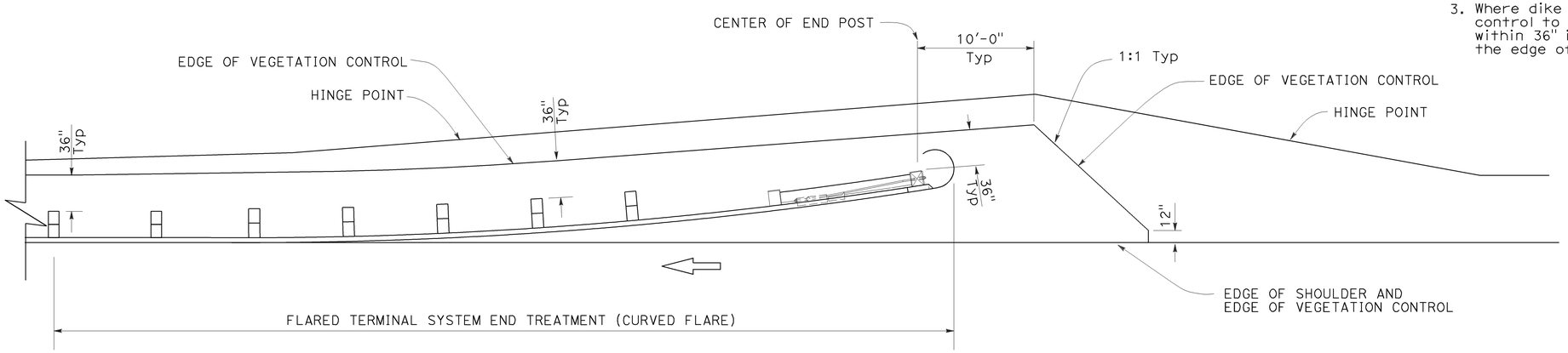

PLAN

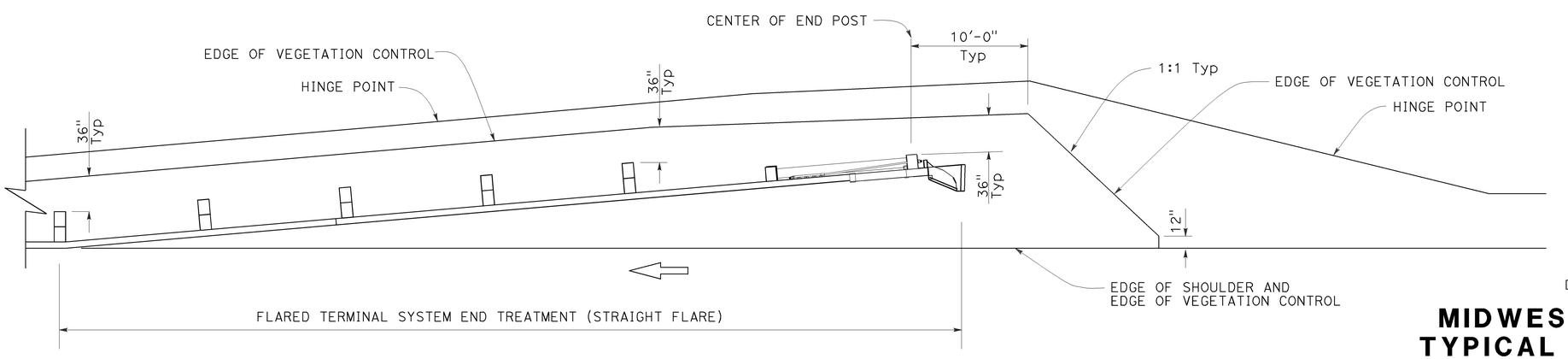

PLAN

NOTES:

1. See Revised Standard Plan RSP A77N5 for additional vegetation control details.
2. Where the distance between back of post and hinge point is less than 42", construct vegetation control to 6" from hinge point while maintaining the 8" block-out at back of post. If the 8" block-out at back of post can not be maintained, construct vegetation control flush with the back edge of post.
3. Where dike is constructed under railing, construct vegetation control to back edge of dike. Where paved shoulder is constructed within 36" in front of the post, construct vegetation control to the edge of paved shoulder.

STATE OF CALIFORNIA
DEPARTMENT OF TRANSPORTATION

MIDWEST GUARDRAIL SYSTEM TYPICAL VEGETATION CONTROL FOR TERMINAL SYSTEM END TREATMENTS

NO SCALE

RSP A77N6 DATED JULY 19, 2013 SUPPLEMENTS THE STANDARD PLANS BOOK DATED 2010.

REVISED STANDARD PLAN RSP A77N6

2010 REVISED STANDARD PLAN RSP A77N6

6-12-13

Dist	COUNTY	ROUTE	POST MILES TOTAL PROJECT	SHEET No.	TOTAL SHEETS
06	Fre	33	10.9/11.1	59	104

Randell D. Hiatt
REGISTERED CIVIL ENGINEER

July 19, 2013
PLANS APPROVAL DATE

REGISTERED PROFESSIONAL ENGINEER
Randell D. Hiatt
No. C50200
Exp. 6-30-15
CIVIL
STATE OF CALIFORNIA

THE STATE OF CALIFORNIA OR ITS OFFICERS OR AGENTS SHALL NOT BE RESPONSIBLE FOR THE ACCURACY OR COMPLETENESS OF SCANNED COPIES OF THIS PLAN SHEET.

TO ACCOMPANY PLANS DATED 4-28-14

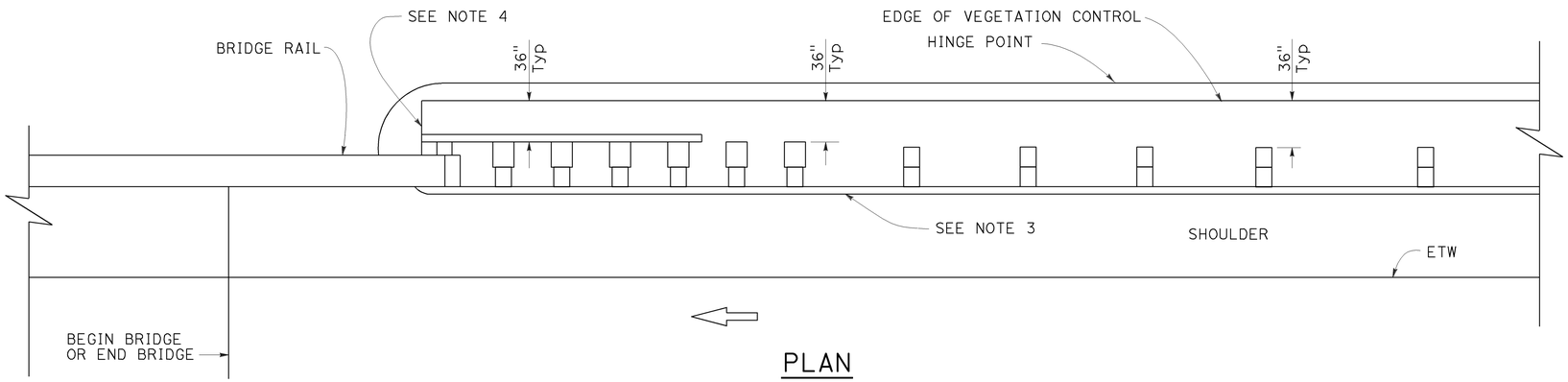

PLAN

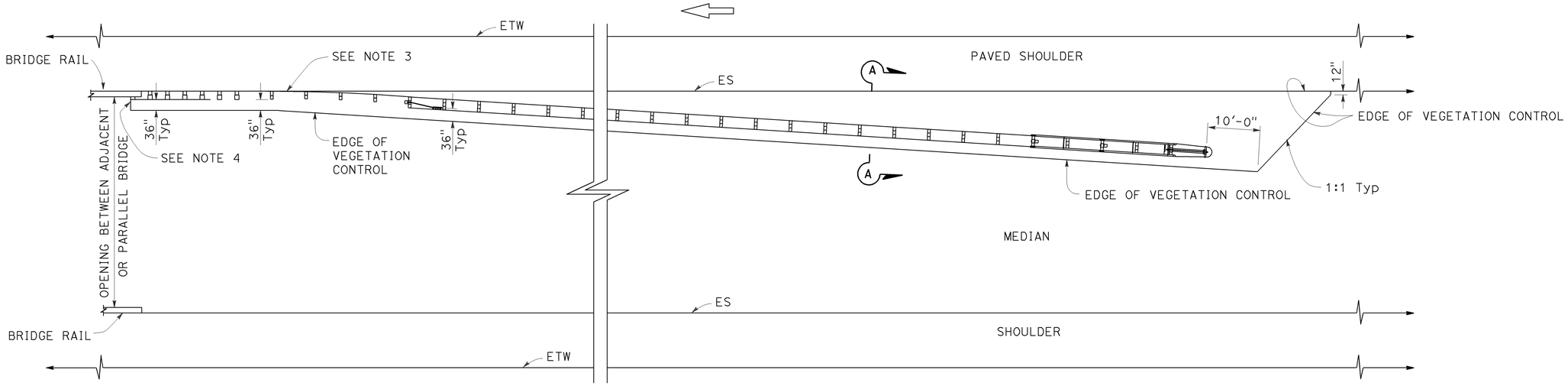

PLAN

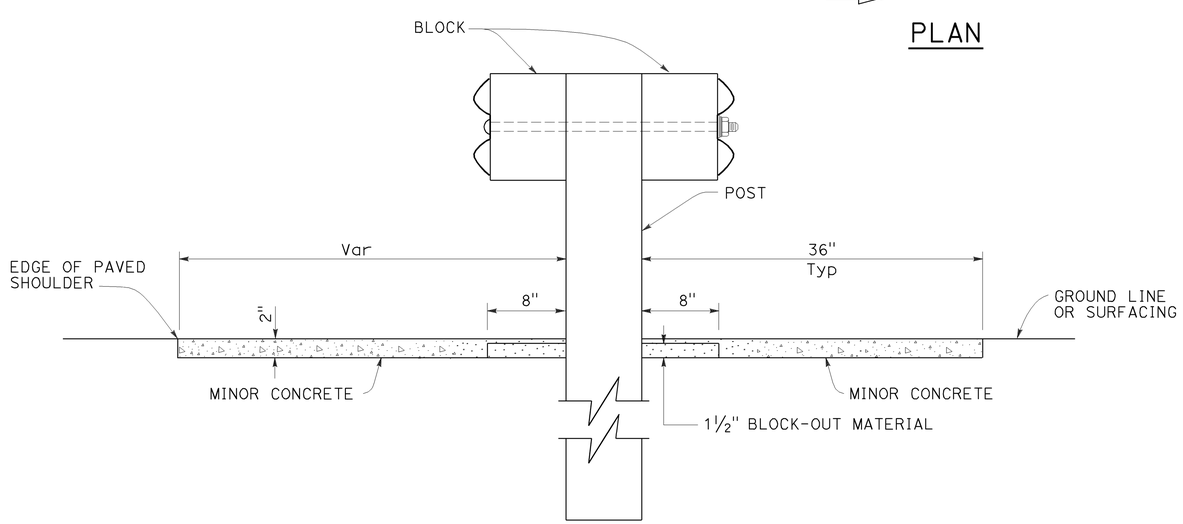

SECTION A-A

NOTES:

1. See Revised Standard Plan RSP A77N5 for additional vegetation control details.
2. Where the distance between back of post and hinge point is less than 42", construct vegetation control to 6" from hinge point while maintaining the 8" block-out at back of post. If the 8" block-out at back of post can not be maintained, construct vegetation control flush with the back edge of post.
3. Where dike is constructed under railing, construct vegetation control to back edge of dike. Where paved shoulder is constructed within 36" in front of the post, construct vegetation control to the edge of paved shoulder.
4. End vegetation control at end of backside rail element.

STATE OF CALIFORNIA
DEPARTMENT OF TRANSPORTATION

MIDWEST GUARDRAIL SYSTEM TYPICAL VEGETATION CONTROL AT STRUCTURE APPROACH

NO SCALE

RSP A77N7 DATED JULY 19, 2013 SUPPLEMENTS THE STANDARD PLANS BOOK DATED 2010.

REVISED STANDARD PLAN RSP A77N7

2010 REVISED STANDARD PLAN RSP A77N7

6-12-13

Dist	COUNTY	ROUTE	POST MILES TOTAL PROJECT	SHEET No.	TOTAL SHEETS
06	Fre	33	10.9/11.1	60	104

Randell D. Hiatt
REGISTERED CIVIL ENGINEER

July 19, 2013
PLANS APPROVAL DATE

REGISTERED PROFESSIONAL ENGINEER
Randell D. Hiatt
No. C50200
Exp. 6-30-15
CIVIL
STATE OF CALIFORNIA

THE STATE OF CALIFORNIA OR ITS OFFICERS OR AGENTS SHALL NOT BE RESPONSIBLE FOR THE ACCURACY OR COMPLETENESS OF SCANNED COPIES OF THIS PLAN SHEET.

TO ACCOMPANY PLANS DATED 4-28-14

2010 REVISED STANDARD PLAN RSP A77Q1

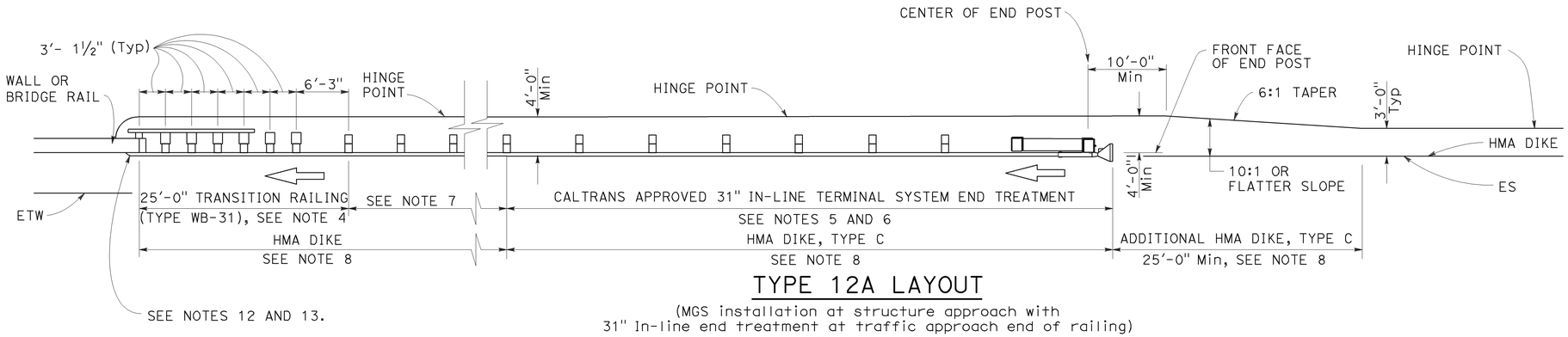

TYPE 12A LAYOUT

(MGS installation at structure approach with
31" In-line end treatment at traffic approach end of railing)
See Notes 9

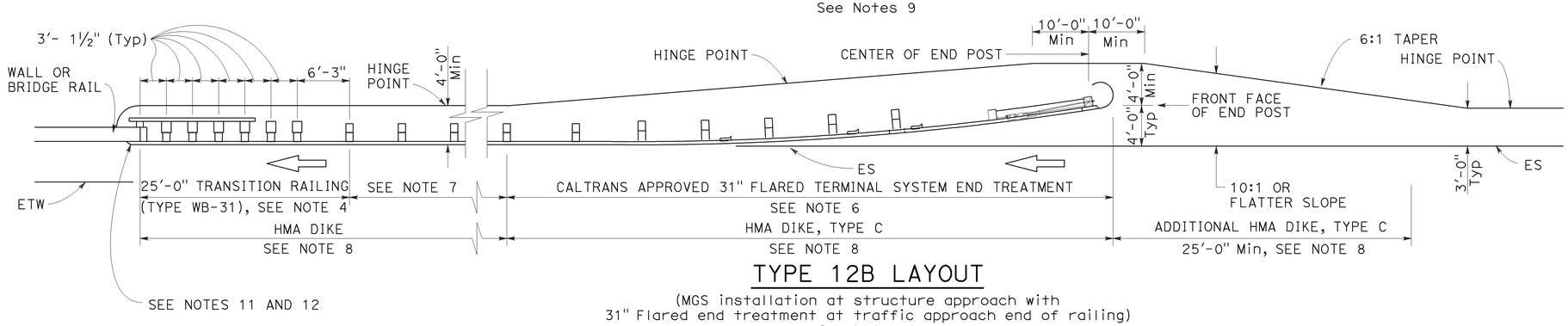

TYPE 12B LAYOUT

(MGS installation at structure approach with
31" Flared end treatment at traffic approach end of railing)
See Notes 9

NOTES:

1. Line post, blocks and hardware to be used are shown on Revised Standard Plans RSP A77L1, RSP A77L2, RSP A77M1, RSP A77N1 and RSP A77N2.
2. MGS post spacing to be 6'-3" center to center, except as otherwise noted.
3. Except as noted, line posts are 6" x 8" x 6'-0" wood with 6" x 12" x 1'-2" wood blocks. W6 x 8.5 or W6 x 9 steel posts, 6'-0" in length, with 6" x 12" x 1'-2" notched wood blocks or plastic blocks may be used for 6" x 8" x 6'-0" wood posts with 6" x 12" x 1'-2" wood blocks where applicable and when specified.
4. For Transition Railing (Type WB-31) details for Types 12A and 12B Layouts, see Revised Standard Plan RSP A77U4.
5. 31" in-line terminal system end treatments are used where site conditions will not accommodate a 31" flared end treatment.
6. The type 31" of terminal system end treatment to be used will be shown on the Project Plans.
7. Dependent on site conditions (embankment height, side slopes, or other fixed objects), it may be advisable to construct additional guard railing (a length equal to multiples of 12'-6" with 6'-3" post spacing) between the transition railing and end treatment. A 12.5 degree angle of departure can be drawn on the Project Plans from the edge of traveled way through the outer most point of the fixed object to determine the additional length of railing needed.
8. Where placement of dike is required with guard railing installations, see Revised Standard Plan RSP A77N4 for dike positioning details.
9. Type 12A or Type 12B Layouts are typically used:
   a. To the right of approaching traffic, at the end of a structure, on two-lane conventional highway where the roadbed width across the structure is less than 40 feet.
   b. To the left of approaching traffic, at the end of a structure, on two-lane conventional highway where the roadbed width across the structure is less than 40 feet.
   c. To the right of approaching traffic at the end of each structure on multilane freeways or expressways with separate adjacent or parallel bridges.
   d. To the right of approaching traffic at the end of the structure on multilane freeways or expressways with decked median on the bridge.
10. See Revised Standard Plan RSP A77Q3 for typical layout used left of approaching traffic at the ends of each structure on multilane freeways or expressways with separate adjacent or parallel bridges.
11. For additional details of typical connections to bridge rail, see Connection Detail AA on Revised Standard Plans RSP A77U1 and RSP A77U2 and Connection Detail FF on Revised Standard Plans RSP A77V1 and RSP A77V2.
12. For additional details of a typical connection to walls or abutments, see Revised Standard Plan RSP A77U3.

STATE OF CALIFORNIA
DEPARTMENT OF TRANSPORTATION

MIDWEST GUARDRAIL SYSTEM TYPICAL LAYOUTS FOR STRUCTURE APPROACH

NO SCALE

RSP A77Q1 DATED JULY 19, 2013 SUPPLEMENTS THE STANDARD PLANS BOOK DATED 2010.

REVISED STANDARD PLAN RSP A77Q1

Dist	COUNTY	ROUTE	POST MILES TOTAL PROJECT	SHEET No.	TOTAL SHEETS
06	Fre	33	10.9/11.1	61	104

Randell D. Hiatt
REGISTERED CIVIL ENGINEER

July 19, 2013
PLANS APPROVAL DATE

REGISTERED PROFESSIONAL ENGINEER
Randell D. Hiatt
No. C50200
Exp. 6-30-15
CIVIL
STATE OF CALIFORNIA

THE STATE OF CALIFORNIA OR ITS OFFICERS OR AGENTS SHALL NOT BE RESPONSIBLE FOR THE ACCURACY OR COMPLETENESS OF SCANNED COPIES OF THIS PLAN SHEET.

TO ACCOMPANY PLANS DATED 4-28-14

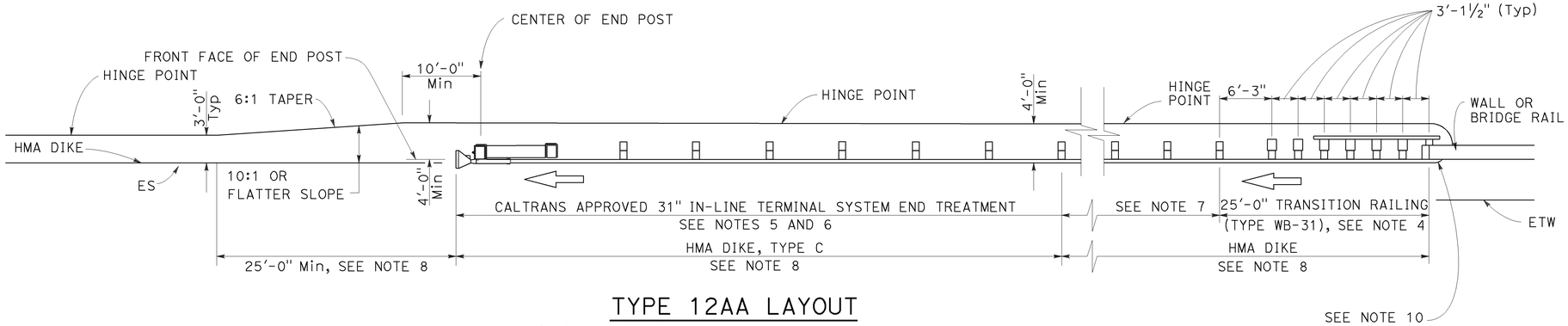

TYPE 12AA LAYOUT

(MGS installation at structure departure with
31" in-line end treatment at trailing end of railing)
See Notes 8 and 9

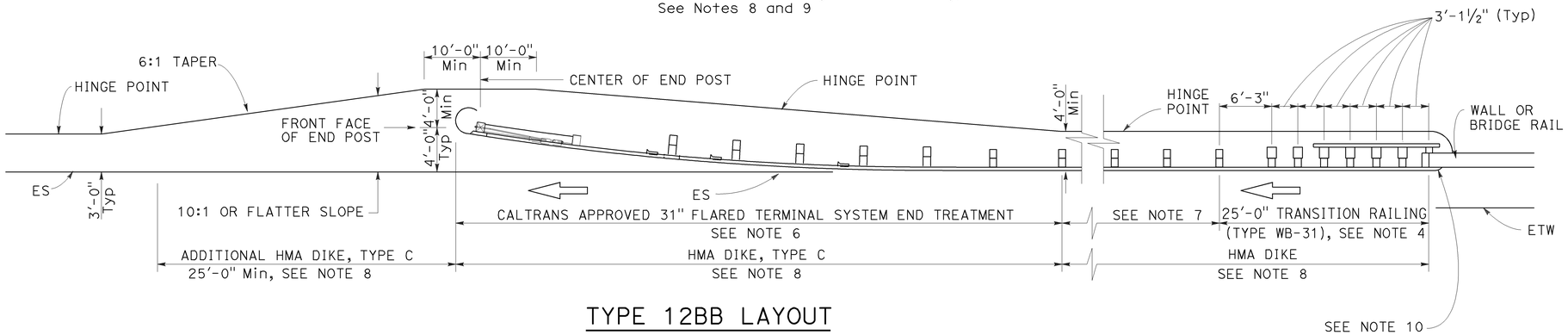

TYPE 12BB LAYOUT

(MGS installation at structure departure with
31" flared end treatment at trailing end of railing)
See Notes 8 and 9

NOTES:

1. Line post, blocks and hardware to be used are shown on Revised Standard Plans RSP A77L1, RSP A77L2, RSP A77M1, RSP A77N1 and RSP A77N2.
2. MGS post spacing to be 6'-3" center to center, except as otherwise noted.
3. Except as noted, line posts are 6" x 8" x 6'-0" wood with 6" x 12" x 1'-2" wood blocks. W6 x 8.5 or W6 x 9 steel posts, 6'-0" in length, with 6" x 12" x 1-2" notched wood blocks or notched recycled plastic blocks may be used for 6" x 8" x 6'-0" wood posts with 6" x 12" x 1'-2" wood blocks where applicable and when specified.
4. For Transition Railing (Type WB-31) details for Types 12AA and 12BB Layouts, see Revised Standard Plan RSP A77U4.
5. 31" in-line terminal system treatments are used where site conditions will not accommodate a 31" flared end treatment.
6. The type of 31" terminal system to be used will be shown on the Project Plans.
7. Dependent on site conditions (embankment height, side slopes, other fixed objects), it may be advisable to construct additional MGS (a length equal to multiples of 12'-6" with 6'-3" post spacing) between the transition railing and 31" end treatments.
8. Where placement of dike is required with MGS installations, see Revised Standard Plan RSP A77N4 for dike positioning details.
9. Type 12AA or Type 12BB Layouts are typically used to the right of traffic departing a structure on two-way conventional highways where the roadbed width across the structure is less than 40 feet.
10. For additional details of typical connections to bridge rail, see Connection Detail CC on Revised Standard Plan RSP A77U2 and Connection Detail HH on Revised Standard Plan RSP A77V2.

STATE OF CALIFORNIA
DEPARTMENT OF TRANSPORTATION

MIDWEST GUARDRAIL SYSTEM TYPICAL LAYOUTS FOR STRUCTURE DEPARTURE

NO SCALE

RSP A77Q4 DATED JULY 19, 2013 SUPPLEMENTS THE STANDARD PLANS BOOK DATED 2010.

REVISED STANDARD PLAN RSP A77Q4

2010 REVISED STANDARD PLAN RSP A77Q4

6-19-13

Dist	COUNTY	ROUTE	POST MILES TOTAL PROJECT	SHEET No.	TOTAL SHEETS
06	Fre	33	10.9/11.1	62	104

Randell D. Hiatt
REGISTERED CIVIL ENGINEER

July 19, 2013
PLANS APPROVAL DATE

REGISTERED PROFESSIONAL ENGINEER
Randell D. Hiatt
No. C50200
Exp. 6-30-15
CIVIL
STATE OF CALIFORNIA

THE STATE OF CALIFORNIA OR ITS OFFICERS OR AGENTS SHALL NOT BE RESPONSIBLE FOR THE ACCURACY OR COMPLETENESS OF SCANNED COPIES OF THIS PLAN SHEET.

TO ACCOMPANY PLANS DATED 4-28-14

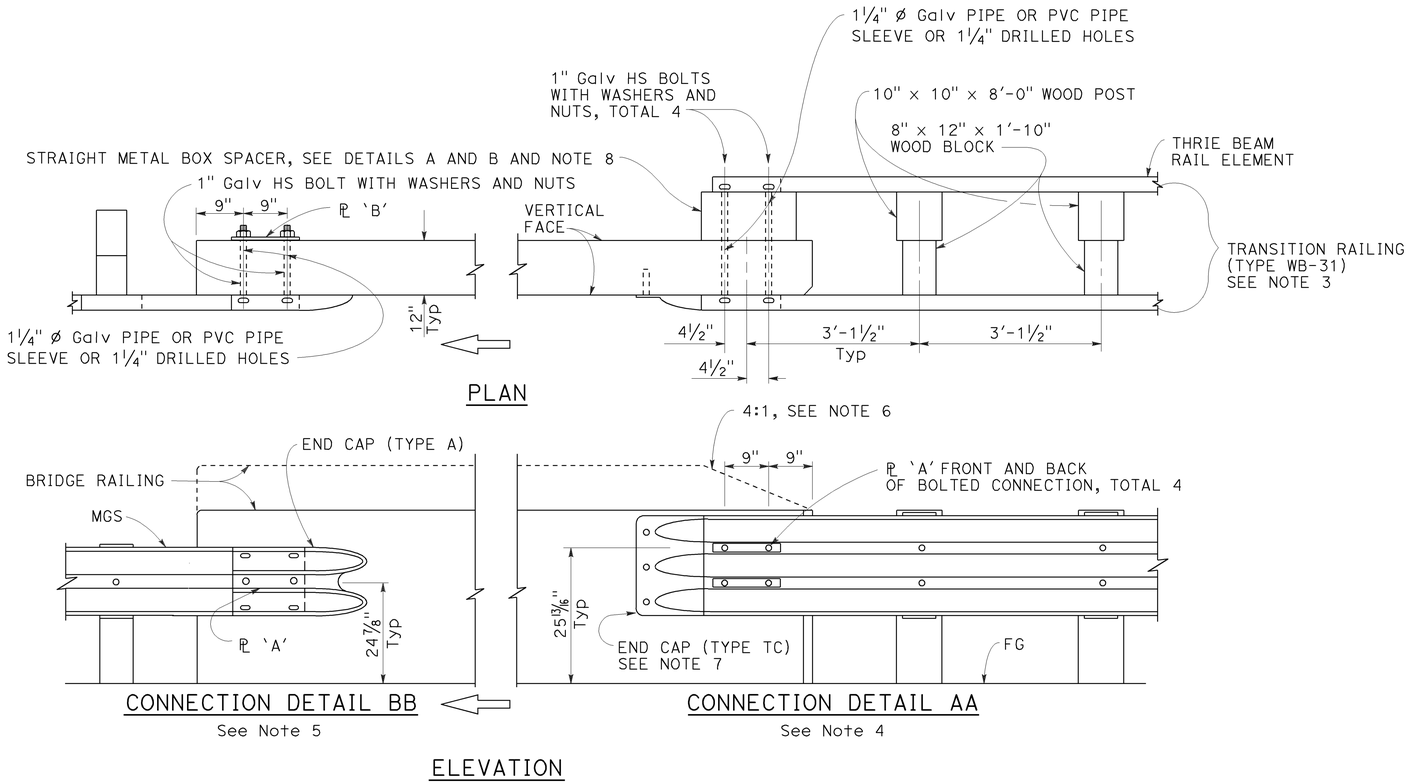

MIDWEST GUARDRAIL SYSTEM CONNECTION TO BRIDGE RAILING WITHOUT SIDEWALK

NOTES:

1. See Revised Standard Plan RSP A77U2 for additional connection details to bridges without sidewalks.
2. Additional details of posts, blocks and hardware are shown on Revised Standard Plans RSP A77M1, RSP A77N1 and RSP A77N2.
3. For additional details of Transition Railing (Type WB-31), see Revised Standard Plan RSP A77U4. Transition Railing (Type WB-31) transitions the 12 gauge MGS railing section to a heavier gage nested thrie beam railing section which is connected to the concrete bridge railing.
4. For typical use of Connection Detail AA, see Layout Types 12A and 12B on Revised Standard Plan RSP A77Q1, Layout Types 12C and 12D on Revised Standard Plan RSP A77Q2, and Layout Type 12E on Revised Standard Plan RSP A77Q3.
5. For typical use of Connection Detail BB, see Layout Type 12D (structure departure railing connection) on Revised Standard Plan RSP A77Q2 and Layout Type 12DD on Revised Standard Plan RSP A77Q5.
6. Where the height of the bridge railing exceeds the height of the thrie beam railing by more than 1" at Connection Detail AA, taper the top of the end of the bridge railing at 4:1 to match the top elevation of the thrie beam rail.
7. For details of End Cap (Type TC), see Revised Standard Plan RSP A77U4.
8. See Revised Standard Plan RSP A77U4 for additional details regarding depth dimension for straight metal box spacer.

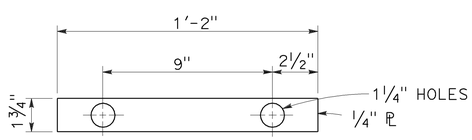

PLATE 'A'

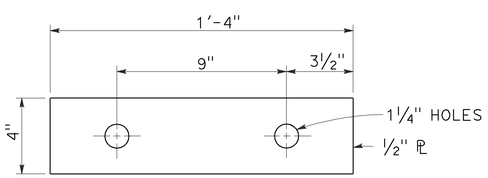

PLATE 'B'
(For backside of connection BB)

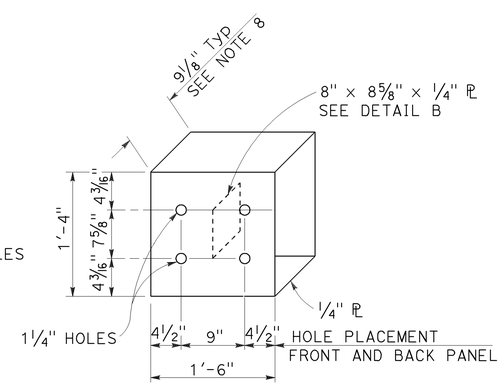

DETAIL A

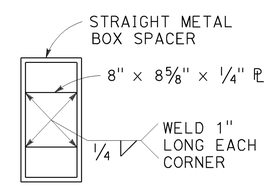

DETAIL B

STRAIGHT METAL BOX SPACER

STATE OF CALIFORNIA
DEPARTMENT OF TRANSPORTATION

MIDWEST GUARDRAIL SYSTEM CONNECTIONS TO BRIDGE RAILINGS WITHOUT SIDEWALKS DETAILS No. 1

NO SCALE

RSP A77U1 DATED JULY 19, 2013 SUPPLEMENTS THE STANDARD PLANS BOOK DATED 2010.

REVISED STANDARD PLAN RSP A77U1

2010 REVISED STANDARD PLAN RSP A77U1

7-8-13

Dist	COUNTY	ROUTE	POST MILES TOTAL PROJECT	SHEET No.	TOTAL SHEETS
06	Fre	33	10.9/11.1	63	104

Randell D. Hiatt
REGISTERED CIVIL ENGINEER

July 19, 2013
PLANS APPROVAL DATE

REGISTERED PROFESSIONAL ENGINEER
Randell D. Hiatt
No. C50200
Exp. 6-30-15
CIVIL
STATE OF CALIFORNIA

THE STATE OF CALIFORNIA OR ITS OFFICERS OR AGENTS SHALL NOT BE RESPONSIBLE FOR THE ACCURACY OR COMPLETENESS OF SCANNED COPIES OF THIS PLAN SHEET.

TO ACCOMPANY PLANS DATED 4-28-14

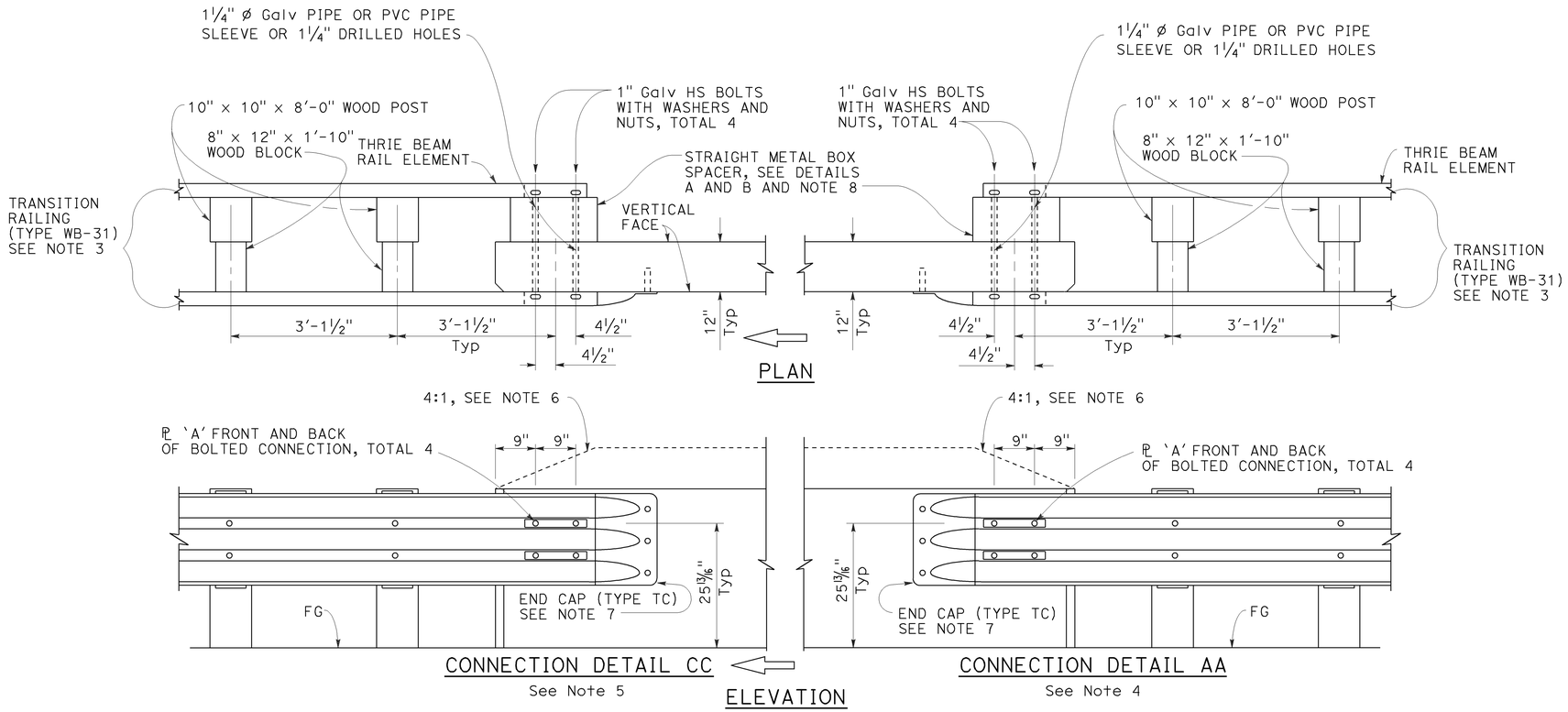

MIDWEST GUARDRAIL SYSTEM CONNECTION TO BRIDGE RAILING WITHOUT SIDEWALK

NOTES:

1. See Revised Standard Plan RSP A77U1 for additional connection details to bridges without sidewalks.
2. Additional details of posts, blocks and hardware are shown on Revised Standard Plans RSP A77M1, RSP A77N1 and RSP A77N2.
3. For additional details of Transition Railing (Type WB-31), see Revised Standard Plan RSP A77U4. Transition Railing (Type WB-31) transitions the 12 gauge MGS railing section to a heavier gage nested thrie beam railing section which is connected to the concrete bridge railing.
4. For typical use of Connection Detail AA, see Layout Types 12A and 12B on Revised Standard Plan RSP A77Q1, Layout Types 12C and 12D on Revised Standard Plan RSP A77Q2, and Layout Type 12E on Revised Standard Plan RSP A77Q3.
5. For typical use of Connection Detail CC, see Layout Types 12AA and 12BB on Revised Standard Plan RSP A77Q4 and Layout Type 12CC on Revised Standard Plan RSP A77Q5.
6. Where the height of the bridge railing exceeds the height of the thrie beam railing by more than 1" at Connection Detail AA and connection Detail CC, taper the top of the end of the bridge railing at 4:1 to match the top elevation of the thrie beam railing.
7. For details of End Cap (Type TC), see Revised Standard Plan RSP A77U4.
8. See Revised Standard Plan RSP A77U4 for additional details regarding depth dimension for straight metal box spacer.

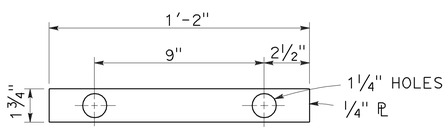

PLATE 'A'

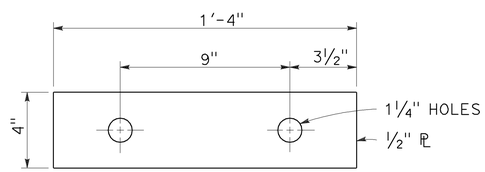

PLATE 'B'
(For backside of connection BB)

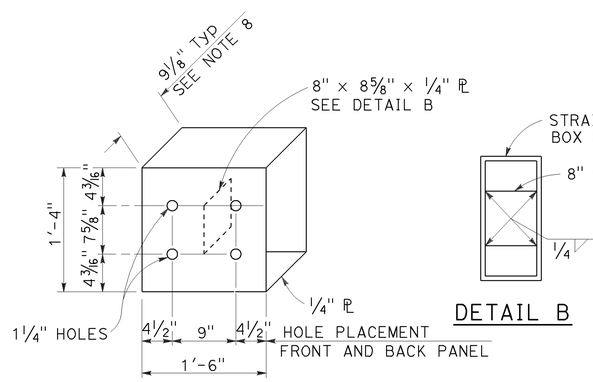

DETAIL A

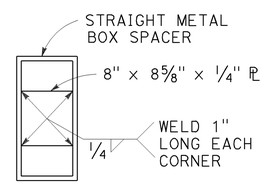

DETAIL B

STRAIGHT METAL BOX SPACER

STATE OF CALIFORNIA
DEPARTMENT OF TRANSPORTATION

MIDWEST GUARDRAIL SYSTEM CONNECTIONS TO BRIDGE RAILINGS WITHOUT SIDEWALKS DETAILS No. 2

NO SCALE

RSP A77U2 DATED JULY 19, 2013 SUPPLEMENTS THE STANDARD PLANS BOOK DATED 2010.

REVISED STANDARD PLAN RSP A77U2

2010 REVISED STANDARD PLAN RSP A77U2

6-20-13

Dist	COUNTY	ROUTE	POST MILES TOTAL PROJECT	SHEET No.	TOTAL SHEETS
06	Fre	33	10.9/11.1	64	104

Randell D. Hiatt
REGISTERED CIVIL ENGINEER

July 19, 2013
PLANS APPROVAL DATE

REGISTERED PROFESSIONAL ENGINEER
Randell D. Hiatt
No. C50200
Exp. 6-30-15
CIVIL
STATE OF CALIFORNIA

THE STATE OF CALIFORNIA OR ITS OFFICERS OR AGENTS SHALL NOT BE RESPONSIBLE FOR THE ACCURACY OR COMPLETENESS OF SCANNED COPIES OF THIS PLAN SHEET.

TO ACCOMPANY PLANS DATED 4-28-14

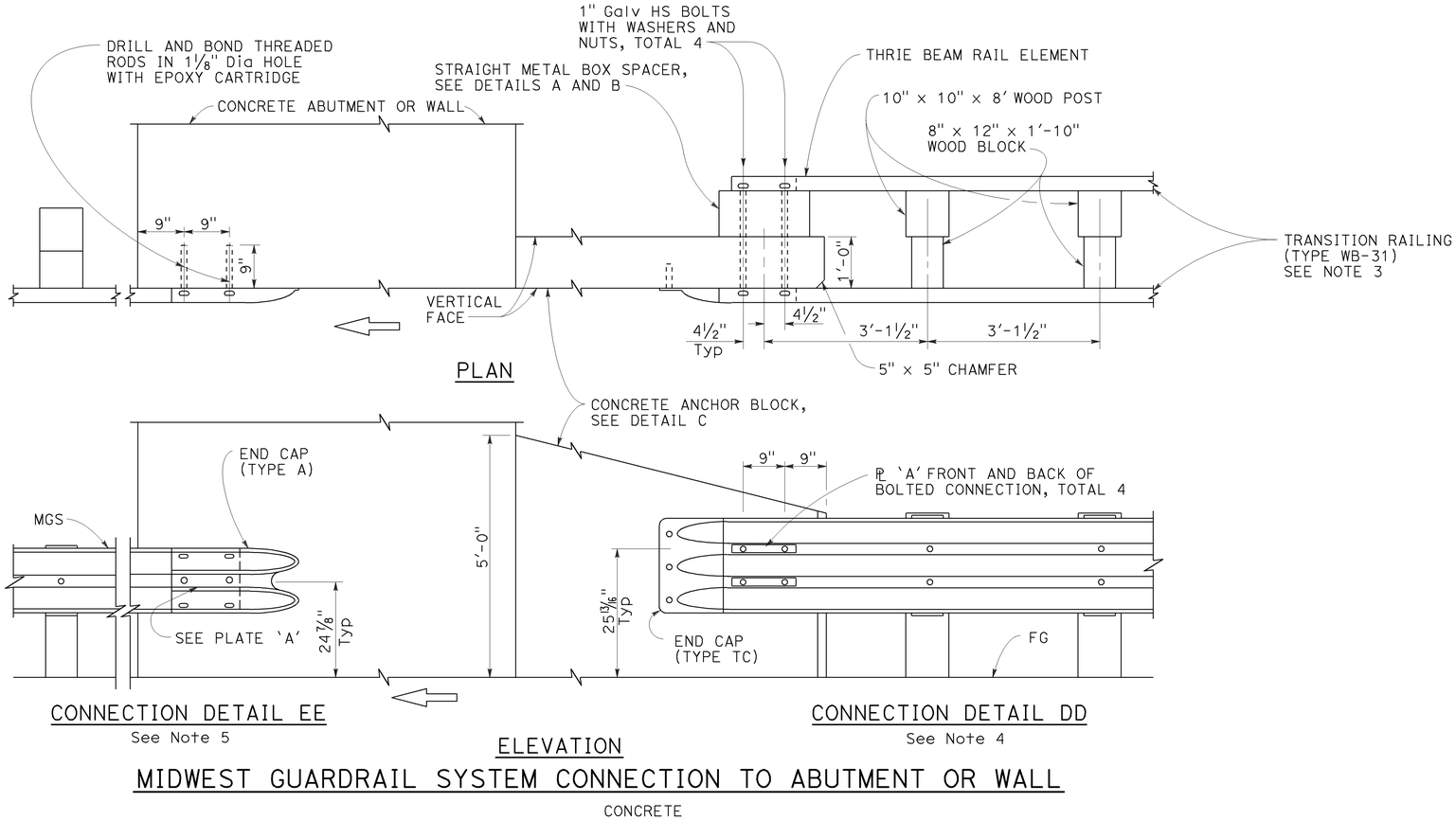

MIDWEST GUARDRAIL SYSTEM CONNECTION TO ABUTMENT OR WALL

NOTES:

1. These connection details apply to abutments and walls.
2. Additional details of posts, blocks and hardware are shown on Revised Standard Plans RSP A77M1, RSP A77N1 and RSP A77N2.
3. For additional details of Transition Railing (Type WB-31), see Revised Standard Plan RSP A77U4. Transition Railing (Type WB-31) transitions the 12 gauge MGS railing section to a heavier gage nested thrie beam railingsection which is connected to the concrete anchor block.
4. For typical use of Connection Details DD, see Layout Types 12A and 12B on Revised Standard Plan RSP A77Q1 and Layout Types 12C and 12D on Revised Standard Plan RSP A77Q2.
5. For typical use of Connection Detail EE, see Layout Type 12D on Revised Standard Plan RSP A77Q2 and Layout Type 12DD on Revised Standard Plan RSP A77Q5.

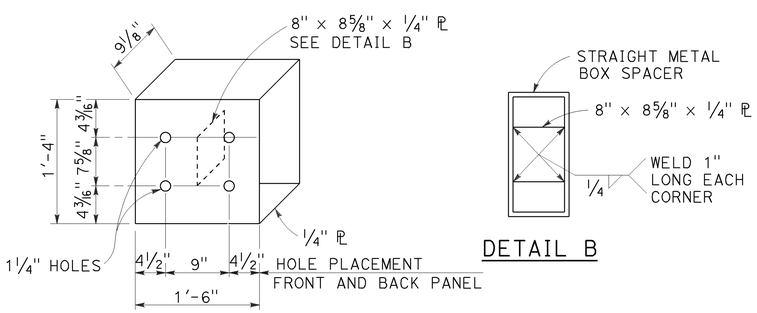

STRAIGHT METAL BOX SPACER

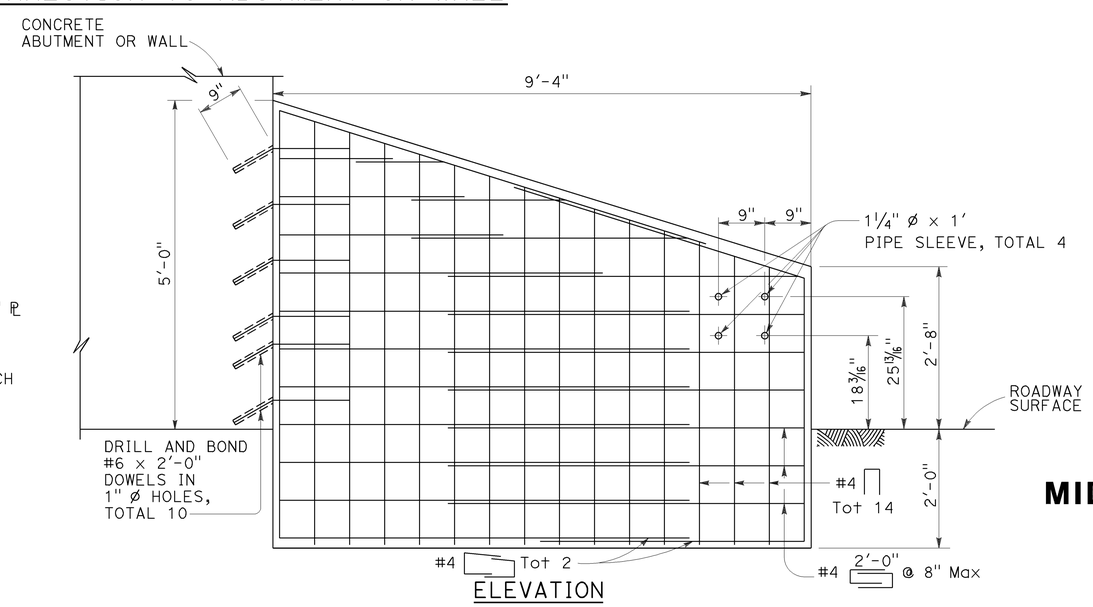

ANCHOR BLOCK FOR TRANSITION RAILING CONNECTION

DETAIL C

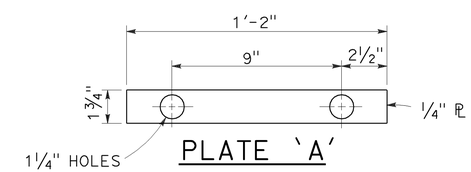

STATE OF CALIFORNIA
DEPARTMENT OF TRANSPORTATION

MIDWEST GUARDRAIL SYSTEM CONNECTIONS TO ABUTMENTS AND WALLS

NO SCALE

RSP A77U3 DATED JULY 19, 2013 SUPPLEMENTS THE STANDARD PLANS BOOK DATED 2010.

REVISED STANDARD PLAN RSP A77U3

2010 REVISED STANDARD PLAN RSP A77U3

7-8-13

Dist	COUNTY	ROUTE	POST MILES TOTAL PROJECT	SHEET No.	TOTAL SHEETS
06	Fre	33	10.9/11.1	65	104

Randell D. Hiatt
REGISTERED CIVIL ENGINEER

November 15, 2013
PLANS APPROVAL DATE

REGISTERED PROFESSIONAL ENGINEER Randell D. Hiatt No. C50200 Exp. 6-30-15 CIVIL STATE OF CALIFORNIA

THE STATE OF CALIFORNIA OR ITS OFFICERS OR AGENTS SHALL NOT BE RESPONSIBLE FOR THE ACCURACY OR COMPLETENESS OF SCANNED COPIES OF THIS PLAN SHEET.

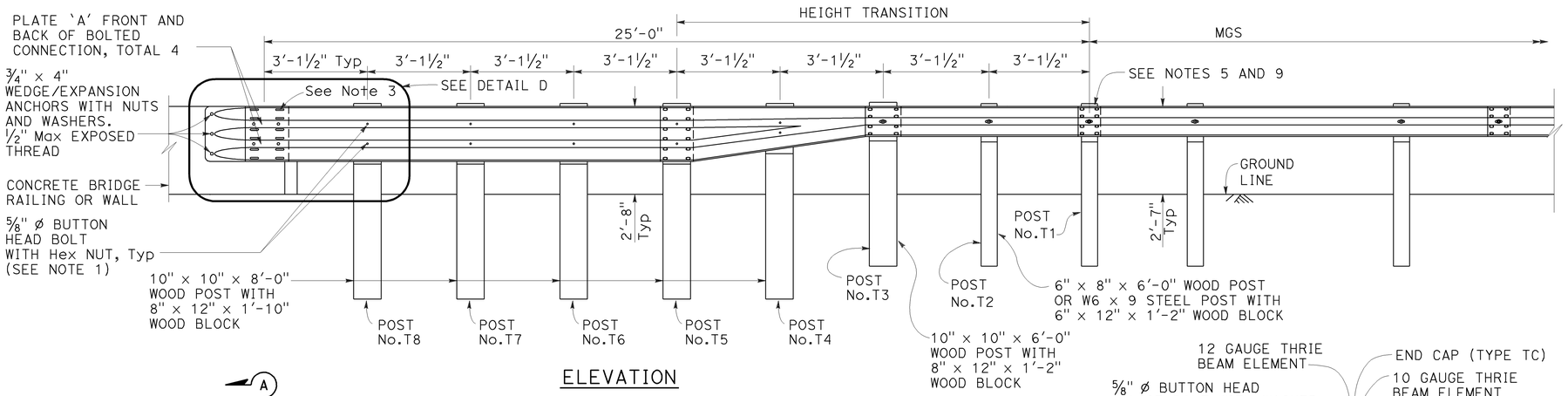

ELEVATION

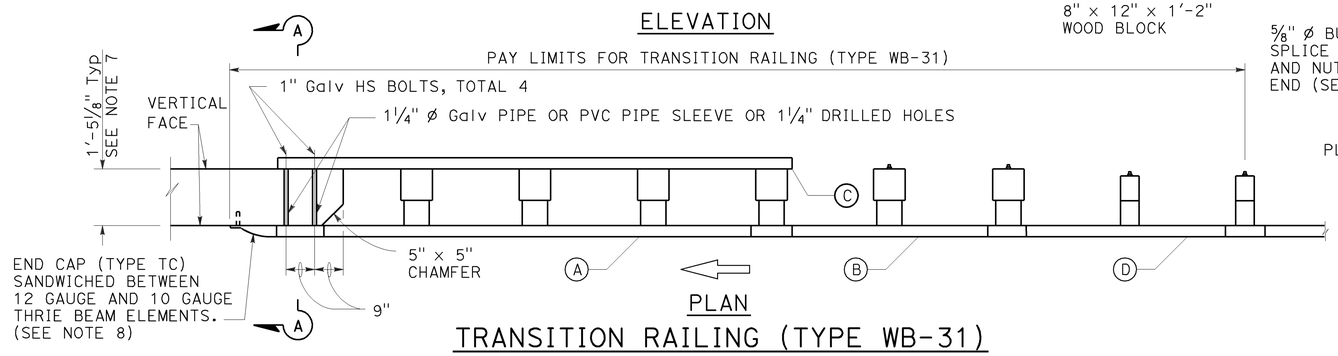

PLAN

TRANSITION RAILING (TYPE WB-31)

(No Blockout Attachment)

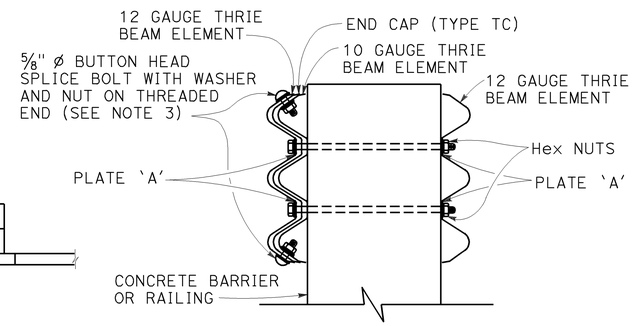

SECTION A-A

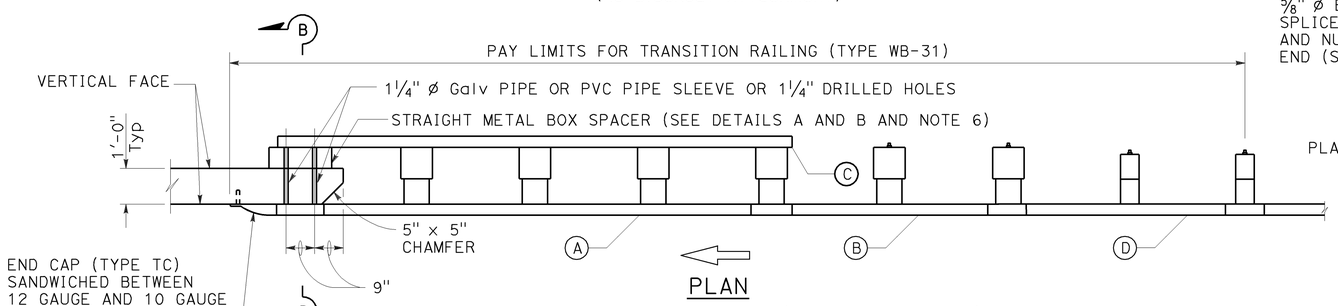

PLAN

TRANSITION RAILING (TYPE WB-31)

(Blockout Attachment)

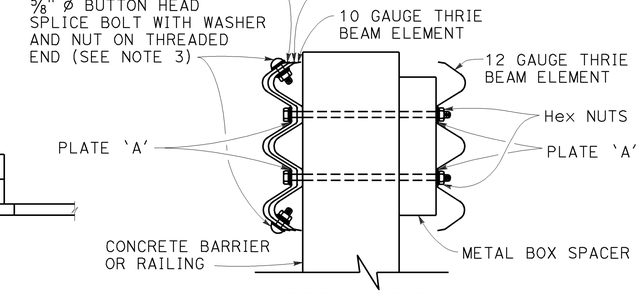

SECTION B-B

NOTES:

TO ACCOMPANY PLANS DATED 4-28-14

1. Use 5/8" ø Button head bolts and hex nuts for connections to posts. No washer on rail face for bolted connections to post.
2. The nested rail elements, end cap, and 'W' beam to thrie beam element may be spliced together prior to bolting the elements to the wood post and concrete barrier or railing.
3. Exterior splice bolt holes for rail element splices at Post No. T5 and the connection to the concrete barrier or railing shall be the standard 29/32" x 1 1/8" slot size. Interior splice bolt holes at these locations may be increased up to 1 1/4" ø. Only the top 4 and the bottom 4 splice bolts with washers and nuts are required for rail splices at Post No. T5 and the connection to the concrete barrier or railing.
4. The top elevation of Posts No. T2 through No. T7 shall not project more than 1" above the top elevation of the rail element.
5. Typically, the railing connected to Transition Railing (Type WB-31) will be either standard railing section of MGS with height transition ratio of 150:1 or a Caltrans approved 31" end treatment attached to Post No. T1.
6. The depth of the metal box spacer varies from the 9 1/8" to 1 1/2" and is dependent on the width of the concrete railing or wall. The combined dimension for the depth of the metal box spacer plus the width of railing or wall is typically 21 1/8". Where the space between the backside of the concrete railing or wall and the rear thrie beam element is less than 1 1/2", metal plates similar to Plate 'A' are to be used as spacers.
7. Where the width of the concrete railing or wall is greater than 17 1/8", wood blocks are to be used to fill the space created between the backside of Posts No. T5 through No. T8 and the rear thrie beam element. These wood blocks shall be 8" in width and 1'-2" in length. The dimension between the front thrie beam element and the rear thrie beam element is to match the width of the concrete railing or wall.
8. End cap may be installed over 12 gauge and 10 gauge thrie beam elements where transition railing is installed on the departure end of bridge railing.
9. Conform standard railing section height to 31" at Post No. T1 using height transition ratio of 150:1.

LEGEND:

(A) NESTED THRIE BEAM ELEMENTS (ONE 12 GAUGE ELEMENT NESTED OVER ONE 10 GAUGE ELEMENT).

(B) ONE ASYMMETRICAL 10 GAUGE "W" BEAM TO THRIE BEAM ELEMENT.

(C) ONE 12 GAUGE THRIE BEAM ELEMENT.

(D) ONE 10 GAUGE "W" BEAM RAIL ELEMENT (7'-3 1/2" LENGTH)

10 GAUGE = 0.138" THICK
12 GAUGE = 0.108" THICK

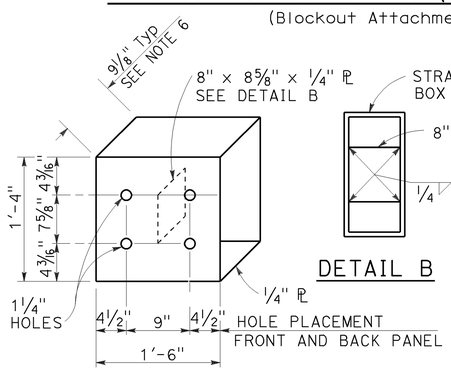

DETAIL A

STRAIGHT METAL BOX SPACER

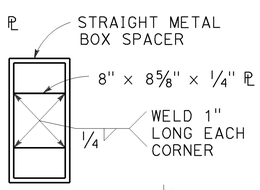

DETAIL B

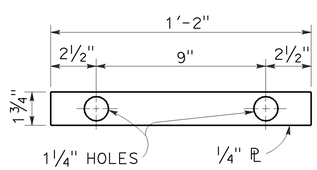

DETAIL C

PLATE 'A'

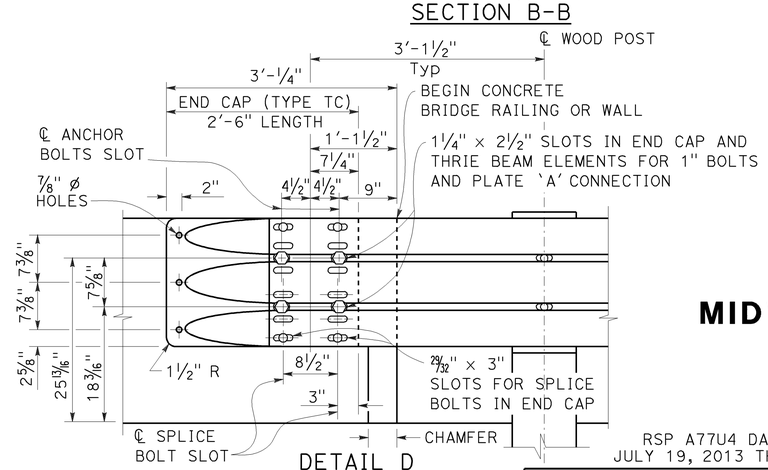

DETAIL D

STATE OF CALIFORNIA
DEPARTMENT OF TRANSPORTATION

MIDWEST GUARDRAIL SYSTEM TRANSITION RAILING (TYPE WB-31)

NO SCALE

RSP A77U4 DATED NOVEMBER 15, 2013 SUPERSEDES RSP A77U4 DATED JULY 19, 2013 THAT SUPPLEMENTS THE STANDARD PLANS BOOK DATED 2010.

REVISED STANDARD PLAN RSP A77U4

2010 REVISED STANDARD PLAN RSP A77U4

10-4-13

Dist	COUNTY	ROUTE	POST MILES TOTAL PROJECT	SHEET No.	TOTAL SHEETS
06	Fre	33	10.9/11.1	66	104

REGISTERED CIVIL ENGINEER

July 18, 2014
PLANS APPROVAL DATE

REGISTERED PROFESSIONAL ENGINEER Glenn DeCou No. C34547 Exp. 9-30-15 CIVIL STATE OF CALIFORNIA

THE STATE OF CALIFORNIA OR ITS OFFICERS OR AGENTS SHALL NOT BE RESPONSIBLE FOR THE ACCURACY OR COMPLETENESS OF SCANNED COPIES OF THIS PLAN SHEET.

TO ACCOMPANY PLANS DATED 4-28-14

2010 REVISED STANDARD PLAN RSP A85

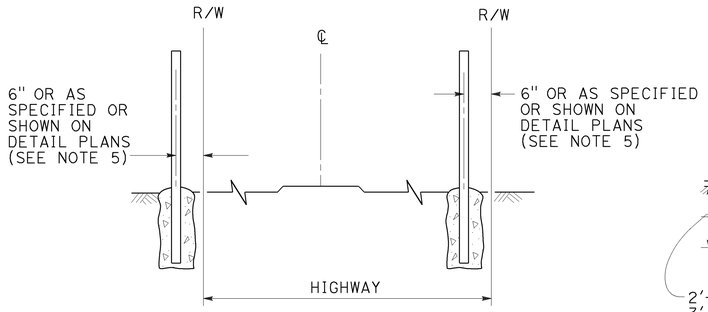

FENCE LOCATION

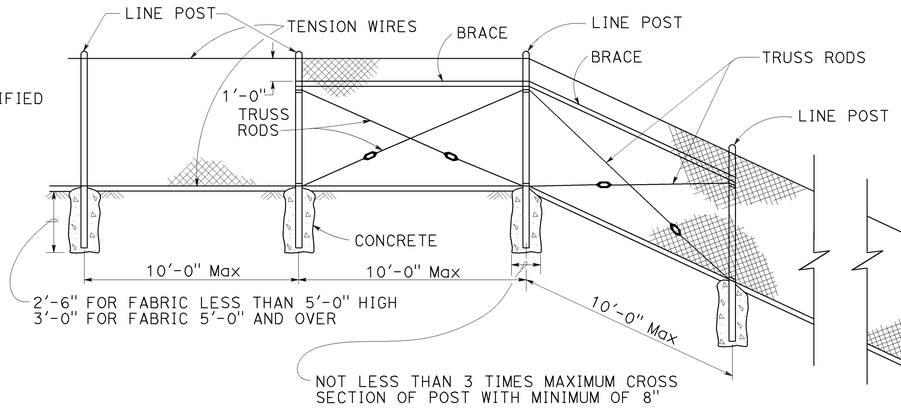

CHAIN LINK FENCE ON SHARP BREAK IN GRADE

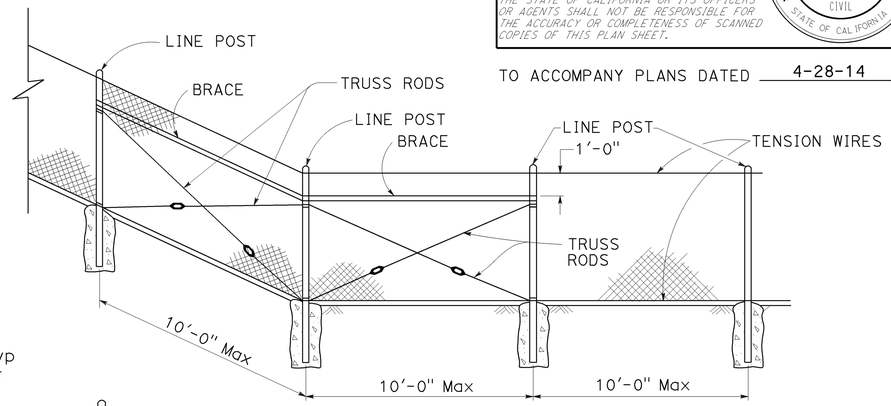

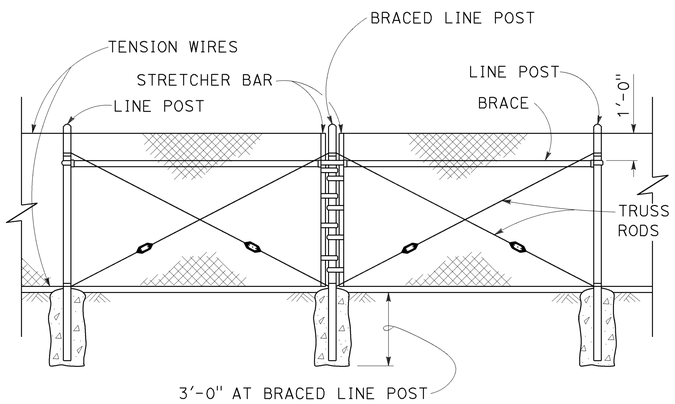

BRACED LINE POST INSTALLATION

Braced line post at intervals not exceeding 1000'

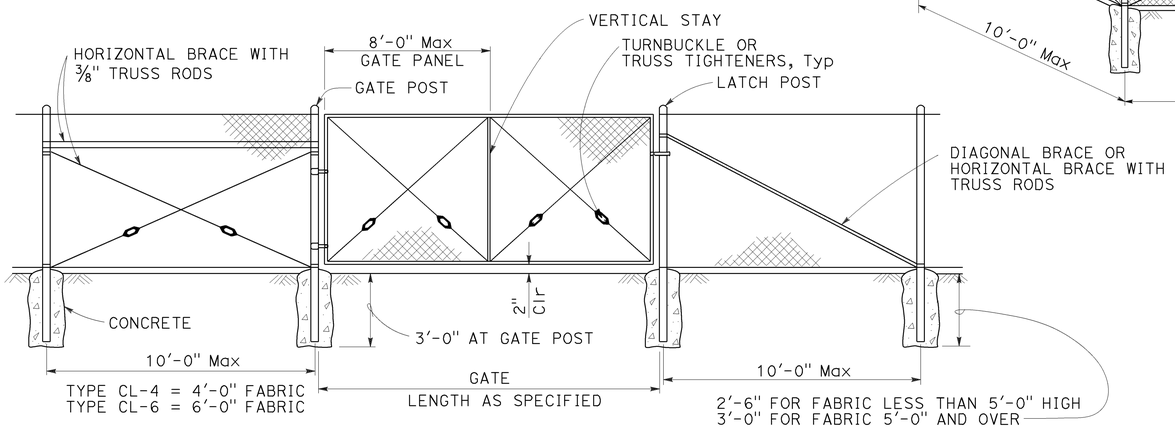

CHAIN LINK GATE INSTALLATION

GATE POST			
FENCE HEIGHT	GATE WIDTHS	ROUND OD PIPE	WEIGHT (lb/ft)
6'-0" AND LESS	UP THRU 6'-0"	2.875"	5.80
	OVER 6'-0" THRU 12'-0"	4.500"	10.80
	OVER 12'-0" THRU 18'-0"	5.563"	14.63
	OVER 18'-0" TO 24'-0" Max	6.625"	18.99
OVER 6'-0" TO 8'-0" Max	UP THRU 6'-0"	3.500"	7.58
	OVER 6'-0" THRU 12'-0"	5.563"	14.63
	OVER 12'-0" THRU 18'-0"	6.625"	18.99
	OVER 18'-0" TO 24'-0" Max	8.625"	28.58

Above post dimensions and weights are minimums. Larger sizes may be used upon approval.

NOTES:

1. The table below shows minimum sized posts and braces complying with the specifications. Larger or heavier post and brace sizes may be used upon approval.
2. Sections shown in the tables must also comply with the strength requirements and other provisions of the Specifications.
3. Other sections which comply with the strength requirements and other provisions of the Specifications may be used upon approval.
4. Options exercised shall be uniform on any one project.
5. Offset to be 2'-0" at monument locations, measured at right angles to R/W lines. Taper to achieve offset to be at least 20'-0" long.
6. See Revised Standard Plan RSP A85B for Brace, Stretcher Bar, and Truss Tightener Details.

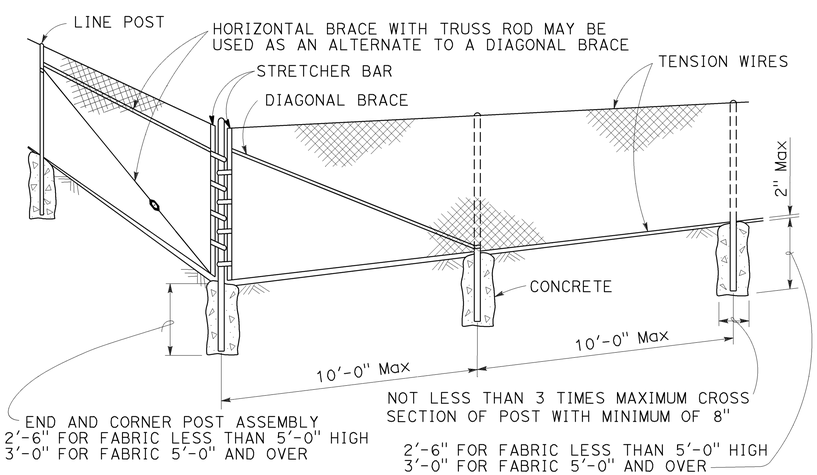

CORNER POST

TYPICAL MEMBER DIMENSIONS (See Notes)										
FENCE HEIGHT	LINE POSTS				END, LATCH AND CORNER POSTS		BRACES			
	ROUND OD PIPE	WEIGHT (lb/ft)	ROLL FORMED		ROUND OD PIPE	WEIGHT (lb/ft)	ROUND OD PIPE	WEIGHT (lb/ft)	ROLL FORMED	
			SECTION	WEIGHT (lb/ft)					SECTION	WEIGHT (lb/ft)
6'-0" AND LESS	1.900"	2.72	1.875" x 1.625"	1.85	2.375"	3.65	1.66"	2.27	1.625" x 1.25"	1.35
OVER 6'-0" TO 8'-0" Max	2.375"	3.65	2.25" x 1.70"	2.78	2.875"	5.80	1.66"	2.27	1.625" x 1.25"	1.35

STATE OF CALIFORNIA
DEPARTMENT OF TRANSPORTATION

CHAIN LINK FENCE

NO SCALE

RSP A85 DATED JULY 18, 2014 SUPERSEDES STANDARD PLAN A85 DATED MAY 20, 2011 - PAGE 112 OF THE STANDARD PLANS BOOK DATED 2010.

REVISED STANDARD PLAN RSP A85

7-1-14

Dist	COUNTY	ROUTE	POST MILES TOTAL PROJECT	SHEET No.	TOTAL SHEETS
06	Fre	33	10.9/11.1	67	104

REGISTERED CIVIL ENGINEER

October 19, 2012
PLANS APPROVAL DATE

REGISTERED PROFESSIONAL ENGINEER Glenn DeCou No. C34547 Exp. 9-30-13 CIVIL STATE OF CALIFORNIA

THE STATE OF CALIFORNIA OR ITS OFFICERS OR AGENTS SHALL NOT BE RESPONSIBLE FOR THE ACCURACY OR COMPLETENESS OF SCANNED COPIES OF THIS PLAN SHEET.

TO ACCOMPANY PLANS DATED 4-28-14

2010 REVISED STANDARD PLAN RSP A85B

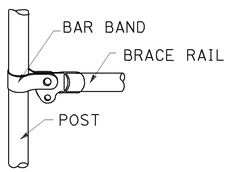

BRACE RAIL

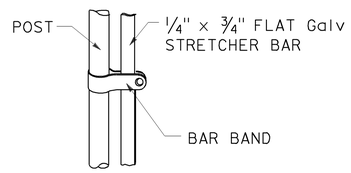

STRETCHER BAR

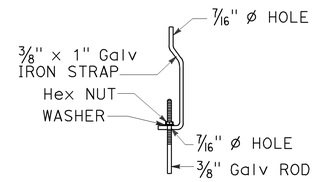

TRUSS TIGHTENER

NOTES:

1. All material for abutment connection to be galvanized.
2. The chain link fabric shall be replaced by barbed wire strands at 12" maximum centers between the double posts.
3. When the width of the culvert makes it necessary to anchor a post to the top of the culvert, a cast iron shoe or other device approved by the Engineer shall be used.
4. Fencing over stream and around headwall may also use Barbed Wire or Wire Mesh fencing with either wood post or steel post installation.
5. See Standard Plan A85 for Chain Link fence dimensions. See Standard Plan A86 for Barbed Wire and Wire Mesh fence dimensions and for wood post and steel post installation.

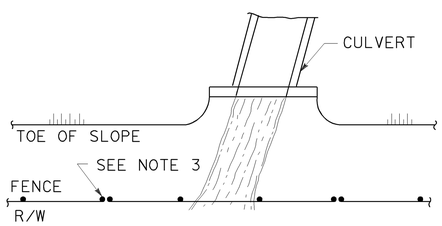

PLAN

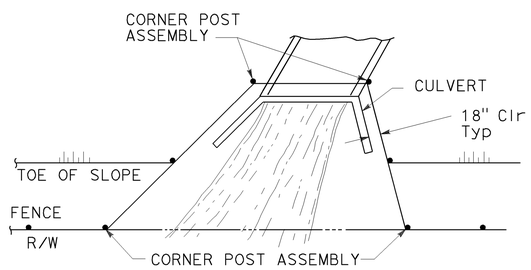

PLAN

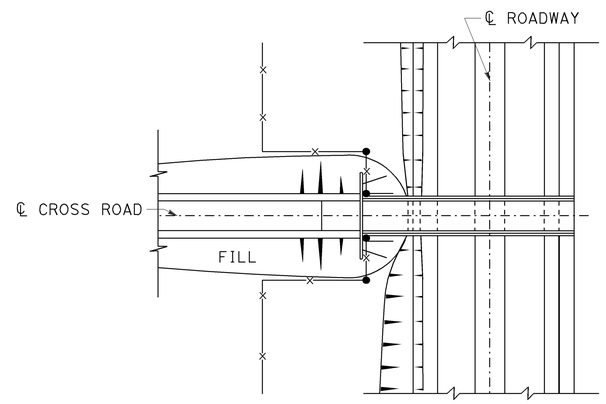

PLAN OF ROADWAY - OVERCROSSING

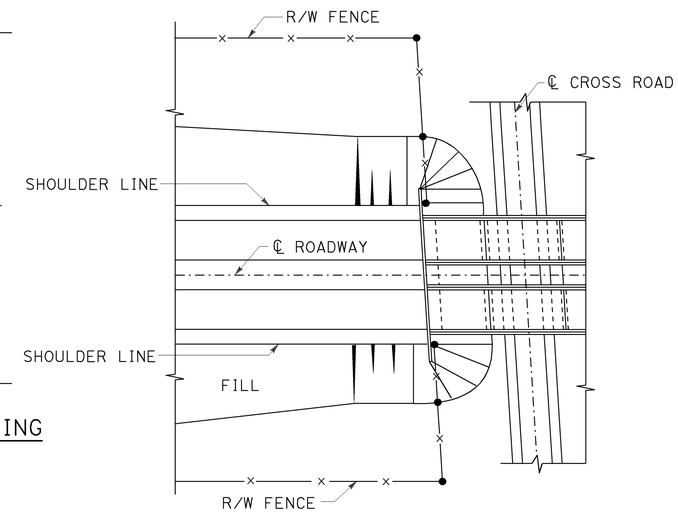

PLAN OF ROADWAY - UNDERCROSSING

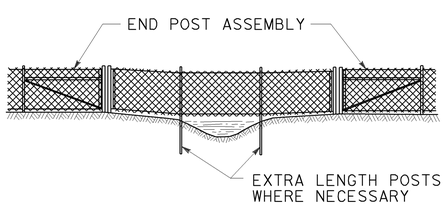

ELEVATION

INSTALLATION OVER STREAM

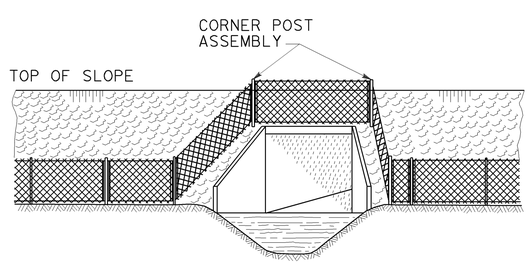

ELEVATION

INSTALLATION AROUND HEADWALL

See Note 4

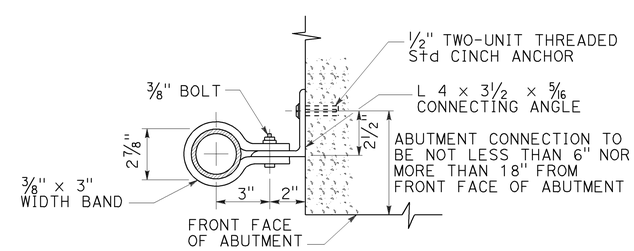

ABUTMENT CONNECTION

TYPICAL INSTALLATION AT BRIDGES

STATE OF CALIFORNIA
DEPARTMENT OF TRANSPORTATION

CHAIN LINK FENCE DETAILS

NO SCALE

RSP A85B DATED OCTOBER 19, 2012 SUPERSEDES STANDARD PLAN A85B DATED MAY 20, 2011 - PAGE 114 OF THE STANDARD PLANS BOOK DATED 2010.

REVISED STANDARD PLAN RSP A85B

7-19-12

Dist	COUNTY	ROUTE	POST MILES TOTAL PROJECT	SHEET No.	TOTAL SHEETS
06	Fre	33	10.9/11.1	68	104

Raymond Don Tsztoo
REGISTERED CIVIL ENGINEER

October 19, 2012
PLANS APPROVAL DATE

REGISTERED PROFESSIONAL ENGINEER
Raymond Don Tsztoo
No. C37332
Exp. 6-30-14
CIVIL
STATE OF CALIFORNIA

THE STATE OF CALIFORNIA OR ITS OFFICERS OR AGENTS SHALL NOT BE RESPONSIBLE FOR THE ACCURACY OR COMPLETENESS OF SCANNED COPIES OF THIS PLAN SHEET.

TO ACCOMPANY PLANS DATED 4-28-14

2010 REVISED STANDARD PLAN RSP A86D

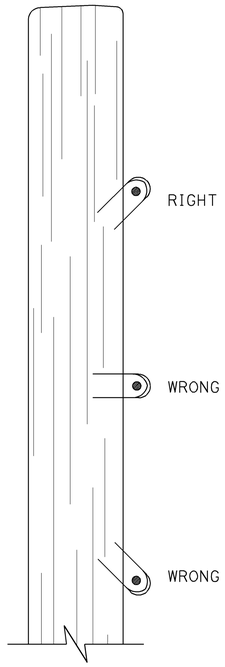

DRIVE STAPLES AT ANGLE

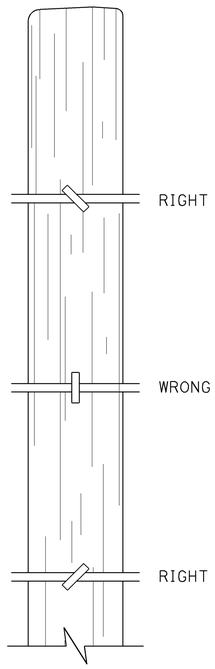

DO NOT DRIVE STAPLES PARALLEL TO SIDE OF POST

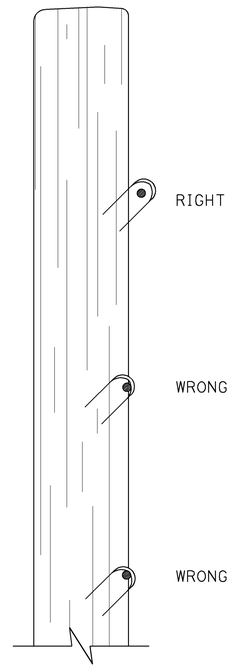

LEAVE WIRE LOOSE IN STAPLE

LINE POST STAPLING DETAILS

(Apply to rectangular/square and round posts)
Do not staple vertical wire in wire mesh.

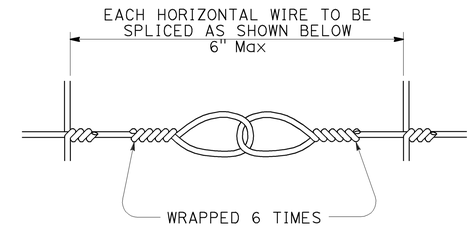

SPLICE DETAIL FOR BARBED WIRE/WIRE MESH FENCE

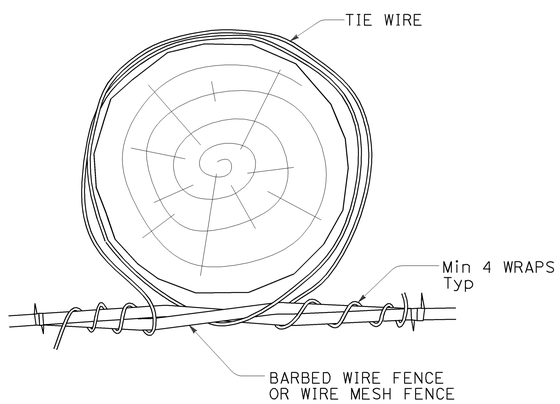

OPTION A

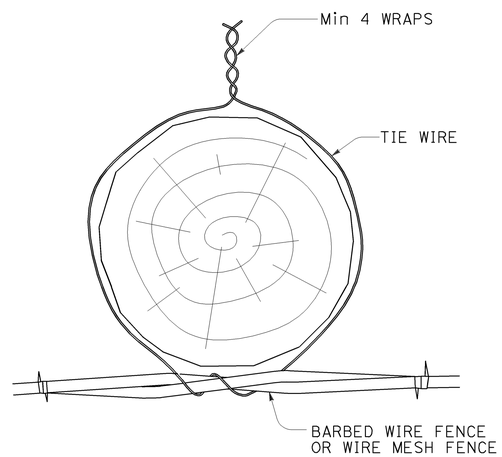

OPTION B

LINE POST WIRE TIE OPTION DETAILS

(Option details also apply to rectangular/square posts)

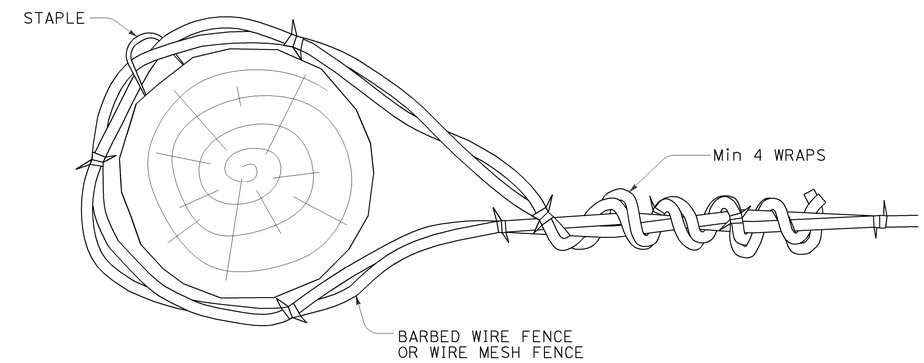

END, LATCH, PULL, AND CORNER POST DETAIL

(Also applies to rectangular/square posts)

STATE OF CALIFORNIA
DEPARTMENT OF TRANSPORTATION

BARBED WIRE AND WIRE MESH FENCE - MISCELLANEOUS DETAILS

NO SCALE

RSP A86D DATED OCTOBER 19, 2012 SUPPLEMENTS THE STANDARD PLANS BOOK DATED 2010.

REVISED STANDARD PLAN RSP A86D

10-9-12

Dist	COUNTY	ROUTE	POST MILES TOTAL PROJECT	SHEET No.	TOTAL SHEETS
06	Fre	33	10.9/11.1	69	104

REGISTERED CIVIL ENGINEER

July 19, 2013
PLANS APPROVAL DATE

REGISTERED PROFESSIONAL ENGINEER
Michael Janzen
No. 44788
Exp. 03-31-14
CIVIL
STATE OF CALIFORNIA

THE STATE OF CALIFORNIA OR ITS OFFICERS OR AGENTS SHALL NOT BE RESPONSIBLE FOR THE ACCURACY OR COMPLETENESS OF SCANNED COPIES OF THIS PLAN SHEET.

TO ACCOMPANY PLANS DATED 4-28-14

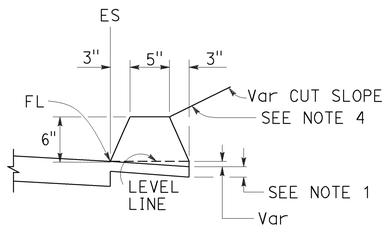

TYPE A
See Note 3

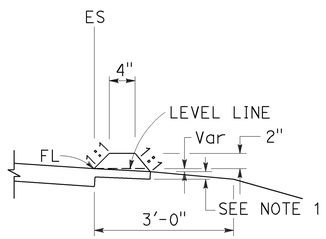

TYPE C

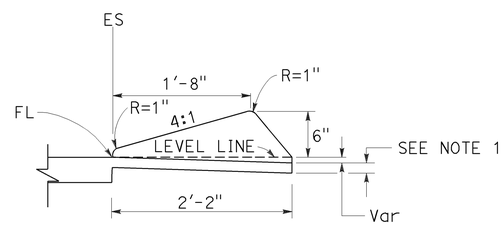

TYPE D

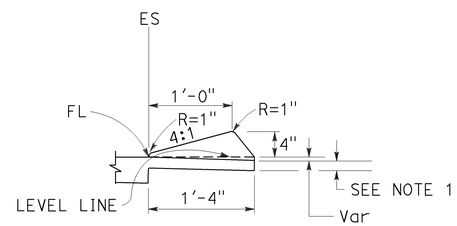

TYPE E

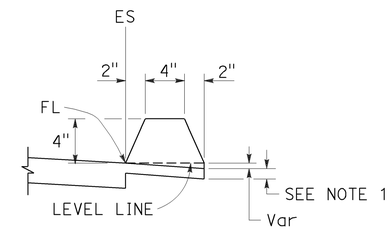

TYPE F
See Note 5

DIKES

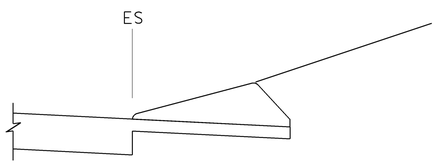

CASE C-1
Cut Slope

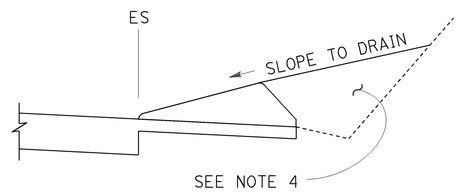

CASE C-2
Cut Slope

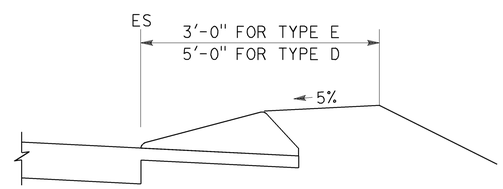

CASE F

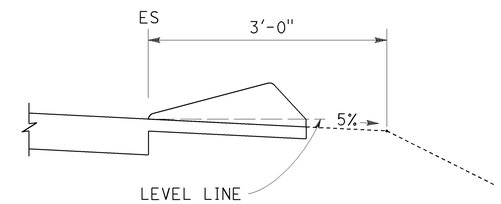

CASE R
See Note 2

TYPE D AND E BACKFILL DETAILS

NOTES:

1. For HMA shoulders only, extend top layer of HMA placed on the shoulder under dike with no joint at the ES. For projects with OGFC shoulders, do not extend OGFC under dike. See project plans for modified dike detail.
2. Case R applies to retrofit only projects where restrictive conditions do not provide enough width for Case F backfill.
3. Type A dike only to be used where restrictive slope conditions do not provide enough width to use Type D or Type E dike.
4. Fill and compact with excavated material to top of dike.
5. Use Type F dike, where dike is required with guard railing installations. See Revised Standard Plan RSP A77N4 for dike positioning details.

DIKE QUANTITIES

TYPE	CUBIC YARDS PER LINEAR FOOT
A	0.0135
C	0.0038
D	0.0293
E	0.0130
F	0.0066

Quantities based on 5% cross slope.

STATE OF CALIFORNIA
DEPARTMENT OF TRANSPORTATION

HOT MIX ASPHALT DIKES

NO SCALE

RSP A87B DATED JULY 19, 2013 SUPERSEDES STANDARD PLAN A87B DATED MAY 20, 2011 - PAGE 120 OF THE STANDARD PLANS BOOK DATED 2010.

REVISED STANDARD PLAN RSP A87B

2010 REVISED STANDARD PLAN RSP A87B

6-27-13

DIST	COUNTY	ROUTE	POST MILES TOTAL PROJECT	SHEET No.	TOTAL SHEETS
06	Fre	33	10.9/11.1	70	104

REGISTERED CIVIL ENGINEER

November 15, 2013
PLANS APPROVAL DATE

REGISTERED PROFESSIONAL ENGINEER
Cornelis M. Hakim
No. C55610
Exp. 12-31-14
CIVIL
STATE OF CALIFORNIA

THE STATE OF CALIFORNIA OR ITS OFFICERS OR AGENTS SHALL NOT BE RESPONSIBLE FOR THE ACCURACY OR COMPLETENESS OF SCANNED COPIES OF THIS PLAN SHEET.

TO ACCOMPANY PLANS DATED 4-28-14

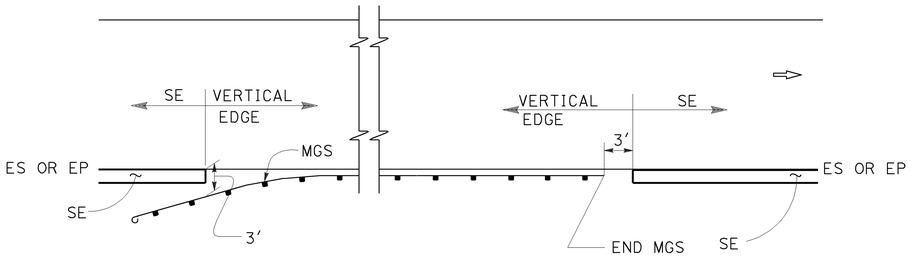

MGS

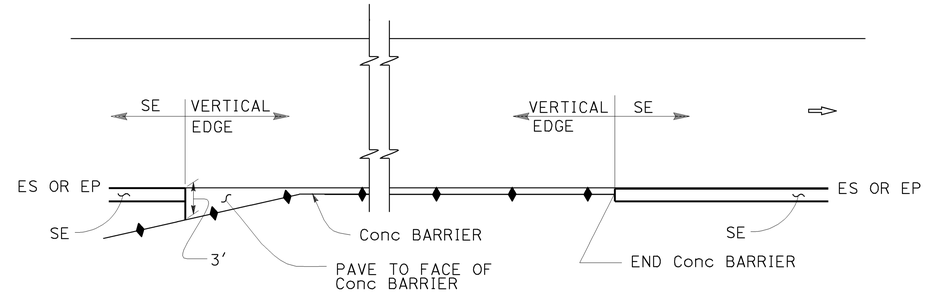

CONCRETE BARRIER

ABBREVIATIONS:

SE SAFETY EDGE

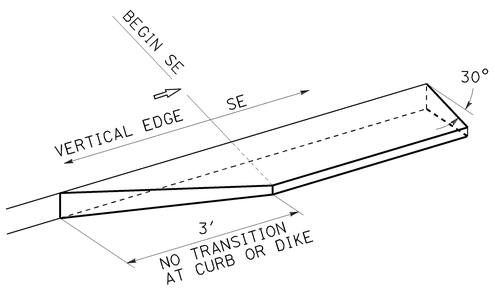

TRANSITION DETAIL FOR CONCRETE ONLY

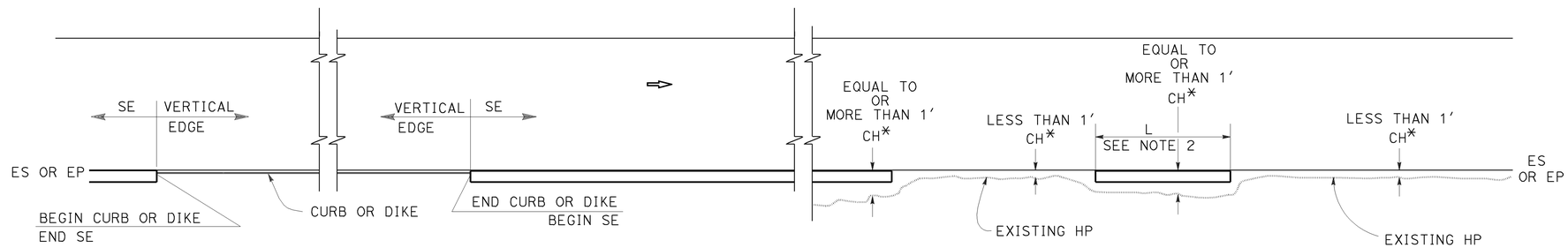

CURB OR DIKE

NARROW SIDE SLOPE

* CH = Distance from ES or EP to existing HP.

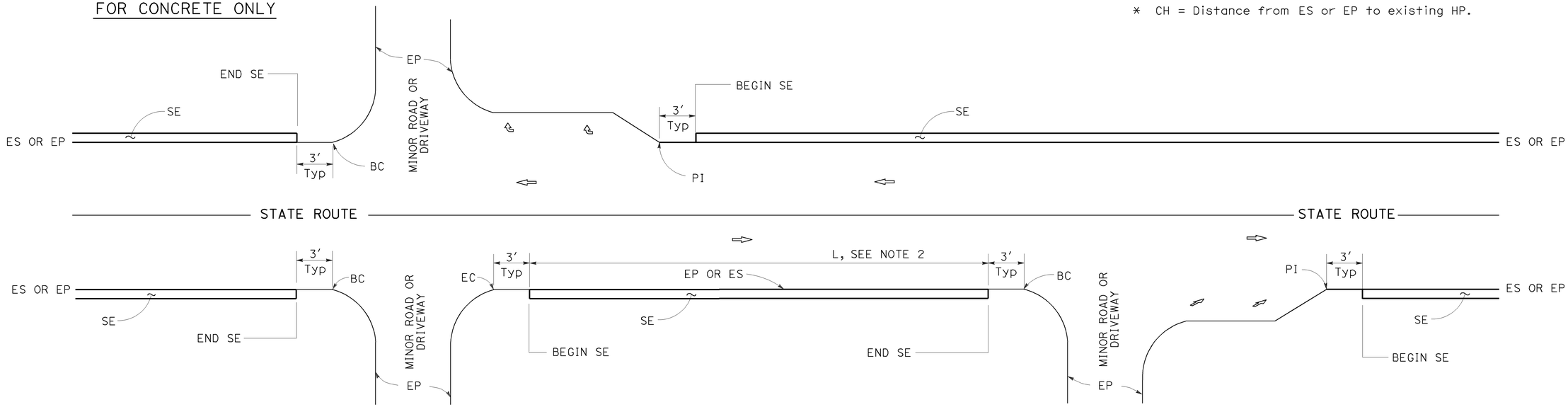

INTERSECTION

MINOR ROADWAY OR DRIVEWAY

DRIVEWAY AND INTERSECTION

STATE OF CALIFORNIA
DEPARTMENT OF TRANSPORTATION

PAVEMENT EDGE TREATMENTS

NO SCALE

RSP P74 DATED NOVEMBER 15, 2013 SUPERSEDES RSP P74 DATED JANUARY 20, 2012 THAT SUPPLEMENTS THE STANDARD PLANS BOOK DATED 2010.

REVISED STANDARD PLAN RSP P74

NOTES:

1. For details not shown, see Revised Standard Plans RSP P75 and RSP P76.
2. Safety edge is optional when L is less than 30′.

2010 REVISED STANDARD PLAN RSP P74

10-11-13

DIST	COUNTY	ROUTE	POST MILES TOTAL PROJECT	SHEET No.	TOTAL SHEETS
06	Fre	33	10.9/11.1	71	104

REGISTERED CIVIL ENGINEER

November 15, 2013
PLANS APPROVAL DATE

REGISTERED PROFESSIONAL ENGINEER
Cornelis M. Hakim
No. C55610
Exp. 12-31-14
CIVIL
STATE OF CALIFORNIA

THE STATE OF CALIFORNIA OR ITS OFFICERS OR AGENTS SHALL NOT BE RESPONSIBLE FOR THE ACCURACY OR COMPLETENESS OF SCANNED COPIES OF THIS PLAN SHEET.

TO ACCOMPANY PLANS DATED 4-28-14

LEGEND:

- HMA PAVEMENT
- HMA OR CONCRETE PAVEMENT
- CONCRETE PAVEMENT

ABBREVIATIONS:

SE SAFETY EDGE
TT TOTAL THICKNESS OF SE
HW HINGE WIDTH, DISTANCE FROM ES OR EP TO HP

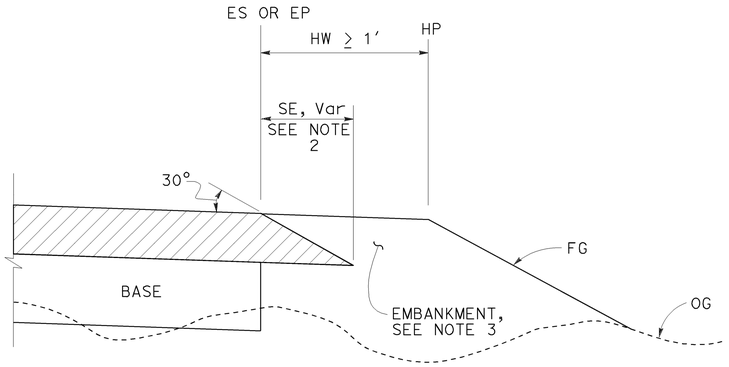

CASE K
Safety Edge - Fill Section, HW ≥ 1′

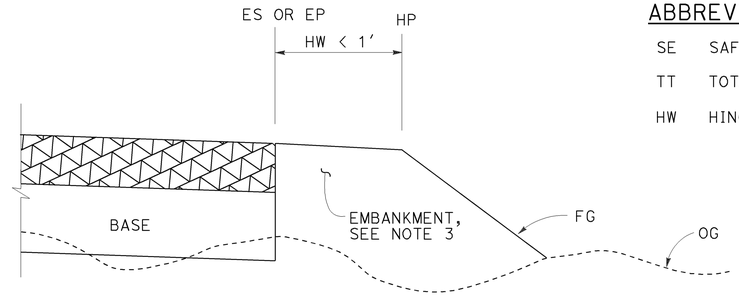

CASE L
Vertical Edge - Fill Section, HW < 1′

FILL SECTION

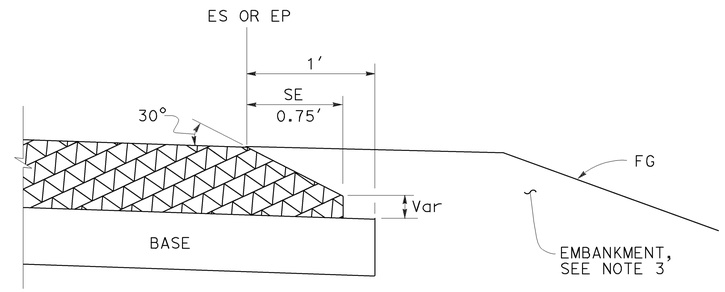

DETAIL "B"
For HMA pavement thickness more than 0.43′ or concrete pavement

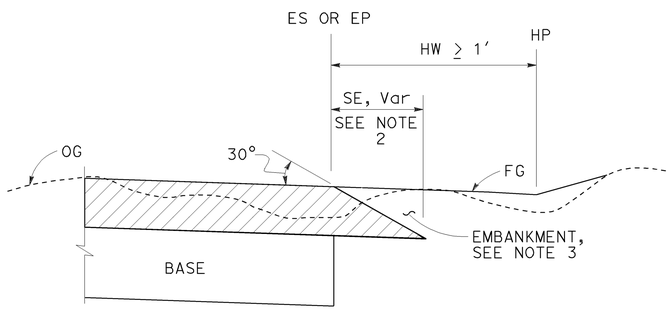

CASE M
Safety Edge - Cut Section, HW ≥ 1′

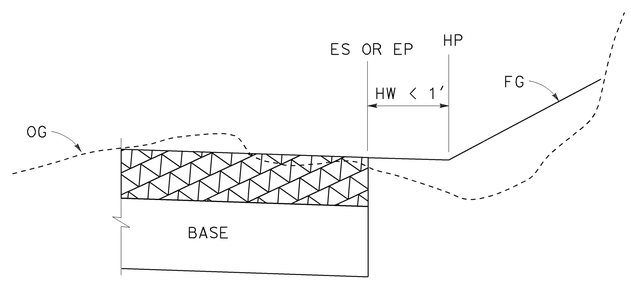

CASE N
Vertical Edge - Cut Section, HW < 1′

CUT SECTION

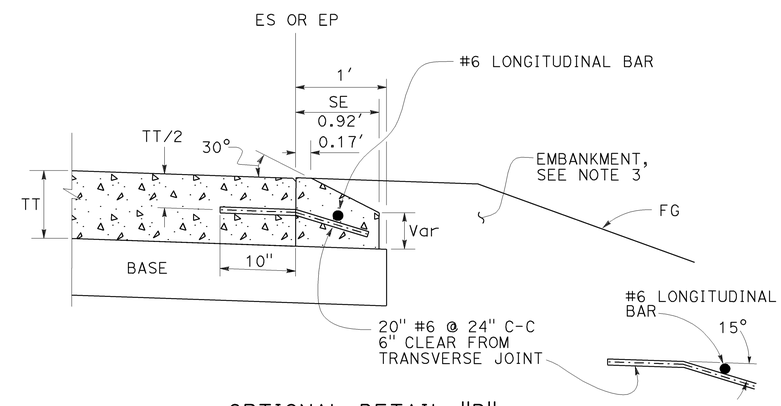

OPTIONAL DETAIL "B"
For concrete pavement
See Note 4

NOTES:

1. For limits of safety edge and vertical edge treatments, see Revised Standard Plan RSP P74
2. Details shown for HMA pavement thickness less than 0.43′. See Detail "B" for HMA pavement thickness more than 0.43′ or concrete pavement.
3. For locations and limits of embankment see project plans.
4. Safety edge transverse joint must match pavement transverse joint. End of #6 longitudinal bar must be 2" ±½" clear from transverse joint.
5. Safety edge is not needed in the area of MGS, barrier, right turn lane and acceleration lane. See Revised Standard Plan RSP P74.

STATE OF CALIFORNIA
DEPARTMENT OF TRANSPORTATION

PAVEMENT EDGE TREATMENTS-NEW CONSTRUCTION

NO SCALE

RSP P76 DATED NOVEMBER 15, 2013 SUPERSEDES RSP P76 DATED JANUARY 20, 2012 THAT SUPPLEMENTS THE STANDARD PLANS BOOK DATED 2010.

REVISED STANDARD PLAN RSP P76

2010 REVISED STANDARD PLAN RSP P76

10-4-13

Dist	COUNTY	ROUTE	POST MILES TOTAL PROJECT	SHEET No.	TOTAL SHEETS
06	Fre	33	10.9/11.1	72	104

Gregory A. Balzer
LICENSED LANDSCAPE ARCHITECT

July 19, 2013
PLANS APPROVAL DATE

THE STATE OF CALIFORNIA OR ITS OFFICERS OR AGENTS SHALL NOT BE RESPONSIBLE FOR THE ACCURACY OR COMPLETENESS OF SCANNED COPIES OF THIS PLAN SHEET.

LICENSED LANDSCAPE ARCHITECT
Gregory A. Balzer 2516
Gregory A. Balzer
Renewal Date 2-28-15
Renewal Date 7-19-13
Date
STATE OF CALIFORNIA

TO ACCOMPANY PLANS DATED 4-28-14

A

AB	AGGREGATE BASE
ABS	ACRYLONITRILE-BUTADIENE-STYRENE
AC	ASPHALT CONCRETE
ACC	ARMOR-CLAD CONDUCTORS
Adj	ADJACENT/ADJUSTABLE
AIC	AUXILIARY IRRIGATION CONTROLLER
Alt	ALTERNATIVE
AMEND	AMENDMENT
ARV	AIR RELEASE VALVE
AUTO	AUTOMATIC
AUX	AUXILIARY
AVB	ATMOSPHERIC VACUUM BREAKER

B

B&B	BALLED AND BURLAPPED
B/B	BRASS/BRONZE
B/B/PL	BRASS/BRONZE/PLASTIC
B/PL	BRASS/PLASTIC
BFM	BONDED FIBER MATRIX
Bit Ctd	BITUMINOUS COATED
BP	BOOSTER PUMP
BPA	BACKFLOW PREVENTER ASSEMBLY
BPE	BACKFLOW PREVENTER ENCLOSURE
BV	BALL VALVE

C

C	CONDUIT
CAP	CORRUGATED ALUMINUM PIPE
CARV	COMBINATION AIR RELEASE VALVE
CB	COUPLING BAND
CCA	CAM COUPLER ASSEMBLY
CEC	CONTROLLER ENCLOSURE CABINET
CHDPE	CORRUGATED HIGH DENSITY POLYETHYLENE
CL	CHAIN LINK
CNC	CONTROL AND NEUTRAL CONDUCTORS
Conc	CONCRETE
CP	COPPER PIPE
CS	COMPOST SOCK
CSP	CORRUGATED STEEL PIPE
CST	CENTER STRIP
CV	CHECK VALVE

D

Dia	DIAMETER
DIP	DUCTILE IRON PIPE
DIT	DRIP IRRIGATION TUBING
DG	DECOMPOSED GRANITE
DN	DIAMETER NOMINAL
DVA	DRIP VALVE ASSEMBLY

E

EC	EROSION CONTROL
ECTC	EROSION CONTROL TECHNOLOGY COUNCIL
Elect	ELECTRIC/ELECTRICAL
Elev	ELEVATION
ELL	ELBOW
ENCL	ENCLOSURE
EP	EDGE OF PAVEMENT
ES	EDGE OF SHOULDER
EST	END STRIP
ESTB	ESTABLISHMENT
ETW	EDGE OF TRAVELED WAY

F

F	FULL CIRCLE
F/P	FULL/PART CIRCLE
FCV	FLOW CONTROL VALVE
FERT	FERTILIZER
FG	FINISHED GRADE
FH	FLEXIBLE HOSE
FIPT	FEMALE IRON PIPE THREAD
FIS	FERTILIZER INJECTOR SYSTEM
FL	FLOW LINE
FR	FIBER ROLL
FS	FLOW SENSOR
FSC	FLOW SENSOR CABLE
FV	FLUSH VALVE

G

Galv	GALVANIZED
GARV	GARDEN VALVE
GARVA	GARDEN VALVE ASSEMBLY
GM	GRAVEL MULCH
GPH	GALLONS PER HOUR
GPM	GALLONS PER MINUTE
GSP	GALVANIZED STEEL PIPE
GV	GATE VALVE

H

H	HALF CIRCLE
HDPE	HIGH DENSITY POLYETHYLENE
HP	HORSEPOWER/HINGE POINT
HPL	HIGH PRESSURE LINE
Hwy	HIGHWAY

I

IC	IRRIGATION CONTROLLER
ICC	IRRIGATION CONTROLLER(S) IN CONTROLLER ENCLOSURE CABINET
ID	INSIDE DIAMETER
IFS	IRRIGATION FILTRATION SYSTEM
IPS	IRON PIPE SIZE
IPT	IRON PIPE THREAD
Irr	IRRIGATION

L

L	LENGTH

M

Max	MAXIMUM
MBGR	METAL BEAM GUARD RAILING
MCV	MANUAL CONTROL VALVE
MIC	MASTER IRRIGATION CONTROLLER
Min	MINIMUM
MIPT	MALE IRON PIPE THREAD
Misc	MISCELLANEOUS
Mtl	MATERIAL
MVP	MAINTENANCE VEHICLE PULLOUT

N

NCN	NO COMMON NAME
NL	NOZZLE LINE
No.	NUMBER
NPT	NATIONAL PIPE THREAD

O

O/C	ON CENTER
OD	OUTSIDE DIAMETER
OL	OVERLAP

P

P	PART CIRCLE
PB	PULL BOX
PCC	PORTLAND CEMENT CONCRETE
PE	POLYETHYLENE
Pkt	PACKET
PL	PLASTIC
PLS	PURE LIVE SEED
PLT	PLANT/PLANTING
PLT ESTB	PLANT ESTABLISHMENT
PM	POST MILE
PR	PRESSURE RATED
PRLV	PRESSURE RELIEF VALVE
PRV	PRESSURE REGULATING VALVE
PVC	POLYVINYL CHLORIDE
Pvmt	PAVEMENT

Q

Q	QUARTER CIRCLE
QCV	QUICK COUPLING VALVE

R

R	RADIUS
RCP	REINFORCED CONCRETE PIPE
RCV	REMOTE CONTROL VALVE
RCVM	REMOTE CONTROL VALVE (MASTER)
RCVMF	REMOTE CONTROL VALVE (MASTER) W/FLOW SENSOR
RCVP	REMOTE CONTROL VALVE W/PRESSURE REGULATOR
RCW	RECYCLED WATER
RECP	ROLLED EROSION CONTROL PRODUCT
REQ	REQUIRED
RICS	REMOTE IRRIGATION CONTROL SYSTEM
R/W	RIGHT OF WAY

S

S	SLIP
SCH	SCHEDULE
SF	STATE-FURNISHED
Shld	SHOULDER
Sq	SQUARE
SST	SIDE STRIP
Sta	STATION
Std	STANDARD
SW	SIDEWALK/SOUND WALL

T

T	THIRD CIRCLE/THREAD
TLS	TRUCK LOADING STANDPIPE
TQ	THREE QUARTER CIRCLE
TRM	TURF REINFORCEMENT MAT
TT	TWO-THIRDS CIRCLE
TWSA	TREE WELL SPRINKLER ASSEMBLY
Typ	TYPICAL

U

UG	UNDERGROUND

W

W	WIDTH
W/	WITH
WM	WATER METER
WS	WYE STRAINER
WSA	WYE STRAINER ASSEMBLY
WSP	WELDED STEEL PIPE
WWM	WELDED WIRE MESH

NOTE:

For additional abbreviations, see Standard Plans A10A and A10B.

STATE OF CALIFORNIA
DEPARTMENT OF TRANSPORTATION

LANDSCAPE AND EROSION CONTROL ABBREVIATIONS

NO SCALE

RSP H1 DATED JULY 19, 2013 SUPERSEDES STANDARD PLAN H1 DATED MAY 20, 2011 - PAGE 218 OF THE STANDARD PLANS BOOK DATED 2010.

REVISED STANDARD PLAN RSP H1

2010 REVISED STANDARD PLAN RSP H1

6-28-13

Dist	COUNTY	ROUTE	POST MILES TOTAL PROJECT	SHEET No.	TOTAL SHEETS
06	Fre	33	10.9/11.1	73	104

Gregory A. Balzer
LICENSED LANDSCAPE ARCHITECT

November 15, 2013
PLANS APPROVAL DATE

LICENSED LANDSCAPE ARCHITECT
Gregory A. Balzer 2576
Signature
2-28-15
Renewal Date
11-15-13
Date
STATE OF CALIFORNIA

THE STATE OF CALIFORNIA OR ITS OFFICERS OR AGENTS SHALL NOT BE RESPONSIBLE FOR THE ACCURACY OR COMPLETENESS OF SCANNED COPIES OF THIS PLAN SHEET.

TO ACCOMPANY PLANS DATED 4-28-14

EXISTING	NEW	ITEM DESCRIPTION
		WATER METER (WM)
		BACKFLOW PREVENTER ASSEMBLY (BPA)
		BACKFLOW PREVENTER ENCLOSURE (BPE)
		BOOSTER PUMP (BP)
		TRUCK LOADING STANDPIPE (TLS)
FS	FS	FLOW SENSOR (FS)
		MASTER IRRIGATION CONTROLLER (MIC)
		AUXILIARY IRRIGATION CONTROLLER (AIC)
		IRRIGATION CONTROLLER (IC) IRRIGATION CONTROLLER (IC) (BATTERY) IRRIGATION CONTROLLER (IC) (SOLAR) IRRIGATION CONTROLLER (IC) (TWO WIRE) IRRIGATION CONTROLLER(S) IN CONTROLLER ENCLOSURE CABINET (ICC)
acc	ACC	ARMOR-CLAD CONDUCTORS (ACC)
cnc	CNC	CONTROL AND NEUTRAL CONDUCTORS (CNC)
		IRRIGATION CONDUIT
		EXTEND IRRIGATION CONDUIT
dip	DIP	DUCTILE IRON PIPE (SUPPLY LINE) (MAIN) (DIP)
		GALVANIZED STEEL PIPE (SUPPLY LINE) (MAIN) (GSP)
		GALVANIZED STEEL PIPE (SUPPLY LINE) (LATERAL) (GSP)
		PLASTIC PIPE (SUPPLY LINE) (MAIN)
		PLASTIC PIPE (SUPPLY LINE) (LATERAL)
cp	CP	COPPER PIPE (SUPPLY LINE)
dit	DIT	DRIP IRRIGATION TUBING
		REMOTE CONTROL VALVE (RCV) REMOTE CONTROL VALVE (MASTER) (RCVM) REMOTE CONTROL VALVE (MASTER) W/FLOW METER (RCVMF)
P	P	REMOTE CONTROL VALVE W/PRESSURE REGULATOR (RCVP)
		EXISTING MANUAL CONTROL VALVE (MCV)
		DRIP VALVE ASSEMBLY (DVA)
		WYE STRAINER ASSEMBLY (WSA)

EXISTING	NEW	ITEM DESCRIPTION
		GATE VALVE (GV)
		BALL VALVE (BV)
		QUICK COUPLING VALVE (QCV)
		CAM COUPLER ASSEMBLY (CCA)
		GARDEN VALVE ASSEMBLY (GARVA)
		PRESSURE REGULATING VALVE (PRV)
		PRESSURE RELIEF VALVE (PRLV)
		FLOW CONTROL VALVE (FCV)
		COMBINATION AIR RELEASE VALVE (CARV)
		CHECK VALVE (CV)
		FLUSH VALVE (FV)
		EXISTING NOZZLE LINE W/TURNING UNION
		EXISTING IRRIGATION SYSTEM
		EXISTING IRRIGATION SYSTEM TO BE REMOVED
		CHAIN LINK GATE
		QUICK COUPLING VALVE W/SPRINKLER PROTECTOR
3	3	SPRINKLER W/SPRINKLER PROTECTOR
	C	CONNECT TO EXISTING SYSTEM
		CAP
		CAP EXISTING
	\\\FR\\\	FIBER ROLL
	\\\CS\\\	COMPOST SOCK

RCV SIZE
IRRIGATION CONTROLLER
CONTROLLER STATION
VALVE IN PARALLEL (IF APPLICABLE)
GPM
QUANTITY OF SPRINKLERS (WHEN SHOWN)

* 2½"-A-2b-40-60

VALVE CODE

* VALVE CODES FOR EXISTING VALVES ARE SHOWN IN A DASHED ENCLOSURE.

STATE OF CALIFORNIA
DEPARTMENT OF TRANSPORTATION

LANDSCAPE AND EROSION CONTROL SYMBOLS

NO SCALE

RSP H2 DATED NOVEMBER 15, 2013 SUPERSEDES RSP H2 DATED JULY 19, 2013 AND STANDARD PLAN H2 DATED MAY 20, 2011 - PAGE 219 OF THE STANDARD PLANS BOOK DATED 2010.

REVISED STANDARD PLAN RSP H2

2010 REVISED STANDARD PLAN RSP H2

10-9-13

Dist	COUNTY	ROUTE	POST MILES TOTAL PROJECT	SHEET No.	TOTAL SHEETS
06	Fre	33	10.9/11.1	74	104

REGISTERED CIVIL ENGINEER

July 19, 2013
PLANS APPROVAL DATE

REGISTERED PROFESSIONAL ENGINEER
Gurinderpal Bhullar
No. C48815
Exp. 9-30-14
CIVIL
STATE OF CALIFORNIA

THE STATE OF CALIFORNIA OR ITS OFFICERS OR AGENTS SHALL NOT BE RESPONSIBLE FOR THE ACCURACY OR COMPLETENESS OF SCANNED COPIES OF THIS PLAN SHEET.

TO ACCOMPANY PLANS DATED 4-28-14

2010 REVISED STANDARD PLAN RSP T9

TABLE 1

TAPER LENGTH CRITERIA AND CHANNELIZING DEVICE SPACING

SPEED (S)	MINIMUM TAPER LENGTH * FOR WIDTH OF OFFSET 12 FEET (W)				MAXIMUM CHANNELIZING DEVICE SPACING		
					X	Y	Z **
	TANGENT 2L	MERGING L	SHIFTING L/2	SHOULDER L/3	TAPER	TANGENT	CONFLICT
mph	ft	ft	ft	ft	ft	ft	ft
20	160	80	40	27	20	40	10
25	250	125	63	42	25	50	12
30	360	180	90	60	30	60	15
35	490	245	123	82	35	70	17
40	640	320	160	107	40	80	20
45	1080	540	270	180	45	90	22
50	1200	600	300	200	50	100	25
55	1320	660	330	220	55	110	27
60	1440	720	360	240	60	120	30
65	1560	780	390	260	65	130	32
70	1680	840	420	280	70	140	35

* - For other offsets, use the following merging taper length formula for L:
For speed of 40 mph or less, $L = WS^2/60$
For speed of 45 mph or more, $L = WS$

Where: L = Taper length in feet
W = Width of offset in feet
S = Posted speed limit, off-peak 85th-percentile speed prior to work starting, or the anticipated operating speed in mph

** - Use for taper and tangent sections where there are no pavement markings or where there is a conflict between existing pavement markings and channelizers (CA).

TABLE 2

LONGITUDINAL BUFFER SPACE AND FLAGGER STATION SPACING

SPEED *	Min D **	DOWNGRADE Min D ***		
		-3%	-6%	-9%
mph	ft	ft	ft	ft
20	115	116	120	126
25	155	158	165	173
30	200	205	215	227
35	250	257	271	287
40	305	315	333	354
45	360	378	400	427
50	425	446	474	507
55	495	520	553	593
60	570	598	638	686
65	645	682	728	785
70	730	771	825	891

* - Speed is posted speed limit, off-peak 85th-percentile speed prior to work starting, or the anticipated operating speed in mph

** - Longitudinal buffer space or flagger station spacing

*** - Use on sustained downgrade steeper than -3 percent and longer than 1 mile.

TABLE 3

ADVANCE WARNING SIGN SPACING

ROAD TYPE	DISTANCE BETWEEN SIGNS *		
	A	B	C
	ft	ft	ft
URBAN - 25 mph OR LESS	100	100	100
URBAN - MORE THAN 25 mph TO 40 mph	250	250	250
URBAN - MORE THAN 40 mph	350	350	350
RURAL	500	500	500
EXPRESSWAY / FREEWAY	1000	1500	2640

* - The distances are approximate, are intended for guidance purposes only, and should be applied with engineering judgment. These distances should be adjusted by the Engineer for field conditions, if necessary, by increasing or decreasing the recommmended distances.

STATE OF CALIFORNIA
DEPARTMENT OF TRANSPORTATION

TRAFFIC CONTROL SYSTEM TABLES FOR LANE AND RAMP CLOSURES

NO SCALE

RSP T9 DATED JULY 19, 2013 SUPERSEDES RSP T9 DATED APRIL 19, 2013 THAT SUPPLEMENTS THE STANDARD PLANS BOOK DATED 2010.

REVISED STANDARD PLAN RSP T9

Dist	COUNTY	ROUTE	POST MILES TOTAL PROJECT	SHEET No.	TOTAL SHEETS
06	Fre	33	10.9/11.1	75	104

REGISTERED CIVIL ENGINEER

July 18, 2014
PLANS APPROVAL DATE

REGISTERED PROFESSIONAL ENGINEER Gurinderpal Bhullar No. C48815 Exp. 9-30-14 CIVIL STATE OF CALIFORNIA

THE STATE OF CALIFORNIA OR ITS OFFICERS OR AGENTS SHALL NOT BE RESPONSIBLE FOR THE ACCURACY OR COMPLETENESS OF SCANNED COPIES OF THIS PLAN SHEET.

TO ACCOMPANY PLANS DATED 4-28-14

NOTES:

See Revised Standard Plan RSP T9 for tables.

Use cone spacing X for taper segment, Y for tangent segment or Z for conflict situations, as approriate, per Table 1, unless X, Y, or Z cone spacing is shown on this sheet.

Unless otherwise specified in the special provisions, all temporary warning signs shall have black legend on fluorescent orange background.

California codes are designated by (CA). Otherwise, Federal (MUTCD) codes are shown.

TYPICAL LANE CLOSURE WITH REVERSIBLE CONTROL

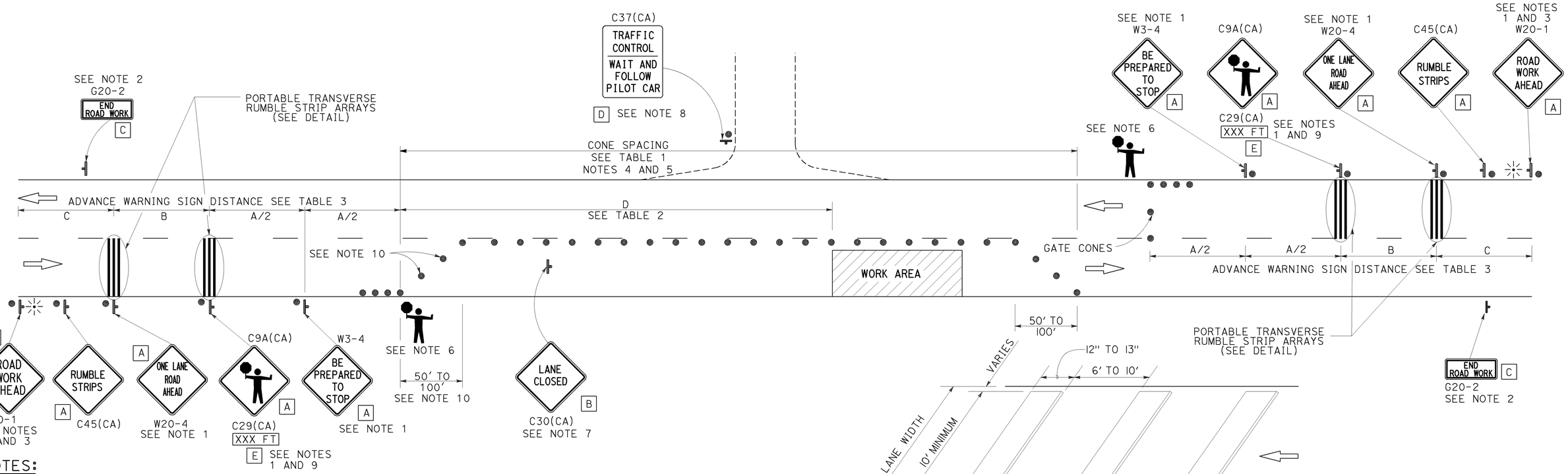

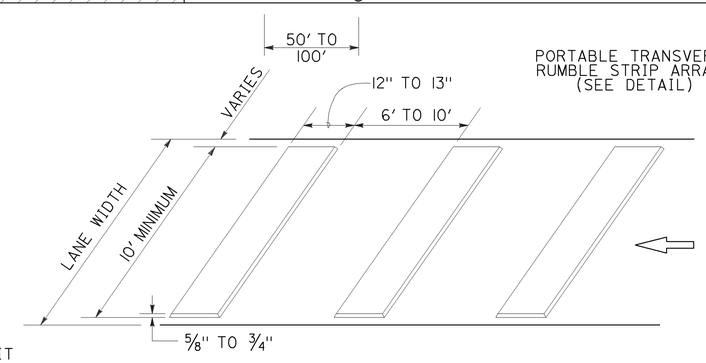

PORTABLE TRANSVERSE RUMBLE STRIP ARRAY DETAIL

NOTES:

1. Each advance warning sign in each direction of travel shall be equipped with at least two flags for daytime closure. Each flag shall be at least 16" x 16" in size and shall be orange or fluorescent red-orange in color. Flashing beacons shall be placed at the locations indicated for lane closure during hours of darkness.
2. A G20-2 "END ROAD WORK" sign, as appropriate, shall be placed at the end of the lane control unless the end of work area is obvious, or ends within a larger project's limits.
3. If the W20-1 sign would follow within 2000' of a stationary W20-1 or G20-1 "ROAD WORK NEXT _____ MILES", use a W20-4 sign for the first advance warning sign.
4. All cones used for lane closures during the hours of darkness shall be fitted with retroreflective bands (or sleeves) as specified in the specifications.
5. Portable delineators, placed at one-half the spacing indicated for traffic cones, may be used instead of cones for daytime closures only.
6. Additional advance flaggers may be required. Flagger should stand in a conspicuous place, be visible to approaching traffic as well as approaching vehicles after the first vehicle has stopped. During the hours of darkness, the flagging-station and flagger shall be illuminated and clearly visible to approaching traffic. The illumination footprint of the lighting on the ground shall be at least 20' in diameter. Place a minimum of four cones at 50' intervals in advance of flagger station as shown.
7. Place C30(CA) "LANE CLOSED" sign at 500' to 1000' intervals throughout extended work areas. They are optional if the work area is visible from the flagger station.
8. When a pilot car is used, place a C37(CA) "TRAFFIC CONTROL-WAIT AND FOLLOW PILOT CAR" sign with black legend on white background at all intersections, driveways and alleys without a flagger within traffic control area. Signs shall be clean and visible at all times. Where traffic can not be effectively self-regulated, at least one flagger shall be used at each intersection within traffic control area.
9. An optional C29(CA) sign may be placed below the C9A(CA) sign.
10. Either traffic cones or barricades shall be placed on the taper. Barricades shall be Type I, II, or III.
11. The color of the portable transverse rumble strips shall be black or orange. Use 2 arrays, each array shall consist of 3 rumble strips.
12. Portable transverse rumble strips shall not be placed on sharp horizontal or vertical curves nor shall they be placed through pedestrian crossings.
13. If the portable transverse rumble strips become out of alignment (skewed) by more than 6 inches, measured from one end to the other, they shall be readjusted to bring the placement back to the original location.

LEGEND

- TRAFFIC CONE
- TEMPORARY TRAFFIC CONTROL SIGN
- PORTABLE FLASHING BEACON
- FLAGGER

SIGN PANEL SIZE (Min)

A	48" x 48"
B	30" x 30"
C	36" x 18"
D	36" x 42"
E	20" x 7"

STATE OF CALIFORNIA
DEPARTMENT OF TRANSPORTATION

TRAFFIC CONTROL SYSTEM FOR LANE CLOSURE ON TWO LANE CONVENTIONAL HIGHWAYS

NO SCALE

RSP T13 DATED JULY 18, 2014 SUPERSEDES RSP T13 DATED APRIL 19, 2013 AND STANDARD PLAN T13 DATED MAY 20, 2011 - PAGE 241 OF THE STANDARD PLANS BOOK DATED 2010.

REVISED STANDARD PLAN RSP T13

2010 REVISED STANDARD PLAN RSP T13

6-19-14

Dist	COUNTY	ROUTE	POST MILES TOTAL PROJECT	SHEET No.	TOTAL SHEETS
06	Fre	33	10.9/11.1	76	104

REGISTERED CIVIL ENGINEER

July 19, 2013
PLANS APPROVAL DATE

REGISTERED PROFESSIONAL ENGINEER Marc Friedheim No. C57968 Exp. 6-30-14 CIVIL STATE OF CALIFORNIA

THE STATE OF CALIFORNIA OR ITS OFFICERS OR AGENTS SHALL NOT BE RESPONSIBLE FOR THE ACCURACY OR COMPLETENESS OF SCANNED COPIES OF THIS PLAN SHEET.

TO ACCOMPANY PLANS DATED 4-28-14

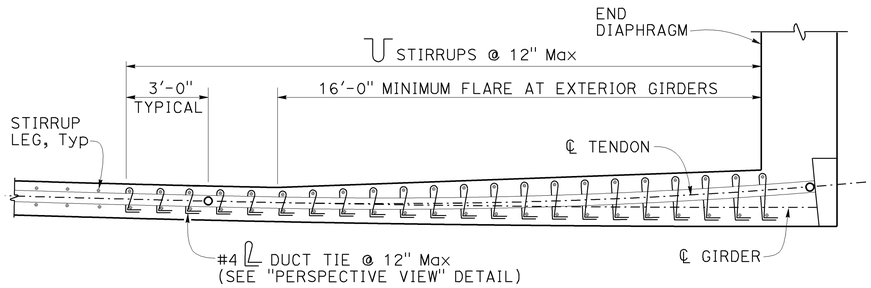

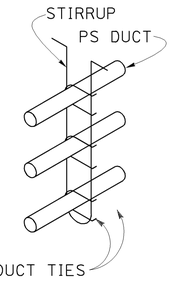

LEGEND:

o - Denotes beginning or end of tendon horizontal angle change (BC, EC or PCC)

PLAN

PERSPECTIVE VIEW

DUCT TIES AT TENDON HORIZONTAL ANGLE CHANGES
DETAIL 5-1

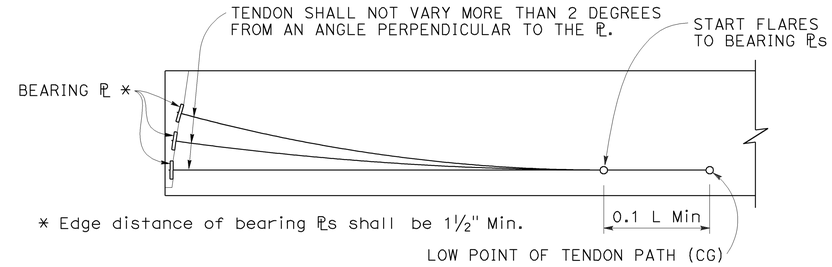

* Edge distance of bearing ℙs shall be 1½" Min.

ELEVATION - BEARING PLATE AND PRESTRESSING PATH
DETAIL 5-2

NOTES FOR DETAIL 5-1

1. Tendon horizontal angle change at end diaphragm shown. Duct tie placement similar for other locations where tendon horizontal angle changes occur. For curved girders place duct ties at tendon angle changes where ℄ tendon radius is smaller than ℄ girder radius.
2. Adjacent duct ties may be staggered to facilitate placement if stirrup spacing is less than 12 inches.
3. Place closed end of duct ties toward inside of tendon curve.
4. Wrap duct ties around both stirrup legs.
5. Individual duct ties may only be used to anchor one duct.

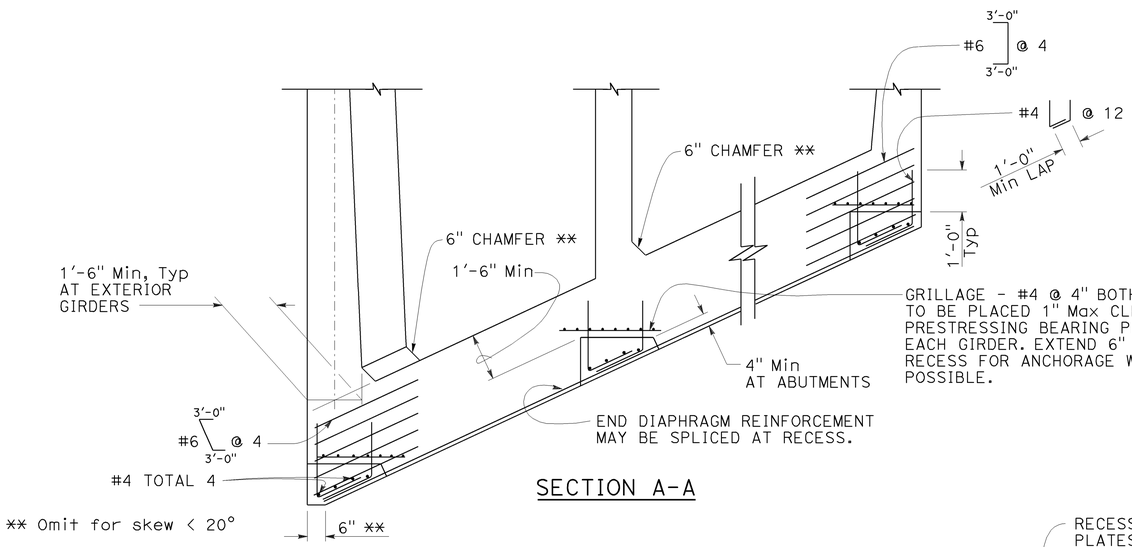

SECTION A-A

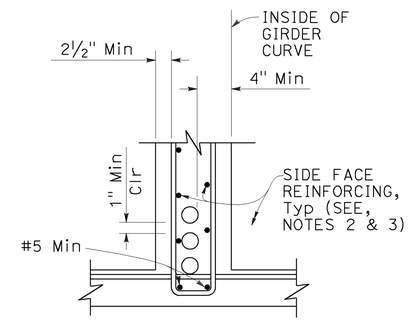

DUCTS 4½" OD AND LESS FOR HORIZONTAL CURVE RADIUS ≤ 2000'

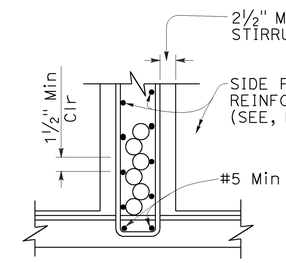

DUCTS 4½" OD AND LESS

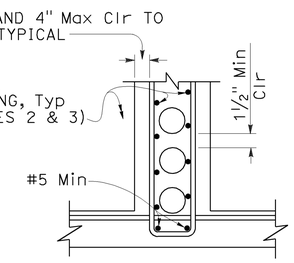

DUCTS OVER 4½" OD

CLEARANCE REQUIREMENTS FOR DUCTS
DETAIL 5-4

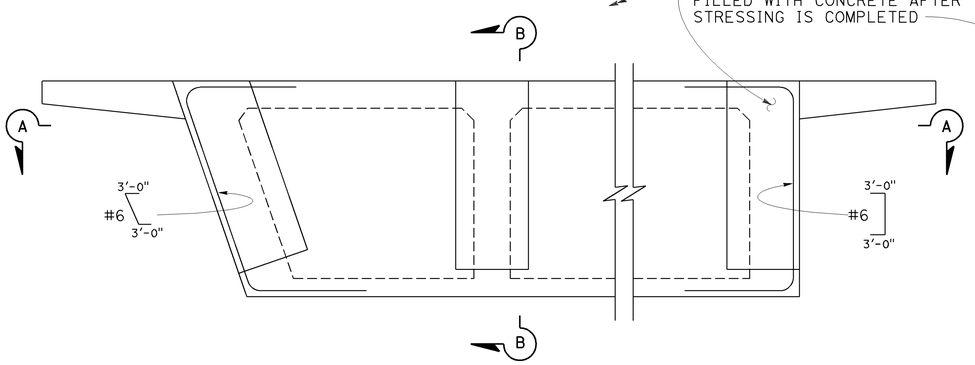

PRESTRESS ANCHORAGE DETAILS AT END DIAPHRAGMS
DETAIL 5-3

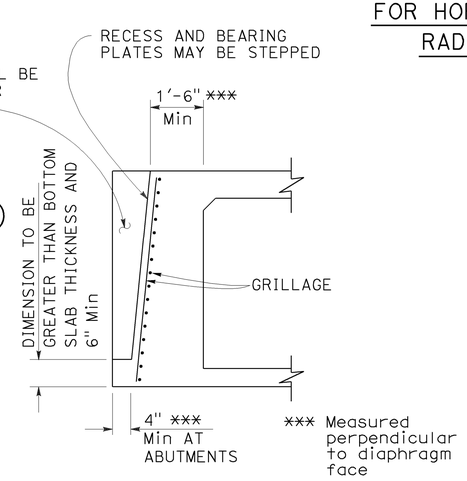

SECTION B-B

NOTES FOR DETAIL 5-4:

1. ⊔ Stirrups may also be used.
2. For additional details, see Standard Plan B7-1, and Project Plans.
3. Bar reinforcing which interferes with prestressing ducts may be adjusted as approved by the Engineer.

STATE OF CALIFORNIA
DEPARTMENT OF TRANSPORTATION

CAST-IN-PLACE POST-TENSIONED GIRDER DETAILS

NO SCALE

RSP B8-5 DATED JULY 19, 2013 SUPERSEDES STANDARD PLAN B8-5 DATED MAY 20, 2011 - PAGE 291 OF THE STANDARD PLANS BOOK DATED 2010.

REVISED STANDARD PLAN RSP B8-5

2010 REVISED STANDARD PLAN RSP B8-5

4-17-13

Dist	COUNTY	ROUTE	POST MILES TOTAL PROJECT	SHEET No.	TOTAL SHEETS
06	Fre	33	10.9/11.1	77	104

REGISTERED CIVIL ENGINEER

November 15, 2013
PLANS APPROVAL DATE

REGISTERED PROFESSIONAL ENGINEER — Tillat Satter — No. C42892 — Exp. 3-31-14 — CIVIL — STATE OF CALIFORNIA

THE STATE OF CALIFORNIA OR ITS OFFICERS OR AGENTS SHALL NOT BE RESPONSIBLE FOR THE ACCURACY OR COMPLETENESS OF SCANNED COPIES OF THIS PLAN SHEET.

TO ACCOMPANY PLANS DATED 4-28-14

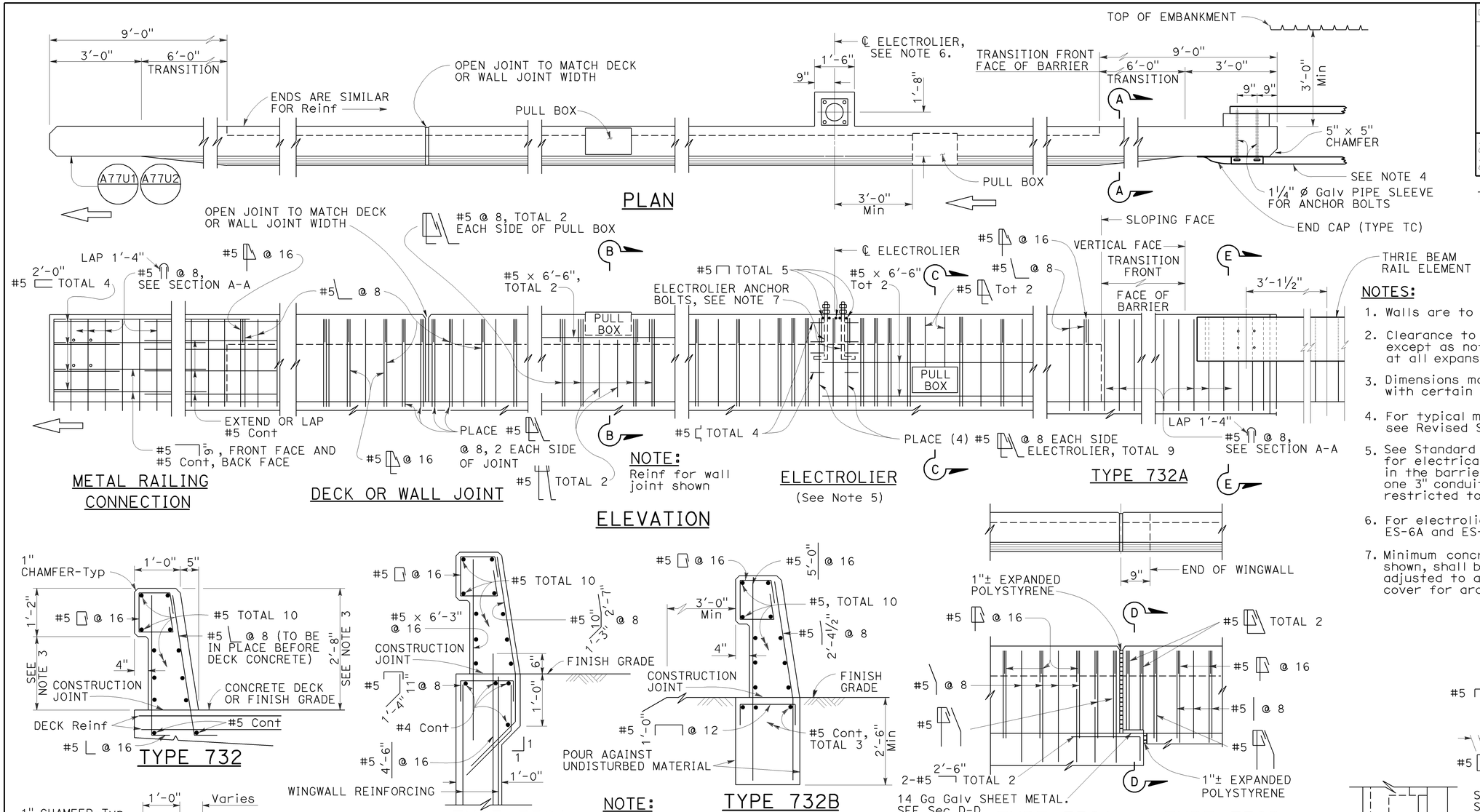

NOTES:

1. Walls are to be backfilled before barrier is placed.
2. Clearance to reinforcing steel in barrier to be 1", except as noted. Longitudinal reinforcement to stop at all expansion joints.
3. Dimensions may vary with roadway cross slope and with certain thickness of surfacing. See Project Plans.
4. For typical metal railing connection details not shown, see Revised Standard Plans RSP A77U1 and RSP A77U2.
5. See Standard Plans ES-9A, ES-9B, ES-9C, ES-9D and ES-9E for electrical details. The maximum number of conduits in the barrier is limited to two 2" conduits along with one 3" conduit. When a 3" conduit is used, it is restricted to the base of the barrier.
6. For electrolier mounting details, See Standard Plans ES-6A and ES-6B.
7. Minimum concrete edge distance, to the reinforcing shown, shall be maintained. Edge distance may be adjusted to accommodate increase in concrete cover for architectual treatment.

NOTE: Types 732A and 732B are similar to Type 732 except as noted.

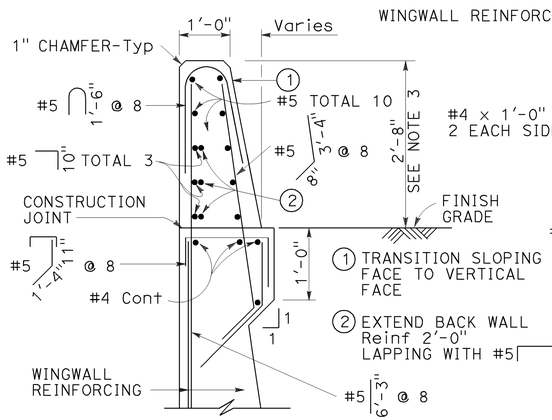

Details shown for barrier anchorage to Type 732A. Anchorage for barrier Types 732 and 732A are similar to their respective details.

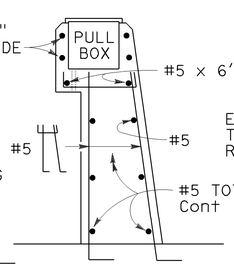

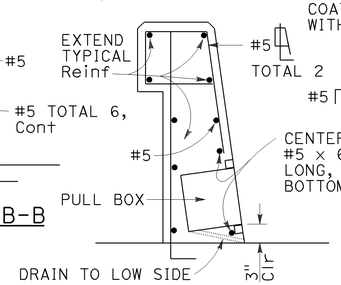

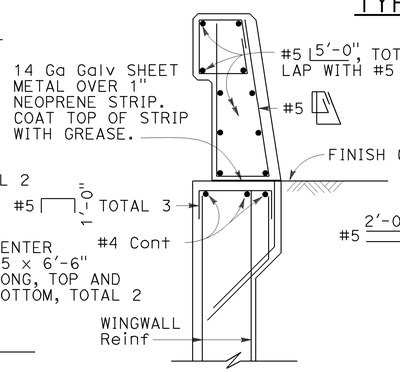

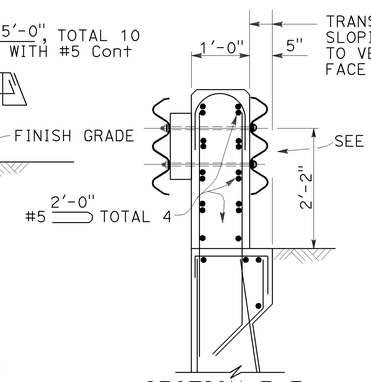

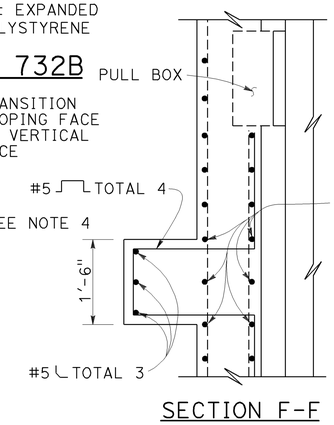

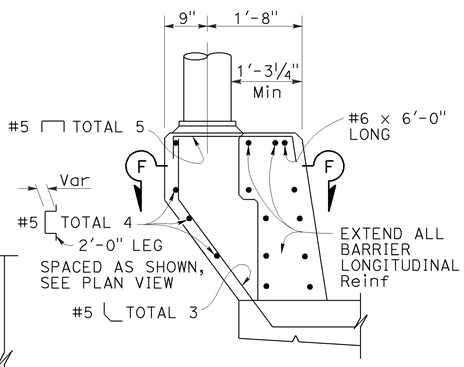

STATE OF CALIFORNIA
DEPARTMENT OF TRANSPORTATION

CONCRETE BARRIER TYPE 732

NO SCALE

RSP B11-55 DATED NOVEMBER 15, 2013 SUPERSEDES
RSP B11-55 DATED JULY 19, 2013 AND STANDARD PLAN B11-55
DATED MAY 20, 2011 - PAGE 297 OF THE STANDARD PLANS BOOK DATED 2010.

REVISED STANDARD PLAN RSP B11-55

2010 REVISED STANDARD PLAN RSP B11-55

10-4-13

Dist	COUNTY	ROUTE	POST MILES TOTAL PROJECT	SHEET No.	TOTAL SHEETS
06	Fre	33	10.9/11.1	78	104

Theresa Gabriel
REGISTERED ELECTRICAL ENGINEER

July 19, 2013
PLANS APPROVAL DATE

REGISTERED PROFESSIONAL ENGINEER
Theresa Aziz Gabriel
No. E15129
Exp. 6-30-14
ELECTRICAL
STATE OF CALIFORNIA

THE STATE OF CALIFORNIA OR ITS OFFICERS OR AGENTS SHALL NOT BE RESPONSIBLE FOR THE ACCURACY OR COMPLETENESS OF SCANNED COPIES OF THIS PLAN SHEET.

TO ACCOMPANY PLANS DATED 4-28-14

LEGEND:

AB	ABANDON. IF APPLIED TO CONDUIT, REMOVE CONDUCTORS
BC	INSTALL PULL BOX IN EXISTING CONDUIT RUN
BP	PEDESTRIAN BARRICADE, TYPE AS INDICATED ON PLAN
CB	INSTALL CONDUIT INTO EXISTING PULL BOX
CC	CONNECT NEW AND EXISTING CONDUIT. REMOVE EXISTING CONDUCTORS AND INSTALL CONDUCTORS AS INDICATED
CF	CONDUIT TO REMAIN FOR FUTURE USE. REMOVE CONDUCTORS. INSTALL PULL TAPE
DH	DETECTOR HANDHOLE
FA	FOUNDATION TO BE ABANDONED
IS	INSTALL SIGN ON SIGNAL MAST ARM
NS	NO SLIP BASE ON STANDARD
PEC	PHOTOELECTRIC CONTROL
PEU	PHOTOELECTRIC UNIT
RC	EQUIPMENT OR MATERIAL TO BE REMOVED AND BECOME THE PROPERTY OF THE CONTRACTOR
RE	REMOVE ELECTROLIER, FUSES AND BALLAST. TAPE ENDS OF CONDUCTORS
RL	RELOCATE EQUIPMENT
RR	REMOVE AND REUSE EQUIPMENT
RS	REMOVE AND SALVAGE EQUIPMENT
SC	SPLICE NEW TO EXISTING CONDUCTORS
SD	SERVICE DISCONNECT
TSP	TELEPHONE SERVICE POINT

ABBREVIATIONS

APS	ACCESSIBLE PEDESTRIAN SIGNAL
BBS	BATTERY BACKUP SYSTEM
BC	BOLT CIRCLE
BPB	BICYCLE PUSH BUTTON
C	CONDUIT
CB	CIRCUIT BREAKER
CCTV	CLOSED CIRCUIT TELEVISION
Ckt	CIRCUIT
CMS	CHANGEABLE MESSAGE SIGN
Ctid	CALTRANS IDENTIFICATION
Comm	COMMUNICATION
DLC	LOOP DETECTOR LEAD-IN CABLE
EMS	EXTINGUISHABLE MESSAGE SIGN
EVUC	EMERGENCY VEHICLE UNIT CABLE
EVUD	EMERGENCY VEHICLE UNIT DETECTOR
FB	FLASHING BEACON
FBCA	FLASHING BEACON CONTROL ASSEMBLY
FBS	FLASHING BEACON WITH SLIP BASE
FO	FIBER OPTIC
G	EQUIPMENT GROUNDING CONDUCTOR
GB	GROUND BUS
GFCI	GROUND FAULT CIRCUIT INTERRUPTER
HAR	HIGHWAY ADVISORY RADIO
Hex	HEXAGONAL
HPS	HIGH PRESSURE SODIUM
IISNS	INTERNALLY ILLUMINATED STREET NAME SIGN
ISL	INDUCTION SIGN LIGHTING
LED	LIGHT EMITTING DIODE
LMA	LUMINAIRE MAST ARM
LPS	LOW PRESSURE SODIUM
Ltg	LIGHTING
Lum	LUMINAIRE
M	METERED
MAT	MAST ARM MOUNTING TOP ATTACHMENT
MAS	MAST ARM MOUNTING SIDE ATTACHMENT
M/M	MULTIPLE TO MULTIPLE TRANSFORMER
Mtg	MOUNTING
MV	MERCURY VAPOR LIGHTING FIXTURE
MVDS	MICROWAVE VEHICLE DETECTION SYSTEM
N	NEUTRAL (GROUNDED CONDUCTOR)
NB	NEUTRAL BUS
NC	NORMALLY CLOSE
NO	NORMALLY OPEN
P	CIRCUIT BREAKER'S POLE
PB	PULL BOX
PBA	PUSH BUTTON ASSEMBLY
PEC	PHOTOELECTRIC CONTROL
Ped	PEDESTRIAN
PEU	PHOTOELECTRIC UNIT
PT	CONDUIT WITH PULL TAPE
RE	RELOCATED EQUIPMENT
RM	RAMP METERING
RWIS	ROADSIDE WEATHER INFORMATION SYSTEM
SB	SLIP BASE
SIC	SIGNAL INTERCONNECT CABLE
Sig	SIGNAL
SMA	SIGNAL MAST ARM
SNS	STREET NAME SIGN
SP	SERVICE POINT
TDC	TELEPHONE DEMARCATION CABINET
TMS	TRAFFIC MONITORING STATION
TOS	TRAFFIC OPERATIONS SYSTEM
Veh	VEHICLE
VIVDS	VIDEO IMAGE VEHICLE DETECTION SYSTEM
WIM	WEIGH-IN-MOTION
Xfmr	TRANSFORMER

SOFFIT AND WALL MOUNTED LUMINAIRES

PENDANT, 70 W HPS UNLESS OTHERWISE SPECIFIED

FLUSH, 70 W HPS UNLESS OTHERWISE SPECIFIED

WALL SURFACE, 70 W HPS UNLESS OTHERWISE SPECIFIED

EXISTING SOFFIT OR WALL LUMINAIRE TO REMAIN UNMODIFIED

EXISTING SOFFIT OR WALL LUMINAIRE TO BE MODIFIED AS SPECIFIED

NOTE:

Arrow indicates "street side" of luminaire.

MISCELLANEOUS ELECTROLIERS

NEW	EXISTING	
		LUMINAIRE ON WOOD POLE
		NON-STANDARD ELECTROLIER (SEE PROJECT NOTES OR PROJECT PLANS)
		CITY ELECTROLIER
		ELECTROLIER FOUNDATION (FUTURE INSTALLATION)

NOTES:

1. HPS luminaires shall be 310 W HPS when installed on Type 21, 21D, 30, 31 and 32 Standards, unless otherwise specified. HPS luminaires shall be 200 W when installed on other type standards or poles, unless otherwise specified.
2. LED luminaires shall be 235 W when installed on Type 21, 21D, 30, 31 and 32 Standards, unless otherwise specified. LED luminaires shall be 165 W when installed on other type standards or poles, unless otherwise specified.
3. Luminaires shall be the cutoff type, ANSI Type III medium cutoff lighting distribution, unless otherwise specified.

STANDARD ELECTROLIER

NEW	EXISTING	STANDARD TYPE
		15
		15D
		15 STRUCTURE
		15D STRUCTURE
		21
		21D
		21 STRUCTURE
		21D STRUCTURE
		30
		31
		32

COMMONLY USED SYMBOLS FOR UNITED STATES CUSTOMARY UNITS OF MEASUREMENT:

SYMBOL USED	DEFINITIONS
Ω	OHMS
min	MINUTE
s	SECOND
bps	BITS PER SECOND
Bps	BYTES PER SECOND
A	AMPERE
V	VOLT
V(dc)	VOLT (DIRECT CURRENT)
V(ac)	VOLT (ALTERNATING CURRENT)
FC	FOOT - CANDLE
W	WATTS
VA	VOLT-AMPERE
M	MEGA
k	KILO
m	MILLI
μ	MICRO
P	PICO
Hz	HERTZ

STATE OF CALIFORNIA
DEPARTMENT OF TRANSPORTATION

ELECTRICAL SYSTEMS (LEGEND AND ABBREVIATIONS)

NO SCALE

RSP ES-1A DATED JULY 19, 2013 SUPERSEDES STANDARD PLAN ES-1A DATED MAY 20, 2011 - PAGE 425 OF THE STANDARD PLANS BOOK DATED 2010.

REVISED STANDARD PLAN RSP ES-1A

2010 REVISED STANDARD PLAN RSP ES-1A

7-15-13

Dist	COUNTY	ROUTE	POST MILES TOTAL PROJECT	SHEET No.	TOTAL SHEETS
06	Fre	33	10.9/11.1	79	104

Theresa Gabriel
REGISTERED ELECTRICAL ENGINEER

July 19, 2013
PLANS APPROVAL DATE

REGISTERED PROFESSIONAL ENGINEER Theresa Aziz Gabriel No. E15129 Exp. 6-30-14 ELECTRICAL STATE OF CALIFORNIA

THE STATE OF CALIFORNIA OR ITS OFFICERS OR AGENTS SHALL NOT BE RESPONSIBLE FOR THE ACCURACY OR COMPLETENESS OF SCANNED COPIES OF THIS PLAN SHEET.

TO ACCOMPANY PLANS DATED 4-28-14

CONDUIT

NEW	EXISTING	
		LIGHTING CONDUIT, UNLESS OTHERWISE INDICATED OR NOTED
		TRAFFIC SIGNAL CONDUIT
C	c	COMMUNICATION CONDUIT
T	t	TELEPHONE CONDUIT
F	f	FIRE ALARM CONDUIT
FO	fo	FIBER OPTIC CONDUIT
		CONDUIT TERMINATION
R	r	CONDUIT RISER ATTACHED TO THE STRUCTURE OR SERVICE POLE

SERVICE EQUIPMENT

NEW	EXISTING	
OH	oh	OVERHEAD LINES
U	U	WOOD POLE, "U" INDICATES UTILITY OWNED
		POLE GUY WITH ANCHOR
		UTILITY TRANSFORMER - GROUND MOUNTED
III	III	SERVICE EQUIPMENT ENCLOSURE TYPE. DOOR INDICATES FRONT OF ENCLOSURE
T	t	TELEPHONE DEMARCATION CABINET

POLE-MOUNTED SERVICE DESIGNATION

TYPE H SERVICE, 28'-10" — TYPE OF INSTALLATION AND POLE HEIGHT ABOVE GRADE

FLASHING BEACON

NEW	EXISTING	
R	R	FLASHING BEACON (ONE VEHICLE SIGNAL HEAD WITH BACKPLATE AND VISOR) "R" INDICATES RED INDICATION, "Y" INDICATES YELLOW INDICATION
Y Y	Y Y	FLASHING BEACON WITH TYPE 15-FBS STANDARD AND A SIGN.
R R	R R	FLASHING BEACON WITH TYPES 9, 9A OR 9B SIGN UNLESS OTHERWISE SPECIFIED OR INDICATED

SIGNAL EQUIPMENT

NEW	EXISTING	
C	C	PEDESTRIAN SIGNAL HEAD "C" INDICATES COUNTDOWN PEDESTRIAN HEAD
		PUSH BUTTON ASSEMBLY POST
		PEDESTRIAN BARRICADE
		VEHICLE SIGNAL HEAD (WITH BACKPLATE AND 3-SECTIONS: RED, YELLOW AND GREEN)
		VEHICLE SIGNAL HEAD WITH ANGLE VISOR
PV	PV	MODIFICATIONS OF BASIC SYMBOL: "L" INDICATES ALL NON-ARROW SECTIONS LOUVERED "LG" INDICATES LOUVERED GREEN SECTION ONLY "PV" INDICATES ALL 12" SECTIONS PROGRAMMED VISIBILITY "8" INDICATES ALL 8" SECTIONS (ONLY WHEN SPECIFIED)
		VEHICLE SIGNAL HEAD CONSISTING OF RED, YELLOW AND GREEN LEFT ARROW SECTIONS
		VEHICLE SIGNAL HEAD CONSISTING OF RED AND YELLOW SECTIONS WITH AN UP GREEN ARROW SECTION
		VEHICLE SIGNAL HEAD (5 SECTION) CONSISTING OF RED, YELLOW AND GREEN SECTIONS WITH YELLOW AND GREEN RIGHT ARROW SECTIONS
		TYPE 15TS STANDARD WITH VEHICLE SIGNAL HEAD AND LUMINAIRE
		TYPE 21TS STANDARD WITH VEHICLE SIGNAL HEAD AND LUMINAIRE
		STANDARD WITH LUMINAIRE AND SIGNAL MAST ARMS AND ATTACHED VEHICLE SIGNAL HEADS
		TYPE 1 STANDARD WITH ATTACHED VEHICLE SIGNAL HEADS
		STANDARD WITH A SIGNAL MAST ARM, ATTACHED VEHICLE SIGNAL HEADS AND INTERNALLY ILLUMINATED STREET NAME SIGN
		CONTROLLER ASSEMBLY. DOOR INDICATES FRONT OF CABINET

SIGNAL EQUIPMENT Cont

NEW	EXISTING	
		GUARD POST
		TYPE 1 STANDARD WITH RAMP METERING SIGN
		OPTICAL DETECTOR FOR THE EMERGENCY VEHICLE DETECTION SYSTEM

NOTES:

1. All signal sections shall be 12" unless shown otherwise.
2. Signal heads shall be provided with backplates unless shown otherwise.

ILLUMINATED OVERHEAD SIGN

NEW	EXISTING	
		SINGLE POST, SINGLE ILLUMINATED SIGN, BALANCED BUTTERFLY
		SINGLE POST, DOUBLE ILLUMINATED SIGN, BALANCED BUTTERFLY
		SINGLE POST, SINGLE ILLUMINATED SIGN, FULL CANTILEVER
		DOUBLE POST, SINGLE ILLUMINATED SIGN
		SINGLE ILLUMINATED SIGN MOUNTED ON STRUCTURE
		DOUBLE POST, SINGLE ILLUMINATED SIGN WITH ELECTROLIER

STATE OF CALIFORNIA
DEPARTMENT OF TRANSPORTATION

ELECTRICAL SYSTEMS (LEGEND AND ABBREVIATIONS)

NO SCALE

RSP ES-1B DATED JULY 19, 2013 SUPERSEDES STANDARD PLAN ES-1B DATED MAY 20, 2011 - PAGE 426 OF THE STANDARD PLANS BOOK DATED 2010.

REVISED STANDARD PLAN RSP ES-1B

2010 REVISED STANDARD PLAN RSP ES-1B

7-15-13

Dist	COUNTY	ROUTE	POST MILES TOTAL PROJECT	SHEET No.	TOTAL SHEETS
06	Fre	33	10.9/11.1	80	104

Theresa Gabriel
REGISTERED ELECTRICAL ENGINEER

July 19, 2013
PLANS APPROVAL DATE

REGISTERED PROFESSIONAL ENGINEER
Theresa Aziz Gabriel
No. E15129
Exp. 6-30-14
ELECTRICAL
STATE OF CALIFORNIA

THE STATE OF CALIFORNIA OR ITS OFFICERS OR AGENTS SHALL NOT BE RESPONSIBLE FOR THE ACCURACY OR COMPLETENESS OF SCANNED COPIES OF THIS PLAN SHEET.

TO ACCOMPANY PLANS DATED 4-28-14

EQUIPMENT IDENTIFICATION

ILLUMINATED SIGN IDENTIFICATION NUMBER:

SIGN No. 12345

10 ISL SCI 1.0

- SIGN NUMBER - PLACE ON POST OR STRUCTURE
- TRANSFORMER RATING (kVA)
- LIGHTING CONTROL TYPE
- NUMBER AND TYPE OF FIXTURES

DO NOT PLACE ON STANDARD OR STRUCTURE

ELECTROLIER OR EQUIPMENT IDENTIFICATION NUMBER:

12345 - 15'-0"

- MAST ARM LENGTH, IF SHOWN. DO NOT PLACE ON STANDARD OR STRUCTURE
- EQUIPMENT NUMBER - PLACE ON STANDARD OR STRUCTURE. EXISTING EQUIPMENT NUMBERS ARE SHOWN IN PARENTHESIS

CONDUIT AND CONDUCTOR IDENTIFICATION:

1½"C, 2#10, 15#14, 2 DLC, 12P#18

- PAIR
- NUMBER AND SIZE OF CONDUCTORS AND CABLES
- SIZE OF CONDUIT IN INCHES

ø1, ø2, ø2P, etc.	TRAFFIC PHASE IDENTIFICATION FOR SIGNAL FACES, DETECTORS AND PHASE DIAGRAMS
1 2 3	LEGEND NUMBERS
A B C	EQUIPMENT, SIGNAL POLES, INSTALLATION OR ITEMS
1 2 3	CONDUIT RUN NUMBERS

SIGNAL AND LIGHTING STANDARD (TYPICAL DESIGNATION):

19A - 3 - 100

- WIND VELOCITY = 100 mph
- CASE 3 ARM LOADING
- STANDARD TYPE
- STANDARD PLAN SHEET NUMBER
- DETAIL, NUMBER, SECTION, TYPE OR ELEVATION

MISCELLANEOUS EQUIPMENT

NEW	EXISTING	
CMS	cms	CHANGEABLE MESSAGE SIGN
		CLOSED CIRCUIT TELEVISION CAMERA
		HIGHWAY ADVISORY RADIO POLE AND ANTENNA
EMS	ems	EXTINGUISHABLE MESSAGE SIGN
M V	m v	DETECTION DEVICE M = MICROWAVE SENSOR V = VIDEO IMAGE SENSOR

WIRING DIAGRAM LEGEND

- EXTERNAL CONDUCTOR
- CONDUCTOR OR BUS
- TIE POINT
- CONTACTOR COIL
- CONTACTOR, NO CONTACT
- TERMINAL BLOCKS
- CONTACTOR, NC CONTACT
- ENCLOSURE BOND
- GROUNDING ELECTRODE
- CIRCUIT BREAKER
- RECEPTACLE

PULL BOXES

NEW	EXISTING	
		PULL BOX, No. 5 UNLESS OTHERWISE INDICATED OR NOTED
3	9A(21)	PULL BOX, ADDITIONAL DESIGNATIONS OR DESCRIPTIONS

3 No. 3½ PULL BOX
5 No. 5 PULL BOX
6 No. 6 PULL BOX
7 No. 7 (CEILING PULL BOX)
8 No. 8 (PENDANT SOFFIT PULL BOX)
9 No. 9 PULL BOX
9A No. 9A PULL BOX

(C) COMMUNICATIONS PULL BOX
(E) PULL BOX WITH EXTENSION
(S) SPRINKLER CONTROL PULL BOX
(21) ANCHOR BOLTS AND CONDUIT FOR FUTURE INSTALLATION OF TYPE 21 STANDARD
(T) TRAFFIC PULL BOX

VEHICLE DETECTORS

5 J 9 U

- VEHICLE DETECTOR DESIGNATION
- U = UPPER
  L = LOWER
- SLOT NUMBER IN INPUT FILE
- INPUT FILE (I OR J)
- PHASE

NEW	EXISTING	
		TYPE A DETECTOR LOOP. OUTLINE OF SAWCUT SHOWN
		TYPE B DETECTOR LOOP. OUTLINE OF SAWCUT SHOWN
		TYPE C DETECTOR LOOP. OUTLINE OF SAWCUT SHOWN
		TYPE D DETECTOR LOOP. OUTLINE OF SAWCUT SHOWN
		TYPE E DETECTOR LOOP. OUTLINE OF SAWCUT SHOWN
		TYPE Q DETECTOR LOOP. OUTLINE OF SAWCUT SHOWN
		MAGNETIC DETECTOR
DH	dh	DETECTOR HANDHOLE
		MICROWAVE OR VIDEO DETECTION ZONE

STATE OF CALIFORNIA
DEPARTMENT OF TRANSPORTATION

ELECTRICAL SYSTEMS (LEGEND AND ABBREVIATIONS)

NO SCALE

RSP ES-1C DATED JULY 19, 2013 SUPERSEDES STANDARD PLAN ES-1C DATED MAY 20, 2011 - PAGE 427 OF THE STANDARD PLANS BOOK DATED 2010.

REVISED STANDARD PLAN RSP ES-1C

2010 REVISED STANDARD PLAN RSP ES-1C

7-11-13

Dist	COUNTY	ROUTE	POST MILES TOTAL PROJECT	SHEET No.	TOTAL SHEETS
06	Fre	33	10.9/11.1	81	104

Theresa Gabriel
REGISTERED ELECTRICAL ENGINEER

July 19, 2013
PLANS APPROVAL DATE

REGISTERED PROFESSIONAL ENGINEER
Theresa Aziz Gabriel
No. E15129
Exp. 6-30-14
ELECTRICAL
STATE OF CALIFORNIA

THE STATE OF CALIFORNIA OR ITS OFFICERS OR AGENTS SHALL NOT BE RESPONSIBLE FOR THE ACCURACY OR COMPLETENESS OF SCANNED COPIES OF THIS PLAN SHEET.

TO ACCOMPANY PLANS DATED 4-28-14

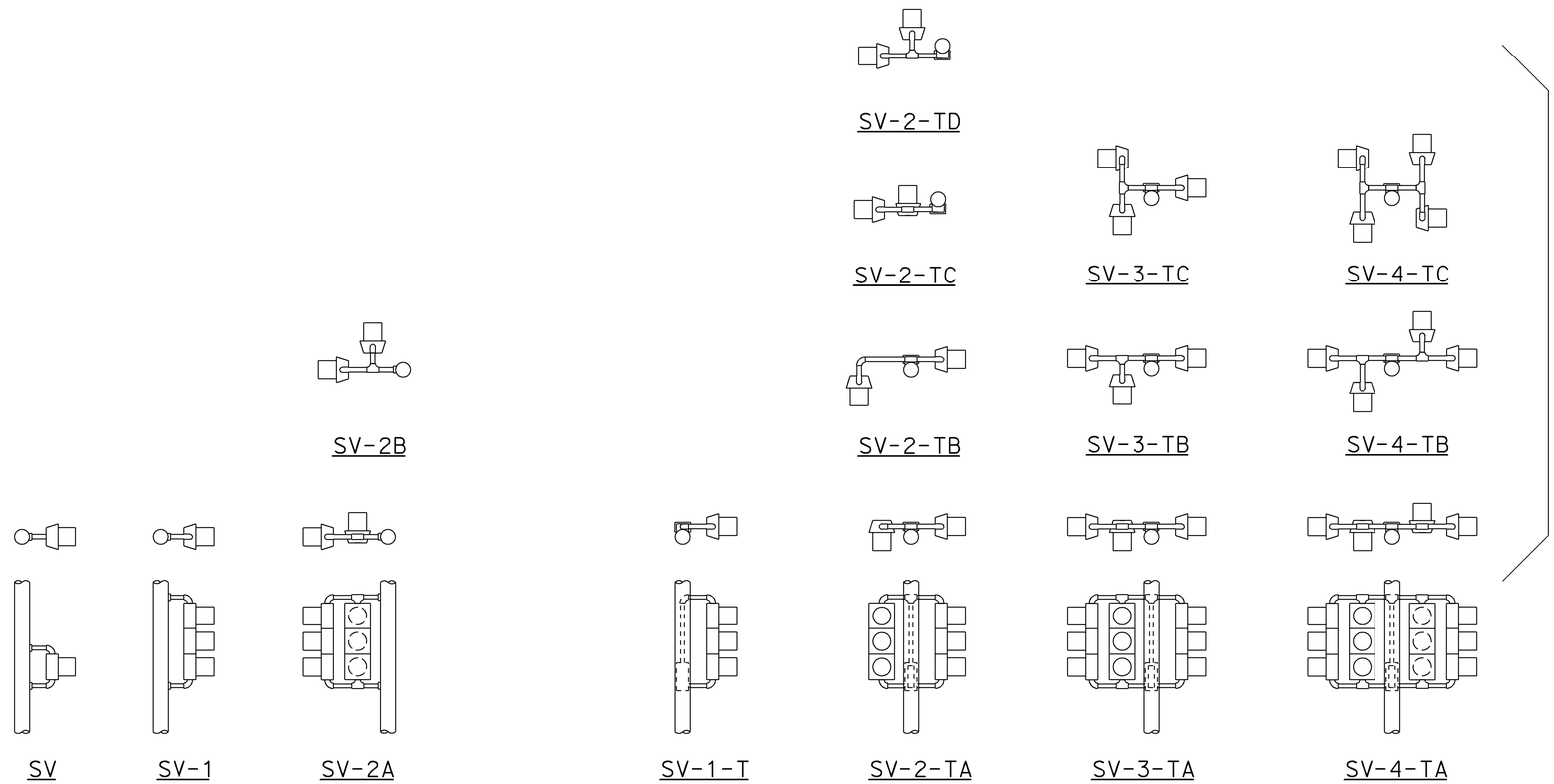

SIDE MOUNTINGS

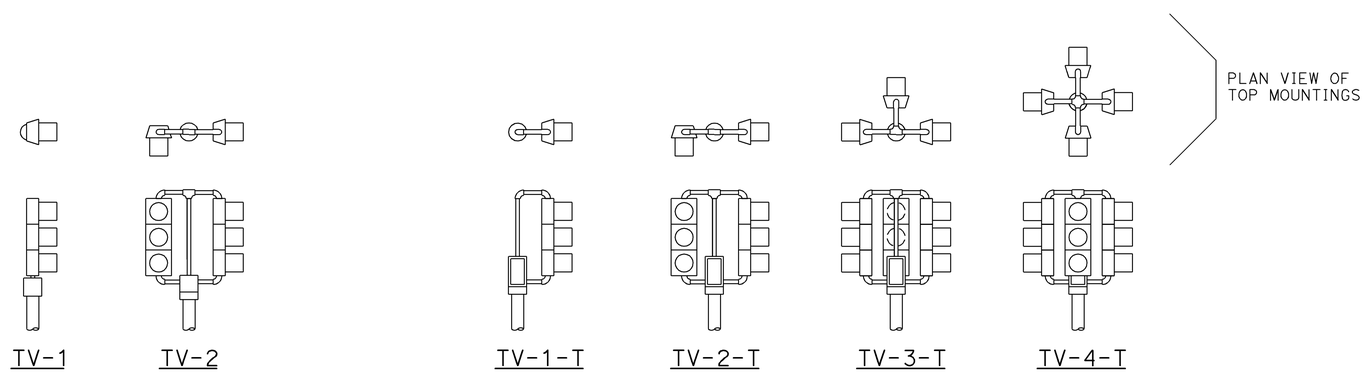

TOP MOUNTINGS

ABBREVIATIONS:

SV	SIDE MOUNTED VEHICLE SIGNALS
T	TERMINAL COMPARTMENT
TV	TOP MOUNTED VEHICLE SIGNALS
1, 2, 3, 4	NUMBER OF SIGNAL FACES (3 - SECTION, UNLESS OTHERWISE INDICATED)
A, B, C, D	CONFIGURATION OF SIGNALS

NOTES:

1. Mountings shall be oriented to provide maximum horizontal clearance to adjacent roadway.
2. Bracket arms shall be long enough to permit proper alignment of signals and backplate installation.
3. See Standard Plans ES-4D and ES-4E for attachment fitting details.

STATE OF CALIFORNIA
DEPARTMENT OF TRANSPORTATION

ELECTRICAL SYSTEMS (VEHICULAR SIGNAL HEADS AND MOUNTINGS)

NO SCALE

RSP ES-4A DATED JULY 19, 2013 SUPERSEDES STANDARD PLAN ES-4A DATED MAY 20, 2011 - PAGE 443 OF THE STANDARD PLANS BOOK DATED 2010.

REVISED STANDARD PLAN RSP ES-4A

2010 REVISED STANDARD PLAN RSP ES-4A

7-9-13

Dist	COUNTY	ROUTE	POST MILES TOTAL PROJECT	SHEET No.	TOTAL SHEETS
06	Fre	33	10.9/11.1	82	104

Theresa Gabriel
REGISTERED ELECTRICAL ENGINEER

July 19, 2013
PLANS APPROVAL DATE

REGISTERED PROFESSIONAL ENGINEER
Theresa Aziz Gabriel
No. E15129
Exp. 6-30-14
ELECTRICAL
STATE OF CALIFORNIA

THE STATE OF CALIFORNIA OR ITS OFFICERS OR AGENTS SHALL NOT BE RESPONSIBLE FOR THE ACCURACY OR COMPLETENESS OF SCANNED COPIES OF THIS PLAN SHEET.

TO ACCOMPANY PLANS DATED 4-28-14

VISORS

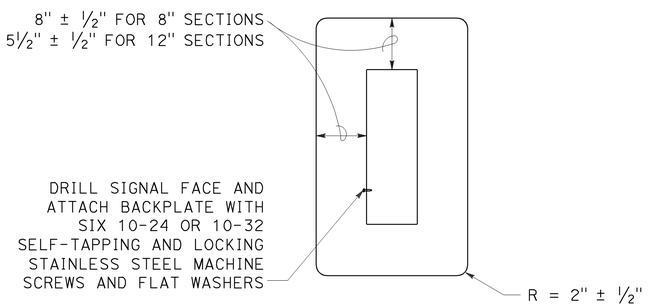

8" AND 12" SECTIONS

BACKPLATE

1/16" minimum thickness
3001-14 aluminum or plastic
when specified

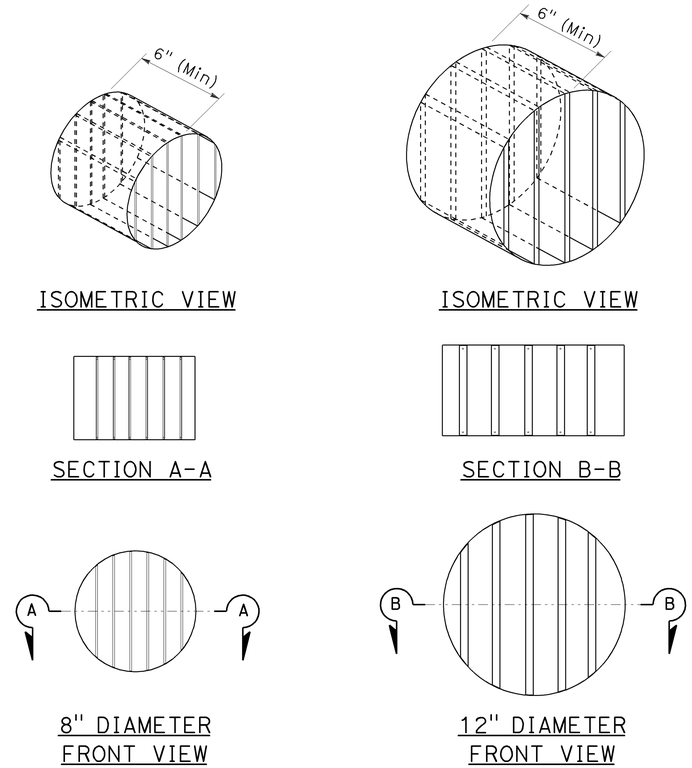

DIRECTIONAL LOUVER

Directional louvers shall be oriented as directed by the Engineer and secured in place with one plated brass machine screw and nut.

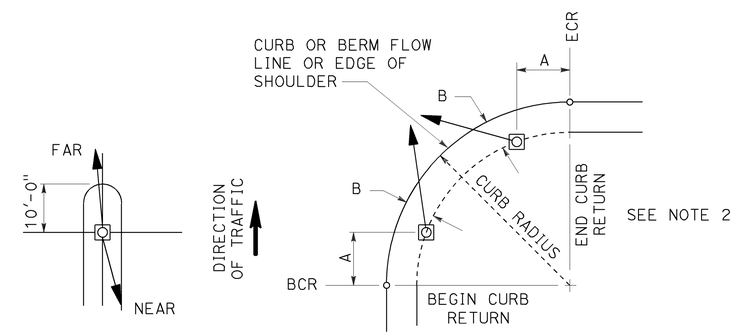

NOTES:

1. Typical signal pole placement unless dimensioned on plans.
2. For A and B dimensions, see Pole Schedule, or as directed by the Engineer.

SIGNAL STANDARD PLACEMENT DIMENSIONS AND EQUIPMENT LOCATIONS

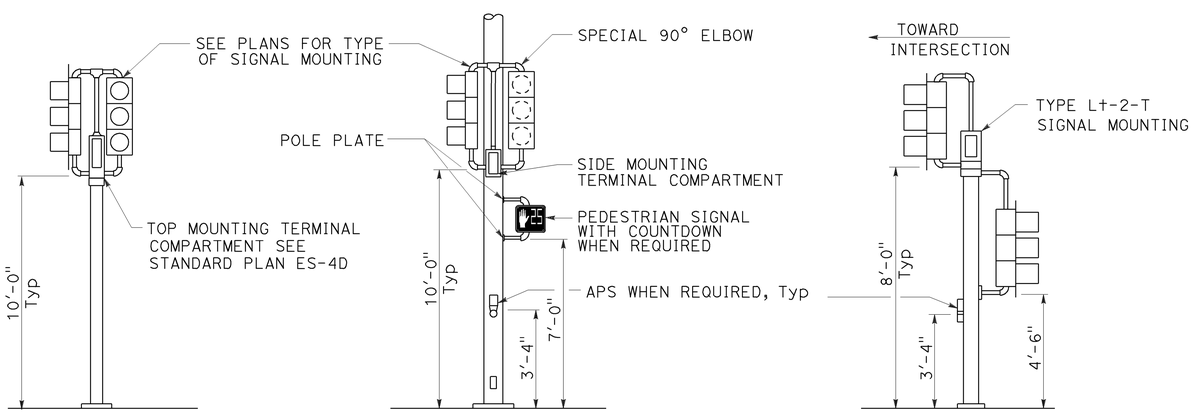

TOP MOUNTED SIGNALS (TV)
Type 1-A, 1-B, 1-C and 1-D standard as indicated on the plans

SIDE MOUNTED SIGNALS (SV AND SP)
Normally used on standards with luminaire or signal mast arm

LEFT TURN LANE SIGNAL
Type 1-A, 1-B, 1-C and 1-D standard as indicated on plans

TYPICAL SIGNAL INSTALLATIONS

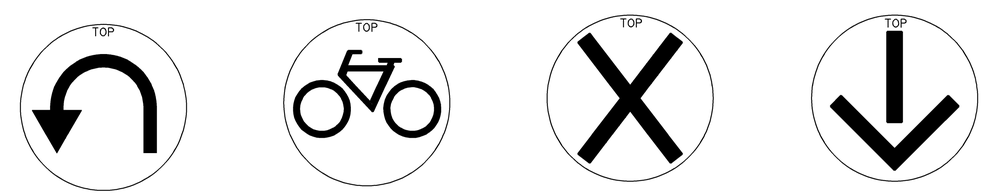

U-TURN | BICYCLE | LANE CONTROL | LANE CONTROL

SIGNAL FACES

STATE OF CALIFORNIA
DEPARTMENT OF TRANSPORTATION

ELECTRICAL SYSTEMS (VEHICULAR SIGNAL HEADS AND MOUNTINGS)

NO SCALE

RSP ES-4C DATED JULY 19, 2013 SUPERSEDES STANDARD PLAN ES-04C DATED MAY 20, 2011 - PAGE 445 OF THE STANDARD PLANS BOOK DATED 2010.

REVISED STANDARD PLAN RSP ES-4C

2010 REVISED STANDARD PLAN RSP ES-4C

7-10-13

Dist	COUNTY	ROUTE	POST MILES TOTAL PROJECT	SHEET No.	TOTAL SHEETS
06	Fre	33	10.9/11.1	83	104

Theresa Gabriel
REGISTERED ELECTRICAL ENGINEER

July 19, 2013
PLANS APPROVAL DATE

REGISTERED PROFESSIONAL ENGINEER
Theresa Aziz Gabriel
No. E15129
Exp. 6-30-14
ELECTRICAL
STATE OF CALIFORNIA

THE STATE OF CALIFORNIA OR ITS OFFICERS OR AGENTS SHALL NOT BE RESPONSIBLE FOR THE ACCURACY OR COMPLETENESS OF SCANNED COPIES OF THIS PLAN SHEET.

TO ACCOMPANY PLANS DATED 4-28-14

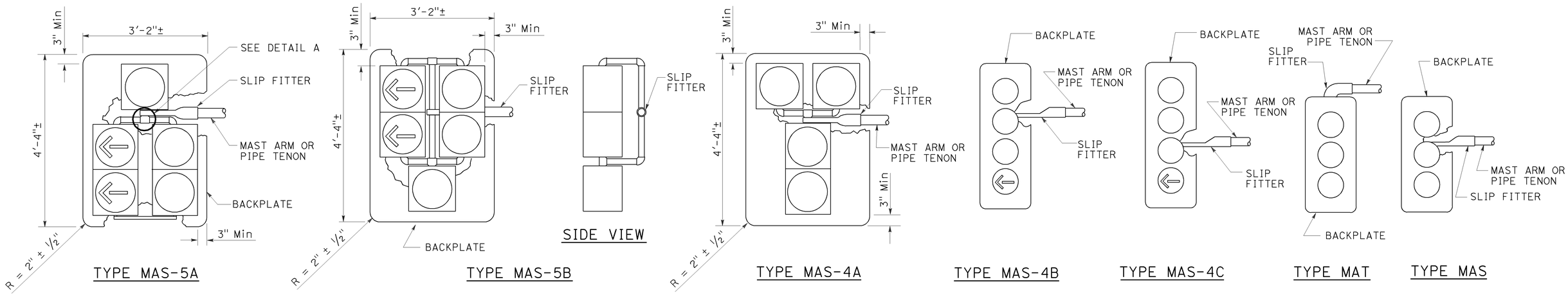

MAST ARM MOUNTINGS

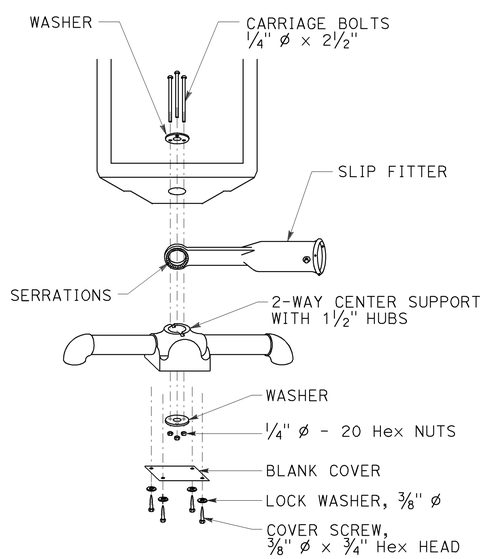

DETAIL A

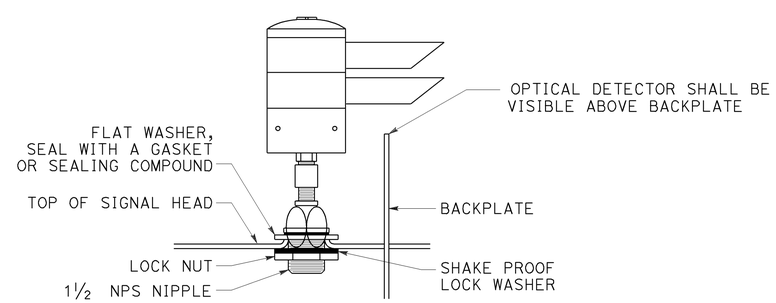

OPTICAL DETECTOR MOUNTING FOR EMERGENCY VEHICLE DETECTION SYSTEM

DETAIL B

STATE OF CALIFORNIA
DEPARTMENT OF TRANSPORTATION

ELECTRICAL SYSTEMS (VEHICULAR SIGNAL HEADS AND OPTICAL DETECTOR MOUNTING)

NO SCALE

RSP ES-4E DATED JULY 19, 2013 SUPERSEDES STANDARD PLAN ES-4E DATED MAY 20, 2011 - 447 OF THE STANDARD PLANS BOOK DATED 2010.

REVISED STANDARD PLAN RSP ES-4E

2010 REVISED STANDARD PLAN RSP ES-4E

7-9-13

Dist	COUNTY	ROUTE	POST MILES TOTAL PROJECT	SHEET No.	TOTAL SHEETS
06	Fre	33	10.9/11.1	84	104

Theresa Gabriel
REGISTERED ELECTRICAL ENGINEER

July 19, 2013
PLANS APPROVAL DATE

REGISTERED PROFESSIONAL ENGINEER
Theresa Aziz Gabriel
No. E15129
Exp. 6-30-14
ELECTRICAL
STATE OF CALIFORNIA

THE STATE OF CALIFORNIA OR ITS OFFICERS OR AGENTS SHALL NOT BE RESPONSIBLE FOR THE ACCURACY OR COMPLETENESS OF SCANNED COPIES OF THIS PLAN SHEET.

TO ACCOMPANY PLANS DATED 4-28-14

2010 REVISED STANDARD PLAN RSP ES-5B

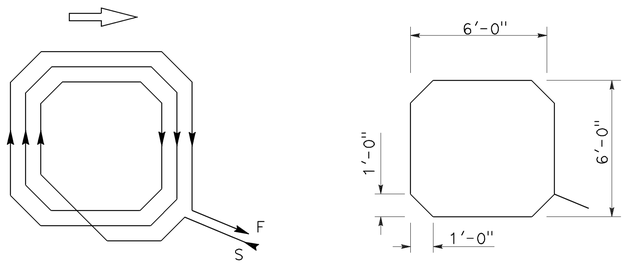

WINDING DETAIL SAWCUT DETAIL

TYPE A LOOP DETECTOR CONFIGURATION

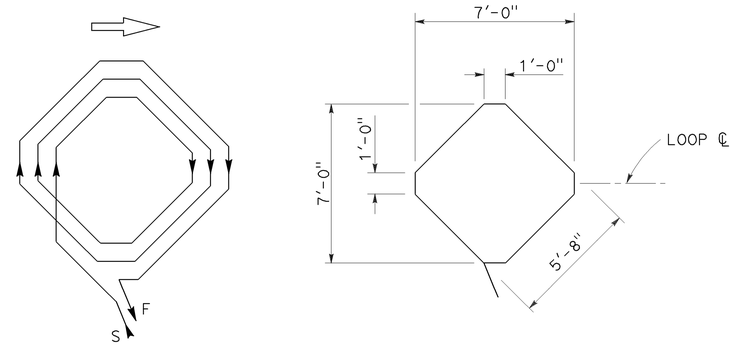

WINDING DETAIL SAWCUT DETAIL

TYPE B LOOP DETECTOR CONFIGURATION

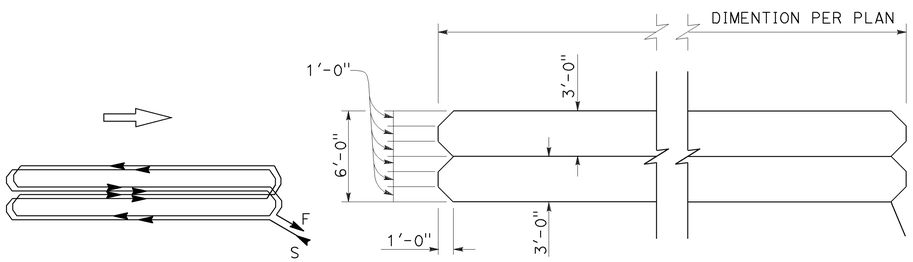

WINDING DETAIL SAWCUT DETAIL

TYPE C LOOP DETECTOR CONFIGURATION

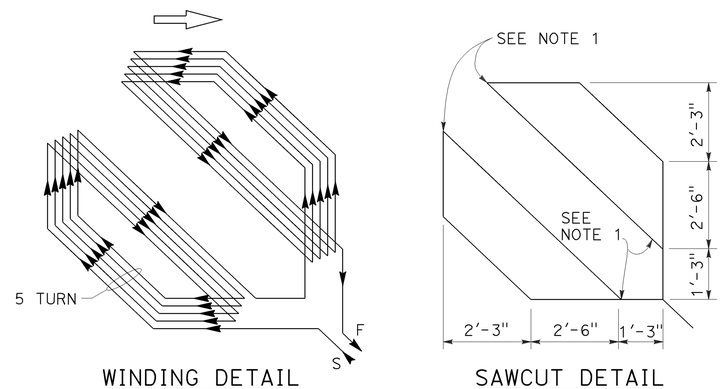

WINDING DETAIL SAWCUT DETAIL

TYPE D LOOP DETECTOR CONFIGURATION

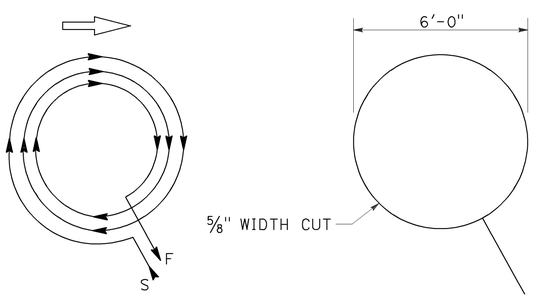

WINDING DETAIL SAWCUT DETAIL

TYPE E LOOP DETECTOR CONFIGURATION

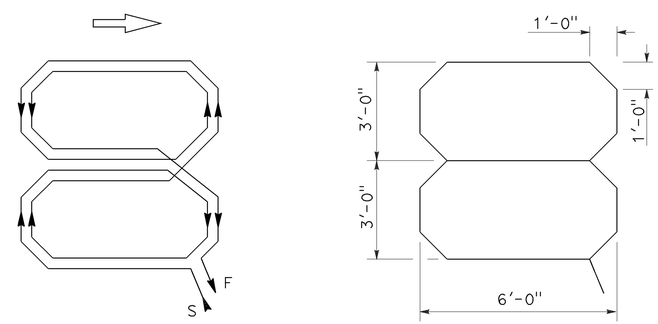

WINDING DETAIL SAWCUT DETAIL

TYPE Q LOOP DETECTOR CONFIGURATION

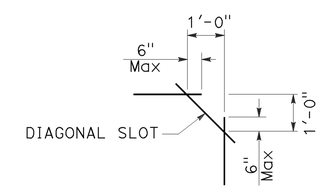

PLAN VIEW OF DIAGONAL SLOT AT CORNERS

NOTES:

1. Round corners of acute angle sawcuts to prevent damage to conductors.
2. Typical distance separating loops from edge to edge is 10' for Type A, B, D and E installation in single lane.

STATE OF CALIFORNIA
DEPARTMENT OF TRANSPORTATION

ELECTRICAL SYSTEMS (DETECTORS)

NO SCALE

RSP ES-5B DATED JULY 19, 2013 SUPERSEDES STANDARD PLAN ES-5B DATED MAY 20, 2011 - PAGE 449 OF THE STANDARD PLANS BOOK DATED 2010.

REVISED STANDARD PLAN RSP ES-5B

Dist	COUNTY	ROUTE	POST MILES TOTAL PROJECT	SHEET No.	TOTAL SHEETS
06	Fre	33	10.9/11.1	85	104

Theresa Gabriel
REGISTERED ELECTRICAL ENGINEER

July 19, 2013
PLANS APPROVAL DATE

REGISTERED PROFESSIONAL ENGINEER
Theresa Aziz Gabriel
No. E15129
Exp. 6-30-14
ELECTRICAL
STATE OF CALIFORNIA

THE STATE OF CALIFORNIA OR ITS OFFICERS OR AGENTS SHALL NOT BE RESPONSIBLE FOR THE ACCURACY OR COMPLETENESS OF SCANNED COPIES OF THIS PLAN SHEET.

TO ACCOMPANY PLANS DATED 4-28-14

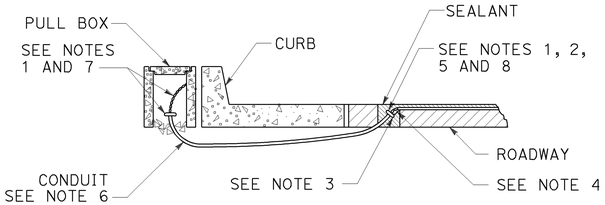

TYPE A
CURB TERMINATION DETAIL

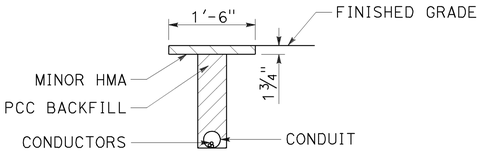

"T" TRENCH
DETAIL T

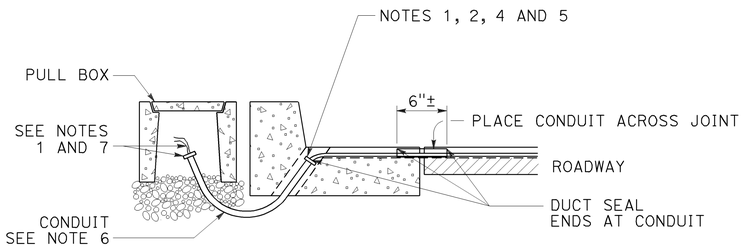

CROSS SECTION

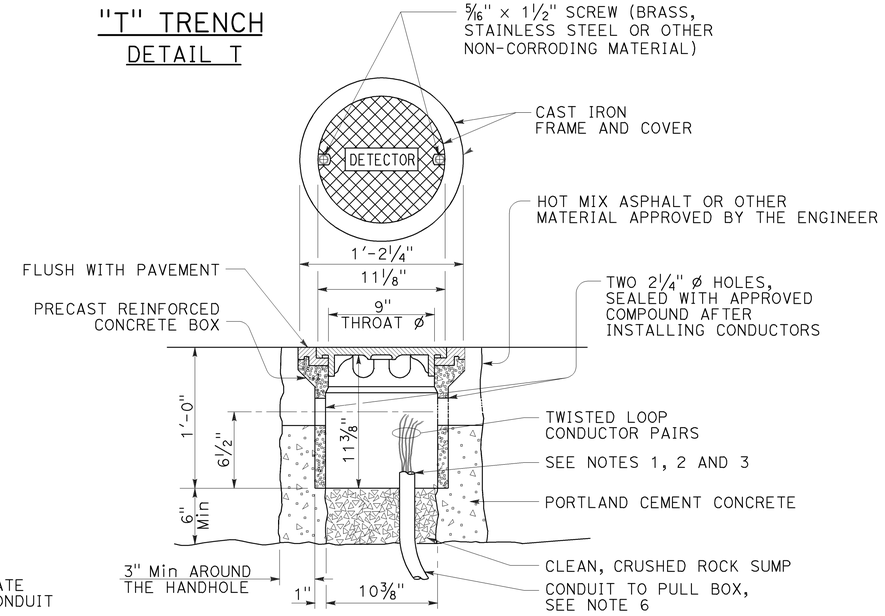

DETECTOR HANDHOLE DETAIL

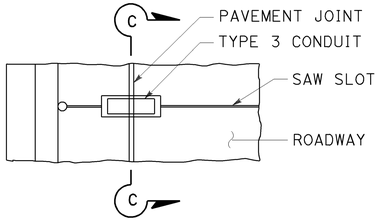

PLAN VIEW

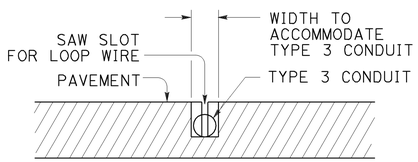

SECTION C-C

TYPE B
CURB TERMINATION DETAIL

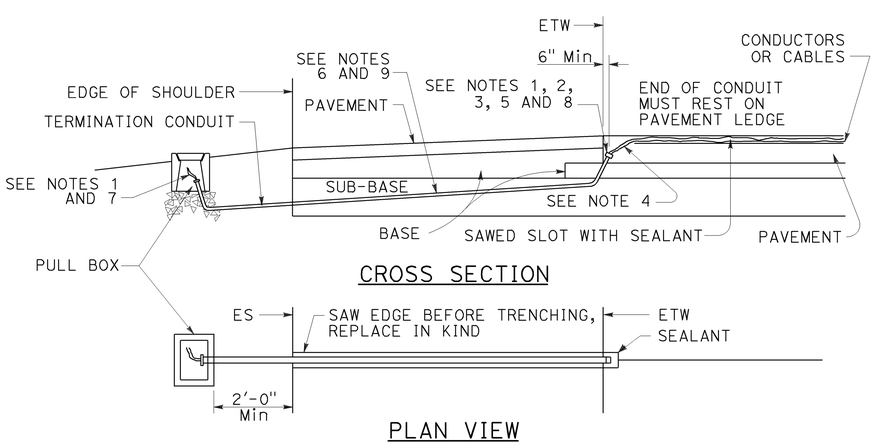

CROSS SECTION

PLAN VIEW

SHOULDER TERMINATION DETAILS

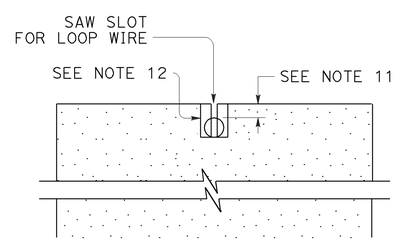

SECTION A-A

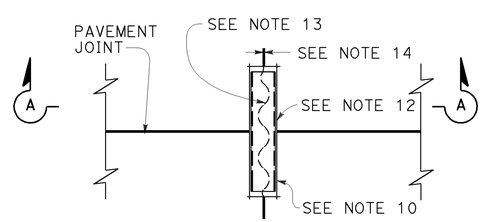

PLAN VIEW

TYPICAL LOOP LEAD-IN DETAIL
AT PAVEMENT JOINT

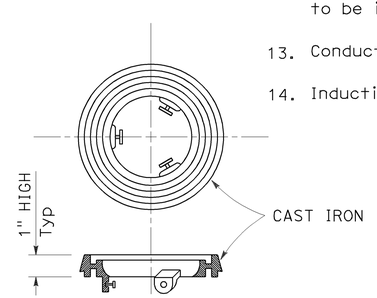

LOCKING GRADE RING

NOTES:

1. Bushing shall be used at end of conduit.
2. Tape detector conductors or cables 3" each side of bushings.
3. Install duct seal compound to each end of termination conduit before installing sealant.
4. Round all sharp edges where detector conductors or cables have to pass.
5. End of conduit shall be 3⅛" below roadway surface.
6.

Conduit size	Loop conductors
1"C minimum	1 to 2 pairs
1½"C minimum	3 to 4 pairs
2"C minimum	5 or more pairs

7. Splice detector conductors or cables to detector lead-in-cable.
8. Location of detector handhole when shown on plans.
9. When the shoulder and traveled way are paved with the same material and there is no joint between them, the conduit shall extend only 2'-0" into the shoulder pavement.
10. ¾"C, Type 3 conduit 6" long minimum, plug both ends with duct compound to keep out sealant.
11. ½" Minimum between top of conduit and pavement surface.
12. Sawcut shall not exceed 1" in width and ⅛" longer than conduit to be installed.
13. Conductors with ½" minimum slack inside conduit.
14. Inductive loop detector saw slot.

STATE OF CALIFORNIA
DEPARTMENT OF TRANSPORTATION

ELECTRICAL SYSTEMS (CURB TERMINATION AND HANDHOLE)

NO SCALE

RSP ES-5D DATED JULY 19, 2013 SUPERSEDES STANDARD PLAN ES-5D
DATED MAY 20, 2011 - PAGE 451 OF THE STANDARD PLANS BOOK DATED 2010.

REVISED STANDARD PLAN RSP ES-5D

2010 REVISED STANDARD PLAN RSP ES-5D

7-9-13

DIST	COUNTY	ROUTE	POST MILES TOTAL PROJECT	SHEET NO.	TOTAL SHEETS
06	Fre	33	10.9/11.1	86	104

Theresa Gabriel
REGISTERED ELECTRICAL ENGINEER

July 19, 2013
PLANS APPROVAL DATE

REGISTERED PROFESSIONAL ENGINEER Theresa Aziz Gabriel No. E15129 Exp. 6-30-14 ELECTRICAL STATE OF CALIFORNIA

THE STATE OF CALIFORNIA OR ITS OFFICERS OR AGENTS SHALL NOT BE RESPONSIBLE FOR THE ACCURACY OR COMPLETENESS OF SCANNED COPIES OF THIS PLAN SHEET.

TO ACCOMPANY PLANS DATED 4-28-14

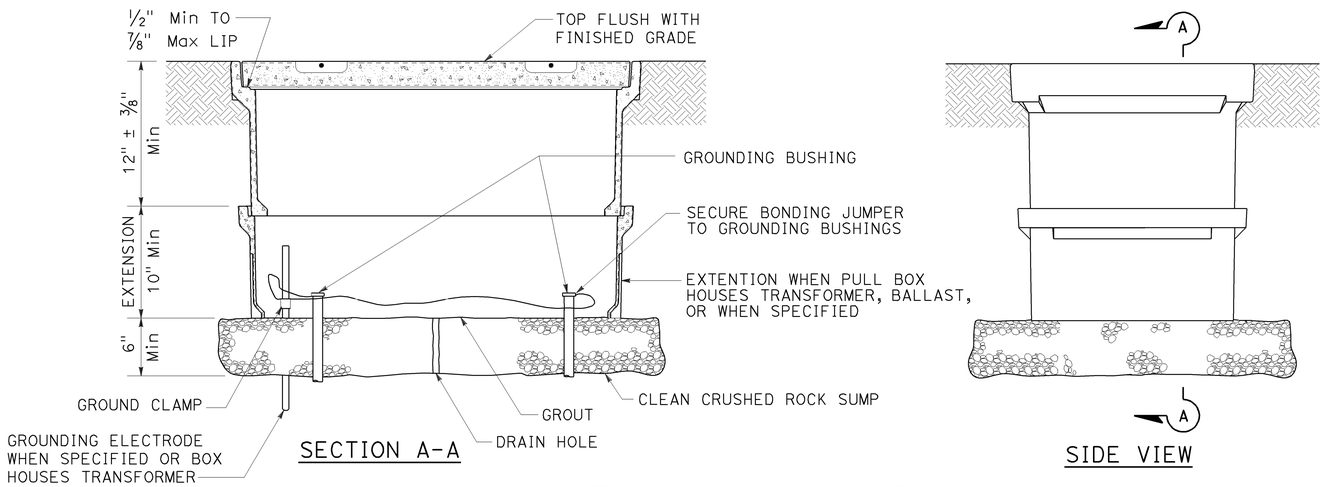

SECTION A-A

SIDE VIEW

INSTALLATION DETAILS

DETAIL A

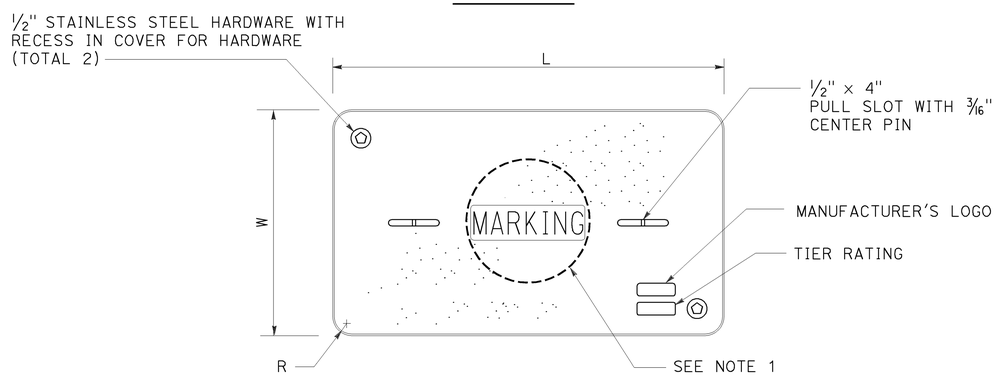

COVER TOP VIEW

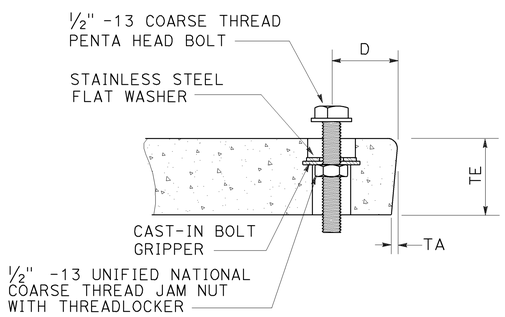

TYPICAL COVER CAPTIVE BOLT

OR SIMILAR

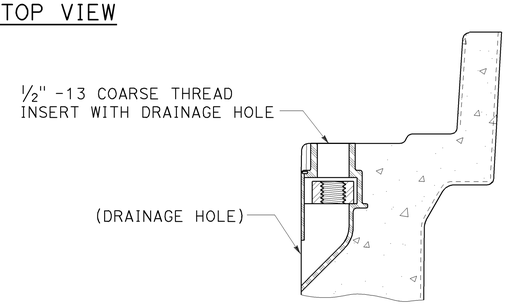

TYPICAL THREADED INSERT

OR SIMILAR

DIMENSION TABLE

PULL BOX	PULL BOX			COVER						
	MINIMUM DEPTH BOX	MINIMUM DEPTH EXTENSION	MAXIMUM WEIGHT	L	W	R	TE	TA	D	MAXIMUM WEIGHT
No. 3½	12"	N/A	40 lb	1′ - 3⅜"	10⅛"	1⅜"	2"	⅛"	1¾"	30 lb
No. 5	12"	10"	55 lb	1′ - 11¼"	1′ - 1¾"	1⅜"	2"	⅛"	1¾"	60 lb
No. 6	12"	10"	70 lb	2′ - 6½"	1′ - 5½"	1⅜"	2"	⅛"	2"	85 lb

NOTES:

1. Pull box covers shall be marked as follows: "SERVICE" Service circuits between service point and service disconnect; "SPRINKLER-CONTROL" sprinkler control circuits, 50 V or less; "CALTRANS" on all pull boxes, except pull boxes marked "SPRINKLER-CONTROL"; and "TELEPHONE" Telephone service;
   - A) No. 3½ pull box.
     - 1) "SIGNAL" - Traffic signal circuits with or without lighting or sign lighting circuits.
     - 2) "LIGHTING" - Lighting or sign lighting circuits where voltage is under 600 V.
   - B) No. 5, 6, 9 or 9A pull box.
     - 1) "TRAFFIC SIGNAL" - Traffic signal circuits with or without lighting or sign lighting circuits.
     - 2) "LIGHTING" - Lighting or sign lighting circuits where voltage is under 600 V.
     - 3) "LIGHTING-HIGH VOLTAGE" - Lighting or sign lighting circuits where voltage is above 600 V.
     - 4) "IRRIGATION" - Circuits to irrigation controller 120 V or more.
     - 5) "RAMP METER" - Ramp meter circuits.
     - 6) "COUNT STATION" - Count or speed monitor circuits.
     - 7) "COMMUNICATIONS" - Communication circuits.
     - 8) "TOS COMMUNICATIONS" - TOS communication line.
     - 9) "TOS POWER" - TOS power.
     - 10) "TDC POWER" - Telephone demarcation cabinet power.
     - 11) "CCTV" - Closed circuit television circuits.
     - 12) "TMS" - Traffic monitoring station circuits.
     - 13) "CMS" - Changeable message sign circuits.
     - 14) "HAR" - Highway advisory radio circuits.
     - 15) "BOOSTER PUMP" - Booster pump circuit.
2. The nominal dimensions of the opening in which the cover sets shall be the same as the cover dimensions except the length and width dimensions shall be ⅛" greater.
3. Covers and boxes shall be interchangeable with California standard male and female gages. When interchanged with a standard male or female gage, the top surfaces shall be flush within ⅛". Top outside radius of covers and pull boxes shall have a ⅛" radius.
4. Pull box extension may be another pull box as long as the bottom edge of the pull box can fit into the cover opening.
5. All dimensions for the cover for non-traffic pull box are nominal values.

STATE OF CALIFORNIA
DEPARTMENT OF TRANSPORTATION

ELECTRICAL SYSTEMS (NON-TRAFFIC PULL BOX)

NO SCALE

RSP ES-8A DATED JULY 19, 2013 SUPERSEDES RSP ES-8A DATED JANUARY 20, 2012 THAT SUPPLEMENTS THE STANDARD PLANS BOOK DATED 2010.

REVISED STANDARD PLAN RSP ES-8A

2010 REVISED STANDARD PLAN RSP ES-8A

7-15-13

DIST	COUNTY	ROUTE	POST MILES TOTAL PROJECT	SHEET NO.	TOTAL SHEETS
06	Fre	33	10.9/11.1	87	104

Theresa Gabriel
REGISTERED ELECTRICAL ENGINEER

July 19, 2013
PLANS APPROVAL DATE

REGISTERED PROFESSIONAL ENGINEER
Theresa Aziz Gabriel
No. E15129
Exp. 6-30-14
ELECTRICAL
STATE OF CALIFORNIA

THE STATE OF CALIFORNIA OR ITS OFFICERS OR AGENTS SHALL NOT BE RESPONSIBLE FOR THE ACCURACY OR COMPLETENESS OF SCANNED COPIES OF THIS PLAN SHEET.

TO ACCOMPANY PLANS DATED 4-28-14

2010 REVISED STANDARD PLAN RSP ES-8B

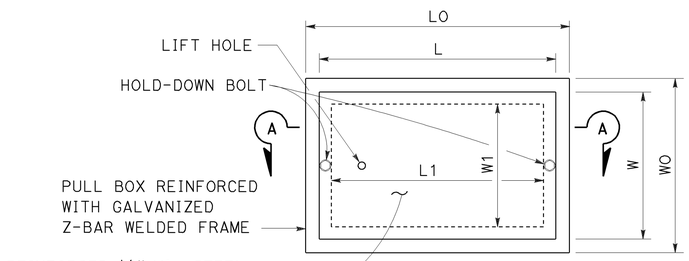

TOP VIEW

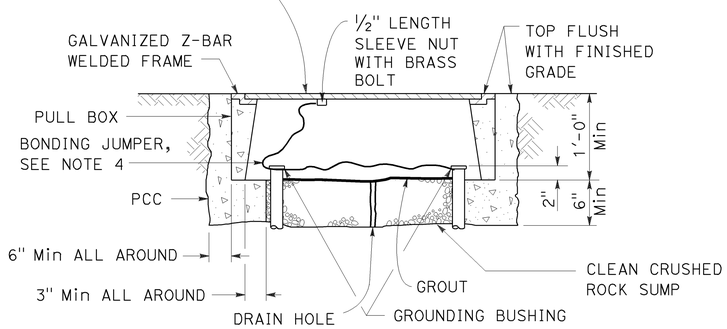

SECTION A-A

No. 3½(T), No. 5(T) AND No. 6(T) TRAFFIC PULL BOX

NOTES:

1. Traffic pull box shall be provided with steel cover and special concrete footing. Steel cover shall have embossed non-skid pattern.
2. Steel reinforcing shall be as regularly used in the standard products of the respective manufacturer.
3. Pull box covers shall be marked as follows: "SERVICE" Service circuits between service point and service disconnect; "SPRINKLER-CONTROL" Sprinkler control circuits, 50 V or less; "CALTRANS" On all pull boxes, except pull boxes marked "SPRINKLER-CONTROL"; and "TELEPHONE" Telephone service.
   - A) No. 3½(T) pull box.
     - 1) "SIGNAL" - Traffic signal circuits with or without lighting or sign lighting circuits.
     - 2) "LIGHTING" - Lighting or sign lighting circuits where voltage is under 600 V.
   - B) No. 5(T) or 6(T) pull box.
     - 1) "TRAFFIC SIGNAL" - Traffic signal circuits with or without lighting or sign lighting circuits.
     - 2) "LIGHTING" - Lighting or sign lighting circuits where voltage is under 600 V.
     - 3) "LIGHTING-HIGH VOLTAGE" - Lighting or sign lighting circuits where voltage is above 600 V.
     - 4) "IRRIGATION" - Circuits to irrigation controller 120 V or more.
     - 5) "RAMP METER" - Ramp meter circuits.
     - 6) "COUNT STATION" - Count or speed monitor circuits.
     - 7) "COMMUNICATION" - Communication circuits.
     - 8) "TOS COMMUNICATIONS" - TOS communications line.
     - 9) "TOS POWER" - TOS power.
     - 10) "TDC POWER" - Telephone demarcation cabinet power.
     - 11) "CCTV" - Closed circuit television circuits.
     - 12) "TMS" - Traffic monitoring station circuits.
     - 13) "CMS" - Changeable message sign circuits.
     - 14) "HAR" - Highway advisory radio circuits.
     - 15) "BOOSTER PUMP" - Booster pump circuit.
4. Bonding jumper for metal covers shall be 3' long, minimum.
5. The nominal dimensions of the opening in which the cover sets shall be the same as the cover dimensions except the length and width dimensions shall be ⅛" greater.
6. Covers and boxes shall be interchangeable with California standard male and female gages. When interchanged with a standard male or female gage, the top surfaces shall be flush within ⅛".

DIMENSION TABLE

PULL BOX	PULL BOX						COVER				
	MINIMUM * THICKNESS	MINIMUM DEPTH BOX AND EXTENSION	WO	LO	L1	W1	L **	W **	R	EDGE THICKNESS	EDGE TAPER
No. 3½(T)	1½"	1'-0"	1'-5"± 1"	1'-8⅞"±	1'-2½"±	10⅝"± 1"	1'-8"±	1'-1¾"±	0"	½"	NONE
No. 5(T)	1¾"	1'-0"	1'-11½"± 1"	2'-5½"±	1'-7"±	1'-1"± 1"	2'-3"±	1'-4"±	0"	½"	NONE
No. 6(T)	2"	1'-0"	2'-6"± 1"	2'-11½"±	1'-11½"±	1'-5"± 1"	2'-9"±	1'-8"±	0"	½"	NONE

* EXCLUDING CONDUIT WEB ** TOP DIMENSION

STATE OF CALIFORNIA
DEPARTMENT OF TRANSPORTATION

ELECTRICAL SYSTEMS (TRAFFIC PULL BOX)

NO SCALE

RSP ES-8B DATED JULY 19, 2013 SUPERSEDES RSP ES-8B DATED JANUARY 20, 2012 THAT SUPPLEMENTS THE STANDARD PLANS BOOK DATED 2010.

REVISED STANDARD PLAN RSP ES-8B

7-15-13

Dist	COUNTY	ROUTE	POST MILES TOTAL PROJECT	SHEET No.	TOTAL SHEETS
06	Fre	33	10.9/11.1	88	104

Theresa Gabriel
REGISTERED ELECTRICAL ENGINEER

July 19, 2013
PLANS APPROVAL DATE

REGISTERED PROFESSIONAL ENGINEER
Theresa Aziz Gabriel
No. E15129
Exp. 6-30-14
ELECTRICAL
STATE OF CALIFORNIA

THE STATE OF CALIFORNIA OR ITS OFFICERS OR AGENTS SHALL NOT BE RESPONSIBLE FOR THE ACCURACY OR COMPLETENESS OF SCANNED COPIES OF THIS PLAN SHEET.

TO ACCOMPANY PLANS DATED 4-28-14

ISOFOOTCANDLE CURVE - MINIMUM

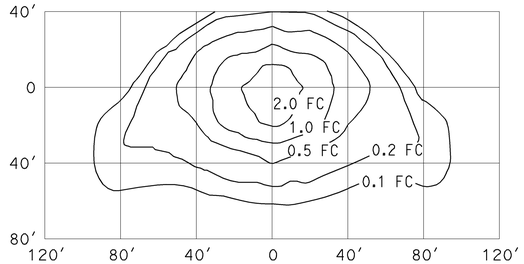

TYPE III MEDIUM CUTOFF

Cutoff Luminaire
34′ Mounting Height
Lamp operated at 22,000 lm
200-W high pressure sodium lamp
ANSI Designation S66

ISOFOOTCANDLE CURVE - MINIMUM

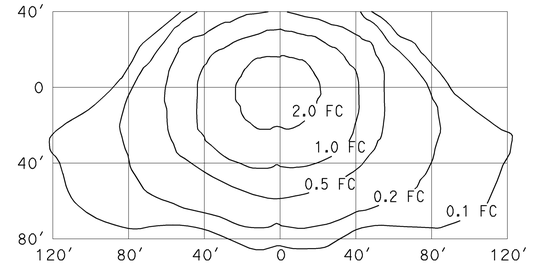

TYPE III MEDIUM CUTOFF

Cutoff Luminaire
40′ Mounting Height
Lamp operated at 37,000 lm
310-W high pressure sodium lamp
ANSI Designation S67

ISOFOOTCANDLE CURVE - MINIMUM

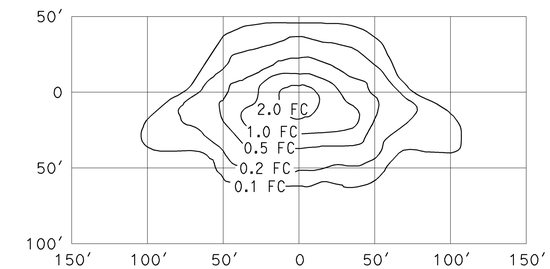

TYPE III MEDIUM CUTOFF

Cutoff Luminaire
30′ Mounting Height
Lamp operated at 16,000 lm
150-W high pressure sodium lamp
ANSI Designation S55

ISOFOOTCANDLE CURVE - MINIMUM

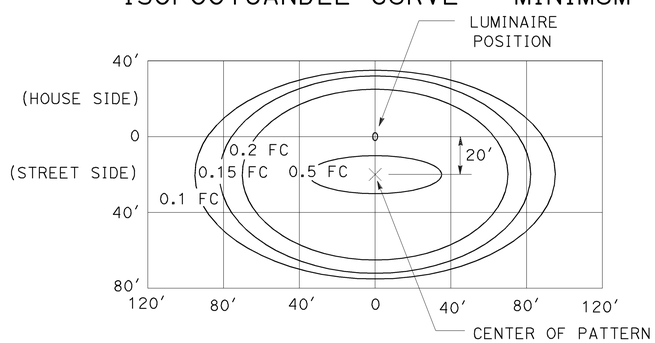

LED LUMINAIRE ROADWAY 1

165-W at 34′ Mounting Height

ISOFOOTCANDLE CURVE - MINIMUM

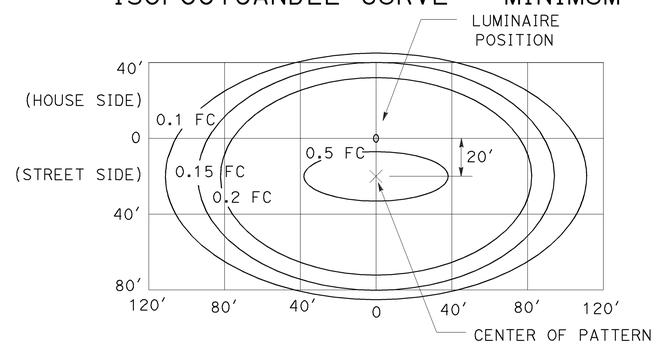

LED LUMINAIRE ROADWAY 2

235-W at 40′ Mounting Height

ISOFOOTCANDLE CURVE - MINIMUM

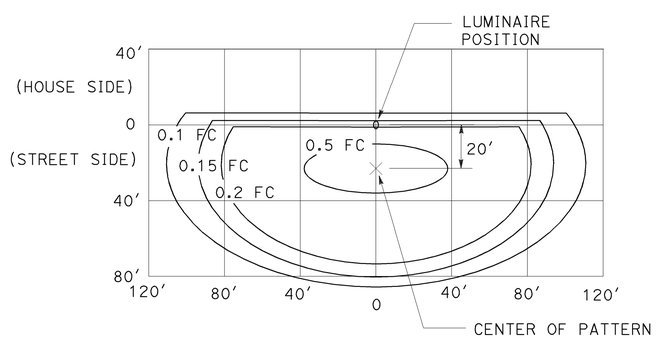

LED LUMINAIRE ROADWAY 3

235-W at 40′ Mounting Height
with back side control

ISOFOOTCANDLE CURVE - MINIMUM

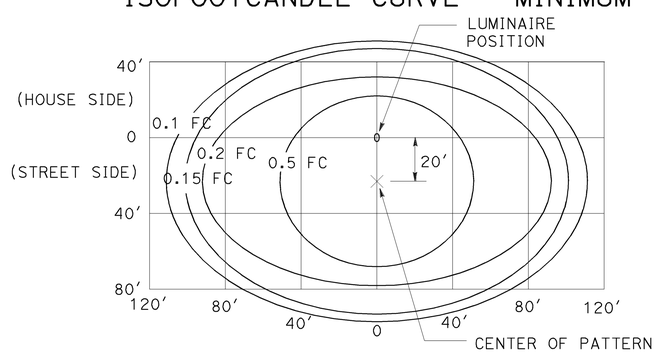

LED LUMINAIRE ROADWAY 4

300-W at 40′ Mounting Height

ISOFOOTCANDLE CURVE - MINIMUM

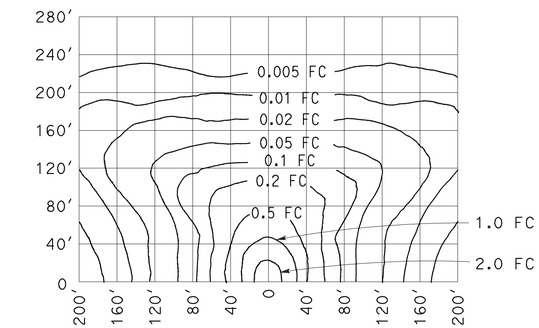

LOW PRESSURE SODIUM LUMINAIRE

40′ Mounting Height
Lamp operated at 33,000 lm
180-W low pressure sodium lamp

STATE OF CALIFORNIA
DEPARTMENT OF TRANSPORTATION

ELECTRICAL SYSTEMS (ISOFOOTCANDLE DIAGRAMS)

NO SCALE

RSP ES-10A DATED JULY 19, 2013 SUPERSEDES RSP ES-10A DATED JULY 20, 2012 THAT SUPPLEMENTS THE STANDARD PLANS BOOK DATED 2010.

REVISED STANDARD PLAN RSP ES-10A

2010 REVISED STANDARD PLAN RSP ES-10A

7-9-13

Dist	COUNTY	ROUTE	POST MILES TOTAL PROJECT	SHEET No.	TOTAL SHEETS
06	Fre	33	10.9/11.1	89	104

REGISTERED CIVIL ENGINEER

July 19, 2013
PLANS APPROVAL DATE

REGISTERED PROFESSIONAL ENGINEER
Stanley P. Johnson
No. C57793
Exp. 3-31-14
CIVIL
STATE OF CALIFORNIA

THE STATE OF CALIFORNIA OR ITS OFFICERS OR AGENTS SHALL NOT BE RESPONSIBLE FOR THE ACCURACY OR COMPLETENESS OF SCANNED COPIES OF THIS PLAN SHEET.

TO ACCOMPANY PLANS DATED 4-28-14

STANDARD TYPE	SETBACK (DIMENSION A)
32	30'-0" (Min)
31	20'-0" (Min)
15, 15D, 15-SB, 21, 21D, 30	ARM LENGTH (Min)

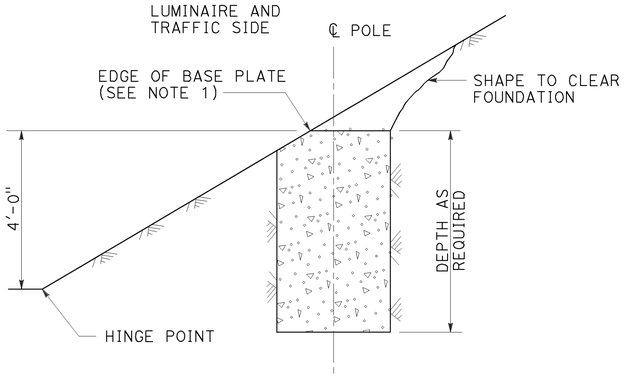

CUT SLOPES
STEEPER THAN 4:1,
LESS THAN 2:1
DETAIL A-1
See Note 2 and 3

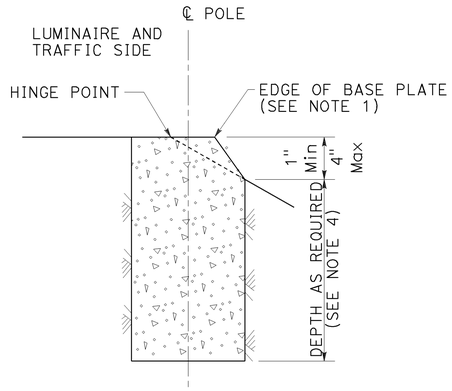

FILL SLOPES
STEEPER THAN 4:1,
LESS THAN 2:1
DETAIL A-2
See Note 2 and 3

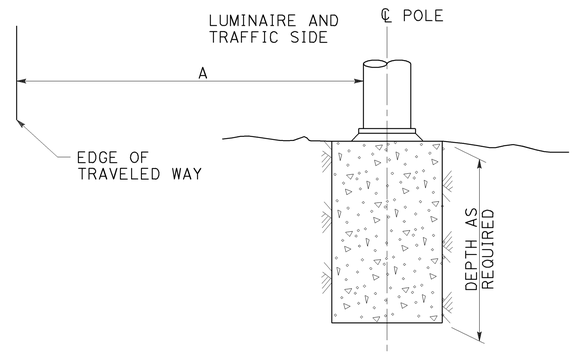

FLAT SECTIONS, CUT OR FILL SLOPES
4:1 OR FLATTER
DETAIL A-3
See Note 2

FOUNDATIONS ADJACENT TO ALL ROADWAYS EXCEPT
IN SIDEWALK, MEDIAN AND ISLAND AREAS
DETAIL A

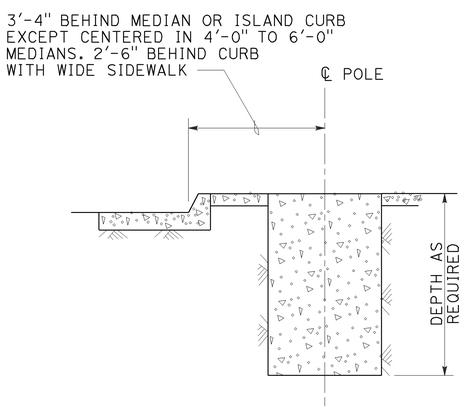

MEDIAN, ISLAND
OR WIDE SIDEWALK
DETAIL B-1
7' Wide and wider

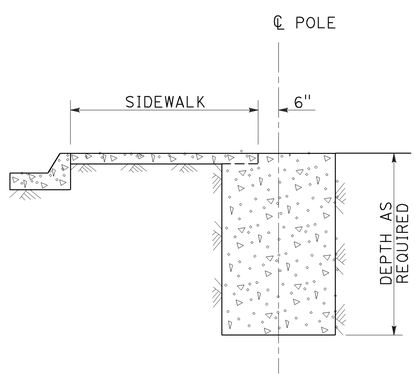

NARROW SIDEWALK
DETAIL B-2
Less than 7' wide

FOUNDATIONS IN SIDEWALK, MEDIAN AND ISLAND AREAS
DETAIL B

NOTES:

1. Where a portion of the foundation is above grade, the top edges shall have a 1" chamfer.
2. Slopes shall be horizontal to vertical ratio (Horizontal : Vertical).
3. Horizontal setbacks on cut and fill slopes steeper than 4:1 shall not exceed the distance shown for flat sections.
4. CIDH embedment depth shall be increased beyond standard depths by the diameter of the CIDH.

STATE OF CALIFORNIA
DEPARTMENT OF TRANSPORTATION

ELECTRICAL SYSTEMS (FOUNDATION INSTALLATIONS)

NO SCALE

RSP ES-11 DATED JULY 19, 2013 SUPERSEDES STANDARD PLAN ES-11
DATED MAY 20, 2011 - PAGE 488 OF THE STANDARD PLANS BOOK DATED 2010.

REVISED STANDARD PLAN RSP ES-11

2010 REVISED STANDARD PLAN RSP ES-11

7-9-13

DIST	COUNTY	ROUTE	POST MILES TOTAL PROJECT	SHEET No.	TOTAL SHEETS
06	Fre	33	10.9/11.1	90	104

REGISTERED CIVIL ENGINEER — DATE 1-21-14

4-28-14
PLANS APPROVAL DATE

REGISTERED PROFESSIONAL ENGINEER — Eduardo Jose Ortega Jr. No. 77226 Exp. 6/30/2015 CIVIL — STATE OF CALIFORNIA

The State of California or its officers or agents shall not be responsible for the accuracy or completeness of electronic copies of this plan sheet.

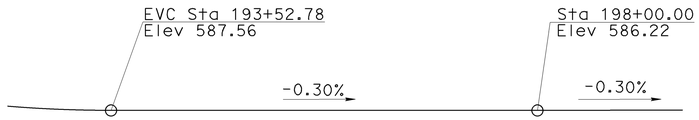

PROFILE GRADE

No Scale

NOTES:

1. Paint "Jacalitos Creek Bridge"
2. Paint "Br. No. 42-0441"
3. Temporary Railing (Type K), see "ROAD PLANS"
4. Concrete Barrier Type 732
5. For hydrologic summary, see "INDEX TO PLANS" sheet
6. Rock Slope protection, see "Road Plans"
7. Existing Department of Water Resources measuring devices, see "MISCELLANEOUS DETAILS" sheet.
8. Location of existing sheet piling cut-off wall. Remove over the limits of new RSP, see "ROAD PLANS". Remainder of wall can be abandoned in place unless conflicts with new structure.
9. Existing Bridge No. 42-0072 with pile extension bents
10. Future Utility opening

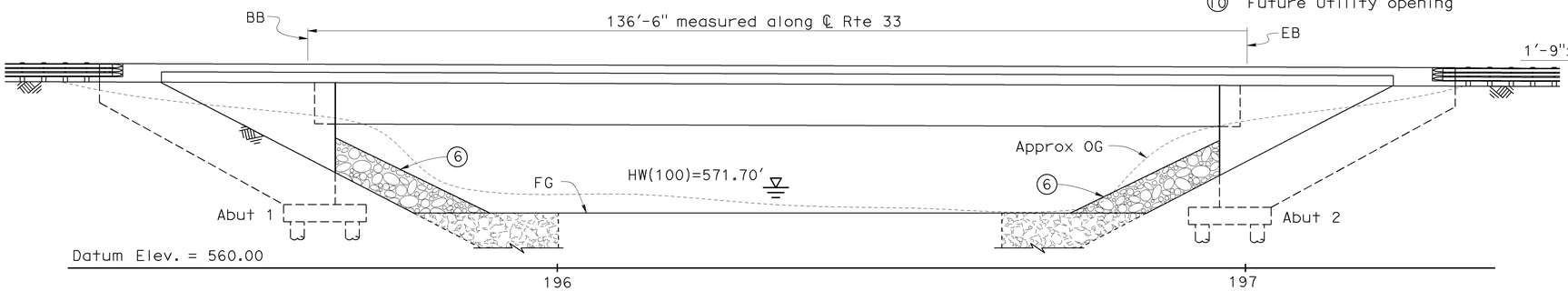

ELEVATION

1"=10'

LEGEND:

- Indicates Closure Pour
- Indicates limits of bridge removal
- Indicates existing structure

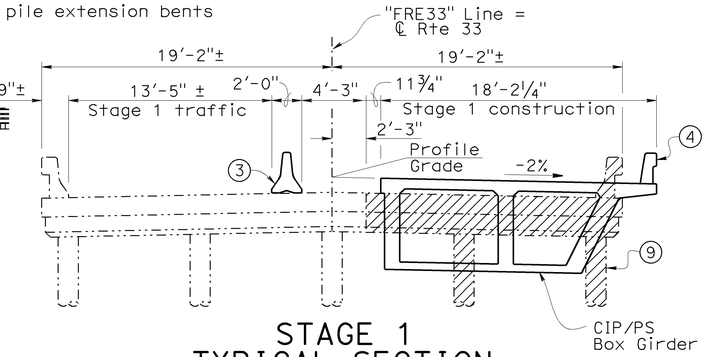

STAGE 1 TYPICAL SECTION

1"=5'

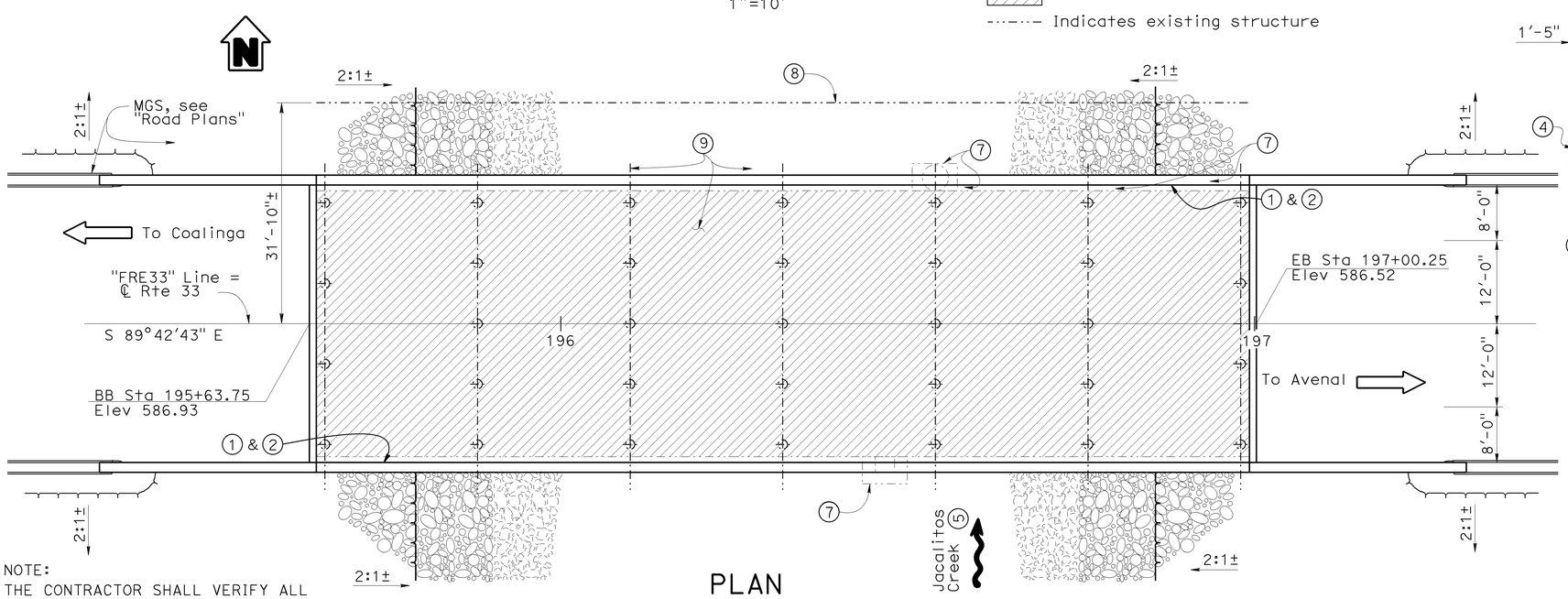

PLAN

1"=10'

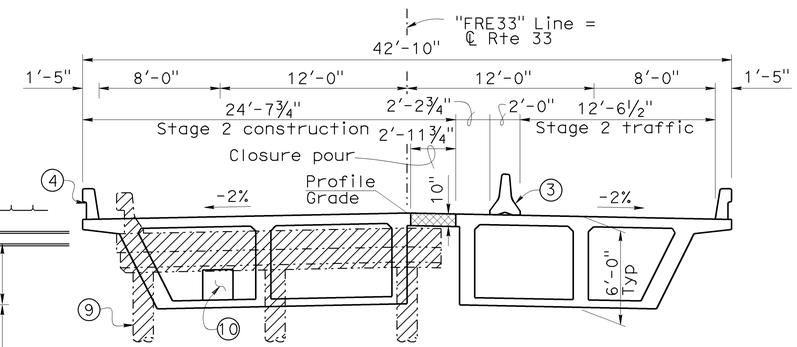

STAGE 2 TYPICAL SECTION

1"=5'

Notes:

1. For "INDEX TO PLANS" and "STANDARD PLANS 2010" list, see "INDEX TO PLANS" sheet.
2. For Quantities, see "DECK CONTOURS" sheet.

NOTE:
THE CONTRACTOR SHALL VERIFY ALL CONTROLLING FIELD DIMENSIONS BEFORE ORDERING OR FABRICATING ANY MATERIAL.

Michael Beauchamp
DESIGN ENGINEER

	BY	CHECKED
DESIGN	Eduardo Ortega Jr.	Greg Thornton
DETAILS	B. Jenko / J. Tang	Greg Thornton
QUANTITIES	Tracy Sanderson	Bob Huddleston

LOAD & RESISTANCE FACTOR DESIGN — LIVE LOADING: HL93 W/"LOW-BOY"; PERMIT DESIGN VEHICLE

	BY	CHECKED
LAYOUT	Eduardo Ortega Jr.	Greg Thornton
SPECIFICATIONS	Tina Chen	PLANS AND SPECS COMPARED: Tina Chen

STATE OF CALIFORNIA
DEPARTMENT OF TRANSPORTATION

DIVISION OF ENGINEERING SERVICES
STRUCTURE DESIGN
DESIGN BRANCH 7

BRIDGE NO. 42-0441
POST MILE 11.00

JACALITOS CREEK BRIDGE (REPLACE)
GENERAL PLAN

ORIGINAL SCALE IN INCHES FOR REDUCED PLANS 0 1 2 3

UNIT: 3592
PROJECT NUMBER & PHASE: 0600020388 4
CONTRACT NO.: 06-432604

DISREGARD PRINTS BEARING EARLIER REVISION DATES

REVISION DATES: ~~2-24-12~~ 12/02/13 12/10/13

SHEET 1 OF 15

STRUCTURES DESIGN GENERAL PLAN SHEET (ENGLISH) (REV.09-01-10)

FILE => 42-0441-a-gp.dgn

USERNAME => s136549 DATE PLOTTED => 21-APR-2014 TIME PLOTTED => 09:05

DIST	COUNTY	ROUTE	POST MILES TOTAL PROJECT	SHEET No.	TOTAL SHEETS
06	Fre	33	10.9/11.1	91	104

REGISTERED CIVIL ENGINEER 1-21-14 DATE

4-28-14
PLANS APPROVAL DATE

REGISTERED PROFESSIONAL ENGINEER Eduardo Jose Ortega Jr. No. 77226 Exp. 6/30/2015 CIVIL STATE OF CALIFORNIA

The State of California or its officers or agents shall not be responsible for the accuracy or completeness of electronic copies of this plan sheet.

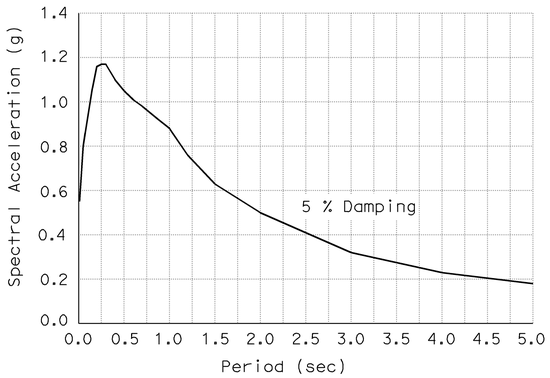

ACCELERATION RESPONSE SPECTRUM

SDC (ARS) curve. Vs30 = 700 ft/sec (Mmax = 7.0)
(Peak Ground Acceleration = 0.55g)

INDEX TO PLANS

SHEET NO.	TITLE
1.	GENERAL PLAN
2.	INDEX TO PLANS
3.	DECK CONTOURS
4.	FOUNDATION PLAN
5.	ABUTMENT LAYOUT
6.	ABUTMENT DETAILS NO. 1
7.	ABUTMENT DETAILS NO. 2
8.	ABUTMENT DETAILS NO. 3
9.	ABUTMENT DETAILS NO. 4
10.	TYPICAL SECTION
11.	GIRDER LAYOUT
12.	ADDITIONAL GIRDER REINFORCEMENT
13.	MISCELLANEOUS DETAILS
14.	LOG OF TEST BORINGS 1 OF 2
15.	LOG OF TEST BORINGS 2 OF 2

GENERAL NOTES
LOAD AND RESISTANCE FACTOR DESIGN

DESIGN:	AASHTO LRFD Bridge Design Specifications, 4th edition and the Caltrans Amendments, preface dated December 2011.
SEISMIC DESIGN :	Caltrans Seismic Design Criteria (SDC), Version 1.6 dated November 2010.
SEISMIC LOADING:	Acceleration Response Spectrum for Soil of Vs30 = 700 ft/sec.
DEAD LOAD:	Includes 35 psf for future wearing surface.
LIVE LOADING:	HL93 and P-15 permit design load.
REINFORCED CONCRETE:	f_y = 60 ksi f'_c = 3.6 ksi n = 8
PRESTRESSED CONCRETE:	See "Prestressing Notes" on "GIRDER LAYOUT" sheet.
STRUCTURAL STEEL:	Pipe Piles Fy = 45 ksi Fu = 66 ksi

STANDARD PLANS 2010

	A10A	ABBREVIATIONS (SHEET 1 OF 2)
RSP	A10B	ABBREVIATIONS (SHEET 2 OF 2)
	A10C	LINES AND SYMBOLS (SHEET 1 OF 3)
	A10D	LINES AND SYMBOLS (SHEET 2 OF 3)
	A10E	LINES AND SYMBOLS (SHEET 3 OF 3)
	A10F	LEGEND - SOIL (SHEET 1 OF 2)
	A10G	LEGEND - SOIL (SHEET 2 OF 2)
	A10H	LEGEND - ROCK
	A62C	LIMITS OF PAYMENT FOR EXCAVATION AND BACKFILL BRIDGE
	B0-1	BRIDGE DETAILS
	B0-3	BRIDGE DETAILS
	B0-5	BRIDGE DETAILS
	B0-13	BRIDGE DETAILS
	B6-21	JOINT SEALS (MAXIMUM MOVEMENT RATING = 2")
	B7-1	BOX GIRDER DETAILS
	B7-10	UTILITY OPENING BOX GIRDER
RSP	B8-5	CAST-IN-PLACE POST-TENSIONED GIRDER DETAILS
RSP	B11-55	CONCRETE BARRIER TYPE 732
	B14-5	WATER SUPPLY LINE (DETAILS)

STANDARD PLAN SHEET NO.

DETAIL NO.

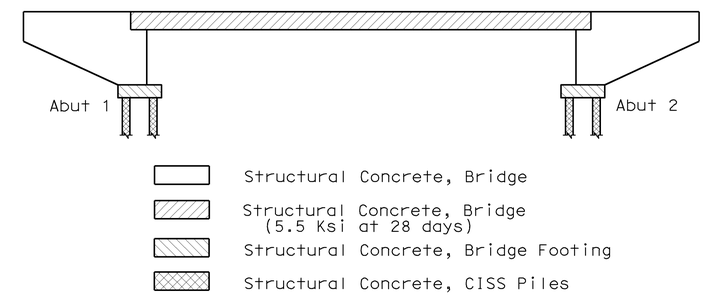

CONCRETE STRENGTH AND TYPE LIMITS

No Scale

HYDROLOGIC SUMMARY

Drainage Area: 64 mi^2

	Design Flood	Base Flood
Frequency	50 years	100 years
Discharge	3,700 cfs	5,200 cfs
Water Surface Elevations at Bridge	571.0 ft	571.7 ft
Velocities	N/A	8.8 ft/sec
Minimum soffit Elev	N/A	573.0 ft
Degradation scour	4.0 ft	
Contraction scour	6.4 ft	
Total potential scour depth at Abutment	10.4 ft	
Long term potential scour Elev	554.4 ft	

Flood plain data are based upon information available when the plans were prepared and are shown to meet federal requirements. The accuracy of said information is not warranted by the state and interested or affected parties should make their own investigation.

Notes:
All Elevations are based on NAVD 88.

PILE DATA TABLE

Support Location	Pile Type	Cut-Off Elevation (ft)	Nominal Resistance (kips)		Design Tip Elevation (ft)	Specified Tip Elevation (ft)	Nominal Driving Resistance Required (kips)
			Compression	Tension			
Abut 1	CISS NPS 24 X 0.625	566.66	430	50	497 (a) 480 (b) 510 (c) 491 (d)	480	650
Abut 2	CISS NPS 24 X 0.625	566.25	430	50	497 (a) 480 (b) 510 (c) 491 (d)	480	650

Notes :

Design tip elevations are controlled by:
(a) Compression, (b) Compression with liquefaction (c) Tension, (d) Lateral Load

	BY	CHECKED
DESIGN	Eduardo Ortega Jr.	Greg Thornton
DETAILS	Jie Tang	Greg Thornton
QUANTITIES	Tracy Sanderson	Bob Huddleston

STATE OF CALIFORNIA
DEPARTMENT OF TRANSPORTATION

DIVISION OF ENGINEERING SERVICES
STRUCTURE DESIGN
DESIGN BRANCH 7

BRIDGE NO. 42-0441
POST MILE 11.00

JACALITOS CREEK BRIDGE (REPLACE)
INDEX TO PLANS

STRUCTURES DESIGN DETAIL SHEET (ENGLISH) (REV. 09-01-10)

ORIGINAL SCALE IN INCHES FOR REDUCED PLANS 0 1 2 3

UNIT: 3592
PROJECT NUMBER & PHASE: 0600020388 4 CONTRACT NO.: 06-432604

DISREGARD PRINTS BEARING EARLIER REVISION DATES

REVISION DATES 09/29/13 01/10/14 12/19/13

SHEET 2 OF 15

FILE => 42-0441-b-itp.dgn

USERNAME => s136649 DATE PLOTTED => 21-APR-2014 TIME PLOTTED => 09:05

DIST	COUNTY	ROUTE	POST MILES TOTAL PROJECT	SHEET No.	TOTAL SHEETS
06	Fre	33	10.9/11.1	92	104

REGISTERED CIVIL ENGINEER — DATE 1-21-14

4-28-14
PLANS APPROVAL DATE

REGISTERED PROFESSIONAL ENGINEER — Eduardo Jose Ortega Jr. — No. 77226 — Exp. 6/30/2015 — CIVIL — STATE OF CALIFORNIA

The State of California or its officers or agents shall not be responsible for the accuracy or completeness of electronic copies of this plan sheet.

QUANTITIES

BRIDGE REMOVAL	LUMP	SUM
STRUCTURE EXCAVATION (BRIDGE)	870	CY
STRUCTURE BACKFILL (BRIDGE)	423	CY
FURNISH 24" CAST-IN-STEEL SHELL CONCRETE PILING	2,767	LF
DRIVE 24" CAST-IN-STEEL SHELL CONCRETE PILE	32	EA
PRESTRESSING CAST-IN-PLACE CONCRETE	LUMP	SUM
STRUCTURAL CONCRETE, BRIDGE FOOTING	120	CY
STRUCTURAL CONCRETE, BRIDGE	626	CY
JOINT SEAL (MR 2")	82	LF
BAR REINFORCING STEEL (BRIDGE)	291,596	LB
HEADED BAR REINFORCEMENT	192	EA
CONCRETE BARRIER (TYPE 732)	394	LF

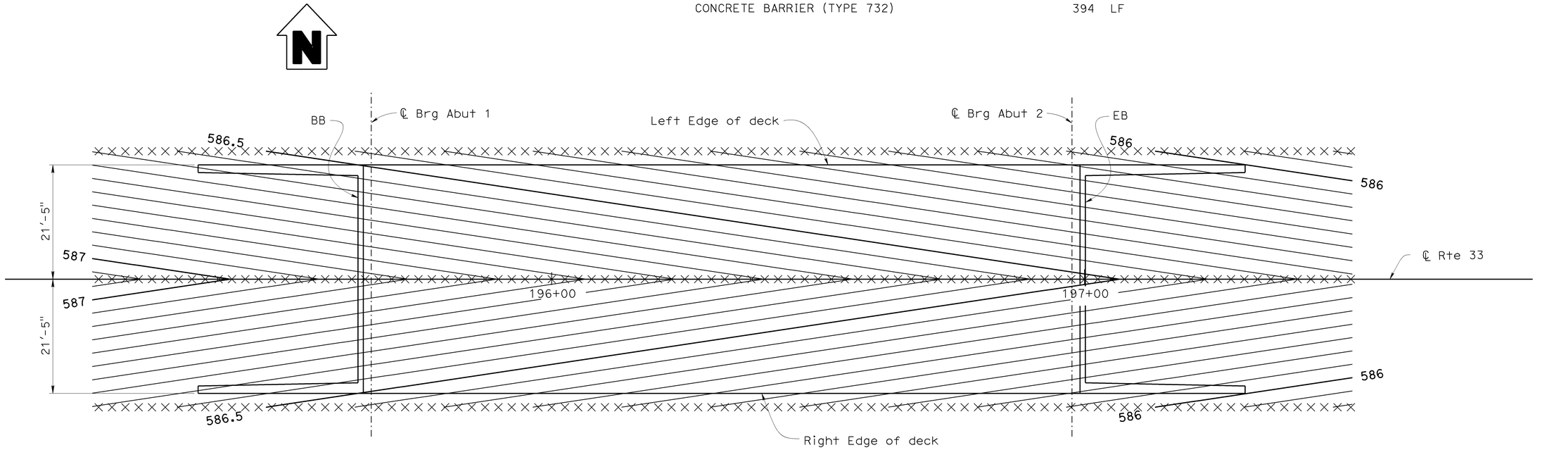

PLAN
1"=10'

Note:

x - Indicates 2'-6" intervals along station line
Contours do not include camber
Contour interval = 0.05'

DESIGN	BY Eduardo Ortega Jr.	CHECKED Greg Thornton	
DETAILS	BY Jie Tang	CHECKED Greg Thornton	
QUANTITIES	BY Tracy Sanderson	CHECKED Bob Huddleston	

STATE OF CALIFORNIA
DEPARTMENT OF TRANSPORTATION

DIVISION OF ENGINEERING SERVICES
STRUCTURE DESIGN
DESIGN BRANCH 7

BRIDGE NO. 42-0441
POST MILE 11.00

JACALITOS CREEK BRIDGE (REPLACE)
DECK CONTOURS

STRUCTURES DESIGN DETAIL SHEET (ENGLISH) (REV. 09-01-10)

ORIGINAL SCALE IN INCHES FOR REDUCED PLANS 0 1 2 3

UNIT: 3592
PROJECT NUMBER & PHASE: 0600020388 4 CONTRACT NO.: 06-432604

DISREGARD PRINTS BEARING EARLIER REVISION DATES

REVISION DATES: 9-13-13 9-19-13 11/26/13

SHEET 3 OF 15

FILE => 42-0441-d-dc_gp-sheet.dgn

USERNAME => s136549 DATE PLOTTED => 21-APR-2014 TIME PLOTTED => 09:05

DIST	COUNTY	ROUTE	POST MILES TOTAL PROJECT	SHEET No.	TOTAL SHEETS
06	Fre	33	10.9/11.1	93	104

REGISTERED CIVIL ENGINEER — DATE 1-21-14

4-28-14
PLANS APPROVAL DATE

REGISTERED PROFESSIONAL ENGINEER — Eduardo Jose Ortega Jr. — No. 77226 — Exp. 6/30/2015 — CIVIL — STATE OF CALIFORNIA

The State of California or its officers or agents shall not be responsible for the accuracy or completeness of electronic copies of this plan sheet.

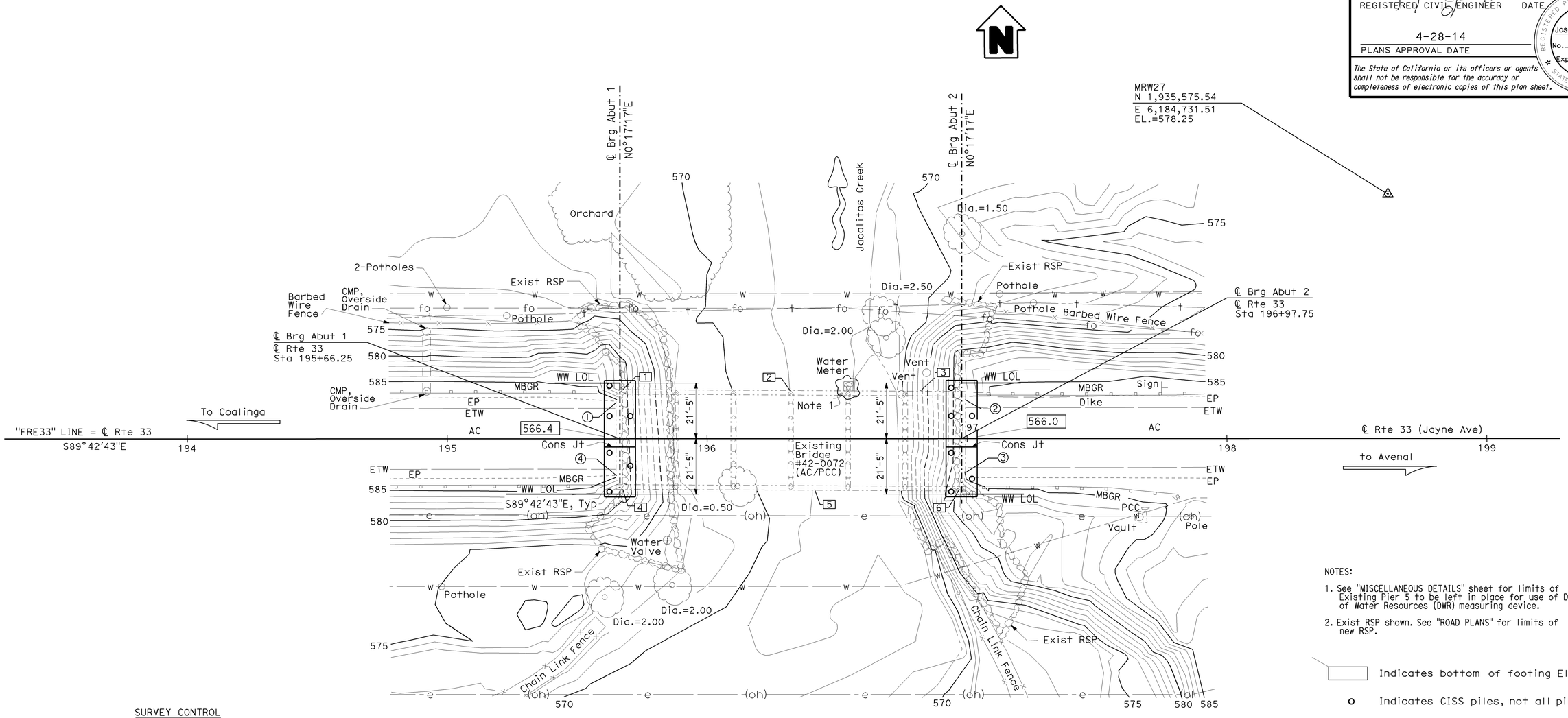

NOTES:

1. See "MISCELLANEOUS DETAILS" sheet for limits of Existing Pier 5 to be left in place for use of Department of Water Resources (DWR) measuring device.
2. Exist RSP shown. See "ROAD PLANS" for limits of new RSP.

Indicates bottom of footing Elev

Indicates CISS piles, not all piles shown

MRW28
N 1,935,348.20
E 6,184,674.56
EL.=585.95

SURVEY CONTROL

MRW27

Fnd 1" I.P. w/ Red CT Plug and Tack
94.13 Lt "FRE33" Line, Rte 33
Sta 198+61.94
N 1,935,575.54
E 6,184,731.51
Elev=578.25

MRW28

Fnd 1" I.P. w/ Red CT Plug and Tack
133.49 Rt "FRE33" Line, Rte 33
Sta 198+06.13
N 1,935,348.20
E 6,184,674.56
Elve=585.95

Bridge Location #42-0072 (PN Points)

1. 13.96 Lt "FRE33" Line, Sta 195+64.97, Elev=585.67± (AC)
2. 14.97 Lt "FRE33" Line, Sta 196+99.28, Elev=585.87± (AC)
3. 13.01 Rt "FRE33" Line, Sta 196+99.60, Elev=585.82± (AC)
4. 14.20 Rt "FRE33" Line, Sta 195+65.18, Elev=585.61± (AC)

Soffit Elev

1	583.99	2	584.22
3	584.20	4	583.97
5	584.08	6	587.55

PRELIMINARY INVESTIGATION SECTION

SCALE 1"=20'	VERT.DATUM NAVD 88	PHOTOGRAMMETRY AS OF: X		
	HORZ.DATUM NAD83	SURVEYED	BY District	CHECKED BY John Borden 05/2011
ALIGNMENT TIES Dist. Traverse Sheet		DRAFTED	BY Sharon Zheng 05/2011	CHECKED BY Jim Pallares 05/2011

DESIGN	BY Eduardo Ortega Jr.	CHECKED Greg Thornton
DETAILS	BY Jie Tang/R. Kirkland	CHECKED Greg Thornton
QUANTITIES	BY Tracy Sanderson	CHECKED Bob Huddleston

STATE OF CALIFORNIA
DEPARTMENT OF TRANSPORTATION

DIVISION OF ENGINEERING SERVICES
STRUCTURE DESIGN
DESIGN BRANCH 07

BRIDGE NO. 42-0441
POST MILE 11.00

JACALITOS CREEK BRIDGE (REPLACE)
FOUNDATION PLAN

STRUCTURES FOUNDATION PLAN SHEET (ENGLISH) (REV. 09-01-10)

ORIGINAL SCALE IN INCHES FOR REDUCED PLANS 0 1 2 3

UNIT: 3646
PROJECT NUMBER & PHASE: 0600020388 4
CONTRACT NO.: 06-432604

DISREGARD PRINTS BEARING EARLIER REVISION DATES

REVISION DATES 5/02/2011 6/16/2011 2/13/2014 3/4/2014

SHEET 4 OF 15

FILE => 42-0441-e-fp101.dgn

USERNAME => s136549 DATE PLOTTED => 22-APR-2014

DIST	COUNTY	ROUTE	POST MILES TOTAL PROJECT	SHEET No.	TOTAL SHEETS
06	Fre	33	10.9/11.1	94	104

REGISTERED CIVIL ENGINEER — DATE 1-21-14

4-28-14
PLANS APPROVAL DATE

REGISTERED PROFESSIONAL ENGINEER — Eduardo Jose Ortega Jr. No. 77226 Exp. 6/30/2015 CIVIL — STATE OF CALIFORNIA

The State of California or its officers or agents shall not be responsible for the accuracy or completeness of electronic copies of this plan sheet.

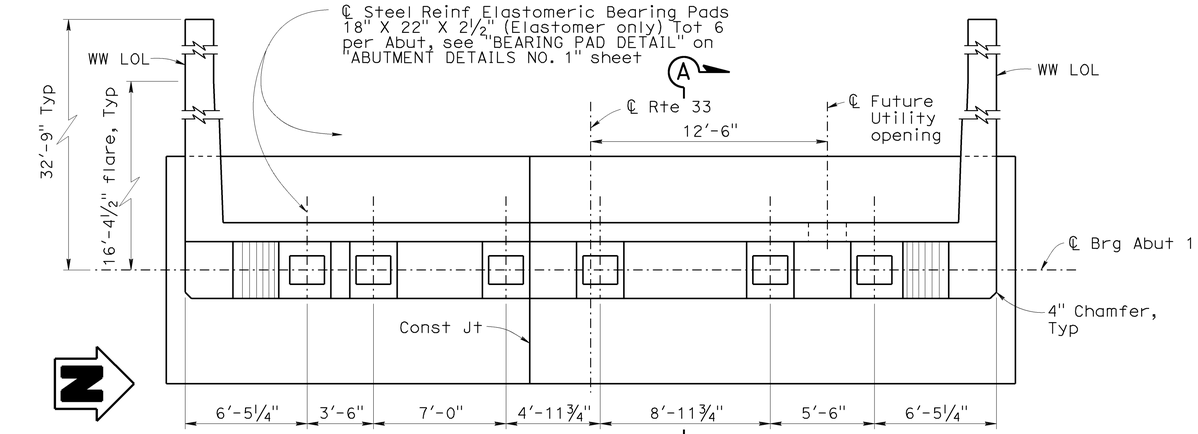

PLAN
¼" = 1'-0"

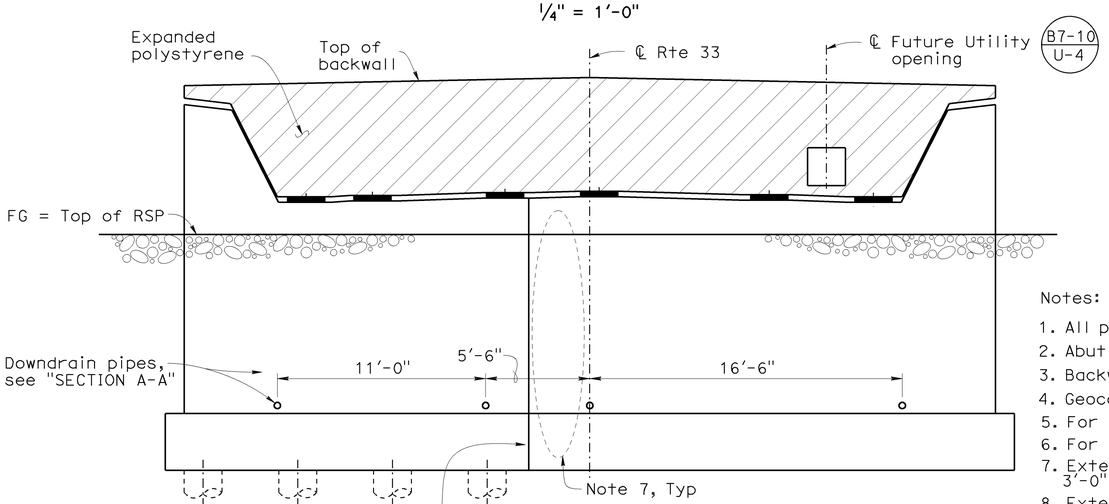

ELEVATION
¼" = 1'-0"

Notes:

1. All piles not shown on "ELEVATION".
2. Abut 1 shown, Abut 2 similar.
3. Backwall to be placed after prestressing is completed it.
4. Geocomposite drain, see "ABUTMENT DETAILS NO. 2" sheet.
5. For "Detail Z" see "ABUTMENT DETAILS NO. 1" sheet.
6. For pile details, see "ABUTMENT DETAILS NO. 4" sheet.
7. Extend stage 1 Const transverse Reinf 3'-0" into stage 2 Const.
8. Extend downdrain pipes 6" beyond RSP fabric.

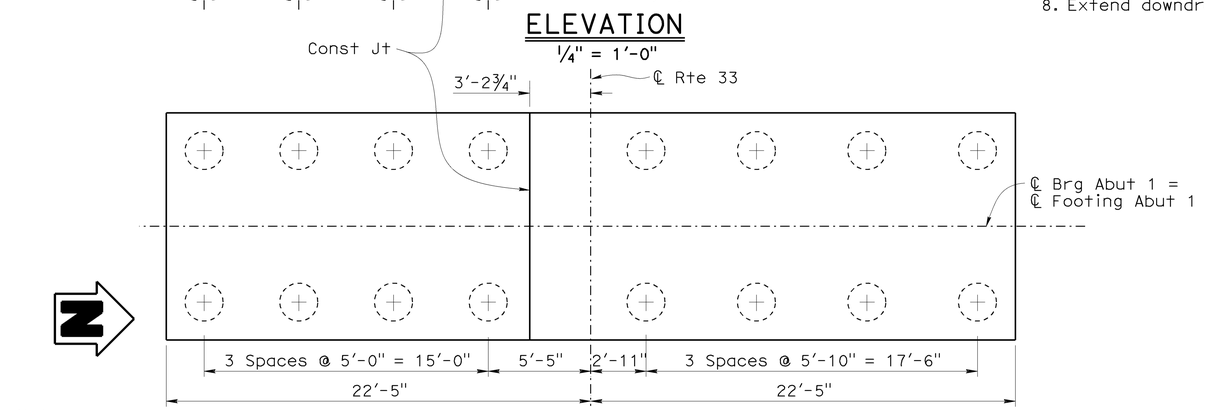

FOOTING PLAN
¼" = 1'-0"

Note:

⊕ - Indicates 24" Diam CISS pile.

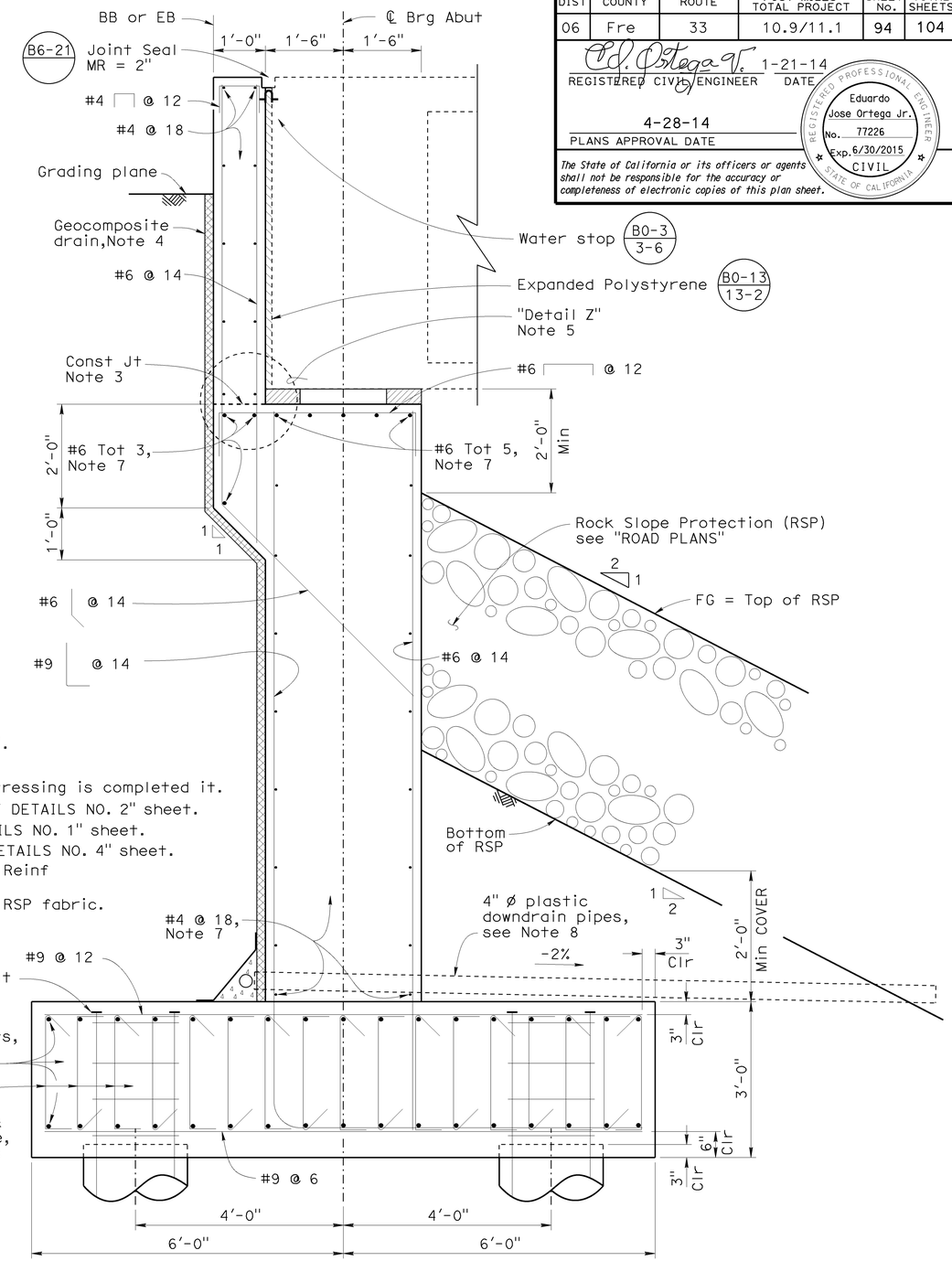

SECTION A-A
¾" = 1'-0"

DESIGN	BY Eduardo Ortega Jr.	CHECKED Greg Thornton	
DETAILS	BY Jie Tang	CHECKED Greg Thornton	
QUANTITIES	BY Tracy Sanderson	CHECKED Bob Huddleston	

STATE OF CALIFORNIA
DEPARTMENT OF TRANSPORTATION

DIVISION OF ENGINEERING SERVICES
STRUCTURE DESIGN
DESIGN BRANCH 7

BRIDGE NO. 42-0441
POST MILE 11.00

JACALITOS CREEK BRIDGE (REPLACE)
ABUTMENT LAYOUT

STRUCTURES DESIGN DETAIL SHEET (ENGLISH) (REV. 09-01-10)

ORIGINAL SCALE IN INCHES FOR REDUCED PLANS 0 1 2 3

UNIT: 3592
PROJECT NUMBER & PHASE: 0600020388 4
CONTRACT NO.: 06-432604

DISREGARD PRINTS BEARING EARLIER REVISION DATES

REVISION DATES 09/26/13 12/16/13 12/11/13

SHEET 5 OF 15

FILE => 42-0441-f-abutlyt_detail-sheet.dgn

USERNAME => s136549 DATE PLOTTED => 21-APR-2014 TIME PLOTTED => 09:05

DIST	COUNTY	ROUTE	POST MILES TOTAL PROJECT	SHEET No.	TOTAL SHEETS
06	Fre	33	10.9/11.1	95	104

REGISTERED CIVIL ENGINEER 1-21-14 DATE

4-28-14
PLANS APPROVAL DATE

REGISTERED PROFESSIONAL ENGINEER Eduardo Jose Ortega Jr. No. 77226 Exp. 6/30/2015 CIVIL STATE OF CALIFORNIA

The State of California or its officers or agents shall not be responsible for the accuracy or completeness of electronic copies of this plan sheet.

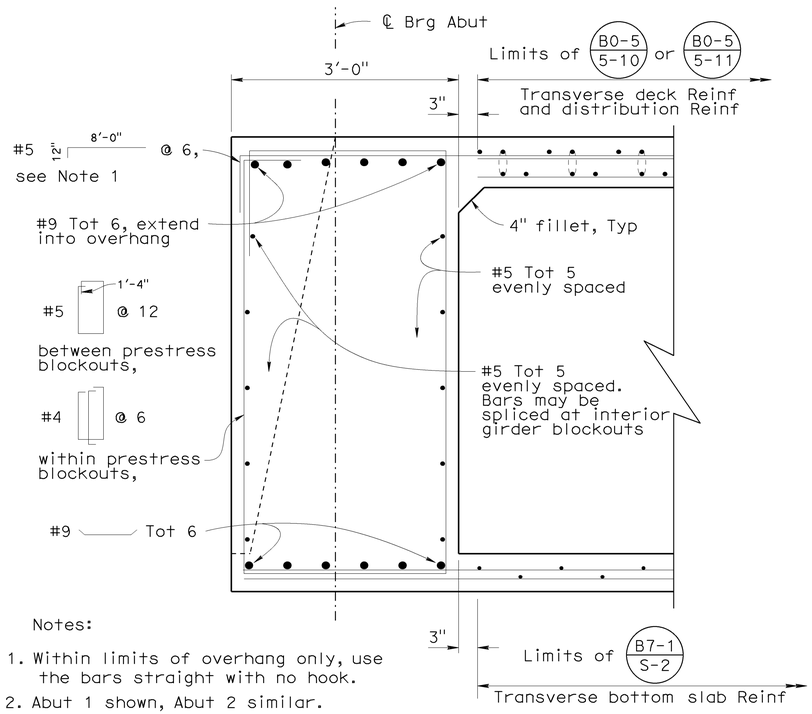

Notes:

1. Within limits of overhang only, use the bars straight with no hook.
2. Abut 1 shown, Abut 2 similar.

END DIAPHRAGM DETAIL RSP B8-5

1" = 1'-0"

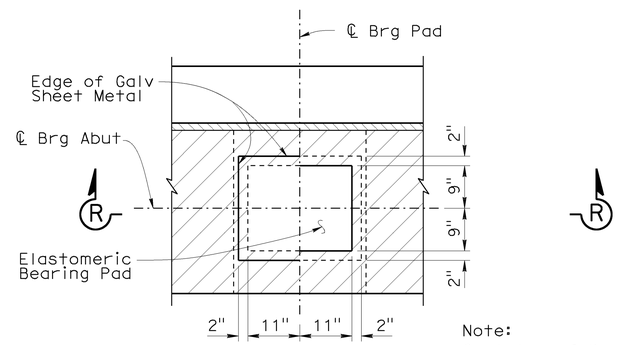

Note:
Coat top of Bearing Pad with silicone grease prior to placing sheet metal.

PLAN

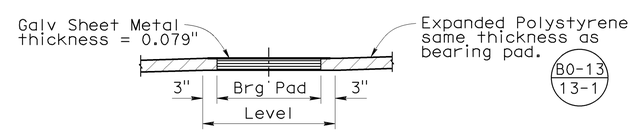

SECTION R-R

BEARING PAD DETAIL

¾" = 1'-0"

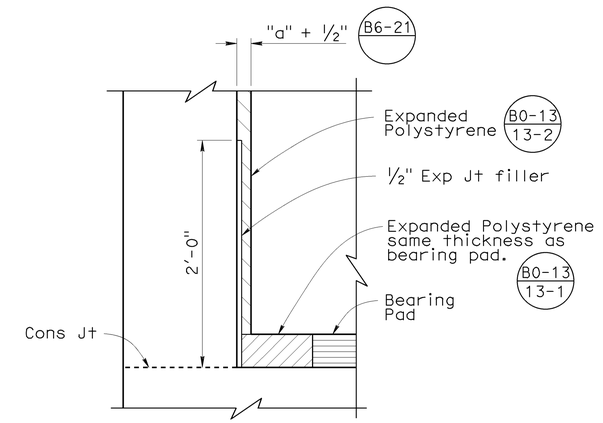

Note:
For location of "DETAIL Z", see "ABUTMENT LAYOUT" sheet

DETAIL Z

1½" = 1'-0"

	BY	CHECKED
DESIGN	Eduardo Ortega Jr.	Greg Thornton
DETAILS	Jie Tang	Greg Thornton
QUANTITIES	Tracy Sanderson	Bob Huddleston

STATE OF CALIFORNIA
DEPARTMENT OF TRANSPORTATION

DIVISION OF ENGINEERING SERVICES
STRUCTURE DESIGN
DESIGN BRANCH 7

BRIDGE NO. 42-0441
POST MILE 11.00

JACALITOS CREEK BRIDGE (REPLACE)
ABUTMENT DETAILS NO. 1

STRUCTURES DESIGN DETAIL SHEET (ENGLISH) (REV. 09-01-10)

ORIGINAL SCALE IN INCHES FOR REDUCED PLANS 0 1 2 3

UNIT: 3592
PROJECT NUMBER & PHASE: 0600020388 4 CONTRACT NO.: 06-432604

DISREGARD PRINTS BEARING EARLIER REVISION DATES

REVISION DATES 09/23/13 09/25/13 12/04/13 12/10/13

SHEET 6 OF 15

FILE => 42-0441-g-abutdet01_detail-sheet.dgn

USERNAME => s136549 DATE PLOTTED => 21-APR-2014 TIME PLOTTED => 09:05

DIST	COUNTY	ROUTE	POST MILES TOTAL PROJECT	SHEET No.	TOTAL SHEETS
06	Fre	33	10.9/11.1	96	104

REGISTERED CIVIL ENGINEER 1-21-14 DATE

4-28-14
PLANS APPROVAL DATE

REGISTERED PROFESSIONAL ENGINEER Eduardo Jose Ortega Jr. No. 77226 Exp. 6/30/2015 CIVIL STATE OF CALIFORNIA

The State of California or its officers or agents shall not be responsible for the accuracy or completeness of electronic copies of this plan sheet.

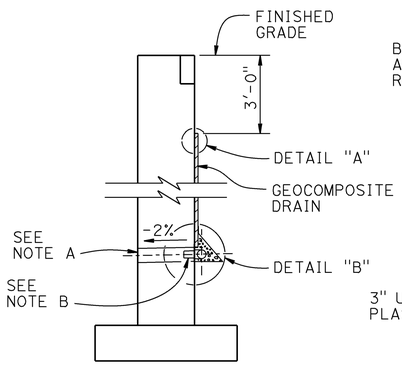

WALL SECTION

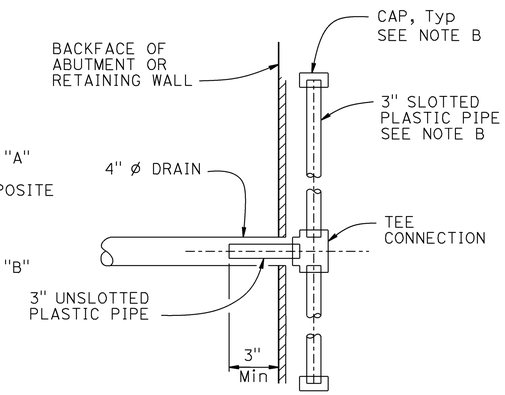

SECTION A-A

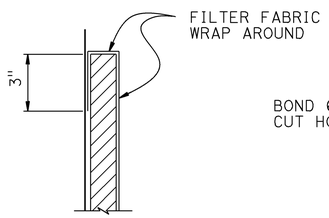

DETAIL "A"

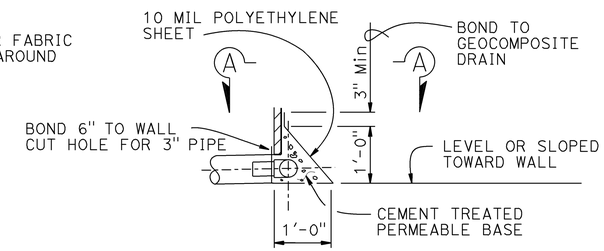

DETAIL "B"

WEEP HOLE AND GEOCOMPOSITE DRAIN

Notes:

A. 4" ø drains at intermediate sag points and at 25' max center to center (9' c-c for Type 3 and 9'-3" c-c for Type 4 retaining walls).
For walls adjacent to sidewalks or curbs, provide 4" cast iron or asbestos cement pipe under the sidewalk to discharge through curb face.
Exposed wall drains shall be located 3"± above finished grade.

B. Geocomposite drain, cement treated permeable base, and 3"ø slotted plastic pipe continuous behind retaining wall or abutment. Cap ends of pipe. Provide "Tee" connection at each 4" ø drain.

C. Connect the low end of plastic pipe to the main outlet pipe as apprlicable.

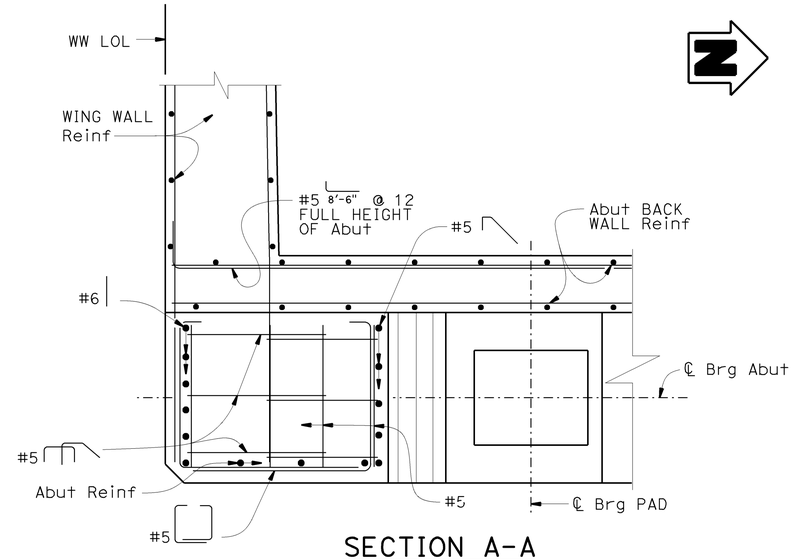

SECTION A-A
¾" = 1'-0"

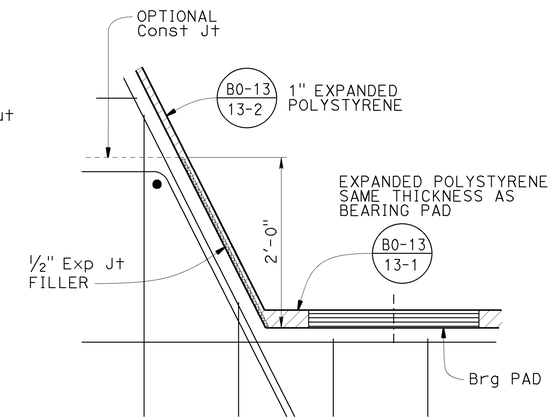

DETAIL Y
NO SCALE

Note: bar not shown.

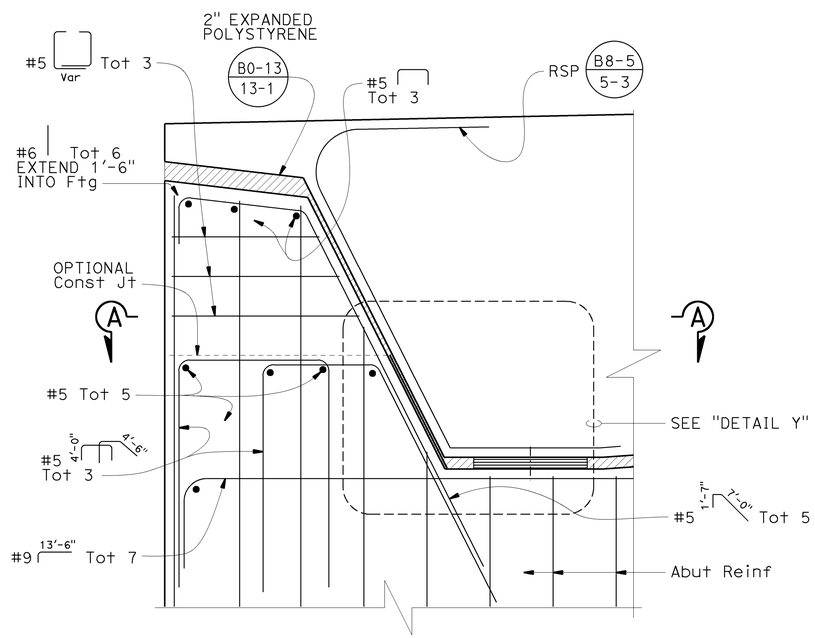

ELEVATION
¾" = 1'-0"

ABUTMENT SHEAR KEY DETAILS

NOTE:

1. Abutment 1 Right Shear Key shown, others similar.

DESIGN	BY Eduardo Ortega Jr.	CHECKED Greg Thornton	
DETAILS	BY Bob Huddleston	CHECKED Greg Thornton	
QUANTITIES	BY Tracy Sanderson	CHECKED Bob Huddleston	

STATE OF CALIFORNIA
DEPARTMENT OF TRANSPORTATION

DIVISION OF ENGINEERING SERVICES
STRUCTURE DESIGN
DESIGN BRANCH 7

BRIDGE NO. 42-0441
POST MILE 11.00

JACALITOS CREEK BRIDGE (REPLACE)
ABUTMENT DETAILS NO. 2

STRUCTURES DESIGN DETAIL SHEET (ENGLISH) (REV. 09-01-10)

ORIGINAL SCALE IN INCHES FOR REDUCED PLANS 0 1 2 3

UNIT: 3592
PROJECT NUMBER & PHASE: 0600020388 4 CONTRACT NO.: 06-432604

DISREGARD PRINTS BEARING EARLIER REVISION DATES

REVISION DATES 09/23/13 09/25/13 12/05/13

SHEET 7 OF 15

FILE => 42-0441-g-abutdet02_detail-sheet.dgn

USERNAME => s136549 DATE PLOTTED => 21-APR-2014 TIME PLOTTED => 09:05

DIST	COUNTY	ROUTE	POST MILES TOTAL PROJECT	SHEET No.	TOTAL SHEETS
06	Fre	33	10.9/11.1	97	104

REGISTERED CIVIL ENGINEER 1-21-14 DATE

4-28-14
PLANS APPROVAL DATE

REGISTERED PROFESSIONAL ENGINEER Eduardo Jose Ortega Jr. No. 77226 Exp. 6/30/2015 CIVIL STATE OF CALIFORNIA

The State of California or its officers or agents shall not be responsible for the accuracy or completeness of electronic copies of this plan sheet.

Note:
Conc Barrier
not shown

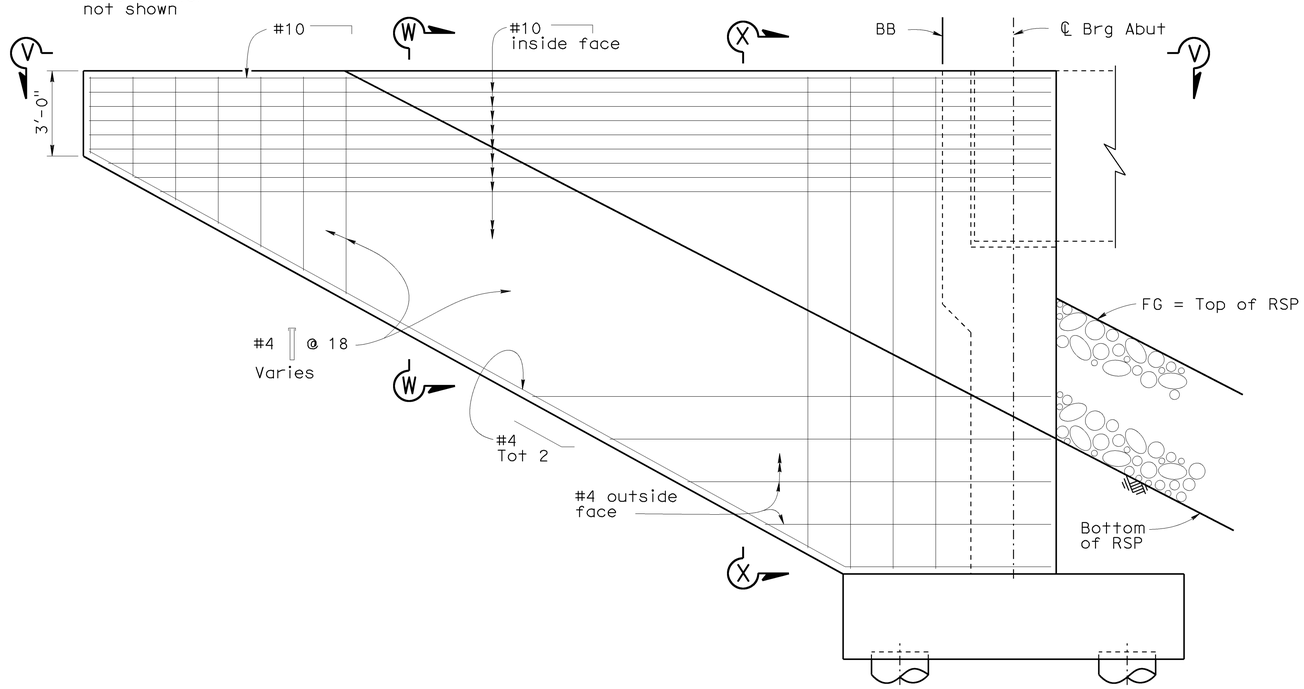

WINGWALL ELEVATION
3/8" = 1'-0"

Note:
Abut 1 right wingwall shown, others similar.

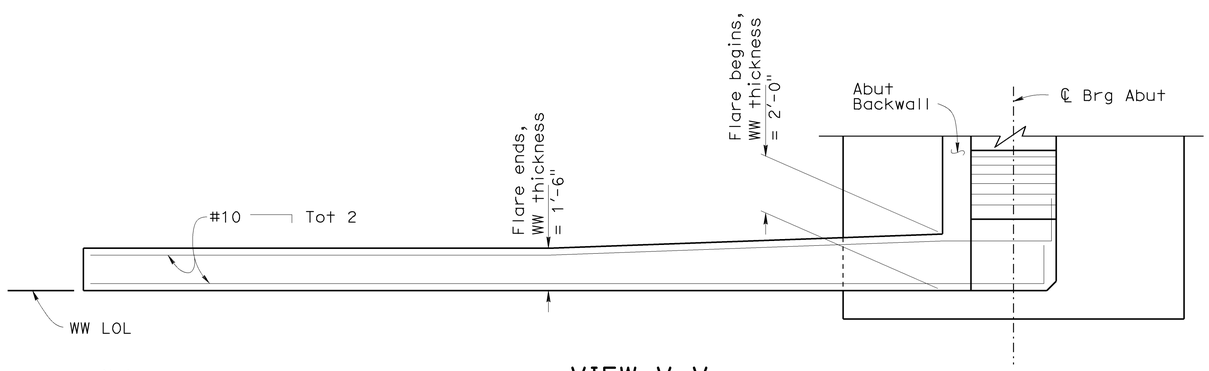

Note:
Not all Reinf shown for clarity.

VIEW V-V
3/8" = 1'-0"

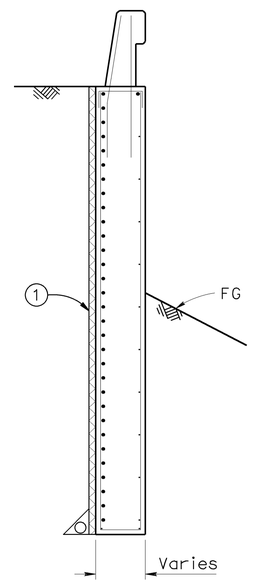

SECTION X-X
3/8" = 1'-0"

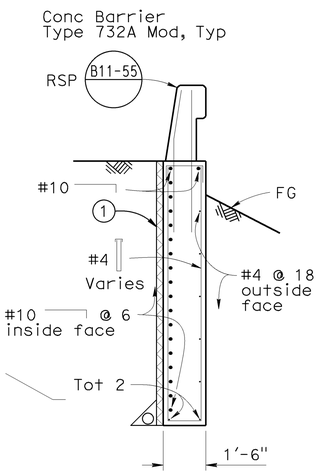

SECTION W-W
3/8" = 1'-0"

Note:
For Reinf information not shown, see "SECTION W-W"

(1) Geocomposite drain, see "ABUTMENT DETAILS NO. 2" sheet

DESIGN	BY Eduardo Ortega Jr.	CHECKED Greg Thornton	
DETAILS	BY Jie Tang	CHECKED Greg Thornton	
QUANTITIES	BY Tracy Sanderson	CHECKED Bob Huddleston	

STATE OF CALIFORNIA
DEPARTMENT OF TRANSPORTATION

DIVISION OF ENGINEERING SERVICES
STRUCTURE DESIGN
DESIGN BRANCH 7

BRIDGE NO. 42-0441
POST MILE 11.00

JACALITOS CREEK BRIDGE (REPLACE)
ABUTMENT DETAILS NO. 3

STRUCTURES DESIGN DETAIL SHEET (ENGLISH) (REV. 09-01-10)

ORIGINAL SCALE IN INCHES FOR REDUCED PLANS 0 1 2 3

UNIT: 3592
PROJECT NUMBER & PHASE: 0600020388 4 CONTRACT NO.: 06-432604

DISREGARD PRINTS BEARING EARLIER REVISION DATES

REVISION DATES 09/26/13 09/26/13 12/11/13

SHEET 8 OF 15

FILE => 42-0441-g-abutdet03_detail-sheet.dgn

USERNAME => s136549 DATE PLOTTED => 21-APR-2014 TIME PLOTTED => 09:05

DIST	COUNTY	ROUTE	POST MILES TOTAL PROJECT	SHEET No.	TOTAL SHEETS
06	Fre	33	10.9/11.1	98	104

REGISTERED CIVIL ENGINEER 1-21-14 DATE

4-28-14
PLANS APPROVAL DATE

REGISTERED PROFESSIONAL ENGINEER Eduardo Jose Ortega Jr. No. 77226 Exp. 6/30/2015 CIVIL STATE OF CALIFORNIA

The State of California or its officers or agents shall not be responsible for the accuracy or completeness of electronic copies of this plan sheet.

Note:

1. All pile hoops are ultimate butt spliced continuous.

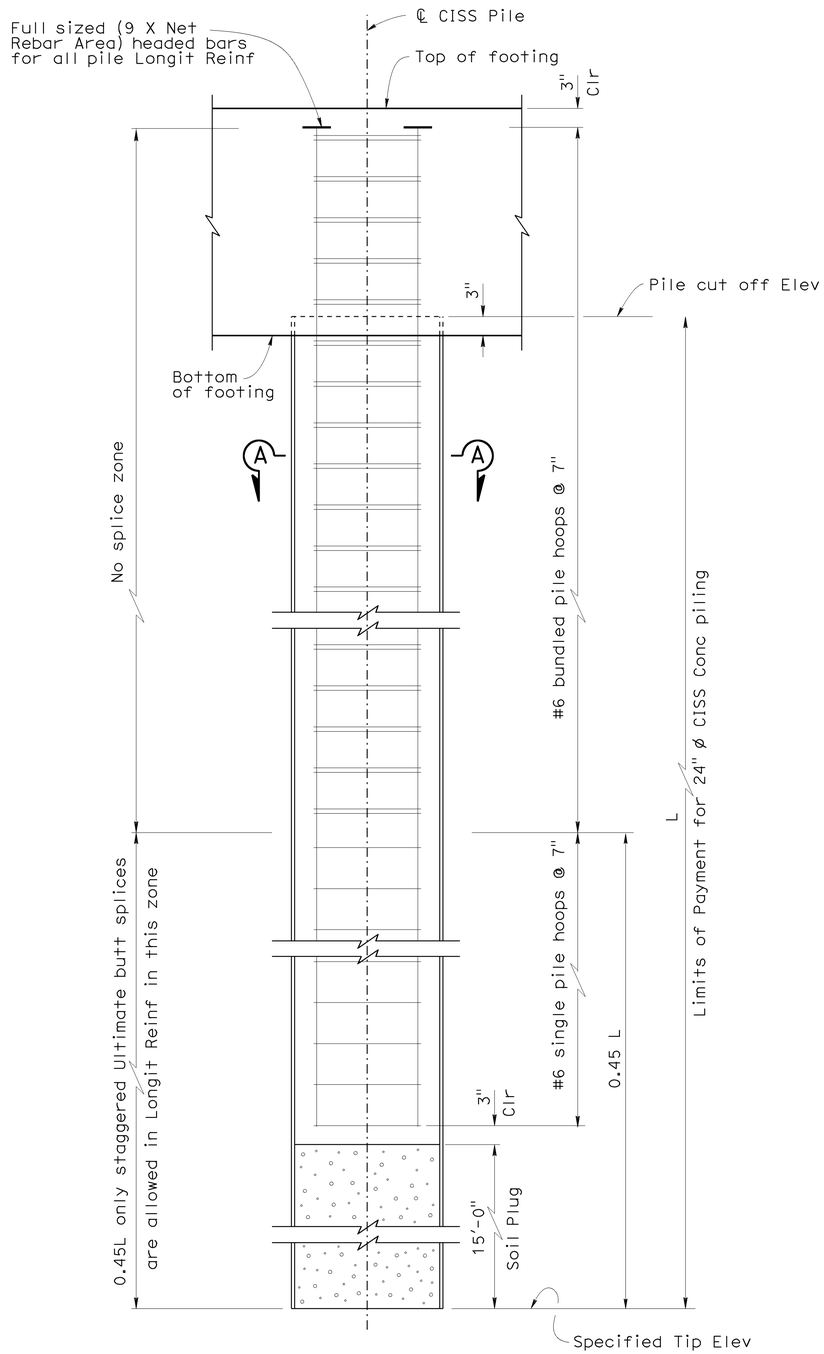

CISS ABUTMENT PILE ELEVATION

1" = 1'-0"

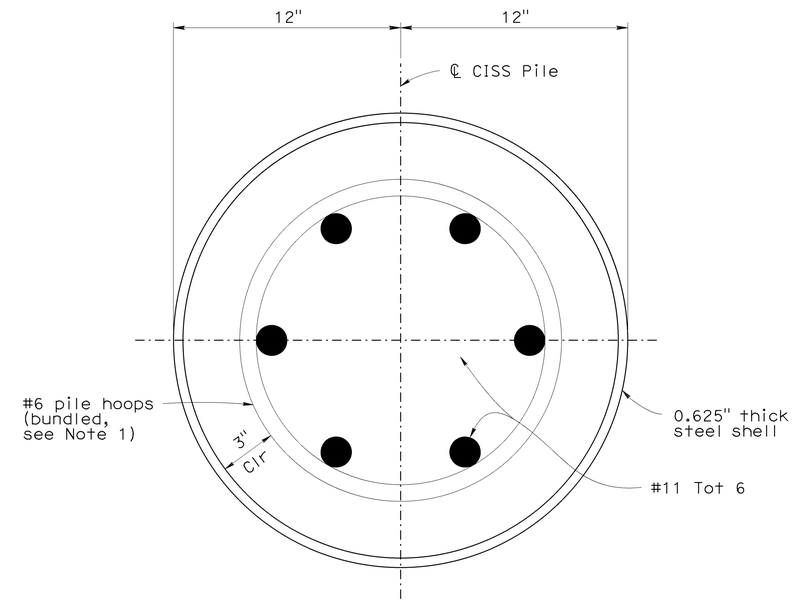

SECTION A-A

3" = 1'-0"

DESIGN	BY Eduardo Ortega Jr.	CHECKED Greg Thornton	
DETAILS	BY Jie Tang	CHECKED Greg Thornton	
QUANTITIES	BY Tracy Sanderson	CHECKED Bob Huddleston	

STATE OF CALIFORNIA
DEPARTMENT OF TRANSPORTATION

DIVISION OF ENGINEERING SERVICES
STRUCTURE DESIGN
DESIGN BRANCH 7

BRIDGE NO. 42-0441
POST MILE 11.00

JACALITOS CREEK BRIDGE (REPLACE)
ABUTMENT DETAILS NO. 4

STRUCTURES DESIGN DETAIL SHEET (ENGLISH) (REV. 09-01-10)

ORIGINAL SCALE IN INCHES FOR REDUCED PLANS 0 1 2 3

UNIT: 3592
PROJECT NUMBER & PHASE: 0600020388 4 CONTRACT NO.: 06-432604

DISREGARD PRINTS BEARING EARLIER REVISION DATES

REVISION DATES 09/23/13 12/05/13 12/19/13 12/12/13

SHEET 9 OF 15

FILE => 42-0441-g-abutdet04_detail-sheet.dgn

USERNAME => s136549 DATE PLOTTED => 21-APR-2014 TIME PLOTTED => 09:05

DIST	COUNTY	ROUTE	POST MILES TOTAL PROJECT	SHEET No.	TOTAL SHEETS
06	Fre	33	10.9/11.1	99	104

REGISTERED CIVIL ENGINEER 1-21-14 DATE

4-28-14
PLANS APPROVAL DATE

REGISTERED PROFESSIONAL ENGINEER Eduardo Jose Ortega Jr. No. 77226 Exp. 6/30/2015 CIVIL STATE OF CALIFORNIA

The State of California or its officers or agents shall not be responsible for the accuracy or completeness of electronic copies of this plan sheet.

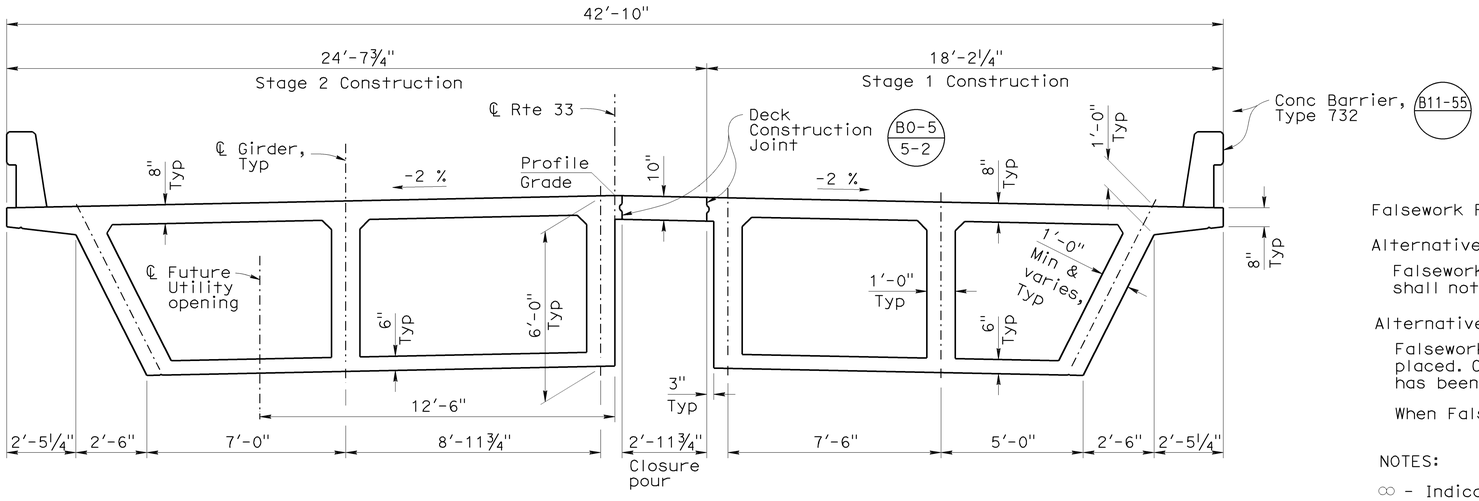

TYPICAL SECTION

⅜" = 1'-0"

Falsework Release

Alternative 1:

Falsework shall be released as soon as permitted by the specifications. Closure pour shall not be placed sooner than 60 days after the falsework has been released.

Alternative 2:

Falsework shall not be released less than 28 days after the last concrete has been placed. Closure pour shall not be placed sooner than 14 days after the falsework has been released.

When Falsework Release Alternative 2 is used, camber values are 0.75 times those shown.

NOTES:

∞ - Indicates bundled additional bottom slab Reinf, see "ADDITIONAL GIRDER REINFORCEMENT" sheet.

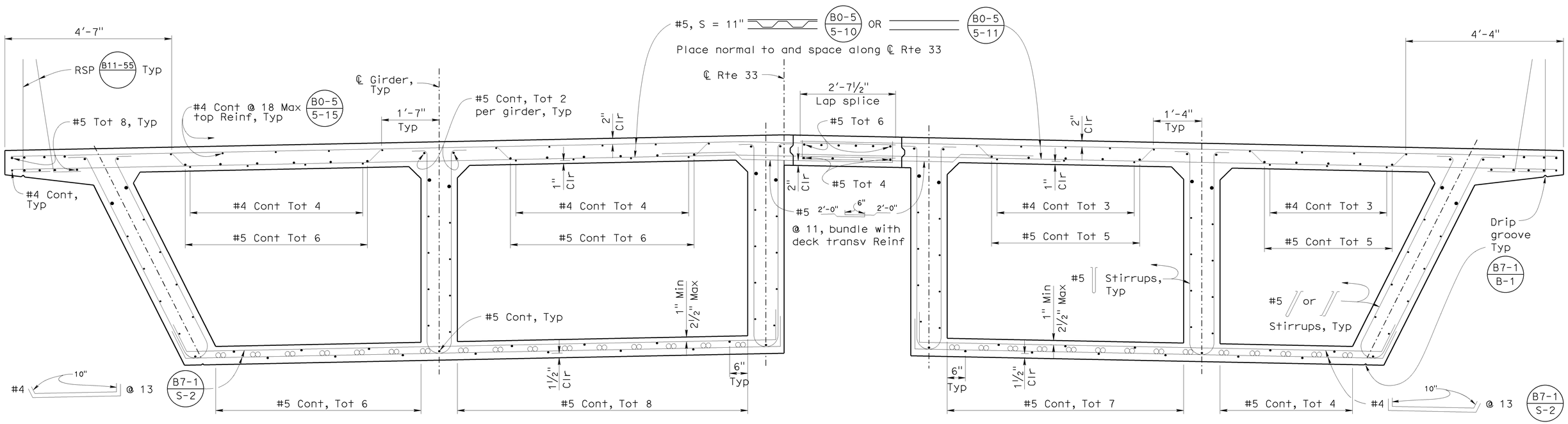

FULL TYPICAL SECTION

B0-5 B7-1 B8-5 (RSP)

¾" = 1'-0"

DESIGN	BY Eduardo Ortega Jr.	CHECKED Greg Thornton	
DETAILS	BY Jie Tang	CHECKED Greg Thornton	
QUANTITIES	BY Tracy Sanderson	CHECKED Bob Huddleston	

STATE OF CALIFORNIA
DEPARTMENT OF TRANSPORTATION

DIVISION OF ENGINEERING SERVICES
STRUCTURE DESIGN
DESIGN BRANCH 7

BRIDGE NO. 42-0441
POST MILE 11.00

JACALITOS CREEK BRIDGE (REPLACE)
TYPICAL SECTION

STRUCTURES DESIGN DETAIL SHEET (ENGLISH) (REV. 09-01-10)

ORIGINAL SCALE IN INCHES FOR REDUCED PLANS 0 1 2 3

UNIT: 3592
PROJECT NUMBER & PHASE: 0600020388 4
CONTRACT NO.: 06-432604

DISREGARD PRINTS BEARING EARLIER REVISION DATES

REVISION DATES 08/28/13 12/11/13 12/09/13

SHEET 10 OF 15

FILE => 42-0441-h-ts_detail-sheet.dgn

USERNAME => s136549 DATE PLOTTED => 21-APR-2014 TIME PLOTTED => 09:05

DIST	COUNTY	ROUTE	POST MILES TOTAL PROJECT	SHEET No.	TOTAL SHEETS
06	Fre	33	10.9/11.1	100	104

REGISTERED CIVIL ENGINEER 1-21-14 DATE

4-28-14
PLANS APPROVAL DATE

REGISTERED PROFESSIONAL ENGINEER Eduardo Jose Ortega Jr. No. 77226 Exp. 6/30/2015 CIVIL STATE OF CALIFORNIA

The State of California or its officers or agents shall not be responsible for the accuracy or completeness of electronic copies of this plan sheet.

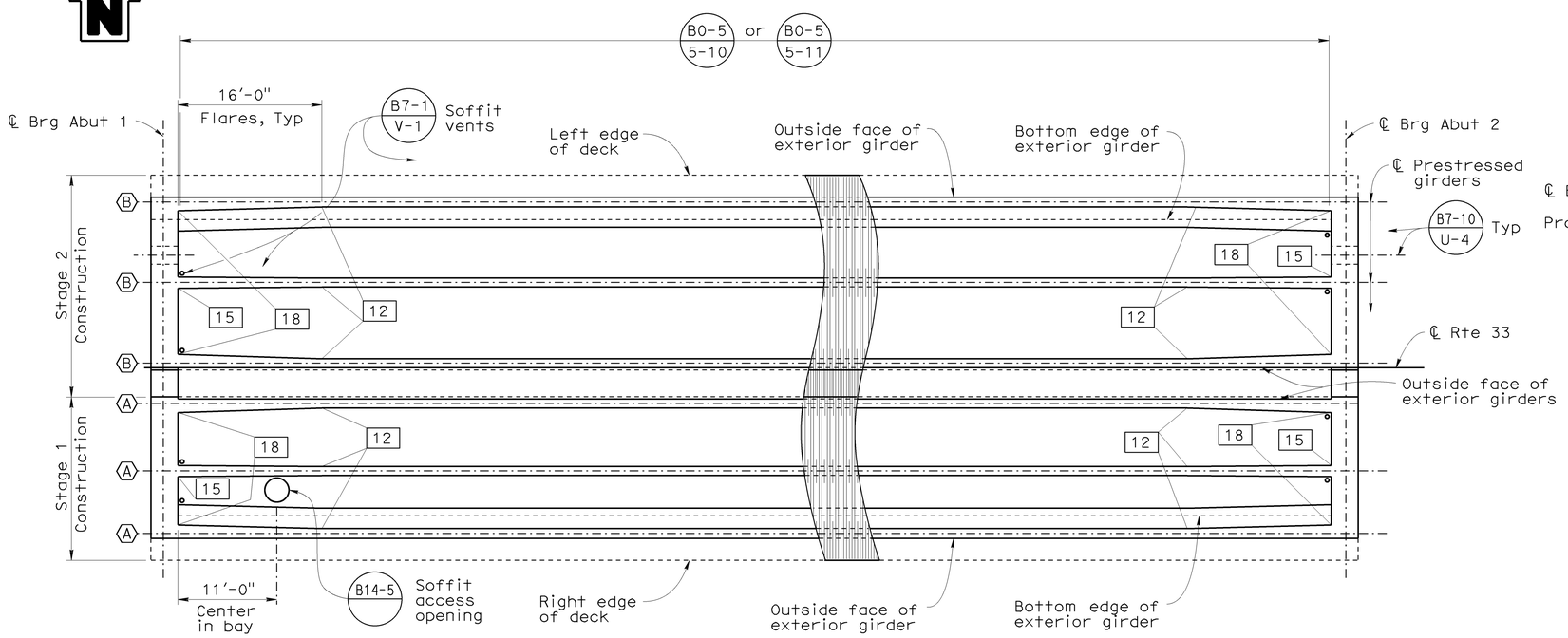

GIRDER LAYOUT

B7-1 B8-5 RSP

1/8" = 1'-0"

Notes:

▭ Indicates girder stem width

ȣ Indicates bundled stirrups

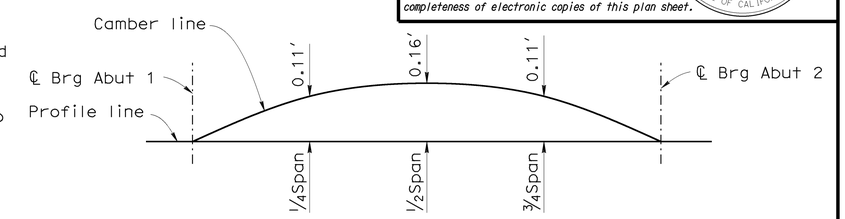

CAMBER DIAGRAM

NO SCALE

Does not include allowance for falsework settlement

STAGE 1 PRESTRESSING NOTES

270 KSI Low Relaxation Strand:

P_{jack} = 6,172 kips

Anchor Set = 3/8 in

Total Number of Girders = 3 (A) Girders

Friction curvature coefficient, μ = 0.200 (1/rad)

Friction wobble coefficient, K = 0.000200/ft

Difference in prestress force between girders shall not exceed the ratio of 3:2.

Concrete: f'_c = 5.5 ksi @ 28 days

f'_{ci} = 3.5 ksi @ time of stressing

Contractor shall submit elongation calculations based on initial stress at

⊠ = 0.9530 times jacking stress.

One end stressing from Abutment 1

STAGE 2 PRESTRESSING NOTES

270 KSI Low Relaxation Strand:

P_{jack} = 6,162 kips

Anchor Set = 3/8 in

Total Number of Girders = 3 (B) Girders

Friction curvature coefficient, μ = 0.200 (1/rad)

Friction wobble coefficient, K = 0.000200/ft

Difference in prestress force between girders shall not exceed the ratio of 3:2.

Concrete: f'_c = 5.5 ksi @ 28 days

f'_{ci} = 3.5 ksi @ time of stressing

Contractor shall submit elongation calculations based on initial stress at

⊠ = 0.9509 times jacking stress.

One end stressing from Abutment 1

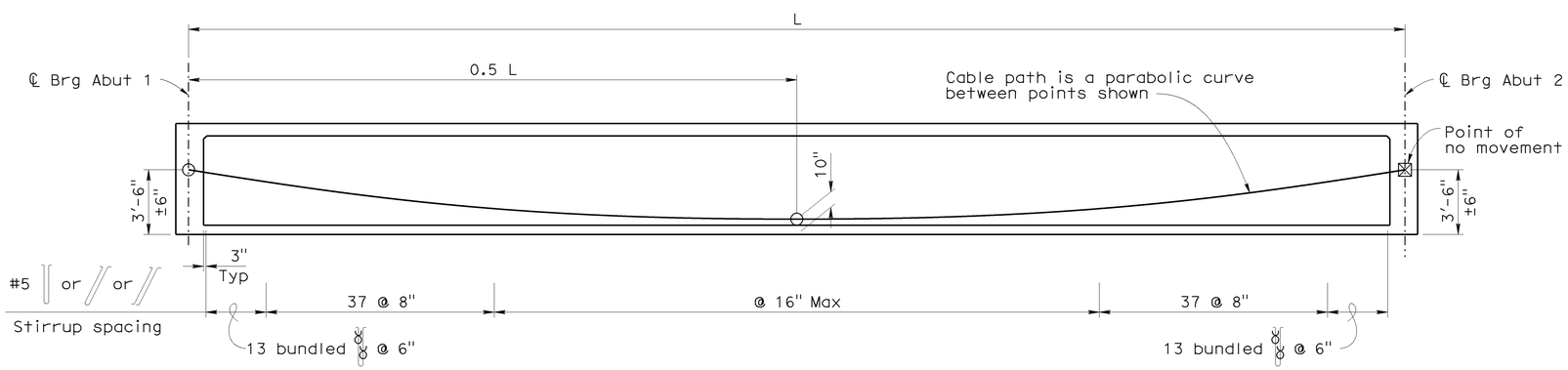

LONGITUDINAL SECTION

B7-1 B8-5

NO SCALE

	BY	CHECKED
DESIGN	Eduardo Ortega Jr.	Greg Thornton
DETAILS	Jie Tang	Greg Thornton
QUANTITIES	Tracy Sanderson	Bob Huddleston

STATE OF CALIFORNIA DEPARTMENT OF TRANSPORTATION

DIVISION OF ENGINEERING SERVICES STRUCTURE DESIGN DESIGN BRANCH 7

BRIDGE NO. 42-0441 POST MILE 11.00

JACALITOS CREEK BRIDGE (REPLACE)

GIRDER LAYOUT

STRUCTURES DESIGN DETAIL SHEET (ENGLISH) (REV. 09-01-10)

ORIGINAL SCALE IN INCHES FOR REDUCED PLANS 0 1 2 3

UNIT: 3592
PROJECT NUMBER & PHASE: 0600020388 4 CONTRACT NO.: 06-432604

DISREGARD PRINTS BEARING EARLIER REVISION DATES

REVISION DATES 09/14/13 12/12/13 12/14/13

SHEET 11 OF 15

FILE => 42-0441-i-girderlayout_detail-sheet.dgn

USERNAME => s136549 DATE PLOTTED => 21-APR-2014 TIME PLOTTED => 09:05

DIST	COUNTY	ROUTE	POST MILES TOTAL PROJECT	SHEET No.	TOTAL SHEETS
06	Fre	33	10.9/11.1	101	104

REGISTERED CIVIL ENGINEER 1-21-14 DATE

4-28-14
PLANS APPROVAL DATE

REGISTERED PROFESSIONAL ENGINEER Eduardo Jose Ortega Jr. No. 77226 Exp. 6/30/2015 CIVIL STATE OF CALIFORNIA

The State of California or its officers or agents shall not be responsible for the accuracy or completeness of electronic copies of this plan sheet.

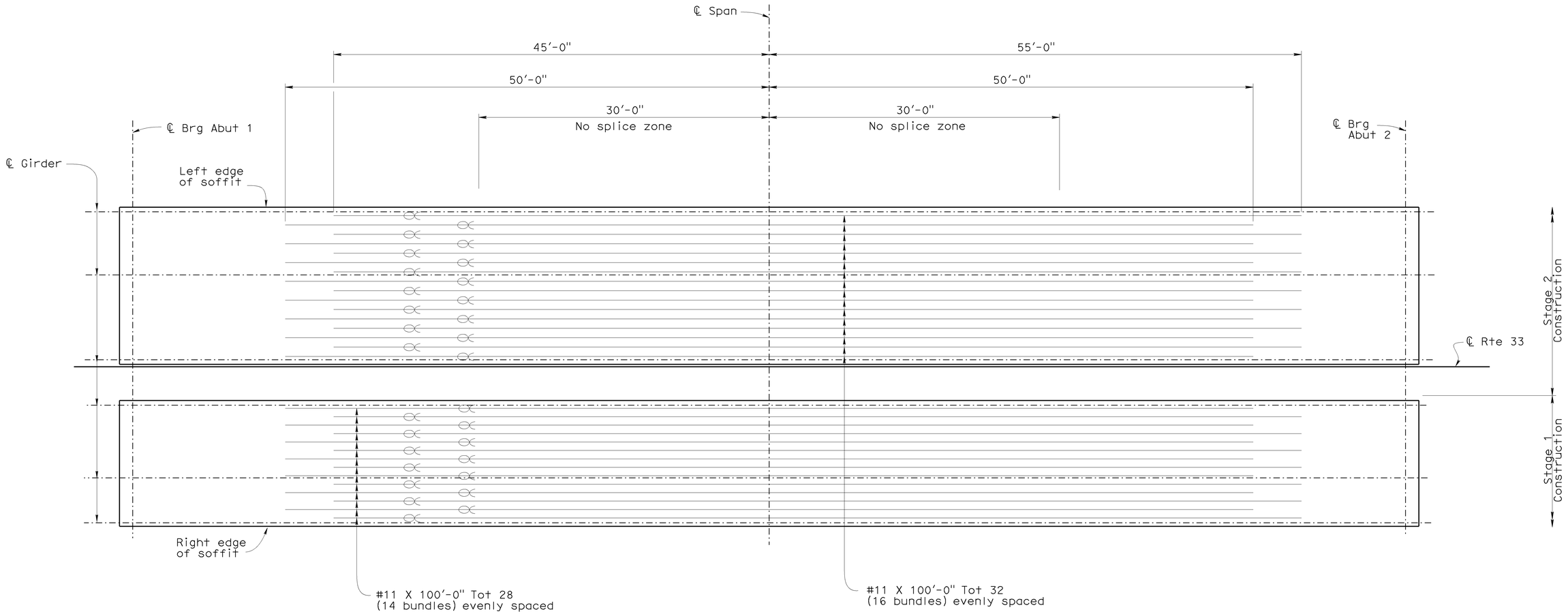

ADDITIONAL BOTTOM SLAB REINFORCEMENT

3/16" = 1'-0"

Notes:

1. Lap splices are not allowed in additional bottom slab reinforcement.

Indicates bundled bars.

DESIGN	BY Eduardo Ortega Jr.	CHECKED Greg Thornton	
DETAILS	BY Jie Tang	CHECKED Greg Thornton	
QUANTITIES	BY Tracy Sanderson	CHECKED Bob Huddleston	

STATE OF CALIFORNIA
DEPARTMENT OF TRANSPORTATION

DIVISION OF ENGINEERING SERVICES
STRUCTURE DESIGN
DESIGN BRANCH 7

BRIDGE NO. 42-0441
POST MILE 11.00

JACALITOS CREEK BRIDGE (REPLACE)
ADDITIONAL GIRDER REINFORCEMENT

STRUCTURES DESIGN DETAIL SHEET (ENGLISH) (REV. 09-01-10)

ORIGINAL SCALE IN INCHES FOR REDUCED PLANS 0 1 2 3

UNIT: 3592
PROJECT NUMBER & PHASE: 0600020388 4 CONTRACT NO.: 06-432604

DISREGARD PRINTS BEARING EARLIER REVISION DATES

REVISION DATES 09/08/13 09/19/13 09/24/13 12/11/13

SHEET 12 OF 15

FILE => 42-0441-j-agreinf_detail-sheet.dgn

USERNAME => s136549 DATE PLOTTED => 21-APR-2014 TIME PLOTTED => 09:05

DIST	COUNTY	ROUTE	POST MILES TOTAL PROJECT	SHEET No.	TOTAL SHEETS
06	Fre	33	10.9/11.1	102	104

REGISTERED CIVIL ENGINEER 1-21-14 DATE

4-28-14
PLANS APPROVAL DATE

REGISTERED PROFESSIONAL ENGINEER Eduardo Jose Ortega Jr. No. 77226 Exp. 6/30/2015 CIVIL STATE OF CALIFORNIA

The State of California or its officers or agents shall not be responsible for the accuracy or completeness of electronic copies of this plan sheet.

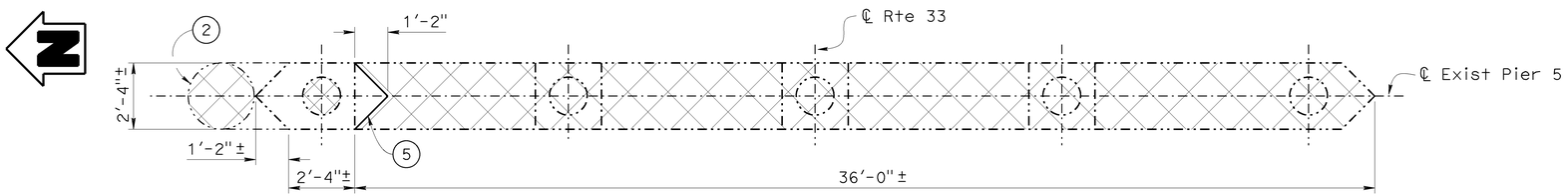

SECTION A-A

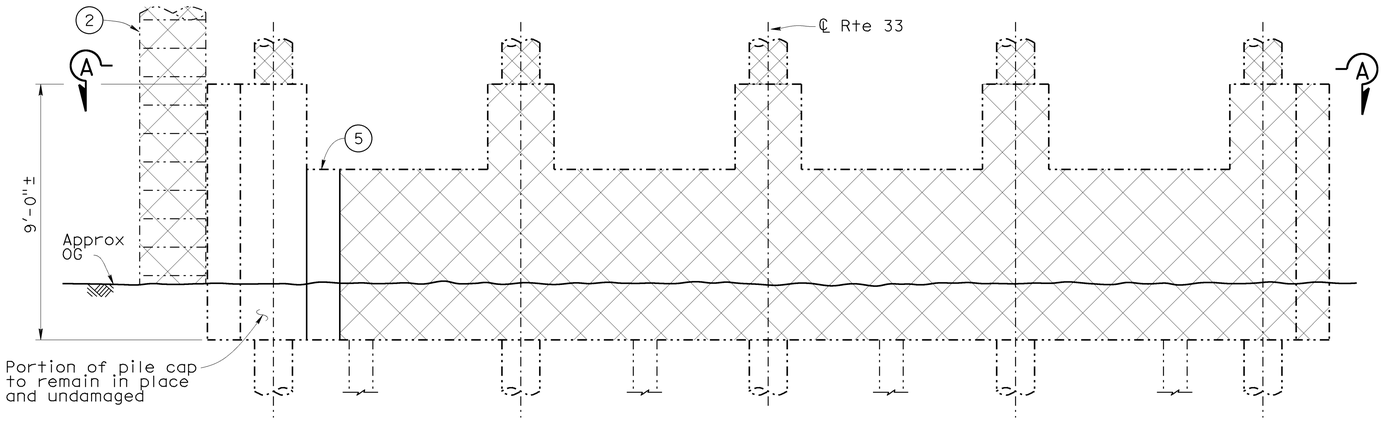

ELEVATION

LIMITS OF BRIDGE REMOVAL AT Exist PIER 5

3/8" = 1'-0"

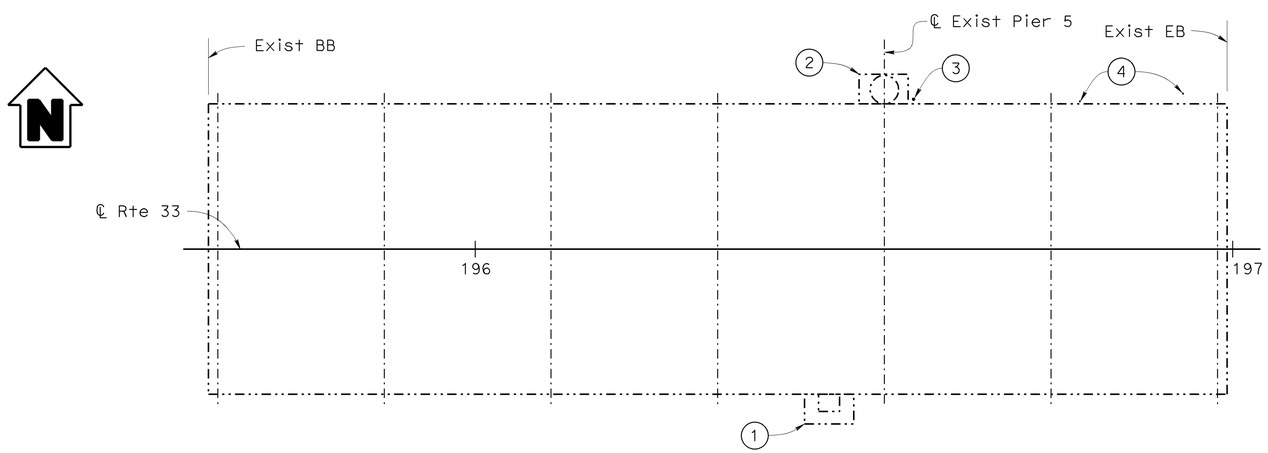

PLAN

EXISTING BRIDGE NO. 42-0072

1" = 10'

NOTE:
THE CONTRACTOR SHALL VERIFY ALL CONTROLLING FIELD DIMENSIONS BEFORE ORDERING OR FABRICATING ANY MATERIAL.

Notes:

1. Exist bridge shown only to indicate location of Exist Department of Water Resources (DWR) sampling equipment.

(1) Exist sediment cage box will be removed by DWR prior to start of construction.

(2) Exist stilling well (vertical corrugated steel pipe) and support brackets can be removed along with Exist bridge.

(3) Exist 3" Dia vertical steel pipe can be removed along with Exist bridge.

(4) (2) small vertical measuring rods 1" Dia can be removed along with Exist bridge.

(5) Saw cut a new triangular nose.

Indicates limits of bridge removal

	BY	CHECKED
DESIGN	Eduardo Ortega Jr.	Greg Thornton
DETAILS	Jie Tang	Greg Thornton
QUANTITIES	Tracy Sanderson	Bob Huddleston

STATE OF CALIFORNIA
DEPARTMENT OF TRANSPORTATION

DIVISION OF ENGINEERING SERVICES
STRUCTURE DESIGN
DESIGN BRANCH 7

BRIDGE NO. 42-0441
POST MILE 11.00

JACALITOS CREEK BRIDGE (REPLACE)
MISCELLANEOUS DETAILS

STRUCTURES DESIGN DETAIL SHEET (ENGLISH) (REV. 09-01-10)

ORIGINAL SCALE IN INCHES FOR REDUCED PLANS 0 1 2 3

UNIT: 3592
PROJECT NUMBER & PHASE: 0600020388 4 CONTRACT NO.: 06-432604

DISREGARD PRINTS BEARING EARLIER REVISION DATES

REVISION DATES 12/04/13 12/11/13

SHEET 13 OF 15

FILE => 42-0441-k-miscdet_detail-sheet.dgn

USERNAME => s136549 DATE PLOTTED => 21-APR-2014 TIME PLOTTED => 09:05

BENCH MARK

MRW 27
Fnd 1" I.P. w/Red CT Plug and Track
94.64' Lt "CL1" Line, Rte 33
Sta 19+40.21
Elev 578.25
Vert Datum NAVD 88

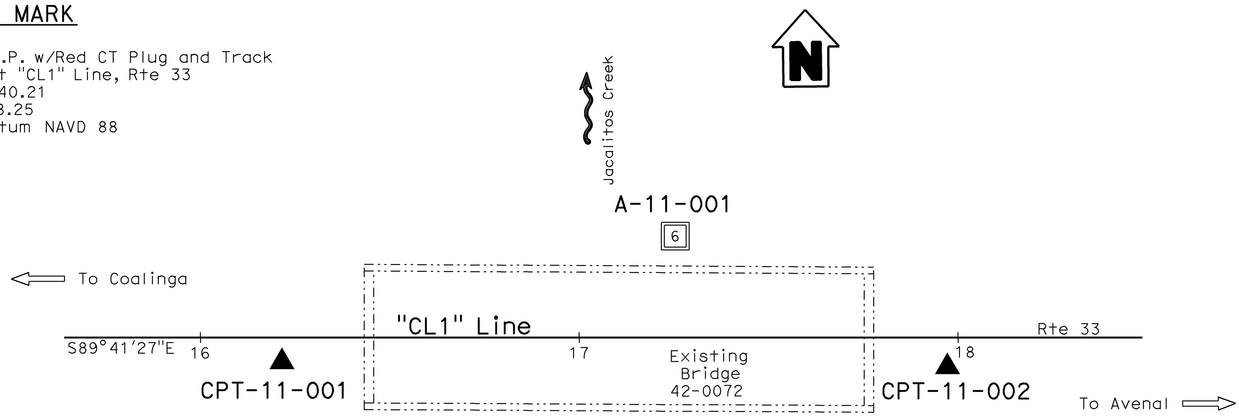

R-11-002
4.5

PLAN
1" = 20'

Note: No groundwater encountered during field investigation.

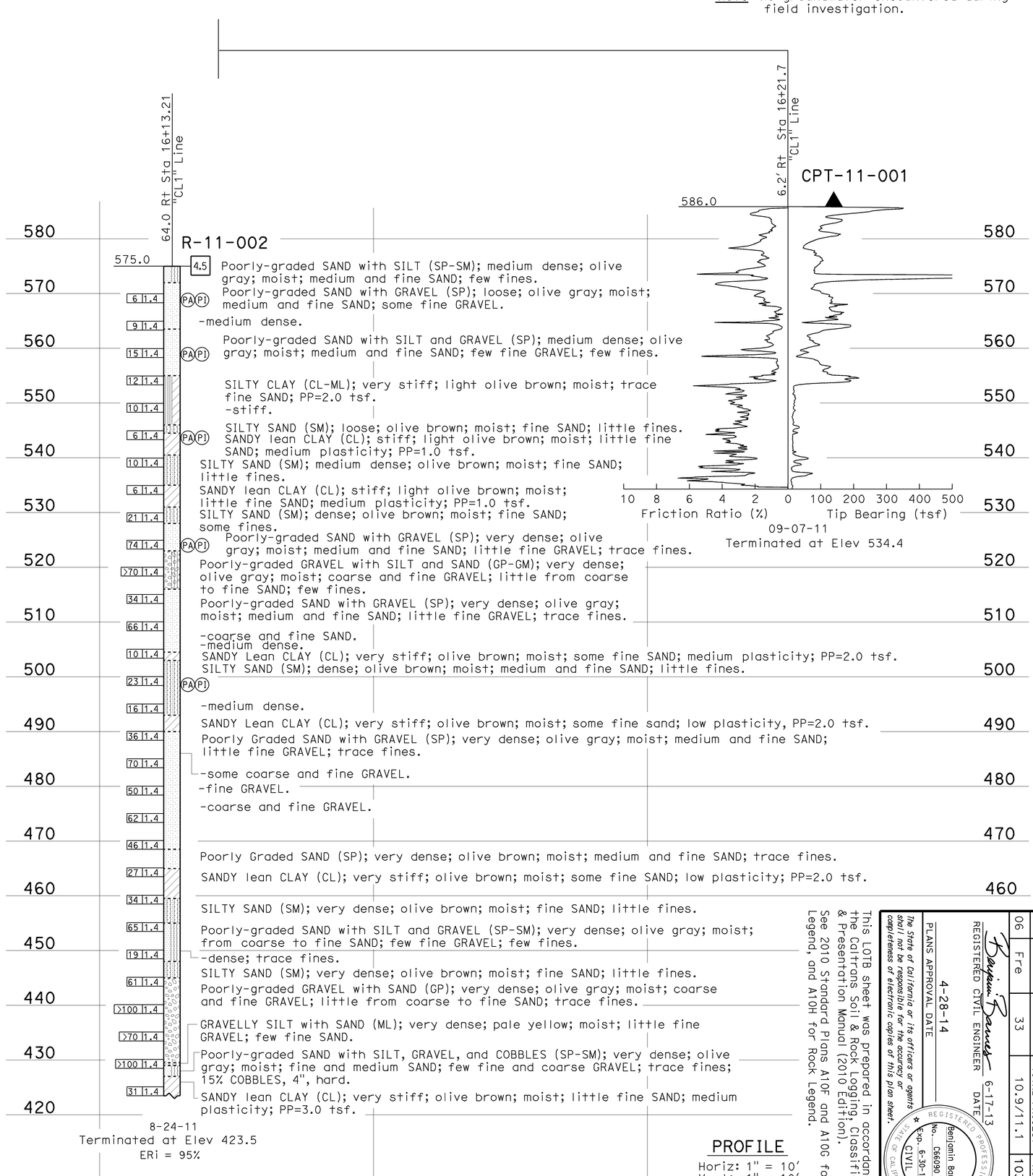

PROFILE
Horiz: 1" = 10'
Vert: 1" = 10'

This LOTB sheet was prepared in accordance with the Caltrans Soil & Rock Logging, Classification, & Presentation Manual (2010 Edition).
See 2010 Standard Plans A10F and A10G for Soil Legend, and A10H for Rock Legend.

REGISTERED CIVIL ENGINEER 6-17-13 DATE
4-28-14
PLANS APPROVAL DATE

The state of California or its officers or agents shall not be responsible for the accuracy or completeness of electronic copies of this plan sheet.

REGISTERED PROFESSIONAL ENGINEER
Benjamin Barnes
No. C56090
Exp. 6-30-14
CIVIL
STATE OF CALIFORNIA

DIST	COUNTY	ROUTE	POST MILES TOTAL PROJECT	SHEET NO.	TOTAL SHEETS
06	Fre	33	10.9/11.1	103	104

ENGINEERING SERVICES
MATERIALS AND GEOTECHNICAL SERVICES

FUNCTIONAL SUPERVISOR
NAME: Q. Huang
DRAWN BY: W. Tang 05/13
CHECKED BY: T. Song
FIELD INVESTIGATION BY: L. Sepulveda

STATE OF CALIFORNIA
DEPARTMENT OF TRANSPORTATION
DIVISION OF ENGINEERING SERVICES
STRUCTURE DESIGN
DESIGN BRANCH 7
BRIDGE NO. 42-0441
POST MILE 11.0

JACALITOS CREEK BRIDGE (REPLACE)
LOG OF TEST BORINGS 1 OF 2

ORIGINAL SCALE IN INCHES FOR REDUCED PLANS 0 1 2 3
DGS CIVIL LOG OF TEST BORINGS SHEET
UNIT: 3643
PROJECT NUMBER & PHASE: 0600020388 4
CONTRACT NO.: 06-432604
FILE => 42-0441-Z-1TB01.dgn
DISREGARD PRINTS BEARING EARLIER REVISION DATES
REVISION DATES 06/APR/13 06/APR/13 06/APR/13 11/27/13
SHEET 14 OF 15

USERNAME => s136549 DATE PLOTTED => 21-APR-2014 TIME PLOTTED => 09:05

DIST	COUNTY	ROUTE	POST MILES TOTAL PROJECT	SHEET No.	TOTAL SHEETS
06	Fre	33	10.9/11.1	104	104

Benjamin Barnes 6-17-13
REGISTERED CIVIL ENGINEER DATE

4-28-14
PLANS APPROVAL DATE

REGISTERED PROFESSIONAL ENGINEER Benjamin Barnes No. C66090 Exp. 6-30-14 CIVIL STATE OF CALIFORNIA

The State of California or its officers or agents shall not be responsible for the accuracy or completeness of electronic copies of this plan sheet.

This LOTB sheet was prepared in accordance with the Caltrans Soil & Rock Logging, Classification, & Presentation Manual (2010 Edition).

See 2010 Standard Plans A10F and A10G for Soil Legend, and A10H for Rock Legend.

FOR PLAN VIEW, SEE
"LOG OF TEST BORINGS 1 OF 2"

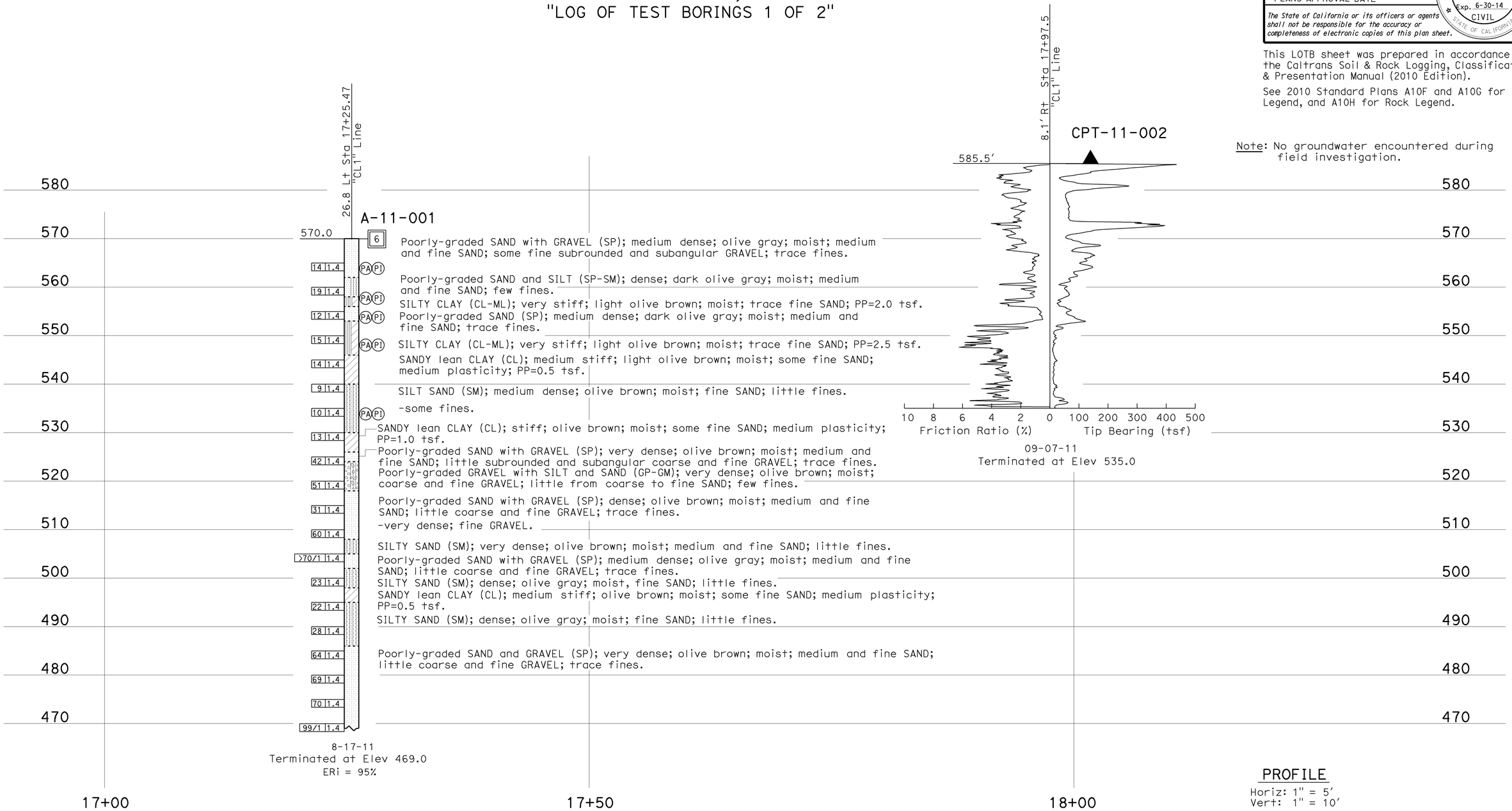

Note: No groundwater encountered during field investigation.

PROFILE
Horiz: 1" = 5'
Vert: 1" = 10'

ENGINEERING SERVICES	MATERIALS AND GEOTECHNICAL SERVICES	STATE OF CALIFORNIA DEPARTMENT OF TRANSPORTATION	DIVISION OF ENGINEERING SERVICES STRUCTURE DESIGN DESIGN BRANCH 7	BRIDGE NO. 42-0441 POST MILE 11.0	JACALITOS CREEK BRIDGE (REPLACE)
FUNCTIONAL SUPERVISOR NAME: Q. Huang	DRAWN BY: W. Tang 05/13 CHECKED BY: T. Song	FIELD INVESTIGATION BY: L. Sepulveda			LOG OF TEST BORINGS 2 OF 2

OGS CIVIL LOG OF TEST BORINGS SHEET

ORIGINAL SCALE IN INCHES FOR REDUCED PLANS 0 1 2 3

UNIT: 3643
PROJECT NUMBER & PHASE: 0600020388 4
CONTRACT NO.: 06-432604

DISREGARD PRINTS BEARING EARLIER REVISION DATES

REVISION DATES: ~~06-05-13~~ ~~06-07-13~~ ~~09/04/13~~ 11/27/13

SHEET 15 OF 15

FILE => 42-0441-z-lltb02.dgn

USERNAME => s136549 DATE PLOTTED => 21-APR-2014 TIME PLOTTED => 09:05