Dist	COUNTY	ROUTE	POST MILES TOTAL PROJECT	SHEET No.	TOTAL SHEETS
06	Tul	190	4.1/4.8	1	73

STATE OF CALIFORNIA **ACHSSTP-P190(021)E**

DEPARTMENT OF TRANSPORTATION

PROJECT PLANS FOR CONSTRUCTION ON

STATE HIGHWAY

IN TULARE COUNTY

FROM 0.4 MILE WEST OF ROAD 152 TO 0.7 MILE WEST OF ROAD 160

TO BE SUPPLEMENTED BY STANDARD PLANS DATED 2015

INDEX OF PLANS

SHEET No.	DESCRIPTION
1	TITLE AND LOCATION MAP
2-5	TYPICAL CROSS SECTIONS
6-9	LAYOUTS
10-16	CONSTRUCTION DETAILS
17-20	UTILITY PLANS
21	CONSTRUCTION AREA SIGNS
22-25	STAGE CONSTRUCTION PLANS
26-29	TRAFFIC HANDLING PLANS, DETAILS, AND QUANTITIES
30-33	PAVEMENT DELINEATION PLANS, DETAILS, AND QUANTITIES
34-38	SIGN PLANS, DETAILS, AND QUANTITIES
39	SUMMARY OF QUANTITIES
40	LANDSCAPE DETAILS
41-45	EROSION CONTROL PLANS
46-55	ELECTRICAL PLANS
56-73	REVISED STANDARD PLANS

THE STANDARD PLANS LIST APPLICABLE TO THIS CONTRACT IS INCLUDED IN THE NOTICE TO BIDDERS AND SPECIAL PROVISIONS BOOK.

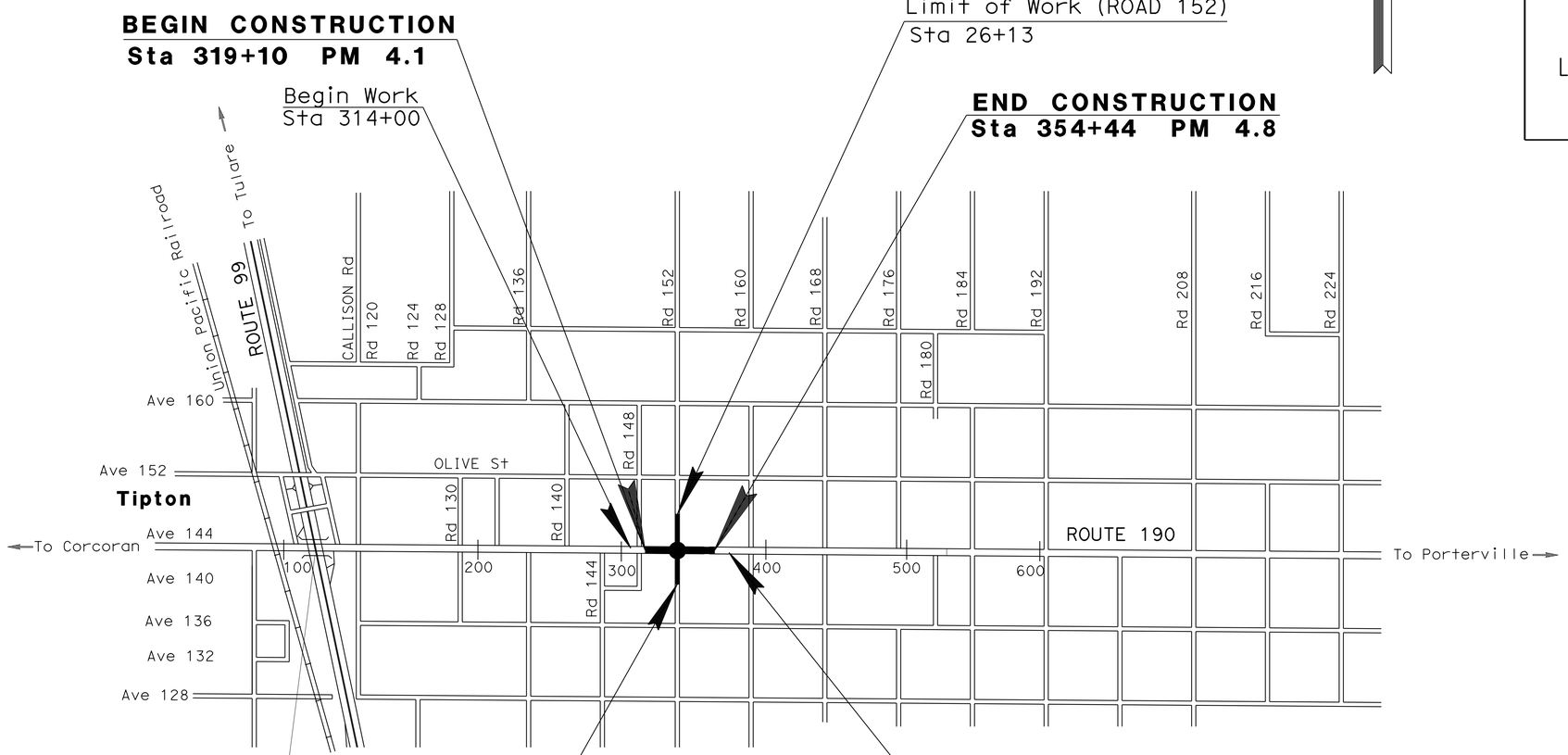

NO SCALE

LOCATION MAP

Richard H. Kuan 6-17-16
PROJECT ENGINEER DATE
REGISTERED CIVIL ENGINEER

June 20, 2016
PLANS APPROVAL DATE

REGISTERED PROFESSIONAL ENGINEER RICHARD H. KUAN No. 56678 Exp. 6-30-17 CIVIL STATE OF CALIFORNIA

THE STATE OF CALIFORNIA OR ITS OFFICERS OR AGENTS SHALL NOT BE RESPONSIBLE FOR THE ACCURACY OR COMPLETENESS OF SCANNED COPIES OF THIS PLAN SHEET.

PROJECT MANAGER VICTOR SHAW

DESIGN ENGINEER ERNESTO PENUNA

THE CONTRACTOR SHALL POSSESS THE CLASS (OR CLASSES) OF LICENSE AS SPECIFIED IN THE "NOTICE TO BIDDERS."

CONTRACT No.	06-0P5904
PROJECT ID	0612000182

LAST REVISION 06-17-16

DATE PLOTTED => 08-AUG-2016
TIME PLOTTED => 15:02

Dist	COUNTY	ROUTE	POST MILES TOTAL PROJECT	SHEET No.	TOTAL SHEETS
06	Tul	190	4.1/4.8	2	73

Richard H. Kuan 06-17-16
REGISTERED CIVIL ENGINEER DATE

6-20-16
PLANS APPROVAL DATE

REGISTERED PROFESSIONAL ENGINEER RICHARD H. KUAN No. 56678 Exp. 6-30-17 CIVIL STATE OF CALIFORNIA

THE STATE OF CALIFORNIA OR ITS OFFICERS OR AGENTS SHALL NOT BE RESPONSIBLE FOR THE ACCURACY OR COMPLETENESS OF SCANNED COPIES OF THIS PLAN SHEET.

NOTES:

1. DIMENSIONS OF THE PAVEMENT STRUCTURES (STRUCTURAL SECTIONS) ARE SUBJECT TO TOLERANCES SPECIFIED IN THE STANDARD SPECIFICATIONS.
2. SUPERELEVATION AS SHOWN OR AS DIRECTED BY THE ENGINEER.

ABBREVIATION:

PET - PAVEMENT EDGE TREATMENT

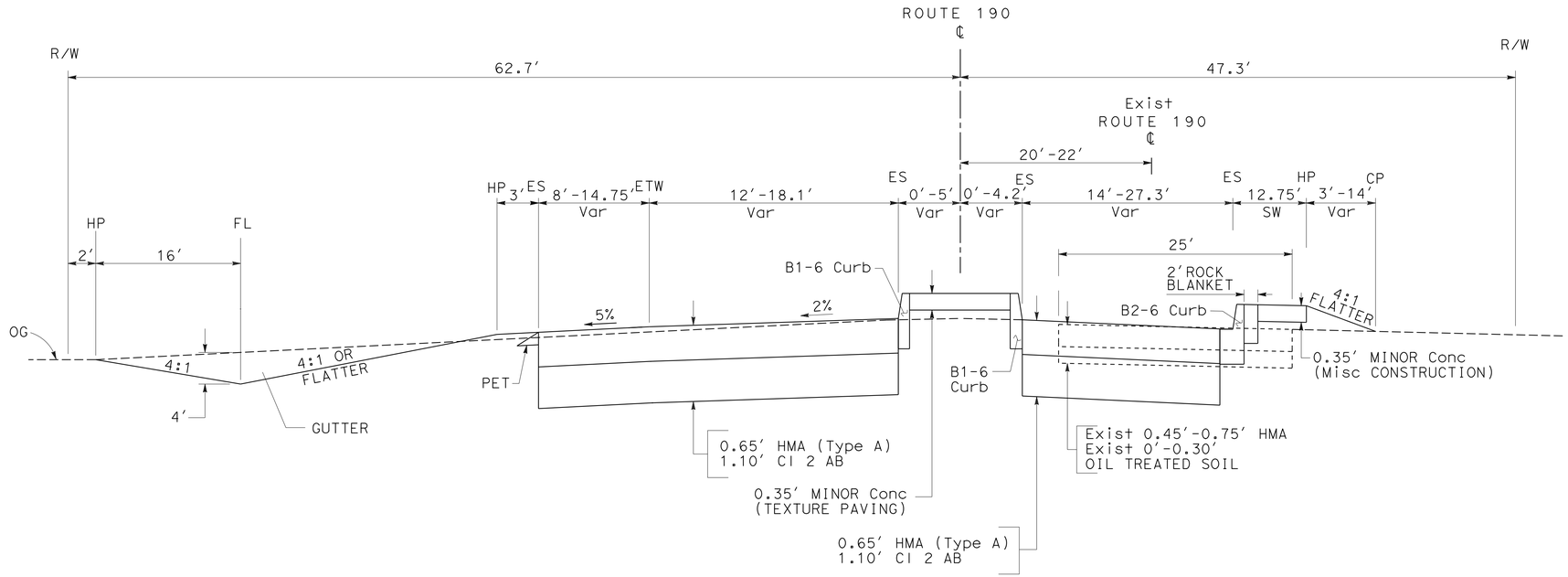

Sta 331+86.51 TO Sta 334+03.37

ROUTE 190

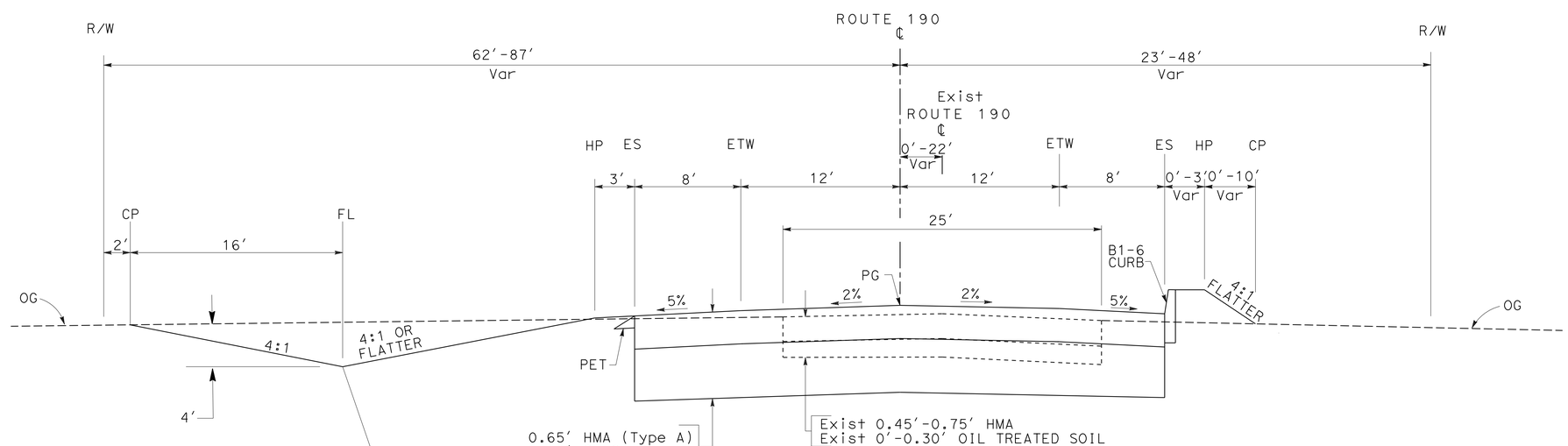

Sta 319+10.78 TO Sta 331+86.51
Sta 342+43.00 TO Sta 354+44.91

ROUTE 190

DESIGN DESIGNATION

2017 ADT	5,800	DHV	810
2027 ADT	6,800	D	67%
2037 ADT	8,100	TRUCKS	24%
2027 TI	10.5		
2027 ESAL	3,730,000		
2037 TI	11.5		
2037 ESAL	8,190,000		

PAVEMENT CLIMATE REGION

INLAND VALLEY

TYPICAL CROSS SECTIONS

NO SCALE

X-1

STATE OF CALIFORNIA - DEPARTMENT OF TRANSPORTATION
Caltrans®
DESIGN
FUNCTIONAL SUPERVISOR: ERNESTO PENUNA
CALCULATED-DESIGNED BY: JOO BAEK
CHECKED BY: FERNANDO MORALES
REVISED BY
DATE REVISED

LAST REVISION 06-17-16
DATE PLOTTED => 21-JUL-2016
TIME PLOTTED => 16:16

Dist	COUNTY	ROUTE	POST MILES TOTAL PROJECT	SHEET No.	TOTAL SHEETS
06	Tul	190	4.1/4.8	3	73

Richard H. Kuan 06-17-16
REGISTERED CIVIL ENGINEER DATE

6-20-16
PLANS APPROVAL DATE

REGISTERED PROFESSIONAL ENGINEER RICHARD H. KUAN No. 56678 Exp 6-30-17 CIVIL STATE OF CALIFORNIA

THE STATE OF CALIFORNIA OR ITS OFFICERS OR AGENTS SHALL NOT BE RESPONSIBLE FOR THE ACCURACY OR COMPLETENESS OF SCANNED COPIES OF THIS PLAN SHEET.

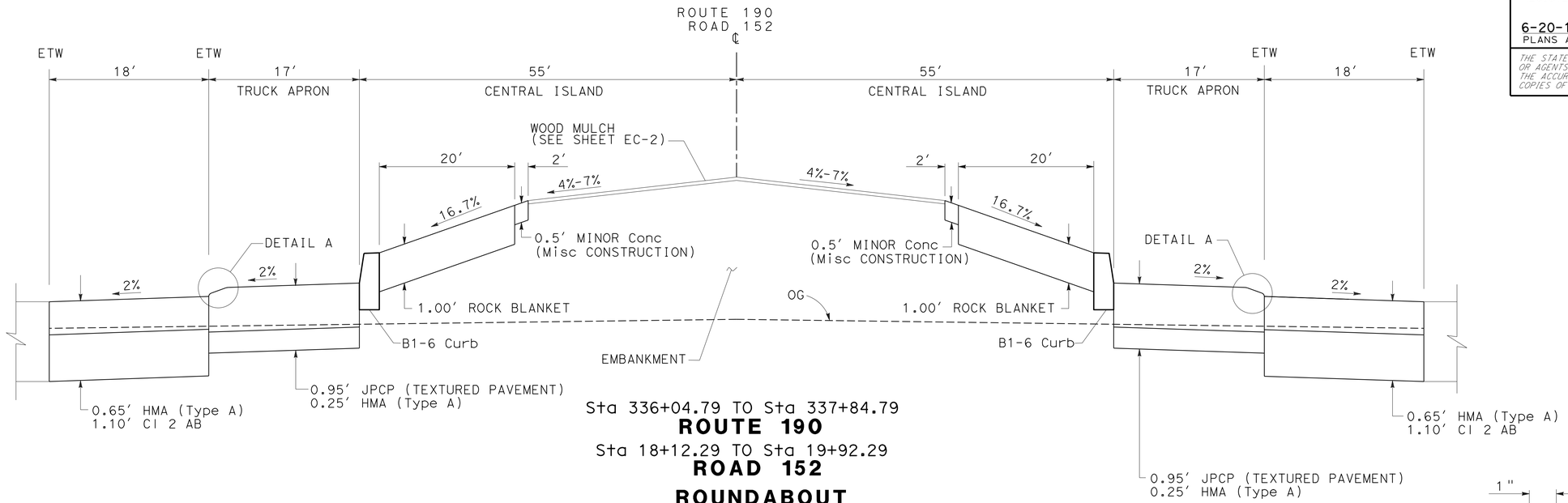

Sta 336+04.79 TO Sta 337+84.79
ROUTE 190
Sta 18+12.29 TO Sta 19+92.29
ROAD 152
ROUNDABOUT

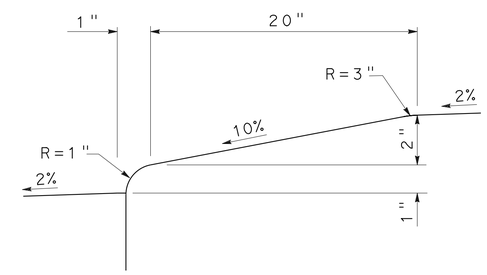

DETAIL A

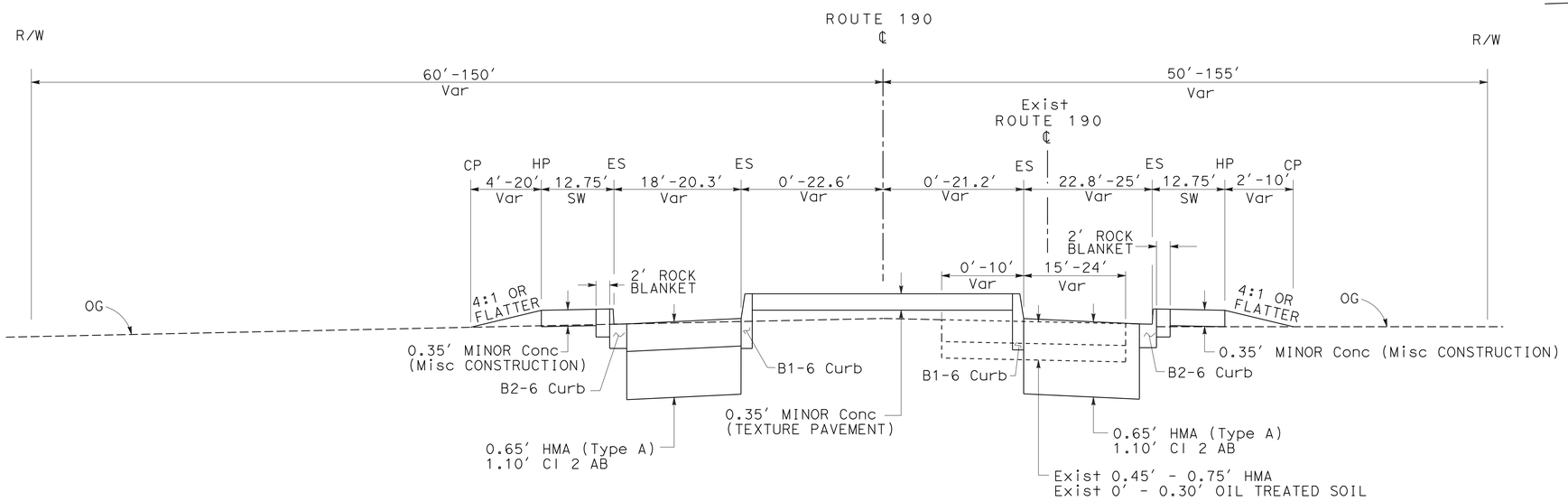

Sta 334+03.37 TO Sta 336+04.79
Sta 337+84.79 TO Sta 339+36.00
ROUTE 190

TYPICAL CROSS SECTIONS

NO SCALE

X-2

STATE OF CALIFORNIA - DEPARTMENT OF TRANSPORTATION
Caltrans®
DESIGN

FUNCTIONAL SUPERVISOR: ERNESTO PENUNA
CALCULATED-DESIGNED BY: JOO BAEK
CHECKED BY: FERNANDO MORALES
REVISED BY
DATE REVISED

LAST REVISION 06-17-16
DATE PLOTTED => 21-JUL-2016
TIME PLOTTED => 16:16

Dist	COUNTY	ROUTE	POST MILES TOTAL PROJECT	SHEET No.	TOTAL SHEETS
06	Tul	190	4.1/4.8	4	73

Richard H. Kuan 06-17-16
REGISTERED CIVIL ENGINEER DATE

6-20-16
PLANS APPROVAL DATE

REGISTERED PROFESSIONAL ENGINEER RICHARD H. KUAN No. 56678 Exp. 6-30-17 CIVIL STATE OF CALIFORNIA

THE STATE OF CALIFORNIA OR ITS OFFICERS OR AGENTS SHALL NOT BE RESPONSIBLE FOR THE ACCURACY OR COMPLETENESS OF SCANNED COPIES OF THIS PLAN SHEET.

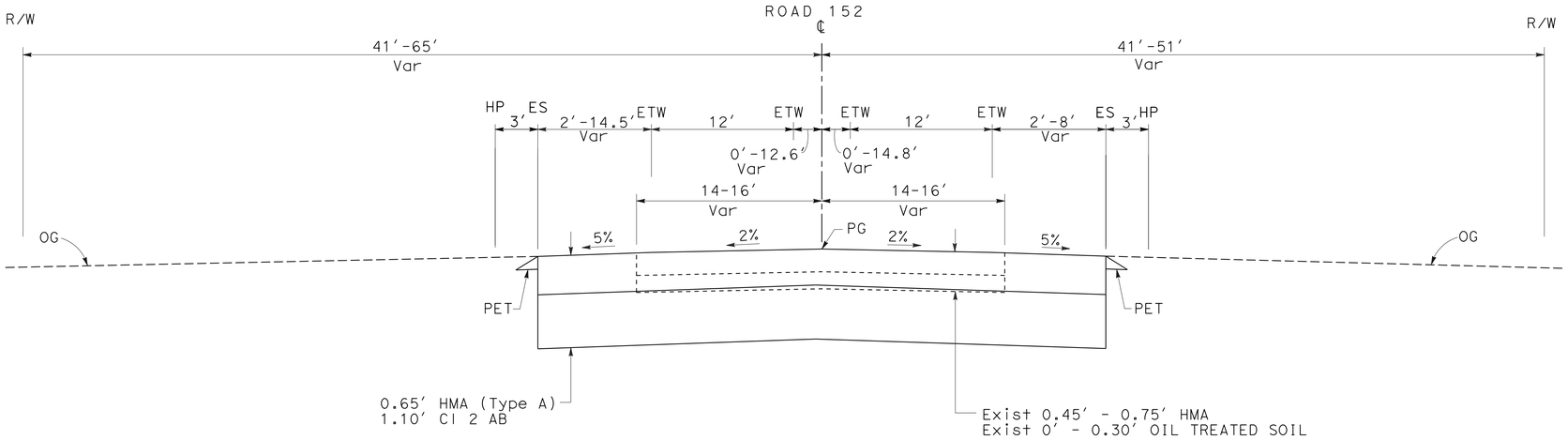

Sta 11+00.00 TO Sta 15+37.50
Sta 22+71.93 TO Sta 26+12.82

ROAD 152

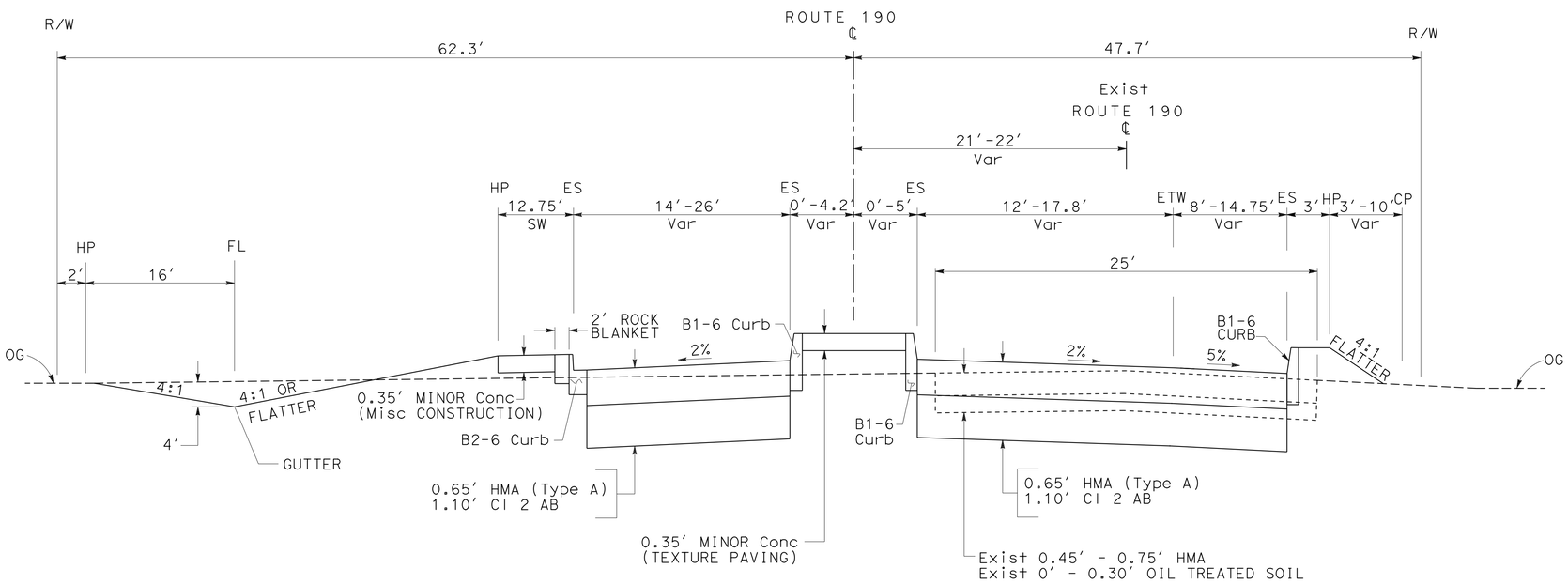

Sta 339+36.00 TO 342+43.00

ROUTE 190

TYPICAL CROSS SECTIONS

NO SCALE

X-3

STATE OF CALIFORNIA - DEPARTMENT OF TRANSPORTATION
Caltrans
DESIGN

FUNCTIONAL SUPERVISOR: ERNESTO PENUNA
CALCULATED-DESIGNED BY: JOO BAEK
CHECKED BY: FERNANDO MORALES
REVISED BY
DATE REVISED

LAST REVISION 06-17-16
DATE PLOTTED => 21-JUL-2016
TIME PLOTTED => 16:16

Dist	COUNTY	ROUTE	POST MILES TOTAL PROJECT	SHEET No.	TOTAL SHEETS
06	Tul	190	4.1/4.8	5	73

Richard H. Kuan 06-17-16
REGISTERED CIVIL ENGINEER DATE

6-20-16
PLANS APPROVAL DATE

REGISTERED PROFESSIONAL ENGINEER RICHARD H. KUAN No. 56678 Exp. 6-30-17 CIVIL STATE OF CALIFORNIA

THE STATE OF CALIFORNIA OR ITS OFFICERS OR AGENTS SHALL NOT BE RESPONSIBLE FOR THE ACCURACY OR COMPLETENESS OF SCANNED COPIES OF THIS PLAN SHEET.

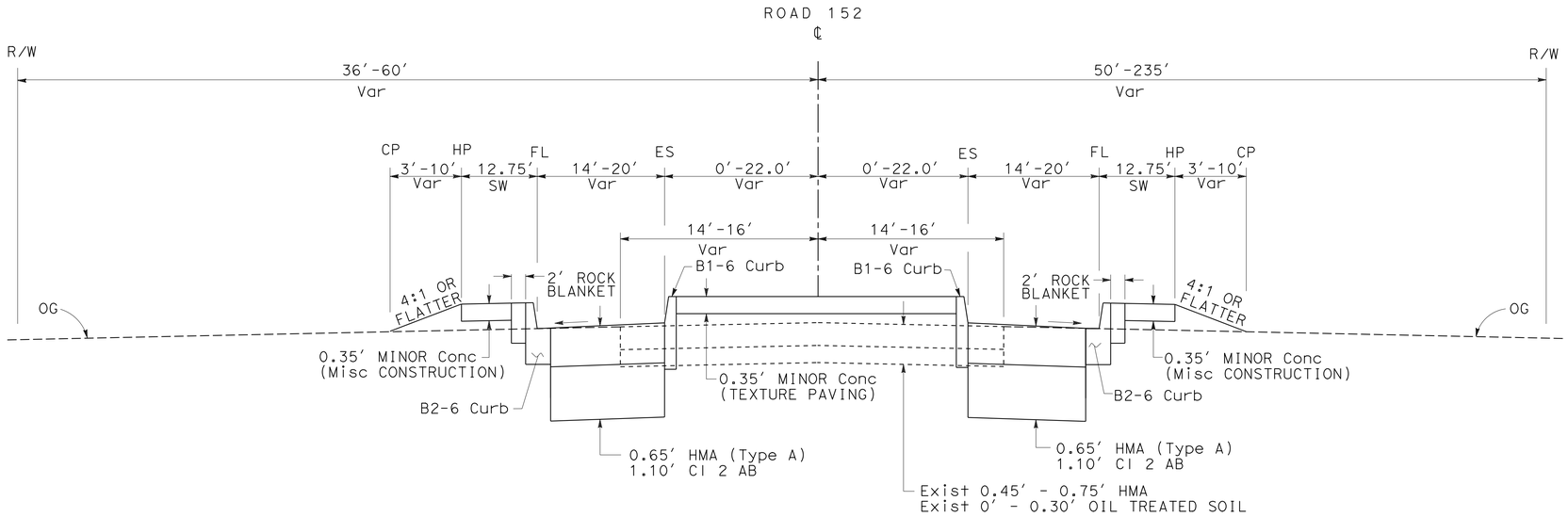

Sta 16+56.48 TO Sta 18+12.29
Sta 19+92.29 TO Sta 22+71.93

ROAD 152

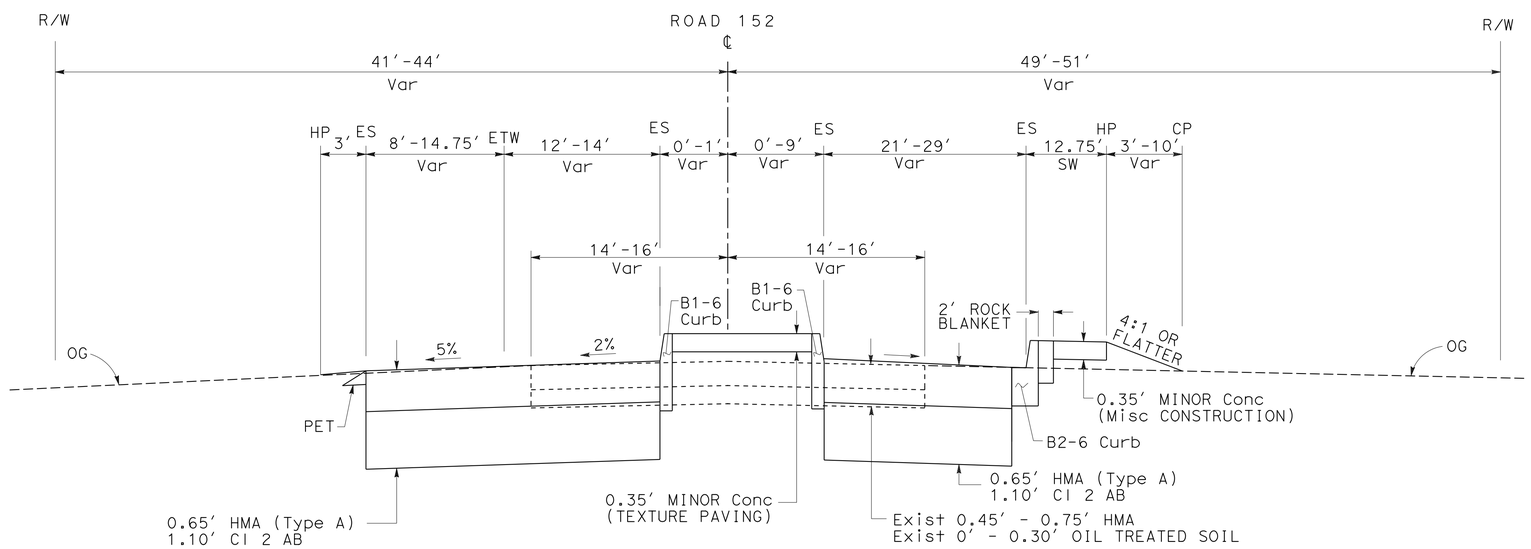

Sta 15+37.50 TO Sta 16+56.48

ROAD 152

TYPICAL CROSS SECTIONS
NO SCALE

X-4

STATE OF CALIFORNIA - DEPARTMENT OF TRANSPORTATION
Caltrans®
DESIGN
FUNCTIONAL SUPERVISOR: ERNESTO PENUNA
CALCULATED-DESIGNED BY: JOO BAEK
CHECKED BY: FERNANDO MORALES
REVISED BY / DATE REVISED

LAST REVISION 06-17-16
DATE PLOTTED => 21-JUL-2016
TIME PLOTTED => 16:16

Dist	COUNTY	ROUTE	POST MILES TOTAL PROJECT	SHEET No.	TOTAL SHEETS
06	Tul	190	4.1/4.8	6	73

Richard H. Kuan 06-17-16
REGISTERED CIVIL ENGINEER DATE

6-20-16
PLANS APPROVAL DATE

REGISTERED PROFESSIONAL ENGINEER RICHARD H. KUAN No. 56678 Exp. 6-30-17 CIVIL STATE OF CALIFORNIA

THE STATE OF CALIFORNIA OR ITS OFFICERS OR AGENTS SHALL NOT BE RESPONSIBLE FOR THE ACCURACY OR COMPLETENESS OF SCANNED COPIES OF THIS PLAN SHEET.

NOTE:

FOR ACCURATE RIGHT OF WAY DATA, CONTACT RIGHT OF WAY ENGINEERING AT THE DISTRICT OFFICE.

LEGEND

GUTTER

JPCP (TEXTURED PAVEMENT)

CURVE DATA

No. ⊕	R	Δ	T	L	NOTE
1	10000′	02°44′50"	239.80′	479.50′	CENTER LINE
2	10000′	02°45′32"	240.81′	481.52′	CENTER LINE
3	10006′	03°04′56"	269.20′	538.27′	ETW
4	10006′	03°05′54"	270.61′	541.10′	ETW
5	9994′	02°21′35"	205.83′	411.60′	ETW
6	9994′	02°22′33"	207.24′	414.42′	ETW
14	658′	08°48′05"	50.64′	101.08′	FLOW LINE
27	70′	23°53′44"	14.81′	29.19′	FLOW LINE

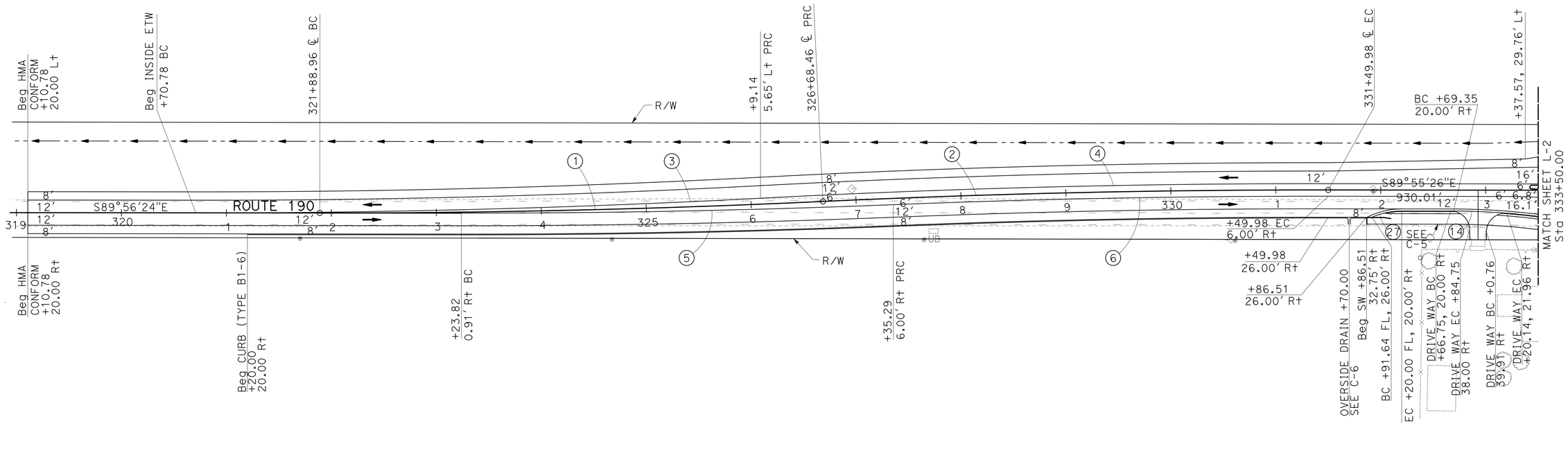

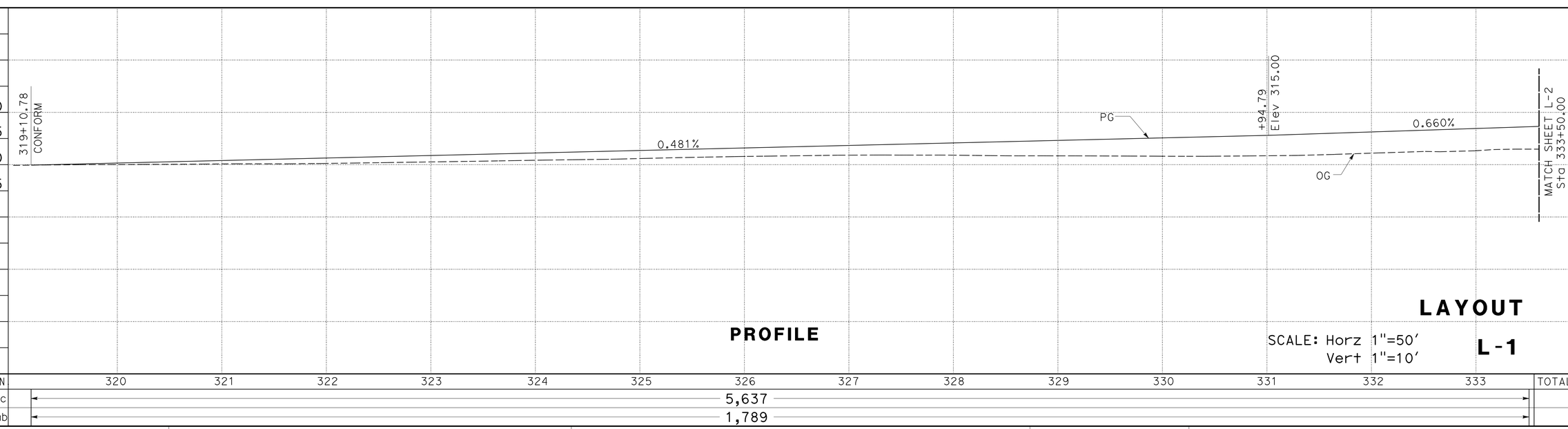

STATION	320	321	322	323	324	325	326	327	328	329	330	331	332	333	TOTAL
CY Exc	5,637														5,637
CY Emb	1,789														1,789

STATE OF CALIFORNIA - DEPARTMENT OF TRANSPORTATION
Caltrans DESIGN

FUNCTIONAL SUPERVISOR: ERNESTO PENUNA
CALCULATED-DESIGNED BY: JOO BAEK
CHECKED BY: RICHARD KUAN
REVISED BY / DATE REVISED

LAST REVISION 06-17-16
DATE PLOTTED => 21-JUL-2016
TIME PLOTTED => 16:16

Dist	COUNTY	ROUTE	POST MILES TOTAL PROJECT	SHEET No.	TOTAL SHEETS
06	Tul	190	4.1/4.8	7	73

Richard H. Kuan 06-17-16
REGISTERED CIVIL ENGINEER DATE

6-20-16
PLANS APPROVAL DATE

REGISTERED PROFESSIONAL ENGINEER RICHARD H. KUAN No. 56678 Exp. 6-30-17 CIVIL STATE OF CALIFORNIA

THE STATE OF CALIFORNIA OR ITS OFFICERS OR AGENTS SHALL NOT BE RESPONSIBLE FOR THE ACCURACY OR COMPLETENESS OF SCANNED COPIES OF THIS PLAN SHEET.

NOTE:

FOR ACCURATE RIGHT OF WAY DATA, CONTACT RIGHT OF WAY ENGINEERING AT THE DISTRICT OFFICE.

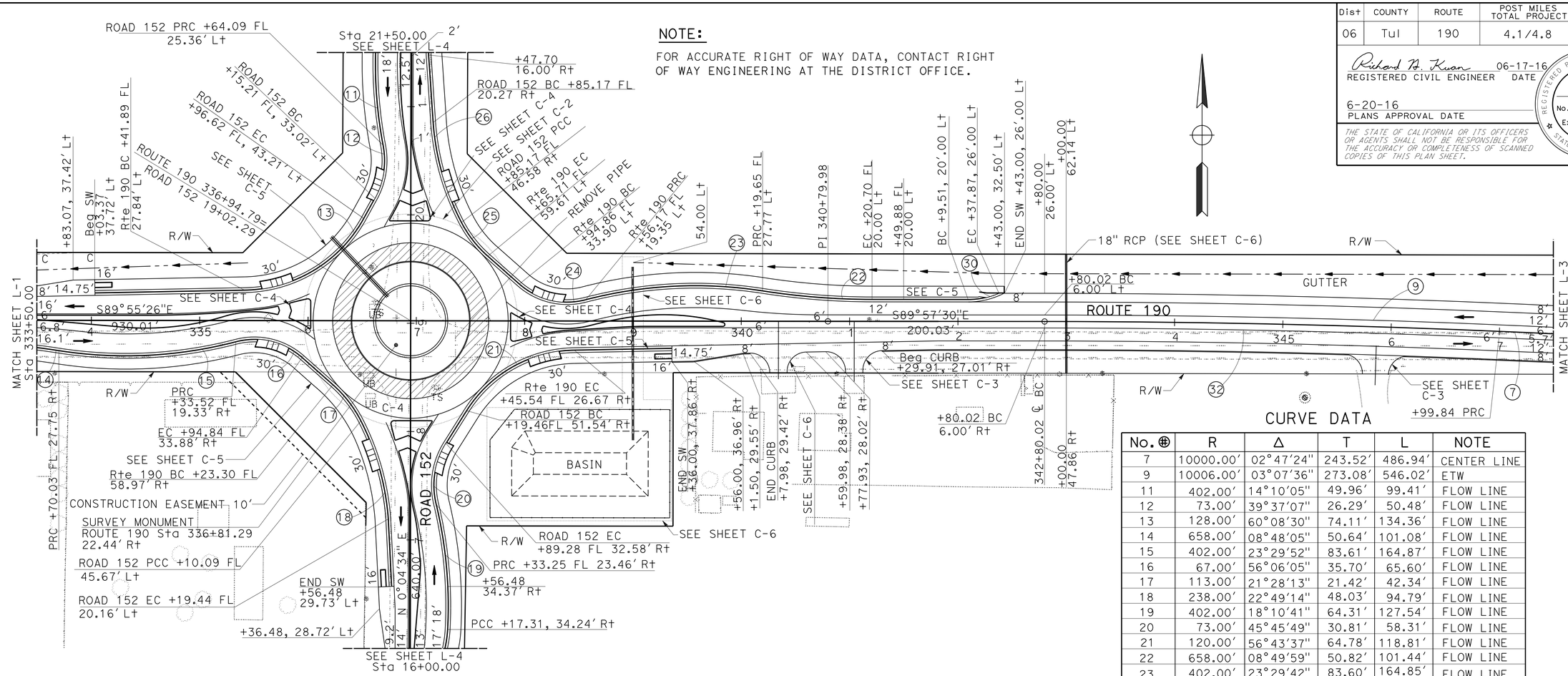

CURVE DATA

No. ⊕	R	Δ	T	L	NOTE
7	10000.00'	02°47'24"	243.52'	486.94'	CENTER LINE
9	10006.00'	03°07'36"	273.08'	546.02'	ETW
11	402.00'	14°10'05"	49.96'	99.41'	FLOW LINE
12	73.00'	39°37'07"	26.29'	50.48'	FLOW LINE
13	128.00'	60°08'30"	74.11'	134.36'	FLOW LINE
14	658.00'	08°48'05"	50.64'	101.08'	FLOW LINE
15	402.00'	23°29'52"	83.61'	164.87'	FLOW LINE
16	67.00'	56°06'05"	35.70'	65.60'	FLOW LINE
17	113.00'	21°28'13"	21.42'	42.34'	FLOW LINE
18	238.00'	22°49'14"	48.03'	94.79'	FLOW LINE
19	402.00'	18°10'41"	64.31'	127.54'	FLOW LINE
20	73.00'	45°45'49"	30.81'	58.31'	FLOW LINE
21	120.00'	56°43'37"	64.78'	118.81'	FLOW LINE
22	658.00'	08°49'59"	50.82'	101.44'	FLOW LINE
23	402.00'	23°29'42"	83.60'	164.85'	FLOW LINE
24	67.00'	56°06'05"	35.70'	65.60'	FLOW LINE
25	108.00'	21°02'55"	20.06'	39.68'	FLOW LINE
26	238.00'	23°14'32"	48.95'	96.55'	FLOW LINE
30	70.00'	23°53'44"	14.81'	29.19'	FLOW LINE
32	9994.00'	02°24'20"	209.82'	419.58'	ETW

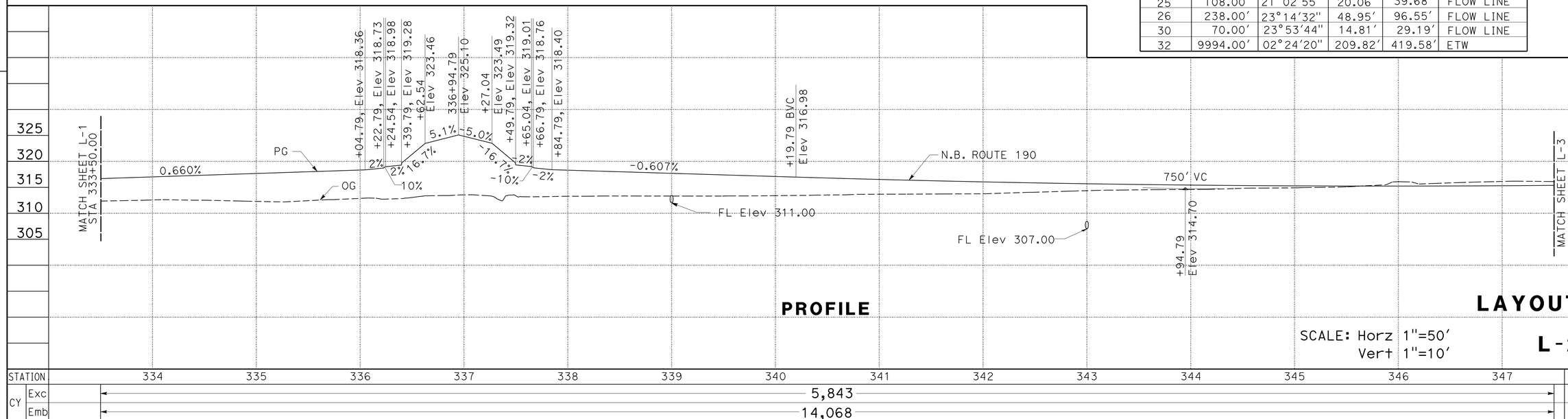

STATION	334	335	336	337	338	339	340	341	342	343	344	345	346	347	TOTAL
CY Exc	5,843														5,843
CY Emb	14,068														14,068

STATE OF CALIFORNIA - DEPARTMENT OF TRANSPORTATION
Caltrans®
DESIGN
FUNCTIONAL SUPERVISOR: ERNESTO PENUNA
CALCULATED-DESIGNED BY: FERNANDO MORALES
CHECKED BY: JOO BAEK
REVISED BY / DATE REVISED

LAST REVISION 06-17-16
DATE PLOTTED => 21-JUL-2016
TIME PLOTTED => 16:16

Dist	COUNTY	ROUTE	POST MILES TOTAL PROJECT	SHEET No.	TOTAL SHEETS
06	Tul	190	4.1/4.8	8	73

Richard H. Kuan 06-17-16
REGISTERED CIVIL ENGINEER DATE

6-20-16
PLANS APPROVAL DATE

REGISTERED PROFESSIONAL ENGINEER RICHARD H. KUAN No. 56678 Exp. 6-30-17 CIVIL STATE OF CALIFORNIA

THE STATE OF CALIFORNIA OR ITS OFFICERS OR AGENTS SHALL NOT BE RESPONSIBLE FOR THE ACCURACY OR COMPLETENESS OF SCANNED COPIES OF THIS PLAN SHEET.

NOTE:
FOR ACCURATE RIGHT OF WAY DATA, CONTACT RIGHT OF WAY ENGINEERING AT THE DISTRICT OFFICE.

CURVE DATA

No. ⊕	R	Δ	T	L	NOTE
8	10000.00′	02°45′00″	240.02′	479.95′	CENTER LINE
10	10006.00′	03°05′12″	269.58′	539.03′	ETW
33	9994.00′	02°21′55″	206.32′	412.59′	ETW

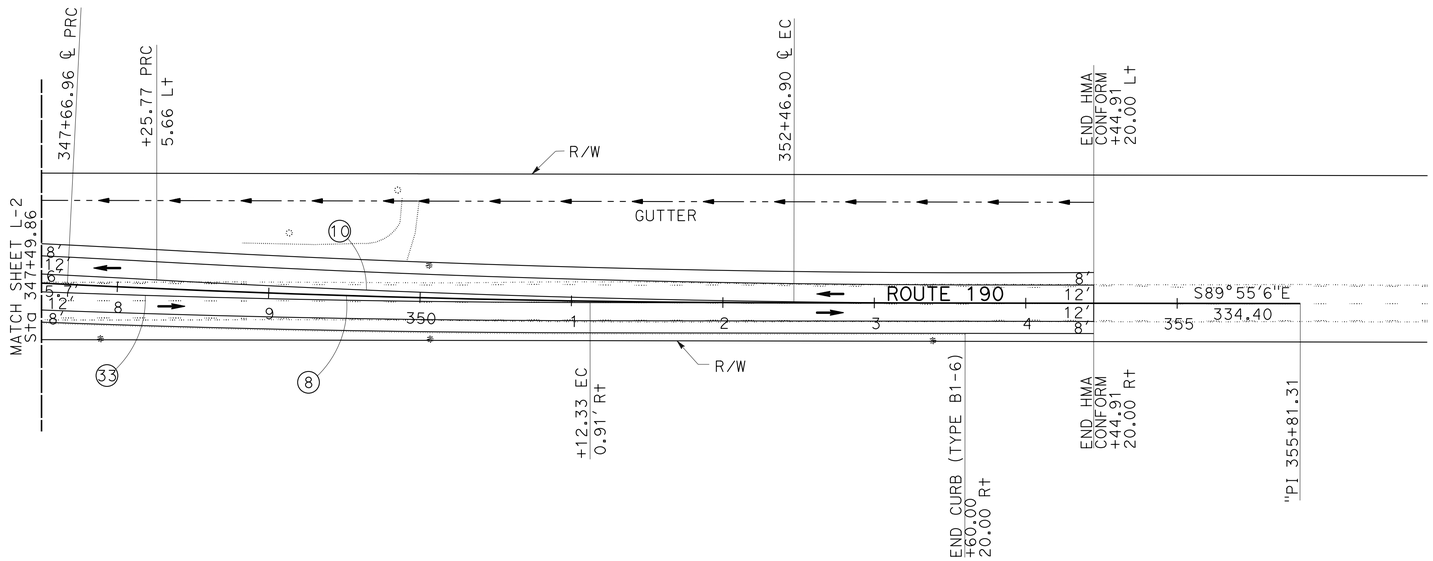

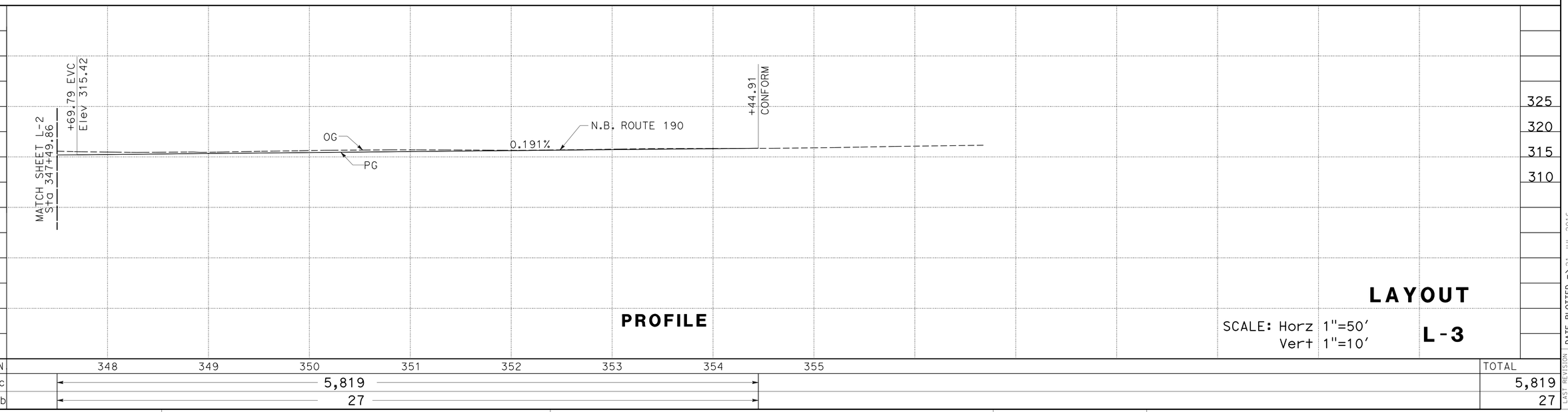

STATE OF CALIFORNIA - DEPARTMENT OF TRANSPORTATION
Caltrans DESIGN
FUNCTIONAL SUPERVISOR: ERNESTO PENUNA
CALCULATED-DESIGNED BY: FERNANDO MORALES
CHECKED BY
REVISED BY
DATE REVISED
JOO BAEK

LAST REVISION 06-17-16
DATE PLOTTED => 21-JUL-2016
TIME PLOTTED => 16:16

Dist	COUNTY	ROUTE	POST MILES TOTAL PROJECT	SHEET No.	TOTAL SHEETS
06	Tul	190	4.1/4.8	9	73

Richard H. Kuan 6-17-20
REGISTERED CIVIL ENGINEER DATE

6-20-16
PLANS APPROVAL DATE

REGISTERED PROFESSIONAL ENGINEER RICHARD H. KUAN No. 56678 Exp 6-30-17 CIVIL STATE OF CALIFORNIA

THE STATE OF CALIFORNIA OR ITS OFFICERS OR AGENTS SHALL NOT BE RESPONSIBLE FOR THE ACCURACY OR COMPLETENESS OF SCANNED COPIES OF THIS PLAN SHEET.

NOTE:

FOR ACCURATE RIGHT OF WAY DATA, CONTACT RIGHT OF WAY ENGINEERING AT THE DISTRICT OFFICE.

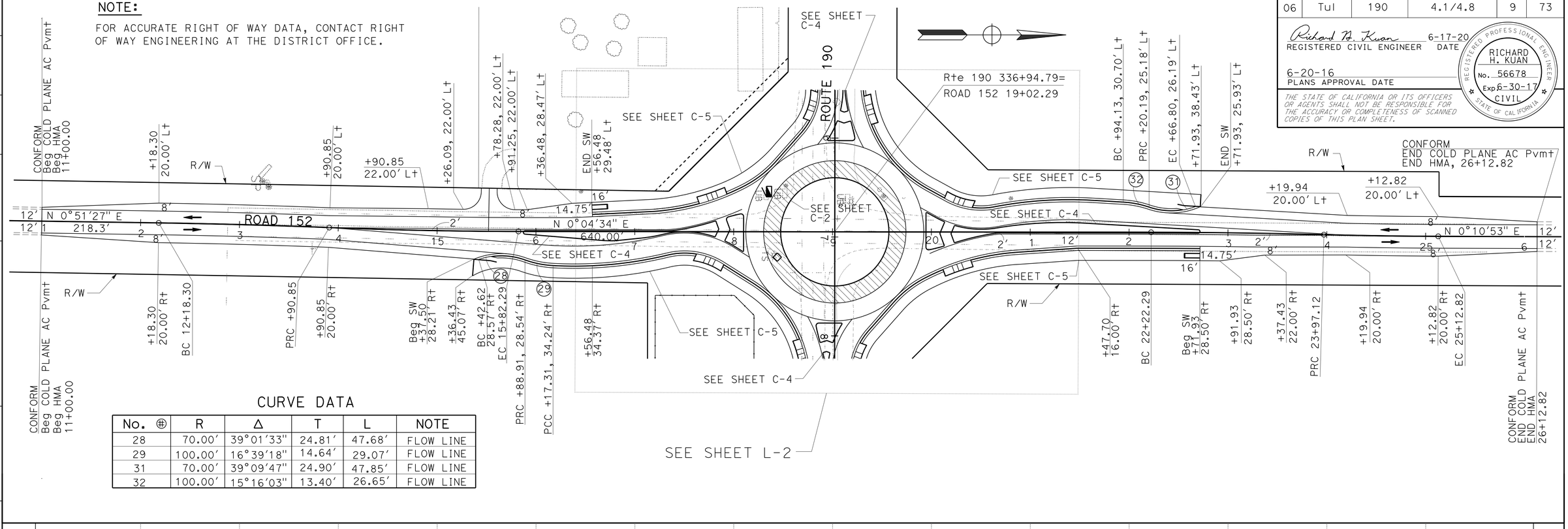

CURVE DATA

No. ⊕	R	Δ	T	L	NOTE
28	70.00'	39°01'33"	24.81'	47.68'	FLOW LINE
29	100.00'	16°39'18"	14.64'	29.07'	FLOW LINE
31	70.00'	39°09'47"	24.90'	47.85'	FLOW LINE
32	100.00'	15°16'03"	13.40'	26.65'	FLOW LINE

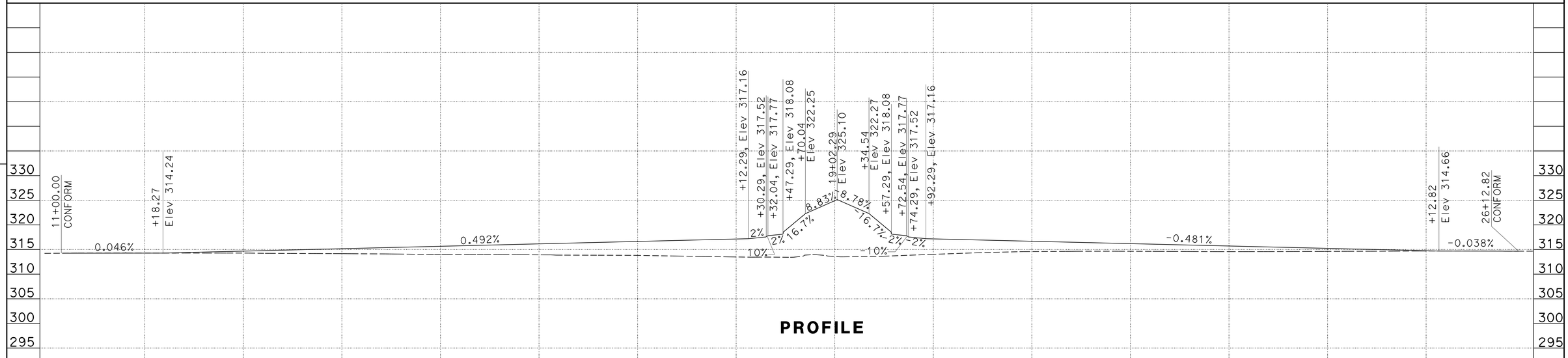

PROFILE

SCALE: Horz 1"=50'
Vert 1"=10'

LAYOUT
L-4

STATION		12	13	14	15	16	17	18	19	20	21	22	23	24	25	TOTAL
CY	Exc								1,454							1,454
	Emb								291							291

STATE OF CALIFORNIA - DEPARTMENT OF TRANSPORTATION
Caltrans
DESIGN

FUNCTIONAL SUPERVISOR: ERNESTO PENUNA
CALCULATED-DESIGNED BY: JOO BAEK
CHECKED BY: ALBERT VITELA
REVISED BY
DATE REVISED

LAST REVISION 06-17-16
DATE PLOTTED => 21-JUL-2016
TIME PLOTTED => 16:16

Dist	COUNTY	ROUTE	POST MILES TOTAL PROJECT	SHEET No.	TOTAL SHEETS
06	Tul	190	4.1/4.8	10	73

Richard H. Kuan 06-17-16
REGISTERED CIVIL ENGINEER DATE

6-20-16
PLANS APPROVAL DATE

REGISTERED PROFESSIONAL ENGINEER RICHARD H. KUAN No. 56678 Exp 6-30-17 CIVIL STATE OF CALIFORNIA

THE STATE OF CALIFORNIA OR ITS OFFICERS OR AGENTS SHALL NOT BE RESPONSIBLE FOR THE ACCURACY OR COMPLETENESS OF SCANNED COPIES OF THIS PLAN SHEET.

NOTES:

1. JPCP, TEXTURE FINISH, PREPARE AND STAIN CONCRETE COLOR: RED (FEDERAL STANDARD 595C COLOR #31136)
2. MINOR CONCRETE (TEXTURED PAVING) COLOR: RED (FEDERAL STANDARD 595C COLOR #31136)
3. SEE C-4 AND C-5 FOR CONCRETE WORK LAYOUT DETAILS
4. SEE LD-1 FOR TEXTURED PAVING PATTERN DETAIL
5. FOR ACCURATE RIGHT OF WAY DATA, CONTACT RIGHT OF WAY ENGINEERING AT THE DISTRICT OFFICE.

LEGEND:

- MINOR CONCRETE (TEXTURED PAVING)
- JPCP (TEXTURED PAVEMENT)
- ROCK BLANKET

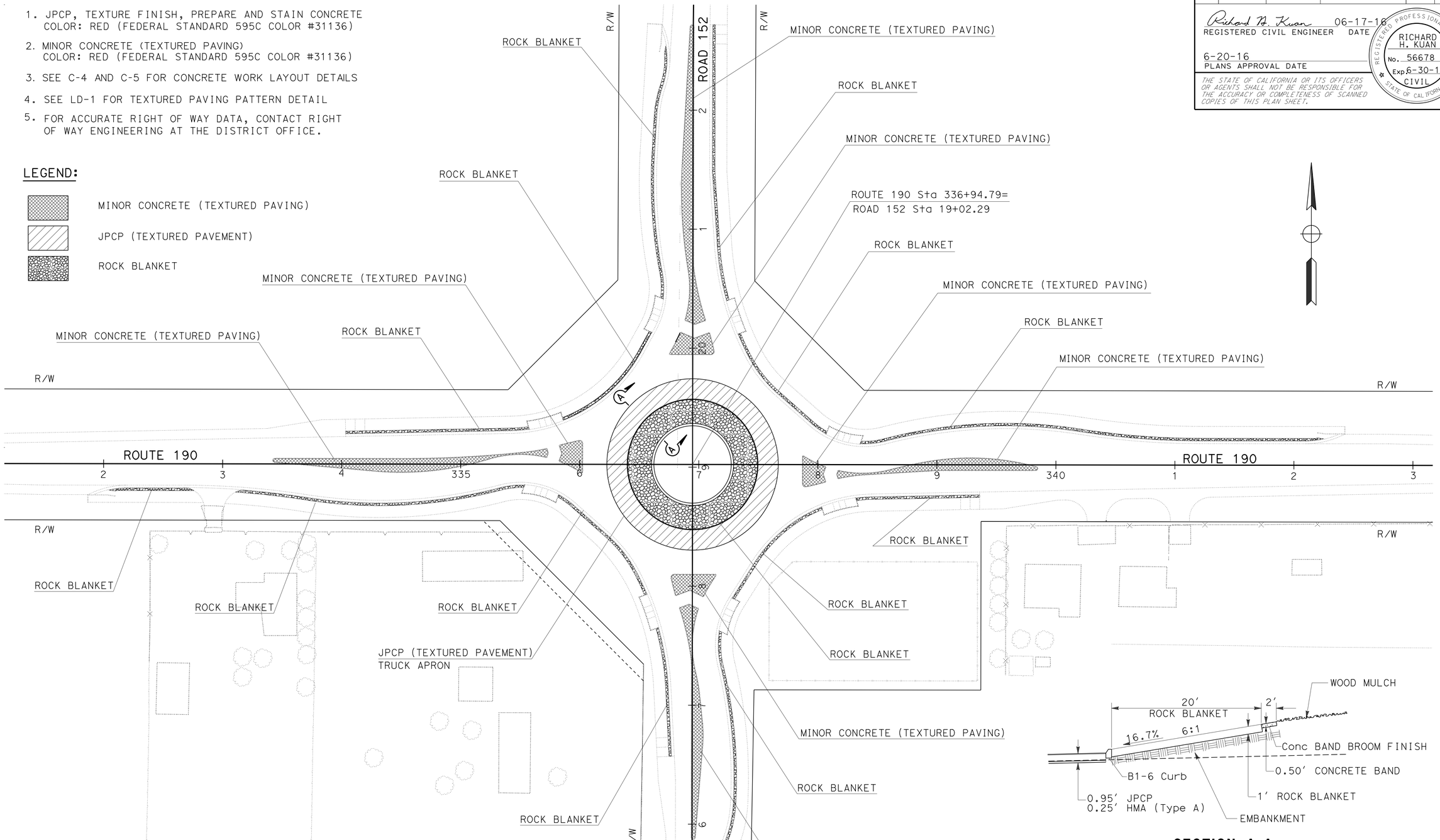

SECTION A-A

CONSTRUCTION DETAILS

NO SCALE

C-1

REVISED BY	DATE REVISED

CALCULATED-DESIGNED BY	CHECKED BY
JOO BAEK	ALBERT VITELA

FUNCTIONAL SUPERVISOR: ERNESTO PENUNA

STATE OF CALIFORNIA - DEPARTMENT OF TRANSPORTATION

Caltrans

DESIGN

LAST REVISION 06-17-16 | DATE PLOTTED => 21-JUL-2016 | TIME PLOTTED => 16:17

Dist	COUNTY	ROUTE	POST MILES TOTAL PROJECT	SHEET No.	TOTAL SHEETS
06	Tul	190	4.1/4.8	11	73

Richard H. Kuan 06-17-16
REGISTERED CIVIL ENGINEER DATE

6-20-16
PLANS APPROVAL DATE

REGISTERED PROFESSIONAL ENGINEER
RICHARD H. KUAN
No. 56678
Exp. 6-30-17
CIVIL
STATE OF CALIFORNIA

THE STATE OF CALIFORNIA OR ITS OFFICERS OR AGENTS SHALL NOT BE RESPONSIBLE FOR THE ACCURACY OR COMPLETENESS OF SCANNED COPIES OF THIS PLAN SHEET.

NOTE:

SEE TYPICAL CROSS SECTION (X-2).

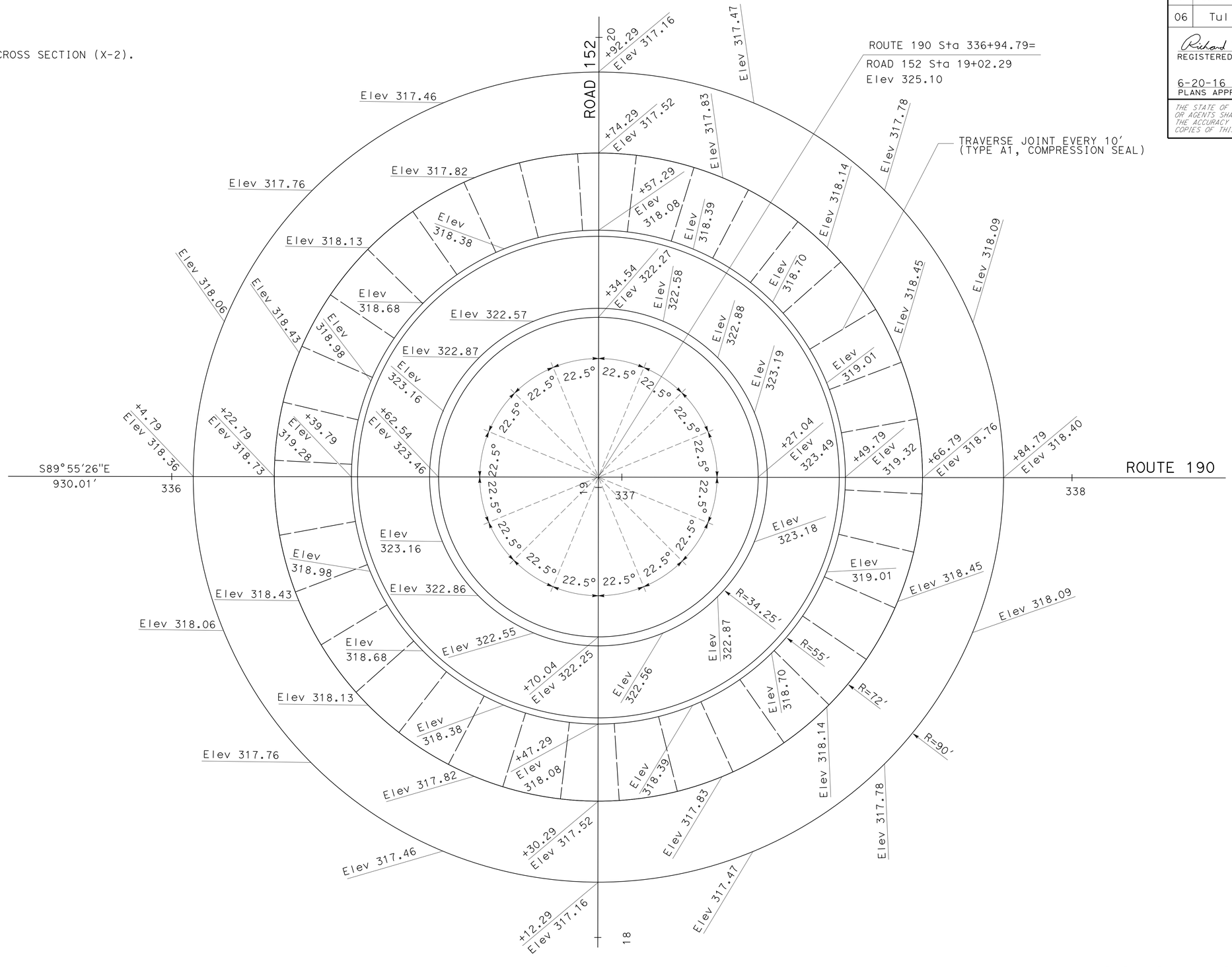

ROUNDABOUT

CONSTRUCTION DETAILS

NO SCALE

C-2

STATE OF CALIFORNIA - DEPARTMENT OF TRANSPORTATION
Caltrans®
DESIGN

FUNCTIONAL SUPERVISOR: ERNESTO PENUNA
CALCULATED-DESIGNED BY: JOO BAEK
CHECKED BY: ALBERT VITELEVA
REVISED BY
DATE REVISED

LAST REVISION 06-17-16
DATE PLOTTED => 21-JUL-2016
TIME PLOTTED => 16:17

Dist	COUNTY	ROUTE	POST MILES TOTAL PROJECT	SHEET No.	TOTAL SHEETS
06	Tul	190	4.1/4.8	12	73

Richard H. Kuan 06-17-16
REGISTERED CIVIL ENGINEER DATE

6-20-16
PLANS APPROVAL DATE

REGISTERED PROFESSIONAL ENGINEER RICHARD H. KUAN No. 56678 Exp. 6-30-17 CIVIL STATE OF CALIFORNIA

THE STATE OF CALIFORNIA OR ITS OFFICERS OR AGENTS SHALL NOT BE RESPONSIBLE FOR THE ACCURACY OR COMPLETENESS OF SCANNED COPIES OF THIS PLAN SHEET.

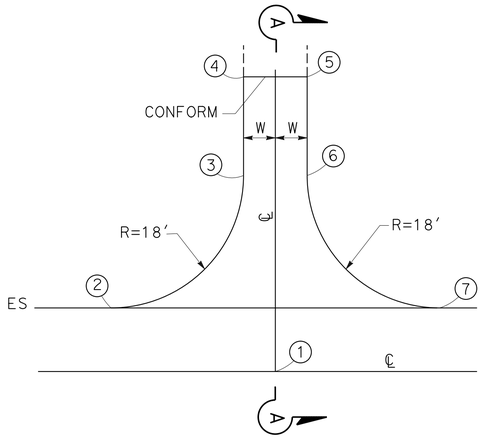

TYPICAL PRIVATE DRIVEWAY

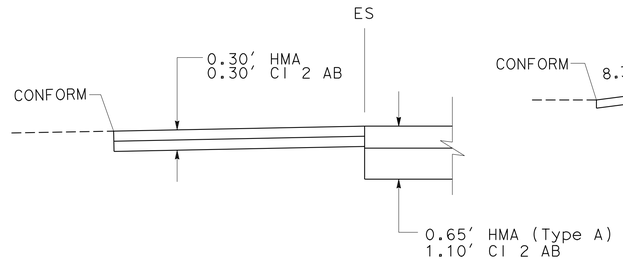

PRIVATE DRIVEWAY (HMA)
SECTION A-A (CASE 1)

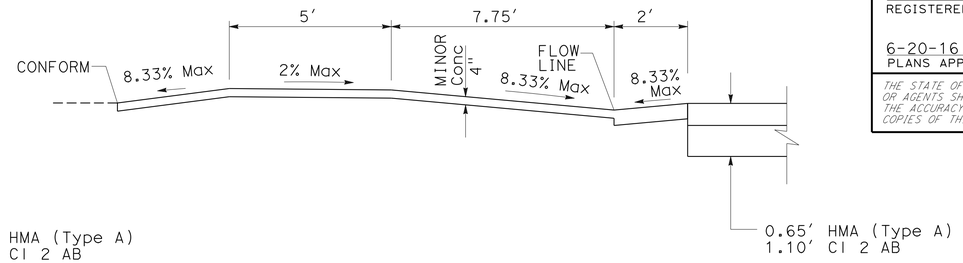

PRIVATE DRIVEWAY (MINOR Conc, SIDEWALK AREA)
SECTION A-A (CASE 2)

DRIVEWAY TABLE

1	2	3	4	5	6	7	NOTE
Rte 190 332+92.74	Rte 190 332+66.74 20.00' Rt	Rte 190 332+84.74 38.00' Rt	Rte 190 332+84.74 47.32' Rt	Rte 190 333+00.74 47.32' Rt	Rte 190 333+00.74 39.91' Rt	Rte 190 333+20.13 21.96' Rt	CASE 2, W=8'
Rte 190 340+34.34	Rte 190 340+07.98 29.42' Rt	Rte 190 340+26.33 47.42' Rt			Rte 190 340+42.33 47.42' Rt	Rte 190 340+59.98 28.38' Rt	CASE 1, W=8'
Rte 190 341+04.27	Rte 190 340+77.93 28.02' Rt	Rte 190 340+96.28 46.02' Rt	Rte 190 340+96.28 47.68' Rt	Rte 190 341+12.28 47.68' Rt	Rte 190 341+12.28 45.01' Rt	Rte 190 341+29.91 27.01' Rt	CASE 1, W=8'
Rte 190 345+86.65	Rte 190 345+56.52 26.00' Rt	Rte 190 345+74.42 44.04' Rt			Rte 190 345+98.42 44.04' Rt	Rte 190 346+16.63 26.00' Rt	CASE 1, W=12'
ROAD 152 15+52.00	ROAD 152 15+26.09 22.00 Lt	ROAD 152 15+44.00 39.88' Lt	ROAD 152 15+44.00 43.65' Lt	ROAD 152 15+60.00 43.49' Lt	ROAD 152 15+60.00 40.25' Lt	ROAD 152 15+78.28 22.00 Lt	CASE 1, W=8'

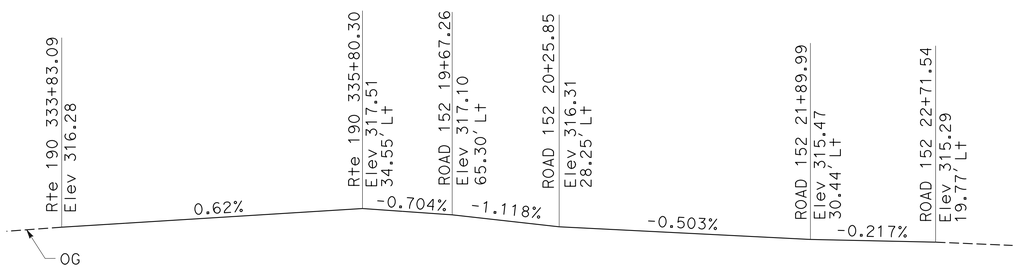

NORTHWEST CORNER OF ROUNDABOUT

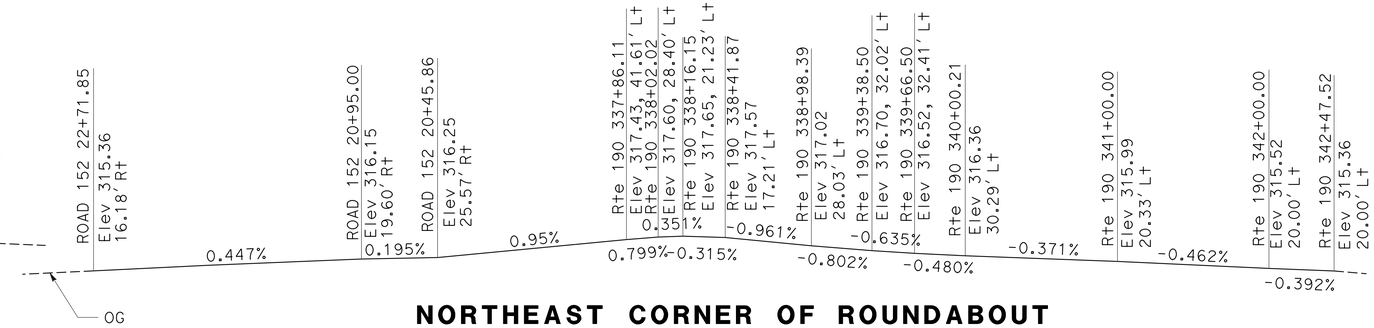

NORTHEAST CORNER OF ROUNDABOUT

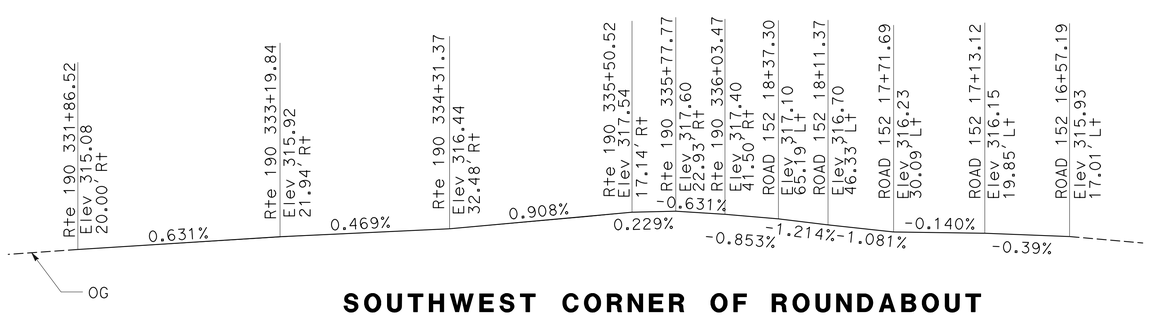

SOUTHWEST CORNER OF ROUNDABOUT

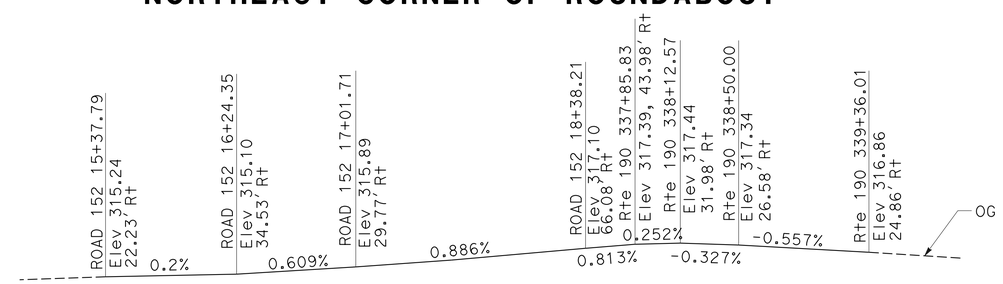

SOUTHEAST CORNER OF ROUNDABOUT

FLOW LINE PROFILE (SIDEWALK AREA)

CONSTRUCTION DETAILS
NO SCALE

C-3

STATE OF CALIFORNIA - DEPARTMENT OF TRANSPORTATION
Caltrans® DESIGN

FUNCTIONAL SUPERVISOR: ERNESTO PENUNA
CALCULATED-DESIGNED BY: JOO BAEK
CHECKED BY: FERNANDO MORALES
REVISED BY / DATE REVISED

LAST REVISION 06-17-16
DATE PLOTTED => 21-JUL-2016
TIME PLOTTED => 16:17

Dist	COUNTY	ROUTE	POST MILES TOTAL PROJECT	SHEET No.	TOTAL SHEETS
06	Tul	190	4.1/4.8	13	73

Richard H. Kuan 06-17-16
REGISTERED CIVIL ENGINEER DATE

6-20-16
PLANS APPROVAL DATE

REGISTERED PROFESSIONAL ENGINEER RICHARD H. KUAN No. 56678 Exp. 6-30-17 CIVIL STATE OF CALIFORNIA

THE STATE OF CALIFORNIA OR ITS OFFICERS OR AGENTS SHALL NOT BE RESPONSIBLE FOR THE ACCURACY OR COMPLETENESS OF SCANNED COPIES OF THIS PLAN SHEET.

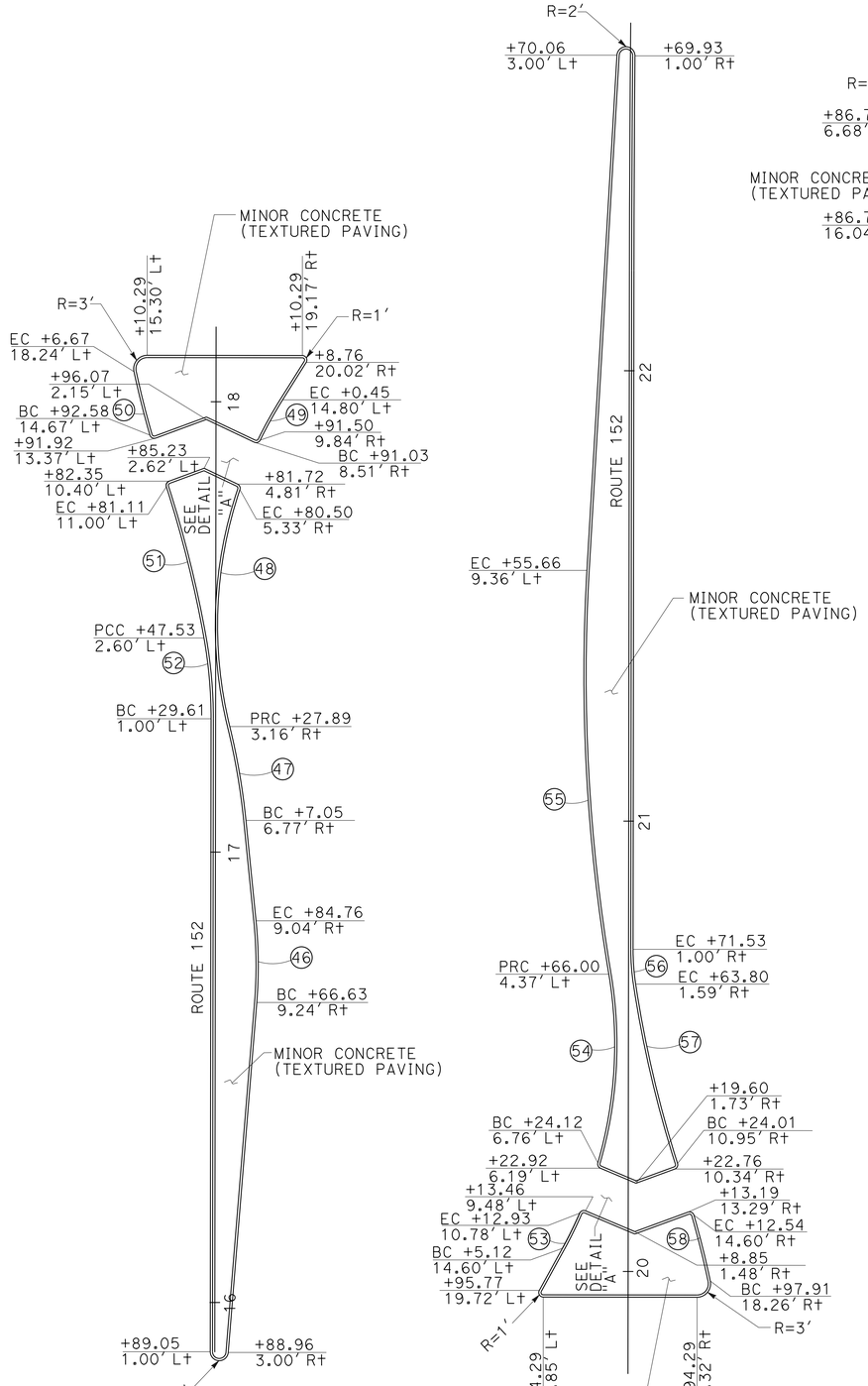

SPLITTER ISLAND (ROAD 152)

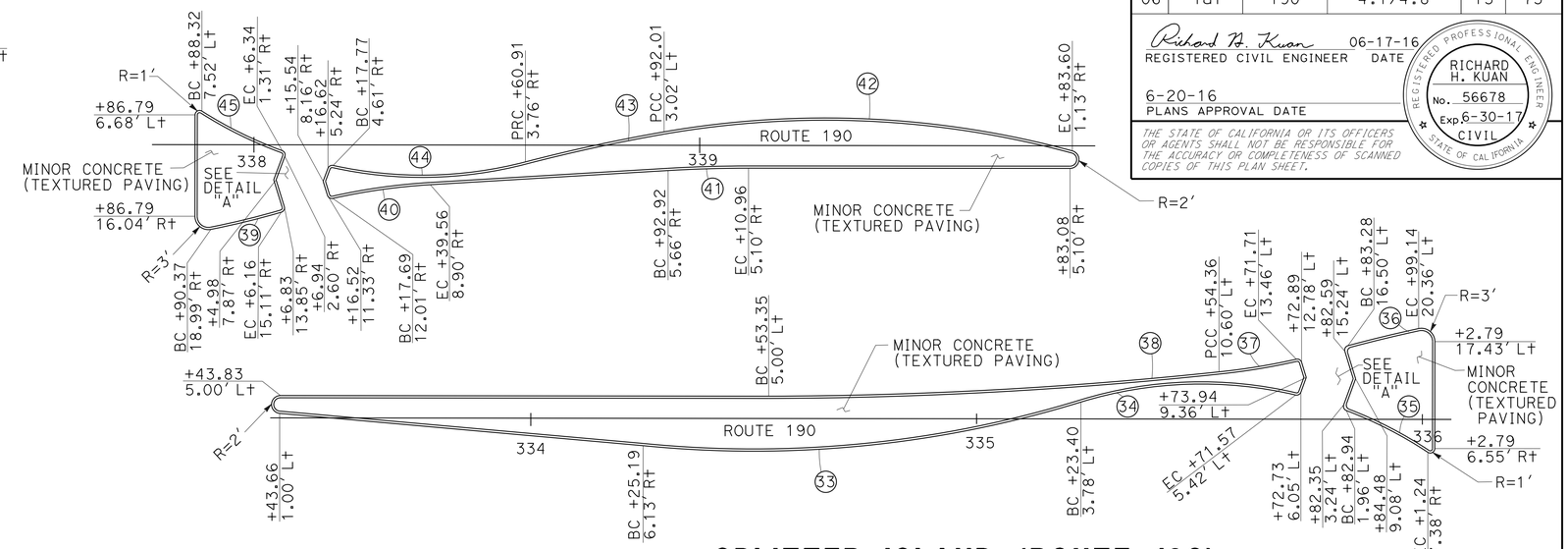

SPLITTER ISLAND (ROUTE 190)

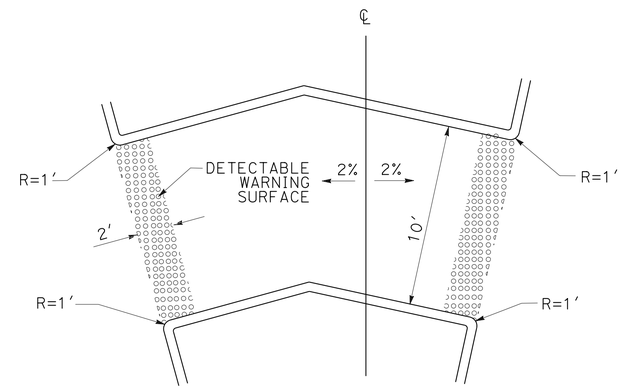

DETAIL "A"

CURVE DATA

No. ⊕	R	Δ	T	L
33	250′	22°46′17"	50.34′	99.36′
34	92′	30°22′12"	24.97′	48.76′
35	92′	12°49′15"	10.34′	20.59′
36	330′	02°50′02"	8.16′	16.32′
37	146′	06°54′17"	8.81′	17.59′
38	981′	05°54′47"	50.65′	101.21′
39	180′	05°10′39"	8.14′	16.27′
40	138′	09°10′53"	11.08′	22.11′
41	300′	03°26′54"	9.03′	18.06′
42	212′	24°58′33"	46.95′	92.41′
43	380′	04°48′00"	15.93′	31.84′
44	92′	27°07′23"	22.19′	43.55′
45	92′	12°31′16"	10.09′	20.11′
46	100′	10°24′08"	9.10′	18.16′
47	150′	08°05′02"	10.60′	21.16′
48	94′	32°31′45"	27.42′	53.37′
49	94′	06°14′23"	5.12′	10.24′
50	199′	04°11′07"	7.27′	14.54′
51	259′	07°39′44"	17.34′	34.64′
52	101′	10°13′16"	9.03′	18.02′
53	94′	05°18′09"	4.35′	8.70′
54	94′	25°47′09"	21.52′	42.30′
55	400′	12°53′24"	45.19′	89.99′
56	200′	04°19′10"	7.54′	15.08′
57	259′	09°03′09"	20.50′	40.92′
58	51′	08°42′45"	3.89′	7.76′

CONSTRUCTION DETAILS

NO SCALE

C-4

STATE OF CALIFORNIA - DEPARTMENT OF TRANSPORTATION
Caltrans® DESIGN

FUNCTIONAL SUPERVISOR: ERNESTO PENUNA
CALCULATED-DESIGNED BY: JOO BAEK
CHECKED BY: FERNANDO MORALES
REVISED BY / DATE REVISED

LAST REVISION 06-17-16 DATE PLOTTED => 21-JUL-2016 TIME PLOTTED => 16:17

Dist	COUNTY	ROUTE	POST MILES TOTAL PROJECT	SHEET No.	TOTAL SHEETS
06	Tul	190	4.1/4.8	14	73

Richard H. Kuan 06-17-16
REGISTERED CIVIL ENGINEER DATE

6-20-16
PLANS APPROVAL DATE

REGISTERED PROFESSIONAL ENGINEER RICHARD H. KUAN No. 56678 Exp 6-30-17 CIVIL STATE OF CALIFORNIA

THE STATE OF CALIFORNIA OR ITS OFFICERS OR AGENTS SHALL NOT BE RESPONSIBLE FOR THE ACCURACY OR COMPLETENESS OF SCANNED COPIES OF THIS PLAN SHEET.

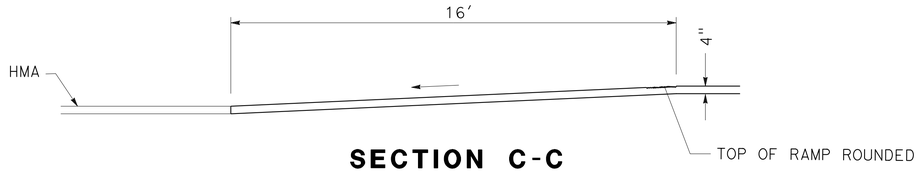

SECTION C-C

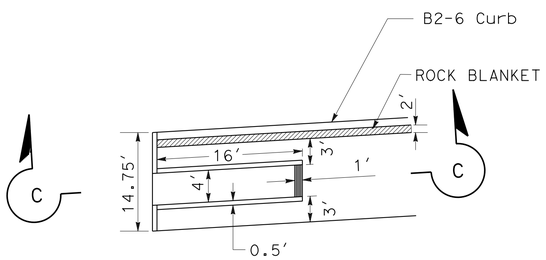

DETAIL "C" (BICYCLE RAMP)

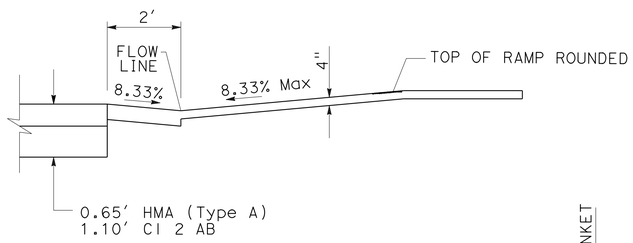

SECTION A-A

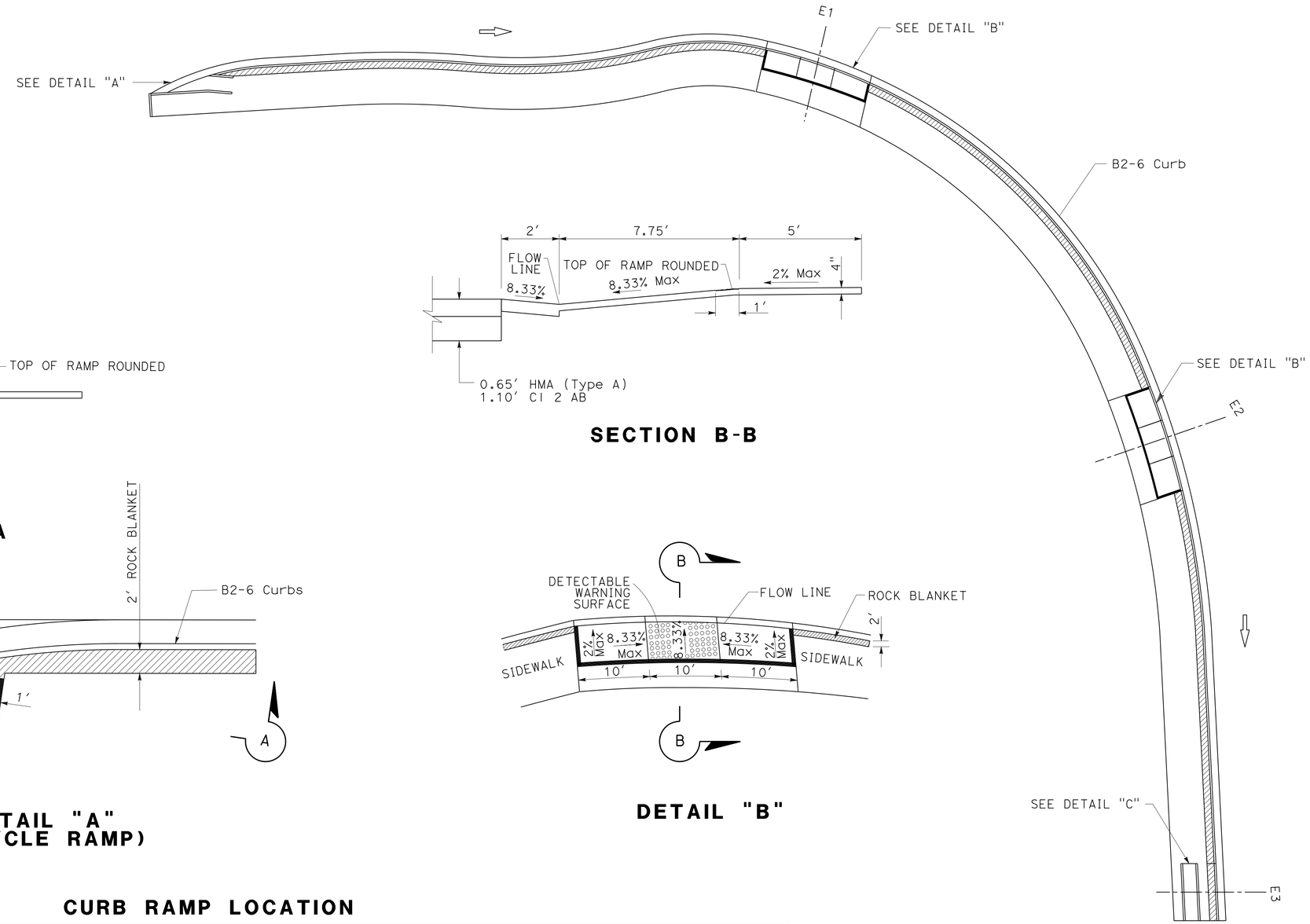

SECTION B-B

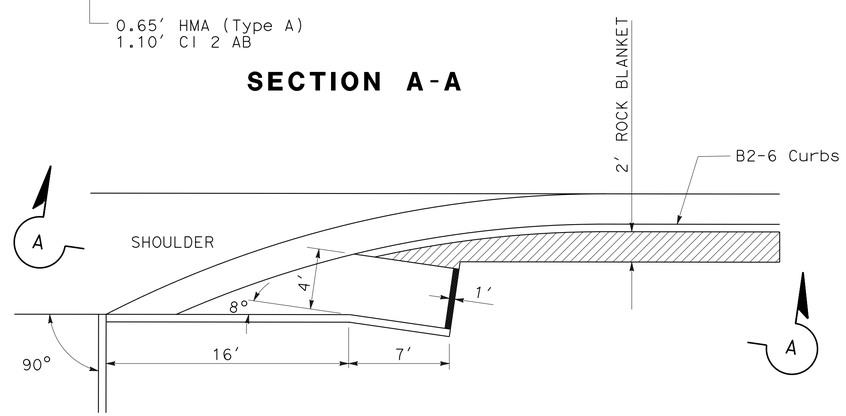

DETAIL "A" (BICYCLE RAMP)

DETAIL "B"

CURB RAMP LOCATION

LOCATION	E1	E2	E3	NOTE
SOUTH WEST SIDE OF ROUNDABOUT	ROUTE 190 335+68.69, 19.65′ R†	ROAD 152 17+79.47, 32.60′ L†	ROAD 152 16+65.10, 17.40′ L†	STATION AND OFFSET AT FLOW LINE
SOUTH EAST SIDE OF ROUNDABOUT	ROAD 152 17+77.04, 26.42′ R†	ROUTE 190 338+17.26, 30.64′ R†	ROUTE 190 339+28.00, 25.02′ R†	STATION AND OFFSET AT FLOW LINE
NORTH EAST SIDE OF ROUNDABOUT	ROUTE 190 338+20.59, 19.78′ L†	ROAD 152 20+25.60, 32.55′ R†	ROAD 152 21+63.93, 16.00′ R†	STATION AND OFFSET AT FLOW LINE
NORTH WEST SIDE OF ROUNDABOUT	ROAD 152 20+26.66, 27.97′ L†	ROUTE 190 335+72.16, 32.11′ L†	ROUTE 190 334+11.33, 25.23′ L†	STATION AND OFFSET AT FLOW LINE

CONSTRUCTION DETAILS

NO SCALE

C-5

STATE OF CALIFORNIA - DEPARTMENT OF TRANSPORTATION
Caltrans
DESIGN

FUNCTIONAL SUPERVISOR: ERNESTO PENUNA
CALCULATED-DESIGNED BY: JOO BAEK
CHECKED BY: FERNANDO MORALES
REVISED BY
DATE REVISED

LAST REVISION
DATE PLOTTED => 21-JUL-2016
TIME PLOTTED => 16:17
06-17-16

Dist	COUNTY	ROUTE	POST MILES TOTAL PROJECT	SHEET No.	TOTAL SHEETS
06	Tul	190	4.1/4.8	15	73

Richard H. Kuan 06-17-16
REGISTERED CIVIL ENGINEER DATE

6-20-16
PLANS APPROVAL DATE

REGISTERED PROFESSIONAL ENGINEER RICHARD H. KUAN No. 56678 Exp 6-30-17 CIVIL STATE OF CALIFORNIA

THE STATE OF CALIFORNIA OR ITS OFFICERS OR AGENTS SHALL NOT BE RESPONSIBLE FOR THE ACCURACY OR COMPLETENESS OF SCANNED COPIES OF THIS PLAN SHEET.

NOTES:

1. FOR DIMENSIONS AND Const DETAILS NOT SHOWN, SEE Std PLAN A85A
2. GRADE 16′ x 16′ SQUARE AT GATE TO: CROSS SLOPE 2% Max; MATCH EXISTING DIRECTIONAL SLOPE. PROVIDE 16′ Min TRANSITIONS (CROSS SLOPE AND DIRECTIONAL SLOPE) TO EXISTING AT 2:1 Max.

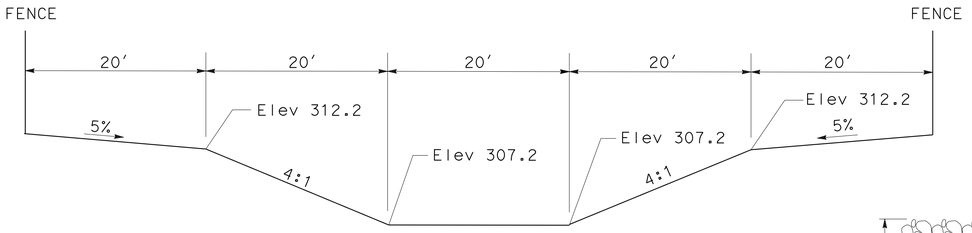

SECTION A-A

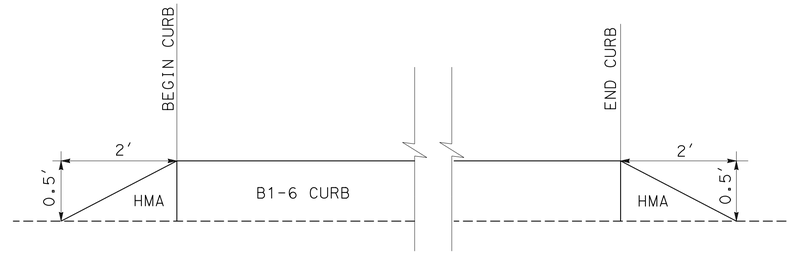

B1-6 CURB TRANSITION (SIDE VIEW)

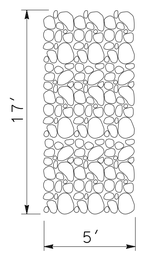

DETAIL B

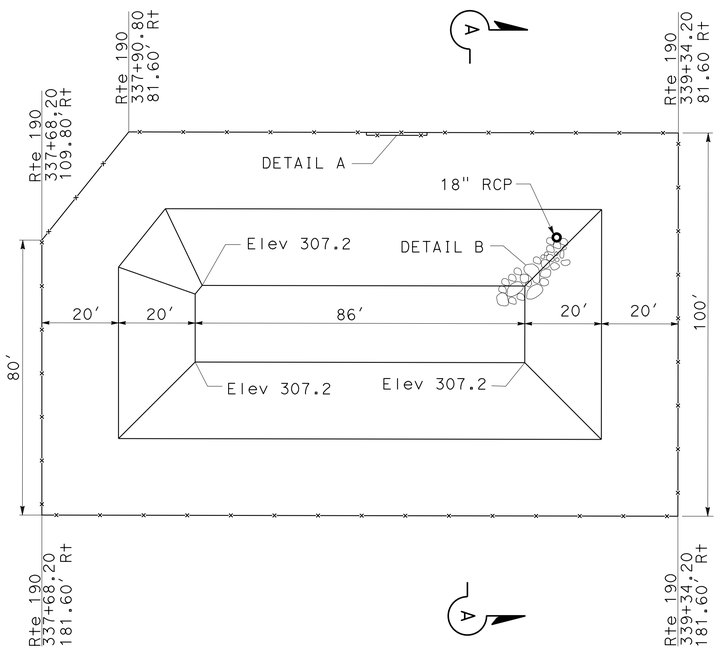

DRAINAGE BASIN

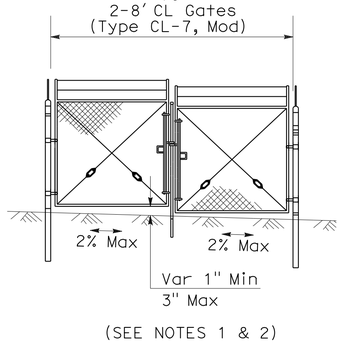

DETAIL A

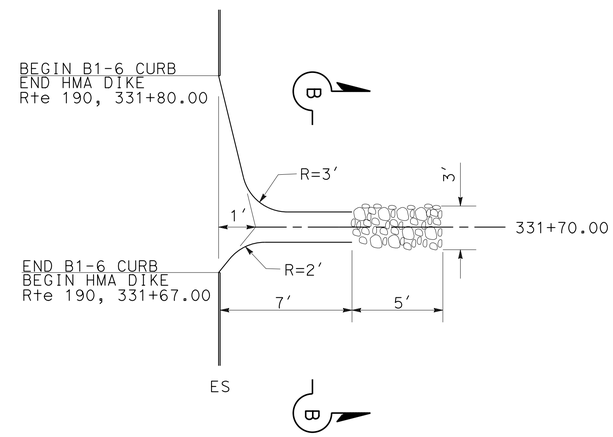

HMA OVERSIDE DRAIN

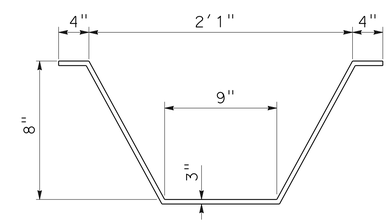

SECTION B-B

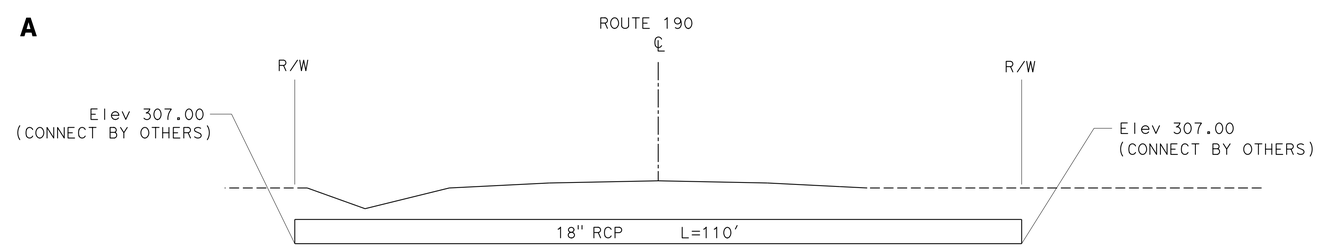

IRRIGATION CROSS CULVERT (STATION 343+00)

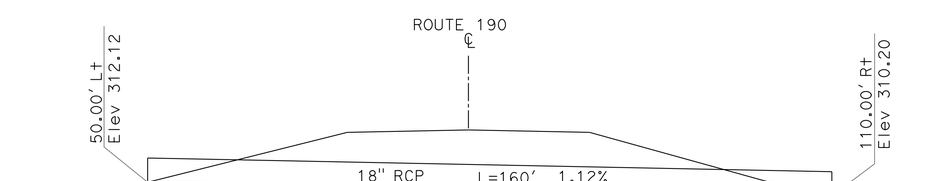

DRAINAGE CROSS CULVERT (STATION 339+00)

CONSTRUCTION DETAILS

NO SCALE

C-6

STATE OF CALIFORNIA - DEPARTMENT OF TRANSPORTATION
Caltrans DESIGN

FUNCTIONAL SUPERVISOR: ERNESTO PENUNA
CALCULATED-DESIGNED BY: JOO BAEK
CHECKED BY: FERNANDO MORALES
REVISED BY / DATE REVISED

LAST REVISION 06-17-16
DATE PLOTTED => 21-JUL-2016
TIME PLOTTED => 16:17

Dist	COUNTY	ROUTE	POST MILES TOTAL PROJECT	SHEET No.	TOTAL SHEETS
06	Tul	190	4.1/4.8	16	73

Richard H. Kuan 06-17-16
REGISTERED CIVIL ENGINEER DATE

6-20-16
PLANS APPROVAL DATE

REGISTERED PROFESSIONAL ENGINEER RICHARD H. KUAN No. 56678 Exp 6-30-17 CIVIL STATE OF CALIFORNIA

THE STATE OF CALIFORNIA OR ITS OFFICERS OR AGENTS SHALL NOT BE RESPONSIBLE FOR THE ACCURACY OR COMPLETENESS OF SCANNED COPIES OF THIS PLAN SHEET.

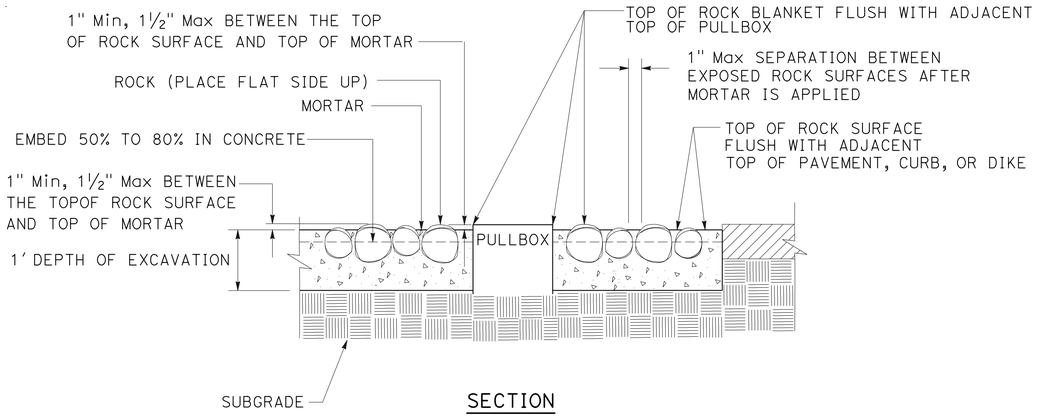

SECTION

ROCK BLANKET AT PULLBOX

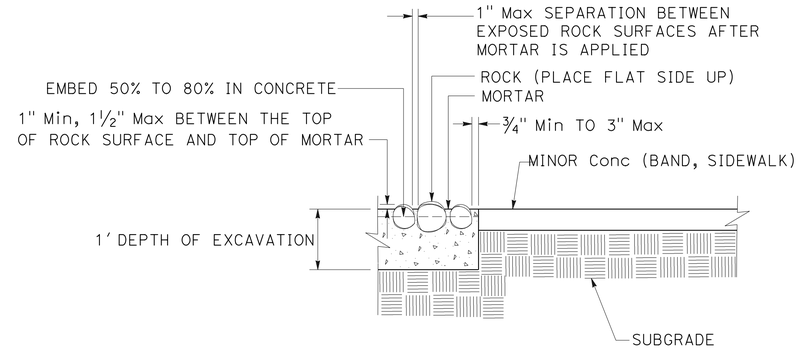

SECTION

ROCK BLANKET AT SIDEWALK

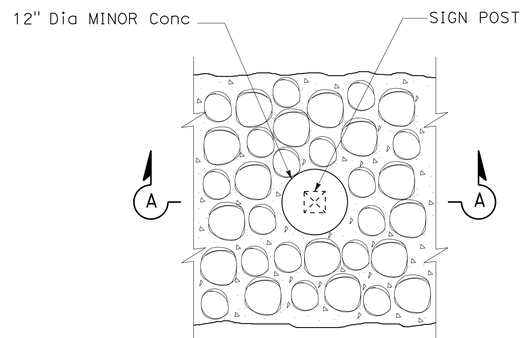

PLAN

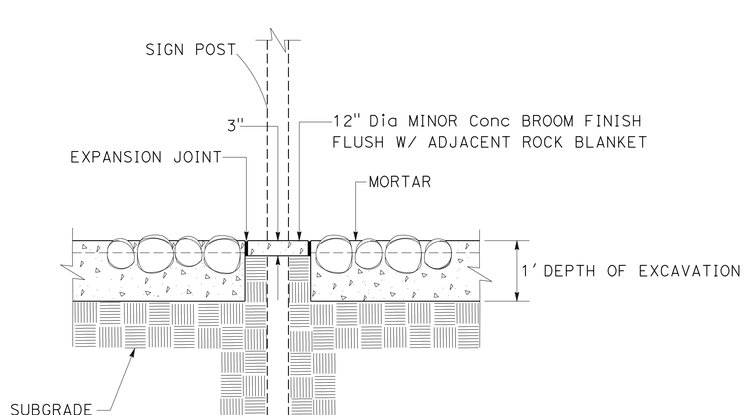

SECTION A-A

ROCK BLANKET BLOCK OUT AT SIGN POST

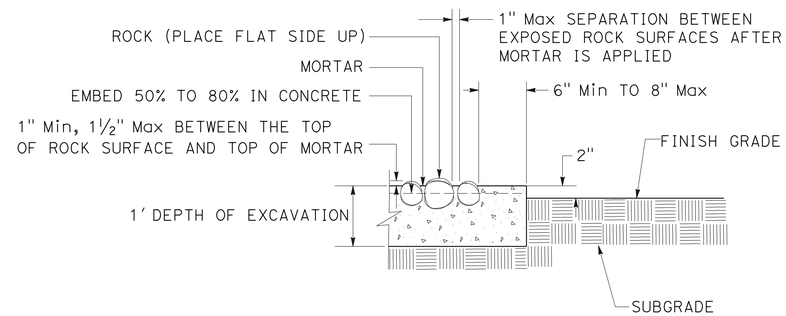

SECTION

ROCK BLANKET AT FINISH GRADE

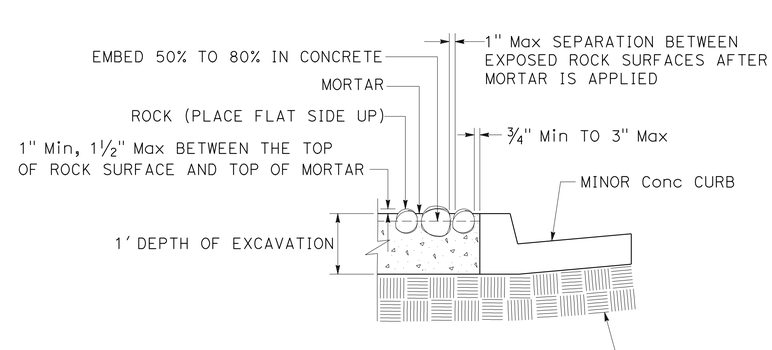

SECTION

ROCK BLANKET AT CURB

CONSTRUCTION DETAILS

NO SCALE

C-7

STATE OF CALIFORNIA - DEPARTMENT OF TRANSPORTATION
Caltrans®
DESIGN

FUNCTIONAL SUPERVISOR: ERNESTO PENUNA
CALCULATED-DESIGNED BY: JOO BAEK
CHECKED BY: ALBERT VITELA
REVISED BY | DATE REVISED

LAST REVISION 06-17-16
DATE PLOTTED => 21-JUL-2016
TIME PLOTTED => 16:17

Dist	COUNTY	ROUTE	POST MILES TOTAL PROJECT	SHEET No.	TOTAL SHEETS
06	Tul	190	4.1/4.8	17	73

Richard H. Kuan 06-17-16
REGISTERED CIVIL ENGINEER DATE

6-20-16
PLANS APPROVAL DATE

REGISTERED PROFESSIONAL ENGINEER
RICHARD H. KUAN
No. 56678
Exp 6-30-17
CIVIL
STATE OF CALIFORNIA

THE STATE OF CALIFORNIA OR ITS OFFICERS OR AGENTS SHALL NOT BE RESPONSIBLE FOR THE ACCURACY OR COMPLETENESS OF SCANNED COPIES OF THIS PLAN SHEET.

NOTES:

1. FOR ACCURATE RIGHT OF WAY DATA, CONTACT RIGHT OF WAY ENGINEERING AT THE DISTRICT OFFICE.
2. LOCATIONS OF UTILITY FACILITIES SHOWN ON THESE PLANS ARE APPROXIMATE. UTILITY TO BE VERIFIED BY UTILITY FACILITIES.
3. UTILITY OWNERSHIP:

   ELECTRICAL - SOUTHERN CALIFORNIA EDISON (SCE)
   TELEPHONE - AMERICAN TELPHONE AND TELEGRAPH (AT&T)

LEGEND

—— - e —— —— -(oh)—	EXISTING OVERHEAD ELECTRICAL, SOUTHERN CALIFORNIA EDISON
—— - - t —— —— - - t —	EXISTING UNDERGROUND TELEPHONE LINE, AT&T
—— - - T —— —— - - T —	PROPOSED UNDERGROUND TELEPHONE LINE, AT&T
—— - - t —— —— - -(oh)—	EXISTING OVERHEAD TELEPHONE LINE, AT&T
☒	UTILITY IN CONFLICT (RELOCATE BY OTHERS)
═══	12" CHDPE PIPE CONDUIT
- - - - - -	18" RCP

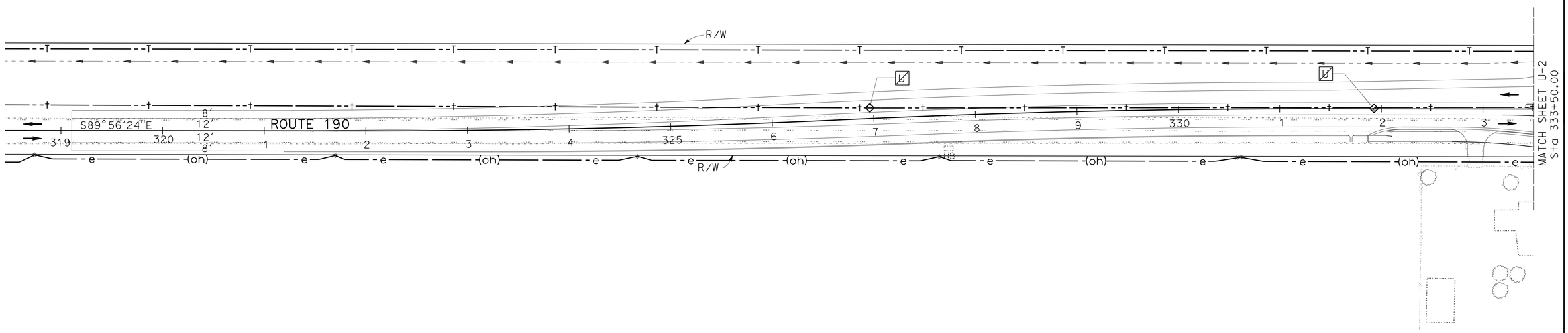

UTILITY PLAN

SCALE: 1"=50'

U-1

THIS PLAN TO BE USED FOR UTILITY INFORMATION ONLY

STATE OF CALIFORNIA - DEPARTMENT OF TRANSPORTATION
Caltrans
DESIGN

FUNCTIONAL SUPERVISOR: ERNESTO PENUNA
CALCULATED-DESIGNED BY: JOO BAEK
CHECKED BY: RICHARD KUAN
REVISED BY
DATE REVISED

LAST REVISION 06-17-16
DATE PLOTTED => 21-JUL-2016
TIME PLOTTED => 16:17

Dist	COUNTY	ROUTE	POST MILES TOTAL PROJECT	SHEET No.	TOTAL SHEETS
06	Tul	190	4.1/4.8	18	73

Richard H. Kuan 06-17-16
REGISTERED CIVIL ENGINEER DATE

6-20-16
PLANS APPROVAL DATE

REGISTERED PROFESSIONAL ENGINEER
RICHARD H. KUAN
No. 56678
Exp. 6-30-17
CIVIL
STATE OF CALIFORNIA

THE STATE OF CALIFORNIA OR ITS OFFICERS OR AGENTS SHALL NOT BE RESPONSIBLE FOR THE ACCURACY OR COMPLETENESS OF SCANNED COPIES OF THIS PLAN SHEET.

NOTES:

1. FOR ACCURATE RIGHT OF WAY DATA, CONTACT RIGHT OF WAY ENGINEERING AT THE DISTRICT OFFICE.
2. LOCATIONS OF UTILITY FACILITIES SHOWN ON THESE PLANS ARE APPROXIMATE. UTILITY TO BE VERIFIED BY THE UTILITY FACILITIES.

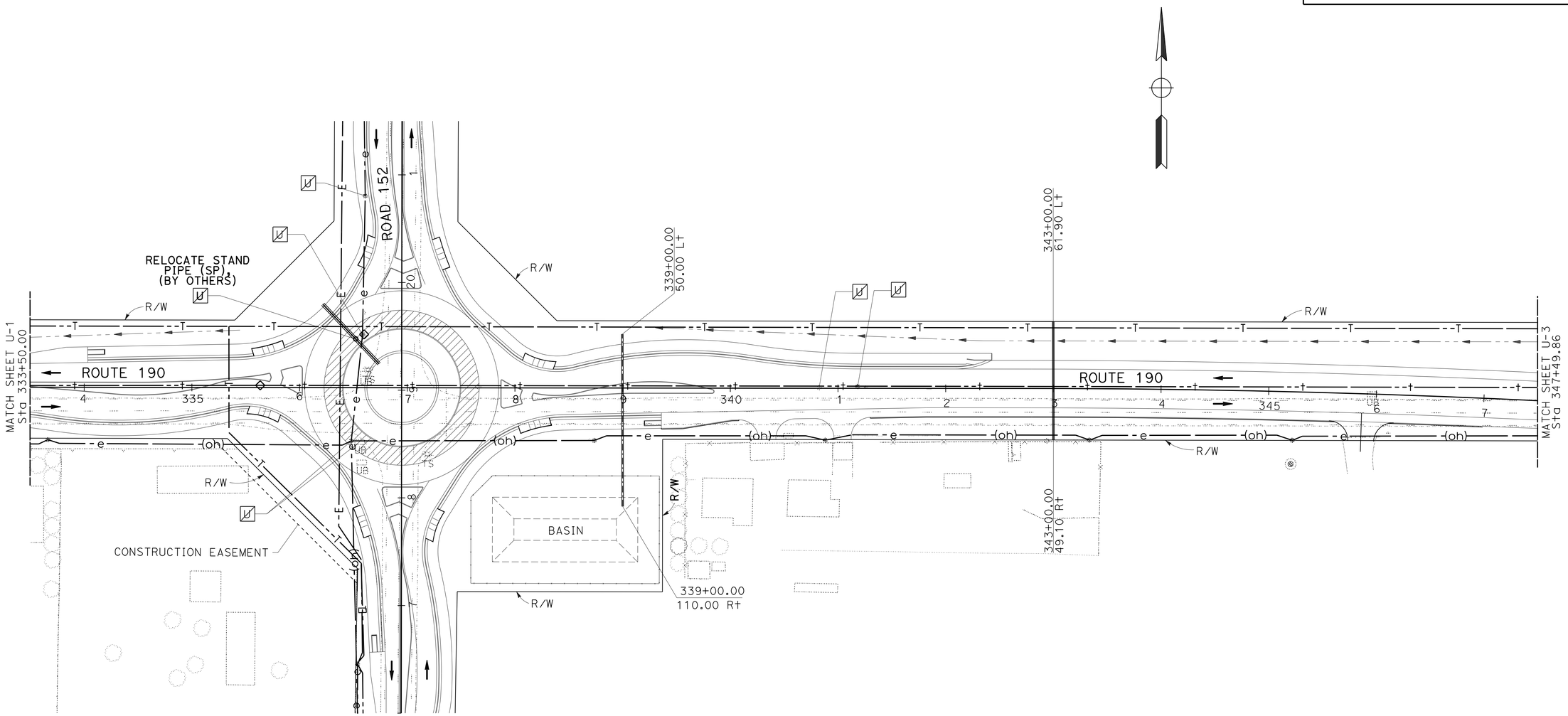

UTILITY PLAN

SCALE: 1"=50'

U-2

THIS PLAN TO BE USED FOR UTILITY INFORMATION ONLY

STATE OF CALIFORNIA - DEPARTMENT OF TRANSPORTATION
Caltrans
DESIGN

FUNCTIONAL SUPERVISOR: ERNESTO PENUNA
CALCULATED-DESIGNED BY: JOO BAEK
CHECKED BY: RICHARD KUAN
REVISED BY
DATE REVISED

LAST REVISION 06-17-16
DATE PLOTTED => 21-JUL-2016
TIME PLOTTED => 16:17

Dist	COUNTY	ROUTE	POST MILES TOTAL PROJECT	SHEET No.	TOTAL SHEETS
06	Tul	190	4.1/4.8	19	73

Richard H. Kuan 06-17-16
REGISTERED CIVIL ENGINEER DATE

6-20-16
PLANS APPROVAL DATE

REGISTERED PROFESSIONAL ENGINEER
RICHARD H. KUAN
No. 56678
Exp. 6-30-17
CIVIL
STATE OF CALIFORNIA

THE STATE OF CALIFORNIA OR ITS OFFICERS OR AGENTS SHALL NOT BE RESPONSIBLE FOR THE ACCURACY OR COMPLETENESS OF SCANNED COPIES OF THIS PLAN SHEET.

NOTES:

1. FOR ACCURATE RIGHT OF WAY DATA, CONTACT RIGHT OF WAY ENGINEERING AT THE DISTRICT OFFICE.
2. LOCATIONS OF UTILITY FACILITIES SHOWN ON THESE PLANS ARE APPROXIMATE. UTILITY TO BE VERIFIED BY THE UTILITY FACILITIES.

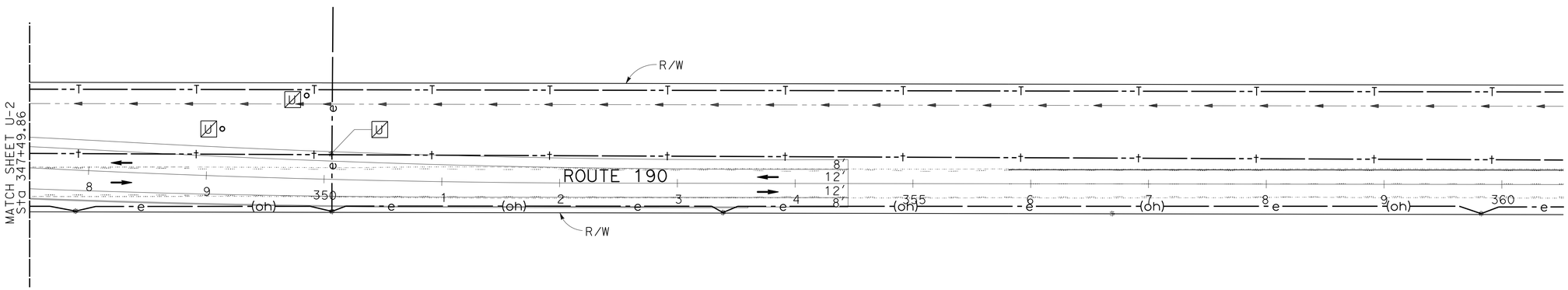

UTILITY PLAN

SCALE: 1"=50'

U-3

THIS PLAN TO BE USED FOR UTILITY INFORMATION ONLY

REVISED BY	DATE REVISED

CALCULATED-DESIGNED BY: JOO BAEK
CHECKED BY: RICHARD KUAN
FUNCTIONAL SUPERVISOR: ERNESTO PENUNA

STATE OF CALIFORNIA - DEPARTMENT OF TRANSPORTATION
Caltrans
DESIGN

LAST REVISION 06-17-16
DATE PLOTTED => 21-JUL-2016
TIME PLOTTED => 16:17

Dist	COUNTY	ROUTE	POST MILES TOTAL PROJECT	SHEET No.	TOTAL SHEETS
06	Tul	190	4.1/4.8	20	73

Richard H. Kuan 06-17-16
REGISTERED CIVIL ENGINEER DATE

6-20-16
PLANS APPROVAL DATE

REGISTERED PROFESSIONAL ENGINEER
RICHARD H. KUAN
No. 56678
Exp 6-30-17
CIVIL
STATE OF CALIFORNIA

THE STATE OF CALIFORNIA OR ITS OFFICERS OR AGENTS SHALL NOT BE RESPONSIBLE FOR THE ACCURACY OR COMPLETENESS OF SCANNED COPIES OF THIS PLAN SHEET.

NOTES:

1. FOR ACCURATE RIGHT OF WAY DATA, CONTACT RIGHT OF WAY ENGINEERING AT THE DISTRICT OFFICE.
2. LOCATIONS OF UTILITY FACILITIES SHOWN ON THESE PLANS ARE APPROXIMATE. UTILITY TO BE VERIFIED BY UTILITY FACILITIES.

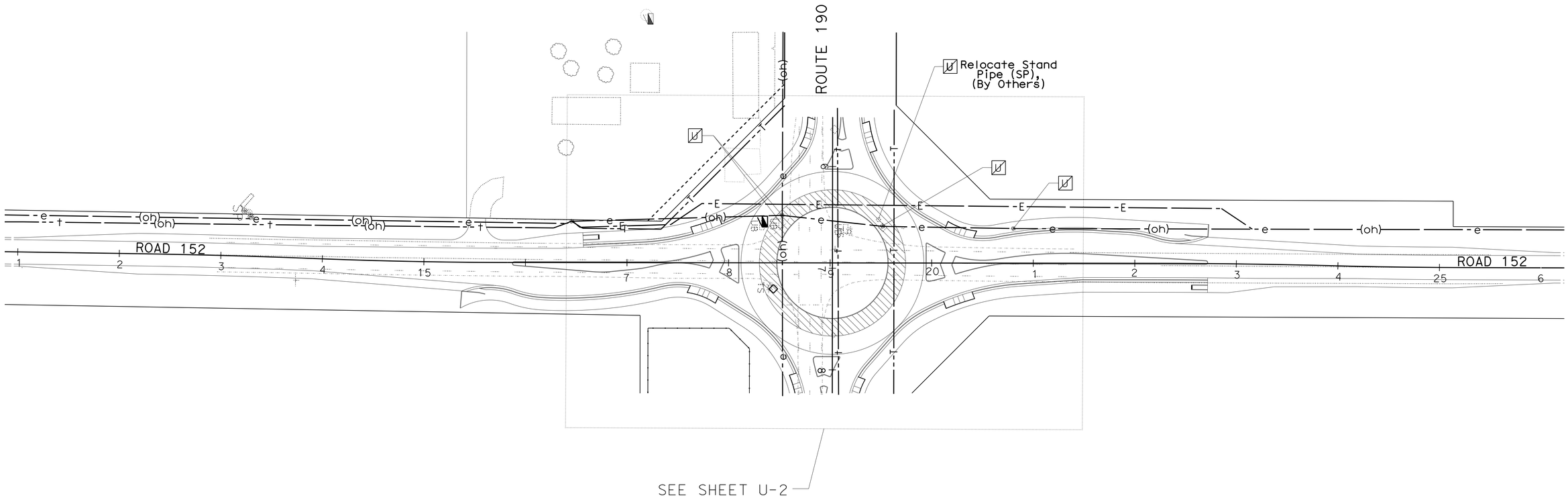

UTILITY PLAN

SCALE: 1"=50'

U-4

THIS PLAN TO BE USED FOR UTILITY INFORMATION ONLY

STATE OF CALIFORNIA - DEPARTMENT OF TRANSPORTATION
Caltrans
DESIGN

FUNCTIONAL SUPERVISOR: ERNESTO PENUNA
CALCULATED-DESIGNED BY: JOO BAEK
CHECKED BY: RICHARD KUAN
REVISED BY
DATE REVISED

LAST REVISION 06-17-16
DATE PLOTTED => 21-JUL-2016
TIME PLOTTED => 16:17

Dist	COUNTY	ROUTE	POST MILES TOTAL PROJECT	SHEET No.	TOTAL SHEETS
06	Tul	190	4.1/4.8	21	73

REGISTERED CIVIL ENGINEER 06-17-16 DATE

6-20-16
PLANS APPROVAL DATE

REGISTERED PROFESSIONAL ENGINEER KAMRUL KHAN No. 74112 Exp 06/30/17 CIVIL STATE OF CALIFORNIA

THE STATE OF CALIFORNIA OR ITS OFFICERS OR AGENTS SHALL NOT BE RESPONSIBLE FOR THE ACCURACY OR COMPLETENESS OF SCANNED COPIES OF THIS PLAN SHEET.

STATIONARY MOUNTED CONSTRUCTION AREA SIGNS

SIGN (X)	SIGN CODE FEDERAL	SIGN CODE CALIFORNIA	SIGN MESSAGE	PANEL SIZE	No. OF POSTS AND SIZE	No. OF SIGNS
(A)	W20-1		ROAD WORK AHEAD	48" x 48"	1 - 6" x 6"	2
(B)	W20-1		ROAD WORK AHEAD	36" x 36"	1 - 4" x 6"	7
(C)	G20-2		END ROAD WORK	48" x 24"	1 - 4" x 6"	2
(D)	G20-2		END ROAD WORK	36" x 18"	1 - 4" x 4"	2

NOTES:

1. EXACT LOCATION AND POSITION OF SIGNS WILL BE DETERMINED BY THE ENGINEER.
2. FOR ADDITIONAL CONSTRUCTION AREA SIGNS, REFER TO TRAFFIC HANDLING PLANS.

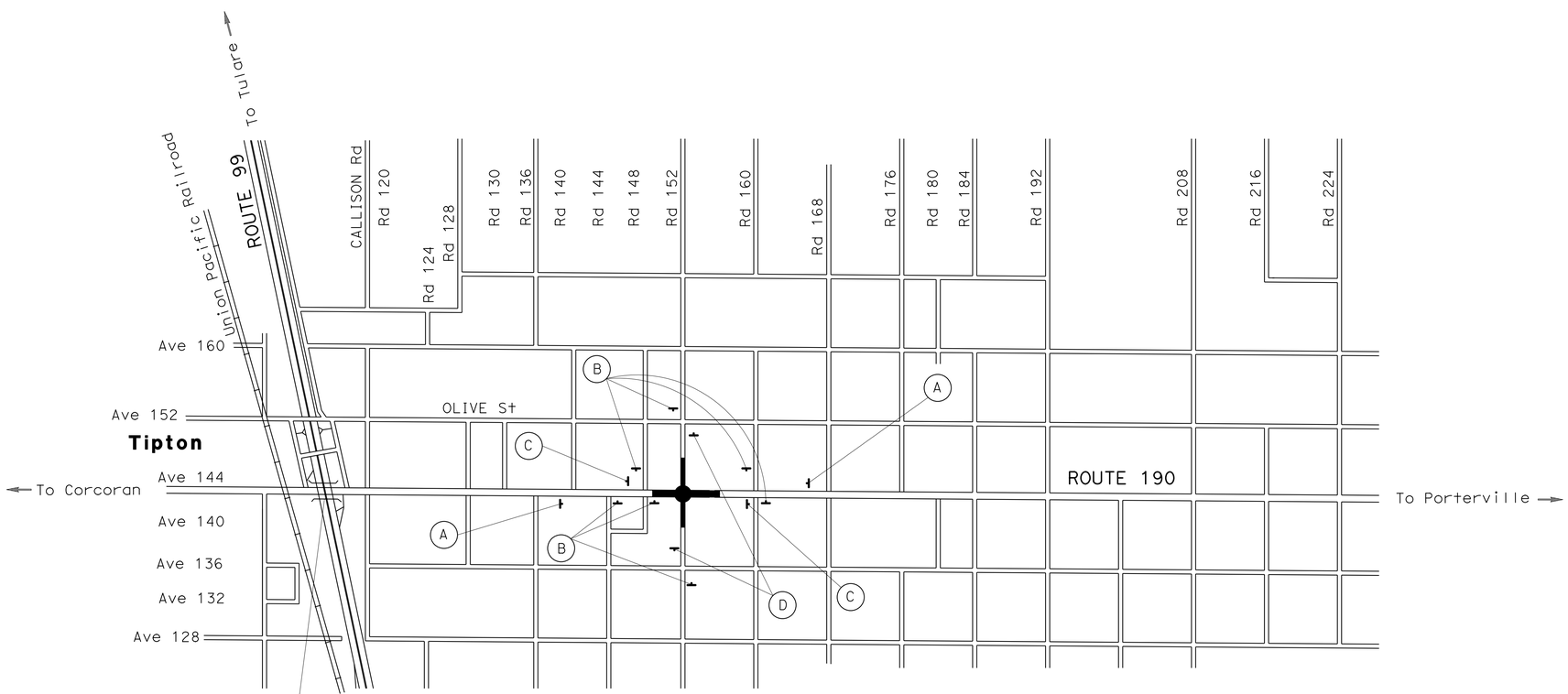

APPROVED FOR CONSTRUCTION AREA SIGN WORK ONLY

CONSTRUCTION AREA SIGNS

NO SCALE

CS-1

STATE OF CALIFORNIA - DEPARTMENT OF TRANSPORTATION
Caltrans®
TRAFFIC DESIGN

FUNCTIONAL SUPERVISOR: MOHAMMED QATAMI
CALCULATED-DESIGNED BY: KAMRUL KHAN
CHECKED BY: HASSAN M. TAHA
REVISED BY
DATE REVISED

LAST REVISION 06-17-16 | DATE PLOTTED => 21-JUL-2016 | TIME PLOTTED => 16:17

Dist	COUNTY	ROUTE	POST MILES TOTAL PROJECT	SHEET No.	TOTAL SHEETS
06	Tul	190	4.1/4.8	22	73

Richard H. Kuan 06-17-16
REGISTERED CIVIL ENGINEER DATE

6-20-16
PLANS APPROVAL DATE

REGISTERED PROFESSIONAL ENGINEER
RICHARD H. KUAN
No. 56678
Exp 6-30-17
CIVIL
STATE OF CALIFORNIA

THE STATE OF CALIFORNIA OR ITS OFFICERS OR AGENTS SHALL NOT BE RESPONSIBLE FOR THE ACCURACY OR COMPLETENESS OF SCANNED COPIES OF THIS PLAN SHEET.

NOTE:

FOR ACCURATE RIGHT OF WAY DATA, CONTACT RIGHT OF WAY ENGINEERING AT THE DISTRICT OFFICE.

STAGE 1 WORK

1. CONSTRUCT TEMPORARY DETOUR ON SOUTHSIDE.
2. TWO WAY TRAFFIC ON Exist ROUTE 190.

LEGEND:

CONSTRUCT THIS STAGE

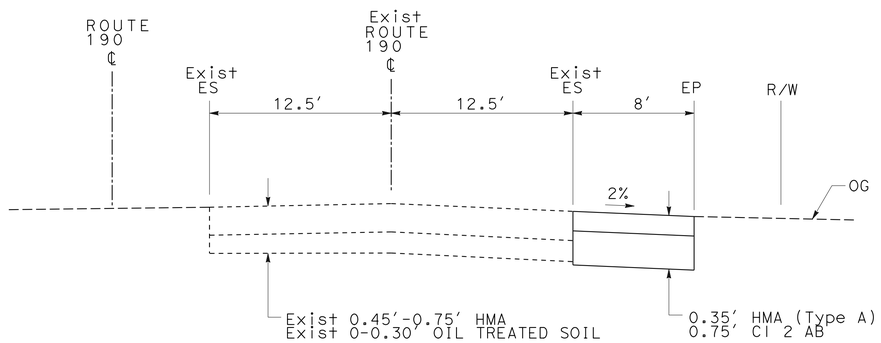

SECTION A-A

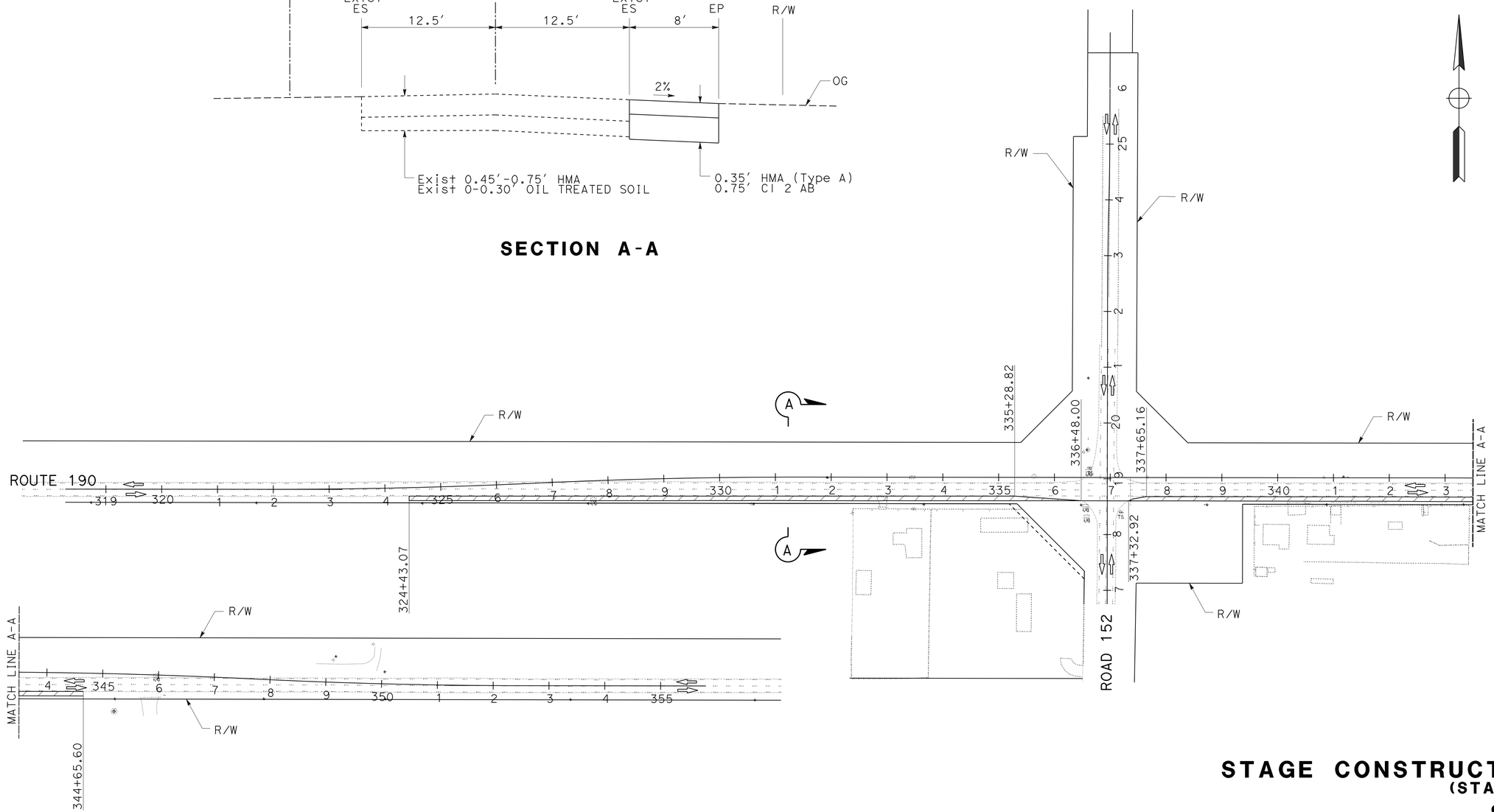

APPROVED FOR STAGE CONSTRUCTION WORK ONLY

NO SCALE

STAGE CONSTRUCTION
(STAGE 1)

SC-1

STATE OF CALIFORNIA - DEPARTMENT OF TRANSPORTATION
Caltrans
DESIGN

FUNCTIONAL SUPERVISOR: ERNESTO PENUNA
CALCULATED-DESIGNED BY: JOO BAEK
CHECKED BY: RICHARD KUAN
REVISED BY
DATE REVISED

LAST REVISION 06-17-16
DATE PLOTTED => 21-JUL-2016
TIME PLOTTED => 16:17

Dist	COUNTY	ROUTE	POST MILES TOTAL PROJECT	SHEET No.	TOTAL SHEETS
06	Tul	190	4.1/4.8	23	73

Richard H. Kuan 06-17-16
REGISTERED CIVIL ENGINEER DATE

6-20-16
PLANS APPROVAL DATE

REGISTERED PROFESSIONAL ENGINEER RICHARD H. KUAN No. 56678 Exp 6-30-17 CIVIL STATE OF CALIFORNIA

THE STATE OF CALIFORNIA OR ITS OFFICERS OR AGENTS SHALL NOT BE RESPONSIBLE FOR THE ACCURACY OR COMPLETENESS OF SCANNED COPIES OF THIS PLAN SHEET.

NOTE:

FOR ACCURATE RIGHT OF WAY DATA, CONTACT RIGHT OF WAY ENGINEERING AT THE DISTRICT OFFICE.

STAGE 2 WORK

1. CONSTRUCT ROUTE 190 AND ROAD 152 ON NORTHSIDE.
2. TWO WAY TRAFFIC ON TEMPORARY DETOUR.

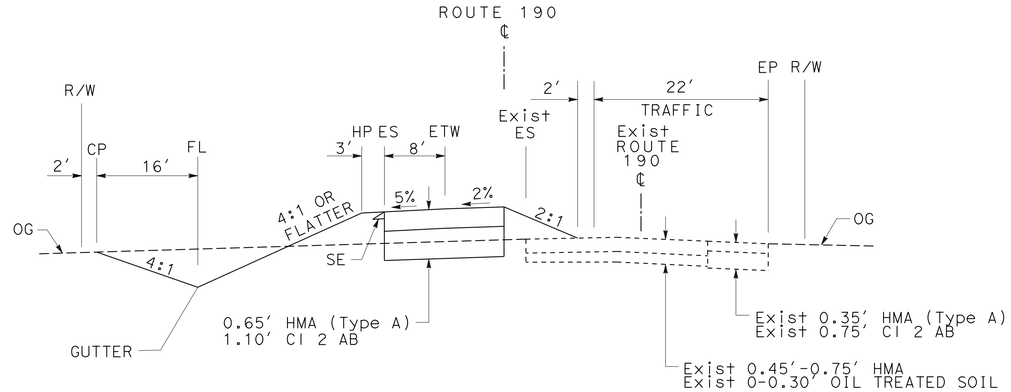

SECTION A-A

SECTION B-B

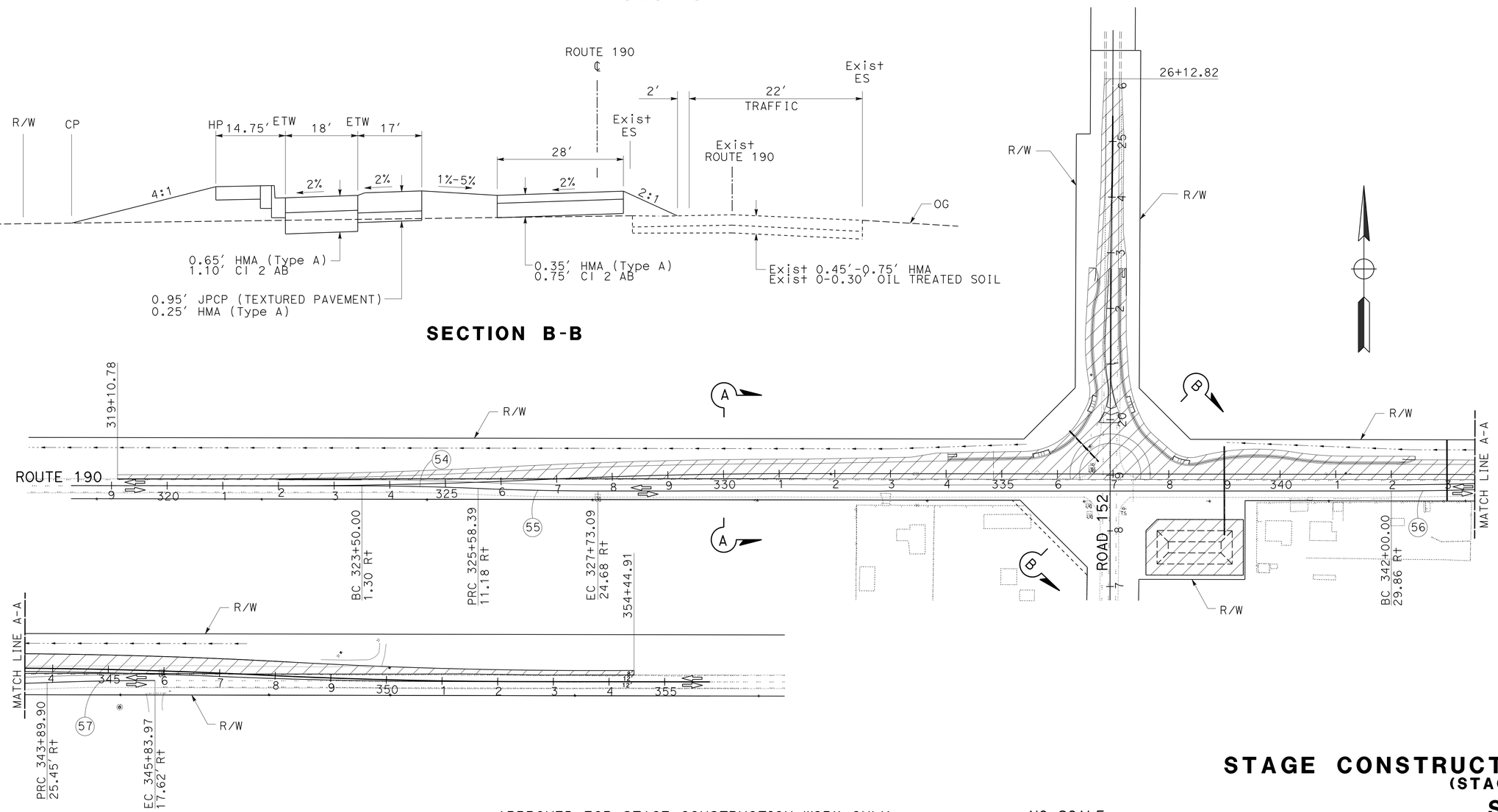

CURVE DATA

No. ⊕	R	Δ	T	L
54	5000′	02°23′30″	104.37′	208.70′
55	5000′	02°28′03″	107.68′	215.32′
56	5000′	02°10′38″	95.02′	190.01′
57	5000′	02°13′24″	97.03′	194.03′

APPROVED FOR STAGE CONSTRUCTION WORK ONLY

NO SCALE

STAGE CONSTRUCTION
(STAGE 2)
SC-2

REVISED BY | DATE REVISED
JOO BAEK | RICHARD KUAN
CALCULATED-DESIGNED BY | CHECKED BY
FUNCTIONAL SUPERVISOR | ERNESTO PENUNA

STATE OF CALIFORNIA - DEPARTMENT OF TRANSPORTATION
Caltrans
DESIGN

LAST REVISION 06-17-16 | DATE PLOTTED => 21-JUL-2016 | TIME PLOTTED => 16:17

Dist	COUNTY	ROUTE	POST MILES TOTAL PROJECT	SHEET No.	TOTAL SHEETS
06	Tul	190	4.1/4.8	24	73

Richard H. Kuan 06-17-16
REGISTERED CIVIL ENGINEER DATE

6-20-16
PLANS APPROVAL DATE

REGISTERED PROFESSIONAL ENGINEER RICHARD H. KUAN No. 56678 Exp. 6-30-17 CIVIL STATE OF CALIFORNIA

THE STATE OF CALIFORNIA OR ITS OFFICERS OR AGENTS SHALL NOT BE RESPONSIBLE FOR THE ACCURACY OR COMPLETENESS OF SCANNED COPIES OF THIS PLAN SHEET.

NOTE:

FOR ACCURATE RIGHT OF WAY DATA, CONTACT RIGHT OF WAY ENGINEERING AT THE DISTRICT OFFICE.

STAGE 3 WORK

1. CONSTRUCT ROUTE 190 AND ROAD 152 ON SOUTHSIDE.
2. TWO WAY TRAFFIC ON NORTH SIDE OF ROUTE 190.

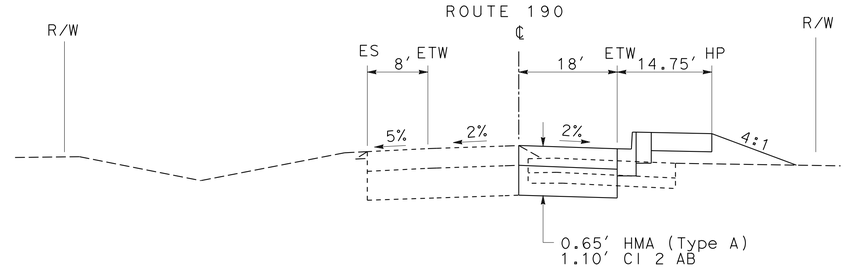

SECTION A-A

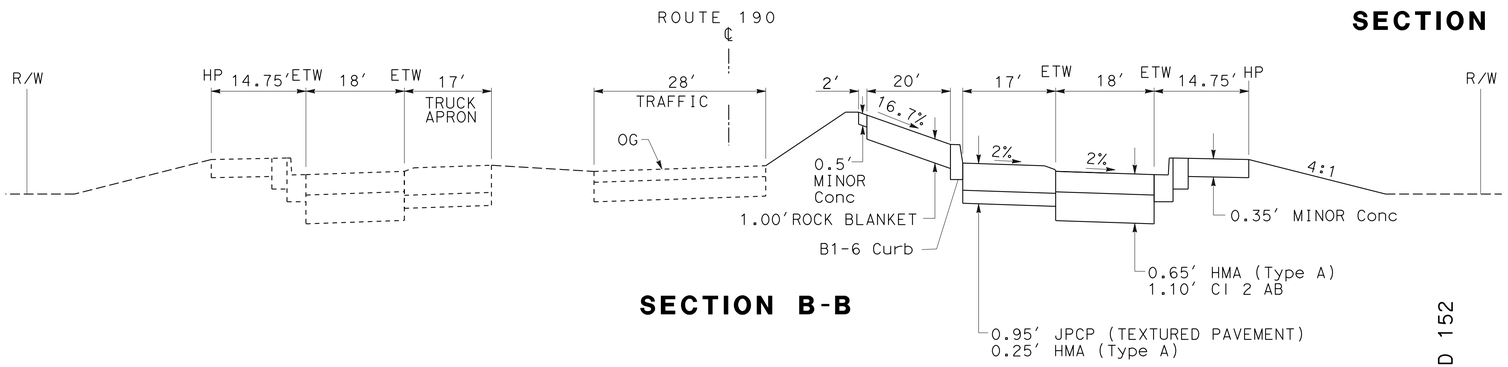

SECTION B-B

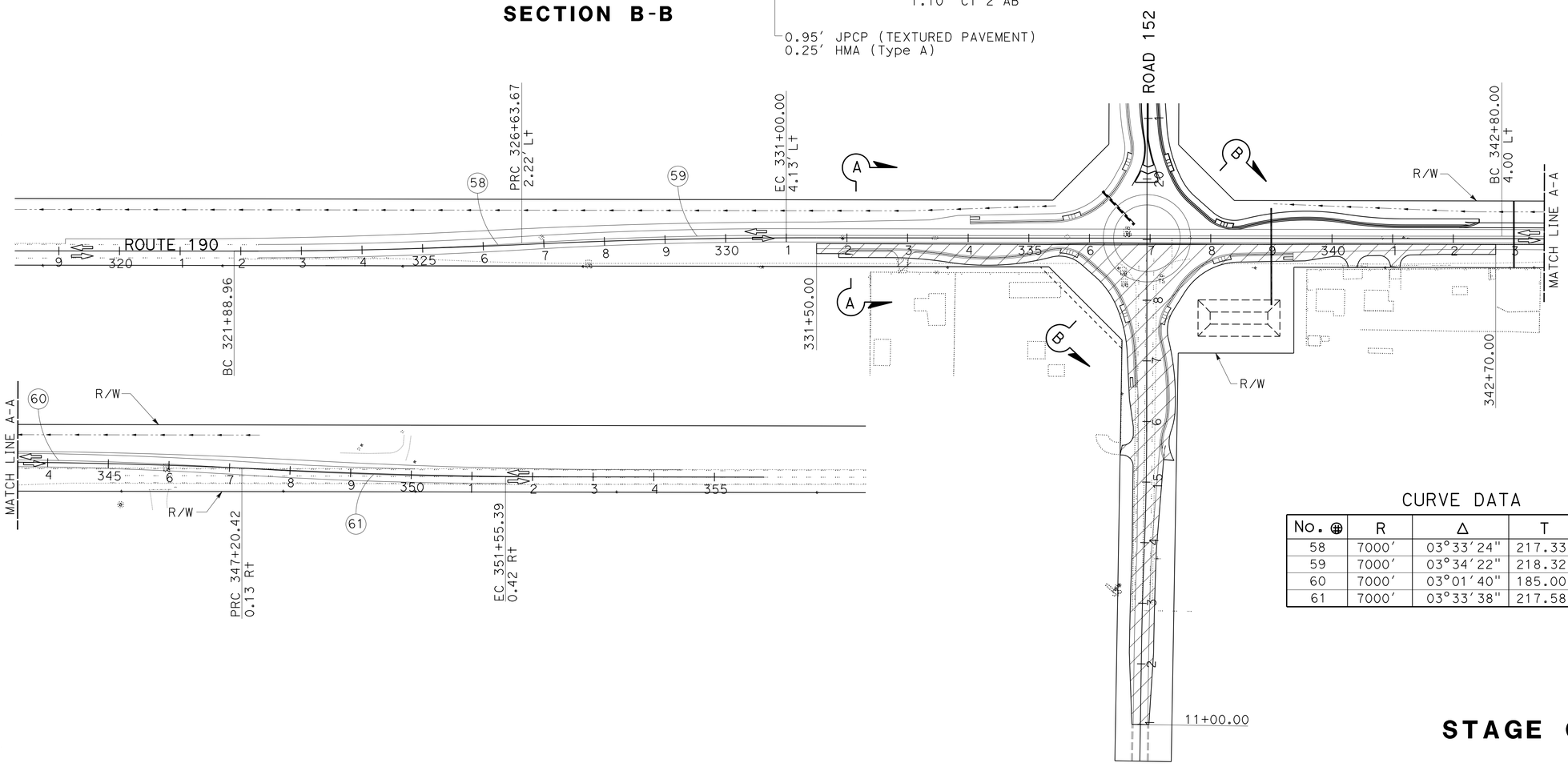

CURVE DATA

No. ⊕	R	Δ	T	L
58	7000′	03°33′24"	217.33′	434.51′
59	7000′	03°34′22"	218.32′	436.49′
60	7000′	03°01′40"	185.00′	369.92′
61	7000′	03°33′38"	217.58′	435.02′

APPROVED FOR STAGE CONSTRUCTION WORK ONLY

NO SCALE

STAGE CONSTRUCTION
(STAGE 3)
SC-3

STATE OF CALIFORNIA - DEPARTMENT OF TRANSPORTATION
Caltrans® DESIGN

FUNCTIONAL SUPERVISOR: ERNESTO PENUNA
CALCULATED-DESIGNED BY: JOO BAEK
CHECKED BY: RICHARD KUAN
REVISED BY
DATE REVISED

LAST REVISION 06-17-16 | DATE PLOTTED => 21-JUL-2016 | TIME PLOTTED => 16:17

Dist	COUNTY	ROUTE	POST MILES TOTAL PROJECT	SHEET No.	TOTAL SHEETS
06	Tul	190	4.1/4.8	25	73

Richard H. Kuan 06-17-16
REGISTERED CIVIL ENGINEER DATE

6-20-16
PLANS APPROVAL DATE

REGISTERED PROFESSIONAL ENGINEER
RICHARD H. KUAN
No. 56678
Exp 6-30-17
CIVIL
STATE OF CALIFORNIA

THE STATE OF CALIFORNIA OR ITS OFFICERS OR AGENTS SHALL NOT BE RESPONSIBLE FOR THE ACCURACY OR COMPLETENESS OF SCANNED COPIES OF THIS PLAN SHEET.

NOTE:

FOR ACCURATE RIGHT OF WAY DATA, CONTACT RIGHT OF WAY ENGINEERING AT THE DISTRICT OFFICE.

STAGE 4 WORK

1. CONSTRUCT TRANSITION, SPLITTER ISLAND,TRUCK APRON, AND CENTRAL ISLAND.
2. ONE WAY TRAFFIC ON ROUTE 190.

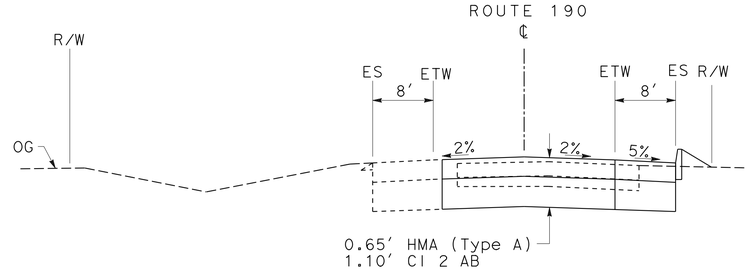

SECTION A-A

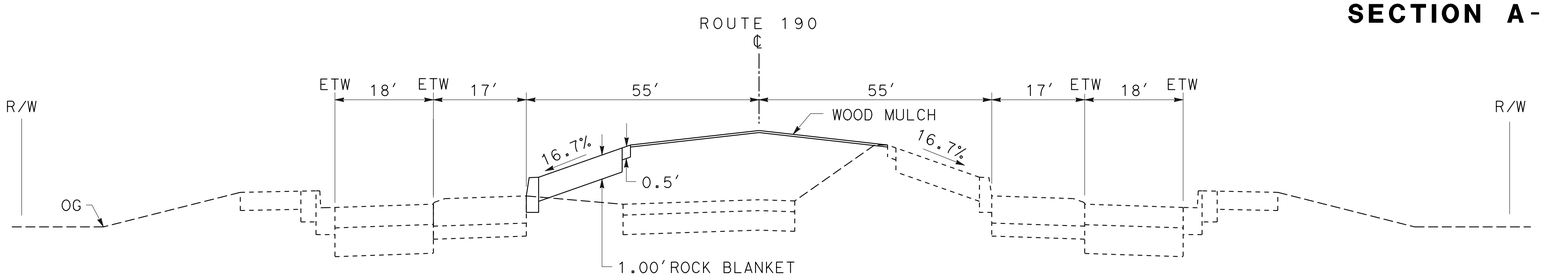

SECTION B-B

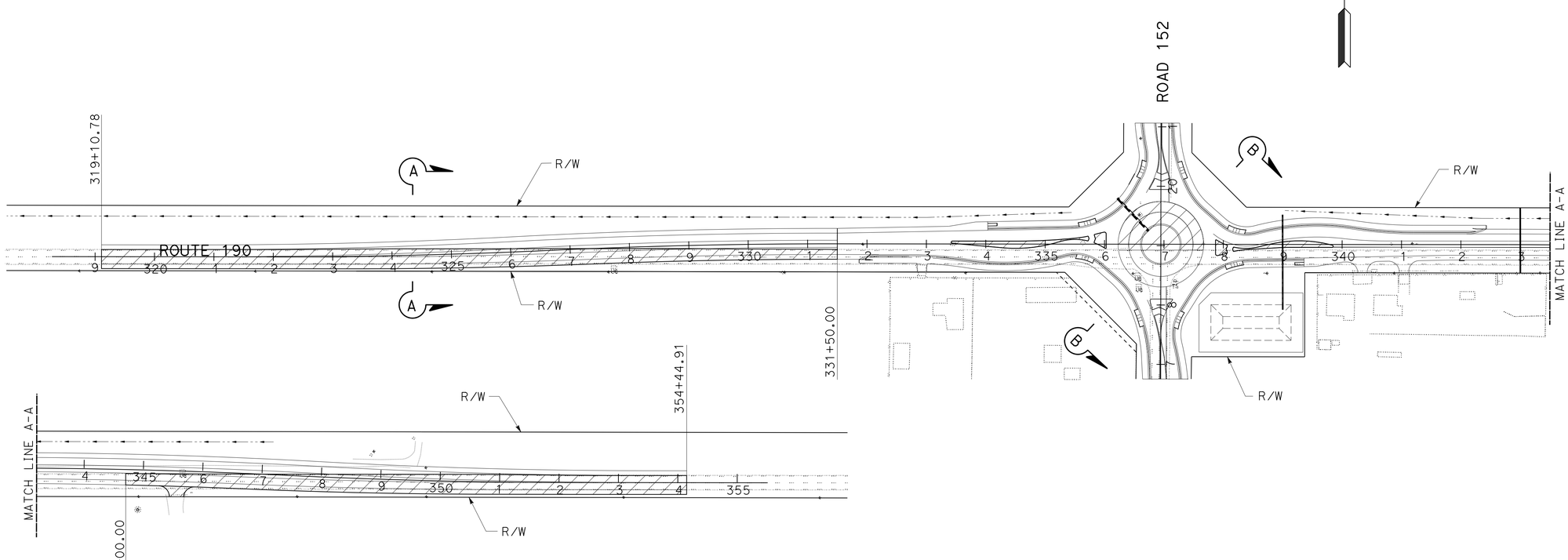

APPROVED FOR STAGE CONSTRUCTION WORK ONLY

NO SCALE

STAGE CONSTRUCTION
(STAGE 4)
SC-4

STATE OF CALIFORNIA - DEPARTMENT OF TRANSPORTATION
Caltrans®
DESIGN

FUNCTIONAL SUPERVISOR: ERNESTO PENUNA
CALCULATED-DESIGNED BY: JOO BAEK
CHECKED BY: RICHARD KUAN
REVISED BY
DATE REVISED

LAST REVISION 06-17-16
DATE PLOTTED => 21-JUL-2016
TIME PLOTTED => 16:17

Dist	COUNTY	ROUTE	POST MILES TOTAL PROJECT	SHEET No.	TOTAL SHEETS
06	Tul	190	4.1/4.8	26	73

REGISTERED CIVIL ENGINEER 06-17-16 DATE

6-20-16
PLANS APPROVAL DATE

REGISTERED PROFESSIONAL ENGINEER KAMRUL KHAN No. 74112 Exp. 06/30/17 CIVIL STATE OF CALIFORNIA

THE STATE OF CALIFORNIA OR ITS OFFICERS OR AGENTS SHALL NOT BE RESPONSIBLE FOR THE ACCURACY OR COMPLETENESS OF SCANNED COPIES OF THIS PLAN SHEET.

LEGEND:

- CONSTRUCT THIS STAGE
- TYPE III BARRICADE
- CHANNELIZER (SURFACED MOUNTED)
- STATIONARY MOUNTED CONSTRUCTION AREA SIGN
- XX TEMPORARY TRAFFIC STRIPE DETAIL NUMBER
- XX REMOVE TRAFIC STRIPE DETAIL NUMBER
- XX CONSTRUCTION AREA SIGN NUMBER
- PD FINAL PAVEMENT DELINEATION (SEE PD PLAN SHEETS)

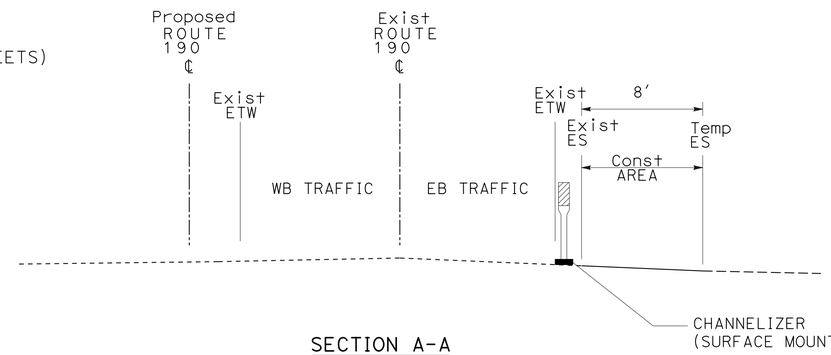

SECTION A-A
NO SCALE

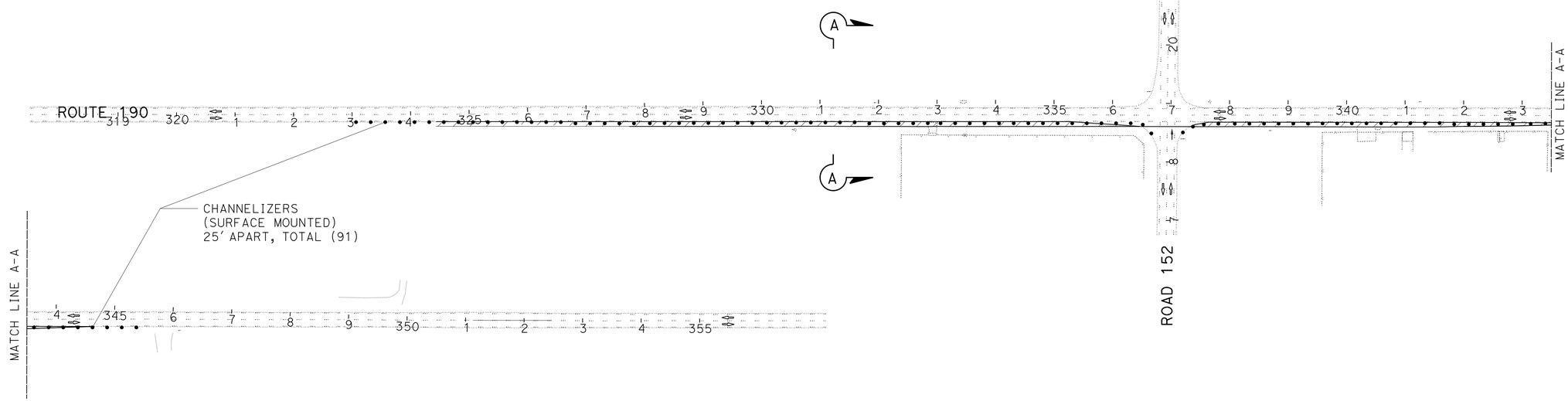

TRAFFIC HANDLING PLAN

(STAGE 1)

SCALE: 1"=100'

TH-1

APPROVED FOR TRAFFIC HANDLING WORK ONLY

STATE OF CALIFORNIA - DEPARTMENT OF TRANSPORTATION
Caltrans
TRAFFIC DESIGN

FUNCTIONAL SUPERVISOR: MOHAMMED QATAMI
CALCULATED-DESIGNED BY: KAMRUL KHAN
CHECKED BY: HASSAN TAHA
REVISED BY
DATE REVISED

LAST REVISION 06-17-16
DATE PLOTTED => 21-JUL-2016
TIME PLOTTED => 16:17

Dist	COUNTY	ROUTE	POST MILES TOTAL PROJECT	SHEET No.	TOTAL SHEETS
06	Tul	190	4.1/4.8	27	73

REGISTERED CIVIL ENGINEER — DATE 06-17-16

6-20-16
PLANS APPROVAL DATE

REGISTERED PROFESSIONAL ENGINEER — KAMRUL KHAN — No. 74112 — Exp. 06/30/17 — CIVIL — STATE OF CALIFORNIA

THE STATE OF CALIFORNIA OR ITS OFFICERS OR AGENTS SHALL NOT BE RESPONSIBLE FOR THE ACCURACY OR COMPLETENESS OF SCANNED COPIES OF THIS PLAN SHEET.

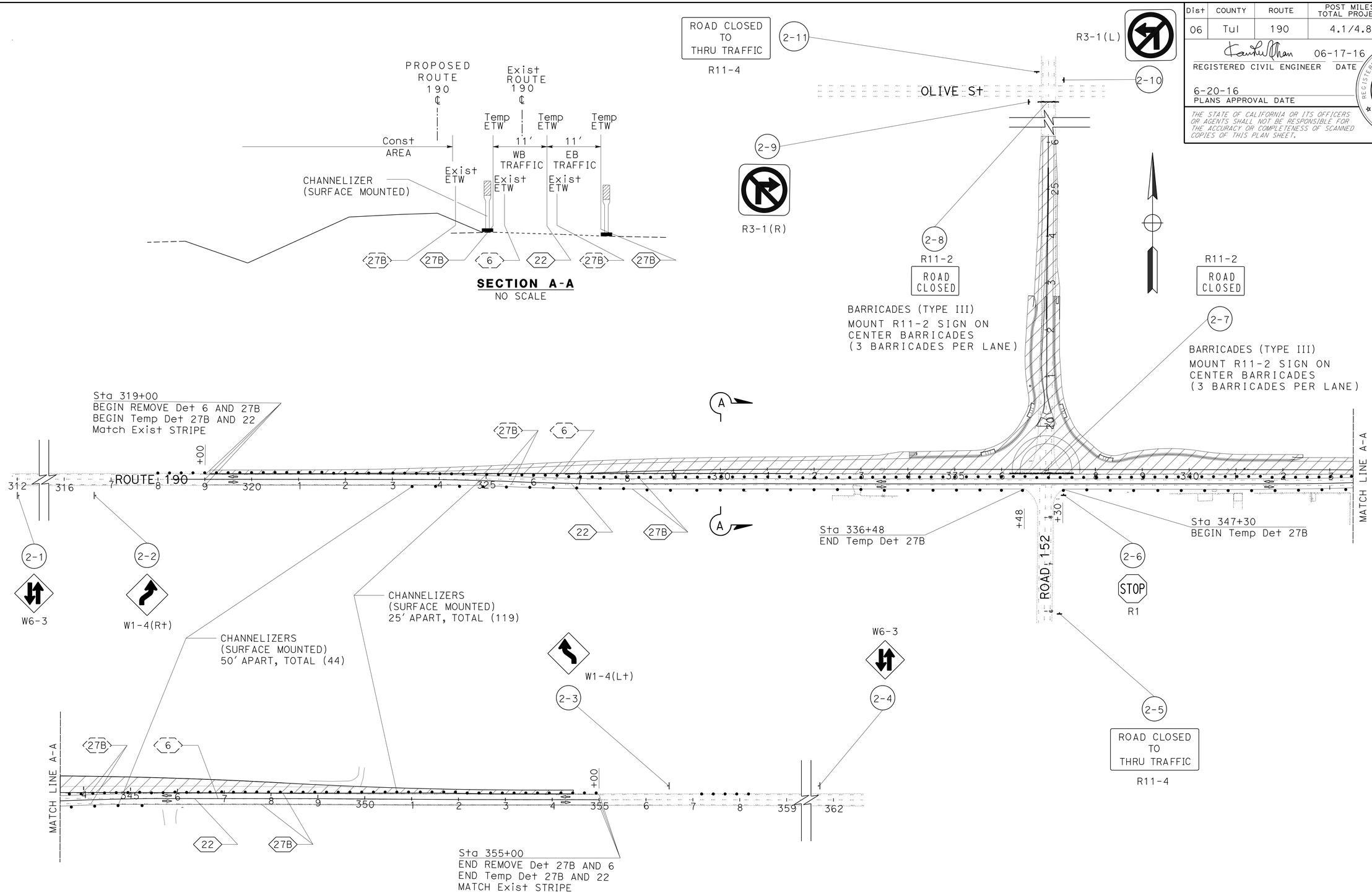

TRAFFIC HANDLING PLAN

(STAGE 2)

SCALE: 1"=100′

TH-2

APPROVED FOR TRAFFIC HANDLING WORK ONLY

STATE OF CALIFORNIA - DEPARTMENT OF TRANSPORTATION
Caltrans
TRAFFIC DESIGN

FUNCTIONAL SUPERVISOR: MOHAMMED QATAMI
CALCULATED-DESIGNED BY: KAMRUL KHAN
CHECKED BY: HASSAN TAHA
REVISED BY
DATE REVISED

LAST REVISION 06-17-16
DATE PLOTTED => 21-JUL-2016
TIME PLOTTED => 16:17

Dist	COUNTY	ROUTE	POST MILES TOTAL PROJECT	SHEET No.	TOTAL SHEETS
06	Tul	190	4.1/4.8	28	73

REGISTERED CIVIL ENGINEER — DATE 06-17-16

6-20-16
PLANS APPROVAL DATE

REGISTERED PROFESSIONAL ENGINEER — KAMRUL KHAN — No. 74112 — Exp. 06/30/17 — CIVIL — STATE OF CALIFORNIA

THE STATE OF CALIFORNIA OR ITS OFFICERS OR AGENTS SHALL NOT BE RESPONSIBLE FOR THE ACCURACY OR COMPLETENESS OF SCANNED COPIES OF THIS PLAN SHEET.

SECTION A-A
NO SCALE

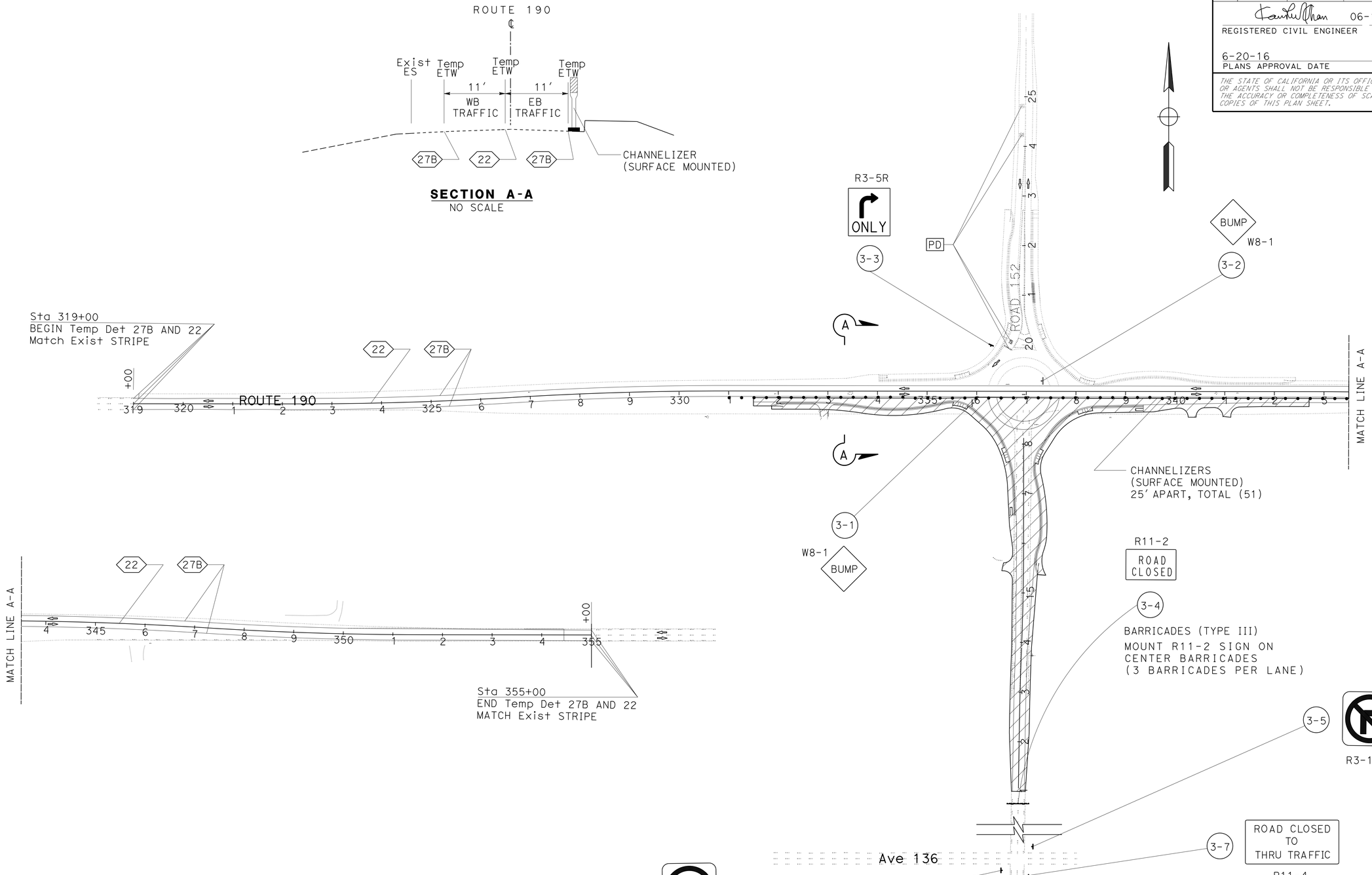

TRAFFIC HANDLING PLAN

(STAGE 3)

SCALE: 1"=100′

TH-3

APPROVED FOR TRAFFIC HANDLING WORK ONLY

STATE OF CALIFORNIA - DEPARTMENT OF TRANSPORTATION
Caltrans®
TRAFFIC DESIGN

FUNCTIONAL SUPERVISOR: MOHAMMED QATAMI
CALCULATED-DESIGNED BY: KAMRUL KHAN
CHECKED BY: HASSAN TAHA
REVISED BY
DATE REVISED

LAST REVISION 06-17-16
DATE PLOTTED => 21-JUL-2016
TIME PLOTTED => 16:17

Dist	COUNTY	ROUTE	POST MILES TOTAL PROJECT	SHEET No.	TOTAL SHEETS
06	Tul	190	4.1/4.8	29	73

REGISTERED CIVIL ENGINEER 06-17-16 DATE

6-20-16
PLANS APPROVAL DATE

REGISTERED PROFESSIONAL ENGINEER KAMRUL KHAN No. 74112 Exp. 06/30/17 CIVIL STATE OF CALIFORNIA

THE STATE OF CALIFORNIA OR ITS OFFICERS OR AGENTS SHALL NOT BE RESPONSIBLE FOR THE ACCURACY OR COMPLETENESS OF SCANNED COPIES OF THIS PLAN SHEET.

TRAFFIC HANDLING QUANTITIES

SHEET No.	LOCATION	STATION	DIRECTION	DETAIL No.	TEMPORARY PAVEMENT MARKER TYPE D	TEMPORARY TRAFFIC STRIPE (TAPE)	REMOVE PAVEMENT MARKER	REMOVE THERMOPLASTIC TRAFFIC STRIPE WHITE	REMOVE THERMOPLASTIC TRAFFIC STRIPE YELLOW
					EA	LF	EA	LF	LF
TH-2	ROUTE 190	319+00 TO 355+00	EB/WB	6			76		900
TH-2	ROUTE 190	319+00 TO 355+00	EB	27B				3600	
TH-2	ROUTE 190	319+00 TO 355+00	WB	27B				3600	
TH-2	ROUTE 190	319+00 TO 355+00	WB	27B		3600			
TH-2	ROUTE 190	319+00 TO 355+00	EB/WB	22	152	3600			
TH-2	ROUTE 190	319+00 TO 336+48	EB	27B		1748			
TH-2	ROUTE 190	347+30 TO 355+00	EB	27B		770			
TH-3	ROUTE 190	319+00 TO 355+00	EB/WB	22	152	3600			
TH-3	ROUTE 190	319+00 TO 355+00	EB	27B		3600			
TH-3	ROUTE 190	319+00 TO 355+00	WB	27B		3600			
SUBTOTAL					304	20518	76	7200	900
TOTAL					304	20518	76	8100	

TYPE III BARRICADE

SHEET No.	EA
TH-2	26
TH-3	7
TOTAL	33

CHANNELIZER (SURFACE MOUNTED)

SHEET No.	EA
TH-1	91
TH-2	163
TH-3	51
TOTAL	305

CONSTRUCTION AREA SIGN (TRAFFIC HANDLING)

SHEET No.	SIGN (X)	SIGN CODE	SIGN MESSAGE	PANEL SIZE	No. OF POST AND SIZE	No. OF SIGN EA	MOUNTING METHOD
TH-2	2-1	W6-3	TWO-WAY TRAFFIC	36" x 36"	1 - 4" x 6"	1	STATIONARY
	2-2	W1-4(R+)	REVERSE CURVE	30" x 30"	1 - 4" x 6"	1	STATIONARY
	2-3	W1-4(L+)	REVERSE CURVE	30" x 30"	1 - 4" x 6"	1	STATIONARY
	2-4	W6-3	TWO-WAY TRAFFIC	36" x 36"	1 - 4" x 6"	1	STATIONARY
	2-5	R11-4	ROAD CLOSE TO THRU TRAFFIC	60" x 30"	SEE DETAIL A	1(N)	MOUNT ON BARRICADE
	2-6	R1-1	STOP	30" x 30"	1 - 4" x 6"	1	STATIONARY
	2-7	R11-2	ROAD CLOSED	48" x 30"	SEE DETAIL B	6(N)	MOUNT ON BARRICADE
	2-8	R11-2	ROAD CLOSED	48" x 30"	SEE DETAIL B	2(N)	MOUNT ON BARRICADE
	2-9	R3-1 (R)	NO RIGHT TURN	30" x 30"	1-4" x 6"	1	STATIONARY
	2-10	R3-1 (L)	NO LEFT TURN	30" x 30"	1-4" x 6"	1	STATIONARY
	2-11	R11-4	ROAD CLOSE TO THRU TRAFFIC	60" x 30"	SEE DETAIL A	1(N)	MOUNT ON BARRICADE
TH-3	3-1	W8-1	BUMP	30" x 30"	1 - 4" x 6"	1	STATIONARY
	3-2	W8-1	BUMP	30" x 30"	1 - 4" x 6"	1	STATIONARY
	3-3	R3-5R	RIGHT TURN ONLY	30" x 36"	1 - 4" x 6"	1	STATIONARY
	3-4	R11-2	ROAD CLOSED	48" x 30"	SEE DETAIL B	2(N)	MOUNT ON BARRICADE
	3-5	R3-1 (R)	NO RIGHT TURN	30" x 30"	1-4" x 6"	1	STATIONARY
	3-6	R3-1 (L)	NO LEFT TURN	30" x 30"	1-4" x 6"	1	STATIONARY
	3-7	R11-4	ROAD CLOSE TO THRU TRAFFIC	60" x 30"	SEE DETAIL A	1(N)	MOUNT ON BARRICADE

1. (N) NOT A SEPARATE PAY ITEM. FOR INFORMATION ONLY.
2. EXACT SIGN LOCATIONS TO BE DETERMINED BY THE ENGINEER.
3. FOR ADDITIONAL CONSTRUCTION AREA SIGNS, REFER TO CONSTRUCTION AREA SIGNS SHEET CS-1.

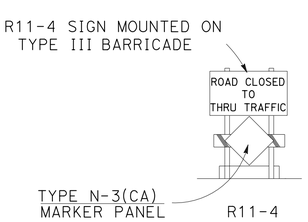

DETAIL A

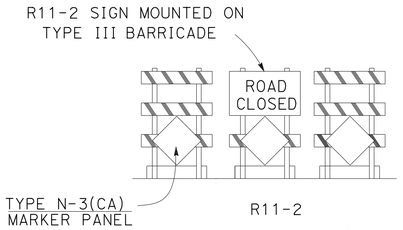

DETAIL B

TRAFFIC HANDLING QUANTITIES AND SIGN DETAIL

THQ-1

STATE OF CALIFORNIA - DEPARTMENT OF TRANSPORTATION
Caltrans® TRAFFIC DESIGN

FUNCTIONAL SUPERVISOR: MOHAMMED QATAMI
CALCULATED-DESIGNED BY: KAMRUL KHAN
CHECKED BY: HASSAN TAHA
REVISED BY / DATE REVISED

LAST REVISION 06-17-16
DATE PLOTTED => 21-JUL-2016
TIME PLOTTED => 16:17

Dist	COUNTY	ROUTE	POST MILES TOTAL PROJECT	SHEET No.	TOTAL SHEETS
06	Tul	190	4.1/4.8	30	73

REGISTERED CIVIL ENGINEER 06-17-16 DATE

6-20-16
PLANS APPROVAL DATE

REGISTERED PROFESSIONAL ENGINEER KAMRUL KHAN No. 74112 Exp. 06/30/17 CIVIL STATE OF CALIFORNIA

THE STATE OF CALIFORNIA OR ITS OFFICERS OR AGENTS SHALL NOT BE RESPONSIBLE FOR THE ACCURACY OR COMPLETENESS OF SCANNED COPIES OF THIS PLAN SHEET.

LEGEND:

- XX — TRAFFIC STRIPE DETAIL NUMBER
- LIMITS OF DESIGNATED TRAFFIC STRIPING DETAIL
- AHEAD — "AHEAD" PAVEMNT MARKING
- STOP — "STOP" PAVEMNT MARKING

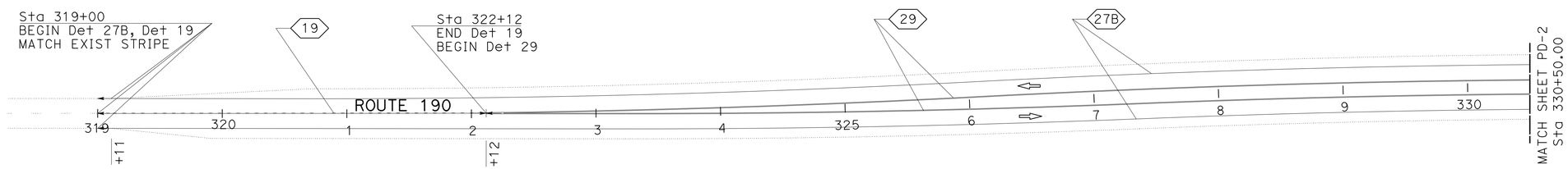

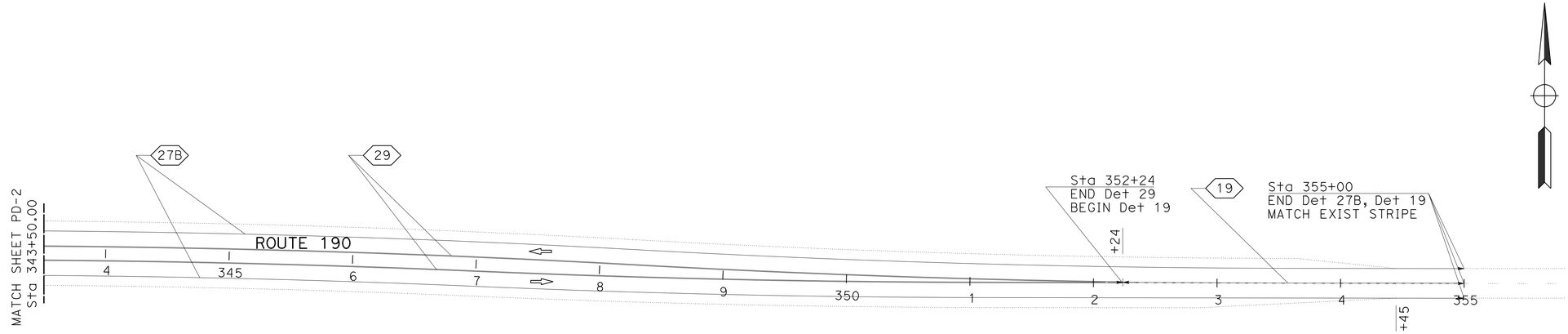

APPROVED FOR PAVEMENT DELINEATION WORK ONLY

PAVEMENT DELINEATION PLAN

SCALE: 1" = 50'

PD-1

REVISED BY	DATE REVISED
KAMRUL KHAN	HASSAN M. TAHA
CALCULATED-DESIGNED BY	CHECKED BY
FUNCTIONAL SUPERVISOR	MOHAMMED QATAMI

STATE OF CALIFORNIA - DEPARTMENT OF TRANSPORTATION
Caltrans
TRAFFIC DESIGN

LAST REVISION 06-17-16 | DATE PLOTTED => 21-JUL-2016 | TIME PLOTTED => 16:17

Dist	COUNTY	ROUTE	POST MILES TOTAL PROJECT	SHEET No.	TOTAL SHEETS
06	Tul	190	4.1/4.8	31	73

REGISTERED CIVIL ENGINEER — DATE 06-17-16

6-20-16
PLANS APPROVAL DATE

REGISTERED PROFESSIONAL ENGINEER — KAMRUL KHAN — No. 74112 — Exp. 06/30/17 — CIVIL — STATE OF CALIFORNIA

THE STATE OF CALIFORNIA OR ITS OFFICERS OR AGENTS SHALL NOT BE RESPONSIBLE FOR THE ACCURACY OR COMPLETENESS OF SCANNED COPIES OF THIS PLAN SHEET.

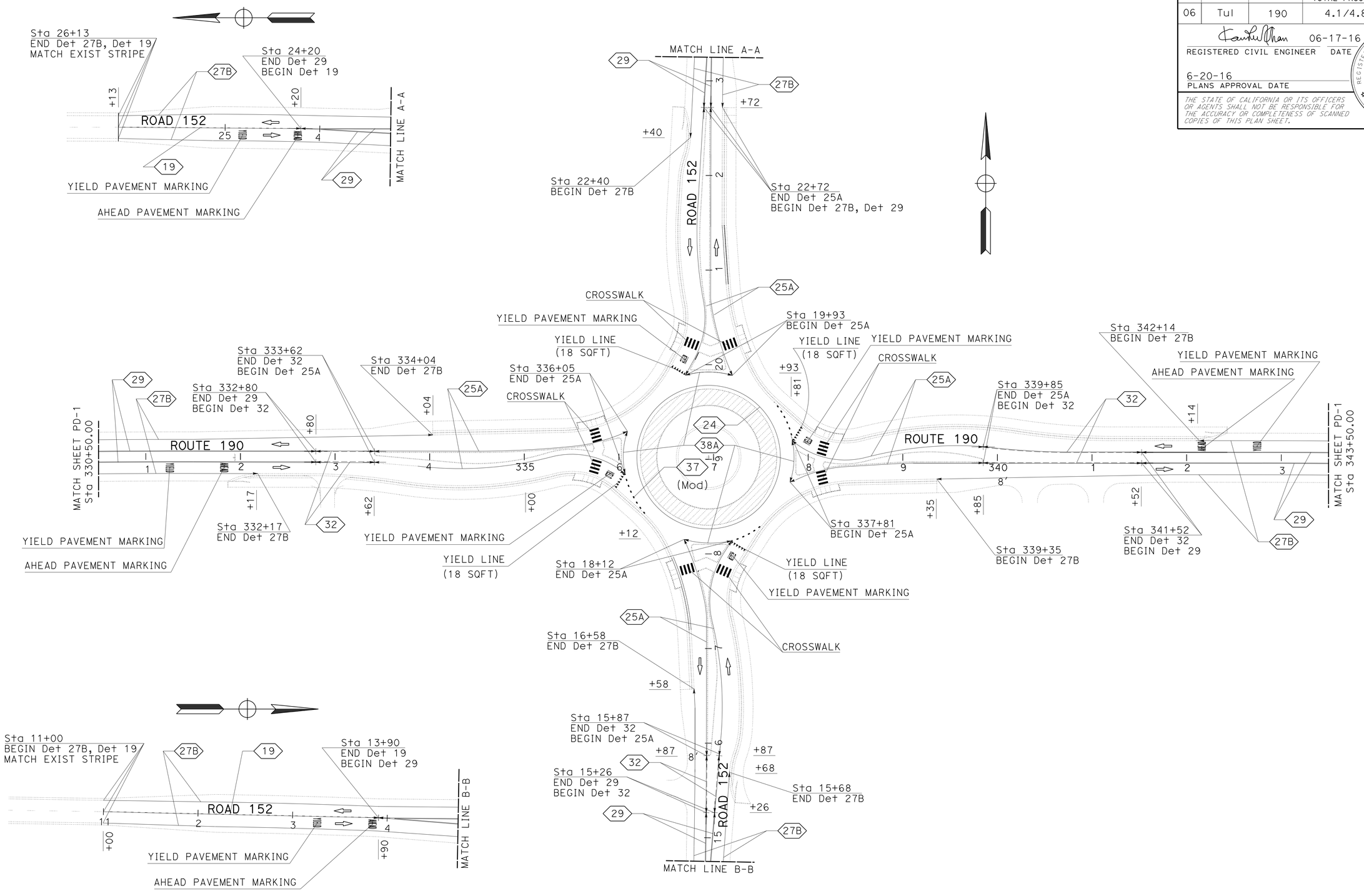

APPROVED FOR PAVEMENT DELINEATION WORK ONLY

PAVEMENT DELINEATION PLAN

SCALE: 1" = 50'

PD-2

REVISED BY	DATE REVISED

CALCULATED-DESIGNED BY: KAMRUL KHAN
CHECKED BY: HASSAN M. TAHA
FUNCTIONAL SUPERVISOR: MOHAMMED QATAMI

STATE OF CALIFORNIA - DEPARTMENT OF TRANSPORTATION
Caltrans®
TRAFFIC DESIGN

LAST REVISION 06-17-16
DATE PLOTTED => 21-JUL-2016
TIME PLOTTED => 16:17

Dist	COUNTY	ROUTE	POST MILES TOTAL PROJECT	SHEET No.	TOTAL SHEETS
06	Tul	190	4.1/4.8	32	73

REGISTERED CIVIL ENGINEER 06-17-16 DATE

6-20-16
PLANS APPROVAL DATE

REGISTERED PROFESSIONAL ENGINEER KAMRUL KHAN No. 74112 Exp. 06/30/17 CIVIL STATE OF CALIFORNIA

THE STATE OF CALIFORNIA OR ITS OFFICERS OR AGENTS SHALL NOT BE RESPONSIBLE FOR THE ACCURACY OR COMPLETENESS OF SCANNED COPIES OF THIS PLAN SHEET.

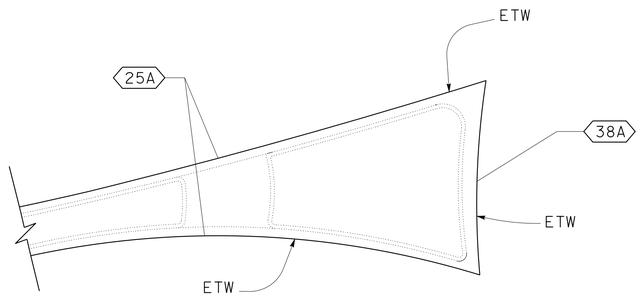

TYPICAL SPLITTER ISLAND STRIPE DETAIL 25A AND 27B

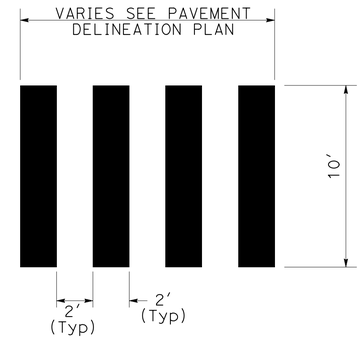

CROSSWALK DETAIL

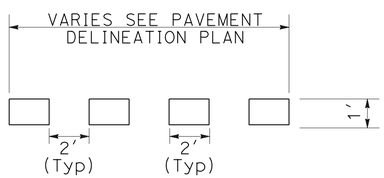

DETAIL 37 (Mod)

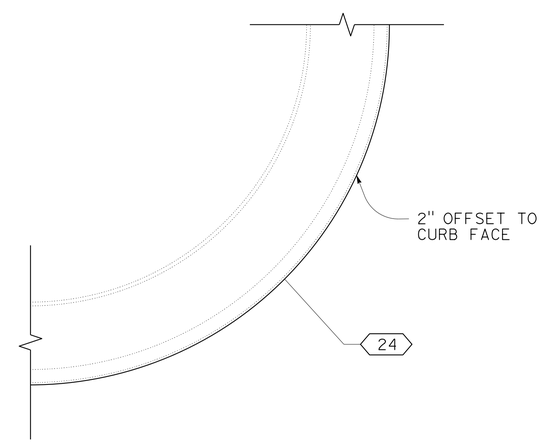

TYPICAL CENTRAL ISLAND STRIPE DETAIL 24

PAVEMENT DELINEATION DETAILS

NO SCALE

PDD-1

STATE OF CALIFORNIA - DEPARTMENT OF TRANSPORTATION
Caltrans
TRAFFIC DESIGN

FUNCTIONAL SUPERVISOR: MOHAMMED QATAMI
CALCULATED-DESIGNED BY: KAMRUL KHAN
CHECKED BY: HASSAN M. TAHA
REVISED BY
DATE REVISED

LAST REVISION 06-17-16
DATE PLOTTED => 21-JUL-2016
TIME PLOTTED => 16:17

Dist	COUNTY	ROUTE	POST MILES TOTAL PROJECT	SHEET No.	TOTAL SHEETS
06	Tul	190	4.1/4.8	33	73

REGISTERED CIVIL ENGINEER 06-17-16 DATE

6-20-16
PLANS APPROVAL DATE

REGISTERED PROFESSIONAL ENGINEER KAMRUL KHAN No. 74112 Exp 06/30/17 CIVIL STATE OF CALIFORNIA

THE STATE OF CALIFORNIA OR ITS OFFICERS OR AGENTS SHALL NOT BE RESPONSIBLE FOR THE ACCURACY OR COMPLETENESS OF SCANNED COPIES OF THIS PLAN SHEET.

PAVEMENT DELINEATION QUANTITIES

SHEET No.	LOCATION	STATION		DIRECTION	DETAIL No.	PAVEMENT MARKER (RETROREFLECTIVE)		THERMOPLASTIC TRAFFIC STRIPE					THERMOPLASTIC PAVEMENT MARKING	
								4" SOLID		8" SOLID	4" (BROKEN 36-12)	12" (BROKEN 36-3)		
						TYPE D	TYPE H	YELLOW	WHITE					
		FROM	TO			EA	EA	LF	LF	LF	LF	LF	DESCRIPTION	SQFT
PD-1 TO PD-2	ROUTE 190	319+00	332+17	EB	27B				1317				4 - AHEAD	124
PD-1 TO PD-2	ROUTE 190	319+00	334+04	WB	27B				1504				8 - YIELD	192
PD-1	ROUTE 190	319+00	322+12	EB/WB	19	10	14	312			312		YIELD LINE	72
PD-1	ROUTE 190	322+12	332+80	EB/WB	29	92		4272					CROSSWALK	640
PD-2	ROUTE 190	332+80	333+62	EB/WB	32	13		164			164			
PD-2	ROUTE 190	333+62	336+05	EB	25A		11	243						
PD-2	ROUTE 190	333+62	336+05	WB	25A		11	243						
PD-2	ROUTE 190	337+81	339+85	EB	25A		10	204						
PD-2	ROUTE 190	337+81	339+85	WB	25A		10	204						
PD-2	ROUTE 190	339+85	341+52	EB/WB	32	20		334			334			
PD-1	ROUTE 190	352+24	355+00	EB/WB	19	8	13	276			276			
PD-2 TO PD-1	ROUTE 190	341+52	352+24	EB/WB	29	92		4288						
PD-2 TO PD-1	ROUTE 190	339+35	355+00	EB	27B				1565					
PD-2 TO PD-1	ROUTE 190	342+14	355+00	WB	27B				1286					
PD-2	ROAD 152	11+00	13+90	NB/SB	19	10	13	290			290			
PD-2	ROAD 152	11+00	15+68	NB	27B				468					
PD-2	ROAD 152	11+00	16+58	SB	27B				558					
PD-2	ROAD 152	13+90	15+26	NB/SB	29	14		544						
PD-2	ROAD 152	15+26	15+87	NB/SB	32	10		122			122			
PD-2	ROAD 152	15+87	18+12	NB	25A		10	225						
PD-2	ROAD 152	15+87	18+12	SB	25A		10	225						
PD-2	ROAD 152	19+93	22+72	NB	25A		13	279						
PD-2	ROAD 152	19+93	22+72	SB	25A		13	279						
PD-2	ROAD 152	22+72	24+20	NB/SB	29	16		592						
PD-2	ROAD 152	24+20	26+13	NB/SB	19	8	9	193			193			
PD-2	ROAD 152	22+72	26+13	NB	27B				341					
PD-2	ROAD 152	22+40	26+13	SB	27B				373					
PD-2	ROUTE 190	CIRCULATORY ROADWAY AT ROAD 152 INTERSECTION			38A					200				
PD-2	ROUTE 190				37(Mod)							163		
PD-2	ROUTE 190				24			240						
SUB-TOTAL						293	137	13529	7412	200	1691	163		1028
SHEET TOTAL						430		20941		200	1691	163		1028

STATE OF CALIFORNIA - DEPARTMENT OF TRANSPORTATION
Caltrans® TRAFFIC DESIGN

FUNCTIONAL SUPERVISOR: MOHAMMED QATAMI

CALCULATED-DESIGNED BY: KAMRUL KHAN
CHECKED BY: HASSAN TAHA

REVISED BY | DATE REVISED

PAVEMENT DELINEATION QUANTITIES
PDQ-1

LAST REVISION 06-17-16 | DATE PLOTTED => 21-JUL-2016 TIME PLOTTED => 16:17

Dist	COUNTY	ROUTE	POST MILES TOTAL PROJECT	SHEET No.	TOTAL SHEETS
06	Tul	190	4.1/4.8	34	73

REGISTERED CIVIL ENGINEER 06-17-16 DATE

6-20-16
PLANS APPROVAL DATE

REGISTERED PROFESSIONAL ENGINEER KAMRUL KHAN No. 74112 Exp. 06/30/17 CIVIL STATE OF CALIFORNIA

THE STATE OF CALIFORNIA OR ITS OFFICERS OR AGENTS SHALL NOT BE RESPONSIBLE FOR THE ACCURACY OR COMPLETENESS OF SCANNED COPIES OF THIS PLAN SHEET.

LEGEND

(X-X) ROADSIDE SIGN NUMBER

▲ REMOVE ROADSIDE SIGN

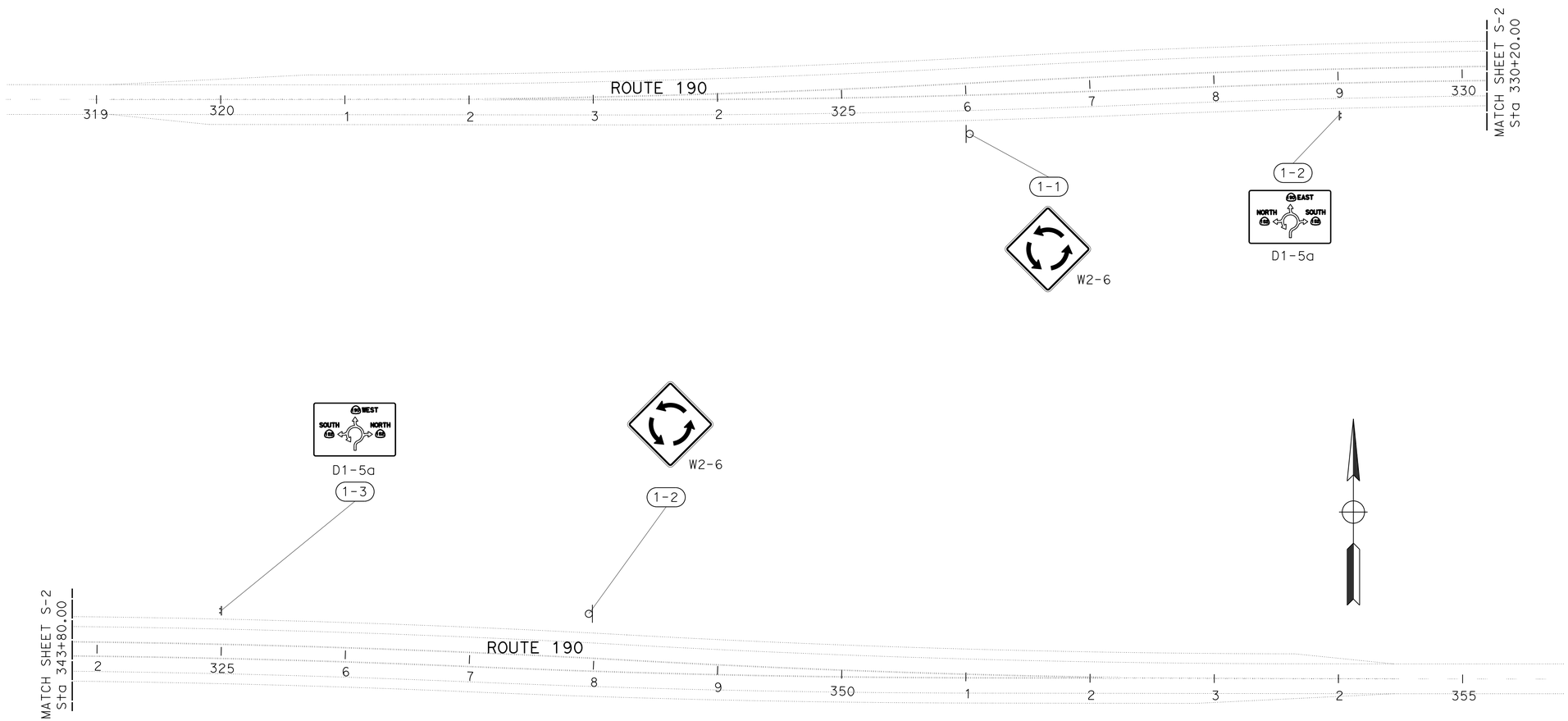

APPROVED FOR SIGN WORK ONLY

SCALE:1"=50'

SIGN PLAN

S-1

STATE OF CALIFORNIA - DEPARTMENT OF TRANSPORTATION

Caltrans®

TRAFFIC DESIGN

FUNCTIONAL SUPERVISOR: MOHAMMED QATAMI

CALCULATED-DESIGNED BY: KAMRUL KHAN

CHECKED BY: HASSAN M. TAHA

REVISED BY

DATE REVISED

LAST REVISION 06-17-16

DATE PLOTTED => 21-JUL-2016
TIME PLOTTED => 16:17

Dist	COUNTY	ROUTE	POST MILES TOTAL PROJECT	SHEET No.	TOTAL SHEETS
06	Tul	190	4.1/4.8	35	73

REGISTERED CIVIL ENGINEER — DATE: 06-17-16

6-20-16
PLANS APPROVAL DATE

REGISTERED PROFESSIONAL ENGINEER — KAMRUL KHAN — No. 74112 — Exp. 06/30/17 — CIVIL — STATE OF CALIFORNIA

THE STATE OF CALIFORNIA OR ITS OFFICERS OR AGENTS SHALL NOT BE RESPONSIBLE FOR THE ACCURACY OR COMPLETENESS OF SCANNED COPIES OF THIS PLAN SHEET.

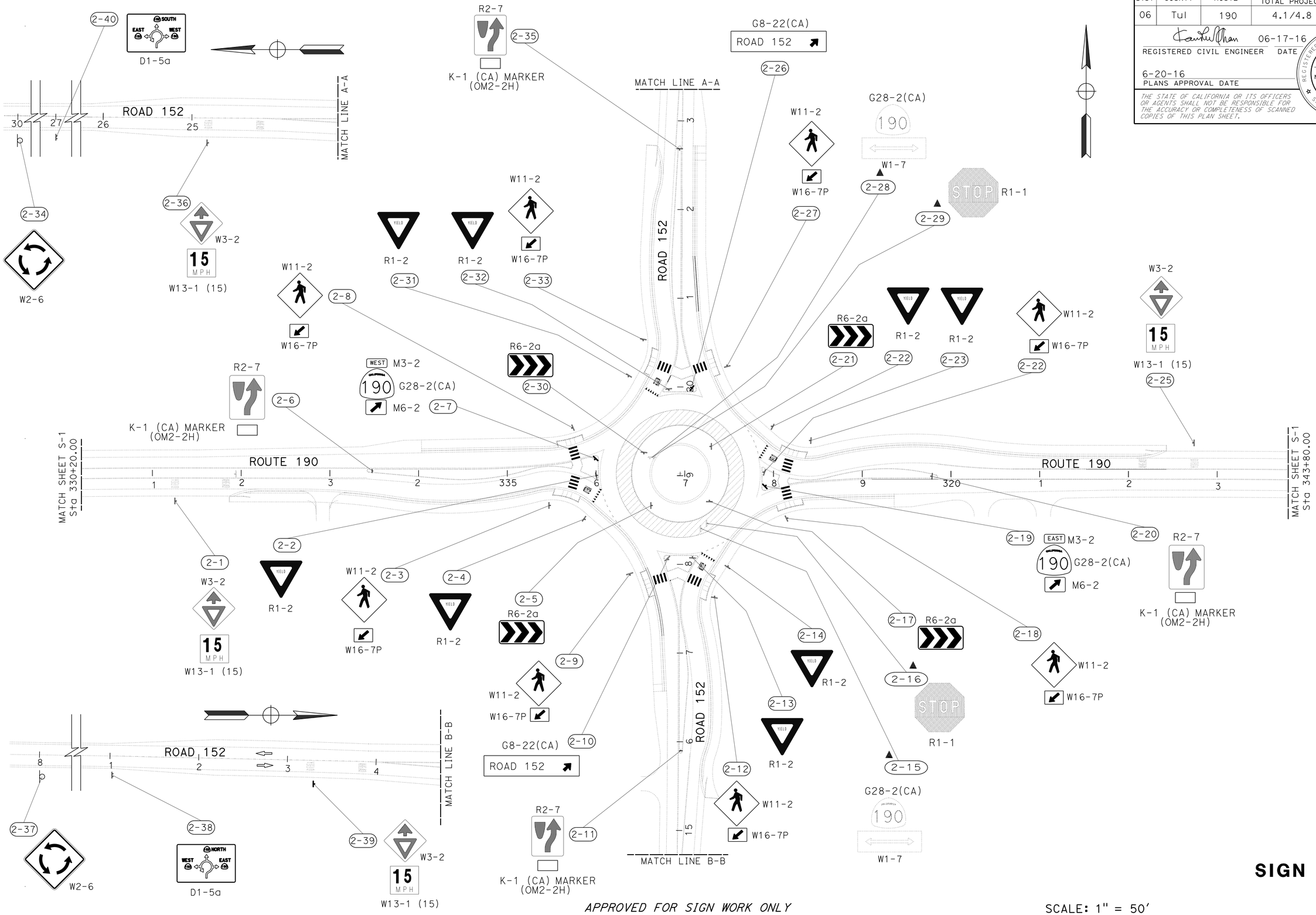

APPROVED FOR SIGN WORK ONLY

SCALE: 1" = 50'

SIGN PLAN
S-2

REVISED BY	DATE REVISED

CALCULATED- DESIGNED BY: KAMRUL KHAN
CHECKED BY: HASSAN M. TAHA
FUNCTIONAL SUPERVISOR: MOHAMMED QATAMI

STATE OF CALIFORNIA - DEPARTMENT OF TRANSPORTATION
Caltrans
TRAFFIC DESIGN

LAST REVISION 06-17-16 | DATE PLOTTED => 21-JUL-2016 | TIME PLOTTED => 16:17

Dist	COUNTY	ROUTE	POST MILES TOTAL PROJECT	SHEET No.	TOTAL SHEETS
06	Tul	190	4.1/4.8	36	73

REGISTERED CIVIL ENGINEER — DATE 06-17-16

6-20-16
PLANS APPROVAL DATE

REGISTERED PROFESSIONAL ENGINEER — KAMRUL KHAN No. 74112 Exp. 06/30/17 CIVIL — STATE OF CALIFORNIA

THE STATE OF CALIFORNIA OR ITS OFFICERS OR AGENTS SHALL NOT BE RESPONSIBLE FOR THE ACCURACY OR COMPLETENESS OF SCANNED COPIES OF THIS PLAN SHEET.

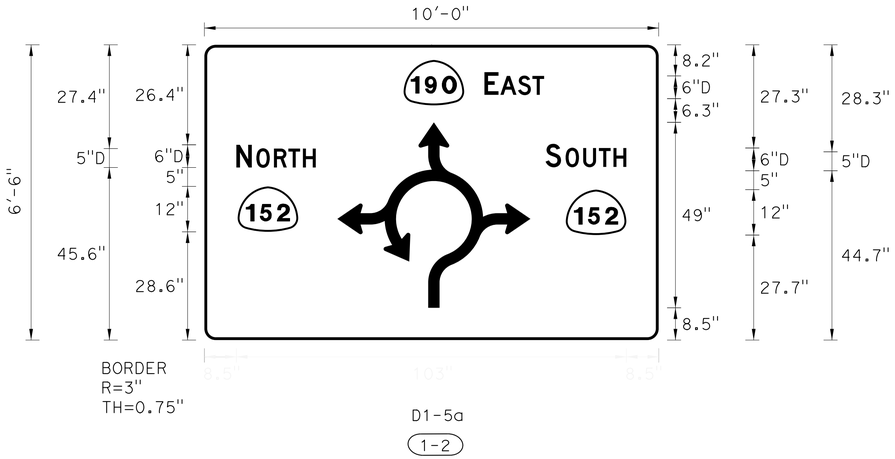

D1-5a

(1-2)

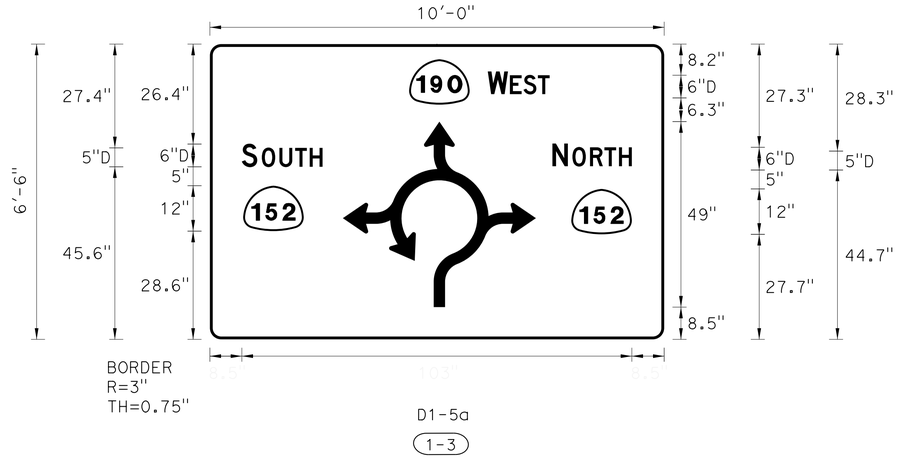

D1-5a

(1-3)

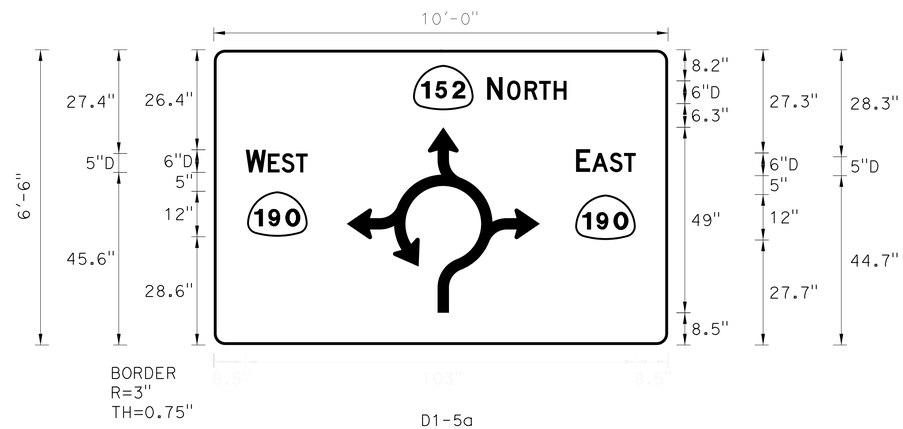

D1-5a

(2-38)

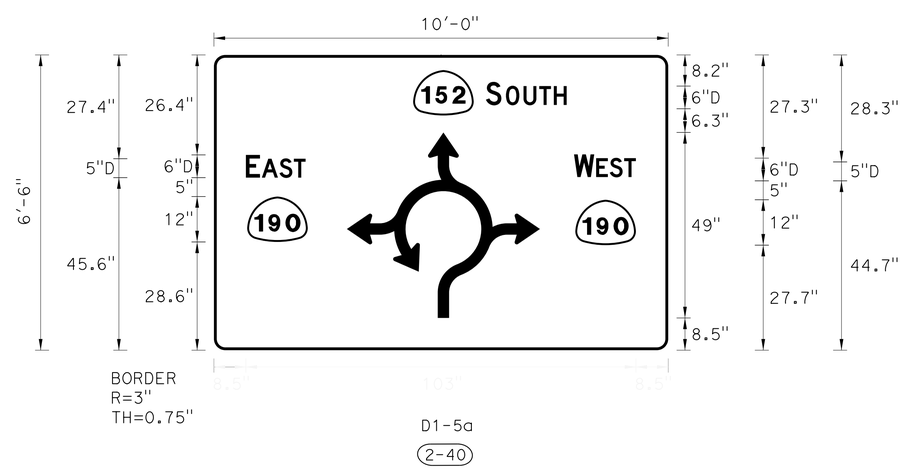

D1-5a

(2-40)

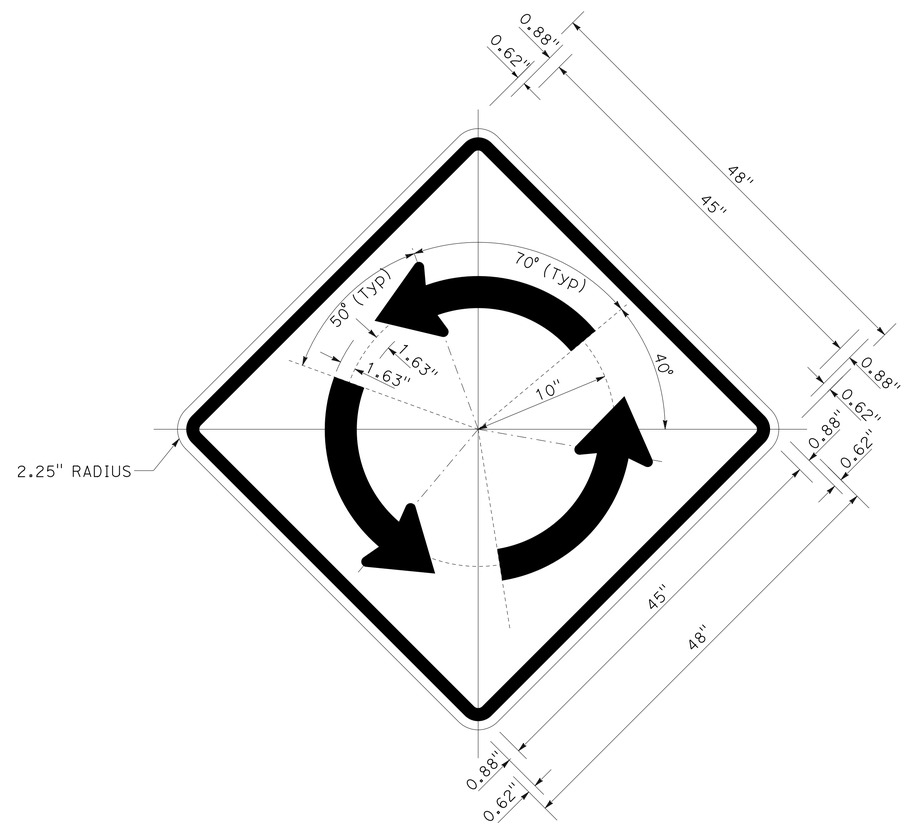

W2-6
BLACK ON YELLOW
ROUNDABOUT SYMBOL

NO SCALE

SIGN DETAILS
SD-1

REVISED BY	
DATE REVISED	
CALCULATED-DESIGNED BY	KAMRUL KHAN
CHECKED BY	HASSAN M. TAHA
FUNCTIONAL SUPERVISOR	MOHAMMED QATAMI

STATE OF CALIFORNIA - DEPARTMENT OF TRANSPORTATION
Caltrans® TRAFFIC DESIGN

LAST REVISION 06-17-16 | DATE PLOTTED => 21-JUL-2016 | TIME PLOTTED => 16:24

Dist	COUNTY	ROUTE	POST MILES TOTAL PROJECT	SHEET No.	TOTAL SHEETS
06	Tul	190	4.1/4.8	37	73

REGISTERED CIVIL ENGINEER 06-17-16 DATE

6-20-16
PLANS APPROVAL DATE

REGISTERED PROFESSIONAL ENGINEER KAMRUL KHAN No. 74112 Exp. 06/30/17 CIVIL STATE OF CALIFORNIA

THE STATE OF CALIFORNIA OR ITS OFFICERS OR AGENTS SHALL NOT BE RESPONSIBLE FOR THE ACCURACY OR COMPLETENESS OF SCANNED COPIES OF THIS PLAN SHEET.

SIGN QUANTITIES

SIGN NUMBER (X-X)	SIGN CODE	SIGN MESSAGE	PANEL SIZE	POST SIZE	BACKGROUND		LEGEND		GRAFFITI FILM		FURNISH SINGLE SHEET ALUMINUM SIGN			ROADSIDE SIGN - ONE POST	ROADSIDE SIGN - TWO POST	INSTALL SIGN (SSBM)	REMOVE ROADSIDE SIGN	TREATED WOOD WASTE	RETROREFLECTIVE SHEETING (TYPE XI)
											FRAMED	UNFRAMED							
					SHEETING COLOR	RETROREFLECTIVITY ASTM TYPE	SHEETING COLOR	RETROREFLECTIVITY ASTM TYPE	STANDARD	PREMIUM	0.080" FOR RETROREFLECTIVE SHEETING (TYPE XI)	0.063" FOR RETROREFLECTIVE SHEETING (TYPE XI)	0.080" FOR RETROREFLECTIVE SHEETING (TYPE XI)						
			INCHES	INCHES							SQFT	SQFT	SQFT	EA	EA	EA	EA	LB	SQFT
1-1	W2-6	CIRCULAR INTERSECTION	48 x 48		YELLOW	XI	BLACK			X			16.00			1			16.00
1-2	D1-5a	AS SHOWN ON PLAN	120x 78	2 - 6 x 8	GREEN	XI	WHITE	XI		X	65.00				1				65.00
1-3	D1-5a	AS SHOWN ON PLAN	120x 78	2 - 6 x 8	GREEN	XI	WHITE	XI		X	65.00				1				65.00
1-4	W2-6	CIRCULAR INTERSECTION	48 x 48		YELLOW	XI	BLACK			X			16.00			1			16.00
2-1	W3-2	YIELD AHEAD	36 x 36	1 - 4 x 6	YELLOW	XI	B/R	XI		X		9.00		1					9.00
	W13-1(15)	ADVISORY SPEED PLAQUE	24 x 24		YELLOW	XI	BLACK			X		4.00				1			4.00
2-2	R1-2	YEILD	36 x 36	1 - 4 x 6	RED	XI	WHITE	XI		X		9.00		1					9.00
2-3	W11-2	PEDESTRIAN TRAFFIC	30 x 30	1 - 4 x 6	YELLOW	XI	BLACK			X		6.25		1					6.25
	W16-7P	ARROW	24 x 12		YELLOW	XI	BLACK			X		2.00				1			2.00
2-4	R1-2	YEILD	36 x 36	1 - 4 x 6	RED	XI	WHITE	XI		X		9.00		1					9.00
2-5	R6-4a	CHEVRON ALIGNMENT	48 x 24	1 - 4 x 6	WHITE	XI	BLACK			X			8.00	1					8.00
2-6	R4-7	KEEP RIGHT SYMBOL	24 x 30	1 - 4 x 4	WHITE	XI	BLACK			X		5.00		1					5.00
	K-1 (CA)	TYPE K OBJECT MARKER	12 x 6		YELLOW	XI	BLACK			X		0.50				1			0.50
2-7	M3-4	WEST	24 x 12	1 - 4 x 4	WHITE	XI	BLACK			X		2.00		1					2.00
	G28-2 (CA)	STATE SHILED	25 x 28	1 - 4 x 4	GREEN	XI	WHITE	XI		X		4.86		1					4.86
	M6-2	DIRECTIONAL ARROW AUXILIARY	21 x 15	1 - 4 x 4	WHITE	XI	BLACK			X		2.19		1					2.19
2-8	W11-2	PEDESTRIAN TRAFFIC	30 x 30	1 - 4 x 6	YELLOW	XI	BLACK			X		6.25		1					6.25
	W16-7P	ARROW	24 x 12		YELLOW	XI	BLACK			X		2.00				1			2.00
2-9	W11-2	PEDESTRIAN TRAFFIC	30 x 30	1 - 4 x 6	YELLOW	XI	BLACK			X		6.25		1					6.25
	W16-7P	ARROW	24 x 12		YELLOW	XI	BLACK			X		2.00				1			2.00
2-10	G8-22(CA)	ROAD 152 WITH ARROW	51 x 51	1 - 6 x 6	GREEN	XI	WHITE	XI		X			18.06	1					18.06
2-11	R4-7	KEEP RIGHT SYMBOL	24 x 30	1 - 4 x 4	WHITE	XI	BLACK			X		5.00		1					5.00
	K-1 (CA)	TYPE K OBJECT MARKER	12 x 6		YELLOW	XI	BLACK			X		0.50				1			0.50
2-12	W11-2	PEDESTRIAN TRAFFIC	30 x 30	1 - 4 x 6	YELLOW	XI	BLACK			X		6.25		1					6.25
	W16-7P	ARROW	24 x 12		YELLOW	XI	BLACK			X		2.00				1			2.00
2-13	R1-2	YEILD	36 x 36	1 - 4 x 6	RED	XI	WHITE	XI		X		9.00		1					9.00
2-14	R1-2	YEILD	36 x 36	1 - 4 x 6	RED	XI	WHITE	XI		X		9.00		1					9.00
2-15	G28- 2(CA), W1-7	ROUTE 190															1	170	
2-16	R1-1	STOP															1	170	
2-17	R6-4a	CHEVRON ALIGNMENT	48 x 24	1 - 4 x 6	WHITE	XI	BLACK			X			8.00	1					8.00
2-18	W11-2	PEDESTRIAN TRAFFIC	30 x 30	1 - 4 x 6	YELLOW	XI	BLACK			X		6.25		1					6.25
	W16-7P	ARROW	24 x 12		YELLOW	XI	BLACK			X		2.00				1			2.00
2-19	M3-2	EAST	24 x 12	1 - 4 x 4	WHITE	XI	BLACK			X		2.00		1					2.00
	G28-2(CA)	ROUTE 190	25 x 28	1 - 4 x 4	GREEN	XI	WHITE	XI		X		4.86		1					4.86
	M6-2	ARROW	21 x 15	1 - 4 x 4	WHITE	XI	BLACK			X		2.19		1					2.19
									SUBTOTAL		130.00	119.35	66.06	21	2	10	2	340	315.41

STATE OF CALIFORNIA - DEPARTMENT OF TRANSPORTATION
Caltrans® TRAFFIC DESIGN

FUNCTIONAL SUPERVISOR: MOHAMMED QATAMI
CALCULATED-DESIGNED BY: KAMRUL KHAN
CHECKED BY: HASSAN M. TAHA
REVISED BY
DATE REVISED

SIGN QUANTITIES
SQ-1

LAST REVISION DATE PLOTTED => 21-JUL-2016
TIME PLOTTED => 16:17
06-17-16

Dist	COUNTY	ROUTE	POST MILES TOTAL PROJECT	SHEET No.	TOTAL SHEETS
06	Tul	190	4.1/4.8	38	73

REGISTERED CIVIL ENGINEER 06-17-16 DATE

6-20-16
PLANS APPROVAL DATE

REGISTERED PROFESSIONAL ENGINEER KAMRUL KHAN No. 74112 Exp. 06/30/17 CIVIL STATE OF CALIFORNIA

THE STATE OF CALIFORNIA OR ITS OFFICERS OR AGENTS SHALL NOT BE RESPONSIBLE FOR THE ACCURACY OR COMPLETENESS OF SCANNED COPIES OF THIS PLAN SHEET.

SIGN QUANTITIES

SIGN NUMBER (X-X)	SIGN CODE	SIGN MESSAGE	PANEL SIZE	POST SIZE	BACKGROUND		LEGEND		GRAFFITI FILM		FURNISH SINGLE SHEET ALUMINUM SIGN			ROADSIDE SIGN - ONE POST	ROADSIDE SIGN - TWO POST	INSTALL SIGN (SSBM)	REMOVE ROADSIDE SIGN	TREATED WOOD WASTE	RETROREFLECTIVE SHEETING (TYPE XI)
											FRAMED	UNFRAMED							
					SHEETING COLOR	RETROREFLECTIVITY ASTM TYPE	SHEETING COLOR	RETROREFLECTIVITY ASTM TYPE	STANDARD	PREMIUM	0.080" FOR RETROREFLECTIVE SHEETING (TYPE XI)	0.063" FOR RETROREFLECTIVE SHEETING (TYPE XI)	0.080" FOR RETROREFLECTIVE SHEETING (TYPE XI)						
			INCHES	INCHES							SQFT	SQFT	SQFT	EA	EA	EA	EA	LB	SQFT
2-20	R4-7	KEEP RIGHT SYMBOL	24 x 30	1 - 4 x 4	WHITE	XI	BLACK			X		5.00		1					5.00
	K-1 (CA)	TYPE K OBJECT MARKER	12 x 6		YELLOW	XI	BLACK			X		0.50				1			0.50
2-21	R6-4a	CHEVRON ALIGNMENT	48 x 24	1 - 4 x 6	WHITE	XI	BLACK			X			8.00	1					8.00
2-22	R1-2	YEILD	36 x 36	1 - 4 x 6	RED	XI	WHITE	XI		X		9.00		1					9.00
2-23	R1-2	YEILD	36 x 36	1 - 4 x 6	RED	XI	WHITE	XI		X		9.00		1					9.00
2-24	W11-2	PEDESTRIAN TRAFFIC	30 x 30	1 - 4 x 6	YELLOW	XI	BLACK			X		6.25		1					6.25
	W16-7P	ARROW	24 x 12		YELLOW	XI	BALCK			X		2.00				1			2.00
2-25	W3-2	YIELD AHEAD	36 x 36	1 - 4 x 6	YELLOW	XI	B/R	XI		X		9.00		1					9.00
	W13-1(15)	ADVISORY SPEED PLAQUE	24 x 24		YELLOW	XI	BALCK			X		4.00				1			4.00
2-26	G28-22 (CA)	ROAD 152 WITH ARROW	51 x 51	1 - 6 x 6	GREEN	XI	WHITE	XI		X			18.06	1					18.06
2-27	W11-2	PEDESTRIAN TRAFFIC	30 x 30	1 - 4 x 6	YELLOW	XI	BLACK			X		6.25		1					6.25
	W16-7P	ARROW	24 x 12		YELLOW	XI	BALCK			X		2.00				1			2.00
2-28	G28-2(CA), W1-7	ROUTE 190, ARROW															1	170	
2-29	R1-1	STOP															1	170	
2-30	R6-4a	CHEVRON ALIGNMENT	48 x 24	1 - 4 x 6	WHITE	XI	BLAXK			X			8.00	1					8.00
2-31	R1-2	YEILD	36 x 36	1 - 4 x 6	RED	XI	WHITE	XI		X		9.00		1					9.00
2-32	R1-2	YEILD	36 x 36	1 - 4 x 6	RED	XI	WHITE	XI		X		9.00		1					9.00
2-33	W11-2	PEDESTRIAN TRAFFIC	30 x 30	1 - 4 x 6	YELLOW	XI	BLACK			X		6.25		1					6.25
	W16-7P	ARROW	24 x 12		YELLOW	XI	BLACK			X		2.00				1			2.00
2-34	W2-6	CIRCULAR INTERSECTION	48 x 48		YELLOW	XI	BLACK			X			16.00			1			16.00
2-35	R4-7	KEEP RIGHT SYMBOL	24 x 30	1 - 4 x 4	WHITE	XI	BLACK			X		5.00		1					5.00
	K-1 (CA)	TYPE K OBJECT MARKER	12 x 6		YELLOW	XI	BLACK			X		0.50				1			0.50
2-36	W3-2	YIELD AHEAD	36 x 36	1 - 4 x 6	YELLOW	XI	B/R	XI		X		9.00		1					9.00
	W13-1 (15)	ADVISORY SPEED PLAQUE	24 x 24		YELLOW	XI	BALCK			X		4.00				1			4.00
2-37	W2-6	CIRCULAR INTERSECTION	48 x 48		YELLOW	XI	BLACK			X			16.00			1			16.00
2-38	D1-5a	AS SHOWN ON PLAN	120x 78	2 - 6 x 8	GREEN	XI	WHITE	XI		X	65.00				1				65.00
2-39	W3-2	YIELD AHEAD	36 x 36	1 - 4 x 6	YELLOW	XI	B/R	XI		X		9.00		1					9.00
	W13-1 (15)	ADVISORY SPEED PLAQUE	24 x 24		YELLOW	XI	BLACK			X		4.00				1			4.00
2-40	D1-5a	AS SHOWN ON PLAN	120x 78	2 - 6 x 8	GREEN	XI	WHITE	XI		X	65.00				1				65.00
TOTAL THIS SHEET											130.00	110.75	66.06	15	2	10		340	306.81
TOTAL FROM SQ-1											130.00	119.35	66.06	21	2	10	2	340	315.41
TOTAL											260.00	230.10	132.12	36	4	20	2	680	622.22

STATE OF CALIFORNIA - DEPARTMENT OF TRANSPORTATION
Caltrans® TRAFFIC DESIGN

FUNCTIONAL SUPERVISOR: MOHAMMED QATAMI
CALCULATED-DESIGNED BY: KAMRUL KHAN
CHECKED BY: HASSAN M. TAHA
REVISED BY
DATE REVISED

LAST REVISION 06-17-16 DATE PLOTTED => 21-JUL-2016 TIME PLOTTED => 16:17

SIGN QUANTITIES
SQ-2

Dist	COUNTY	ROUTE	POST MILES TOTAL PROJECT	SHEET No.	TOTAL SHEETS
06	Tul	190	4.1/4.8	39	73

Richard H. Kuan 06-17-16
REGISTERED CIVIL ENGINEER DATE

6-20-16
PLANS APPROVAL DATE

REGISTERED PROFESSIONAL ENGINEER RICHARD H. KUAN No. 56678 Exp. 6-30-17 CIVIL STATE OF CALIFORNIA

THE STATE OF CALIFORNIA OR ITS OFFICERS OR AGENTS SHALL NOT BE RESPONSIBLE FOR THE ACCURACY OR COMPLETENESS OF SCANNED COPIES OF THIS PLAN SHEET.

ROADWAY QUANTITIES

LOCATION	HMA (TYPE A)	HMA (TYPE A) Misc AREA)	CLASS 2 AGGREGATE BASE	ROADWAY EXCAVATION	EMBANKMENT (N)	JPCP (TEXTURED PAVEMENT)	MINOR CONCRETE (Misc CONSTRUCTION)	TACK COAT
	TON	SQYD	CY	CY	CY	CY	CY	TON
ROUTE 190	6,484		5,526	15,864	2,043			4
ROAD 152	1,764		1,509	1,454	291			2
ROUNDABOUT AREA	3,321		2,006	1,462	13,841	238	6	
DETOUR	445		472		691			
MISCELLANOUS AREA	32	157	16					
DRAINAGE BASIN				700				
SIDEWALK							321	
CURB							292	
TOTAL	12,046	157	9,529	19,480	16,866	238	619	6

(N) = NOT A SEPARATE PAY ITEM, FOR INFORMATION ONLY.

DRAINAGE AND IRRIGATION

LOCATION	18" RCP	REMOVE PIPE	DESCRIPTION
	LF	LF	
ROUTE 190 Sta 339+00.00	160		DRAINAGE SYSTEM
ROUTE 190 Sta 337+36.10		49	
ROUTE 190 Sta 343+00.00	110		IRRIGATION SYSTEM
TOTAL	270	49	

TEMPORARY WATER POLLUTION CONTROL QUANTITIES

LOCATION	TEMPORARY SOIL BINDER	TEMPORARY FIBER ROLL	TEMPORARY SILT FENCE
	SQYD	LF	LF
ROUTE 190 Sta 319+10 TO Sta 354+44	30,000	700	500
TOTAL	30,000	700	500

SURVEY MONUMENT (TYPE B)

LOCATION	BEARING		EA
	NORTHING	EASTING	
ROUTE 190 Sta 336+81.29	1901886.229	6492960.542	1
		TOTAL	1

DETOUR QUANTITIES

LOCATION	HMA	AB
	TON	CY
ROUTE 190 (STAGE CONSTRUCTION)	445	472
TOTAL	445*	472*

* QUANTITIES INCLUDED IN ROADWAY QUANTITIES.

ROCK SLOPE PROTECTION

LOCATION	ROCK SLOPE PROTECTION (NO. 2, METHOD B)	ROCK SLOPE PROTECTION FABRIC (CLASS 8)
	CY	SQYD
DRAINAGE BASIN	3	10
OVERSIDE DRAIN	1	2
TOTAL	4	12

MISCELLANEOUS CONSTRUCTION

DESCRIPTION	LOCATION	MINOR CONCRETE (TEXTURED PAVING)	ROCK BLANKET
		CY	SQFT
SPLITTER ISLAND	ROUTE 190 Sta 333+41.83 TO 335+73.94	20	
SPLITTER ISLAND	ROUTE 190 Sta 335+82.30 TO 336+02.78	5	
SPLITTER ISLAND	ROAD 152 Sta 19+94.29 TO 20+13.46	7	
SPLITTER ISLAND	ROAD 152 Sta 20+19.60 TO 22+71.96	24	
SPLITTER ISLAND	ROUTE 190 Sta 337+86.79 TO 338+07.02	5	
SPLITTER ISLAND	ROUTE 190 Sta 338+15.54 TO 339+85.08	14	
SPLITTER ISLAND	ROAD 152 Sta 15+87.07 TO 17+85.23	16	
SPLITTER ISLAND	ROAD 152 Sta 17+90.93 TO 18+10.29	6	
SIDEWALK	ROAD 152 Sta 16+57.07 TO 17+64.95 Lt		217
SIDEWALK	ROAD 152 Sta 17+93.31 TO 18+76.50 Lt		224
SIDEWALK	ROUTE 190 Sta 332+04.75 TO 332+75.89 Rt		130
SIDEWALK	ROUTE 190 Sta 333+10.70 TO 335+53.44 Rt		484
SIDEWALK	ROUTE 190 Sta 334+03.32 TO 335+57.25 Lt		307
SIDEWALK	ROUTE 190 Sta 335+86.72 TO 336+60.10 Lt		212
SIDEWALK	ROAD 152 Sta 20+41.70 TO 22+53.71 Lt		418
SIDEWALK	ROAD 152 Sta 20+40.12 TO 22+71.84 Rt		464
SIDEWALK	ROAD 152 Sta 19+28.30 TO 20+11.75 Rt		225
SIDEWALK	ROUTE 190 Sta 338+35.83 TO 342+24.75 Lt		773
SIDEWALK	ROUTE 190 Sta 338+32.21 TO 339+36.00 Rt		207
SIDEWALK	ROAD 152 Sta 17+90.17 TO 18+66.44 Rt		217
SIDEWALK	ROAD 152 Sta 15+55.75 TO 17+62.14 Rt		407
ROUNDABOUT	ROUTE 190 Sta 336+22.79 TO 337+66.79		5,560
	TOTAL	97	9,845

HMA AND CLASS 2 AB (MISCELLANEOUS AREA)

LOCATION	STATION	AREA	HMA	AB (CL 2)
		SQYD	TON	CY
DRIVEWAY	Rte 190 340+34.34	49	10	5
DRIVEWAY	Rte 190 341+04.27	51	10	5
DRIVEWAY	ROAD 152 15+52.00	54	11	6
OVERSIDE DRAIN	Rte 190 331+70.00	3	1	
TOTAL		157*	32*	16*

* QUANTITIES INCLUDED IN ROADWAY QUANTITIES.

FENCE AND GATE

ROUTE 190	DIRECTION	CHAIN LINK FENCE (CL-6)	8' CHAIN LINK GATE (CL-6)
LOCATION		LF	EA
Sta 357+55.00 TO Sta 359+35.00	EB	502	
Sta 338+30.00	EB		2
TOTAL		502	2

IRRIGATION CONDUIT

LOCATION	12" CHDPE PIPE CONDUIT
	LF
ROUTE 190 336+21.46 TO 336+73.82 Lt	76
TOTAL	76

SUMMARY OF QUANTITIES
Q-1

REVISED BY | DATE REVISED
JOO BAEK | FERNANDO MORALES
CALCULATED-DESIGNED BY | CHECKED BY
FUNCTIONAL SUPERVISOR | ERNESTO PENUNA
STATE OF CALIFORNIA - DEPARTMENT OF TRANSPORTATION
Caltrans® DESIGN

LAST REVISION 06-17-16 | DATE PLOTTED => 21-JUL-2016 TIME PLOTTED => 16:17

Dist	COUNTY	ROUTE	POST MILES TOTAL PROJECT	SHEET No.	TOTAL SHEETS
06	Tul	190	4.1/4.8	40	73

LICENSED LANDSCAPE ARCHITECT

6-20-16
PLANS APPROVAL DATE

LICENSED LANDSCAPE ARCHITECT
Charles S. LaRue No. 3946
Expiration Date
07/31/16
Renewal Date
06/02/16
Date
STATE OF CALIFORNIA

THE STATE OF CALIFORNIA OR ITS OFFICERS OR AGENTS SHALL NOT BE RESPONSIBLE FOR THE ACCURACY OR COMPLETENESS OF SCANNED COPIES OF THIS PLAN SHEET.

NOTE:

SEE C-1 FOR TEXTURED PAVING LIMITS

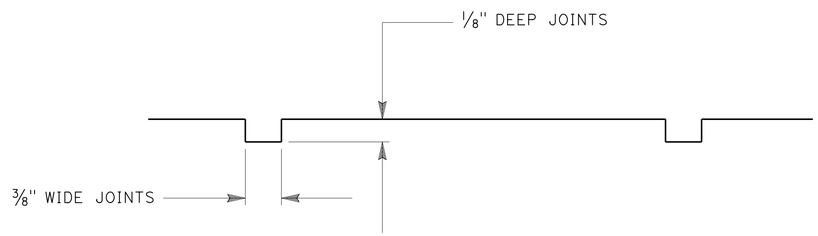

SECTION A-A

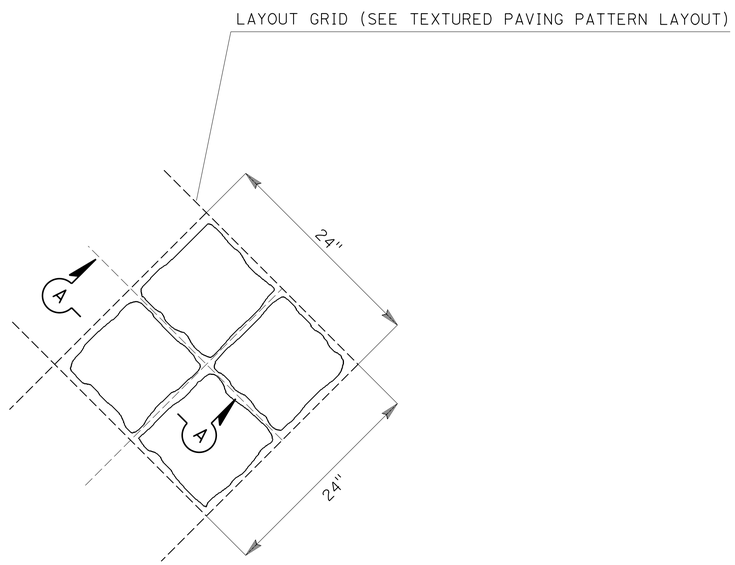

PLAN

TEXTURED PAVING PATTERN

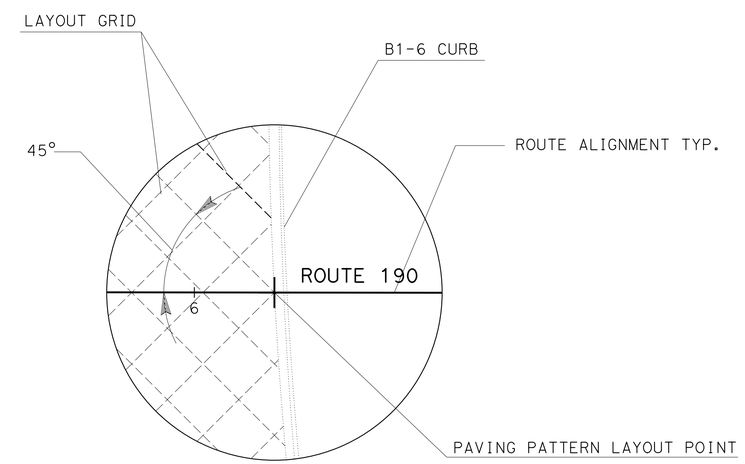

TEXTURED PAVING PATTERN LAYOUT

LANDSCAPE DETAILS
LD-1

NO SCALE

STATE OF CALIFORNIA - DEPARTMENT OF TRANSPORTATION
Caltrans® LANDSCAPE ARCHITECTURE

SENIOR LANDSCAPE ARCHITECT: BRAD COLE
CALCULATED-DESIGNED BY / CHECKED BY: CHARLES LaRUE
REVISED BY: RAYMOND SEGURA
DATE REVISED: XXXXX XXXXX

LAST REVISION 06-17-16
DATE PLOTTED => 21-JUL-2016
TIME PLOTTED => 16:17

Dist	COUNTY	ROUTE	POST MILES TOTAL PROJECT	SHEET No.	TOTAL SHEETS
06	Tul	190	4.1/4.8	41	73

LICENSED LANDSCAPE ARCHITECT

6-20-16
PLANS APPROVAL DATE

LICENSED LANDSCAPE ARCHITECT
Charles S. LaRue No. 3946
Expiration Date 07/31/16
Renewal Date 06/02/16
Date
STATE OF CALIFORNIA

THE STATE OF CALIFORNIA OR ITS OFFICERS OR AGENTS SHALL NOT BE RESPONSIBLE FOR THE ACCURACY OR COMPLETENESS OF SCANNED COPIES OF THIS PLAN SHEET.

EROSION CONTROL TYPE 1

SEQUENCE	ITEM	MATERIAL		APPLICATION RATE
		DESCRIPTION	TYPE	
STEP 1	HYDROSEED	SEED	MIX	25.1 LB/ACRE
		FIBER	WOOD	500 LB/ACRE
STEP 2	HYDROMULCH	FIBER	WOOD	1,500 LB/ACRE
		TACKIFIER	PSYLLIUM	100 LB/ACRE

EROSION CONTROL TYPE 2

SEQUENCE	ITEM	MATERIAL		APPLICATION RATE	REMARKS
		DESCRIPTION	TYPE		
STEP 1	ROLLED EROSION CONTROL PRODUCT (NETTING)	NETTING	TYPE A		
STEP 2	FIBER ROLLS	FIBER ROLL	TYPE B 8" TO 10" Dia		TYPE 1 FIBER ROLL INSTALLATION
STEP 3	HYDROSEED	SEED	MIX	25.1 LB/ACRE	
		FIBER	WOOD	500 LB/ACRE	
STEP 4	HYDROMULCH	FIBER	WOOD	1,500 LB/ACRE	
		TACKIFIER	PSYLLIUM	100 LB/ACRE	

SEED MIX

BOTANICAL NAME (COMMON NAME)	PERCENT GERMINATION (MINIMUM)	POUNDS PURE LIVE SEED PER ACRE (SLOPE MEASUREMENT)
BROMUS CARINATUS [1] (CALIFORNIA BROME)	80	14.5
VULPIA MICROSTACHYS [1] (SMALL FESCUE)	80	7.9
VULPIA OCTOFLORA [1] (SIX WEEKS FESCUE)	60	2.7

[1] SEED PRODUCED IN CALIFORNIA ONLY.

EROSION CONTROL LEGEND
ECL-1

REVISED BY | DATE REVISED
RAYMOND SEGURA | CHARLES LaRUE
CALCULATED-DESIGNED BY | CHECKED BY
SENIOR LANDSCAPE ARCHITECT | BRAD COLE

STATE OF CALIFORNIA - DEPARTMENT OF TRANSPORTATION
Caltrans® LANDSCAPE ARCHITECTURE

LAST REVISION 06-17-16 | DATE PLOTTED => 21-JUL-2016 | TIME PLOTTED => 16:17

Dist	COUNTY	ROUTE	POST MILES TOTAL PROJECT	SHEET No.	TOTAL SHEETS
06	Tul	190	4.1/4.8	42	73

LICENSED LANDSCAPE ARCHITECT

6-20-16
PLANS APPROVAL DATE

LICENSED LANDSCAPE ARCHITECT
Charles S. LaRue No. 5946
Expiration Date 07/31/16
Renewal Date 06/02/16
Date
STATE OF CALIFORNIA

THE STATE OF CALIFORNIA OR ITS OFFICERS OR AGENTS SHALL NOT BE RESPONSIBLE FOR THE ACCURACY OR COMPLETENESS OF SCANNED COPIES OF THIS PLAN SHEET.

NOTE:

FOR ACCURATE RIGHT OF WAY DATA, CONTACT RIGHT OF WAY ENGINEERING AT THE DISTRICT OFFICE.

LEGEND

EROSION CONTROL TYPE 1

EROSION CONTROL TYPE 2

WOOD MULCH (WOOD CHIP MULCH), 4" DEPTH
PLACE ON ORIGINAL GROUND.
DO NOT USE SOIL STERILANT OR FILTER FABRIC.

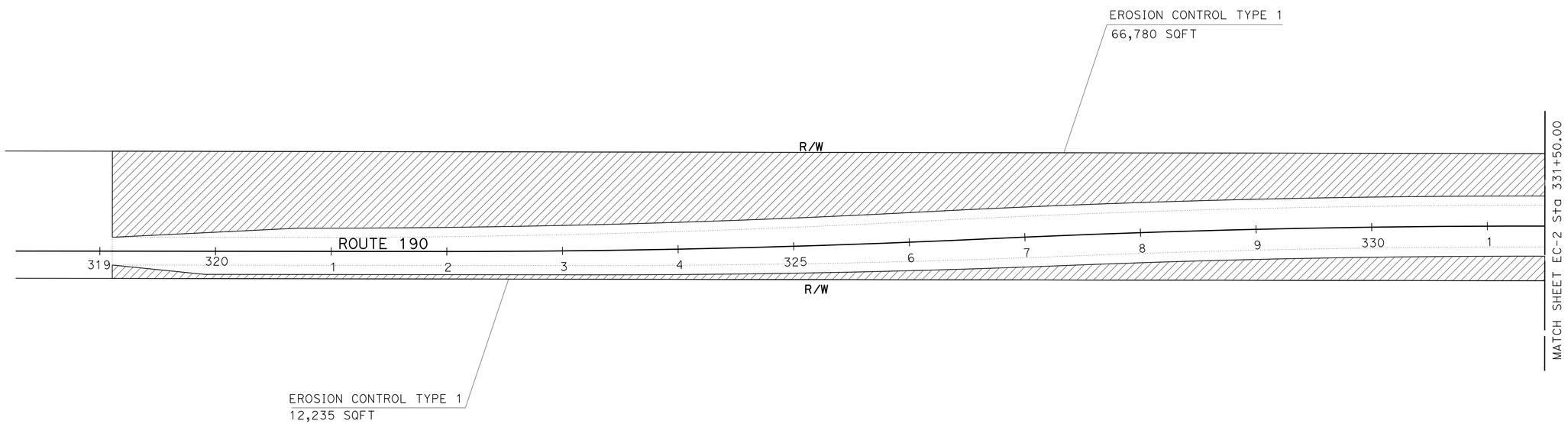

APPROVED FOR EROSION CONTROL WORK ONLY

EROSION CONTROL PLAN
SCALE: 1"=50'

EC-1

REVISED BY | DATE REVISED
RAYMOND SEGURA | CHARLES LaRUE
CALCULATED-DESIGNED BY | CHECKED BY
SENIOR LANDSCAPE ARCHITECT
BRAD COLE

STATE OF CALIFORNIA - DEPARTMENT OF TRANSPORTATION
Caltrans® LANDSCAPE ARCHITECTURE

LAST REVISION 06-17-16 | DATE PLOTTED => 21-JUL-2016 | TIME PLOTTED => 16:17

Dist	COUNTY	ROUTE	POST MILES TOTAL PROJECT	SHEET No.	TOTAL SHEETS
06	Tul	190	4.1/4.8	43	73

LICENSED LANDSCAPE ARCHITECT

6-20-16
PLANS APPROVAL DATE

LICENSED LANDSCAPE ARCHITECT Charles S. LaRue No. 5946 Expiration Date 07/31/16 Renewal Date 06/02/16 Date STATE OF CALIFORNIA

THE STATE OF CALIFORNIA OR ITS OFFICERS OR AGENTS SHALL NOT BE RESPONSIBLE FOR THE ACCURACY OR COMPLETENESS OF SCANNED COPIES OF THIS PLAN SHEET.

NOTE:

FOR ACCURATE RIGHT OF WAY DATA, CONTACT RIGHT OF WAY ENGINEERING AT THE DISTRICT OFFICE.

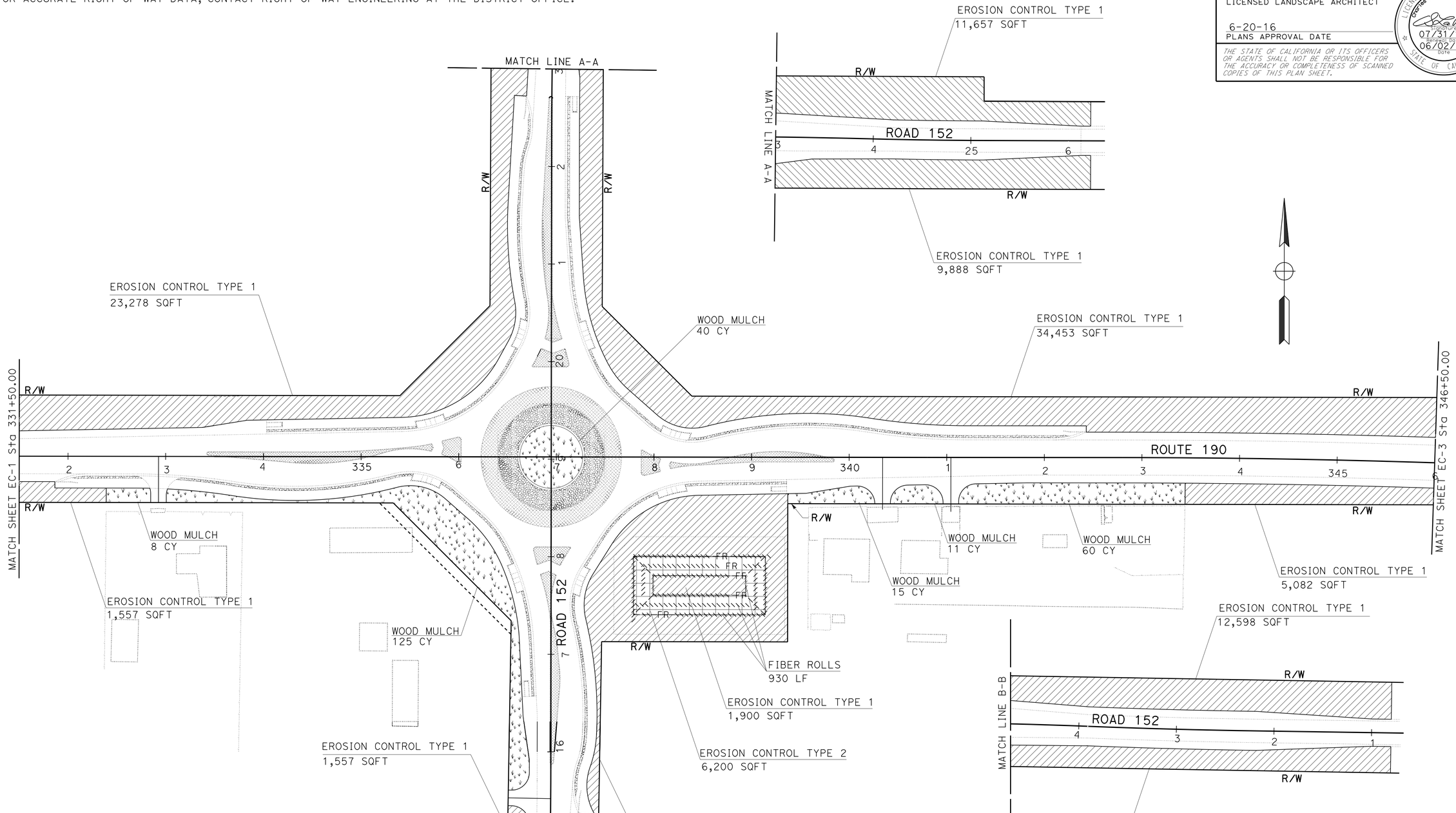

APPROVED FOR EROSION CONTROL WORK ONLY

EROSION CONTROL PLAN

SCALE: 1"=50'

EC-2

REVISED BY	DATE REVISED

CALCULATED-DESIGNED BY	CHECKED BY
RAYMOND SEGURA	CHARLES LaRUE

SENIOR LANDSCAPE ARCHITECT: BRAD COLE

STATE OF CALIFORNIA - DEPARTMENT OF TRANSPORTATION
Caltrans® LANDSCAPE ARCHITECTURE

LAST REVISION 06-17-16 | DATE PLOTTED => 21-JUL-2016 | TIME PLOTTED => 16:17

Dist	COUNTY	ROUTE	POST MILES TOTAL PROJECT	SHEET No.	TOTAL SHEETS
06	Tul	190	4.1/4.8	44	73

LICENSED LANDSCAPE ARCHITECT

6-20-16
PLANS APPROVAL DATE

LICENSED LANDSCAPE ARCHITECT
Charles S. LaRue No. 5946
Expiration Date
07/31/16
Renewal Date
06/02/16
Date
STATE OF CALIFORNIA

THE STATE OF CALIFORNIA OR ITS OFFICERS OR AGENTS SHALL NOT BE RESPONSIBLE FOR THE ACCURACY OR COMPLETENESS OF SCANNED COPIES OF THIS PLAN SHEET.

NOTE:

FOR ACCURATE RIGHT OF WAY DATA, CONTACT RIGHT OF WAY ENGINEERING AT THE DISTRICT OFFICE.

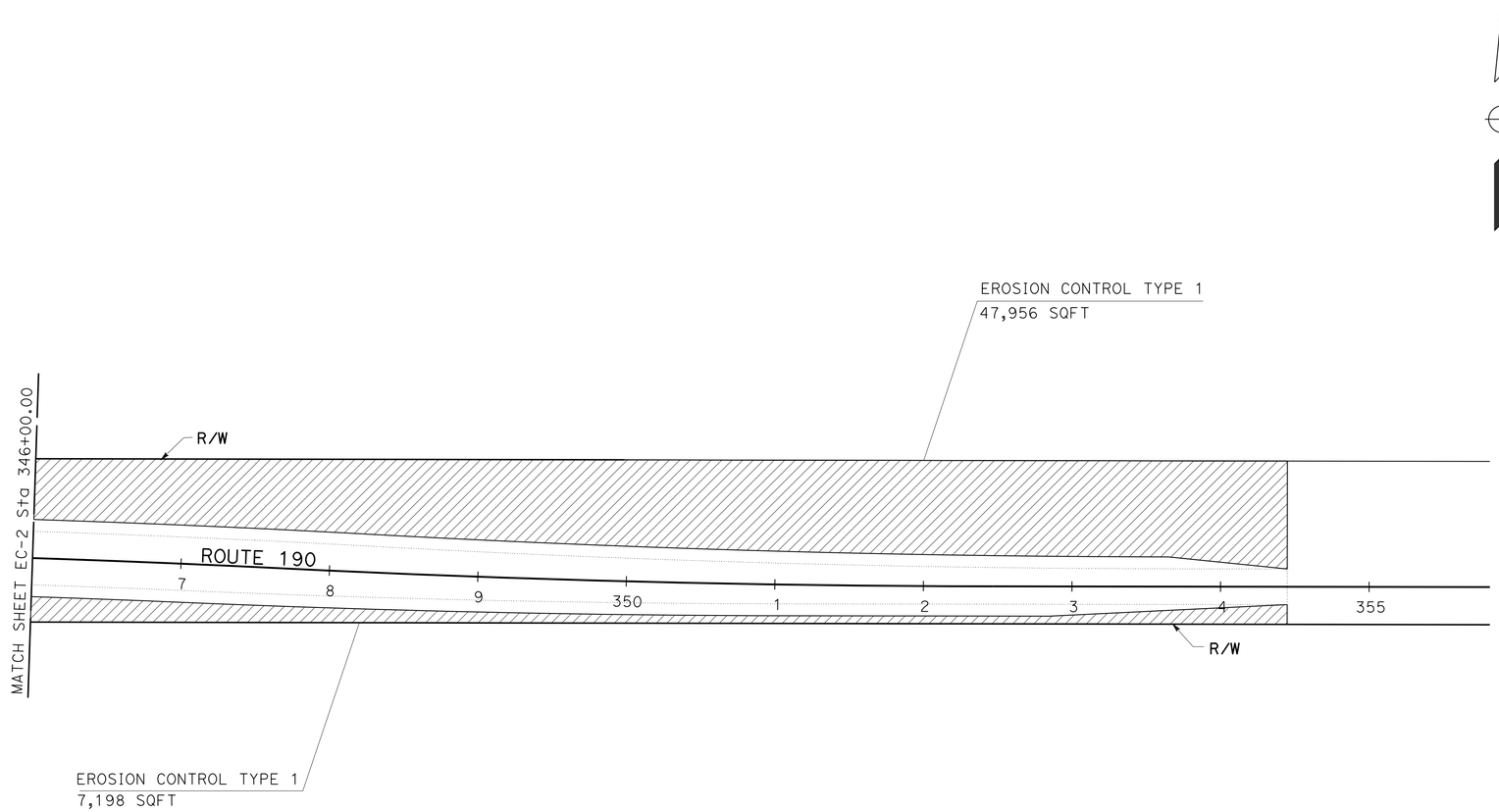

APPROVED FOR EROSION CONTROL WORK ONLY

EROSION CONTROL PLAN

SCALE: 1"=50'

EC-3

STATE OF CALIFORNIA - DEPARTMENT OF TRANSPORTATION
Caltrans® LANDSCAPE ARCHITECTURE

SENIOR LANDSCAPE ARCHITECT: BRAD COLE
CALCULATED-DESIGNED BY: RAYMOND SEGURA
CHECKED BY: CHARLES LaRUE
REVISED BY
DATE REVISED

LAST REVISION 06-17-16
DATE PLOTTED => 21-JUL-2016
TIME PLOTTED => 16:17

Dist	COUNTY	ROUTE	POST MILES TOTAL PROJECT	SHEET No.	TOTAL SHEETS
06	Tul	190	4.1/4.8	45	73

LICENSED LANDSCAPE ARCHITECT

6-20-16
PLANS APPROVAL DATE

LICENSED LANDSCAPE ARCHITECT
Charles S. LaRue No. 3946
Expiration Date 07/31/16
Renewal Date 06/02/16
Date
STATE OF CALIFORNIA

THE STATE OF CALIFORNIA OR ITS OFFICERS OR AGENTS SHALL NOT BE RESPONSIBLE FOR THE ACCURACY OR COMPLETENESS OF SCANNED COPIES OF THIS PLAN SHEET.

EROSION CONTROL QUANTITIES

SHEET	DESCRIPTION	HYDROSEED	HYDROMULCH	ROLLED EROSION CONTROL PRODUCT (NETTING)	FIBER ROLL
		SQFT	SQFT	SQFT	LF
EC-1	EC TYPE 1	66,780	66,780		
	EC TYPE 1	12,235	12,235		
EC-2	EC TYPE 1	23,278	23,278		
	EC TYPE 1	11,657	11,657		
	EC TYPE 1	9,888	9,888		
	EC TYPE 1	34,453	34,453		
	EC TYPE 1	1,557	1,557		
	EC TYPE 1	1,557	1,557		
	EC TYPE 1	8,796	8,796		
	EC TYPE 1	12,598	12,598		
	EC TYPE 1	22,528	22,528		
	EC TYPE 2	6,200	6,200	6,200	930
	EC TYPE 1	1,900	1,900		
	EC TYPE 1	5,082	5,082		
EC-3	EC TYPE 1	47,956	47,956		
	EC TYPE 1	7,198	7,198		
	TOTAL	273,663	273,663	6,200	930

WOOD MULCH

SHEET	LOCATION			CY
	STATION	L†	R†	
EC-2	ROUTE 190 332+39.23 TO 332+84.74		X	8
	ROUTE 190 333+01.06 TO ROAD 152 15+60.49	X	X	125
	ROUTE 190 336+62.54 TO 337+27.04	X	X	40
	ROUTE 190 339+37.20 TO 340+26.34		X	15
	ROUTE 190 340+42.34 TO 340+96.27		X	11
	ROUTE 190 341+12.27 TO 343+44.50		X	60
			TOTAL	259

EROSION CONTROL QUANTITIES
ECQ-1

STATE OF CALIFORNIA - DEPARTMENT OF TRANSPORTATION
Caltrans® LANDSCAPE ARCHITECTURE

SENIOR LANDSCAPE ARCHITECT: BRAD COLE
CALCULATED-DESIGNED BY: RAYMOND SEGURA
CHECKED BY: CHARLES LaRUE
REVISED BY
DATE REVISED

LAST REVISION 06-17-16
DATE PLOTTED => 21-JUL-2016
TIME PLOTTED => 16:17

Dist	COUNTY	ROUTE	POST MILES TOTAL PROJECT	SHEET No.	TOTAL SHEETS
06	Tul	190	4.1/4.8	46	73

REGISTERED ELECTRICAL ENGINEER 6-20-16 DATE

PLANS APPROVAL DATE 6-20-16

REGISTERED PROFESSIONAL ENGINEER PAUL MATOS No. 18757 Exp. 6/30/17 ELECTRICAL STATE OF CALIFORNIA

THE STATE OF CALIFORNIA OR ITS OFFICERS OR AGENTS SHALL NOT BE RESPONSIBLE FOR THE ACCURACY OR COMPLETENESS OF SCANNED COPIES OF THIS PLAN SHEET.

LEGEND: (FOR THIS SHEET ONLY)

1 Exist 120/240 V, 1Ø, 3-WIRE, TYPE III-BF SERVICE EQUIPMENT ENCLOSURE.

NOTE:

FOR ACCURATE RIGHT OF WAY DATA, CONTACT RIGHT OF WAY ENGINEERING AT THE DISTRICT OFFICE.

SYMBOL:

Exist TYPE 1-A POLE WITH FB EQUIPMENT.

ABBREVIATIONS:

SCE	SOUTHERN CALIFORNIA EDISON
Al	ALUMINUM
Cu	COPPER
TCS	TRAFFIC COUNT STATION
STC	SCREENED TRANSMISSION CABLE
PATC	PORTABLE AUTOMATED TRAFFIC COUNTER
CAT5E	CATEGORY 5E CABLE

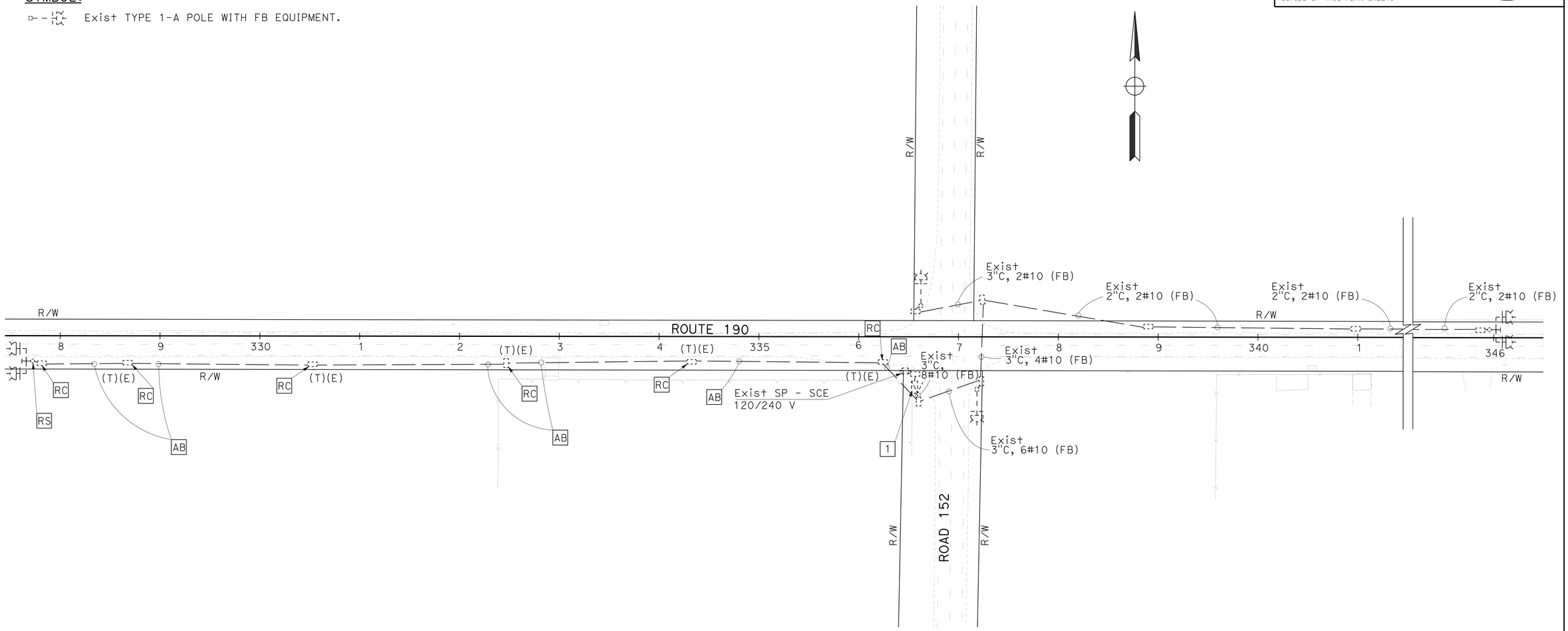

MODIFYING FLASHING BEACON SYSTEM

MODIFYING EXISTING ELECTRICAL SYSTEM

(STAGE CONSTRUCTION-1)

SCALE: 1" = 50'

E-1

APPROVED FOR ELECTRICAL WORK ONLY

STATE OF CALIFORNIA - DEPARTMENT OF TRANSPORTATION

Caltrans® ELECTRICAL DESIGN

FUNCTIONAL SUPERVISOR: ALI BAKHDOUD

CALCULATED-DESIGNED BY: RAJINDER S BRAR

CHECKED BY: PAUL MATOS

REVISED BY

DATE REVISED

LAST REVISION 06-19-16

DATE PLOTTED => 21-JUL-2016

TIME PLOTTED => 14:25

Dist	COUNTY	ROUTE	POST MILES TOTAL PROJECT	SHEET No.	TOTAL SHEETS
06	Tul	190	4.1/4.8	47	73

REGISTERED ELECTRICAL ENGINEER 6-20-16 DATE

6-20-16
PLANS APPROVAL DATE

REGISTERED PROFESSIONAL ENGINEER PAUL MATOS No. 18757 Exp. 6/30/17 ELECTRICAL STATE OF CALIFORNIA

THE STATE OF CALIFORNIA OR ITS OFFICERS OR AGENTS SHALL NOT BE RESPONSIBLE FOR THE ACCURACY OR COMPLETENESS OF SCANNED COPIES OF THIS PLAN SHEET.

LEGEND: (FOR THIS SHEET ONLY)

1 120/240 V, 1Ø, 3-WIRE, TYPE III-CF SERVICE EQUIPMENT ENCLOSURE WITH THE FOLLOWING CIRCUIT BREAKERS:

Ctid No. 06461900004416T

AMPERES	VOLTS	POLES	NAMEPLATE	METER	PHOTOELECTRIC CONTROL TYPE
100	240	2	MAIN	YES	———
15	120	1	FLASHING BEACON	YES	———
15	120	1	TCS (WB)	YES	———
15	120	1	TCS (EB)	YES	———
30	120	1	SPARE	YES	———
——	——	6	SPACE	——	———

Ctid No. 06461900004416L

AMPERES	VOLTS	POLES	NAMEPLATE	METER	PHOTOELECTRIC CONTROL TYPE
100	240	2	MAIN	YES	———
20	240	2	LIGHTING	YES	IV
30	240	2	SPARE	YES	———
30	120	1	SPARE	YES	———
——	——	6	SPACE	——	———

2 FURNISH AND INSTALL CONCRETE TRANSFORMER PAD PER SCE REQUIREMENTS.

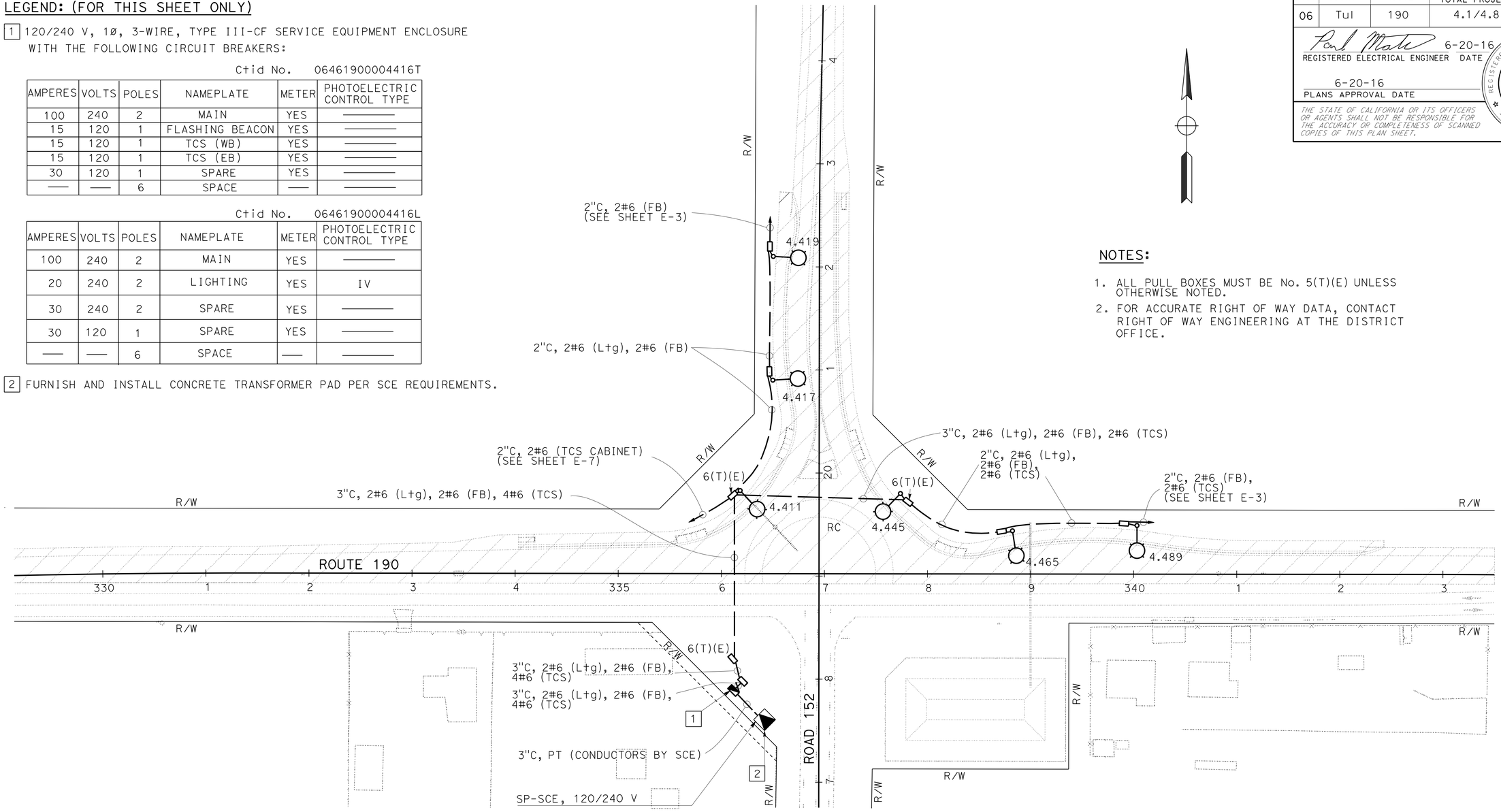

NOTES:

1. ALL PULL BOXES MUST BE No. 5(T)(E) UNLESS OTHERWISE NOTED.
2. FOR ACCURATE RIGHT OF WAY DATA, CONTACT RIGHT OF WAY ENGINEERING AT THE DISTRICT OFFICE.

LIGHTING SYSTEM

(STAGE CONSTRUCTION-2)

SCALE: 1" = 50'

E-2

APPROVED FOR ELECTRICAL WORK ONLY

STATE OF CALIFORNIA - DEPARTMENT OF TRANSPORTATION
Caltrans® ELECTRICAL DESIGN

FUNCTIONAL SUPERVISOR: ALI BAKHDOUD
CALCULATED-DESIGNED BY: RAJINDER S BRAR
CHECKED BY: PAUL MATOS
REVISED BY
DATE REVISED

LAST REVISION 06-19-16
DATE PLOTTED => 21-JUL-2016
TIME PLOTTED => 14:25

Dist	COUNTY	ROUTE	POST MILES TOTAL PROJECT	SHEET No.	TOTAL SHEETS
06	Tul	190	4.1/4.8	48	73

REGISTERED ELECTRICAL ENGINEER 6-20-16 DATE

PLANS APPROVAL DATE 6-20-16

REGISTERED PROFESSIONAL ENGINEER PAUL MATOS No. 18757 Exp. 6/30/17 ELECTRICAL STATE OF CALIFORNIA

THE STATE OF CALIFORNIA OR ITS OFFICERS OR AGENTS SHALL NOT BE RESPONSIBLE FOR THE ACCURACY OR COMPLETENESS OF SCANNED COPIES OF THIS PLAN SHEET.

LEGEND: (FOR THIS SHEET ONLY)

1 ADVANCED FB WITH SB INSTALLATION ON TYPE 15-FBS. INSTALL W2-6 SIGN. SEE SIGN PLANS FOR DETAILS.

NOTES:

1. ALL PULL BOXES MUST BE No. 5(T)(E) UNLESS OTHERWISE NOTED.
2. FOR ACCURATE RIGHT OF WAY DATA, CONTACT RIGHT OF WAY ENGINEERING AT THE DISTRICT OFFICE.

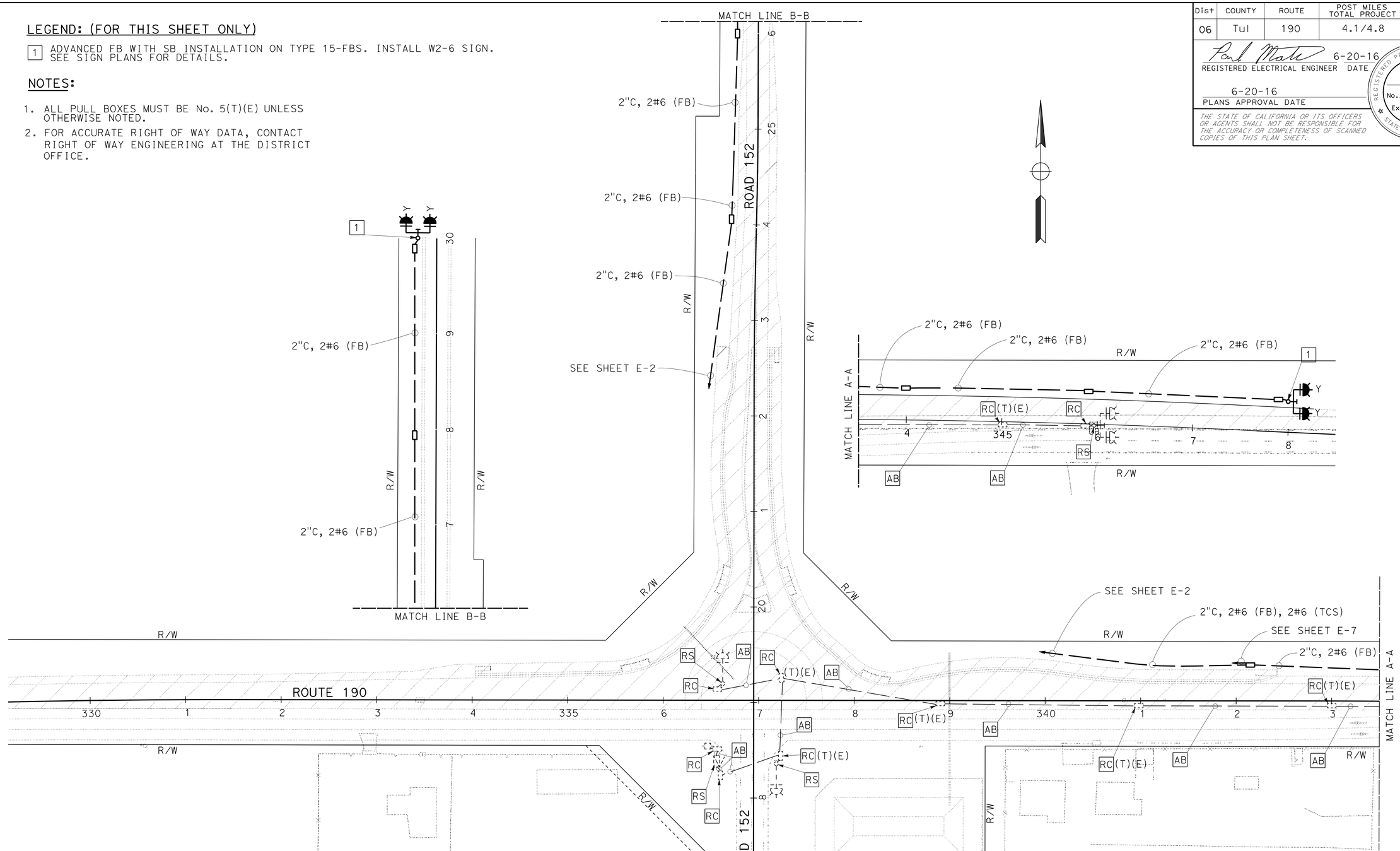

MODIFYING FLASHING BEACON SYSTEM

MODIFYING EXISTING ELECTRICAL SYSTEM

(STAGE CONSTRUCTION-2)

APPROVED FOR ELECTRICAL WORK ONLY

SCALE: 1" = 50'

E-3

STATE OF CALIFORNIA - DEPARTMENT OF TRANSPORTATION

Caltrans® ELECTRICAL DESIGN

FUNCTIONAL SUPERVISOR: ALI BAKHDOUD

CALCULATED-DESIGNED BY: RAJINDER S BRAR

CHECKED BY: PAUL MATOS

REVISED BY / DATE REVISED

LAST REVISION 06-19-16

DATE PLOTTED => 21-JUL-2016
TIME PLOTTED => 14:25

Dist	COUNTY	ROUTE	POST MILES TOTAL PROJECT	SHEET No.	TOTAL SHEETS
06	Tul	190	4.1/4.8	49	73

REGISTERED ELECTRICAL ENGINEER 6-20-16 DATE

6-20-16
PLANS APPROVAL DATE

REGISTERED PROFESSIONAL ENGINEER
PAUL MATOS
No. 18757
Exp. 6/30/17
ELECTRICAL
STATE OF CALIFORNIA

THE STATE OF CALIFORNIA OR ITS OFFICERS OR AGENTS SHALL NOT BE RESPONSIBLE FOR THE ACCURACY OR COMPLETENESS OF SCANNED COPIES OF THIS PLAN SHEET.

NOTES:

1. ALL PULL BOXES MUST BE No. 5(T)(E) UNLESS OTHERWISE NOTED
2. FOR ACCURATE RIGHT OF WAY DATA, CONTACT RIGHT OF WAY ENGINEERING AT THE DISTRICT OFFICE.

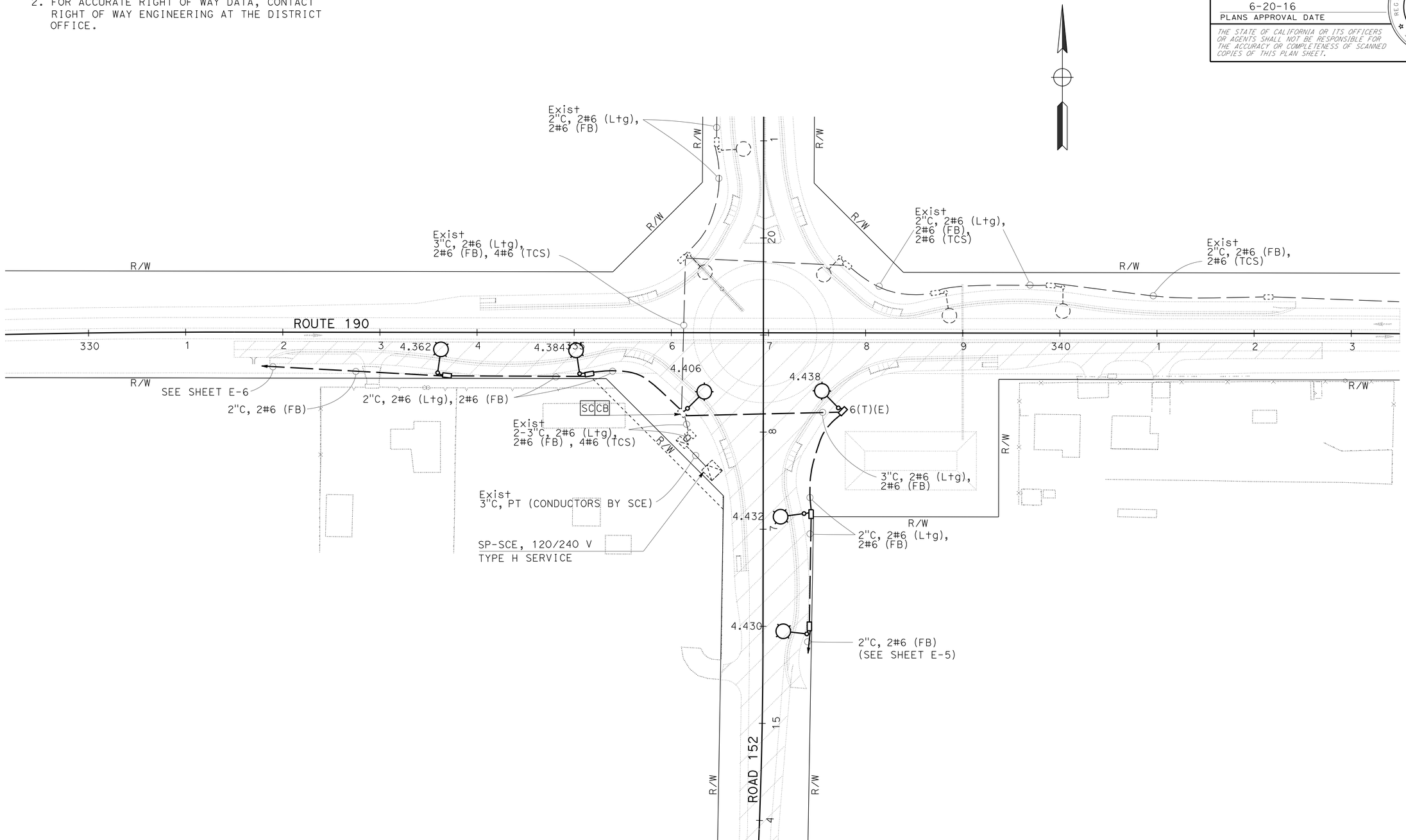

LIGHTING SYSTEM

(STAGE CONSTRUCTION-3)

SCALE: 1" = 50'

E-4

APPROVED FOR ELECTRICAL WORK ONLY

STATE OF CALIFORNIA - DEPARTMENT OF TRANSPORTATION
Caltrans® ELECTRICAL DESIGN

FUNCTIONAL SUPERVISOR: ALI BAKHDOUD
CALCULATED-DESIGNED BY: RAJINDER S BRAR
CHECKED BY: PAUL MATOS
REVISED BY
DATE REVISED

LAST REVISION 06-19-16
DATE PLOTTED => 21-JUL-2016
TIME PLOTTED => 14:25

Dist	COUNTY	ROUTE	POST MILES TOTAL PROJECT	SHEET No.	TOTAL SHEETS
06	Tul	190	4.1/4.8	50	73

REGISTERED ELECTRICAL ENGINEER 6-20-16 DATE

6-20-16
PLANS APPROVAL DATE

REGISTERED PROFESSIONAL ENGINEER PAUL MATOS No. 18757 Exp. 6/30/17 ELECTRICAL STATE OF CALIFORNIA

THE STATE OF CALIFORNIA OR ITS OFFICERS OR AGENTS SHALL NOT BE RESPONSIBLE FOR THE ACCURACY OR COMPLETENESS OF SCANNED COPIES OF THIS PLAN SHEET.

LEGEND: (FOR THIS SHEET ONLY)

[1] ADVANCED FB WITH SB INSTALLATION ON TYPE 15-FBS. INSTALL W2-6 SIGN. SEE SIGN PLANS FOR DETAILS.

NOTES:

1. ALL PULL BOXES MUST BE No. 5(T)(E) UNLESS OTHERWISE NOTED.
2. FOR ACCURATE RIGHT OF WAY DATA, CONTACT RIGHT OF WAY ENGINEERING AT THE DISTRICT OFFICE.

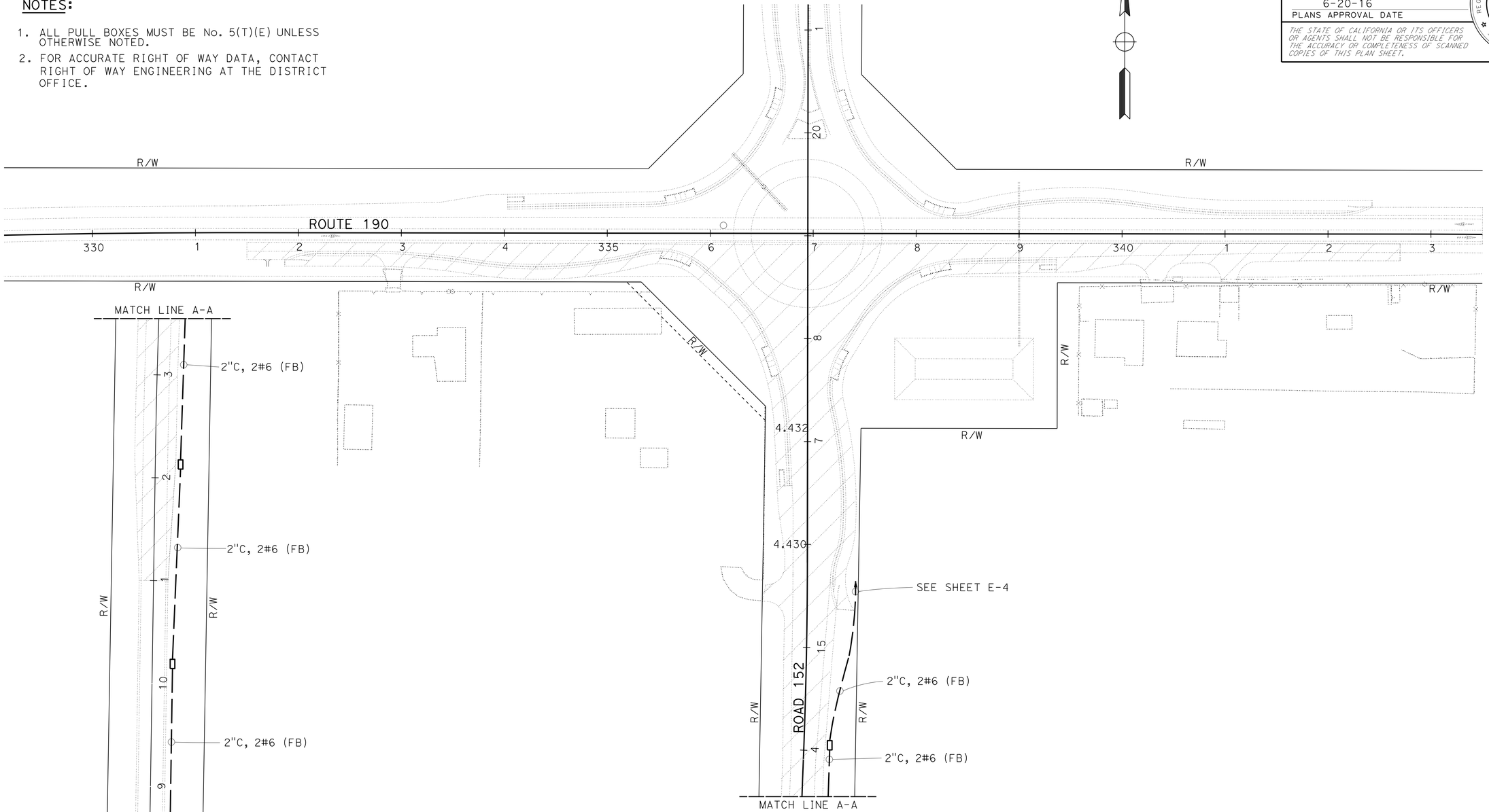

MODIFYING FLASHING BEACON SYSTEM

MODIFYING EXISTING ELECTRICAL SYSTEM

(STAGE CONSTRUCTION-3)

SCALE: 1" = 50'

E-5

APPROVED FOR ELECTRICAL WORK ONLY

STATE OF CALIFORNIA - DEPARTMENT OF TRANSPORTATION
Caltrans® ELECTRICAL DESIGN

FUNCTIONAL SUPERVISOR: ALI BAKHDOUD
CALCULATED-DESIGNED BY: RAJINDER S BRAR
CHECKED BY: PAUL MATOS
REVISED BY
DATE REVISED

LAST REVISION: DATE PLOTTED => 21-JUL-2016 06-19-16 TIME PLOTTED => 14:25

Dist	COUNTY	ROUTE	POST MILES TOTAL PROJECT	SHEET No.	TOTAL SHEETS
06	Tul	190	4.1/4.8	51	73

Paul Matos 6-20-16
REGISTERED ELECTRICAL ENGINEER DATE

6-20-16
PLANS APPROVAL DATE

REGISTERED PROFESSIONAL ENGINEER
PAUL MATOS
No. 18757
Exp. 6/30/17
ELECTRICAL
STATE OF CALIFORNIA

THE STATE OF CALIFORNIA OR ITS OFFICERS OR AGENTS SHALL NOT BE RESPONSIBLE FOR THE ACCURACY OR COMPLETENESS OF SCANNED COPIES OF THIS PLAN SHEET.

LEGEND: (FOR THIS SHEET ONLY)

[1] ADVANCED FB WITH SB INSTALLATION ON TYPE 15-FBS. INSTALL W2-6 SIGN. SEE SIGN PLANS FOR DETAILS.

NOTES:

1. ALL PULL BOXES MUST BE No. 5(T)(E) UNLESS OTHERWISE NOTED.
2. FOR ACCURATE RIGHT OF WAY DATA, CONTACT RIGHT OF WAY ENGINEERING AT THE DISTRICT OFFICE.

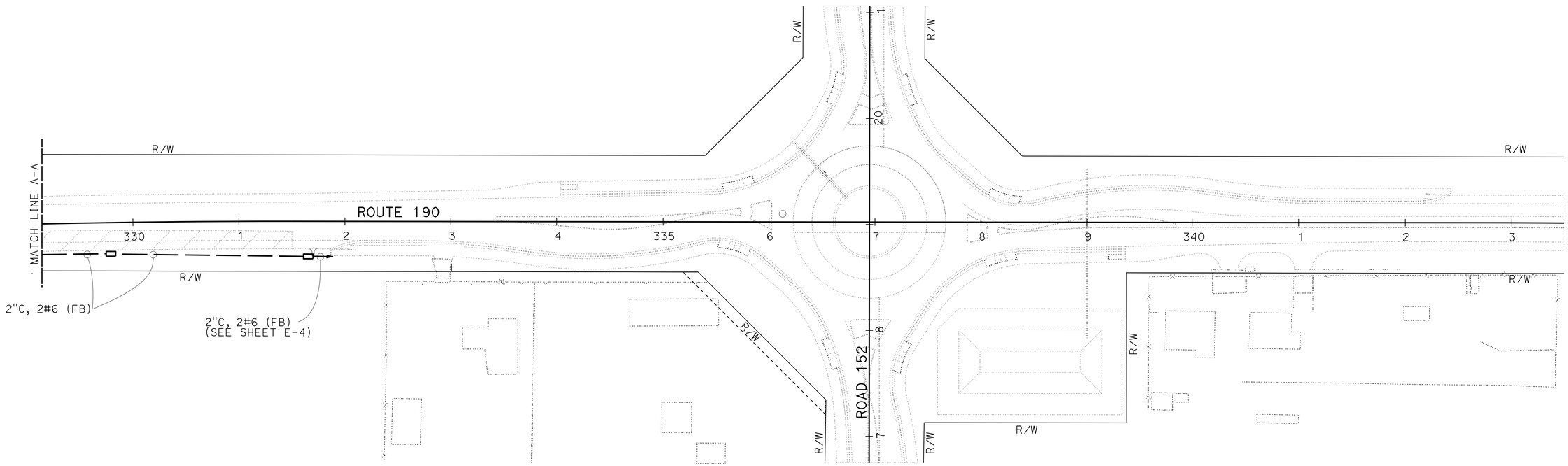

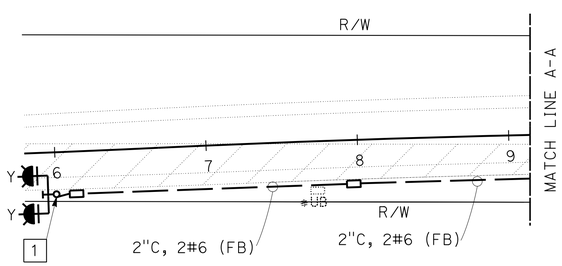

MODIFYING FLASHING BEACON SYSTEM

MODIFYING EXISTING ELECTRICAL SYSTEM

(STAGE CONSTRUCTION-4)

SCALE: 1" = 50'

E-6

APPROVED FOR ELECTRICAL WORK ONLY

STATE OF CALIFORNIA - DEPARTMENT OF TRANSPORTATION
Caltrans® ELECTRICAL DESIGN

FUNCTIONAL SUPERVISOR: ALI BAKHDOUD
CALCULATED-DESIGNED BY: RAJINDER S BRAR
CHECKED BY: PAUL MATOS
REVISED BY
DATE REVISED

LAST REVISION 06-19-16
DATE PLOTTED => 21-JUL-2016
TIME PLOTTED => 14:25

Dist	COUNTY	ROUTE	POST MILES TOTAL PROJECT	SHEET No.	TOTAL SHEETS
06	Tul	190	4.1/4.8	52	73

Paul Matos 6-20-16
REGISTERED ELECTRICAL ENGINEER DATE

6-20-16
PLANS APPROVAL DATE

REGISTERED PROFESSIONAL ENGINEER
PAUL MATOS
No. 18757
Exp. 6/30/17
ELECTRICAL
STATE OF CALIFORNIA

THE STATE OF CALIFORNIA OR ITS OFFICERS OR AGENTS SHALL NOT BE RESPONSIBLE FOR THE ACCURACY OR COMPLETENESS OF SCANNED COPIES OF THIS PLAN SHEET.

LEGEND: (FOR THIS SHEET ONLY)

1 TYPE B TDC WITH PATC. SEE DETAIL ON SHEET E-8.

2 SEE DETAIL ON SHEET E-9 FOR PIEZO AXLE SENSOR AND LOOP DETECTOR INSTALLATIONS.

NOTES:

1. ALL PULL BOXES MUST BE No. 5(T)(E) UNLESS OTHERWISE NOTED.
2. FOR ACCURATE RIGHT OF WAY DATA, CONTACT RIGHT OF WAY ENGINEERING AT THE DISTRICT OFFICE.

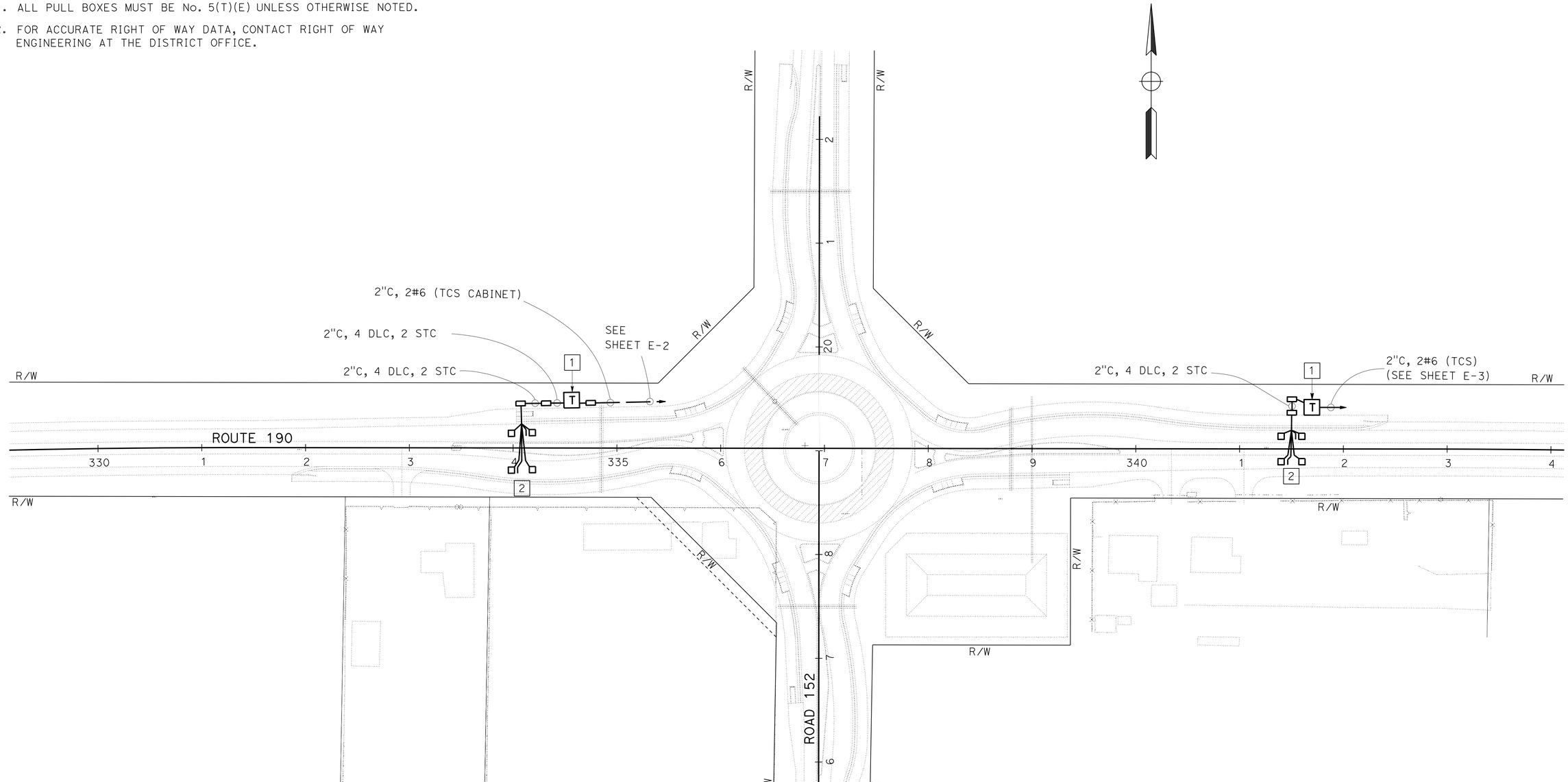

APPROVED FOR ELECTRICAL WORK ONLY

TRAFFIC MONITORING STATION SYSTEM

SCALE: 1" = 50'

E-7

STATE OF CALIFORNIA - DEPARTMENT OF TRANSPORTATION
Caltrans® **ELECTRICAL DESIGN**

FUNCTIONAL SUPERVISOR: ALI BAKHDOUD
CALCULATED-DESIGNED BY: RAJINDER S BRAR
CHECKED BY: PAUL MATOS
REVISED BY
DATE REVISED

LAST REVISION DATE PLOTTED => 21-JUL-2016
06-19-16 TIME PLOTTED => 14:25

Dist	COUNTY	ROUTE	POST MILES TOTAL PROJECT	SHEET No.	TOTAL SHEETS
06	Tul	190	4.1/4.8	53	73

REGISTERED ELECTRICAL ENGINEER 6-20-16 DATE

6-20-16
PLANS APPROVAL DATE

REGISTERED PROFESSIONAL ENGINEER
PAUL MATOS
No. 18757
Exp. 6/30/17
ELECTRICAL
STATE OF CALIFORNIA

THE STATE OF CALIFORNIA OR ITS OFFICERS OR AGENTS SHALL NOT BE RESPONSIBLE FOR THE ACCURACY OR COMPLETENESS OF SCANNED COPIES OF THIS PLAN SHEET.

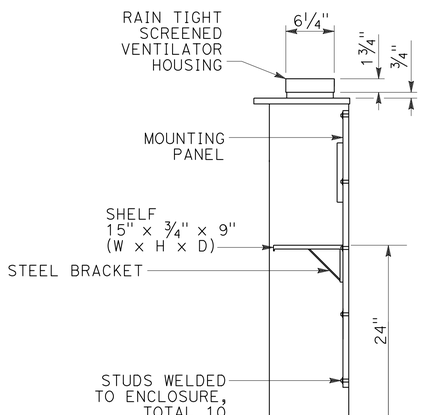

SECTION A-A

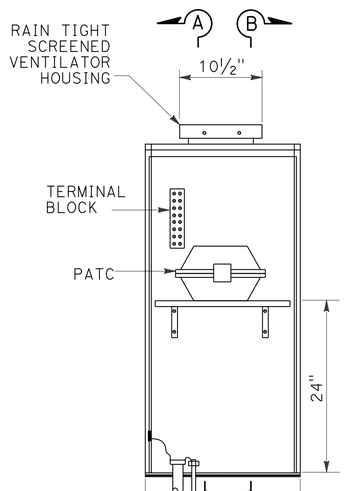

FRONT VIEW

INTERIOR
DETAIL C

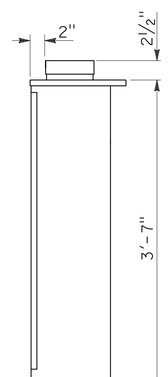

SECTION B-B

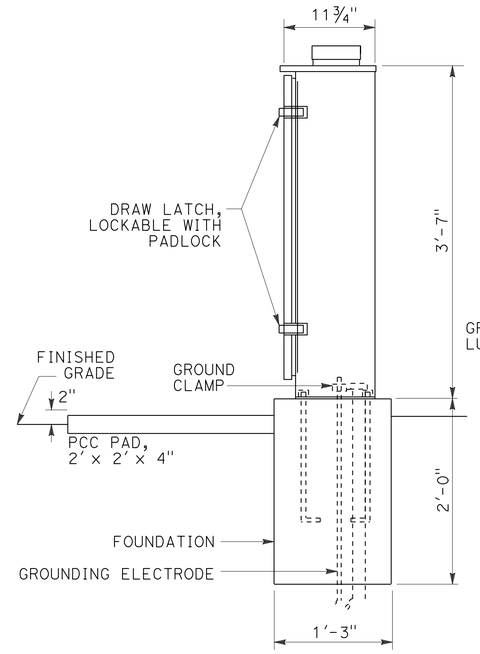

SIDE VIEW

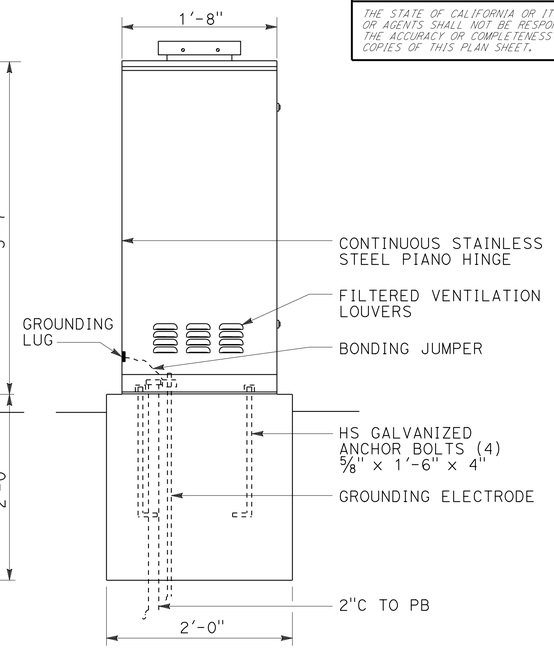

FRONT VIEW

EXTERIOR
DETAIL D

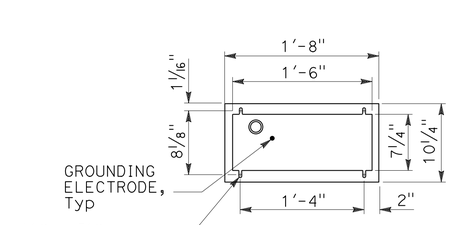

BASE PLAN
DETAIL E

ELECTRICAL DETAILS

NO SCALE

E-8

REVISED BY	DATE REVISED

CALCULATED-DESIGNED BY	CHECKED BY
RAJINDER S BRAR	PAUL MATOS

FUNCTIONAL SUPERVISOR: ALI BAKHDOUD

STATE OF CALIFORNIA - DEPARTMENT OF TRANSPORTATION
Caltrans
ELECTRICAL DESIGN

LAST REVISION 06-19-16 | DATE PLOTTED => 21-JUL-2016 | TIME PLOTTED => 14:25

Dist	COUNTY	ROUTE	POST MILES TOTAL PROJECT	SHEET No.	TOTAL SHEETS
06	Tul	190	4.1/4.8	54	73

Paul Matos 6-20-16
REGISTERED ELECTRICAL ENGINEER DATE

6-20-16
PLANS APPROVAL DATE

REGISTERED PROFESSIONAL ENGINEER
PAUL MATOS
No. 18757
Exp. 6/30/17
ELECTRICAL
STATE OF CALIFORNIA

THE STATE OF CALIFORNIA OR ITS OFFICERS OR AGENTS SHALL NOT BE RESPONSIBLE FOR THE ACCURACY OR COMPLETENESS OF SCANNED COPIES OF THIS PLAN SHEET.

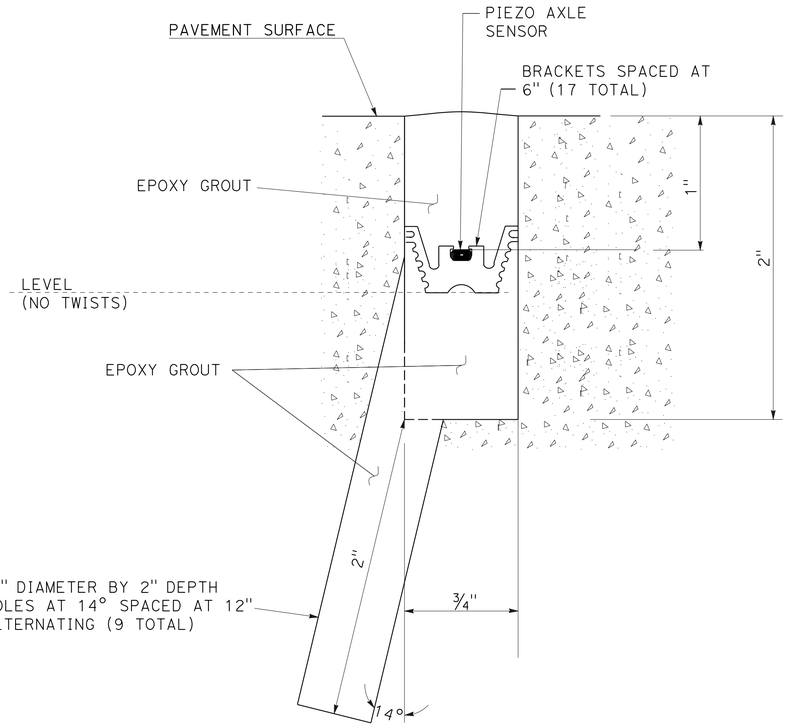

SECTION A-A

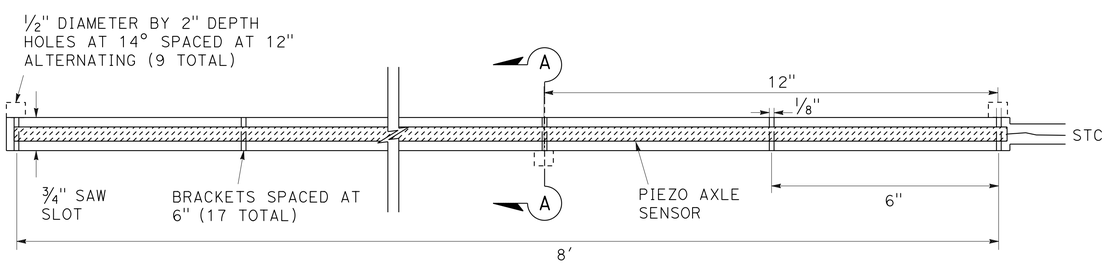

PIEZO AXLE SENSOR INSTALLATION

TOP VIEW

LOOP DETECTOR SENSOR DESIGNATION

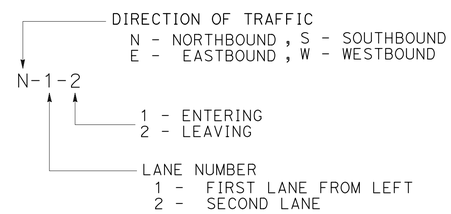

PIEZO AXLE SENSOR DESIGNATION

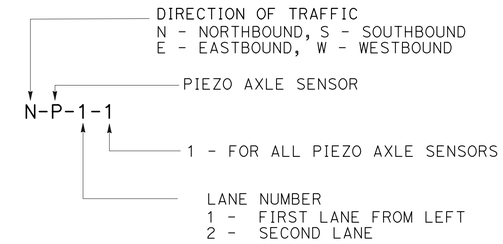

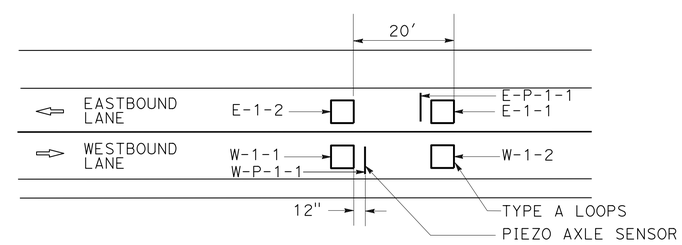

LOOP DETECTOR AND PIEZO AXLE SENSOR PLACEMENT AND DESIGNATION

ELECTRICAL DETAILS
E-9

NO SCALE

STATE OF CALIFORNIA - DEPARTMENT OF TRANSPORTATION
Caltrans® ELECTRICAL DESIGN

FUNCTIONAL SUPERVISOR: ALI BAKHDOUD
CALCULATED-DESIGNED BY: RAJINDER S BRAR
CHECKED BY: PAUL MATOS
REVISED BY
DATE REVISED

LAST REVISION 06-19-16
DATE PLOTTED => 21-JUL-2016
TIME PLOTTED => 14:25

Dist	COUNTY	ROUTE	POST MILES TOTAL PROJECT	SHEET No.	TOTAL SHEETS
06	Tul	190	4.1/4.8	55	73

REGISTERED ELECTRICAL ENGINEER 6-20-16 DATE

6-20-16
PLANS APPROVAL DATE

REGISTERED PROFESSIONAL ENGINEER PAUL MATOS No. 18757 Exp. 6/30/17 ELECTRICAL STATE OF CALIFORNIA

THE STATE OF CALIFORNIA OR ITS OFFICERS OR AGENTS SHALL NOT BE RESPONSIBLE FOR THE ACCURACY OR COMPLETENESS OF SCANNED COPIES OF THIS PLAN SHEET.

NOTE:
THE QUANTITIES SHOWN ON THE TABLE ARE NOT SEPARATE PAY ITEMS, FOR INFORMATION ONLY.
FOR COMPLETE ELECTRICAL WORK, SEE ELECTRICAL PLAN SHEETS.

LIGHTING SYSTEM

SHEET No.	No.5(T)(E) PB	No.6(T)(E) PB	TYPE 15 ELECTROLIER CIDH PILE	TYPE 15 ELECTROLIER	TYPE III-CF SERVICE EQUIPMENT ENCLOSURE AND FOUNDATION	1½"C, TYPE 1	2"C, TYPE 3	3"C, TYPE 3	3"C, TYPE 1	NO. 8 CONDUCTOR (G) (Cu)	NO. 6 CONDUCTOR (Al)
	EA					LF					
E-2	5	3	6	6	1	60	600	330	30	1220	5850
E-4	4	1	6	6		60	900	170		1210	3740

MODIFYING EXISTING ELECTRICAL SYSTEM

SHEET No.	No.5(T)(E) PB	FB TYPE 15-FBS CIDH PILE	TYPE 15-FBS POLE WITH FB EQUIPMENT	2"C, TYPE 1	2"C, TYPE 3	NO. 8 CONDUCTOR (G) (Cu)	NO. 6 CONDUCTOR (Al)
	EA			LF			
E-3	8	2	2	20	1580	1640	3730
E-5	4	1	1	10	760	790	1570
E-6	4	1	1	10	600	620	1240

TRAFFIC MONITORING STATION SYSTEM

SHEET No.	No.5(T)(E) PB	DETECTOR LOOP, TYPE A	DETECTOR-STUB SHOULDER	TDC FOUNDATION WITH ANCHOR BOLTS	TYPE B TDC	PATC	PIEZO AXLE SENSOR WITH STC	2"C, TYPE 3	2"C, TYPE 1	DLC	NO. 8 CONDUCTOR (G) (Cu)	NO. 6 CONDUCTOR (Al)
	EA							LF				
E-7	5	8	2	2	2	2	4	150	60	600	125	250

ELECTRICAL QUANTITIES
NO SCALE **E-10**

STATE OF CALIFORNIA - DEPARTMENT OF TRANSPORTATION
Caltrans® ELECTRICAL DESIGN

FUNCTIONAL SUPERVISOR: ALI BAKHDOUD
CALCULATED-DESIGNED BY: RAJINDER S BRAR
CHECKED BY: PAUL MATOS
REVISED BY
DATE REVISED

LAST REVISION 06-19-16 | DATE PLOTTED => 21-JUL-2016 | TIME PLOTTED => 14:25

Dist	COUNTY	ROUTE	POST MILES TOTAL PROJECT	SHEET No.	TOTAL SHEETS
06	Tul	190	4.1/4.8	56	73

REGISTERED CIVIL ENGINEER

July 15, 2016
PLANS APPROVAL DATE

REGISTERED PROFESSIONAL ENGINEER Sukhdeep Singh Sandher No. C74893 Exp. 12-31-17 CIVIL STATE OF CALIFORNIA

THE STATE OF CALIFORNIA OR ITS OFFICERS OR AGENTS SHALL NOT BE RESPONSIBLE FOR THE ACCURACY OR COMPLETENESS OF SCANNED COPIES OF THIS PLAN SHEET.

TO ACCOMPANY PLANS DATED 6-20-16

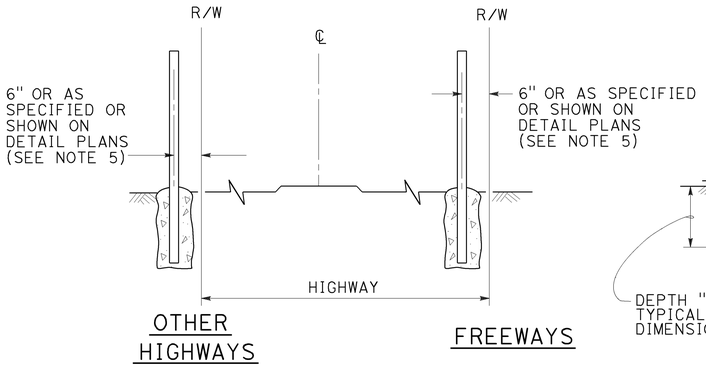

FENCE LOCATION

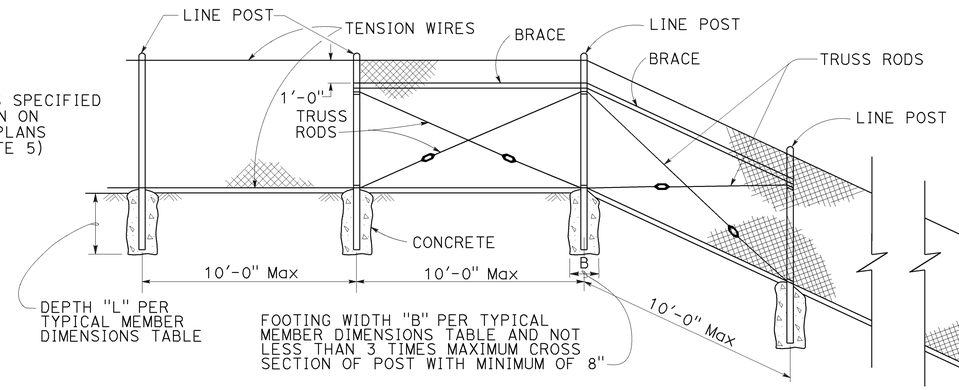

CHAIN LINK FENCE ON SHARP BREAK IN GRADE

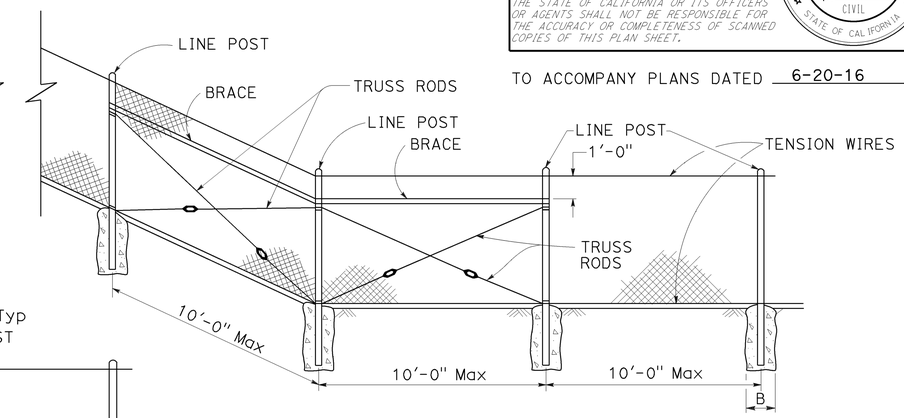

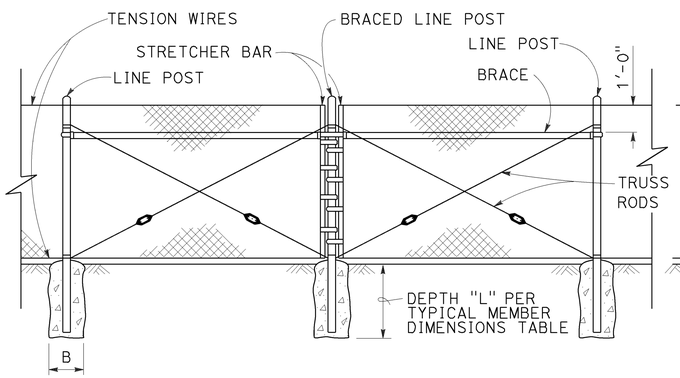

BRACED LINE POST INSTALLATION

Braced line post at intervals not exceeding 1000'

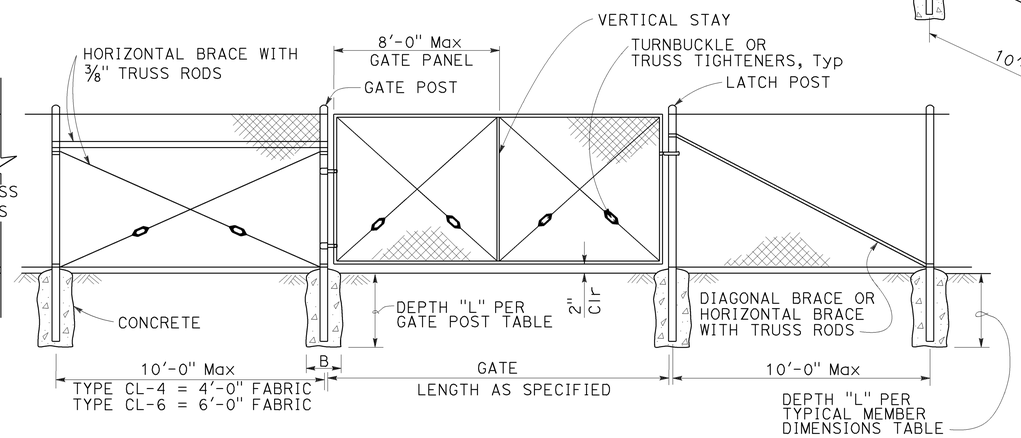

CHAIN LINK GATE INSTALLATION

GATE POST						
FENCE HEIGHT (Max)	SLATTED	B (in)	L (ft)	ROUND PIPE		
				SECTION	ROUND OD PIPE	WEIGHT (lb/ft)
5'-0"	NO	12"	2'-6"	3 Std	3.50"	7.58
6'-0"	NO	12"	2'-6"	3 Std	3.50"	7.58
8'-0"	NO	12"	3'-0"	3 Std	3.50"	7.58
10'-0"	NO	14"	3'-6"	3 Std	3.50"	7.58
5'-0"	YES	12"	3'-0"	3½ Std	4.00"	9.12
6'-0"	YES	14"	3'-6"	4 Std	4.50"	10.80
8'-0"	YES	18"	3'-6"	5 Std	5.56"	14.60
10'-0"	YES	20"	4'-0"	6 Std	6.63"	19.00

Above post dimensions and weights are minimums.
Larger sizes may be used upon approval.
Maximum Gate Width is 24'-0".

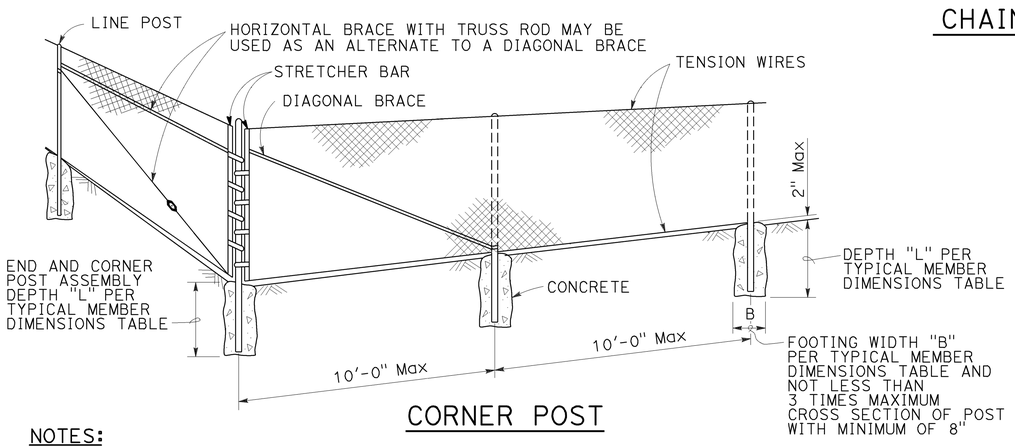

CORNER POST

TYPICAL MEMBER DIMENSIONS (See Notes)													
FENCE HEIGHT (Max)	SLATTED	B (in)	L (ft)	LINE POSTS					BRACES				
				ROUND PIPE			ROLL FORMED		ROUND PIPE			ROLL FORMED	
				SECTION	ROUND OD PIPE	WEIGHT (lb/ft)	SECTION	WEIGHT (lb/ft)	SECTION	ROUND OD PIPE	WEIGHT (lb/ft)	SECTION	WEIGHT (lb/ft)
5'-0"	NO	8"	2'-6"	1½ Std	1.90"	2.72	1.875" x 1.625"	1.85	2 Std	2.38"	3.66	1.625" x 1.250"	1.35
6'-0"	NO	10"	2'-6"	2 Std	2.38"	3.66	1.875" x 1.625"	2.40	2 Std	2.38"	3.66	1.625" x 1.250"	1.35
8'-0"	NO	12"	3'-0"	2½ Std	2.88"	5.80	3.250" x 2.500"	4.50	2 Std	2.38"	3.66	1.625" x 1.250"	1.35
10'-0"	NO	14"	3'-6"	3 Std	3.50"	7.58	3.250" x 2.500"	4.50	2½ Std	2.88"	5.80	1.625" x 1.250"	1.35
5'-0"	YES	12"	3'-0"	3½ Std	4.00"	9.12	N/A	-	2 Std	2.38"	3.66	N/A	-
6'-0"	YES	14"	3'-0"	4 Std	4.50"	10.80	N/A	-	2 Std	2.38"	3.66	N/A	-
8'-0"	YES	18"	3'-6"	5 Std	5.56"	14.60	N/A	-	2 Std	2.38"	3.66	N/A	-
10'-0"	YES	20"	4'-0"	6 Std	6.63"	19.00	N/A	-	2½ Std	2.88"	5.80	N/A	-

NOTES:

1. The table to the right shows minimum sized posts and braces complying with the specifications. Larger or heavier post and brace sizes may be used upon approval.
2. Sections shown in the tables must also comply with the strength requirements and other provisions of the Specifications.
3. Other sections which comply with the strength requirements and other provisions of the Specifications may be used upon approval.
4. Options exercised shall be uniform on any one project.
5. Offset to be 2'-0" at monument locations, measured at right angles to R/W lines. Taper to achieve offset to be at least 20'-0" long.
6. See Revised Standard Plan RSP A85B for Brace, Stretcher Bar, and Truss Tightener Details.

STATE OF CALIFORNIA
DEPARTMENT OF TRANSPORTATION

CHAIN LINK FENCE

NO SCALE

RSP A85 DATED JULY 15, 2016 SUPERSEDES STANDARD PLAN A85
DATED OCTOBER 30, 2015 - PAGE 117 OF THE STANDARD PLANS BOOK DATED 2015.

REVISED STANDARD PLAN RSP A85

2015 REVISED STANDARD PLAN RSP A85

6-29-16

Dist	COUNTY	ROUTE	POST MILES TOTAL PROJECT	SHEET No.	TOTAL SHEETS
06	Tul	190	4.1/4.8	57	73

REGISTERED CIVIL ENGINEER

July 15, 2016
PLANS APPROVAL DATE

REGISTERED PROFESSIONAL ENGINEER
Sukhdeep Singh Sandher
No. C74893
Exp. 12-31-17
CIVIL
STATE OF CALIFORNIA

THE STATE OF CALIFORNIA OR ITS OFFICERS OR AGENTS SHALL NOT BE RESPONSIBLE FOR THE ACCURACY OR COMPLETENESS OF SCANNED COPIES OF THIS PLAN SHEET.

TO ACCOMPANY PLANS DATED 6-20-16

2015 REVISED STANDARD PLAN RSP A85A

NOTES:

1. B is not less than 3 times maximum cross section of post with minimum of 8".
2. See Revised Standard Plan RSP A85 for Chain Link Fencing dimensions.
3. See Detail A on Standard Plan A86B for connection at headwall.
4. See Detail D on Standard Plan A86B for connection at headwall.

CENTER POST		
FENCE HEIGHT (Max)	SLATTED	P
ALL HEIGHTS	NO	1'-6"
5'-0"	YES	3'-0"
6'-0"	YES	3'-0"
8'-0"	YES	3'-6"
10'-0"	YES	4'-0"

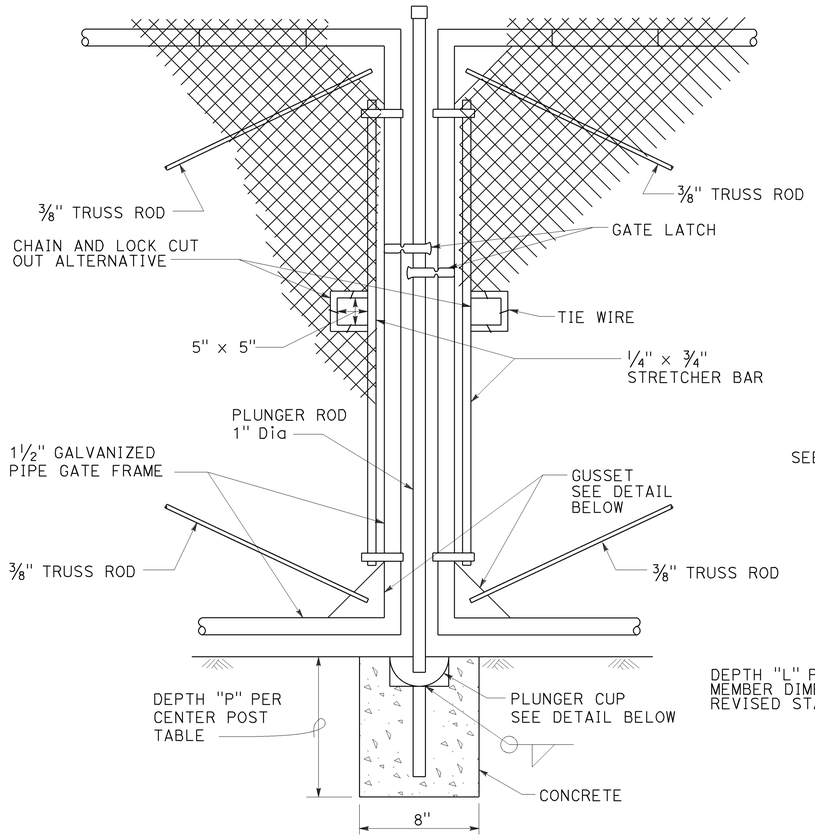

DOUBLE GATE
REMOVABLE CENTER POST

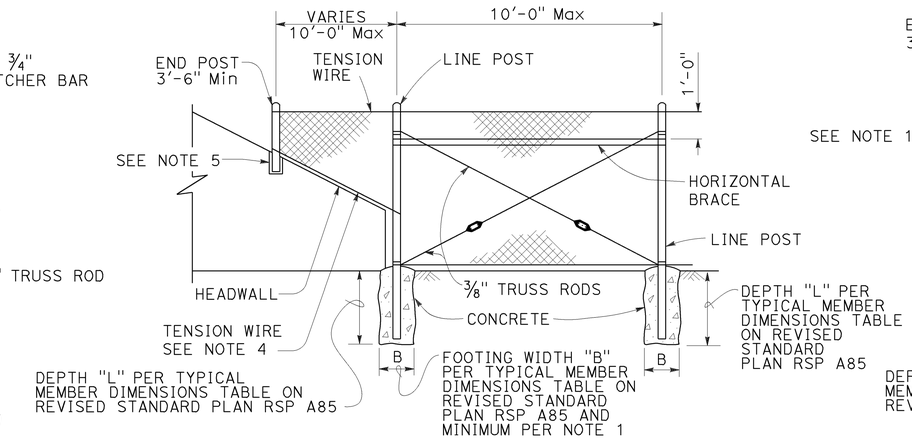

METHOD OF TYING FENCE TO HEADWALL

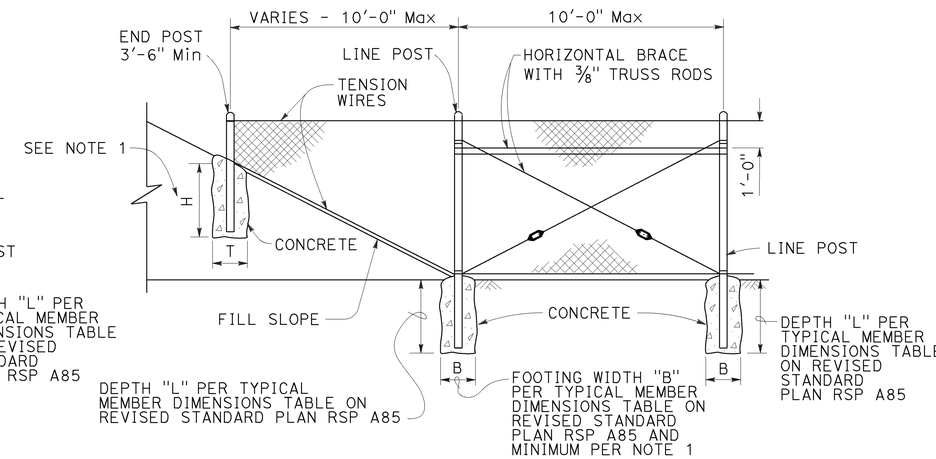

METHOD OF ERECTING FENCE FOR FILL SLOPE

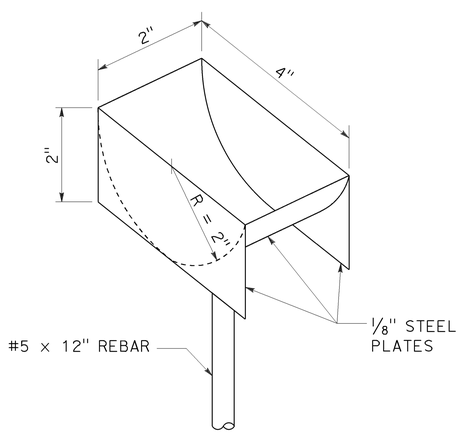

PLUNGER CUP DETAIL

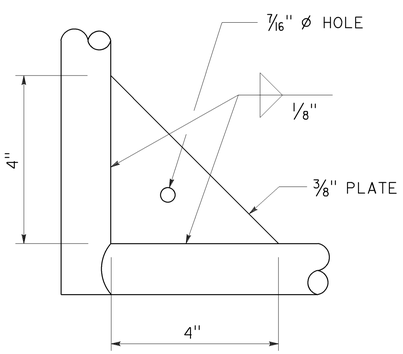

GUSSET DETAIL

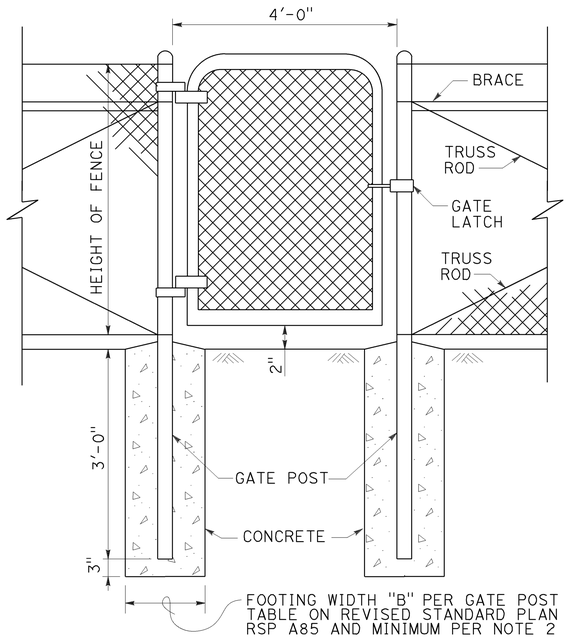

WALK GATE

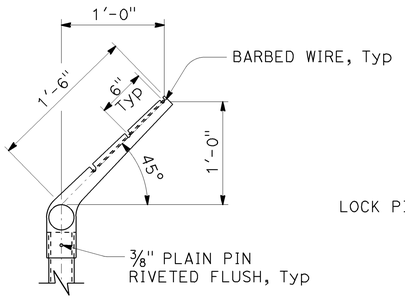

LINE POST

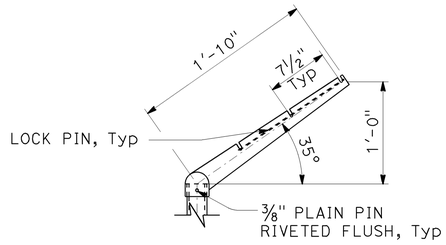

CORNER POST

BARBED WIRE POST TOP

STATE OF CALIFORNIA
DEPARTMENT OF TRANSPORTATION

CHAIN LINK FENCE DETAILS

NO SCALE

RSP A85A DATED JULY 15, 2016 SUPERSEDES STANDARD PLAN A85A
DATED OCTOBER 30, 2015 - PAGE 118 OF THE STANDARD PLANS BOOK DATED 2015.

REVISED STANDARD PLAN RSP A85A

6-24-16

Dist	COUNTY	ROUTE	POST MILES TOTAL PROJECT	SHEET No.	TOTAL SHEETS
06	Tul	190	4.1/4.8	58	73

REGISTERED CIVIL ENGINEER

July 15, 2016
PLANS APPROVAL DATE

Hector David Cordova No. C41957 Exp. 3-31-18 CIVIL — REGISTERED PROFESSIONAL ENGINEER — STATE OF CALIFORNIA

THE STATE OF CALIFORNIA OR ITS OFFICERS OR AGENTS SHALL NOT BE RESPONSIBLE FOR THE ACCURACY OR COMPLETENESS OF SCANNED COPIES OF THIS PLAN SHEET.

TO ACCOMPANY PLANS DATED 6-20-16

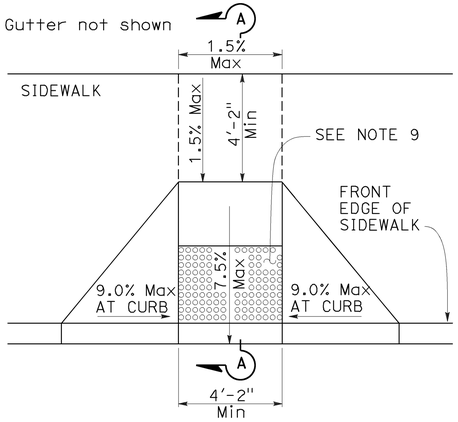

CASE A

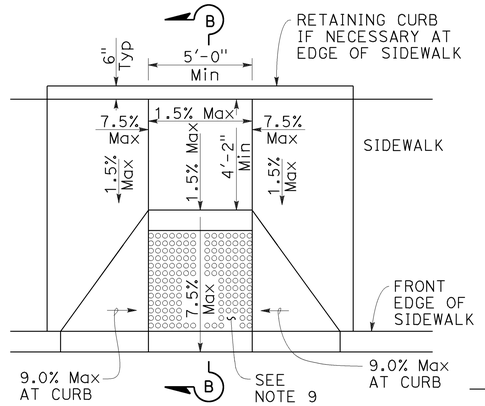

CASE B

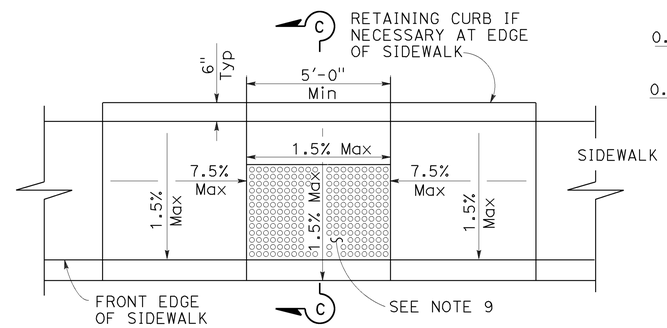

CASE C

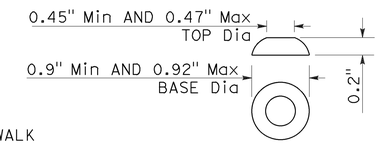

RAISED TRUNCATED DOME

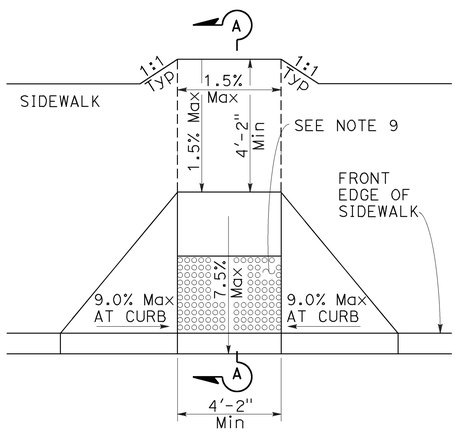

CASE D

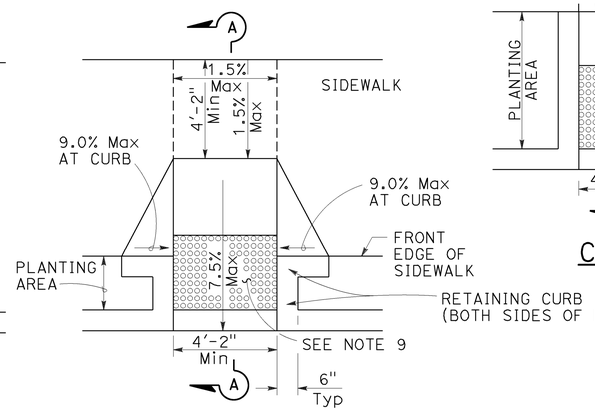

CASE E

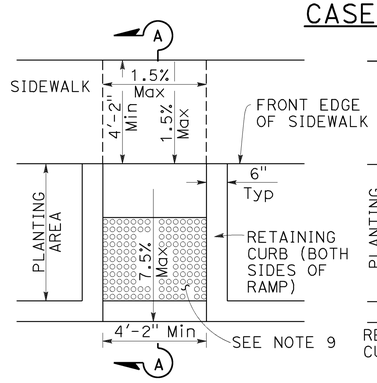

CASE F

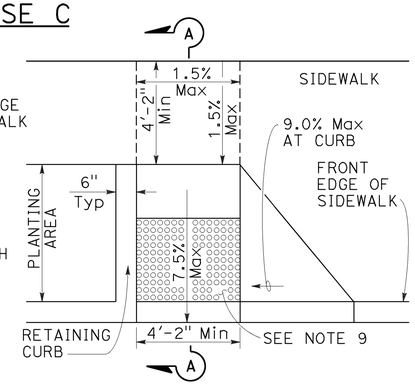

CASE G
See Note 4

SECTION A-A

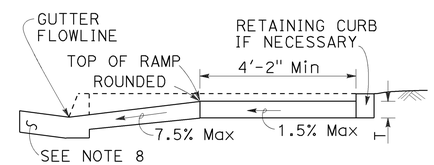

SECTION B-B
Depress entire sidewalk as required

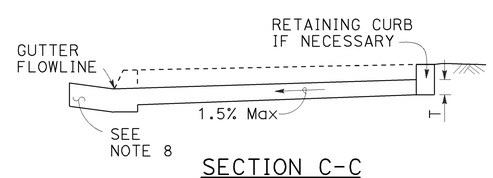

SECTION C-C

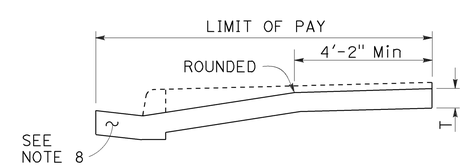

RETROFIT PAY LIMITS
Existing curb and sidewalk

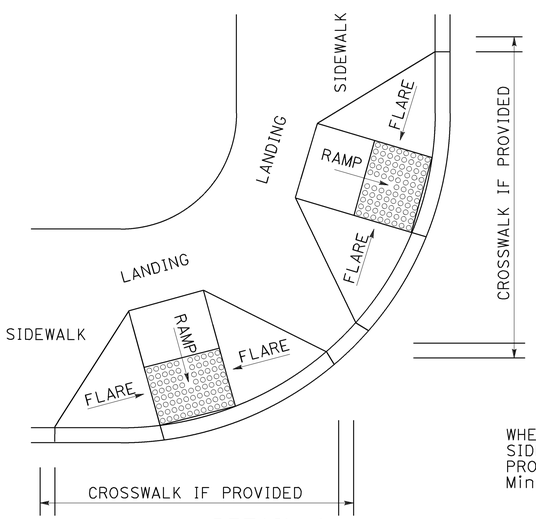

DETAIL A

TYPICAL TWO-RAMP CORNER INSTALLATION
See Note 1

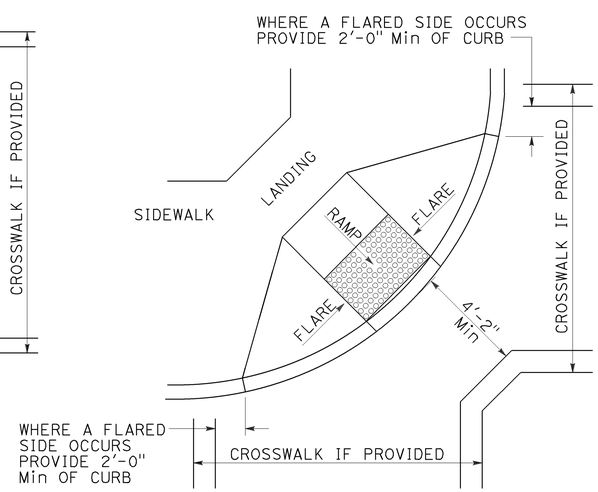

DETAIL B

TYPICAL ONE-RAMP CORNER INSTALLATION
See Notes 1 and 3

NOTES:

1. As site conditions dictate, Case A through Case G curb ramps may be used for corner installations similar to those shown in Detail A and Detail B. The case of curb ramps used in Detail A do not have to be the same. Case A through Case G curb ramps also may be used at mid block locations, as site conditions dictate.
2. If distance from curb to back of sidewalk is too short to accommodate ramp and 4'-2" platform (landing) as shown in Case A, the sidewalk may be depressed longitudinally as in Case B or C or may be widened as in Case D.
3. When ramp is located in center of curb return, crosswalk configuration must be similar to that shown for Detail B.
4. As site conditions dictate, the retaining curb side and the flared side of the Case G ramp shall be constructed in reversed position.
5. If located on a curve, the sides of the ramp need not be parallel, but the minimum width of the ramp shall be 4'-2".
6. Side slope of ramp flares vary uniformly from a maximum of 9.0% at curb to conform with longitudinal sidewalk slope adjacent to top of the ramp, except in Case C and Case F.
7. The adjacent surfaces at transitions at curb ramps to walks, gutters, and streets shall be at the same level.
8. Counter slopes of adjoining gutters and road surfaces immediately adjacent to and within 24 inches of the curb ramp shall not be steeper than 1V:20H (5.0%). Gutter pan slope shall not exceed 1" of depth for each 2'-0" of width.
9. Curb ramps shall have a detectable warning surface that extends the full width and 3'-0" depth of the ramp. A 4'-0" wide detectable warning surface may be used on a 4'-2" wide curb ramp. Detectable Warning Surfaces shall conform to the requirements in the Standard Specifications.
10. Sidewalk and ramp thickness, "T", shall be 3½" minimum.
11. Utility pull boxes, manholes, vaults and all other utility facilities within the boundaries of the curb ramp will be relocated or adjusted to grade by the owner prior to, or in conjunction with, curb ramp construction.
12. Detectable warning surface may have to be cut to allow removal of utility covers while maintaining full detectable warning width and depth.

RAISED TRUNCATED DOME PATTERN (IN-LINE)

DETECTABLE WARNING SURFACE
See Note 9

STATE OF CALIFORNIA
DEPARTMENT OF TRANSPORTATION

CURB RAMP DETAILS

NO SCALE

RSP A88A DATED JULY 15, 2016 SUPERSEDES STANDARD PLAN A88A
DATED OCTOBER 30, 2015 - PAGE 127 OF THE STANDARD PLANS BOOK DATED 2015.

REVISED STANDARD PLAN RSP A88A

2015 REVISED STANDARD PLAN RSP A88A

3-30-16

Dist	COUNTY	ROUTE	POST MILES TOTAL PROJECT	SHEET No.	TOTAL SHEETS
06	Tul	190	4.1/4.8	59	73

Theresa Gabriel
REGISTERED ELECTRICAL ENGINEER

April 15, 2016
PLANS APPROVAL DATE

REGISTERED PROFESSIONAL ENGINEER
Theresa Aziz Gabriel
No. E15129
Exp. 6-30-16
ELECTRICAL
STATE OF CALIFORNIA

THE STATE OF CALIFORNIA OR ITS OFFICERS OR AGENTS SHALL NOT BE RESPONSIBLE FOR THE ACCURACY OR COMPLETENESS OF SCANNED COPIES OF THIS PLAN SHEET.

TO ACCOMPANY PLANS DATED 6-20-16

EQUIPMENT IDENTIFICATION

ILLUMINATED SIGN IDENTIFICATION:

SIGN No. 12345
10 ISL SCI 1.0

- SIGN EQUIPMENT IDENTIFICATION CHARACTERS - PLACE ON POST OR STRUCTURE
- TRANSFORMER RATING (kVA)
- LIGHTING CONTROL TYPE
- NUMBER AND TYPE OF FIXTURES

} DO NOT PLACE ON STANDARD OR STRUCTURE

ELECTROLIER OR EQUIPMENT IDENTIFICATION:

L2745 - 15'-0"

- MAST ARM LENGTH, IF SHOWN. DO NOT PLACE ON STANDARD OR STRUCTURE
- EQUIPMENT IDENTIFICATION CHARACTERS - PLACE ON STANDARD OR STRUCTURE. EXISTING EQUIPMENT IDENTIFICATION CHARACTERS ARE SHOWN IN PARENTHESIS

CONDUIT AND CONDUCTOR IDENTIFICATION:

1½"C, 2#10, 15#14, 2 DLC, 12P#18 (PAIR)

- NUMBER AND SIZE OF CONDUCTORS AND CABLES
- SIZE OF CONDUIT IN INCHES

ø1, ø2, ø2P, etc.	TRAFFIC PHASE IDENTIFICATION FOR SIGNALS, DETECTORS AND PHASE DIAGRAMS
1 2 3	LEGEND NUMBERS
A B C	EQUIPMENT, SIGNAL POLES, INSTALLATION OR ITEMS
1 2 3	CONDUIT RUN NUMBERS

SIGNAL AND LIGHTING STANDARD (TYPICAL DESIGNATION):

19A - 3 - 100

- WIND VELOCITY = 100 mph
- CASE 3 ARM LOADING
- STANDARD TYPE
- STANDARD PLAN SHEET NUMBER
- DETAIL, NUMBER, SECTION, TYPE OR ELEVATION

MISCELLANEOUS EQUIPMENT

NEW	EXISTING	
CMS	cms	CHANGEABLE MESSAGE SIGN
		CLOSED CIRCUIT TELEVISION CAMERA
		HIGHWAY ADVISORY RADIO POLE AND ANTENNA
EMS	ems	LED EXTINGUISHABLE MESSAGE SIGN
M V	m v	DETECTION DEVICE M = MICROWAVE SENSOR V = VIDEO IMAGE SENSOR

WIRING DIAGRAM LEGEND

- EXTERNAL CONDUCTOR
- CONDUCTOR OR BUS
- TIE POINT
- CONTACTOR COIL
- CONTACTOR, NO CONTACT
- TERMINAL BLOCKS
- CONTACTOR, NC CONTACT
- ENCLOSURE BOND
- GROUNDING ELECTRODE
- CIRCUIT BREAKER
- RECEPTACLE

PULL BOXES

NEW	EXISTING	
		PULL BOX, No. 5 UNLESS OTHERWISE INDICATED OR NOTED
3	9A(21)	PULL BOX, ADDITIONAL DESIGNATIONS OR DESCRIPTIONS

3 No. 3½ PULL BOX
5 No. 5 PULL BOX
6 No. 6 PULL BOX
7 No. 7 PULL BOX (CEILING)
8 No. 8 PULL BOX
9 No. 9 PULL BOX (STRUCTURE)
9A No. 9A PULL BOX (STRUCTURE)

(C) COMMUNICATIONS PULL BOX
(E) PULL BOX WITH EXTENSION
(S) SPRINKLER CONTROL PULL BOX
(21) ANCHOR BOLTS AND CONDUIT FOR FUTURE INSTALLATION OF TYPE 21 STANDARD
(T) TRAFFIC PULL BOX

VEHICLE DETECTORS

5 J 9 U

- VEHICLE DETECTOR DESIGNATION
- U = UPPER
  L = LOWER
- SLOT NUMBER IN INPUT FILE
- INPUT FILE (I OR J)
- PHASE

NEW	EXISTING	
		TYPE A LOOP DETECTOR. OUTLINE OF SAW CUT SHOWN
		TYPE B LOOP DETECTOR. OUTLINE OF SAW CUT SHOWN
		TYPE C LOOP DETECTOR. OUTLINE OF SAW CUT SHOWN
		TYPE D LOOP DETECTOR. OUTLINE OF SAW CUT SHOWN
		TYPE E LOOP DETECTOR. OUTLINE OF SAW CUT SHOWN
		TYPE Q LOOP DETECTOR. OUTLINE OF SAW CUT SHOWN
DH	dh	DETECTOR HANDHOLE
		MICROWAVE OR VIDEO DETECTION ZONE

STATE OF CALIFORNIA
DEPARTMENT OF TRANSPORTATION

ELECTRICAL SYSTEMS (LEGEND AND ABBREVIATIONS)

NO SCALE

RSP ES-1C DATED APRIL 15, 2016 SUPERSEDES STANDARD PLAN ES-1C DATED OCTOBER 30, 2015 - PAGE 420 OF THE STANDARD PLANS BOOK DATED 2015.

REVISED STANDARD PLAN RSP ES-1C

2015 REVISED STANDARD PLAN RSP ES-1C

1-22-16

Dist	COUNTY	ROUTE	POST MILES TOTAL PROJECT	SHEET No.	TOTAL SHEETS
06	Tul	190	4.1/4.8	60	73

Theresa Gabriel
REGISTERED ELECTRICAL ENGINEER

April 15, 2016
PLANS APPROVAL DATE

REGISTERED PROFESSIONAL ENGINEER
Theresa Aziz Gabriel
No. E15129
Exp. 6-30-16
ELECTRICAL
STATE OF CALIFORNIA

THE STATE OF CALIFORNIA OR ITS OFFICERS OR AGENTS SHALL NOT BE RESPONSIBLE FOR THE ACCURACY OR COMPLETENESS OF SCANNED COPIES OF THIS PLAN SHEET.

TO ACCOMPANY PLANS DATED 6-20-16

2015 REVISED STANDARD PLAN RSP ES-3C

NOTES:

1. Controller units, plug-mounted equipment, shelf-mounted equipment and wall-mounted equipment shall be located to permit safe and easy removal or replacement without removing any other piece of equipment.
2. Cabinet fan may be installed at an alternate location near the top of the cabinet when approved by the Engineer.
3. Where telephone interconnect is required, a minimum of 5" clear vertical space shall be provided inside the cabinet for the equipment.
4. Telephone interconnect conductors shall be enclosed in a ¾"C or larger conduit through the foundation. Type 4 conduit shall be used to separate telephone and power conductors in cabinets.

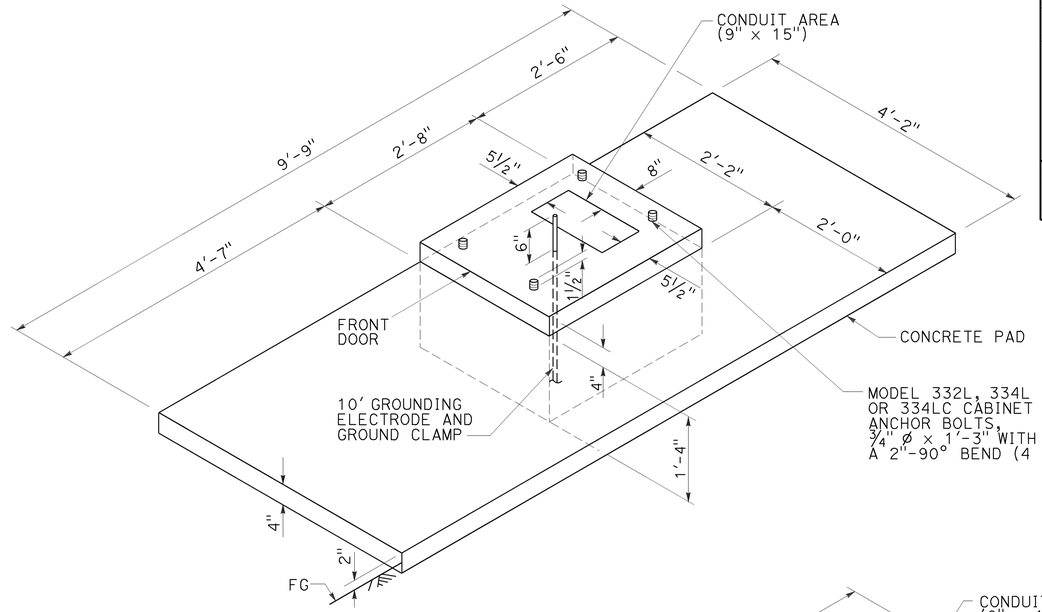

FOUNDATION AND PAD DETAIL

Model 332L, 334L and 334LC

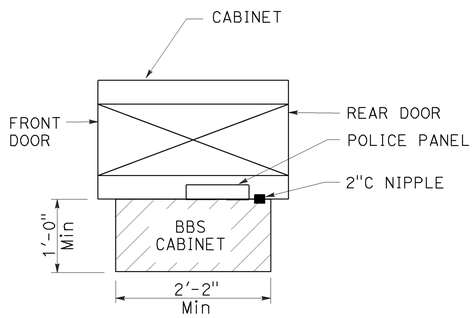

TOP VIEW

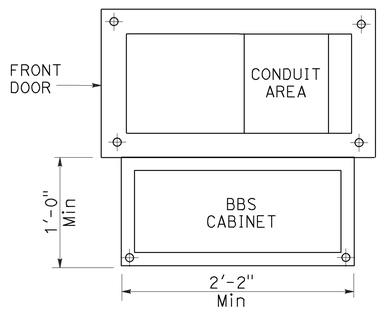

BASE PLAN FOR BBS MOUNTED TO THE MODEL 332L CABINET

(FOR DIMENSIONS AND DETAILS NOT SHOWN, SEE CABINET HOUSING DETAILS OF THE TRANSPORTATION ELECTRICAL EQUIPMENT SPECIFICATION (TEES))

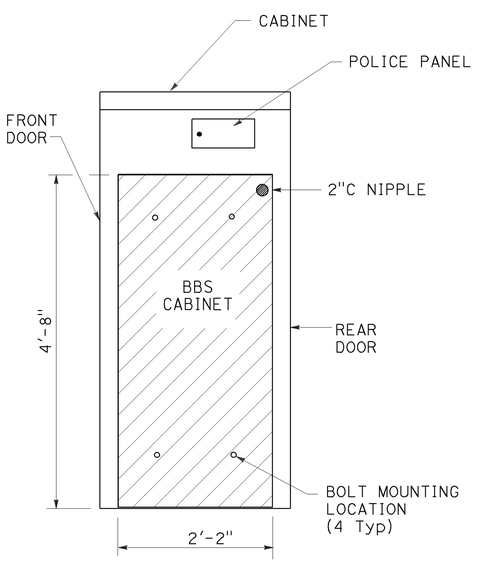

SIDE VIEW

BBS CABINET MOUNTED TO THE MODEL 332L CABINET

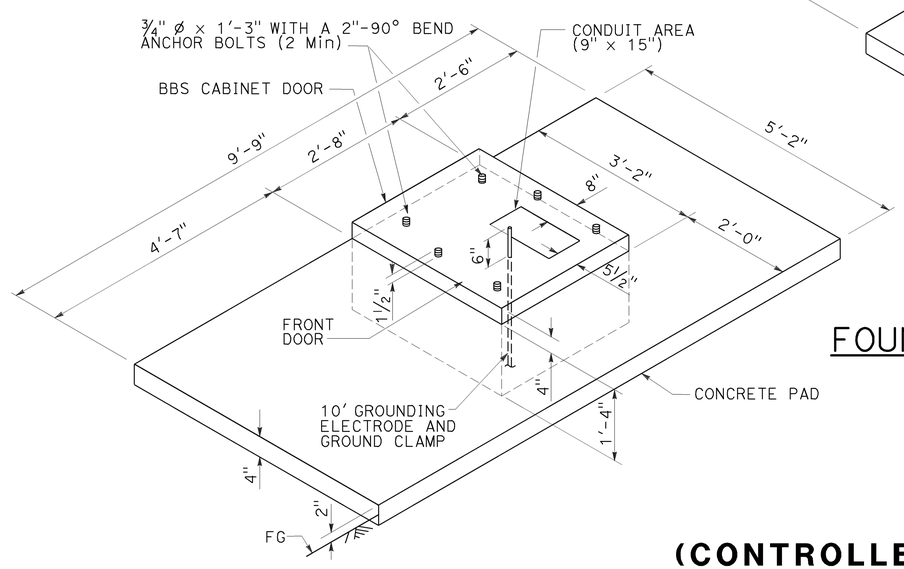

LEFT SIDE INSTALLATION

DETAIL A

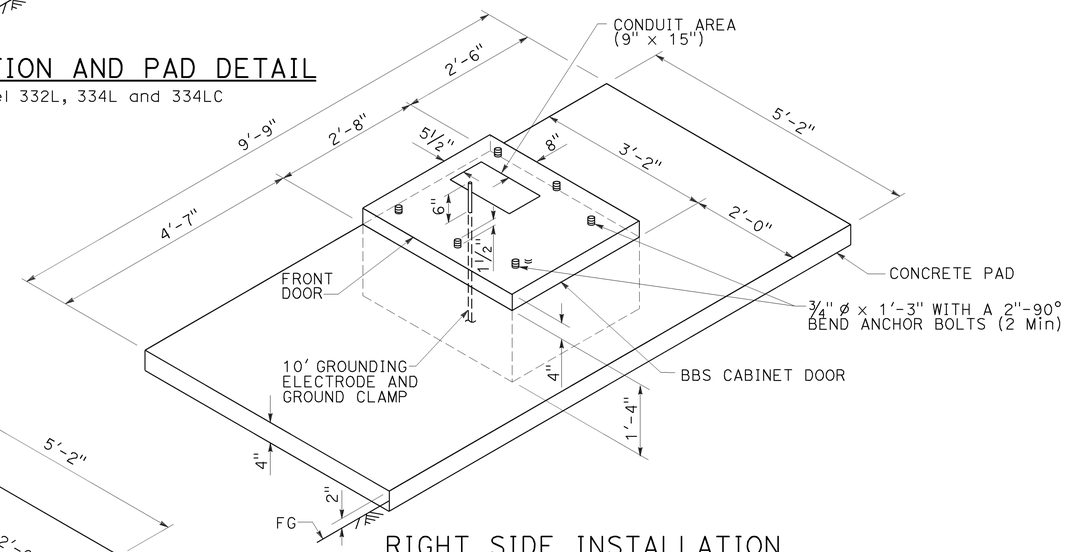

RIGHT SIDE INSTALLATION

DETAIL B

MODIFIED MODEL 332L CABINET FOUNDATION DETAIL FOR BATTERY BACKUP SYSTEM

STATE OF CALIFORNIA
DEPARTMENT OF TRANSPORTATION

ELECTRICAL SYSTEMS
(CONTROLLER CABINET FOUNDATION AND PAD DETAILS)

NO SCALE

RSP ES-3C DATED APRIL 15, 2016 SUPERSEDES STANDARD PLAN ES-3C DATED OCTOBER 30, 2015 - PAGE 430 OF THE STANDARD PLANS BOOK DATED 2015.

REVISED STANDARD PLAN RSP ES-3C

1-12-16

Dist	COUNTY	ROUTE	POST MILES TOTAL PROJECT	SHEET No.	TOTAL SHEETS
06	Tul	190	4.1/4.8	61	73

Theresa Gabriel
REGISTERED ELECTRICAL ENGINEER

April 15, 2016
PLANS APPROVAL DATE

REGISTERED PROFESSIONAL ENGINEER
Theresa Aziz Gabriel
No. E15129
Exp. 6-30-16
ELECTRICAL
STATE OF CALIFORNIA

THE STATE OF CALIFORNIA OR ITS OFFICERS OR AGENTS SHALL NOT BE RESPONSIBLE FOR THE ACCURACY OR COMPLETENESS OF SCANNED COPIES OF THIS PLAN SHEET.

TO ACCOMPANY PLANS DATED 6-20-16

2015 REVISED STANDARD PLAN RSP ES-5A

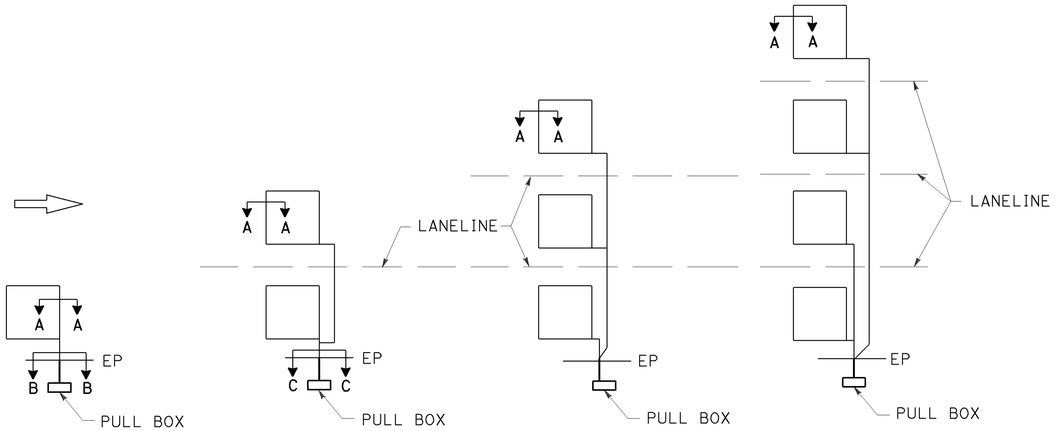

SAW CUT DETAILS

Type A loop detector configurations illustrated

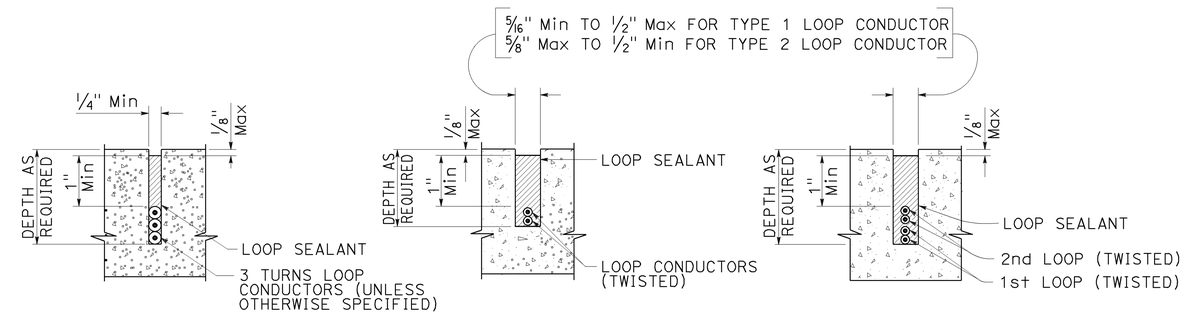

SECTION A-A SECTION B-B SECTION C-C

SLOT DETAILS - TYPE 1 AND TYPE 2 LOOP CONDUCTOR

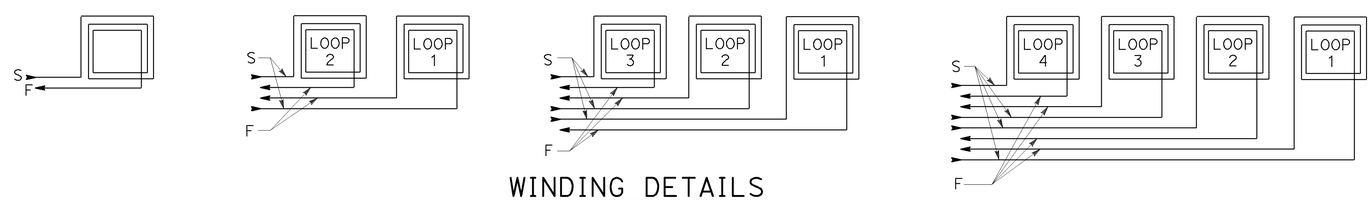

WINDING DETAILS

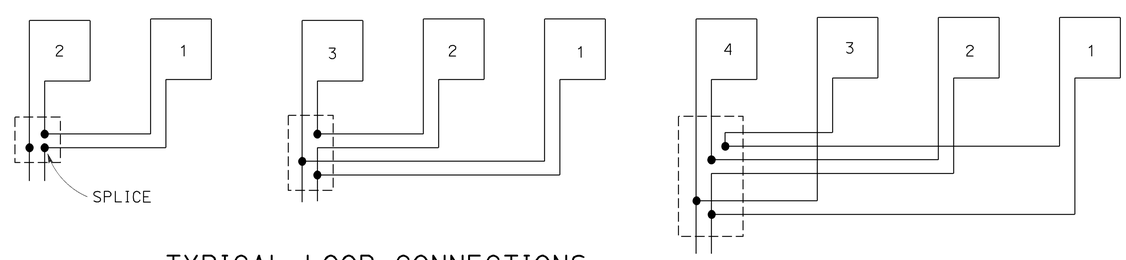

TYPICAL LOOP CONNECTIONS

Dashed lines represent the pull box

ABBREVIATIONS:

S - START
F - FINISH

STATE OF CALIFORNIA
DEPARTMENT OF TRANSPORTATION

ELECTRICAL SYSTEMS (LOOP DETECTORS)

NO SCALE

RSP ES-5A DATED APRIL 15, 2016 SUPERSEDES STANDARD PLAN ES-5A
DATED OCTOBER 30, 2015 - PAGE 445 OF THE STANDARD PLANS BOOK DATED 2015.

REVISED STANDARD PLAN RSP ES-5A

1-12-16

Dist	COUNTY	ROUTE	POST MILES TOTAL PROJECT	SHEET No.	TOTAL SHEETS
06	Tul	190	4.1/4.8	62	73

Theresa Gabriel
REGISTERED ELECTRICAL ENGINEER

April 15, 2016
PLANS APPROVAL DATE

REGISTERED PROFESSIONAL ENGINEER Theresa Aziz Gabriel No. E15129 Exp. 6-30-16 ELECTRICAL STATE OF CALIFORNIA

THE STATE OF CALIFORNIA OR ITS OFFICERS OR AGENTS SHALL NOT BE RESPONSIBLE FOR THE ACCURACY OR COMPLETENESS OF SCANNED COPIES OF THIS PLAN SHEET.

TO ACCOMPANY PLANS DATED 6-20-16

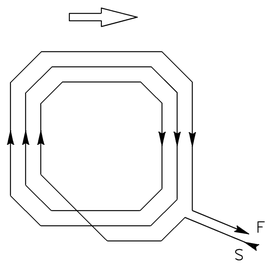

WINDING DETAIL

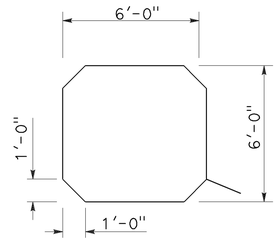

SAW CUT DETAIL

TYPE A LOOP DETECTOR CONFIGURATION

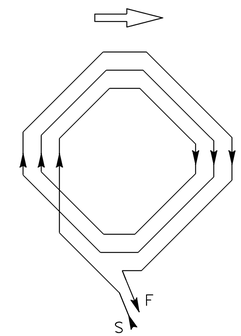

WINDING DETAIL

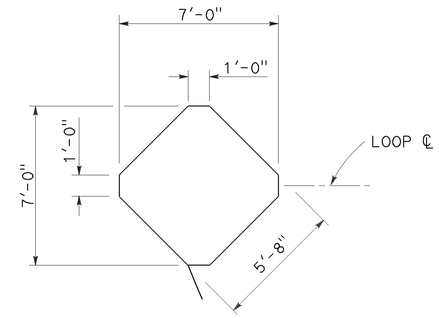

SAW CUT DETAIL

TYPE B LOOP DETECTOR CONFIGURATION

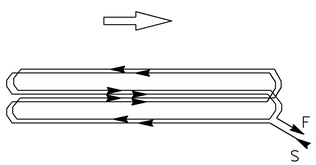

WINDING DETAIL

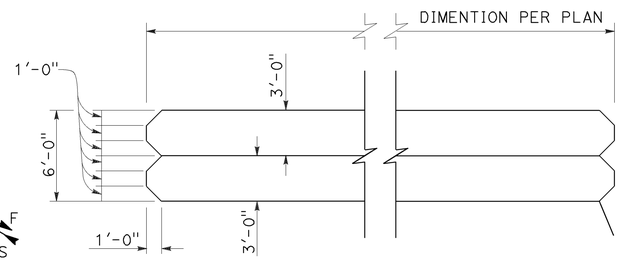

SAW CUT DETAIL

TYPE C LOOP DETECTOR CONFIGURATION

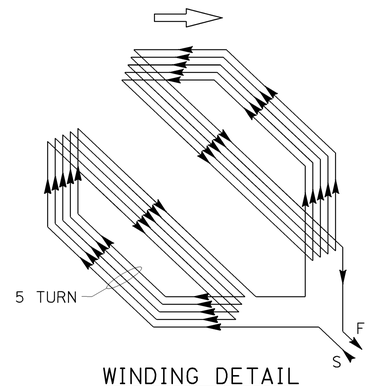

WINDING DETAIL

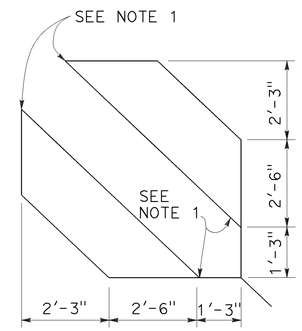

SAW CUT DETAIL

TYPE D LOOP DETECTOR CONFIGURATION

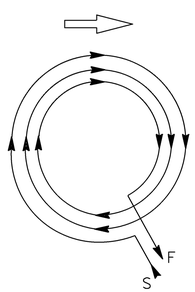

WINDING DETAIL

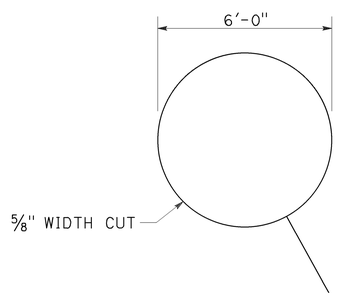

SAW CUT DETAIL

TYPE E LOOP DETECTOR CONFIGURATION

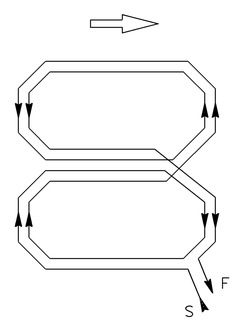

WINDING DETAIL

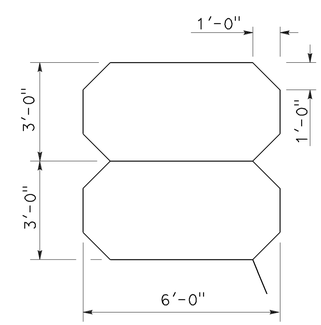

SAW CUT DETAIL

TYPE Q LOOP DETECTOR CONFIGURATION

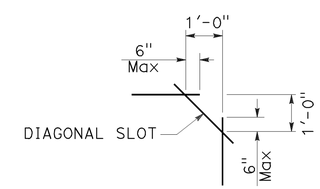

PLAN VIEW OF DIAGONAL SLOT AT CORNERS

NOTES:

1. Round corners of acute angle saw cuts to prevent damage to conductors.
2. Typical distance separating loops from edge to edge is 10' for Type A, B, D and E installation in single lane.
3. Use Type D loops for limit line detection and bicycle lanes.

STATE OF CALIFORNIA
DEPARTMENT OF TRANSPORTATION

ELECTRICAL SYSTEMS (DETECTORS)

NO SCALE

RSP ES-5B DATED APRIL 15, 2016 SUPERSEDES STANDARD PLAN ES-5B DATED OCTOBER 30, 2015 - PAGE 446 OF THE STANDARD PLANS BOOK DATED 2015.

REVISED STANDARD PLAN RSP ES-5B

2015 REVISED STANDARD PLAN RSP ES-5B

1-22-16

Dist	COUNTY	ROUTE	POST MILES TOTAL PROJECT	SHEET No.	TOTAL SHEETS
06	Tul	190	4.1/4.8	63	73

REGISTERED CIVIL ENGINEER

July 15, 2016
PLANS APPROVAL DATE

REGISTERED PROFESSIONAL ENGINEER
Stanley P. Johnson
No. C57793
Exp. 3-31-18
CIVIL
STATE OF CALIFORNIA

THE STATE OF CALIFORNIA OR ITS OFFICERS OR AGENTS SHALL NOT BE RESPONSIBLE FOR THE ACCURACY OR COMPLETENESS OF SCANNED COPIES OF THIS PLAN SHEET.

TO ACCOMPANY PLANS DATED 6-20-16

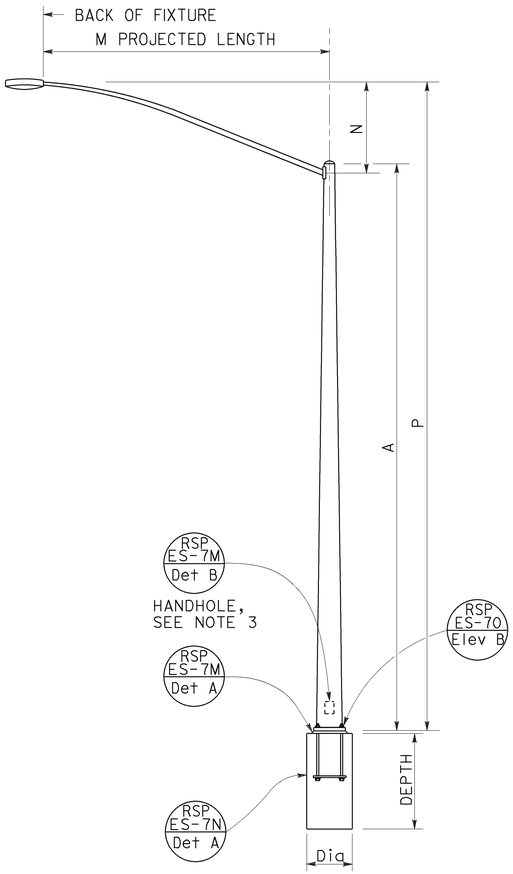

TYPE 15 AND TYPE 21
ELEVATION A

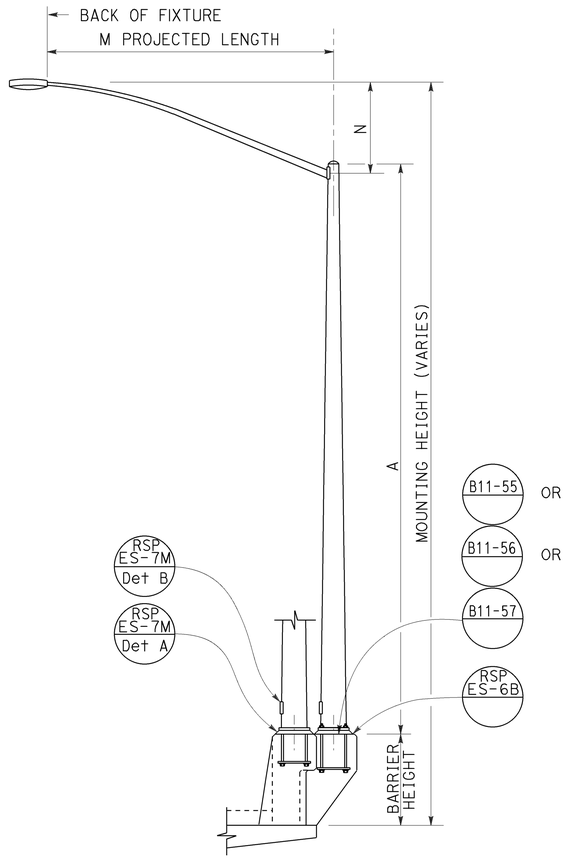

TYPE 15 AND TYPE 21 BARRIER RAIL MOUNTED
ELEVATION B

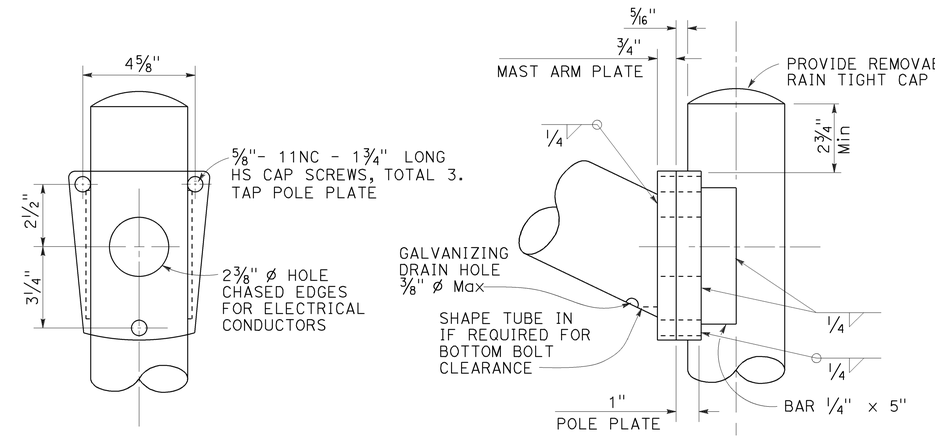

FRONT VIEW

SIDE VIEW

LUMINAIRE MAST ARM CONNECTION
DETAIL R

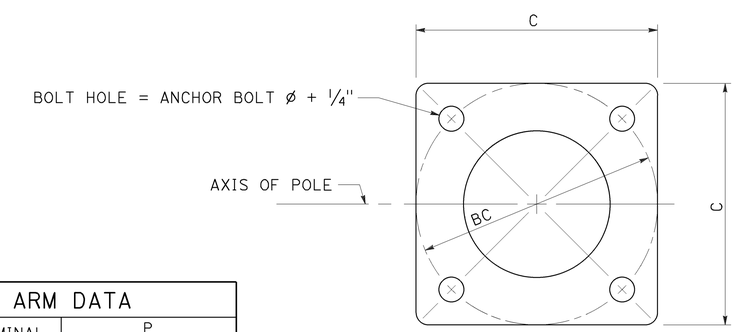

BASE PLATE
DETAIL A

POLE TYPE	POLE DATA				BASE PLATE DATA				CIDH PILE FOUNDATION	
	A HEIGHT	Min OD BASE	Min OD TOP	WALL THICKNESS	C	BC = BOLT CIRCLE	THICKNESS	ANCHOR BOLT SIZE	Dia	DEPTH
15	30'-0"	8"	3 11/16"	0.1196"	1'-0"	1'-0"	1 1/2"	1" ø x 36" *	2'-6"	6'-0"
21	35'-0"	8 5/8"	3 9/16"	0.1793"			2"	1 1/4" ø x 36" *		7'-0"

* FOR BARRIER RAIL BOLTS, SEE REVISED STANDARD PLAN RSP ES-6B.

LUMINAIRE MAST ARM DATA					
M PROJECTED LENGTH	N RISE	Min OD AT POLE	NOMINAL THICKNESS	P TYPE 15	P TYPE 21
6'-0"	2'-0"±	3 1/4"	0.1196"	31'-6"±	36'-6"±
8'-0"	2'-6"±	3 1/2"		32'-0"±	37'-0"±
10'-0"	3'-3"±	3 7/8"		32'-9"±	37'-9"±
12'-0"	4'-3"±			33'-9"±	38'-9"±
15'-0"	4'-9"±	4 1/4"		34'-3"±	39'-3"±

NOTES:

1. ☐ Indicates mast arm length to be used unless otherwise noted on the plans.
2. For Type 15-SB, use Type 15 standard with Type 30 slip base plate details, see Revised Standard Plan RSP ES-6F.
3. Handhole shall be located on the downstream side of traffic.
4. For additional notes and details, see Revised Standard Plans RSP ES-7M and RSP ES-7N.

STATE OF CALIFORNIA
DEPARTMENT OF TRANSPORTATION

ELECTRICAL SYSTEMS (LIGHTING STANDARD, TYPES 15 AND 21)

NO SCALE

RSP ES-6A DATED JULY 15, 2016 SUPERSEDES STANDARD PLAN ES-6A
DATED OCTOBER 30, 2015 - PAGE 449 OF THE STANDARD PLANS BOOK DATED 2015.

REVISED STANDARD PLAN RSP ES-6A

2015 REVISED STANDARD PLAN RSP ES-6A

4-15-16

Dist	COUNTY	ROUTE	POST MILES TOTAL PROJECT	SHEET No.	TOTAL SHEETS
06	Tul	190	4.1/4.8	64	73

REGISTERED CIVIL ENGINEER

July 15, 2016
PLANS APPROVAL DATE

REGISTERED PROFESSIONAL ENGINEER
Stanley P. Johnson
No. C57793
Exp. 3-31-18
CIVIL
STATE OF CALIFORNIA

THE STATE OF CALIFORNIA OR ITS OFFICERS OR AGENTS SHALL NOT BE RESPONSIBLE FOR THE ACCURACY OR COMPLETENESS OF SCANNED COPIES OF THIS PLAN SHEET.

TO ACCOMPANY PLANS DATED 6-20-16

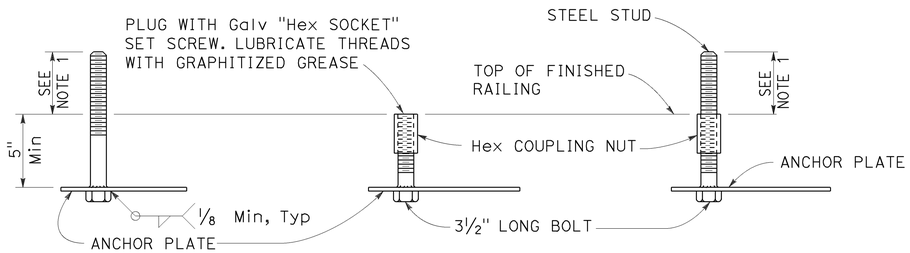

FOR IMMEDIATE INSTALLATION
DETAIL B-1

FOR FUTURE INSTALLATION WITH PLUG
DETAIL B-2

FOR INSTALLATION ON FUTURE ANCHORAGE WITH STUD
DETAIL B-3

ELECTROLIER ANCHORAGES
DETAIL B

NOTES:

1. Anchor bolt or stud length shall be such that thread extends 1/2" maximum above nut on level base plate after grouting. See Detail N.
2. Electrolier anchor bolts shall be held in position for pouring by means of anchor plates and suitable templates. Deviation from the true position, vertical and height shall not exceed 1/16".
3. See railing sheets for reinforcement and structural details at electroliers and pull boxes.

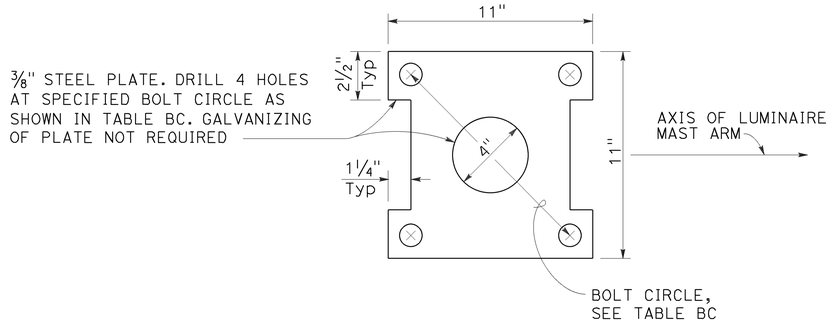

ANCHOR PLATE
DETAIL A

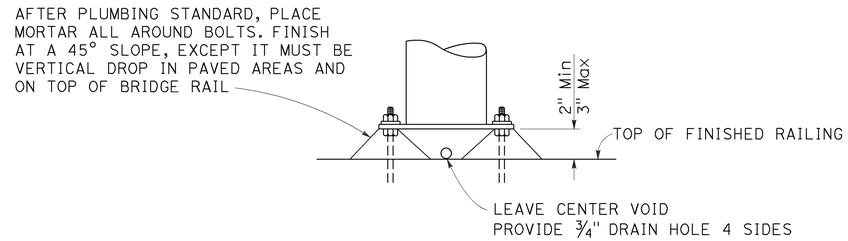

GROUTING AT ELECTROLIER
DETAIL N

TABLE BC

TYPE	BC = BOLT CIRCLE	ANCHOR BOLT DIAMETER	COUPLING NUT BASIC LENGTH	SET SCREW LENGTH DETAIL B-2
15	1'-0"	1"	3"	1 1/2"
21		1 1/4"	3 3/4"	1 7/8"

STATE OF CALIFORNIA
DEPARTMENT OF TRANSPORTATION

ELECTRICAL SYSTEMS (ELECTROLIER ANCHORAGE AND GROUTING FOR TYPE 15 AND TYPE 21 BARRIER RAIL MOUNTED)

NO SCALE

RSP ES-6B DATED JULY 15, 2016 SUPERSEDES STANDARD PLAN ES-6B
DATED OCTOBER 30, 2015 - PAGE 450 OF THE STANDARD PLANS BOOK DATED 2015.

REVISED STANDARD PLAN RSP ES-6B

2015 REVISED STANDARD PLAN RSP ES-6B

4-15-16

Dist	COUNTY	ROUTE	POST MILES TOTAL PROJECT	SHEET No.	TOTAL SHEETS
06	Tul	190	4.1/4.8	65	73

REGISTERED CIVIL ENGINEER

July 15, 2016

PLANS APPROVAL DATE

REGISTERED PROFESSIONAL ENGINEER Stanley P. Johnson No. C57793 Exp. 3-31-18 CIVIL STATE OF CALIFORNIA

THE STATE OF CALIFORNIA OR ITS OFFICERS OR AGENTS SHALL NOT BE RESPONSIBLE FOR THE ACCURACY OR COMPLETENESS OF SCANNED COPIES OF THIS PLAN SHEET.

TO ACCOMPANY PLANS DATED 6-20-16

2015 REVISED STANDARD PLAN RSP ES-6E

LUMINAIRE MAST ARM DATA			
PROJECTED LENGTH	THICKNESS	MINIMUM OD AT POLE	MOUNTING HEIGHT
* 6'-0"	0.1196"	3¼"	36'-9"±
* 8'-0"		3½"	37'-3"±
* 10'-0"		3⅞"	38'-0"±
* 12'-0"			39'-0"±
* 15'-0"		4¼"	39'-6"±
** 20'-0"	0.1793"	5"	37'-0"±

* TYPE 30
** TYPE 31

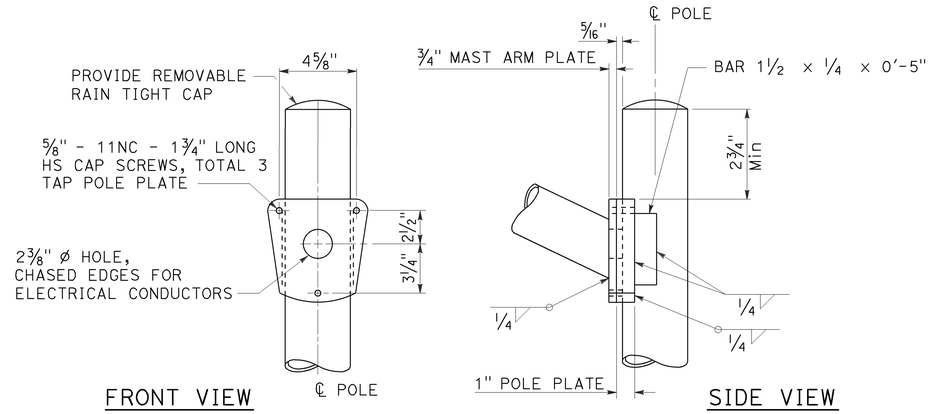

TYPE 30
DETAIL A

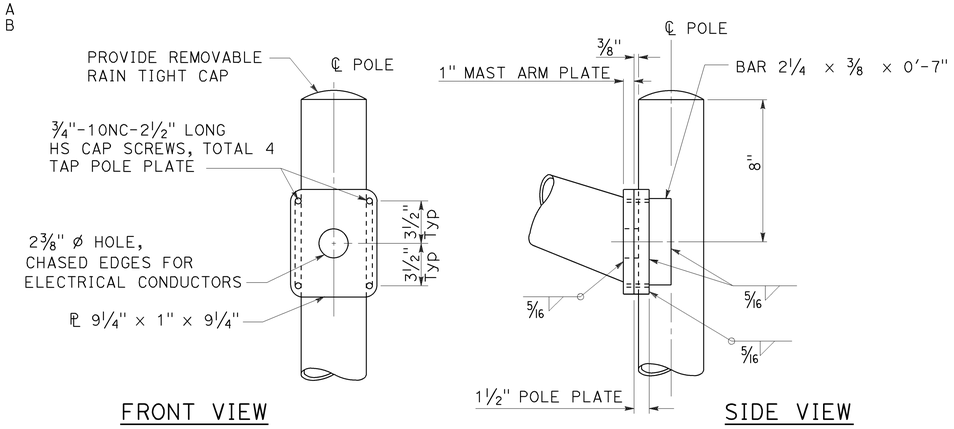

TYPE 31
DETAIL B

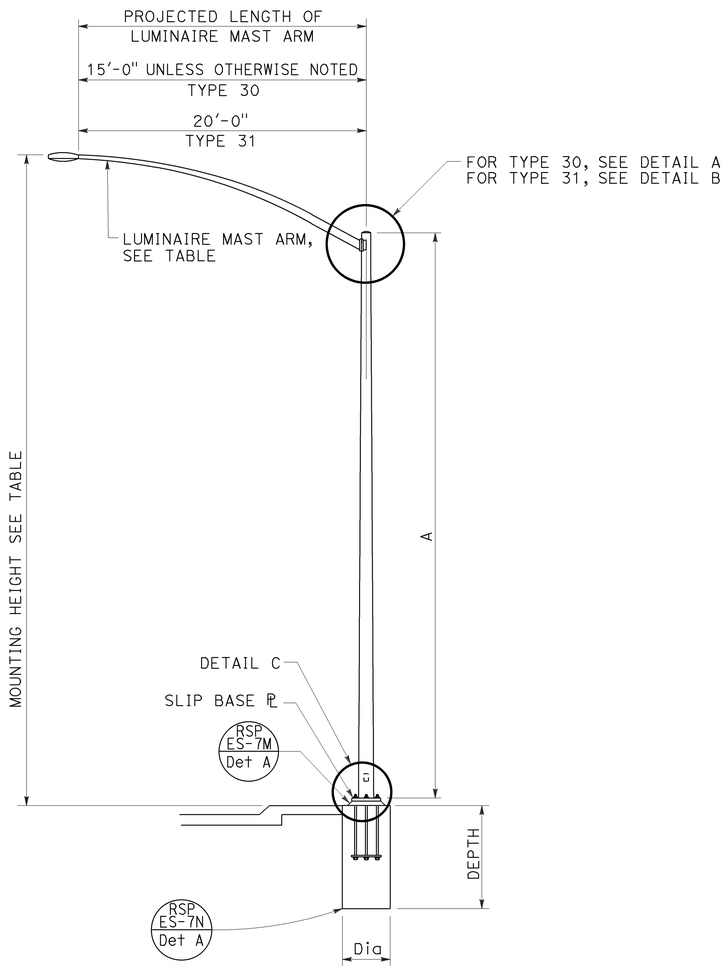

ELEVATION A

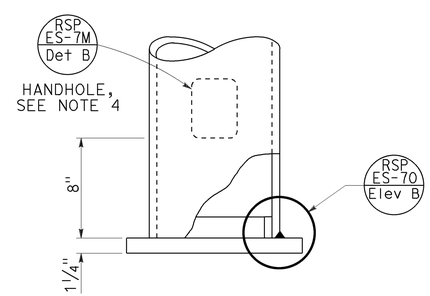

DETAIL C

NOTES:

1. For slip base plate details, see Revised Standard Plan RSP ES-6F.
2. For Type 30 fixed base use Type 15 base plate and foundation shown on Revised Standard Plan RSP ES-6A. Use 1¼" Dia x 3'-6" anchor bolts.
3. For Type 31 fixed base use Type 32 base plate, anchor bolts and foundation on Revised Standard Plan RSP ES-6G.
4. Handhole shall be located on the downstream side of traffic.
5. For additional notes and details, see Revised Standard Plans RSP ES-7M and RSP ES-7N.

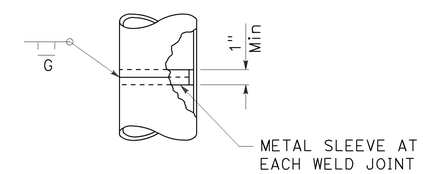

POLE SPLICE

POLE TYPE	POLE DATA				CIDH PILE FOUNDATION	
	A HEIGHT	Min OD BASE	Min OD TOP	Min THICKNESS	Dia	DEPTH
30	35'-0"	8¾"	3 11/16"	0.1196"	2'-6"	7'-0"
31		10¾"	5 11/16"	0.1793"	3'-0"	8'-0"

STATE OF CALIFORNIA
DEPARTMENT OF TRANSPORTATION

ELECTRICAL SYSTEMS (LIGHTING STANDARD, TYPES 30 AND 31)

NO SCALE

RSP ES-6E DATED JULY 15, 2016 SUPERSEDES STANDARD PLAN ES-6E DATED OCTOBER 30, 2015 - PAGE 453 OF THE STANDARD PLANS BOOK DATED 2015.

REVISED STANDARD PLAN RSP ES-6E

6-20-16

Dist	COUNTY	ROUTE	POST MILES TOTAL PROJECT	SHEET No.	TOTAL SHEETS
06	Tul	190	4.1/4.8	66	73

REGISTERED CIVIL ENGINEER

July 15, 2016
PLANS APPROVAL DATE

REGISTERED PROFESSIONAL ENGINEER
Stanley P. Johnson
No. C57793
Exp. 3-31-18
CIVIL
STATE OF CALIFORNIA

THE STATE OF CALIFORNIA OR ITS OFFICERS OR AGENTS SHALL NOT BE RESPONSIBLE FOR THE ACCURACY OR COMPLETENESS OF SCANNED COPIES OF THIS PLAN SHEET.

TO ACCOMPANY PLANS DATED 6-20-16

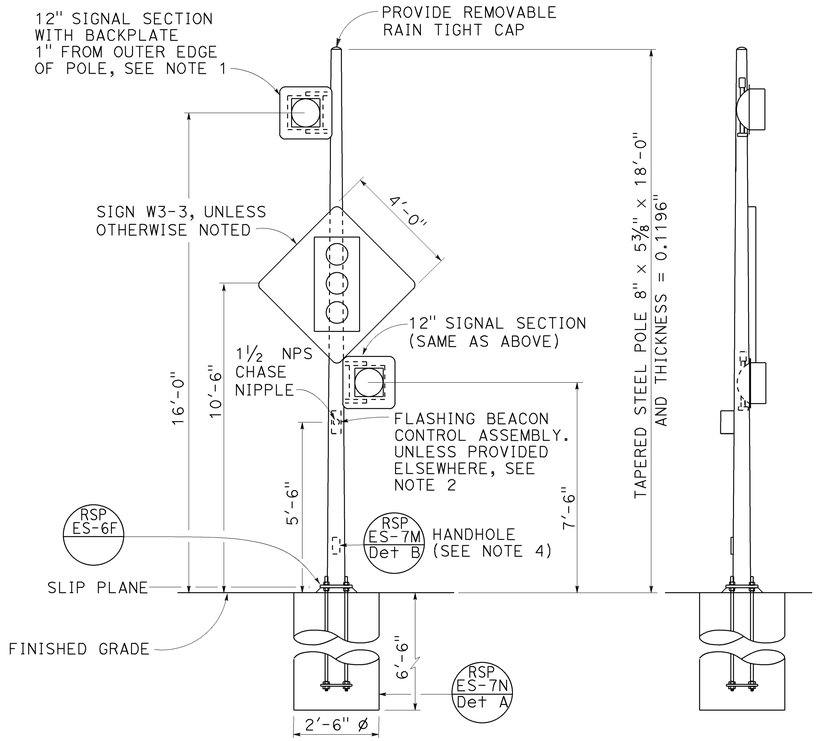

FRONT VIEW

SIDE VIEW

TYPE 15-FBS
FLASHING BEACON WITH SLIP BASE INSTALLATION
DETAIL A

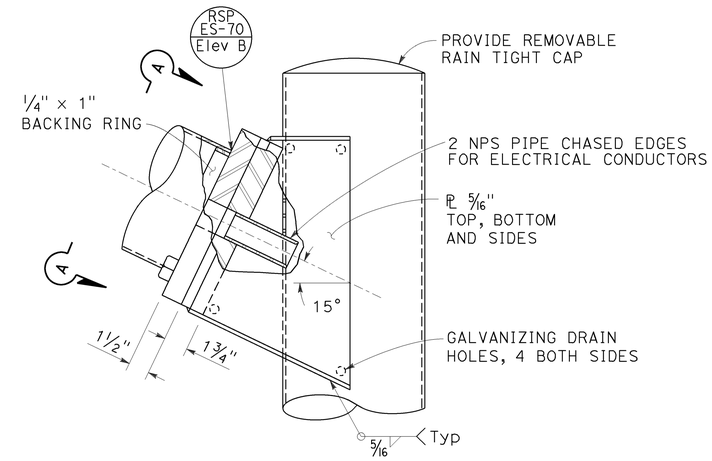

ELEVATION B

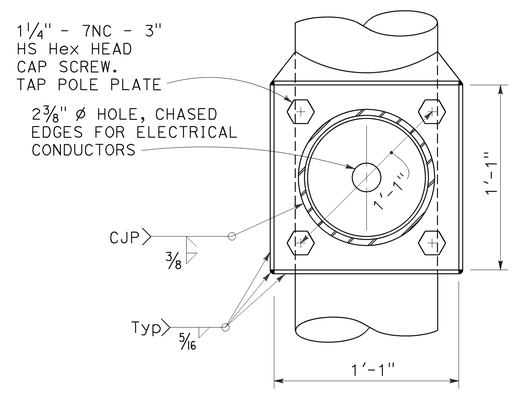

VIEW A-A

FLASHING BEACON MAST ARM CONNECTION DETAIL
DETAIL B

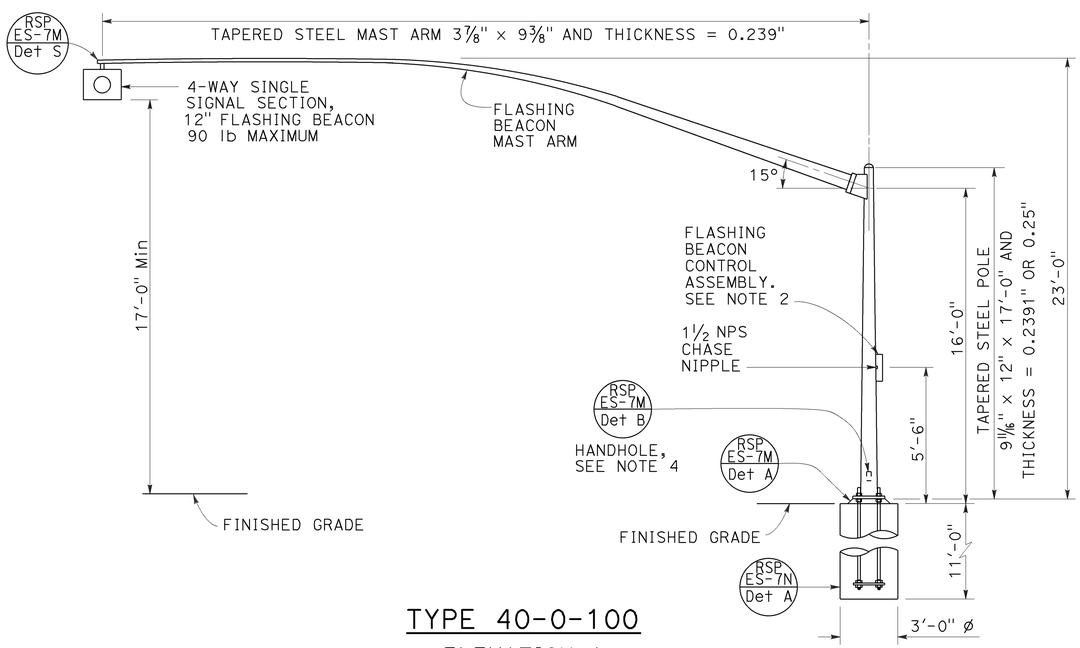

TYPE 40-0-100
ELEVATION A

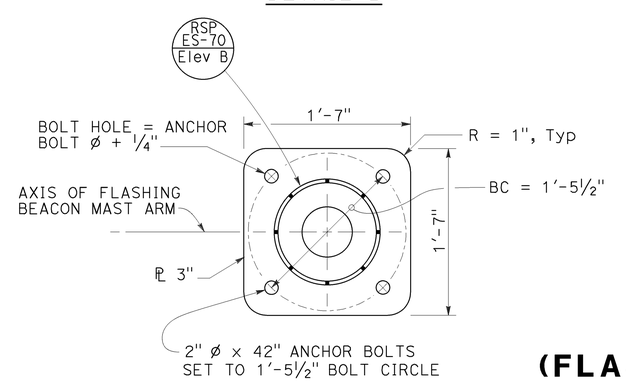

BASE PLATE
DETAIL C

NOTES:

1. See Standard Plans ES-4A and ES-4D for attachment fitting details.
2. For wiring diagram, see Revised Standard Plan RSP ES-14B.
3. For additional notes and details, see Revised Standard Plans RSP ES-7M and RSP ES-7N.
4. Handhole shall be located on the downstream side of traffic.
5. See project plans for type of standard to be installed.

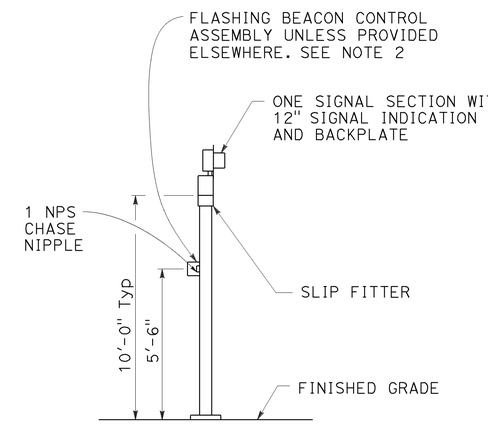

TYPE 1-A, 1-B, 1-C, AND 1-D
FLASHING BEACON INSTALLATION
DETAIL D
See Note 5

STATE OF CALIFORNIA
DEPARTMENT OF TRANSPORTATION

ELECTRICAL SYSTEMS (FLASHING BEACON ON A TYPE 1, TYPE 15-FBS, AND TYPE 40 STANDARD)

NO SCALE

RSP ES-7J DATED JULY 15, 2016 SUPERSEDES RSP ES-7J DATED APRIL 15, 2016 AND STANDARD PLAN ES-7J DATED OCTOBER 30, 2015 - PAGE 464 OF THE STANDARD PLANS BOOK DATED 2015.

REVISED STANDARD PLAN RSP ES-7J

2015 REVISED STANDARD PLAN RSP ES-7J

6-20-16

Dist	COUNTY	ROUTE	POST MILES TOTAL PROJECT	SHEET No.	TOTAL SHEETS
06	Tul	190	4.1/4.8	67	73

REGISTERED CIVIL ENGINEER

July 15, 2016
PLANS APPROVAL DATE

REGISTERED PROFESSIONAL ENGINEER
Stanley P. Johnson
No. C57793
Exp. 3-31-18
CIVIL
STATE OF CALIFORNIA

THE STATE OF CALIFORNIA OR ITS OFFICERS OR AGENTS SHALL NOT BE RESPONSIBLE FOR THE ACCURACY OR COMPLETENESS OF SCANNED COPIES OF THIS PLAN SHEET.

TO ACCOMPANY PLANS DATED 6-20-16

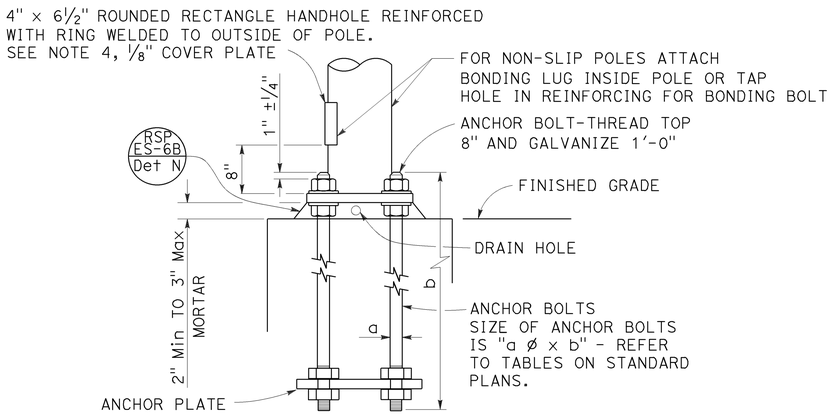

HANDHOLE AND ANCHORAGE
DETAIL A

IDENTIFICATION NUMBER

1. Attach a stamped metal tag with pole's identification number above the handhole. ¼" high number, minimum.
2. Attach a stamped metal tag with mast arm's identification number to the bottom of the signal mast arm near the pole plate. ¼" high number, minimum.

Type — Load case (Use SL for special load case) — Design wind velocity (mph) — Signal mast arm length (ft) { Near handhole: Maximum signal mast arm length for pole type; Near pole plate: Installed signal mast arm length } — Standard plan year — Only for poles or mast arms using Detail F — Only for poles or mast arms using RSP ES-7O

26A - 3 - 100 - 45 - 10 - F or FB

SAMPLE IDENTIFICATION NUMBER

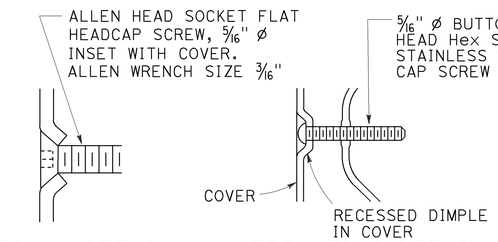

TYPICAL DETAIL
DETAIL B-1

ALTERNATIVE DETAIL
DETAIL B-2

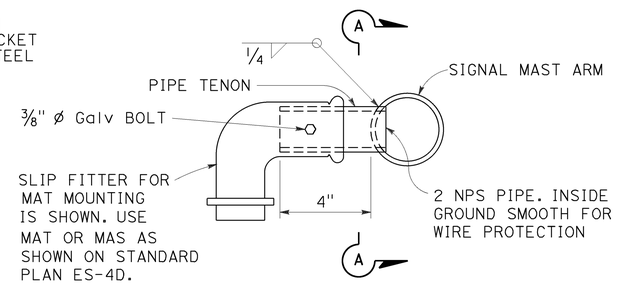

SIDE TENON
DETAIL S-1

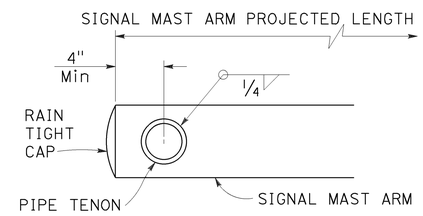

SECTION A-A

PIPE TENONS
DETAIL S

NOTES:

1. Provide a Hex nut, leveling nut and 2 washers for each bolt.
2. Luminaire mast arms shall be round, tapered steel tubes, taper of 0.1375" to 0.143-inch per foot with an end section 2⅜" OD for mounting hardware. Extensions of 2 NPS Standard pipe and 7" long may be used at the option of the manufacturer. When low pressure sodium luminaires are required, the extension shall be 1'-3".
3. Signal mast arms shall be round, tapered steel tubes, maximum taper 0.143-inch per foot.
4. Handhole reinforcement ring shall be ¼" x 2" for 0.1196" to 0.2391" thick poles, ⅜" x 2" for 0.3125" to 0.375" thick poles.
5. Handholes shall be located on the downstream side of traffic.
6. Detail F, fatigue resistant weld, is required at socket welded signal mast arm plate and pole base plate.
7. Cap screws shall be tightened by the turn-of-nut method ⅓ turn from a snug tight condition. No washer will be required.
8. Outside diameter, wall thickness, and corresponding section properties of poles and mast arms as shown in the Standard Plans are minimums. Unless otherwise specified, alternative sections shall require approval by the Engineer.
9. Design: AASHTO Standard Specifications for Structural Support for Highway Signs, Luminaires, and Traffic Signals, 6th Edition. Basic Wind Speed = 100 mph (3 seconds gust). Yearly Mean Wind Velocity = 15.6 mph.
10. Materials (Structural steel):
    fy = 55,000 psi (tapered steel tube and anchor bolts)
    fy = 50,000 psi (unless otherwise noted)
11. Materials (Reinforced concrete):
    f'c = 3,625 psi
    fy = 60,000 psi

WELD SIZE	WALL THICKNESS
⅜"	0.1196"
¼"	0.1793"
5/16"	0.2391"
⅜"	0.3125"
7/16"	0.375"

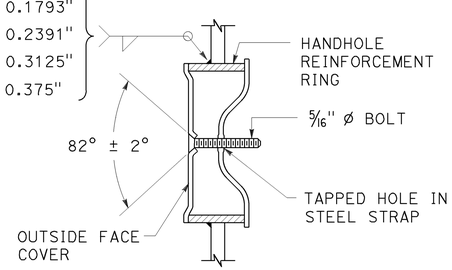

TAMPER RESISTANT HANDHOLE COVER
DETAIL B

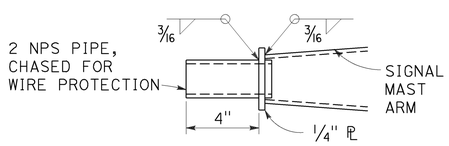

TIP TENON
DETAIL TL

This detail supersedes Detail S when so designated

WELD SIZE	WALL THICKNESS
⅛"	0.1196"
3/16"	0.1793"
¼"	0.2391"

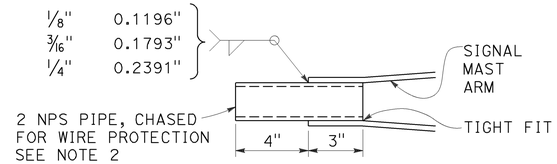

TIP TENON
DETAIL TS

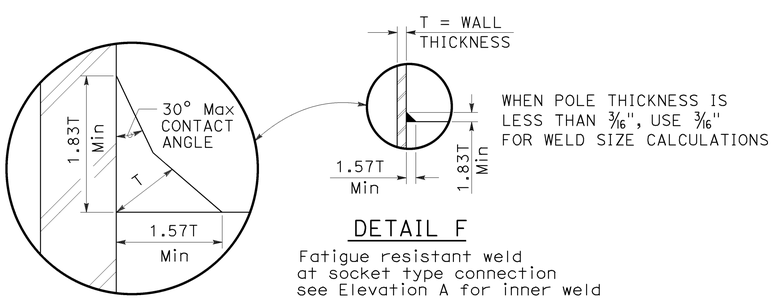

DETAIL F

Fatigue resistant weld at socket type connection see Elevation A for inner weld

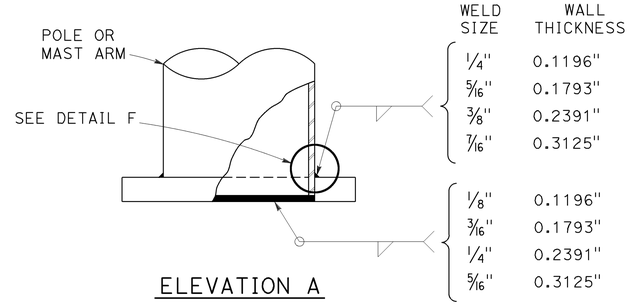

ELEVATION A

STATE OF CALIFORNIA
DEPARTMENT OF TRANSPORTATION

ELECTRICAL SYSTEMS (SIGNAL AND LIGHTING STANDARD, DETAIL No. 1)

NO SCALE

RSP ES-7M DATED JULY 15, 2016 SUPERSEDES STANDARD PLAN ES-7M DATED OCTOBER 30, 2015 - PAGE 467 OF THE STANDARD PLANS BOOK DATED 2015.

REVISED STANDARD PLAN RSP ES-7M

2015 REVISED STANDARD PLAN RSP ES-7M

6-20-16

Dist	COUNTY	ROUTE	POST MILES TOTAL PROJECT	SHEET No.	TOTAL SHEETS
06	Tul	190	4.1/4.8	68	73

REGISTERED CIVIL ENGINEER

July 15, 2016
PLANS APPROVAL DATE

REGISTERED PROFESSIONAL ENGINEER
Stanley P. Johnson
No. C57793
Exp. 3-31-18
CIVIL
STATE OF CALIFORNIA

THE STATE OF CALIFORNIA OR ITS OFFICERS OR AGENTS SHALL NOT BE RESPONSIBLE FOR THE ACCURACY OR COMPLETENESS OF SCANNED COPIES OF THIS PLAN SHEET.

TO ACCOMPANY PLANS DATED 6-20-16

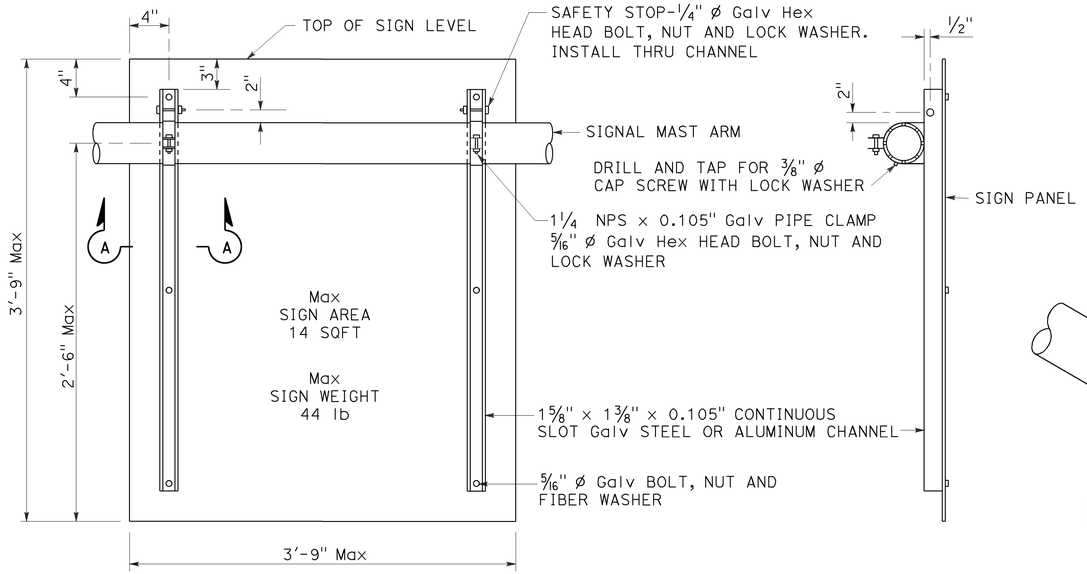

REAR VIEW

SIDE VIEW

SIGN MOUNTING DETAILS
DETAIL U

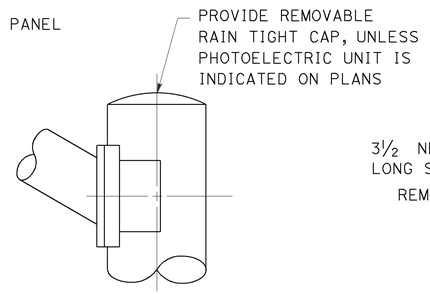

STANDARD TOP
DETAIL B-1

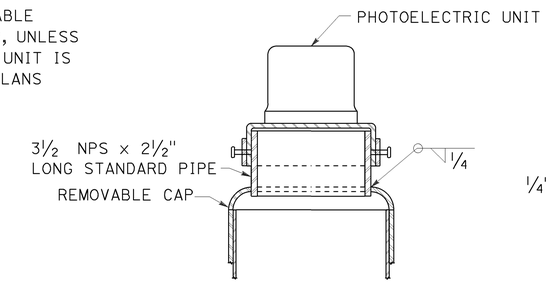

MOUNTING ADAPTER FOR
PHOTOELECTRIC UNIT
DETAIL B-2

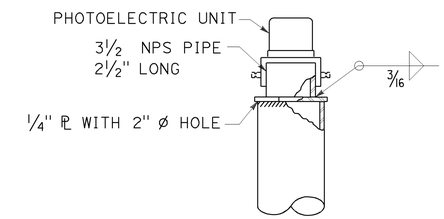

ALTERNATIVE
MOUNTING ADAPTER
DETAIL B-3

POLE TOP DETAILS
DETAIL B

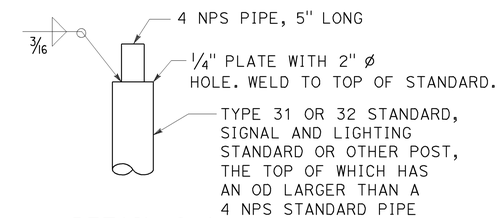

DETAIL C-1

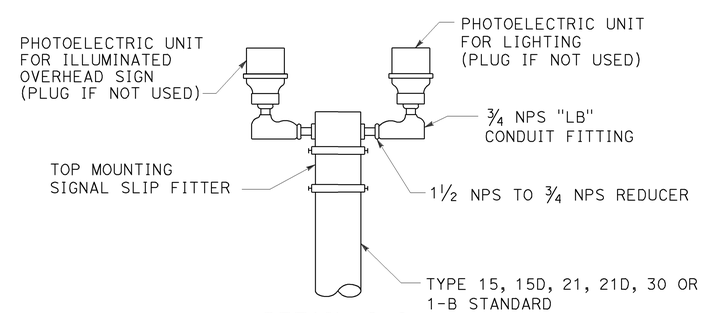

DETAIL C-2

DUAL PHOTOELECTRIC UNIT MOUNTING DETAIL
DETAIL C

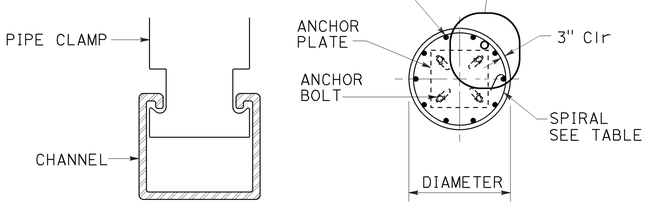

SECTION A-A

SECTION B-B

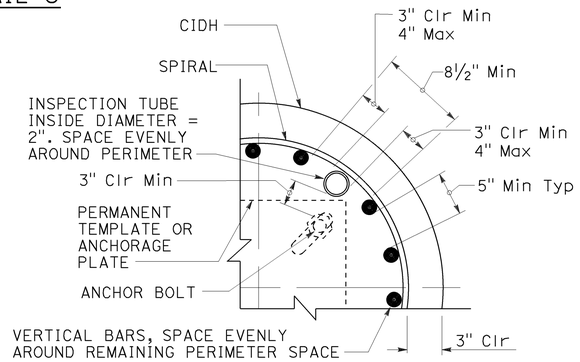

INSPECTION TUBE PLACEMENT
DETAIL I

CIDH REINFORCING AND INSPECTION TUBE SCHEDULE			
CIDH DIAMETER	VERTICAL BARS	SPIRAL	INSPECTION TUBE
2 ft	8-#5	#4 AT 6	2
2.5 ft	10-#6		4*
3 ft	12-#7	#5 AT 6	
3.5 ft	14-#8		4
4 ft	18-#9	2-#4 AT 7	5
4.5 ft	18-#9	2-#5 AT 7	5
5 ft	22-#10	2-#5 AT 7	6
6 ft	26-#11	2-#6 AT 7	7

* FOR SLIP BASE VERSIONS WITH 3 ANCHOR BOLTS USE 3 INSPECTION TUBES.

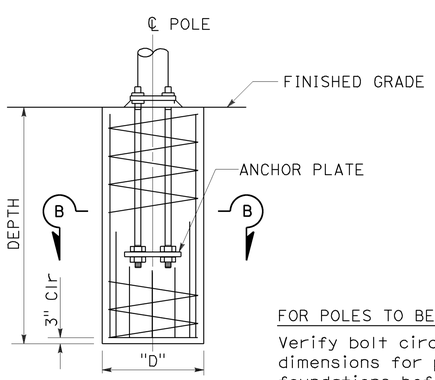

ELEVATION

FOR POLES TO BE INSTALLED ON EXISTING FOUNDATION:

Verify bolt circles, anchor bolt sizes and dependent dimensions for poles to be installed on existing foundations before fabricating the poles.

CAST-IN-DRILLED-HOLE PILE FOUNDATION, REINFORCED PILE
DETAIL A

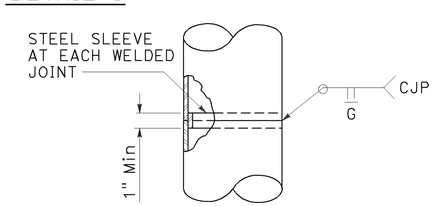

FOR UNIFORM TUBE THICKNESS
DETAIL T-1

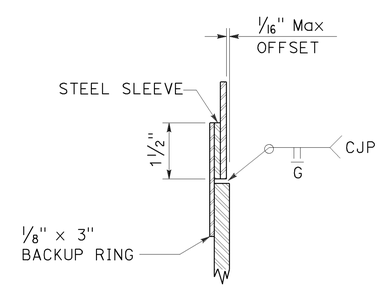

AT TUBE THICKNESS CHANGE
DETAIL T-2

POLE SPLICES
DETAIL T

STATE OF CALIFORNIA
DEPARTMENT OF TRANSPORTATION

ELECTRICAL SYSTEMS (SIGNAL AND LIGHTING STANDARD, DETAIL No. 2)

NO SCALE

RSP ES-7N DATED JULY 15, 2016 SUPERSEDES STANDARD PLAN ES-7N
DATED OCTOBER 30, 2015 - PAGE 468 OF THE STANDARD PLANS BOOK DATED 2015.

REVISED STANDARD PLAN RSP ES-7N

2015 REVISED STANDARD PLAN RSP ES-7N

6-20-16

Dist	COUNTY	ROUTE	POST MILES TOTAL PROJECT	SHEET No.	TOTAL SHEETS
06	Tul	190	4.1/4.8	69	73

Theresa Gabriel
REGISTERED ELECTRICAL ENGINEER

April 15, 2016
PLANS APPROVAL DATE

REGISTERED PROFESSIONAL ENGINEER
Theresa Aziz Gabriel
No. E15129
Exp. 6-30-16
ELECTRICAL
STATE OF CALIFORNIA

THE STATE OF CALIFORNIA OR ITS OFFICERS OR AGENTS SHALL NOT BE RESPONSIBLE FOR THE ACCURACY OR COMPLETENESS OF SCANNED COPIES OF THIS PLAN SHEET.

TO ACCOMPANY PLANS DATED 6-20-16

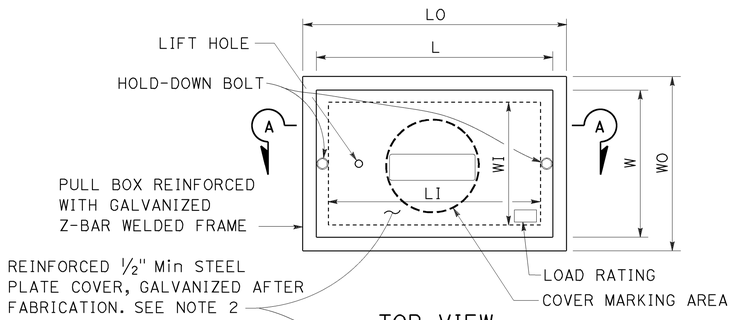

TOP VIEW

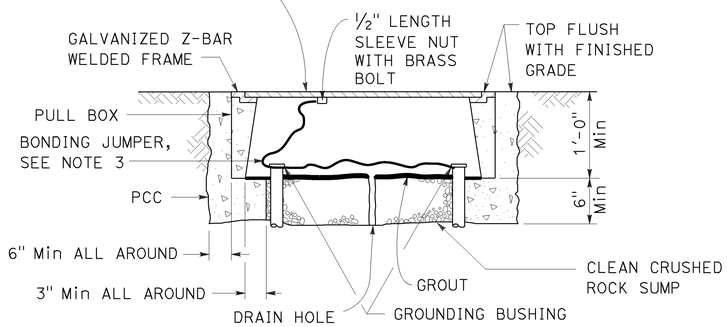

SECTION A-A

No. 3½(T), No. 5(T) AND No. 6(T) TRAFFIC PULL BOX

NOTES:

1. Traffic pull box shall be provided with steel cover and special concrete footing. Steel cover shall have embossed non-skid pattern.
2. Steel reinforcing shall be as regularly used in the standard products of the respective manufacturer.
3. Bonding jumper for metal covers shall be 3' long, minimum.
4. The nominal dimensions of the opening in which the cover sets shall be the same as the cover dimensions except the length and width dimensions shall be ⅛" greater.
5. Covers and boxes shall be interchangeable with California standard male and female gages. When interchanged with a standard male or female gage, the top surfaces shall be flush within ⅛".

DIMENSION TABLE

PULL BOX	PULL BOX						COVER	
	MINIMUM * THICKNESS	MINIMUM DEPTH BOX AND EXTENSION	LO	LI	WO	WI	L **	W **
No. 3½(T)	1½"	1'-0"	1'-10" - 1'-11"	1'-5" - 1'-6½"	1'-3" - 1'-4"	10" - 1'-0"	1'-8" - 1'-8½"	1'-1" - 1'-2"
No. 5(T)	1¾"	1'-0"	2'-5" - 2'-6"	2'-0" - 2'-1"	1'-6" - 1'-7"	1'-1" - 1'-2"	2'-3" - 2'-3½"	1'-4" - 1'-4½"
No. 6(T)	2"	1'-0"	2'-11" - 3'-1"	2'-6" - 2'-7"	1'-10" - 2'-0"	1'-5" - 1'-6"	2'-9" - 2'-9½"	1'-8" - 1'-8½"

* EXCLUDING CONDUIT WEB ** TOP DIMENSION

STATE OF CALIFORNIA
DEPARTMENT OF TRANSPORTATION

ELECTRICAL SYSTEMS (TRAFFIC PULL BOX)

NO SCALE

RSP ES-8B DATED APRIL 15, 2016 SUPERSEDES STANDARD PLAN ES-8B DATED OCTOBER 30, 2015 - PAGE 474 OF THE STANDARD PLANS BOOK DATED 2015.

REVISED STANDARD PLAN RSP ES-8B

2015 REVISED STANDARD PLAN RSP ES-8B

1-22-16

Dist	COUNTY	ROUTE	POST MILES TOTAL PROJECT	SHEET No.	TOTAL SHEETS
06	Tul	190	4.1/4.8	70	73

REGISTERED CIVIL ENGINEER

July 15, 2016
PLANS APPROVAL DATE

REGISTERED PROFESSIONAL ENGINEER
Stanley P. Johnson
No. C57793
Exp. 3-31-18
CIVIL
STATE OF CALIFORNIA

THE STATE OF CALIFORNIA OR ITS OFFICERS OR AGENTS SHALL NOT BE RESPONSIBLE FOR THE ACCURACY OR COMPLETENESS OF SCANNED COPIES OF THIS PLAN SHEET.

TO ACCOMPANY PLANS DATED 6-20-16

2015 REVISED STANDARD PLAN RSP ES-11

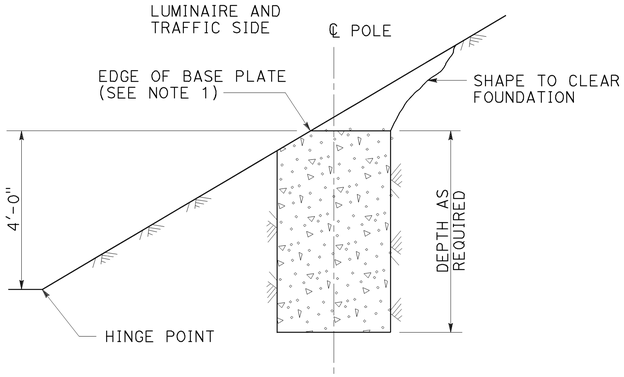

CUT SLOPES
STEEPER THAN 4:1,
LESS THAN 2:1
DETAIL A-1
See Note 2 and 3

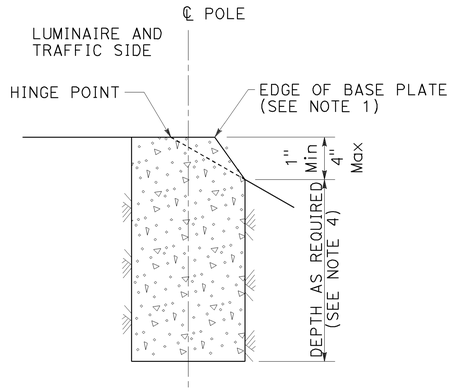

FILL SLOPES
STEEPER THAN 4:1,
LESS THAN 2:1
DETAIL A-2
See Note 2 and 3

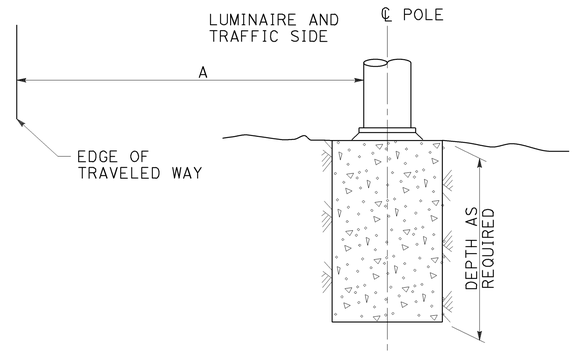

FLAT SECTIONS, CUT OR FILL SLOPES
4:1 OR FLATTER
DETAIL A-3
See Note 2

STANDARD TYPE	SETBACK (DIMENSION A)
32	30'-0" (Min)
31	20'-0" (Min)
15, 15D, 15-SB, 21, 21D, 30	ARM LENGTH (Min)

FOUNDATIONS ADJACENT TO ALL ROADWAYS EXCEPT
IN SIDEWALK, MEDIAN AND ISLAND AREAS
DETAIL A

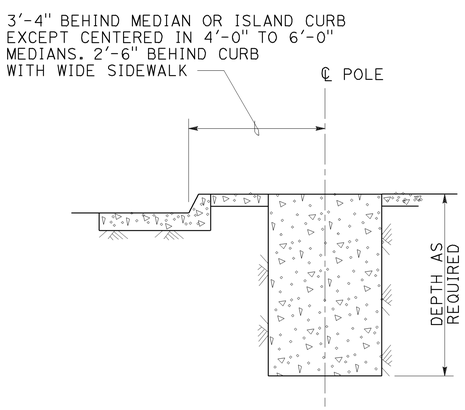

MEDIAN, ISLAND
OR WIDE SIDEWALK
DETAIL B-1
7' Wide and wider

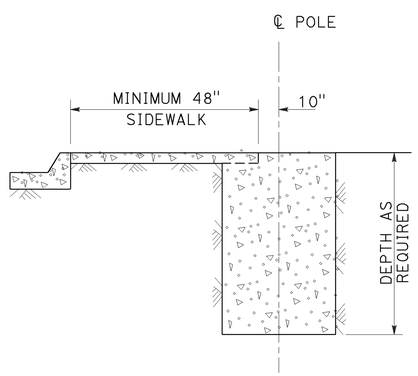

NARROW SIDEWALK
DETAIL B-2
Less than 7' wide

FOUNDATIONS IN SIDEWALK, MEDIAN AND ISLAND AREAS
DETAIL B

NOTES:

1. Where a portion of the foundation is above grade, the top edges shall have a 1" chamfer.
2. Slopes shall be horizontal to vertical ratio (Horizontal : Vertical).
3. Horizontal setbacks on cut and fill slopes steeper than 4:1 shall not exceed the distance shown for flat sections.
4. CIDH embedment depth shall be increased beyond standard depths by the diameter of the CIDH.

STATE OF CALIFORNIA
DEPARTMENT OF TRANSPORTATION

ELECTRICAL SYSTEMS (FOUNDATION INSTALLATIONS)

NO SCALE

RSP ES-11 DATED JULY 15, 2016 SUPERSEDES STANDARD PLAN ES-11 DATED DATED OCTOBER 30, 2015 - PAGE 483 OF THE STANDARD PLANS BOOK DATED 2015.

REVISED STANDARD PLAN RSP ES-11

6-20-16

Dist	COUNTY	ROUTE	POST MILES TOTAL PROJECT	SHEET No.	TOTAL SHEETS
06	Tul	190	4.1/4.8	71	73

Theresa Gabriel
REGISTERED ELECTRICAL ENGINEER

April 15, 2016
PLANS APPROVAL DATE

REGISTERED PROFESSIONAL ENGINEER
Theresa Aziz Gabriel
No. E15129
Exp. 6-30-16
ELECTRICAL
STATE OF CALIFORNIA

THE STATE OF CALIFORNIA OR ITS OFFICERS OR AGENTS SHALL NOT BE RESPONSIBLE FOR THE ACCURACY OR COMPLETENESS OF SCANNED COPIES OF THIS PLAN SHEET.

TO ACCOMPANY PLANS DATED 6-20-16

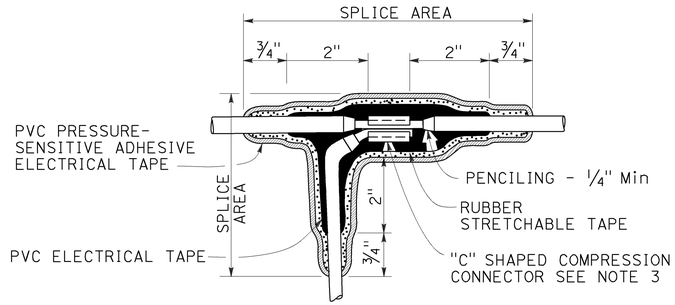

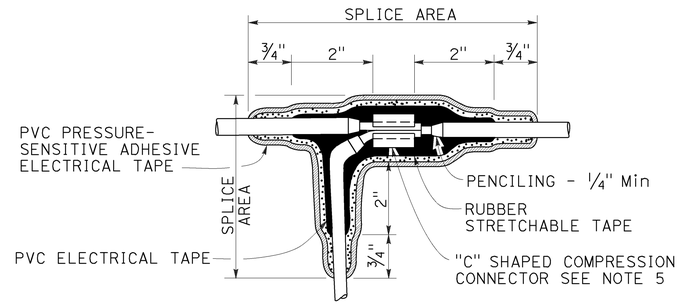

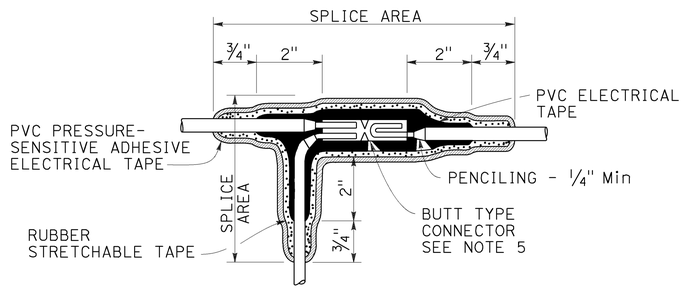

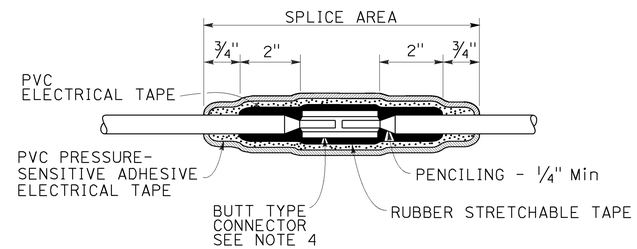

TYPICAL SPLICE INSULATION METHOD B

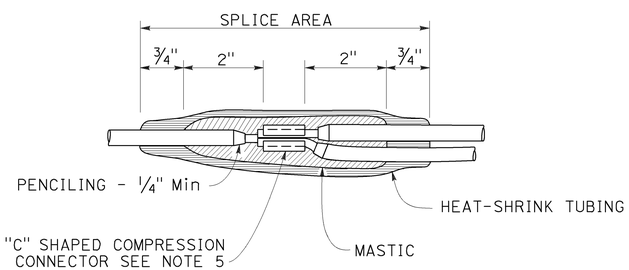

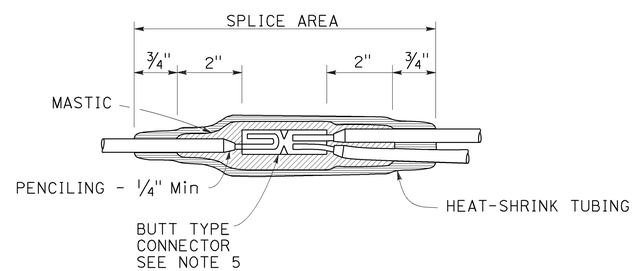

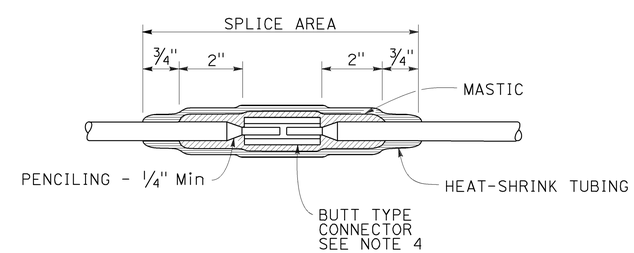

TYPICAL SPLICE INSULATION HEAT-SHRINK TUBING

NOTES:

1. Dimensions are minimum.
2. Rubber tapes shall be rolled after application.
3. Between 1 free-end and 1 through conductor.
4. Between 2 free-end conductors.
5. Between 3 free-end conductors.

STATE OF CALIFORNIA
DEPARTMENT OF TRANSPORTATION

ELECTRICAL SYSTEMS (SPLICE INSULATION METHODS DETAILS)

NO SCALE

RSP ES-13A DATED APRIL 15, 2016 SUPERSEDES STANDARD PLAN ES-13A DATED OCTOBER 30, 2015 - PAGE 484 OF THE STANDARD PLANS BOOK DATED 2015.

REVISED STANDARD PLAN RSP ES-13A

2015 REVISED STANDARD PLAN RSP ES-13A

12-16-15

Dist	COUNTY	ROUTE	POST MILES TOTAL PROJECT	SHEET No.	TOTAL SHEETS
06	Tul	190	4.1/4.8	72	73

Theresa Gabriel
REGISTERED ELECTRICAL ENGINEER

April 15, 2016
PLANS APPROVAL DATE

REGISTERED PROFESSIONAL ENGINEER Theresa Aziz Gabriel No. E15129 Exp. 6-30-16 ELECTRICAL STATE OF CALIFORNIA

THE STATE OF CALIFORNIA OR ITS OFFICERS OR AGENTS SHALL NOT BE RESPONSIBLE FOR THE ACCURACY OR COMPLETENESS OF SCANNED COPIES OF THIS PLAN SHEET.

TO ACCOMPANY PLANS DATED 6-20-16

CIRCUIT VOLTAGE	FUSE VOLTAGE RATING	FUSE CURRENT RATING						
		HPS LAMP BALLAST		LOW PRESSURE SODIUM BALLAST	INDUCTION SIGN LIGHTING	SINGLE PHASE (TWO WIRE) TRANSFORMERS (PRIMARY SIDE)		
		70 W	100 W	180 W	85 W	1 kVA	2 kVA	3 kVA
120 V	250 V	5 A	5 A	5 A	5 A	10 A	20 A	30 A
240 V	250 V	5 A	5 A	5 A	5 A	6 A	10 A	20 A
480 V	500-600 V	5 A	5 A	3 A	1 A (SEE NOTE 2)	3 A	6 A	10 A

NOTES:

1. Primary lines of multiple ballasts shall be provided with fused connectors. Fuse ratings shall be as noted above.
2. See Standard Plan ES-15D, Type SC3 control.

FUSE RATINGS FOR FUSED CONNECTORS

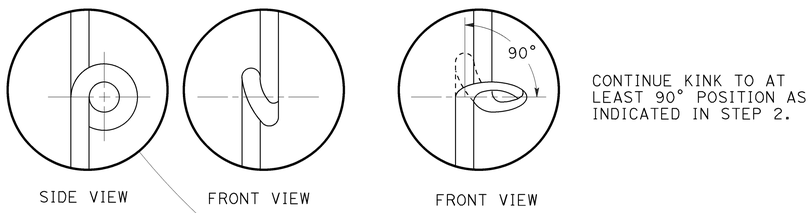

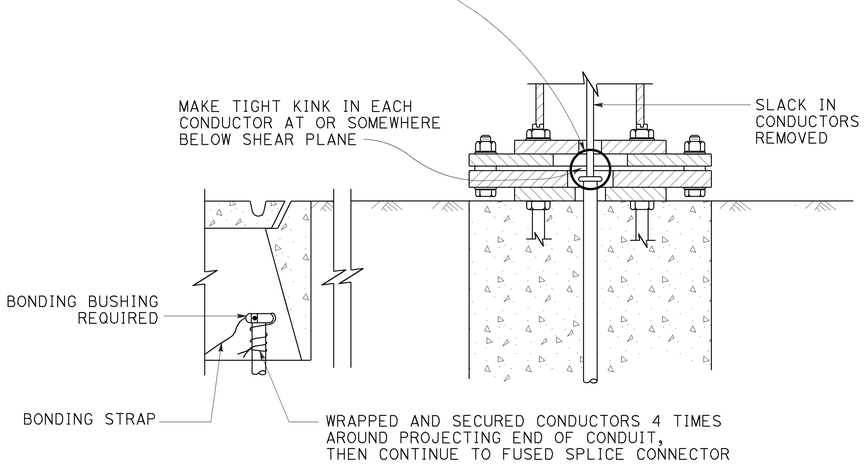

KINKING DETAIL FOR SLIP BASE STANDARDS

DETAIL A

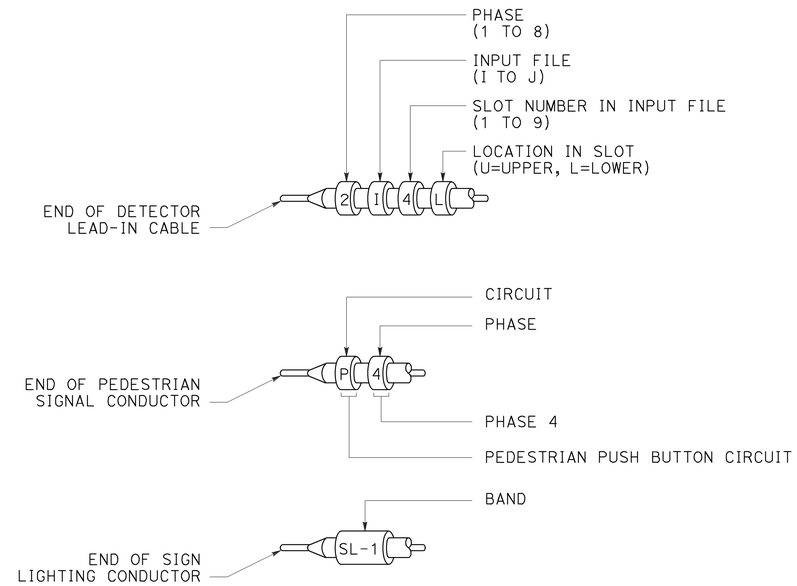

TYPICAL BANDING DETAILS

DETAIL B

STATE OF CALIFORNIA
DEPARTMENT OF TRANSPORTATION

ELECTRICAL SYSTEMS (FUSE RATING, KINKING AND BANDING DETAIL)

NO SCALE

RSP ES-13B DATED APRIL 15, 2016 SUPERSEDES STANDARD PLAN ES-13B DATED OCTOBER 30, 2015 - PAGE 485 OF THE STANDARD PLANS BOOK DATED 2015.

REVISED STANDARD PLAN RSP ES-13B

2015 REVISED STANDARD PLAN RSP ES-13B

1-12-16

Dist	COUNTY	ROUTE	POST MILES TOTAL PROJECT	SHEET No.	TOTAL SHEETS
06	Tul	190	4.1/4.8	73	73

Theresa Gabriel
REGISTERED ELECTRICAL ENGINEER

April 15, 2016
PLANS APPROVAL DATE

REGISTERED PROFESSIONAL ENGINEER
Theresa Aziz Gabriel
No. E15129
Exp. 6-30-16
ELECTRICAL
STATE OF CALIFORNIA

THE STATE OF CALIFORNIA OR ITS OFFICERS OR AGENTS SHALL NOT BE RESPONSIBLE FOR THE ACCURACY OR COMPLETENESS OF SCANNED COPIES OF THIS PLAN SHEET.

TO ACCOMPANY PLANS DATED 6-20-16

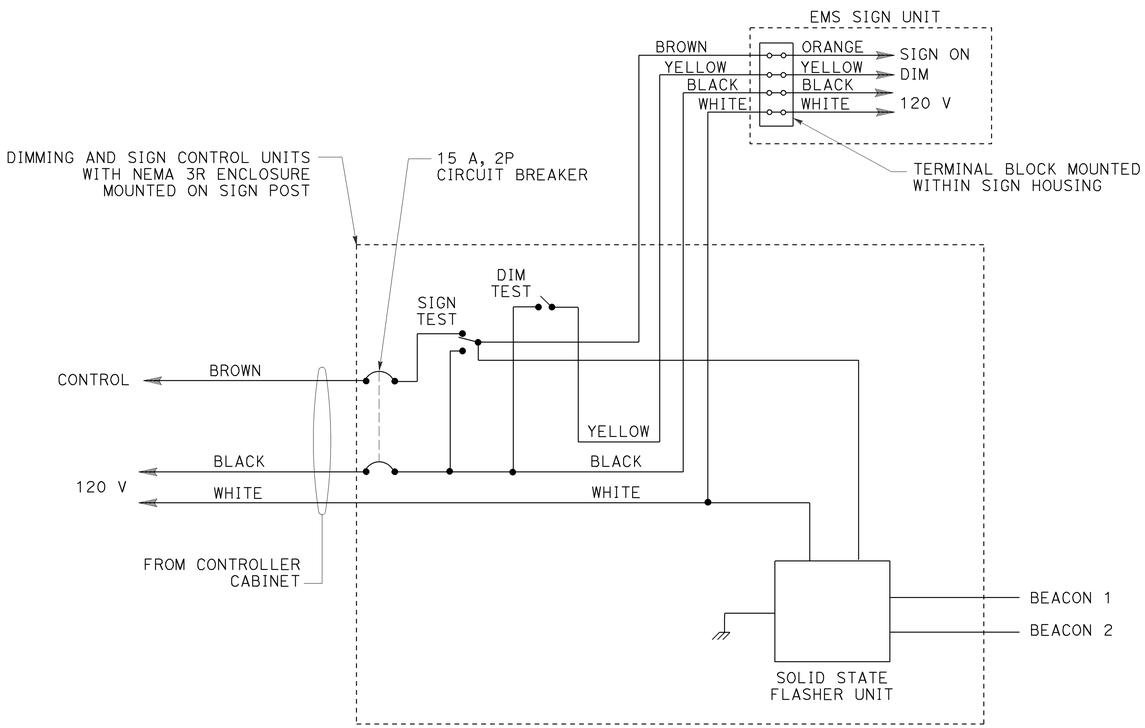

WIRING DIAGRAM
LED EXTINGUISHABLE MESSAGE SIGN
DETAIL A

THE FLASHER SHALL MATE WITH A CINCH-JONES SOCKET S-406-SB OR EQUAL AND CONNECTED AS FOLLOWS:

PIN	CIRCUIT	PIN	CIRCUIT
7	LOAD	10	NEUTRAL
8	LOAD	11	LINE
9	CHASSIS GROUND	12	NOT USED

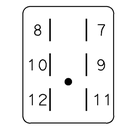

CONNECTOR SOCKET
SOLID STATE FLASHER UNIT

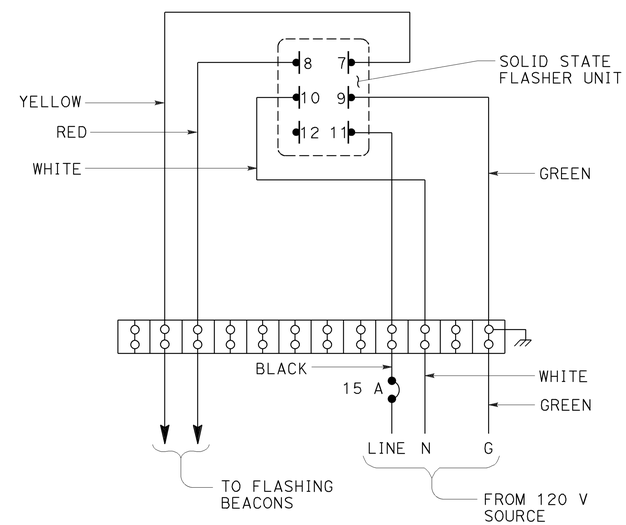

WIRING DIAGRAM
FLASHING BEACON CONTROL ASSEMBLY
DETAIL B

STATE OF CALIFORNIA
DEPARTMENT OF TRANSPORTATION

ELECTRICAL SYSTEMS (CONTROL ASSEMBLY WIRING DIAGRAMS)

NO SCALE

RSP ES-14B DATED APRIL 15, 2016 SUPERSEDES STANDARD PLAN ES-14B
DATED OCTOBER 30, 2015 - PAGE 487 OF THE STANDARD PLANS BOOK DATED 2015.

REVISED STANDARD PLAN RSP ES-14B

2015 REVISED STANDARD PLAN RSP ES-14B

1-22-16