ACHSNHPG-P099(573)E

| Dist | COUNTY | ROUTE | POST MILES TOTAL PROJECT | SHEET No. | TOTAL SHEETS |
|---|---|---|---|---|---|
| 06 | Mad | 99 | 20.2/22.7 | 1 | 76 |

STATE OF CALIFORNIA
# DEPARTMENT OF TRANSPORTATION

## PROJECT PLANS FOR CONSTRUCTION ON
# STATE HIGHWAY

## IN MADERA COUNTY IN FAIRMEAD AT VARIOUS LOCATIONS FROM 0.7 MILE SOUTH OF AVENUE 21 1/2 OVERCROSSING TO ROUTE 152

TO BE SUPPLEMENTED BY STANDARD PLANS DATED MAY 2010

INDEX OF PLANS


| SHEET No. | DESCRIPTION |
|---|---|
| 1 | TITLE AND LOCATION MAP |
| 2 | TYPICAL CROSS SECTIONS |
| 3-10 | LAYOUTS |
| 11-13 | CONSTRUCTION DETAILS |
| 14 | CONSTRUCTION AREA SIGNS |
| 15-16 | MOTORIST INFORMATION PLANS |
| 17-21 | TRAFFIC HANDLING PLANS AND QUANTITIES |
| 22-27 | PAVEMENT DELINEATION PLANS, DETAILS AND QUANTITIES |
| 28-35 | SIGN PLANS, DETAILS AND QUANTITIES |
| 36 | SUMMARY OF QUANTITIES |
| 37-49 | LANDSCAPE PLANS |
| 50-53 | ELECTRICAL PLANS |
| 54-76 | REVISED STANDARD PLANS |


THE STANDARD PLANS LIST APPLICABLE TO THIS CONTRACT IS INCLUDED IN THE NOTICE TO BIDDERS AND SPECIAL PROVISIONS BOOK.

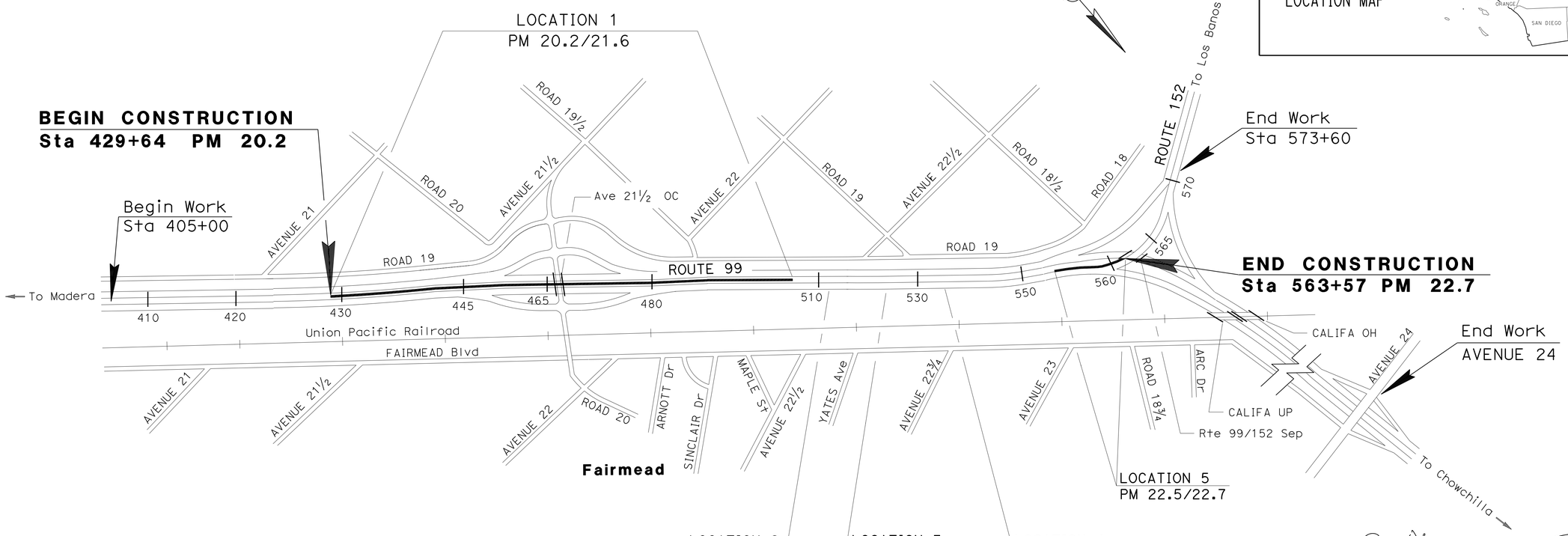


NO SCALE

Eric Olson 7-15-13
PROJECT ENGINEER DATE
REGISTERED CIVIL ENGINEER

July 15, 2013
PLANS APPROVAL DATE

REGISTERED PROFESSIONAL ENGINEER ERIC H. OLSON No. 60801 Exp. 12/31/14 CIVIL STATE OF CALIFORNIA

*THE STATE OF CALIFORNIA OR ITS OFFICERS OR AGENTS SHALL NOT BE RESPONSIBLE FOR THE ACCURACY OR COMPLETENESS OF SCANNED COPIES OF THIS PLAN SHEET.*

THE CONTRACTOR SHALL POSSESS THE CLASS (OR CLASSES) OF LICENSE AS SPECIFIED IN THE "NOTICE TO BIDDERS."

PROJECT MANAGER B HULL
DESIGN ENGINEER D FRANKE

| CONTRACT No. | 06-0N2004 |
|---|---|
| PROJECT ID | 0600020447 |

LAST REVISION 07-11-13
DATE PLOTTED => 18-OCT-2013
TIME PLOTTED => 08:10

| Dist | COUNTY | ROUTE | POST MILES TOTAL PROJECT | SHEET No. | TOTAL SHEETS |
|---|---|---|---|---|---|
| 06 | Mad | 99 | 20.2/22.7 | 2 | 76 |

REGISTERED CIVIL ENGINEER 7-15-13 DATE

7-15-13
PLANS APPROVAL DATE

REGISTERED PROFESSIONAL ENGINEER ERIC H. OLSON No. 60801 Exp. 12/31/14 CIVIL STATE OF CALIFORNIA

*THE STATE OF CALIFORNIA OR ITS OFFICERS OR AGENTS SHALL NOT BE RESPONSIBLE FOR THE ACCURACY OR COMPLETENESS OF SCANNED COPIES OF THIS PLAN SHEET.*

NOTES:

1. SEE LAYOUT FOR LIMITS OF SCUPPERS
2. DIMENSIONS OF THE STRUCTURAL SECTIONS ARE SUBJECT TO TOLERENCES SPECIFIED IN THE STANDARD SPECIFICATIONS
3. SEE LAYOUTS FOR LOCATION OF DTBB AND STBB

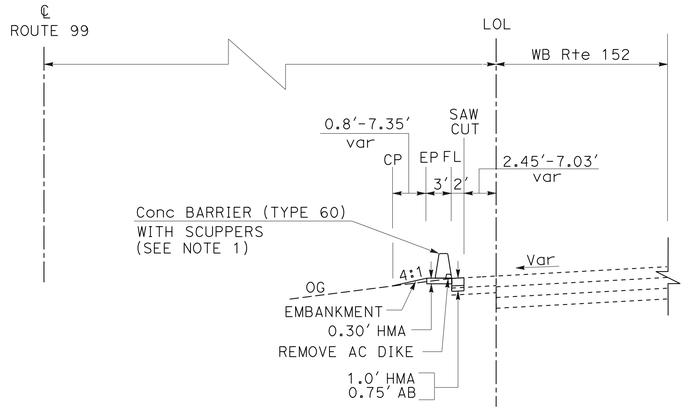


LOCATION 5
Sta 555+15 To Sta 563+56.4

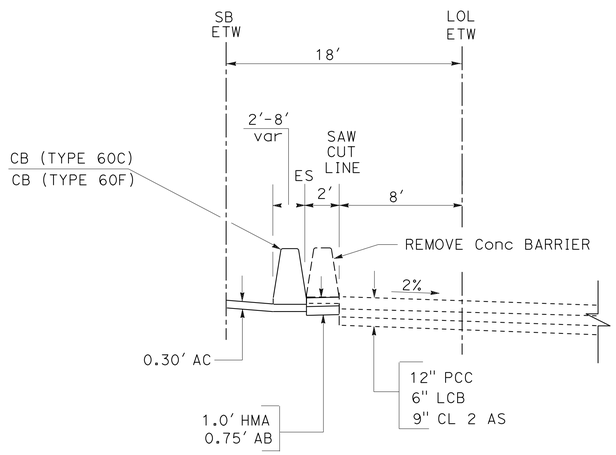


LOCATION 4
Sta 531+71.5 To Sta 534+18.4

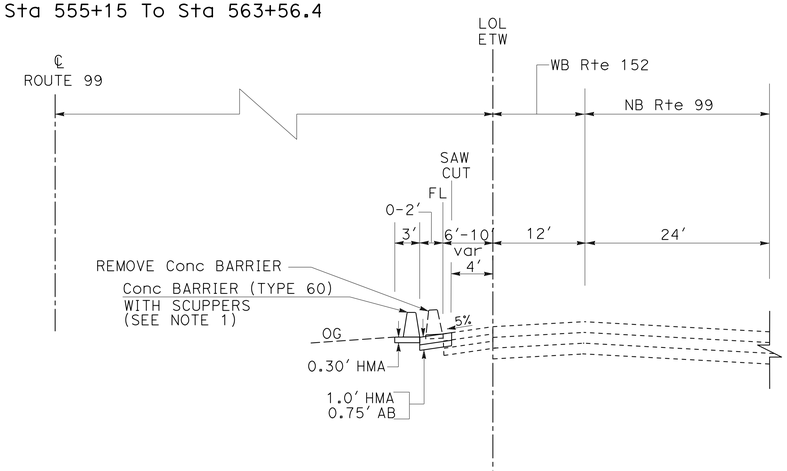


LOCATION 5
Sta 553+43.8 To Sta 555+15

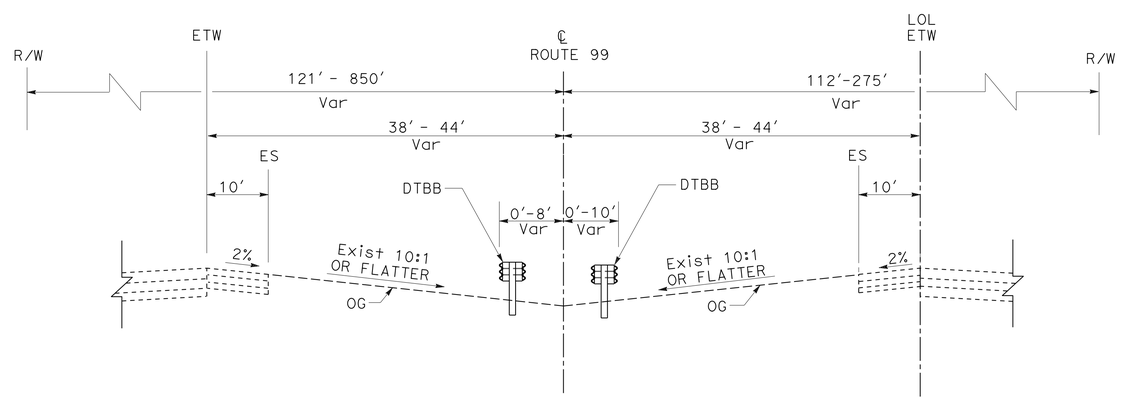


LOCATION 1
Sta 429+64 To Sta 464+80
Sta 466+98 To Sta 505+78

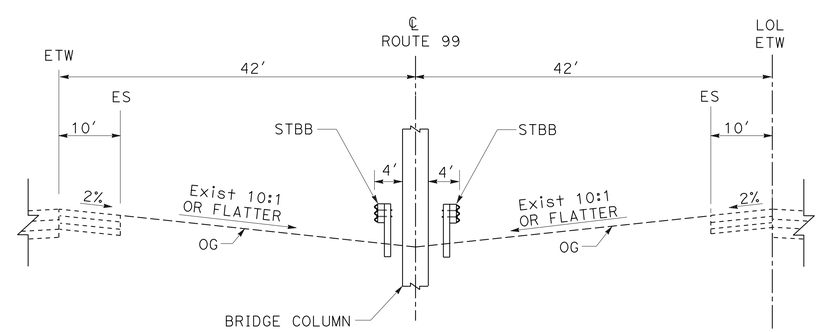


LOCATION 1
Sta 464+80 To Sta 466+98

# TYPICAL CROSS SECTIONS

NO SCALE

**X-1**

STATE OF CALIFORNIA - DEPARTMENT OF TRANSPORTATION
Caltrans®
DESIGN

FUNCTIONAL SUPERVISOR: DAVID FRANKE
CALCULATED-DESIGNED BY: GEORGE PANOS
CHECKED BY: ERIC OLSON
REVISED BY
DATE REVISED

LAST REVISION 07-14-13
DATE PLOTTED => 18-OCT-2013
TIME PLOTTED => 08:10

| Dist | COUNTY | ROUTE | POST MILES TOTAL PROJECT | SHEET No. | TOTAL SHEETS |
|---|---|---|---|---|---|
| 06 | Mad | 99 | 20.2/22.7 | 3 | 76 |

REGISTERED CIVIL ENGINEER — DATE 7-15-13

PLANS APPROVAL DATE 7-15-13

REGISTERED PROFESSIONAL ENGINEER — ERIC H. OLSON No. 60801 Exp. 12/31/14 CIVIL — STATE OF CALIFORNIA

*THE STATE OF CALIFORNIA OR ITS OFFICERS OR AGENTS SHALL NOT BE RESPONSIBLE FOR THE ACCURACY OR COMPLETENESS OF SCANNED COPIES OF THIS PLAN SHEET.*

## NOTES:

1. FOR ACCURATE RIGHT OF WAY DATA, CONTACT RIGHT OF ENGINEERING AT THE DISTRICT OFFICE.
2. SEE CONSTRUCTION DETAILS SHEET (C-3) FOR TYPICAL DI GRADING, AND SUMMARY OF QUANTITIES (Q-1) FOR LOCATIONS.

CURVE DATA

| No. O | R | Δ | T | L |
|---|---|---|---|---|
| 1 | 8512.80′ | 4° 42′0" | 349.35′ | 698.30′ |

## LEGEND:

REMOVE AC pvmt

## ABBREVIATION:

MGS - MIDWEST GUARDRAIL SYSTEM (STEEL POST)

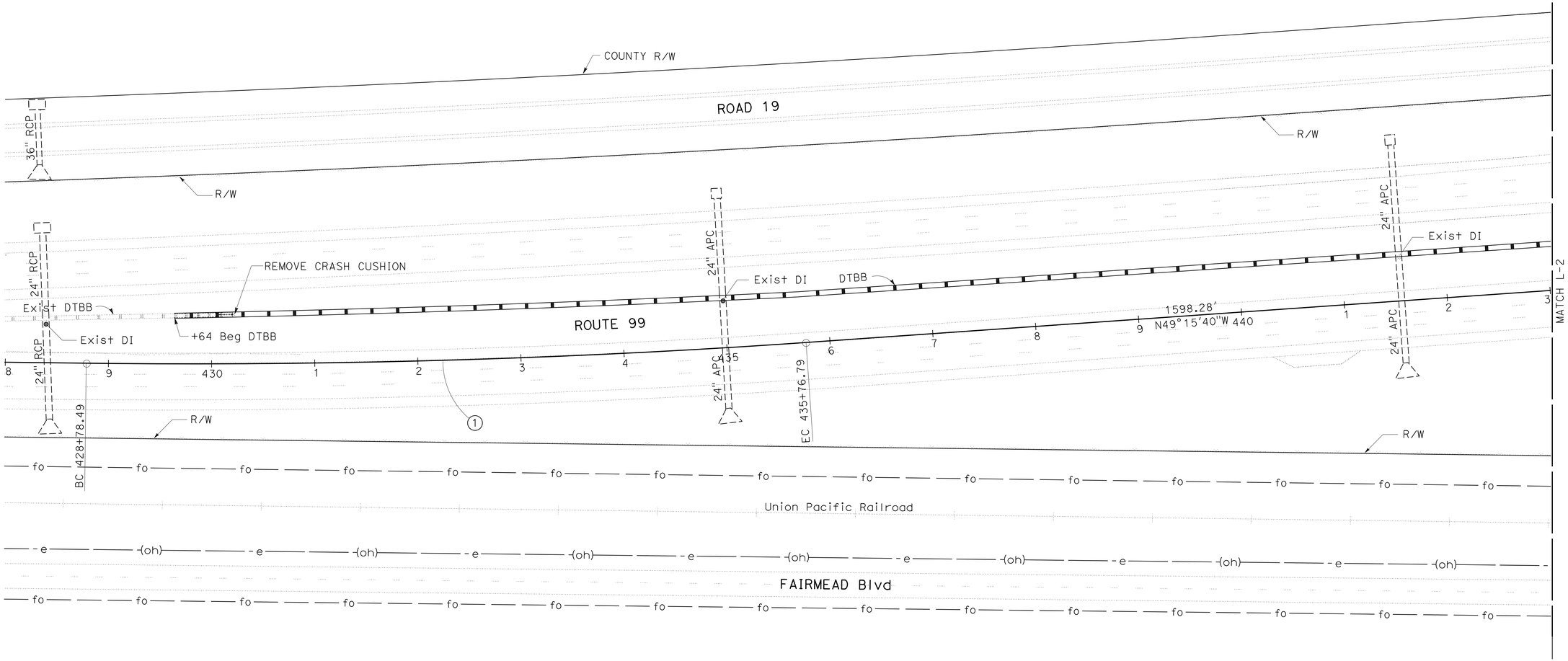


# LAYOUT

SCALE: 1"=50′ **L-1**

STATE OF CALIFORNIA - DEPARTMENT OF TRANSPORTATION — Caltrans — DESIGN

FUNCTIONAL SUPERVISOR: DAVID FRANKE

CALCULATED-DESIGNED BY: GEORGE PANOS — CHECKED BY: ERIC OLSON

REVISED BY — DATE REVISED

LAST REVISION 07-14-13 — DATE PLOTTED => 18-OCT-2013 — TIME PLOTTED => 08:10

| Dist | COUNTY | ROUTE | POST MILES TOTAL PROJECT | SHEET No. | TOTAL SHEETS |
|---|---|---|---|---|---|
| 06 | Mad | 99 | 20.2/22.7 | 4 | 76 |

Eric Olson 7-15-13
REGISTERED CIVIL ENGINEER DATE

7-15-13
PLANS APPROVAL DATE

REGISTERED PROFESSIONAL ENGINEER ERIC H. OLSON No. 60801 Exp. 12/31/14 CIVIL STATE OF CALIFORNIA

*THE STATE OF CALIFORNIA OR ITS OFFICERS OR AGENTS SHALL NOT BE RESPONSIBLE FOR THE ACCURACY OR COMPLETENESS OF SCANNED COPIES OF THIS PLAN SHEET.*

CURVE DATA

| No. O | R | Δ | T | L |
|---|---|---|---|---|
| 2 | 9877.92′ | 3°54′09″ | 336.53′ | 672.80′ |

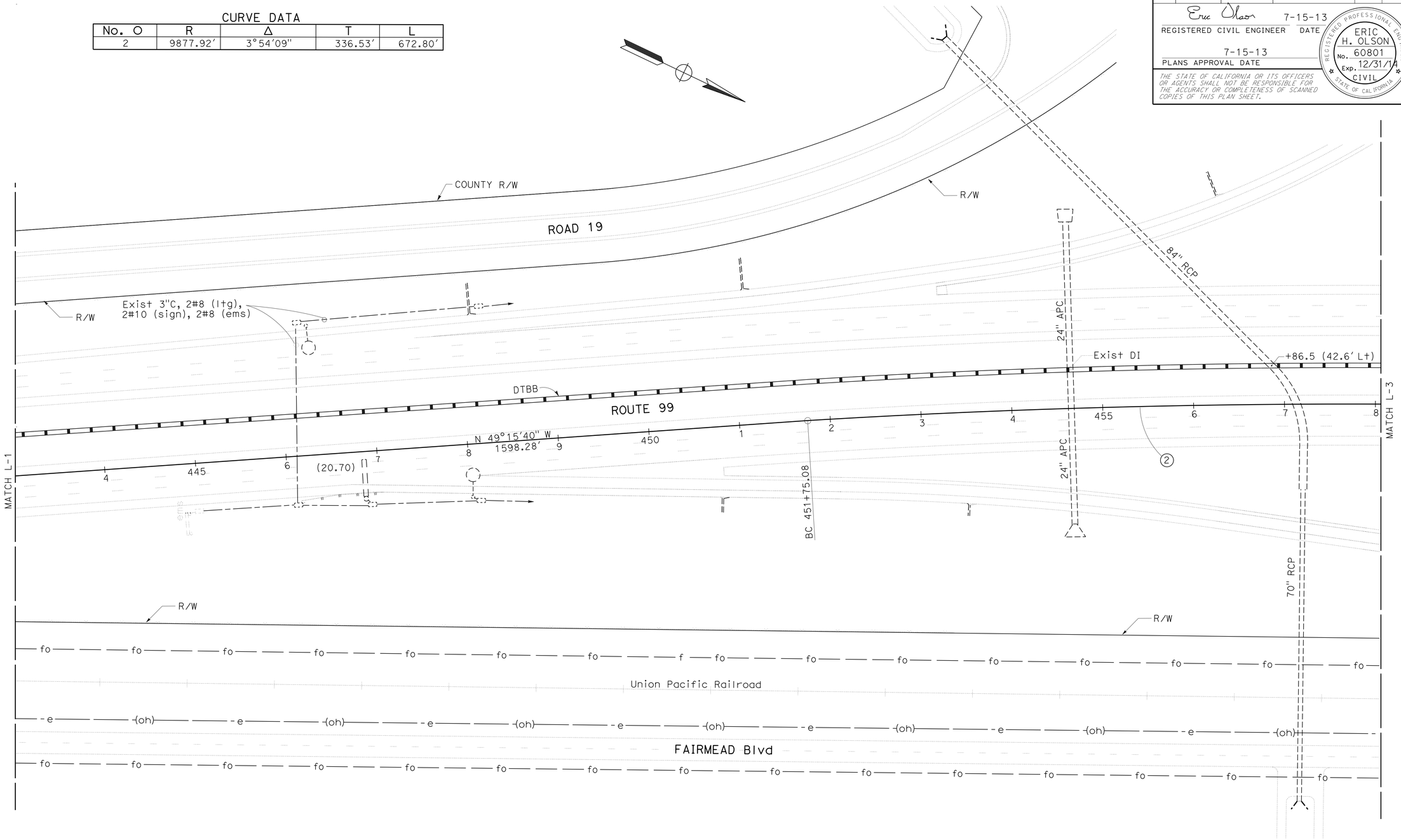


# LAYOUT

SCALE: 1"=50′ **L-2**

| REVISED BY | DATE REVISED |
|---|---|
| | |

| CALCULATED-DESIGNED BY | CHECKED BY |
|---|---|
| GEORGE PANOS | ERIC OLSON |

FUNCTIONAL SUPERVISOR: DAVID FRANKE

STATE OF CALIFORNIA - DEPARTMENT OF TRANSPORTATION
Caltrans
DESIGN

LAST REVISION 07-11-13 | DATE PLOTTED => 18-OCT-2013 | TIME PLOTTED => 08:10

| Dist | COUNTY | ROUTE | POST MILES TOTAL PROJECT | SHEET No. | TOTAL SHEETS |
|---|---|---|---|---|---|
| 06 | Mad | 99 | 20.2/22.7 | 5 | 76 |

Eric Olson 7-15-13
REGISTERED CIVIL ENGINEER DATE

7-15-13
PLANS APPROVAL DATE

REGISTERED PROFESSIONAL ENGINEER ERIC H. OLSON No. 60801 Exp. 12/31/14 CIVIL STATE OF CALIFORNIA

*THE STATE OF CALIFORNIA OR ITS OFFICERS OR AGENTS SHALL NOT BE RESPONSIBLE FOR THE ACCURACY OR COMPLETENESS OF SCANNED COPIES OF THIS PLAN SHEET.*

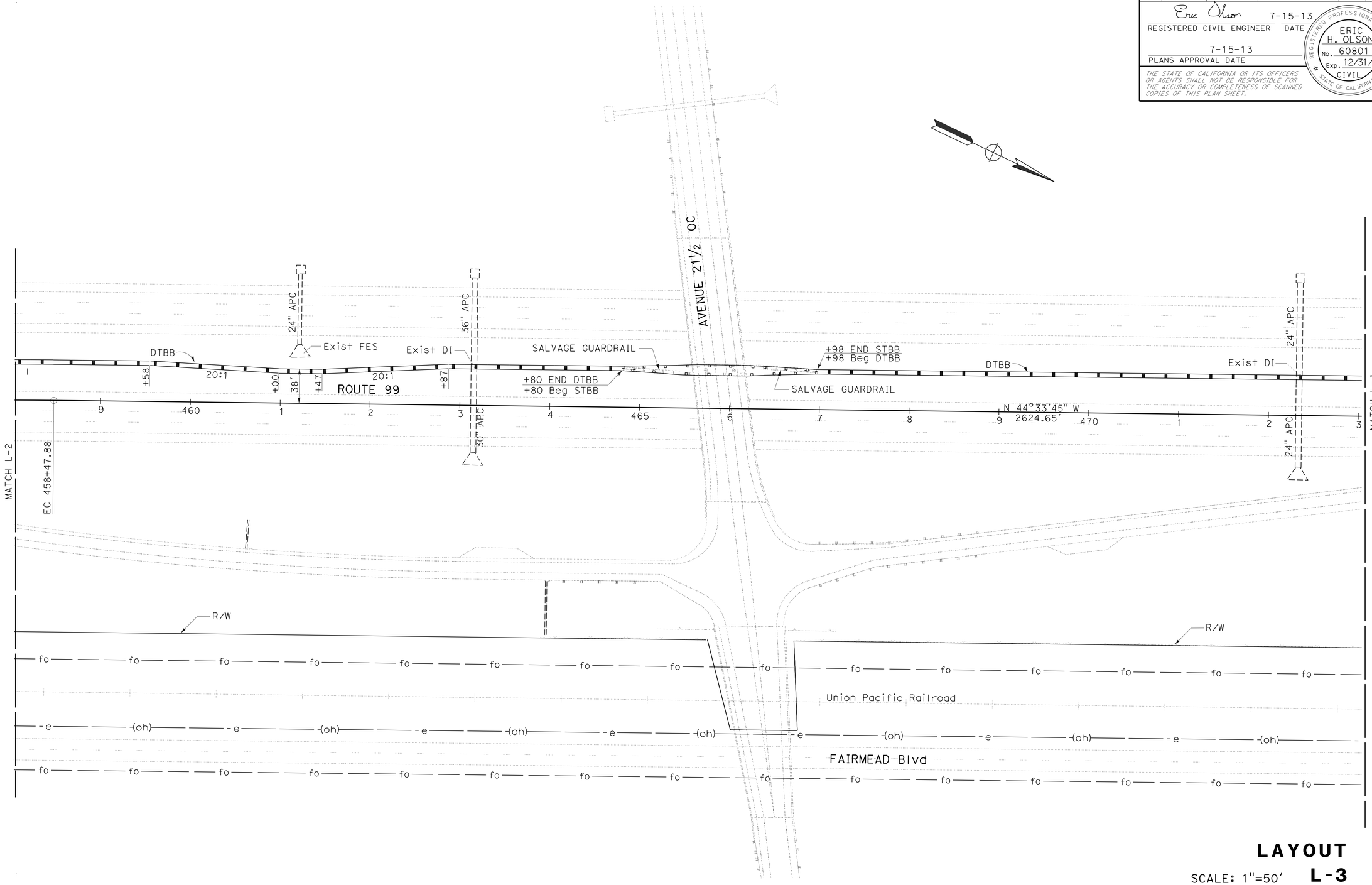


# LAYOUT

SCALE: 1"=50' **L-3**

| | | |
|---|---|---|
| STATE OF CALIFORNIA - DEPARTMENT OF TRANSPORTATION | GEORGE PANOS | REVISED BY |
| Caltrans® DESIGN | ERIC OLSON | DATE REVISED |
| FUNCTIONAL SUPERVISOR | CALCULATED-DESIGNED BY | |
| DAVID FRANKE | CHECKED BY | |

LAST REVISION 07-14-13 | DATE PLOTTED => 18-OCT-2013 | TIME PLOTTED => 08:10

| Dist | COUNTY | ROUTE | POST MILES TOTAL PROJECT | SHEET No. | TOTAL SHEETS |
|---|---|---|---|---|---|
| 06 | Mad | 99 | 20.2/22.7 | 6 | 76 |

Eric Olson 7-15-13
REGISTERED CIVIL ENGINEER DATE

7-15-13
PLANS APPROVAL DATE

REGISTERED PROFESSIONAL ENGINEER ERIC H. OLSON No. 60801 Exp. 12/31/14 CIVIL STATE OF CALIFORNIA

*THE STATE OF CALIFORNIA OR ITS OFFICERS OR AGENTS SHALL NOT BE RESPONSIBLE FOR THE ACCURACY OR COMPLETENESS OF SCANNED COPIES OF THIS PLAN SHEET.*

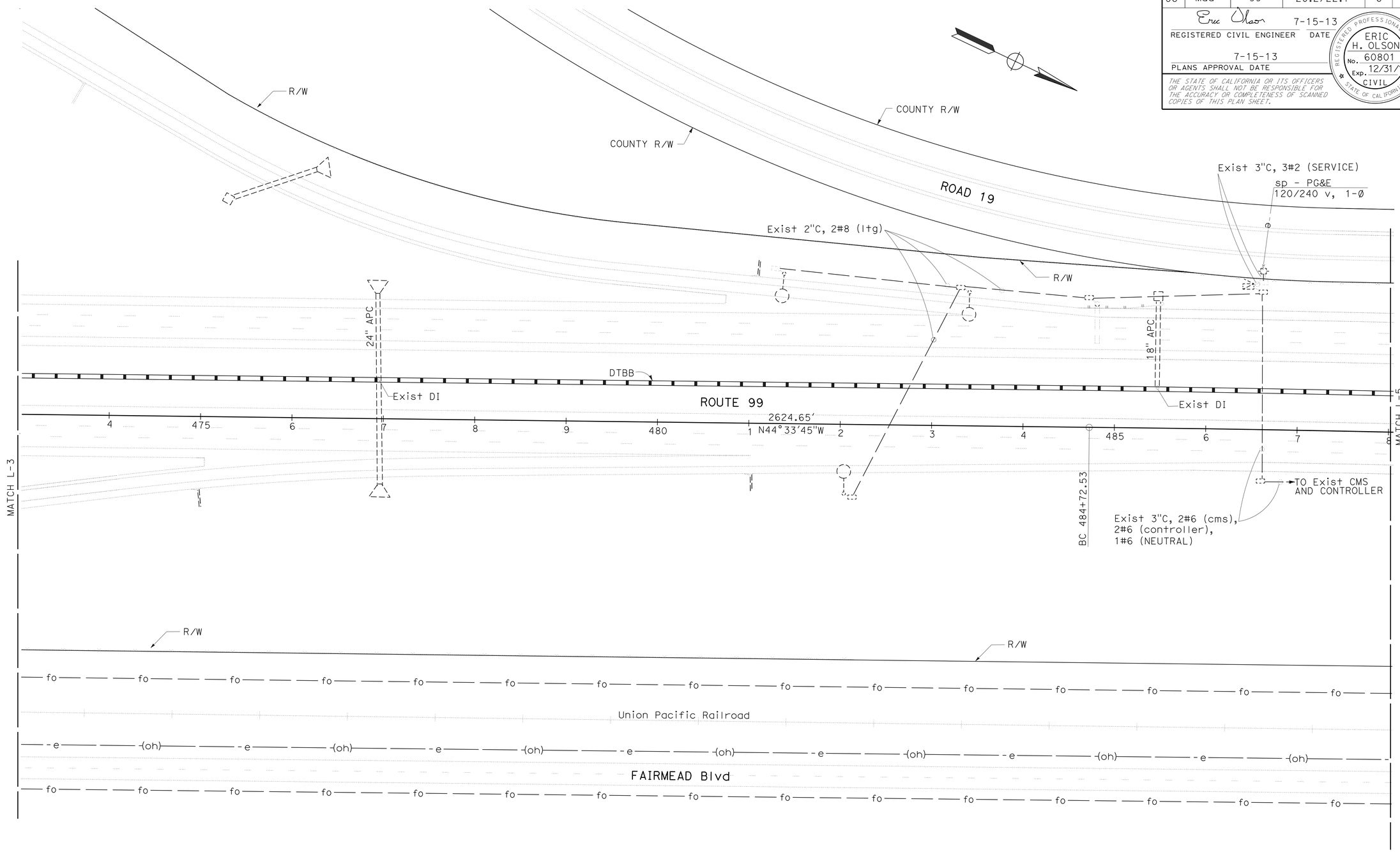


# LAYOUT L-4

SCALE: 1"=50'

STATE OF CALIFORNIA - DEPARTMENT OF TRANSPORTATION
Caltrans DESIGN

FUNCTIONAL SUPERVISOR: DAVID FRANKE
CALCULATED-DESIGNED BY: GEORGE PANOS
CHECKED BY: ERIC OLSON
REVISED BY
DATE REVISED

LAST REVISION 07-11-13
DATE PLOTTED => 18-OCT-2013
TIME PLOTTED => 08:10

| Dist | COUNTY | ROUTE | POST MILES TOTAL PROJECT | SHEET No. | TOTAL SHEETS |
|---|---|---|---|---|---|
| 06 | Mad | 99 | 20.2/22.7 | 7 | 76 |

REGISTERED CIVIL ENGINEER 7-15-13 DATE

7-15-13
PLANS APPROVAL DATE

REGISTERED PROFESSIONAL ENGINEER ERIC H. OLSON No. 60801 Exp. 12/31/14 CIVIL STATE OF CALIFORNIA

*THE STATE OF CALIFORNIA OR ITS OFFICERS OR AGENTS SHALL NOT BE RESPONSIBLE FOR THE ACCURACY OR COMPLETENESS OF SCANNED COPIES OF THIS PLAN SHEET.*

CURVE DATA

| No. O | R | Δ | T | L |
|---|---|---|---|---|
| 3 | 27101.31′ | 1°47′20" | 423.09′ | 846.11′ |

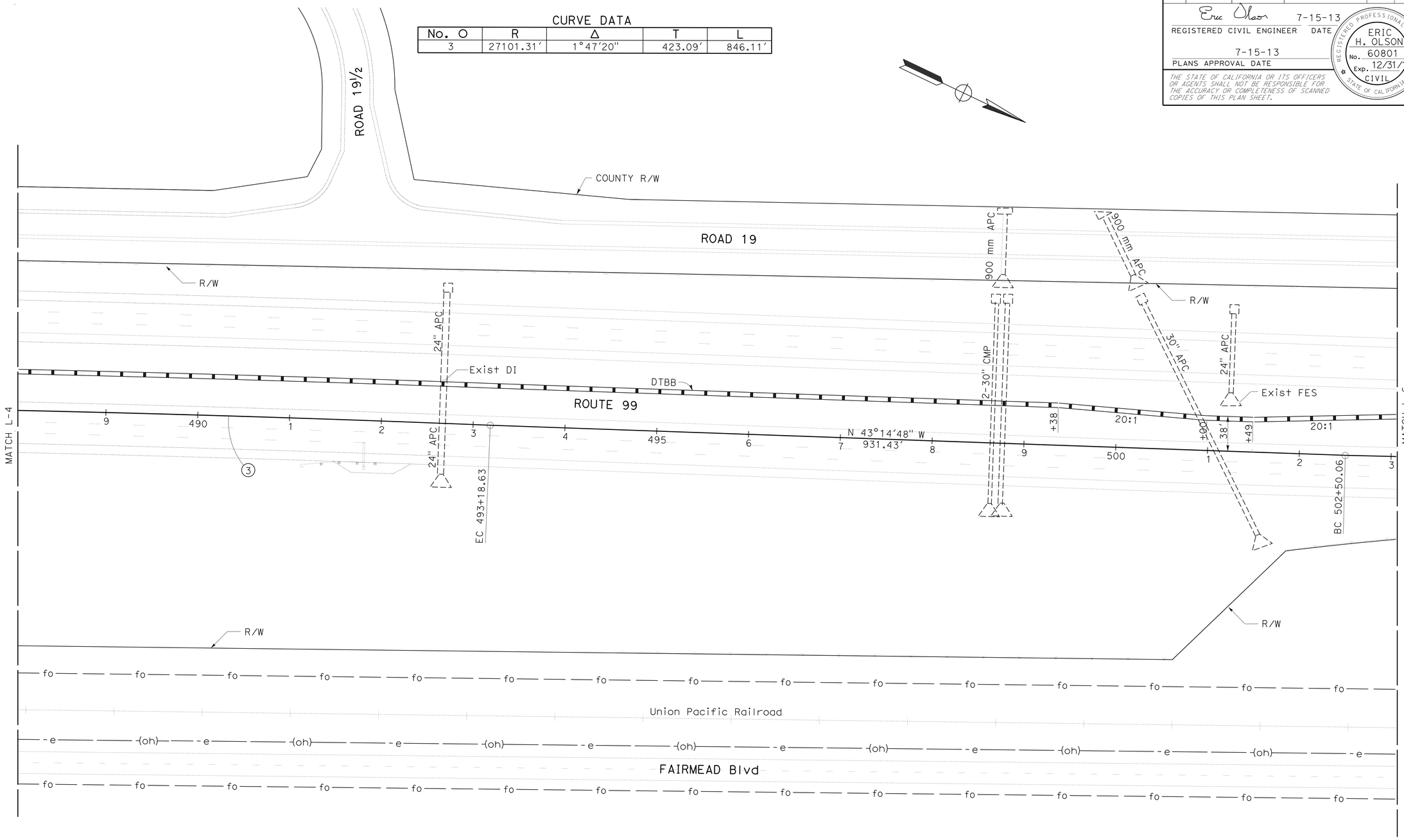


# LAYOUT

SCALE: 1"=50′ **L-5**

STATE OF CALIFORNIA - DEPARTMENT OF TRANSPORTATION
Caltrans
DESIGN

FUNCTIONAL SUPERVISOR: DAVID FRANKE
CALCULATED-DESIGNED BY: GEORGE PANOS
CHECKED BY: ERIC OLSON
REVISED BY
DATE REVISED

LAST REVISION 07-11-13
DATE PLOTTED => 18-OCT-2013
TIME PLOTTED => 08:10

| Dist | COUNTY | ROUTE | POST MILES TOTAL PROJECT | SHEET No. | TOTAL SHEETS |
|---|---|---|---|---|---|
| 06 | Mad | 99 | 20.2/22.7 | 8 | 76 |

Eric Olson 7-15-13
REGISTERED CIVIL ENGINEER DATE

7-15-13
PLANS APPROVAL DATE

REGISTERED PROFESSIONAL ENGINEER ERIC H. OLSON No. 60801 Exp. 12/31/14 CIVIL STATE OF CALIFORNIA

*THE STATE OF CALIFORNIA OR ITS OFFICERS OR AGENTS SHALL NOT BE RESPONSIBLE FOR THE ACCURACY OR COMPLETENESS OF SCANNED COPIES OF THIS PLAN SHEET.*

CURVE DATA

| No. O | R | Δ | T | L |
|---|---|---|---|---|
| 4 | 59489.45′ | 1°3′12″ | 546.87′ | 1093.72′ |

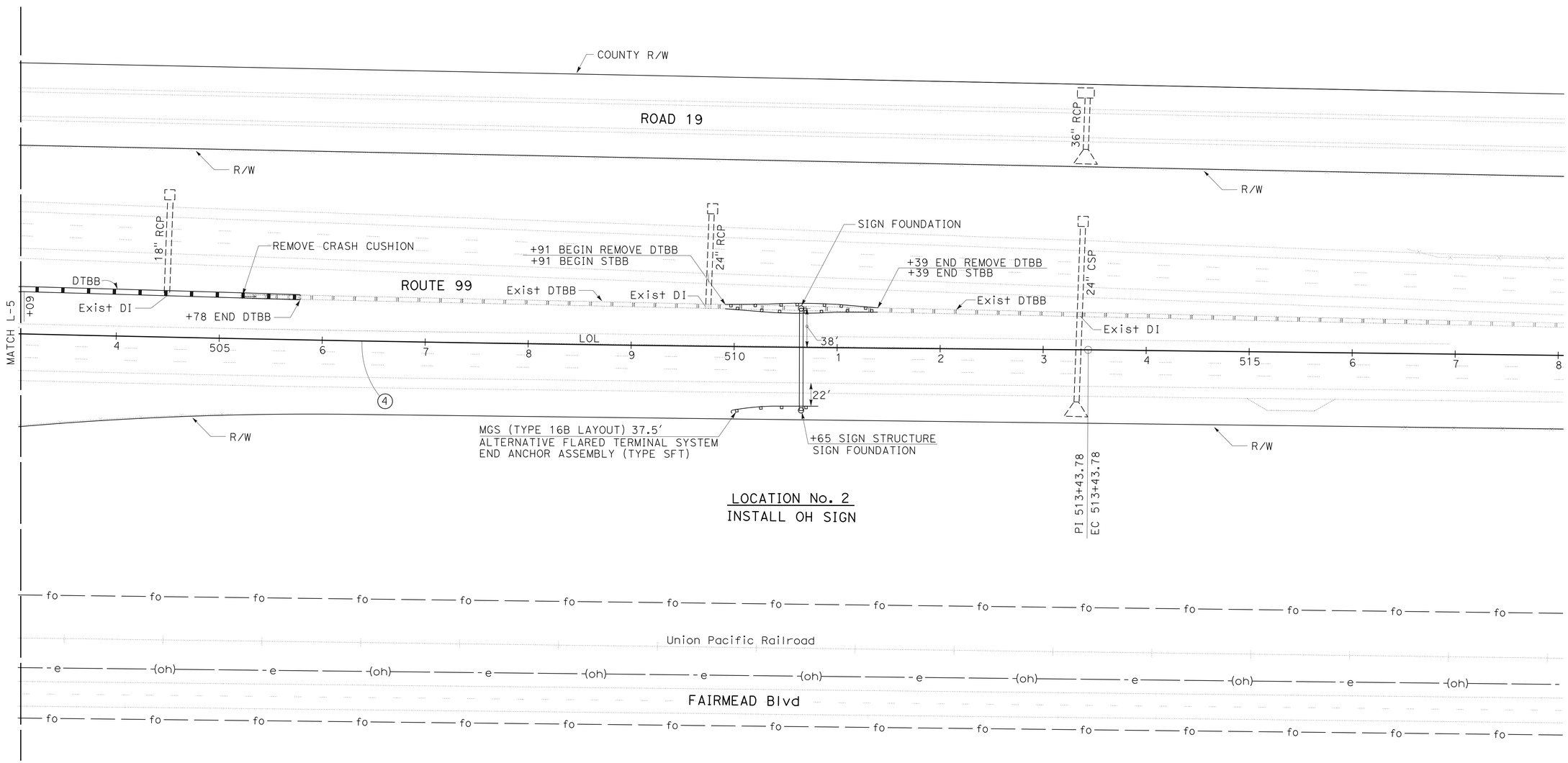


# LAYOUT

SCALE: 1"=50′ **L-6**

STATE OF CALIFORNIA - DEPARTMENT OF TRANSPORTATION
Caltrans®
DESIGN

GEORGE PANOS
ERIC OLSON
DAVID FRANKE

REVISED BY | DATE REVISED
CALCULATED-DESIGNED BY | CHECKED BY
FUNCTIONAL SUPERVISOR

LAST REVISION 07-14-13
DATE PLOTTED => 23-OCT-2013
TIME PLOTTED => 08:51

| Dist | COUNTY | ROUTE | POST MILES TOTAL PROJECT | SHEET No. | TOTAL SHEETS |
|---|---|---|---|---|---|
| 06 | Mad | 99 | 20.2/22.7 | 9 | 76 |

Eric Olson 7-15-13
REGISTERED CIVIL ENGINEER DATE

7-15-13
PLANS APPROVAL DATE

REGISTERED PROFESSIONAL ENGINEER ERIC H. OLSON No. 60801 Exp. 12/31/14 CIVIL STATE OF CALIFORNIA

*THE STATE OF CALIFORNIA OR ITS OFFICERS OR AGENTS SHALL NOT BE RESPONSIBLE FOR THE ACCURACY OR COMPLETENESS OF SCANNED COPIES OF THIS PLAN SHEET.*

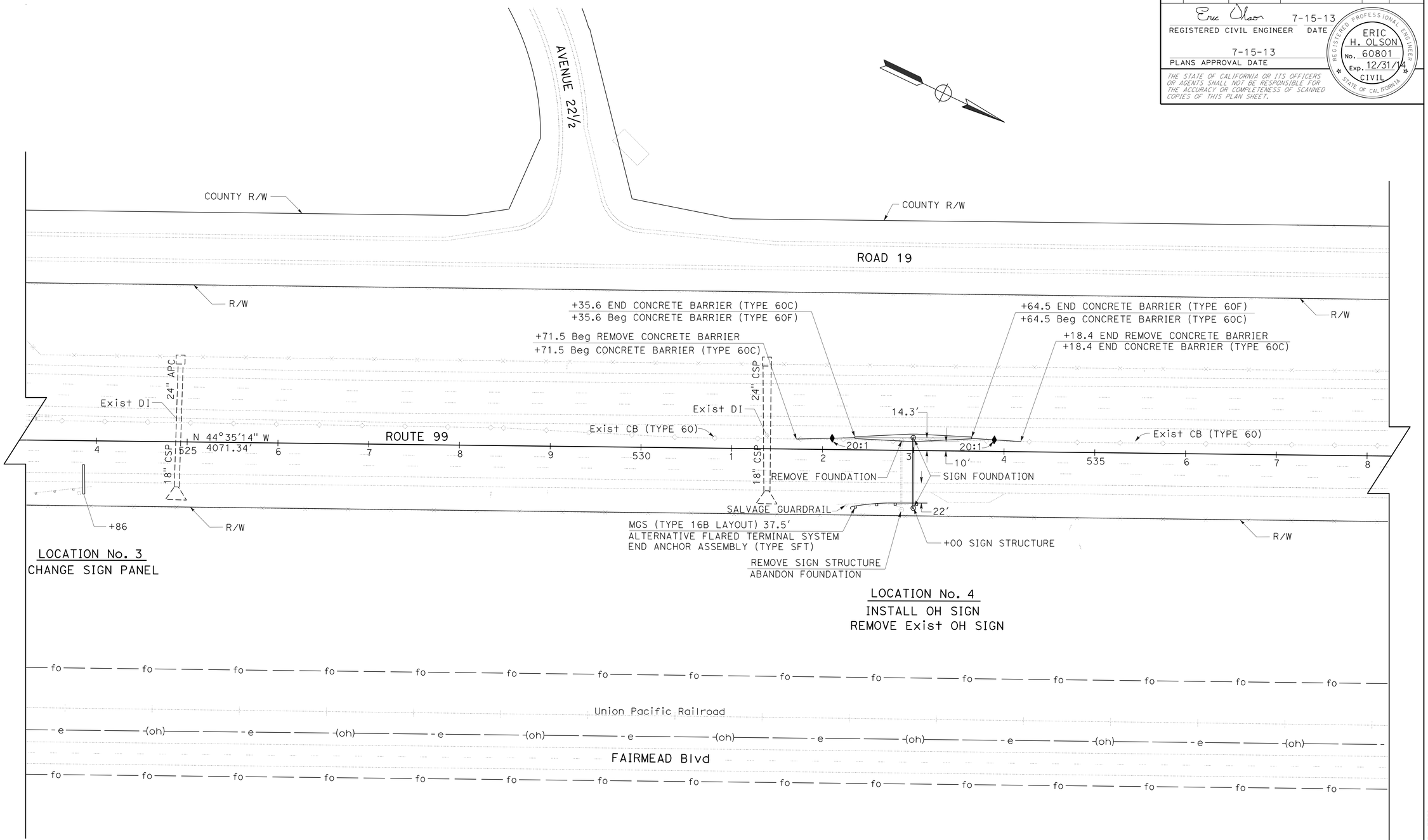


**LAYOUT**

SCALE: 1"=50' **L-7**

| REVISED BY | DATE REVISED |
|---|---|
| GEORGE PANOS | ERIC OLSON |
| CALCULATED-DESIGNED BY | CHECKED BY |
| FUNCTIONAL SUPERVISOR | DAVID FRANKE |

STATE OF CALIFORNIA - DEPARTMENT OF TRANSPORTATION
Caltrans
**DESIGN**

LAST REVISION 07-14-13 | DATE PLOTTED => 23-OCT-2013 | TIME PLOTTED => 08:51

| Dist | COUNTY | ROUTE | POST MILES TOTAL PROJECT | SHEET No. | TOTAL SHEETS |
|---|---|---|---|---|---|
| 06 | Mad | 99 | 20.2/22.7 | 10 | 76 |

REGISTERED CIVIL ENGINEER — DATE 7-15-13

PLANS APPROVAL DATE 7-15-13

REGISTERED PROFESSIONAL ENGINEER — ERIC H. OLSON — No. 60801 — Exp. 12/31/14 — CIVIL — STATE OF CALIFORNIA

*THE STATE OF CALIFORNIA OR ITS OFFICERS OR AGENTS SHALL NOT BE RESPONSIBLE FOR THE ACCURACY OR COMPLETENESS OF SCANNED COPIES OF THIS PLAN SHEET.*

CURVE DATA

| No. O | R | Δ | T | L |
|---|---|---|---|---|
| 5 | 980.00′ | 53°33′42″ | 494.62′ | 916.13′ |

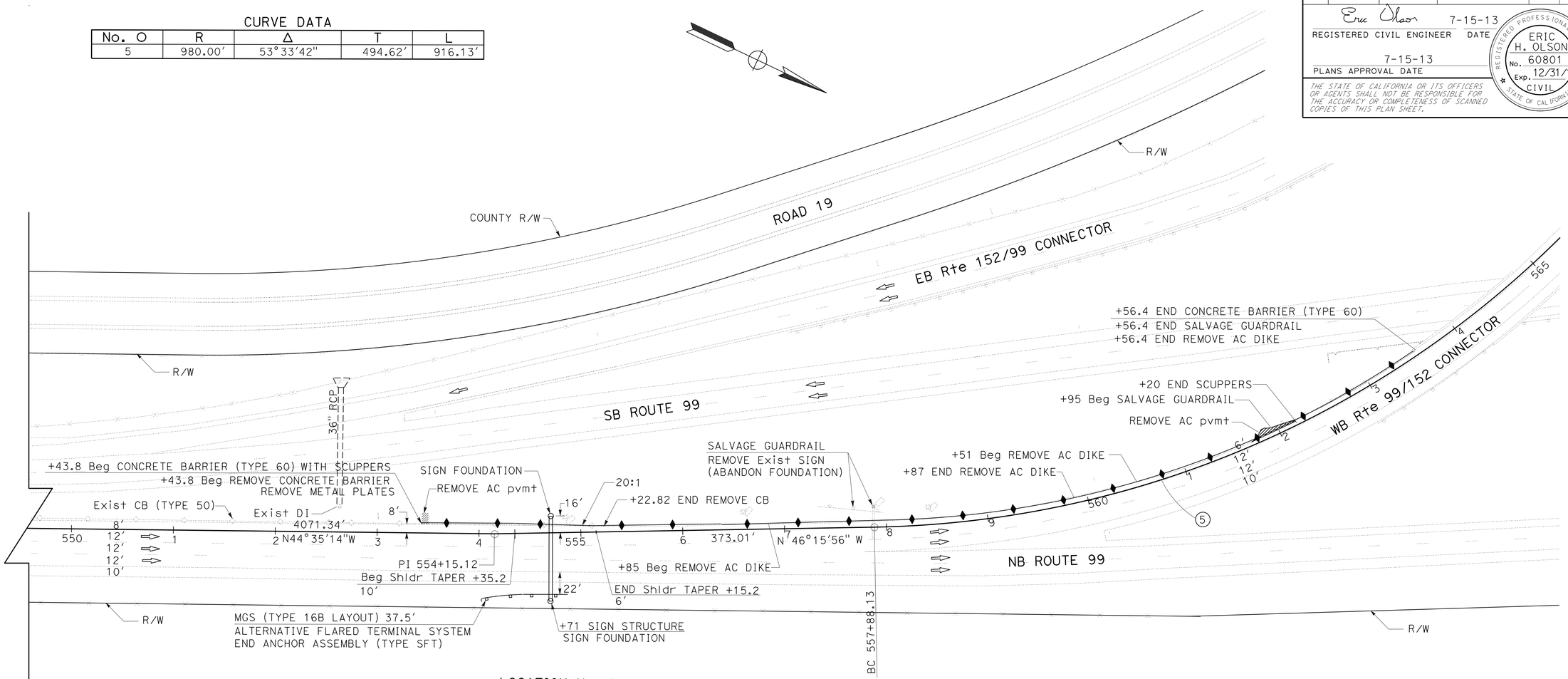


LOCATION No. 5

INSTALL OH SIGN

# LAYOUT

SCALE: 1″=50′ **L-8**

STATE OF CALIFORNIA - DEPARTMENT OF TRANSPORTATION — Caltrans® — DESIGN

FUNCTIONAL SUPERVISOR: DAVID FRANKE

CALCULATED-DESIGNED BY: GEORGE PANOS — CHECKED BY: ERIC OLSON — REVISED BY — DATE REVISED

LAST REVISION 07-14-13 — DATE PLOTTED => 23-OCT-2013 — TIME PLOTTED => 08:51

| Dist | COUNTY | ROUTE | POST MILES TOTAL PROJECT | SHEET No. | TOTAL SHEETS |
|---|---|---|---|---|---|
| 06 | Mad | 99 | 20.2/22.7 | 11 | 76 |

Eric Olson 7-15-13
REGISTERED CIVIL ENGINEER DATE

7-15-13
PLANS APPROVAL DATE

REGISTERED PROFESSIONAL ENGINEER ERIC H. OLSON No. 60801 Exp. 12/31/14 CIVIL STATE OF CALIFORNIA

*THE STATE OF CALIFORNIA OR ITS OFFICERS OR AGENTS SHALL NOT BE RESPONSIBLE FOR THE ACCURACY OR COMPLETENESS OF SCANNED COPIES OF THIS PLAN SHEET.*

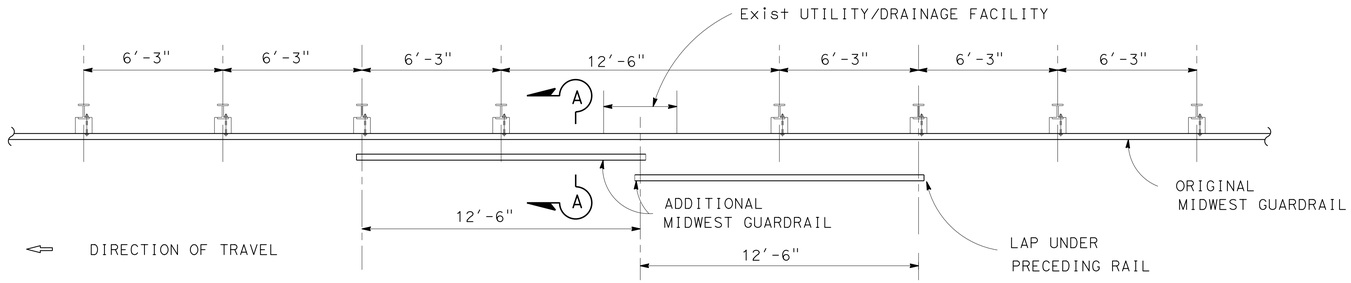


**CASE 1**

**ONE POST OMITTED (SPLICE IN CENTER)**

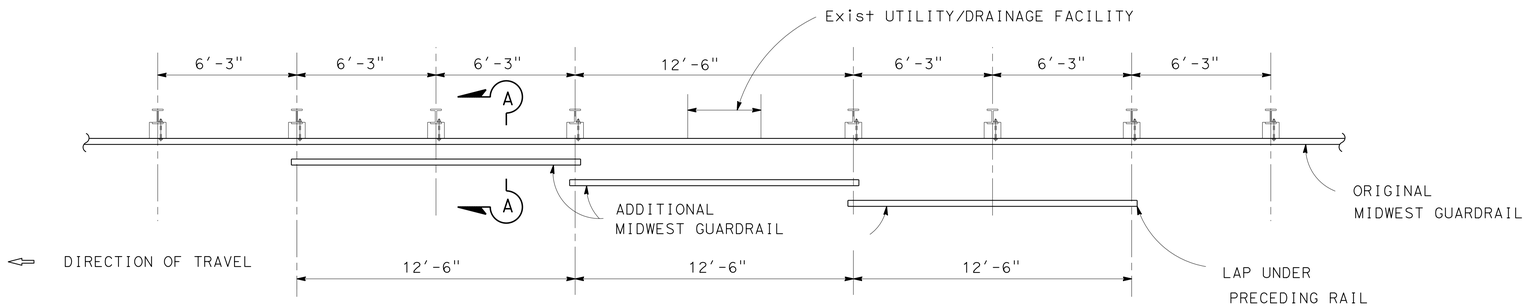


**CASE 2**

**ONE POST OMITTED (SPLICE AT POSTS)**

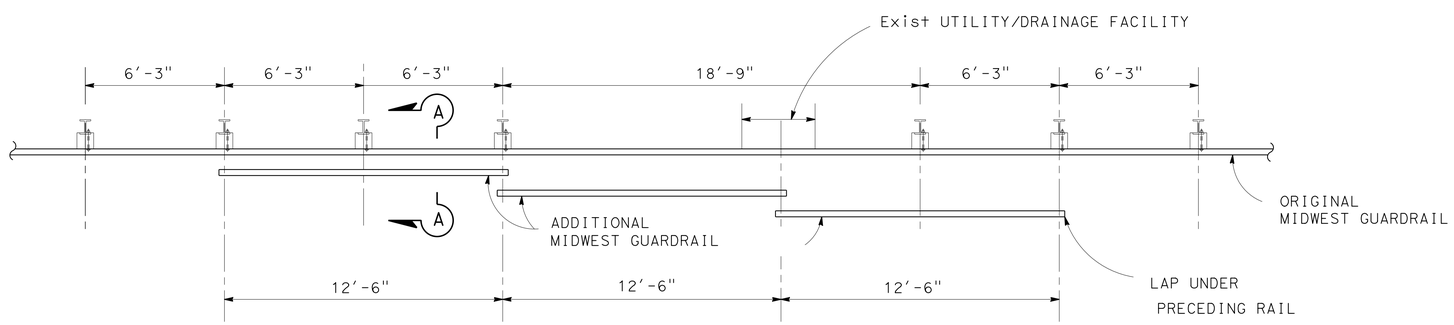


**CASE 3**

**TWO POSTS OMITTED**

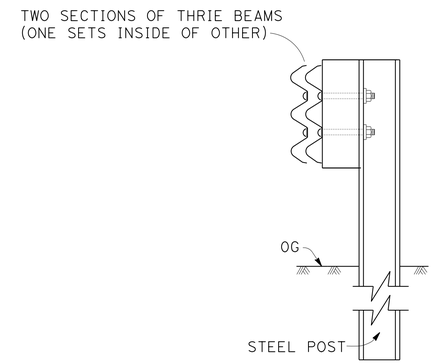


SECTION A-A

# CONSTRUCTION DETAILS

NO SCALE

**C-1**

| REVISED BY | DATE REVISED |
|---|---|
| | |

| CALCULATED-DESIGNED BY | CHECKED BY |
|---|---|
| GEORGE PANOS | ERIC OLSON |

FUNCTIONAL SUPERVISOR: DAVID FRANKE

STATE OF CALIFORNIA - DEPARTMENT OF TRANSPORTATION

Caltrans® DESIGN

LAST REVISION 07-14-13 | DATE PLOTTED => 18-OCT-2013 | TIME PLOTTED => 08:11

| Dist | COUNTY | ROUTE | POST MILES TOTAL PROJECT | SHEET No. | TOTAL SHEETS |
|---|---|---|---|---|---|
| 06 | Mad | 99 | 20.2/22.7 | 12 | 76 |

Eric Olson 7-15-13
REGISTERED CIVIL ENGINEER DATE

7-15-13
PLANS APPROVAL DATE

REGISTERED PROFESSIONAL ENGINEER ERIC H. OLSON No. 60801 Exp. 12/31/14 CIVIL STATE OF CALIFORNIA

*THE STATE OF CALIFORNIA OR ITS OFFICERS OR AGENTS SHALL NOT BE RESPONSIBLE FOR THE ACCURACY OR COMPLETENESS OF SCANNED COPIES OF THIS PLAN SHEET.*

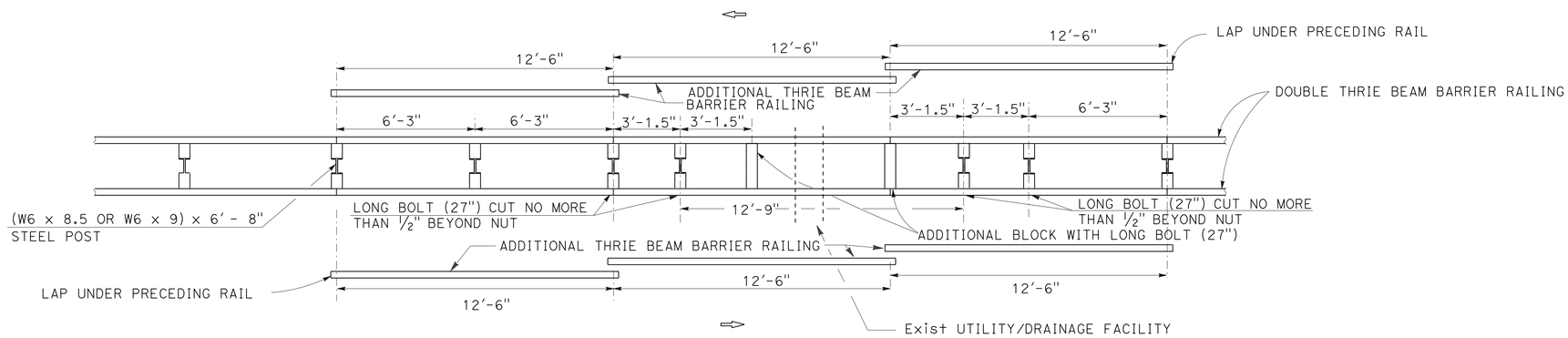


**PLAN**

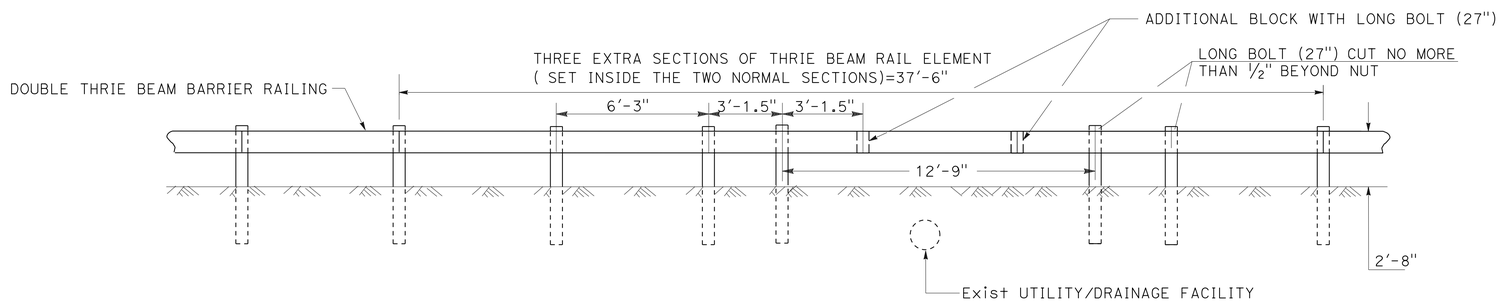


**ELEVATION**

**TWO POSTS RELOCATED**

**LONG SPAN NESTED DOUBLE THRIE BEAM**

# CONSTRUCTION DETAILS

NO SCALE

**C-2**

STATE OF CALIFORNIA - DEPARTMENT OF TRANSPORTATION
Caltrans® **DESIGN**

FUNCTIONAL SUPERVISOR: DAVID FRANKE
CALCULATED-DESIGNED BY: GEORGE PANOS
CHECKED BY: ERIC OLSON
REVISED BY
DATE REVISED

LAST REVISION 07-11-13
DATE PLOTTED => 18-OCT-2013
TIME PLOTTED => 08:11

| Dist | COUNTY | ROUTE | POST MILES TOTAL PROJECT | SHEET No. | TOTAL SHEETS |
|---|---|---|---|---|---|
| 06 | Mad | 99 | 20.2/22.7 | 13 | 76 |

REGISTERED CIVIL ENGINEER 7-15-13 DATE

7-15-13
PLANS APPROVAL DATE

REGISTERED PROFESSIONAL ENGINEER ERIC H. OLSON No. 60801 Exp. 12/31/14 CIVIL STATE OF CALIFORNIA

*THE STATE OF CALIFORNIA OR ITS OFFICERS OR AGENTS SHALL NOT BE RESPONSIBLE FOR THE ACCURACY OR COMPLETENESS OF SCANNED COPIES OF THIS PLAN SHEET.*

NOTES (THIS SHEET ONLY):

1. SEE LAYOUT FOR LIMITS OF SCUPPERS
2. GRADE AS DIRECTED BY THE ENGINEER TO MANTAIN 2'-8" FROM GRATE TO TOP OF RAIL

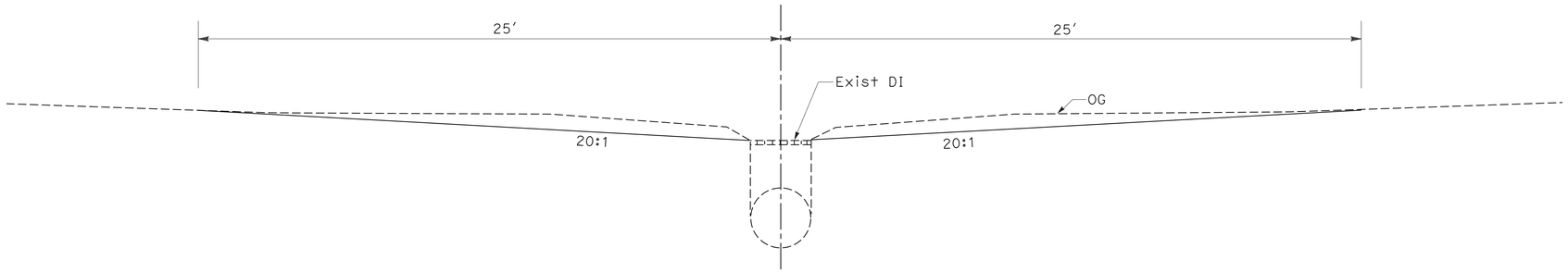


**TYPICAL DI GRADING**

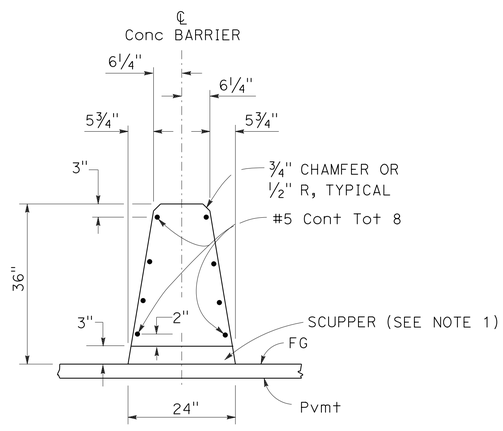


SECTION A-A
(CONCRETE BARRIER TYPE 60 SHOWN)

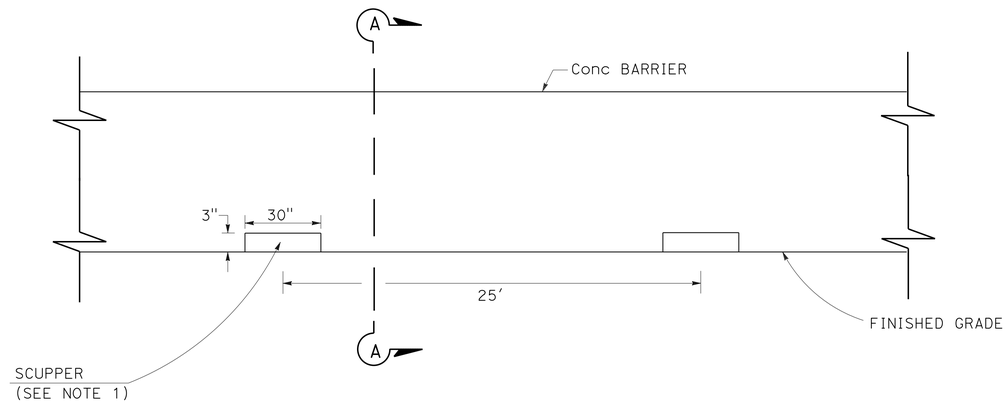


ELEVATION

**CONCRETE BARRIER (TYPE 60) WITH SCUPPERS**

**CONSTRUCTION DETAILS**

NO SCALE **C-3**

STATE OF CALIFORNIA - DEPARTMENT OF TRANSPORTATION
Caltrans® **DESIGN**

FUNCTIONAL SUPERVISOR: DAVID FRANKE
CALCULATED-DESIGNED BY: GEORGE PANOS
CHECKED BY: ERIC OLSON
REVISED BY / DATE REVISED

LAST REVISION 07-14-13 | DATE PLOTTED => 18-OCT-2013 | TIME PLOTTED => 08:11

| Dist | COUNTY | ROUTE | POST MILES TOTAL PROJECT | SHEET No. | TOTAL SHEETS |
|---|---|---|---|---|---|
| 06 | Mad | 99 | 20.2/22.7 | 14 | 76 |

REGISTERED CIVIL ENGINEER — DATE 06-04-13

7-15-13
PLANS APPROVAL DATE

REGISTERED PROFESSIONAL ENGINEER — KEVIN H. MURAI No. 59586 Exp. 12/31/13 CIVIL — STATE OF CALIFORNIA

*THE STATE OF CALIFORNIA OR ITS OFFICERS OR AGENTS SHALL NOT BE RESPONSIBLE FOR THE ACCURACY OR COMPLETENESS OF SCANNED COPIES OF THIS PLAN SHEET.*

## LEGEND:

- ONE POST SIGN
- (X-X) SIGN NUMBER
- (1-1) ROAD WORK AHEAD — W20-1
- (1-2) END ROAD WORK — G20-2

## NOTES:

1. LOCATIONS OF CONSTRUCTION AREA SIGNS SHOWN ARE APPROXIMATE. EXACT SIGN LOCATIONS TO BE DETERMINED BY THE ENGINEER.
2. FOR MORE CONSTRUCTION AREA SIGNS, SEE TRAFFIC HANDLING SHEETS AND MOTORIST INFORMATION SHEETS.

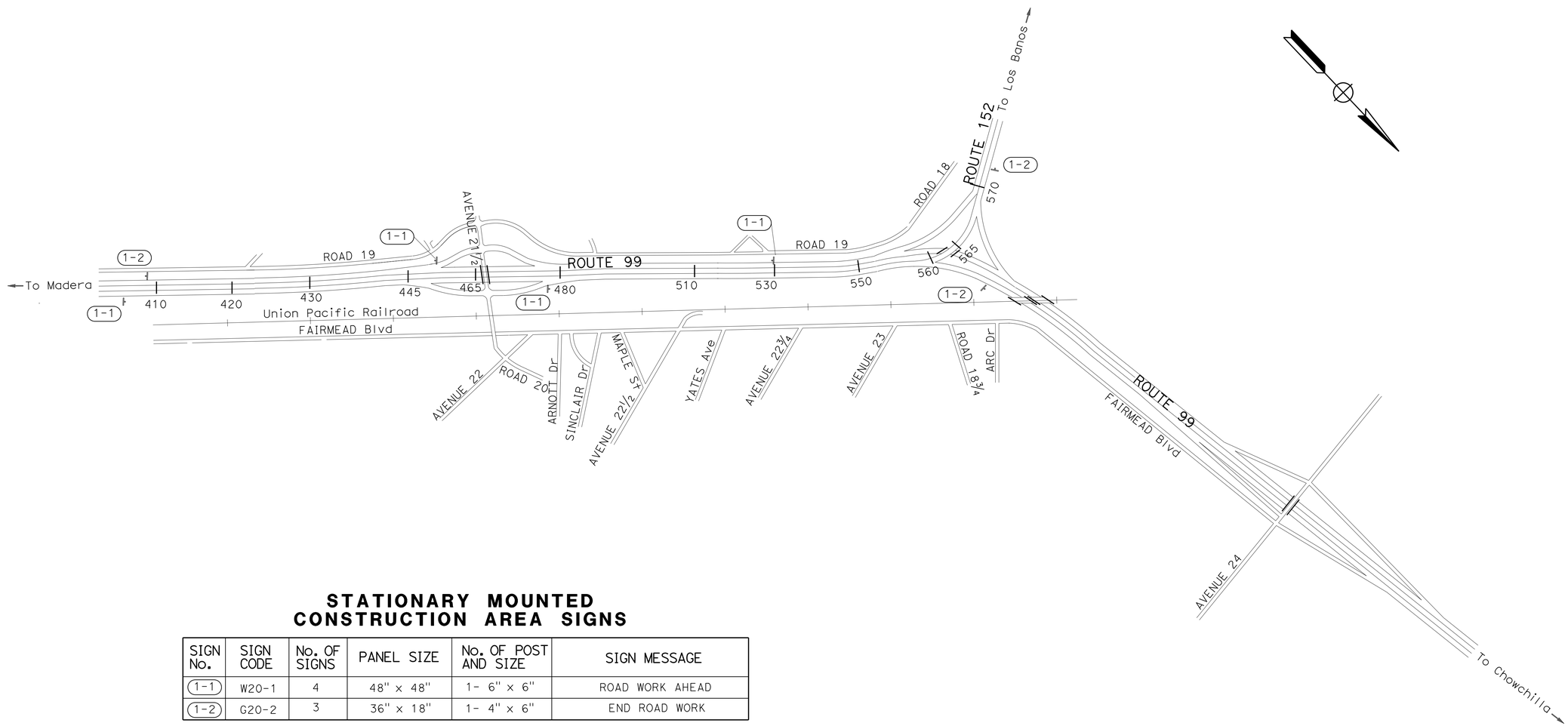


## STATIONARY MOUNTED CONSTRUCTION AREA SIGNS

| SIGN No. | SIGN CODE | No. OF SIGNS | PANEL SIZE | No. OF POST AND SIZE | SIGN MESSAGE |
|---|---|---|---|---|---|
| (1-1) | W20-1 | 4 | 48" x 48" | 1- 6" x 6" | ROAD WORK AHEAD |
| (1-2) | G20-2 | 3 | 36" x 18" | 1- 4" x 6" | END ROAD WORK |

# CONSTRUCTION AREA SIGNS

NO SCALE

**CS-1**

STATE OF CALIFORNIA - DEPARTMENT OF TRANSPORTATION
Caltrans
TRAFFIC DESIGN

FUNCTIONAL SUPERVISOR: MOHAMMED QATAMI
CALCULATED-DESIGNED BY: KEVIN MURAI
CHECKED BY: HASSAN TAHA
REVISED BY
DATE REVISED

LAST REVISION 06-04-13 | DATE PLOTTED => 18-OCT-2013 | TIME PLOTTED => 08:11

| Dist | COUNTY | ROUTE | POST MILES TOTAL PROJECT | SHEET No. | TOTAL SHEETS |
|---|---|---|---|---|---|
| 06 | Mad | 99 | 20.2/22.7 | 15 | 76 |

REGISTERED CIVIL ENGINEER 06-04-13 DATE

7-15-13
PLANS APPROVAL DATE

REGISTERED PROFESSIONAL ENGINEER KEVIN H. MURAI No. 59586 Exp. 12/31/13 CIVIL STATE OF CALIFORNIA

*THE STATE OF CALIFORNIA OR ITS OFFICERS OR AGENTS SHALL NOT BE RESPONSIBLE FOR THE ACCURACY OR COMPLETENESS OF SCANNED COPIES OF THIS PLAN SHEET.*

## LEGEND:

- DIRECTION OF DETOUR
- PORTABLE CHANGEABLE MESSAGE SIGN (PCMS)
- TEMPORARY SIGN
- (X-X) SIGN NUMBER
- CONSTRUCTION AREA

| | | |
|---|---|---|
| 1-1 | 99 152 DETOUR | G28-2(CA) G28-2(CA) M4-10(R) |
| 1-2 | 99 152 DETOUR | G28-2(CA) G28-2(CA) M4-10(L) |
| 1-3 | 152 DETOUR | G28-2(CA) M4-10(L) |
| 1-4 | 99 DETOUR | G28-2(CA) SC3(CA) |
| 1-5 | DETOUR | SC3(CA) |
| 1-6 | END DETOUR | M5-8a |
| 1-7 | DETOUR | SC9(CA) |

## NOTES:

1. LOCATIONS OF CONSTRUCTION AREA SIGNS SHOWN ARE APPROXIMATE. EXACT SIGN LOCATIONS TO BE DETERMINED BY THE ENGINEER.
2. FOR MORE CONSTRUCTION AREA SIGNS, SEE TRAFFIC HANDLING SHEETS AND CONSTRUCTION AREA SIGN PLAN.
3. ALL CONTROLLED INTERSECTIONS MUST BE LIT.

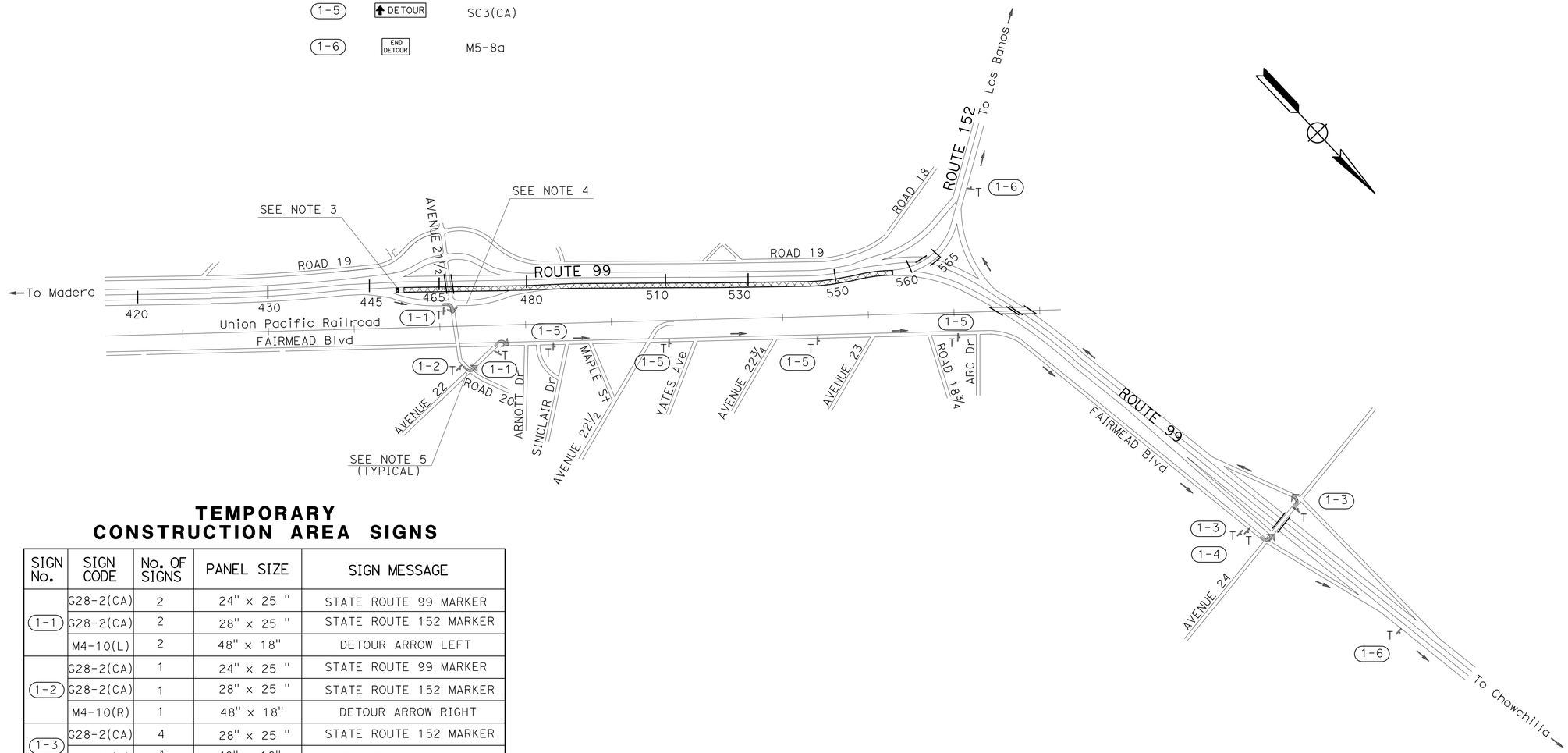


## TEMPORARY CONSTRUCTION AREA SIGNS

| SIGN No. | SIGN CODE | No. OF SIGNS | PANEL SIZE | SIGN MESSAGE |
|---|---|---|---|---|
| 1-1 | G28-2(CA) | 2 | 24" x 25" | STATE ROUTE 99 MARKER |
| | G28-2(CA) | 2 | 28" x 25" | STATE ROUTE 152 MARKER |
| | M4-10(L) | 2 | 48" x 18" | DETOUR ARROW LEFT |
| 1-2 | G28-2(CA) | 1 | 24" x 25" | STATE ROUTE 99 MARKER |
| | G28-2(CA) | 1 | 28" x 25" | STATE ROUTE 152 MARKER |
| | M4-10(R) | 1 | 48" x 18" | DETOUR ARROW RIGHT |
| 1-3 | G28-2(CA) | 4 | 28" x 25" | STATE ROUTE 152 MARKER |
| | M4-10(L) | 4 | 48" x 18" | DETOUR ARROW LEFT |
| 1-4 | G28-2(CA) | 1 | 24" x 25" | STATE ROUTE 99 MARKER |
| | SC3(CA) | 1 | 48" x 18" | DETOUR W/ARROW |
| 1-5 | SC3(CA) | 4 | 48" x 18" | DETOUR W/ARROW |
| 1-6 | M5-8a | 3 | 84" x 42" | END DETOUR |
| 1-7 | SC9(CA) | 1 | 48" x 48" | DETOUR W/ARROW |

# MOTORIST INFORMATION PLAN

NO SCALE

**MI-1**

STATE OF CALIFORNIA - DEPARTMENT OF TRANSPORTATION
Caltrans
TRAFFIC DESIGN

FUNCTIONAL SUPERVISOR: MOHAMMED QATAMI
CALCULATED-DESIGNED BY: KEVIN MURAI
CHECKED BY: HASSAN TAHA
REVISED BY / DATE REVISED

LAST REVISION 06-04-13
DATE PLOTTED => 18-OCT-2013
TIME PLOTTED => 08:11

| Dist | COUNTY | ROUTE | POST MILES TOTAL PROJECT | SHEET No. | TOTAL SHEETS |
|---|---|---|---|---|---|
| 06 | Mad | 99 | 20.2/22.7 | 16 | 76 |

REGISTERED CIVIL ENGINEER 06-04-13 DATE

7-15-13
PLANS APPROVAL DATE

REGISTERED PROFESSIONAL ENGINEER KEVIN H. MURAI No. 59586 Exp. 12/31/13 CIVIL STATE OF CALIFORNIA

*THE STATE OF CALIFORNIA OR ITS OFFICERS OR AGENTS SHALL NOT BE RESPONSIBLE FOR THE ACCURACY OR COMPLETENESS OF SCANNED COPIES OF THIS PLAN SHEET.*

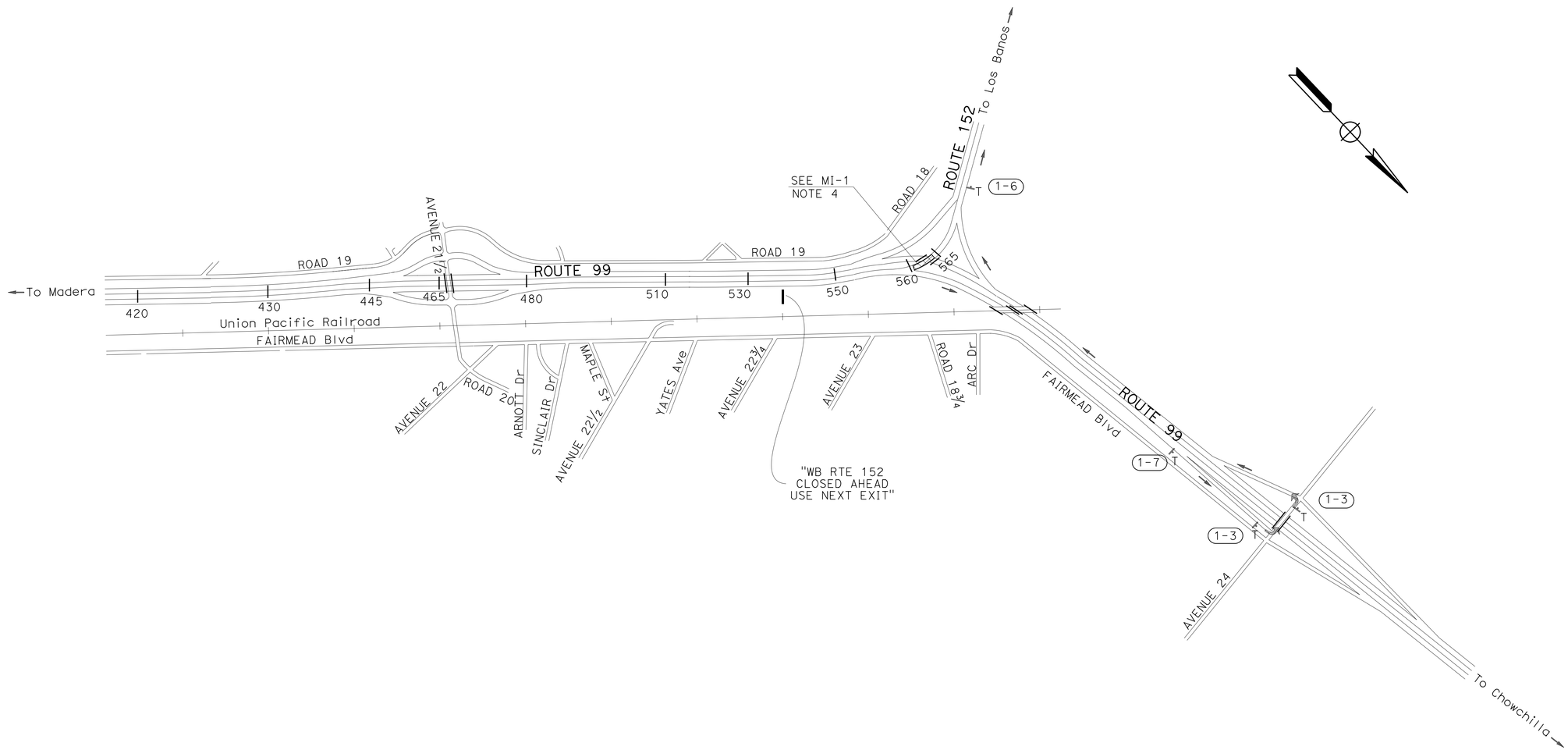


# MOTORIST INFORMATION PLAN

NO SCALE

**MI-2**

| REVISED BY | DATE REVISED |
|---|---|
| | |

| CALCULATED-DESIGNED BY | KEVIN MURAI |
|---|---|
| CHECKED BY | HASSAN TAHA |
| FUNCTIONAL SUPERVISOR | MOHAMMED QATAMI |

STATE OF CALIFORNIA - DEPARTMENT OF TRANSPORTATION
Caltrans
TRAFFIC DESIGN

LAST REVISION 06-04-13 | DATE PLOTTED => 18-OCT-2013 | TIME PLOTTED => 08:11

| Dist | COUNTY | ROUTE | POST MILES TOTAL PROJECT | SHEET No. | TOTAL SHEETS |
|---|---|---|---|---|---|
| 06 | Mad | 99 | 20.2/22.7 | 17 | 76 |

REGISTERED CIVIL ENGINEER 06-04-13 DATE

7-15-13
PLANS APPROVAL DATE

REGISTERED PROFESSIONAL ENGINEER KEVIN H. MURAI No. 59586 Exp. 12/31/13 CIVIL STATE OF CALIFORNIA

*THE STATE OF CALIFORNIA OR ITS OFFICERS OR AGENTS SHALL NOT BE RESPONSIBLE FOR THE ACCURACY OR COMPLETENESS OF SCANNED COPIES OF THIS PLAN SHEET.*

## LEGEND:

- ONE POST SIGN
- INSTALL SIGN OVERLAY
- (X-X) TEMPORARY ROADSIDE SIGN
- (XX) TEMPORARY TRAFFIC STRIPE
- (XX) REMOVE THERMOPLASTIC TRAFFIC STRIPE
- TEMPORARY RAILING (TYPE K)
- TEMPORARY CRASH CUSHION ARRAY (TS14)
- CHANNELIZER
- TRAFFIC PLASTIC DRUM
- TYPE III BARRICADE
- STRIPE CHANGE LOCATION
- THERMOPLASTIC PAVEMENT MARKING
- REMOVE THERMOPLASTIC PAVEMENT MARKING
- TYPE VI ARROW (24')
- CONSTRUCTION AREA

## ABBREVIATIONS:

TRK TEMPORARY RAILING (TYPE K)
TTS TEMPORARY TRAFFIC SCREEN

## NOTES:

1. FOR LIMITS OF TRAFFIC STRIPE REMOVAL AND PAVEMENT MARKING REMOVAL, SEE TRAFFIC HANDLING QUANTITIES.
2. STATION/OFFSET CALLOUTS FOR TRK REFER TO THE TRAFFIC SIDE OF THE RAILING.
3. TRK TAPERS SHALL BE 10:1 UNLESS OTHERWISE INDICATED.
4. TTS SHALL BE PLACED WITH TRK.
5. FOR ADDITIONAL CONSTRUCTION AREA SIGNS, SEE DETOUR AND CONSTRUCTION AREA SIGN PLANS.
6. FOR TRAFFIC HANDLING ON LOCAL ROADS, SEE MOTORIST INFORMATION SHEETS
7. EXACT LOCATION OF SIGNS TO BE DETERMINED BY THE ENGINEER.

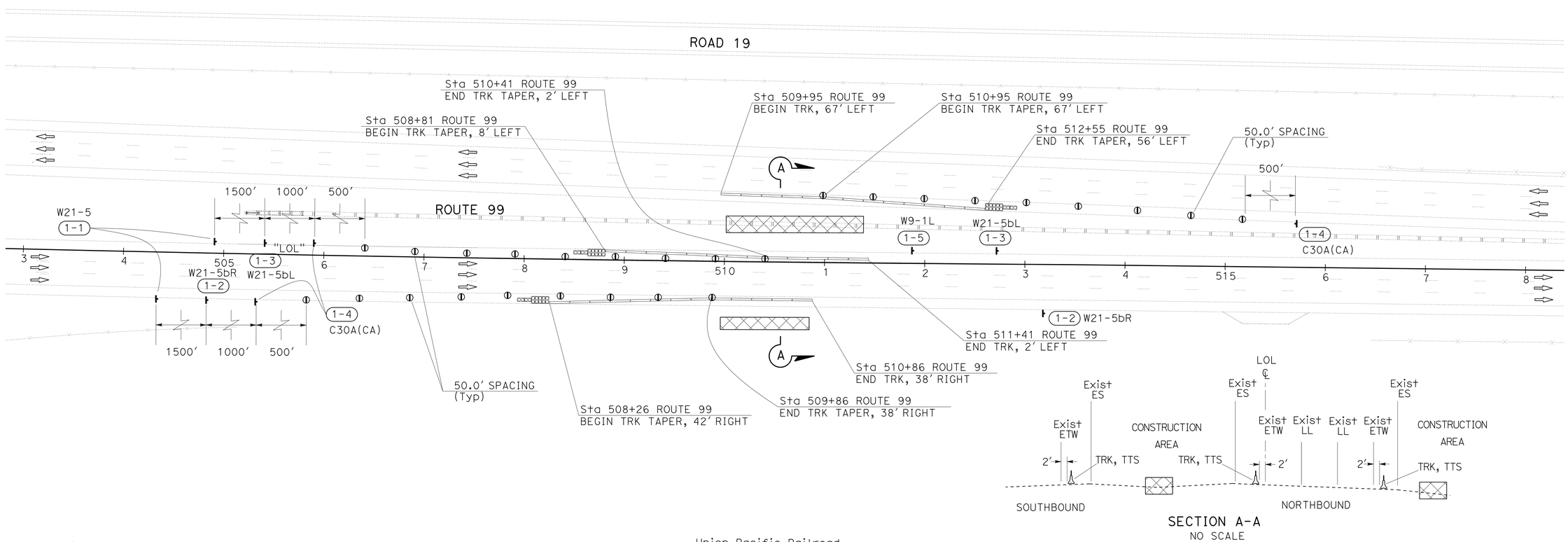





SECTION A-A
NO SCALE

*APPROVED FOR TRAFFIC HANDLING WORK ONLY*

# TRAFFIC HANDLING PLAN

SCALE: 1"=50'

**TH-1**

STATE OF CALIFORNIA - DEPARTMENT OF TRANSPORTATION
Caltrans
TRAFFIC DESIGN

FUNCTIONAL SUPERVISOR: MOHAMMED QATAMI
CALCULATED-DESIGNED BY: KEVIN MURAI
CHECKED BY: HASSAN TAHA
REVISED BY
DATE REVISED

LAST REVISION 06-04-13
DATE PLOTTED => 18-OCT-2013
TIME PLOTTED => 08:11

| Dist | COUNTY | ROUTE | POST MILES TOTAL PROJECT | SHEET No. | TOTAL SHEETS |
|---|---|---|---|---|---|
| 06 | Mad | 99 | 20.2/22.7 | 18 | 76 |

REGISTERED CIVIL ENGINEER 06-04-13 DATE

7-15-13
PLANS APPROVAL DATE

REGISTERED PROFESSIONAL ENGINEER KEVIN H. MURAI No. 59586 Exp. 12/31/13 CIVIL STATE OF CALIFORNIA

*THE STATE OF CALIFORNIA OR ITS OFFICERS OR AGENTS SHALL NOT BE RESPONSIBLE FOR THE ACCURACY OR COMPLETENESS OF SCANNED COPIES OF THIS PLAN SHEET.*

NOTE: THE EXISTING OH SIGN AND SIGN PANEL OVERLAY SHOULD REMAIN IN PLACE UNTIL NEW OH SIGN IS INSTALLED AND BOTH LANES FOR THE WESTBOUND 152 CONNECTOR ARE AVAILABLE AGAIN.

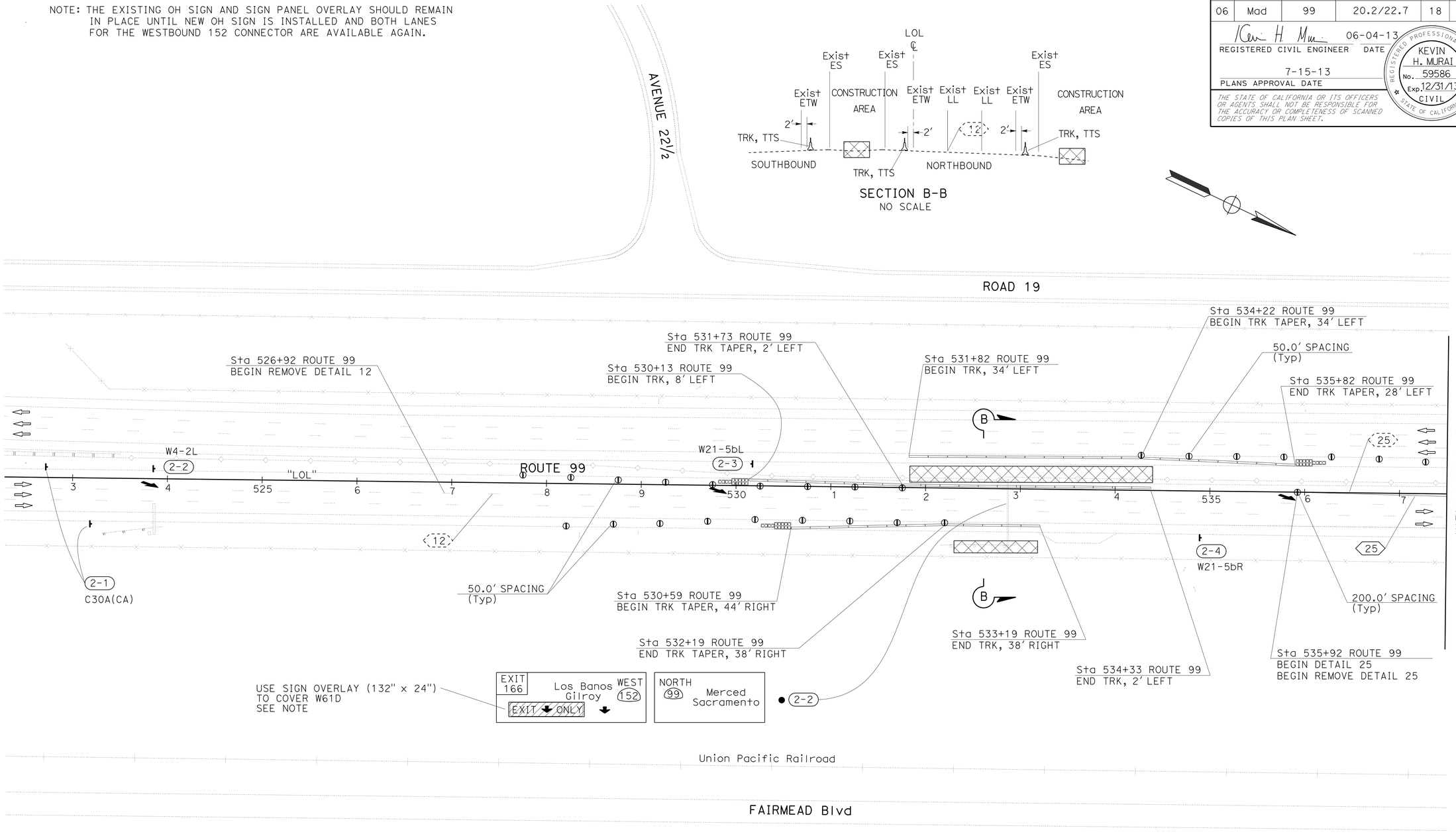


# TRAFFIC HANDLING PLAN

SCALE: 1"=50'

**TH-2**

*APPROVED FOR TRAFFIC HANDLING WORK ONLY*

STATE OF CALIFORNIA - DEPARTMENT OF TRANSPORTATION
Caltrans
TRAFFIC DESIGN

FUNCTIONAL SUPERVISOR: MOHAMMED QATAMI
CALCULATED-DESIGNED BY: KEVIN MURAI
CHECKED BY: HASSAN TAHA
REVISED BY
DATE REVISED

LAST REVISION 06-04-13
DATE PLOTTED => 18-OCT-2013
TIME PLOTTED => 08:11

| Dist | COUNTY | ROUTE | POST MILES TOTAL PROJECT | SHEET No. | TOTAL SHEETS |
|---|---|---|---|---|---|
| 06 | Mad | 99 | 20.2/22.7 | 19 | 76 |

REGISTERED CIVIL ENGINEER 06-04-13 DATE

7-15-13
PLANS APPROVAL DATE

REGISTERED PROFESSIONAL ENGINEER
KEVIN H. MURAI
No. 59586
Exp. 12/31/13
CIVIL
STATE OF CALIFORNIA

*THE STATE OF CALIFORNIA OR ITS OFFICERS OR AGENTS SHALL NOT BE RESPONSIBLE FOR THE ACCURACY OR COMPLETENESS OF SCANNED COPIES OF THIS PLAN SHEET.*

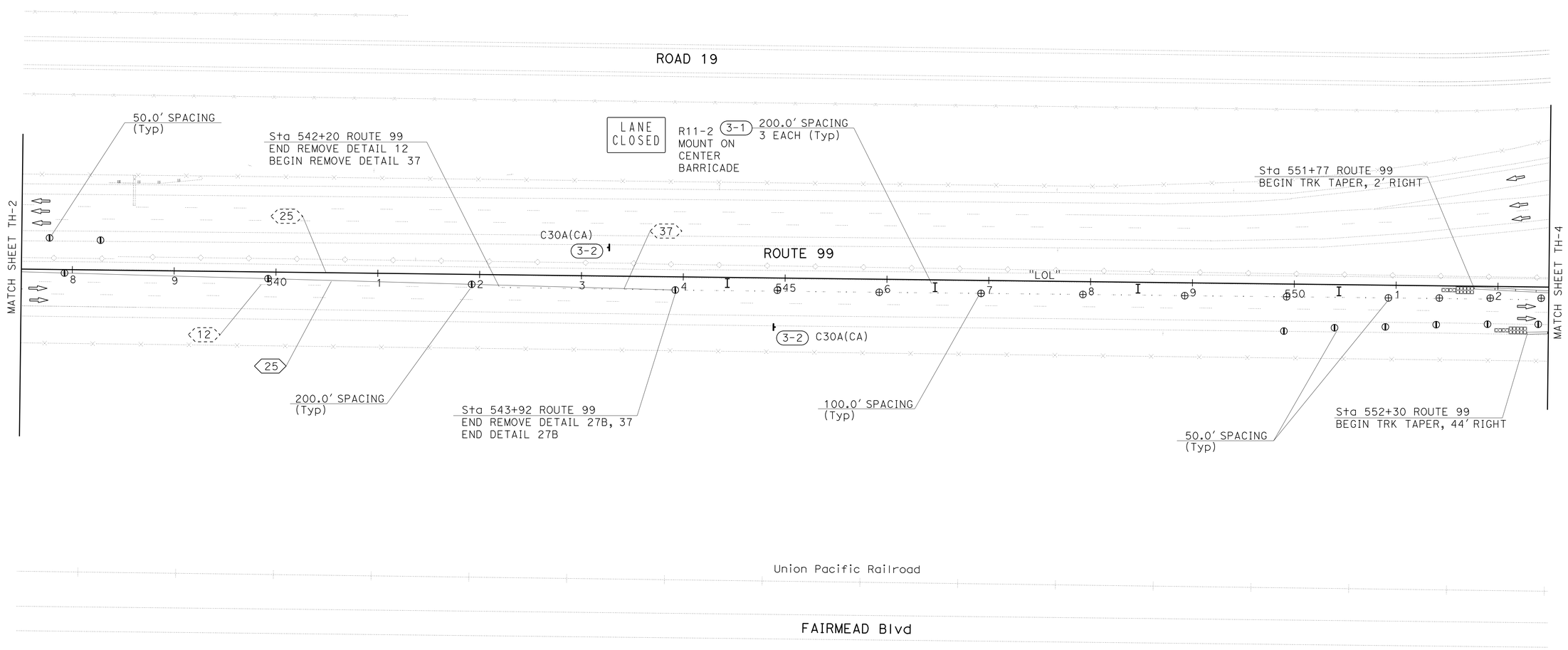


*APPROVED FOR TRAFFIC HANDLING WORK ONLY*

# TRAFFIC HANDLING PLAN

SCALE: 1"=50'

**TH-3**

STATE OF CALIFORNIA - DEPARTMENT OF TRANSPORTATION
Caltrans
**TRAFFIC DESIGN**

FUNCTIONAL SUPERVISOR: MOHAMMED QATAMI
CALCULATED-DESIGNED BY: KEVIN MURAI
CHECKED BY: HASSAN TAHA
REVISED BY
DATE REVISED

LAST REVISION 06-04-13
DATE PLOTTED => 18-OCT-2013
TIME PLOTTED => 08:11

| Dist | COUNTY | ROUTE | POST MILES TOTAL PROJECT | SHEET No. | TOTAL SHEETS |
|---|---|---|---|---|---|
| 06 | Mad | 99 | 20.2/22.7 | 20 | 76 |

REGISTERED CIVIL ENGINEER — DATE: 06-04-13

PLANS APPROVAL DATE: 7-15-13

REGISTERED PROFESSIONAL ENGINEER — KEVIN H. MURAI No. 59586 Exp. 12/31/13 CIVIL — STATE OF CALIFORNIA

*THE STATE OF CALIFORNIA OR ITS OFFICERS OR AGENTS SHALL NOT BE RESPONSIBLE FOR THE ACCURACY OR COMPLETENESS OF SCANNED COPIES OF THIS PLAN SHEET.*

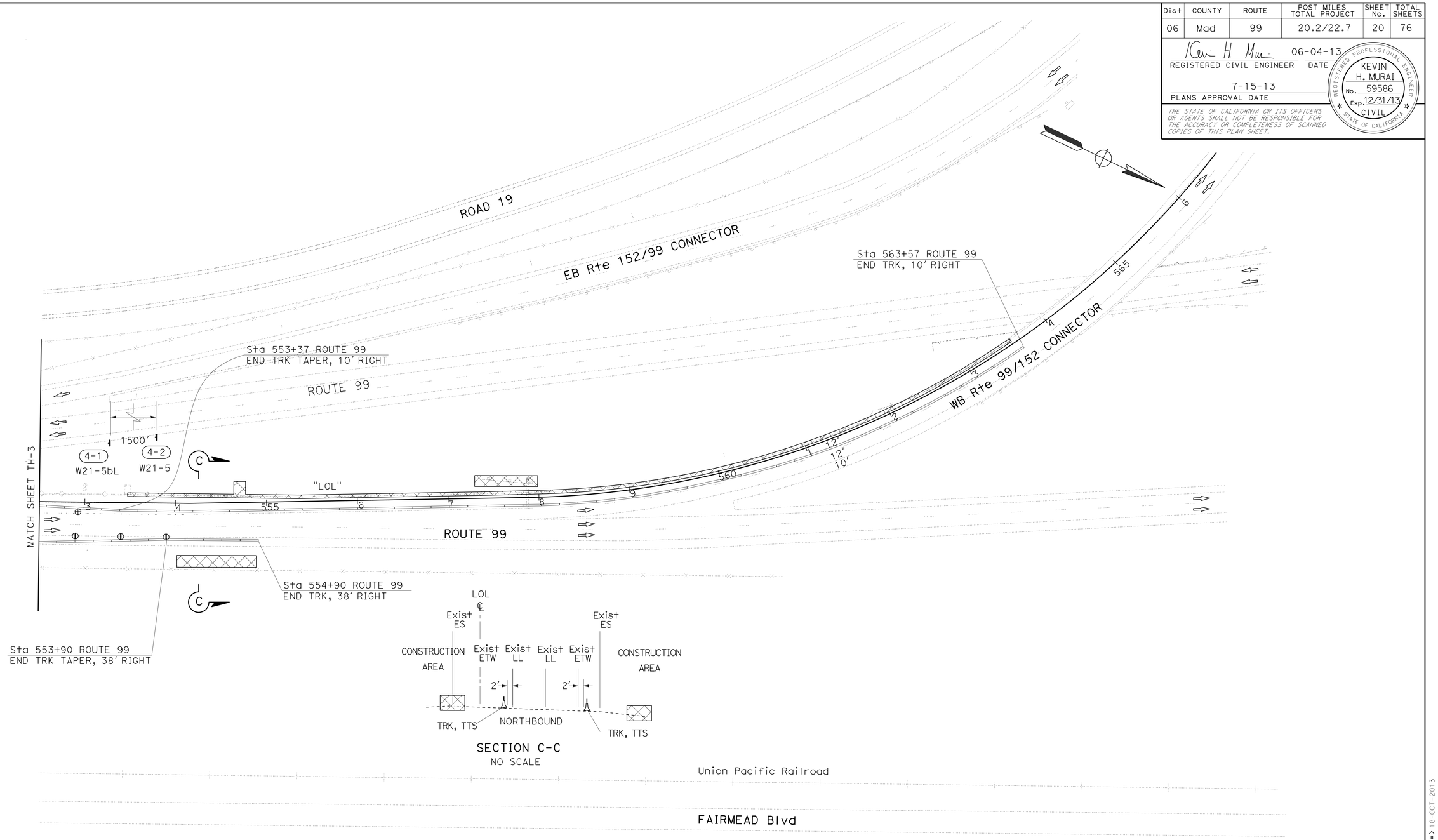


# TRAFFIC HANDLING PLAN

SCALE: 1"=50'

**TH-4**

*APPROVED FOR TRAFFIC HANDLING WORK ONLY*

STATE OF CALIFORNIA - DEPARTMENT OF TRANSPORTATION

Caltrans

**TRAFFIC DESIGN**

FUNCTIONAL SUPERVISOR: MOHAMMED QATAMI

CALCULATED-DESIGNED BY: KEVIN MURAI

CHECKED BY: HASSAN TAHA

REVISED BY

DATE REVISED

LAST REVISION 06-04-13

DATE PLOTTED => 18-OCT-2013

TIME PLOTTED => 08:11

| Dist | COUNTY | ROUTE | POST MILES TOTAL PROJECT | SHEET No. | TOTAL SHEETS |
|---|---|---|---|---|---|
| 06 | Mad | 99 | 20.2/22.7 | 21 | 76 |

REGISTERED CIVIL ENGINEER 06-19-13 DATE

7-15-13
PLANS APPROVAL DATE

REGISTERED PROFESSIONAL ENGINEER KEVIN H. MURAI No. 59586 Exp. 12/31/13 CIVIL STATE OF CALIFORNIA

*THE STATE OF CALIFORNIA OR ITS OFFICERS OR AGENTS SHALL NOT BE RESPONSIBLE FOR THE ACCURACY OR COMPLETENESS OF SCANNED COPIES OF THIS PLAN SHEET.*

NOTE:

FOR ADDITIONAL CONSTRUCTION AREA SIGNS, SEE MOTORIST INFORMATION PLAN AND CONSTRUCTION AREA SIGNS.

## CONSTRUCTION AREA SIGNS

| SHEET No. | SIGN No. | SIGN CODE | No. OF SIGNS | PANEL SIZE | No. OF POST AND SIZE | SIGN MESSAGE | COMMENT |
|---|---|---|---|---|---|---|---|
| TH-1 | 1-1 | W21-5 | 2 | 48" x 48" | 1- 6" x 6" | SHOULDER WORK | |
| | 1-2 | W21-5bR | 2 | 48" x 48" | 1- 6" x 6" | RIGHT SHOULDER CLOSED AHEAD | |
| | 1-3 | W21-5bL | 2 | 48" x 48" | 1- 6" x 6" | LEFT SHOULDER CLOSED AHEAD | |
| | 1-4 | C30A(CA) | 3 | 48" x 48" | 1- 6" x 6" | SHOULDER CLOSED | |
| | 1-5 | W9-1L | 1 | 48" x 48" | 1- 6" x 6" | LEFT LANE ENDS | BLACK ON ORANGE |
| TH-2 | 2-1 | C30A(CA) | 2 | 48" x 48" | 1- 6" x 6" | SHOULDER CLOSED | |
| | 2-2 | W4-2L | 1 | 48" x 48" | 1- 6" x 6" | LANE ENDS | BLACK ON ORANGE |
| | 2-3 | W21-5bL | 1 | 48" x 48" | 1- 6" x 6" | LEFT SHOULDER CLOSED AHEAD | |
| | 2-4 | W21-5bR | 1 | 48" x 48" | 1- 6" x 6" | RIGHT SHOULDER CLOSED AHEAD | |
| TH-3 | 3-1 | SC11(CA) | 4 | 42" x 30" | | LANE CLOSED | MOUNT ON BARRICADE |
| | 3-2 | C30A(CA) | 2 | 48" x 48" | 1- 6" x 6" | SHOULDER CLOSED | |
| TH-4 | 4-1 | W21-5bL | 1 | 48" x 48" | 1- 6" x 6" | LEFT SHOULDER CLOSED AHEAD | |
| | 4-2 | W21-5 | 1 | 48" x 48" | 1- 6" x 6" | SHOULDER WORK | |

## TEMPORARY RAILING (TYPE K)

| SHEET | LOCATION | LF |
|---|---|---|
| TH-1 | Sta 508+26 TO Sta 510+86 Rte 99 | 260 |
| | Sta 508+81 TO Sta 511+41 Rte 99 | 260 |
| | Sta 509+95 TO Sta 512+55 Rte 99 | 260 |
| TH-2 | Sta 530+59 TO Sta 533+19 Rte 99 | 260 |
| | Sta 530+13 TO Sta 534+33 Rte 99 | 420 |
| | Sta 531+82 TO Sta 535+82 Rte 99 | 400 |
| TH-3 TO TH-4 | Sta 552+30 TO Sta 554+90 Rte 99 | 260 |
| | Sta 551+77 TO Sta 563+57 Rte 99 | 1180 |
| | TOTAL | 3300 |

## TEMPORARY PAVEMENT DELINEATION QUANTITIES

| SHEET No. | ROUTE | LOCATION FROM | LOCATION TO | DETAIL No. | INSTALL/REMOVE | TEMPORARY TRAFFIC STRIPE (PAINT) | TEMPORARY PAVEMENT MARKER | REMOVE THERMOPLASTIC TRFFIC STRIPE | REMOVE YELLOW THERMOPLASTIC TRFFIC STRIPE (HAZARDOUS WASTE) | REMOVE PAVEMENT MARKER |
|---|---|---|---|---|---|---|---|---|---|---|
| | | | | | | LF | EA | LF | | EA |
| TH-2 TO TH-3 | Rte 99 | 526+92 | 542+20 | 12 | R | | | 382 | | 33 |
| | Rte 99 | 535+92 | 543+92 | 25 | R | | | | 800 | 18 |
| | Rte 99 | 535+92 | 543+92 | 25 | I | 800 | 18 | | | |
| TH-3 | Rte 99 | 542+20 | 543+92 | 37 | R | | | 34 | | 22 |
| TOTAL | | | | | | 800 | 18 | 416 | 800 | 73 |

## TEMPORARY TRAFFIC SCREEN

| SHEET | LOCATION | LF |
|---|---|---|
| TH-1 | Sta 508+26 TO Sta 510+86 Rte 99 | 260 |
| | Sta 508+81 TO Sta 511+41 Rte 99 | 260 |
| | Sta 509+95 TO Sta 512+55 Rte 99 | 260 |
| TH-2 | Sta 530+59 TO Sta 533+19 Rte 99 | 260 |
| | Sta 530+13 TO Sta 534+33 Rte 99 | 420 |
| | Sta 531+82 TO Sta 535+82 Rte 99 | 400 |
| TH-3 TO TH-4 | Sta 552+30 TO Sta 554+90 Rte 99 | 260 |
| | Sta 551+77 TO Sta 563+57 Rte 99 | 1180 |
| | TOTAL | 3300 |

## TYPE III BARRICADE

| SHEET | EA |
|---|---|
| TH-3 | 12 |
| TOTAL | 12 |

## TRAFFIC PLASTIC DRUM

| SHEET | EA |
|---|---|
| TH-3 | 10 |
| TH-4 | 1 |
| TOTAL | 11 |

## CHANNELIZER (SURFACE MOUNTED)

| SHEET | EA |
|---|---|
| TH-1 | 27 |
| TH-2 | 26 |
| TH-3 | 12 |
| TH-4 | 3 |
| TOTAL | 68 |

## TEMPORARY CRASH CUSHION MODULE

| SHEET | EA |
|---|---|
| TH-1 | 42 |
| TH-2 | 42 |
| TH-3 | 28 |
| TOTAL | 112 |

# TRAFFIC HANDLING QUANTITIES

THQ-1

REVISED BY | DATE REVISED
KEVIN MURAI | HASSAN TAHA
CALCULATED-DESIGNED BY | CHECKED BY
FUNCTIONAL SUPERVISOR | MOHAMMED QATAMI
STATE OF CALIFORNIA - DEPARTMENT OF TRANSPORTATION
Caltrans® TRAFFIC DESIGN

LAST REVISION 06-19-13 | DATE PLOTTED => 18-OCT-2013 | TIME PLOTTED => 08:11

| Dist | COUNTY | ROUTE | POST MILES TOTAL PROJECT | SHEET No. | TOTAL SHEETS |
|---|---|---|---|---|---|
| 06 | Mad | 99 | 20.2/22.7 | 22 | 76 |

REGISTERED CIVIL ENGINEER 06-04-13 DATE

7-15-13
PLANS APPROVAL DATE

REGISTERED PROFESSIONAL ENGINEER KEVIN H. MURAI No. 59586 Exp. 12/31/13 CIVIL STATE OF CALIFORNIA

*THE STATE OF CALIFORNIA OR ITS OFFICERS OR AGENTS SHALL NOT BE RESPONSIBLE FOR THE ACCURACY OR COMPLETENESS OF SCANNED COPIES OF THIS PLAN SHEET.*

LEGEND:

- REMOVE SIGN PANEL
- INSTALL SIGN PANEL ON EXISTING FRAME
- REMOVE SIGN STRUCTURE
- RELOCATE ROADSIDE SIGN (STRAP AND SADDLE BRACKET METHOD) FROM TO
- REMOVE ROADSIDE SIGN

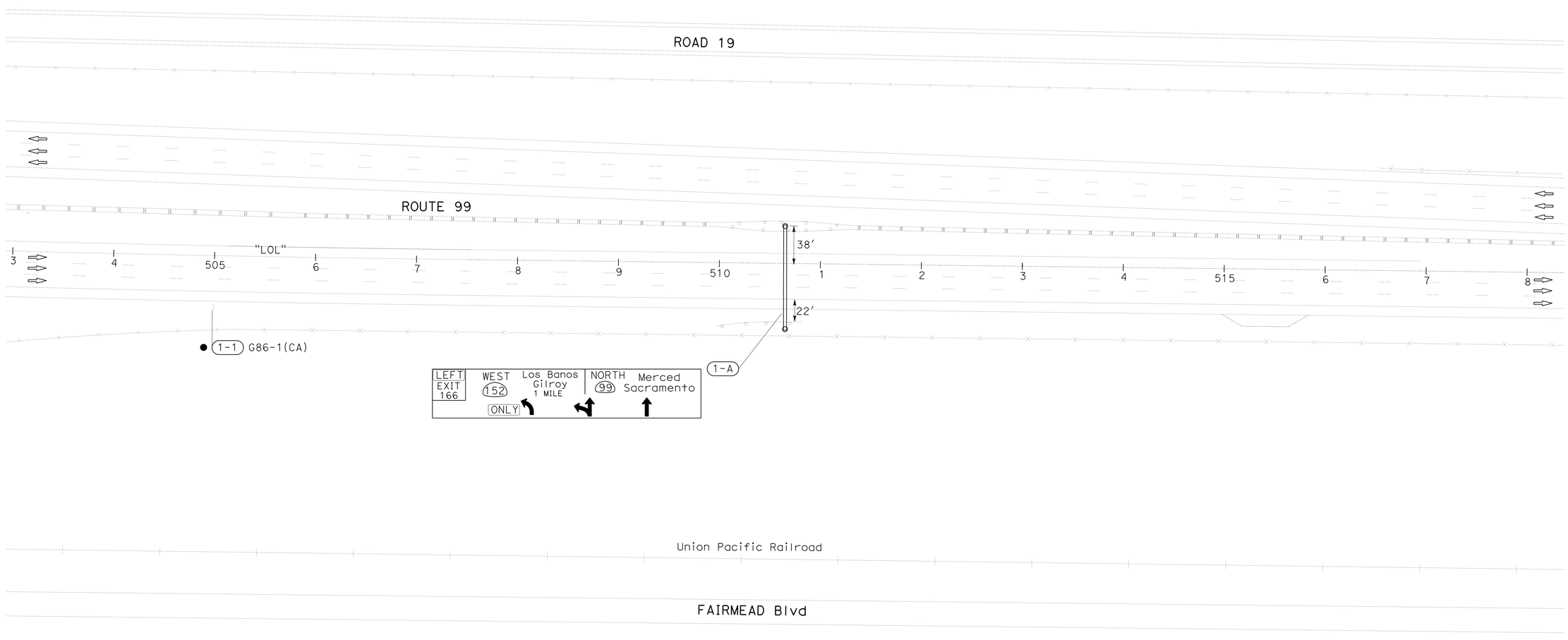


*APPROVED FOR PAVEMENT DELINEATION AND SIGN WORK ONLY*

# PAVEMENT DELINEATION AND SIGN PLAN

SCALE: 1"=50'

**PD-1**

| | |
|---|---|
| REVISED BY | |
| DATE REVISED | |
| CALCULATED-DESIGNED BY | KEVIN MURAI |
| CHECKED BY | HASSAN TAHA |
| FUNCTIONAL SUPERVISOR | MOHAMMED QATAMI |

STATE OF CALIFORNIA - DEPARTMENT OF TRANSPORTATION
Caltrans
TRAFFIC DESIGN

LAST REVISION 06-04-13 | DATE PLOTTED => 23-OCT-2013 | TIME PLOTTED => 08:52

| Dist | COUNTY | ROUTE | POST MILES TOTAL PROJECT | SHEET No. | TOTAL SHEETS |
|---|---|---|---|---|---|
| 06 | Mad | 99 | 20.2/22.7 | 23 | 76 |

REGISTERED CIVIL ENGINEER — DATE 06-04-13

PLANS APPROVAL DATE 7-15-13

REGISTERED PROFESSIONAL ENGINEER — KEVIN H. MURAI — No. 59586 — Exp. 12/31/13 — CIVIL — STATE OF CALIFORNIA

*THE STATE OF CALIFORNIA OR ITS OFFICERS OR AGENTS SHALL NOT BE RESPONSIBLE FOR THE ACCURACY OR COMPLETENESS OF SCANNED COPIES OF THIS PLAN SHEET.*

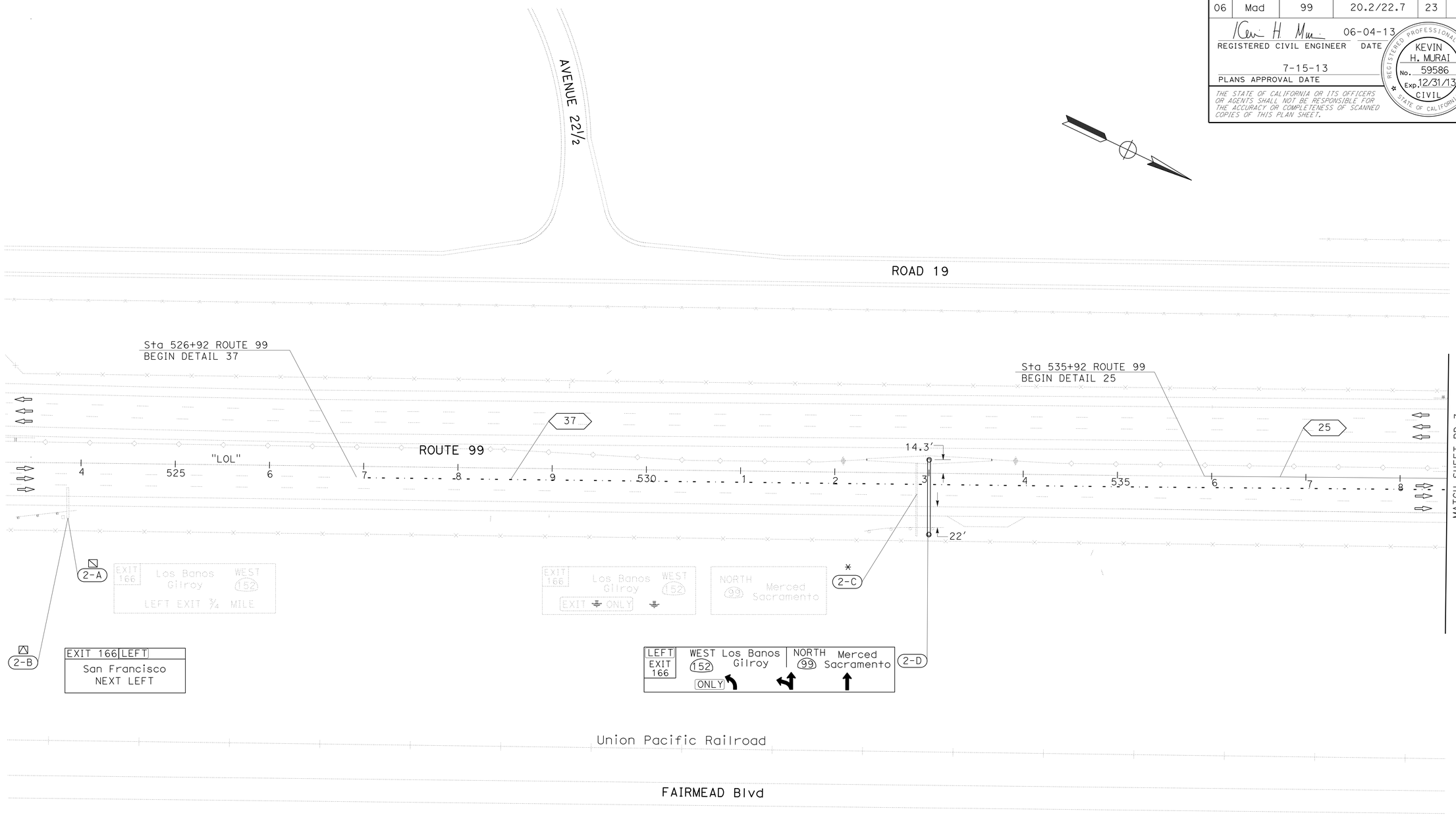


# PAVEMENT DELINEATION AND SIGN PLAN

SCALE: 1"=50'

**PD-2**

*APPROVED FOR PAVEMENT DELINEATION AND SIGN WORK ONLY*

STATE OF CALIFORNIA - DEPARTMENT OF TRANSPORTATION

Caltrans

**TRAFFIC DESIGN**

FUNCTIONAL SUPERVISOR: MOHAMMED QATAMI

CALCULATED-DESIGNED BY: KEVIN MURAI

CHECKED BY: HASSAN TAHA

REVISED BY

DATE REVISED

LAST REVISION — DATE PLOTTED => 18-OCT-2013 — TIME PLOTTED => 08:11

06-04-13

| Dist | COUNTY | ROUTE | POST MILES TOTAL PROJECT | SHEET No. | TOTAL SHEETS |
|---|---|---|---|---|---|
| 06 | Mad | 99 | 20.2/22.7 | 24 | 76 |

REGISTERED CIVIL ENGINEER — DATE 06-04-13

PLANS APPROVAL DATE 7-15-13

REGISTERED PROFESSIONAL ENGINEER — KEVIN H. MURAI — No. 59586 — Exp. 12/31/13 — CIVIL — STATE OF CALIFORNIA

*THE STATE OF CALIFORNIA OR ITS OFFICERS OR AGENTS SHALL NOT BE RESPONSIBLE FOR THE ACCURACY OR COMPLETENESS OF SCANNED COPIES OF THIS PLAN SHEET.*

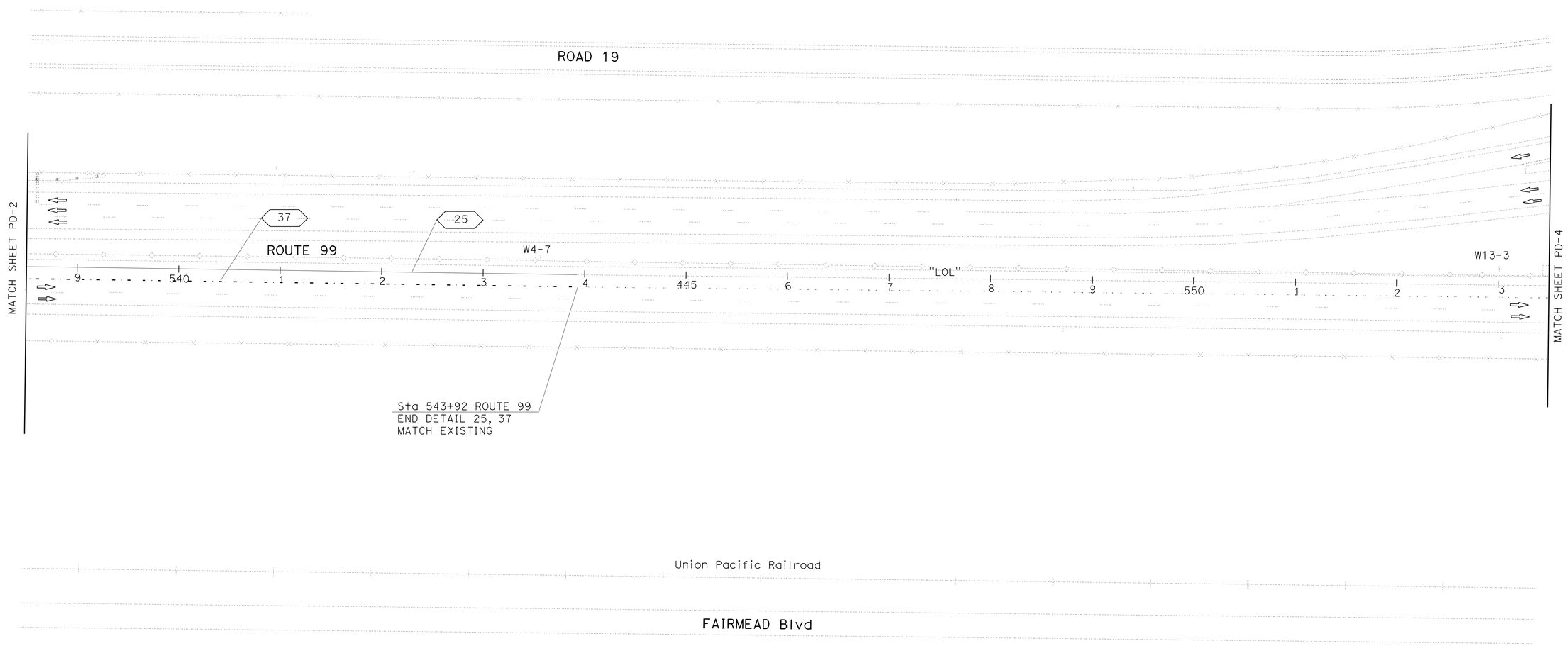


*APPROVED FOR PAVEMENT DELINEATION AND SIGN WORK ONLY*

# PAVEMENT DELINEATION AND SIGN PLAN

SCALE: 1"=50'

**PD-3**

STATE OF CALIFORNIA - DEPARTMENT OF TRANSPORTATION

Caltrans

**TRAFFIC DESIGN**

FUNCTIONAL SUPERVISOR: MOHAMMED QATAMI

CALCULATED-DESIGNED BY: KEVIN MURAI

CHECKED BY: HASSAN TAHA

REVISED BY

DATE REVISED

LAST REVISION 06-04-13

DATE PLOTTED => 18-OCT-2013

TIME PLOTTED => 08:11

| Dist | COUNTY | ROUTE | POST MILES TOTAL PROJECT | SHEET No. | TOTAL SHEETS |
|---|---|---|---|---|---|
| 06 | Mad | 99 | 20.2/22.7 | 25 | 76 |

REGISTERED CIVIL ENGINEER 06-19-13 DATE

7-15-13
PLANS APPROVAL DATE

REGISTERED PROFESSIONAL ENGINEER KEVIN H. MURAI No. 59586 Exp. 12/31/13 CIVIL STATE OF CALIFORNIA

*THE STATE OF CALIFORNIA OR ITS OFFICERS OR AGENTS SHALL NOT BE RESPONSIBLE FOR THE ACCURACY OR COMPLETENESS OF SCANNED COPIES OF THIS PLAN SHEET.*

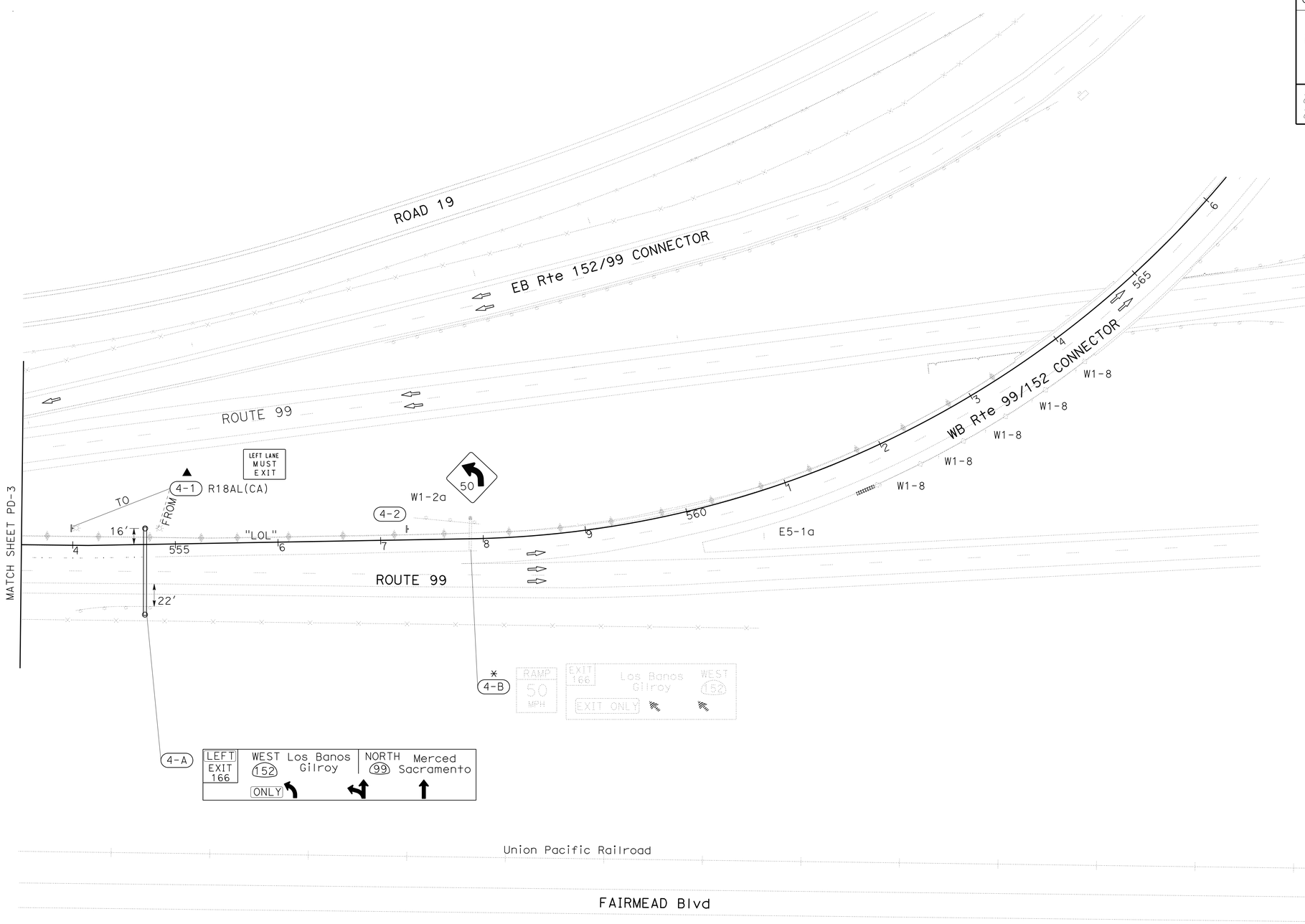


*APPROVED FOR PAVEMENT DELINEATION AND SIGN WORK ONLY*

# PAVEMENT DELINEATION AND SIGN PLAN

SCALE: 1"=50'

**PD-4**

STATE OF CALIFORNIA - DEPARTMENT OF TRANSPORTATION
Caltrans®
**TRAFFIC DESIGN**

FUNCTIONAL SUPERVISOR: MOHAMMED QATAMI
CALCULATED-DESIGNED BY: KEVIN MURAI
CHECKED BY: HASSAN TAHA
REVISED BY
DATE REVISED

LAST REVISION 06-19-13
DATE PLOTTED => 18-OCT-2013
TIME PLOTTED => 08:11

| Dist | COUNTY | ROUTE | POST MILES TOTAL PROJECT | SHEET No. | TOTAL SHEETS |
|---|---|---|---|---|---|
| 06 | Mad | 99 | 20.2/22.7 | 26 | 76 |

REGISTERED CIVIL ENGINEER 06-04-13 DATE

7-15-13
PLANS APPROVAL DATE

REGISTERED PROFESSIONAL ENGINEER KEVIN H. MURAI No. 59586 Exp. 12/31/13 CIVIL STATE OF CALIFORNIA

*THE STATE OF CALIFORNIA OR ITS OFFICERS OR AGENTS SHALL NOT BE RESPONSIBLE FOR THE ACCURACY OR COMPLETENESS OF SCANNED COPIES OF THIS PLAN SHEET.*

## PAVEMENT DELINEATION QUANTITIES

| SHEET No. | ROUTE | LOCATION | | DETAIL No. | INSTALL/REMOVE | PAVEMENT MARKERS (RETRO-REFLECTIVE) | | THERMOPLASTIC TRAFFIC STRIPE | |
|---|---|---|---|---|---|---|---|---|---|
| | | | | | | TYPE G | TYPE H | SOLID YELLOW 4" | (BROKEN 12'-3') 8" |
| | | FROM | TO | | | EA | EA | LF | LF |
| PD-2 | Rte 99 | 535+92 | 538+50 | 25 | I | | 6 | 258 | |
| | Rte 99 | 526+92 | 538+50 | 37 | I | 82 | | | 1158 |
| PD-3 | Rte 99 | 538+50 | 543+92 | 25 | I | | 12 | 542 | |
| | Rte 99 | 538+50 | 543+92 | 37 | I | 44 | | | 542 |
| SUBTOTAL | | | | | | 126 | 18 | 800 | 1700 |
| TOTAL | | | | | | 144 | | 800 | 1700 |

## ROADSIDE SIGN

| SHEET No. | SIGN No. | SIGN CODE | SIGN MESSAGE | PANEL SIZE (LxD) | No. OF POST AND SIZE | BACKGROUND | | LEGEND | | GRAFFITI FLOW | | FURNISH SINGLE SHEET ALUMINUM SIGN | ROADSIDE SIGN ONE POST | REMOVE ROADSIDE SIGN | RELOCATE ROADSIDE SIGN (SSBM) |
|---|---|---|---|---|---|---|---|---|---|---|---|---|---|---|---|
| | | | | | | SHEETING COLOR | RETROREFLECTIVITY ASTM TYPE | SHEETING COLOR | RETROREFLECTIVITY ASTM TYPE | STANDARD | PREMIUM | 0.080"- UNFRAMED | | | |
| | | | | INCH x INCH | INCH x INCH | | | | | | | SQFT | EA | | |
| PD-1 | 1-1 | G86-1 (CA) | SAN FRANCISCO NEXT LEFT | | | | | | | | | | | 1 | |
| PD-4 | 4-1 | R18AL (CA) | RIGHT LANE MUST EXIT | | | | | | | | | | | | 1 |
| | 4-2 | W1-2a (50) | COMBINATION CURVE/ADVISORY SPEED | 48 x 48 | 1 - 6 x 6 | YELLOW | | BLACK | | | X | 16.00 | 1 | | |
| TOTAL | | | | | | | | | | | | 16.00 | 1 | 1 | 1 |

# PAVEMENT DELINEATION AND SIGN QUANTITIES

**PDQ-1**

STATE OF CALIFORNIA - DEPARTMENT OF TRANSPORTATION
Caltrans® TRAFFIC DESIGN

FUNCTIONAL SUPERVISOR: MOHAMMED QATAMI
CALCULATED-DESIGNED BY: KEVIN MURAI
CHECKED BY: HASSAN TAHA
REVISED BY / DATE REVISED

LAST REVISION 06-04-13 | DATE PLOTTED => 18-OCT-2013 | TIME PLOTTED => 08:11

| Dist | COUNTY | ROUTE | POST MILES TOTAL PROJECT | SHEET No. | TOTAL SHEETS |
|---|---|---|---|---|---|
| 06 | Mad | 99 | 20.2/22.7 | 27 | 76 |

REGISTERED CIVIL ENGINEER 06-19-13 DATE

7-15-13
PLANS APPROVAL DATE

REGISTERED PROFESSIONAL ENGINEER KEVIN H. MURAI No. 59586 Exp. 12/31/13 CIVIL STATE OF CALIFORNIA

*THE STATE OF CALIFORNIA OR ITS OFFICERS OR AGENTS SHALL NOT BE RESPONSIBLE FOR THE ACCURACY OR COMPLETENESS OF SCANNED COPIES OF THIS PLAN SHEET.*

# OVERHEAD SIGN STRUCTURE QUANTITIES

| SHEET No. | SIGN No. | LOCATION | SIGN MESSAGE | OVERHEAD SIGN PANEL: SINGLE FACED | DOUBLE FACED | BACKGROUND: SHEETING COLOR | BACKGROUND: Retroreflectivity ASTM TYPE | LEGEND: SHEETING COLOR | LEGEND: Retroreflectivity ASTM TYPE | GRAFFITI FLOW: STANDARD | GRAFFITI FLOW: PREMIUM | FURNISH LAMINATED PANEL SIGN (1" - TYPE A) | PANEL SIZE | FURNISH SIGN STRUCTURE (TRUSS) | INSTALL SIGN STRUCTURE (TRUSS) | REMOVE SIGN STRUCTURE | REMOVE SIGN PANEL | INSTALL SIGN PANEL ON EXISTING FRAME | CIDH CONCRETE PILE (SIGN FOUNDATION) 60" |
|---|---|---|---|---|---|---|---|---|---|---|---|---|---|---|---|---|---|---|---|
| | | | | | | | | | | | | SQFT | IN x IN | LB | LB | EA | EA | SQFT | LF |
| PD-1 | 1-A | Sta 510+65 ROUTE 99 | LEFT EXIT 166 ONLY; WEST (152); Los Banos Gilroy 1 MILE; NORTH (99); Merced Sacramento | X | | GREEN | IV | WHITE | IV | | IV | 480 | 576 x 120 | 55,400 | 55,400 | | | | 55.7 |
| PD-2 | 2-A | Sta 523+85 ROUTE 99 | EXIT 166; Los Banos Gilroy; WEST (152); LEFT EXIT 3/4 MILE | | | | | | | | | | | | | | 1 | | |
| | 2-B | Sta 523+85 ROUTE 99 | EXIT 166 LEFT; San Francisco; NEXT LEFT | X | | GREEN | IV | WHITE | IV | | IV | 167 | 240 x 100 | | | | | 167 | |
| | 2-C | Sta 532+86 ROUTE 99 | EXIT 166; Los Banos Gilroy; WEST (152); EXIT ONLY; NORTH (99); Merced Sacramento | | | | | | | | | | | | | 1 | | | |
| | 2-D | Sta 533+00 ROUTE 99 | LEFT EXIT 166 ONLY; WEST (152); Los Banos Gilroy; NORTH (99); Merced Sacramento | X | | GREEN | IV | WHITE | IV | | IV | 480 | 576 x 120 | 33,100 | 33,100 | | | | 55.5 |
| PD-4 | 4-A | Sta 554+71 ROUTE 99 | LEFT EXIT 166 ONLY; WEST (152); Los Banos Gilroy; NORTH (99); Merced Sacramento | X | | GREEN | IV | WHITE | IV | | IV | 480 | 576 x 120 | 34,500 | 34,500 | | | | 52.5 |
| | 4-B | Sta 557+87 ROUTE 99 | EXIT 166; Los Banos Gilroy; WEST (152); EXIT ONLY | | | | | | | | | | | | | 1 | | | |
| | | | | | | | | | | | TOTAL | 1,607 | | 123,000 | 123,000 | 2 | 1 | 167 | 163.7 |

REVISED BY | DATE REVISED
KEVIN MURAI | HASSAN TAHA
CALCULATED-DESIGNED BY | CHECKED BY
FUNCTIONAL SUPERVISOR
MOHAMMED QATAMI

STATE OF CALIFORNIA - DEPARTMENT OF TRANSPORTATION
Caltrans
TRAFFIC DESIGN

# PAVEMENT DELINEATION AND SIGN QUANTITIES

PDQ-2

LAST REVISION 06-19-13 | DATE PLOTTED => 18-OCT-2013 TIME PLOTTED => 08:11

| Dist | COUNTY | ROUTE | POST MILES TOTAL PROJECT | SHEET No. | TOTAL SHEETS |
|---|---|---|---|---|---|
| 06 | Mad | 99 | 20.2/22.7 | 28 | 76 |

REGISTERED CIVIL ENGINEER 06-04-13 DATE

7-15-13
PLANS APPROVAL DATE

REGISTERED PROFESSIONAL ENGINEER KEVIN H. MURAI No. 59586 Exp 12/31/13 CIVIL STATE OF CALIFORNIA

*THE STATE OF CALIFORNIA OR ITS OFFICERS OR AGENTS SHALL NOT BE RESPONSIBLE FOR THE ACCURACY OR COMPLETENESS OF SCANNED COPIES OF THIS PLAN SHEET.*

**LEGEND:**

X-X / X-X — OVERHEAD SIGN No. / SIGN PLAN SHEET No.

1-A / PD-1

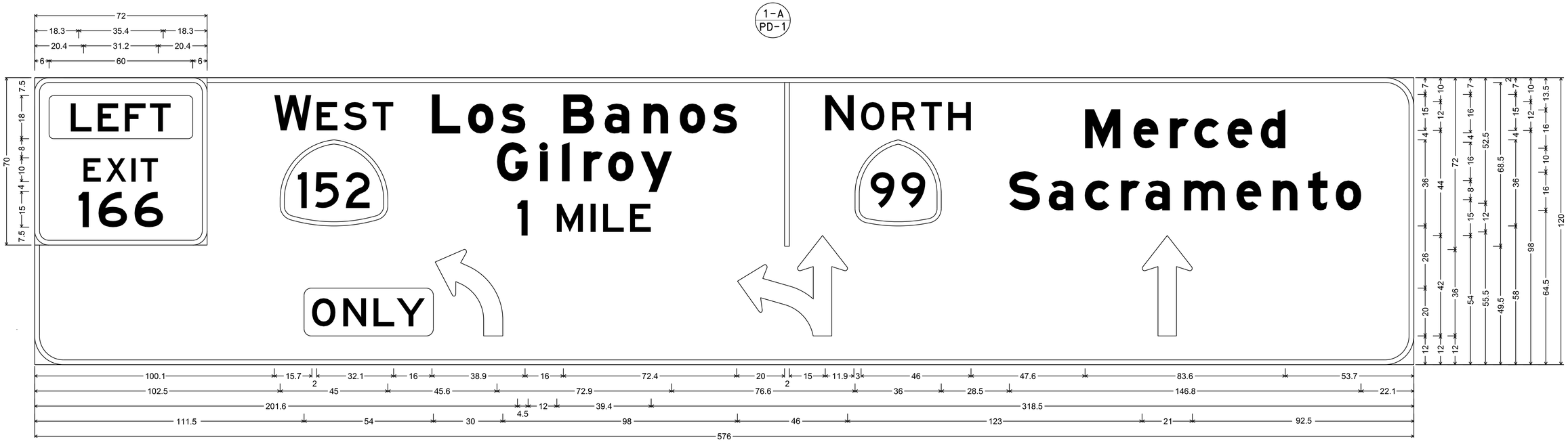


6.0" Radius, 2.0" Border, White on Green;
Rounded Rectangle 1.9" Radius Yellow;
[EXIT] E; [166] E;

12.0" Radius, 2.0" Border, White on Green;
[W] E; [EST] E; [Los Banos] E Mod; [Gilroy] E Mod; [1] E; [MILE] E; [N] E; [ORTH] E; [Merced] E Mod; [Sacramento] E Mod; Rounded Rectangle 3.0" Radius Yellow;
Arrow Custom - 42.0" 90°; Arrow Custom - 42.0" 90°; Arrow Custom - 42.0" 90°;
Table of letter and object lefts.

| | | | |
|---|---|---|---|
| 6.0 | | | |
| E 20.4 | X 29.8 | I 40.5 | T 44.2 |
| 1 18.3 | 6 26.7 | 6 41.7 | |

| | | | | | | | | | | | | | | | | | | | | | | | |
|---|---|---|---|---|---|---|---|---|---|---|---|---|---|---|---|---|---|---|---|---|---|---|---|
| W 100.1 | E 117.8 | S 129.1 | T 141.1 | L 165.9 | o 181.0 | s 194.7 | B 220.8 | a 238.0 | n 254.3 | o 269.4 | s 283.1 | \| 313.2 | N 330.2 | O 345.1 | R 358.2 | T 370.2 | H 381.5 | M 438.7 | e 458.9 | r 474.2 | c 484.3 | e 498.2 | d 512.1 |

| | | | | | | | | | | | | | | | | | | |
|---|---|---|---|---|---|---|---|---|---|---|---|---|---|---|---|---|---|---|
| 152 102.5 | G 193.1 | i 211.1 | l 220.2 | r 229.3 | o 239.5 | y 253.1 | 99 342.6 | S 407.1 | a 423.5 | c 438.6 | r 453.7 | a 463.9 | m 480.1 | e 501.9 | n 517.1 | t 531.8 | o 543.4 |

| | | | |
|---|---|---|---|
| 1 201.6 | M 218.1 | I 232.2 | L 237.4 | E 248.7 |
| 104.5 | 158.5 | 285.5 | 454.5 |

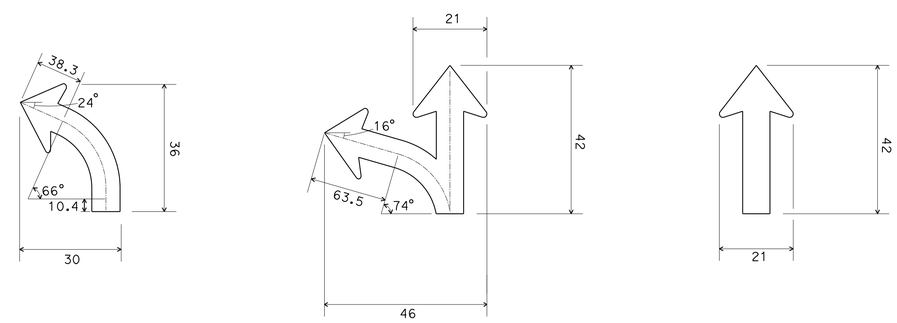


# SIGN DETAILS

NO SCALE **SD-1**

STATE OF CALIFORNIA - DEPARTMENT OF TRANSPORTATION
Caltrans
TRAFFIC DESIGN

FUNCTIONAL SUPERVISOR: MOHAMMED QATAMI
CALCULATED-DESIGNED BY: KEVIN MURAI
CHECKED BY: HASSAN TAHA
REVISED BY / DATE REVISED

LAST REVISION 06-04-13 | DATE PLOTTED => 18-OCT-2013 | TIME PLOTTED => 08:11

| Dist | COUNTY | ROUTE | POST MILES TOTAL PROJECT | SHEET No. | TOTAL SHEETS |
|---|---|---|---|---|---|
| 06 | Mad | 99 | 20.2/22.7 | 29 | 76 |

REGISTERED CIVIL ENGINEER 06-04-13 DATE

7-15-13
PLANS APPROVAL DATE

REGISTERED PROFESSIONAL ENGINEER KEVIN H. MURAI No. 59586 Exp. 12/31/13 CIVIL STATE OF CALIFORNIA

*THE STATE OF CALIFORNIA OR ITS OFFICERS OR AGENTS SHALL NOT BE RESPONSIBLE FOR THE ACCURACY OR COMPLETENESS OF SCANNED COPIES OF THIS PLAN SHEET.*

2-B
PD-2

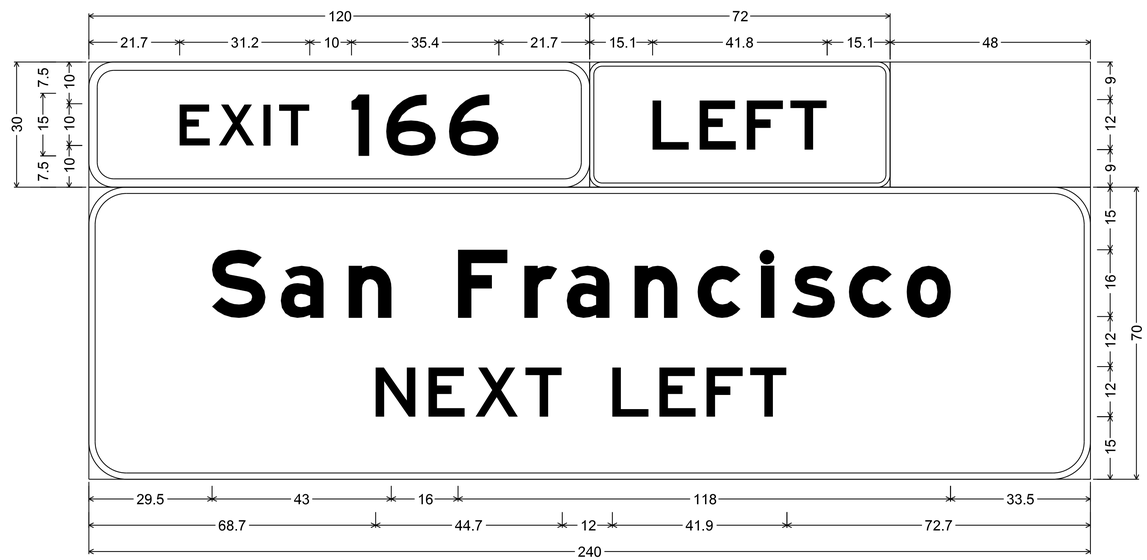


6.0" Radius, 2.0" Border, White on Green;
[EXIT] E; [166] E;
3.0" Radius, 1.0" Border, Black on Yellow;
[LEFT] E;
No border, White on Green;
9.0" Radius, 1.5" Border, White on Green;
[San Francisco] E Mod; [NEXT LEFT] E;
Table of letter and object lefts.

| | | | | | | |
|---|---|---|---|---|---|---|
| E 21.7 | X 31.2 | I 41.8 | T 45.6 | 1 62.9 | 6 71.3 | 6 86.3 |

| | | | |
|---|---|---|---|
| L 15.1 | E 26.4 | F 37.6 | T 48.1 |

| | | | | | | | | | | | | |
|---|---|---|---|---|---|---|---|---|---|---|---|---|
| S 29.5 | a 46.0 | n 62.3 | F 88.5 | r 104.4 | a 114.5 | n 130.8 | c 145.9 | i 161.0 | s 168.5 | c 182.1 | o 196.0 | |

| | | | | | | | |
|---|---|---|---|---|---|---|---|
| N 68.7 | E 81.4 | X 92.7 | T 104.6 | L 125.4 | E 136.7 | F 148.0 | T 158.5 |

# SIGN DETAILS

NO SCALE **SD-2**

STATE OF CALIFORNIA - DEPARTMENT OF TRANSPORTATION
Caltrans
TRAFFIC DESIGN

FUNCTIONAL SUPERVISOR: MOHAMMED QATAMI
CALCULATED-DESIGNED BY: KEVIN MURAI
CHECKED BY: HASSAN TAHA
REVISED BY
DATE REVISED

LAST REVISION 06-04-13
DATE PLOTTED => 18-OCT-2013
TIME PLOTTED => 08:11

| Dist | COUNTY | ROUTE | POST MILES TOTAL PROJECT | SHEET No. | TOTAL SHEETS |
|---|---|---|---|---|---|
| 06 | Mad | 99 | 20.2/22.7 | 30 | 76 |

REGISTERED CIVIL ENGINEER 06-04-13 DATE

7-15-13
PLANS APPROVAL DATE

REGISTERED PROFESSIONAL ENGINEER KEVIN H. MURAI No. 59586 Exp. 12/31/13 CIVIL STATE OF CALIFORNIA

*THE STATE OF CALIFORNIA OR ITS OFFICERS OR AGENTS SHALL NOT BE RESPONSIBLE FOR THE ACCURACY OR COMPLETENESS OF SCANNED COPIES OF THIS PLAN SHEET.*

2-D
PD-2

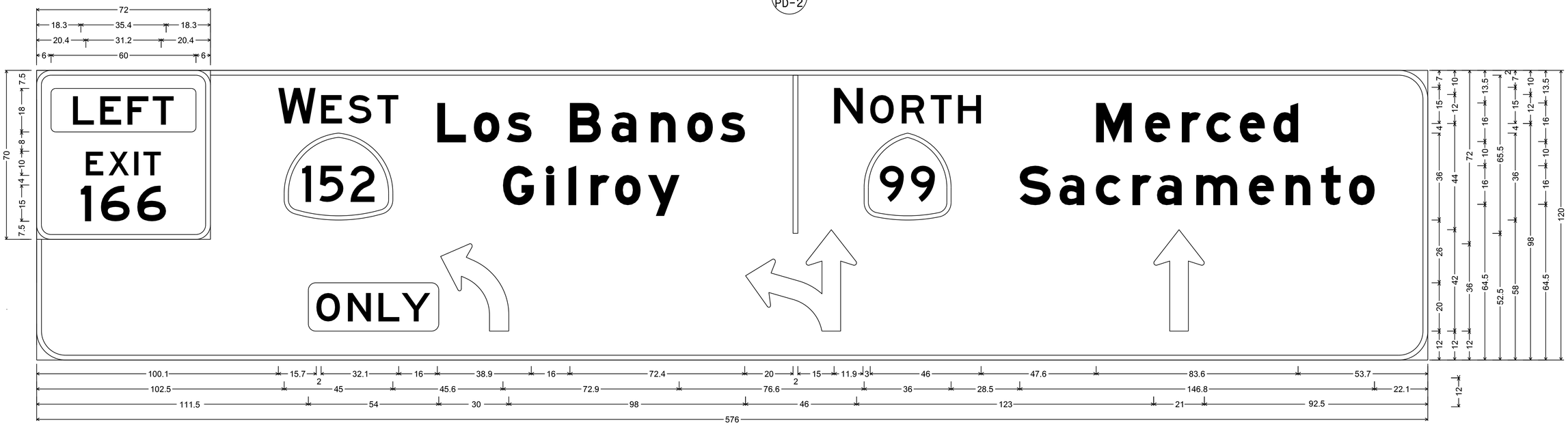


6.0" Radius, 2.0" Border, White on Green;
Rounded Rectangle 1.9" Radius Yellow;
[EXIT] E; [166] E;

12.0" Radius, 2.0" Border, White on Green;
[W] E; [EST] E; [Los Banos] E Mod; [Gilroy] E Mod; [N] E; [ORTH] E; [Merced] E Mod; [Sacramento] E Mod; Rounded Rectangle 3.0" Radius Yellow;
Arrow Custom - 42.0" 90°; Arrow Custom - 42.0" 90°; Arrow Custom - 42.0" 90°;
Table of letter and object lefts.

| | | | |
|---|---|---|---|
| 6.0 | | | |

| | | | |
|---|---|---|---|
| E 20.4 | X 29.8 | I 40.5 | T 44.2 |

| | | |
|---|---|---|
| 1 18.3 | 6 26.7 | 6 41.7 |

| | | | | | | | | | | | | | | | | | | | | | | | | |
|---|---|---|---|---|---|---|---|---|---|---|---|---|---|---|---|---|---|---|---|---|---|---|---|---|
| W 100.1 | E 117.8 | S 129.1 | T 141.1 | L 165.9 | o 181.0 | s 194.7 | B 220.8 | a 238.0 | n 254.3 | o 269.4 | s 283.1 | l 313.2 | N 330.2 | O 345.1 | R 358.2 | T 370.2 | H 381.5 | M 438.7 | e 458.9 | r 474.2 | c 484.3 | e 498.2 | d 512.1 |

| | | | | | | | | | | | | | | | | | | | |
|---|---|---|---|---|---|---|---|---|---|---|---|---|---|---|---|---|---|---|---|
| 152 102.5 | G 193.1 | i 211.1 | l 220.2 | r 229.3 | o 239.5 | y 253.1 | 99 342.6 | S 407.1 | a 423.5 | c 438.6 | r 453.7 | a 463.9 | m 480.1 | e 501.9 | n 517.1 | t 531.8 | o 543.4 |

| | | | |
|---|---|---|---|
| 104.5 | 158.5 | 285.5 | 454.5 |

# SIGN DETAILS

NO SCALE

**SD-3**

STATE OF CALIFORNIA - DEPARTMENT OF TRANSPORTATION
Caltrans®
TRAFFIC DESIGN

FUNCTIONAL SUPERVISOR: MOHAMMED QATAMI
CALCULATED-DESIGNED BY: KEVIN MURAI
CHECKED BY: HASSAN TAHA
REVISED BY
DATE REVISED

LAST REVISION 06-04-13
DATE PLOTTED => 18-OCT-2013
TIME PLOTTED => 08:11

| Dist | COUNTY | ROUTE | POST MILES TOTAL PROJECT | SHEET No. | TOTAL SHEETS |
|---|---|---|---|---|---|
| 06 | Mad | 99 | 20.2/22.7 | 31 | 76 |

REGISTERED CIVIL ENGINEER — DATE: 06-04-13

PLANS APPROVAL DATE: 7-15-13

REGISTERED PROFESSIONAL ENGINEER — KEVIN H. MURAI — No. 59586 — Exp. 12/31/13 — CIVIL — STATE OF CALIFORNIA

*THE STATE OF CALIFORNIA OR ITS OFFICERS OR AGENTS SHALL NOT BE RESPONSIBLE FOR THE ACCURACY OR COMPLETENESS OF SCANNED COPIES OF THIS PLAN SHEET.*

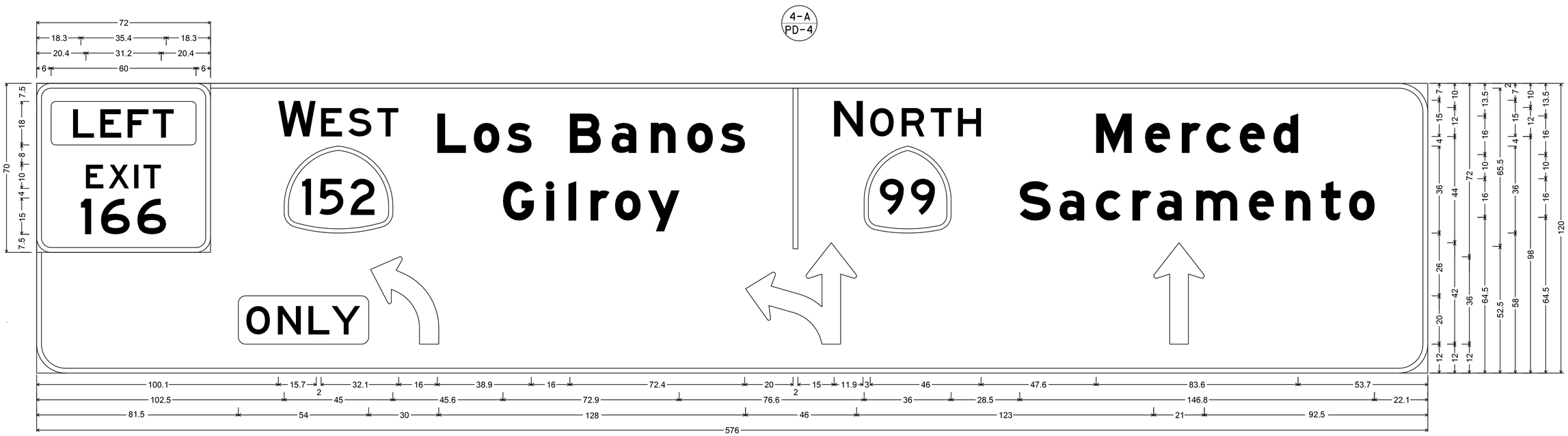


6.0" Radius, 2.0" Border, White on Green;
Rounded Rectangle 1.9" Radius Yellow;
[EXIT] E; [166] E;

12.0" Radius, 2.0" Border, White on Green;
[W] E; [EST] E; [Los Banos] E Mod; [Gilroy] E Mod; [N] E; [ORTH] E; [Merced] E Mod; [Sacramento] E Mod; Rounded Rectangle 3.0" Radius Yellow;
Arrow Custom - 42.0" 90°; Arrow Custom - 42.0" 90°; Arrow Custom - 42.0" 90°;
Table of letter and object lefts.

| | | | |
|---|---|---|---|
| 6.0 | | | |

| | | | |
|---|---|---|---|
| E 20.4 | X 29.8 | I 40.5 | T 44.2 |

| | | |
|---|---|---|
| 1 18.3 | 6 26.7 | 6 41.7 |

| | | | | | | | | | | | | | | | | | | | | | | | |
|---|---|---|---|---|---|---|---|---|---|---|---|---|---|---|---|---|---|---|---|---|---|---|---|
| W 100.1 | E 117.8 | S 129.1 | T 141.1 | L 165.9 | o 181.0 | s 194.7 | B 220.8 | a 238.0 | n 254.3 | o 269.4 | s 283.1 | l 313.2 | N 330.2 | O 345.1 | R 358.2 | T 370.2 | H 381.5 | M 438.7 | e 458.9 | r 474.2 | c 484.3 | e 498.2 | d 512.1 |

| | | | | | | | | | | | | | | | | | | |
|---|---|---|---|---|---|---|---|---|---|---|---|---|---|---|---|---|---|---|
| 102.5 | G 193.1 | i 211.1 | l 220.2 | r 229.3 | o 239.5 | y 253.1 | 342.6 | S 407.1 | a 423.5 | c 438.6 | r 453.7 | a 463.9 | m 480.1 | e 501.9 | n 517.1 | t 531.8 | o 543.4 |

| | | | |
|---|---|---|---|
| 104.5 | 158.5 | 285.5 | 454.5 |

# SIGN DETAILS

NO SCALE

**SD-4**

STATE OF CALIFORNIA - DEPARTMENT OF TRANSPORTATION

Caltrans®

**TRAFFIC DESIGN**

FUNCTIONAL SUPERVISOR: MOHAMMED QATAMI

CALCULATED-DESIGNED BY: KEVIN MURAI

CHECKED BY: HASSAN TAHA

REVISED BY

DATE REVISED

LAST REVISION 06-04-13

DATE PLOTTED => 18-OCT-2013

TIME PLOTTED => 08:11

| Dist | COUNTY | ROUTE | POST MILES TOTAL PROJECT | SHEET No. | TOTAL SHEETS |
|---|---|---|---|---|---|
| 06 | Mad | 99 | 20.2/22.7 | 32 | 76 |

REGISTERED CIVIL ENGINEER 06-04-13 DATE

7-15-13
PLANS APPROVAL DATE

REGISTERED PROFESSIONAL ENGINEER KEVIN H. MURAI No. 59586 Exp. 12/31/13 CIVIL STATE OF CALIFORNIA

*THE STATE OF CALIFORNIA OR ITS OFFICERS OR AGENTS SHALL NOT BE RESPONSIBLE FOR THE ACCURACY OR COMPLETENESS OF SCANNED COPIES OF THIS PLAN SHEET.*

## ABBREVIATION:

ES EDGE OF SHOULDER
ETW EDGE OF TRAVEL WAY
LL LANE LINE
MGS MIDWEST GUARDRAIL SYSTEM
TBB THRIE BEAM BARRIER

## NOTES:

1. BASE PLATE ELEVATIONS TO BE SET IN THE FIELD TO PROVIDE A VERTICAL CLEARANCE OF 18' MINIMUM FROM EITHER BOTTOM OF SIGN OR LIGHT FIXTURE MOUNTING BRACKETS TO ETW.
2. CONTRACTOR SHALL VERIFY ALL FIELD CONTROLLING DIMENSIONS BEFORE ORDERING OR FABRICATING ANY MATERIAL.

LAMINATED PANEL TYPE A

120" PANEL DEPTH

16" UPPER CASE LETTERING
12" LOWER CASE LETTERING
12" CAPITALS
15" NUMBERS

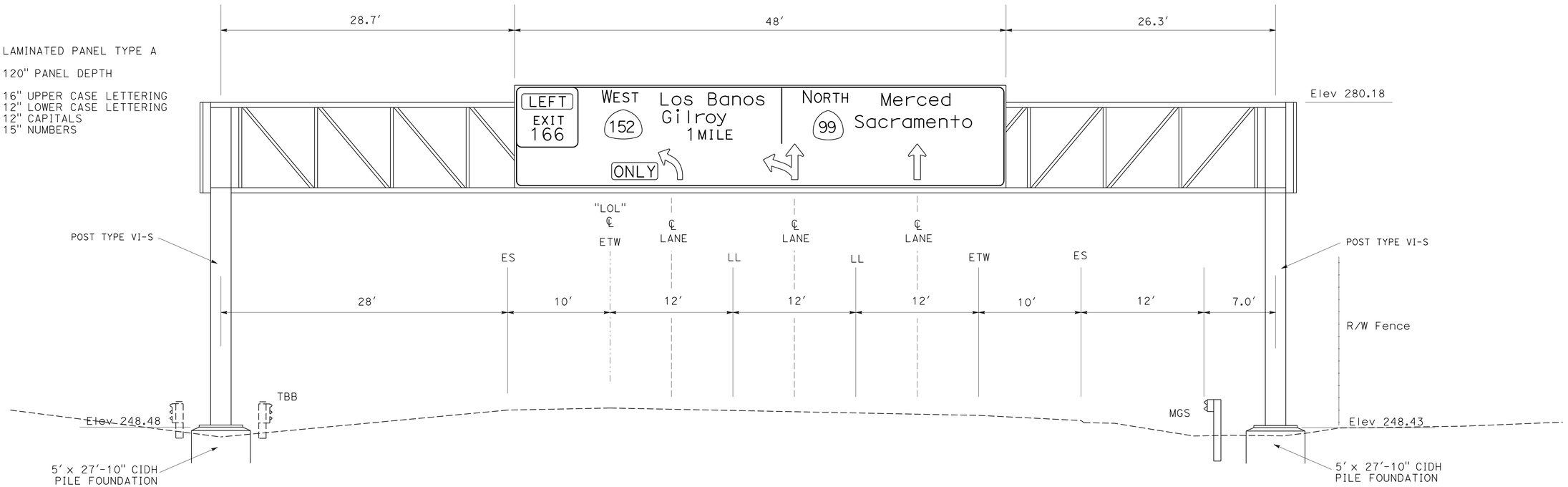


1-A / PD-1 **INSTALL FNBT AT Sta 510+65 "LOL" LINE ROUTE 99**
(ILLUMINATION REQUIRED)

# SIGN DETAIL

NO SCALE **SD-5**

STATE OF CALIFORNIA - DEPARTMENT OF TRANSPORTATION
Caltrans® **TRAFFIC DESIGN**

FUNCTIONAL SUPERVISOR: MOHAMMED QATAMI
CALCULATED-DESIGNED BY: KEVIN MURAI
CHECKED BY: HASSAN TAHA
REVISED BY: KHM
DATE REVISED: 8/23/13

LAST REVISION 06-04-13
DATE PLOTTED => 18-OCT-2013
TIME PLOTTED => 08:11

| Dist | COUNTY | ROUTE | POST MILES TOTAL PROJECT | SHEET No. | TOTAL SHEETS |
|---|---|---|---|---|---|
| 06 | Mad | 99 | 20.2/22.7 | 33 | 76 |

REGISTERED CIVIL ENGINEER 06-04-13 DATE

7-15-13
PLANS APPROVAL DATE

REGISTERED PROFESSIONAL ENGINEER
KEVIN H. MURAI
No. 59586
Exp. 12/31/13
CIVIL
STATE OF CALIFORNIA

*THE STATE OF CALIFORNIA OR ITS OFFICERS OR AGENTS SHALL NOT BE RESPONSIBLE FOR THE ACCURACY OR COMPLETENESS OF SCANNED COPIES OF THIS PLAN SHEET.*

LAMINATED PANEL TYPE A

16" UPPER CASE LETTERING
12" LOWER CASE LETTERING
12" CAPITALS

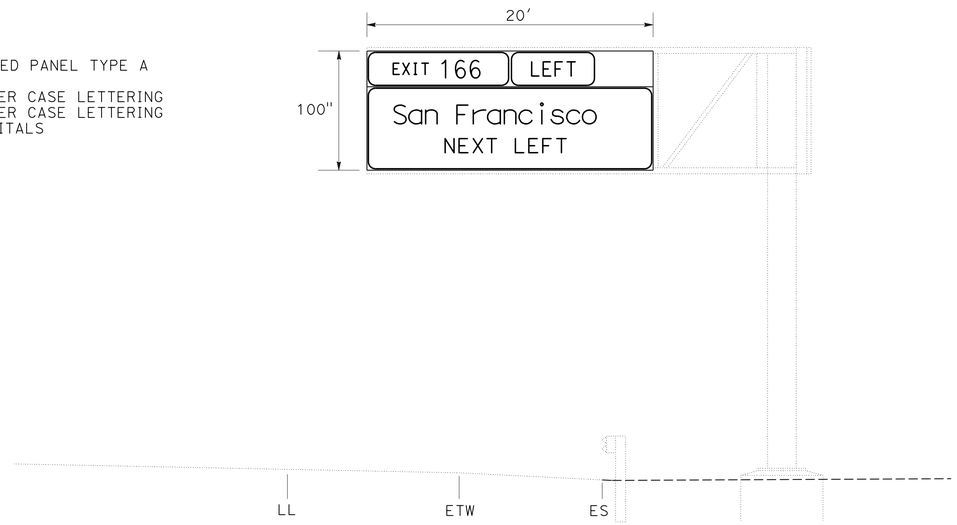


2-B
PD-2

## REPLACE SIGN PANEL

Sta 523+85 "LOL" LINE ROUTE 99

# SIGN DETAIL

NO SCALE **SD-6**

STATE OF CALIFORNIA - DEPARTMENT OF TRANSPORTATION
Caltrans
TRAFFIC DESIGN

FUNCTIONAL SUPERVISOR: MOHAMMED QATAMI
CALCULATED-DESIGNED BY: KEVIN MURAI
CHECKED BY: HASSAN TAHA
REVISED BY
DATE REVISED

LAST REVISION 06-04-13
DATE PLOTTED => 18-OCT-2013
TIME PLOTTED => 08:11

| Dist | COUNTY | ROUTE | POST MILES TOTAL PROJECT | SHEET No. | TOTAL SHEETS |
|---|---|---|---|---|---|
| 06 | Mad | 99 | 20.2/22.7 | 34 | 76 |

REGISTERED CIVIL ENGINEER 06-19-13 DATE

7-15-13
PLANS APPROVAL DATE

REGISTERED PROFESSIONAL ENGINEER KEVIN H. MURAI No. 59586 Exp. 12/31/13 CIVIL STATE OF CALIFORNIA

*THE STATE OF CALIFORNIA OR ITS OFFICERS OR AGENTS SHALL NOT BE RESPONSIBLE FOR THE ACCURACY OR COMPLETENESS OF SCANNED COPIES OF THIS PLAN SHEET.*

LAMINATED PANEL TYPE A

120" PANEL DEPTH

16" UPPER CASE LETTERING
12" LOWER CASE LETTERING

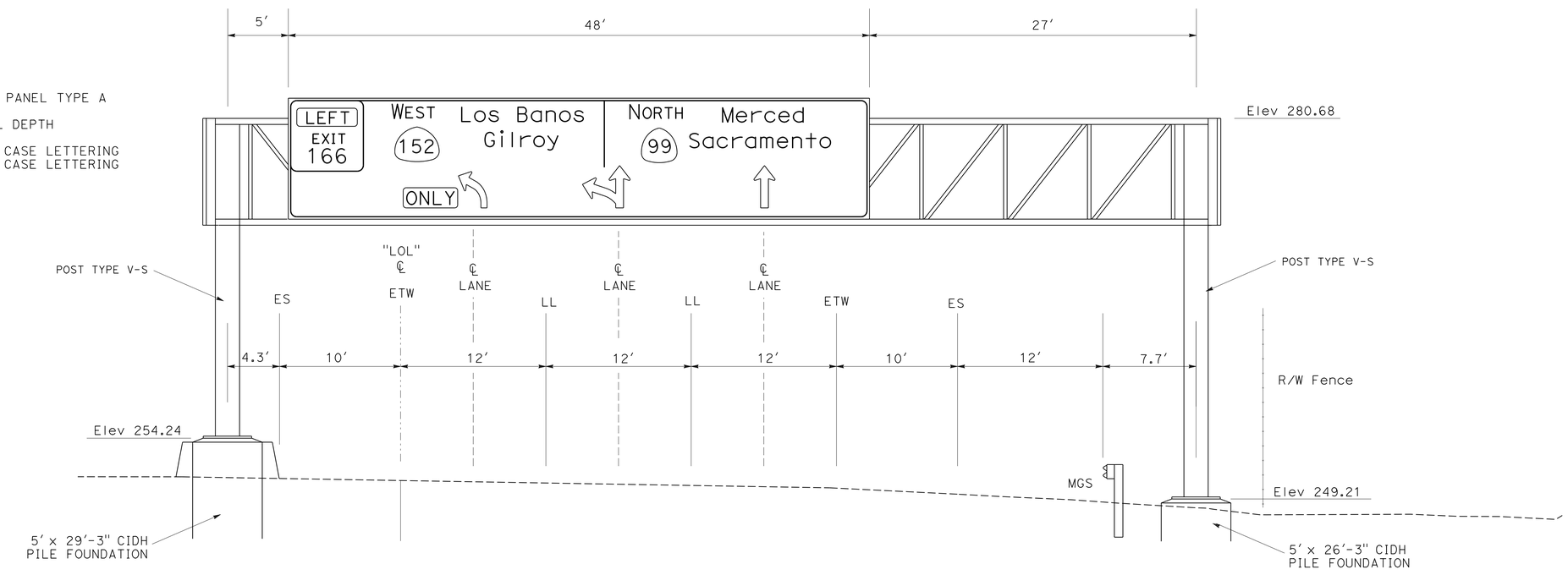


2-D
PD-2

## INSTALL FNBT AT Sta 533+00 "LOL" LINE ROUTE 99

(ILLUMINATION REQUIRED)

# SIGN DETAIL

NO SCALE **SD-7**

STATE OF CALIFORNIA - DEPARTMENT OF TRANSPORTATION
Caltrans® **TRAFFIC DESIGN**

FUNCTIONAL SUPERVISOR: MOHAMMED QATAMI

CALCULATED-DESIGNED BY: KEVIN MURAI
CHECKED BY: HASSAN TAHA

REVISED BY: KHM
DATE REVISED: 8/23/13

LAST REVISION 06-19-13
DATE PLOTTED => 18-OCT-2013
TIME PLOTTED => 08:11

| Dist | COUNTY | ROUTE | POST MILES TOTAL PROJECT | SHEET No. | TOTAL SHEETS |
|---|---|---|---|---|---|
| 06 | Mad | 99 | 20.2/22.7 | 35 | 76 |

REGISTERED CIVIL ENGINEER 06-19-13 DATE

7-15-13
PLANS APPROVAL DATE

REGISTERED PROFESSIONAL ENGINEER KEVIN H. MURAI No. 59586 Exp. 12/31/13 CIVIL STATE OF CALIFORNIA

*THE STATE OF CALIFORNIA OR ITS OFFICERS OR AGENTS SHALL NOT BE RESPONSIBLE FOR THE ACCURACY OR COMPLETENESS OF SCANNED COPIES OF THIS PLAN SHEET.*

LAMINATED PANEL TYPE A

120" PANEL DEPTH

16" UPPER CASE LETTERING
12" LOWER CASE LETTERING

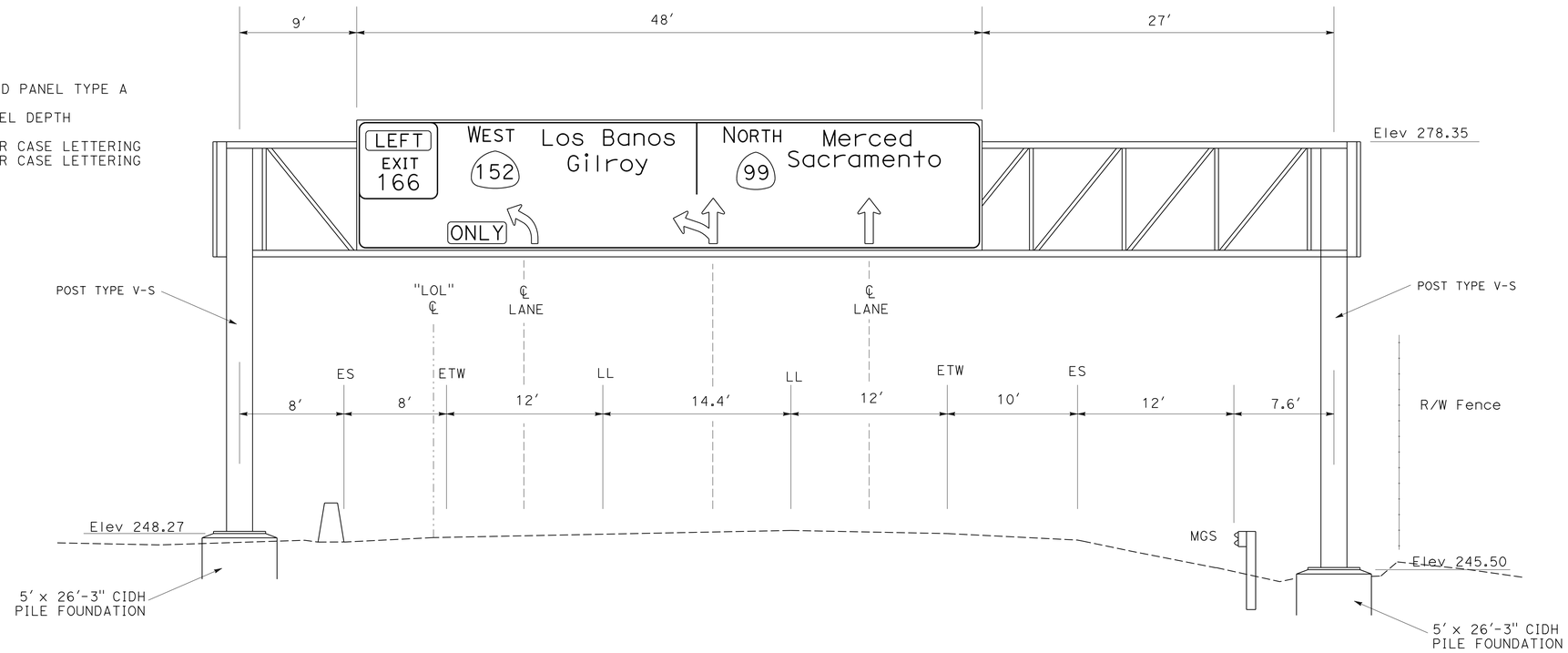


4-A
PD-4

## INSTALL FNBT AT Sta 554+71 "LOL" LINE ROUTE 99

(ILLUMINATION REQUIRED)

# SIGN DETAIL

NO SCALE **SD-8**

| REVISED BY | DATE REVISED |
|---|---|
| KHM | 8/23/13 |

KEVIN MURAI — HASSAN TAHA

CALCULATED-DESIGNED BY — CHECKED BY

FUNCTIONAL SUPERVISOR: MOHAMMED QATAMI

STATE OF CALIFORNIA - DEPARTMENT OF TRANSPORTATION
Caltrans
TRAFFIC DESIGN

LAST REVISION 06-19-13 | DATE PLOTTED => 18-OCT-2013 | TIME PLOTTED => 08:11

| Dist | COUNTY | ROUTE | POST MILES TOTAL PROJECT | SHEET No. | TOTAL SHEETS |
|---|---|---|---|---|---|
| 06 | Mad | 99 | 20.2/22.7 | 36 | 76 |

Eric Olson 7-15-13
REGISTERED CIVIL ENGINEER DATE

7-15-13
PLANS APPROVAL DATE

REGISTERED PROFESSIONAL ENGINEER ERIC H. OLSON No. 60801 Exp. 12/31/14 CIVIL STATE OF CALIFORNIA

*THE STATE OF CALIFORNIA OR ITS OFFICERS OR AGENTS SHALL NOT BE RESPONSIBLE FOR THE ACCURACY OR COMPLETENESS OF SCANNED COPIES OF THIS PLAN SHEET.*

## THRIE BEAM BARRIER, MIDWEST GUARDRAIL, AND CONCRETE BARRIER

| LOCATION | DOUBLE THRIE BEAM BARRIER (STEEL POST) | SINGLE THRIE BEAM BARRIER (STEEL POST) | CONCRETE BARRIER (TYPE 60) | CONCRETE BARRIER (TYPE 60C) | CONCRETE BARRIER (TYPE 60F) | REMOVE CONCRETE BARRIER | MIDWEST GUARDRAIL SYSTEM (STEEL POST) | END ANCHOR ASSEMBLY (TYPE SFT) | ALTERNATIVE FLARED TERMINAL SYSTEM | SALVAGE GUARDRAIL | TREATED WOOD WASTE | REMOVE CRASH CUSHION | VEGETATION CONTROL (ASPHALT COMPOSITE) |
|---|---|---|---|---|---|---|---|---|---|---|---|---|---|
| | LF | LF | LF | LF | LF | LF | LF | EA | EA | LF | LB | EA | SQYD |
| Sta 429+64 TO Sta 464+80 | 3516 | | | | | | | | | | | 1 | |
| Sta 464+80 TO Sta 466+98 | | 436 | | | | | | | | | | | |
| Sta 466+98 TO Sta 505+78 | 3880 | | | | | | | | | | | 1 | |
| Sta 509+91 TO Sta 511+39 | | 296 | | | | | | | | | | | |
| Sta 531+71.5 TO Sta 532+35.6 | | | | 64.1 | | | | | | | | | |
| Sta 532+35.6 TO Sta 533+64.5 | | | | | 128.9 | | | | | | | | |
| Sta 533+64.5 TO Sta 534+18.4 | | | | 53.9 | | | | | | | | | |
| Sta 553+43.8 TO Sta 563+56.4 | | | 1012.6 | | | | | | | | | | |
| Sta 553+43.8 TO Sta 555+22.9 | | | | | | 179.1 | | | | | | | |
| Sta 464+79 TO Sta 466+98 | | | | | | | | | | 400 | | | |
| Sta 510+65 | | | | | | | 37.5 | 1 | 1 | | | | |
| Sta 533+00 | | | | | | | 37.5 | 1 | 1 | 80 | | | |
| Sta 554+71 | | | | | | | 37.5 | 1 | 1 | | | | |
| Sta 557+88 | | | | | | | | | | 65 | 874 | | |
| Sta 561+95 TO Sta 563+57 | | | | | | | | | | 162 | 2059 | | |
| Sta 429+64 TO Sta 505+93 | | | | | | | | | | | | | 3390 |
| Sta 509+76 TO Sta 511+54 | | | | | | | | | | | | | 79 |
| TOTAL | 7396 | 732 | 1012.6 | 118 | 128.9 | 179.1 | 112.5 | 3 | 3 | 707 | 2933 | 2 | 3469 |

## ROADWAY QUANTITIES

| LOCATION | HMA (TYPE A) | AGGREGATE BASE (CLASS 2) | ROADWAY EXCAVATION | REMOVE AC pvmt | REMOVE AC DIKE | (N) REMOVE METAL PLATES | (N) EMBANKMENT |
|---|---|---|---|---|---|---|---|
| | TON | CY | CY | CY | LF | EA | CY |
| Sta 531+71.5 TO Sta 534+18.4 | 101 | 24 | 68 | | | | |
| Sta 553+43.8 TO Sta 563+56.4 | 225 | 58 | 96 | | | | 22 |
| Sta 553+45 | | | | 2.5 | | | |
| Sta 561+90 | | | | 6.5 | | | |
| Sta 556+85 TO Sta 559+87 | | | | | 302 | | |
| Sta 560+51 TO Sta 563+57 | | | | | 306 | | |
| Sta 553+45 | | | | | | 2 | |
| TYPICAL DI GRADING | | | 50 | | | | |
| TOTAL | 326 | 82 | 214 | 9 | 608 | | |

(N) NOT A SEPARATE PAY ITEM, FOR INFORMATION ONLY.

## DRAINAGE INLET

| LOCATION | TEMPORARY DRAINAGE INLET PROTECTION | TYPICAL DI GRADING * |
|---|---|---|
| | EA | CY |
| Sta 428+40 | 1 | |
| Sta 435+00 | 1 | 5 |
| Sta 441+60 | 1 | 5 |
| Sta 454+70 | 1 | 5 |
| Sta 463+10 | 1 | 5 |
| Sta 472+20 | 1 | 5 |
| Sta 476+95 | 1 | 5 |
| Sta 485+40 | 1 | 5 |
| Sta 492+70 | 1 | 5 |
| Sta 504+40 | 1 | 5 |
| Sta 509+80 | 1 | 5 |
| Sta 513+30 | 1 | |
| Sta 531+30 | 1 | |
| Sta 552+70 | 1 | |
| TOTAL | 14 | 50 |

* INCLUDED IN ROADWAY EXCAVATION IN ROADWAY QUANTITIES TABLE

# SUMMARY OF QUANTITIES

Q-1

STATE OF CALIFORNIA - DEPARTMENT OF TRANSPORTATION
Caltrans® DESIGN
FUNCTIONAL SUPERVISOR: DAVID FRANKE
CALCULATED-DESIGNED BY: GEORGE PANOS
CHECKED BY: ERIC OLSON
REVISED BY / DATE REVISED

LAST REVISION 07-14-13 DATE PLOTTED => 18-OCT-2013 TIME PLOTTED => 08:11

| Dist | COUNTY | ROUTE | POST MILES TOTAL PROJECT | SHEET No. | TOTAL SHEETS |
|---|---|---|---|---|---|
| 06 | Mad | 99 | 20.2/22.7 | 37 | 76 |

LICENSED LANDSCAPE ARCHITECT

7-15-13

PLANS APPROVAL DATE

LICENSED LANDSCAPE ARCHITECT MICHAEL W. MILLS No. 4779 Signature of Expiration 11/30/14 Renewal Date 06/12/13 Date STATE OF CALIFORNIA

*THE STATE OF CALIFORNIA OR ITS OFFICERS OR AGENTS SHALL NOT BE RESPONSIBLE FOR THE ACCURACY OR COMPLETENESS OF SCANNED COPIES OF THIS PLAN SHEET.*

## EROSION CONTROL TYPE 1

| SEQUENCE | ITEM | MATERIAL | | APPLICATION RATE | DEPTH |
|---|---|---|---|---|---|
| | | DESCRIPTION | TYPE | | |
| STEP 1 | COMPOST | COMPOST | FINE | 270 CY/ACRE | |
| STEP 2 | INCORPORATE MATERIALS | COMPOST | | | 12" |
| STEP 3 | DRILL SEED | SEED | MIX 1 | 97.8 LB/ACRE | |
| STEP 4 | HYDRO MULCH | FIBER | WOOD | 1,500 LB/ACRE | |
| | | TACKIFIER | GUAR | 125 LB/ACRE | |

## SEED MIX

| SEED | BOTANICAL NAME (COMMON NAME) | PERCENT GERMINATION (MINIMUM) | POUNDS PURE LIVE SEED PER ACRE (SLOPE MEASUREMENT) |
|---|---|---|---|
| MIX 1 | BROMUS CARINATUS (CALIFORNIA BROME) | 85 | 21.7 |
| | ELYMUS GLAUCUS BUCKLEY (BLUE WILDRYE) | 85 | 19.6 |
| | HORDEUM BRACHYANTHERUM (BARLEY) | 80 | 30.1 |
| | KOELERIA MACRANTHA (JUNEGRASS) | 60 | 1.3 |
| | MELICA IMPERFECTA (Melic) | 70 | 1.8 |
| | NASSELLA PULCHRA (PURPLE NEEDLEGRASS) | 75 | 23.3 |

# EROSION CONTROL LEGEND

# ECL-1

STATE OF CALIFORNIA - DEPARTMENT OF TRANSPORTATION

Caltrans® LANDSCAPE ARCHITECTURE

SENIOR LANDSCAPE ARCHITECT: BRAD COLE

CALCULATED-DESIGNED BY: CHARLES LaRUE

CHECKED BY: MIKE MILLS

REVISED BY

DATE REVISED

LAST REVISION 07-14-13

DATE PLOTTED => 18-OCT-2013

TIME PLOTTED => 08:11

| Dist | COUNTY | ROUTE | POST MILES TOTAL PROJECT | SHEET No. | TOTAL SHEETS |
|---|---|---|---|---|---|
| 06 | Mad | 99 | 20.2/22.7 | 38 | 76 |

LICENSED LANDSCAPE ARCHITECT

7-15-13
PLANS APPROVAL DATE

*THE STATE OF CALIFORNIA OR ITS OFFICERS OR AGENTS SHALL NOT BE RESPONSIBLE FOR THE ACCURACY OR COMPLETENESS OF SCANNED COPIES OF THIS PLAN SHEET.*

LICENSED LANDSCAPE ARCHITECT
MICHAEL W. MILLS No. 4770
Signature
11/30/14
Renewal Date
09/26/13
Date
STATE OF CALIFORNIA

## NOTES:

1. FOR ACCURATE RIGHT OF WAY DATA, CONTACT RIGHT OF WAY ENGINEERING AT THE DISTRICT OFFICE.
2. LAYOUT LINES AND STATIONS ARE FOR CONSTRUCTION PURPOSES ONLY.

## LEGEND:

EROSION CONTROL TYPE 1

TFESA — TEMPORARY FENCE (TYPE ESA)

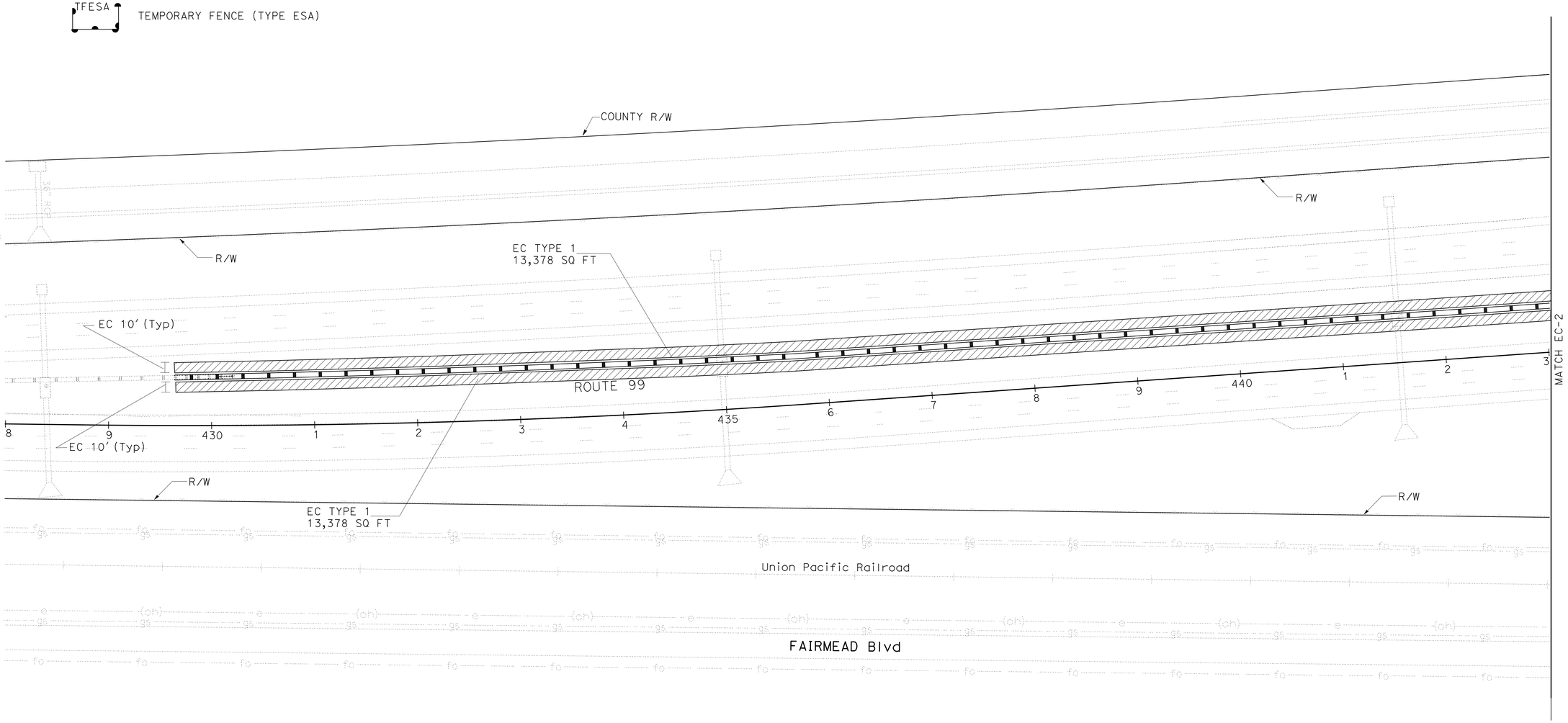


*APPROVED FOR EROSION CONTROL WORK ONLY*

# EROSION CONTROL PLAN

SCALE:1"=50'

**EC-1**

| REVISED BY | DATE REVISED |
|---|---|
| CHARLES LaRUE | MIKE MILLS |
| CALCULATED-DESIGNED BY | CHECKED BY |
| SENIOR LANDSCAPE ARCHITECT | BRAD COLE |

STATE OF CALIFORNIA - DEPARTMENT OF TRANSPORTATION
Caltrans® LANDSCAPE ARCHITECTURE

LAST REVISION 07-14-13
DATE PLOTTED => 18-OCT-2013
TIME PLOTTED => 08:11

| Dist | COUNTY | ROUTE | POST MILES TOTAL PROJECT | SHEET No. | TOTAL SHEETS |
|---|---|---|---|---|---|
| 06 | Mad | 99 | 20.2/22.7 | 39 | 76 |

LICENSED LANDSCAPE ARCHITECT

7-15-13

PLANS APPROVAL DATE

LICENSED LANDSCAPE ARCHITECT MICHAEL W. MILLS No. 4770 Signature of Renewal Date 11/30/14 09/26/13 Date STATE OF CALIFORNIA

*THE STATE OF CALIFORNIA OR ITS OFFICERS OR AGENTS SHALL NOT BE RESPONSIBLE FOR THE ACCURACY OR COMPLETENESS OF SCANNED COPIES OF THIS PLAN SHEET.*

## NOTES:

1. FOR ACCURATE RIGHT OF WAY DATA, CONTACT RIGHT OF WAY ENGINEERING AT THE DISTRICT OFFICE.

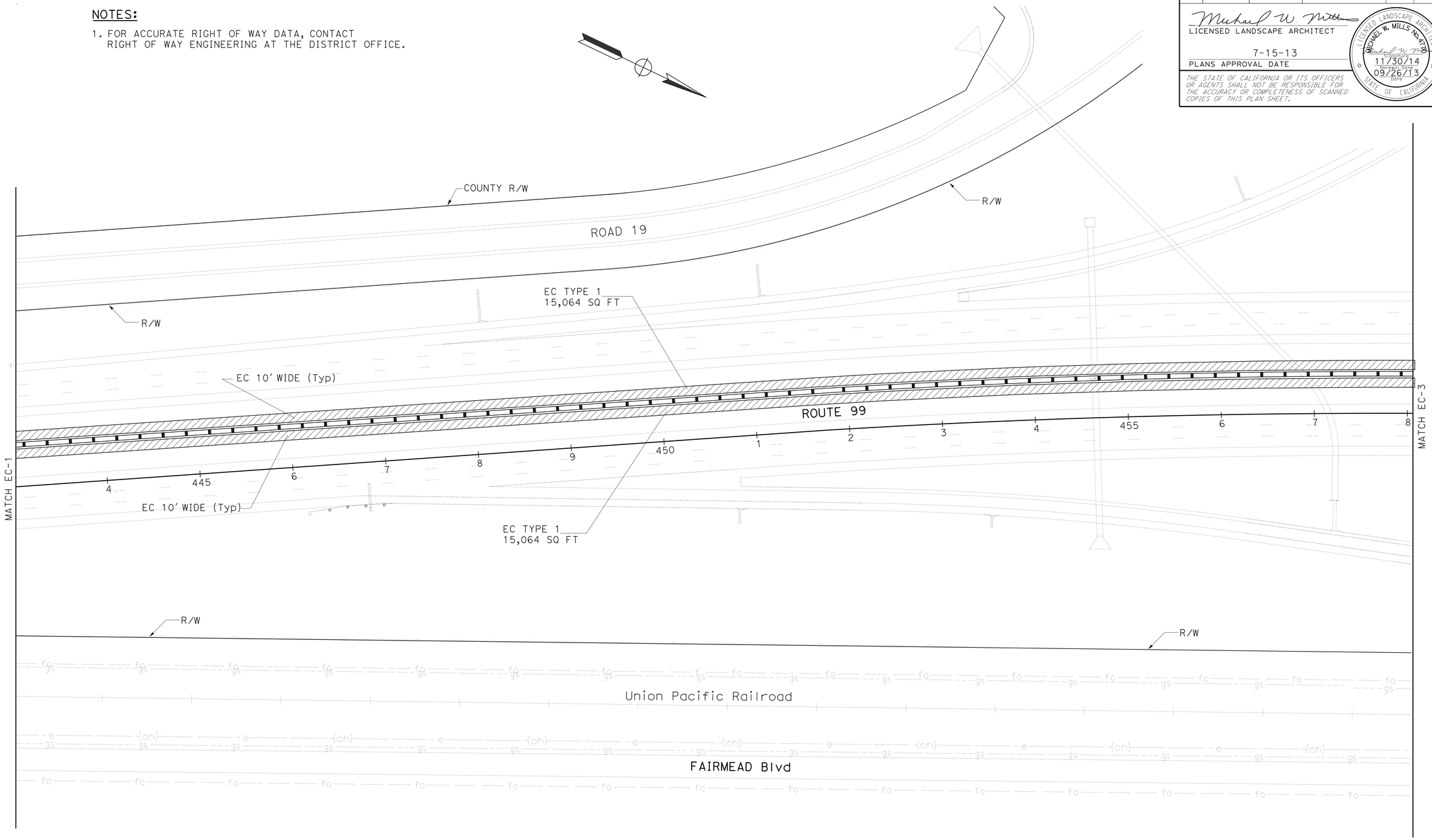


*APPROVED FOR EROSION CONTROL WORK ONLY*

# EROSION CONTROL PLAN

SCALE:1"=50'

**EC-2**

STATE OF CALIFORNIA - DEPARTMENT OF TRANSPORTATION

Caltrans® LANDSCAPE ARCHITECTURE

SENIOR LANDSCAPE ARCHITECT: BRAD COLE

CALCULATED-DESIGNED BY: CHARLES LaRUE

CHECKED BY: MIKE MILLS

REVISED BY

DATE REVISED

LAST REVISION 07-14-13

DATE PLOTTED => 18-OCT-2013

TIME PLOTTED => 08:11

| Dist | COUNTY | ROUTE | POST MILES TOTAL PROJECT | SHEET No. | TOTAL SHEETS |
|---|---|---|---|---|---|
| 06 | Mad | 99 | 20.2/22.7 | 40 | 76 |

LICENSED LANDSCAPE ARCHITECT

7-15-13
PLANS APPROVAL DATE

LICENSED LANDSCAPE ARCHITECT
MICHAEL W. MILLS No. 4770
Signature
11/30/14
Renewal Date
09/26/13
Date
STATE OF CALIFORNIA

*THE STATE OF CALIFORNIA OR ITS OFFICERS OR AGENTS SHALL NOT BE RESPONSIBLE FOR THE ACCURACY OR COMPLETENESS OF SCANNED COPIES OF THIS PLAN SHEET.*

**NOTES:**

1. FOR ACCURATE RIGHT OF WAY DATA, CONTACT RIGHT OF WAY ENGINEERING AT THE DISTRICT OFFICE.

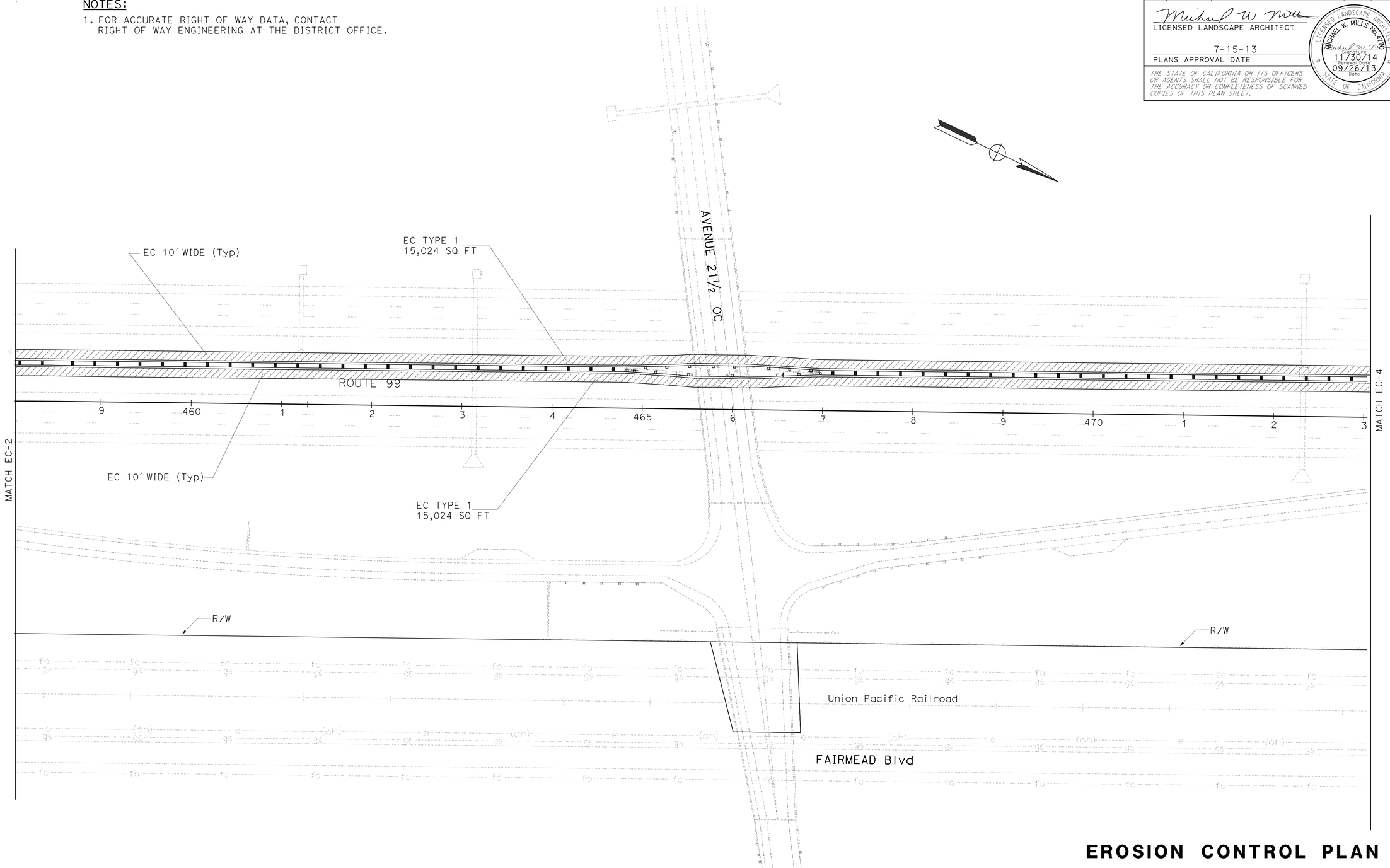


*APPROVED FOR EROSION CONTROL WORK ONLY*

# EROSION CONTROL PLAN

SCALE:1"=50'

**EC-3**

| REVISED BY | DATE REVISED |
|---|---|
| | |

| CALCULATED-DESIGNED BY | CHECKED BY |
|---|---|
| CHARLES LaRUE | MIKE MILLS |

SENIOR LANDSCAPE ARCHITECT
BRAD COLE

STATE OF CALIFORNIA - DEPARTMENT OF TRANSPORTATION
Caltrans® LANDSCAPE ARCHITECTURE

LAST REVISION 07-14-13
DATE PLOTTED => 18-OCT-2013
TIME PLOTTED => 08:11

| Dist | COUNTY | ROUTE | POST MILES TOTAL PROJECT | SHEET No. | TOTAL SHEETS |
|---|---|---|---|---|---|
| 06 | Mad | 99 | 20.2/22.7 | 41 | 76 |

LICENSED LANDSCAPE ARCHITECT

7-15-13

PLANS APPROVAL DATE

LICENSED LANDSCAPE ARCHITECT MICHAEL W. MILLS No. 4170 Signature 11/30/14 Renewal Date 09/26/13 Date STATE OF CALIFORNIA

*THE STATE OF CALIFORNIA OR ITS OFFICERS OR AGENTS SHALL NOT BE RESPONSIBLE FOR THE ACCURACY OR COMPLETENESS OF SCANNED COPIES OF THIS PLAN SHEET.*

**NOTES:**

1. FOR ACCURATE RIGHT OF WAY DATA, CONTACT RIGHT OF WAY ENGINEERING AT THE DISTRICT OFFICE.

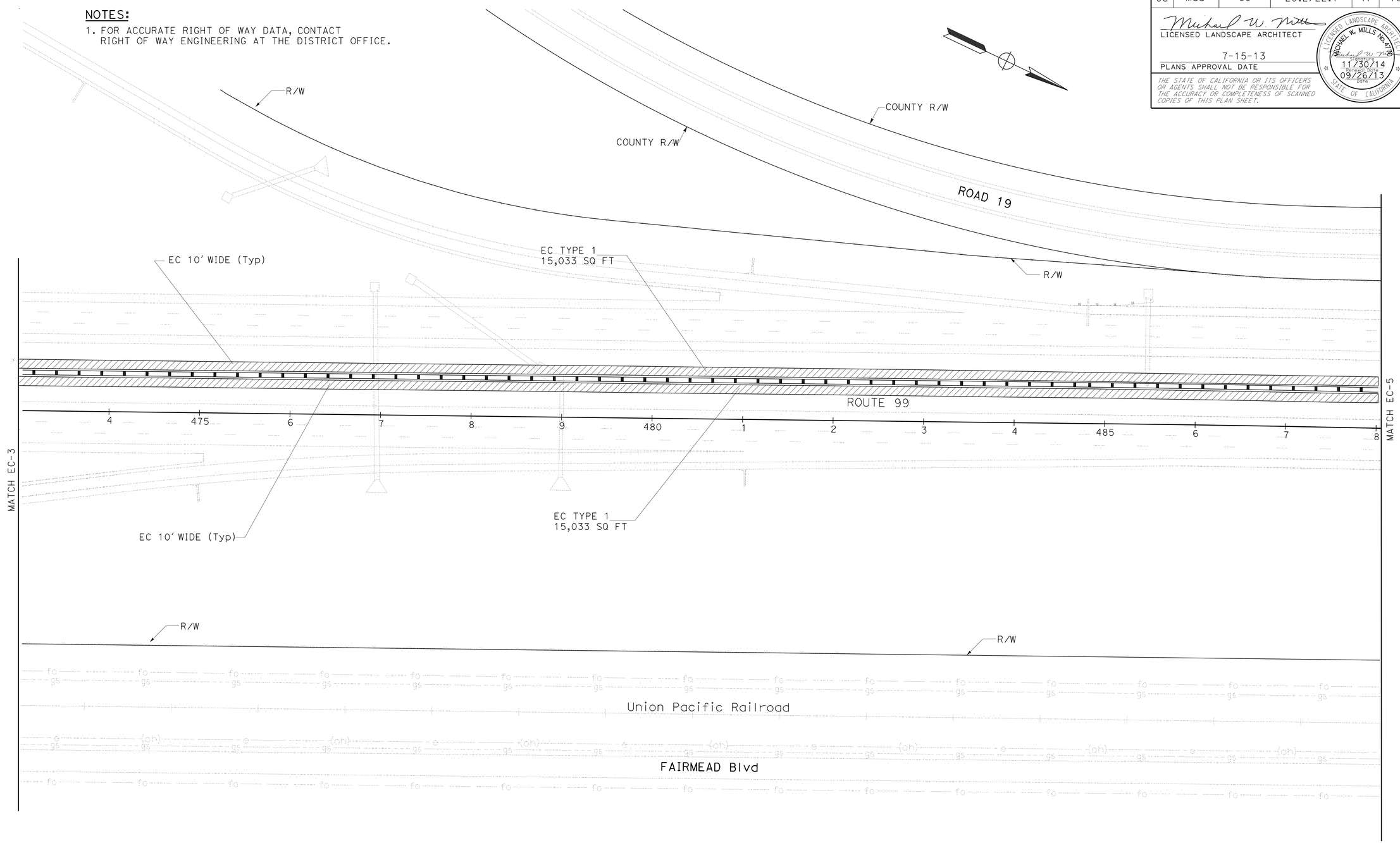


*APPROVED FOR EROSION CONTROL WORK ONLY*

# EROSION CONTROL PLAN

SCALE:1"=50'

**EC-4**

STATE OF CALIFORNIA - DEPARTMENT OF TRANSPORTATION

Caltrans® LANDSCAPE ARCHITECTURE

SENIOR LANDSCAPE ARCHITECT: BRAD COLE

CALCULATED-DESIGNED BY: CHARLES LaRUE

CHECKED BY: MIKE MILLS

REVISED BY / DATE REVISED

LAST REVISION 07-14-13

DATE PLOTTED => 18-OCT-2013

TIME PLOTTED => 08:11

| Dist | COUNTY | ROUTE | POST MILES TOTAL PROJECT | SHEET No. | TOTAL SHEETS |
|---|---|---|---|---|---|
| 06 | Mad | 99 | 20.2/22.7 | 42 | 76 |

LICENSED LANDSCAPE ARCHITECT

7-15-13
PLANS APPROVAL DATE

LICENSED LANDSCAPE ARCHITECT
MICHAEL W. MILLS No. 4780
Expiration Date
11/30/14
Renewal Date
09/26/13
Date
STATE OF CALIFORNIA

*THE STATE OF CALIFORNIA OR ITS OFFICERS OR AGENTS SHALL NOT BE RESPONSIBLE FOR THE ACCURACY OR COMPLETENESS OF SCANNED COPIES OF THIS PLAN SHEET.*

**NOTES:**

1. FOR ACCURATE RIGHT OF WAY DATA, CONTACT RIGHT OF WAY ENGINEERING AT THE DISTRICT OFFICE.

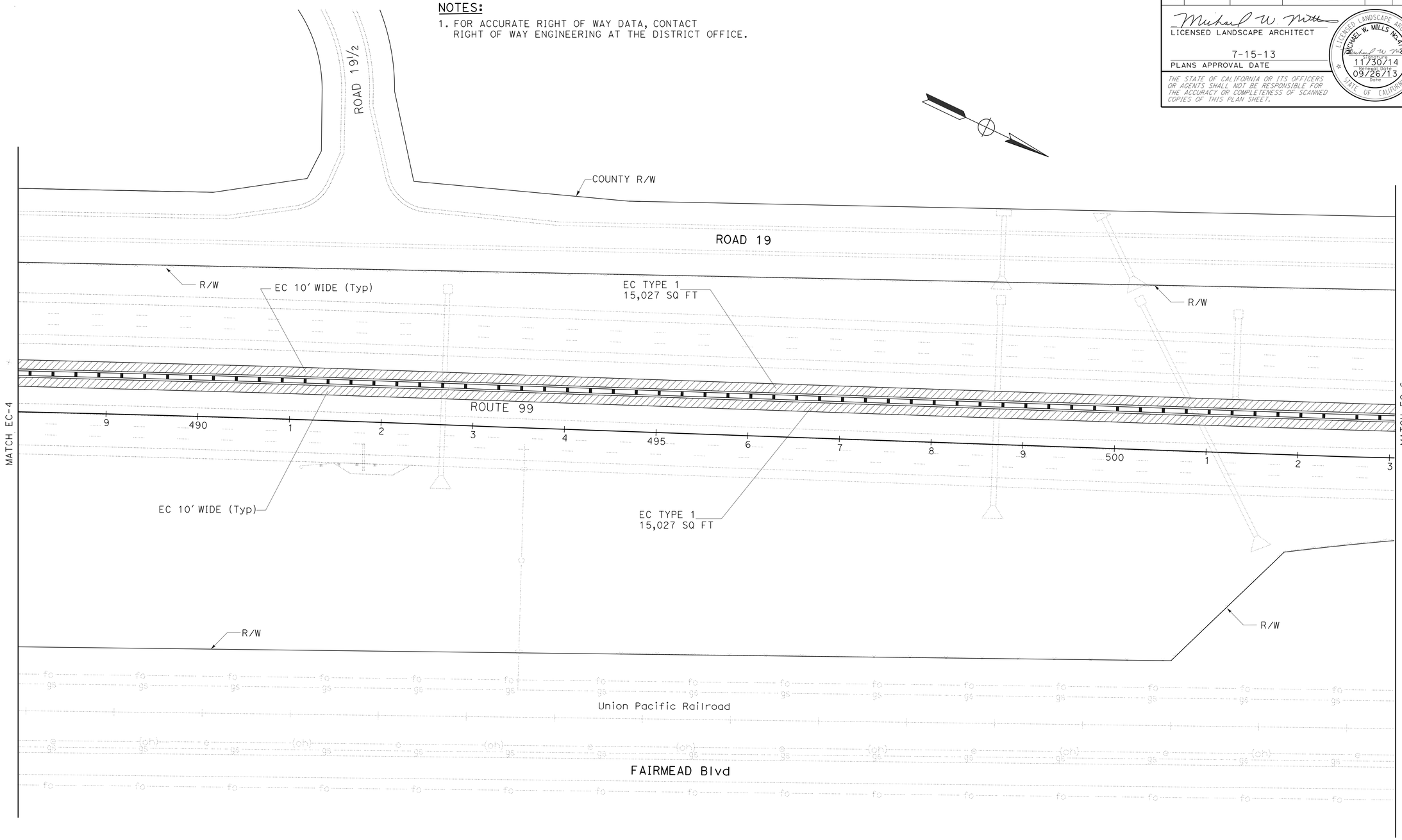


*APPROVED FOR EROSION CONTROL WORK ONLY*

# EROSION CONTROL PLAN

SCALE:1"=50'

**EC-5**

| REVISED BY | DATE REVISED |
|---|---|
| | |

CHARLES LaRUE — MIKE MILLS
CALCULATED-DESIGNED BY — CHECKED BY
SENIOR LANDSCAPE ARCHITECT — BRAD COLE

STATE OF CALIFORNIA - DEPARTMENT OF TRANSPORTATION
Caltrans® LANDSCAPE ARCHITECTURE

LAST REVISION 07-14-13
DATE PLOTTED => 18-OCT-2013
TIME PLOTTED => 08:11

| Dist | COUNTY | ROUTE | POST MILES TOTAL PROJECT | SHEET No. | TOTAL SHEETS |
|---|---|---|---|---|---|
| 06 | Mad | 99 | 20.2/22.7 | 43 | 76 |

LICENSED LANDSCAPE ARCHITECT

7-15-13
PLANS APPROVAL DATE

LICENSED LANDSCAPE ARCHITECT
MICHAEL W. MILLS No. 4170
Expiration Date 11/30/14
Renewal Date 06/12/13
Date
STATE OF CALIFORNIA

*THE STATE OF CALIFORNIA OR ITS OFFICERS OR AGENTS SHALL NOT BE RESPONSIBLE FOR THE ACCURACY OR COMPLETENESS OF SCANNED COPIES OF THIS PLAN SHEET.*

**NOTES:**

1. FOR ACCURATE RIGHT OF WAY DATA, CONTACT RIGHT OF WAY ENGINEERING AT THE DISTRICT OFFICE.

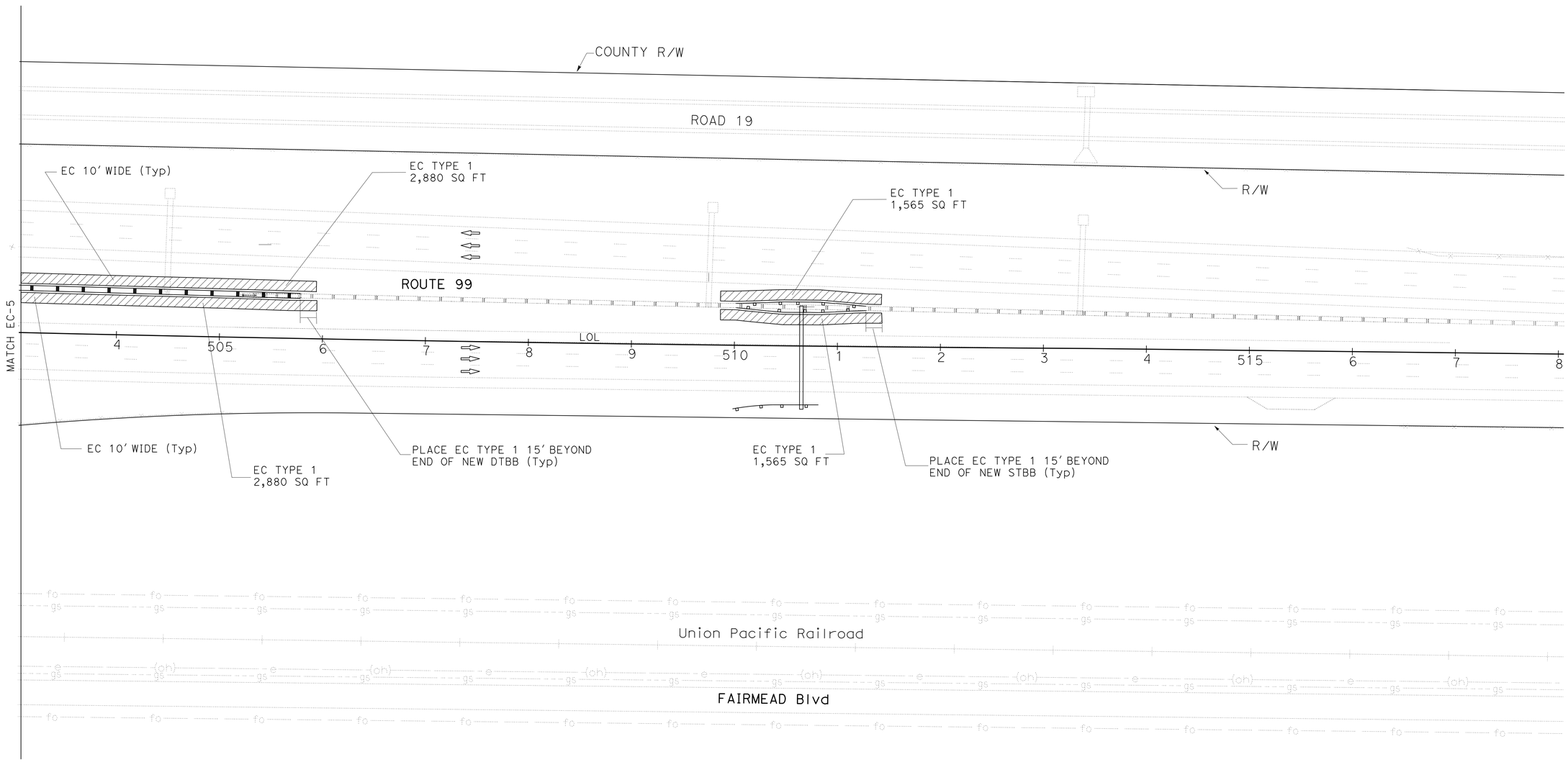


*APPROVED FOR EROSION CONTROL WORK ONLY*

# EROSION CONTROL PLAN

SCALE:1"=50'

**EC-6**

STATE OF CALIFORNIA - DEPARTMENT OF TRANSPORTATION
Caltrans® LANDSCAPE ARCHITECTURE

SENIOR LANDSCAPE ARCHITECT: BRAD COLE
CALCULATED-DESIGNED BY: CHARLES LaRUE
CHECKED BY: MIKE MILLS
REVISED BY
DATE REVISED

LAST REVISION 06-12-13
DATE PLOTTED => 18-OCT-2013
TIME PLOTTED => 08:11

| Dist | COUNTY | ROUTE | POST MILES TOTAL PROJECT | SHEET No. | TOTAL SHEETS |
|---|---|---|---|---|---|
| 06 | Mad | 99 | 20.2/22.7 | 44 | 76 |

LICENSED LANDSCAPE ARCHITECT

7-15-13

PLANS APPROVAL DATE

LICENSED LANDSCAPE ARCHITECT MICHAEL W. MILLS No. 4178 Expiration Date 11/30/14 Renewal Date 09/26/13 Date STATE OF CALIFORNIA

*THE STATE OF CALIFORNIA OR ITS OFFICERS OR AGENTS SHALL NOT BE RESPONSIBLE FOR THE ACCURACY OR COMPLETENESS OF SCANNED COPIES OF THIS PLAN SHEET.*

**NOTES:**

1. FOR ACCURATE RIGHT OF WAY DATA, CONTACT RIGHT OF WAY ENGINEERING AT THE DISTRICT OFFICE.

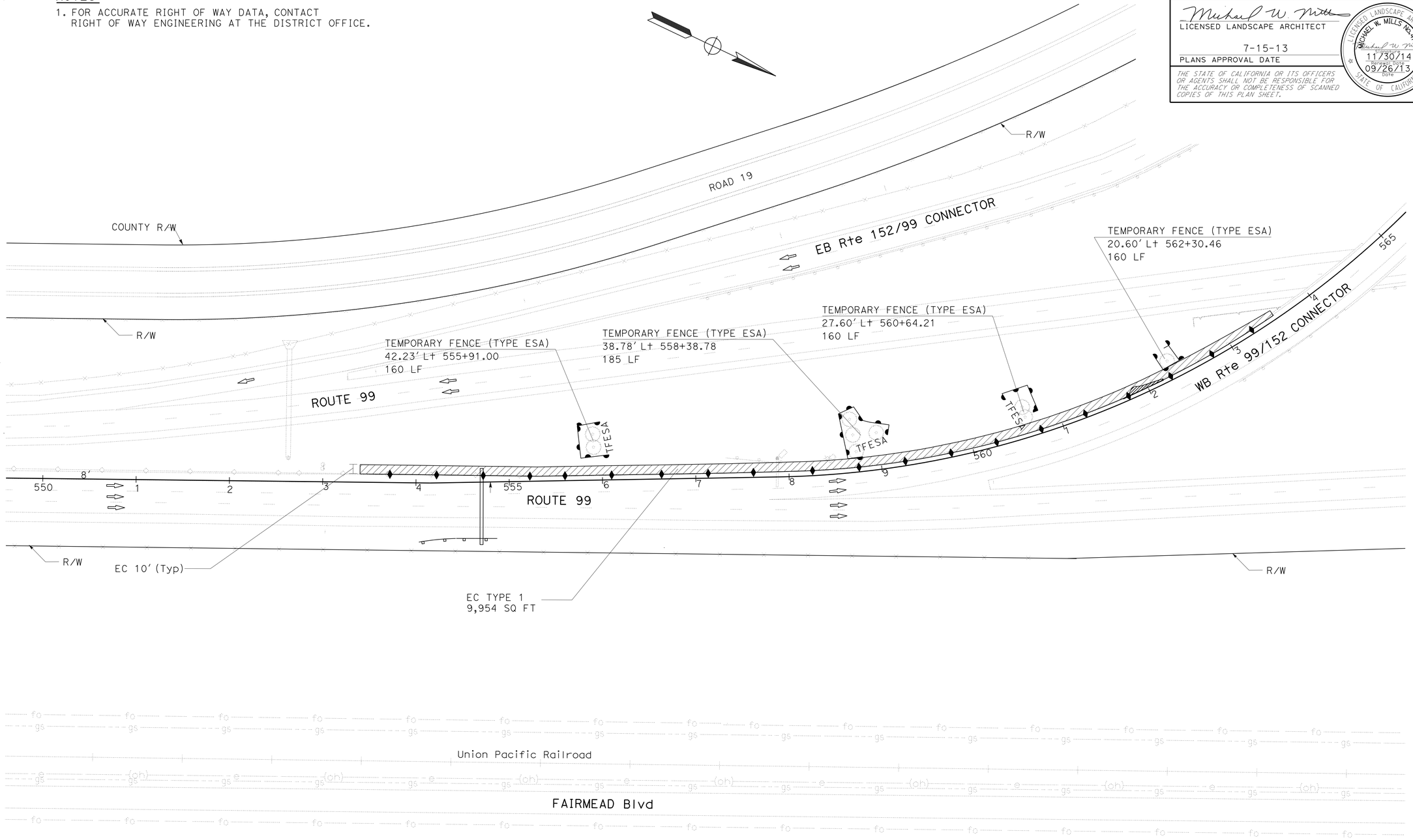


*APPROVED FOR EROSION CONTROL WORK ONLY*

# EROSION CONTROL PLAN

SCALE:1"=50'

**EC-7**

STATE OF CALIFORNIA - DEPARTMENT OF TRANSPORTATION

Caltrans® LANDSCAPE ARCHITECTURE

SENIOR LANDSCAPE ARCHITECT: BRAD COLE

CALCULATED-DESIGNED BY: CHARLES LaRUE

CHECKED BY: MIKE MILLS

REVISED BY / DATE REVISED

LAST REVISION 07-14-13

DATE PLOTTED => 18-OCT-2013

TIME PLOTTED => 08:11

| Dist | COUNTY | ROUTE | POST MILES TOTAL PROJECT | SHEET No. | TOTAL SHEETS |
|---|---|---|---|---|---|
| 06 | Mad | 99 | 20.2/22.7 | 45 | 76 |

LICENSED LANDSCAPE ARCHITECT

7-15-13

PLANS APPROVAL DATE

*THE STATE OF CALIFORNIA OR ITS OFFICERS OR AGENTS SHALL NOT BE RESPONSIBLE FOR THE ACCURACY OR COMPLETENESS OF SCANNED COPIES OF THIS PLAN SHEET.*

LICENSED LANDSCAPE ARCHITECT MICHAEL W. MILLS No. 4779 Signature 11/30/14 Renewal Date 09/26/13 Date STATE OF CALIFORNIA

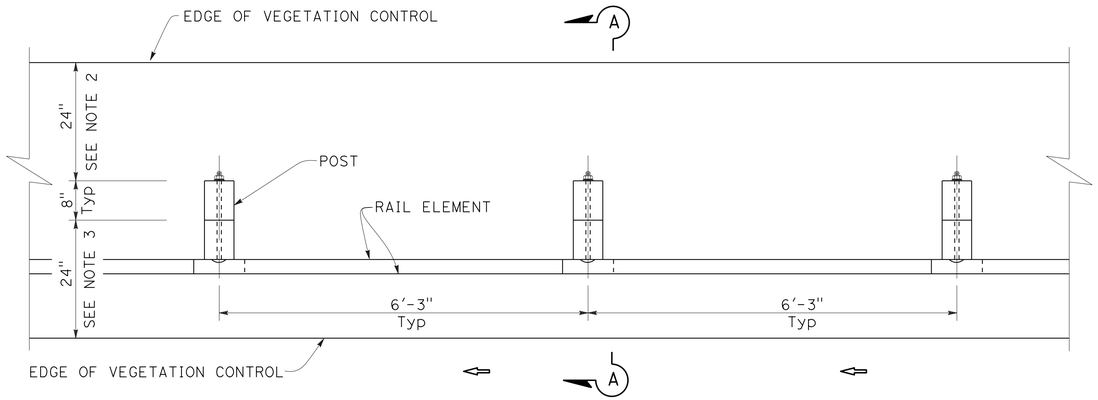


PLAN

## NOTES:

1. WHERE THE DISTANCE BETWEEN BACK OF POST AND HINGE POINT IS LESS THAN 24", VEGETATION CONTROL TO BE CONSTRUCTED 6" BEYOND THE HINGE POINT WITH THE EDGE KEYED IN.
2. WHERE CURB OR DIKE IS CONSTRUCTED UNDER RAILING, CONSTRUCT VEGETATION CONTROL TO BACK EDGE OF CURB OR DIKE. WHERE PAVED SHOULDER IS CONSTRUCTED WITHIN 24" IN FRONT OF THE POST, CONSTRUCT VEGETATION CONTROL TO THE EDGE OF PAVED SHOULDER.
3. FEATHER EDGE OF ASPHALT COMPOSITE TRANSITION UP POSTS AND BACK OF CURBS AND DIKES. TRANSITION LINE SHALL FORM A REASONABLY STRAIGHT LINE, HORIZONTALLY FROM POST TO POST OR ALONG TOP EDGE OF CURB OR DIKE.

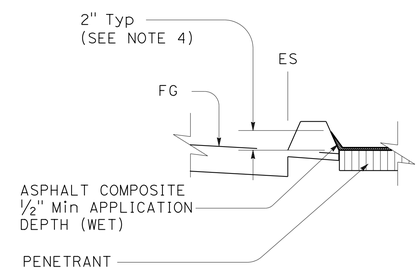


VEGETATION CONTROL AT CURB OR DIKE

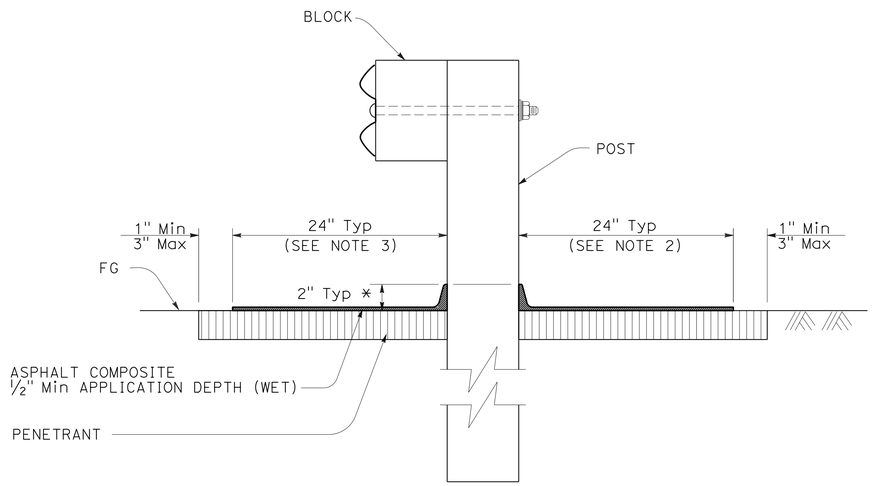


* (SEE NOTE 4)

SECTION A-A

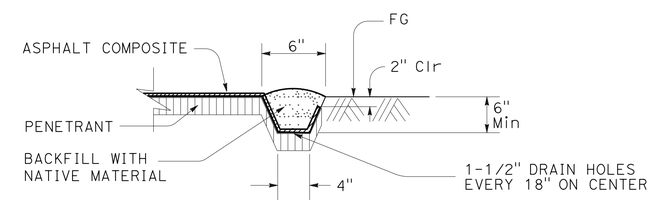


KEY EDGE

NO SCALE

# METAL BEAM GUARD RAILING
# VEGETATION CONTROL (ASPHALT COMPOSITE)
# STANDARD RAILING SECTION

# EROSION CONTROL DETAILS
# ECD-1

STATE OF CALIFORNIA - DEPARTMENT OF TRANSPORTATION
Caltrans® LANDSCAPE ARCHITECTURE

SENIOR LANDSCAPE ARCHITECT: BRAD COLE
CALCULATED-DESIGNED BY: CHARLES LaRUE
CHECKED BY: MIKE MILLS
REVISED BY
DATE REVISED

LAST REVISION 07-14-13
DATE PLOTTED => 18-OCT-2013
TIME PLOTTED => 08:11

| Dist | COUNTY | ROUTE | POST MILES TOTAL PROJECT | SHEET No. | TOTAL SHEETS |
|---|---|---|---|---|---|
| 06 | Mad | 99 | 20.2/22.7 | 46 | 76 |

LICENSED LANDSCAPE ARCHITECT

7-15-13

PLANS APPROVAL DATE

LICENSED LANDSCAPE ARCHITECT MICHAEL W. MILLS No. 4720 11/30/14 Renewal Date 09/26/13 Date STATE OF CALIFORNIA

*THE STATE OF CALIFORNIA OR ITS OFFICERS OR AGENTS SHALL NOT BE RESPONSIBLE FOR THE ACCURACY OR COMPLETENESS OF SCANNED COPIES OF THIS PLAN SHEET.*

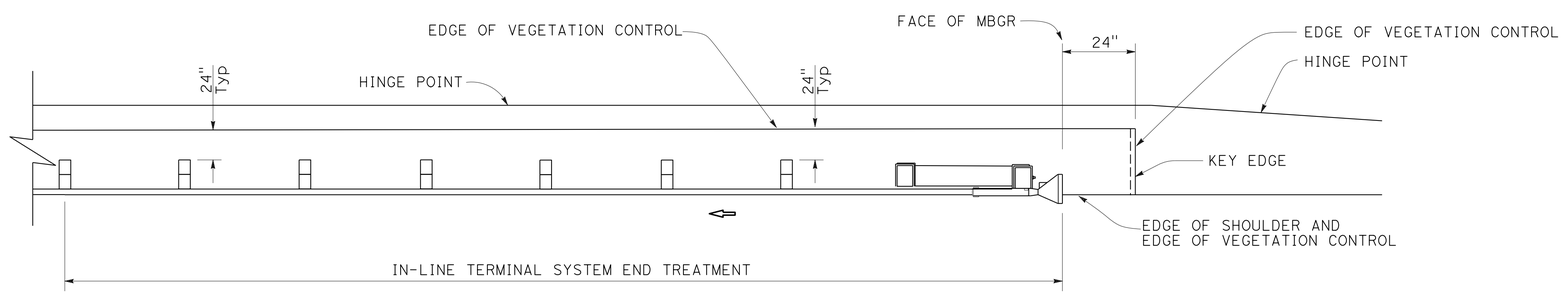


PLAN

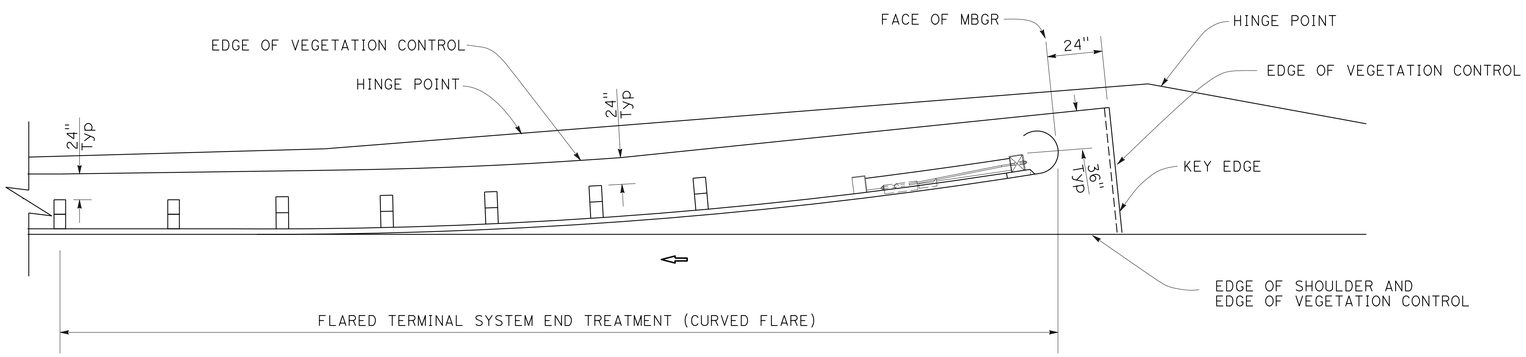


PLAN

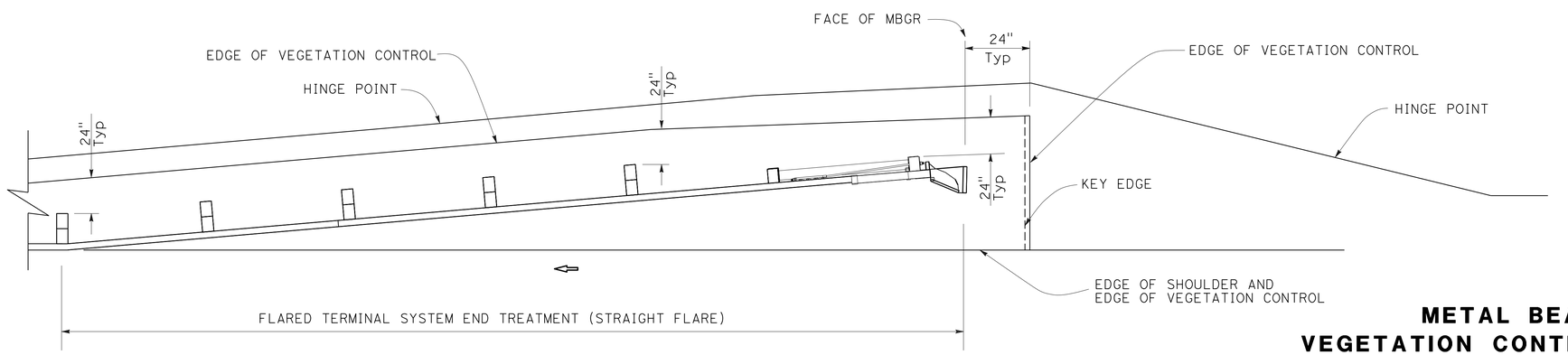


PLAN

# METAL BEAM GUARD RAILING
# VEGETATION CONTROL (ASPHALT COMPOSITE)
# FOR TERMINAL SYSTEM END TREATMENTS

NO SCALE

# EROSION CONTROL DETAILS
# ECD-2

| REVISED BY | DATE REVISED |
|---|---|
| | |

CHARLES LaRUE — MIKE MILLS

CALCULATED-DESIGNED BY — CHECKED BY

SENIOR LANDSCAPE ARCHITECT — BRAD COLE

STATE OF CALIFORNIA - DEPARTMENT OF TRANSPORTATION
Caltrans® LANDSCAPE ARCHITECTURE

LAST REVISION 07-14-13 | DATE PLOTTED => 18-OCT-2013 | TIME PLOTTED => 08:11

| Dist | COUNTY | ROUTE | POST MILES TOTAL PROJECT | SHEET No. | TOTAL SHEETS |
|---|---|---|---|---|---|
| 06 | Mad | 99 | 20.2/22.7 | 47 | 76 |

LICENSED LANDSCAPE ARCHITECT

7-15-13

PLANS APPROVAL DATE

LICENSED LANDSCAPE ARCHITECT MICHAEL W. MILLS No. 4779 STATE OF CALIFORNIA

Expiration Date 11/30/14

Renewal Date 09/26/13

DSPO

*THE STATE OF CALIFORNIA OR ITS OFFICERS OR AGENTS SHALL NOT BE RESPONSIBLE FOR THE ACCURACY OR COMPLETENESS OF SCANNED COPIES OF THIS PLAN SHEET.*

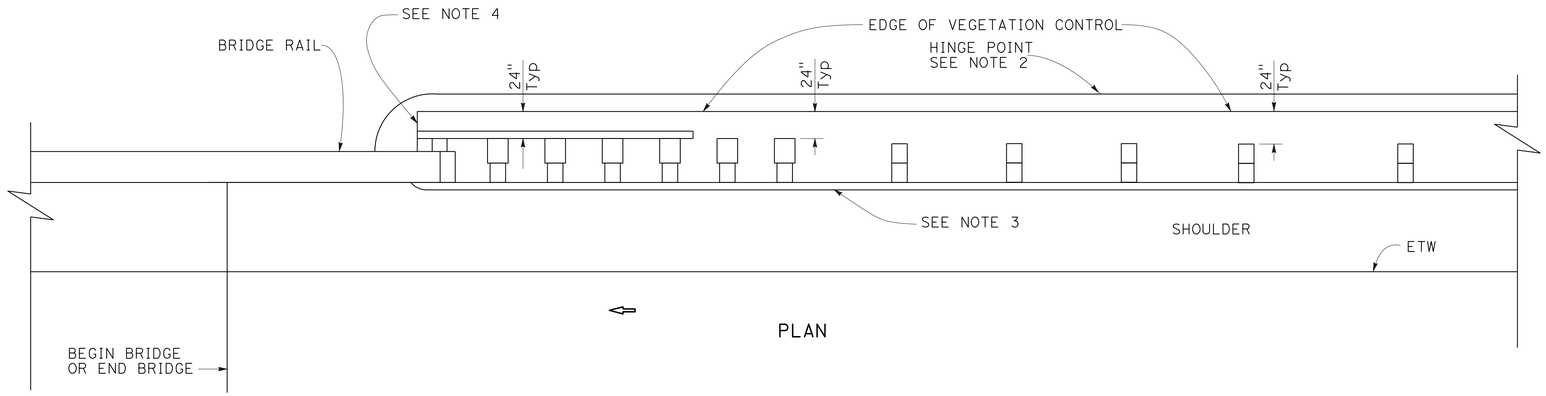


PLAN

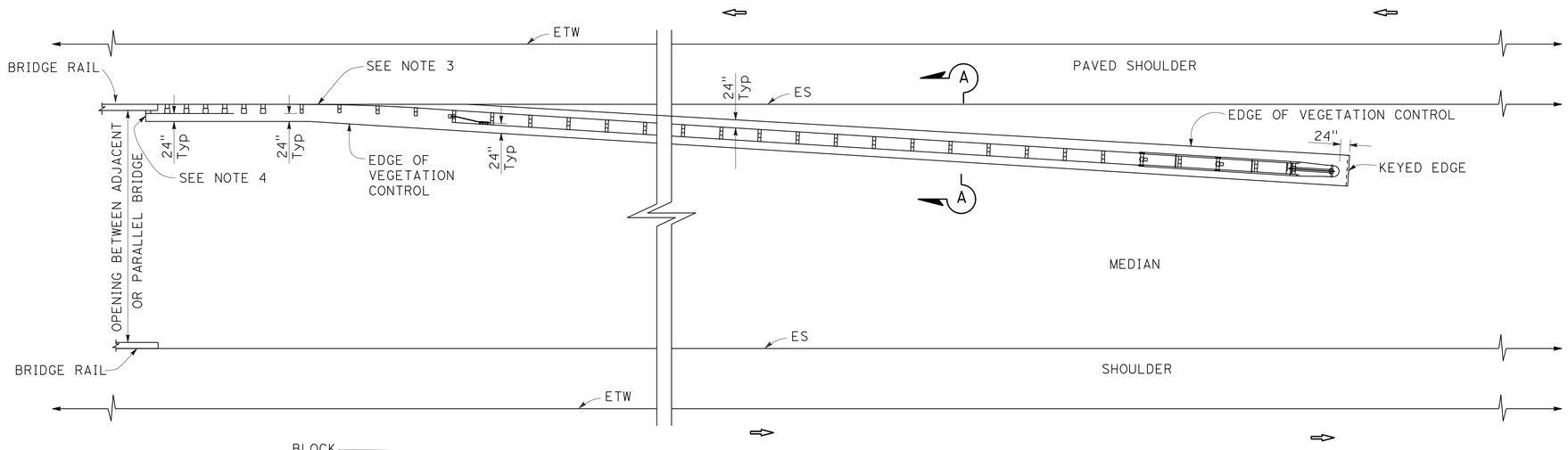


PLAN

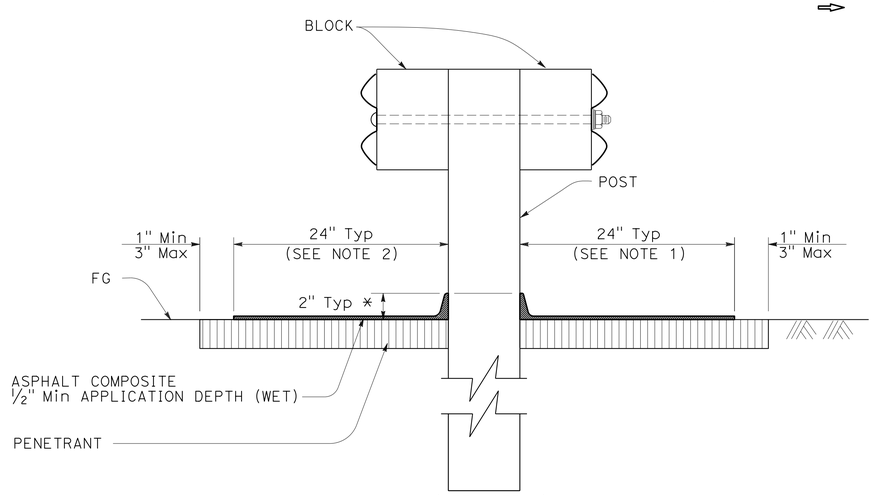


SECTION A-A

NO SCALE

# METAL BEAM GUARD RAILING
# VEGETATION CONTROL (ASPHALT COMPOSITE)
# AT STRUCTURE APPROACH AND DEPARTURE

# EROSION CONTROL DETAILS
# ECD-3

STATE OF CALIFORNIA - DEPARTMENT OF TRANSPORTATION

Caltrans® LANDSCAPE ARCHITECTURE

SENIOR LANDSCAPE ARCHITECT: BRAD COLE

CALCULATED-DESIGNED BY: CHARLES LaRUE

CHECKED BY: MIKE MILLS

REVISED BY / DATE REVISED

LAST REVISION 07-14-13

DATE PLOTTED => 18-OCT-2013

TIME PLOTTED => 08:11

| Dist | COUNTY | ROUTE | POST MILES TOTAL PROJECT | SHEET No. | TOTAL SHEETS |
|---|---|---|---|---|---|
| 06 | Mad | 99 | 20.2/22.7 | 48 | 76 |

LICENSED LANDSCAPE ARCHITECT

7-15-13

PLANS APPROVAL DATE

LICENSED LANDSCAPE ARCHITECT
MICHAEL W. MILLS No. 4170
Signature
11/30/14
Renewal Date
09/26/13
Date
STATE OF CALIFORNIA

*THE STATE OF CALIFORNIA OR ITS OFFICERS OR AGENTS SHALL NOT BE RESPONSIBLE FOR THE ACCURACY OR COMPLETENESS OF SCANNED COPIES OF THIS PLAN SHEET.*

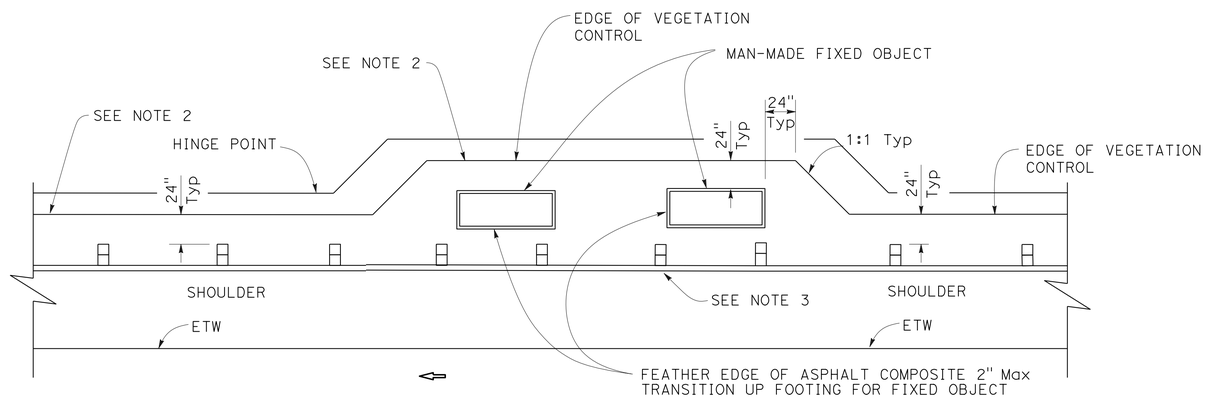


PLAN

FIXED OBJECT(S) ON SHOULDER

**METAL BEAM GUARD RAILING**
**VEGETATION CONTROL (ASPHALT COMPOSITE)**
**AT FIXED OBJECT**

NO SCALE

# EROSION CONTROL DETAILS
# ECD-4

| | |
|---|---|
| CALCULATED-DESIGNED BY | CHARLES LaRUE |
| CHECKED BY | MIKE MILLS |
| REVISED BY | |
| DATE REVISED | |
| SENIOR LANDSCAPE ARCHITECT | BRAD COLE |

STATE OF CALIFORNIA - DEPARTMENT OF TRANSPORTATION
Caltrans® LANDSCAPE ARCHITECTURE

LAST REVISION 07-14-13
DATE PLOTTED => 18-OCT-2013
TIME PLOTTED => 08:11

| Dist | COUNTY | ROUTE | POST MILES TOTAL PROJECT | SHEET No. | TOTAL SHEETS |
|---|---|---|---|---|---|
| 06 | Mad | 99 | 20.2/22.7 | 49 | 76 |

LICENSED LANDSCAPE ARCHITECT

7-15-13

PLANS APPROVAL DATE

LICENSED LANDSCAPE ARCHITECT MICHAEL W. MILLS No. 4179 Signature 11/30/14 Renewal Date 09/26/13 Date STATE OF CALIFORNIA

*THE STATE OF CALIFORNIA OR ITS OFFICERS OR AGENTS SHALL NOT BE RESPONSIBLE FOR THE ACCURACY OR COMPLETENESS OF SCANNED COPIES OF THIS PLAN SHEET.*

## EROSION CONTROL

| SHEET | DESCRIPTION | COMPOST | INCORPORATE MATERIALS | DRILL SEED | HYDROMULCH |
|---|---|---|---|---|---|
| | | SQFT | SQFT | SQYD | SQFT |
| EC SHEETS | EROSION CONTROL TYPE 1 | 165,896 | 165,896 | 18,433 | 165,896 |

## TEMPORARY FENCE (TYPE ESA)

| LOCATION | LENGTH (LF) |
|---|---|
| EC SHEETS | 665 |

# EROSION CONTROL QUANTITIES

# ECQ-1

REVISED BY | DATE REVISED

CHARLES LaRUE | MIKE MILLS

CALCULATED-DESIGNED BY | CHECKED BY

SENIOR LANDSCAPE ARCHITECT

BRAD COLE

STATE OF CALIFORNIA - DEPARTMENT OF TRANSPORTATION

Caltrans® LANDSCAPE ARCHITECTURE

LAST REVISION 07-14-13 | DATE PLOTTED => 18-OCT-2013 | TIME PLOTTED => 08:11

| Dist | COUNTY | ROUTE | POST MILES TOTAL PROJECT | SHEET No. | TOTAL SHEETS |
|---|---|---|---|---|---|
| 06 | Mad | 99 | 20.2/22.7 | 50 | 76 |

Omar Mendoza 7-15-13
REGISTERED ELECTRICAL ENGINEER DATE

7-15-13
PLANS APPROVAL DATE

REGISTERED PROFESSIONAL ENGINEER OMAR MENDOZA No. 17982 Exp. 12/31/14 ELECTRICAL STATE OF CALIFORNIA

*THE STATE OF CALIFORNIA OR ITS OFFICERS OR AGENTS SHALL NOT BE RESPONSIBLE FOR THE ACCURACY OR COMPLETENESS OF SCANNED COPIES OF THIS PLAN SHEET.*

## LEGEND: (FOR THIS SHEET ONLY)

1 RS Exist 120/240 V,1Ø, 3-WIRE, TYPE III-BF SERVICE EQUIPMENT ENCLOSURE.

2 120/240 V, 1Ø, 3-WIRE, TYPE III-BF SERVICE EQUIPMENT ENCLOSURE WITH THE FOLLOWING CIRCUIT BREAKERS:

Ctid No. 06410990021980T

| AMPERES | VOLTS | POLES | NAMEPLATE | METER | PEC TYPE |
|---|---|---|---|---|---|
| 100 | 240 | 2 | MAIN BREAKER | YES | ———— |
| 50 | 120 | 1 | TMS | YES | ———— |
| 20 | 240 | 2 | SIGN ILLUMINATION N | YES | LC3 SIGN CONTROL |
| 20 | 240 | 2 | SIGN ILLUMINATION S | YES | LC3 SIGN CONTROL |
| 30 | 240 | 2 | SPARE | YES | ———— |
| 20 | 120 | 1 | SPARE | YES | ———— |

3 INSTALL NEW SERVICE EQUIPMENT ENCLOSURE ON Exist FOUNDATION, COORDINATE Exist SERVICE DISCONNECT WITH PG&E.

## NOTES:

1. ALL PULL BOXES SHALL BE No. 5(E)(T) UNLESS OTHERWISE NOTED.
2. FOR ACCURATE RIGHT OF WAY DATA, CONTACT RIGHT OF WAY ENGINEERING AT THE DISTRICT OFFICE.

## ABBREVIATIONS:

| NEW | EXISTING | |
|---|---|---|
| PG&E | | PACIFIC GAS AND ELECTRIC COMPANY |
| ILL | ill | ILLUMINATION |
| | stc | SCREENED TRANSMISSION CABLE |

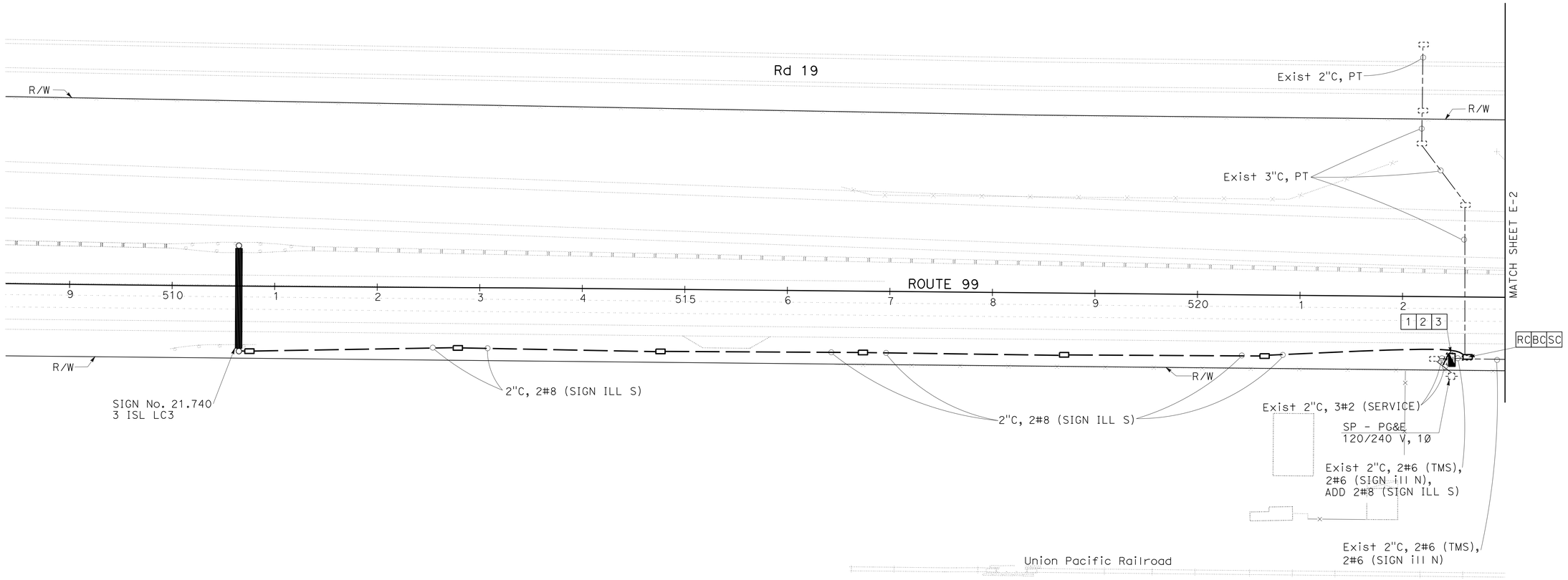


*APPROVED FOR ELECTRICAL WORK ONLY*

# MODIFY LIGHTING AND SIGN ILLUMINATION

SCALE: 1"=50'

**E-1**

STATE OF CALIFORNIA - DEPARTMENT OF TRANSPORTATION
Caltrans® **ELECTRICAL DESIGN**

FUNCTIONAL SUPERVISOR: ALI BAKHDOUD
CALCULATED-DESIGNED BY: KARIM ABDOLLAHIAN
CHECKED BY: OMAR MENDOZA
REVISED BY
DATE REVISED

LAST REVISION 07-14-13
DATE PLOTTED => 18-OCT-2013
TIME PLOTTED => 08:12

| Dist | COUNTY | ROUTE | POST MILES TOTAL PROJECT | SHEET No. | TOTAL SHEETS |
|---|---|---|---|---|---|
| 06 | Mad | 99 | 20.2/22.7 | 51 | 76 |

Omar Mendoza 7-15-13
REGISTERED ELECTRICAL ENGINEER DATE

7-15-13
PLANS APPROVAL DATE

REGISTERED PROFESSIONAL ENGINEER OMAR MENDOZA No. 17982 Exp. 12/31/14 ELECTRICAL STATE OF CALIFORNIA

*THE STATE OF CALIFORNIA OR ITS OFFICERS OR AGENTS SHALL NOT BE RESPONSIBLE FOR THE ACCURACY OR COMPLETENESS OF SCANNED COPIES OF THIS PLAN SHEET.*

LEGEND: (FOR THIS SHEET ONLY)

1 Exist CONTROLLER CABINET FOR TMS.

2 SIGN STRUCTURE TO BE REMOVED. SEE SIGN PLANS. RS Exist ISL FIXTURES.

NOTES:

1. ALL PULL BOXES SHALL BE No. 5(E)(T) UNLESS OTHERWISE NOTED.
2. FOR ACCURATE RIGHT OF WAY DATA, CONTACT RIGHT OF WAY ENGINEERING AT THE DISTRICT OFFICE.

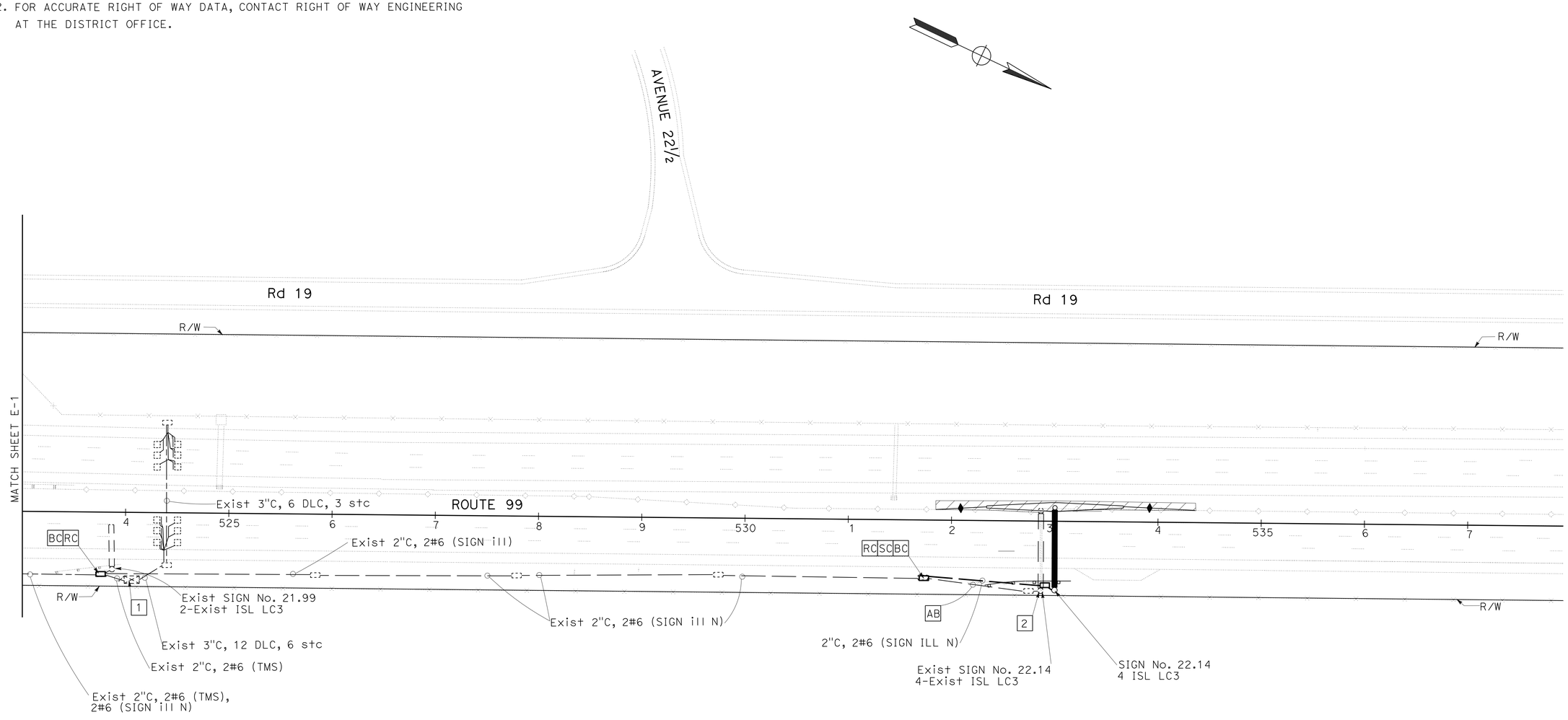


# MODIFY LIGHTING AND SIGN ILLUMINATION

SCALE: 1"=50'

**E-2**

*APPROVED FOR ELECTRICAL WORK ONLY*

STATE OF CALIFORNIA - DEPARTMENT OF TRANSPORTATION
Caltrans® **ELECTRICAL DESIGN**

FUNCTIONAL SUPERVISOR: ALI BAKHDOUD
CALCULATED-DESIGNED BY: KARIM ABDOLLAHIAN
CHECKED BY: OMAR MENDOZA
REVISED BY
DATE REVISED

LAST REVISION 07-14-13
DATE PLOTTED => 18-OCT-2013
TIME PLOTTED => 08:12

| Dist | COUNTY | ROUTE | POST MILES TOTAL PROJECT | SHEET No. | TOTAL SHEETS |
|---|---|---|---|---|---|
| 06 | Mad | 99 | 20.2/22.7 | 52 | 76 |

Omar Mendoza 7-15-13
REGISTERED ELECTRICAL ENGINEER DATE

7-15-13
PLANS APPROVAL DATE

REGISTERED PROFESSIONAL ENGINEER OMAR MENDOZA No. 17982 Exp. 12/31/14 ELECTRICAL STATE OF CALIFORNIA

*THE STATE OF CALIFORNIA OR ITS OFFICERS OR AGENTS SHALL NOT BE RESPONSIBLE FOR THE ACCURACY OR COMPLETENESS OF SCANNED COPIES OF THIS PLAN SHEET.*

## LEGEND: (FOR THIS SHEET ONLY)

1 COORDINATE WITH PG&E TO ADD METER IN Exist 120/240 V,1Ø, 3 WIRE, TYPE III-AF SERVICE EQUIPMENT ENCLOSURE WITH THE FOLLOWING CIRCUIT BREAKERS:

Ctid No. 06410990022700L

| AMPERES | VOLTS | POLES | NAMEPLATE | METER | PEC TYPE | NOTE |
|---|---|---|---|---|---|---|
| 100 | 240 | 2 | MAIN BREAKER | YES | | * ** |
| 40 | 240 | 2 | HIGHWAY LIGHTING N | YES | IV | * |
| 40 | 240 | 2 | HIGHWAY LIGHTING S | YES | IV | * *** |
| 20 | 240 | 2 | SIGN ILLUMINATION | YES | LC3 SIGN CONTROL | * |
| 70 | 120 | 1 | RAMP METERING | YES | | * |
| 20 | 120 | 1 | TDC | YES | | * |

* REWIRE WITH INSULATED CLIPS Exist METERED AND UNMETERED CIRCUIT TO METERED ONLY.
** RC Exist 1P METERED 2P UNMETERED CB. INSTALL 2P CB AS SHOWN.
*** ADD CIRCUIT BREAKER.

2 TO Exist Hwy Ltg Ckt NOT SHOWN.

3 SIGN STRUCTURE TO BE REMOVED. SEE SIGN PLANS. RS Exist ISL FIXTURES.

## NOTES:

1. ALL PULL BOXES SHALL BE No. 5(E)(T) UNLESS OTHERWISE NOTED.
2. FOR ACCURATE RIGHT OF WAY DATA, CONTACT RIGHT OF WAY ENGINEERING AT THE DISTRICT OFFICE.

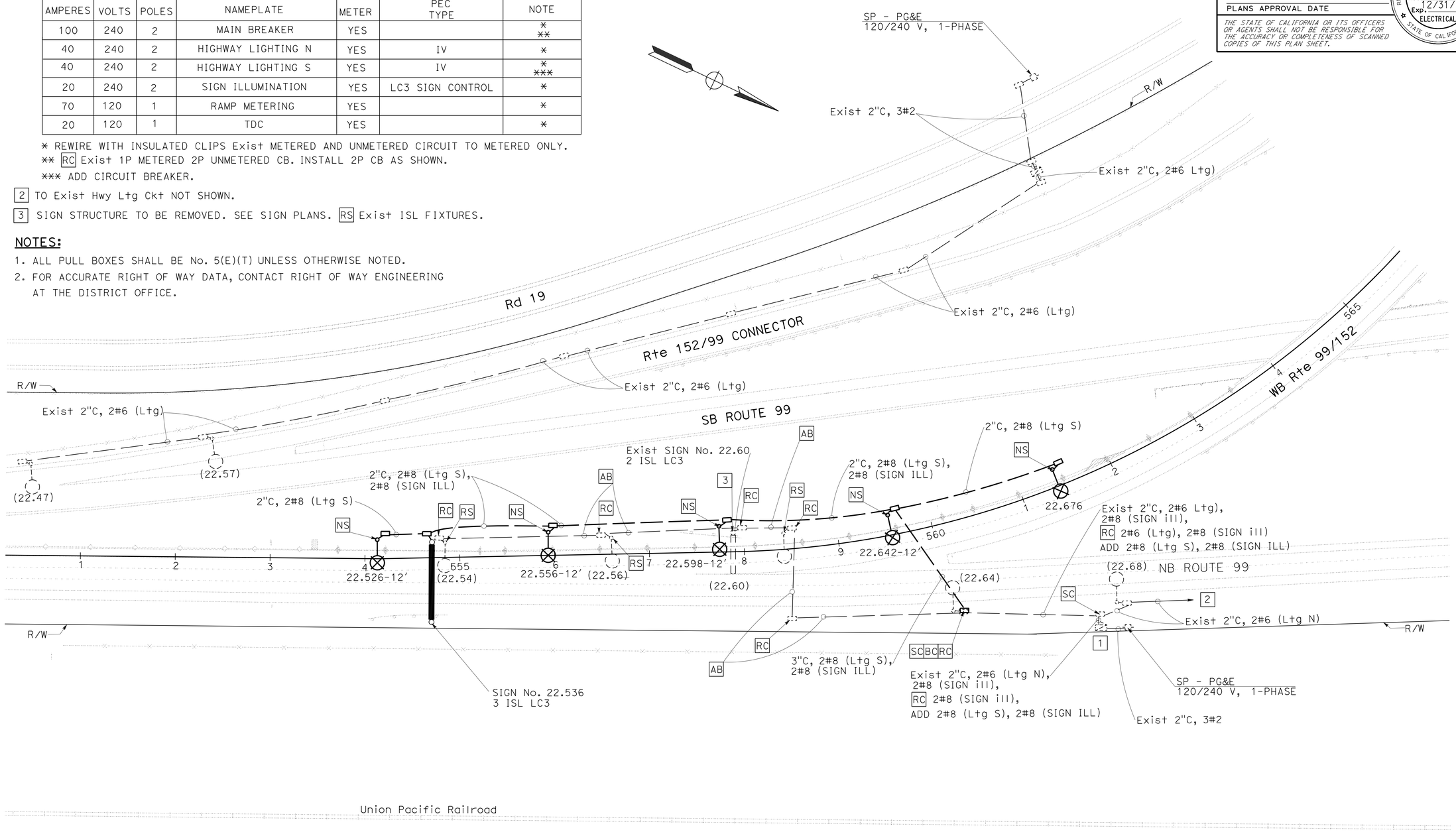


*APPROVED FOR ELECTRICAL WORK ONLY*

# MODIFY LIGHTING AND SIGN ILLUMINATION

SCALE: 1"=50'

**E-3**

| REVISED BY | DATE REVISED |
|---|---|
| KARIM ABDOLLAHIAN | OMAR MENDOZA |
| CALCULATED-DESIGNED BY | CHECKED BY |
| FUNCTIONAL SUPERVISOR | ALI BAKHDOUD |

STATE OF CALIFORNIA - DEPARTMENT OF TRANSPORTATION
Caltrans® ELECTRICAL DESIGN

LAST REVISION 07-14-13 | DATE PLOTTED => 18-OCT-2013 | TIME PLOTTED => 08:12

| Dist | COUNTY | ROUTE | POST MILES TOTAL PROJECT | SHEET No. | TOTAL SHEETS |
|---|---|---|---|---|---|
| 06 | Mad | 99 | 20.2/22.7 | 53 | 76 |

Omar Mendoza 7-15-13
REGISTERED ELECTRICAL ENGINEER DATE

7-15-13
PLANS APPROVAL DATE

REGISTERED PROFESSIONAL ENGINEER
OMAR MENDOZA
No. 17982
Exp. 12/31/14
ELECTRICAL
STATE OF CALIFORNIA

*THE STATE OF CALIFORNIA OR ITS OFFICERS OR AGENTS SHALL NOT BE RESPONSIBLE FOR THE ACCURACY OR COMPLETENESS OF SCANNED COPIES OF THIS PLAN SHEET.*

NOTE:

THE QUANTITIES ON THIS SHEET ARE NOT SEPARATE PAY ITEMS AND ARE FOR INFORMATION ONLY.

## MODIFY LIGHTING AND SIGN ILLUMINATION

| SHEET No. | No. 6 CONDUCTOR | No. 8 CONDUCTOR | No. 8 (G) | 1½"C, TYPE 1 | 2"C, TYPE 1 | 2"C, TYPE 3 | 3"C, TYPE 3 | No. 5 (T)(E) PB | TYPE 30 NS ELECTROLIER | TYPE 30 ELECTROLIER CIDH PILE | TYPE III-BF SERVICE ENCLOSURE | 85 W ISL |
|---|---|---|---|---|---|---|---|---|---|---|---|---|
| | LF | LF | LF | LF | LF | LF | LF | EA | EA | EA | EA | EA |
| E-1 | ——— | 2520 | 1260 | ——— | 10 | 1200 | ——— | 7 | ——— | ——— | 1 | 4 |
| E-2 | 320 | ——— | 130 | ——— | 10 | 110 | ——— | 3 | ——— | ——— | ——— | 4 |
| E-3 | ——— | 3700 | 1100 | 50 | 10 | 750 | 125 | 7 | 5 | 5 | ——— | 3 |

REVISED BY | DATE REVISED
KARIM ABDOLLAHIAN | OMAR MENDOZA
CALCULATED-DESIGNED BY | CHECKED BY
FUNCTIONAL SUPERVISOR
ALI BAKHDOUD

STATE OF CALIFORNIA - DEPARTMENT OF TRANSPORTATION
Caltrans®
ELECTRICAL DESIGN

# ELECTRICAL QUANTITIES
# E-4

LAST REVISION 07-14-13
DATE PLOTTED => 18-OCT-2013
TIME PLOTTED => 08:12

## M

| | |
|---|---|
| Maint | MAINTENANCE |
| Max | MAXIMUM |
| MB | METAL BEAM |
| MBB | METAL BEAM BARRIER |
| MBGR | METAL BEAM GUARD RAILING |
| Med | MEDIAN |
| MGS | MIDWEST GUARDRAIL SYSTEM |
| MH | MANHOLE |
| Min | MINIMUM |
| Misc | MISCELLANEOUS |
| Misc I & S | MISCELLANEOUS IRON AND STEEL |
| Mkr | MARKER |
| Mod | MODIFIED,<br>MODIFY |
| Mon | MONUMENT |
| MP | METAL PLATE |
| MPGR | METAL PLATE GUARD RAILING |
| MR | MOVEMENT RATING |
| MSE | MECHANICALLY STABILIZED EMBANKMENT |
| Mt | MOUNTAIN, MOUNT |
| Mtl | MATERIAL |
| MVP | MAINTENANCE VEHICLE PULLOUT |

## N

| | |
|---|---|
| N | NORTH |
| NB | NORTHBOUND |
| No. | NUMBER (MUST HAVE PERIOD) |
| Nos. | NUMBERS (MUST HAVE PERIOD) |
| NPS | NOMINAL PIPE SIZE |
| NS | NEAR SIDE |
| NSP | NEW STANDARD PLAN |
| NTS | NOT TO SCALE |

## O

| | |
|---|---|
| Oblr | OBLITERATE |
| OC | OVERCROSSING |
| OD | OUTSIDE DIAMETER |
| OF | OUTSIDE FACE |
| OG | ORIGINAL GROUND |
| OGAC | OPEN GRADED ASPHALT CONCRETE |
| OGFC | OPEN GRADED FRICTION COURSE |
| OH | OVERHEAD |
| OHWM | ORDINARY HIGH WATER MARK |
| O-O | OUT TO OUT |
| Opp | OPPOSITE |
| OSD | OVERSIDE DRAIN |

## P

| | |
|---|---|
| P | PAGE |
| PAP | PERFORATED ALUMINUM PIPE |
| PB | PULL BOX |
| PC | POINT OF CURVATURE,<br>PRECAST |
| PCC | POINT OF COMPOUND CURVE,<br>PORTLAND CEMENT CONCRETE |
| PCMS | PORTABLE CHANGEABLE MESSAGE SIGN |
| PCP | PERFORATED CONCRETE PIPE,<br>PRESTRESSED CONCRETE PIPE |
| PCVC | POINT OF COMPOUND VERTICAL CURVE |
| PEC | PERMIT TO ENTER AND CONSTRUCT |
| Ped | PEDESTRIAN |
| Ped OC | PEDESTRIAN OVERCROSSING |
| Ped UC | PEDESTRIAN UNDERCROSSING |
| Perm Mtl | PERMEABLE MATERIAL |

## P continued

| | |
|---|---|
| PG | PROFILE GRADE |
| PI | POINT OF INTERSECTION |
| PJP | PARTIAL JOINT PENETRATION |
| Pkwy | PARKWAY |
| ℙ,PL | PLATE |
| P/L | PROPERTY LINE |
| PM | POST MILE,<br>TIME FROM NOON TO MIDNIGHT |
| PN | PAVING NOTCH |
| POC | POINT OF HORIZONTAL CURVE |
| POT | POINT OF TANGENT |
| POVC | POINT OF VERTICAL CURVE |
| PP | PIPE PILE,<br>PLASTIC PIPE,<br>POWER POLE |
| PPL | PREFORMED PERMEABLE LINER |
| PPP | PERFORATED PLASTIC PIPE |
| PRC | POINT OF REVERSE CURVE |
| PRF | PAVEMENT REINFORCING FABRIC |
| PRVC | POINT OF REVERSE VERTICAL CURVE |
| PS&E | PLANS, SPECIFICATIONS AND ESTIMATES |
| PS, P/S | PRESTRESSED |
| PSP | PERFORATED STEEL PIPE |
| PT | POINT OF TANGENCY |
| PVC | POLYVINYL CHLORIDE |
| Pvmt | PAVEMENT |

## Q

| | |
|---|---|
| Qty | QUANTITY |

## R

| | |
|---|---|
| R | RADIUS |
| R & D | REMOVE AND DISPOSE |
| R & S | REMOVE AND SALVAGE |
| R/C | RATE OF CHANGE |
| RCA | REINFORCED CONCRETE ARCH |
| RCB | REINFORCED CONCRETE BOX |
| RCP | REINFORCED CONCRETE PIPE |
| RCPA | REINFORCED CONCRETE PIPE ARCH |
| Rd | ROAD |
| Reinf | REINFORCED,<br>REINFORCEMENT,<br>REINFORCING |
| Rel | RELOCATE |
| Repl | REPLACEMENT |
| Ret | RETAINING |
| Rev | REVISED, REVISION |
| Rdwy | ROADWAY |
| RHMA | RUBBERIZED HOT MIX ASPHALT |
| Riv | RIVER |
| RM | ROAD-MIXED |
| RP | RADIUS POINT,<br>REFERENCE POINT |
| RR | RAILROAD |
| RSP | ROCK SLOPE PROTECTION,<br>REVISED STANDARD PLAN |
| Rt | RIGHT |
| Rte | ROUTE |
| RW | REDWOOD,<br>RETAINING WALL |
| R/W | RIGHT OF WAY |
| Rwy | RAILWAY |

## S

| | |
|---|---|
| S | SOUTH,<br>SUPPLEMENT |
| SAE | STRUCTURE APPROACH EMBANKMENT |
| Salv | SALVAGE |
| SAPP | STRUCTURAL ALUMINUM PLATE PIPE |
| SB | SOUTHBOUND |
| SC | SAND CUSHION |
| SCSP | SLOTTED CORRUGATED STEEL PIPE |
| SD | STORM DRAIN |
| Sec | SECOND,<br>SECTION |
| Sep | SEPARATION |
| SG | SUBGRADE |
| Shld | SHOULDER |
| Sht | SHEET |
| Sim | SIMILAR |
| ℄ | STATION LINE |
| SM | SELECTED MATERIAL |
| Spec | SPECIAL,<br>SPECIFICATIONS |
| SPP | SLOTTED PLASTIC PIPE |
| SS | SLOPE STAKE |
| SSBM | STRAP AND SADDLE BRACKET METHOD |
| SSD | STRUCTURAL SECTION DRAIN |
| SSPA | STRUCTURAL STEEL PLATE ARCH |
| SSPP | STRUCTURAL STEEL PLATE PIPE |
| SSPPA | STRUCTURAL STEEL PLATE PIPE ARCH |
| SSRP | STEEL SPIRAL RIB PIPE |
| St | STREET |
| Sta | STATION |
| STBB | SINGLE THRIE BEAM BARRIER |
| Std | STANDARD |
| Str | STRUCTURE |
| Surf | SURFACING |
| SW | SIDEWALK,<br>SOUND WALL |
| Swr | SEWER |
| Sym | SYMMETRICAL |
| S4S | SURFACE 4 SIDES |

## T

| | |
|---|---|
| T | SEMI-TANGENT |
| Tan | TANGENT |
| TBB | THRIE BEAM BARRIER |
| Tbr | TIMBER |
| TC | TOP OF CURB |
| TCB | TRAFFIC CONTROL BOX |
| TCE | TEMPORARY CONSTRUCTION EASEMENT |
| Tel | TELEPHONE |
| Temp | TEMPORARY |
| TG | TOP OF GRADE |
| Tot | TOTAL |
| TP | TELEPHONE POLE |
| TPB | TREATED PERMEABLE BASE |
| TPM | TREATED PERMEABLE MATERIAL |
| Trans | TRANSITION |

## T continued

| | |
|---|---|
| TS | TRANSVERSE,<br>TRAFFIC SIGNAL,<br>TUBULAR STEEL |
| Typ | TYPICAL |

## U

| | |
|---|---|
| UC | UNDERCROSSING |
| UD | UNDERDRAIN |
| UG | UNDERGROUND |
| UON | UNLESS OTHERWISE NOTED |
| UP | UNDERPASS |

## V

| | |
|---|---|
| V | VALVE,<br>DESIGN SPEED |
| Var | VARIABLE,<br>VARIES |
| VC | VERTICAL CURVE |
| VCP | VITRIFIED CLAY PIPE |
| Vert | VERTICAL |
| Via | VIADUCT |
| Vol | VOLUME |

## W

| | |
|---|---|
| W | WEST,<br>WIDTH |
| WB | WESTBOUND |
| WH | WEEP HOLE |
| WM | WIRE MESH |
| WS | WATER SURFACE |
| WSP | WELDED STEEL PIPE |
| Wt | WEIGHT |
| WV | WATER VALVE |
| WW | WINGWALL |
| WWLOL | WINGWALL LAYOUT LINE |

## X

| | |
|---|---|
| X Sec | CROSS SECTION |
| Xing | CROSSING |

## Y

| | |
|---|---|
| Yr | YEAR |
| Yrs | YEARS |

| Dist | COUNTY | ROUTE | POST MILES TOTAL PROJECT | SHEET No. | TOTAL SHEETS |
|---|---|---|---|---|---|
| 06 | Mad | 99 | 20.2/22.7 | 54 | 76 |

Grace M. Tsushima
REGISTERED CIVIL ENGINEER

July 19, 2013
PLANS APPROVAL DATE

REGISTERED PROFESSIONAL ENGINEER Grace M. Tsushima No. C49814 Exp. 9-30-14 CIVIL STATE OF CALIFORNIA

*THE STATE OF CALIFORNIA OR ITS OFFICERS OR AGENTS SHALL NOT BE RESPONSIBLE FOR THE ACCURACY OR COMPLETENESS OF SCANNED COPIES OF THIS PLAN SHEET.*

TO ACCOMPANY PLANS DATED 7-15-13

**2010 REVISED STANDARD PLAN RSP A10B**

### UNIT OF MEASUREMENT SYMBOLS:

Some of the symbols used in the project plan quantity tables and in the Bid Item List are:

TABLE A

| SYMBOL USED | DEFINITIONS |
|---|---|
| ACRE | ACRE |
| CF | CUBIC FOOT |
| CY | CUBIC YARD |
| EA | EACH |
| GAL | GALLON |
| LB | POUND |
| LF | LINEAR FOOT |
| SQFT | SQUARE FOOT |
| SQYD | SQUARE YARD |
| STA | 100 FEET |
| TAB | TABLET |
| TON | 2,000 POUNDS |

Some of the symbols used in the plans other than in the project plan quantity tables are:

TABLE B

| SYMBOL USED | DEFINITIONS |
|---|---|
| ksi | KIPS PER SQUARE INCH |
| ksf | KIPS PER SQUARE FOOT |
| psi | POUNDS PER SQUARE INCH |
| psf | POUNDS PER SQUARE FOOT |
| $lb/ft^3$, pcf | POUNDS PER CUBIC FOOT |
| tsf | TONS PER SQUARE FOOT |
| mph, MPH * | MILES PER HOUR |
| ø | NOMINAL DIAMETER |
| oz | OUNCE |
| lb | POUND |
| kip | 1,000 POUNDS |
| cal | CALORIE |
| ft | FOOT OR FEET |
| gal | GALLON |

* For use on a sign panel only

STATE OF CALIFORNIA
DEPARTMENT OF TRANSPORTATION

# ABBREVIATIONS (SHEET 2 OF 2)

NO SCALE

RSP A10B DATED JULY 19, 2013 SUPERSEDES STANDARD PLAN A10B DATED MAY 20, 2011 - PAGE 2 OF THE STANDARD PLANS BOOK DATED 2010.

**REVISED STANDARD PLAN RSP A10B**

6-7-13

| Dist | COUNTY | ROUTE | POST MILES TOTAL PROJECT | SHEET No. | TOTAL SHEETS |
|---|---|---|---|---|---|
| 06 | Mad | 99 | 20.2/22.7 | 55 | 76 |

REGISTERED CIVIL ENGINEER

July 19, 2013
PLANS APPROVAL DATE

REGISTERED PROFESSIONAL ENGINEER Roberta L. McLaughlin No. C40375 Exp. 3-31-15 CIVIL STATE OF CALIFORNIA

*THE STATE OF CALIFORNIA OR ITS OFFICERS OR AGENTS SHALL NOT BE RESPONSIBLE FOR THE ACCURACY OR COMPLETENESS OF SCANNED COPIES OF THIS PLAN SHEET.*

TO ACCOMPANY PLANS DATED 7-15-13

## EXIT RAMP NEUTRAL AREA (GORE) TREATMENT

DETAIL 36

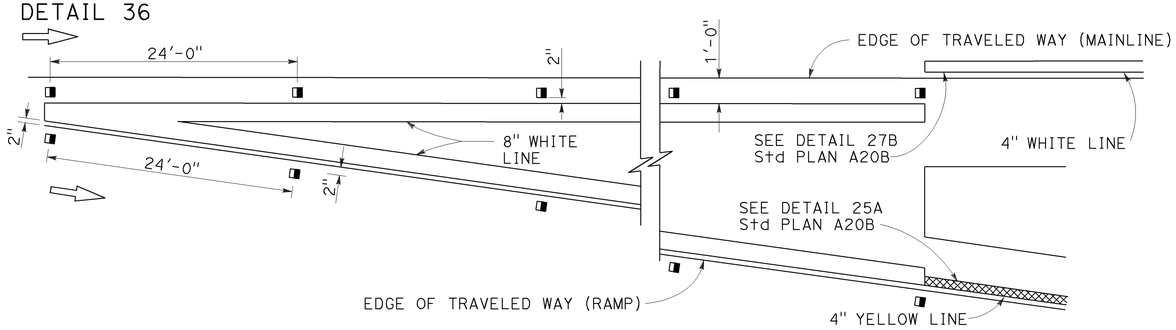


## ENTRANCE RAMP NEUTRAL AREA (MERGE) TREATMENT

DETAIL 36A

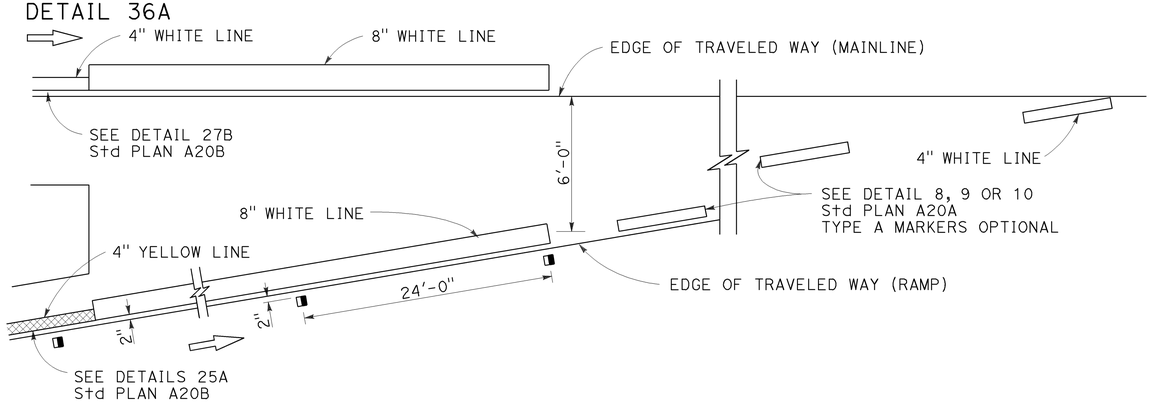


## ENTRANCE RAMP NEUTRAL AREA (ACCELERATION LANE) TREATMENT

DETAIL 36B

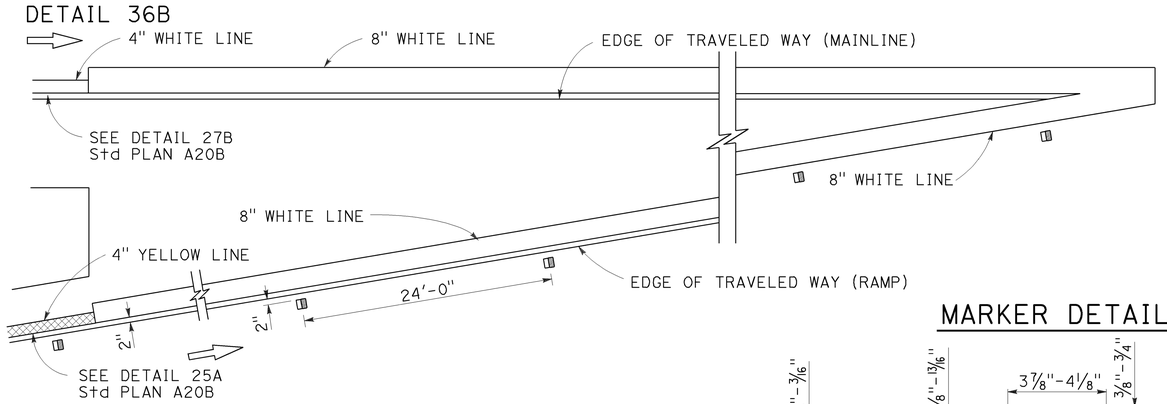


## MARKER DETAILS

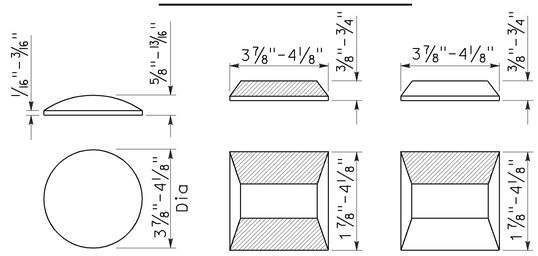


RETROREFLECTIVE FACE

**LEGEND:**

MARKERS

- TYPE A WHITE NON-REFLECTIVE
- TYPE C RED-CLEAR RETROREFLECTIVE
- TYPE G ONE-WAY CLEAR RETROREFLECTIVE

## LANE DROP AT EXIT RAMPS

DETAIL 37

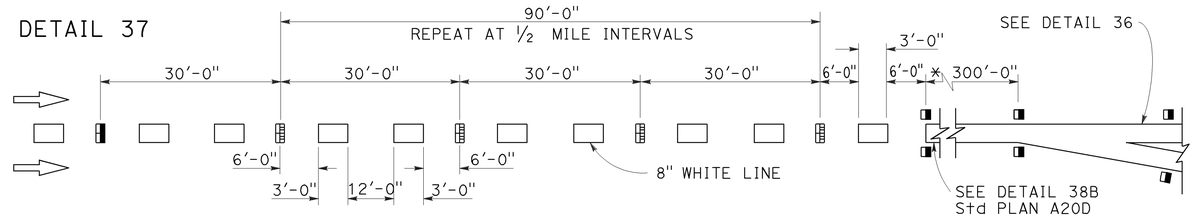


DETAIL 37A

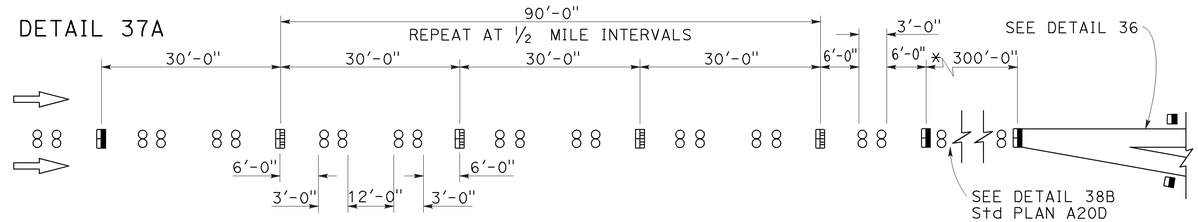


* The solid channelizing line shown may be omitted on short auxiliary lanes where weaving length is critical.

## LANE DROP AT INTERSECTIONS

DETAIL 37B

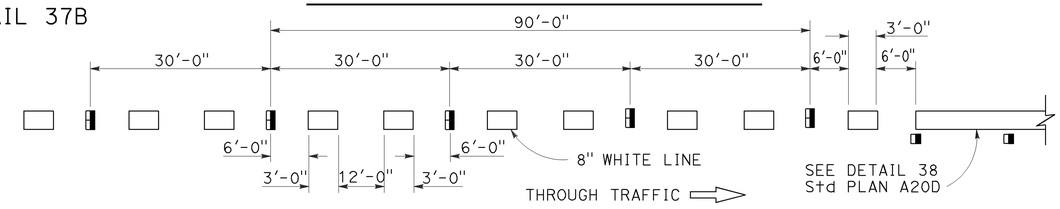


DETAIL 37C

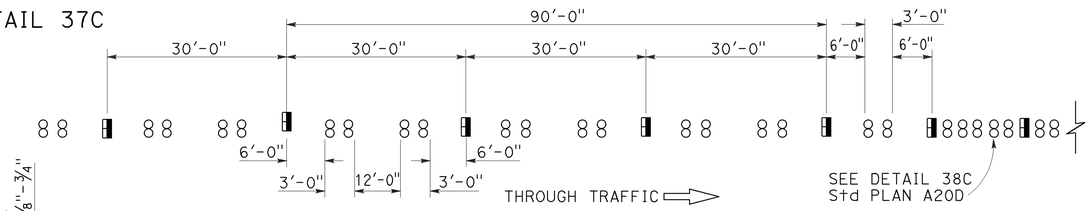


STATE OF CALIFORNIA
DEPARTMENT OF TRANSPORTATION

# PAVEMENT MARKERS AND TRAFFIC LINE TYPICAL DETAILS

NO SCALE

RSP A20C DATED JULY 19, 2013 SUPERSEDES STANDARD PLAN A20C DATED MAY 20, 2011 - PAGE 11 OF THE STANDARD PLANS BOOK DATED 2010.

**REVISED STANDARD PLAN RSP A20C**

**2010 REVISED STANDARD PLAN RSP A20C**

4-29-13

| Dist | COUNTY | ROUTE | POST MILES TOTAL PROJECT | SHEET No. | TOTAL SHEETS |
|---|---|---|---|---|---|
| 06 | Mad | 99 | 20.2/22.7 | 56 | 76 |

Randell D. Hiatt
REGISTERED CIVIL ENGINEER

July 19, 2013
PLANS APPROVAL DATE

REGISTERED PROFESSIONAL ENGINEER
Randell D. Hiatt
No. C50200
Exp. 6-30-15
CIVIL
STATE OF CALIFORNIA

*THE STATE OF CALIFORNIA OR ITS OFFICERS OR AGENTS SHALL NOT BE RESPONSIBLE FOR THE ACCURACY OR COMPLETENESS OF SCANNED COPIES OF THIS PLAN SHEET.*

TO ACCOMPANY PLANS DATED 7-15-13

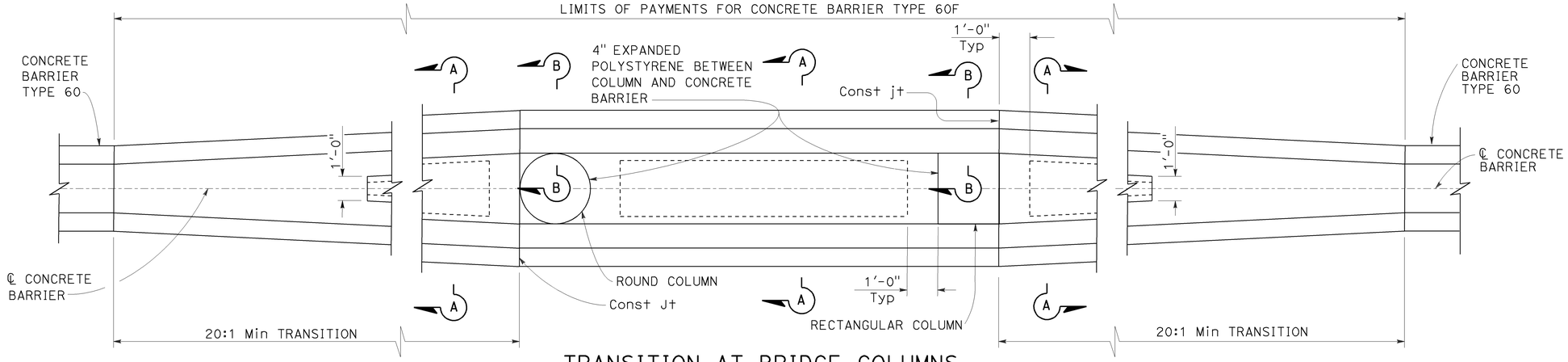


## TRANSITION AT BRIDGE COLUMNS

Concrete Barrier Type 60F
See Note 7

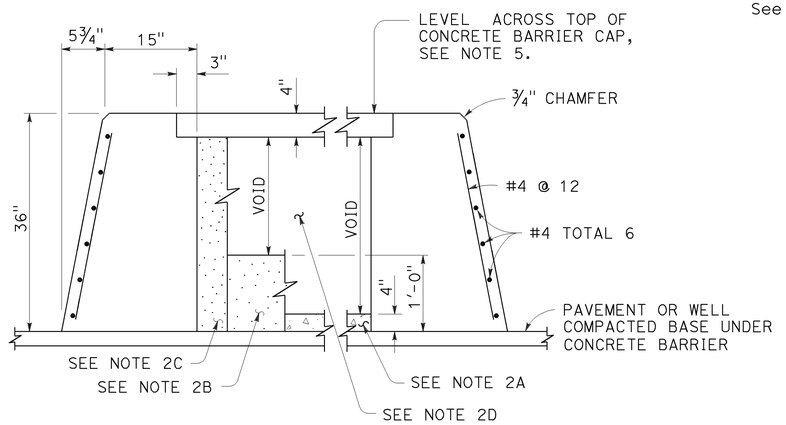


SECTION A-A

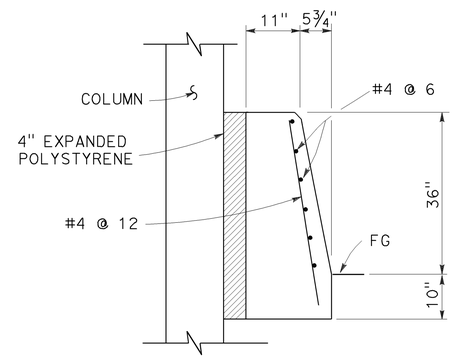


SECTION B-B

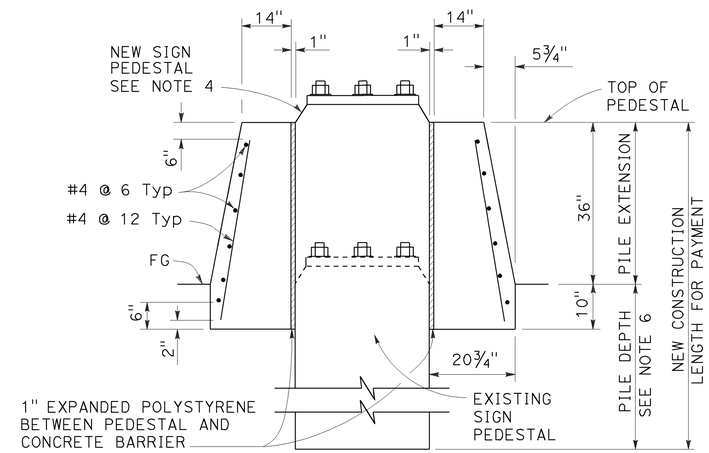


SECTION C-C

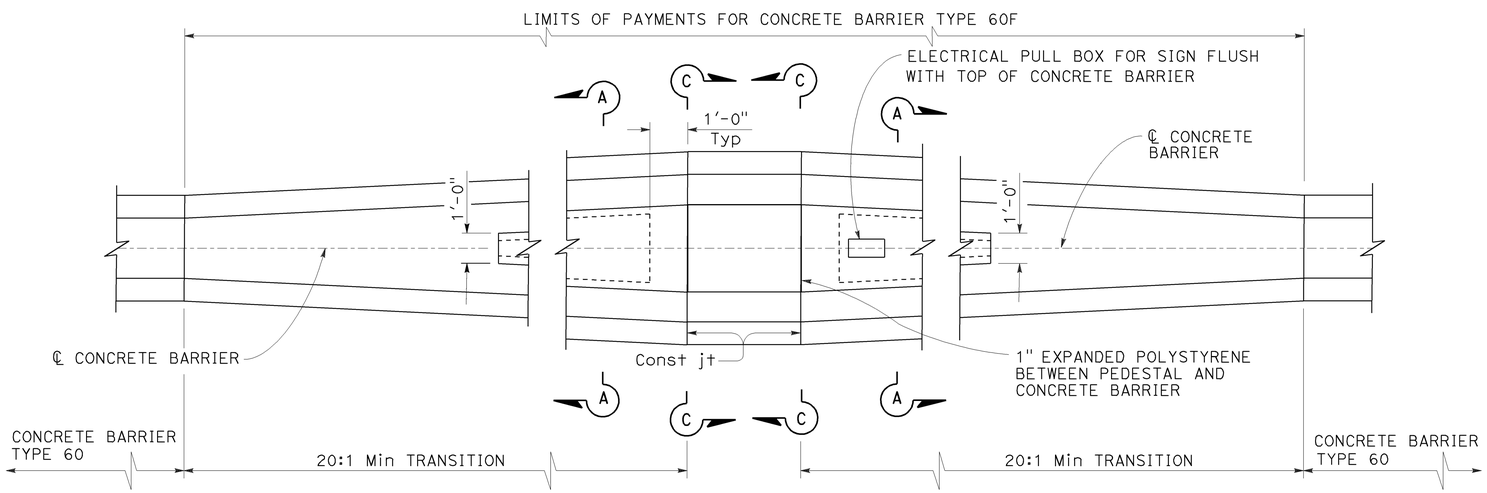


## TRANSITION AT SIGN PEDESTAL

Concrete Barrier Type 60F
See Note 7

NOTES:

1. See Standard Plan A76A for Concrete Barrier Type 60.
2. Contractor options for fill between concrete barrier walls:
   A. Place 4" PCC at base between concrete barrier walls.
   B. Place 1'-0" of granular material at base between walls.
   C. Place granular material from base to bottom of 4" cap.
   D. Monolithic concrete with foam blockouts is not permitted.
3. Reinforcing steel shall extend continuous through construction joints.
4. See "Overhead Sign" plans for sign pedestal elevations on new construction.
5. Adjust height of concrete barrier wall on low side of offset or superelevated roadways to provide level grade across top of concrete barrier cap.
6. See Overhead Signs Standard Plan Pile Foundation Tables.
7. All locations with limited shoulder width available for barrier, see Standard Plan A76F for use of Concrette Barrier Type 60GE.

STATE OF CALIFORNIA
DEPARTMENT OF TRANSPORTATION

# CONCRETE BARRIER TYPE 60F

NO SCALE

RSP A76C DATED JULY 19, 2013 SUPERSEDES STANDARD PLAN A76C DATED MAY 20, 2011 - PAGE 36 OF THE STANDARD PLANS BOOK DATED 2010.

**REVISED STANDARD PLAN RSP A76C**

**2010 REVISED STANDARD PLAN RSP A76C**

7-3-13

| Dist | COUNTY | ROUTE | POST MILES TOTAL PROJECT | SHEET No. | TOTAL SHEETS |
|---|---|---|---|---|---|
| 06 | Mad | 99 | 20.2/22.7 | 57 | 76 |

Randell D. Hiatt
REGISTERED CIVIL ENGINEER

July 19, 2013
PLANS APPROVAL DATE

REGISTERED PROFESSIONAL ENGINEER
Randell D. Hiatt
No. C50200
Exp. 6-30-15
CIVIL
STATE OF CALIFORNIA

*THE STATE OF CALIFORNIA OR ITS OFFICERS OR AGENTS SHALL NOT BE RESPONSIBLE FOR THE ACCURACY OR COMPLETENESS OF SCANNED COPIES OF THIS PLAN SHEET.*

TO ACCOMPANY PLANS DATED 7-15-13

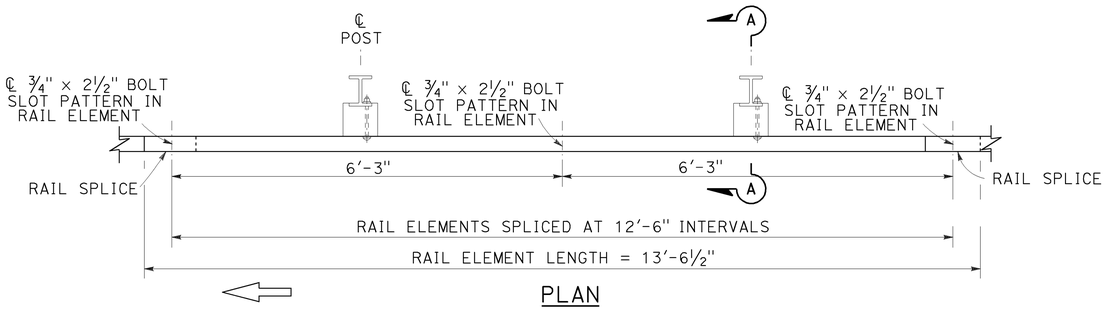


PLAN

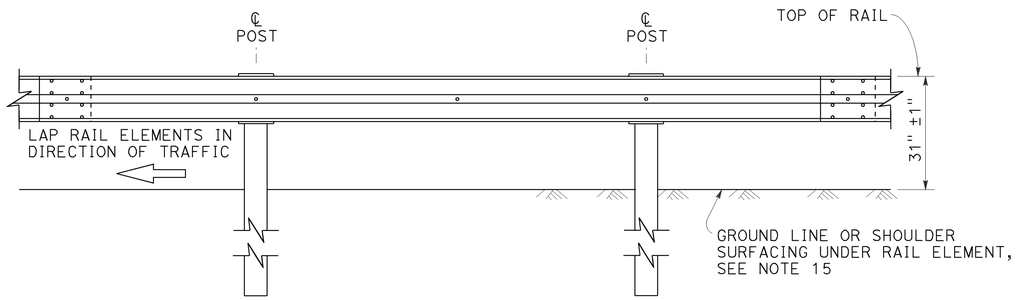


ELEVATION

## MIDWEST GUARDRAIL SYSTEM WITH STEEL POSTS AND NOTCHED WOOD OR NOTCHED RECYCLED PLASTIC BLOCKS

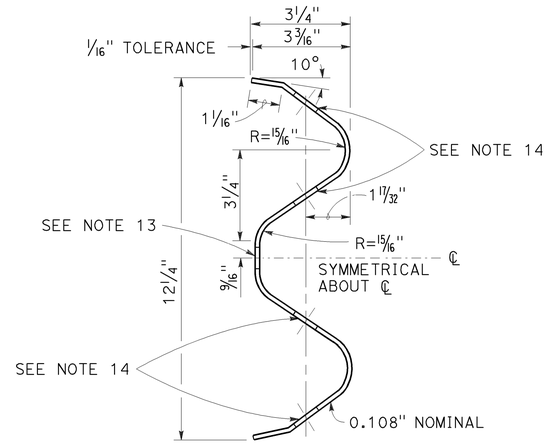


SECTION THRU RAIL ELEMENT

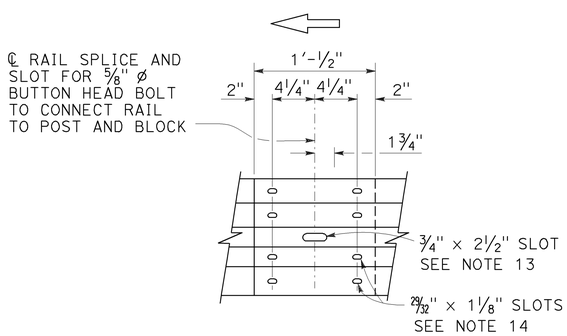


ELEVATION

## RAIL ELEMENT SPLICE DETAIL

a) Connect the over lapped end of the rail elements with ⅝" ø × 1⅜" button head oval shoulder splice bolts inserted into the 29⁄₃₂" × 1⅛" slots and bolted together with ⅝" ø recessed hex nuts. Recess of hex nut points toward rail element. A total of 8 bolts and nuts are to be used at each rail splice connection.

b) The ends of the rail elements are to be overlapped in the direction of traffic (see details).

c) Where end cap is to be attached to the end of a rail element, a total of 4 of the above described splice bolts and nuts are to be used.

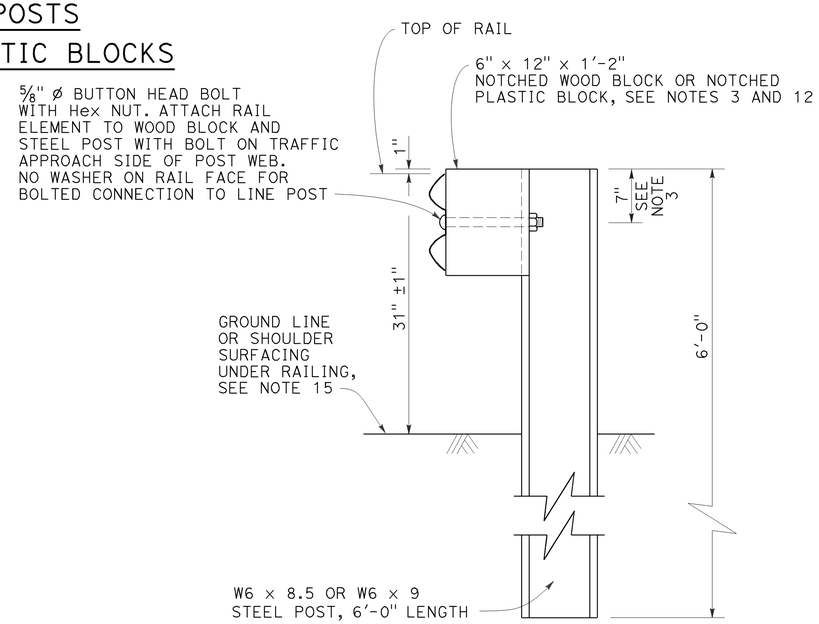


SECTION A-A

## TYPICAL STEEL LINE POST INSTALLATION

See Note 4

NOTES:

1. For details of wood post installations, see Revised Standard Plan RSP A77L1.
2. For details of standard hardware used to construct MGS, see Revised Standard Plan RSP A77M1.
3. For details of steel posts and notched wood blocks used to construct MGS, see Revised Standard Plan RSP A77N2.
4. For additional installation details, see Revised Standard Plan RSP A77N3.
5. MGS post spacing to be 6'-3" center to center, except as otherwise noted.
6. For MGS typical layouts, see the A77P, A77Q and A77R Series of Standard Plans.
7. If railing is connected to terminal system end treatment, use 31" height terminal system end treatment.
8. For MGS end anchor details, see Revised Standard Plans RSP A77S1 and RSP A77T2.
9. For details of MGS transition to bridge railing, see Revised Standard Plan RSP A77U4.
10. For additional details of MGS connection to bridge railings, see Revised Standard Plans RSP A77U1, RSP A77U2 and RSP A77V1.
11. For dike positioning and MGS delineation details, see Revised Standard Plan RSP A77N4.
12. Notched face of block faces steel post.
13. Slotted hole for bolted connection of rail element to block and post. See "Section Thru Rail Element".
14. Slotted holes for splice bolts to overlap ends of rail element. See "Section Thru Rail Element".
15. Install posts in soil.

STATE OF CALIFORNIA
DEPARTMENT OF TRANSPORTATION

# MIDWEST GUARDRAIL SYSTEM STANDARD RAILING SECTION (STEEL POST WITH NOTCHED WOOD OR NOTCHED RECYCLED PLASTIC BLOCK)

NO SCALE

RSP A77L2 DATED JULY 19, 2013 SUPPLEMENTS THE STANDARD PLANS BOOK DATED 2010.

**REVISED STANDARD PLAN RSP A77L2**

**2010 REVISED STANDARD PLAN RSP A77L2**

7-3-13

| Dist | COUNTY | ROUTE | POST MILES TOTAL PROJECT | SHEET No. | TOTAL SHEETS |
|---|---|---|---|---|---|
| 06 | Mad | 99 | 20.2/22.7 | 58 | 76 |

Randell D. Hiatt
REGISTERED CIVIL ENGINEER

July 19, 2013
PLANS APPROVAL DATE

REGISTERED PROFESSIONAL ENGINEER
Randell D. Hiatt
No. C50200
Exp. 6-30-15
CIVIL
STATE OF CALIFORNIA

*THE STATE OF CALIFORNIA OR ITS OFFICERS OR AGENTS SHALL NOT BE RESPONSIBLE FOR THE ACCURACY OR COMPLETENESS OF SCANNED COPIES OF THIS PLAN SHEET.*

TO ACCOMPANY PLANS DATED 7-15-13

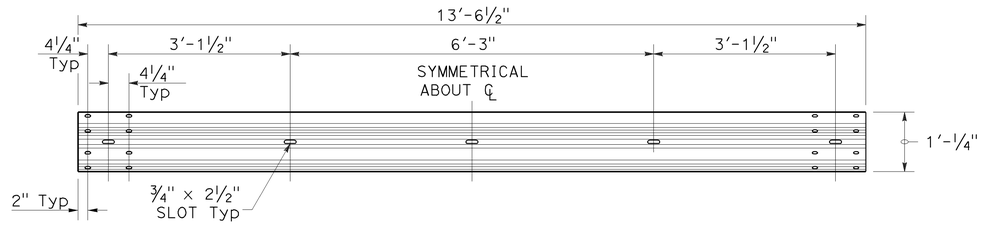


TYPICAL RAIL ELEMENT

NOTE:

1. Slotted holes for splice bolts to overlap ends of rail element.

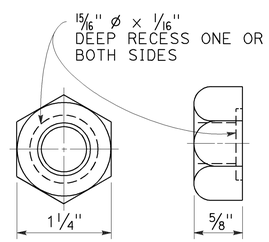


⅝" ø RECESS NUT

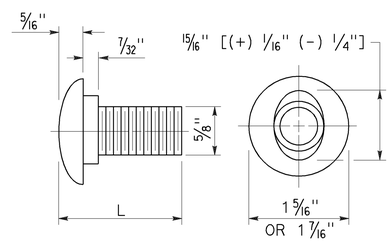


⅝" ø BUTTON HEAD BOLT

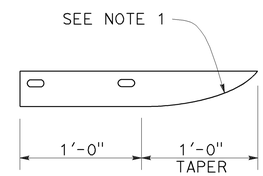


PLAN

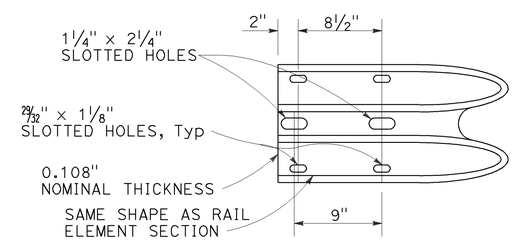


ELEVATION

END CAP
(TYPE A)

BUTTON HEAD BOLT

| L | THREAD LENGTH |
|---|---|
| 1⅜" | FULL THREAD LENGTH |
| 2" | FULL THREAD LENGTH |
| 10" | 4" Min THREAD LENGTH |
| 18" | 4" Min THREAD LENGTH |
| 20" | 4" Min THREAD LENGTH |
| 22" | 4" Min THREAD LENGTH |
| 26" | 4" Min THREAD LENGTH |
| 36" | 4" Min THREAD LENGTH |
| ** 2¾" | 2" Min THREAD LENGTH |
| ** 19" | 4" Min THREAD LENGTH |

** For nested rail applications.

STATE OF CALIFORNIA
DEPARTMENT OF TRANSPORTATION

# MIDWEST GUARDRAIL SYSTEM STANDARD HARDWARE

NO SCALE

RSP A77M1 DATED JULY 19, 2013 SUPPLEMENTS THE STANDARD PLANS BOOK DATED 2010.

**REVISED STANDARD PLAN RSP A77M1**

**2010 REVISED STANDARD PLAN RSP A77M1**

| Dist | COUNTY | ROUTE | POST MILES TOTAL PROJECT | SHEET No. | TOTAL SHEETS |
|---|---|---|---|---|---|
| 06 | Mad | 99 | 20.2/22.7 | 59 | 76 |

Randell D. Hiatt
REGISTERED CIVIL ENGINEER

July 19, 2013
PLANS APPROVAL DATE

REGISTERED PROFESSIONAL ENGINEER
Randell D. Hiatt
No. C50200
Exp. 6-30-15
CIVIL
STATE OF CALIFORNIA

*THE STATE OF CALIFORNIA OR ITS OFFICERS OR AGENTS SHALL NOT BE RESPONSIBLE FOR THE ACCURACY OR COMPLETENESS OF SCANNED COPIES OF THIS PLAN SHEET.*

TO ACCOMPANY PLANS DATED 7-15-13

**2010 REVISED STANDARD PLAN RSP A77N3**

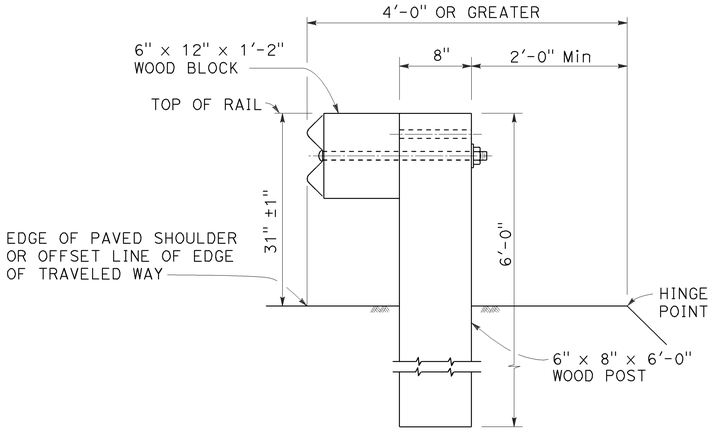


DETAIL A

TYPICAL ROADWAY INSTALLATION

See Note 1

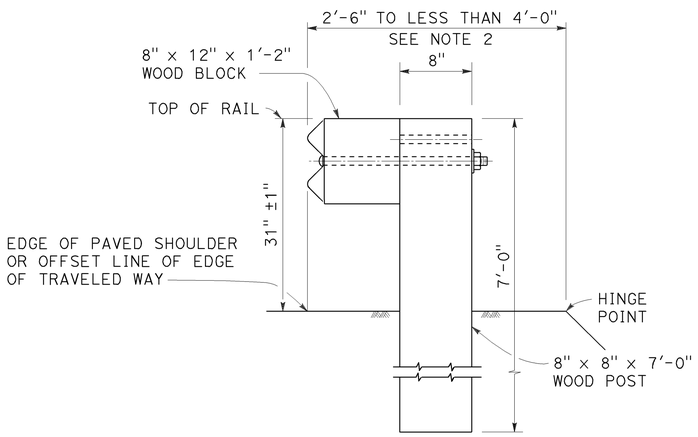


DETAIL B

NARROW ROADWAY INSTALLATION

See Note 1

## POST EMBEDMENT

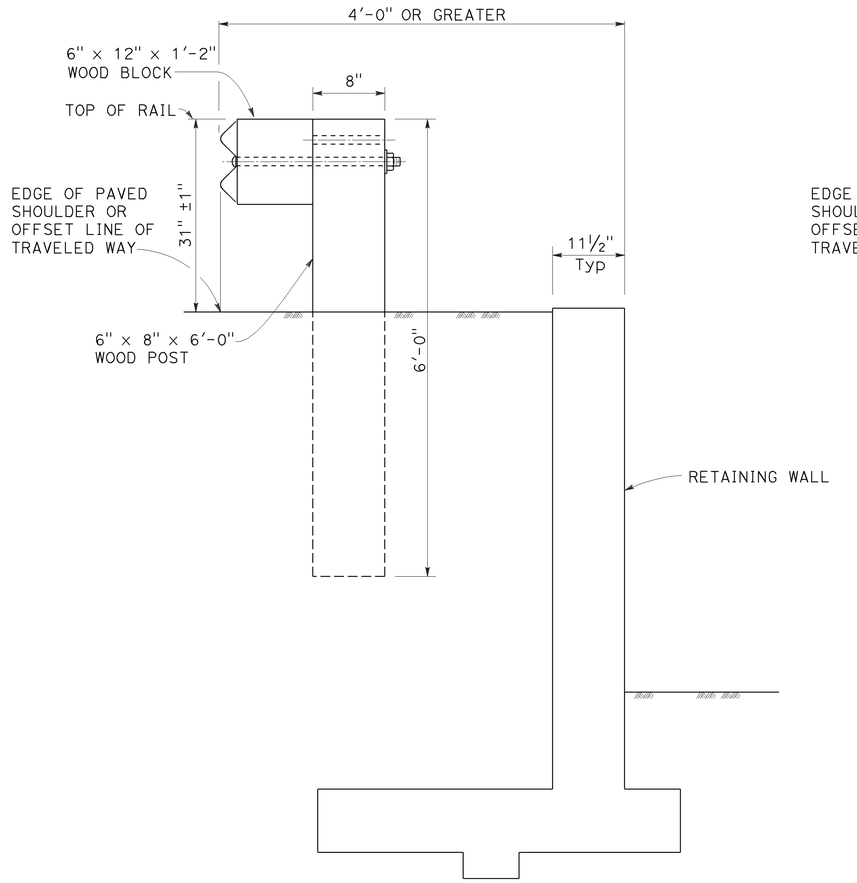


DETAIL C

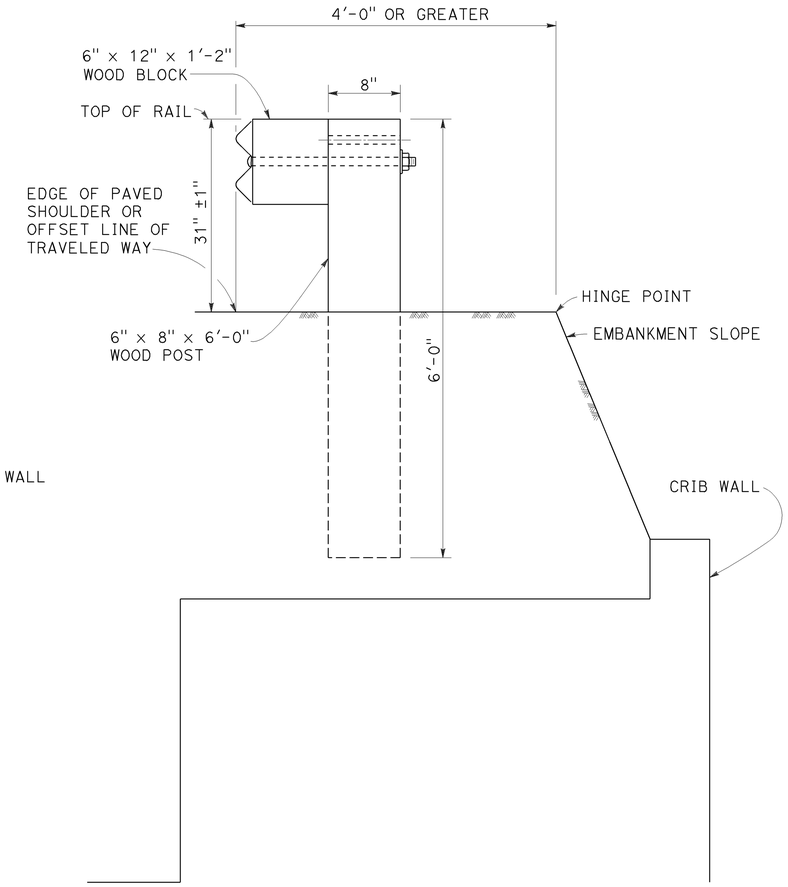


DETAIL D

## INSTALLATION AT EARTH RETAINING WALLS

NOTES:

1. These installation details also applicable to steel line post installations. For Detail A, C, and D, where steel line post installations are constructed, W6 x 8.5 or W6 x 9 steel post, 6'-0" in length, with 6" x 12" x 1'-2" notched wood blocks or notched recycled plastic blocks are to be used in place of the size of wood post and wood block shown. For Detail B, where steel line post installations are constructed, or W6 x 15 steel post, 8'-0" in length, with 8" x 12" x 1'-2" notched wood blocks or notched recycled plastic blocks are to be used in place of the size of wood post and wood block shown. For additional installation details, see Revised Standard Plan RSP A77L1 and RSP A77L2.
2. Where the distance between the face of the rail and the hinge point is less than 2'-6", see the Project Plans for special details.
3. For dike positioning with MGS installations, see Revised Standard Plan RSP A77N4.

STATE OF CALIFORNIA
DEPARTMENT OF TRANSPORTATION

# MIDWEST GUARDRAIL SYSTEM TYPICAL LINE POST EMBEDMENT AND HINGE POINT OFFSET DETAILS

NO SCALE

RSP A77N3 DATED JULY 19, 2013 SUPPLEMENTS THE STANDARD PLANS BOOK DATED 2010.

**REVISED STANDARD PLAN RSP A77N3**

| Dist | COUNTY | ROUTE | POST MILES TOTAL PROJECT | SHEET No. | TOTAL SHEETS |
|---|---|---|---|---|---|
| 06 | Mad | 99 | 20.2/22.7 | 60 | 76 |

Randell D. Hiatt
REGISTERED CIVIL ENGINEER

July 19, 2013
PLANS APPROVAL DATE

REGISTERED PROFESSIONAL ENGINEER
Randell D. Hiatt
No. C50200
Exp. 6-30-15
CIVIL
STATE OF CALIFORNIA

THE STATE OF CALIFORNIA OR ITS OFFICERS OR AGENTS SHALL NOT BE RESPONSIBLE FOR THE ACCURACY OR COMPLETENESS OF SCANNED COPIES OF THIS PLAN SHEET.

TO ACCOMPANY PLANS DATED 7-15-13

## NOTES:

1. When necessary to place dike more than 7" in front of face of MGS, only Type C dike may be used. For dike details, see Revised Standard Plan RSP A87B.
2. For standard railing post embedment, see Revised Standard Plan RSP A77N3.
3. MGS delineation to be used where shown on the Project Plans.
4. When dike or curb is placed under MGS, the maximum height of the dike or curb shall be 6". Mountable dike should not be used. For dike and curb details, see Revised Standard Plans RSP A87A and RSP A87B.
5. For details of typical distance between the face of rail and hinge point, see Revised Standard Plan RSP A77N3.
6. For steel line posts, use 1/4 - 20 self-tapping screws in 0.22" diameter holes or 1/4" bolts in 9/32" diameter holes.

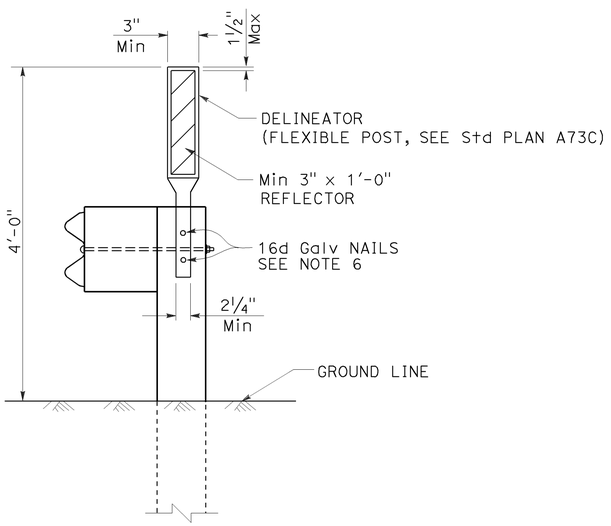


MGS DELINEATION
See Note 3

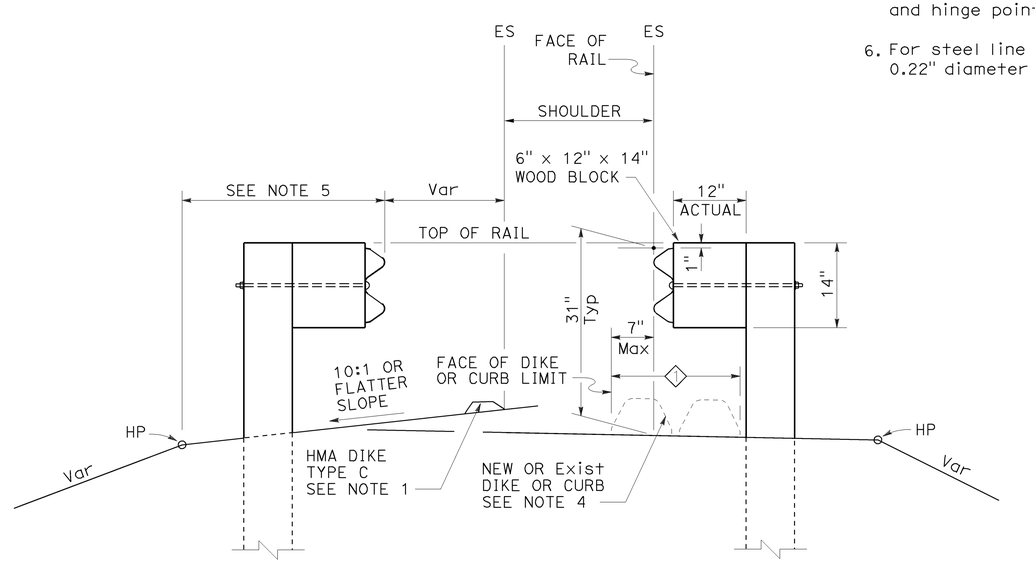


DIKE POSITIONING
See Note 1

1 PERMISSIBLE DIKE OR CURB PLACEMENT AREA

STATE OF CALIFORNIA
DEPARTMENT OF TRANSPORTATION

# MIDWEST GUARDRAIL SYSTEM TYPICAL RAILING DELINEATION AND DIKE POSITIONING DETAILS

NO SCALE

RSP A77N4 DATED JULY 19, 2013 SUPPLEMENTS THE STANDARD PLANS BOOK DATED 2010.

**REVISED STANDARD PLAN RSP A77N4**

2010 REVISED STANDARD PLAN RSP A77N4

7-10-13

| Dist | COUNTY | ROUTE | POST MILES TOTAL PROJECT | SHEET No. | TOTAL SHEETS |
|---|---|---|---|---|---|
| 06 | Mad | 99 | 20.2/22.7 | 61 | 76 |

Randell D. Hiatt
REGISTERED CIVIL ENGINEER

July 19, 2013
PLANS APPROVAL DATE

REGISTERED PROFESSIONAL ENGINEER
Randell D. Hiatt
No. C50200
Exp. 6-30-15
CIVIL
STATE OF CALIFORNIA

*THE STATE OF CALIFORNIA OR ITS OFFICERS OR AGENTS SHALL NOT BE RESPONSIBLE FOR THE ACCURACY OR COMPLETENESS OF SCANNED COPIES OF THIS PLAN SHEET.*

TO ACCOMPANY PLANS DATED 7-15-13

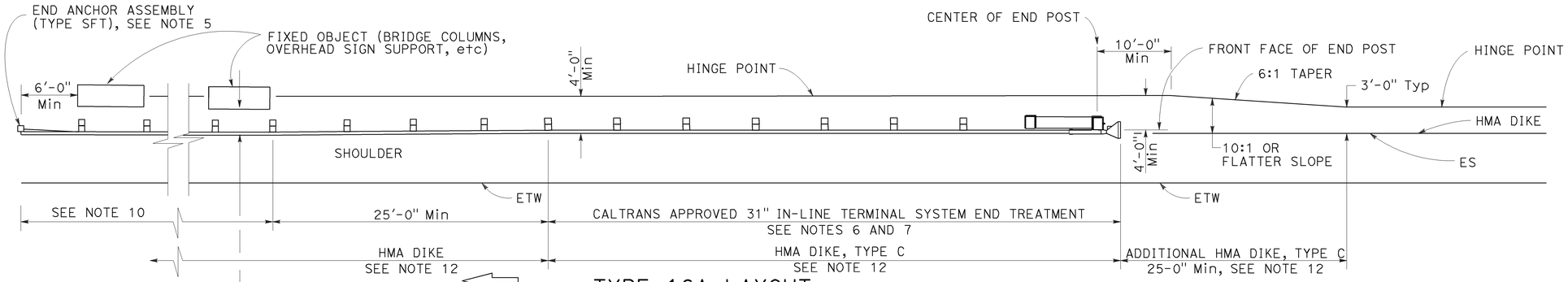


## TYPE 16A LAYOUT

(MGS installation at roadside fixed object or objects with 31" in-line end treatment at traffic approach end of railing)
See Notes 11 and 12

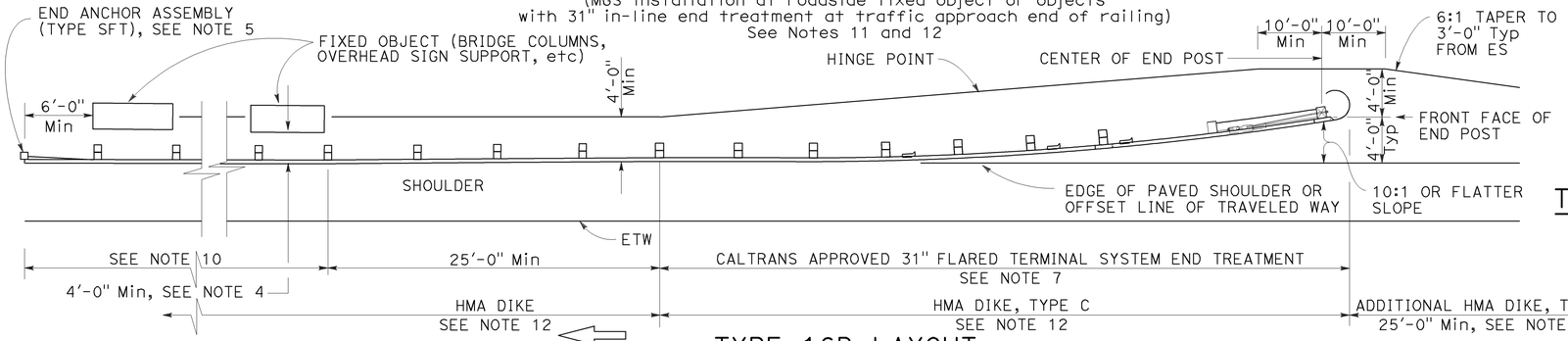


## TYPE 16B LAYOUT

(MGS installation at roadside fixed object or objects with 31' flared end treatment at traffic approach end of railing)
See Notes 11 and 12

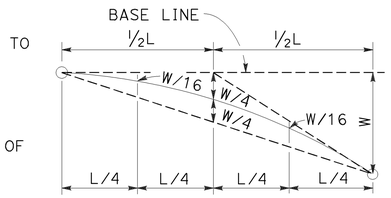


## TYPIC AL PARABOLIC LAYOUT

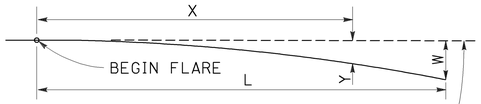


BASE LINE (EDGE OF PAVED SHOULDER OR OFFSET LINE OF EDGE OF TRAVELED WAY)

$$Y = \frac{WX^2}{L^2}$$

Y = OFFSET FROM BASE LINE
W = MAXIMUM OFFSET
X = DISTANCE ALONG BASE LINE
L = LENGTH OF FLARE

## PARABOLIC FLARE OFFSETS

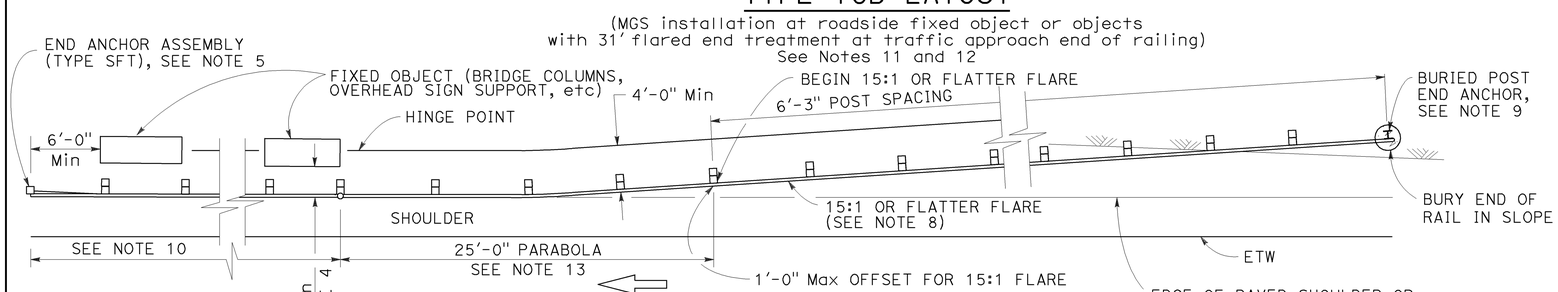


## TYPE 16C LAYOUT

(MGS installation at roadside fixed object or objects with a buried end anchor treatment at traffic approach end of railing)
See Notes 11 and 12

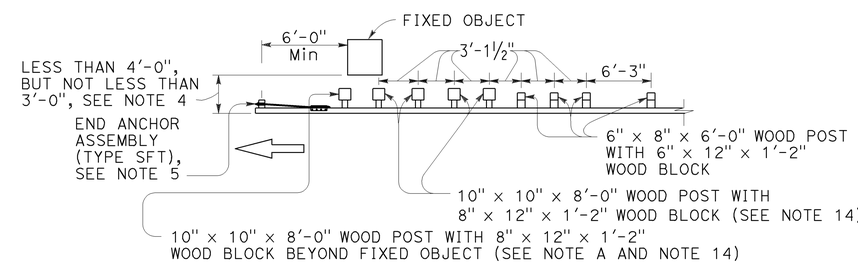


**NOTE A:** For a series of fixed objects (bridge columns, overhead sign supports, etc.) additional 10" x 10" x 8'-0" wood post with 8" x 12" x 1'-2" wood blocks at 3'-1½" center to center spacing are to be used between fixed objects.

## STRENGTHENED MIDWEST GUARDRAIL SYSTEM SECTIONS FOR FIXED OBJECT

Use strengthened MGS sections with Types 16A, 16B or 16C layouts where minimum clearance between the face of the railing and fixed object(s) is less than 4'-0", but not less than 3'-0". See Note 4

## NOTES:

1. Line post, blocks and hardware to be used are shown on Revised Standard Plans RSP A77L1, RSP A77L2, RSP A77M1, RSP A77N1 and RSP A77N2.
2. MGS post spacing to be 6'-3" center to center, except as otherwise noted.
3. Except as noted, line posts are 6" x 8" x 6'-0" wood with 6" x 12" x 1'-2" wood blocks. W6 x 8.5 or W6 x 9 steel posts, 6'-0" in length, with 6" x 12" x 1'-2" notched wood blocks or notched recycled plastic blocks may be used for 6" x 8" x 6'-0" wood line posts with 6" x 12" x 1'-2" wood blocks where applicable and when specified.
4. A 4'-0" minimum clearance is required between the face of the railing and the face of a fixed object located directly behind MGS sections with post spacing of 6'-3". Construct MGS as shown in the detail "Strengthened Midwest Guardrail System Sections for Fixed Object" on this plan, where the clearance between the face of the railing and the face of a fixed object is less than 4'-0", but not less than 3'-0". Where the clearance is less than 3'-0", a concrete wall or barrier should be constructed to shield the fixed object(s).
5. For End Anchor Assembly (Type SFT) details, see Revised Standard Plan RSP A77S1.
6. 31" in-line terminal system end treatments are used where site conditions will not accommodate a 31" flared end treatment.
7. The type of 31" terminal system to be used will be shown on the Project Plans.
8. The 15:1 or flatter flare used with Type 16C Layout is based on the edge of the paved shoulder or offset line of edge of the traveled way. The length of MGS within the 15:1 or flatter flare is based on site conditions and should be a length equal to multiples of 12'-6".
9. For details of the Buried Post End Anchor used with Type 16C Layout, see Revised Standard Plan RSP A77T2.
10. As site conditions dictate, construct additional MGS to shield fixed object(s). Additional MGS length equal to multiples of 12'-6". Post spacing at 6'-3" except as specified in Note 4.
11. Layout Types 16A, 16B or 16C are typically used where MGS is recommended to shield roadside fixed object(s) and a crashworthy 31" end treatment is required for only one direction of traffic.
12. Where placement of dike is required with MGS, see Revised Standard Plan RSP A77N4 for dike positioning details.
13. For typical flare offsets for 25'-0" length parabola with maximum offset of 1'-0", see Revised Standard Plan RSP A77P1.
14. W6 x 15 steel post, 8'-0" in length, with 8" x 12" x 1'-2" notched wood block or notched recycled plastic blocks may be used in place of the 10" x 10" x 8'-0" wood post with 8" x 12" x 1'-2" wood block shown in the detail "Strengthened Midwest Guardrail System Sections for Fixed Object".

STATE OF CALIFORNIA
DEPARTMENT OF TRANSPORTATION

# MIDWEST GUARDRAIL SYSTEM TYPICAL LAYOUTS FOR ROADSIDE FIXED OBJECTS

NO SCALE

RSP A77R3 DATED JULY 19, 2013 SUPPLEMENTS THE STANDARD PLANS BOOK DATED 2010.

**REVISED STANDARD PLAN RSP A77R3**

**2010 REVISED STANDARD PLAN RSP A77R3**

6-20-13

| Dist | COUNTY | ROUTE | POST MILES TOTAL PROJECT | SHEET No. | TOTAL SHEETS |
|---|---|---|---|---|---|
| 06 | Mad | 99 | 20.2/22.7 | 62 | 76 |

Randell D. Hiatt
REGISTERED CIVIL ENGINEER

July 19, 2013
PLANS APPROVAL DATE

REGISTERED PROFESSIONAL ENGINEER
Randell D. Hiatt
No. C50200
Exp. 6-30-15
CIVIL
STATE OF CALIFORNIA

*THE STATE OF CALIFORNIA OR ITS OFFICERS OR AGENTS SHALL NOT BE RESPONSIBLE FOR THE ACCURACY OR COMPLETENESS OF SCANNED COPIES OF THIS PLAN SHEET.*

TO ACCOMPANY PLANS DATED 7-15-13

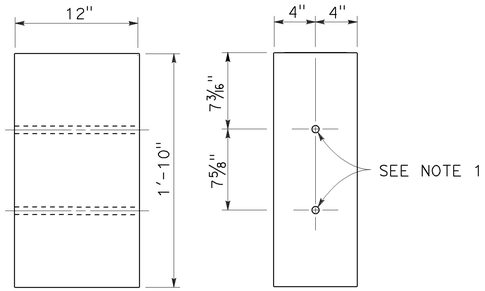


SIDE FRONT

8" x 12"
WOOD BLOCK

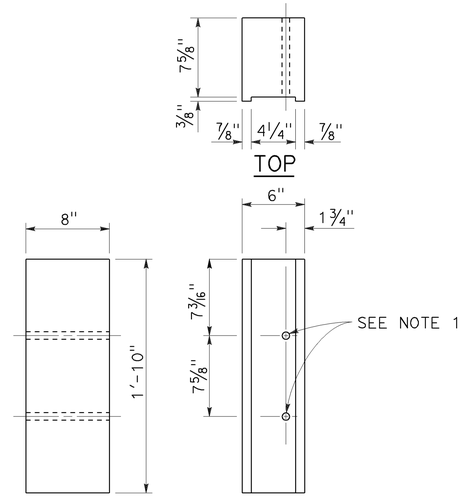


SIDE FRONT

6" x 8"
NOTCHED WOOD BLOCK
See Notes 3 and 5

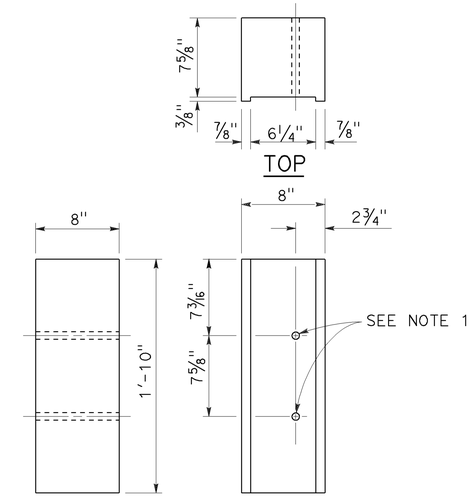


SIDE FRONT

8" x 8"
NOTCHED WOOD BLOCK
See Notes 4 and 5

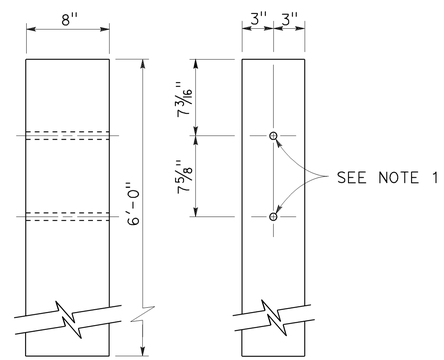


SIDE FRONT

6" x 8"
WOOD POST

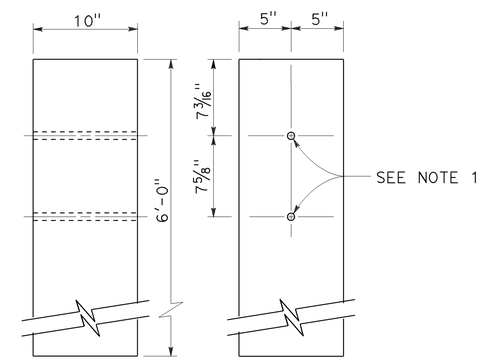


SIDE FRONT

10" x 10"
WOOD POST

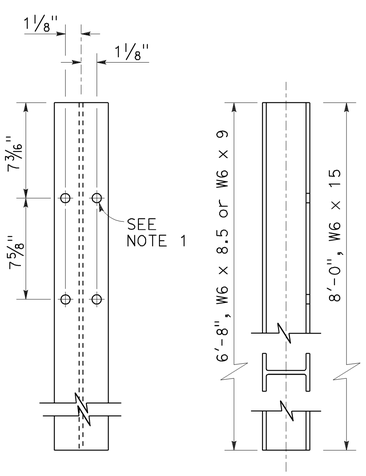


FRONT SIDE

STEEL POST
W6 x 9 or W6 x 8.5 and W6 x 15

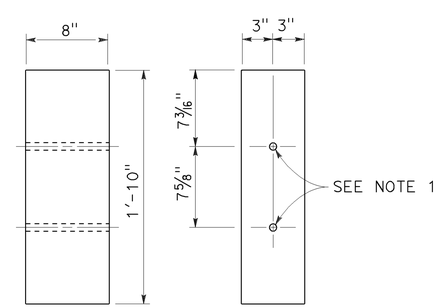


SIDE FRONT

6" x 8"
WOOD BLOCK

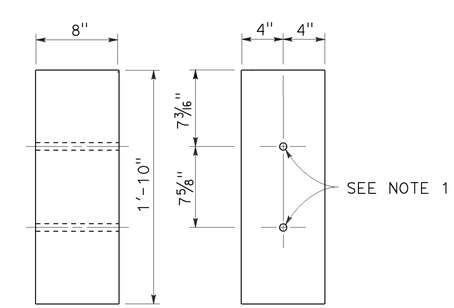


SIDE FRONT

8" x 8"
WOOD BLOCK

## NOTES:

1. All holes in steel post to be 13/16" Dia maximum. Holes in wood posts and wood blocks to be 3/4" Dia ±1/16".
2. Dimensions shown for wood post are nominal.
3. For use with W6 x 8.5 or W6 x 9 steel post.
4. For use with W6 x 15 steel post.
5. Notched face of block faces steel post.

STATE OF CALIFORNIA
DEPARTMENT OF TRANSPORTATION

# THRIE BEAM BARRIER POST AND BLOCK DETAILS

NO SCALE

RSP A78C2 DATED JULY 19, 2013 SUPERSEDES STANDARD PLAN A78C2 DATED MAY 20, 2011 - PAGE 92 OF THE STANDARD PLANS BOOK DATED 2010.

**REVISED STANDARD PLAN RSP A78C2**

**2010 REVISED STANDARD PLAN RSP A78C2**

7-3-13

| Dist | COUNTY | ROUTE | POST MILES TOTAL PROJECT | SHEET No. | TOTAL SHEETS |
|---|---|---|---|---|---|
| 06 | Mad | 99 | 20.2/22.7 | 63 | 76 |

Randell D. Hiatt
REGISTERED CIVIL ENGINEER

July 19, 2013
PLANS APPROVAL DATE

REGISTERED PROFESSIONAL ENGINEER
Randell D. Hiatt
No. C50200
Exp. 6-30-15
CIVIL
STATE OF CALIFORNIA

THE STATE OF CALIFORNIA OR ITS OFFICERS OR AGENTS SHALL NOT BE RESPONSIBLE FOR THE ACCURACY OR COMPLETENESS OF SCANNED COPIES OF THIS PLAN SHEET.

TO ACCOMPANY PLANS DATED 7-15-13

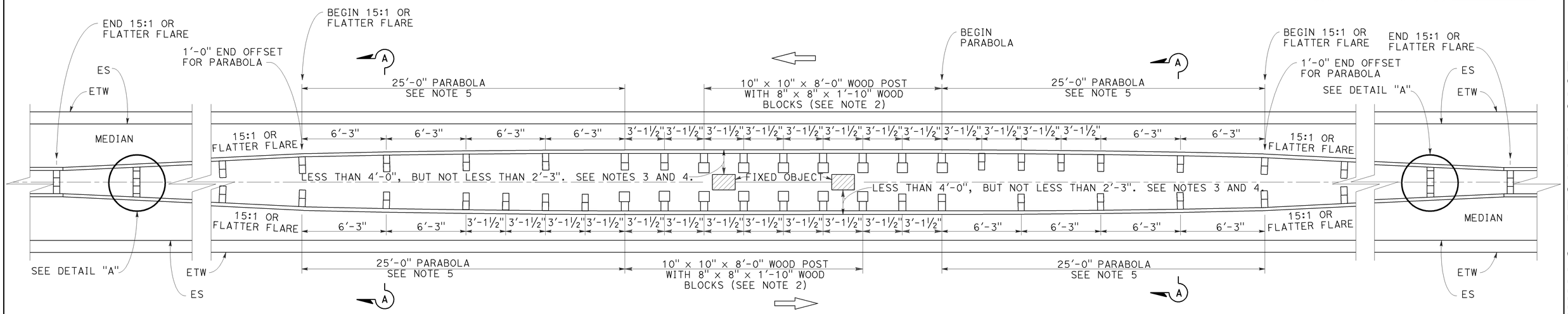


PLAN

## THRIE BEAM BARRIER AT FIXED OBJECTS

(Wood post and block shown)
See Notes 1, 2 and 3.

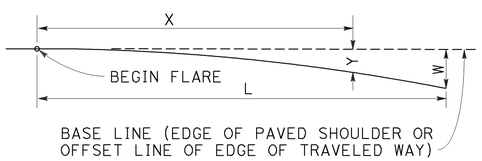


$$Y = \frac{WX^2}{L^2}$$

Y = OFFSET FROM BASE LINE
W = MAXIMUM OFFSET
X = DISTANCE ALONG BASE LINE
L = LENGTH OF FLARE

## PARABOLIC FLARE OFFSETS

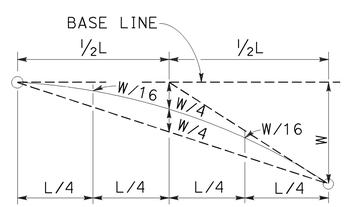


## TYPICAL PARABOLIC LAYOUT

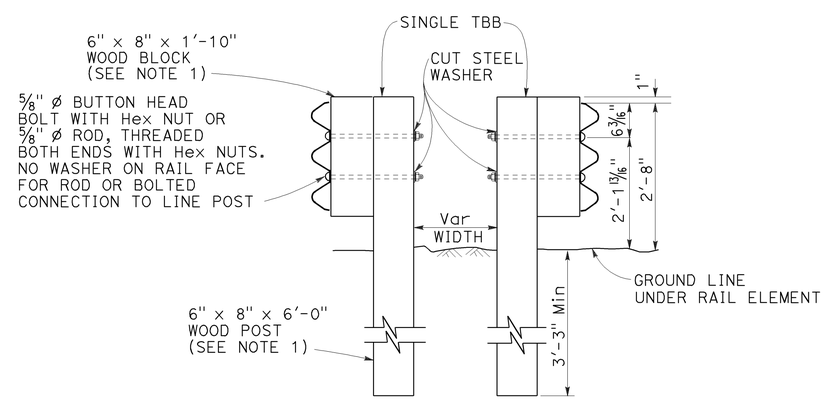


## SECTION A-A

Wood post with wood block shown
See Note 1

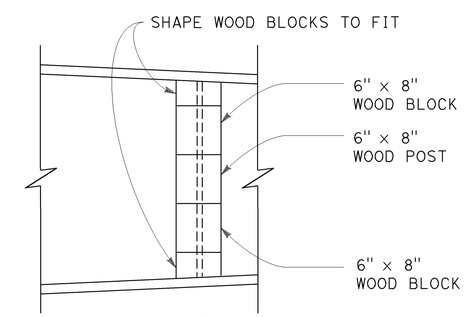


## DETAIL "A"

### NOTES:

1. Where applicable and when specified, (W6 x 8.5 or W6 x 9) x 6'-8" steel post with 6" x 8" x 1'-10" notched wood blocks or notched recycled plastic blocks may be used for 6" x 8" x 6'-0" wood post with 6" x 8" x 1'-10" wood block.
2. Where applicable and when specified, (W6 x 15) x 8'-0" steel post with 8" x 8" x 1'-10" notched wood blocks or notched recycled plastic blocks may be used for the 10" x 10" x 8'-0" wood post with 8" x 8" x 1'-10" wood blocks shown at 3'-1½" center to center spacing.
3. Where a minimum clearance of 4'-0" or more can be obtained between the face of the thrie beam rail and the face of the fixed object(s), the following substitutions may be made:
   a) 6" x 8" x 6'-0" wood posts with 6" x 8" x 1'-10" wood blocks for the 10" x 10" x 8'-0" wood post with 8" x 8" x 1'-10" wood blocks shown.
   b) 6'-3" post spacing for the 3'-1½" spacing shown.
4. Where the clearance between the face of the railing and the face of a fixed object is less than 2'-3", a concrete barrier should be constructed to shield the fixed object(s).
5. For typical flare offsets for 25'-0" length parabola with maximum offset of 1'-0", see Revised Standard Plan RSP A77P1.

STATE OF CALIFORNIA
DEPARTMENT OF TRANSPORTATION

# THRIE BEAM BARRIER AT FIXED OBJECTS IN MEDIAN

NO SCALE

RSP A78D1 DATED JULY 19, 2013 SUPERSEDES STANDARD PLAN A78D1
DATED MAY 20, 2011 - PAGE 97 OF THE STANDARD PLANS BOOK DATED 2010.

**REVISED STANDARD PLAN RSP A78D1**

2010 REVISED STANDARD PLAN RSP A78D1

7-18-13

| Dist | COUNTY | ROUTE | POST MILES TOTAL PROJECT | SHEET No. | TOTAL SHEETS |
|---|---|---|---|---|---|
| 06 | Mad | 99 | 20.2/22.7 | 64 | 76 |

REGISTERED CIVIL ENGINEER

July 19, 2013
PLANS APPROVAL DATE

REGISTERED PROFESSIONAL ENGINEER
Gurinderpal Bhullar
No. C48815
Exp. 9-30-14
CIVIL
STATE OF CALIFORNIA

THE STATE OF CALIFORNIA OR ITS OFFICERS OR AGENTS SHALL NOT BE RESPONSIBLE FOR THE ACCURACY OR COMPLETENESS OF SCANNED COPIES OF THIS PLAN SHEET.

TO ACCOMPANY PLANS DATED 7-15-13

2010 REVISED STANDARD PLAN RSP T9

## TABLE 1

### TAPER LENGTH CRITERIA AND CHANNELIZING DEVICE SPACING

| SPEED (S) | MINIMUM TAPER LENGTH * FOR WIDTH OF OFFSET 12 FEET (W) | | | | MAXIMUM CHANNELIZING DEVICE SPACING | | |
|---|---|---|---|---|---|---|---|
| | | | | | X | Y | Z ** |
| | TANGENT 2L | MERGING L | SHIFTING L/2 | SHOULDER L/3 | TAPER | TANGENT | CONFLICT |
| mph | ft | ft | ft | ft | ft | ft | ft |
| 20 | 160 | 80 | 40 | 27 | 20 | 40 | 10 |
| 25 | 250 | 125 | 63 | 42 | 25 | 50 | 12 |
| 30 | 360 | 180 | 90 | 60 | 30 | 60 | 15 |
| 35 | 490 | 245 | 123 | 82 | 35 | 70 | 17 |
| 40 | 640 | 320 | 160 | 107 | 40 | 80 | 20 |
| 45 | 1080 | 540 | 270 | 180 | 45 | 90 | 22 |
| 50 | 1200 | 600 | 300 | 200 | 50 | 100 | 25 |
| 55 | 1320 | 660 | 330 | 220 | 55 | 110 | 27 |
| 60 | 1440 | 720 | 360 | 240 | 60 | 120 | 30 |
| 65 | 1560 | 780 | 390 | 260 | 65 | 130 | 32 |
| 70 | 1680 | 840 | 420 | 280 | 70 | 140 | 35 |

* - For other offsets, use the following merging taper length formula for L:
For speed of 40 mph or less, $L = WS^2/60$
For speed of 45 mph or more, $L = WS$

Where: L = Taper length in feet
W = Width of offset in feet
S = Posted speed limit, off-peak 85th-percentile speed prior to work starting, or the anticipated operating speed in mph

** - Use for taper and tangent sections where there are no pavement markings or where there is a conflict between existing pavement markings and channelizers (CA).

## TABLE 2

### LONGITUDINAL BUFFER SPACE AND FLAGGER STATION SPACING

| SPEED * | Min D ** | DOWNGRADE Min D *** | | |
|---|---|---|---|---|
| | | -3% | -6% | -9% |
| mph | ft | ft | ft | ft |
| 20 | 115 | 116 | 120 | 126 |
| 25 | 155 | 158 | 165 | 173 |
| 30 | 200 | 205 | 215 | 227 |
| 35 | 250 | 257 | 271 | 287 |
| 40 | 305 | 315 | 333 | 354 |
| 45 | 360 | 378 | 400 | 427 |
| 50 | 425 | 446 | 474 | 507 |
| 55 | 495 | 520 | 553 | 593 |
| 60 | 570 | 598 | 638 | 686 |
| 65 | 645 | 682 | 728 | 785 |
| 70 | 730 | 771 | 825 | 891 |

* - Speed is posted speed limit, off-peak 85th-percentile speed prior to work starting, or the anticipated operating speed in mph

** - Longitudinal buffer space or flagger station spacing

*** - Use on sustained downgrade steeper than -3 percent and longer than 1 mile.

## TABLE 3

### ADVANCE WARNING SIGN SPACING

| ROAD TYPE | DISTANCE BETWEEN SIGNS * | | |
|---|---|---|---|
| | A | B | C |
| | ft | ft | ft |
| URBAN - 25 mph OR LESS | 100 | 100 | 100 |
| URBAN - MORE THAN 25 mph TO 40 mph | 250 | 250 | 250 |
| URBAN - MORE THAN 40 mph | 350 | 350 | 350 |
| RURAL | 500 | 500 | 500 |
| EXPRESSWAY / FREEWAY | 1000 | 1500 | 2640 |

* - The distances are approximate, are intended for guidance purposes only, and should be applied with engineering judgment. These distances should be adjusted by the Engineer for field conditions, if necessary, by increasing or decreasing the recommmended distances.

STATE OF CALIFORNIA
DEPARTMENT OF TRANSPORTATION

# TRAFFIC CONTROL SYSTEM TABLES FOR LANE AND RAMP CLOSURES

NO SCALE

RSP T9 DATED JULY 19, 2013 SUPERSEDES RSP T9 DATED APRIL 19, 2013 THAT SUPPLEMENTS THE STANDARD PLANS BOOK DATED 2010.

**REVISED STANDARD PLAN RSP T9**

4-30-13

TO ACCOMPANY PLANS DATED 7-15-13

| Dist | COUNTY | ROUTE | POST MILES TOTAL PROJECT | SHEET No. | TOTAL SHEETS |
|---|---|---|---|---|---|
| 06 | Mad | 99 | 20.2/22.7 | 65 | 76 |

REGISTERED CIVIL ENGINEER

April 19, 2013
PLANS APPROVAL DATE

REGISTERED PROFESSIONAL ENGINEER Gurinderpal Bhullar No. C48815 Exp. 9-30-14 CIVIL STATE OF CALIFORNIA

*THE STATE OF CALIFORNIA OR ITS OFFICERS OR AGENTS SHALL NOT BE RESPONSIBLE FOR THE ACCURACY OR COMPLETENESS OF SCANNED COPIES OF THIS PLAN SHEET.*

## NOTES:

See Revised Standard Plan RSP T9 for tables.

Use cone spacing X for taper segment, Y for tangent segment or Z for conflict situations, as approriate, per Table 1, unless X, Y, or Z cone spacing is shown on this sheet.

Unless otherwise specified in the special provisions, all temporary warning signs shall have black legend on fluorescent orange background.

California codes are designated by (CA). Otherwise, Federal (MUTCD) codes are shown.

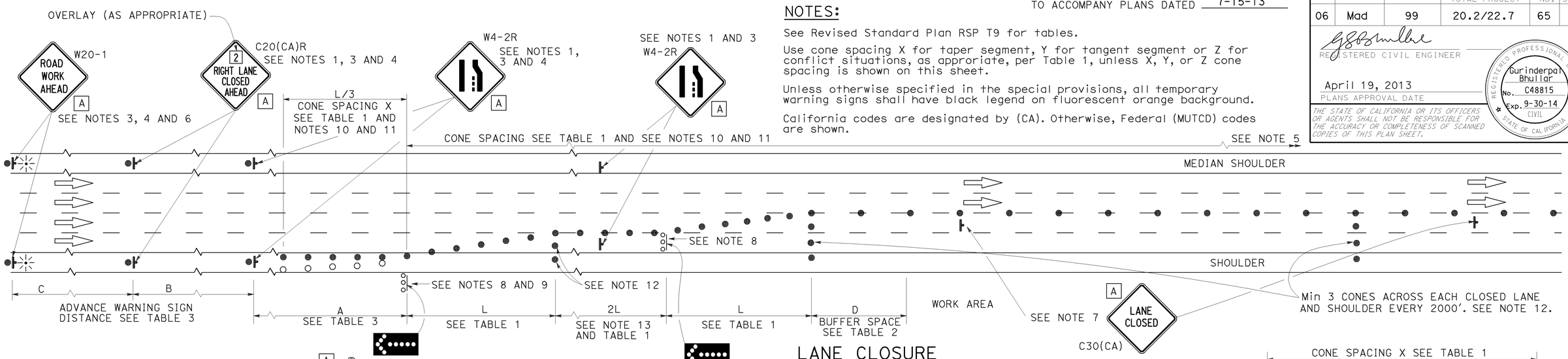


## LANE CLOSURE

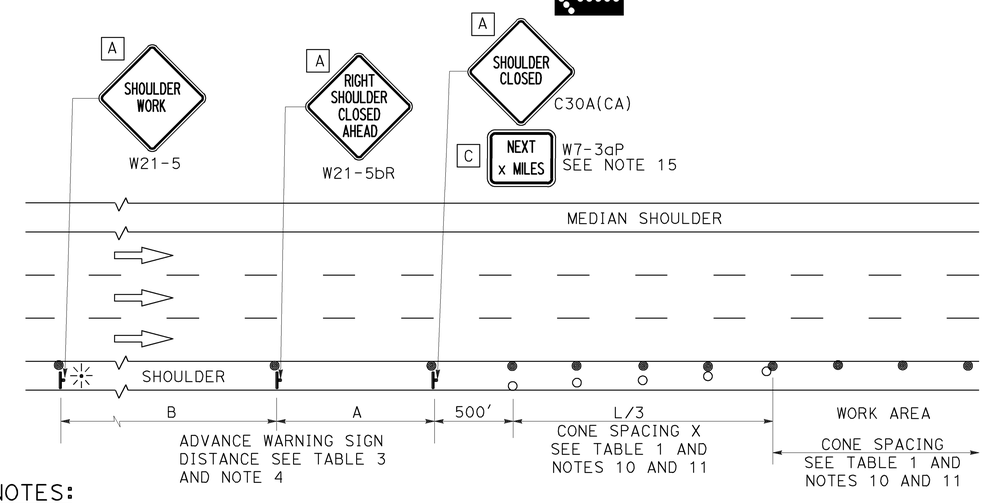


## SHOULDER CLOSURE

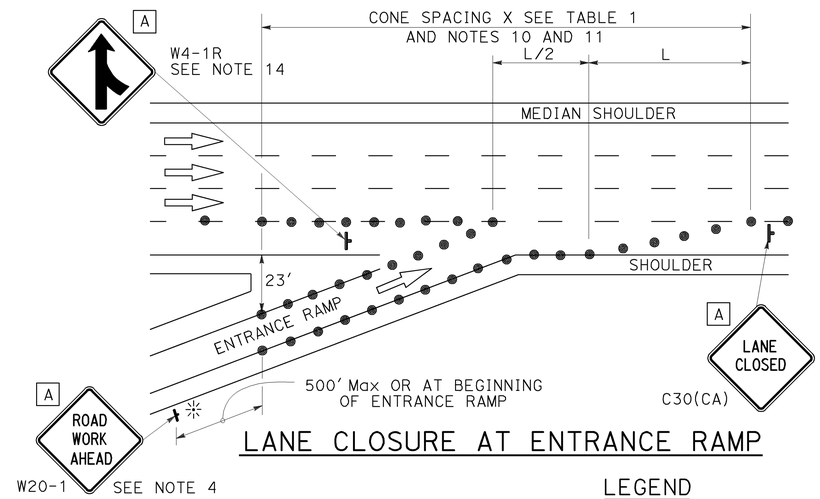


## LANE CLOSURE AT ENTRANCE RAMP

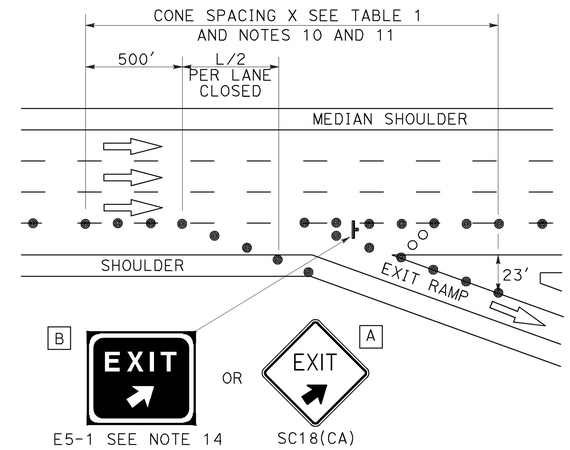


## LANE CLOSURE AT EXIT RAMP

## NOTES:

1. Median lane closures shall conform to the details as shown except that C20(CA)L and W4-2L signs shall be used.
2. At least one person shall be assigned to provide full time maintenance of traffic control devices for lane closures.
3. Duplicate sign installations are not required:
   a) On opposite shoulder if at least one-half of the available lanes remain open to traffic.
   b) In the median if the width of the median shoulder is less than 8' and the outside lanes are to be closed.
4. Each advance warning sign on each side of the roadway shall be equipped with at least two flags for daytime closure. Each flag shall be at least 16" x 16" in size and shall be orange or fluorescent red-orange in color. Flashing beacons shall be placed at the locations indicated for lane closure during hours of darkness.
5. A G20-2 "END ROAD WORK" sign, with minimum size of 48" x 24" as appropriate, shall be placed at the end of the lane closure unless the end of work area is obvious or ends within a larger project's limits.
6. If the W20-1 sign would follow within 2000' of a stationary W20-1 or G20-1 "ROAD WORK NEXT _____ MILES", use a C20(CA) sign for the first advance warning sign.
7. Place a C30(CA) sign every 2000' throughout length of lane closure.
8. One flashing arrow sign for each lane closed. The flashing arrow signs shall be Type I.
9. A minimum 1500' of sight distance shall be provided where possible for vehicles approaching the first flashing arrow sign. Lane closures shall not begin at top of crest vertical curve or on a horizontal curve.
10. All cones used for lane closures during the hours of darkness shall be fitted with retroreflective bands (or sleeves) as specified in the specifications.
11. Portable delineators, placed at one-half the spacing indicated for traffic cones may be used instead of cones for daytime closures only.
12. Unless otherwise specified in the special provisions, a minimum of 3 cones shall be placed transversely across each closed lane and shoulder at each location where a taper across a traffic lane ends and every 2000' as shown on the "Lane Closure" detail. Two Type II barricades may be used instead of the 3 cones. The transverse alignment of the cones or barricades on the closed shoulder may be shifted from the transverse alignment to provide access to the work.
13. Unless otherwise specified in the special provisions, the 2L tangent shown along lane lines shall be used between the L tapers required for each closed traffic lane.
14. Unless otherwise specified in the special provisions, the E5-1 or SC18(CA) and W4-1 signs shall be used as shown.
15. A W7-3aP "NEXT____ MILES" plaque must be used if theshoulder closure extends beyond the distance that can be perceived by road users.

## LEGEND

- TRAFFIC CONE
- TRAFFIC CONE (OPTIONAL TAPER)
- TEMPORARY TRAFFIC CONTROL SIGN
- FLASHING ARROW SIGN (FAS)
- FAS SUPPORT OR TRAILER
- PORTABLE FLASHING BEACON

## SIGN PANEL SIZE (Min)

| | |
|---|---|
| A | 48" x 48" |
| B | 72" x 60" |
| C | 36" x 30" |

STATE OF CALIFORNIA
DEPARTMENT OF TRANSPORTATION

# TRAFFIC CONTROL SYSTEM FOR LANE CLOSURE ON FREEWAYS AND EXPRESSWAYS

NO SCALE

RSP T10 DATED APRIL 19, 2013 SUPERSEDES STANDARD PLAN T10 DATED MAY 20, 2011 - PAGE 237 OF THE STANDARD PLANS BOOK DATED 2010.

**REVISED STANDARD PLAN RSP T10**

**2010 REVISED STANDARD PLAN RSP T10**

12-18-12

TO ACCOMPANY PLANS DATED 7-15-13

| Dist | COUNTY | ROUTE | POST MILES TOTAL PROJECT | SHEET No. | TOTAL SHEETS |
|---|---|---|---|---|---|
| 06 | Mad | 99 | 20.2/22.7 | 66 | 76 |

REGISTERED CIVIL ENGINEER

April 19, 2013
PLANS APPROVAL DATE

REGISTERED PROFESSIONAL ENGINEER Gurinderpal Bhullar No. C48815 Exp. 9-30-14 CIVIL STATE OF CALIFORNIA

*THE STATE OF CALIFORNIA OR ITS OFFICERS OR AGENTS SHALL NOT BE RESPONSIBLE FOR THE ACCURACY OR COMPLETENESS OF SCANNED COPIES OF THIS PLAN SHEET.*

**NOTES:** See Revised Standard Plan RSP T9 for tables.

Use cone spacing X for taper segment, Y for tangent segment or Z for conflict situations, as approriate, per Table 1, unless X, Y, or Z cone spacing is shown on this sheet.

Unless otherwise specified in the special provisions, all temporary warning signs shall have black legend on fluorescent orange background.

California codes are designated by (CA). Otherwise, Federal (MUTCD) codes are shown.

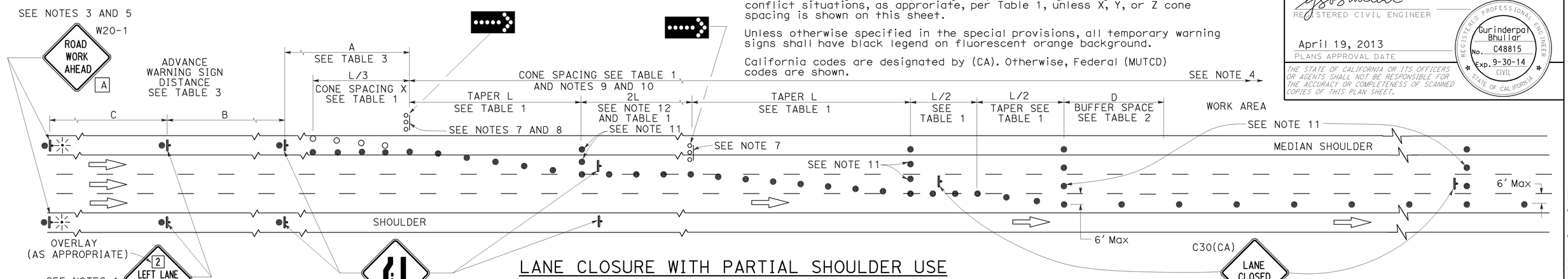


## LANE CLOSURE WITH PARTIAL SHOULDER USE

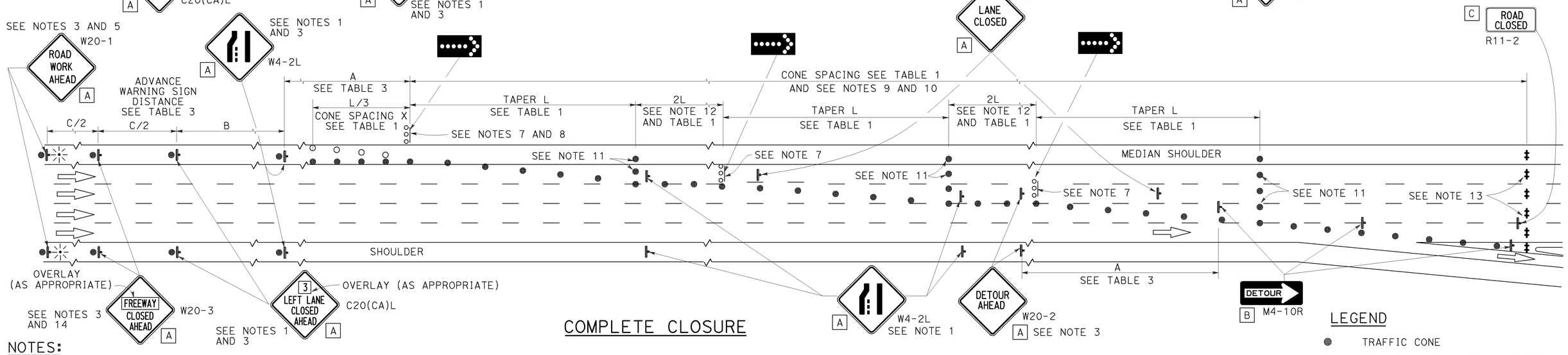


## COMPLETE CLOSURE

### LEGEND

- TRAFFIC CONE
- TRAFFIC CONE (OPTIONAL TAPER)
- TEMPORARY TRAFFIC CONTROL SIGN
- FLASHING ARROW SIGN (FAS)
- FAS SUPPORT OR TRAILER
- PORTABLE FLASHING BEACON

### NOTES:

1. Lane closures on the right side using partial median shoulder as a traffic lane shall conform to the details as shown except that C20(CA)R and W4-2R signs shall be used.
2. At least one person shall be assigned to provide full time maintenance of traffic control devices for lane closures.
3. Each advance warning sign on each side of the roadway shall be equipped with at least two flags for daytime closure. Each flag shall be at least 16" X 16" in size and shall be orange or fluorescent red-orange in color. Flashing beacons shall be placed at the locations indicated for lane closure during hours of darkness.
4. A G20-2 "END ROAD WORK" sign, with minimum size of 48" x 24" as appropriate, shall be placed at the end of the lane closure unless the end of work area is obvious or ends within a larger project's limits.
5. If the W20-1 sign would follow within 2000' of a stationary W20-1 or G20-1 "ROAD WORK NEXT ___ MILES", use a C20(CA) sign for the first advance warning sign.
6. Place a C30(CA) sign every 2000' throughout length of lane closure.
7. One flashing arrow sign for each lane closed. The flashing arrow signs shall be Type I.
8. A minimum 1500' of sight distance shall be provided where possible for vehicles approaching the first flashing arrow sign. Lane closures shall not begin at the top of crest vertical curve or on a horizontal curve.
9. All cones used for lane closures during the hours of darkness shall be fitted with retroreflective bands (or sleeves) as specified in the specifications.
10. Portable delineators, placed at one-half the spacing indicated for traffic cones, may be used instead of cones for daytime closures only.
11. Unless otherwise specified in the special provisions, a minimum of 3 cones shall be placed transversely across each closed lane and shoulder at each location where a taper across a traffic lane ends and every 2000' as shown on the "Lane Closure With Partial Shoulder Use" detail. Two Type II barricades may be used instead of the 3 cones. The transverse alignment of the cones or barricades on the closed shoulder may be shifted from the transverse alignment to provide access to the work.
12. Unless otherwise specified in the special provisions, the 2L tangent shown along lane lines shall be used between the L tapers required for each closed traffic lane.
13. A minimum of Two Type II or III barricades shall be placed across each closed lane and shoulder at the location shown and every 2000' within the complete closure area. Within the complete closure area, the transverse alignment of the barricades on the closed shoulder may be shifted from the transverse alignment to provide access to the work.
14. When specified in the special provisions, a W20-2 "DETOUR AHEAD" sign is to be used in place of the W20-3 "FREEWAY CLOSED AHEAD" sign.

### SIGN PANEL SIZE (Min)

| | |
|---|---|
| A | 48" x 48" |
| B | 48" x 18" |
| C | 48" x 30" |

STATE OF CALIFORNIA
DEPARTMENT OF TRANSPORTATION

# TRAFFIC CONTROL SYSTEM FOR LANE CLOSURES ON FREEWAYS AND EXPRESSWAYS

NO SCALE

RSP T10A DATED APRIL 19, 2013 SUPERSEDES STANDARD PLAN T10A DATED MAY 20, 2011 - PAGE 238 OF THE STANDARD PLANS BOOK DATED 2010.

**REVISED STANDARD PLAN RSP T10A**

**2010 REVISED STANDARD PLAN RSP T10A**

12-18-12

| Dist | COUNTY | ROUTE | POST MILES TOTAL PROJECT | SHEET No. | TOTAL SHEETS |
|---|---|---|---|---|---|
| 06 | Mad | 99 | 20.2/22.7 | 67 | 76 |

REGISTERED CIVIL ENGINEER

April 19, 2013
PLANS APPROVAL DATE

REGISTERED PROFESSIONAL ENGINEER Gurinderpal Bhullar No. C48815 Exp. 9-30-14 CIVIL STATE OF CALIFORNIA

*THE STATE OF CALIFORNIA OR ITS OFFICERS OR AGENTS SHALL NOT BE RESPONSIBLE FOR THE ACCURACY OR COMPLETENESS OF SCANNED COPIES OF THIS PLAN SHEET.*

TO ACCOMPANY PLANS DATED 7-15-13

# TYPICAL RAMP CLOSURES

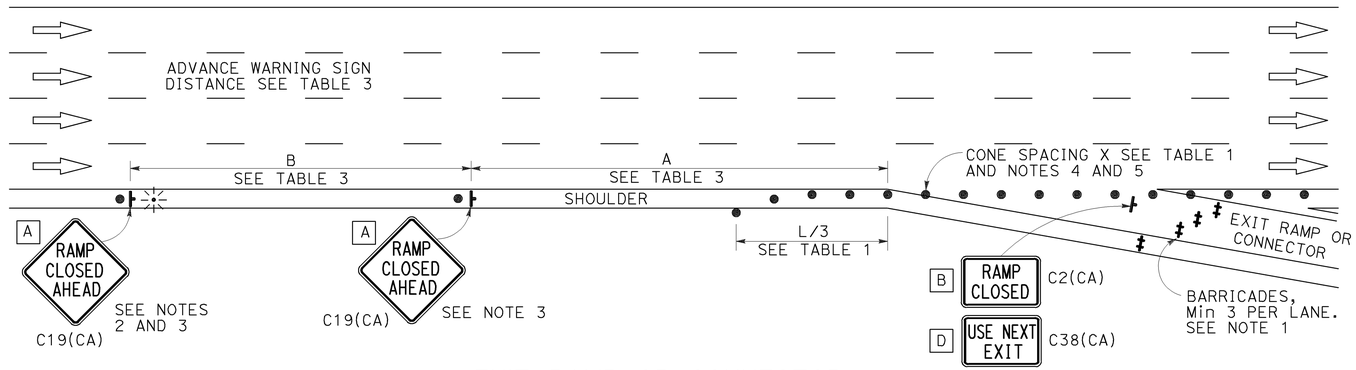


## EXIT RAMP OR CONNECTOR

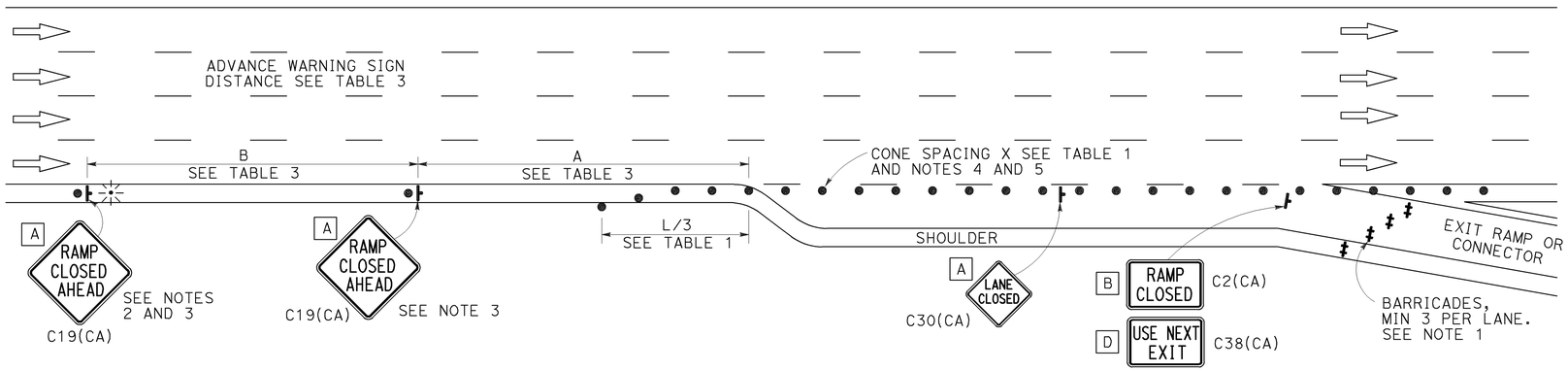


## EXIT RAMP OR CONNECTOR WITH ADDITIONAL LANE

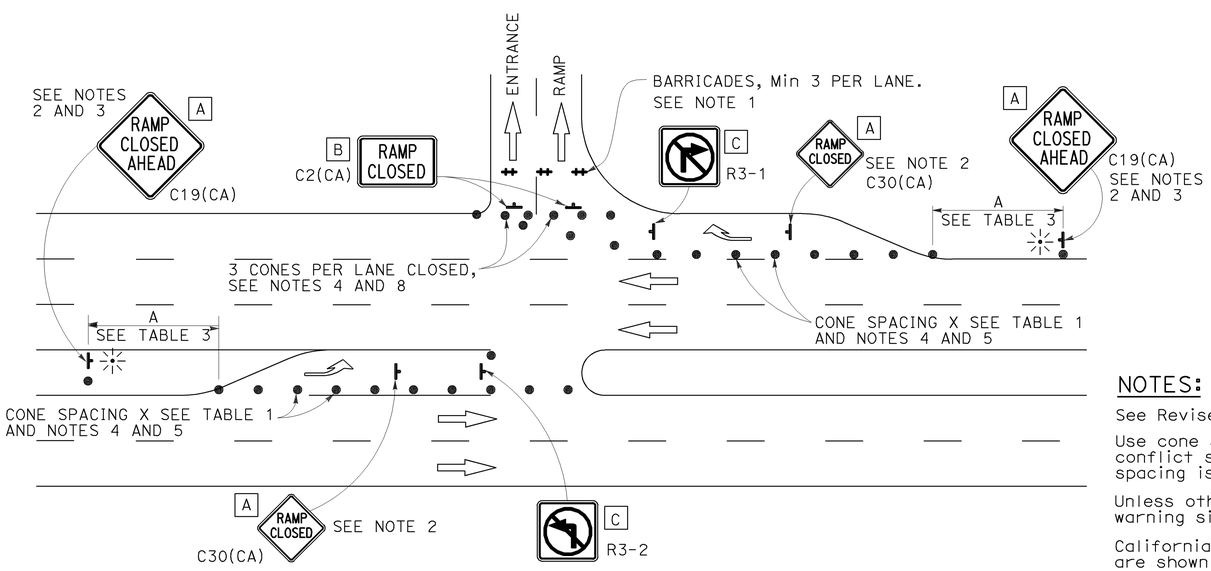


## ENTRANCE RAMP WITH TURNING POCKETS

## SIGN PANEL SIZE (Min)

- A 48" × 48"
- B 48" × 30"
- C 36" × 36"
- D 48" × 36"

## LEGEND

- TRAFFIC CONE
- TEMPORARY TRAFFIC CONTROL SIGN
- BARRICADES
- PORTABLE FLASHING BEACON

## NOTES:

1. Barricades shall be Type I, II, or III for closures lasting one week or less and Type III for closures lasting longer than one week.
2. In addition to placing the C19(CA) "RAMP CLOSED AHEAD" and C30(CA) "RAMP CLOSED" signs, black on orange overlay plates with the word "CLOSED" may be mounted, as directed by the Engineer, on all guide signs that refer to the closed ramp. The letter size on the overlay shall be the same as the guide sign.
3. Each advance C19(CA) "RAMP CLOSED AHEAD" sign shall be equipped with at least two flags for daytime closure. Each flag shall be at least 16" x 16" in size and shall be orange or fluorescent red-orange in color. A flashing beacon shall be placed on top of the first C19(CA) sign during hours of darkness.
4. All cones used for ramp closures during the hours of darkness shall be fitted with retroreflective bands (or sleeves) as specified in the specifications.
5. Portable delineators, placed at one-half the spacing indicated for traffic cones, may be used instead of cones for daytime ramp closures only.
6. At least one person shall be assigned to provide full time maintenance of traffic control devices, unless otherwise directed by the Engineer.
7. The existing "EXIT" signs shall be covered during ramp closures.
8. A minimum of 3 cones shall be placed transversely across each closed lane and shoulder.

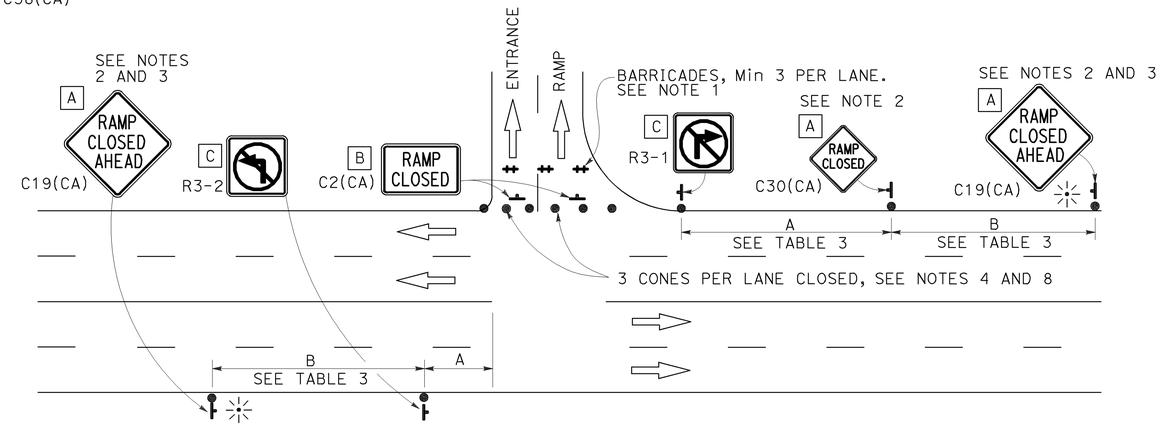


## ENTRANCE RAMP WITHOUT TURNING POCKETS

## NOTES:

See Revised Standard Plan RSP T9 for tables.

Use cone spacing X for taper segment, Y for tangent segment or Z for conflict situations, as approriate, per Table 1, unless X, Y, or Z cone spacing is shown on this sheet.

Unless otherwise specified in the special provisions, all temporary warning signs shall have black legend on fluorescent orange background.

California codes are designated by (CA). Otherwise, Federal (MUTCD) codes are shown.

STATE OF CALIFORNIA
DEPARTMENT OF TRANSPORTATION

# TRAFFIC CONTROL SYSTEM FOR RAMP CLOSURE

NO SCALE

RSP T14 DATED APRIL 19, 2013 SUPERSEDES STANDARD PLAN T14
DATED MAY 20, 2011 - PAGE 242 OF THE STANDARD PLANS BOOK DATED 2010.

**REVISED STANDARD PLAN RSP T14**

**2010 REVISED STANDARD PLAN RSP T14**

12-18-12

| Dist | COUNTY | ROUTE | POST MILES TOTAL PROJECT | SHEET No. | TOTAL SHEETS |
|---|---|---|---|---|---|
| 06 | Mad | 99 | 20.2/22.7 | 68 | 76 |

REGISTERED CIVIL ENGINEER

July 19, 2013
PLANS APPROVAL DATE

REGISTERED PROFESSIONAL ENGINEER Stanley P. Johnson No. C57793 Exp. 3-31-14 CIVIL STATE OF CALIFORNIA

*THE STATE OF CALIFORNIA OR ITS OFFICERS OR AGENTS SHALL NOT BE RESPONSIBLE FOR THE ACCURACY OR COMPLETENESS OF SCANNED COPIES OF THIS PLAN SHEET.*

TO ACCOMPANY PLANS DATED 7-15-13

2010 REVISED STANDARD PLAN RSP S1

## INSTRUCTIONS TO FABRICATOR

PROJECT PLANS SHOW:

1. Sign structure location.
2. Length of structure frame.
3. Panel size and locations on structure.
4. Walkway length for two post signs.
5. Post type and height to bottom of frame.
6. Base plate elevation.
7. Footing elevation or location of pile foundation.
8. Photoelectric unit location if required.

REFER TO THE FOLLOWING STANDARD PLANS FOR DETAILS NOT SHOWN ON PROJECT PLANS:

| Sheet No. | SHEET NAME |
|---|---|
| S1 | Overhead Signs-Truss, Instructions and Examples |
| S2 | Overhead Signs-Truss, Single Post Type, Post Types II to IX |
| S3 | Overhead Signs-Truss, Single Post Type, Base Plate and Anchorage Details |
| S4 | Overhead Signs-Truss, Single Post Type, Structural Frame Members Details No. 1 |
| S5 | Overhead Signs-Truss, Single Post Type, Structural Frame Members Details No. 2 |
| S6 | Overhead Signs-Truss, Gusset Plate Details |
| S8 | Overhead Signs-Truss, Single Post Type, Round Pedestal Pile Foundation |
| S9 | Overhead Signs-Truss, Two Post Type, Post Types I-S through VII-S |
| S10 | Overhead Signs-Truss, Two Post Type, Base Plate and Anchorage Details |
| S11 | Overhead Signs-Truss, Two Post Type, Structural Frame Members |
| S12 | Overhead Signs-Truss, Structural Frame Details |
| S13 | Overhead Signs-Truss, Frame Juncture Details |
| S15 | Overhead Signs-Truss, Two Post Type, Round Pedestal Pile Foundation |
| S16 | Overhead Signs, Walkway Details No. 1 |
| S17 | Overhead Signs, Walkway Details No. 2 |
| S17A | Overhead Signs, Walkway Details No. 3 |
| S18 | Overhead Signs, Walkway Safety Railing Details |
| S19 | Overhead Signs-Truss, Sign Mounting Details, Laminated Panel-Type A |
| S20 | Overhead Signs, Steel Frames, Removable Sign Panel Frames |
| S21 | Overhead Signs, Removable Sign Panel Frames, Mounting Details |
| S22 | Overhead Signs-Truss, Removable Sign Panel Frames, 9'-2" and 10'-0" Sign Panels |

WALKWAY BRACKETS:

Space all walkway brackets maintaining uniform spacing where possible. Maximum spacing shall not exceed 5'-6".

LIGHTING FIXTURE SUPPORTS:

Where distance from walkway bracket to end of sign panel exceeds 1'-4", extend lighting fixture supports to next walkway bracket. See Example No. 2.

WALKWAY AND SAFETY RAILING:

Walkway to be continuous for entire length of frame for single post signs. For two post signs, see Project Plans. Safety railing to protect entire walkway, but continuous for no more than 11'-0" in one unit.

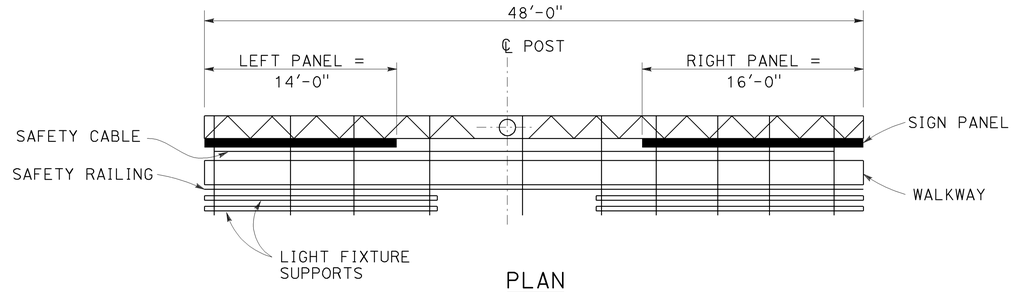


PLAN

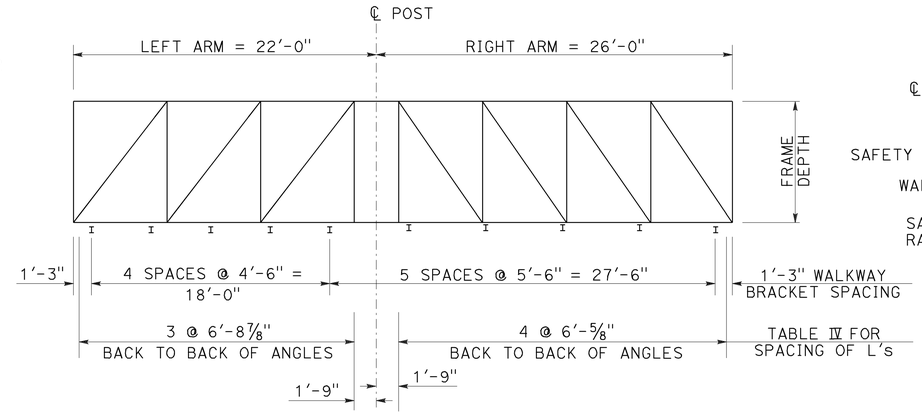


ELEVATION

## UNBALANCED SINGLE POST TYPE

Example No. 1

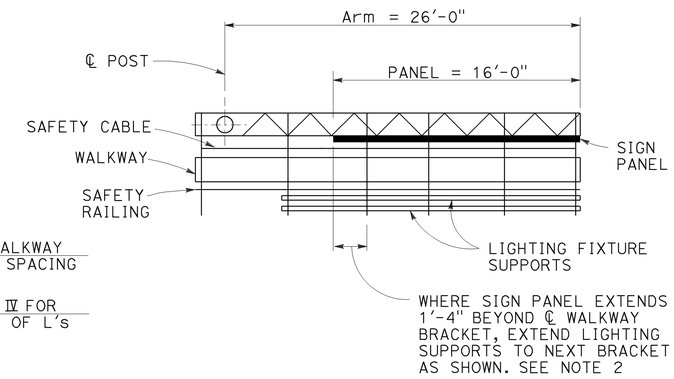


PLAN

## CANTILEVER SINGLE POST TYPE

Example No. 2

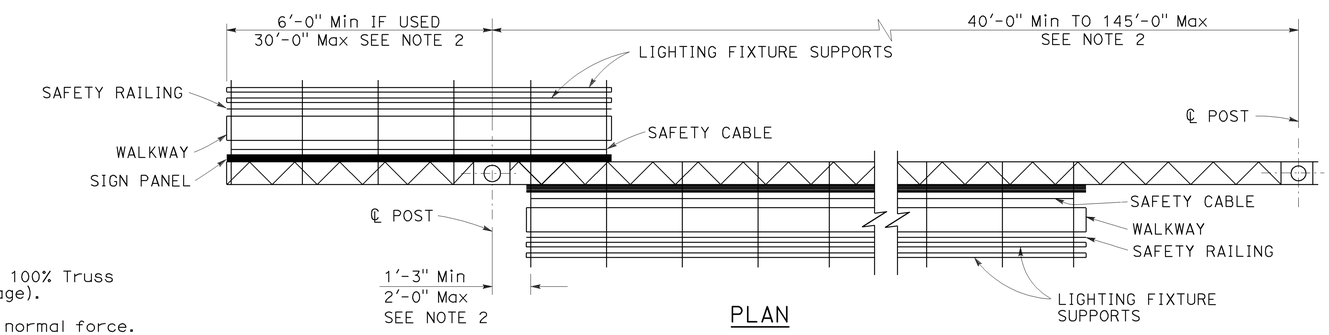


PLAN

## TWO POST TYPE WITH CANTILEVER (PART DOUBLE-FACED)

Example No. 3

## GENERAL NOTES:

LOADING:

WIND LOADING:

Normal to face of sign: 40.3 psf on 100% Truss surface area (i.e. 100% panel coverage).

Transverse to face of sign: 20% of normal force.

WALKWAY LOADING:

Dead load +500 LB concentrated live load.

UNIT STRESSES:

STRUCTURAL STEEL: fy = 36,000 psi
REINFORCED CONCRETE: fy = 60,000 psi
f'c = 3600 psi
FOOTING SOIL PRESSURE: 2.5 ksf (spread footing)

MINIMUM CLEARANCE

Vertical roadway clearance 18'-0" (bottom of walkway system)

WELDING:

All welding continuous unless otherwise noted on the plans.

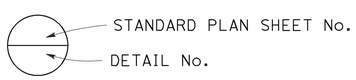


## NOTES:

1. Signs are shown and dimensioned looking in the direction of traffic. Double faced signs are shown and dimensioned looking ahead along stationing.
2. Mandatory dimension limit.

STATE OF CALIFORNIA
DEPARTMENT OF TRANSPORTATION

# OVERHEAD SIGNS-TRUSS INSTRUCTIONS AND EXAMPLES

NO SCALE

RSP S1 DATED JULY 19, 2013 SUPERSEDES STANDARD PLAN S1 DATED MAY 20, 2011 - PAGE 334 OF THE STANDARD PLANS BOOK DATED 2010.

**REVISED STANDARD PLAN RSP S1**

7-11-13

| Dist | COUNTY | ROUTE | POST MILES TOTAL PROJECT | SHEET No. | TOTAL SHEETS |
|---|---|---|---|---|---|
| 06 | Mad | 99 | 20.2/22.7 | 69 | 76 |

REGISTERED CIVIL ENGINEER

July 19, 2013
PLANS APPROVAL DATE

REGISTERED PROFESSIONAL ENGINEER
Stanley P. Johnson
No. C57793
Exp. 3-31-14
CIVIL
STATE OF CALIFORNIA

*THE STATE OF CALIFORNIA OR ITS OFFICERS OR AGENTS SHALL NOT BE RESPONSIBLE FOR THE ACCURACY OR COMPLETENESS OF SCANNED COPIES OF THIS PLAN SHEET.*

TO ACCOMPANY PLANS DATED 7-15-13

## NOTES:

1. For "General Notes", see Revised Standard Plan RSP S1.
2. Longer side of post and footing (longitudinal) shall be normal to axis of sign.
3. Backfill shall be in place prior to erection of post.
4. Thread upper 10" of anchor bolts and galvanize upper 1'-0".
5. Spread footing with square pedestal shown, use pile foundation when shown on the Project Plans. For pile foundation details, see Standard Plan S15.
6. Anchor plates may be retained with Hex nut or formed head as an alternative to details shown.
7. When foundation is located on a steep slope with exposed face of concrete adjacent to traffic, see "Detail C" on Standard Plan S15.
8. Slope protection required when indicated on Project Plans.
9. Weld coupling or drill and tap for 1½"C chase nipple, perpendicular to sign panel axis away from approaching traffic. Plug with recessed pipe plug. See Standard Plan ES-15C.
10. Excavate to neat lines and place concrete against undisturbed material.

## TABLE XIV

| POST TYPE | PIPE | | | ROUND PEDESTAL | | | | | SQUARE PEDESTAL | | | | | | SPREAD FOOTING | | | | | |
|---|---|---|---|---|---|---|---|---|---|---|---|---|---|---|---|---|---|---|---|---|
| | | | | PEDESTAL SIZE | VERTICAL ⌋-BARS | | SPIRAL | | PEDESTAL SIZE | VERTICAL ⌋-BARS | | | HOOP | | (SEE NOTE 2) | REINFORCEMENT | | | | |
| | | | | | | | | | | | | | | | | WIDTH | | LONGITUDINAL | | FOOTING STIRRUPS |
| | NPS | THICKNESS | SPLIT | Dia | EQUALLY SPACED TOTAL | BAR SIZE | BAR SIZE | PITCH | SQUARE | EQUALLY SPACED TOTAL | BAR SIZE | # OF BARS EA FACE | BAR SIZE | SPACING | | TOP | BOTTOM | TOP | BOTTOM | |
| I-S | 14 | ½" | 5" | 5'-3" | 16 | #10 | #5 | 3½" | 5'-3" | 16 | #10 | 5 | #5 | 6" | 7'-0" x 13'-0" x 2'-6" | 14-#6 | 14-#7 | 10-#9 | 10-#9 | #5 @ 12 |
| II-S | 16 | ↓ | 6" | ↓ | ↓ | ↓ | ↓ | ↓ | ↓ | ↓ | ↓ | ↓ | ↓ | ↓ | 7'-0" x 13'-0" x 2'-6" | 14-#6 | 14-#7 | 10-#9 | 10-#9 | ↓ |
| III-S | 18 | ↓ | 7" | ↓ | ↓ | ↓ | ↓ | ↓ | ↓ | ↓ | ↓ | ↓ | ↓ | ↓ | 7'-0" x 13'-0" x 2'-6" | 14-#6 | 14-#7 | 11-#9 | 11-#9 | ↓ |
| IV-S | 20 | ↓ | 8" | ↓ | ↓ | ↓ | ↓ | ↓ | ↓ | ↓ | ↓ | ↓ | ↓ | ↓ | 8'-0" x 14'-0 x 2'-6" | 15-#7 | 15-#7 | 12-#9 | 12-#11 | ↓ |
| V-S | 24 | ↓ | 8" | 5'-9" | ↓ | #11 | ↓ | ↓ | 5'-9" | ↓ | #11 | ↓ | ↓ | ↓ | 8'-0" x 16'-0" x 3'-0" | 17-#7 | 17-#7 | 12-#9 | 12-#11 | ↓ |
| VI-S | 24 | 31/32" | 10" | 5'-9" | ↓ | #11 | ↓ | ↓ | 5'-9" | ↓ | #11 | ↓ | ↓ | ↓ | 9'-0" x 17'-0" x 3'-0" | 18-#7 | 18-#7 | 12-#9 | 12-#11 | ↓ |
| VII-S | 24 | 31/32" | 10" | 5'-9" | ↓ | #11 | ↓ | ↓ | 5'-9" | ↓ | #11 | ↓ | ↓ | ↓ | 10'-0 x 18'-0" x 3'-0" | 19-#7 | 19-#7 | 13-#9 | 13-#11 | ↓ |

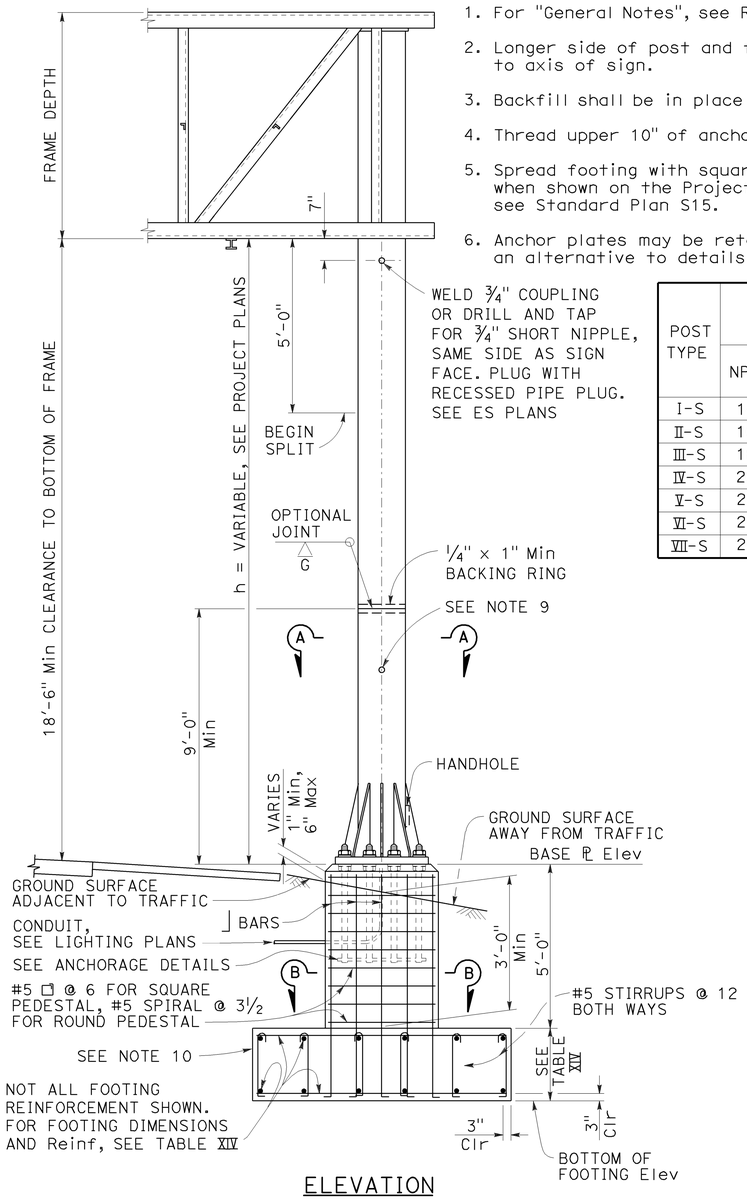


ELEVATION
SEE NOTE 5

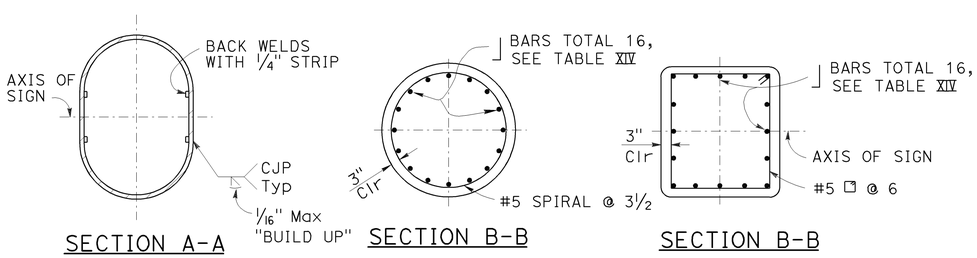


SECTION A-A

SECTION B-B

SECTION B-B

ROUND PEDESTAL

SQUARE PEDESTAL

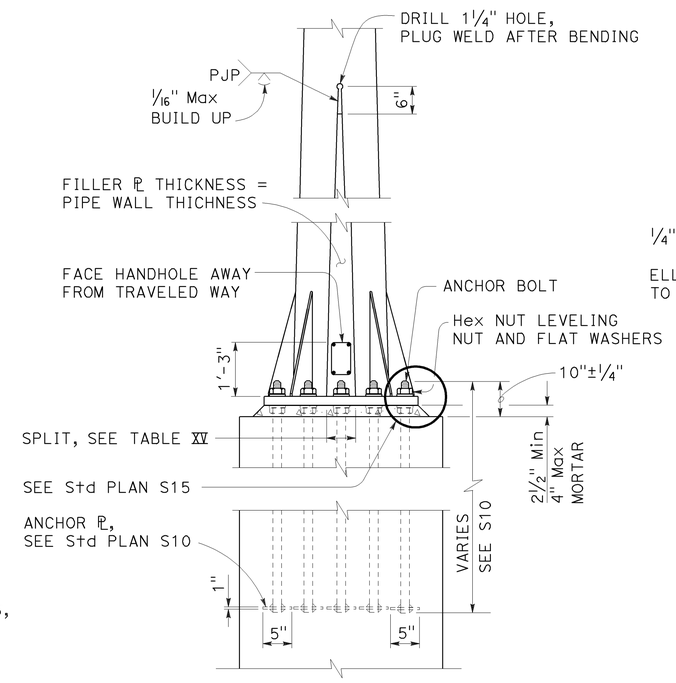


ELEVATION
SIDE VIEW

ANCHORAGE DETAILS

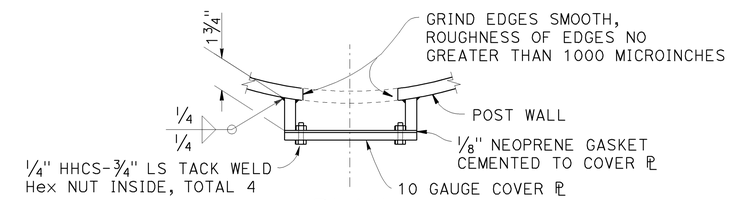


PLAN

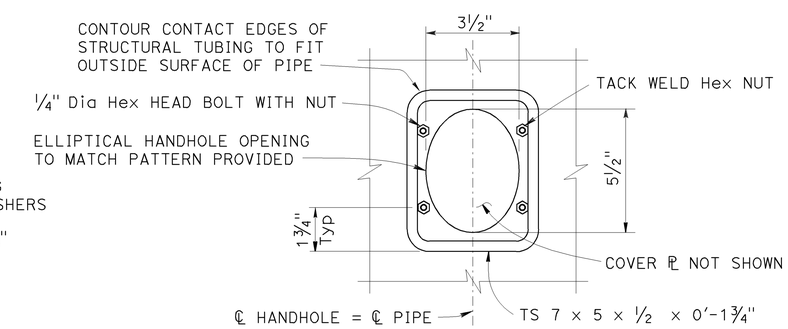


ELEVATION

TYPICAL DETAILS OF HANDHOLE AND COVER

STATE OF CALIFORNIA
DEPARTMENT OF TRANSPORTATION

# OVERHEAD SIGNS-TRUSS TWO POST TYPE POST TYPES I-S THROUGH VII-S

NO SCALE

RSP S9 DATED JULY 19, 2013 SUPERSEDES STANDARD PLAN S9
DATED MAY 20, 2011 - PAGE 342 OF THE STANDARD PLANS BOOK DATED 2010.

**REVISED STANDARD PLAN RSP S9**

**2010 REVISED STANDARD PLAN RSP S9**

7-11-13

| Dist | COUNTY | ROUTE | POST MILES TOTAL PROJECT | SHEET No. | TOTAL SHEETS |
|---|---|---|---|---|---|
| 06 | Mad | 99 | 20.2/22.7 | 70 | 76 |

Theresa Gabriel
REGISTERED ELECTRICAL ENGINEER

July 19, 2013
PLANS APPROVAL DATE

REGISTERED PROFESSIONAL ENGINEER Theresa Aziz Gabriel No. E15129 Exp. 6-30-14 ELECTRICAL STATE OF CALIFORNIA

*THE STATE OF CALIFORNIA OR ITS OFFICERS OR AGENTS SHALL NOT BE RESPONSIBLE FOR THE ACCURACY OR COMPLETENESS OF SCANNED COPIES OF THIS PLAN SHEET.*

TO ACCOMPANY PLANS DATED 7-15-13

## LEGEND:

| | |
|---|---|
| AB | ABANDON. IF APPLIED TO CONDUIT, REMOVE CONDUCTORS |
| BC | INSTALL PULL BOX IN EXISTING CONDUIT RUN |
| BP | PEDESTRIAN BARRICADE, TYPE AS INDICATED ON PLAN |
| CB | INSTALL CONDUIT INTO EXISTING PULL BOX |
| CC | CONNECT NEW AND EXISTING CONDUIT. REMOVE EXISTING CONDUCTORS AND INSTALL CONDUCTORS AS INDICATED |
| CF | CONDUIT TO REMAIN FOR FUTURE USE. REMOVE CONDUCTORS. INSTALL PULL TAPE |
| DH | DETECTOR HANDHOLE |
| FA | FOUNDATION TO BE ABANDONED |
| IS | INSTALL SIGN ON SIGNAL MAST ARM |
| NS | NO SLIP BASE ON STANDARD |
| PEC | PHOTOELECTRIC CONTROL |
| PEU | PHOTOELECTRIC UNIT |
| RC | EQUIPMENT OR MATERIAL TO BE REMOVED AND BECOME THE PROPERTY OF THE CONTRACTOR |
| RE | REMOVE ELECTROLIER, FUSES AND BALLAST. TAPE ENDS OF CONDUCTORS |
| RL | RELOCATE EQUIPMENT |
| RR | REMOVE AND REUSE EQUIPMENT |
| RS | REMOVE AND SALVAGE EQUIPMENT |
| SC | SPLICE NEW TO EXISTING CONDUCTORS |
| SD | SERVICE DISCONNECT |
| TSP | TELEPHONE SERVICE POINT |

## ABBREVIATIONS

| | |
|---|---|
| APS | ACCESSIBLE PEDESTRIAN SIGNAL |
| BBS | BATTERY BACKUP SYSTEM |
| BC | BOLT CIRCLE |
| BPB | BICYCLE PUSH BUTTON |
| C | CONDUIT |
| CB | CIRCUIT BREAKER |
| CCTV | CLOSED CIRCUIT TELEVISION |
| Ckt | CIRCUIT |
| CMS | CHANGEABLE MESSAGE SIGN |
| Ctid | CALTRANS IDENTIFICATION |
| Comm | COMMUNICATION |
| DLC | LOOP DETECTOR LEAD-IN CABLE |
| EMS | EXTINGUISHABLE MESSAGE SIGN |
| EVUC | EMERGENCY VEHICLE UNIT CABLE |
| EVUD | EMERGENCY VEHICLE UNIT DETECTOR |
| FB | FLASHING BEACON |
| FBCA | FLASHING BEACON CONTROL ASSEMBLY |
| FBS | FLASHING BEACON WITH SLIP BASE |
| FO | FIBER OPTIC |
| G | EQUIPMENT GROUNDING CONDUCTOR |
| GB | GROUND BUS |
| GFCI | GROUND FAULT CIRCUIT INTERRUPTER |
| HAR | HIGHWAY ADVISORY RADIO |
| Hex | HEXAGONAL |
| HPS | HIGH PRESSURE SODIUM |
| IISNS | INTERNALLY ILLUMINATED STREET NAME SIGN |
| ISL | INDUCTION SIGN LIGHTING |
| LED | LIGHT EMITTING DIODE |
| LMA | LUMINAIRE MAST ARM |
| LPS | LOW PRESSURE SODIUM |
| Ltg | LIGHTING |
| Lum | LUMINAIRE |
| M | METERED |
| MAT | MAST ARM MOUNTING TOP ATTACHMENT |
| MAS | MAST ARM MOUNTING SIDE ATTACHMENT |
| M/M | MULTIPLE TO MULTIPLE TRANSFORMER |
| Mtg | MOUNTING |
| MV | MERCURY VAPOR LIGHTING FIXTURE |
| MVDS | MICROWAVE VEHICLE DETECTION SYSTEM |
| N | NEUTRAL (GROUNDED CONDUCTOR) |
| NB | NEUTRAL BUS |
| NC | NORMALLY CLOSE |
| NO | NORMALLY OPEN |
| P | CIRCUIT BREAKER'S POLE |
| PB | PULL BOX |
| PBA | PUSH BUTTON ASSEMBLY |
| PEC | PHOTOELECTRIC CONTROL |
| Ped | PEDESTRIAN |
| PEU | PHOTOELECTRIC UNIT |
| PT | CONDUIT WITH PULL TAPE |
| RE | RELOCATED EQUIPMENT |
| RM | RAMP METERING |
| RWIS | ROADSIDE WEATHER INFORMATION SYSTEM |
| SB | SLIP BASE |
| SIC | SIGNAL INTERCONNECT CABLE |
| Sig | SIGNAL |
| SMA | SIGNAL MAST ARM |
| SNS | STREET NAME SIGN |
| SP | SERVICE POINT |
| TDC | TELEPHONE DEMARCATION CABINET |
| TMS | TRAFFIC MONITORING STATION |
| TOS | TRAFFIC OPERATIONS SYSTEM |
| Veh | VEHICLE |
| VIVDS | VIDEO IMAGE VEHICLE DETECTION SYSTEM |
| WIM | WEIGH-IN-MOTION |
| Xfmr | TRANSFORMER |

## SOFFIT AND WALL MOUNTED LUMINAIRES

PENDANT, 70 W HPS UNLESS OTHERWISE SPECIFIED

FLUSH, 70 W HPS UNLESS OTHERWISE SPECIFIED

WALL SURFACE, 70 W HPS UNLESS OTHERWISE SPECIFIED

EXISTING SOFFIT OR WALL LUMINAIRE TO REMAIN UNMODIFIED

EXISTING SOFFIT OR WALL LUMINAIRE TO BE MODIFIED AS SPECIFIED

**NOTE:**

Arrow indicates "street side" of luminaire.

COMMONLY USED SYMBOLS FOR UNITED STATES CUSTOMARY UNITS OF MEASUREMENT:

| SYMBOL USED | DEFINITIONS |
|---|---|
| Ω | OHMS |
| min | MINUTE |
| s | SECOND |
| bps | BITS PER SECOND |
| Bps | BYTES PER SECOND |
| A | AMPERE |
| V | VOLT |
| V(dc) | VOLT (DIRECT CURRENT) |
| V(ac) | VOLT (ALTERNATING CURRENT) |
| FC | FOOT - CANDLE |
| W | WATTS |
| VA | VOLT-AMPERE |
| M | MEGA |
| k | KILO |
| m | MILLI |
| μ | MICRO |
| P | PICO |
| Hz | HERTZ |

## MISCELLANEOUS ELECTROLIERS

| NEW | EXISTING | |
|---|---|---|
| | | LUMINAIRE ON WOOD POLE |
| | | NON-STANDARD ELECTROLIER (SEE PROJECT NOTES OR PROJECT PLANS) |
| | | CITY ELECTROLIER |
| | | ELECTROLIER FOUNDATION (FUTURE INSTALLATION) |

**NOTES:**

1. HPS luminaires shall be 310 W HPS when installed on Type 21, 21D, 30, 31 and 32 Standards, unless otherwise specified. HPS luminaires shall be 200 W when installed on other type standards or poles, unless otherwise specified.
2. LED luminaires shall be 235 W when installed on Type 21, 21D, 30, 31 and 32 Standards, unless otherwise specified. LED luminaires shall be 165 W when installed on other type standards or poles, unless otherwise specified.
3. Luminaires shall be the cutoff type, ANSI Type III medium cutoff lighting distribution, unless otherwise specified.

## STANDARD ELECTROLIER

| NEW | EXISTING | STANDARD TYPE |
|---|---|---|
| | | 15 |
| | | 15D |
| | | 15 STRUCTURE |
| | | 15D STRUCTURE |
| | | 21 |
| | | 21D |
| | | 21 STRUCTURE |
| | | 21D STRUCTURE |
| | | 30 |
| | | 31 |
| | | 32 |

STATE OF CALIFORNIA
DEPARTMENT OF TRANSPORTATION

# ELECTRICAL SYSTEMS (LEGEND AND ABBREVIATIONS)

NO SCALE

RSP ES-1A DATED JULY 19, 2013 SUPERSEDES STANDARD PLAN ES-1A DATED MAY 20, 2011 - PAGE 425 OF THE STANDARD PLANS BOOK DATED 2010.

**REVISED STANDARD PLAN RSP ES-1A**

**2010 REVISED STANDARD PLAN RSP ES-1A**

| Dist | COUNTY | ROUTE | POST MILES TOTAL PROJECT | SHEET No. | TOTAL SHEETS |
|---|---|---|---|---|---|
| 06 | Mad | 99 | 20.2/22.7 | 71 | 76 |

Theresa Gabriel
REGISTERED ELECTRICAL ENGINEER

July 19, 2013
PLANS APPROVAL DATE

REGISTERED PROFESSIONAL ENGINEER Theresa Aziz Gabriel No. E15129 Exp. 6-30-14 ELECTRICAL STATE OF CALIFORNIA

*THE STATE OF CALIFORNIA OR ITS OFFICERS OR AGENTS SHALL NOT BE RESPONSIBLE FOR THE ACCURACY OR COMPLETENESS OF SCANNED COPIES OF THIS PLAN SHEET.*

TO ACCOMPANY PLANS DATED 7-15-13

## CONDUIT

| NEW | EXISTING | |
|---|---|---|
| | | LIGHTING CONDUIT, UNLESS OTHERWISE INDICATED OR NOTED |
| | | TRAFFIC SIGNAL CONDUIT |
| C | c | COMMUNICATION CONDUIT |
| T | t | TELEPHONE CONDUIT |
| F | f | FIRE ALARM CONDUIT |
| FO | fo | FIBER OPTIC CONDUIT |
| | | CONDUIT TERMINATION |
| R | r | CONDUIT RISER ATTACHED TO THE STRUCTURE OR SERVICE POLE |

## SERVICE EQUIPMENT

| NEW | EXISTING | |
|---|---|---|
| OH | oh | OVERHEAD LINES |
| U | U | WOOD POLE, "U" INDICATES UTILITY OWNED |
| | | POLE GUY WITH ANCHOR |
| | | UTILITY TRANSFORMER - GROUND MOUNTED |
| III | III | SERVICE EQUIPMENT ENCLOSURE TYPE. DOOR INDICATES FRONT OF ENCLOSURE |
| T | t | TELEPHONE DEMARCATION CABINET |

## POLE-MOUNTED SERVICE DESIGNATION

TYPE H SERVICE, 28'-10" — TYPE OF INSTALLATION AND POLE HEIGHT ABOVE GRADE

## FLASHING BEACON

| NEW | EXISTING | |
|---|---|---|
| R | R | FLASHING BEACON (ONE VEHICLE SIGNAL HEAD WITH BACKPLATE AND VISOR) "R" INDICATES RED INDICATION, "Y" INDICATES YELLOW INDICATION |
| Y Y | Y Y | FLASHING BEACON WITH TYPE 15-FBS STANDARD AND A SIGN. |
| R R | R R | FLASHING BEACON WITH TYPES 9, 9A OR 9B SIGN UNLESS OTHERWISE SPECIFIED OR INDICATED |

## SIGNAL EQUIPMENT

| NEW | EXISTING | |
|---|---|---|
| C | C | PEDESTRIAN SIGNAL HEAD "C" INDICATES COUNTDOWN PEDESTRIAN HEAD |
| | | PUSH BUTTON ASSEMBLY POST |
| | | PEDESTRIAN BARRICADE |
| | | VEHICLE SIGNAL HEAD (WITH BACKPLATE AND 3-SECTIONS: RED, YELLOW AND GREEN) |
| | | VEHICLE SIGNAL HEAD WITH ANGLE VISOR |
| PV | PV | MODIFICATIONS OF BASIC SYMBOL: "L" INDICATES ALL NON-ARROW SECTIONS LOUVERED "LG" INDICATES LOUVERED GREEN SECTION ONLY "PV" INDICATES ALL 12" SECTIONS PROGRAMMED VISIBILITY "8" INDICATES ALL 8" SECTIONS (ONLY WHEN SPECIFIED) |
| | | VEHICLE SIGNAL HEAD CONSISTING OF RED, YELLOW AND GREEN LEFT ARROW SECTIONS |
| | | VEHICLE SIGNAL HEAD CONSISTING OF RED AND YELLOW SECTIONS WITH AN UP GREEN ARROW SECTION |
| | | VEHICLE SIGNAL HEAD (5 SECTION) CONSISTING OF RED, YELLOW AND GREEN SECTIONS WITH YELLOW AND GREEN RIGHT ARROW SECTIONS |
| | | TYPE 15TS STANDARD WITH VEHICLE SIGNAL HEAD AND LUMINAIRE |
| | | TYPE 21TS STANDARD WITH VEHICLE SIGNAL HEAD AND LUMINAIRE |
| | | STANDARD WITH LUMINAIRE AND SIGNAL MAST ARMS AND ATTACHED VEHICLE SIGNAL HEADS |
| | | TYPE 1 STANDARD WITH ATTACHED VEHICLE SIGNAL HEADS |
| | | STANDARD WITH A SIGNAL MAST ARM, ATTACHED VEHICLE SIGNAL HEADS AND INTERNALLY ILLUMINATED STREET NAME SIGN |
| | | CONTROLLER ASSEMBLY. DOOR INDICATES FRONT OF CABINET |

## SIGNAL EQUIPMENT Cont

| NEW | EXISTING | |
|---|---|---|
| | | GUARD POST |
| | | TYPE 1 STANDARD WITH RAMP METERING SIGN |
| | | OPTICAL DETECTOR FOR THE EMERGENCY VEHICLE DETECTION SYSTEM |

### NOTES:

1. All signal sections shall be 12" unless shown otherwise.
2. Signal heads shall be provided with backplates unless shown otherwise.

## ILLUMINATED OVERHEAD SIGN

| NEW | EXISTING | |
|---|---|---|
| | | SINGLE POST, SINGLE ILLUMINATED SIGN, BALANCED BUTTERFLY |
| | | SINGLE POST, DOUBLE ILLUMINATED SIGN, BALANCED BUTTERFLY |
| | | SINGLE POST, SINGLE ILLUMINATED SIGN, FULL CANTILEVER |
| | | DOUBLE POST, SINGLE ILLUMINATED SIGN |
| | | SINGLE ILLUMINATED SIGN MOUNTED ON STRUCTURE |
| | | DOUBLE POST, SINGLE ILLUMINATED SIGN WITH ELECTROLIER |

STATE OF CALIFORNIA
DEPARTMENT OF TRANSPORTATION

# ELECTRICAL SYSTEMS (LEGEND AND ABBREVIATIONS)

NO SCALE

RSP ES-1B DATED JULY 19, 2013 SUPERSEDES STANDARD PLAN ES-1B DATED MAY 20, 2011 - PAGE 426 OF THE STANDARD PLANS BOOK DATED 2010.

**REVISED STANDARD PLAN RSP ES-1B**

**2010 REVISED STANDARD PLAN RSP ES-1B**

7-15-13

| Dist | COUNTY | ROUTE | POST MILES TOTAL PROJECT | SHEET No. | TOTAL SHEETS |
|---|---|---|---|---|---|
| 06 | Mad | 99 | 20.2/22.7 | 72 | 76 |

Theresa Gabriel
REGISTERED ELECTRICAL ENGINEER

July 19, 2013
PLANS APPROVAL DATE

REGISTERED PROFESSIONAL ENGINEER
Theresa Aziz Gabriel
No. E15129
Exp. 6-30-14
ELECTRICAL
STATE OF CALIFORNIA

THE STATE OF CALIFORNIA OR ITS OFFICERS OR AGENTS SHALL NOT BE RESPONSIBLE FOR THE ACCURACY OR COMPLETENESS OF SCANNED COPIES OF THIS PLAN SHEET.

TO ACCOMPANY PLANS DATED 7-15-13

# EQUIPMENT IDENTIFICATION

## ILLUMINATED SIGN IDENTIFICATION NUMBER:

SIGN No. 12345

10 ISL SCI 1.0

- SIGN NUMBER - PLACE ON POST OR STRUCTURE
- TRANSFORMER RATING (kVA)
- LIGHTING CONTROL TYPE
- NUMBER AND TYPE OF FIXTURES

DO NOT PLACE ON STANDARD OR STRUCTURE

## ELECTROLIER OR EQUIPMENT IDENTIFICATION NUMBER:

12345 - 15'-0"

- MAST ARM LENGTH, IF SHOWN. DO NOT PLACE ON STANDARD OR STRUCTURE
- EQUIPMENT NUMBER - PLACE ON STANDARD OR STRUCTURE. EXISTING EQUIPMENT NUMBERS ARE SHOWN IN PARENTHESIS

## CONDUIT AND CONDUCTOR IDENTIFICATION:

1½"C, 2#10, 15#14, 2 DLC, 12P#18

- PAIR
- NUMBER AND SIZE OF CONDUCTORS AND CABLES
- SIZE OF CONDUIT IN INCHES

| | |
|---|---|
| ø1, ø2, ø2P, etc. | TRAFFIC PHASE IDENTIFICATION FOR SIGNAL FACES, DETECTORS AND PHASE DIAGRAMS |
| 1 2 3 | LEGEND NUMBERS |
| A B C | EQUIPMENT, SIGNAL POLES, INSTALLATION OR ITEMS |
| 1 2 3 | CONDUIT RUN NUMBERS |

## SIGNAL AND LIGHTING STANDARD (TYPICAL DESIGNATION):

19A - 3 - 100

- WIND VELOCITY = 100 mph
- CASE 3 ARM LOADING
- STANDARD TYPE
- STANDARD PLAN SHEET NUMBER
- DETAIL, NUMBER, SECTION, TYPE OR ELEVATION

# MISCELLANEOUS EQUIPMENT

| NEW | EXISTING | |
|---|---|---|
| CMS | cms | CHANGEABLE MESSAGE SIGN |
| | | CLOSED CIRCUIT TELEVISION CAMERA |
| | | HIGHWAY ADVISORY RADIO POLE AND ANTENNA |
| EMS | ems | EXTINGUISHABLE MESSAGE SIGN |
| M V | m v | DETECTION DEVICE<br>M = MICROWAVE SENSOR<br>V = VIDEO IMAGE SENSOR |

# WIRING DIAGRAM LEGEND

- EXTERNAL CONDUCTOR
- CONDUCTOR OR BUS
- TIE POINT
- CONTACTOR COIL
- CONTACTOR, NO CONTACT
- TERMINAL BLOCKS
- CONTACTOR, NC CONTACT
- ENCLOSURE BOND
- GROUNDING ELECTRODE
- CIRCUIT BREAKER
- RECEPTACLE

# PULL BOXES

| NEW | EXISTING | |
|---|---|---|
| | | PULL BOX, No. 5 UNLESS OTHERWISE INDICATED OR NOTED |
| 3 | 9A(21) | PULL BOX, ADDITIONAL DESIGNATIONS OR DESCRIPTIONS |

3 No. 3½ PULL BOX
5 No. 5 PULL BOX
6 No. 6 PULL BOX
7 No. 7 (CEILING PULL BOX)
8 No. 8 (PENDANT SOFFIT PULL BOX)
9 No. 9 PULL BOX
9A No. 9A PULL BOX

(C) COMMUNICATIONS PULL BOX
(E) PULL BOX WITH EXTENSION
(S) SPRINKLER CONTROL PULL BOX
(21) ANCHOR BOLTS AND CONDUIT FOR FUTURE INSTALLATION OF TYPE 21 STANDARD
(T) TRAFFIC PULL BOX

# VEHICLE DETECTORS

5 J 9 U

- VEHICLE DETECTOR DESIGNATION
- U = UPPER
  L = LOWER
- SLOT NUMBER IN INPUT FILE
- INPUT FILE (I OR J)
- PHASE

| NEW | EXISTING | |
|---|---|---|
| | | TYPE A DETECTOR LOOP. OUTLINE OF SAWCUT SHOWN |
| | | TYPE B DETECTOR LOOP. OUTLINE OF SAWCUT SHOWN |
| | | TYPE C DETECTOR LOOP. OUTLINE OF SAWCUT SHOWN |
| | | TYPE D DETECTOR LOOP. OUTLINE OF SAWCUT SHOWN |
| | | TYPE E DETECTOR LOOP. OUTLINE OF SAWCUT SHOWN |
| | | TYPE Q DETECTOR LOOP. OUTLINE OF SAWCUT SHOWN |
| | | MAGNETIC DETECTOR |
| DH | dh | DETECTOR HANDHOLE |
| | | MICROWAVE OR VIDEO DETECTION ZONE |

STATE OF CALIFORNIA
DEPARTMENT OF TRANSPORTATION

# ELECTRICAL SYSTEMS (LEGEND AND ABBREVIATIONS)

NO SCALE

RSP ES-1C DATED JULY 19, 2013 SUPERSEDES STANDARD PLAN ES-1C DATED MAY 20, 2011 - PAGE 427 OF THE STANDARD PLANS BOOK DATED 2010.

**REVISED STANDARD PLAN RSP ES-1C**

**2010 REVISED STANDARD PLAN RSP ES-1C**

7-11-13

| DIST | COUNTY | ROUTE | POST MILES TOTAL PROJECT | SHEET NO. | TOTAL SHEETS |
|---|---|---|---|---|---|
| 06 | Mad | 99 | 20.2/22.7 | 73 | 76 |

Theresa Gabriel
REGISTERED ELECTRICAL ENGINEER

July 19, 2013
PLANS APPROVAL DATE

REGISTERED PROFESSIONAL ENGINEER
Theresa Aziz Gabriel
No. E15129
Exp. 6-30-14
ELECTRICAL
STATE OF CALIFORNIA

*THE STATE OF CALIFORNIA OR ITS OFFICERS OR AGENTS SHALL NOT BE RESPONSIBLE FOR THE ACCURACY OR COMPLETENESS OF SCANNED COPIES OF THIS PLAN SHEET.*

TO ACCOMPANY PLANS DATED 7-15-13

**2010 REVISED STANDARD PLAN RSP ES-8B**

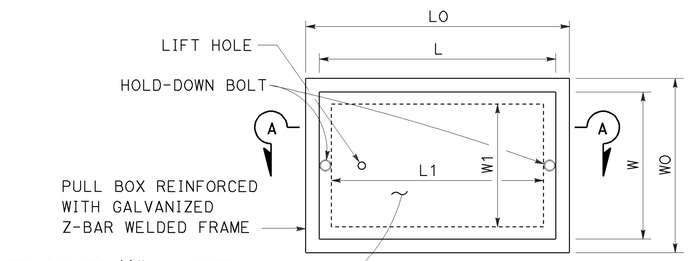


TOP VIEW

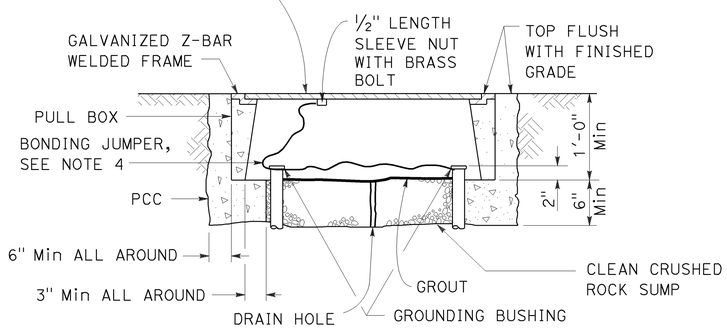


SECTION A-A

## No. 3½(T), No. 5(T) AND No. 6(T) TRAFFIC PULL BOX

## NOTES:

1. Traffic pull box shall be provided with steel cover and special concrete footing. Steel cover shall have embossed non-skid pattern.
2. Steel reinforcing shall be as regularly used in the standard products of the respective manufacturer.
3. Pull box covers shall be marked as follows: "SERVICE" Service circuits between service point and service disconnect; "SPRINKLER-CONTROL" Sprinkler control circuits, 50 V or less; "CALTRANS" On all pull boxes, except pull boxes marked "SPRINKLER-CONTROL"; and "TELEPHONE" Telephone service.
   - A) No. 3½(T) pull box.
     - 1) "SIGNAL" - Traffic signal circuits with or without lighting or sign lighting circuits.
     - 2) "LIGHTING" - Lighting or sign lighting circuits where voltage is under 600 V.
   - B) No. 5(T) or 6(T) pull box.
     - 1) "TRAFFIC SIGNAL" - Traffic signal circuits with or without lighting or sign lighting circuits.
     - 2) "LIGHTING" - Lighting or sign lighting circuits where voltage is under 600 V.
     - 3) "LIGHTING-HIGH VOLTAGE" - Lighting or sign lighting circuits where voltage is above 600 V.
     - 4) "IRRIGATION" - Circuits to irrigation controller 120 V or more.
     - 5) "RAMP METER" - Ramp meter circuits.
     - 6) "COUNT STATION" - Count or speed monitor circuits.
     - 7) "COMMUNICATION" - Communication circuits.
     - 8) "TOS COMMUNICATIONS" - TOS communications line.
     - 9) "TOS POWER" - TOS power.
     - 10) "TDC POWER" - Telephone demarcation cabinet power.
     - 11) "CCTV" - Closed circuit television circuits.
     - 12) "TMS" - Traffic monitoring station circuits.
     - 13) "CMS" - Changeable message sign circuits.
     - 14) "HAR" - Highway advisory radio circuits.
     - 15) "BOOSTER PUMP" - Booster pump circuit.
4. Bonding jumper for metal covers shall be 3' long, minimum.
5. The nominal dimensions of the opening in which the cover sets shall be the same as the cover dimensions except the length and width dimensions shall be ⅛" greater.
6. Covers and boxes shall be interchangeable with California standard male and female gages. When interchanged with a standard male or female gage, the top surfaces shall be flush within ⅛".

DIMENSION TABLE

| PULL BOX | PULL BOX | | | | | | COVER | | | | |
|---|---|---|---|---|---|---|---|---|---|---|---|
| | MINIMUM * THICKNESS | MINIMUM DEPTH BOX AND EXTENSION | WO | LO | L1 | W1 | L ** | W ** | R | EDGE THICKNESS | EDGE TAPER |
| No. 3½(T) | 1½" | 1'-0" | 1'-5"± 1" | 1'-8⅞"± | 1'-2½"± | 10⅝"± 1" | 1'-8"± | 1'-1¾"± | 0" | ½" | NONE |
| No. 5(T) | 1¾" | 1'-0" | 1'-11½"± 1" | 2'-5½"± | 1'-7"± | 1'-1"± 1" | 2'-3"± | 1'-4"± | 0" | ½" | NONE |
| No. 6(T) | 2" | 1'-0" | 2'-6"± 1" | 2'-11½"± | 1'-11½"± | 1'-5"± 1" | 2'-9"± | 1'-8"± | 0" | ½" | NONE |

* EXCLUDING CONDUIT WEB ** TOP DIMENSION

STATE OF CALIFORNIA
DEPARTMENT OF TRANSPORTATION

# ELECTRICAL SYSTEMS (TRAFFIC PULL BOX)

NO SCALE

RSP ES-8B DATED JULY 19, 2013 SUPERSEDES RSP ES-8B DATED JANUARY 20, 2012 THAT SUPPLEMENTS THE STANDARD PLANS BOOK DATED 2010.

**REVISED STANDARD PLAN RSP ES-8B**

| Dist | COUNTY | ROUTE | POST MILES TOTAL PROJECT | SHEET No. | TOTAL SHEETS |
|---|---|---|---|---|---|
| 06 | Mad | 99 | 20.2/22.7 | 74 | 76 |

Theresa Gabriel
REGISTERED ELECTRICAL ENGINEER

July 19, 2013
PLANS APPROVAL DATE

REGISTERED PROFESSIONAL ENGINEER
Theresa Aziz Gabriel
No. E15129
Exp. 6-30-14
ELECTRICAL
STATE OF CALIFORNIA

THE STATE OF CALIFORNIA OR ITS OFFICERS OR AGENTS SHALL NOT BE RESPONSIBLE FOR THE ACCURACY OR COMPLETENESS OF SCANNED COPIES OF THIS PLAN SHEET.

TO ACCOMPANY PLANS DATED 7-15-13

## ISOFOOTCANDLE CURVE - MINIMUM

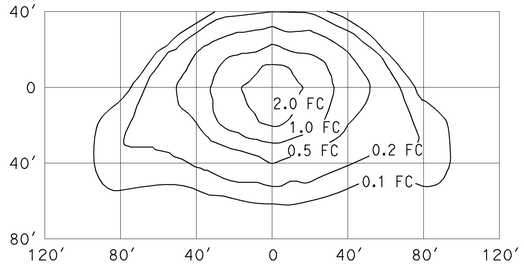


### TYPE III MEDIUM CUTOFF

Cutoff Luminaire
34′ Mounting Height
Lamp operated at 22,000 lm
200-W high pressure sodium lamp
ANSI Designation S66

## ISOFOOTCANDLE CURVE - MINIMUM

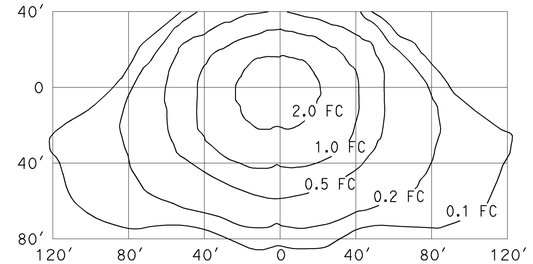


### TYPE III MEDIUM CUTOFF

Cutoff Luminaire
40′ Mounting Height
Lamp operated at 37,000 lm
310-W high pressure sodium lamp
ANSI Designation S67

## ISOFOOTCANDLE CURVE - MINIMUM

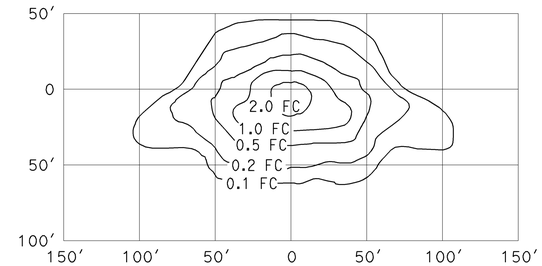


### TYPE III MEDIUM CUTOFF

Cutoff Luminaire
30′ Mounting Height
Lamp operated at 16,000 lm
150-W high pressure sodium lamp
ANSI Designation S55

## ISOFOOTCANDLE CURVE - MINIMUM

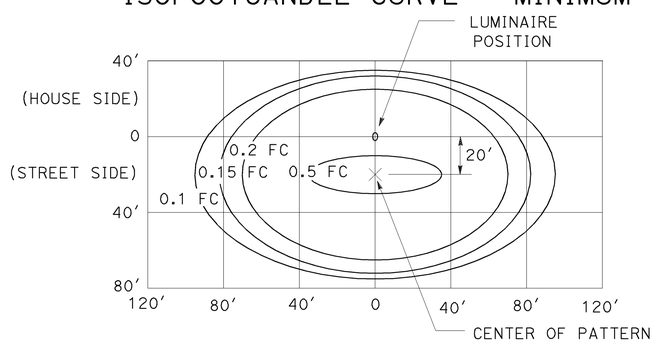


### LED LUMINAIRE ROADWAY 1

165-W at 34′ Mounting Height

## ISOFOOTCANDLE CURVE - MINIMUM

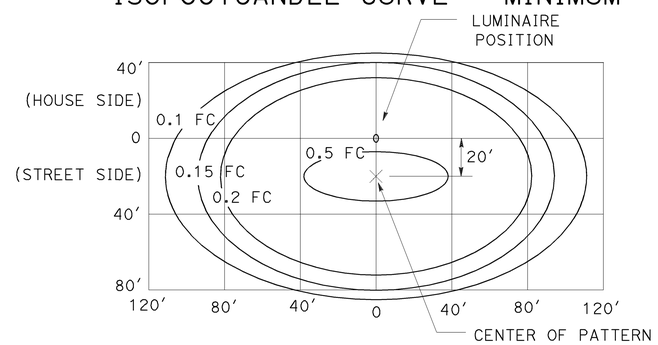


### LED LUMINAIRE ROADWAY 2

235-W at 40′ Mounting Height

## ISOFOOTCANDLE CURVE - MINIMUM

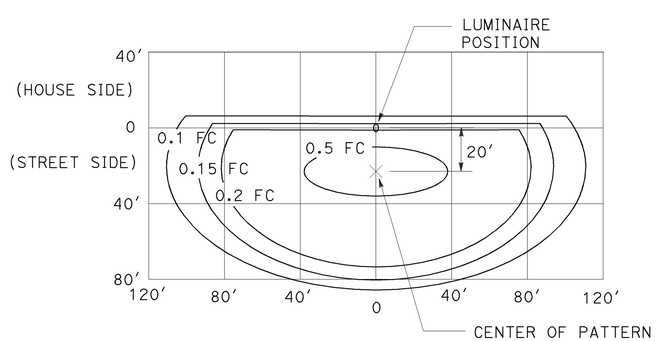


### LED LUMINAIRE ROADWAY 3

235-W at 40′ Mounting Height
with back side control

## ISOFOOTCANDLE CURVE - MINIMUM

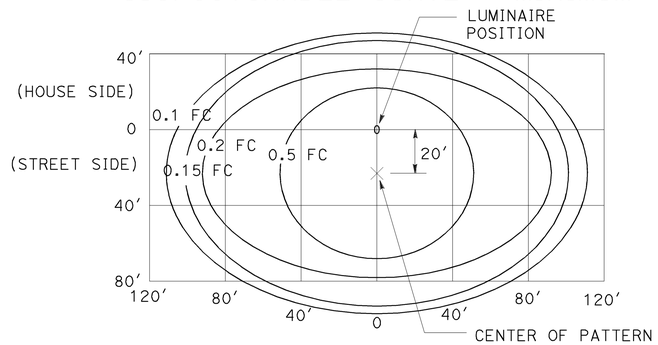


### LED LUMINAIRE ROADWAY 4

300-W at 40′ Mounting Height

## ISOFOOTCANDLE CURVE - MINIMUM

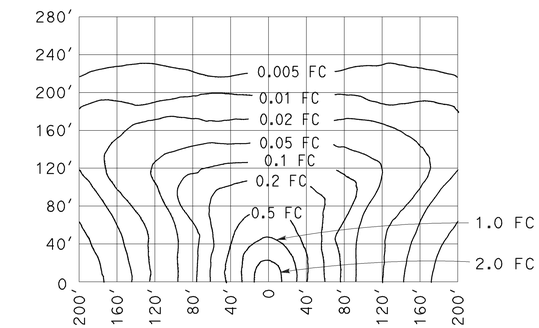


### LOW PRESSURE SODIUM LUMINAIRE

40′ Mounting Height
Lamp operated at 33,000 lm
180-W low pressure sodium lamp

STATE OF CALIFORNIA
DEPARTMENT OF TRANSPORTATION

# ELECTRICAL SYSTEMS (ISOFOOTCANDLE DIAGRAMS)

NO SCALE

RSP ES-10A DATED JULY 19, 2013 SUPERSEDES RSP ES-10A DATED JULY 20, 2012 THAT SUPPLEMENTS THE STANDARD PLANS BOOK DATED 2010.

**REVISED STANDARD PLAN RSP ES-10A**

**2010 REVISED STANDARD PLAN RSP ES-10A**

| Dist | COUNTY | ROUTE | POST MILES TOTAL PROJECT | SHEET No. | TOTAL SHEETS |
|---|---|---|---|---|---|
| 06 | Mad | 99 | 20.2/22.7 | 75 | 76 |

REGISTERED ELECTRICAL ENGINEER

July 20, 2012
PLANS APPROVAL DATE

REGISTERED PROFESSIONAL ENGINEER
Jeffery G. McRae
No. E14512
Exp. 6-30-14
ELECTRICAL
STATE OF CALIFORNIA

*THE STATE OF CALIFORNIA OR ITS OFFICERS OR AGENTS SHALL NOT BE RESPONSIBLE FOR THE ACCURACY OR COMPLETENESS OF SCANNED COPIES OF THIS PLAN SHEET.*

TO ACCOMPANY PLANS DATED 7-15-13

## ISOFOOTCANDLE CURVE - MINIMUM

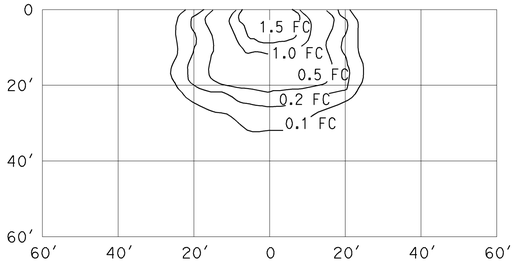


WALL LUMINAIRE
15′ Mounting Height
Lamp operated at 5,800 lm
70-W high pressure sodium lamp
ANSI Designation S62

## ISOFOOTCANDLE CURVE - MINIMUM

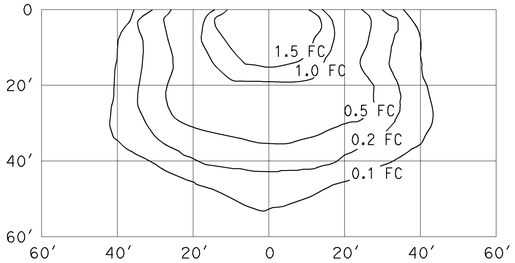


WALL LUMINAIRE
15′ Mounting Height
Lamp operated at 9,500 lm
100-W high pressure sodium lamp
ANSI Designation S54

## ISOFOOTCANDLE CURVE - MINIMUM

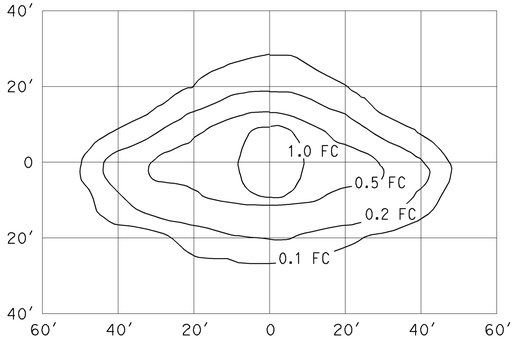


PENDANT SOFFIT LUMINAIRE
TYPE III SHORT
17′ Mounting Height
Lamp operated at 5,800 lm
70-W high pressure sodium lamp
ANSI Designation S62

## ISOFOOTCANDLE CURVE - MINIMUM

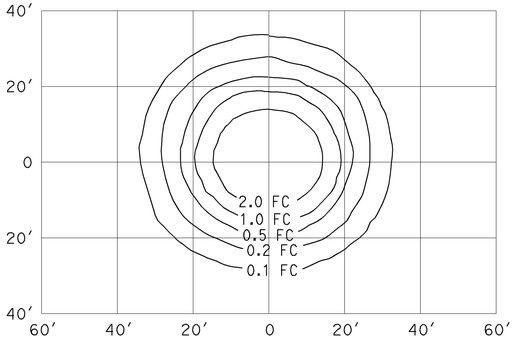


PENDANT SOFFIT LUMINAIRE
17′ Mounting Height
Lamp operated at 5,800 lm
70-W high pressure sodium lamp
ANSI Designation S62

## ISOFOOTCANDLE CURVE - MINIMUM

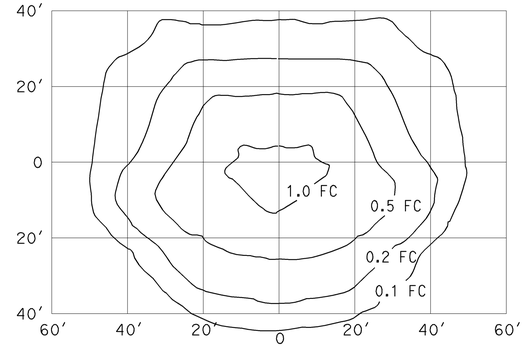


FLUSH SOFFIT LUMINAIRE
17′ Mounting Height
Lamp operated at 5,800 lm
70-W high pressure sodium lamp
ANSI Designation S62

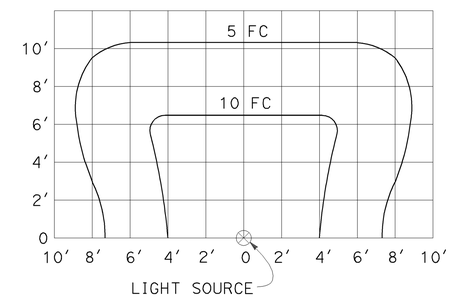


SIGN LIGHTING FIXTURE
ISOFOOTCANDLE DIAGRAM

NOTES:

1. Curves represent the minimum footcandle (FC) of initial illumination on a 10′-0" x 20′-0" panel.
2. The FC shown are with the fixture attached to the light fixture mounting channel which places the center of the source 4′-8" in front of panel and 1′-0" below the bottom edge.
3. Applicable lamp: 85-W fluorescent phosphor coated induction lamp.

STATE OF CALIFORNIA
DEPARTMENT OF TRANSPORTATION

# ELECTRICAL SYSTEMS (ISOFOOTCANDLE DIAGRAMS)

NO SCALE

RSP ES-10B DATED JULY 20, 2012 SUPPLEMENTS THE STANDARD PLANS BOOK DATED 2010.

**REVISED STANDARD PLAN RSP ES-10B**

2010 REVISED STANDARD PLAN RSP ES-10B

| Dist | COUNTY | ROUTE | POST MILES TOTAL PROJECT | SHEET No. | TOTAL SHEETS |
|---|---|---|---|---|---|
| 06 | Mad | 99 | 20.2/22.7 | 76 | 76 |

REGISTERED CIVIL ENGINEER

July 19, 2013
PLANS APPROVAL DATE

REGISTERED PROFESSIONAL ENGINEER
Stanley P. Johnson
No. C57793
Exp. 3-31-14
CIVIL
STATE OF CALIFORNIA

*THE STATE OF CALIFORNIA OR ITS OFFICERS OR AGENTS SHALL NOT BE RESPONSIBLE FOR THE ACCURACY OR COMPLETENESS OF SCANNED COPIES OF THIS PLAN SHEET.*

TO ACCOMPANY PLANS DATED 7-15-13

| STANDARD TYPE | SETBACK (DIMENSION A) |
|---|---|
| 32 | 30'-0" (Min) |
| 31 | 20'-0" (Min) |
| 15, 15D, 15-SB, 21, 21D, 30 | ARM LENGTH (Min) |

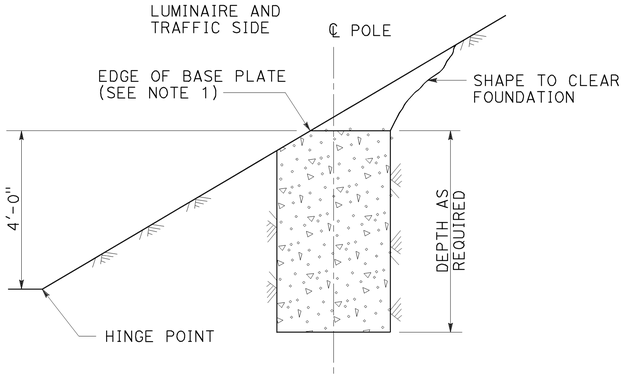


CUT SLOPES
STEEPER THAN 4:1,
LESS THAN 2:1
DETAIL A-1
See Note 2 and 3

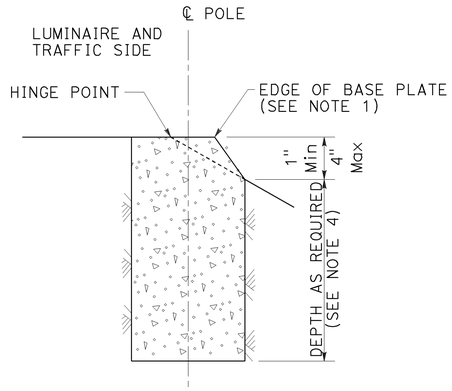


FILL SLOPES
STEEPER THAN 4:1,
LESS THAN 2:1
DETAIL A-2
See Note 2 and 3

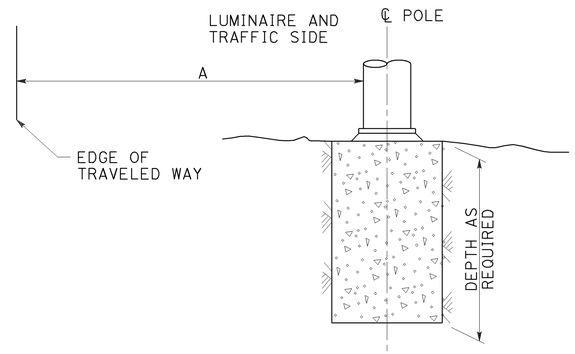


FLAT SECTIONS, CUT OR FILL SLOPES
4:1 OR FLATTER
DETAIL A-3
See Note 2

FOUNDATIONS ADJACENT TO ALL ROADWAYS EXCEPT
IN SIDEWALK, MEDIAN AND ISLAND AREAS
DETAIL A

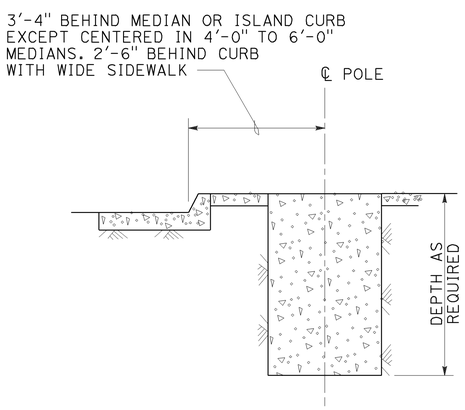


MEDIAN, ISLAND
OR WIDE SIDEWALK
DETAIL B-1
7' Wide and wider

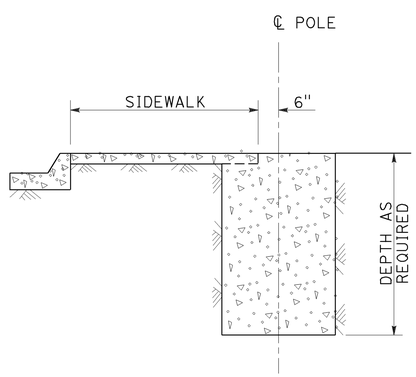


NARROW SIDEWALK
DETAIL B-2
Less than 7' wide

FOUNDATIONS IN SIDEWALK, MEDIAN AND ISLAND AREAS
DETAIL B

NOTES:

1. Where a portion of the foundation is above grade, the top edges shall have a 1" chamfer.
2. Slopes shall be horizontal to vertical ratio (Horizontal : Vertical).
3. Horizontal setbacks on cut and fill slopes steeper than 4:1 shall not exceed the distance shown for flat sections.
4. CIDH embedment depth shall be increased beyond standard depths by the diameter of the CIDH.

STATE OF CALIFORNIA
DEPARTMENT OF TRANSPORTATION

# ELECTRICAL SYSTEMS (FOUNDATION INSTALLATIONS)

NO SCALE

RSP ES-11 DATED JULY 19, 2013 SUPERSEDES STANDARD PLAN ES-11
DATED MAY 20, 2011 - PAGE 488 OF THE STANDARD PLANS BOOK DATED 2010.

**REVISED STANDARD PLAN RSP ES-11**

**2010 REVISED STANDARD PLAN RSP ES-11**

7-9-13