Dist	COUNTY	ROUTE	POST MILES TOTAL PROJECT	SHEET No.	TOTAL SHEETS
05	Mon,SBt	101	100.0/101.3, 0.0/1.6	401	641

Ivo Rummler 12-28-11
REGISTERED CIVIL ENGINEER DATE

4-9-12
PLANS APPROVAL DATE

REGISTERED PROFESSIONAL ENGINEER IVO RUMMLER No. 59642 Exp. 12/31/13 CIVIL STATE OF CALIFORNIA

THE STATE OF CALIFORNIA OR ITS OFFICERS OR AGENTS SHALL NOT BE RESPONSIBLE FOR THE ACCURACY OR COMPLETENESS OF SCANNED COPIES OF THIS PLAN SHEET.

TEMPORARY FIBER ROLL

STATION	LOCATION	LF
"SB1" STA 773+50.0 TO 825+00.0	ALONG OUTSIDE Shld	13771
"NB1" STA 773+50.0 TO 822+60.0	ALONG OUTSIDE Shld	7589
"R1" STA 786+44.90 TO 801+74.92	Lt EMBANK	9031
"R2" STA 803+38.00 TO 820+80.76	Rt EMBANK	11561
"R3" STA 791+16.22 TO 806+95.16	Rt EMBANK	1595
"R3" STA 791+16.22 TO 806+95.16	Lt EMBANK	5272
"R4" STA 783+00.00 TO 802+30.56	Rt EMBANK	5211
"R4" STA 783+00.00 TO 802+30.56	Lt EMBANK	2429
"CO1" STA 15+43.28 TO 47+77.00	Rt EMBANK	5727
"CO1" STA 15+43.28 TO 47+77.00	Lt EMBANK	20153
"SJR1" STA 9+00.00 TO 52+96.00	Rt EMBANK	11161
"SJR1" STA 9+00.00 TO 52+96.00	Lt EMBANK	19069
"SJR1" STA 56+81.00 TO 61+29.26	Rt EMBANK	1554
"SJR1" STA 56+81.00 TO 61+29.26	Lt EMBANK	4305
"BAL" STA 17+00.00 TO 21+27.57	Rt EMBANK	1135
"BAL" STA 17+00.00 TO 21+27.57	Lt EMBANK	563
"FRE" STA 22+28.93 TO 50+35.52	Rt EMBANK	6427
"FRE" STA 22+28.93 TO 50+35.52	Lt EMBANK	2875
"BALD1" 5+85.00 TO 11+20.00	Lt EMBANK	518
"BALD2" 5+30.00 TO 9+65.00	Rt EMBANK	585
"BALD2" 5+30.00 TO 9+65.00	Lt EMBANK	325
"DNCUL2"		1398
TOTAL		133,000

TEMPORARY SILT FENCE

STATION	LOCATION	LF
"SB1" STA 773+50.0 TO 785+00.0	ALONG OUTSIDE Shld	1872
"SB1" STA 820+00.0 TO 825+00.0	ALONG OUTSIDE Shld	502
"SB1" STA 815+00 TO 825+00.0	MEDIAN	1896
"NB1" STA 803+50.0 TO 822+60.0	ALONG OUTSIDE Shld	1916
"R3" STA 791+16.22 TO 806+95.2	Rt EMBANK	1379
"R4" STA 795+00.00 TO 797+00	Lt EMBANK	380
"CO1" STA 38+00.00 TO 47+80.00	Rt EMBANK	1151
"CO1" STA 15+43.28 TO 47+77.00	Lt EMBANK	3827
"SJR1" STA 9+00.00 TO 52+00.00	Rt EMBANK	3300
"SJR1" STA 9+00.00 TO 47+00.00	Lt EMBANK	3281
"SJR1" STA 56+81.00 TO 61+29.3	Lt EMBANK	680
"BAL" STA 17+00.00 TO 21+27.57	Rt EMBANK	605
"BAL" STA 17+00.00 TO 21+27.57	Lt EMBANK	755
"FRE" STA 22+28.93 TO 50+35.52	Rt EMBANK	5252
"FRE" STA 44+00 TO 47+00	Lt EMBANK	680
"BALD1" 5+85.00 TO 11+20.00	Lt EMBANK	515
"BALD2" 5+30.00 TO 9+65.00	Rt EMBANK	254
"BALD2" 5+30.00 TO 9+65.00	Lt EMBANK	325
"DNCUL2"		1351
TOTAL		29,921

SURVEY MONUMENT (TYPE A)

LOCATION	Conc 6"x6"	IP 1.0"
	EA	EA
"R1" 795+31.36, 6.55′Rt	1	
"NB1" 794+96.87, 43.53′ Rt	1	
"R1" 796+81.42, 10.62′ Rt	1	
"SB1" 798+20.11, 46.94′ Lt	1	
"SJR1" 53+14.51, 37.34′ Lt	1	
"SB1" 807+20.01, 47.10′ Lt	1	
"SB1" 811+64.93, 38.96′ Lt	1	
"R2" 819+84.98, 29.41′ Lt	1	
"NB1" 821+18.52, 50.19′ Rt	1	
"SB1" 823+66.16, 49.34′ Lt	1	
"SB1" 775+49.60, 22.88′ Lt		1
"MA1" 20+84.55, 6.69′ Rt		1
"FRE1" 24+17.04, 67.42′ Rt		1
"ND1" 49+27.54, 24.91′ Lt		1
SUBTOTAL	10	4
TOTAL	14	

NOTE: ALL LISTED SURVEY MONUMENTS WILL BE DESTROYED AND PERPETUATED BY SURVEYS

GATE

PLAN SHEET No.	LOCATION	CL-4	CL-4	CL-6	CL-6	CL-6 SLATTED	WM	WM	REMARKS
		4′	12′	4′	16′	10′	4′	12′	
		EA	EA	EA	EA	EA	EA	EA	
L-3	"NB1" 772+50, 73.00′ Rt						1		
L-3	"NB1" 773+96.58, 55.00′ Rt		1						Dwy "DWF1"
L-3	"NB1" 774+51.49, 118.50′ Rt		1						Dwy "DWF2"
L-3	"FRE1" 20+49.27, 68.00′ Rt							2	Dwy "MA1"
L-3	"FRE1" 21+51.50, 57.00′ Lt		1						Dwy "DWF3A"
L-3	"SB1" 777+50, 90.00 Lt						1		
L-3	"FRE1" 22+93.97, 70.00′ Rt				2				Dwy "DWF3"
L-3	"FRE1" 24+20, 69.50′ Rt			1					
L-3	"FRE1" 25+19.97, 70.00′ Rt				2				Dwy "DWF4"
L-3	"FRE1" 26+50, 33.00′ Lt	1							
L-3	"FRE1" 26+69.97, 70.00′ Rt				2				Dwy "DWF5"
L-6	"SJR1" 33+00, 71.00′ Rt						1		
L-6	"FRE1" 29+87.55, 62.00′ Rt				2				Dwy "DWF6"
L-6	"FRE1" 34+30.35, 68.50′ Rt				2				Dwy "DWF7"
L-7	"R2" 804+30, 90.00′ Lt						1		
L-8	"FRE1" 39+50, 146.00′ Rt			1					
L-8	"FRE1" 40+00, 47.50′ Lt						1		
L-8	"FRE1" 41+15.00, 83.00′ Lt					1			Well Enclosure
L-8	"FRE1" 41+73.99, 33.00′ Lt				2				Dwy "DWF11"
L-8	"SJR1" 61+60.27, 172.50′ Lt							1	Dwy "DWS9"
L-10	"CO1" 38+00, 35.00′ Rt						1		
	TOTAL	1	3	2	12	1	6	3	

NOTE: ALL GATES ON THIS TABLE ARE REFERENCED TO CENTER OF GATE OPENING

TEMPORARY CHECK DAM

STATION	LOCATION	LF
"SB1" STA 772+00.0 TO 789+00.0	ALONG OUTSIDE Shld	240
"NB1" STA 792+00.0 TO 798+00.0	ALONG OUTSIDE Shld	80
"FRE" STA 22+28.93 TO 42+00.0	Rt EMBANK	240
"SJR1" STA 22+00.0 TO 32+00.0	Lt EMBANK	80
"SJR1" STA 56+81.00 TO 61+30.0	Lt EMBANK	180
TOTAL		820

DESTROY WATER WELL

STATION	LOCATION	EA
"FRE1" STA 41+3.91, 13.21′ Rt	Rt SHOULDER	1
TOTAL		1

RELOCATE GATE (*)

STATION	LOCATION	EA
"DWS1" STA 10+24.51	Dwy "DWS1"	1
TOTAL		1

(*) EXACT LOCATION TO BE DETERMINED BY ENGINEER.

SUMMARY OF QUANTITIES

Q-6

REVISED BY | DATE REVISED
WILLARD TULLOCK | IVO RUMMLER
CALCULATED-DESIGNED BY | CHECKED BY
FUNCTIONAL SUPERVISOR | ERNIE PENUNA
STATE OF CALIFORNIA - DEPARTMENT OF TRANSPORTATION
Caltrans
06-DESIGN

LAST REVISION 02-29-12 | DATE PLOTTED => 14-APR-2012 | TIME PLOTTED => 15:52

Dist	COUNTY	ROUTE	POST MILES TOTAL PROJECT	SHEET No.	TOTAL SHEETS
05	Mon,SB†	101	100.0/101.3, 0.0/1.6	402	641

Ivo Rummler 12-28-11
REGISTERED CIVIL ENGINEER DATE

4-9-12
PLANS APPROVAL DATE

REGISTERED PROFESSIONAL ENGINEER IVO RUMMLER No. 59642 Exp. 12/31/13 CIVIL STATE OF CALIFORNIA

THE STATE OF CALIFORNIA OR ITS OFFICERS OR AGENTS SHALL NOT BE RESPONSIBLE FOR THE ACCURACY OR COMPLETENESS OF SCANNED COPIES OF THIS PLAN SHEET.

REMOVE FENCE AND GATE

SHEET No.	LOCATION		FENCE					GATE	REMARKS
			METAL	CL	BW	WOOD	OTHER		
	FROM	TO	LF	LF	LF	LF	LF	EA	
L-2	"SB1" 747+82.85, 90.87 L†	"DNCUL1" 17+00, 21.92 R†			403				
L-3	"SB1" 774+25.33, 54.78 L†	"SB1" 776+49.00, 34.37 L†		227					
L-3	"SB1" 777+67.19, 53.21 L†	"SB1" 780+31.57, 53.21 L†			271				
L-3	"NB1" 773+95.05, 64.14 R†	"NB1" 775+59.43, 51.70 R†		163				2	CL GATE
L-3	"MA1" 20+36.56,9.09 R†	"NB1" 775+59.43, 81.70 R†			174			1	METAL GATE
L-3	"MA1" 20+36.56, 13.12 L†	"FRE1" 21+48.72, 100.28′ L†		201					
L-3	"FRE1" 21+48.72, 100.28′ L†	"FRE1" 22+64.30, 69.22′ L†		162					
L-3	"FRE1" 22+64.30, 69.22′ L†	"FRE1" 23+68.39, 70.09 R†		175					
L-3	"FRE1" 24+11.71, 70.09 R†	"FRE1" 22+64.30, 62.97′ L†		151					
L-3	"FRE1" 22+64.30, 62.97′ L†	"FRE1" 26+68.02, 63.79′ L†		349					
L-3	"FRE1" 26+68.02, 63.79′ L†	"FRE1" 26+84.03,15.27′ L†		62					
L-3	"FRE1" 26+84.03,15.27′ L†	"FRE1" 27+56.97, 12.05 R†		72					
L-4	"SJR1" 8+14.21, 21.10 L†	"SJR1" 10+01.00, 52.68 L†					185		BLACK CL
L-4	"SJR1" 10+01.00, 52.68 L†	"SJR1" 09+96.80, 102.68 L†					53		BLACK CL
L-4	"SJR1" 10+01.00, 52.68 L†	"SJR1" 19+50.00, 42.90 L†			907				
L-5	"SJR1" 19+58.74, 43.39 L†	"SJR1" 19+50.00, 106.33 R†			67				
L-5	"SJR1" 19+58.74, 43.39 L†	"SJR1" 23+65.67, 32.03 L†			404				
L-5	"SJR1" 23+65.67, 32.03 L†	"SJR1" 23+62.62, 59.64 L†			25				
L-5	"SJR1" 23+65.67, 32.03 L†	"SJR1" 25+58.91, 31.91′ L†			214 *	36			*BW W/ WOOD POST
L-5	"SJR1" 25+58.91, 31.91′ L†	"SJR1" 25+74.03, 66.87 L†			36 *				
L-5	"SJR1" 26+16.47, 66.63 L†	"SJR1" 26+13.26, 34.74 L†					34		MASONRY WALL
L-5	"SJR1" 26+13.26, 34.74 L†	"SJR1" 26+85.63, 34.78′ L†					70		
L-5	"SJR1" 26+94.86, 71.15 L†	"SJR1" 26+94.86, 71.15 L†					36		
L-5	"SJR1" 26+27.41, 35.47′ L†	"SJR1" 26+32.95, 67.59′ L†					33		
L-5	"SJR1" 27+5.57, 35.35 L†	"SJR1" 27+30.91, 31.51′ L†				24		2	IRON GATE
L-5	"SJR1" 27+30.91, 31.51′ L†	"SJR1" 27+41.66, 84.66 L†				51			
L-6	"SJR1" 29+02.00, 31.28 L†	"SJR1" 29+47.25, 27.50′ L†				42			
L-6	"SJR1" 29+47.25, 27.50′ L†	"SJR1" 29+83.40, 104.70 L†				90			
L-6	"SJR1" 30+5.00, 104.80 L†	"SJR1" 29+91.90, 36.46′L†				65			
L-6	"SJR1" 29+91.90, 36.46′L†	"SJR1" 31+11.29, 8.90 L†				128			
THIS SHEET TOTAL				1562	2501	436	411	5	

NOTE: * INDICATES BW WITH WOOD POST

SUMMARY OF QUANTITIES

Q-7

STATE OF CALIFORNIA - DEPARTMENT OF TRANSPORTATION
Caltrans 06-DESIGN

FUNCTIONAL SUPERVISOR: ERNIE PENUNA
CALCULATED-DESIGNED BY: WILLARD TULLOCK
CHECKED BY: FRANK Q. CAO
REVISED BY / DATE REVISED

LAST REVISION 03-22-12 | DATE PLOTTED => 14-APR-2012 | TIME PLOTTED => 15:53

Dist	COUNTY	ROUTE	POST MILES TOTAL PROJECT	SHEET No.	TOTAL SHEETS
05	Mon,SBt	101	100.0/101.3, 0.0/1.6	403	641

Ivo Rummler 12-28-11
REGISTERED CIVIL ENGINEER DATE

4-9-12
PLANS APPROVAL DATE

REGISTERED PROFESSIONAL ENGINEER IVO RUMMLER No. 59642 Exp. 12/31/13 CIVIL STATE OF CALIFORNIA

THE STATE OF CALIFORNIA OR ITS OFFICERS OR AGENTS SHALL NOT BE RESPONSIBLE FOR THE ACCURACY OR COMPLETENESS OF SCANNED COPIES OF THIS PLAN SHEET.

REMOVE FENCE AND GATE (CONTINUED)

SHEET No.	LOCATION		FENCE					GATE	REMARKS
			METAL	CL	BW	WOOD	OTHER		
	FROM	TO	LF	LF	LF	LF	LF	EA	
L-6	"SJR1" 31+18.67, 8.91 Lt	"SJR1" 31+11.29, 126.18 Lt			119				
L-6	"SJR1" 32+33.31, 149.74 Lt	"SJR1" 31+85.45, 30.30 Rt			187				
L-6	"SJR1" 31+85.45, 30.30 Rt	"SJR1" 33+97.19, 136.27 Rt			246				
L-6	"R1" 791+53.87.27.55 Lt	"R1" 794+58.64			306				
L-6	"R4" 783+50.87, 43.99 Rt	"R4" 789+23.66, 2′ Lt		730					
L-6	"R4" 789+23.66, 2′ Lt	"R4" 790+3.09, 19′ Lt		30					
L-6	"R4" 790+3.09, 19′ Lt	"R4" 793+20.58,67.75′ Lt		336					
L-6	"R4" 793+20.58,67.75′ Lt	"R4" 793+83.39, 85.18′ Lt		76					
L-6	"R4" 793+83.39, 85.18′ Lt	"R4" 794+26.72		95					
L-6	"FRE1" 27+56.27, 12.39 Lt	"FRE1" 33+38.30, 30.49′ Lt		585					
L-6	"FRE1" 33+38.30, 30.49′ Lt	"FRE1" 34+14.41, 32.04 Rt		101					
L-6	"FRE1" 29+74.72, 24.60 Rt	"FRE1" 29+64.18, 84.13 Rt		60					
L-7	"SJR1" 44+32.86, 144.65 Lt	"SJR1" 44+16.71, 73.50 Lt			73				
L-7	"SJR1" 42+59.78, 29.26 Rt	"SJR1" 44+15.93, 11.55 Rt			127				
L-7	"SJR1" 42+98.34, 60.07 Lt	"SJR1" 45+47.62, 123.21′ Lt			289				
L-7	"SJR1" 45+47.62, 123.21′ Lt	"SJR1" 45+58.20, 146.63 Lt			28				
L-7	"SJR1" 42+59.78, 29.26′ Rt	"SJR1" 42+98.34			40				
L-7	"SJR1" 42+98.34	"SJR1" 43+10.49, 40′ Rt			47				
L-7	"SJR1" 43+10.49, 40′ Rt	"SJR1" 44+20.97, 57′ Lt			111				
L-7	"SJR1" 44+20.97, 57′ Lt	"SJR1" 44+15.69, 43.27 Rt			99				
L-7	"SJR1" 44+15.69, 43.27 Rt	"SJR1" 45+65.61, 100.98 Rt			135				
L-7	"SJR1" 45+65.61, 100.98 Rt	"SJR1" 47+62.92, 24.19 Rt			185				
L-7	"SJR1" 45+93.18, 156.50 Lt	"SJR1" 45+78.41, 111′ Lt			50				
L-7	"SJR1" 45+78.41, 111′ Lt	"CO1" 15+42.35, 39′ Rt			230				
L-7	"CO1" 15+42.35, 39′ Rt	"CO1" 18+87.98, 106.07′ Rt			181				
L-7	"CO1" 18+87.98, 106.07′ Rt	"CO1" 19+45.251, 124.29 Rt			42				
L-7	"SJR1" 47+62.92, 24.19′ Rt	"SJR1" 47+86.68, 50.48′ Rt	35.5						
L-7	"SJR1" 47+86.68, 50.48′ Rt	"SJR1" 48+24.57, 34.77′ Rt	35.5						
L-7	"SJR1" 48+24.57, 34.77′ Rt	"SJR1" 47+88.13, 3.69′ Rt	35.5						
L-7	"SJR1" 47+88.13, 3.69′ Rt	"SJR1" 47+62.92, 24.19′ Rt	35.5						
THIS SHEET TOTAL			142	2013	2495				

SUMMARY OF QUANTITIES

Q-8

STATE OF CALIFORNIA - DEPARTMENT OF TRANSPORTATION
Caltrans 06-DESIGN
FUNCTIONAL SUPERVISOR ERNIE PENUNA
CALCULATED-DESIGNED BY FRANK Q. CAO
CHECKED BY WILLARD TULLOCK
REVISED BY
DATE REVISED

LAST REVISION 03-22-12 | DATE PLOTTED => 14-APR-2012 | TIME PLOTTED => 15:53

Dist	COUNTY	ROUTE	POST MILES TOTAL PROJECT	SHEET No.	TOTAL SHEETS
05	Mon,SB†	101	100.0/101.3, 0.0/1.6	404	641

REGISTERED CIVIL ENGINEER 12-28-11 DATE

4-9-12
PLANS APPROVAL DATE

REGISTERED PROFESSIONAL ENGINEER IVO RUMMLER No. 59642 Exp. 12/31/13 CIVIL STATE OF CALIFORNIA

THE STATE OF CALIFORNIA OR ITS OFFICERS OR AGENTS SHALL NOT BE RESPONSIBLE FOR THE ACCURACY OR COMPLETENESS OF SCANNED COPIES OF THIS PLAN SHEET.

REMOVE FENCE AND GATE (CONTINUED)

SHEET No.	LOCATION		FENCE					GATE	REMARKS
			METAL	CL	BW	WOOD	OTHER		
	FROM	TO	LF	LF	LF	LF	EA	EA	
L-7	"CO1" 15+60.90, 43.97 R†	"CO1" 15+42.35, 39.15 R†			28				
L-7	"SJR1" 48+24.57, 34.77 R†	"R1" 801+92.07, 40.19 R†			410				
L-7	"R1" 802+21.20, 43.08 R†	"SJR1" 50+39.95, 14.87 L†		261					
L-7	"CO1" 20+27.41, 80.89 L†	"SJR1" 50+39.95, 14.87 L†		281					
L-7	"CO1" 22+15.06, 23.11 L†	"CO1" 20+71.98, 88.04 L†		146					
L-7	"CO1" 22+72.26, 79.43 L†	"CO1" 21+85.95, 15.71 R†		123					
L-7	"R2" 804+17.63, 46.97 R†	"CO1" 21+85.95, 15.71 R†		270					
L-7	"NB1" 794+92.39, 101.71 R†	"NB1" 794+92.39, 44.66 R†		57					
L-7	"NB1" 794+92.39, 44.66 R†	"NB1" 806+24.95, 36.38 R†		1128					
L-7	"R1" 794+59.39	"SB1" 806+50.00, 42.12 R†			1209				
L-7	"R1" 795+34.27	"SJR1" 43+44.48, 162.24 L†			540				
L-8	"FRE1" 38+50.00, 150.88 R†	"FRE1" 39+16.00,99.86′ R†		68					
L-8	"FRE1" 39+16.00,99.86′ R†	"FRE1" 39+21.19, 80.77′ R†		20					
L-8	"FRE1" 39+21.19, 80.77′ R†	"FRE1" 39+42.71, 55.70′ R†		31					
L-8	"FRE1" 39+42.71, 55.70′ R†	"FRE1" 39+41.75,46.29′ R†		9					
L-8	"FRE1" 39+41.75,46.29′ R†	"FRE1" 39+51.26, 21.35 R†		29					
L-8	"FRE1" 39+51.26, 21.35 R†	"R4" 794+27.99		178					
L-8	"FRE1" 39+70.11, 41.04 L†	"R4" 794+52.04, 69.82 L†			193			1	Wire GATE
L-8	"FRE1" 40+62.29, 31.43 R†	"R4" 800+74.75, 103.71 L†			532				
L-8	"R4" 800+74.75, 103.71 L†	"SJR1" 57+55.83, 182.50 L†			375				
L-8	"BAL1" 18+66.79, 104.40 R†	"FRE1" 40+62.29, 31.43 R†			401				
L-8	"BAL1" 14+66.00, 53.07 R†	"FRE1" 40+3.73, 61.14 R†		702					
L-8	"FRE1" 40+3.73, 61.14 R†	"FRE1" 39+62.87, 154.41 R†		94					
L-9	"R2" 806+77.41, 42.85 R†	"CO1" 24+50.00, 66.74 L†				234			
L-9	"R2" 806+77.41, 42.85 R†	"R2" 809+6.99, 34.75 R†				230			
L-9	"R2" 809+6.99, 34.75 R†	"CO1" 26+86.25, 84.04 L†			242				
L-9	"R2" 809+6.99, 34.75 R†	"R2" 816+27.96, 11.37 L†				723			
L-9	"R2" 816+27.96, 11.37 L†	"CO1" 34+43.58, 142.15 L†				302			
L-9	"R2" 816+27.96, 11.37 L†	"R2" 818+48.72, 29.10 L†			220				
L-9	"R3" 806+24.96, 95.37 R†	"R3" 818+49.99, 49.85 R†			1223				
L-9	"R2" 806+62.30,43.05 R†	"R2" 806+77.41, 42.85 R†			10				
THIS SHEET TOTAL				3397	5383	1489		1	

SUMMARY OF QUANTITIES

Q-9

STATE OF CALIFORNIA - DEPARTMENT OF TRANSPORTATION
Caltrans
06-DESIGN

FUNCTIONAL SUPERVISOR: ERNIE PENUNA
CALCULATED-DESIGNED BY: FRANK Q. CAO
CHECKED BY: WILLARD TULLOCK
REVISED BY
DATE REVISED

LAST REVISION 03-22-12 | DATE PLOTTED => 14-APR-2012 | TIME PLOTTED => 15:53

Dist	COUNTY	ROUTE	POST MILES TOTAL PROJECT	SHEET No.	TOTAL SHEETS
05	Mon,SBt	101	100.0/101.3, 0.0/1.6	405	641

Ivo Rummler 12-28-11
REGISTERED CIVIL ENGINEER DATE

4-9-12
PLANS APPROVAL DATE

REGISTERED PROFESSIONAL ENGINEER IVO RUMMLER No. 59642 Exp. 12/31/13 CIVIL STATE OF CALIFORNIA

THE STATE OF CALIFORNIA OR ITS OFFICERS OR AGENTS SHALL NOT BE RESPONSIBLE FOR THE ACCURACY OR COMPLETENESS OF SCANNED COPIES OF THIS PLAN SHEET.

REMOVE FENCE AND GATE (CONTINUED)

SHEET No.	LOCATION		REMOVE FENCE					REMOVE GATE	REMARKS
			METAL	CL	BW	WOOD	OTHER		
	FROM	TO	LF	LF	LF	LF	LF	EA	
L-10	"CO1" 40+20.24, 166.97 Rt	"CO1" 42+22.94, 80.54 Rt			215				
L-10	"CO1" 42+38.94, 73.83 Rt	"CO1" 44+94.03, 6.06 Lt			270				
L-10	"CO1" 44+94.03, 6.06 Lt	"CO1" 44+76.22, 78.26 Lt			74				
L-10	"CO1" 44+94.03, 6.06 Lt	"CO1" 48+87.14, 15.30 Lt			394				
L-10	"CO1" 48+82.07, 38.44 Lt	"CO1" 48+87.14, 15.30 Lt			24				
L-10	"CO1" 45+10.25, 32.00 Rt	"CO1" 48+2.40, 25.58 Rt			298				
L-11	"R2" 818+49.43, 57.13 Lt	"R2" 822+42.71, 33.91 Lt			390				
L-11	"R2" 822+42.71, 33.91 Lt	"SB1" 823+09.05, 106.31 Lt			99				
L-11	"NB1" 818+50.00, 51.12 Rt	"NB1" 821+67.27, 50.69 Rt			317			1	BW GATE
		SUBTOTAL OF SHEET Q-10			2,081			1	
		SUBTOTAL OF SHEET Q-9		3397	5383	1489		1	
		SUBTOTAL OF SHEET Q-8	142	2013	2,495				
		SUBTOTAL OF SHEET Q-7		1562	2,501	436	411	5	
SUBTOTAL			142	6,972	12,460	1,925	411		
TOTAL			21,910					7	

SUMMARY OF QUANTITIES
Q-10

STATE OF CALIFORNIA - DEPARTMENT OF TRANSPORTATION
Caltrans 06-DESIGN

FUNCTIONAL SUPERVISOR: ERNIE PENUNA
CALCULATED-DESIGNED BY: FRANK Q. CAO
CHECKED BY: WILLARD TULLOCK
REVISED BY
DATE REVISED

LAST REVISION 03-22-12
DATE PLOTTED => 15-APR-2012
TIME PLOTTED => 10:02

Dist	COUNTY	ROUTE	POST MILES TOTAL PROJECT	SHEET No.	TOTAL SHEETS
05	Mon,SB†	101	100.0/101.3, 0.0/1.6	406	641

Ivo Rummler 12-28-11
REGISTERED CIVIL ENGINEER DATE

4-9-12
PLANS APPROVAL DATE

REGISTERED PROFESSIONAL ENGINEER IVO RUMMLER No. 59642 Exp. 12/31/13 CIVIL STATE OF CALIFORNIA

THE STATE OF CALIFORNIA OR ITS OFFICERS OR AGENTS SHALL NOT BE RESPONSIBLE FOR THE ACCURACY OR COMPLETENESS OF SCANNED COPIES OF THIS PLAN SHEET.

FENCES

SHEET No.	LOCATION		FENCE				REMARKS
			CL-4	CL-6	CL-6 SLATTED	BW	
	FROM	TO	LF	LF	LF	LF	
L-2	"BK1" 8+31.06, 63.10′ L†	"BK1" 8+44.61, 11.80 ′ L†				54	
L-2	"SB1" 748+31.77, 119.63′ L†	"SB1" 748+56.40, 48′ L†				76	
L-2	"SB1" 748+56.40, 48′ L†	"SB1" 750+12.87, 47.92′ L†				156	
L-2	"SB1" 750+12.87, 47.92′ L†	"DNCUL1" 15+39.31, 37.82′ R†				135	
L-2	"DNCUL1" 15+39.31, 37.82′ R†	"DN1" 16+32.41, 22.79′ R†				89	
L-3	"SB1" 772+17.07, 73.40 L†	"SB1" 772+17.07, 110.79′ L†				37	
L-3	"SB1" 772+17.07, 110.79′ L†	"SB1" 772+93.48, 104.18′ L†				78	
L-3	"SB1" 772+93.48, 104.18′ L†	"SB1" 772+93.48, 63.50′ L†				41	
L-3	"SB1" 772+93.48, 63.50′ L†	"SB1" 773+61.43, 63.50 ′ L†				69	
L-3	"SB1" 773+61.43, 63.50 ′ L†	"SB1" 773+61.43, 99.29′ L†				35	
L-3	"SB1" 773+61.43, 99.29′ L†	"SB1" 776+51.93, 89.49′ L†		290			
L-3	"SB1" 776+51.93, 89.49′ L†	"SB1" 776+51.93, 61.0′ L†				29	
L-3	"SB1" 776+51.93, 61.0′ L†	"SB1" 777+15.73, 61.0′ L†				65	
L-3	"SB1" 777+15.73, 61.0′ L†	"SB1" 777+15.73, 89.66′ L†				29	
L-3	"SB1" 777+15.73, 89.66′ L†	"SB1" 778+20.00, 91.86′ L†				106	
L-3	"SB1" 778+20.00, 91.86′ L†	"SB1" 780+1.95, 86.97′ L†				186	
L-3	"SB1" 780+1.95, 86.97′ L†	"SB1" 780+36.25, 52.00 L†				50	
L-3	"NB1" 771+81.55, 75.36 R†	"NB1" 771+83.51, 34.74′ R†				44	
L-3	"NB1" 771+83.51, 34.74′ R†	"NB1" 774+36.20, 34.68′ R†				251	
L-3	"NB1" 773+88.53, 74.64 R†	"NB1" 774+69.41, 131.63′ R†				97	
L-3	"NB1" 774+69.41, 131.63′ R†	"NB1" 775+45.91, 251.52′ R†				140	
L-3	"NB1" 775+45.91, 251.52′ R†	"FRE1" 20+40.44, 28.41 R†				22	
L-3	"FRE1" 22+36.04, 33.02 L†	"FRE1" 27+61.25, 33.35 L†	525				
L-3	"NB1" 776+2.44, 248.71′ R†	"NB1" 776+33.53, 246.86′ R†		31			
L-3	"NB1" 776+33.53, 246.86′ R†	"FRE1" 22+21.41, 70.07′ R†		80			
L-3	"FRE1" 22+21.41, 70.07′ R†	"FRE1" 23+40.23, 69.99′ R†		119			
L-3	"FRE1" 23+40.23, 69.99′ R†	"FRE1" 23+40.23, 46.90′ R†		23			
L-3	"FRE1" 23+40.23, 46.90′ R†	"FRE1" 23+40.23, 46.90′ R†		72			
L-3	"FRE1" 23+40.23, 46.90′ R†	"FRE1" 23+40.23, 69.99′ R†		23			
L-3	"FRE1" 23+40.23, 69.99′ R†	"FRE1" 27+61.24, 64.61 R†		338			
		TOTAL THIS SHEET	525	976		1789	

SUMMARY OF QUANTITIES

Q-11

STATE OF CALIFORNIA - DEPARTMENT OF TRANSPORTATION
Caltrans® 06-DESIGN

FUNCTIONAL SUPERVISOR: ERNIE PENUNA
CALCULATED-DESIGNED BY: WILLARD TULLOCK
CHECKED BY: ERNIE PENUNA
REVISED BY
DATE REVISED

LAST REVISION 03-22-12 | DATE PLOTTED => 14-APR-2012 | TIME PLOTTED => 15:53

Dist	COUNTY	ROUTE	POST MILES TOTAL PROJECT	SHEET No.	TOTAL SHEETS
05	Mon,SBt	101	100.0/101.3, 0.0/1.6	407	641

REGISTERED CIVIL ENGINEER 12-28-11 DATE

4-9-12
PLANS APPROVAL DATE

REGISTERED PROFESSIONAL ENGINEER IVO RUMMLER No. 59642 Exp. 12/31/13 CIVIL STATE OF CALIFORNIA

THE STATE OF CALIFORNIA OR ITS OFFICERS OR AGENTS SHALL NOT BE RESPONSIBLE FOR THE ACCURACY OR COMPLETENESS OF SCANNED COPIES OF THIS PLAN SHEET.

FENCES (CONTINUED)

SHEET No.	LOCATION		FENCE				REMARKS
			CL-4	CL-6	CL-6 SLATTED	BW	
	FROM	TO	LF	LF	LF	LF	
L-4	"SJR1" 8+14.21, 39.87 Lt	"SJR1" 11+99.39, 140.87′ Lt				367	
L-4	"SJR1" 11+99.39, 140.87′ Lt	"SJR1" 19+50, 105.79 Lt				676	
L-4	"DN1" 48+21.57, 29.81 Rt	"DN1" 48+70.50, 48.50′ Rt				49	
L-4	"DN1" 48+70.50, 48.50′ Rt	"DN1" 48+94.71, 29.65′ Rt				33	
L-4	"DN1" 48+94.71, 29.65′ Rt	"SJR1" 14+80.256, 59.20 Rt				136	
L-5	"SJR1" 19+50, 105.79′ Lt	"SJR1" 22+0.12, 52.02′ Lt				255	
L-5	"SJR1" 22+0.12, 52.02′ Lt	"SJR1" 25+72.98, 66.92′ Lt				373	
L-5	"SJR1" 26+17.75, 68.13′ Lt	"SJR1" 26+78.30, 66.59′ Lt				41	
L-5	"SJR1" 26+78.30, 66.59′ Lt	"SJR1" 29+00, 102.87′ Lt				204	
L-6	"SJR1" 29+00, 103.78′ Lt	"SJR1" 30+41.56, 101.31′ Lt				125	
L-6	"SJR1" 30+41.56, 101.31′ Lt	"SJR1" 36+80.02, 177.20′ Lt				601	
L-6	"SJR1" 36+80.02, 177.20′ Lt	"SJR1" 39+13.06, 189.90′ Lt				233	
L-6	"SJR1" 39+13.06, 189.90′ Lt	"SJR1" 40+50, 183.35′ Lt				138	
L-6	"SB1" 782+93.73, 50.90′ Lt	"SB1" 784+55.87, 53.05′ Lt		163			
L-6	"SB1" 784+55.87, 53.05′ Lt	"SB1" 784+56.57, 90.48′ Lt		37			
L-6	"SB1" 784+56.57, 90.48′ Lt	"R1" 794+2.53, 206.51′ Lt				982	
L-6	"R4" 792+51.15, 71.70′ Rt	"R4" 794+28.03, 71.99′ Rt	1125				
L-6	"FRE1" 27+44.42, 64.37′ Rt	"FRE1" 28+4.18, 59.47′ Rt		46			
L-6	"FRE1" 28+4.18, 59.47′ Rt	"FRE1" 28+9.53,44.07′ Rt		16			
L-6	"FRE1" 28+9.53,44.07′ Rt	"FRE1" 28+71.63, 44.11′ Rt		60			
L-6	"FRE1" 28+71.63, 44.11′ Rt	"FRE1" 29+37.55, 60′ Rt		65			
L-6	"FRE1" 29+37.55, 60′ Rt	"FRE1" 29+85.78, 61.92′ Rt		46			
L-6	"FRE1" 29+85.78, 61.92′ Rt	"FRE1" 34+30.02, 68.45′ Rt		444			
L-6	"FRE1" 34+30.02, 68.45′ Rt	"FRE1" 35+49.56, 70.64′ Rt		126			
L-6	"FRE1" 35+49.56, 70.64′ Rt	"FRE1" 38+50.08, 115.10′ Rt		236			
		TOTAL THIS SHEET	1125	1239		4239	

SUMMARY OF QUANTITIES
Q-12

STATE OF CALIFORNIA - DEPARTMENT OF TRANSPORTATION
Caltrans
06-DESIGN

FUNCTIONAL SUPERVISOR: ERNIE PENUNA
CALCULATED-DESIGNED BY / CHECKED BY
WILLARD TULLOCK / ERNIE PENUNA
REVISED BY / DATE REVISED

LAST REVISION 03-22-12
DATE PLOTTED => 14-APR-2012
TIME PLOTTED => 15:53

Dist	COUNTY	ROUTE	POST MILES TOTAL PROJECT	SHEET No.	TOTAL SHEETS
05	Mon,SBt	101	100.0/101.3, 0.0/1.6	408	641

Ivo Rummler 12-28-11
REGISTERED CIVIL ENGINEER DATE

4-9-12
PLANS APPROVAL DATE

REGISTERED PROFESSIONAL ENGINEER IVO RUMMLER No. 59642 Exp. 12/31/13 CIVIL STATE OF CALIFORNIA

THE STATE OF CALIFORNIA OR ITS OFFICERS OR AGENTS SHALL NOT BE RESPONSIBLE FOR THE ACCURACY OR COMPLETENESS OF SCANNED COPIES OF THIS PLAN SHEET.

FENCES (CONTINUED)

SHEET No.	LOCATION		FENCE				REMARKS
			CL-4	CL-6	CL-6 SLATTED	BW	
	FROM	TO	LF	LF	LF	LF	
L-7	"SJR1" 40+50.00, 183.52′ Lt	"SJR1" 42+97.36, 171.53′ Lt				248	
L-7	"SJR1" 42+97.36, 171.53′ Lt	"SJR1" 46+61.28, 189.16′ Lt				465	
L-7	"SJR1" 46+61.28, 189.16′ Lt	"CO1" 17+63.81, 70.86′ Lt				238	
L-7	"CO1" 17+63.81, 70.86′ Lt	"CO1" 18+85.30, 73.44′ Lt				194	
L-7	"CO1" 18+85.30, 73.44′ Lt	"CO1" 22+98.41, 73.08′ Lt				385	
L-7	"CO1" 22+98.41, 73.08′ Lt	"CO1" 24+50.16, 86.92′ Lt				123	
L-7	"SJR1" 40+50.00, 155.62′ Rt	"SJR1" 41+97.89, 172.26′ Rt				149	
L-7	"SJR1" 41+97.89, 172.26′ Rt	"SJR1" 42+57.20, 38.00′ Rt				147	
L-7	"CO1" 21+27.05, 96.00′ Rt	"CO1" 24+50.16, 43.21′ Rt					
L-7	"SJR1" 55+62.13, 193.79′ Lt	"R3" 804+19.22, 77.49′ Rt				89	
L-7	"R3" 804+19.22, 77.49′ Rt	"R3" 806+25.58, 64.95′ Rt				206	
L-8	"FRE1" 38+49.97, 38.50′ Lt	"FRE1" 39+15.29, 39.45′ Lt	72				
L-8	"FRE1" 39+15.29, 39.45′ Lt	"FRE1" 40+21.27, 50.38′ Lt				111	
L-8	"FRE1" 40+21.27, 50.38′ Lt	"FRE1" 40+99.37, 33′ Lt				80	
L-8	"FRE1" 40+99.37, 33′ Lt	"FRE1" 41+47.97,33′ Lt				49	
L-8	"FRE1" 41+03.62, 82.85′ Lt	"FRE1" 41+33.62, 82.85′ Lt			20		WELL ENCLOSURE
L-8	"FRE1" 41+33.62, 82.85′ Lt	"FRE1" 41+33.62, 52.85′ Lt			30		WELL ENCLOSURE
L-8	"FRE1" 41+33.62, 52.85′ Lt	"FRE1" 41+03.62, 52.85′ Lt			30		WELL ENCLOSURE
L-8	"FRE1" 41+03.62, 52.85′ Lt	"FRE1" 41+03.62, 82.85′ Lt			30		WELL ENCLOSURE
L-8	"FRE1" 41+47.97,33′ Lt	"FRE1" 41+47.97,63′ Lt				30	
L-8	"FRE1" 41+47.97,63′ Lt	"FRE1" 42+00, 63′ Lt				52	
L-8	"FRE1" 42+00, 63′ Lt	"FRE1" 42+00, 33′ Lt				30	
L-8	"FRE1" 42+00, 33′ Lt	"FRE1" 43+72.75, 33′ Lt				173	
L-8	"FRE1" 43+72.75, 33′ Lt	"FRE1" 43+68.46, 121′ Lt				88	
L-8	"FRE1" 43+68.46, 121′ Lt	"FRE1" 44+5.80, 136.62′ Lt				27	
L-8	"FRE1" 44+5.80, 136.62′ Lt	"FRE1" 44+64.07, 145′ Lt				33	
		TOTAL THIS SHEET	72		110	2917	

SUMMARY OF QUANTITIES

Q-13

STATE OF CALIFORNIA - DEPARTMENT OF TRANSPORTATION
06-DESIGN
Caltrans
FUNCTIONAL SUPERVISOR: ERNIE PENUNA
CALCULATED-DESIGNED BY: WILLARD TULLOCK
CHECKED BY: ERNIE PENUNA
REVISED BY
DATE REVISED

LAST REVISION 03-22-12
DATE PLOTTED => 14-APR-2012
TIME PLOTTED => 15:53

Dist	COUNTY	ROUTE	POST MILES TOTAL PROJECT	SHEET No.	TOTAL SHEETS
05	Mon,SBt	101	100.0/101.3, 0.0/1.6	409	641

Ivo Rummler 12-28-11
REGISTERED CIVIL ENGINEER DATE

4-9-12
PLANS APPROVAL DATE

REGISTERED PROFESSIONAL ENGINEER IVO RUMMLER No. 59642 Exp. 12/31/13 CIVIL STATE OF CALIFORNIA

THE STATE OF CALIFORNIA OR ITS OFFICERS OR AGENTS SHALL NOT BE RESPONSIBLE FOR THE ACCURACY OR COMPLETENESS OF SCANNED COPIES OF THIS PLAN SHEET.

FENCES (CONTINUED)

SHEET No.	LOCATION		FENCE				REMARKS
			CL-4	CL-6	CL-6 SLATTED	BW	
	FROM	TO	LF	LF	LF	LF	
L-8	"FRE1" 44+64.07, 145′ Lt	"FRE1" 46+5.59, 122.69′ Lt				98	
L-8	"FRE1" 46+5.59, 122.69′ Lt	"FRE1" 46+12.74, 144.02′ Lt				23	
L-8	"FRE1" 46+12.74, 144.02′ Lt	"FRE1" 47+95.02, 178.64′ Lt				179	
L-8	"FRE1" 41+3.62, 52.85′ Lt	"FRE1" 41+33.62, 52.85′ Lt	30				
L-8	"FRE1" 41+33.62, 52.85′ Lt	"R4" 797+27.96, 89.64′ Rt	30				
L-8	"R4" 797+27.96, 89.64′ Rt	"R4" 797+1.19, 81.55′ Rt	30				
L-8	"R4" 797+1.19, 81.55′ Rt	"FRE1" 41+3.62, 52.85′ Lt	30				
L-8	"SJR1" 60+00.00, 38.00′ Lt	"SJR1" 60+00.00, 178.73′ Lt				141	
L-8	"BAL1" 15+54.00, 30.00′ Rt	"BAL1" 15+54.00, 30.00′ Rt				446	
L-8	"BAL1" 19+0.88, 182.01′ Rt	"FRE1" 48+37.70, 138.30′ Rt				531	
L-8	"FRE1" 48+37.70, 138.30′ Rt	"FRE1" 50+30.30, 111.88′ Rt				210	
L-8	"FRE1" 50+30.30, 111.88′ Rt	"SJR1" 61+60.18, 172.82′ Rt				142	
L-8	"SJR1" 61+60.18, 172.82′ Rt	"SJR1" 55+62.12, 168.85′ Lt				579	
L-8	"BAL1" 14+27.43, 31.89′ Lt	"BAL1" 18+12.55, 42.21.′ Lt					
L-8	"BAL1" 18+12.55, 42.21.′ Lt	"BAL1" 19+34.82, 60.78′ Lt		91			
L-8	"BAL1" 19+34.82, 60.78′ Lt	"BAL1" 20+56.05, 117.29′ Lt		150			
L-8	"BAL1" 20+56.05, 117.29′ Lt	"BAL1" 20+64.96, 227.43′ Lt		111			
L-8	"BAL1" 20+64.96, 227.43′ Lt	"FRE1" 39+94.60, 64.70′ Rt		62			
L-8	"FRE1" 39+94.60, 64.70′ Rt	"FRE1" 39+2.50, 22.01′ Rt		88			
L-8	"FRE1" 39+2.50, 22.01′ Rt	"FRE1" 38+56.40, 122.01′ Rt		61			
L-8	"FRE1" 38+56.40, 115.47′ Rt	"FRE1" 38+56.40, 115.47′ Rt		19			
L-9	"CO1" 24+50.18, 87.58′ Lt	"CO1" 25+48.55, 72.77′ Lt				90	
L-9	"CO1" 25+48.55, 72.77′ Lt	"CO1" 26+85.03, 83.90′ Lt				137	
L-9	"CO1" 26+85.03, 83.90′ Lt	"CO1" 30+60.19, 131.40′ Lt				378	
L-9	"CO1" 30+60.19, 131.40′ Lt	"CO1" 31+95.77, 201.07′ Lt				145	
L-9	"CO1" 31+95.77, 201.07′ Lt	"CO1" 35+46.62, 171.34′ Lt				288	
TOTAL THIS SHEET			120	911		3387	

SUMMARY OF QUANTITIES
Q-14

STATE OF CALIFORNIA - DEPARTMENT OF TRANSPORTATION
Caltrans
06-DESIGN

FUNCTIONAL SUPERVISOR: ERNIE PENUNA
CALCULATED-DESIGNED BY: WILLARD TULLOCK
CHECKED BY: ERNIE PENUNA
REVISED BY
DATE REVISED

LAST REVISION 03-22-12
DATE PLOTTED => 14-APR-2012
TIME PLOTTED => 15:53

Dist	COUNTY	ROUTE	POST MILES TOTAL PROJECT	SHEET No.	TOTAL SHEETS
05	Mon,SB†	101	100.0/101.3, 0.0/1.6	410	641

Ivo Rummler 12-28-11
REGISTERED CIVIL ENGINEER DATE

4-9-12
PLANS APPROVAL DATE

REGISTERED PROFESSIONAL ENGINEER IVO RUMMLER No. 59642 Exp. 12/31/13 CIVIL STATE OF CALIFORNIA

THE STATE OF CALIFORNIA OR ITS OFFICERS OR AGENTS SHALL NOT BE RESPONSIBLE FOR THE ACCURACY OR COMPLETENESS OF SCANNED COPIES OF THIS PLAN SHEET.

FENCES (CONTINUED)

SHEET No.	LOCATION		FENCE				REMARKS
			CL-4	CL-6	CL-6 SLATTED	BW	
	FROM	TO	LF	LF	LF	LF	
L-9	"CO1" 24+50.18, 43.63′ R†	"CO1" 31+54.43, 40′ R†				758	
L-9	"CO1" 31+54.43, 40′ R†	"CO1" 35+46.62, 40.03′ R†				366	
L-9	"R3" 806+24.95, 78.97′ R†	"R3" 810+65.68, 81.35′ R†				440	
L-9	"R3" 810+65.68, 81.35′ R†	"R3" 818+50, 80.00′ R†				784	
L-10	"CO1" 35+49.96, 171.10′ L†	"CO1" 36+94.36, 129′ L†				131	
L-10	"CO1" 36+94.36, 129′ L†	"CO1" 37+93.03, 277′ L†				171	
L-10	"CO1" 37+93.03, 277′ L†	"CO1" 41+34.33, 250′ L†				307	
L-10	"CO1" 41+34.33, 250′ L†	"CO1" 41+34.33, 250′ L†				201	
L-10	"CO1" 41+34.33, 250′ L†	"CO1" 43+36.60, 99.02′ L†				47	
L-10	"CO1" 43+36.60, 99.02′ L†	"CO1" 48+82.01, 38.43′ L†				733	
L-10	"CO1" 45+5.61, 32.38′ R†	"CO1" 46+46.51, 64.65′ R†				150	
L-10	"CO1" 46+46.51, 64.65′ R†	"CO1" 47+15.83, 75.56′ R†				69	
L-10	"CO1" 47+15.83, 75.56′ R†	"CO1" 48+2.53, 25.79′ R†				103	
L-10	"CO1" 25+49.96, 40.29′ R†	"CO1" 40+56.33, 34.62′ R†				521	
L-10	"CO1" 40+56.33, 34.62′ R†	"CO1" 40+20.04, 154.06′ R†				125	
L-10	"CO1" 25+49.96, 40.29′ R†	"CO1" 40+52.30, 226.69′ R†				76	
L-11	"SB1" 823+52.91, 63.48′ L†	"SB1" 823+70.49, 44.76′ L†				26	
L-11	"NB1" 818+50.00, 80.42′ R†	"NB1" 821+67.16, 80.55′ R†				319	
L-11	"NB1" 821+67.16, 80.55′ R†	"NB1" 821+67.94, 50.74′ R†				30	
		SUBTOTAL OF SHEET Q-15				5357	
		SUBTOTAL OF SHEET Q-14	120	911		3387	
		SUBTOTAL OF SHEET Q-13	72		110	2917	
		SUBTOTAL OF SHEET Q-12	1125	1239		4239	
		SUBTOTAL OF SHEET Q-11	525	976		1789	
		TOTAL	1842	3126	110	17689	

SUMMARY OF QUANTITIES
Q-15

STATE OF CALIFORNIA - DEPARTMENT OF TRANSPORTATION
Caltrans
06-DESIGN

FUNCTIONAL SUPERVISOR: ERNIE PENUNA
CALCULATED-DESIGNED BY: WILLARD TULLOCK
REVISED BY: ERNIE PENUNA
DATE REVISED
CHECKED BY

LAST REVISION 03-22-12 | DATE PLOTTED => 14-APR-2012 | TIME PLOTTED => 15:53

Dist	COUNTY	ROUTE	POST MILES TOTAL PROJECT	SHEET No.	TOTAL SHEETS
05	Mon,SBt	101	100.0/101.3, 0.0/1.6	411	641

Ivo Rummler 12-28-11
REGISTERED CIVIL ENGINEER DATE

4-9-12
PLANS APPROVAL DATE

REGISTERED PROFESSIONAL ENGINEER IVO RUMMLER No. 59642 Exp. 12/31/13 CIVIL STATE OF CALIFORNIA

THE STATE OF CALIFORNIA OR ITS OFFICERS OR AGENTS SHALL NOT BE RESPONSIBLE FOR THE ACCURACY OR COMPLETENESS OF SCANNED COPIES OF THIS PLAN SHEET.

NOTE: EXACT LOCATIONS TO BE DETERMINED BY THE ENGINEER

RESET MAILBOX

LOCATION	STATION FROM	STATION TO	EA	PLAN SHEET No.
MARYLIN Ln	74.58' Lt "FRE1" 1+20.10	61.16' Lt "FRE1" 1+02.50	1	L-3
MARYLIN Ln	74.58' Lt "FRE1" 1+20.10	61.16' Lt "FRE1" 1+02.50	1	L-3
MARYLIN Ln	73.14' Lt "FRE1" 1+20.44	61.96' Lt "FRE1" 1+04.35	1	L-3
ROUTE 101 NORTH	72.57' Rt "NB1" 777+66.64	25.00' Rt "FRE1" 3+28.07	1	L-3
DUNBARTON Rd	27.64' LT "DN1" 09+45.83	18.21' Rt "DN1" 08+73.23	1	L-4
SAN JUAN Rd	27.73' Rt "SJR1" 20+85.53	44.15' Rt "SJR1" 20+51.49	1	L-5
SAN JUAN Rd	33.50' Rt "SJR1" 21+43.58	39.15' Rt "SJR1" 21+70.80	1	L-5
SAN JUAN Rd	33.50' Rt "SJR1" 21+45.58	39.77' Rt "SJR1" 21+73.27	1	L-5
SAN JUAN Rd	34.82' Rt "SJR1" 26+76.10	39.20' Rt "SJR1" 26+76.10	1	L-5
SAN JUAN Rd	34.82' Rt "SJR1" 26+78.10	38.58' Rt "SJR1" 26+78.10	1	L-5
SAN JUAN Rd	35.96' Rt "SJR1" 28+53.08	56.20' Rt "SJR1" 28+53.08	1	L-5
SAN JUAN Rd	43.03' Rt "SJR1" 28+55.58	58.60' Rt "SJR1" 28+55.58	1	L-5
SAN JUAN Rd	36.10' Rt "SJR1" 28+57.98	60.82' Rt "SJR1" 28+57.98	1	L-5
SAN JUAN Rd	36.26' Rt "SJR1" 28+62.38	64.96' Rt "SJR1" 28+62.38	1	L-5
COLE Rd	98.04' Rt "CO1" 42+63.71	30.63' Lt "CO1" 42+57.84	1	L-10
		TOTAL	15	

REMOVE RETAINING WALL (WOOD)

STATION	LF	PLAN SHEET No.
"SB1" 820+45.08 TO "SB1" 821+20.08	75	L-11
"NB1" 819+35.70 TO "NB1" 819+55.70	20	L-11
TOTAL	95	

CABLE RAILING

DRAINAGE SYSTEM ⬡	DESCRIPTION	L LF
5	DOWNSTREAM SIDE (SEE DD-2)	76.0
5	UPSTREAM SIDE (SEE DD-3)	78.0
8	DOWNSTREAM SIDE (SEE DD-5)	60.8
8	UPSTREAM SIDE (SEE DD-5)	64.4
35	DOWNSTREAM SIDE (SEE DD-6)	108.0
35	UPSTREAM SIDE (SEE DD-6)	95.0
51	DOWNSTREAM SIDE (SEE DD-8)	49.7
51	UPSTREAM SIDE (SEE DD-8)	59.5
53	UPSTREAM SIDE (SEE DD-9)	31.0
54	UPSTREAM SIDE (SEE DD-10)	53.2
54	DOWNSTREAM SIDE (SEE DD-11)	53.8
	TOTAL	729.4

TEMPORARY FENCE (TYPE CL-6)

LOCATION FROM	LOCATION TO	LENGTH LF	(N) GATE EA	(N) WIDTH FT
"FRE1" 21+66.17	"BAL1" 14+48.81	2560		
"FRE1" 22+77.97	"FRE1" 23+09.97	32	2	32
"FRE1" 25+03.97	"FRE1" 25+35.97	32	2	32
"FRE1" 26+53.97	"FRE1" 26+85.97	32	2	32
"FRE1" 29+71.55	"FRE1" 30+03.55	32	2	32
"FRE1" 34+14.35	"FRE1" 34+46.35	32	2	32
TOTAL		2720		

SUMMARY OF QUANTITIES

Q-16

STATE OF CALIFORNIA - DEPARTMENT OF TRANSPORTATION
06-DESIGN
Caltrans
FUNCTIONAL SUPERVISOR ERNIE PENUNA
CALCULATED-DESIGNED BY WILLARD TULLOCK
CHECKED BY
REVISED BY
DATE REVISED

LAST REVISION 12-18-11
DATE PLOTTED => 15-APR-2012
TIME PLOTTED => 05:45

Dist	COUNTY	ROUTE	POST MILES TOTAL PROJECT	SHEET No.	TOTAL SHEETS
05	Mon,SBt	101	100.0/101.3, 0.0/1.6	412	641

Ivo Rummler 12-28-11
REGISTERED CIVIL ENGINEER DATE

4-9-12
PLANS APPROVAL DATE

REGISTERED PROFESSIONAL ENGINEER IVO RUMMLER No. 59642 Exp. 12/31/13 CIVIL STATE OF CALIFORNIA

THE STATE OF CALIFORNIA OR ITS OFFICERS OR AGENTS SHALL NOT BE RESPONSIBLE FOR THE ACCURACY OR COMPLETENESS OF SCANNED COPIES OF THIS PLAN SHEET.

TEMPORARY FENCE (TYPE ESA)

SHEET No.	LOCATION		FENCE
	BEGIN	END	LF
L-2	"SB1" 744+47.01, 29.76′ Lt	"BK1" 8+88.34, 97.47′ Lt	480
L-2	"DNCUL2" 14+83.62, 59.29′ Lt	"DNCUL2" 17+00.00, 23.46′ Lt	240
L-2	"SB1" 749+63.27, 47.32′ Lt		50
L-2	"SB1" 750+16.88, 46.47′ Lt		60
L-4	"SJR1" 15+54.14, 156.74′ Lt		100
L-4	"SJR1" 18+91.43, 112.46′ Lt		40
L-4	"SJR1" 18+82.31, 83.70′ Lt	"SJR1" 18+99.32, 75.64′ Lt	100
L-4	"SJR1" 18+14.41, 45.86′ Rt	"SJR1" 19+8.67, 34.22′ Rt	130
L-4	"SJR1" 15+69.40, 34.84′ Rt		40
L-4	"DN1" 48+48.86, 16.44′ Rt	"DN1" 48+72.44, 23.57′ Rt	40
L-5	"SJR1" 19+72.02, 76.97′ Lt		40
L-5	"SJR1" 19+93.11, 92.44′ Lt		40
L-5	"SJR1" 20+16.29, 74.57′ Lt		80
L-5	"SJR1" 19+50.00, 33.29′ Rt	"SJR1" 20+55.26, 58.26′ Rt	120
L-5	"SJR1" 20+80.49, 57.33′ Rt	"SJR1" 21+56.31, 56.88′ Rt	100
L-5	"SJR1" 22+03.67, 58.11′ Rt	"SJR1" 24+12.79, 59.02′ Rt	220
L-5	"SJR1" 23+45.19, 63.02′ Lt		60
L-5	"SJR1" 28+86.90, 41.51′ Rt		30
L-6	"SJR1" 34+98.73, 85.84′ Lt		60
L-7	"SJR1" 41+99.83, 137.93′ Lt		80
L-7	"SJR1" 42+28.50, 128.20′ Lt		100
L-7	"SJR1" 45+38.28, 119.98′ Lt		70
L-7	"SJR1" 45+94.82, 133.99′ Lt		40
L-7	"SJR1" 46+23.69, 127.05′ Lt		90
L-7	"SJR1" 47+97.88, 163.49′ Rt		80
L-7	"R3" 798+36.00, 82.00′ Rt	"R3" 802+28.64, 140.00′ Rt	420
L-7	"NB1" 804+30.50, 165.00′ Rt	"NB1" 806+25.00, 56.00′ Rt	290
		THIS TABLE TOTAL	3200

TEMPORARY FENCE (TYPE ESA) (CONTINUED)

SHEET No.	LOCATION		FENCE
	BEGIN	END	LF
L-8	"BAL1" 19+34.53, 62.29′ Lt	"FRE1" 40+69.16, 137.23′ Rt	200
L-8	"FRE1" 44+57.26, 106.24′ Lt	"FRE1" 46+93.27, 69.35′ Lt	500
L-8	"FRE1" 47+72.08, 145.84′ Rt	"FRE1" 50+12.55, 74.55′ Rt	370
L-8	"FRE1" 49+91.86, 35.35′ Rt		100
L-8	"R3" 798+36.00, 82.00′ Rt	"SJR1" 57+48.08, 200.00′ Lt	750
L-8	"R3" 802+28.64, 140.00′ Rt	"NB1" 804+30.50, 165.00′ Rt	375
L-9	"CO1" 30+66.14, 141.46′ Lt		100
L-9	"SB1" 818+50.12, 46.97′ Rt	"NB1" 818+50.00, 49.61′ Rt	275
L-9	"NB1" 817+14.94, 59.48′ Rt		175
L-9	"NB1" 815+40.36, 42.00′ Rt	"NB1" 818+50.00, 41.97′ Rt	300
L-9	"NB1" 814+60.65, 38.77′ Rt		80
L-9	"NB1" 809+98.12, 57.74′ Rt	"NB1" 810+8.75, 79.87′ Rt	275
L-9	"NB1" 807+84.40, 92.80′ Rt		50
L-9	"NB1" 806+60.23, 66.85′ Rt		100
L-10	"CO1" 40+08.64, 138.00′ Rt	"CO1" 42+46.52, 66.00′ Rt	300
L-10	"CO1" 40+25.00, 181.00′ Rt	"CO1" 42+46.52, 66.04′ Rt	250
L-10	"CO1" 40+76.55, 190.30′ Rt		225
L-10	"CO1" 41+50.47, 157.66′ Rt		150
L-10	"CO1" 43+85.61, 68.00′ Lt	"CO1" 44+61.00, 77.00′ Lt	125
		TOTAL THIS TABLE	4700
		TOTAL PREVIOUS TABLE	3200
		TOTAL SHEET Q-17	7900

SUMMARY OF QUANTITIES
Q-17

STATE OF CALIFORNIA - DEPARTMENT OF TRANSPORTATION
Caltrans 06-DESIGN
FUNCTIONAL SUPERVISOR: ERNIE PENUNA
CALCULATED-DESIGNED BY: WILLARD TULLOCK
CHECKED BY: FRAMK CAO
REVISED BY / DATE REVISED

LAST REVISION 03-05-12 | DATE PLOTTED => 15-APR-2012 | TIME PLOTTED => 05:45

Dist	COUNTY	ROUTE	POST MILES TOTAL PROJECT	SHEET No.	TOTAL SHEETS
05	Mon,SBt	101	100.0/101.3, 0.0/1.6	413	641

Ivo Rummler 12-28-11
REGISTERED CIVIL ENGINEER DATE

4-9-12
PLANS APPROVAL DATE

REGISTERED PROFESSIONAL ENGINEER IVO RUMMLER No. 59642 Exp. 12/31/13 CIVIL STATE OF CALIFORNIA

THE STATE OF CALIFORNIA OR ITS OFFICERS OR AGENTS SHALL NOT BE RESPONSIBLE FOR THE ACCURACY OR COMPLETENESS OF SCANNED COPIES OF THIS PLAN SHEET.

TEMPORARY FENCE (TYPE ESA) (CONTINUED)

SHEET No.	LOCATION		FENCE
	BEGIN	END	LF
L-11	"SB1" 818+50.00, 48.00′ Rt	"SB1" 818+50.00, 115.00′ Rt	195
L-11	"SB1" 819+63.64, 83.18′ Rt		76
L-11	"SB1" 820+04.49, 73.40′ Rt		140
L-11	"SB1" 820+43.44, 103.33′ Rt		79
L-11	"SB1" 820+78.34, 67.77′ Rt		96
L-11	"SB1" 822+84.00, 132.00′ Lt	"SB1" 823+13.00, 96.00′ Lt	188
L-11	"SB1" 823+80.00, 40.78′ Lt	"SB1" 824+06.63, 42.60′ Lt	162
L-11	"SB1" 824+78.81, 42.18′ Lt		89
L-11	"NB1" 818+50.00, 42.00′ Rt	"NB1" 819+93.60, 80.00′ Rt	195
L-11	"NB1" 819+70.92, 84.75′ Lt		133
L-11	"NB1" 820+22.50, 74.54′ Lt		43
L-11	"NB1" 820+42.24, 85.98′ Lt		56
L-11	"NB1" 820+86.77, 60.21′ Rt		126
L-11	"NB1" 822+39.45, 28.18′ Lt	"SB1" 825+00.00, 33.87′ Rt	522
		SUBTOTAL OF SHEET Q-18	2100
		SUBTOTAL OF SHEET Q-17	7900
		TOTAL	10000

SUMMARY OF QUANTITIES
Q-18

REVISED BY | DATE REVISED
FRAMK CAO | WILLARD TULLOCK
CALCULATED-DESIGNED BY | CHECKED BY
FUNCTIONAL SUPERVISOR: ERNIE PENUNA
STATE OF CALIFORNIA - DEPARTMENT OF TRANSPORTATION
Caltrans® 06-DESIGN

LAST REVISION 03-05-12 | DATE PLOTTED => 15-APR-2012 | TIME PLOTTED => 05:45

Dist	COUNTY	ROUTE	POST MILES TOTAL PROJECT	SHEET No.	TOTAL SHEETS
05	Mon,SBt	101	100.0/101.3, 0.0/1.6	414	641

Hassan Taha 12/21/11
REGISTERED CIVIL ENGINEER DATE

4-9-12
PLANS APPROVAL DATE

REGISTERED PROFESSIONAL ENGINEER HASSAN M. TAHA No. 60130 Exp 06/30/12 CIVIL STATE OF CALIFORNIA

THE STATE OF CALIFORNIA OR ITS OFFICERS OR AGENTS SHALL NOT BE RESPONSIBLE FOR THE ACCURACY OR COMPLETENESS OF SCANNED COPIES OF THIS PLAN SHEET.

LEGEND

- TRAFFIC DIRECTION
- ROADSIDE SIGN ONE-POST
- ROADSIDE SIGN TWO-POST
- (X-X) ROADSIDE SIGN NUMBER
- (No.) OVERHEAD SIGN STRUCTURE NUMBER
- REMOVE ROADSIDE SIGN
- */■ RELOCATE ROADSIDE SIGN
- DELINEATOR (TYPE G/ TYPE F)
- OBJECT MARKER (TYPE K, P , L-1...)

NOTE:

EXACT SIGN LOCATIONS TO BE DETERMINED BY THE ENGINEER

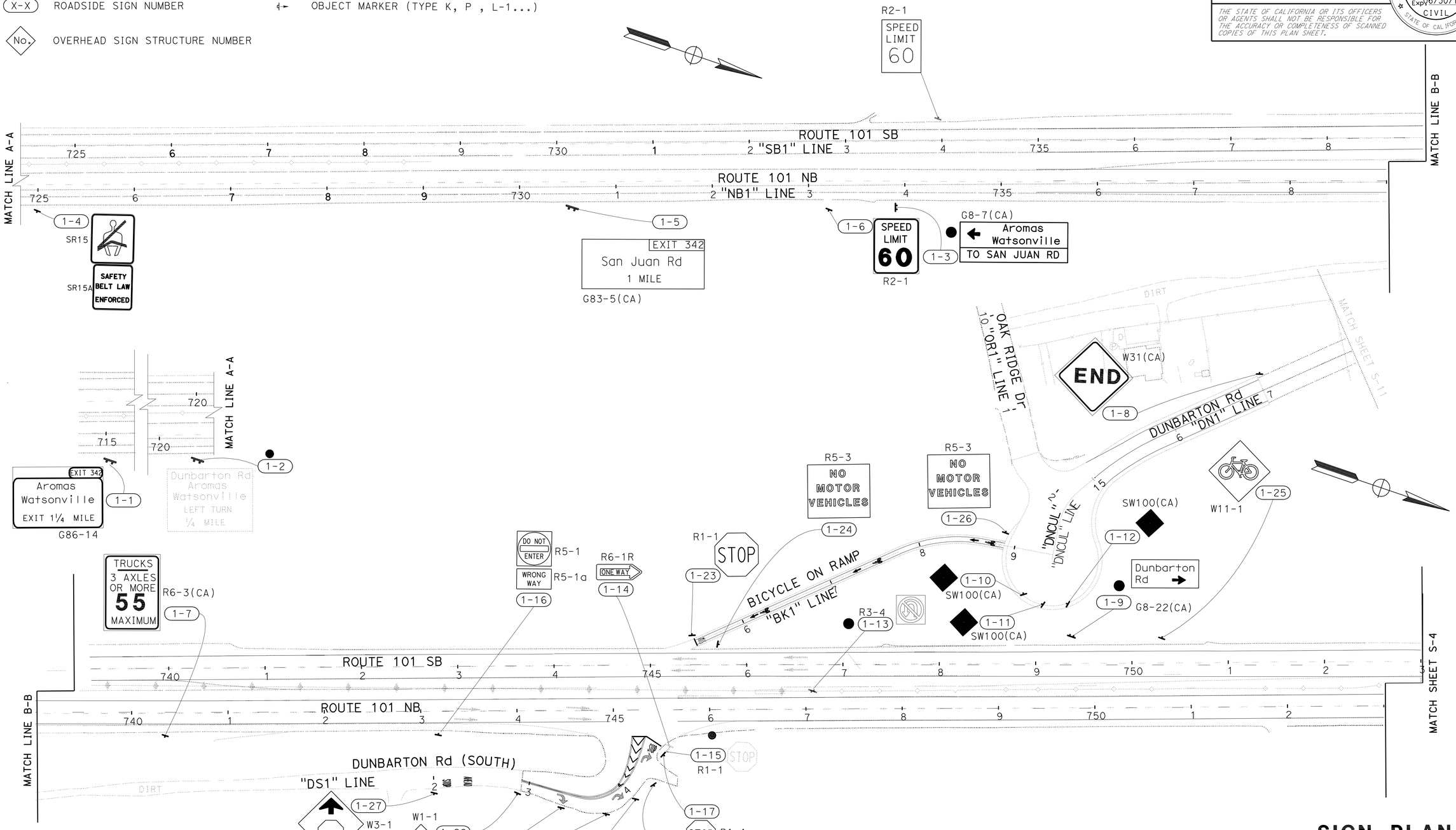

APPROVED FOR SIGN WORK ONLY

SIGN PLAN
(LOCATION 1 & 2)

SCALE:1"=50'

S-1

REVISED BY	DATE REVISED

CALCULATED-DESIGNED BY	CHECKED BY
MUNIR ASSAF	HASSAN TAHA

FUNCTIONAL SUPERVISOR: MOHAMMED QATAMI

STATE OF CALIFORNIA - DEPARTMENT OF TRANSPORTATION
Caltrans 06-TRAFFIC DESIGN

LAST REVISION 12-21-11 | DATE PLOTTED => 15-APR-2012 | TIME PLOTTED => 05:45

Dist	COUNTY	ROUTE	POST MILES TOTAL PROJECT	SHEET No.	TOTAL SHEETS
05	Mon,SBt	101	100.0/101.3, 0.0/1.6	415	641

Hassan Taha 12/21/11
REGISTERED CIVIL ENGINEER DATE

4-9-12
PLANS APPROVAL DATE

REGISTERED PROFESSIONAL ENGINEER HASSAN M. TAHA No. 60130 Exp 06/30/12 CIVIL STATE OF CALIFORNIA

THE STATE OF CALIFORNIA OR ITS OFFICERS OR AGENTS SHALL NOT BE RESPONSIBLE FOR THE ACCURACY OR COMPLETENESS OF SCANNED COPIES OF THIS PLAN SHEET.

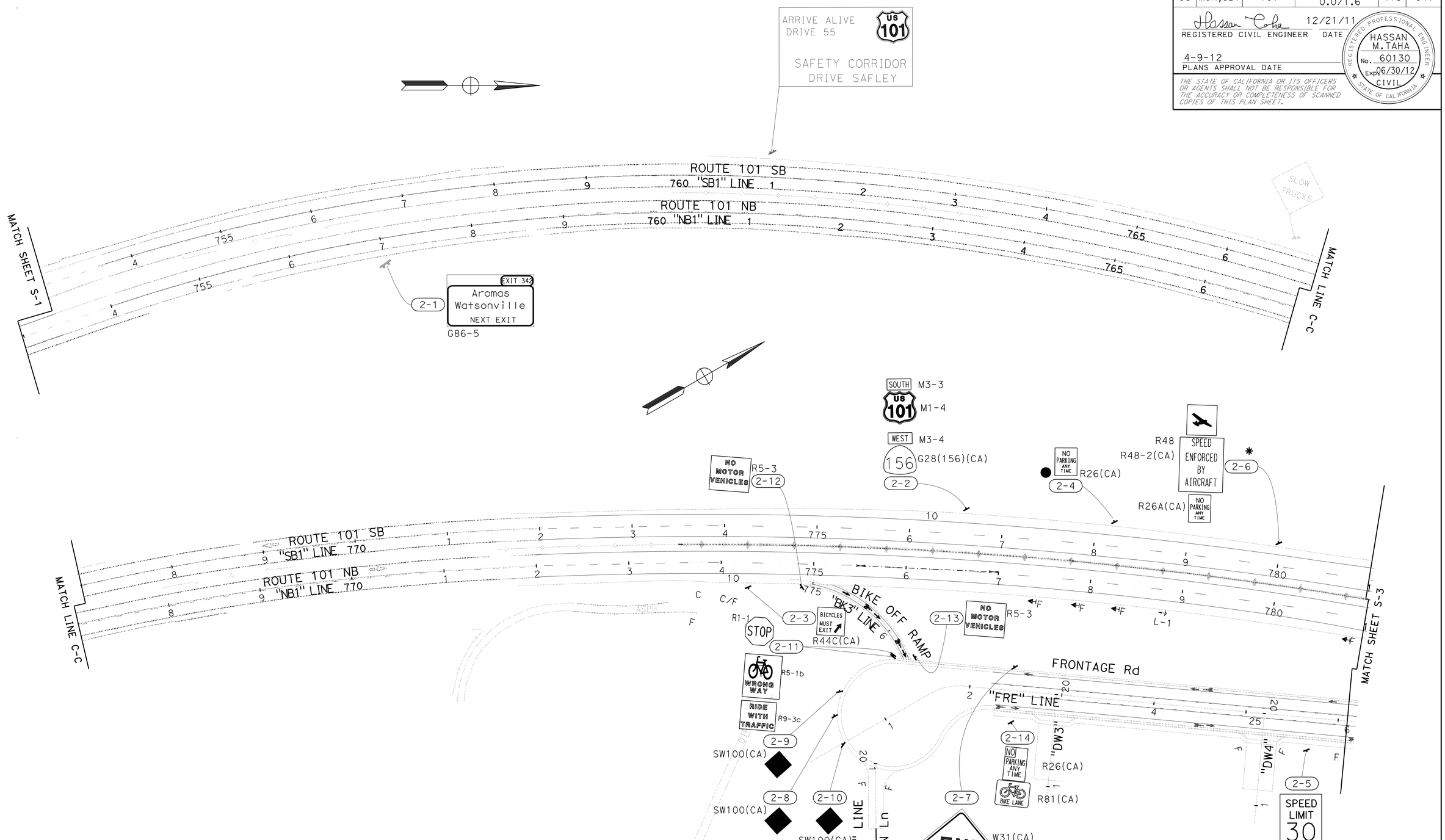

SIGN PLAN
(LOCATION 3)

APPROVED FOR SIGN WORK ONLY

SCALE:1"=50'

S-2

STATE OF CALIFORNIA - DEPARTMENT OF TRANSPORTATION
Caltrans 06-TRAFFIC DESIGN

FUNCTIONAL SUPERVISOR: MOHAMMED QATAMI
CALCULATED-DESIGNED BY: MUNIR ASSAF
CHECKED BY: HASSAN TAHA
REVISED BY
DATE REVISED

LAST REVISION 12-21-11
DATE PLOTTED => 15-APR-2012
TIME PLOTTED => 05:45

Dist	COUNTY	ROUTE	POST MILES TOTAL PROJECT	SHEET No.	TOTAL SHEETS
05	Mon,SBt	101	100.0/101.3, 0.0/1.6	416	641

Hassan Taha 12/21/11
REGISTERED CIVIL ENGINEER DATE

4-9-12
PLANS APPROVAL DATE

REGISTERED PROFESSIONAL ENGINEER HASSAN M. TAHA No. 60130 Exp 06/30/12 CIVIL STATE OF CALIFORNIA

THE STATE OF CALIFORNIA OR ITS OFFICERS OR AGENTS SHALL NOT BE RESPONSIBLE FOR THE ACCURACY OR COMPLETENESS OF SCANNED COPIES OF THIS PLAN SHEET.

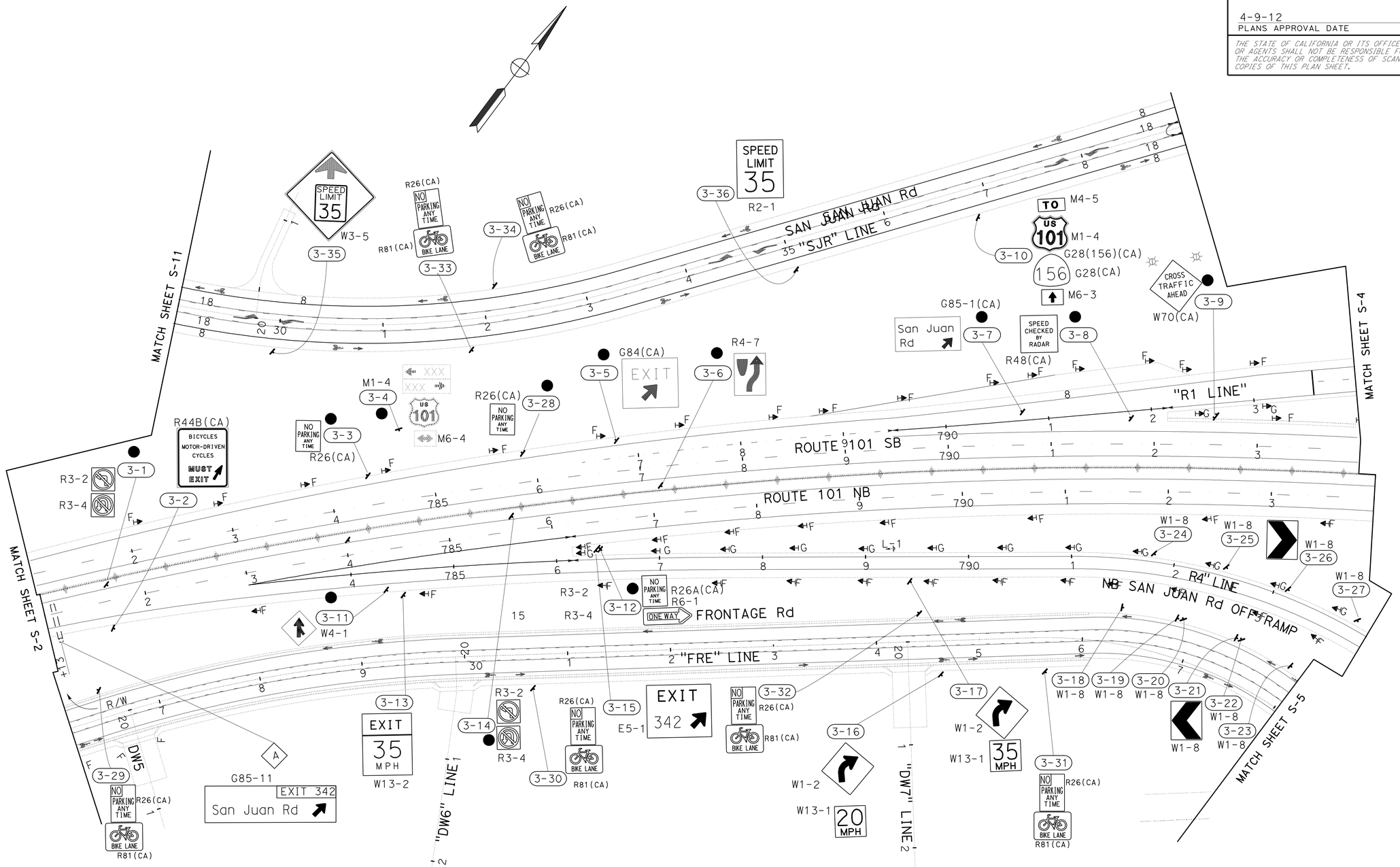

SIGN PLAN
(LOCATION 3)

SCALE:1"=50'

S-3

APPROVED FOR SIGN WORK ONLY

STATE OF CALIFORNIA - DEPARTMENT OF TRANSPORTATION
Caltrans 06-TRAFFIC DESIGN

FUNCTIONAL SUPERVISOR: MOHAMMED QATAMI
CALCULATED-DESIGNED BY: MUNIR ASSAF
CHECKED BY: HASSAN TAHA
REVISED BY
DATE REVISED

LAST REVISION 12-21-11
DATE PLOTTED => 15-APR-2012
TIME PLOTTED => 06:10

BORDER LAST REVISED 7/2/2010
USERNAME => s117606
DGN FILE => 531580oa003.dgn
RELATIVE BORDER SCALE IS IN INCHES 0 1 2 3
UNIT 1513
PROJECT NUMBER & PHASE 05000004951

Dist	COUNTY	ROUTE	POST MILES TOTAL PROJECT	SHEET No.	TOTAL SHEETS
05	Mon,SBt	101	100.0/101.3, 0.0/1.6	417	641

Hassan Taha 12/21/11
REGISTERED CIVIL ENGINEER DATE

4-9-12
PLANS APPROVAL DATE

REGISTERED PROFESSIONAL ENGINEER HASSAN M. TAHA No. 60130 Exp 06/30/12 CIVIL STATE OF CALIFORNIA

THE STATE OF CALIFORNIA OR ITS OFFICERS OR AGENTS SHALL NOT BE RESPONSIBLE FOR THE ACCURACY OR COMPLETENESS OF SCANNED COPIES OF THIS PLAN SHEET.

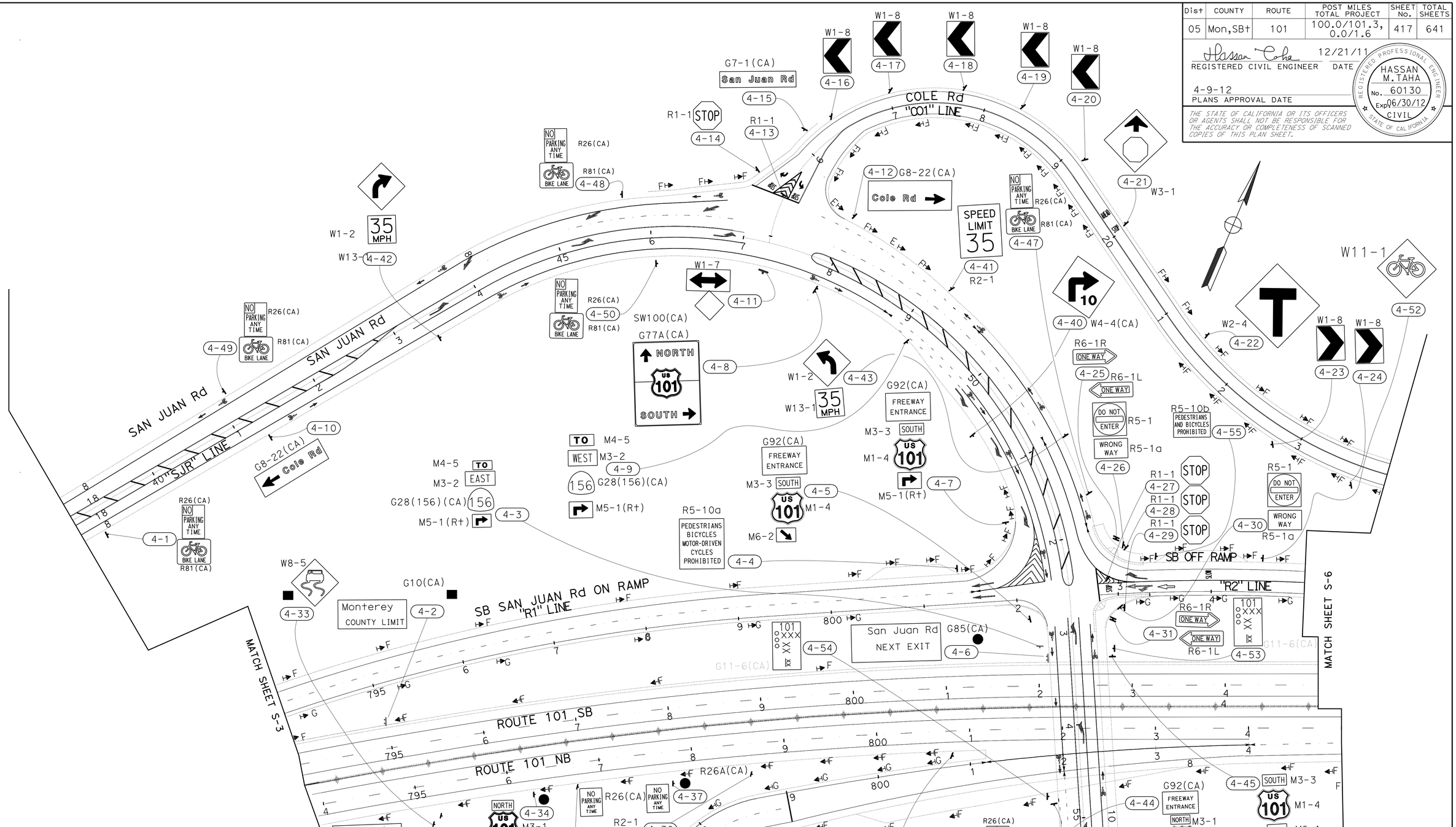

SIGN PLAN (LOCATION 3)

SCALE:1"=50'

S-4

APPROVED FOR SIGN WORK ONLY

STATE OF CALIFORNIA - DEPARTMENT OF TRANSPORTATION
Caltrans® 06-TRAFFIC DESIGN

FUNCTIONAL SUPERVISOR: MOHAMMED QATAMI
CALCULATED-DESIGNED BY: MUNIR ASSAF
CHECKED BY: HASSAN TAHA
REVISED BY / DATE REVISED

LAST REVISION 12-21-11
DATE PLOTTED => 15-APR-2012
TIME PLOTTED => 09:45

Dist	COUNTY	ROUTE	POST MILES TOTAL PROJECT	SHEET No.	TOTAL SHEETS
05	Mon,SBt	101	100.0/101.3, 0.0/1.6	418	641

Hassan Taha 12/21/11
REGISTERED CIVIL ENGINEER DATE

4-9-12
PLANS APPROVAL DATE

REGISTERED PROFESSIONAL ENGINEER HASSAN M. TAHA No. 60130 Exp 06/30/12 CIVIL STATE OF CALIFORNIA

THE STATE OF CALIFORNIA OR ITS OFFICERS OR AGENTS SHALL NOT BE RESPONSIBLE FOR THE ACCURACY OR COMPLETENESS OF SCANNED COPIES OF THIS PLAN SHEET.

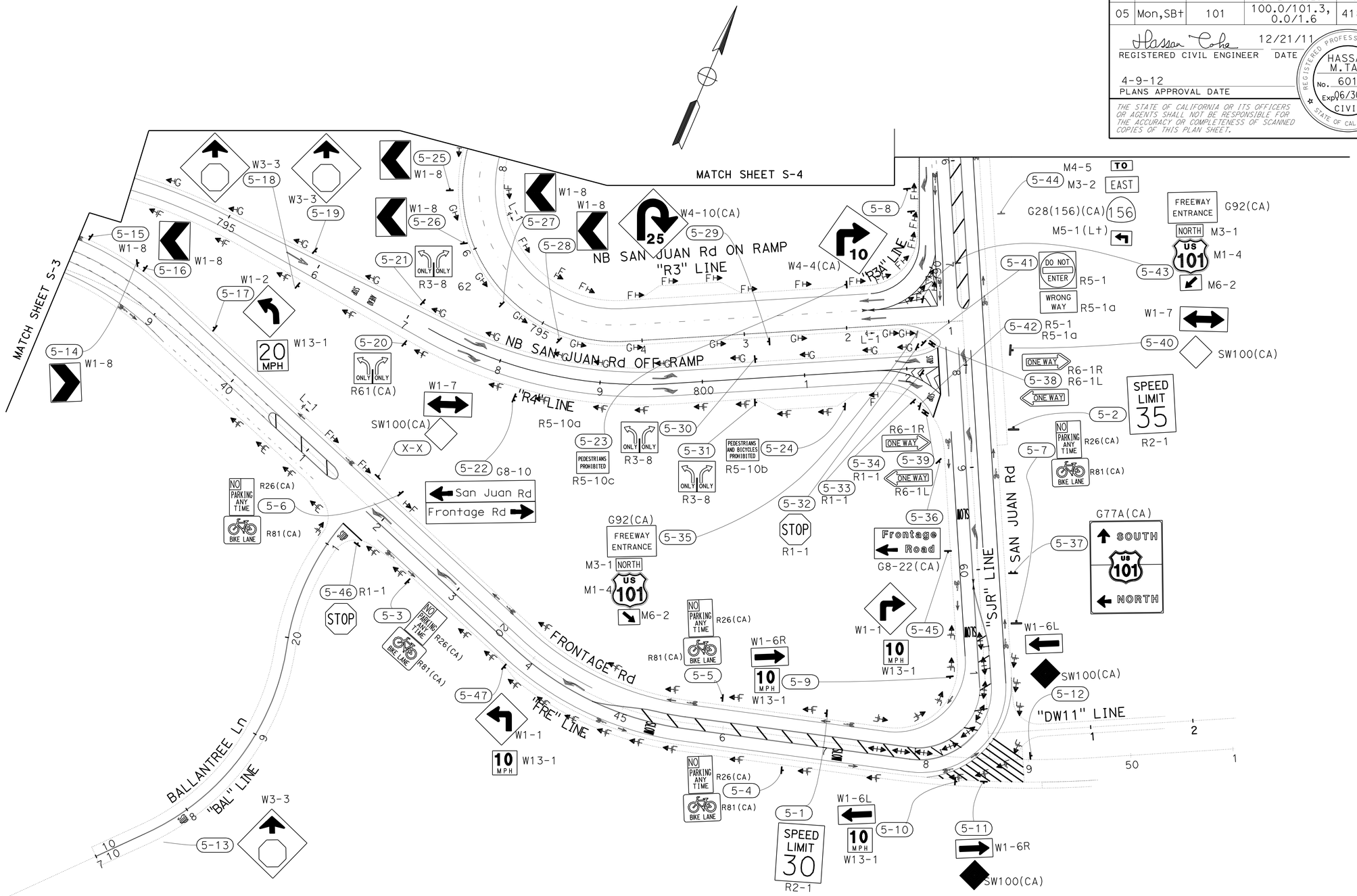

SIGN PLAN
(LOCATION 3)

SCALE:1"=50'

S-5

APPROVED FOR SIGN WORK ONLY

STATE OF CALIFORNIA - DEPARTMENT OF TRANSPORTATION
Caltrans 06-TRAFFIC DESIGN

FUNCTIONAL SUPERVISOR: MOHAMMED QATAMI
CALCULATED-DESIGNED BY: MUNIR ASSAF
CHECKED BY: HASSAN TAHA
REVISED BY / DATE REVISED

LAST REVISION 12-21-11 | DATE PLOTTED => 15-APR-2012 | TIME PLOTTED => 05:46

BORDER LAST REVISED 7/2/2010 | USERNAME => s117606 | DGN FILE => 531580oa005.dgn | RELATIVE BORDER SCALE IS IN INCHES 0 1 2 3 | UNIT 1513 | PROJECT NUMBER & PHASE 05000004951

Dist	COUNTY	ROUTE	POST MILES TOTAL PROJECT	SHEET No.	TOTAL SHEETS
05	Mon,SBt	101	100.0/101.3, 0.0/1.6	419	641

Hassan Taha 12/21/11
REGISTERED CIVIL ENGINEER DATE

4-9-12
PLANS APPROVAL DATE

REGISTERED PROFESSIONAL ENGINEER HASSAN M. TAHA No. 60130 Exp 06/30/12 CIVIL STATE OF CALIFORNIA

THE STATE OF CALIFORNIA OR ITS OFFICERS OR AGENTS SHALL NOT BE RESPONSIBLE FOR THE ACCURACY OR COMPLETENESS OF SCANNED COPIES OF THIS PLAN SHEET.

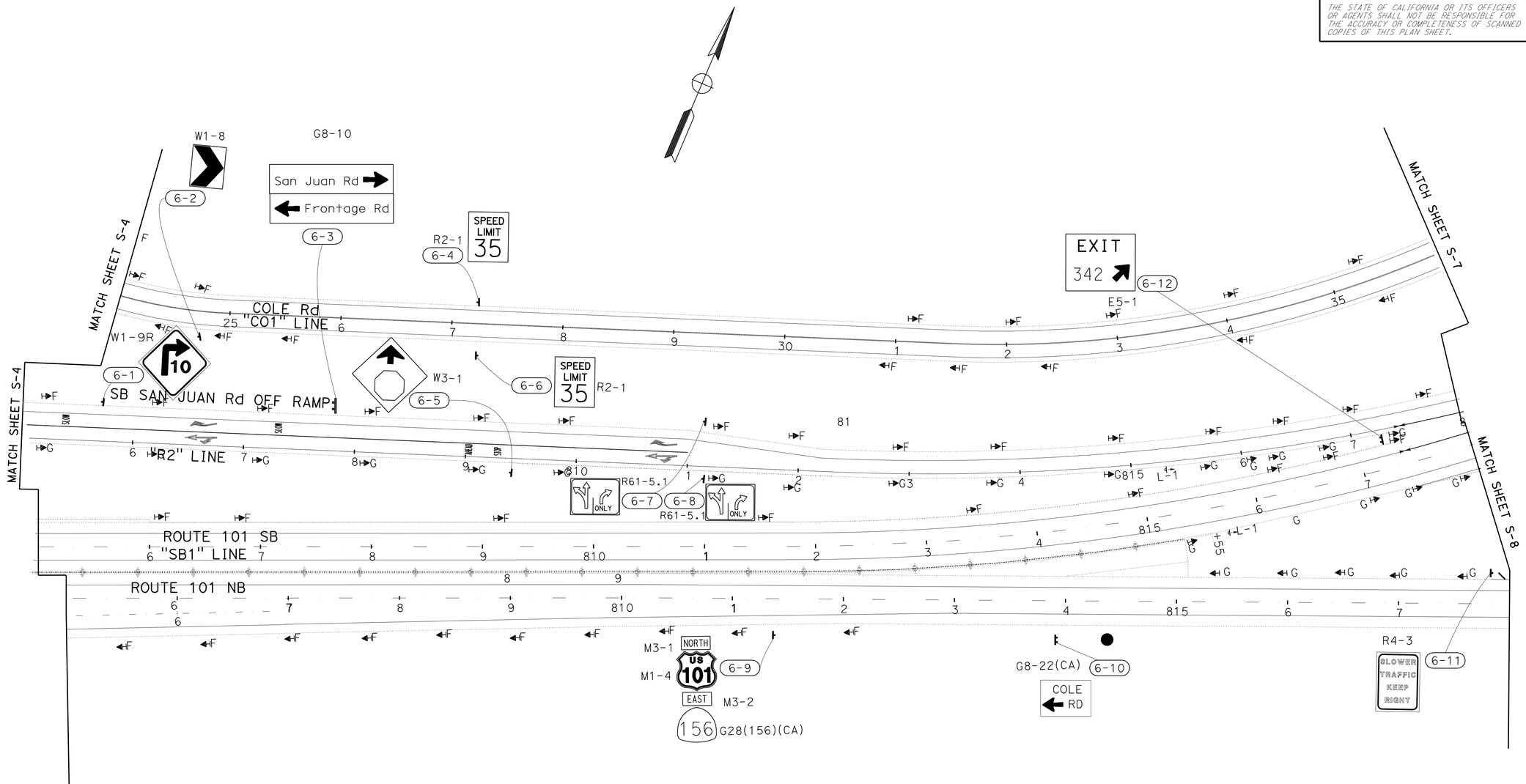

SIGN PLAN
(LOCATION 3)

SCALE:1"=50'

S-6

APPROVED FOR SIGN WORK ONLY

STATE OF CALIFORNIA - DEPARTMENT OF TRANSPORTATION
Caltrans 06-TRAFFIC DESIGN

FUNCTIONAL SUPERVISOR: MOHAMMED QATAMI
CALCULATED-DESIGNED BY: MUNIR ASSAF
CHECKED BY: HASSAN TAHA
REVISED BY
DATE REVISED

LAST REVISION 12-21-11
DATE PLOTTED => 15-APR-2012
TIME PLOTTED => 05:46

BORDER LAST REVISED 7/2/2010
USERNAME => s117606
DGN FILE => 531580oa006.dgn
RELATIVE BORDER SCALE IS IN INCHES 0 1 2 3
UNIT 1513
PROJECT NUMBER & PHASE 05000004951

Dist	COUNTY	ROUTE	POST MILES TOTAL PROJECT	SHEET No.	TOTAL SHEETS
05	Mon,SBt	101	100.0/101.3, 0.0/1.6	420	641

Hassan Taha 12/21/11
REGISTERED CIVIL ENGINEER DATE

4-9-12
PLANS APPROVAL DATE

REGISTERED PROFESSIONAL ENGINEER HASSAN M. TAHA No. 60130 Exp 06/30/12 CIVIL STATE OF CALIFORNIA

THE STATE OF CALIFORNIA OR ITS OFFICERS OR AGENTS SHALL NOT BE RESPONSIBLE FOR THE ACCURACY OR COMPLETENESS OF SCANNED COPIES OF THIS PLAN SHEET.

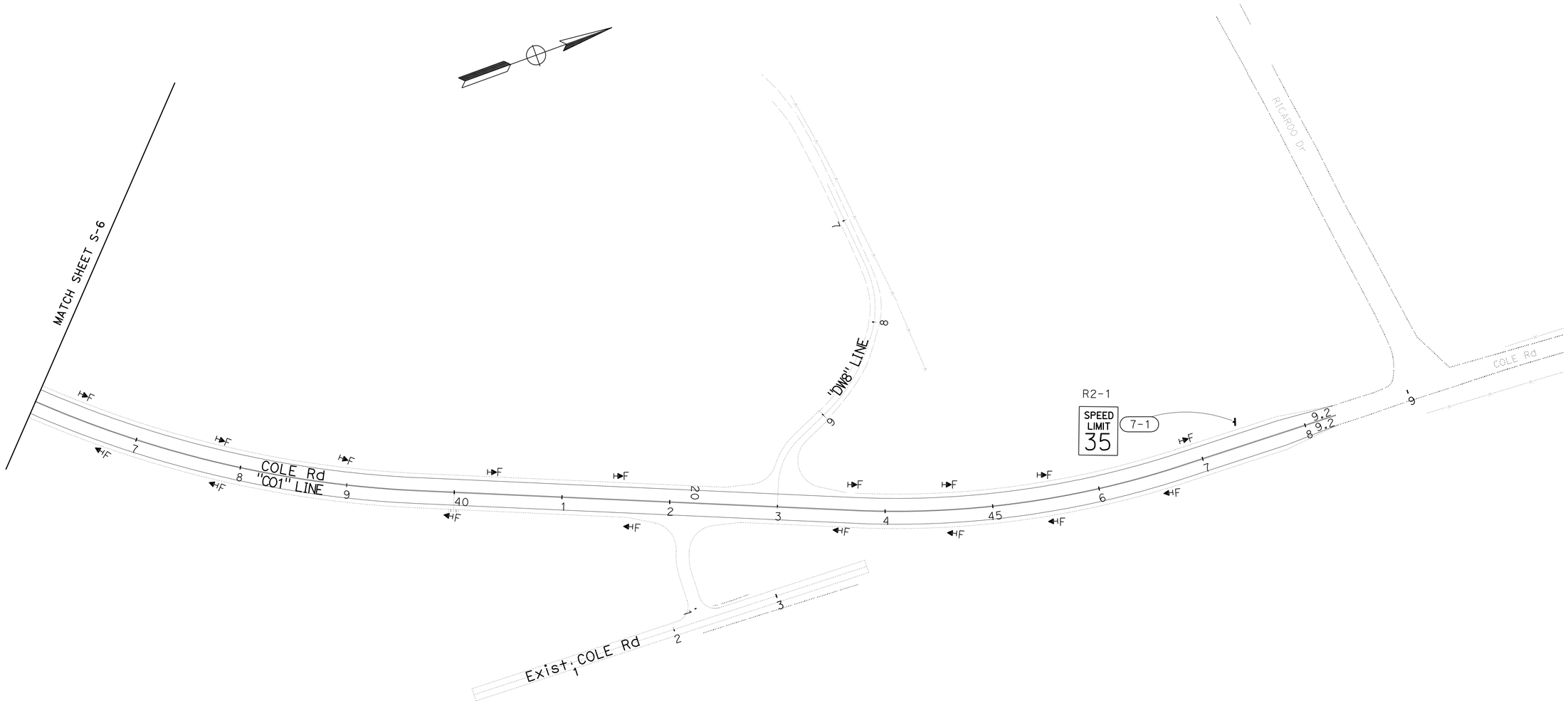

SIGN PLAN
(LOCATION 3)

APPROVED FOR SIGN WORK ONLY

SCALE:1"=50'

S-7

STATE OF CALIFORNIA - DEPARTMENT OF TRANSPORTATION
Caltrans® **06-TRAFFIC DESIGN**

FUNCTIONAL SUPERVISOR: MOHAMMED QATAMI
CALCULATED-DESIGNED BY: MUNIR ASSAF
CHECKED BY: HASSAN TAHA
REVISED BY
DATE REVISED

LAST REVISION 12-21-11
DATE PLOTTED => 15-APR-2012
TIME PLOTTED => 05:46

Dist	COUNTY	ROUTE	POST MILES TOTAL PROJECT	SHEET No.	TOTAL SHEETS
05	Mon,SBt	101	100.0/101.3, 0.0/1.6	421	641

Hassan Taha 12/21/11
REGISTERED CIVIL ENGINEER DATE

4-9-12
PLANS APPROVAL DATE

REGISTERED PROFESSIONAL ENGINEER HASSAN M. TAHA No. 60130 Exp 06/30/12 CIVIL STATE OF CALIFORNIA

THE STATE OF CALIFORNIA OR ITS OFFICERS OR AGENTS SHALL NOT BE RESPONSIBLE FOR THE ACCURACY OR COMPLETENESS OF SCANNED COPIES OF THIS PLAN SHEET.

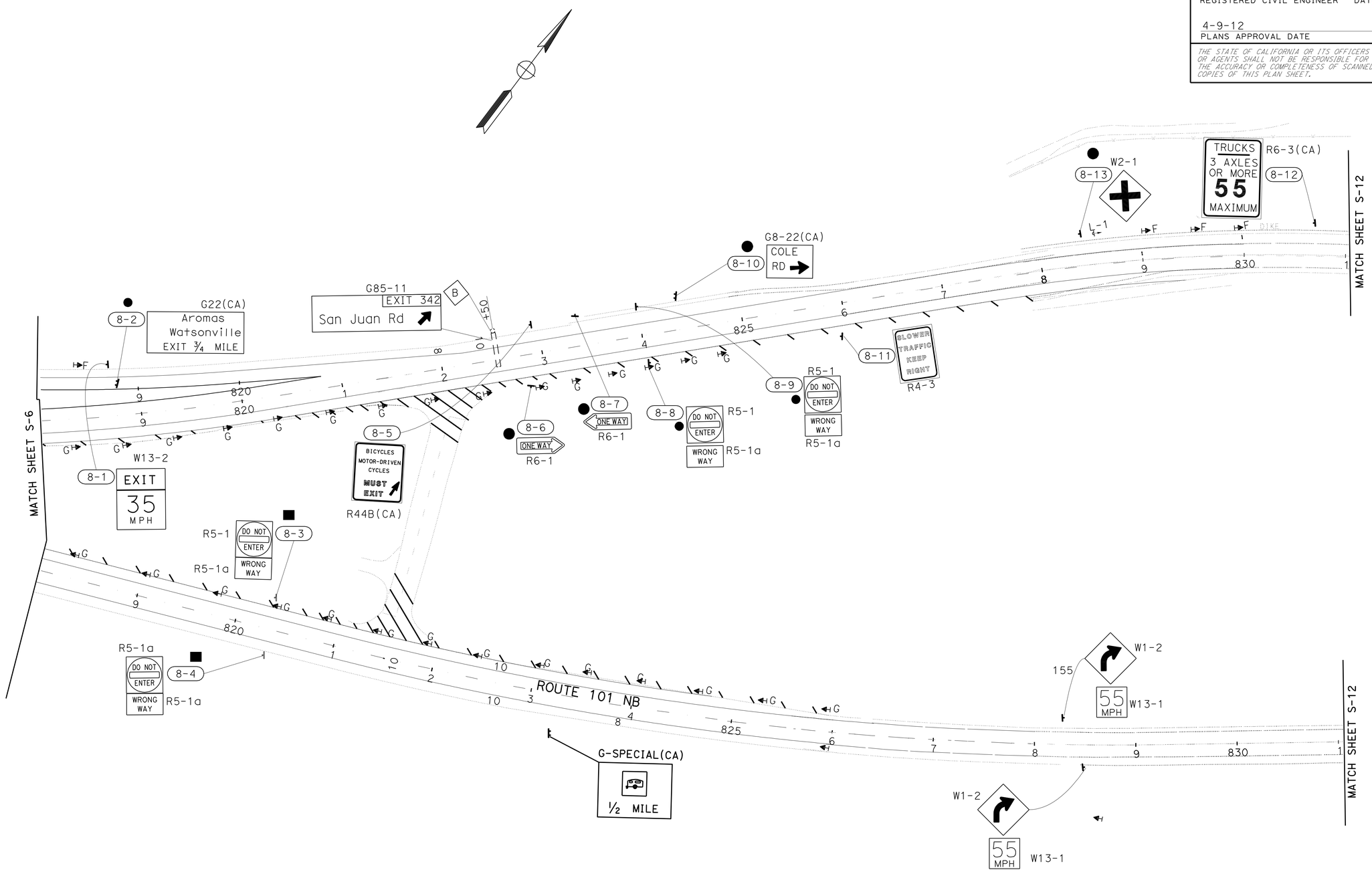

SIGN PLAN
(LOCATION 3)

SCALE:1"=50'

APPROVED FOR SIGN WORK ONLY

S-8

STATE OF CALIFORNIA - DEPARTMENT OF TRANSPORTATION
Caltrans 06-TRAFFIC DESIGN

FUNCTIONAL SUPERVISOR: MOHAMMED QATAMI
CALCULATED-DESIGNED BY: MUNIR ASSAF
CHECKED BY: HASSAN TAHA
REVISED BY
DATE REVISED

LAST REVISION 12-21-11
DATE PLOTTED => 15-APR-2012
TIME PLOTTED => 05:46

BORDER LAST REVISED 7/2/2010
USERNAME => s117606
DGN FILE => 531580oa008.dgn
RELATIVE BORDER SCALE IS IN INCHES 0 1 2 3
UNIT 1513
PROJECT NUMBER & PHASE 05000004951

Dist	COUNTY	ROUTE	POST MILES TOTAL PROJECT	SHEET No.	TOTAL SHEETS
05	Mon,SBt	101	100.0/101.3, 0.0/1.6	422	641

Hassan Taha 12/21/11
REGISTERED CIVIL ENGINEER DATE

4-9-12
PLANS APPROVAL DATE

REGISTERED PROFESSIONAL ENGINEER HASSAN M. TAHA No. 60130 Exp 06/30/12 CIVIL STATE OF CALIFORNIA

THE STATE OF CALIFORNIA OR ITS OFFICERS OR AGENTS SHALL NOT BE RESPONSIBLE FOR THE ACCURACY OR COMPLETENESS OF SCANNED COPIES OF THIS PLAN SHEET.

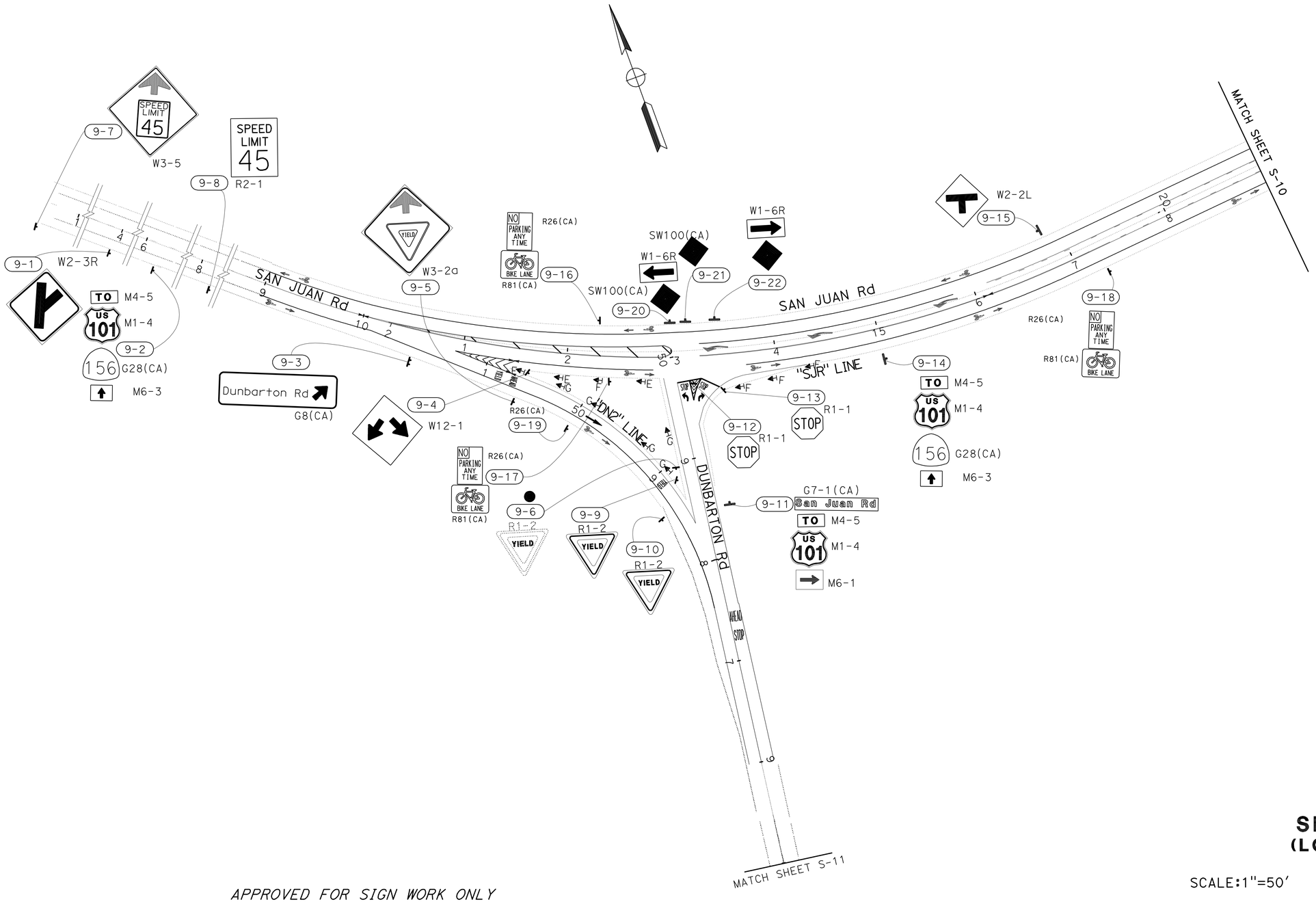

SIGN PLAN (LOCATION 3)

SCALE:1"=50'

S-9

APPROVED FOR SIGN WORK ONLY

STATE OF CALIFORNIA - DEPARTMENT OF TRANSPORTATION
Caltrans® 06-TRAFFIC DESIGN

FUNCTIONAL SUPERVISOR: MOHAMMED QATAMI
CALCULATED-DESIGNED BY: MUNIR ASSAF
CHECKED BY: HASSAN TAHA
REVISED BY
DATE REVISED

LAST REVISION 12-21-11
DATE PLOTTED => 15-APR-2012
TIME PLOTTED => 05:46

Dist	COUNTY	ROUTE	POST MILES TOTAL PROJECT	SHEET No.	TOTAL SHEETS
05	Mon,SBt	101	100.0/101.3, 0.0/1.6	423	641

Hassan Taha 12/21/11
REGISTERED CIVIL ENGINEER DATE

4-9-12
PLANS APPROVAL DATE

REGISTERED PROFESSIONAL ENGINEER HASSAN M. TAHA No. 60130 Exp 06/30/12 CIVIL STATE OF CALIFORNIA

THE STATE OF CALIFORNIA OR ITS OFFICERS OR AGENTS SHALL NOT BE RESPONSIBLE FOR THE ACCURACY OR COMPLETENESS OF SCANNED COPIES OF THIS PLAN SHEET.

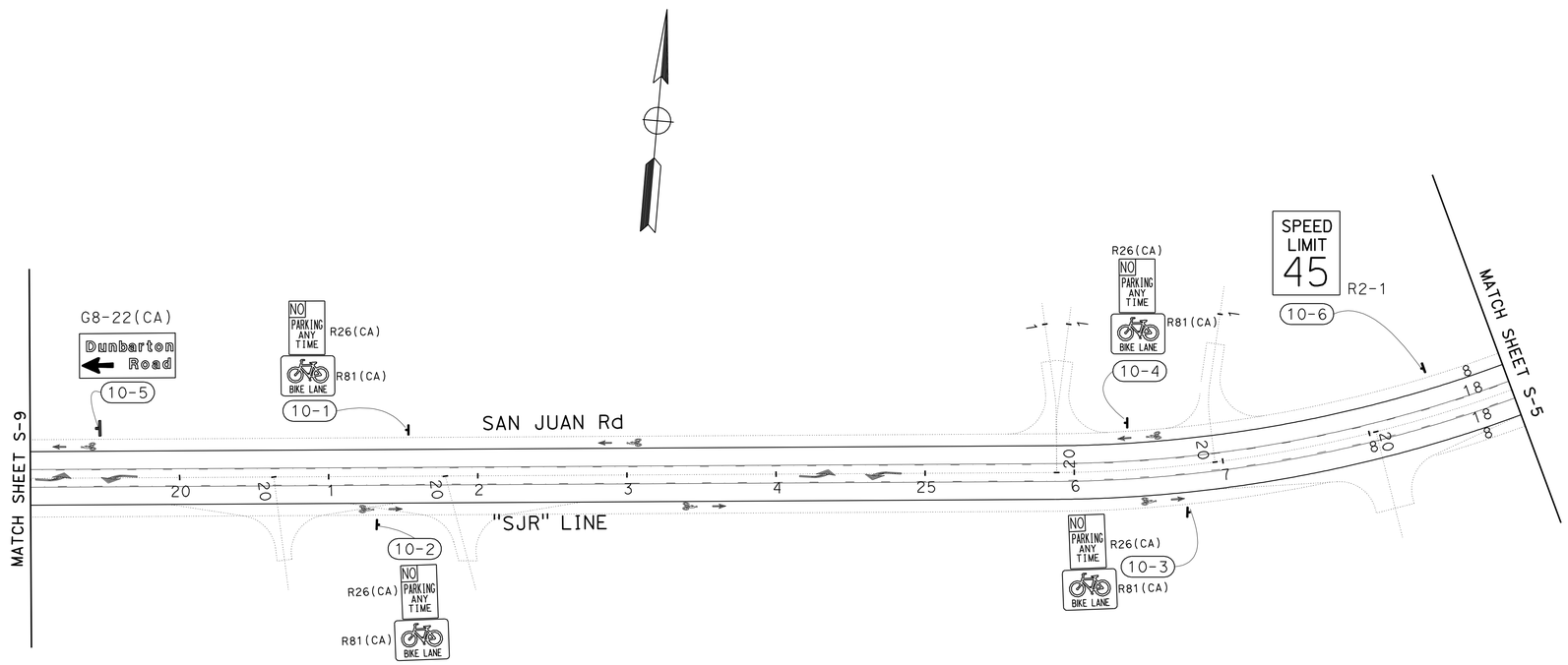

APPROVED FOR SIGN WORK ONLY

SIGN PLAN (LOCATION 3)

SCALE:1"=50'

S-10

STATE OF CALIFORNIA - DEPARTMENT OF TRANSPORTATION
Caltrans 06-TRAFFIC DESIGN

FUNCTIONAL SUPERVISOR: MOHAMMED QATAMI
CALCULATED-DESIGNED BY: MUNIR ASSAF
CHECKED BY: HASSAN TAHA
REVISED BY
DATE REVISED

LAST REVISION 12-21-11
DATE PLOTTED => 15-APR-2012
TIME PLOTTED => 05:46

Dist	COUNTY	ROUTE	POST MILES TOTAL PROJECT	SHEET No.	TOTAL SHEETS
05	Mon,SBt	101	100.0/101.3, 0.0/1.6	424	641

Hassan Taha 12/21/11
REGISTERED CIVIL ENGINEER DATE

4-9-12
PLANS APPROVAL DATE

REGISTERED PROFESSIONAL ENGINEER HASSAN M. TAHA No. 60130 Exp 06/30/12 CIVIL STATE OF CALIFORNIA

THE STATE OF CALIFORNIA OR ITS OFFICERS OR AGENTS SHALL NOT BE RESPONSIBLE FOR THE ACCURACY OR COMPLETENESS OF SCANNED COPIES OF THIS PLAN SHEET.

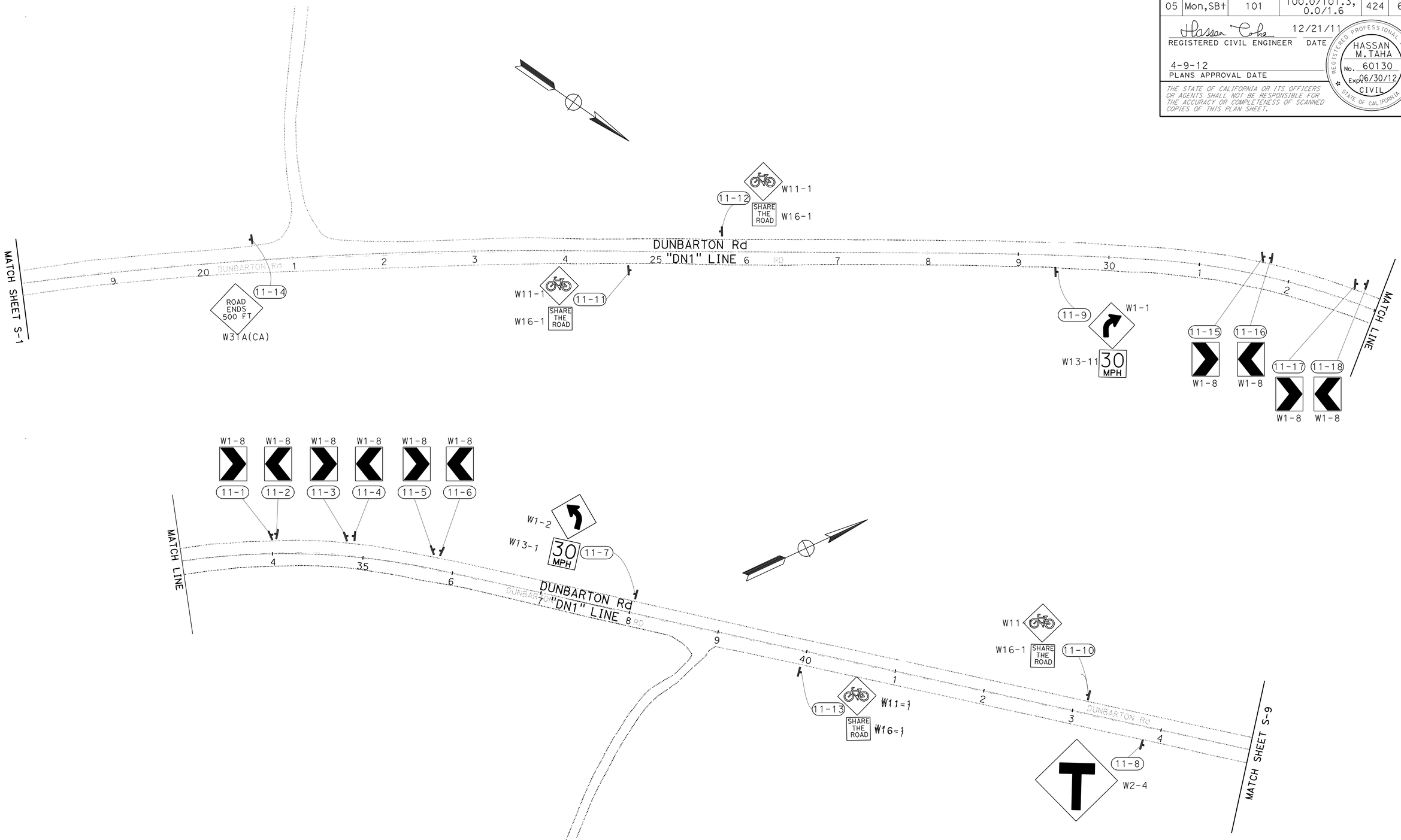

APPROVED FOR SIGN WORK ONLY

SIGN PLAN (LOCATION 3)

SCALE:1"=50'

S-11

STATE OF CALIFORNIA - DEPARTMENT OF TRANSPORTATION
Caltrans 06-TRAFFIC DESIGN

FUNCTIONAL SUPERVISOR: MOHAMMED QATAMI
CALCULATED-DESIGNED BY: MUNIR ASSAF
CHECKED BY: HASSAN TAHA
REVISED BY
DATE REVISED

LAST REVISION 12-21-11
DATE PLOTTED => 15-APR-2012
TIME PLOTTED => 05:46

Dist	COUNTY	ROUTE	POST MILES TOTAL PROJECT	SHEET No.	TOTAL SHEETS
05	Mon,SBt	101	100.0/101.3, 0.0/1.6	425	641

Hassan Taha 12/21/11
REGISTERED CIVIL ENGINEER DATE

4-9-12
PLANS APPROVAL DATE

REGISTERED PROFESSIONAL ENGINEER HASSAN M. TAHA No. 60130 Exp 06/30/12 CIVIL STATE OF CALIFORNIA

THE STATE OF CALIFORNIA OR ITS OFFICERS OR AGENTS SHALL NOT BE RESPONSIBLE FOR THE ACCURACY OR COMPLETENESS OF SCANNED COPIES OF THIS PLAN SHEET.

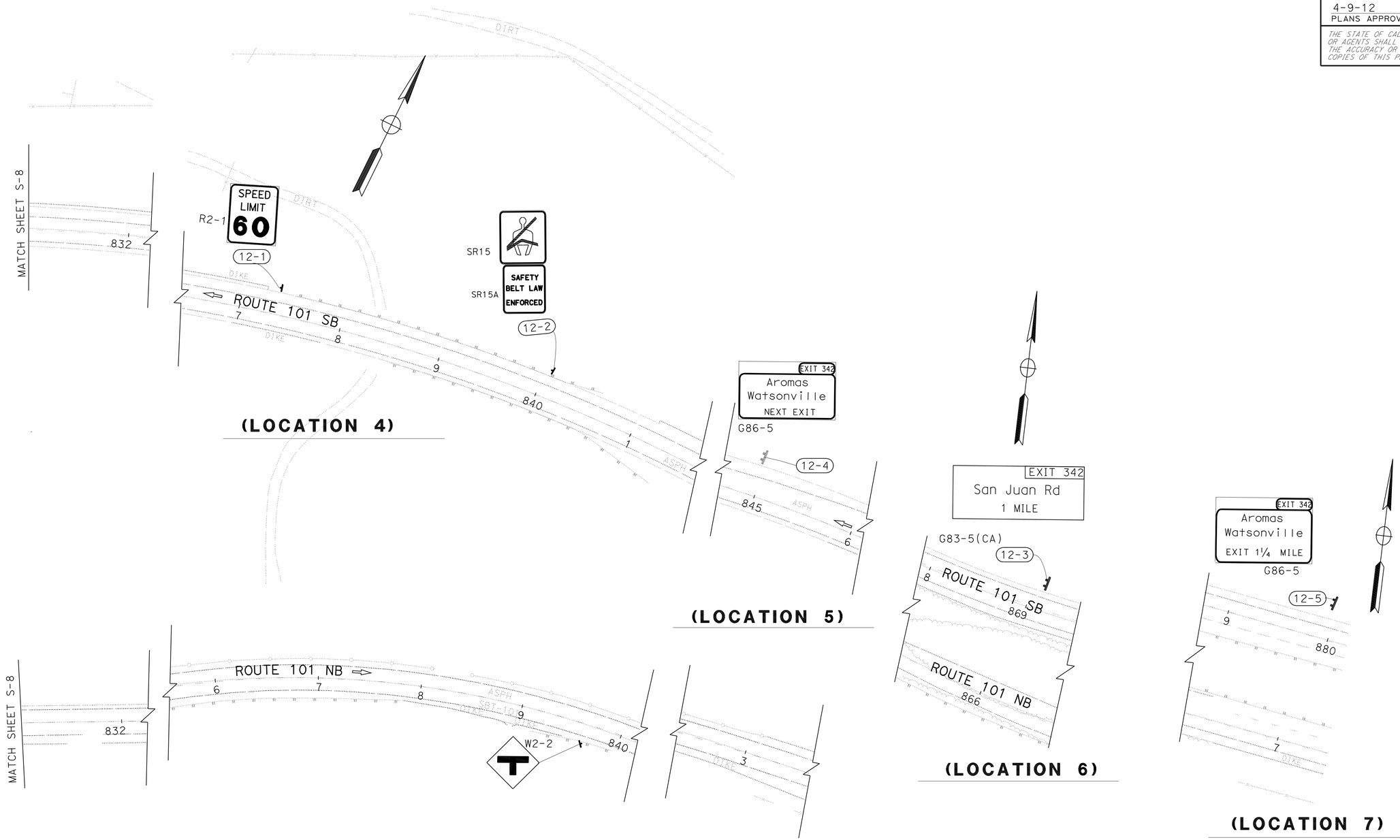

SIGN PLAN

SCALE:1"=50'

S-12

APPROVED FOR SIGN WORK ONLY

STATE OF CALIFORNIA - DEPARTMENT OF TRANSPORTATION
Caltrans 06-TRAFFIC DESIGN

FUNCTIONAL SUPERVISOR: MOHAMMED QATAMI
CALCULATED-DESIGNED BY: MUNIR ASSAF
CHECKED BY: HASSAN TAHA
REVISED BY
DATE REVISED

LAST REVISION 12-21-11
DATE PLOTTED => 15-APR-2012
TIME PLOTTED => 05:46

BORDER LAST REVISED 7/2/2010
USERNAME => s117606
DGN FILE => 531580oa012.dgn
RELATIVE BORDER SCALE IS IN INCHES 0 1 2 3
UNIT 1513
PROJECT NUMBER & PHASE 05000004951

Dist	COUNTY	ROUTE	POST MILES TOTAL PROJECT	SHEET No.	TOTAL SHEETS
05	Mon,SBt	101	100.0/101.3, 0.0/1.6	426	641

Hassan Taha 12/21/11
REGISTERED CIVIL ENGINEER DATE

4-9-12
PLANS APPROVAL DATE

REGISTERED PROFESSIONAL ENGINEER HASSAN M. TAHA No. 60130 Exp 06/30/12 CIVIL STATE OF CALIFORNIA

THE STATE OF CALIFORNIA OR ITS OFFICERS OR AGENTS SHALL NOT BE RESPONSIBLE FOR THE ACCURACY OR COMPLETENESS OF SCANNED COPIES OF THIS PLAN SHEET.

NOTES:

1. BASE PLATE ELEVATIONS TO BE SET IN THE FIELD TO PROVIDE A VERTICAL CLEARANCE OF 18' 6" m MINIMUM FROM BOTTOM OF FRAME OR LIGHTING FIXTURE TO THE ROADBED
2. THE CONTRACTOR SHALL VERIFY ALL FIELD CONTROLLING DIMENSIONS BEFORE ORDERING OR FABRICATING ANY MATERIAL
3. "h" AND BASE PLATE ELEVATIONS ARE FOR QUANTITIES ONLY AND ARE SUBJECTED TO CHANGE BASED ON NOTE 1
4. SEE PROJECT ELECTRICAL PLANS FOR ADDITIONAL DETAILS.
5. SEE STANDARD PLANS FOR ADDITIONAL DETAILS.

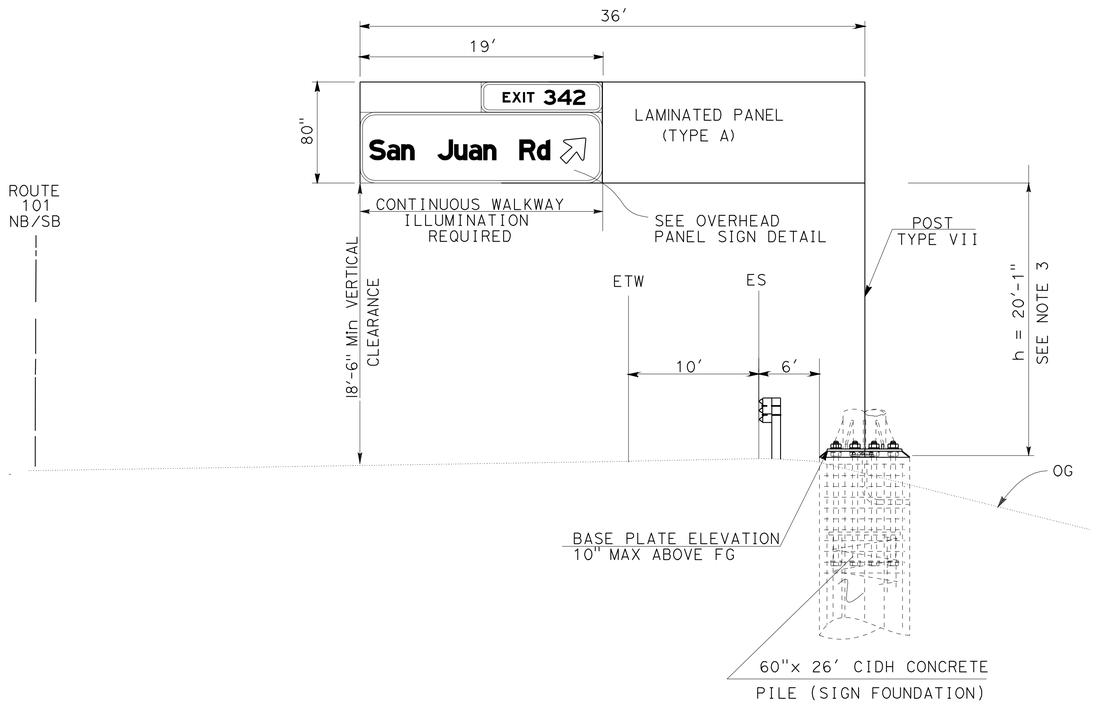

A **SIGN STRUCTURE FNBT ON ROUTE 101 AT Sta 781+13**

B **SIGN STRUCTURE FSBT ON ROUTE 101 AT Sta 822+50**

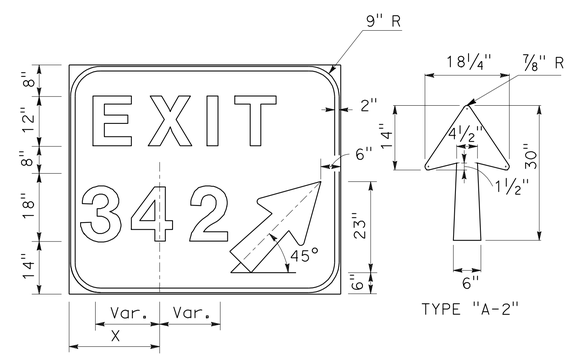

SIGN SPECIFICATIONS						
SIGN NUMBER	BOARD SIZE	NO. OF DIGITS	X	ARROW WIDTH	ARROW LENGTH	ARROW TYPE
E5-1a	72"X60"	1 or 2	24"	18¼"	30"	A-2
E5-1b	90"X60"	3*	33"	18¼"	30"	A-2
E5-1c	108"X60"	4*	42"	18¼"	30"	A-2

* Reduce spacing 25% between numerals

E5-1 SIGN DETAILS

SIGN DETAILS

NO SCALE

SD-1

APPROVED FOR SIGN WORK ONLY

STATE OF CALIFORNIA - DEPARTMENT OF TRANSPORTATION
Caltrans® 06-TRAFFIC DESIGN

FUNCTIONAL SUPERVISOR: MOHAMMED QATAMI
CALCULATED-DESIGNED BY: MUNIR ASSAF
CHECKED BY: HASSAN TAHA
REVISED BY / DATE REVISED

LAST REVISION 12-21-11
DATE PLOTTED => 15-APR-2012
TIME PLOTTED => 05:46

Dist	COUNTY	ROUTE	POST MILES TOTAL PROJECT	SHEET No.	TOTAL SHEETS
05	Mon,SBt	101	100.0/101.3, 0.0/1.6	427	641

Hassan Taha 12/21/11
REGISTERED CIVIL ENGINEER DATE

4-9-12
PLANS APPROVAL DATE

REGISTERED PROFESSIONAL ENGINEER HASSAN M. TAHA No. 60130 Exp 06/30/12 CIVIL STATE OF CALIFORNIA

THE STATE OF CALIFORNIA OR ITS OFFICERS OR AGENTS SHALL NOT BE RESPONSIBLE FOR THE ACCURACY OR COMPLETENESS OF SCANNED COPIES OF THIS PLAN SHEET.

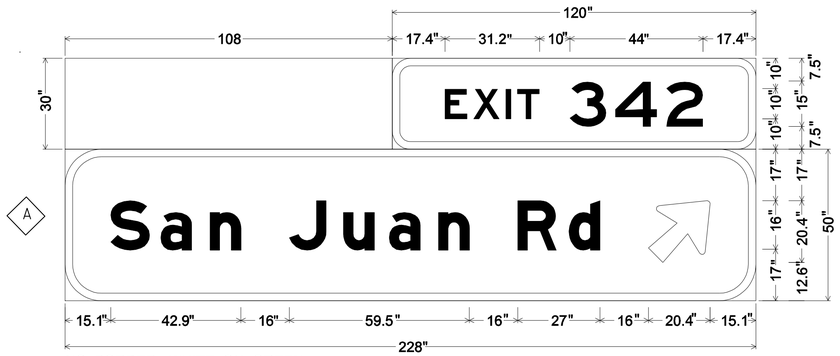

NO BORDER, WHITE ON GREEN;
6.0" RADIUS, 2.5" BORDER, WHITE ON GREEN;
[EXIT] E; [342] E;
12.0" RADIUS, 2.5" BORDER, WHITE ON GREEN;
[SAN JUAN RD] E MOD; ARROW 16CAP-1L - 25.0" 45°;

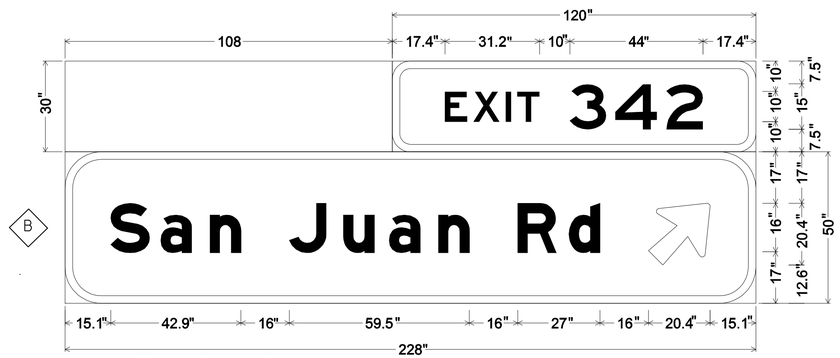

NO BORDER, WHITE ON GREEN;
6.0" RADIUS, 2.5" BORDER, WHITE ON GREEN;
[EXIT] E; [342] E;
12.0" RADIUS, 2.5" BORDER, WHITE ON GREEN;
[SAN JUAN RD] E MOD; ARROW 16CAP-1L - 25.0" 45°;

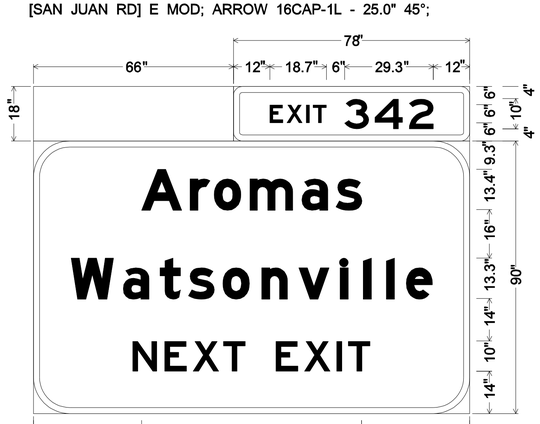

NO BORDER, NONE ON GREEN;
3.0" RADIUS, 2.0" BORDER, WHITE ON GREEN;
[EXIT] E; [342] E;
12.0" RADIUS, 2.0" BORDER, WHITE ON GREEN;
[AROMAS] E MOD 75% SPACING; [WATSONVILLE] E MOD;
[NEXT EXIT] E;

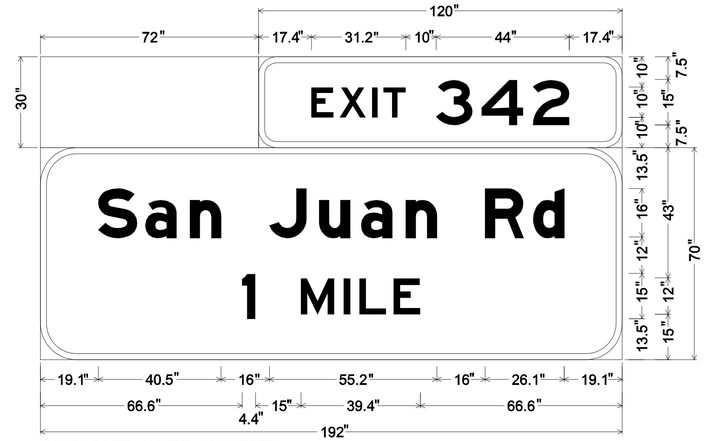

NO BORDER, WHITE ON GREEN;
6.0" RADIUS, 2.0" BORDER, WHITE ON GREEN;
[EXIT] E; [342] E;
12.0" RADIUS, 2.0" BORDER, WHITE ON GREEN;
[SAN JUAN RD] E MOD 75% SPACING; [1] E; [MILE] E;

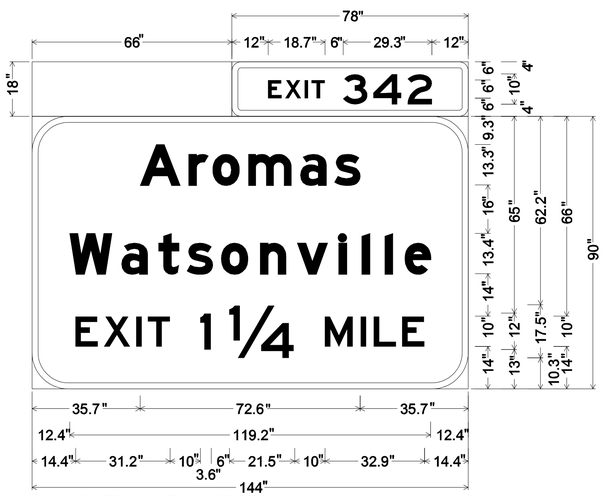

NO BORDER, NONE ON GREEN;
3.0" RADIUS, 2.0" BORDER, WHITE ON GREEN;
[EXIT] E; [342] E;
12.0" RADIUS, 2.0" BORDER, WHITE ON GREEN;
[AROMAS] E MOD 75% SPACING; [WATSONVILLE] E MOD;
[EXIT 1 ¼ MILE] E;

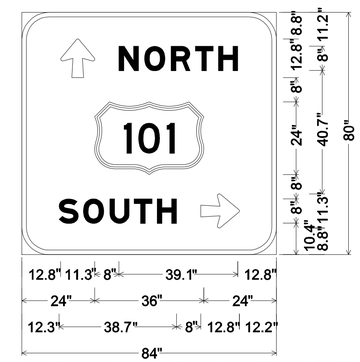

9.0" RADIUS, 1.5" BORDER, WHITE ON GREEN;
ARROW 8UC-1L - 12.8" 90°;
[NORTH] E MOD;
[SOUTH] E MOD;
ARROW 8UC-1L - 12.8" 0°;

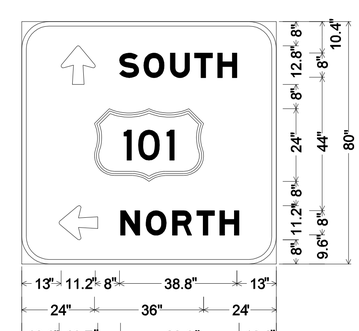

9.0" RADIUS, 1.5" BORDER, WHITE ON GREEN;
ARROW 8UC-1L - 12.8" 90°;
[SOUTH] E MOD;
ARROW 8UC-1L - 12.8" 180°;
[NORTH] E MOD;

SIGN DETAILS

NO SCALE **SD-2**

APPROVED FOR SIGN WORK ONLY

STATE OF CALIFORNIA - DEPARTMENT OF TRANSPORTATION
Caltrans® 06-TRAFFIC DESIGN

FUNCTIONAL SUPERVISOR: MOHAMMED QATAMI
CALCULATED-DESIGNED BY: MUNIR ASSAF
CHECKED BY: HASSAN TAHA
REVISED BY
DATE REVISED

LAST REVISION 12-21-11
DATE PLOTTED => 15-APR-2012
TIME PLOTTED => 05:47

Dist	COUNTY	ROUTE	POST MILES TOTAL PROJECT	SHEET No.	TOTAL SHEETS
05	Mon,SBt	101	100.0/101.3, 0.0/1.6	428	641

Hassan Taha 12/21/11
REGISTERED CIVIL ENGINEER DATE

4-9-12
PLANS APPROVAL DATE

REGISTERED PROFESSIONAL ENGINEER HASSAN M. TAHA No. 60130 Exp 06/30/12 CIVIL STATE OF CALIFORNIA

THE STATE OF CALIFORNIA OR ITS OFFICERS OR AGENTS SHALL NOT BE RESPONSIBLE FOR THE ACCURACY OR COMPLETENESS OF SCANNED COPIES OF THIS PLAN SHEET.

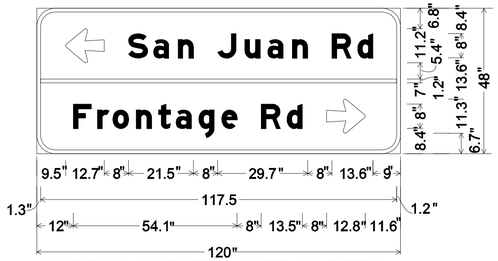

6.0" RADIUS, 1.3" BORDER, WHITE ON GREEN;
ARROW 8UC-1L - 12.8" 180°;
[SAN JUAN RD] E MOD; [FRONTAGE RD] E MOD;
ARROW 8UC-1L - 12.8" 0°;

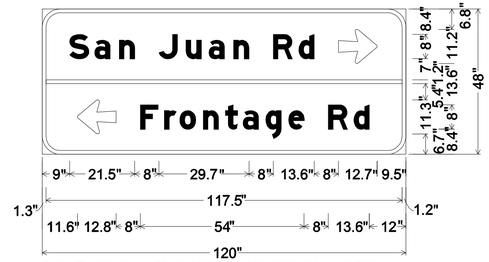

6.0" RADIUS, 1.3" BORDER, WHITE ON GREEN;
[SAN JUAN RD] E MOD; ARROW 8UC-1L - 12.8" 0°;
ARROW 8UC-1L - 12.8" 180°;
[FRONTAGE RD] E MOD;

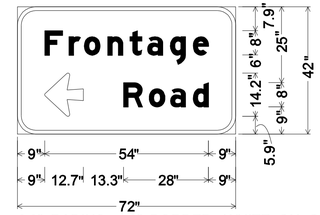

6.0" RADIUS, 1.3" BORDER, WHITE ON GREEN;
[FRONTAGE] E MOD;
ARROW 8UC-2LH - 12.8" 180°;
[ROAD] E MOD;

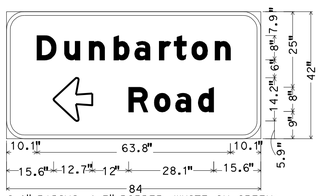

6.0" RADIUS, 1.3" BORDER, WHITE ON GREEN;
[DUNBARTON] E MOD; ARROW 8UC-2LH - 12.8" 180{;
[ROAD] E MOD;

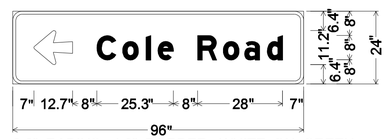

3.0" RADIUS, 1.0" BORDER, WHITE ON GREEN;
ARROW 8UC-1L - 12.8" 180°;
[COLE ROAD] E MOD;

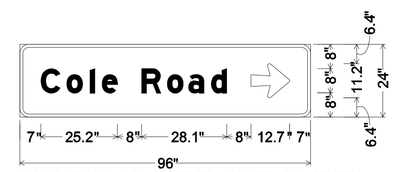

3.0" RADIUS, 1.0" BORDER, WHITE ON GREEN;
[COLE ROAD] E MOD;
ARROW 8UC-1L - 12.8" 0°;

3.0" RADIUS, 1.0" BORDER, WHITE ON GREEN;
[SAN JUAN RD] E MOD;

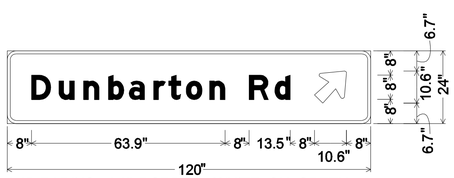

3.0" RADIUS, 1.0" BORDER, WHITE ON GREEN;
[DUNBARTON RD] E MOD;
ARROW 8UC-1L - 12.8" 45°;

APPROVED FOR SIGN WORK ONLY

SIGN DETAILS

NO SCALE **SD-3**

REVISED BY	DATE REVISED

CALCULATED-DESIGNED BY	CHECKED BY
MUNIR ASSAF	HASSAN TAHA

FUNCTIONAL SUPERVISOR: MOHAMMED QATAMI

STATE OF CALIFORNIA - DEPARTMENT OF TRANSPORTATION
Caltrans® 06-TRAFFIC DESIGN

LAST REVISION 12-21-11
DATE PLOTTED => 15-APR-2012
TIME PLOTTED => 05:47

Dist	COUNTY	ROUTE	POST MILES TOTAL PROJECT	SHEET No.	TOTAL SHEETS
05	Mon,SBt	101	100.0/101.3, 0.0/1.6	429	641

Hassan Taha 12/21/11
REGISTERED CIVIL ENGINEER DATE

4-9-12
PLANS APPROVAL DATE

REGISTERED PROFESSIONAL ENGINEER HASSAN M. TAHA No. 60130 Exp 06/30/12 CIVIL STATE OF CALIFORNIA

THE STATE OF CALIFORNIA OR ITS OFFICERS OR AGENTS SHALL NOT BE RESPONSIBLE FOR THE ACCURACY OR COMPLETENESS OF SCANNED COPIES OF THIS PLAN SHEET.

ROADSIDE SIGN QUANTITIES

SHEET No.	SIGN No.	SIGN CODE	SIGN MESSAGE	POST LENGTH FOR LAMINATED WOOD BOX POST SIGN — POST LENGTH LEFT	POST LENGTH RIGHT	No. OF POST AND POST SIZE	PANEL SIZE	BACKGROUND SHEETING COLOR	BACKGROUND RETRO-REFLECTIVITY ASTM TYPE	LEGEND SHEETING COLOR	LEGEND RETRO-REFLECTIVITY ASTM TYPE	GRAFFITI FLOW STANDARD	GRAFFITI FLOW PREMIUM	FURNISHED SINGLE SHEET ALUMINUM SIGN (0.063"-UNFRAMED) SQFT	(0.080"-UNFRAMED) SQFT	(0.063"-FRAMED) SQFT	(0.080"-FRAMED) SQFT	ROADSIDE SIGN ONE POST EA	ROADSIDE SIGN TWO POST EA	INSTALL ROADSIDE SIGN (LAMINATED WOOD BOX POST) EA	RELOCATE ROADSIDE SIGN EA	REMOVE ROADSIDE SIGN EA	FURNISH LAMINATED PANEL SIGN (1"-TYPE B) SQFT	FURNISH LAMINATED PANEL SIGN (2½"-TYPE B) SQFT
S-1	1-1	G86-14	AROMAS WASTONVILLE EXIT 1 1/4 MILE	26′	32′	TYPE M	144" x 90"	GREEN	VII	WHITE	VIII		X										90	
	1-2	G86	Dunbarton Rd AROMAS... LT TRN. 1/4 MILE																			1		
	1-3	G8-7(CA)	AROMAS, WASTONVILLE			TYPE M																1		
	1-4	SR15	SEAT BELT			1-6" x 6"	18" x 24"	WHITE	VIII	BLACK			X	3.00				1						
		SR15A	SAFETY BELT LAW ENFORCED			1-4" x 4"	18" x 18"	WHITE	VIII	BLACK			X	2.25										
	1-5	G83-5(CA)	SAN JUAN ROAD 1 MILE	30	38	type I	192" x 100"	GREEN	VII	WHITE	VIII		X							1				133.33
	1-6	R2-1	SPEED LIMIT 60 MPH			1-6" x 6"	48" x 60"	WHITE	VIII	BLACK			X			20.00		1						
	1-7	R6-3(CA)	3 AXLE OR MORE XX PMH			1-6" x 6"	48" x 60"	WHITE	VIII	BLACK			X			20.00		1						
	1-8	W31(CA)	END			1-4" x 6"	30" x 30"	YELLOW	VIII	BLACK			X	6.25				1						
	1-9	G8-22(CA)																1				1		
	1-10	SW100(CA)	YELLOW			1-4" x 6"	36" x 36"	YELLOW	VIII	BLACK			X	9.00				1						
	1-11	SW100(CA)	YELLOW			1-4" x 6"	36" x 36"	YELLOW	VIII	BLACK			X	9.00				1						
	1-12	SW100(CA)	YELLOW			1-4" x 6"	36" x 36"	YELLOW	VIII	BLACK			X	9.00				1						
	1-13	R3-4																				1		
	1-14	R6-1	ONEWAY			1-4" x 4"	36" x 12"	BLACK		WHITE	VIII		X	3.00				1						
	1-15	R1-1																1				1		
	1-16	R5-1a	WRONG WAY			1-4" x 6"	36" x 24"	RED	VIII	WHITE	XI		X	6.00				1						
		R5-1	DO NOT ENTER				36" x 36"	RED	VIII	WHITE	IX		X	9.00										
	1-17	R1-1	STOP			1-4" x 6"	36" x 36"	RED	VIII	WHITE	IX		X	9.00										
	1-18	R3-2	NO LEFT TURN			1-4" x 6"	36" x 32"	WHITE	VIII	BLACK			X	7.50				1						
	1-19	W1-8	CHEVRON			1-4" x 6"	30"x 36"	YELLOW	VIII	BLACK			X	9.00				1						
	1-20	W1-8	CHEVRON			1-4" x 6"	30"x 36"	YELLOW	VIII	BLACK			X	9.00				1						
	1-21	W1-8	CHEVRON			1-4" x 6"	30"x 36"	YELLOW	VIII	BLACK			X	9.00				1						
	1-22	W1-1	RIGHT ARROW			1-4" x 6"	36" x 36"	YELLOW	VIII	BLACK			x	4.00				1						
	1-23	R1-1	STOP			1-4" x 4"	24" x 24"	RED	VIII	WHITE	XI		X	4.00				1						
	1-24	R5-3	NO MOTOR VEHICLES			1-4" x 4"	24" x 24"	WHITE	VIII	BLACK			X	4.00				1						
	1-25	W11-1	BICYCLE SYMBOL			1-4" x 6"	36"x 36"	YELLOW	VIII	BLACK			X	9.00				1						
	1-26	R5-3	NO MOTOR VEHICLES			1-4" x 6"	24" x 24"	WHITE	VIII	BLACK			X	4.00				1						
	1-27	W3-1	STOP AHEAD			1-4" x 6"	36"x 36"	YELLOW	VIII	BLACK			X	9.00				1						
S-2	2-1	G86-5	AROMAS, WASTONVILLE NEXT EXIT	26′	32′	TYPE M	144" x 90"	GREEN	VII	WHITE	VIII		X							1			108	
		G28(156)(CA)	ROUTE SHIELD(156)			1-4" x 6"	31" x 35"	GREEN	VII	WHITE	VIII		X	7.50										
		M3-3	SOUTH				30" x 15"	GREEN	VII	WHITE	VIII		X	3.13										
	2-2	M3-4	WEST				30" x 15"	GREEN	VII	WHITE	VIII		X	3.13				1						
		M1-4	ROUTE 101 MARKER				30" x 35"	WHITE	VIII	BLACK			X	7.30										
	2-3	R44C(CA)	BIKE MUST EXIT W/ ARROW			1-4" x 4"	30" x 30"	WHITE	VIII	BLACK			X	6.25				1						
	2-4	R26(CA)																				1		
	2-5	R2-1	SPEED LIMIT 30 MPH			1-4" x 6"	36" x 48"	WHITE	VIII	BLACK			X		12.00			1						
	2-6	R48,R48-2(CA),R36(CA)																			1			
	2-4	W31(CA)	END			1-4" x 4"	30" x 30"	WHITE	VIII	BLACK			X	6.25				1						
	2-8	SW100(CA)	YELLOW			1-4" x 6"	36" x 36"	YELLOW	VIII	BLACK			X	9.00				1						
	2-9	SW100(CA)	YELLOW			1-4" x 6"	36" x 36"	YELLOW	VIII	BLACK			X	9.00				1						
	2-10	SW100(CA)	YELLOW			1-4" x 6"	36" x 36"	YELLOW	VIII	BLACK			X	9.00				1						
		R1-1	STOP			1-4" x 6"	24" x 24"	RED	VIII	WHITE	IX		X	4.00										
	2-11	R5-1b	BIKE WRONG WAY				12" x 18"	RED	VIII	WHITE	XI		X	1.50				1						
		R9-3c	RIDE WITH TRAFFIC				12" x 12"	BLACK		WHITE			X	1.00										
						SHEET SUBTOTAL								201.06	12.00	40.00		29		2	1	6	198	133.33

SIGN QUANTITIES
SQ-1

REVISED BY | DATE REVISED
MUNIR ASSAF | HASSAN TAHA
CALCULATED-DESIGNED BY | CHECKED BY
FUNCTIONAL SUPERVISOR
MOHAMMED QATAMI

STATE OF CALIFORNIA - DEPARTMENT OF TRANSPORTATION
Caltrans® 06-TRAFFIC DESIGN

LAST REVISION 12-21-11 | DATE PLOTTED => 15-APR-2012 | TIME PLOTTED => 05:47

Dist	COUNTY	ROUTE	POST MILES TOTAL PROJECT	SHEET No.	TOTAL SHEETS
05	Mon,SBt	101	100.0/101.3, 0.0/1.6	430	641

Hassan Taha 12/21/11
REGISTERED CIVIL ENGINEER DATE

4-9-12
PLANS APPROVAL DATE

REGISTERED PROFESSIONAL ENGINEER HASSAN M. TAHA No. 60130 Exp 06/30/12 CIVIL STATE OF CALIFORNIA

THE STATE OF CALIFORNIA OR ITS OFFICERS OR AGENTS SHALL NOT BE RESPONSIBLE FOR THE ACCURACY OR COMPLETENESS OF SCANNED COPIES OF THIS PLAN SHEET.

ROADSIDE SIGN QUANTITIES

SHEET No.	SIGN No.	SIGN CODE	SIGN MESSAGE	POST LENGTH FOR LAMINATED WOOD BOX POST SIGN — POST LENGTH LEFT	POST LENGTH RIGHT	No. OF POST AND POST SIZE	PANEL SIZE	BACKGROUND SHEETING COLOR	BACKGROUND RETRO-REFLECTIVITY ASTM TYPE	LEGEND SHEETING COLOR	LEGEND RETRO-REFLECTIVITY ASTM TYPE	GRAFFITI FLOW STANDARD	GRAFFITI FLOW PREMIUM	FURNISHED SINGLE SHEET ALUMINUM SIGN (0.063"-UNFRAMED)	(0.080"-UNFRAMED)	(0.063"-FRAMED)	(0.080"-FRAMED)	ROADSIDE SIGN ONE POST	ROADSIDE SIGN TWO POST	INSTALL ROADSIDE SIGN (LAMINATED WOOD BOX POST)	RELOCATE ROADSIDE SIGN	REMOVE ROADSIDE SIGN	FURNISH LAMINATED PANEL SIGN (1"-TYPE B)	FURNISH LAMINATED PANEL SIGN (2/2"-TYPE B)
														SQFT	SQFT	SQFT	SQFT	EA	EA	EA	EA	EA	SQFT	SQFT
S-2	2-12	R5-3	NO MOTOR VEHICLES			1-4" x 4"	24" x 24"	WHITE	VIII	BLACK			X	4.00				1						
	2-13	R5-3	NO MOTOR VEHICLES			1-4" x 4"	24" x 24"	WHITE	VIII	BLACK			X	4.00				1						
	2-14	R26(CA)	NO PARKING ANY TIME			1-4" x 4"	12" x 18"	WHITE	VIII	RED	VIII		X	1.50				1						
		R81(CA)	BIKE & SYMBOL				24" x 18"	WHITE	VIII	BLACK			X	3.00										
S-3	3-1	R3-2,R3-4																				1		
	3-2	R44B(CA)	BICYCLES MOTOR-DRIVE CYCLE PROHIBITED			1-4" x 6"	30" x 36"	WHITE	VIII	BLACK			X	12.00				1						
	3-3	R26(CA)																				1		
	3-4	M1-4,M6-4																				1		
	3-5	G84(CA)																				1		
	3-6	R4-7																				1		
	3-7	G85-1(CA)																				1		
	3-8	R48(CA)																				1		
	3-9	W70(CA)																				1		
	3-10	M4-5	TO			1-6" x 6"	30" x 15"	GREEN	VII	WHITE	VIII		X	3.13				1						
		M1-4	ROUTE 101 MARKER				30" x 35"	WHITE	VIII	BLACK			X	7.30										
		G28(156)(CA)	ROUTE SHIELD(156)				31" x 35"	GREEN	VII	WHITE	VIII		X	9.00										
		M6-3	ARROW				30" x 30"	GREEN	VII	WHITE	VIII		X	6.25										
	3-11	W4-1																				1		
	3-12	R26(CA),R6-1																				1		
	3-13	W13-2	Exit 35 MPH			1-4" x 6"	36" x 48"	YELLOW	VIII	BLACK			X		12.00			1						
	3-14	R3-4,R3-4																				1		
	3-15	E5-1	EXIT (342)			2-6" x 6"	90" x 60"	GREEN	VII	BLACK	VIII		X				37.50		1					
	3-16	W1-2	CURVE			1-6" x 6"	48" x 48"	YELLOW	VIII	BLACK			X		16.00			1						
		W13-1	35 MPH				36" x 36"	YELLOW	VIII	BLACK			X	9.00										
	3-17	W1-2	CURVE			1-6" x 6"	48" x 48"	YELLOW	VIII	BLACK			X		16.00			1						
		W13-1	35 MPH				36" x 36"	YELLOW	VIII	BLACK			X	9.00										
	3-18	W8-1	CHEVRON			1-4" x 6"	30"x 36"	YELLOW	VIII	BLACK			X	7.50				1						
	3-19	W8-1	CHEVRON			1-4" x 6"	30"x 36"	YELLOW	VIII	BLACK			X	7.50				1						
	3-20	W8-1	CHEVRON			1-4" x 6"	30"x 36"	YELLOW	VIII	BLACK			X	7.50				1						
	3-21	W8-1	CHEVRON			1-4" x 6"	30"x 36"	YELLOW	VIII	BLACK			X	7.50				1						
	3-22	W8-1	CHEVRON			1-4" x 6"	30"x 36"	YELLOW	VIII	BLACK			X	7.50				1						
	3-23	W8-1	CHEVRON			1-4" x 6"	30"x 36"	YELLOW	VIII	BLACK			X	7.50				1						
	3-24	W8-1	CHEVRON			1-4" x 6"	30"x 36"	YELLOW	VIII	BLACK			X	7.50				1						
	3-25	W8-1	CHEVRON			1-4" x 6"	30"x 36"	YELLOW	VIII	BLACK			X	7.50				1						
	3-26	W8-1	CHEVRON			1-4" x 6"	30"x 36"	YELLOW	VIII	BLACK			X	7.50				1						
	3-27	W8-1	CHEVRON			1-4" x 6"	30"x 36"	YELLOW	VIII	BLACK			X	7.50				1						
	3-28	R26(CA)																				1		
	3-29	R26(CA)	NO PARKING ANY TIME			1-4" x 4"	12" x 18"	WHITE	VIII	RED	VIII		X	1.50				1						
		R81(CA)	BIKE & SYMBOL				24" x 18"	WHITE	VIII	BLACK			X	3.00										
	3-30	R26(CA)	NO PARKING ANY TIME			1-4" x 4"	12" x 18"	WHITE	VIII	RED	VIII		X	1.50				1						
		R81(CA)	BIKE & SYMBOL				24" x 18"	WHITE	VIII	BLACK			X	3.00										
	3-31	R26(CA)	NO PARKING ANY TIME			1-4" x 4"	12" x 18"	WHITE	VIII	RED	VIII		X	1.50				1						
		R81(CA)	BIKE & SYMBOL				24" x 18"	WHITE	VIII	BLACK			X	3.00										
							SHEET SUBTOTAL							156.68	44.00		37.50	21	1			13		

SIGN QUANTITIES
SQ-2

STATE OF CALIFORNIA - DEPARTMENT OF TRANSPORTATION
Caltrans 06-TRAFFIC DESIGN

FUNCTIONAL SUPERVISOR: MOHAMMED QATAMI
CALCULATED-DESIGNED BY: MUNIR ASSAF
CHECKED BY: HASSAN TAHA
REVISED BY
DATE REVISED

LAST REVISION 12-21-11
DATE PLOTTED => 16-APR-2012
TIME PLOTTED => 09:47

Dist	COUNTY	ROUTE	POST MILES TOTAL PROJECT	SHEET No.	TOTAL SHEETS
05	Mon,SBt	101	100.0/101.3, 0.0/1.6	431	641

Hassan Taha 12/21/11
REGISTERED CIVIL ENGINEER DATE

4-9-12
PLANS APPROVAL DATE

REGISTERED PROFESSIONAL ENGINEER HASSAN M. TAHA No. 60130 Exp 06/30/12 CIVIL STATE OF CALIFORNIA

THE STATE OF CALIFORNIA OR ITS OFFICERS OR AGENTS SHALL NOT BE RESPONSIBLE FOR THE ACCURACY OR COMPLETENESS OF SCANNED COPIES OF THIS PLAN SHEET.

ROADSIDE SIGN QUANTITIES

SHEET No.	SIGN No.	SIGN CODE	SIGN MESSAGE	POST LENGTH FOR LAMINATED WOOD BOX POST SIGN — POST LENGTH LEFT	POST LENGTH RIGHT	No. OF POST AND POST SIZE	PANEL SIZE	BACKGROUND SHEETING COLOR	BACKGROUND RETRO-REFLECTIVITY ASTM TYPE	LEGEND SHEETING COLOR	LEGEND RETRO-REFLECTIVITY ASTM TYPE	GRAFFITI FLOW STANDARD	GRAFFITI FLOW PREMIUM	FURNISHED SINGLE SHEET ALUMINUM SIGN (0.063"-UNFRAMED)	(0.080"-UNFRAMED)	(0.063"-FRAMED)	(0.080"-FRAMED)	ROADSIDE SIGN ONE POST	ROADSIDE SIGN TWO POST	INSTALL ROADSIDE SIGN (LAMINATED WOOD BOX POST)	RELOCATE ROADSIDE SIGN	REMOVE ROADSIDE SIGN	FURNISH LAMINATED PANEL SIGN (1"-TYPE B)	FURNISH LAMINATED PANEL SIGN (2½"-TYPE B)
														SQFT	SQFT	SQFT	SQFT	EA	EA	EA	EA	EA	SQFT	SQFT
S-3	3-32	R26(CA)	NO PARKING ANY TIME			1-4" x 4"	12" x 18"	WHITE	VIII	RED	VIII		X	1.50				1						
		R81(CA)	BIKE & SYMBOL				24" x 18"	WHITE	VIII	BLACK			X	3.00										
	3-33	R26(CA)	NO PARKING ANY TIME			1-4" x 4"	12" x 18"	WHITE	VIII	RED	VIII		X	1.50				1						
		R81(CA)	BIKE & SYMBOL				24" x 18"	WHITE	VIII	BLACK			X	3.00										
	3-34	R26(CA)	NO PARKING ANY TIME			1-4" x 4"	12" x 18"	WHITE	VIII	RED	VIII		X	1.50				1						
		R81(CA)	BIKE & SYMBOL				24" x 18"	WHITE	VIII	BLACK			X	3.00										
	3-35	W3-5	REDUCE SPEED AHEAD(35)			1-6" x 6"	48" x 48"	YELLOW	VIII	BLACK			X		16.00			1						
	3-36	R2-1	SPEED LIMIT 35 MPH			1-4" x 6"	36" x 48"	WHITE	VIII	BLACK			X		12.00			1						
S-4	4-1	R26(CA)	NO PARKING ANY TIME			1-4" x 4"	12" x 18"	WHITE	VIII	RED	VIII		X	1.50				1						
		R81(CA)	BIKE & SYMBOL				24" x 18"	WHITE	VIII	BLACK			X	3.00										
	4-2	G10(CA)																			1			
	4-3	M4-5	TO			1-6" x 6"	30" x 15"	GREEN	VII	WHITE	VIII		X	3.13				1						
		G28(156)(CA)	ROUTE SHIELD(156)				31" x 35"	GREEN	VII	WHITE			X	7.54										
		M3-2	EAST				30" x 15"	GREEN	VII	WHITE	VIII		X	3.13										
		M5-1(Rt)	RIGHT ARROW				30" x 15"	WHITE	VIII	BLACK			X	3.13										
	4-4	R5-10a	PEDSE			1-4" x 4"	36" x 30"	WHITE	VIII	BLACK			X	7.50				1						
	4-5	G92(CA)	FREEWAY ENTRANCE			1-6" x 6"	48" x 40"	GREEN	VII	WHITE	VIII		X		13.33			1						
		M3-3	SOUTH				30" x 15"	GREEN	VII	WHITE	VIII		X	3.13										
		M1-4	ROUTE 101 MARKER			1-4" x 6"	30" x 35"	WHITE	VIII	BLACK			X	7.30										
		M6-2	DIAGOBAL ARROW				30" x 15"	WHITE	VIII	BLACK	VIII		X	3.13										
	4-6	G85(CA)	SAN JUAN ROAD NEXT EXIT																			1		
	4-7	G92(CA)	FREEWAY ENTRANCE			1-6" x 6"	48" x 40"	GREEN	VII	WHITE	VIII		X		13.33			1						
		M3-3	SOUTH				30" x 15"	GREEN	VII	WHITE	VIII		X	3.13										
		M1-4	ROUTE 101 MARKER				30" x 35"	WHITE	VIII	BLACK			X	7.30										
		M6-2	DIAGOBAL ARROW				30" x 15"	WHITE	VIII	BLACK	VIII		X	3.13										
	4-8	G77(CA)	NORTH,101,SOUTH			2-6" x 8"	84" x 80"	GREEN	VII	WHITE	VIII		X				46.67		1					
	4-9	M4-5	TO			1-6" x 6"	30" x 15"	GREEN	VIII	WHITE	VIII		X	3.13				1						
		G28(156)(CA)	ROUTE SHIELD(156)				31" x 35"	WHITE	VIII	BLACK			X	7.54										
		M3-2	EAST				30" x 15"	GREEN	VII	WHITE	VIII		X	3.13										
		M5-1(Rt)	RIGHT ARROW				30" x 15"	GREEN	VII	WHITE	VIII		X	3.13										
	4-10	G8-22(CA)	COLE RAOD			2-4" x 6"	96" x 24"	GREEN	VII	WHITE	VIII		X			16.00			1					
	4-11	W1-7	LEFT/RIGHT ARROW			1-4" x 6"	48" x 24"	YELLOW	VIII	BLACK			X	8.00				1						
		SW100(CA)	YELLOW MRKER				36" x 36"	YELLOW	VIII	BLACK			X	9.00										
	4-12	G8-22(CA)	COLE RAOD			2-6" x 6"	96" x 24"	GREEN	VII	WHITE	VIII		X			16.00			1					
	4-13	R1-1	STOP			1-4" x 6"	36" x 36"	RED	VIII	WHITE	XI		X	4.50				1						
	4-14	R1-1	STOP			1-4" x 6"	36" x 36"	RED	VIII	WHITE	XI		X	4.50				1						
	4-15	G7-1(CA)	SAN JUA ROAD			2-4" x 4"	72" x 18"	GREEN	VII	WHITE	VIII		X			9.00			1					
	4-16	W1-8	CHEVRON			1-4" x 4"	30"x 36"	YELLOW	VIII	BLACK			X	7.50				1						
	4-17	W1-8	CHEVRON			1-4" x 4"	30"x 36"	YELLOW	VIII	BLACK			X	7.50				1						
	4-18	W1-8	CHEVRON			1-4" x 4"	30"x 36"	YELLOW	VIII	BLACK			X	7.50				1						
	4-19	W1-8	CHEVRON			1-4" x 4"	30"x 36"	YELLOW	VIII	BLACK			X	7.50				1						
	4-20	W1-8	CHEVRON			1-4" x 4"	30"x 36"	YELLOW	VIII	BLACK			X	7.50				1						
	4-21	W3-1	STOP AHEAD			1-4" x 4"	30"x 36"	YELLOW	VIII	BLACK			X	9.00				1						
	4-22	W2-4	T INTERSECTION AHEAD			1-4" x 4"	30"x 30"	YELLOW	VIII	BLACK			X	6.25				1						
							SHEET SUBTOTAL							165.23	54.66	41.00	46.67	21	4		1	1		

SIGN QUANTITIES
SQ-3

STATE OF CALIFORNIA - DEPARTMENT OF TRANSPORTATION
Caltrans 06-TRAFFIC DESIGN

FUNCTIONAL SUPERVISOR: MOHAMMED QATAMI
CALCULATED-DESIGNED BY: MUNIR ASSAF
CHECKED BY: HASSAN TAHA
REVISED BY
DATE REVISED

LAST REVISION 12-21-11
DATE PLOTTED => 15-APR-2012
TIME PLOTTED => 09:47

Dist	COUNTY	ROUTE	POST MILES TOTAL PROJECT	SHEET No.	TOTAL SHEETS
05	Mon,SBt	101	100.0/101.3, 0.0/1.6	432	641

Hassan Taha 12/21/11
REGISTERED CIVIL ENGINEER DATE

4-9-12
PLANS APPROVAL DATE

REGISTERED PROFESSIONAL ENGINEER HASSAN M. TAHA No. 60130 Exp 06/30/12 CIVIL STATE OF CALIFORNIA

THE STATE OF CALIFORNIA OR ITS OFFICERS OR AGENTS SHALL NOT BE RESPONSIBLE FOR THE ACCURACY OR COMPLETENESS OF SCANNED COPIES OF THIS PLAN SHEET.

ROADSIDE SIGN QUANTITIES

SHEET No.	SIGN No.	SIGN CODE	SIGN MESSAGE	POST LENGTH FOR LAMINATED WOOD BOX POST SIGN — POST LENGTH LEFT	POST LENGTH RIGHT	No. OF POST AND POST SIZE	PANEL SIZE	BACKGROUND SHEETING COLOR	BACKGROUND RETRO-REFLECTIVITY ASTM TYPE	LEGEND SHEETING COLOR	LEGEND RETRO-REFLECTIVITY ASTM TYPE	GRAFFITI FLOW STANDARD	GRAFFITI FLOW PREMIUM	FURNISHED SINGLE SHEET ALUMINUM SIGN (0.063"-UNFRAMED)	(0.080"-UNFRAMED)	(0.063"-FRAMED)	(0.080"-FRAMED)	ROADSIDE SIGN ONE POST	ROADSIDE SIGN TWO POST	INSTALL ROADSIDE SIGN (LAMINATED WOOD BOX POST)	RELOCATE ROADSIDE SIGN	REMOVE ROADSIDE SIGN	FURNISH LAMINATED PANEL SIGN (1"-TYPE B)	FURNISH LAMINATED PANEL SIGN (2½"-TYPE B)
														SQFT	SQFT	SQFT	SQFT	EA	EA	EA	EA	EA	SQFT	SQFT
S-4	4-23	W1-8	CHEVRON			1-4" x 4"	30"x 36"	YELLOW	VIII	BLACK			X	7.50				1						
	4-24	W1-8	CHEVRON			1-4" x 4"	30"x 36"	YELLOW	VIII	BLACK			X	7.50										
	4-25	R6-1	ONEWAY			1-4" x 4"	36" x 12"	BLACK		WHITE	VIII		X	3.00				1						
	4-26	R5-1a	WRONG WAY			1-4" x 6"	36" x 24"	RED	VIII	WHITE	XI		X	6.00				1						
		R5-1	DO NOT ENTER				36" x 36"	RED	VIII	WHITE	IX		X	9.00										
	4-27	R1-1	STOP			1-4" x 6"	36" x 36"	RED	VIII	WHITE	XI		X	9.00				1						
	4-28	R1-1	STOP			1-4" x 6"	36" x 36"	RED	VIII	WHITE	XI		X	9.00				1						
	4-29	R1-1	STOP			1-4" x 6"	36" x 36"	RED	VIII	WHITE	XI		X	9.00				1						
	4-30	R5-1a	WRONG WAY			1-6" x 6"	36" x 24"	RED	VIII	WHITE	XI		X	6.00				1						
		R5-1	DO NOT ENTER				36" x 36"	RED	VIII	WHITE	XI		X	9.00										
	4-31	R6-1	ONEWAY			1-4" x 4"	36" x 12"	BLACK		WHITE	VIII		X	6.00				1						
	4-32	w8-5																			1			
	4-33	G10(CA)																				1		
	4-34	M3-1,G26-2,M3-2,G26																				1		
	4-35	R26(CA)																				1		
	4-36	R2-1																				1		
	4-37	R26(CA)																				1		
	4-38	W1-8	CHEVRON			1-4" x 4"	30"x 36"	YELLOW	VIII	BLACK			X	7.50				1						
	4-39	W4-1	LANE MEGE			1-6" x 6"	48" x 48"	YELLOW	VIII	BLACK			X		16.00			1						
	4-40	w4-4(CA)	CURVE/10 MPH			2-4" x 6"	60" x 60"	YELLOW	VIII	BLACK			X			25.00		1						
	4-41	R2-1	SPEED LIMIT 35 MPH			1-4" x 6"	36" x 48"	WHITE	VIII	BLACK			X		12.00			1						
	4-42	W1-2	CURVE			1-6" x 6"	48" x 48"	YELLOW	VIII	BLACK			X		16.00			1						
		W13-1	35 MPH				36" x 36"	YELLOW	VIII	BLACK			X	9.00										
	4-43	W1-2	CURVE			1-6" x 6"	48" x 48"	YELLOW	VIII	BLACK			X		16.00			1						
		W13-1	35 MPH				36" x 36"	YELLOW	VIII	BLACK			X											
	4-44	G92(CA)	FREEWAY ENTRANCE			1-4" x 6"	48" x 40"	GREEN	VII	WHITE	VIII		X		13.33			1						
		M3-2	NORTH				30" x 15"	GREEN	VII	WHITE	VIII		X	3.13										
		M1-4	ROUTE 101 MARKER				45" x 36"	WHITE	VIII	BLACK			X	11.25										
		M5-1	RIGHT ARROW				30" x 15"	GREEN	VII	WHITE	IV		X	3.13										
	4-45	M3-2	SOUTH			1-6" x 6"	30" x 15"	GREEN	VII	WHITE	VIII		X	3.13				1						
		M1-4	ROUTE 101 MARKER				45" x 36"	WHITE	VIII	BLACK			X	11.25										
		M6-1	LEFT ARROW				30" x 15"	GREEN	VII	WHITE	VIII		X	3.13										
	4-46	R26(CA)	NO PARKING ANY TIME			1-4" x 4"	12" x 18"	WHITE	VIII	RED	VIII		X	1.50				1						
		R81(CA)	BIKE & SYMBOL				24" x 18"	WHITE	VIII	BLACK			X	3.00										
	4-47	R26(CA)	NO PARKING ANY TIME			1-4" x 4"	12" x 18"	WHITE	VIII	RED	VIII		X	1.50				1						
		R81(CA)	BIKE & SYMBOL				24" x 18"	WHITE	VIII	BLACK			X	3.00										
	4-48	R26(CA)	NO PARKING ANY TIME			1-4" x 4"	12" x 18"	WHITE	VIII	RED	VIII		X	1.50				1						
		R81(CA)	BIKE & SYMBOL				24" x 18"	WHITE	VIII	BLACK			X	3.00										
	4-49	R26(CA)	NO PARKING ANY TIME			1-4" x 4"	12" x 18"	WHITE	VIII	RED	VIII		X	1.50				1						
		R81(CA)	BIKE & SYMBOL				24" x 18"	WHITE	VIII	BLACK			X	3.00										
	4-50	R26(CA)	NO PARKING ANY TIME			1-4" x 4"	12" x 18"	WHITE	VIII	RED	VIII		X	1.50				1						
		R81(CA)	BIKE & SYMBOL				24" x 18"	WHITE	VIII	BLACK			X											
SHEET SUBTOTAL														155.02	73.33	25.00		21			1	5		

SIGN QUANTITIES
SQ-4

REVISED BY | DATE REVISED
MUNIR ASSAF | HASSAN TAHA
CALCULATED-DESIGNED BY | CHECKED BY
FUNCTIONAL SUPERVISOR
MOHAMMED QATAMI

STATE OF CALIFORNIA - DEPARTMENT OF TRANSPORTATION
Caltrans 06-TRAFFIC DESIGN

LAST REVISION 12-21-11 | DATE PLOTTED => 15-APR-2012 | TIME PLOTTED => 05:47

Dist	COUNTY	ROUTE	POST MILES TOTAL PROJECT	SHEET No.	TOTAL SHEETS
05	Mon,SBt	101	100.0/101.3, 0.0/1.6	433	641

Hassan Taha 12/21/11
REGISTERED CIVIL ENGINEER DATE

4-9-12
PLANS APPROVAL DATE

REGISTERED PROFESSIONAL ENGINEER HASSAN M. TAHA No. 60130 Exp 06/30/12 CIVIL STATE OF CALIFORNIA

THE STATE OF CALIFORNIA OR ITS OFFICERS OR AGENTS SHALL NOT BE RESPONSIBLE FOR THE ACCURACY OR COMPLETENESS OF SCANNED COPIES OF THIS PLAN SHEET.

ROADSIDE SIGN QUANTITIES

SHEET No.	SIGN No.	SIGN CODE	SIGN MESSAGE	POST LENGTH FOR LAMINATED WOOD BOX POST SIGN — POST LENGTH LEFT	POST LENGTH RIGHT	No. OF POST AND POST SIZE	PANEL SIZE	BACKGROUND SHEETING COLOR	BACKGROUND RETRO-REFLECTIVITY ASTM TYPE	LEGEND SHEETING COLOR	LEGEND RETRO-REFLECTIVITY ASTM TYPE	GRAFFITI FLOW STANDARD	GRAFFITI FLOW PREMIUM	FURNISHED SINGLE SHEET ALUMINUM SIGN (0.063"-UNFRAMED)	(0.080"-UNFRAMED)	(0.063"-FRAMED)	(0.080"-FRAMED)	ROADSIDE SIGN ONE POST	ROADSIDE SIGN TWO POST	INSTALL ROADSIDE SIGN (LAMINATED WOOD BOX POST)	RELOCATE ROADSIDE SIGN	REMOVE ROADSIDE SIGN	FURNISH LAMINATED PANEL SIGN (1"-TYPE B)	FURNISH LAMINATED PANEL SIGN (2½"-TYPE B)
														SQFT	SQFT	SQFT	SQFT	EA	EA	EA	EA	EA	SQFT	SQFT
S-4	4-51	R26(CA)	NO PARKING ANY TIME			1-4" x 4"	12" x 18"	WHITE	VIII	RED	VIII		X	1.50				1						
		R81(CA)	BIKE & SYMBOL				24" x 18"	WHITE	VIII	BLACK			X	3.00										
	4-52	W11-1	BICYCLE SYMBOL			1-4" x 6"	36"x 36"	YELLOW	VIII	BLACK			X	9.00				1						
	4-53	G11-6(CA)	BRIDGE ID			1-4" x 4"	12" x 18"	WHITE	VIII	BLACK			X	2.00				1						
	4-54	G11-6(CA)	BRIDGE ID			1-4" x 4"	12" x 18"	WHITE	VIII	BLACK			X	2.00				1						
	4-55	R5-10b	PEDS, BIKES PROHIBITED			1-4" x 4"	30" x 18"	WHITE	VIII	BLACK			X	4.50				1						
S-5	5-1	R2-1	SPEED LIMIT 30 MPH			1-4" x 6"	36" x 48"	WHITE	VIII	BLACK			X		12.00			1						
	5-2	R2-1	SPEED LIMIT 35 MPH			1-4" x 6"	36" x 48"	WHITE	VIII	BLACK			X		12.00			1						
	5-3	R26(CA)	NO PARKING ANY TIME			1-4" x 6"	12" x 18"	WHITE	VIII	RED	VIII		X	1.50				1						
		R81(CA)	BIKE & SYMBOL				24" x 18"	WHITE	VIII	BLACK			X	3.00										
	5-4	R26(CA)	NO PARKING ANY TIME			1-4" x 6"	12" x 18"	WHITE	VIII	RED	VIII		X	1.50				1						
		R81(CA)	BIKE & SYMBOL				24" x 18"	WHITE	VIII	BLACK			X	3.00										
	5-5	R26(CA)	NO PARKING ANY TIME			1-4" x 6"	12" x 18"	WHITE	VIII	RED	VIII		X	1.50				1						
		R81(CA)	BIKE & SYMBOL				24" x 18"	WHITE	VIII	BLACK			X	3.00										
	5-6	R26(CA)	NO PARKING ANY TIME			1-4" x 6"	12" x 18"	WHITE	VIII	RED	VIII		X	1.50				1						
		R81(CA)	BIKE & SYMBOL				24" x 18"	WHITE	VIII	BLACK			X	3.00										
	5-7	R26(CA)	NO PARKING ANY TIME			1-4" x 6"	12" x 18"	WHITE	VIII	RED	VIII		X	1.50				1						
		R81(CA)	BIKE & SYMBOL				24" x 18"	WHITE	VIII	BLACK			X	3.00										
	5-8	w4-4(CA)	CURVE/10 MPH			2-4" x 6"	60" x 60"	YELLOW	VIII	BLACK			X			25.00		1						
	5-9	w1-6R	ARROW			1- 6" x 6"	36" x 18"	YELLOW	VIII	BLACK			X	4.50				1						
		w13-1	10 MPH				24" x 24"	YELLOW	VIII	BLACK			X	4.00										
	5-10	w1-6R	ARROW			1- 6" x 6"	36" x 18"	YELLOW	VIII	BLACK			X	4.50				1						
		w13-1	10 MPH				24" x 24"	YELLOW	VIII	BLACK			X	4.00										
	5-11	w1-6R	ARROW			1- 6" x 6"	36" x 18"	YELLOW	VIII	BLACK			X	4.50				1						
		SW100(CA)	MARKER				36" x 36"	YELLOW	VIII	BLACK			X	9.00										
	5-12	w1-6R	ARROW			1- 6" x 6"	36" x 18"	YELLOW	VIII	BLACK			X	4.50				1						
		SW100(CA)	MARKER				36" x 18"	YELLOW	VIII	BLACK			X	9.00										
	5-13	W3-1a	STOP AHEAD			1-4" x 6"	36" x 36"	YELLOW	VIII	BLACK			X	9.00				1						
	5-14	W1-8	CHEVRON			1-4" x 4"	30"x 36"	YELLOW	VIII	BLACK			X	7.50				1						
	5-15	W1-8	CHEVRON			1-4" x 4"	30"x 36"	YELLOW	VIII	BLACK			X	7.50				1						
	5-16	W1-8	CHEVRON			1-4" x 4"	30"x 36"	YELLOW	VIII	BLACK				7.50				1						
	5-17	W1-2	CURVE			1-4" x 6"	36" x 36"	YELLOW	VIII	BLACK			X	9.00				1						
		w13-1	10 MPH				24" x 24"	YELLOW	VIII	BLACK			X	4.00										
	5-18	W3-1a	STOP AHEAD			1-6" x 6"	48" x 48"	YELLOW	VIII	BLACK			X		16.00			1						
	5-19	W3-1a	STOP AHEAD			1-6" x 6"	48" x 48"	YELLOW	VIII	BLACK			X		16.00			1						
	5-20	R61(CA)	LANE ASSIGNMENT			1-4" x 6"	48" x 36"	WHITE	VIII	BLACK			X		12.00			1						
	5-21	R61(CA)	LANE ASSIGNMENT			1-4" x 6"	48" x 36"	WHITE	VIII	BLACK			X		12.00			1						
	5-22	G8-10(CA)	SAN JUAN RD/FRONTAGE ROAD			1-6" x 8"	120" x 48"	GREEN	VII	WHITE	VIII		X				40.00		1					
	5-23	R5-10c	PEDESTRIAN PROHIBITED			1-4" x 4"	24" x 12"	WHITE	VIII	BLACK			X	2.00				1						
	5-24	R5-10a	PEDS/ BIKES PROHIBITED			1-4" x 4"	30" x 18"	WHITE	VIII	BLACK			X	3.75				1						
	5-25	W1-8	CHEVRON			1-4" x 4"	30"x 36"	YELLOW	VIII	BLACK			X	7.50				1						
							SHEET SUBTOTAL							146.25	92.00	50.00	40.00	29	2					

SIGN QUANTITIES
SQ-5

STATE OF CALIFORNIA - DEPARTMENT OF TRANSPORTATION
Caltrans® 06-TRAFFIC DESIGN

FUNCTIONAL SUPERVISOR: MOHAMMED QATAMI
CALCULATED-DESIGNED BY: MUNIR ASSAF
CHECKED BY: HASSAN TAHA
REVISED BY
DATE REVISED

LAST REVISION 12-21-11
DATE PLOTTED => 15-APR-2012
TIME PLOTTED => 05:47

Dist	COUNTY	ROUTE	POST MILES TOTAL PROJECT	SHEET No.	TOTAL SHEETS
05	Mon,SBt	101	100.0/101.3, 0.0/1.6	434	641

Hassan Taha 12/21/11
REGISTERED CIVIL ENGINEER DATE

4-9-12
PLANS APPROVAL DATE

REGISTERED PROFESSIONAL ENGINEER HASSAN M. TAHA No. 60130 Exp 06/30/12 CIVIL STATE OF CALIFORNIA

THE STATE OF CALIFORNIA OR ITS OFFICERS OR AGENTS SHALL NOT BE RESPONSIBLE FOR THE ACCURACY OR COMPLETENESS OF SCANNED COPIES OF THIS PLAN SHEET.

ROADSIDE SIGN QUANTITIES

SHEET No.	SIGN No.	SIGN CODE	SIGN MESSAGE	POST LENGTH FOR LAMINATED WOOD BOX POST SIGN — POST LENGTH LEFT	POST LENGTH RIGHT	No. OF POST AND POST SIZE	PANEL SIZE	BACKGROUND SHEETING COLOR	BACKGROUND RETRO-REFLECTIVITY ASTM TYPE	LEGEND SHEETING COLOR	LEGEND RETRO-REFLECTIVITY ASTM TYPE	GRAFFITI FLOW STANDARD	GRAFFITI FLOW PREMIUM	FURNISHED SINGLE SHEET ALUMINUM SIGN (0.063"-UNFRAMED) SQFT	(0.080"-UNFRAMED) SQFT	(0.063"-FRAMED) SQFT	(0.080"-FRAMED) SQFT	ROADSIDE SIGN ONE POST EA	ROADSIDE SIGN TWO POST EA	INSTALL ROADSIDE SIGN (LAMINATED WOOD BOX POST) EA	RELOCATE ROADSIDE SIGN EA	REMOVE ROADSIDE SIGN EA	FURNISH LAMINATED PANEL SIGN (1"-TYPE B) SQFT	FURNISH LAMINATED PANEL SIGN (2½"-TYPE B) SQFT
S-5	5-26	W1-8	CHEVRON			1-4" x 4"	30"x 36"	YELLOW	VIII	BLACK			X	7.50				1						
	5-27	W1-8	CHEVRON			1-4" x 4"	30"x 36"	YELLOW	VIII	BLACK			X	7.50				1						
	5-28	W1-8	CHEVRON			1-4" x 4"	30"x 36"	YELLOW	VIII	BLACK			X	7.50				1						
	5-29	W4-10(CA)	CURVE/25 MPH			2-4" x 6"	60" x 60"	YELLOW	VIII	BLACK			X			25.00			1					
	5-30	R61(CA)	LANE ASSIGNMENT			1-4" x 6"	48" x 36"	WHITE	VIII	BLACK			X		6.00			1						
	5-31	R61(CA)	LANE ASSIGNMENT			1-4" x 6"	48" x 36"	WHITE	VIII	BLACK			X		6.00			1						
	5-32	R1-1	STOP			1-4" x 4"	36" x 36"	RED	VIII	WHITE	IX		X	27.00				1						
	5-33	R1-1	STOP			1-4" x 4"	36" x 36"	RED	VIII	WHITE	IX		X	27.00				1						
	5-34	R1-1	STOP			1-4" x 4"	36" x 36"	RED	VIII	WHITE	IX		X	27.00				1						
	5-35	G92(CA)	FREEWAY ENTRANCE			1-6" x 6"	48" x 30"	GREEN	III	WHITE	IV		X		10.00			1						
		M3-1	NORTH				30" x 15"	GREEN	III	WHITE	IV		X	3.13										
		M1-4	ROUTE 101 MARKER				45" x 36"	WHITE	VIII	BLACK			X		12.00									
		M6-2	DIAGONAL ARROW				30" x 15"	GREEN	III	WHITE	IV		X	3.13										
	5-36	G8-22(CA)	FRONTAGE ROAD			2-4" x 6"	72" x 42"	GREEN	III	WHITE	IV		X			21.00			1					
	5-37	G77(CA)	SOUTH/101/NORTH			2-6" x 6"	84" x 80"	GREEN	III	WHITE	IV		X				46.67		1					
	5-38	R6-1	ONEWAY			1-4" x 4"	36" x 12"	BLACK		WHITE	VIII		X	6.00				1						
	5-39	R6-1	ONEWAY			1-4" x 4"	36" x 12"	BLACK		WHITE	VIII		X	6.00				1						
	5-40	W1-7	LEFT/RIGHT ARROW			1-4" x 6"	48" x 24"	YELLOW	VIII	BLACK			X	8.00				1						
		SW100(CA)	YELLOW MARKER				36" x 36"	YELLOW	VIII	BLACK			X	9.00										
	5-41	R5-1a	WRONG WAY			1-6" x 6"	36" x 24"	RED	VIII	WHITE	IX		X	12.00				1						
		R5-1	DO NOT ENTER				36" x 36"	RED	VIII	WHITE	IX		X	18.00										
	5-42	R5-1a	WRONG WAY			1-6" x 6"	36" x 24"	RED	VIII	WHITE	IX		X	12.00				1						
		R5-1	DO NOT ENTER				36" x 36"	RED	VIII	WHITE	IX		X	18.00										
	5-43	G92(CA)	FREEWAY ENTRANCE			1-4" x 6"	48" x 40"	GREEN	VII	WHITE	VIII		X		13.33			1						
		M3-1	NORTH				30" x 15"	GREEN	VII	WHITE	VIII		X	3.13										
		M1-4	ROUTE 101 MARKER				45" x 36"	WHITE	III	BLACK			X	11.25										
		M6-2	DIAGONAL ARROW				30" x 15"	GREEN	VII	WHITE	VIII		X	3.13										
	5-44	M4-5	TO			1-4" x 6"	30" x 15"	GREEN	VII	WHITE	VIII		X	3.13				1						
		M3-2	EAST				30" x 15"	GREEN	VII	WHITE	VIII		X	3.13										
		G28(156)(CA)	ROUTE SHIELD(156)				21" x 15"	GREEN	VII	WHITE	VIII		X	2.19										
		M5-1(Lt)	LEFT ARROW				30" x 15"	GREEN	VII	WHITE	VIII		X	3.13										
	5-45	W1-1	RIGHT ARROW			1-4" x 6"	36" x 36"	YELLOW	VIII	BLACK			X	9.00				1						
		W13-1	10 MPH				24" x 24"	YELLOW	VIII	BLACK			X	4.00										
	5-46	R1-1	STOP			1-4" x 6"	36" x 36"	RED	VIII	WHITE	IX		X	9.00				1						
	5-47	W1-1	LEFT ARROW			1-4" x 6"	36" x 36"	YELLOW	VIII	BLACK			X	9.00				1						
		W13-1	10 MPH				24" x 24"	YELLOW	VIII	BLACK			X	4.00										
S-6	6-1	W1-9R	10 MH TURN			1-6" x 6"	48"x 48"	YELLOW	VIII	BLACK			X		16.00			1						
	6-2	W1-8	CHEVRON			1-4" x 4"	30"x 36"	YELLOW	VIII	BLACK			X	7.50				1						
	6-3	G8-10	SAN JUAN Rd/FRONTAGE ROAD			2-6" x 8"	120" x 48"	GREEN	VII	WHITE	VIII		X				40.00		1					
	6-4	R2-1	SPEED LIMIT 35 MPH			1-4" x 6"	36" x 48"	WHITE	VIII	BLACK			X		12.00			1						
	6-5	W3-1a	STOP AHEAD			1-6" x 6"	48"x 48"	YELLOW	VIII	BLACK			X		16.00			1						
	6-6	R2-1	SPEED LIMIT 35 MPH			1-4" x 6"	36" x 48"	WHITE	VIII	BLACK			X		12.00			1						
	6-7	R61-5.1	LANE ASSIGNMENT			1-4" x 4"	36" x 30"	WHITE	VIII	BLACK			X	7.50				1						
	6-8	R61-5.1	LANE ASSIGNMENT			1-4" x 4"	36" x 30"	WHITE	VIII	BLACK			X	7.50				1						
SHEET SUBTOTAL														285.35	103.33	46.00	86.67	26	4					

SIGN QUANTITIES
SQ-6

REVISED BY | DATE REVISED
MUNIR ASSAF | HASSAN TAHA
CALCULATED-DESIGNED BY | CHECKED BY
FUNCTIONAL SUPERVISOR
MOHAMMED QATAMI

STATE OF CALIFORNIA - DEPARTMENT OF TRANSPORTATION
Caltrans® 06-TRAFFIC DESIGN

LAST REVISION 12-21-11 | DATE PLOTTED => 15-APR-2012 | TIME PLOTTED => 05:47

Dist	COUNTY	ROUTE	POST MILES TOTAL PROJECT	SHEET No.	TOTAL SHEETS
05	Mon,SBt	101	100.0/101.3, 0.0/1.6	435	641

Hassan Taha 12/21/11
REGISTERED CIVIL ENGINEER DATE

4-9-12
PLANS APPROVAL DATE

REGISTERED PROFESSIONAL ENGINEER HASSAN M. TAHA No. 60130 Exp 06/30/12 CIVIL STATE OF CALIFORNIA

THE STATE OF CALIFORNIA OR ITS OFFICERS OR AGENTS SHALL NOT BE RESPONSIBLE FOR THE ACCURACY OR COMPLETENESS OF SCANNED COPIES OF THIS PLAN SHEET.

ROADSIDE SIGN QUANTITIES

SHEET No.	SIGN No.	SIGN CODE	SIGN MESSAGE	POST LENGTH FOR LAMINATED WOOD BOX POST SIGN — POST LENGTH LEFT	POST LENGTH RIGHT	No. OF POST AND POST SIZE	PANEL SIZE	BACKGROUND SHEETING COLOR	BACKGROUND RETRO-REFLECTIVITY ASTM TYPE	LEGEND SHEETING COLOR	LEGEND RETRO-REFLECTIVITY ASTM TYPE	GRAFFITI FLOW STANDARD	GRAFFITI FLOW PREMIUM	FURNISHED SINGLE SHEET ALUMINUM SIGN (0.063"-UNFRAMED) SQFT	(0.080"-UNFRAMED) SQFT	(0.063"-FRAMED) SQFT	(0.080"-FRAMED) SQFT	ROADSIDE SIGN ONE POST EA	ROADSIDE SIGN TWO POST EA	INSTALL ROADSIDE SIGN (LAMINATED WOOD BOX POST) EA	RELOCATE ROADSIDE SIGN EA	REMOVE ROADSIDE SIGN EA	FURNISH LAMINATED PANEL SIGN (1"-TYPE B) SQFT	FURNISH LAMINATED PANEL SIGN (2½"-TYPE B) SQFT
		M3-1	NORTH			1-6" x 6"	30" x 15"	GREEN	III	WHITE	VIII		X	3.13										
	6-9	M1-4	ROUTE 101 MARKER				45" x 36"	WHITE	VII	BLACK			X	11.25				1						
		M3-2	EAST				30" x 15"	GREEN	VII	WHITE	VIII		X	3.13										
		G28(156)(CA)	ROUTE SHIELD(156)				21" x 15"	WHITE	VIII	BLACK			X	2.19										
S-6	6-10	G8-22(CA)																				1		
	6-11	R4-3	SLOWER TRAFFIC KEEP RIGHT			1-6" x 6"	48" x 60"	WHITE	VIII	BLACK			X			20.00		1						
	6-12	E5-1	EXIT(342)			2-6" x 6"	90" x 60"	GREEN	VII	WHITE	VIII		X				37.50	1						
S-7	7-1	R2-1	SPEED LIMIT 35 MPH			1-4" x 6"	36" x 48"	WHITE	VIII	BLACK			X	12.00				1						
S-8	8-1	W13-2	EXIT 35 MPH			1-4" x 6"	36" x 48"	YELLOW	VIII	BLACK			X	12.00				1						
	8-2	G22(CA)	ARAMAS WATSONVILLE EXIT ¾ MILE																			1		
	8-3	R5-1,R5-1a																			1			
	8-4	R5-1,R5-1a																			1			
	8-5	R44B(CA)	BICYCLES MOTOR -DRIVEN CYCLE PROHIBITED			1-4" x 4"	30" x 36"	WHITE	III	BLACK			X	7.50				1						
	8-6	R6-1	ONE WAY																			1		
	8-7	R6-1	ONE WAY																			1		
	8-8	R5-1,R5-1a																				1		
	8-9	R5-1,R5-1a																				1		
	8-10	G8-22(CA)																				1		
	8-11	R4-3	SLOWER TRAFFIC KEEP RIGHT			1-6" x 6"	48" x 60"	WHITE	III	BLACK			X			20.00		1						
	8-12	R6-3(CA)	3 AXLE OR MORE XX PMH			1-6" x 6"	48" x 60"	WHITE	III	BLACK			X			20.00		1						
	8-13	W2-1																				1		
S-9	9-1	W2-3R	Y INTERSECTION AHEAD			1-6" x 6"	48"x 48"	YELLOW	VIII	BLACK			X		16.00			1						
		M1-4	ROUTE 101 MARKER			1-6" x 6"	45" x 36"	WHITE	VII	BLACK			X	11.25										
	9-2	G28(156)(CA)	ROUTE SHIELD(156)				21" x 15"	WHITE	VIII	BLACK			X	2.19				1						
		M4-5	TO				30" x 15"	WHITE	VII	BLACK			x	3.13										
		M6-3	ARROW				21" x 15"	WHITE	VII	BLACK			x	2.19										
	9-3	G8(CA)	DUNBARTON ROAD/ ARROW			2-6" x 6"	120" x 24"	GREEN	VII	WHITE	VIII		X			20.00								
	9-4	W12-1	ROAD SPLIT ARROW			1-4" x 6"	48" x 48"	YELLOW	III	BLACK			X		16.00			1						
	9-5	W3-2a	YIELD AHEAD			1-6" x 6"	48" x 48"	YELLOW	III	BLACK			X		16.00			1						
	9-6	R1-2	YIELD																			1		
	9-7	W3-5	REDUCE SPEED AHEAD(45)			1-6" x 6"	48" x 48"	YELLOW	VIII	BLACK					16.00			1						
	9-8	R2-1	SPEED LIMIT 45 MPH			1-4" x 6"	36" x 48"	WHITE	VIII	BLACK			X		12.00			1						
	9-9	R1-2	YIELD			1-6" x 6"	48" x 48"	RED	VIII	WHITE	IX		X		8.00			1						
	9-10	R1-2	YIELD			1-6" x 6"	48" x 48"	RED	VIII	WHITE	IX		X		8.00			1						
		G7-1(CA)	SAN JUAN ROAD			2-6" x 6"	90" x 18"	GREEN	VII	WHITE	VIII		X			11.25								
	9-11	M1-4	ROUTE 101 MARKER				45" x 36"	WHITE	VII	BLACK			X	11.25					1					
		M6-1	ARROW				21" x 15"	WHITE	VII	BLACK			x	2.19										
	9-12	R1-1	STOP			1-4" x 6"	36" x 36"	RED	VIII	WHITE	IX		X	4.50				1						
	9-13	R1-1	STOP			1-4" x 6"	36" x 36"	RED	VIII	WHITE	IX		X	4.50				1						
		M4-5	TO			1-6" x 6"	30" x 15"	GREEN	VII	WHITE	VIII		X	3.13										
	9-14	M1-4	ROUTE 101 MARKER				45" x 36"	WHITE	III	BLACK			X	11.25				1						
		G28(156)(CA)	ROUTE SHIELD(156)				21" x 15"	GREEN	VII	WHITE	VIII		X	2.19										
		M6-3	ARROW				21" x 15"	GREEN	VII	WHITE	VIII		X	2.19										
SHEET SUBTOTAL														111.16	92.00	91.25	37.50	19	1		2	9		

SIGN QUANTITIES
SQ-7

STATE OF CALIFORNIA - DEPARTMENT OF TRANSPORTATION
Caltrans® 06-TRAFFIC DESIGN

FUNCTIONAL SUPERVISOR: MOHAMMED QATAMI
CALCULATED-DESIGNED BY: MUNIR ASSAF
CHECKED BY: HASSAN TAHA
REVISED BY / DATE REVISED

LAST REVISION 12-21-11 | DATE PLOTTED => 15-APR-2012 | TIME PLOTTED => 05:48

Dist	COUNTY	ROUTE	POST MILES TOTAL PROJECT	SHEET No.	TOTAL SHEETS
05	Mon,SBt	101	100.0/101.3, 0.0/1.6	436	641

Hassan Taha 12/21/11
REGISTERED CIVIL ENGINEER DATE

4-9-12
PLANS APPROVAL DATE

REGISTERED PROFESSIONAL ENGINEER HASSAN M. TAHA No. 60130 Exp 06/30/12 CIVIL STATE OF CALIFORNIA

THE STATE OF CALIFORNIA OR ITS OFFICERS OR AGENTS SHALL NOT BE RESPONSIBLE FOR THE ACCURACY OR COMPLETENESS OF SCANNED COPIES OF THIS PLAN SHEET.

ROADSIDE SIGN QUANTITIES

SHEET No.	SIGN No.	SIGN CODE	SIGN MESSAGE	POST LENGTH FOR LAMINATED WOOD BOX POST SIGN — POST LENGTH LEFT	POST LENGTH RIGHT	No. OF POST AND POST SIZE	PANEL SIZE	BACKGROUND SHEETING COLOR	BACKGROUND RETRO-REFLECTIVITY ASTM TYPE	LEGEND SHEETING COLOR	LEGEND RETRO-REFLECTIVITY ASTM TYPE	GRAFFITI FLOW STANDARD	GRAFFITI FLOW PREMIUM	FURNISHED SINGLE SHEET ALUMINUM SIGN (0.063"-UNFRAMED) SQFT	(0.080"-UNFRAMED) SQFT	(0.063"-FRAMED) SQFT	(0.080"-FRAMED) SQFT	ROADSIDE SIGN ONE POST EA	ROADSIDE SIGN TWO POST EA	INSTALL ROADSIDE SIGN (LAMINATED WOOD BOX POST) EA	RELOCATE ROADSIDE SIGN EA	REMOVE ROADSIDE SIGN EA	FURNISH LAMINATED PANEL SIGN (1"-TYPE B) SQFT	FURNISH LAMINATED PANEL SIGN (2 1/2"-TYPE B) SQFT
S-9	9-15	W2-2L	T INTERSECTION			1-6" x 6"	48"x 48"	YELLOW	VIII	BLACK			X		16.00			1						
	9-16	R26(CA)	NO PARKING ANY TIME			1-4" x 4"	12" x 18"	WHITE	VIII	RED	VIII		X	1.50				1						
		R81(CA)	BIKE & SYMBOL				24" x 18"	WHITE	VIII	BLACK			X	3.00										
	9-17	R26(CA)	NO PARKING ANY TIME			1-4" x 4"	12" x 18"	WHITE	VIII	RED	VIII		X	1.50				1						
		R81(CA)	BIKE & SYMBOL				24" x 18"	WHITE	VIII	BLACK			X	3.00										
	9-18	R26(CA)	NO PARKING ANY TIME			1-4" x 4"	12" x 18"	WHITE	VIII	RED	VIII		X	1.50				1						
		R81(CA)	BIKE & SYMBOL				24" x 18"	WHITE	VIII	BLACK			X	3.00										
	9-19	R26(CA)	NO PARKING ANY TIME			1-4" x 4"	12" x 18"	WHITE	VIII	RED	VIII		X	1.50				1						
		R81(CA)	BIKE & SYMBOL				24" x 18"	WHITE	VIII	BLACK			X	3.00										
S-9	9-20	w1-6L	ARROW			1- 6" x 6"	36" x 18"	YELLOW	VIII	BLACK			X	4.50				1						
		SW100(CA)	MARKER				36" x 36"	YELLOW	VIII	BLACK			X	9.00										
	9-21	SW100(CA)	MARKER			1- 4" x 6"	36" x 36"	YELLOW	VIII	BLACK			X	9.00				1						
	9-22	w1-6R	ARROW			1- 6" x 6'	36" x 18"	YELLOW	VIII	BLACK			X	4.50				1						
		SW100(CA)	MARKER			1- 4" x 6'	36" x 36"	YELLOW	VIII	BLACK			X	9.00										
S-10	10-1	R26(CA)	NO PARKING ANY TIME			1-4" x 4"	12" x 18"	WHITE	VIII	RED	VIII		X	1.50				1						
		R81(CA)	BIKE & SYMBOL				24" x 18"	WHITE	VIII	BLACK			X	3.00										
	10-2	R26(CA)	NO PARKING ANY TIME			1-4" x 6"	12" x 18"	WHITE	VIII	RED	VIII		X	1.50				1						
		R81(CA)	BIKE & SYMBOL				24" x 18"	WHITE	VIII	BLACK			X	3.00										
	10-3	R26(CA)	NO PARKING ANY TIME			1-4" x 4"	12" x 18"	WHITE	VIII	RED	VIII		X	1.50				1						
		R81(CA)	BIKE & SYMBOL				24" x 18"	WHITE	VIII	BLACK			X	3.00										
	10-4	R26(CA)	NO PARKING ANY TIME			1-4" x 4"	12" x 18"	WHITE	VIII	RED	VIII		X	1.50				1						
		R81(CA)	BIKE & SYMBOL				24" x 18"	WHITE	VIII	BLACK			X	3.00										
	10-5	G8-22	DUNBERTON ROAD/ ARROW			2-4" x 6"	84" x 36"	GREEN	VII	WHITE	VIII		X				24.50		1					
	10-6	R2-1	SPEED LIMIT 45 MPH			1-4" x 6"	36" x 48"	WHITE	VIII	BLACK			X		12.00			1						
S-11	11-1	W1-8	CHEVRON(6)			1-4" x 4"	30"x 36"	YELLOW	III	BLACK			X	7.50				1						
	11-2	W1-8	CHEVRON(6)			1-4" x 4"	30"x 36"	YELLOW	III	BLACK			X	7.50				1						
	11-3	W1-8	CHEVRON(6)			1-4" x 4"	30"x 36"	YELLOW	III	BLACK			X	7.50				1						
	11-4	W1-8	CHEVRON(6)			1-4" x 4"	30"x 36"	YELLOW	III	BLACK			X	7.50				1						
	11-5	W1-8	CHEVRON(6)			1-4" x 4"	30"x 36"	YELLOW	III	BLACK			X	7.50				1						
	11-6	W1-8	CHEVRON(6)			1-4" x 4"	30"x 36"	YELLOW	III	BLACK			X	7.50				1						
	11-7	W1-2	LEFT TURN			1-4" x 6"	36" x 36"	YELLOW	III	BLACK			X	9.00				1						
		W13-1	30 MPH				24" x 24"	YELLOW	III	BLACK			x	4.00										
	11-8	W2-4	T INTERSECTION AHEAD			1-6" x 6"	48"x 48"	YELLOW	III	BLACK			X	16.00	16.00			1						
	11-9	W1-2	RIGHT TURN			1-4" x 6"	36" x 36"	YELLOW	III	BLACK			X	9.00				1						
		W13-1	30 MPH				24" x 24"	YELLOW	III	BLACK			x	4.00										
	11-10	W11-1	BICYCLE SYMBOL			1-4" x 6"	36"x 36"	YELLOW	VIII	BLACK			X	9.00				1						
		W16-1	SHARE THE ROAD				24" x 30"	YELLOW	VIII	BLACK			X	5.00										
SHEET SUBTOTAL														173.00	28.00		24.50	23	1					

SIGN QUANTITIES
SQ-8

STATE OF CALIFORNIA - DEPARTMENT OF TRANSPORTATION
Caltrans 06-TRAFFIC DESIGN

FUNCTIONAL SUPERVISOR: MOHAMMED QATAMI
CALCULATED-DESIGNED BY: HASSAN TAHA
CHECKED BY: MUNIR ASSAF
REVISED BY
DATE REVISED

LAST REVISION 12-21-11 | DATE PLOTTED => 15-APR-2012 | TIME PLOTTED => 05:48

Dist	COUNTY	ROUTE	POST MILES TOTAL PROJECT	SHEET No.	TOTAL SHEETS
05	Mon,SBt	101	100.0/101.3, 0.0/1.6	437	641

Hassan Taha 12/21/11
REGISTERED CIVIL ENGINEER DATE

4-9-12
PLANS APPROVAL DATE

REGISTERED PROFESSIONAL ENGINEER HASSAN M. TAHA No. 60130 Exp 06/30/12 CIVIL STATE OF CALIFORNIA

THE STATE OF CALIFORNIA OR ITS OFFICERS OR AGENTS SHALL NOT BE RESPONSIBLE FOR THE ACCURACY OR COMPLETENESS OF SCANNED COPIES OF THIS PLAN SHEET.

ROADSIDE SIGN QUANTITIES

SHEET No.	SIGN No.	SIGN CODE	SIGN MESSAGE	POST LENGTH FOR LAMINATED WOOD BOX POST SIGN: POST LENGTH LEFT	POST LENGTH RIGHT	No. OF POST AND POST SIZE	PANEL SIZE	BACKGROUND: SHEETING COLOR	BACKGROUND: RETRO-REFLECTIVITY ASTM TYPE	LEGEND: SHEETING COLOR	LEGEND: RETRO-REFLECTIVITY ASTM TYPE	GRAFFITI FLOW: STANDARD	GRAFFITI FLOW: PREMIUM	FURNISHED SINGLE SHEET ALUMINUM SIGN: (0.063"-UNFRAMED)	(0.080"-UNFRAMED)	(0.063"-FRAMED)	(0.080"-FRAMED)	ROADSIDE SIGN ONE POST	ROADSIDE SIGN TWO POST	INSTALL ROADSIDE SIGN (LAMINATED WOOD BOX POST)	RELOCATE ROADSIDE SIGN	REMOVE ROADSIDE SIGN	FURNISH LAMINATED PANEL SIGN (1"-TYPE B)	FURNISH LAMINATED PANEL SIGN (2½"-TYPE B)
														SQFT	SQFT	SQFT	SQFT	EA	EA	EA	EA	EA	SQFT	SQFT
S-11	11-11	W11-1	BICYCLE SYMBOL			1-4" x 6"	36"x 36"	YELLOW	VIII	BLACK			X	9.00				1						
		W16-1	SHARE THE ROAD				24" x 30"	YELLOW	VIII	BLACK			X	5.00										
	11-12	W11-1	BICYCLE SYMBOL			1-4" x 6"	36"x 36"	YELLOW	VIII	BLACK			X	9.00				1						
		W16-1	SHARE THE ROAD				24" x 30"	YELLOW	VIII	BLACK			X	5.00										
	11-13	W11-1	BICYCLE SYMBOL			1-4" x 6"	36"x 36"	YELLOW	VIII	BLACK			X	9.00				1						
		W16-1	SHARE THE ROAD				24" x 30"	YELLOW	VIII	BLACK			X	5.00										
	11-14	W31a(CA)	ROAD ENDS 500 FT			1-4" x 6"	36"x 36"	YELLOW	VIII	BLACK			X	9.00				1						
	11-15	W1-8	CHEVRON(4)			1-4" x 4"	30"x 36"	YELLOW	III	BLACK			X	7.50				1						
	11-16	W1-8	CHEVRON(4)			1-4" x 4"	30"x 36"	YELLOW	III	BLACK			X	7.50				1						
	11-17	W1-8	CHEVRON(4)			1-4" x 4"	30"x 36"	YELLOW	III	BLACK			X	7.50				1						
	11-18	W1-8	CHEVRON(4)			1-4" x 4"	30"x 36"	YELLOW	III	BLACK			X	7.50				1						
S-12	12-1	R2-1	SPEED LIMIT 60 MPH			1-6" x 6"	48" x 60"	WHITE	VIII	BLACK			X			20.00		1						
	12-2	SR15	SEAT BELT			1-4" x 6"	18" x 24"	WHITE	III	BLACK			X	3.00				1						
		SR15A	SAFETY BELT LAW ENFORCED				18" x 18"	WHITE	III	BLACK			X	2.25										
	12-3	G83-5(CA)	SAN JUAN ROAD 1 MILE	30′	38′	TYPE L	192" x 100"	GREEN	VII	WHITE	VIII		X							1				133.33
	12-4	G86-5	AROMAS, WASTONVILLE NEXT EXIT	26′	32′	TYPE M	144" x 90"	GREEN	VII	WHITE	VIII		X							1			108.00	
	12-5	G86-14	AROMAS WASTONVILLE EXIT 1 1/4 MILE	25′	32′	TYPE M	144" x 90"	GREEN	VII	WHITE	VIII		X							1			108.00	
SUBTOTAL SHEET SQ-1														201.06	12.00	40.00		29		2	1	6	198.00	133.33
SUBTOTAL SHEET SQ-2														156.68	44.00		37.50	21	1			13		
SUBTOTAL SHEET SQ-3														165.23	54.66	41.00	46.67	21	4		1	1		
SUBTOTAL SHEET SQ-4														155.02	73.33	25.00		21			1	5		
SUBTOTAL SHEET SQ-5														146.25	92.00	50.00	40.00	29	2					
SUBTOTAL SHEET SQ-6														285.35	103.33	46.00	86.67	26	4					
SUBTOTAL SHEET SQ-7														111.16	92.00	91.25	37.50	19	1		2	9		
SUBTOTAL SHEET SQ-8														173.00	28.00		24.50	23	1					
SUBTOTAL SHEET SQ-9														86.25		20.00		10		3			216.00	133.33
TOTAL														1480.00	499.32	313.25	272.84	199	13	5	5	34	414.00	266.66

SIGN QUANTITIES

SQ-9

REVISED BY | DATE REVISED
MUNIR ASSAF | HASSAN TAHA
CALCULATED-DESIGNED BY | CHECKED BY
FUNCTIONAL SUPERVISOR: MOHAMMED QATAMI

STATE OF CALIFORNIA - DEPARTMENT OF TRANSPORTATION
Caltrans® 06-TRAFFIC DESIGN

LAST REVISION 12-21-11 | DATE PLOTTED => 15-APR-2012 | TIME PLOTTED => 05:48

Dist	COUNTY	ROUTE	POST MILES TOTAL PROJECT	SHEET No.	TOTAL SHEETS
05	Mon,SBt	101	100.0/101.3, 0.0/1.6	438	641

Hassan Taha 12/21/11
REGISTERED CIVIL ENGINEER DATE

4-9-12
PLANS APPROVAL DATE

REGISTERED PROFESSIONAL ENGINEER HASSAN M. TAHA No. 60130 Exp 06/30/12 CIVIL STATE OF CALIFORNIA

THE STATE OF CALIFORNIA OR ITS OFFICERS OR AGENTS SHALL NOT BE RESPONSIBLE FOR THE ACCURACY OR COMPLETENESS OF SCANNED COPIES OF THIS PLAN SHEET.

OVERHEAD SIGN STRUCTURE QUANTITIES

SHEET No.	SIGN No.	SIGN CODE	LOCATION	PANEL SIZE	OVERHEAD SIGN PANEL					FURNISH LAMINATED PANEL SIGN (1"-TYPE A)	FURNISH SIGN STRUCTURE (TRUSS)	INSTALL SIGN STRUCTURE (TRUSS)	60" CIDH CONCRETE PILE (SIGN FOUNDATION)
					BACKGROUND		LEGEND		GRAFFITI FLOW				
					SHEETING COLOR	RETROR-EFLECTIVITY ASTM TYPE	SHEETING COLOR	RETROR-EFLECTIVITY ASTM TYPE	PREMIUM				
										SQFT	LB	LB	LF
S-3	A	G86-6(CA)	Sta 781+13 ROUTE 101 FNBT	228" x 80"	GREEN	VII	WHITE	VIII	X	126.67	19,100	19,100	26
S-8	B	G86-6(CA)	Sta 822+50 ROUTE 101 FSBT	228" x 80"	GREEN	VII	WHITE	VIII	X	126.67	19,100	19,100	26
									TOTAL	253.34	38,200	38,200	52

DELINEATORS AND MARKERS

SHEET No.	DELINEATOR (CLASS 1)				OBJECT MARKER
	TYPE (F)	TYPE (G)	TYPE (E)	TYPE (I)	TYPE (L-1)
	EA	EA			EA
S-2	3				1
S-3	39	14			1
S-4	56	18	2		
S-5	60	24	2	10	3
S-6	46	26			2
S-7	17				
S-8	4	30			1
S-9	4	4	3		
S-10					
S-11					
SUB-TOTAL	229	116	7	10	
TOTAL	362				8

SIGN QUANTITIES
SQ-10

REVISED BY | DATE REVISED
MUNIR ASSAF | HASSAN TAHA
CALCULATED-DESIGNED BY | CHECKED BY
FUNCTIONAL SUPERVISOR
MOHAMMED QATAMI

STATE OF CALIFORNIA - DEPARTMENT OF TRANSPORTATION
Caltrans® 06-TRAFFIC DESIGN

LAST REVISION 12-21-11 | DATE PLOTTED => 15-APR-2012 | TIME PLOTTED => 07:11

Dist	COUNTY	ROUTE	POST MILES TOTAL PROJECT	SHEET No.	TOTAL SHEETS
05	Mon,SBt	101	100.0/101.3, 0.0/1.6	439	641

LICENSED LANDSCAPE ARCHITECT

4-9-12
PLANS APPROVAL DATE

LICENSED LANDSCAPE ARCHITECT — COBB C. KILMER Lic.No.4131 — Signature — 06-30-12 Renewal Date — 12-21-11 Date — STATE OF CALIFORNIA

THE STATE OF CALIFORNIA OR ITS OFFICERS OR AGENTS SHALL NOT BE RESPONSIBLE FOR THE ACCURACY OR COMPLETENESS OF SCANNED COPIES OF THIS PLAN SHEET.

PLANT LIST AND PLANTING SPECIFICATIONS

PLANT GROUP	PLANT No.	SYMBOL	BOTANICAL NAME	COMMON NAME	SIZE	QUANTITY EACH	HOLE SIZE (INCH) Dia	HOLE SIZE (INCH) DEPTH	BASIN TYPE	IRON SULFATE ①	SOIL AMEND ①	COMMERCIAL FERTILIZER ① PLANTING	COMMERCIAL FERTILIZER ① PLT ESTB	BASIN MULCH ①	STAKING	PLANTING LIMITS MINIMUM DISTANCE (ft) FROM ETW	Pvmt	FENCE	WALL	PAVED DITCH	EARTH DITCH	ON CENTER (ft)	REMARKS
A	1		ARCTOSTAPHYLOS DENSIFLORA 'WHITE LANTERNS'	'WHITE LANTERNS' MANZANITA	No.1	204	③		I	--	--	1 Pkt	--	2 CF	--	--	4	3	--	--	3	8	SHRUB ⑤ ⑥
	2		ARCTOSTAPHYLOS PAJAROENSIS 'WARREN ROBERTS'	'WARREN ROBERTS' PAJARO MANZANITA	No.1	26	③		I	--	--	1 Pkt	--	2 CF	--	--	6	3	--	--	3	6	SHRUB ⑤ ⑥
	3		CEANOTHUS 'CONCHA'	'CONCHA' WILD LILAC	No.1	341	③		II	--	--	1 Pkt	--	2 CF	--	--	10	3	--	--	3	6	SHRUB ⑤ ⑥
	4		DENDROMECON HARTFORDII	ISLAND BUSH POPPY	No.1	119	③		II	--	--	1 Pkt	--	2 CF	--	--	15	3	--	--	3	④	SHRUB ⑤ ⑥
	5		LAVATERA ASSURGENTIFLORA	TREE MALLOW	No.1	170	③		II	--	--	1 Pkt	--	2 CF	--	--	10	3	--	--	3	8	SHRUB ⑤ ⑥
	6		PARTHENOCISSUS TRICUSPIDATA	BOSTON IVY	No.1	62	③		II	--	--	1 Pkt	--	2 CF	--	--	--	--	--	--	--	④	VINE ⑤ ⑥
	7		QUERCUS AGRIFOLIA	COAST LIVE OAK	No.1	680	③		II	--	--	1 Pkt	--	2 CF	⑧	30	--	3	--	--	--	④	TREE, MULTI-TRUNK NATURAL FORM ⑤ ⑥
	8		RHAMNUS CALIFORNICA 'EVE CASE'	COFFEEBERRY	No.1	214	③		II	--	--	1 Pkt	--	2 CF	--	--	8	3	--	--	3	6	SHRUB ⑤ ⑥
B	9		AESCULUS CALIFORNICA	CALIFORNIA BUCKEYE	No.5	21	③		II	--	--	2 Pkt	--	3 CF	--	30	--	3	--	--	--	④	TREE, MULTI-TRUNK NATURAL FORM ⑤ ⑥
	10		CEANOTHUS 'RAY HARTMAN'	'RAY HARTMAN' WILD LILAC	No.5	537	③		II	--	--	2 Pkt	--	3 CF	--	--	15	3	--	--	3	15	SHRUB ⑤ ⑥
	11		CEANOTHUS THYRSIFLORUS 'EL DORADO'	VARIGATED BLUE BLOSSOM	No.5	161	③		II	--	--	2 Pkt	--	3 CF	--	--	8	3	--	--	3	④	SHRUB ⑤ ⑥
	12		HETEROMELES ARBUTIFOLIA	TOYON	No.5	230	③		II	--	--	2 Pkt	--	3 CF	--	--	15	3	--	--	3	10	SHRUB ⑤ ⑥
	13		MYRICA CALIFORNICA	PACIFIC WAX MYRTLE	No.5	230	③		II	--	--	2 Pkt	--	3 CF	--	--	15	3	--	--	3	④	SHRUB ⑤ ⑥
	14		ROMNEYA COULTERI 'WHITE CLOUD'	'WHITE CLOUD' MATILIJA POPPY	No.5	43	③		II	--	--	2 Pkt	--	3 CF	--	--	10	3	--	--	3	④	SHRUB ⑤ ⑥
	15		SAMBUCUS NIGRA MEXICANA	BLUE ELDERBERRY	No.5	77	③		II	--	--	2 Pkt	--	3 CF	--	--	15	3	--	--	3	④	SHRUB ⑤ ⑥
	16		QUERCUS AGRIFOLIA	COAST LIVE OAK	No.5	776	③		II	--	--	2 Pkt	--	3 CF	--	30	--	3	--	--	3	④	TREE, MULTI-TRUNK NATURAL FORM ⑤ ⑥

LEGEND:

EXISTING VEGETATION

WILD FLOWER SEEDING AREA

APPLICABLE WHEN CIRCLED:

① - QUANTITIES SHOWN ARE "PER PLANT" UNLESS SHOWN ON PLANTING PLANS AS CY APPLICATION RATES.
② - SUFFICIENT TO RECEIVE ROOT BALL AND FERTILIER, IF REQUIRED.
③ - SUFFICIENT TO RECEIVE ROOT BALL, AND ROOT PROTECTOR IF REQUIRED.
④ - AS SHOWN ON PLANS.
⑤ - ROOT PROTECTORS REQUIRED.
⑥ - FOLIAGE PROTECTORS REQUIRED.
⑦ - SEE SPECIAL PROVISIONS.
⑧ - REQUIRED.
⑨ - SEE SPECIAL PROVISIONS AND EROSION CONTROL SHEETS FOR "BRUSH LAYERING"
⑩ - PLANT IN RANDOM MIXED GROUPINGS
⑪ - SEE SPECIAL PROVISIONS FOR "EROSION CONTROL (NATIVE GRASS SOD)"
⑫ - SEE SPECIAL PROVISIONS AND DETAILS FOR "WILLOW POLES (PLANT GROUP WP)"
⑬ - WILLOW POLES IN RSP, REFER TO DRAINAGE PLANS AND DETAILS FOR RSP.

NOTES:

1. UNDERLINED PORTIONS OF BOTANICAL NAME INDICATE ABBREVIATIONS USED ON PLANTING PLANS.
2. PLANT No.7 IS SHOWN ON PLANS AS QUE AGR (1g), PLANT No.16 IS SHOWN ON PLANS AS QUE AGR (5g), PLANT No.28 IS SHOWN ON PLANS AS QUE AGR (15g). AND PLANT No.22 IS SHOWN ON PLANS AS QUE AGR (A). MIX SIZES IN RANDOM GROUPS.
3. PLANTING SETBACKS MAY BE CLOSER TO EDGE OF PAVEMENT THAN LISTED LIMITS ONLY ALONG BICYCLE PATHS AND AT DEADEND CUL DE SACS AS SHOWN ON PLANS.
4. IN RECP AREAS SHOWN ON EROSION CONTROL PLANS TO RECEIVE EROSION CONTROL NETTING,EDGES OF NETTING CUT FOR PLANTING HOLES SHALL BE SECURED WITH STAPLES UNDER BASIN MULCH.

PLANT LIST
PL-1

REVISED BY | DATE REVISED
Corby Kilmer | Jo Jackson
CALCULATED-DESIGNED BY | CHECKED BY
SENIOR LANDSCAPE ARCHITECT: Dennis J. Reeves
STATE OF CALIFORNIA - DEPARTMENT OF TRANSPORTATION
Caltrans® LANDSCAPE ARCHITECTURE

LAST REVISION 12-14-11 | DATE PLOTTED => 17-APR-2012 | TIME PLOTTED => 15:26

Dist	COUNTY	ROUTE	POST MILES TOTAL PROJECT	SHEET No.	TOTAL SHEETS
05	Mon,SBt	101	100.0/101.3, 0.0/1.6	440	641

LICENSED LANDSCAPE ARCHITECT

4-9-12
PLANS APPROVAL DATE

LICENSED LANDSCAPE ARCHITECT
COBB C. KILMER Lic.No.4131
Signature
06-30-12
Renewal Date
12-21-11
Date
STATE OF CALIFORNIA

THE STATE OF CALIFORNIA OR ITS OFFICERS OR AGENTS SHALL NOT BE RESPONSIBLE FOR THE ACCURACY OR COMPLETENESS OF SCANNED COPIES OF THIS PLAN SHEET.

PLANT LIST AND PLANTING SPECIFICATIONS

PLANT GROUP	PLANT No.	SYMBOL	BOTANICAL NAME	COMMON NAME	SIZE	QUANTITY EACH	HOLE SIZE (INCH) Dia	HOLE SIZE (INCH) DEPTH	BASIN TYPE	IRON SULFATE ①	SOIL AMEND ①	COMMERCIAL FERTILIZER ① PLANTING	COMMERCIAL FERTILIZER ① PLT ESTB	BASIN MULCH ①	STAKING	PLANTING LIMITS MINIMUM DISTANCE (ft) FROM ETW	Pvmt	FENCE	WALL	PAVED DITCH	EARTH DITCH	ON CENTER (ft)	REMARKS
K	17		CALACEDRUS DECURRENS	CALIFORNIA INCENSE CEDAR	24" BOX	8	③		II	--	--	4 Pkt	--	6 CF	⑧	30	--	3	--	--	--	④	SPECIMEN TREE
	18		PRUNUS SARGENTII 'PINK FLARE'	'PINK FLARE' FLOWERING CHERRY	24" BOX	44	③		II	--	--	4 Pkt	0.5 LB	6 CF	⑧	--	5	3	--	--	--	④	SPECIMEN TREE SIDEWALK CANOPY
M	19		CORNUS STOLONIFERA BAILEYI	'BRIGHT RED' REDTWIG DOGWOOD	Liner⑦	540	②		--	--	--	1 Pkt	--	--	--	--	8	3	--	--	--	3	SHRUB ⑩
	20		RUBUS URSINUS	CALIFORNIA BLACKBERRY	Liner⑦	420	②		--	--	--	1 Pkt	--	--	--	--	8	3	--	--	--	3	VINE ⑩
	21		JUNCUS EFFUSUS	COMMON RUSH	Liner⑦	400	②		--	--	--	--	--	--	--	--	8	3	--	--	--	3	GRASS
O	22		QUERCUS AGRIFOLIA	COAST LIVE OAK	Acorn⑦	720	②		--	--	--	--	--	--	--	30	--	3	--	--	--	④	TREE
U	23		ACER MACROPHYLLUM	BIGLEAF MAPLE	No.15	58	③		II	--	--	3 Pkt	--	4 CF	⑧	30	--	3	--	--	--	④	TREE, MULTI-TRUNK NATURAL FORM ⑤
	24		ACER NEGUNDO CALIFORNICUM 'VARIEGATUM'	VARIGATED BOX ELDER	No.15	59	③		II	--	--	3 Pkt	--	4 CF	⑧	30	--	3	--	--	--	④	TREE, MULTI-TRUNK NATURAL FORM ⑤
	25		ACER FREMANII 'AUTUMN BLAZE'	'AUTUMN BLAZE' MAPLE	No.15	94	③		II	--	--	3 Pkt	--	4 CF	⑧	30	--	3	--	--	--	④	TREE ⑤
	26		PLATANUS RACEMOSA	CALIFORNIA SYCAMORE	No.15	138	③		II	--	--	3 Pkt	--	4 CF	⑧	40	--	3	--	--	--	④	TREE, MULTI-TRUNK NATURAL FORM ⑤
	27		POPULUS FREMONTII	WESTERN COTTONWOOD	No.15	14	③		II	--	--	3 Pkt	--	4 CF	⑧	30	--	3	--	--	--	④	MALE TREE, MULTI-TRUNK NATURAL FORM ⑤
	28		QUERCUS AGRIFOLIA	COAST LIVE OAK	No.15	751	③		II	--	--	3 Pkt	--	4 CF	⑧	30	--	3	--	--	--	④	TREE, MULTI-TRUNK NATURAL FORM ⑤
	29		QUERCUS DOUGLASIANA	BLUE OAK	No.15	124	③		II	--	--	3 Pkt	--	4 CF	⑧	30	--	3	--	--	--	④	TREE, MULTI-TRUNK NATURAL FORM ⑤
	30		QUERCUS LOBATA	VALLEY OAK	No.15	40	③		II	--	--	3 Pkt	--	4 CF	⑧	30	--	3	--	--	--	④	TREE, MULTI-TRUNK NATURAL FORM ⑤
T	31		⑪	⑪	SOD	29,460 SF	--		--	--	--	--	--	--	--	--	--	--	--	--	--	④	PERENNIAL NATIVE GRASS SOD ⑪
WC	32		SALIX SPECIES WC	WILLOW	CUTTING	870	⑦		--	--	--	⑦	--	--	--	--	--	6	6	--	6	6	SHRUB ⑦
WP	33		SALIX SPECIES WP	WILLOW	POLE	80	⑦		--	--	--	⑦	--	--	--	--	--	6	6	--	--	6	SHRUB ⑫ ⑬
WB	34		SALIX SPECIES WB	WILLOW	BRANCH	5500	⑦		--	--	--	⑦	--	--	--	--	--	6	--	--	--	6	SHRUB ⑨

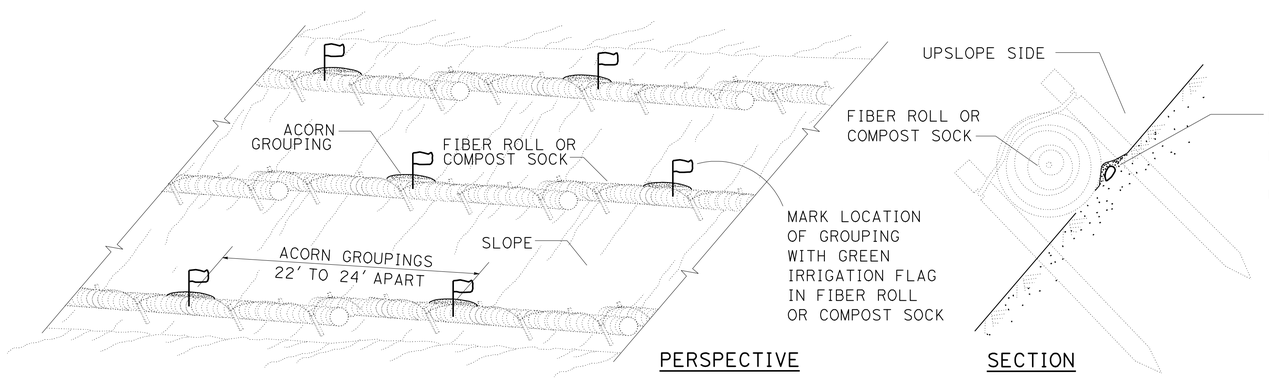

PLANT ACORNS IN GROUPINGS OF 3 ACORNS EACH.
SPACE ACORNS 8" TO 12" APART LINEARLY IN EACH GROUPING.
PLANT ACORNS ON THEIR SIDES UNDER 1/2" TO 1" OF SOIL.
SPACE GROUPINGS 22' TO 24' APART ALONG
UPSLOPE SIDE OF FIBER ROLLS OR COMPOST SOCKS.

ACORN PLANTING
NO SCALE

PLANT LIST
PL-2

REVISED BY | DATE REVISED
Corby Kilmer | Jo Jackson
CALCULATED-DESIGNED BY | CHECKED BY
SENIOR LANDSCAPE ARCHITECT
Dennis J. Reeves
STATE OF CALIFORNIA - DEPARTMENT OF TRANSPORTATION
Caltrans® LANDSCAPE ARCHITECTURE

LAST REVISION 03-08-12 | DATE PLOTTED => 15-APR-2012 | TIME PLOTTED => 07:11

NOTE: FOR ACCURATE RIGHT OF WAY DATA,
CONTACT RIGHT OF WAY ENGINEERING AT THE DISTRICT OFFICE.

Dist	COUNTY	ROUTE	POST MILES TOTAL PROJECT	SHEET No.	TOTAL SHEETS
05	Mon,SBt	101	100.0/101.3, 0.0/1.6	441	641

LICENSED LANDSCAPE ARCHITECT

4-9-12
PLANS APPROVAL DATE

LICENSED LANDSCAPE ARCHITECT
COBB C. KILMER Lic.No.4131
Signature
06-30-12
Renewal Date
12-21-11
Date
STATE OF CALIFORNIA

THE STATE OF CALIFORNIA OR ITS OFFICERS OR AGENTS SHALL NOT BE RESPONSIBLE FOR THE ACCURACY OR COMPLETENESS OF SCANNED COPIES OF THIS PLAN SHEET.

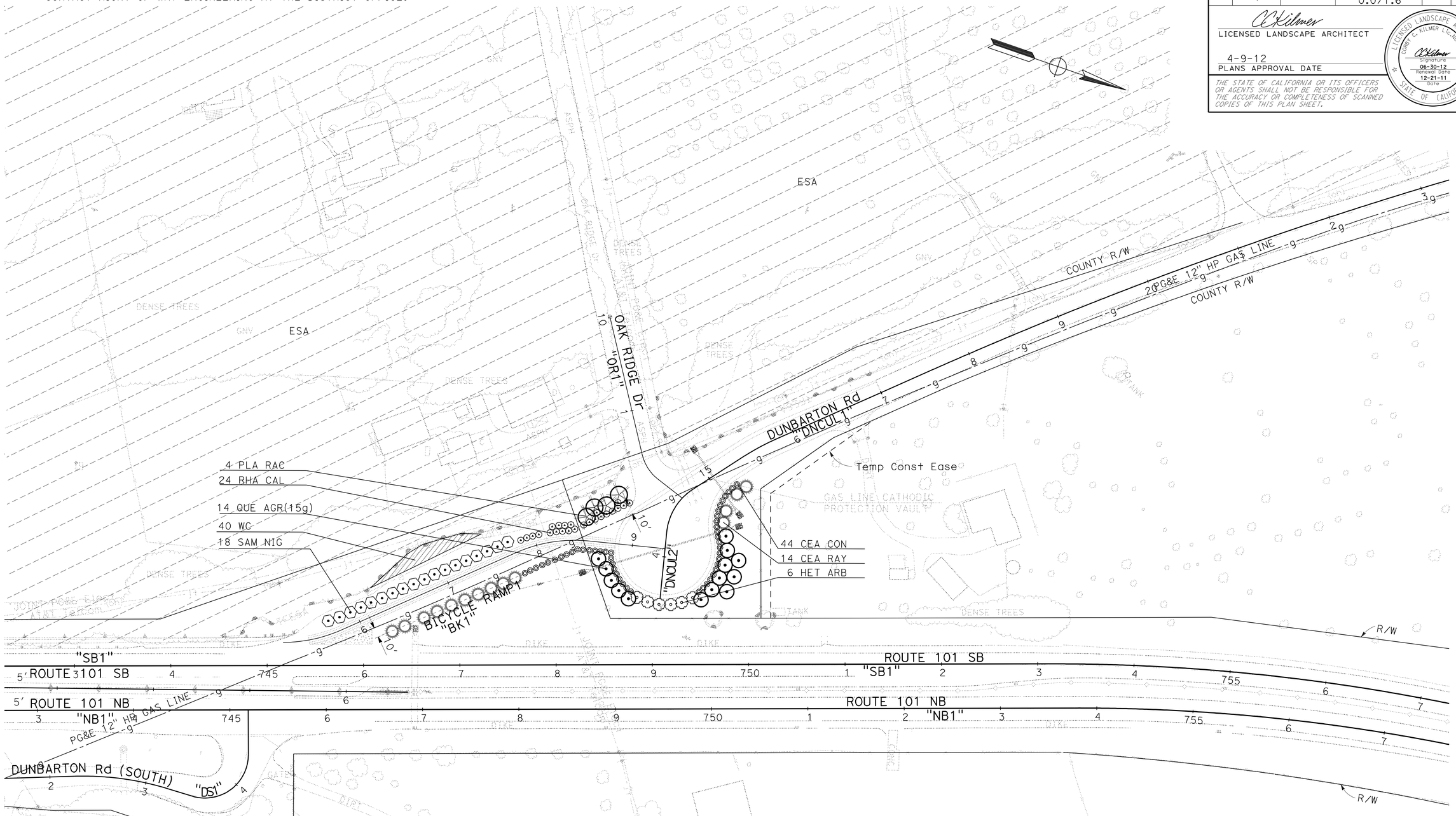

APPROVED FOR PLANTING WORK ONLY

PLANTING PLAN
PP-1

SCALE: 1" = 50'

STATE OF CALIFORNIA - DEPARTMENT OF TRANSPORTATION
Caltrans® LANDSCAPE ARCHITECTURE

SENIOR LANDSCAPE ARCHITECT: Dennis J. Reeves
CALCULATED-DESIGNED BY: Corby Kilmer
CHECKED BY: Jo Jackson
REVISED BY
DATE REVISED

LAST REVISION 03-08-12
DATE PLOTTED => 15-APR-2012
TIME PLOTTED => 07:11

NOTE: FOR ACCURATE RIGHT OF WAY DATA,
CONTACT RIGHT OF WAY ENGINEERING AT THE DISTRICT OFFICE.

Dist	COUNTY	ROUTE	POST MILES TOTAL PROJECT	SHEET No.	TOTAL SHEETS
05	Mon,SBt	101	100.0/101.3, 0.0/1.6	442	641

LICENSED LANDSCAPE ARCHITECT

4-9-12
PLANS APPROVAL DATE

LICENSED LANDSCAPE ARCHITECT
CORBY C. KILMER LIC.No.4131
Signature
06-30-12
Renewal Date
12-21-11
Date
STATE OF CALIFORNIA

THE STATE OF CALIFORNIA OR ITS OFFICERS OR AGENTS SHALL NOT BE RESPONSIBLE FOR THE ACCURACY OR COMPLETENESS OF SCANNED COPIES OF THIS PLAN SHEET.

APPROVED FOR PLANTING WORK ONLY

PLANTING PLAN
PP-2

SCALE: 1" = 50'

STATE OF CALIFORNIA - DEPARTMENT OF TRANSPORTATION
Caltrans® LANDSCAPE ARCHITECTURE

SENIOR LANDSCAPE ARCHITECT: Dennis J. Reeves
CALCULATED-DESIGNED BY: Corby Kilmer
CHECKED BY: Jo Jackson
REVISED BY
DATE REVISED

LAST REVISION 03-08-12
DATE PLOTTED => 15-APR-2012
TIME PLOTTED => 07:11

Dist	COUNTY	ROUTE	POST MILES TOTAL PROJECT	SHEET No.	TOTAL SHEETS
05	Mon,SBt	101	100.0/101.3, 0.0/1.6	443	641

LICENSED LANDSCAPE ARCHITECT

4-9-12
PLANS APPROVAL DATE

THE STATE OF CALIFORNIA OR ITS OFFICERS OR AGENTS SHALL NOT BE RESPONSIBLE FOR THE ACCURACY OR COMPLETENESS OF SCANNED COPIES OF THIS PLAN SHEET.

LICENSED LANDSCAPE ARCHITECT
CORBY C. KILMER Lic.No.4131
Signature
06-30-12
Renewal Date
12-21-11
Date
STATE OF CALIFORNIA

NOTE: FOR ACCURATE RIGHT OF WAY DATA,
CONTACT RIGHT OF WAY ENGINEERING AT THE DISTRICT OFFICE.

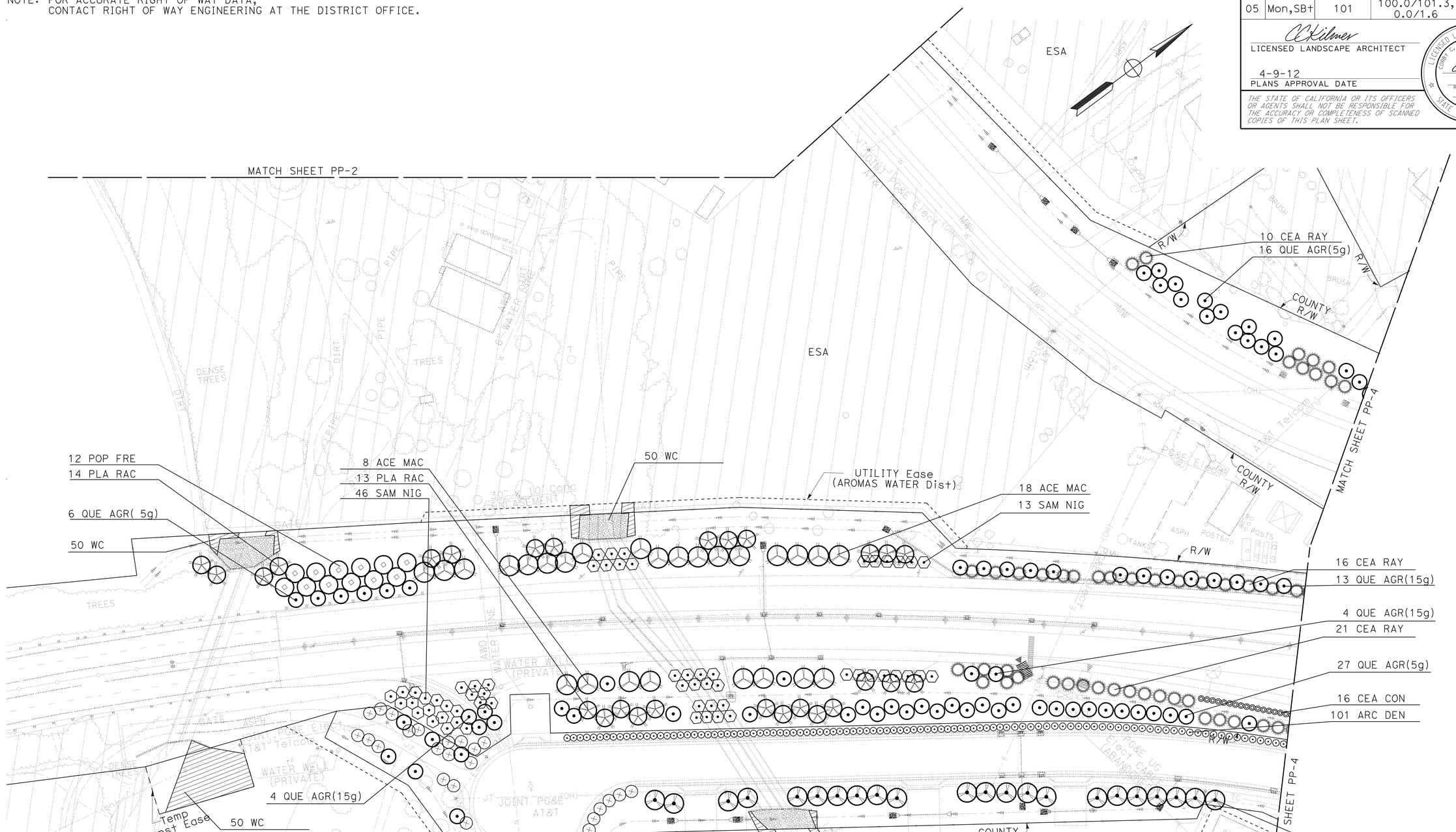

APPROVED FOR PLANTING WORK ONLY

PLANTING PLAN PP-3

SCALE: 1" = 50'

STATE OF CALIFORNIA - DEPARTMENT OF TRANSPORTATION
Caltrans® LANDSCAPE ARCHITECTURE

SENIOR LANDSCAPE ARCHITECT: Dennis J. Reeves
CALCULATED-DESIGNED BY: Corby Kilmer
CHECKED BY: Jo Jackson
REVISED BY
DATE REVISED

LAST REVISION: 12-20-11
DATE PLOTTED => 15-APR-2012
TIME PLOTTED => 07:11

Dist	COUNTY	ROUTE	POST MILES TOTAL PROJECT	SHEET No.	TOTAL SHEETS
05	Mon,SB†	101	100.0/101.3, 0.0/1.6	444	641

LICENSED LANDSCAPE ARCHITECT

4-9-12
PLANS APPROVAL DATE

LICENSED LANDSCAPE ARCHITECT
CORBY C. KILMER (LSC No. 4151)
Signature
06-30-12
Renewal date
12-21-11
Date
STATE OF CALIFORNIA

THE STATE OF CALIFORNIA OR ITS OFFICERS OR AGENTS SHALL NOT BE RESPONSIBLE FOR THE ACCURACY OR COMPLETENESS OF SCANNED COPIES OF THIS PLAN SHEET.

NOTE: FOR ACCURATE RIGHT OF WAY DATA,
CONTACT RIGHT OF WAY ENGINEERING AT THE DISTRICT OFFICE.

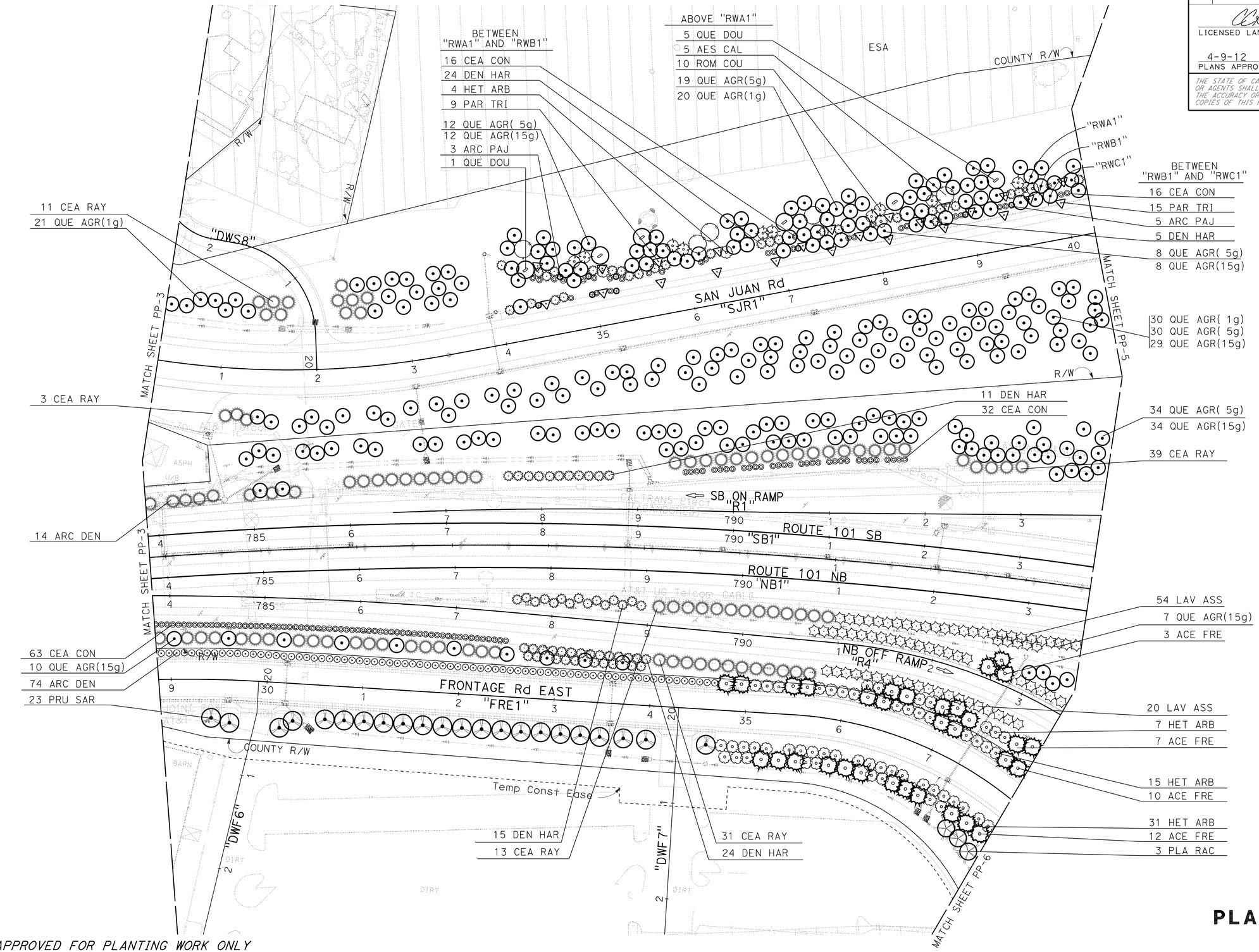

APPROVED FOR PLANTING WORK ONLY

PLANTING PLAN PP-4

SCALE: 1" = 50'

STATE OF CALIFORNIA - DEPARTMENT OF TRANSPORTATION
Caltrans® LANDSCAPE ARCHITECTURE

SENIOR LANDSCAPE ARCHITECT: Dennis J. Reeves
CALCULATED-DESIGNED BY: Jo Jackson
CHECKED BY: Corby Kilmer
REVISED BY
DATE REVISED

LAST REVISION 12-20-11
DATE PLOTTED => 15-APR-2012
TIME PLOTTED => 07:12

Dist	COUNTY	ROUTE	POST MILES TOTAL PROJECT	SHEET No.	TOTAL SHEETS
05	Mon,SBt	101	100.0/101.3, 0.0/1.6	445	641

LICENSED LANDSCAPE ARCHITECT

4-9-12
PLANS APPROVAL DATE

THE STATE OF CALIFORNIA OR ITS OFFICERS OR AGENTS SHALL NOT BE RESPONSIBLE FOR THE ACCURACY OR COMPLETENESS OF SCANNED COPIES OF THIS PLAN SHEET.

LICENSED LANDSCAPE ARCHITECT
CORBY C. KILMER LIC. No. 4131
Signature
06-30-12
Renewal date
12-21-11
Date
STATE OF CALIFORNIA

NOTE: FOR ACCURATE RIGHT OF WAY DATA,
CONTACT RIGHT OF WAY ENGINEERING AT THE DISTRICT OFFICE.

APPROVED FOR PLANTING WORK ONLY

PLANTING PLAN
PP-5

SCALE: 1" = 50'

STATE OF CALIFORNIA - DEPARTMENT OF TRANSPORTATION
Caltrans® LANDSCAPE ARCHITECTURE

SENIOR LANDSCAPE ARCHITECT: Dennis J. Reeves
CALCULATED-DESIGNED BY: Jo Jackson
CHECKED BY: Corby Kilmer
REVISED BY
DATE REVISED

LAST REVISION 12-20-11
DATE PLOTTED => 15-APR-2012
TIME PLOTTED => 07:12

Dist	COUNTY	ROUTE	POST MILES TOTAL PROJECT	SHEET No.	TOTAL SHEETS
05	Mon,SBt	101	100.0/101.3, 0.0/1.6	446	641

LICENSED LANDSCAPE ARCHITECT

4-9-12
PLANS APPROVAL DATE

THE STATE OF CALIFORNIA OR ITS OFFICERS OR AGENTS SHALL NOT BE RESPONSIBLE FOR THE ACCURACY OR COMPLETENESS OF SCANNED COPIES OF THIS PLAN SHEET.

LICENSED LANDSCAPE ARCHITECT
CORBY C. KILMER LIC. No. 4131
Signature
06-30-12
Renewal Date
12-21-11
Date
STATE OF CALIFORNIA

NOTE: FOR ACCURATE RIGHT OF WAY DATA,
CONTACT RIGHT OF WAY ENGINEERING AT THE DISTRICT OFFICE.

APPROVED FOR PLANTING WORK ONLY

PLANTING PLAN PP-6

SCALE: 1" = 50'

STATE OF CALIFORNIA - DEPARTMENT OF TRANSPORTATION
Caltrans® LANDSCAPE ARCHITECTURE

SENIOR LANDSCAPE ARCHITECT: Dennis J. Reeves
CALCULATED-DESIGNED BY: Jo Jackson
CHECKED BY: Corby Kilmer
REVISED BY
DATE REVISED

LAST REVISION 03-08-12
DATE PLOTTED => 15-APR-2012
TIME PLOTTED => 07:12

Dist	COUNTY	ROUTE	POST MILES TOTAL PROJECT	SHEET No.	TOTAL SHEETS
05	Mon,SBt	101	100.0/101.3, 0.0/1.6	447	641

LICENSED LANDSCAPE ARCHITECT

4-9-12
PLANS APPROVAL DATE

LICENSED LANDSCAPE ARCHITECT
COBB C. KILMER Lic.No.4131
Signature
06-30-12
Renewal Date
12-21-11
Date
STATE OF CALIFORNIA

THE STATE OF CALIFORNIA OR ITS OFFICERS OR AGENTS SHALL NOT BE RESPONSIBLE FOR THE ACCURACY OR COMPLETENESS OF SCANNED COPIES OF THIS PLAN SHEET.

NOTE: FOR ACCURATE RIGHT OF WAY DATA,
CONTACT RIGHT OF WAY ENGINEERING AT THE DISTRICT OFFICE.

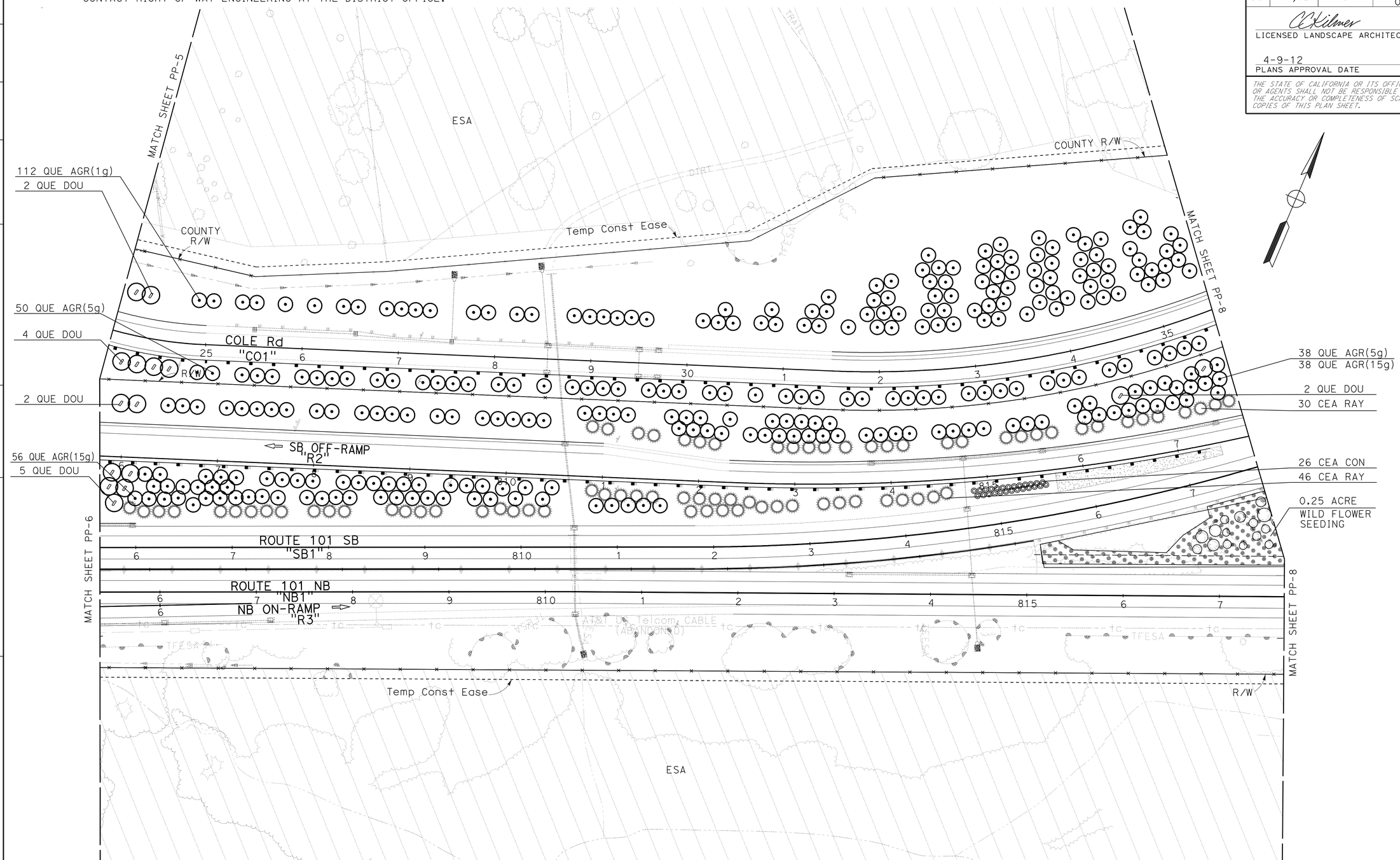

APPROVED FOR PLANTING WORK ONLY

PLANTING PLAN PP-7

SCALE: 1" = 50'

STATE OF CALIFORNIA - DEPARTMENT OF TRANSPORTATION
Caltrans®
LANDSCAPE ARCHITECTURE

SENIOR LANDSCAPE ARCHITECT: Dennis J. Reeves
CALCULATED-DESIGNED BY: Jo Jackson
CHECKED BY: Corby Kilmer
REVISED BY
DATE REVISED

LAST REVISION 12-20-11
DATE PLOTTED => 15-APR-2012
TIME PLOTTED => 07:13

NOTE: FOR ACCURATE RIGHT OF WAY DATA,
CONTACT RIGHT OF WAY ENGINEERING AT THE DISTRICT OFFICE.

Dist	COUNTY	ROUTE	POST MILES TOTAL PROJECT	SHEET No.	TOTAL SHEETS
05	Mon,SBt	101	100.0/101.3, 0.0/1.6	448	641

LICENSED LANDSCAPE ARCHITECT

4-9-12
PLANS APPROVAL DATE

LICENSED LANDSCAPE ARCHITECT
CORBY C. KILMER LIC.No.4131
Signature
06-30-12
Renewal Date
12-21-11
Date
STATE OF CALIFORNIA

THE STATE OF CALIFORNIA OR ITS OFFICERS OR AGENTS SHALL NOT BE RESPONSIBLE FOR THE ACCURACY OR COMPLETENESS OF SCANNED COPIES OF THIS PLAN SHEET.

APPROVED FOR PLANTING WORK ONLY

PLANTING PLAN
PP- 8

SCALE: 1" = 50'

STATE OF CALIFORNIA - DEPARTMENT OF TRANSPORTATION
Caltrans®
LANDSCAPE ARCHITECTURE

SENIOR LANDSCAPE ARCHITECT: Dennis J. Reeves
CALCULATED-DESIGNED BY: Corby Kilmer
CHECKED BY: Jo Jackson
REVISED BY
DATE REVISED

LAST REVISION 03-08-12
DATE PLOTTED => 15-APR-2012
TIME PLOTTED => 07:13

Dist	COUNTY	ROUTE	POST MILES TOTAL PROJECT	SHEET No.	TOTAL SHEETS
05	Mon,SBt	101	100.0/101.3, 0.0/1.6	449	641

LICENSED LANDSCAPE ARCHITECT

4-9-12
PLANS APPROVAL DATE

LICENSED LANDSCAPE ARCHITECT
CORBY C. KILMER L.S.No.4131
Signature
06-30-12
Renewal Date
12-21-11
Date
STATE OF CALIFORNIA

THE STATE OF CALIFORNIA OR ITS OFFICERS OR AGENTS SHALL NOT BE RESPONSIBLE FOR THE ACCURACY OR COMPLETENESS OF SCANNED COPIES OF THIS PLAN SHEET.

NOTE: FOR ACCURATE RIGHT OF WAY DATA,
CONTACT RIGHT OF WAY ENGINEERING AT THE DISTRICT OFFICE.

NOTES

1. SUPPLY LINE (MAIN) SHALL BE 3" . WHERE MAINLINE RUNS ALONG RIGHT OF WAY LINE BETWEEN CALTRANS AND COUNTY, THE MAINLINE SHALL BE INSIDE CALTRANS RIGHT OF WAY.

2. SUPPLY LINE (LATERAL) SHALL CONFORM TO THE LATERAL PIPE SIZING CHART.

3. SUPPLY LINE (LATERAL) FOR TYPE A-1 SPRINKLERS SHALL BE PIPE ON GRADE, AND SHALL BE CONFORM TO THE LATERAL PIPE SIZING CHART.

4. PLASTIC PIPE (IRRIGATION LINE) SHALL BE 1". LATERAL RUNS OF PLASTIC PIPE (IRRIGATION LINE) SHALL NOT EXCEED 14 GPM, OR 800' IN LENGTH. PLASTIC PIPE (IRRIGATION LINE) SHALL BE PLACED OVER EROSION CONTROL NETTING.

5. EXCEPT AT BALLANTREE LANE, IRRIGATION CIRCUITS ARE DESIGNED SUCH THAT EACH COUNTY, MONTEREY COUNTY AND SAN BENITO COUNTY, SHALL BE ABLE TO MANUALLY OPERATE ITS OWN SEPARATE IRRIGATION SYSTEM CIRCUITS AT THE END OF THE PLANT ESTABLISHMENT PERIOD, INDEPENDANTLY FROM THE WELL AND IRRIGATION SYSTEM WITHIN CALTRANS RIGHT OF WAY.

6. IRRIGATION CIRCUITS FOR PLANTINGS AT BALLANTREE LANE ARE DESIGNED SUCH THAT THE HOMEOWNERS ASSOCIATION SHALL BE ABLE TO MANUALLY OPERATE ITS OWN SEPARATE IRRIGATION SYSTEM CIRCUITS AT THE END OF THE PLANT ESTABLISHMENT PERIOD, INDEPENDANTLY FROM THE WELL AND IRRIGATION SYSTEM WITHIN CALTRANS RIGHT OF WAY, AND SEPARATELY FROM EITHER COUNTY SYSTEM.

7. STATIONS ON IC "MSB" HAVE VALVE CODE DESIGNATIONS OF "M', "S", AND "B" WHICH DESIGNATE THE FOLLOWING:
   "M" ARE STATIONS IN MONTEREY COUNTY;
   "S" ARE STATIONS IN SAN BENITO COUNTY;
   "B" ARE STATIONS ALONG BALLANTREE LANE.
STATIONS ON IC "C" ARE WITHIN CALTRANS RIGHT-OF-WAY.
CAM COUPLER WATERING IRRIGATION SYSTEMS ARE DESIGNATED AS "T".

8. UNLESS SHOWN OTHERWISE, EROSION CONTROL (NATIVE GRASS SOD), PLANT GROUP M, AND PLANT GROUPS WC, WP, AND WB PLANTS SHALL BE TRUCK WATERED.

9. SEE EROSION CONTROL PLANS FOR LOCATIONS OF RECP NETTING.

10. IRRIGATION CONTROLLER ENCLOSURE CABINET SHALL BE PER STANDARD PLAN H10 EXCEPT THAT CONCRETE FOUNDATION SHALL BE INTEGRAL TO CONCRETE WELL SLAB (SEE W- AND EE- SHEETS).

VALVE CODE

0"-M-1-00 -00

- RCV SIZE (INCH)
- IRRIGATION CONTROLLER (SEE NOTES REGARDING COUNTY DESIGNATION)
- CONTROLLER STATION
- GALLONS PER MINUTE (GPM)
- QUANTITY OF SPRINKLERS (TYPE A-1, C-2, OR D-3)

VALVE CODE (ON CAM COUPLER ASSEMBLY SYSTEMS)

0" T-1- 00 -00

- CAM COUPLER ASSEMBLY SIZE
- IRRIGATION SYSTEM
- VALVE NUMBER
- GALLONS PER MINUTE (GPM)
- QUANTITY OF SPRINKLERS (TYPE D-1)

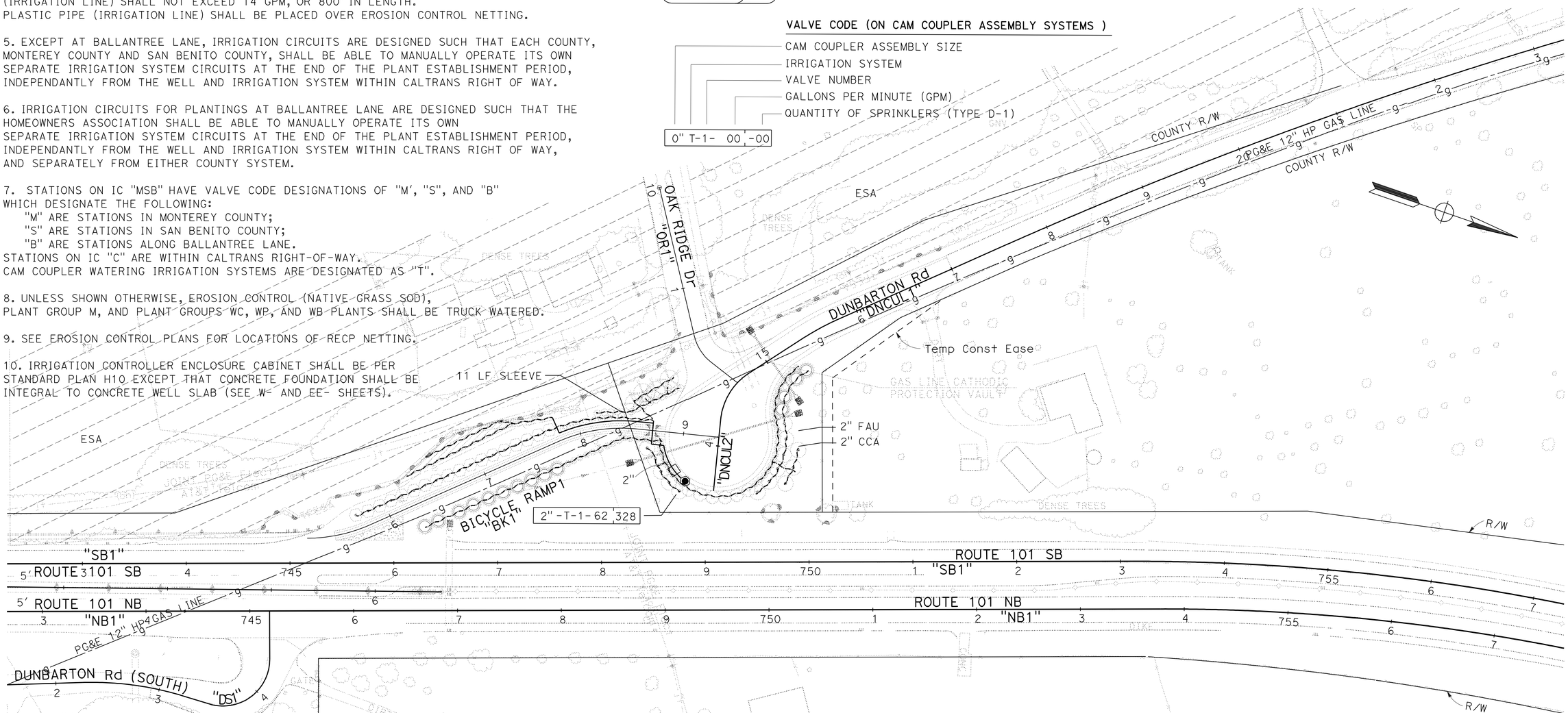

APPROVED FOR IRRIGATION WORK ONLY

IRRIGATION PLAN
IP-1

SCALE: 1" = 50'

STATE OF CALIFORNIA - DEPARTMENT OF TRANSPORTATION
Caltrans
LANDSCAPE ARCHITECTURE

SENIOR LANDSCAPE ARCHITECT: Dennis J. Reeves
CALCULATED-DESIGNED BY: Jo Jackson
CHECKED BY: Corby Kilmer
REVISED BY
DATE REVISED

LAST REVISION 3-08-12
DATE PLOTTED => 15-APR-2012
TIME PLOTTED => 07:14

Dist	COUNTY	ROUTE	POST MILES TOTAL PROJECT	SHEET No.	TOTAL SHEETS
05	Mon,SBt	101	100.0/101.3, 0.0/1.6	450	641

LICENSED LANDSCAPE ARCHITECT

4-9-12
PLANS APPROVAL DATE

THE STATE OF CALIFORNIA OR ITS OFFICERS OR AGENTS SHALL NOT BE RESPONSIBLE FOR THE ACCURACY OR COMPLETENESS OF SCANNED COPIES OF THIS PLAN SHEET.

LICENSED LANDSCAPE ARCHITECT
CORBY C. KILMER LIC.No.4131
Signature
06-30-12
Renewal Date
12-21-11
Date
STATE OF CALIFORNIA

NOTE: FOR ACCURATE RIGHT OF WAY DATA,
CONTACT RIGHT OF WAY ENGINEERING AT THE DISTRICT OFFICE.

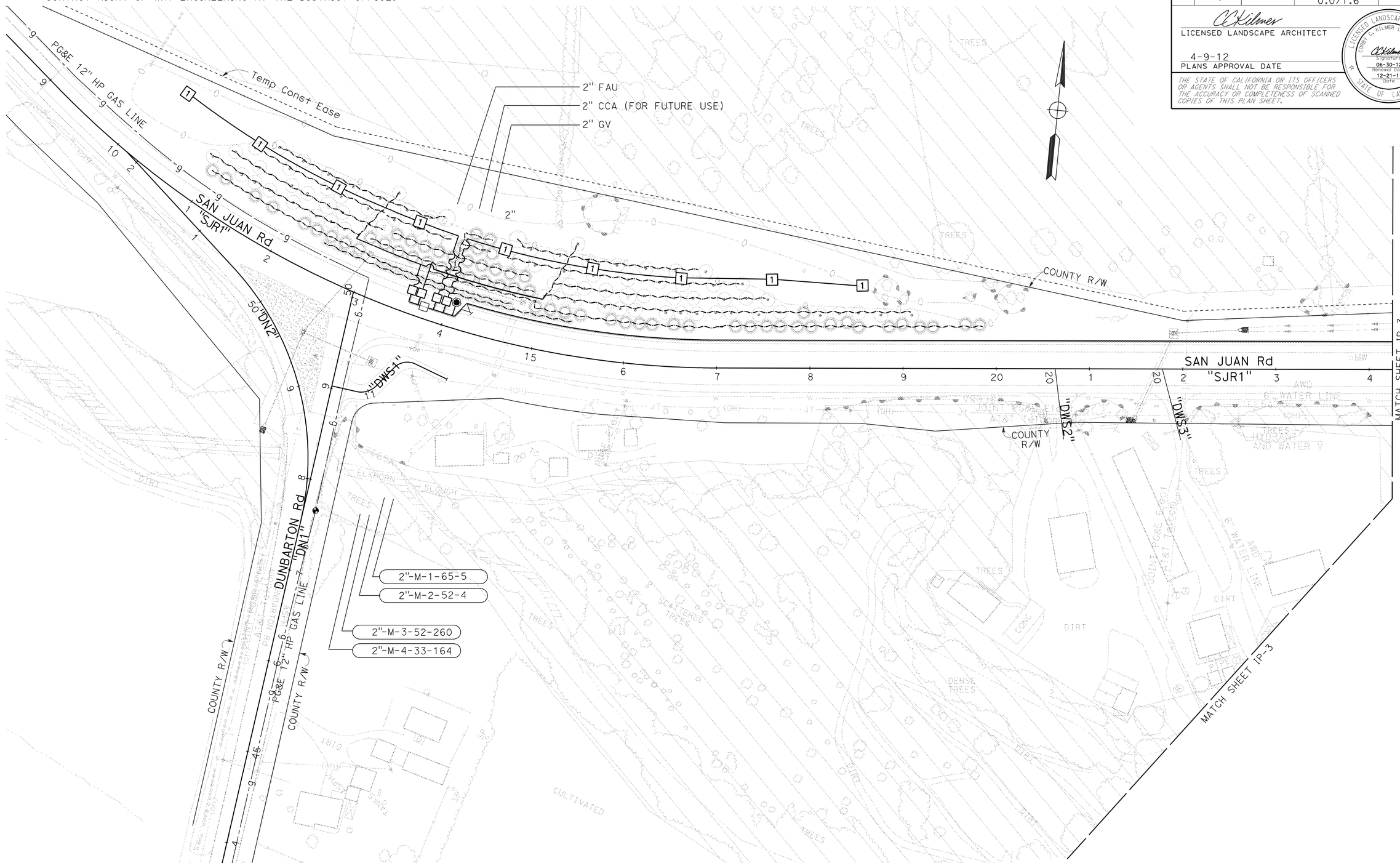

APPROVED FOR IRRIGATION WORK ONLY

IRRIGATION PLAN
IP-2

SCALE: 1" = 50'

STATE OF CALIFORNIA - DEPARTMENT OF TRANSPORTATION
Caltrans® LANDSCAPE ARCHITECTURE

SENIOR LANDSCAPE ARCHITECT: Dennis J. Reeves
CALCULATED-DESIGNED BY: Corby Kilmer
CHECKED BY: Jo Jackson
REVISED BY
DATE REVISED

LAST REVISION 03-08-11
DATE PLOTTED => 15-APR-2012
TIME PLOTTED => 07:14

Dist	COUNTY	ROUTE	POST MILES TOTAL PROJECT	SHEET No.	TOTAL SHEETS
05	Mon,SBt	101	100.0/101.3, 0.0/1.6	451	641

LICENSED LANDSCAPE ARCHITECT

4-9-12
PLANS APPROVAL DATE

THE STATE OF CALIFORNIA OR ITS OFFICERS OR AGENTS SHALL NOT BE RESPONSIBLE FOR THE ACCURACY OR COMPLETENESS OF SCANNED COPIES OF THIS PLAN SHEET.

LICENSED LANDSCAPE ARCHITECT — CORBY C. KILMER L.S. No. 4131 — Signature — 06-30-12 Renewal Date — 12-21-11 Date — STATE OF CALIFORNIA

NOTE: FOR ACCURATE RIGHT OF WAY DATA,
CONTACT RIGHT OF WAY ENGINEERING AT THE DISTRICT OFFICE.

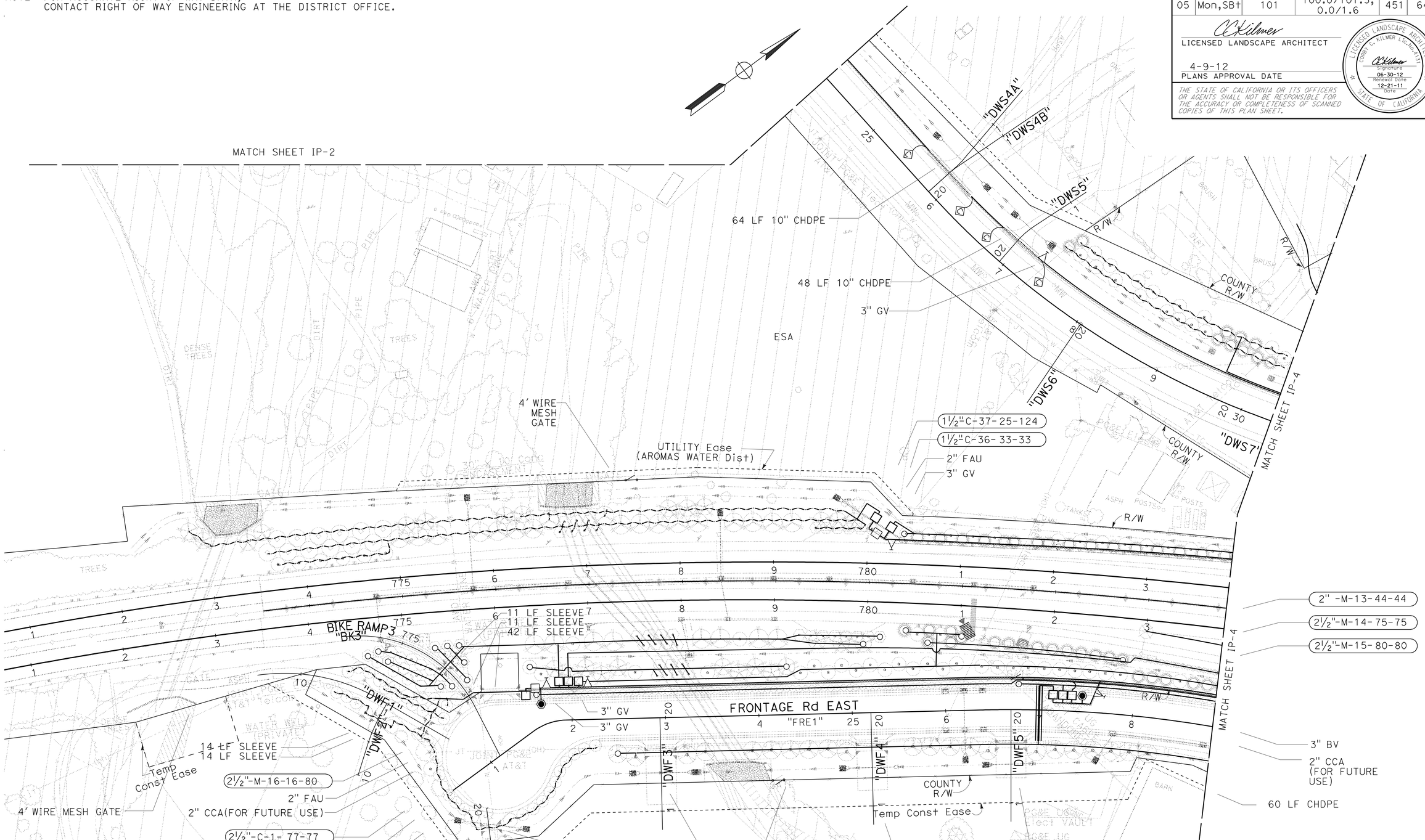

APPROVED FOR IRRIGATION WORK ONLY

IRRIGATION PLAN
IP-3

SCALE: 1" = 50'

REVISED BY	DATE REVISED

CALCULATED- DESIGNED BY: Corby Kilmer
CHECKED BY: Jo Jackson
SENIOR LANDSCAPE ARCHITECT: Dennis J. Reeves

STATE OF CALIFORNIA - DEPARTMENT OF TRANSPORTATION
Caltrans
LANDSCAPE ARCHITECTURE

LAST REVISION 03-08-12 | DATE PLOTTED => 15-APR-2012 | TIME PLOTTED => 07:14

Dist	COUNTY	ROUTE	POST MILES TOTAL PROJECT	SHEET No.	TOTAL SHEETS
05	Mon,SBt	101	100.0/101.3, 0.0/1.6	452	641

LICENSED LANDSCAPE ARCHITECT

4-9-12
PLANS APPROVAL DATE

LICENSED LANDSCAPE ARCHITECT
CORBY C. KILMER L.S.No.4131
Signature
06-30-12
Renewal Date
12-21-11
Date
STATE OF CALIFORNIA

THE STATE OF CALIFORNIA OR ITS OFFICERS OR AGENTS SHALL NOT BE RESPONSIBLE FOR THE ACCURACY OR COMPLETENESS OF SCANNED COPIES OF THIS PLAN SHEET.

NOTE: FOR ACCURATE RIGHT OF WAY DATA,
CONTACT RIGHT OF WAY ENGINEERING AT THE DISTRICT OFFICE.

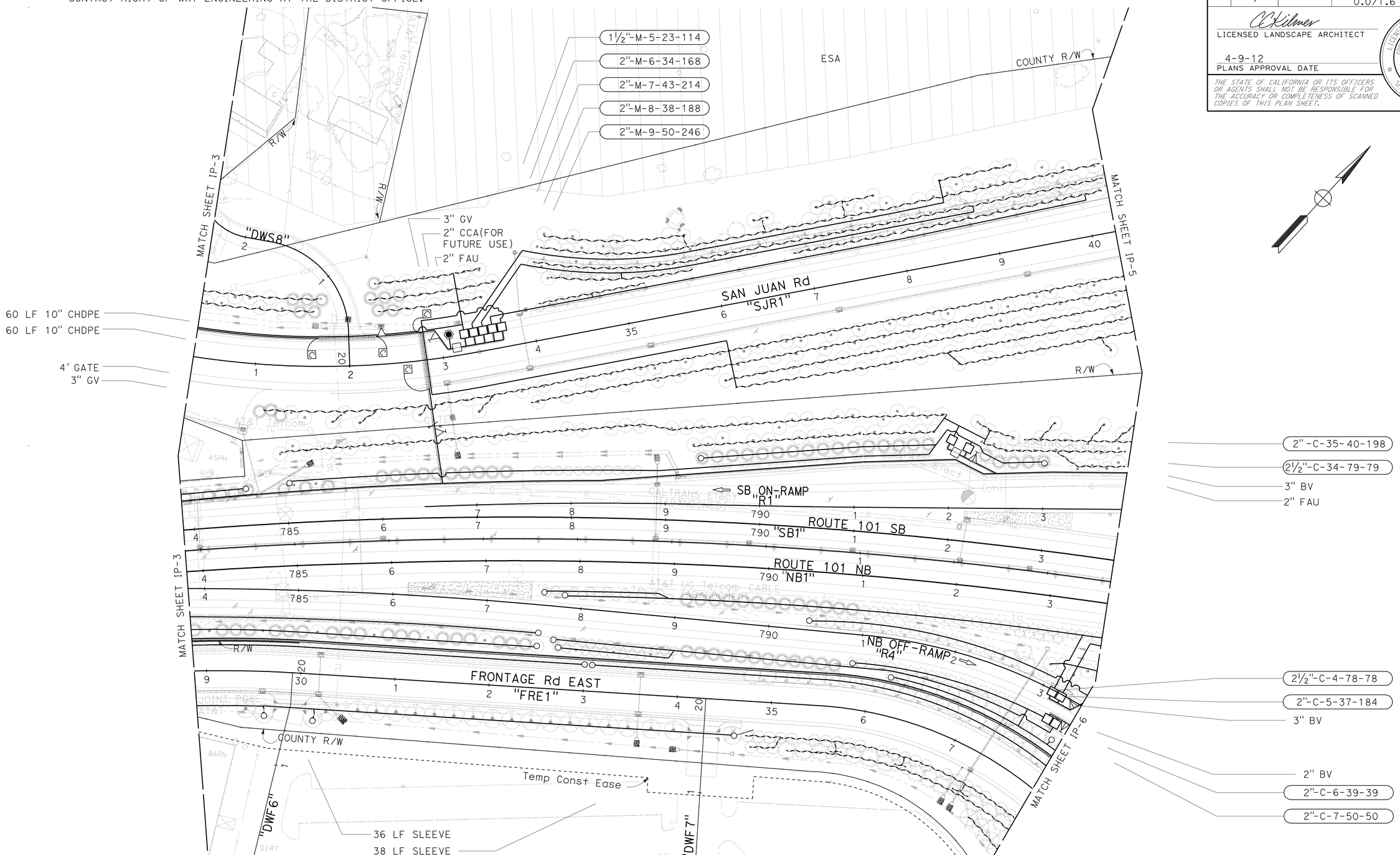

APPROVED FOR IRRIGATION WORK ONLY

IRRIGATION PLAN
IP-4

SCALE: 1" = 50'

REVISED BY	DATE REVISED

CALCULATED-DESIGNED BY	CHECKED BY
Corby Kilmer	Jo Jackson

SENIOR LANDSCAPE ARCHITECT
Dennis J. Reeves

STATE OF CALIFORNIA - DEPARTMENT OF TRANSPORTATION
Caltrans
LANDSCAPE ARCHITECTURE

LAST REVISION 12-20-11
DATE PLOTTED => 15-APR-2012
TIME PLOTTED => 07:14

Dist	COUNTY	ROUTE	POST MILES TOTAL PROJECT	SHEET No.	TOTAL SHEETS
05	Mon,SBt	101	100.0/101.3, 0.0/1.6	453	641

LICENSED LANDSCAPE ARCHITECT

4-9-12
PLANS APPROVAL DATE

LICENSED LANDSCAPE ARCHITECT
CORB C. KILMER Lic.No.4131
Signature
06-30-12
Renewal Date
12-21-11
Date
STATE OF CALIFORNIA

THE STATE OF CALIFORNIA OR ITS OFFICERS OR AGENTS SHALL NOT BE RESPONSIBLE FOR THE ACCURACY OR COMPLETENESS OF SCANNED COPIES OF THIS PLAN SHEET.

NOTE: FOR ACCURATE RIGHT OF WAY DATA, CONTACT RIGHT OF WAY ENGINEERING AT THE DISTRICT OFFICE.

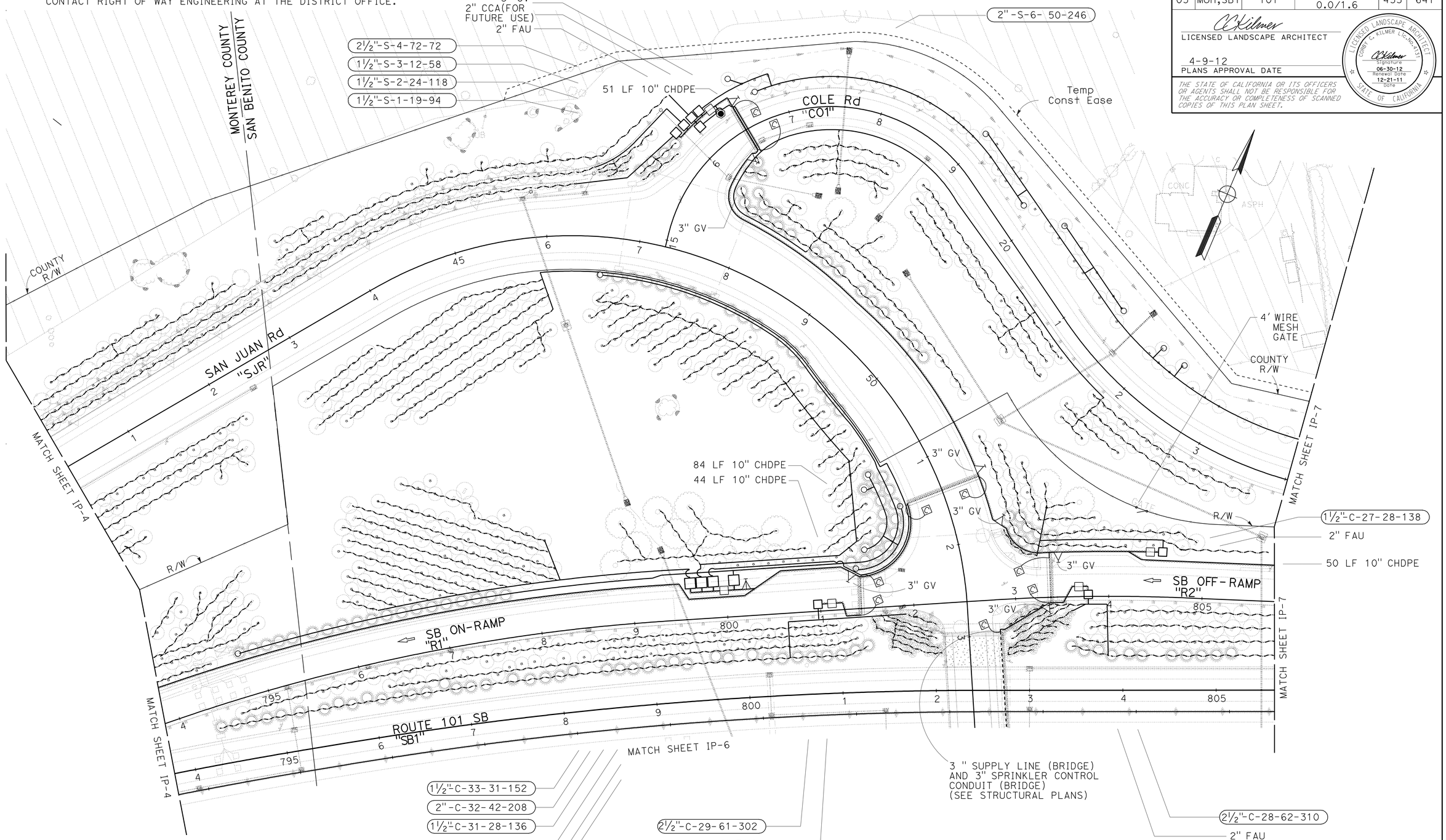

APPROVED FOR IRRIGATION WORK ONLY

IRRIGATION PLAN
IP-5

SCALE: 1" = 50'

STATE OF CALIFORNIA - DEPARTMENT OF TRANSPORTATION
Caltrans®
LANDSCAPE ARCHITECTURE

SENIOR LANDSCAPE ARCHITECT: Dennis J. Reeves
CALCULATED-DESIGNED BY: Corby Kilmer
CHECKED BY: Jo Jackson
REVISED BY
DATE REVISED

LAST REVISION 03-08-12
DATE PLOTTED => 15-APR-2012
TIME PLOTTED => 07:15

Dist	COUNTY	ROUTE	POST MILES TOTAL PROJECT	SHEET No.	TOTAL SHEETS
05	Mon,SBt	101	100.0/101.3, 0.0/1.6	454	641

LICENSED LANDSCAPE ARCHITECT

4-9-12
PLANS APPROVAL DATE

LICENSED LANDSCAPE ARCHITECT
CORB C. KILMER Lic.No.4131
Signature
06-30-12
Renewal Date
12-21-11
Date
STATE OF CALIFORNIA

THE STATE OF CALIFORNIA OR ITS OFFICERS OR AGENTS SHALL NOT BE RESPONSIBLE FOR THE ACCURACY OR COMPLETENESS OF SCANNED COPIES OF THIS PLAN SHEET.

NOTE: FOR ACCURATE RIGHT OF WAY DATA,
CONTACT RIGHT OF WAY ENGINEERING AT THE DISTRICT OFFICE.

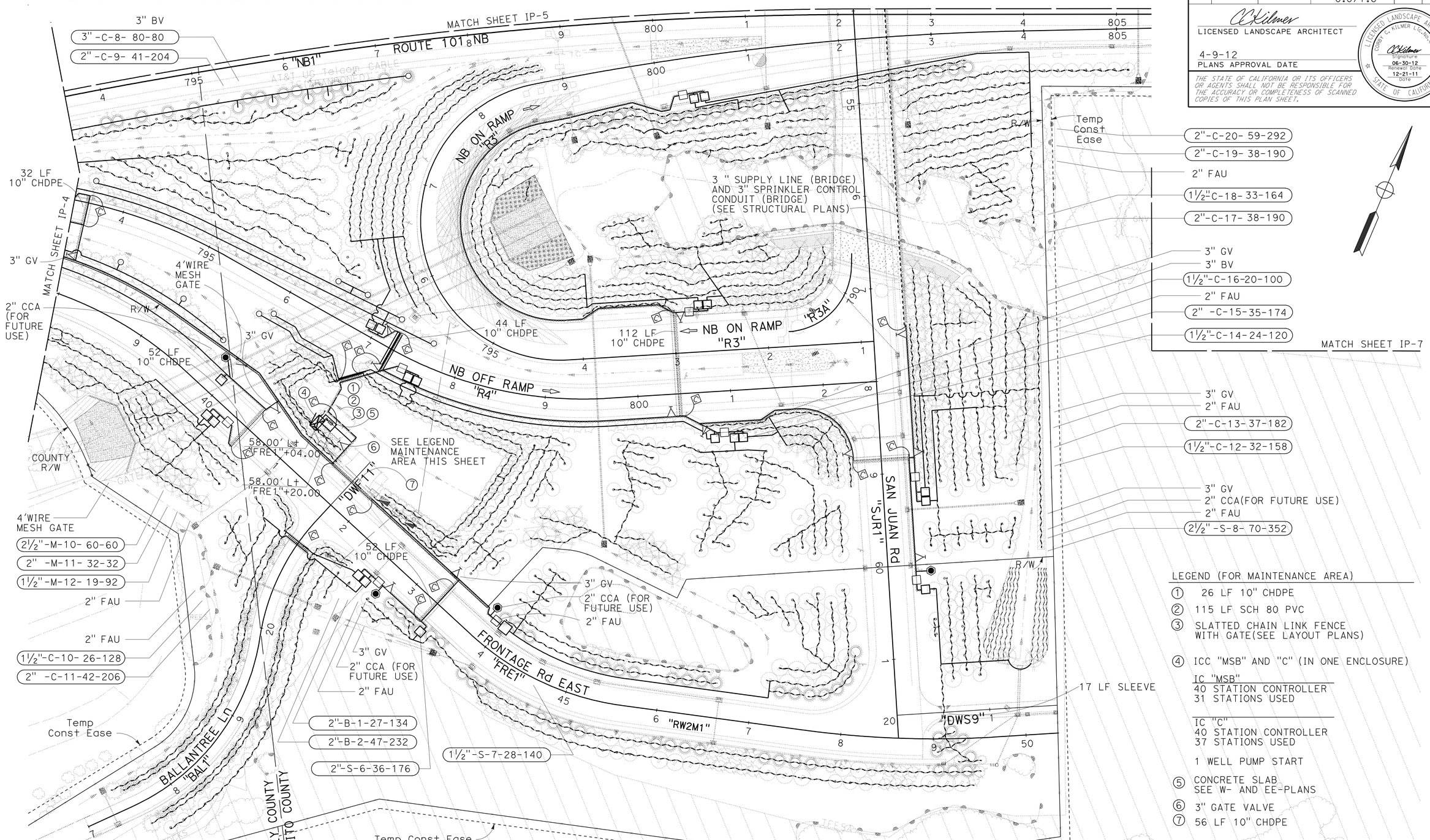

LEGEND (FOR MAINTENANCE AREA)

1. 26 LF 10" CHDPE
2. 115 LF SCH 80 PVC
3. SLATTED CHAIN LINK FENCE WITH GATE(SEE LAYOUT PLANS)
4. ICC "MSB" AND "C" (IN ONE ENCLOSURE)

IC "MSB"
40 STATION CONTROLLER
31 STATIONS USED

IC "C"
40 STATION CONTROLLER
37 STATIONS USED

1 WELL PUMP START

5. CONCRETE SLAB SEE W- AND EE-PLANS
6. 3" GATE VALVE
7. 56 LF 10" CHDPE

APPROVED FOR IRRIGATION WORK ONLY

IRRIGATION PLAN IP-6

SCALE:1"=50'

STATE OF CALIFORNIA - DEPARTMENT OF TRANSPORTATION
Caltrans® LANDSCAPE ARCHITECTURE

SENIOR LANDSCAPE ARCHITECT: Dennis J. Reeves
CALCULATED-DESIGNED BY: Jo Jackson
CHECKED BY: Corby Kilmer
REVISED BY
DATE REVISED

LAST REVISION 03-08-12
DATE PLOTTED => 15-APR-2012
TIME PLOTTED => 09:30

Dist	COUNTY	ROUTE	POST MILES TOTAL PROJECT	SHEET No.	TOTAL SHEETS
05	Mon,SBt	101	100.0/101.3, 0.0/1.6	455	641

LICENSED LANDSCAPE ARCHITECT

4-9-12
PLANS APPROVAL DATE

LICENSED LANDSCAPE ARCHITECT
CORBY C. KILMER (LIC.No.4131)
Signature
06-30-12
Renewal Date
12-21-11
Date
STATE OF CALIFORNIA

THE STATE OF CALIFORNIA OR ITS OFFICERS OR AGENTS SHALL NOT BE RESPONSIBLE FOR THE ACCURACY OR COMPLETENESS OF SCANNED COPIES OF THIS PLAN SHEET.

NOTE: FOR ACCURATE RIGHT OF WAY DATA,
CONTACT RIGHT OF WAY ENGINEERING AT THE DISTRICT OFFICE.

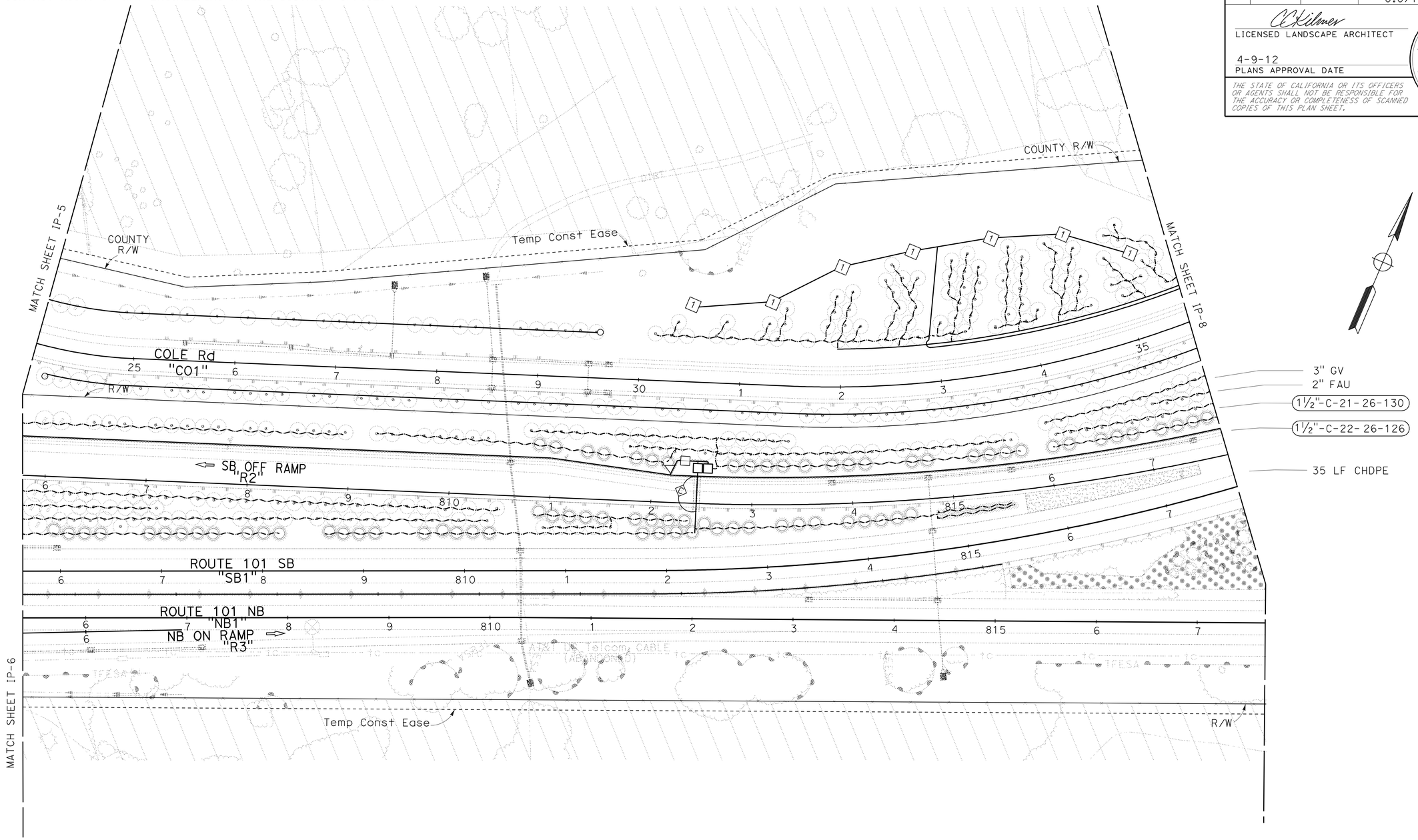

APPROVED FOR IRRIGATION WORK ONLY

IRRIGATION PLAN
IP-7

SCALE:1"=50'

STATE OF CALIFORNIA - DEPARTMENT OF TRANSPORTATION
Caltrans® LANDSCAPE ARCHITECTURE

SENIOR LANDSCAPE ARCHITECT: Dennis J. Reeves
CALCULATED-DESIGNED BY: Jo Jackson
CHECKED BY: Corby Kilmer
REVISED BY
DATE REVISED

LAST REVISION 12-20-11
DATE PLOTTED => 15-APR-2012
TIME PLOTTED => 09:31

Dist	COUNTY	ROUTE	POST MILES TOTAL PROJECT	SHEET No.	TOTAL SHEETS
05	Mon,SBt	101	100.0/101.3, 0.0/1.6	456	641

LICENSED LANDSCAPE ARCHITECT

4-9-12
PLANS APPROVAL DATE

LICENSED LANDSCAPE ARCHITECT
CORBY C. KILMER L.S. No. 4131
Signature
06-30-12
Renewal Date
12-21-11
Date
STATE OF CALIFORNIA

THE STATE OF CALIFORNIA OR ITS OFFICERS OR AGENTS SHALL NOT BE RESPONSIBLE FOR THE ACCURACY OR COMPLETENESS OF SCANNED COPIES OF THIS PLAN SHEET.

NOTE: FOR ACCURATE RIGHT OF WAY DATA,
CONTACT RIGHT OF WAY ENGINEERING AT THE DISTRICT OFFICE.

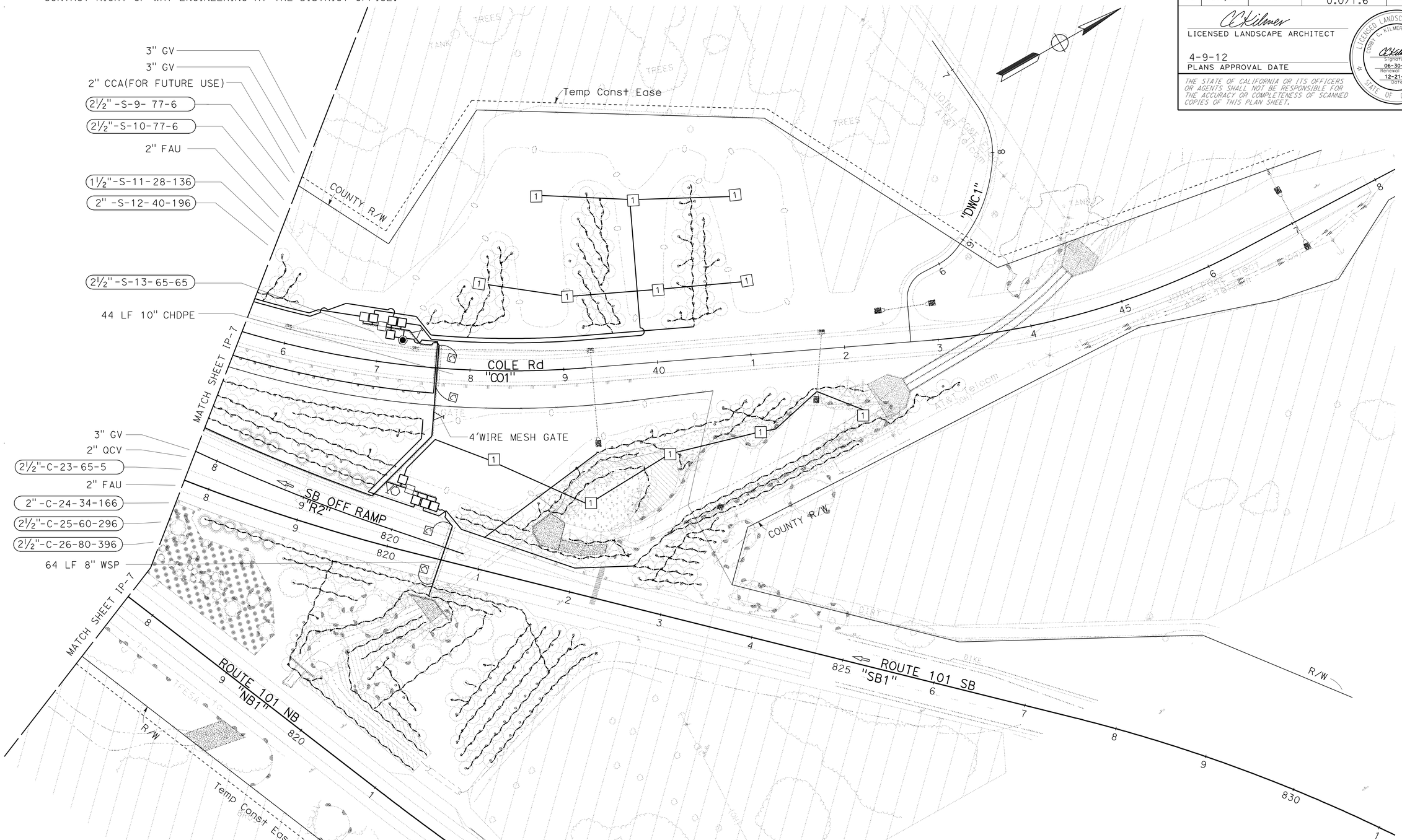

APPROVED FOR IRRIGATION WORK ONLY

IRRIGATION PLAN
IP-8

SCALE:1"=50'

STATE OF CALIFORNIA - DEPARTMENT OF TRANSPORTATION
Caltrans
LANDSCAPE ARCHITECTURE

SENIOR LANDSCAPE ARCHITECT: Dennis J. Reeves
CALCULATED-DESIGNED BY: Jo Jackson
CHECKED BY: Corby Kilmer
REVISED BY
DATE REVISED

LAST REVISION 03-08-12
DATE PLOTTED => 15-APR-2012
TIME PLOTTED => 09:31

Dist	COUNTY	ROUTE	POST MILES TOTAL PROJECT	SHEET No.	TOTAL SHEETS
05	Mon,SBt	101	100.0/101.3, 0.0/1.6	457	641

LICENSED LANDSCAPE ARCHITECT

4-9-12
PLANS APPROVAL DATE

LICENSED LANDSCAPE ARCHITECT — CORBY C. KILMER — Lic. No. 4131 — Signature — 06-30-12 Renewal Date — 12-21-11 Date — STATE OF CALIFORNIA

THE STATE OF CALIFORNIA OR ITS OFFICERS OR AGENTS SHALL NOT BE RESPONSIBLE FOR THE ACCURACY OR COMPLETENESS OF SCANNED COPIES OF THIS PLAN SHEET.

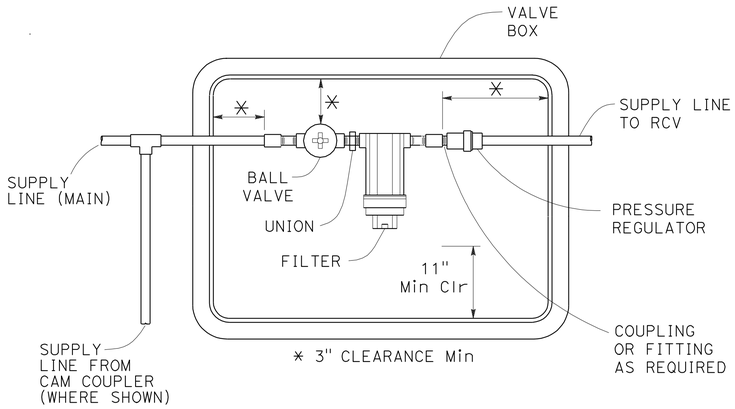

PLAN

FILTER ASSEMBLY UNIT

NO SCALE

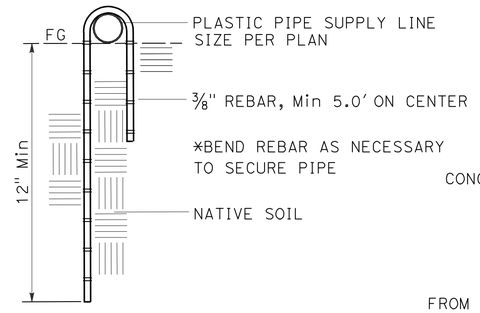

SECTION

PLASTIC PIPE ANCHOR

NO SCALE

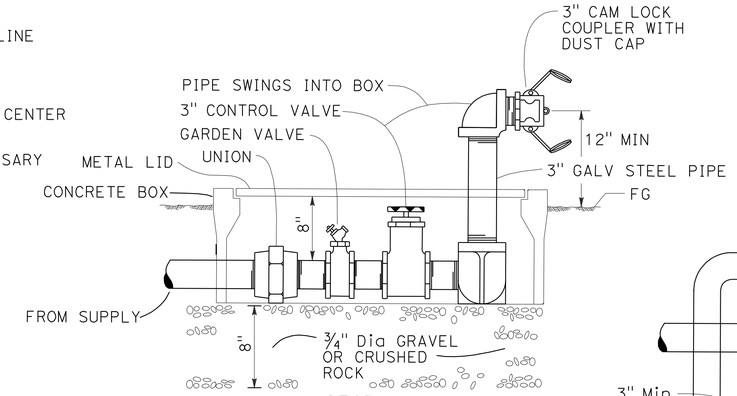

SECTION

QUICK COUPLER ASSEMBLY (QCA)

NO SCALE

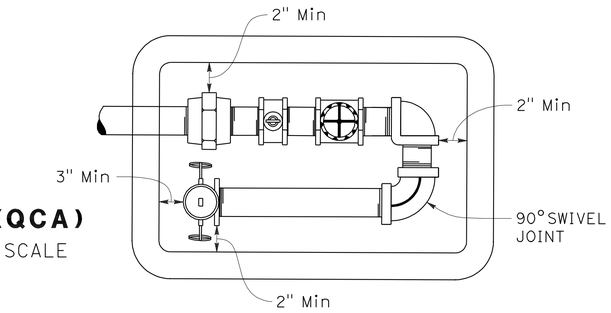

PLAN

X IN BOX DENOTES REQUIREMENT

SPRINKLER SCHEDULE

SYMBOL	TYPE	DESCRIPTION	SPRAY PATTERN	OPERATING PRESSURE (PSI)	PRESSURE COMPENSATING	PLUS/MINUS 5% ② DISCHARGE: GALLONS PER MINUTE (GPM)	GALLONS PER HOUR (GPH)	RADIUS (FT)	WIDTH x LENGTH (FT)	MATERIAL	NOZZLE SIZE (INCH)	INLET CONNECTION (NPT INCH)	POSITIVE-LOCKING ADJ ARC STOP	BACKSPLASH PREVENTER	DIFFUSER PIN	DISTANCE CONTROL FLAP	ADJ DISCHARGE	RISER: TYPE	MATERIAL: PLASTIC	GALVANIZED	SIZE (IPS INCH)	HEIGHT (INCH)	FLOW SHUTOFF DEVICE	SWING JOINT (TYPE) ⑤	RISER SUPPORT	SPRINKLER PROTECTOR (TYPE)	REMARKS
1	A-1	SIDE IMPACT	F	50	-	12.9	-	57	-	B/S		1	X	-	X	-	-	⑥	-	X	1	60	X	-	⑥	-	90' OC SPACING, PLACE AS SHOWN
◯	C-2	BUBBLER	F	10	X	1.0	-	-	-	PL	-	1/2	-	-	-	-	-	V	X	-	1/2	-	-	-	-	-	UMBRELLA PATTERN BUBBLER
-	D-1	EMITTER	-	10-50	X	-	12	-	-	PL	-	-	-	-	-	-	-	-	-	-	-	-	-	-	-	-	⑨ ⑩

APPLICABLE WHEN CIRCLED BELOW:

1 - See Special Provisions.
② - If a pressure compensating device is specified, the discharge and radii shown reflect its use.
3 - Check valve integral with sprinkler required.
4 - Vinyl-coated cast iron housing.
5 - Swing Joints required adjacent to shoulders, curbs, sidewalks, and dikes.
⑥ - See Detail
7 - Matched precipitation rate, dual orafice nozzles.
8 - Sprinkler Protector (Type 1) required where sprinkler head is adjacent to edge of asphalt pavement. Sprinkler protector is not required where sprinkler head is adjacent to concrete sidewalks.
⑨ - Where Plastic Pipe (Irrigation Line) is shown, place two (2) emitters per plant on Plant Group A, B and U, and four(4) emitters per plant on Plant Group K. Place one (1) emitter per plant Group M and WC where shown.
⑩ - Locate emitters on upslope side of rootball, centered on either side of the plant.

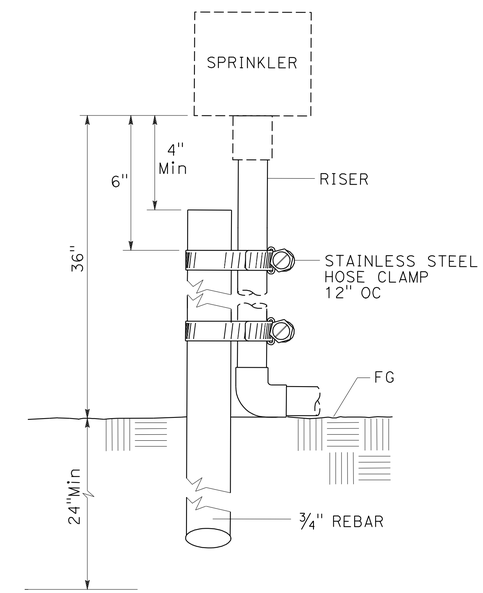

ELEVATION

RISER FOR TYPE A-1 SPRINKLERS

NO SCALE

LANDSCAPE DETAILS AND SPRINKLER SCHEDULE LD-1

NO SCALE

REVISED BY | DATE REVISED
Corby Kilmer | Jo Jackson
CALCULATED-DESIGNED BY | CHECKED BY
SENIOR LANDSCAPE ARCHITECT: Dennis J. Reeves

STATE OF CALIFORNIA - DEPARTMENT OF TRANSPORTATION
Caltrans® LANDSCAPE ARCHITECTURE

LAST REVISION 12-20-11 | DATE PLOTTED => 17-APR-2012 | TIME PLOTTED => 15:26

Dist	COUNTY	ROUTE	POST MILES TOTAL PROJECT	SHEET No.	TOTAL SHEETS
05	Mon,SBt	101	100.0/101.3, 0.0/1.6	458	641

LICENSED LANDSCAPE ARCHITECT

4-9-12
PLANS APPROVAL DATE

LICENSED LANDSCAPE ARCHITECT
CORBY C. KILMER Lic. No. 4131
Signature
06-30-12
Renewal Date
12-21-11
Date
STATE OF CALIFORNIA

THE STATE OF CALIFORNIA OR ITS OFFICERS OR AGENTS SHALL NOT BE RESPONSIBLE FOR THE ACCURACY OR COMPLETENESS OF SCANNED COPIES OF THIS PLAN SHEET.

SUPPLY LINE (LATERAL) PVC PIPE SIZING CHART

GALLONS PER MINUTE	PIPE SIZE	NUMBER OF HEADS BY TYPE		
		A-1	C-2	D-1
0 - 14	1"	1	1 - 14	**
17 - 35	1½"	2	17 - 35	
36 - 55	2"	4	36 - 55	
56 - 80	2½"	6	56 - 80	

** MAXIMUM 70 D-1 EMITTERS (14GPM) ON 1" PLASTIC PIPE (IRRIGATION LINE), FLOWS ABOVE 14 GPM ON D-1 EMITTER CIRCUITS PER SUPPLY LINE (LATERAL) PVC PIPE SIZING CHART.

IRRIGATION CROSSOVERS AND IRRIGATION SLEEVES

LOCATION			SIDE		CONDUIT TYPE (3)	CONDUIT TYPE (5)	IRRIGATION SLEEVE	(N) WATER LINE CROSSOVER	(N) SPRINKLER CONTROL CROSSOVER
	LINE	STATION	L†	R†	SIZE (INCH) 10" LENGTH (LF)	SIZE (INCH) 8" LENGTH (LF)	SIZE (INCH) 6" LENGTH (LF)	SIZE (INCH)	SIZE (INCH)
1	BAL1	21+00	X	X	28	-	-	2 @ 1½"	-
2	COL1	16+50	X	X	51	-	-	1 @ 3", 1@ 2"	2"
3	COL1	37+65	X	X	44	-	-	1 @ 3", 1 @ 2½"	2"
4	DWS4A/4B	20+30	X	X	64	-	-	3"	2"
5	DWS5	20+30	X	X	48	-	-	3"	2"
6	DWS8	20+30	X	X	60	-	-	3"	2"
7	FRE1	27+00	X	X	60	-	-	3"	-
8	FRE1	40+52	X	X	52	-	-	3"	2"
9	FRE1	43+30	X	X	52	-	-	3"	2"
10	DWF11	MAINT EAST	X	X	56	-	-	3"	2"
11	-	MAINT WEST	X	X	26	-	-	1@ 3",1@ 2",2@ 1½"	2"
12	NB OFF R4	797+25	X	X	32	-	-	3"	2"
13	NB OFF R4	793+62	X	X	44	-	-	3"	2"
14	NB OFF R4 NB ON R3	800+44 793+00	X	X	112	-	-	3"	2"
15	SB OFF R2	803+38	X	X	50	-	-	3"	2"
16	SB OFF R2	812+45	X	X	35	-	-	2"	-
17	SB OFF R2	820+60	X	X		64	-	2"	-
18	SB ON R1	801+45	X	X	44	-	-	3"	2"
19	SJR1	32+80	X	X	60	-	-	1 @ 3", 1@ 2"	2"
20	SJR1	51+40	X	X	84	-	-	3"	2"
21	SJR1	58+85	X	X	60	-	-	3"	2"
22	BK1	8+70	X	X	-	-	11	-	-
23	BK3	773+53	X	X	-	-	11	-	-
24	BK3	773+92	X	X	-	-	11	-	-
25	DWF1	11+45	X	X	-	-	14	-	-
26	DWF2	10+63	X	X	-	-	14	-	-
27	DWF3	20+38	X	X	-	-	34	-	-
28	DWF4	20+38	X	X	-	-	34	-	-
29	DWF5	20+38	X	X	-	-	34	-	-
30	DWF6	20+38	X	X	-	-	35	-	-
31	DWF7	20+38	X	X	-	-	34	-	-
32	DWF11	20+50	X	X	-	-	17	-	-
33	FRE1	21+08 to 21+50			-	-	42	-	-
34	MA1	20+21	X	X	-	-	22	-	-
TOTAL					1,062	64	313		

(N) - NOT A SEPARATE PAY ITEM FOR INFORMATION ONLY

X - DENOTES REQUIREMENT

* CROSSOVER TRAVERSES NEW RAMP AND EXISTING SB1 LANES ADJACENT TO CULVERT IN MEDIAN NEAR COLE ROAD

CONDUIT TYPE:

(APPLICABLE WHEN CIRCLED BELOW AND SHOWN UNDER THE 'CONDUIT TYPE' COLUMN HEADING)

1 BITUMINOUS COATED CORRUGATED STEEL PIPE (0.064 INCH THICK)

2 CORRUGATED STEEL PIPE (0.064 INCH THICK)

(3) CORRUGATED HIGH DENSITY POLYETHYLENE PIPE

4 ALTERNATIVE CONDUIT

(5) WELDED STEEL PIPE

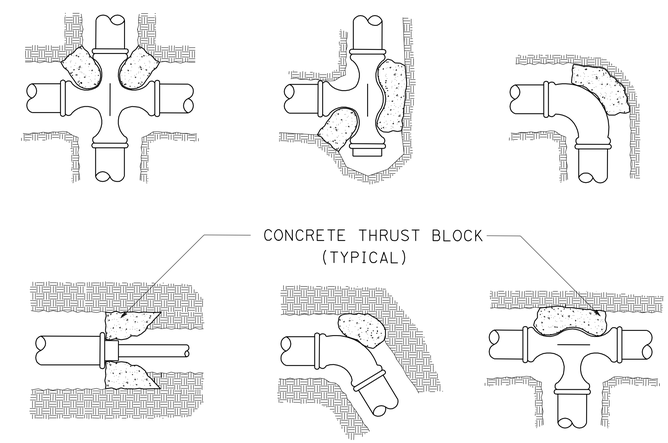

THRUST BLOCKS
NO SCALE

LANDSCAPE DETAILS AND SUMMARY OF QUANTITIES
LD-2

REVISED BY | DATE REVISED
Corby Kilmer | Jo Jackson
CALCULATED-DESIGNED BY | CHECKED BY
SENIOR LANDSCAPE ARCHITECT
Dennis J. Reeves
STATE OF CALIFORNIA - DEPARTMENT OF TRANSPORTATION
Caltrans® LANDSCAPE ARCHITECTURE

LAST REVISION 03-08-12
DATE PLOTTED => 15-APR-2012
TIME PLOTTED => 09:31

Dist	COUNTY	ROUTE	POST MILES TOTAL PROJECT	SHEET No.	TOTAL SHEETS
05	Mon,SBt	101	100.0/101.3, 0.0/1.6	459	641

Paul Matos 12-20-11
REGISTERED ELECTRICAL ENGINEER

4-9-12
PLANS APPROVAL DATE

REGISTERED PROFESSIONAL ENGINEER PAUL MATOS No. 18757 Exp. 6/30/13 ELECTRICAL STATE OF CALIFORNIA

THE STATE OF CALIFORNIA OR ITS OFFICERS OR AGENTS SHALL NOT BE RESPONSIBLE FOR THE ACCURACY OR COMPLETENESS OF SCANNED COPIES OF THIS PLAN SHEET.

NOTES:

1 120/240 V, 1Ø, 3-WIRE TYPE III-BF SERVICE EQUIPMENT ENCLOSURE WITH TIME OF USE METER AND THE FOLLOWING CIRCUIT BREAKERS:

CTID No. 05441010101131T

AMPERES	VOLTS	POLES	NAMEPLATE	METER	PHOTOELECTRIC CONTROL TYPE
100	240	2	MAIN	YES	——
30	120	1	334 CABINET (CCTV/MVDS)	YES	——
20	240	2	LIGHTING	YES	V
15	120	1	LIGHTING CONTROL	YES	——
20	240	2	SIGN ILLUMINATION	YES	——
30	120	1	334 CABINET (RAMP METER)	YES	——
——	——	6	SPACE	-	——

2 120/240 V, 1Ø, 3-WIRE TYPE III-BF SERVICE EQUIPMENT ENCLOSURE WITH TIME OF USE METER AND THE FOLLOWING CIRCUIT BREAKERS:

CTID No. 05441010101322T

AMPERES	VOLTS	POLES	NAMEPLATE	METER	PHOTOELECTRIC CONTROL TYPE
100	240	2	MAIN	YES	——
30	120	1	334 CABINET (RAMP METER)	YES	——
20	240	2	LIGHTING	YES	V
15	120	1	LIGHTING CONTROL	YES	——
——	——	6	SPACE	-	——

3 120/240 V, 1Ø, 3-WIRE TYPE III-BF SERVICE EQUIPMENT ENCLOSURE WITH TIME OF USE METER AND THE FOLLOWING CIRCUIT BREAKERS:

CTID No. 05431010000531T

AMPERES	VOLTS	POLES	NAMEPLATE	METER	PHOTOELECTRIC CONTROL TYPE
100	240	2	MAIN	YES	——
20	240	2	HIGHWAY LIGHTING	YES	V
15	120	1	LIGHTING CONTROL	YES	——
20	240	2	SIGN ILLUMINATION	YES	——
——	——	6	SPACE	-	——

4 120/240 V, 3Ø, 4-WIRE TYPE III-DF SERVICE EQUIPMENT ENCLOSURE WITH THE FOLLOWING CIRCUIT BREAKERS:

CTID No. 05441010101322G

AMPERES	VOLTS	POLES	NAMEPLATE	METER	PHOTOELECTRIC CONTROL TYPE
100	240	3	MAIN	YES	——
80	240	3	IWPCE/WELL	YES	——
20	120	1	ICC	YES	——
——	——	6	SPACE	-	——

5 SEE DETAIL A ON SHEET E-8 FOR INDUCTIVE LOOP DETECTOR PLACEMENT AND IDENTIFICATION.

6 SEE DETAIL B ON SHEET E-8 FOR INDUCTIVE LOOP DETECTOR PLACEMENT AND IDENTIFICATION.

7 TYPE 1-D SIGNAL STANDARD, SEE DETAIL C ON SHEET E-8.

8 TYPE 15TS SIGNAL STANDARD WITH ILLUMINATED METER ON SIGN.

9 TYPE 1-A 7' SIGNAL STANDARD, SEE DETAIL D ON SHEET E-8.

10 INSTALL CCTV CAMERA ON TYPE CCTV 10 POLE EXTENSION, SEE DETAIL ON SHEET E-9.

11 INSTALL MVDS SENSOR ON VDS POLE. SEE DETAILS ON SHEET SES-1 AND SES-2.

12 MODEL 334 CABINET FOR CCTV AND MVDS EQUIPMENT, SEE DETAILS ON SHEET E-9.

13 STATE-FURNISHED MODEL 2070 CONTROLLER ASSEMBLY FOR RAMP METERING SYSTEM. FURNISH AND INSTALL WIRELESS MODEM.

14 PULL BOX PER PG&E REQUIREMENTS.

15 IRRIGATION WELL SYSTEM, FOR ELECTRICAL DETAILS SEE EE SHEETS.

16 ICC, SEE IRRIGATION PLANS FOR INSTALLATION.

17 SEE STRUCTURE PLANS FOR CONDUIT INSTALLED IN STRUCTURE.

18. ALL PULL BOXES SHALL BE No. 5(E) UNLESS OTHERWISE NOTED.

LEGEND:

IWPCE IRRIGATION WELL PUMP CONTROL ENCLOSURE FOR IRRIGATION WELL, SEE EE SHEETS FOR DETAILS

ABBREVIATIONS:

PG&E PACIFIC GAS AND ELECTRIC
CTID CALTRANS IDENTIFICATION NUMBER
IWPCE IRRIGATION WELL PUMP CONTROL ENCLOSURE
OCC OUTDOOR CAT5E CABLE

CONDUIT AND CONDUCTOR SCHEDULE

CONDUCTOR DESIGNATION		CONDUIT RUN NUMBER AND SIZE											
		1	2	3	4	5	6	7	8	9	10	11	12
		2-3"	3"	2"	2"	2"	2-3"	3"	2"	2"	2"	2"	2"
AWG	CIRCUIT												
#4	334 CABINET (RM SB)	2	2										
#6	334 CABINET (RM NB)						2				2		
#8	LIGHTING		2		2	2		2			2	2	
3CSC	METER ON SIGN	2			2	1	2				2	2	1
5CSC	RAMP METER	2	2	1			2	2	1				
DLC	MAINLINE	4	4	4			4	4	4	4			
	PASSAGE	2	2	1			2	2	1				
	DEMAND	2	2	1			2	2	1				
	QUEUE	1			1		1				1	1	

SPRINKLER CONTROL CONDUIT (BRIDGE)
ELECTRIC SERVICE (IRRIGATION)
RAMP METERING SYSTEM
LIGHTING AND SIGN ILLUMINATION
MICROWAVE VEHICLE DETECTION SYSTEM
CLOSED CIRCUIT TELEVISION SYSTEM

APPROVED FOR ELECTRICAL WORK ONLY

E-1

STATE OF CALIFORNIA - DEPARTMENT OF TRANSPORTATION
Caltrans 06-ELECTRICAL DESIGN

FUNCTIONAL SUPERVISOR: ALI BAKHDOUD
CALCULATED-DESIGNED BY: OMAR MENDOZA
CHECKED BY: PAUL MATOS
REVISED BY
DATE REVISED

LAST REVISION 12-07-11
DATE PLOTTED => 17-APR-2012
TIME PLOTTED => 15:26

Dist	COUNTY	ROUTE	POST MILES TOTAL PROJECT	SHEET No.	TOTAL SHEETS
05	Mon,SBt	101	100.0/101.3, 0.0/1.6	460	641

Paul Matos 12-20-11
REGISTERED ELECTRICAL ENGINEER

4-9-12
PLANS APPROVAL DATE

REGISTERED PROFESSIONAL ENGINEER PAUL MATOS No. 18757 Exp. 6/30/13 ELECTRICAL STATE OF CALIFORNIA

THE STATE OF CALIFORNIA OR ITS OFFICERS OR AGENTS SHALL NOT BE RESPONSIBLE FOR THE ACCURACY OR COMPLETENESS OF SCANNED COPIES OF THIS PLAN SHEET.

NOTES (FOR THIS SHEET ONLY):

1. FOR NOTES AND SCHEDULES, SEE SHEET E-1.
2. FOR ACCURATE RIGHT OF WAY DATA, CONTACT RIGHT OF WAY ENGINEERING AT THE DISTRICT OFFICE.

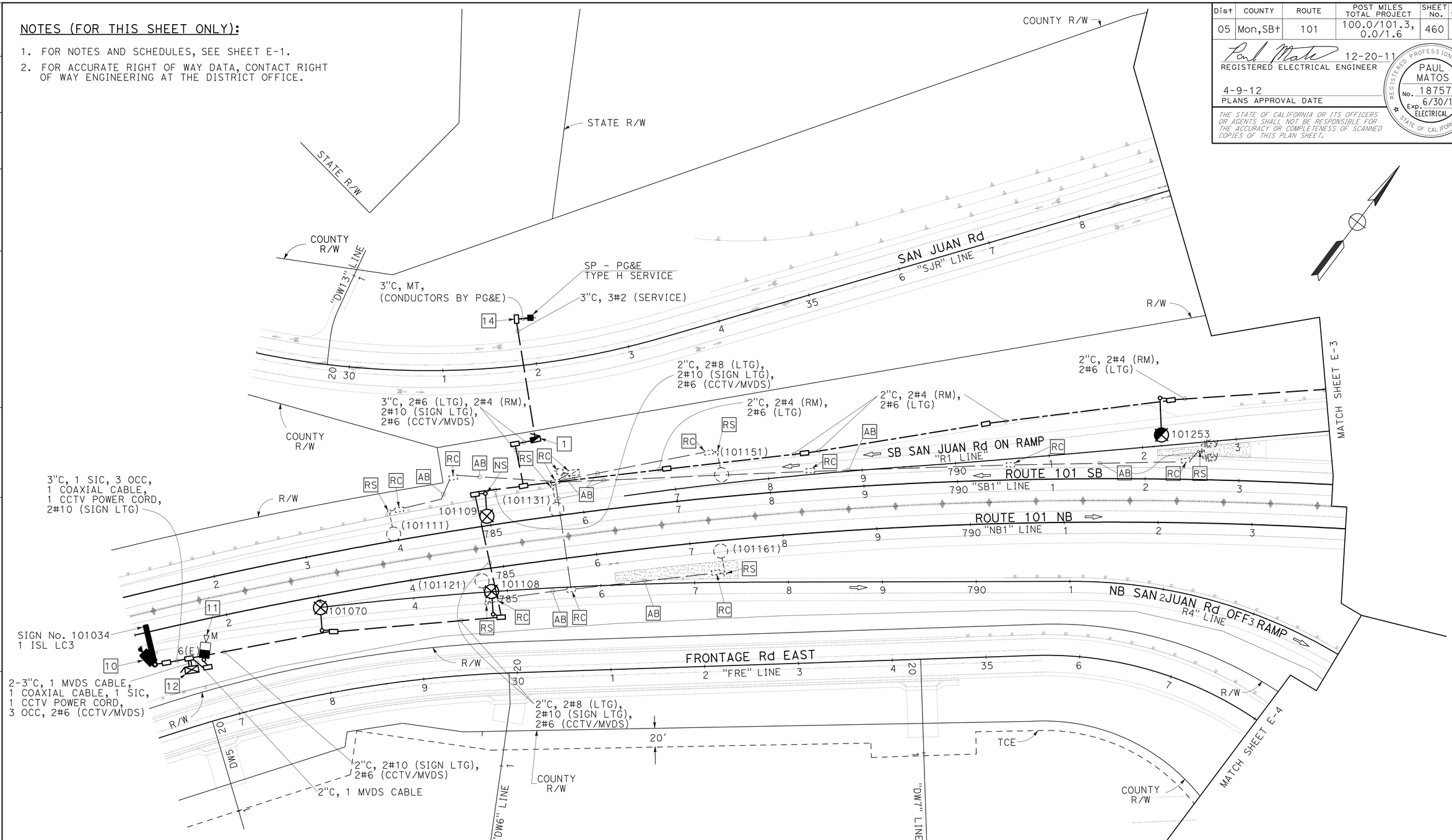

LIGHTING AND SIGN ILLUMINATION
MICROWAVE VEHICLE DETECTION SYSTEM
CLOSED CIRCUIT TELEVISION SYSTEM
RAMP METERING SYSTEM (LOCATION 1)

APPROVED FOR ELECTRICAL WORK ONLY

SCALE:1"=50'

E-2

STATE OF CALIFORNIA - DEPARTMENT OF TRANSPORTATION
Caltrans 06-ELECTRICAL DESIGN

FUNCTIONAL SUPERVISOR: ALI BAKHDOUD
CALCULATED-DESIGNED BY: PAUL MATOS
CHECKED BY: OMAR MENDOZA
REVISED BY
DATE REVISED

LAST REVISION 12-07-11
DATE PLOTTED => 15-APR-2012
TIME PLOTTED => 09:32

Dist	COUNTY	ROUTE	POST MILES TOTAL PROJECT	SHEET No.	TOTAL SHEETS
05	Mon,SBt	101	100.0/101.3, 0.0/1.6	461	641

Paul Matos 12-20-11
REGISTERED ELECTRICAL ENGINEER

4-9-12
PLANS APPROVAL DATE

REGISTERED PROFESSIONAL ENGINEER PAUL MATOS No. 18757 Exp. 6/30/13 ELECTRICAL STATE OF CALIFORNIA

THE STATE OF CALIFORNIA OR ITS OFFICERS OR AGENTS SHALL NOT BE RESPONSIBLE FOR THE ACCURACY OR COMPLETENESS OF SCANNED COPIES OF THIS PLAN SHEET.

NOTES (FOR THIS SHEET ONLY):

1. FOR NOTES AND SCHEDULES, SEE SHEET E-1.
2. FOR ACCURATE RIGHT OF WAY DATA, CONTACT RIGHT OF WAY ENGINEERING AT THE DISTRICT OFFICE.

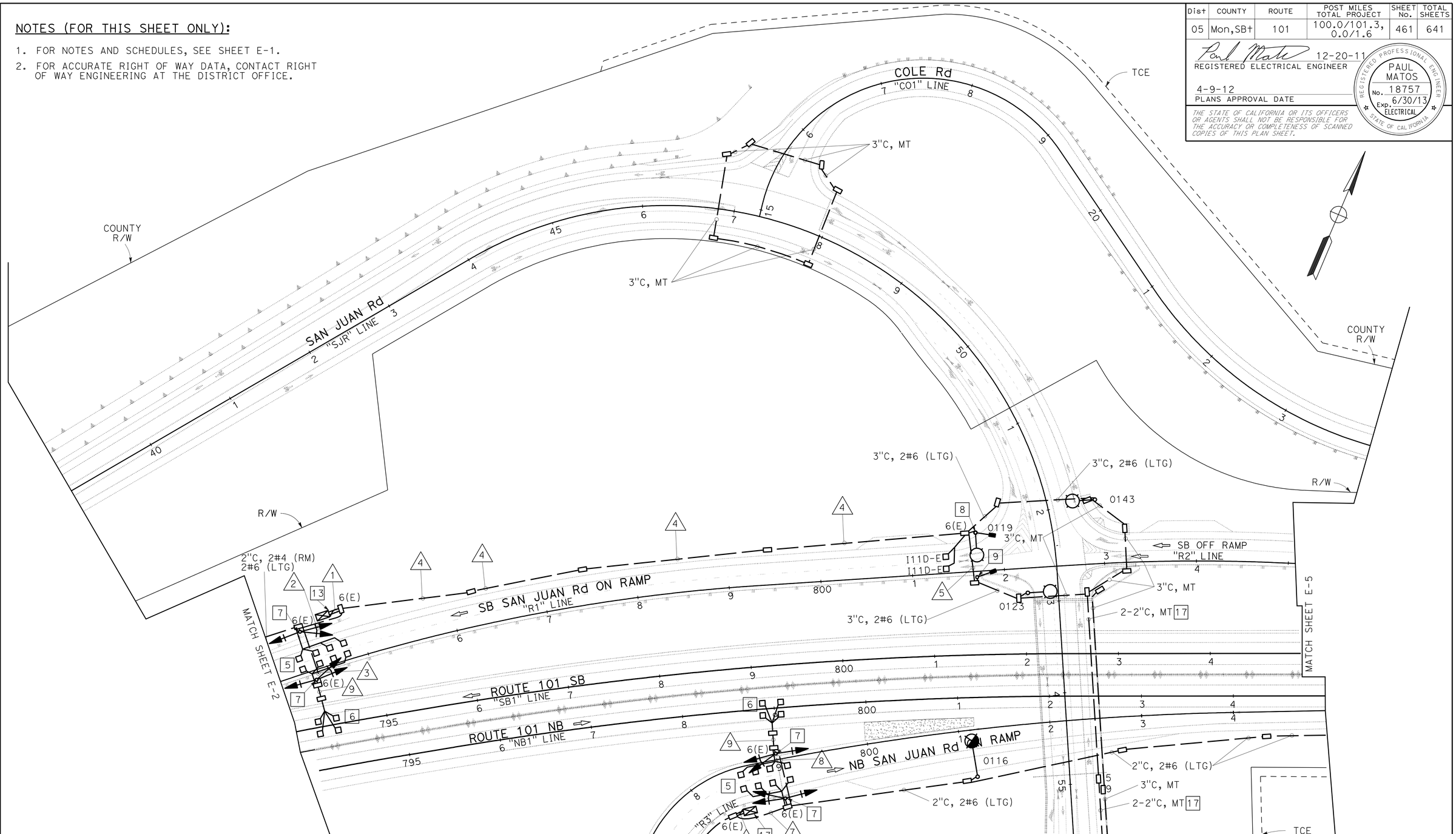

LIGHTING AND SIGN ILLUMINATION
SPRINKLER CONTROL CONDUIT (BRIDGE)
RAMP METERING SYSTEM (LOCATION 1)
RAMP METERING SYSTEM (LOCATION 2)

SCALE:1"=50'

E-3

APPROVED FOR ELECTRICAL WORK ONLY

STATE OF CALIFORNIA - DEPARTMENT OF TRANSPORTATION
Caltrans 06-ELECTRICAL DESIGN

FUNCTIONAL SUPERVISOR: ALI BAKHDOUD
CALCULATED-DESIGNED BY: PAUL MATOS
CHECKED BY: OMAR MENDOZA
REVISED BY
DATE REVISED

LAST REVISION 12-07-11
DATE PLOTTED => 15-APR-2012
TIME PLOTTED => 10:17

Dist	COUNTY	ROUTE	POST MILES TOTAL PROJECT	SHEET No.	TOTAL SHEETS
05	Mon,SBt	101	100.0/101.3, 0.0/1.6	462	641

Paul Matos 12-20-11
REGISTERED ELECTRICAL ENGINEER

4-9-12
PLANS APPROVAL DATE

REGISTERED PROFESSIONAL ENGINEER PAUL MATOS No. 18757 Exp. 6/30/13 ELECTRICAL STATE OF CALIFORNIA

THE STATE OF CALIFORNIA OR ITS OFFICERS OR AGENTS SHALL NOT BE RESPONSIBLE FOR THE ACCURACY OR COMPLETENESS OF SCANNED COPIES OF THIS PLAN SHEET.

NOTES (FOR THIS SHEET ONLY):

1. FOR NOTES AND SCHEDULES, SEE SHEET E-1.
2. FOR ACCURATE RIGHT OF WAY DATA, CONTACT RIGHT OF WAY ENGINEERING AT THE DISTRICT OFFICE.

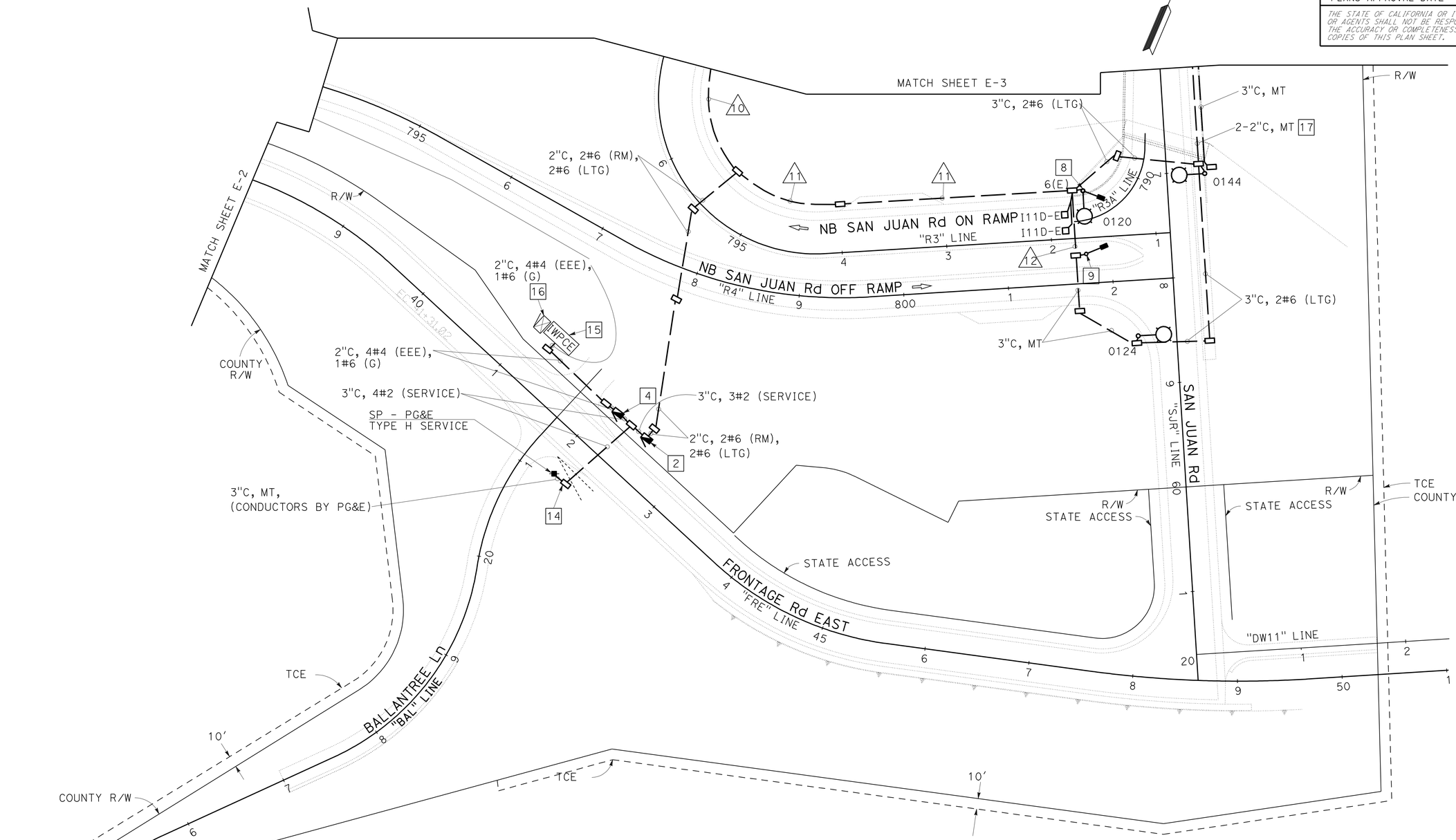

SPRINKLER CONTROL CONDUIT (BRIDGE)
ELECTRIC SERVICE (IRRIGATION)
LIGHTING AND SIGN ILLUMINATION
RAMP METERING SYSTEM (LOCATION 2)

SCALE:1"=50'

APPROVED FOR ELECTRICAL WORK ONLY

E-4

STATE OF CALIFORNIA - DEPARTMENT OF TRANSPORTATION
Caltrans 06-ELECTRICAL DESIGN

FUNCTIONAL SUPERVISOR: ALI BAKHDOUD
CALCULATED-DESIGNED BY: PAUL MATOS
CHECKED BY: OMAR MENDOZA
REVISED BY
DATE REVISED

LAST REVISION 12-07-11
DATE PLOTTED => 17-APR-2012
TIME PLOTTED => 15:26

Dist	COUNTY	ROUTE	POST MILES TOTAL PROJECT	SHEET No.	TOTAL SHEETS
05	Mon,SBt	101	100.0/101.3, 0.0/1.6	463	641

Paul Matos 12-20-11
REGISTERED ELECTRICAL ENGINEER

4-9-12
PLANS APPROVAL DATE

REGISTERED PROFESSIONAL ENGINEER PAUL MATOS No. 18757 Exp. 6/30/13 ELECTRICAL STATE OF CALIFORNIA

THE STATE OF CALIFORNIA OR ITS OFFICERS OR AGENTS SHALL NOT BE RESPONSIBLE FOR THE ACCURACY OR COMPLETENESS OF SCANNED COPIES OF THIS PLAN SHEET.

NOTES (FOR THIS SHEET ONLY):

1. FOR NOTES AND SCHEDULES, SEE SHEET E-1.
2. FOR ACCURATE RIGHT OF WAY DATA, CONTACT RIGHT OF WAY ENGINEERING AT THE DISTRICT OFFICE.

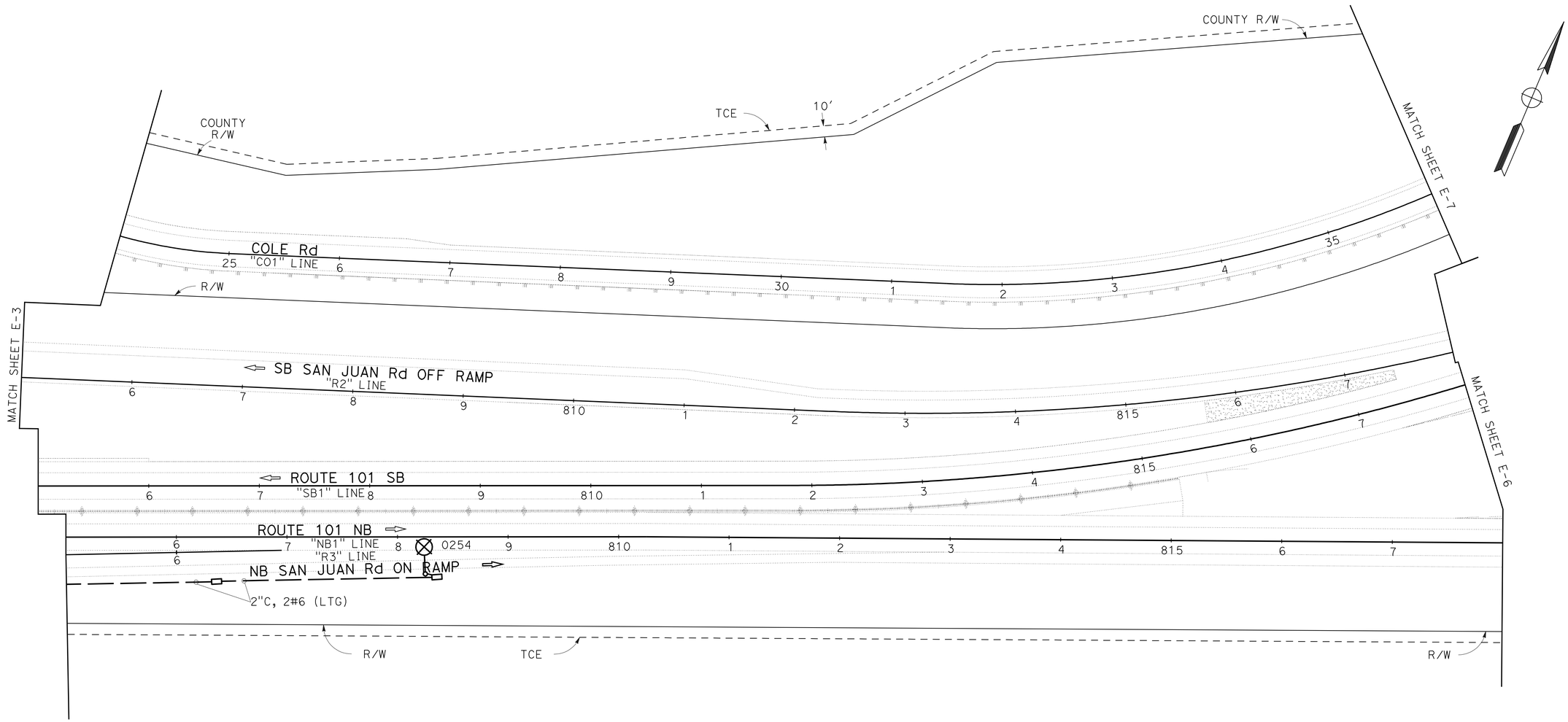

LIGHTING AND SIGN ILLUMINATION

SCALE:1"=50'

E-5

APPROVED FOR ELECTRICAL WORK ONLY

STATE OF CALIFORNIA - DEPARTMENT OF TRANSPORTATION
Caltrans 06-ELECTRICAL DESIGN

FUNCTIONAL SUPERVISOR: ALI BAKHDOUD
CALCULATED-DESIGNED BY: PAUL MATOS
CHECKED BY: OMAR MENDOZA
REVISED BY
DATE REVISED

LAST REVISION 12-07-11
DATE PLOTTED => 15-APR-2012
TIME PLOTTED => 10:25

Dist	COUNTY	ROUTE	POST MILES TOTAL PROJECT	SHEET No.	TOTAL SHEETS
05	Mon,SBt	101	100.0/101.3, 0.0/1.6	464	641

Paul Matos 12-20-11
REGISTERED ELECTRICAL ENGINEER

4-9-12
PLANS APPROVAL DATE

REGISTERED PROFESSIONAL ENGINEER PAUL MATOS No. 18757 Exp. 6/30/13 ELECTRICAL STATE OF CALIFORNIA

THE STATE OF CALIFORNIA OR ITS OFFICERS OR AGENTS SHALL NOT BE RESPONSIBLE FOR THE ACCURACY OR COMPLETENESS OF SCANNED COPIES OF THIS PLAN SHEET.

NOTES (FOR THIS SHEET ONLY):

1. FOR NOTES AND SCHEDULES, SEE SHEET E-1.
2. FOR ACCURATE RIGHT OF WAY DATA, CONTACT RIGHT OF WAY ENGINEERING AT THE DISTRICT OFFICE.

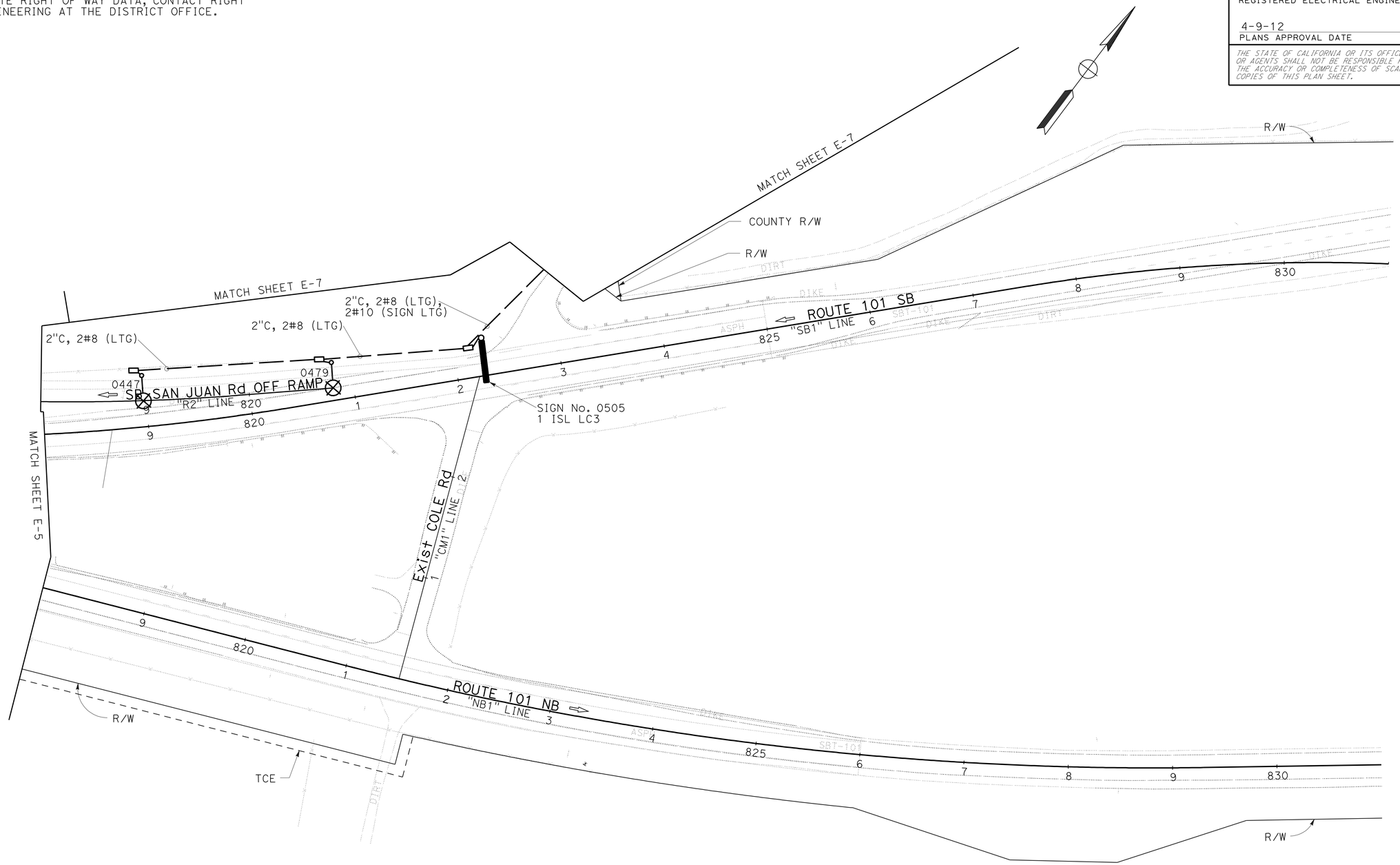

LIGHTING AND SIGN ILLUMINATION

SCALE:1"=50'

E-6

APPROVED FOR ELECTRICAL WORK ONLY

STATE OF CALIFORNIA - DEPARTMENT OF TRANSPORTATION
Caltrans 06-ELECTRICAL DESIGN

FUNCTIONAL SUPERVISOR: ALI BAKHDOUD
CALCULATED-DESIGNED BY: PAUL MATOS
CHECKED BY: OMAR MENDOZA
REVISED BY
DATE REVISED

LAST REVISION 12-07-11
DATE PLOTTED => 15-APR-2012
TIME PLOTTED => 09:32

Dist	COUNTY	ROUTE	POST MILES TOTAL PROJECT	SHEET No.	TOTAL SHEETS
05	Mon,SBt	101	100.0/101.3, 0.0/1.6	465	641

12-20-11
REGISTERED ELECTRICAL ENGINEER

4-9-12
PLANS APPROVAL DATE

REGISTERED PROFESSIONAL ENGINEER PAUL MATOS No. 18757 Exp. 6/30/13 ELECTRICAL STATE OF CALIFORNIA

THE STATE OF CALIFORNIA OR ITS OFFICERS OR AGENTS SHALL NOT BE RESPONSIBLE FOR THE ACCURACY OR COMPLETENESS OF SCANNED COPIES OF THIS PLAN SHEET.

NOTES (FOR THIS SHEET ONLY):

1. FOR NOTES AND SCHEDULES, SEE SHEET E-1.
2. FOR ACCURATE RIGHT OF WAY DATA, CONTACT RIGHT OF WAY ENGINEERING AT THE DISTRICT OFFICE.

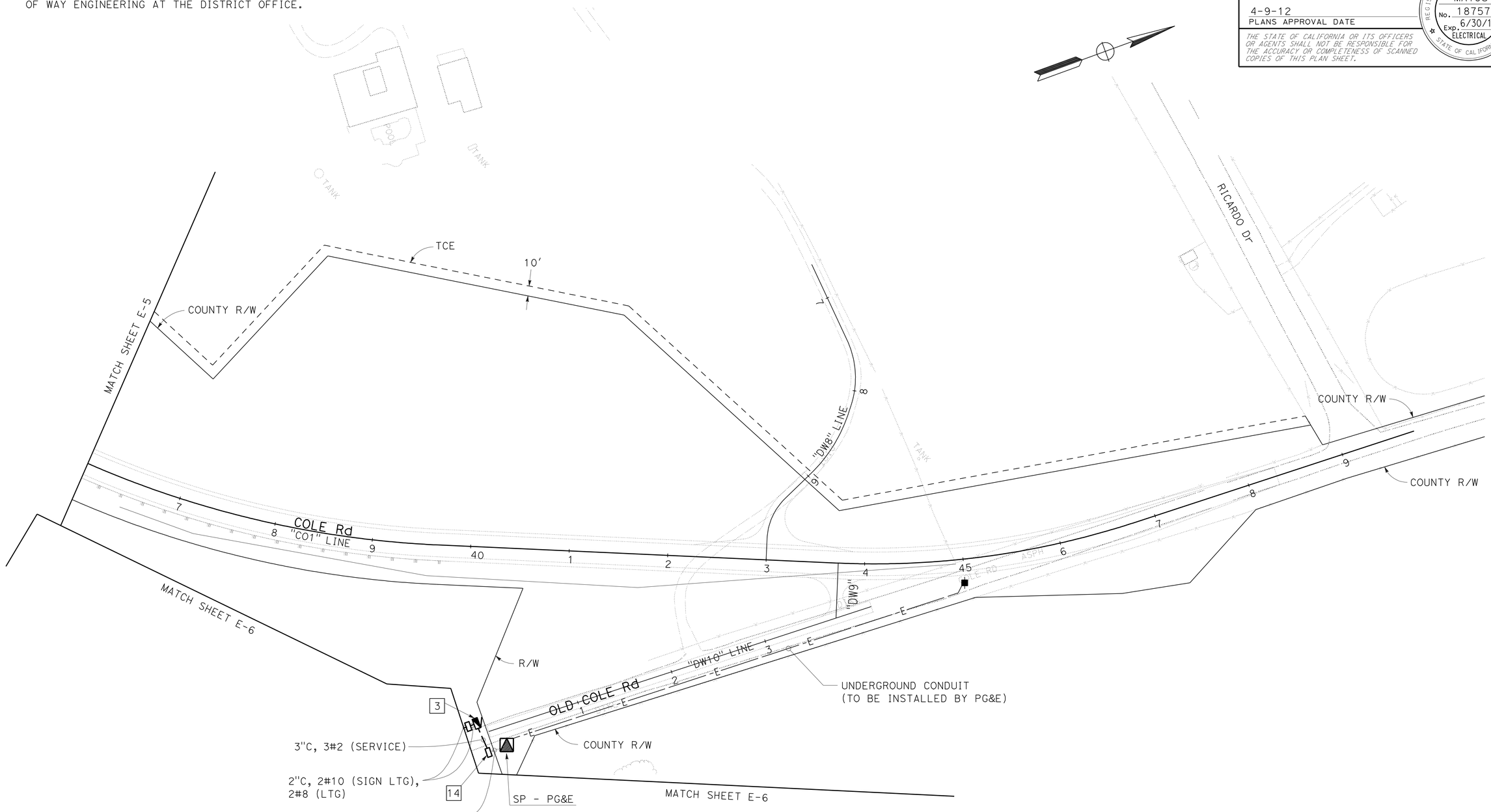

LIGHTING AND SIGN ILLUMINATION

SCALE:1"=50'

E-7

APPROVED FOR ELECTRICAL WORK ONLY

STATE OF CALIFORNIA - DEPARTMENT OF TRANSPORTATION
Caltrans 06-ELECTRICAL DESIGN

FUNCTIONAL SUPERVISOR: ALI BAKHDOUD
CALCULATED-DESIGNED BY: OMAR MENDOZA
CHECKED BY: PAUL MATOS
REVISED BY
DATE REVISED

LAST REVISION 12-07-11
DATE PLOTTED => 17-APR-2012
TIME PLOTTED => 15:26

Dist	COUNTY	ROUTE	POST MILES TOTAL PROJECT	SHEET No.	TOTAL SHEETS
05	Mon,SBt	101	100.0/101.3, 0.0/1.6	466	641

12-20-11
REGISTERED ELECTRICAL ENGINEER

4-9-12
PLANS APPROVAL DATE

REGISTERED PROFESSIONAL ENGINEER
PAUL MATOS
No. 18757
Exp. 6/30/13
ELECTRICAL
STATE OF CALIFORNIA

THE STATE OF CALIFORNIA OR ITS OFFICERS OR AGENTS SHALL NOT BE RESPONSIBLE FOR THE ACCURACY OR COMPLETENESS OF SCANNED COPIES OF THIS PLAN SHEET.

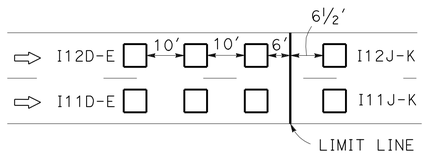

DETAIL A

DLC IDENTIFICATION

D-L-N

DIRECTION OF TRAFFIC
N - NORTHBOUND
S - SOUTHBOUND
E - EASTBOUND
W - WESTBOUND

1 - ENTERING
2 - LEAVING
LANE NUMBER

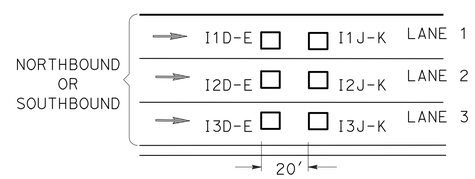

DETAIL B

DLC TERMINATION (TB2)

I1D-E

I - INPUT PANEL (TB2)
DETECTOR ASSIGNMENT

1 - NORTHBOUND/SOUTHBOUND LANE 1
2 - NORTHBOUND/SOUTHBOUND LANE 2
3 - NORTHBOUND/SOUTHBOUND LANE 3

D-E - ENTERING
J-K - LEAVING

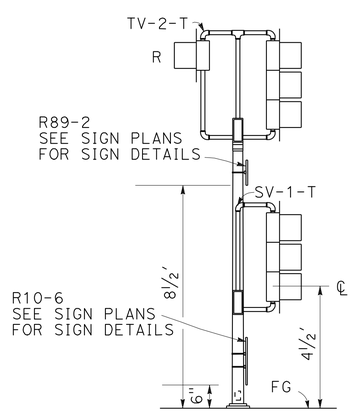

DETAIL C

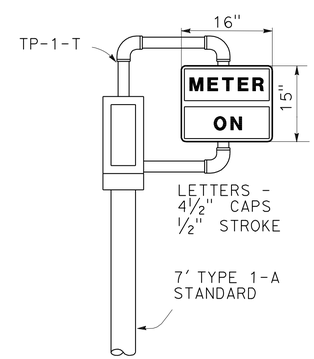

DETAIL D

APPROVED FOR ELECTRICAL WORK ONLY

RAMP METERING SYSTEM

NO SCALE

E-8

STATE OF CALIFORNIA - DEPARTMENT OF TRANSPORTATION
Caltrans 06-ELECTRICAL DESIGN

FUNCTIONAL SUPERVISOR: ALI BAKHDOUD
CALCULATED-DESIGNED BY: PAUL MATOS
CHECKED BY: OMAR MENDOZA
REVISED BY
DATE REVISED

LAST REVISION 12-07-11
DATE PLOTTED => 15-APR-2012
TIME PLOTTED => 09:32

Dist	COUNTY	ROUTE	POST MILES TOTAL PROJECT	SHEET No.	TOTAL SHEETS
05	Mon,SBt	101	100.0/101.3, 0.0/1.6	467	641

12-20-11
REGISTERED ELECTRICAL ENGINEER

4-9-12
PLANS APPROVAL DATE

REGISTERED PROFESSIONAL ENGINEER PAUL MATOS No. 18757 Exp. 6/30/13 ELECTRICAL STATE OF CALIFORNIA

THE STATE OF CALIFORNIA OR ITS OFFICERS OR AGENTS SHALL NOT BE RESPONSIBLE FOR THE ACCURACY OR COMPLETENESS OF SCANNED COPIES OF THIS PLAN SHEET.

NOTES: (THIS SHEET ONLY)

1. COAXIAL CABLE SURGE/LIGHTNING PROTECTOR: SURGE HANDLING: 5 kA; IMPEDANCE: 75 OHMS; INSERTION LOSS:<0.1DB @ 500 MHz; CONNECTORS: TYPE F OR BNC
2. STATE-FURNISHED MATERIAL SHALL BE INSTALLED BY THE CONTRACTOR.
3. STATE-FURNISHED MATERIAL WILL BE INSTALLED BY STATE FORCES.
4. SIC - USE TWO PAIR FOR EIA-422 PAN/TILT/ZOOM COMMUNICATION BETWEEN THE CCTV CAMERA AND VIDEO ENCODER, ONE PAIR WILL REMAIN AS A SPARE (COLORS MAY VARY).
5. OCC (OUTDOOR CAT5E CABLE). REMOVE A PORTION OF THE MODULAR PLASTIC CONNECTOR WITH A FILE TO PREVENT PHYSICAL INTERFERENCE WITH SCREWS ON THE ROTATING CAMERA ASSEMBLY. THEN, PLUG THE OCC INTO THE MODULAR DATA PORT IN THE CCTV DOME CAMERA ASSEMBLY.
6. RG-6U COAXIAL CABLE: CENTER CONDUCTOR: 18 AWG SOLID COPPER; BRAID SHIELD: WOVEN COPPER BRAID WITH MINIMUM 80% COVERAGE (ALUMINUM FOIL SHIELDING OR FOIL WRAP IS NOT ACCEPTABLE); DIELECTRIC INSULATING MATERIAL: POLYURETHANE OR POLYETHYLENE; OUTER JACKET: BLACK PVC
7. TO VDS STANDARD, SEE SES SHEETS FOR DETAILS.

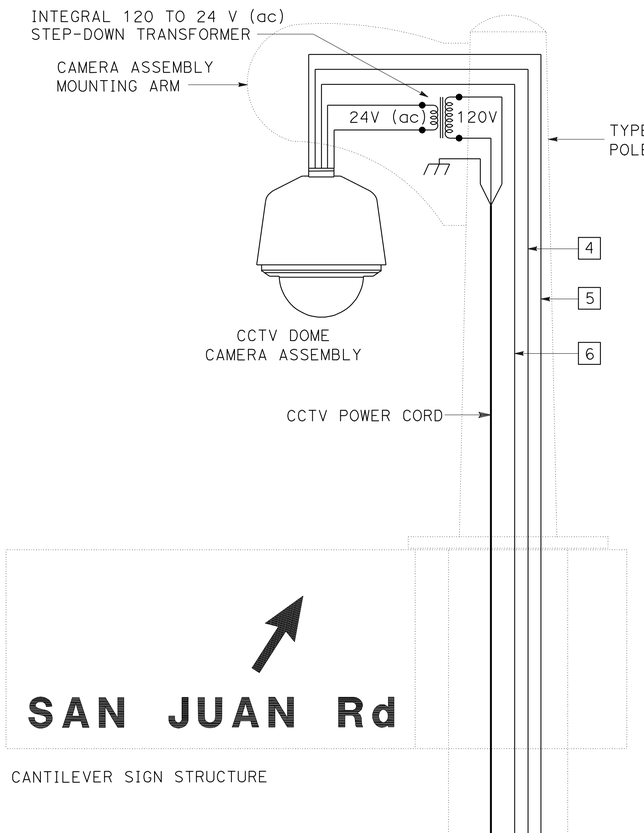

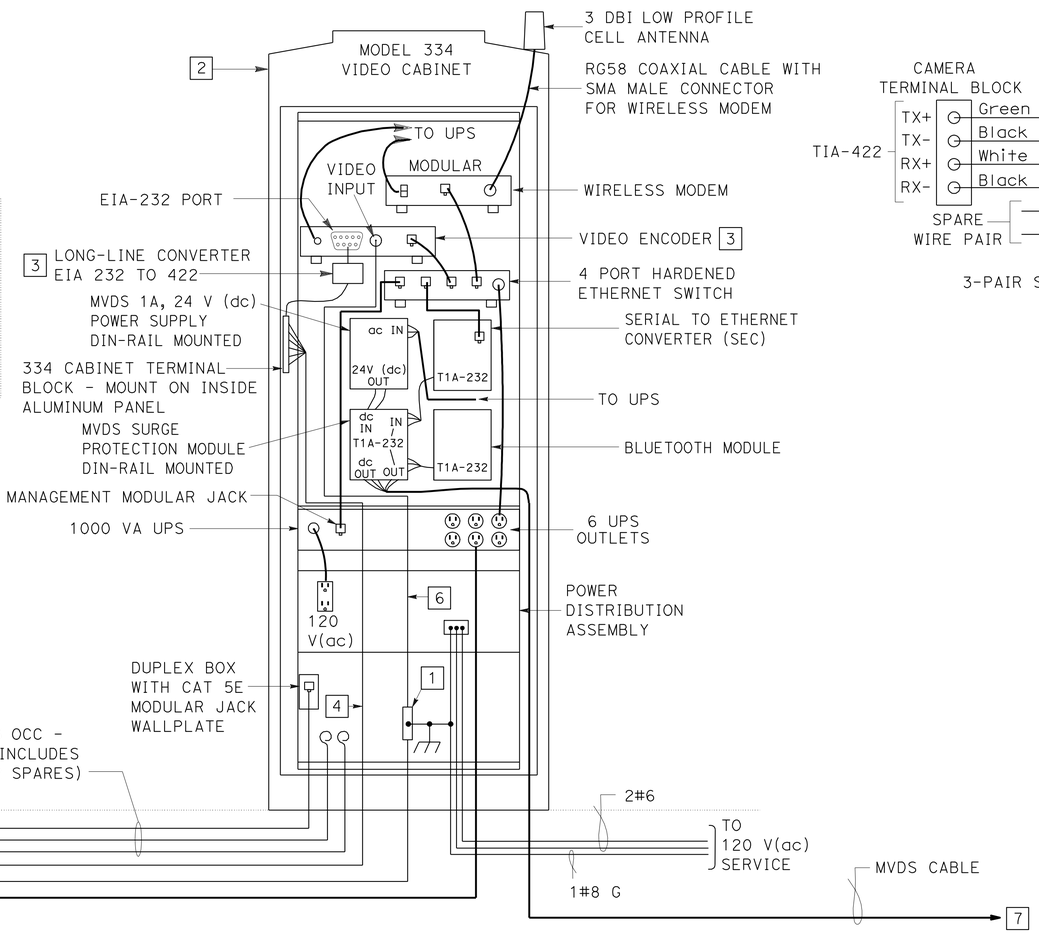

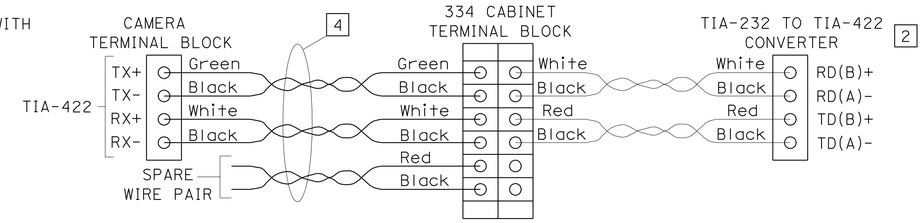

3-PAIR SIC TIA-422 CONNECTIONS

MICROWAVE VEHICLE DETECTION SYSTEM
CLOSED CIRCUIT TELEVISION SYSTEM

(ELECTRICAL DETAILS)

NO SCALE

E-9

STATE OF CALIFORNIA - DEPARTMENT OF TRANSPORTATION
Caltrans 06-ELECTRICAL DESIGN

FUNCTIONAL SUPERVISOR: ALI BAKHDOUD
CALCULATED-DESIGNED BY: PAUL MATOS
CHECKED BY: OMAR MENDOZA
REVISED BY
DATE REVISED

LAST REVISION 12-07-11
DATE PLOTTED => 17-APR-2012
TIME PLOTTED => 15:26

DIST	COUNTY	ROUTE	POST MILES TOTAL PROJECT	SHEET No	TOTAL SHEETS
05	Mon,SB+	101	100.0/101.3, 0.0/1.6	468	641

Eliseo Lopez 3-3-11
REGISTERED CIVIL ENGINEER DATE

4-9-12
PLANS APPROVAL DATE

REGISTERED PROFESSIONAL ENGINEER ELISEO LOPEZ No. C72910 Exp. 12/31/12 CIVIL STATE OF CALIFORNIA

The State of California or its officers or agents shall not be responsible for the accuracy or completeness of electronic copies of this plan sheet.

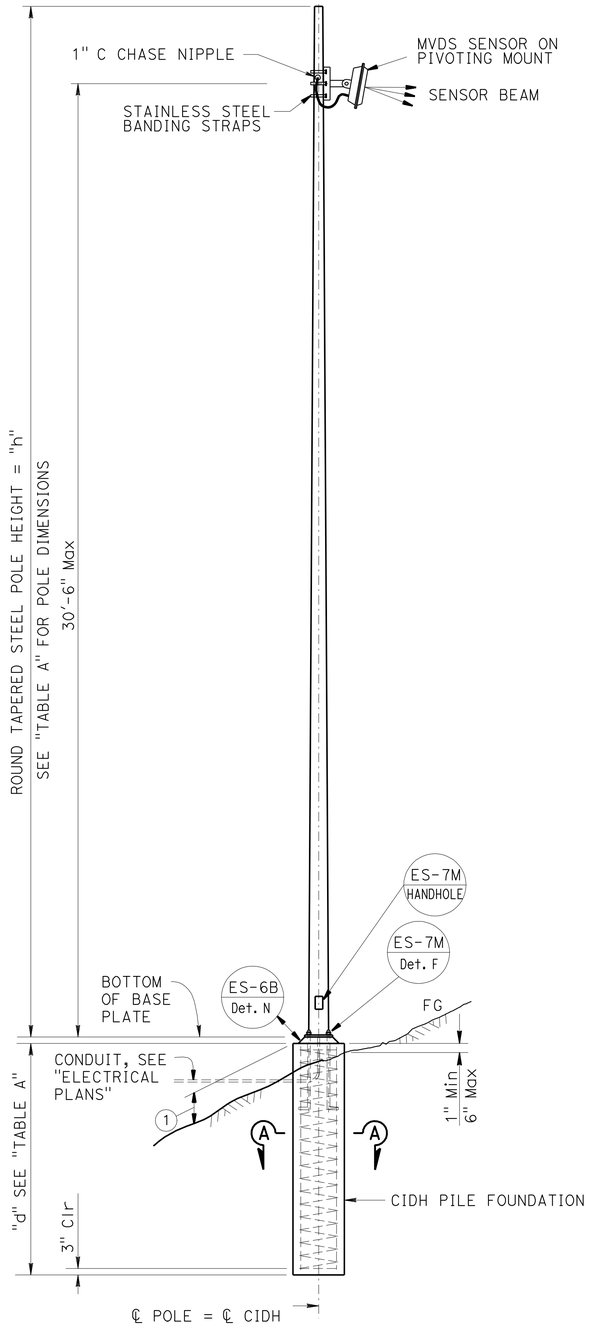

ELEVATION
VDS 35
NO SCALE

TABLE A

POLE TYPE	POLE DATA				BASE PLATE DATA				"d" 2'-0" ø CIDH PILE		STRUCTURAL STEEL Lb PLUS 3.5% GALVANIZING
	HEIGHT "h"	Min OD		THICKNESS	"C"	THICKNESS	ANCHOR BOLTS				
		BASE	TOP				SIZE	BC = BOLT CIRCLE	LEVEL GROUND	SLOPING GROUND	
VDS 35	35'	8⅝"	3⅞"	0.1793"	1'-0"	1"	1" x 3'-0" x 4"	1'-0"	8'-0"	10"-0"	550

TABLE B

ATTACHMENT	MOUNTING HEIGHT	WEIGHT LIMITS (Max)
MVDS	30'-6" Max	7 lb

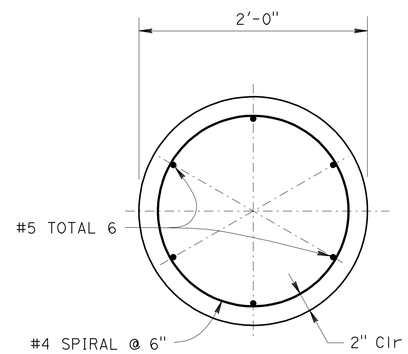

SECTION A-A
NO SCALE

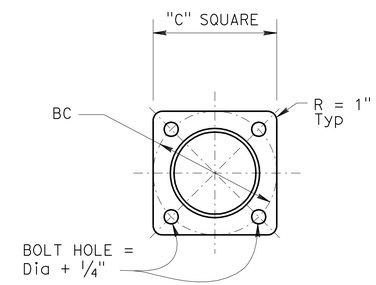

BASE PLATE
NO SCALE

ABBREVIATIONS:
MVDS = Microwave Vehicle Detection System
VDS = Vehicle Detection System

DESIGN NOTES:

SPECIFICATIONS

Design : AASHTO Standard Specifications for Structural Supports for Highway Signs, Luminaires and Traffic Signals dated 2001.

LOADING

Wind Loadings : 100 mph

UNIT STRESSES

Structural Steel : fy = 48,000 psi tapered steel tube
fy = 36,000 psi unless otherwise noted.

Anchor bolts = A307

Reinforced Concrete : f'c = 3,600 psi
fy = 60,000 psi

NOTES:

1. See "ELECTRICAL PLANS" for Pole location.
2. All steel shall be galvanized after fabrication.
3. During pole erection the post shall be raked as necessary with the use of leveling nuts to provide a plumb pole axis.
4. The foundation shall be treated as level ground condition if the slope inclination is flatter than 4H:1V.
5. Foundation design is based on AASHTO 2001 article 13.6 Broms' approximate procedure assuming a cohesionless material. The angle of internal friction used is 30 degrees and unit weight of soil used is 120 lb/ft³.
6. For details not shown, see 2006 "STANDARD PLANS" and 2006 "REVISED STANDARD PLANS".

THE CONTRACTOR SHALL VERIFY ALL CONTROLLING FIELD DIMENSIONS BEFORE ORDERING OR FABRICATING ANY MATERIAL

(1) 1'-3" Max for sloped finished grade.

BRANCH CHIEF Jeffrey B Woody

	BY	CHECKED
DESIGN	ELISEO LOPEZ	ARLENA GUTIERREZ
DETAILS	A R DUDSAK	ARLENA GUTIERREZ
QUANTITIES		

STATE OF CALIFORNIA
DEPARTMENT OF TRANSPORTATION

DIVISION OF ENGINEERING SERVICES
DESIGN AND TECHNICAL SERVICES
SPECIAL DESIGNS BRANCH A

BRIDGE NO. X
POST MILE X

ELECTRICAL SYSTEMS
MICROWAVE VEHICLE DETECTION SYSTEM POLE DETAILS

SES-1

(ENGLISH) SPECIAL DESIGNS BRANCH BORDER SHEET (REV. 7-1-09)

ORIGINAL SCALE IN INCHES FOR REDUCED PLANS 0 1 2 3

UNIT: 3619
PROJECT NUMBER & PHASE: 0500000495-1
CONTRACT NO.: 05-315801

DISREGARD PRINTS BEARING EARLIER REVISION DATES

REVISION DATES: 2-14-11 2-28-11 3-2-11

SHEET X OF X

FILE => spec_des_br_prj/2011sd/05-315801/05-315801_ses-1.dgn

USERNAME => s121614 DATE PLOTTED => 15-APR-2012 TIME PLOTTED => 06:21

DIST	COUNTY	ROUTE	POST MILES TOTAL PROJECT	SHEET No	TOTAL SHEETS
05	Mon,SB+	101	100.0/101.3, 0.0/1.6	469	641

Eliseo Lopez 3-3-11
REGISTERED CIVIL ENGINEER DATE

4-9-12
PLANS APPROVAL DATE

REGISTERED PROFESSIONAL ENGINEER ELISEO LOPEZ No. C72910 Exp. 12/31/12 CIVIL STATE OF CALIFORNIA

The State of California or its officers or agents shall not be responsible for the accuracy or completeness of electronic copies of this plan sheet.

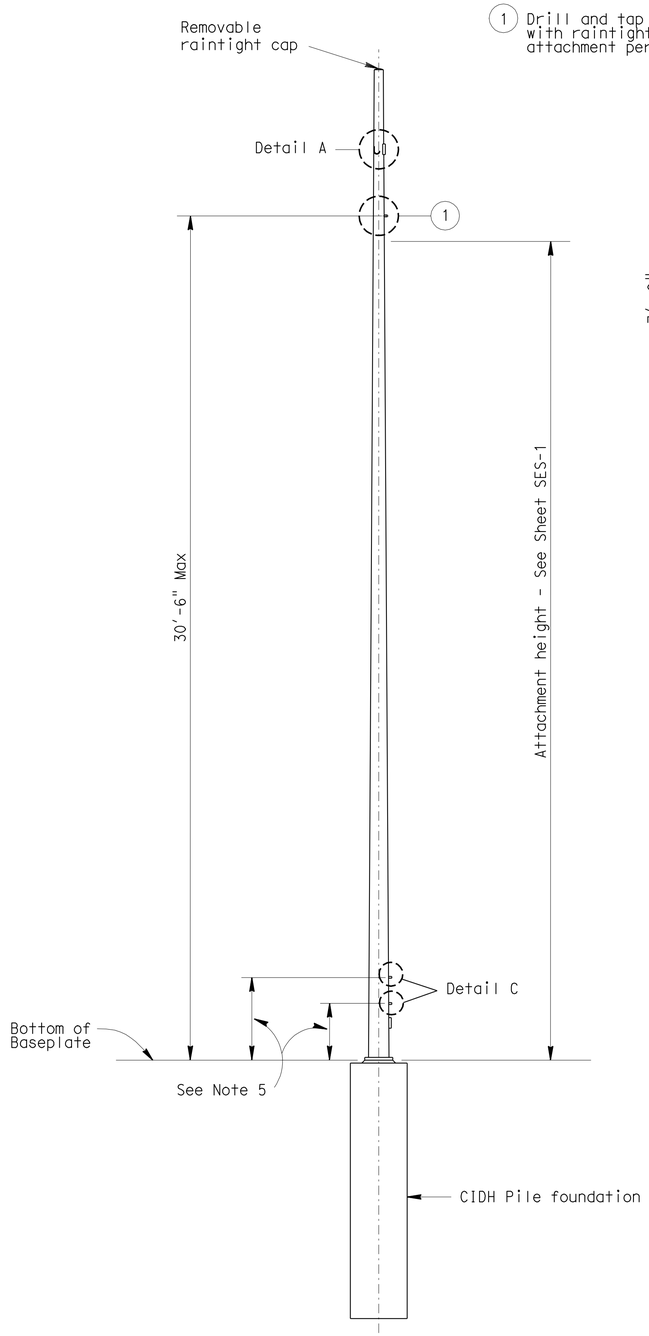

ELEVATION
VDS 35

THE CONTRACTOR SHALL VERIFY ALL CONTROLLING FIELD DIMENSIONS BEFORE ORDERING OR FABRICATING ANY MATERIAL.

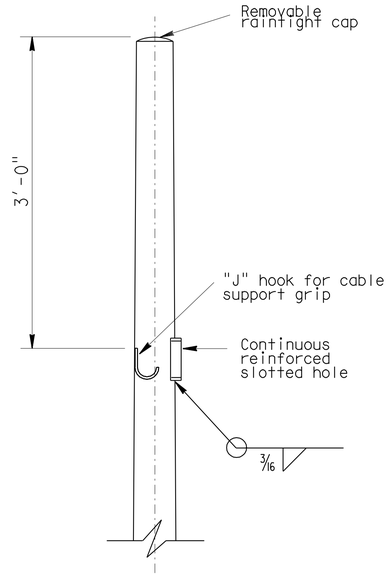

DETAIL A

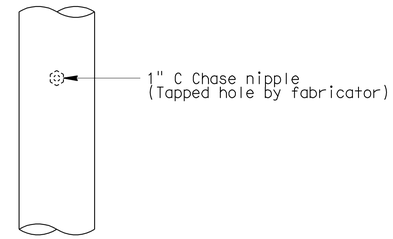

DETAIL B
TYPICAL ELECTRICAL ACCESS DETAIL

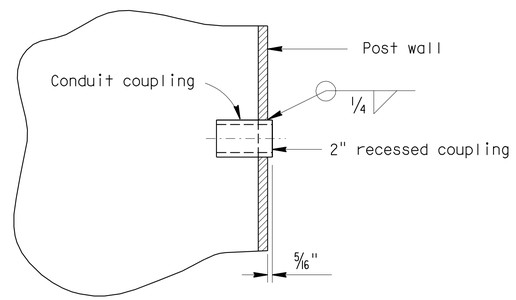

2" RECESSED COUPLING
DETAIL C (TYPICAL)

NOTES:

1. Place all couplings on the same side of pole.
2. Chase nipples and slotted hole shall have a raintight plug. Plug should only be removed if chase nipple or slotted hole is used.
3. The Chase nipples shall be 1'-0" min vertical clearance from the slotted hole and not on the same side as the slotted hole.
4. For attachment details, see sheet SES-1.
5. Coupling location above ground and spacing shall be verified to match choice of enclosure, prior to fabrication.
6. All attachments, unless otherwise noted, shall be mounted to pole with stainless steel straps or other method without drilling holes in pole. Enclosure may require drilling through post for mounting. Method of mounting enclosure will require the Engineer's approval.

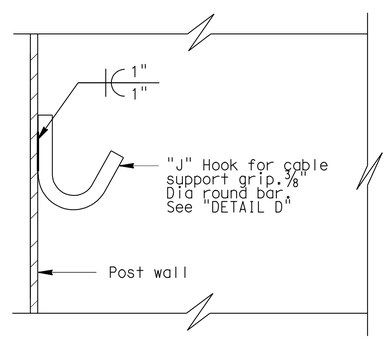

J HOOK DETAIL

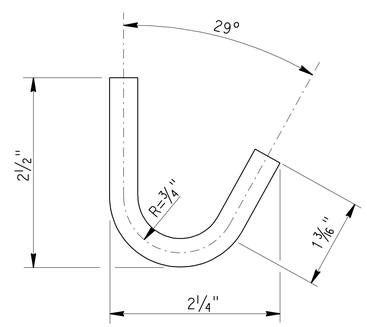

DETAIL D

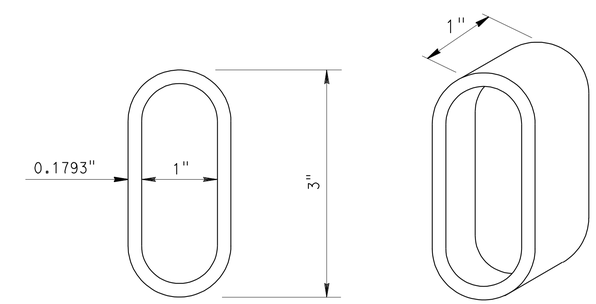

SLOTTED HOLE

NO SCALE

BRANCH CHIEF Jeffrey B Woody	DESIGN	BY ELISEO LOPEZ	CHECKED ARLENA GUTIERREZ
	DETAILS	BY A R DUDSAK	CHECKED ARLENA GUTIERREZ
	QUANTITIES	BY	CHECKED

STATE OF CALIFORNIA
DEPARTMENT OF TRANSPORTATION

DIVISION OF ENGINEERING SERVICES
DESIGN AND TECHNICAL SERVICES
SPECIAL DESIGNS BRANCH A

BRIDGE NO. X
POST MILE X

ELECTRICAL SYSTEMS
MICROWAVE VEHICLE DETECTION SYSTEM POLE DETAILS

SES-2

(ENGLISH) SPECIAL DESIGNS BRANCH BORDER SHEET (REV. 7-1-09)

ORIGINAL SCALE IN INCHES FOR REDUCED PLANS 0 1 2 3

UNIT: 3619
PROJECT NUMBER & PHASE: 0500000495-1
CONTRACT NO.: 05-315801

DISREGARD PRINTS BEARING EARLIER REVISION DATES
REVISION DATES 2-14-11 2-18-11 3-3-11

SHEET X OF X

FILE => spec_des_br_prj/2011sd/05-315801/05-315801_ses-2.dgn

USERNAME => s121614 DATE PLOTTED => 15-APR-2012 TIME PLOTTED => 06:21

DIST	COUNTY	ROUTE	POST MILES TOTAL PROJECT	SHEET No	TOTAL SHEETS
05	Mon,SBt	101	100.0/101.3, 0.0/1.6	470	641

Eliseo Lopez 9/27/11
REGISTERED CIVIL ENGINEER DATE

4-9-12
PLANS APPROVAL DATE

REGISTERED PROFESSIONAL ENGINEER ELISEO LOPEZ No. C72910 Exp. 12/31/12 CIVIL STATE OF CALIFORNIA

The State of California or its officers or agents shall not be responsible for the accuracy or completeness of electronic copies of this plan sheet.

TABLE A

POLE TYPE	POLE DATA				BASE PLATE DATA - SEE 2006 RSP ES-7B			STRUCTURAL STEEL LBS PLUS 3.5% GALVANIZING
	HEIGHT "H"	Min OD		THICKNESS	THICKNESS	ANCHOR BOLTS		
		BASE	TOP			SIZE	BC = BOLT CIRCLE	
1-D (Modified)	10'	5 1/4"	4 1/2"	0.1196"	3/4"	1" x 1'-6" x 3"	8 1/2"	104

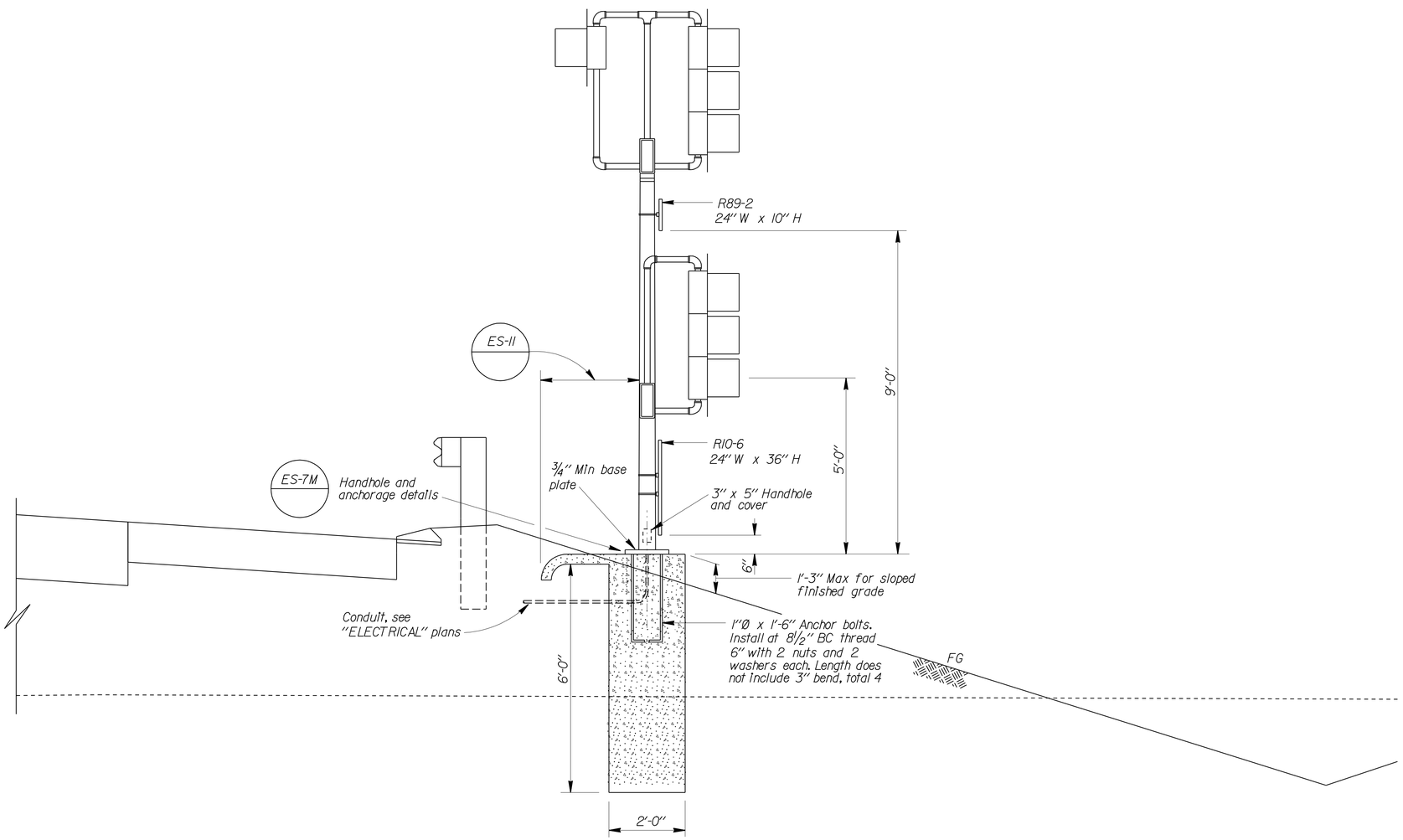

ELEVATION

Type 1-D Pole (Modified)

NOTE:
THE CONTRACTOR SHALL VERIFY ALL CONTROLLING FIELD DIMENSIONS BEFORE ORDERING OR FABRICATING ANY MATERIAL.

STANDARD PLAN SHEET No.
DETAIL No.

NO SCALE

GENERAL NOTES:

SPECIFICATIONS

Design : AASHTO Standard Specifications for Structural Supports for Highway Signs, Luminaires and Traffic Signals dated 2001.

LOADING

Wind Loadings : 100 mph

UNIT STRESSES

Structural Steel : fy = 48,000 psi tapered steel tube
fy = 36,000 psi unless otherwise noted.

Anchor bolts = A307

Reinforced Concrete : f'c = 3,600 psi
fy = 60,000 psi

NOTES:

1. For pole locations, see "ELECTRICAL" plans.
2. All steel shall be galvanized after fabrication.
3. During pole erection, the post shall be raked as necessary with the use of leveling nuts to provide a plumb pole axis.
4. The foundation shall be treated as level ground condition if the slope inclination is flatter than 4H:1V.
5. Foundation design is based on AASHTO 2001 article 13.6 Broms' approximate procedure assuming a cohesionless material. The angle of internal friction used is 30 degrees and unit weight of soil used is 120 lb/ft³.
6. For details not shown, see "2006 STANDARD PLANS" and "2006 REVISED STANDARD PLANS".

BRANCH CHIEF JEFF WOODY

	BY	CHECKED
DESIGN	ELISEO LOPEZ	MAHFOUD LICHA
DETAILS	R. YEE	MAHFOUD LICHA
QUANTITIES		

STATE OF CALIFORNIA
DEPARTMENT OF TRANSPORTATION

DIVISION OF ENGINEERING SERVICES
DESIGN AND TECHNICAL SERVICES
SPECIAL DESIGNS BRANCH A

BRIDGE NO.
POST MILE

TYPE 1-D MODIFIED POLE DETAILS

SES-3

(ENGLISH) SPECIAL DESIGNS BRANCH BORDER SHEET (REV. 7-1-09)

ORIGINAL SCALE IN INCHES FOR REDUCED PLANS 0 1 2 3

UNIT: 3619
PROJECT NUMBER & PHASE: 0500000495-1 CONTRACT NO.: 05-315801

DISREGARD PRINTS BEARING EARLIER REVISION DATES
REVISION DATES 9/27/11 9/27/11
SHEET OF

USERNAME => s12614 DATE PLOTTED => 15-APR-2012 TIME PLOTTED => 06:21

FILE => 2011sd/05-315801/ses3.dgn

DIST.	COUNTY	ROUTE	POST MILES TOTAL PROJECT	SHEET NO.	TOTAL SHEETS
05	Mon,SBt	101	100.0/101.3, 0.0/1.6	471	641

REGISTERED ELECTRICAL ENGINEER — 12-19-11 DATE

REGISTERED PROFESSIONAL ENGINEER — IMRAN SAEED — No. E 18781 — Exp. 6-30-13 ELEC — STATE OF CALIFORNIA

4-9-12
PLANS APPROVAL DATE

The State of California or its officers or agents shall not be responsible for the accuracy or completeness of electronic copies of this plan sheet.

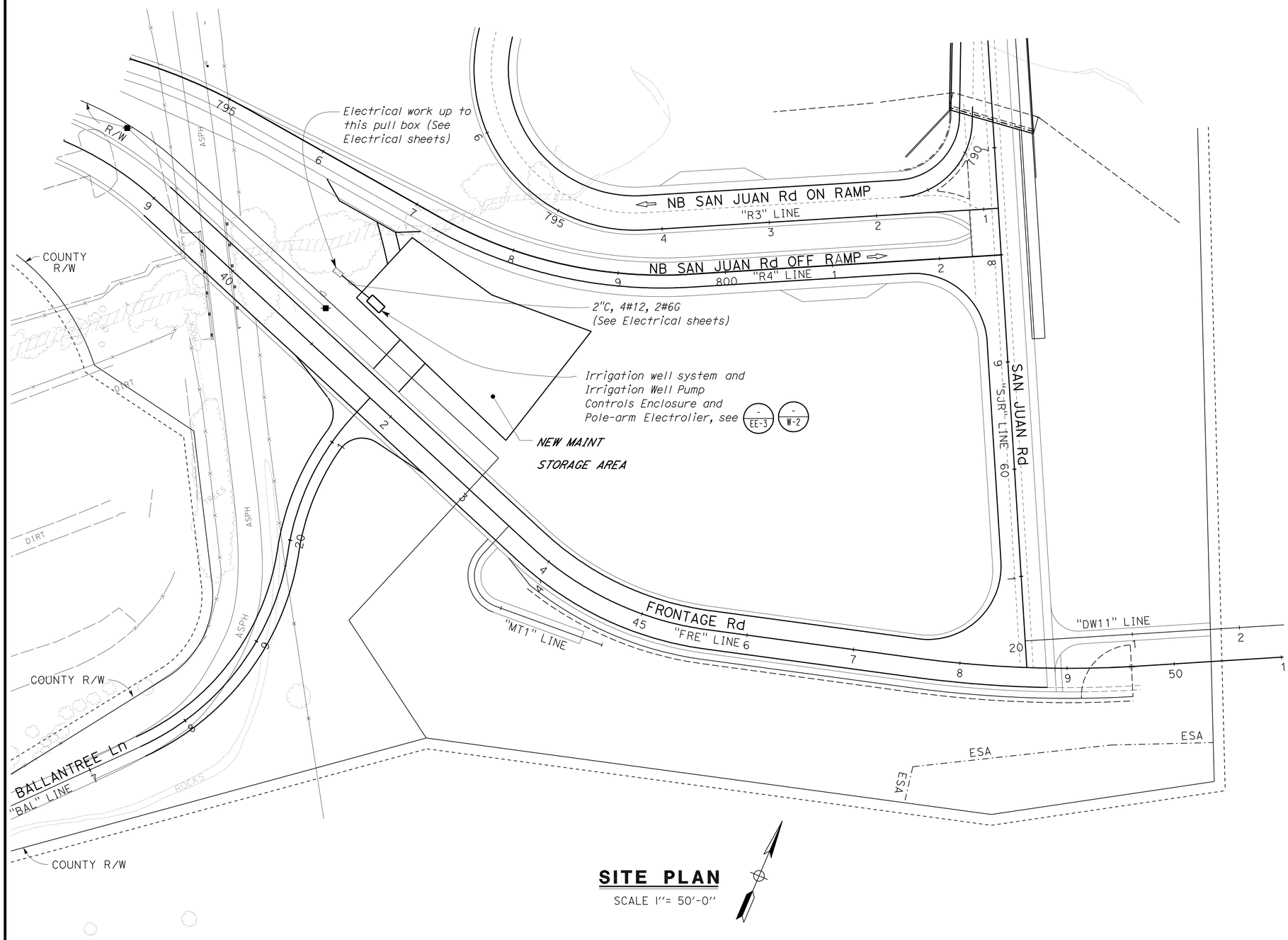

SITE PLAN

SCALE 1"= 50'-0"

APPROVED FOR ELECTRICAL WORK ONLY.

LEGEND

SYMBOL	DESCRIPTION
	CIRCUIT BREAKER, SINGLE POLE
	CIRCUIT BREAKER, THREE POLE
	CONTACT, NORMALLY OPEN
	CONTACT, NORMALLY CLOSED
	SWITCH, SINGLE-POLE, 3-POSITION
	OPERATING COIL
	THERMAL OVERLOAD
M	MOTOR
	GROUNDING ELECTRODE
	POLE-ARM ELECTROLIER

ABBREVIATIONS

A	AMPERES
AC	ALTERNATING CURRENT
AR	ALARM RESET
CD	CONTROL DISCONNECT
CR	CONTROL RELAY
DP	DUPLEX PLUG RECEPTACLE
G	GROUND
GB	GROUND BAR
GFCI	GROUND FAULT CIRCUIT INTERRUPTER
ICD	IRRIGATION CONTROLLER DISCONNECT
LS	LIGHT SWITCH
MD	MAIN DISCONNECT
MS	MOTOR STARTER
(N)	NEW
NB	NEUTRAL BAR
OL	OVERLOAD
PD	PUMP DISCONNECT
RD	RECEPTACLE DISCONNECT
S	STARTER COIL
SS	SELECTOR SWITCH
TB	TERMINAL BLOCK
TM	TIME METER
VFD	VARIABLE FREQUENCY DRIVE
WP	WEATHERPROOF

DESIGN SUPERVISOR — DESIGN ENGINEER

	BY	CHECKED
DESIGN	Inam U. Maher	Imran Saeed
DETAILS	Kathi Andreasen/KG	Inam U. Maher
QUANTITIES	Inam U. Maher	Imran Saeed

STATE OF CALIFORNIA DEPARTMENT OF TRANSPORTATION

DIVISION OF ENGINEERING SERVICES
ELECTRICAL-MECHANICAL-WATER AND WASTEWATER DESIGN

BRIDGE NO.
POST MILE

SAN JUAN ROAD IC PROJECT

WELL ELECTRICAL SITE PLAN AND LEGEND

SHEET **EE-1**

TAEMWW Imperial Rev. 7/10

ORIGINAL SCALE IN INCHES FOR REDUCED PLANS 0 1 2 3

UNIT 3597
PROJECT NUMBER & PHASE 05000004951
EA 315801

DISREGARD PRINTS BEARING EARLIER REVISION DATES

REVISION DATES (PRELIMINARY STAGE ONLY) 4/19/11 4/21/11 6/16/11 6/28/11 8/3/11 10/06/11 12/19/11 SHEET OF

15-APR-2012 07:29

531580we001.dgn

DIST.	COUNTY	ROUTE	POST MILES TOTAL PROJECT	SHEET NO.	TOTAL SHEETS
05	Mon,SBt	101	100.0/101.3, 0.0/1.6	472	641

REGISTERED ELECTRICAL ENGINEER — 12-19-11 DATE

REGISTERED PROFESSIONAL ENGINEER IMRAN SAEED No. E 18781 Exp. 6-30-13 ELEC STATE OF CALIFORNIA

4-9-12
PLANS APPROVAL DATE

The State of California or its officers or agents shall not be responsible for the accuracy or completeness of electronic copies of this plan sheet.

Irrigation Well Pump Control Enclosure

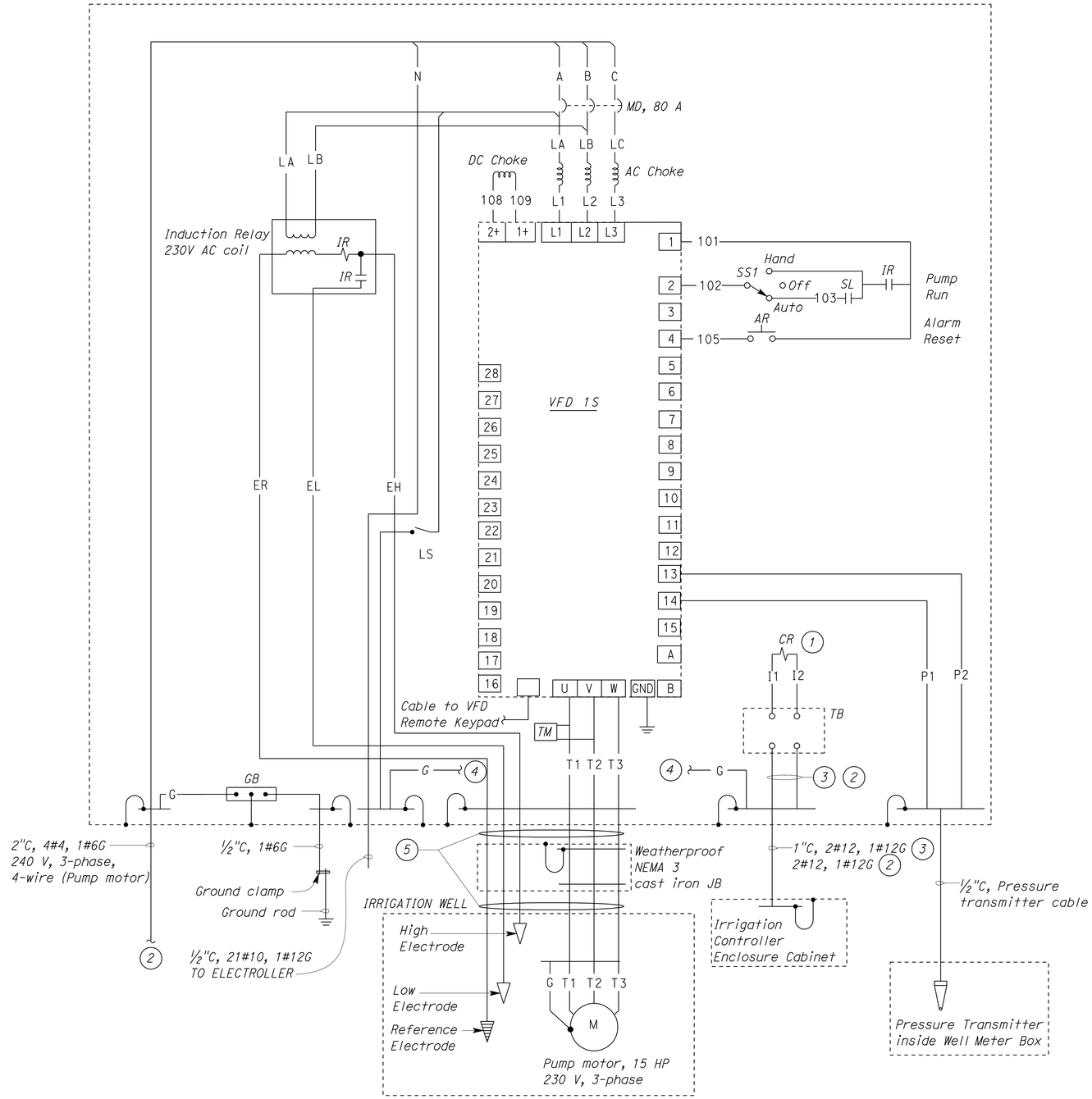

CONTROL SCHEMATIC

General Notes:

A. *For location of irrigation well pump, irrigation well and pump control enclosure and Irrigation Controller Enclosure Cabinet, see Irrigation plans and Water plans.*

B. *Pull boxes in between irrigation well and pump control enclosure and irrigation controller, if any, are not shown. See Electrical sheet E-4.*

Notes:

1. *Pump control relay, 24 Volts AC coil.*
2. *To Service equipment enclosure. For continuation, see Electrical sheet E-4.*
3. *To master valve/pump start terminals inside the Irrigation Controller Enclosure Cabinet.*
4. *Connect to ground bus.*
5. *Well pump motor cables integrated with equipment grounding and 3#12 for electrodes.*

VFD I/O BOARD		
TERMINAL		DESCRIPTION
1	24 V OUT	24 V CONTROL VOLTAGE 1
2	DIN1	DIGITAL INPUT 1-START FORWARD
3	DIN2	DIGITAL INPUT 2-START REVERSE
4	DIN3	DIGITAL INPUT 3-FAULT RESET
5	CMA	DIGITAL INPUT COMMON A
6	GND	I/O GROUND
7	24 V OUT	24 V CONTROL VOLTAGE 2
8	DIN4	DIGITAL INPUT 4-MULTI-STEP SPEED 1
9	DIN5	DIGITAL INPUT 5-MULTI-STEP SPEED 2
10	DIN6	DIGITAL INPUT 6-EXTERNAL FAULT
11	CMB	DIGITAL INPUT COMMON B
12	GND	I/O GROUND
13	AI1+	ANALOG INPUT
14	AI1-	ANALOG INPUT, COMMON
15	AI2+	ANALOG INPUT, VOLTAGE
16	AI2-	ANALOG INPUT, COMMON
17	+10 REF	REFERENCE VOLTAGE
18	RO1/1	NORMALLY CLOSED (NC)
19	RO1/2	COMMON
20	RO1/3	NORMALLY OPEN (NO)
21	AO1+	ANALOG SIGNAL (+OUTPUT)
22	AO1-	ANALOG SIGNAL (COMMON)
23	DO1	DIGITAL OUTPUT 1
24	DOC	COMMON
25	DO 2/3	DIGITAL O/P 2
26	RO 2/1	NORMALLY CLOSED (NC)
27	RO 2/2	COMMON
28	RO 2/3	NORMALLY OPEN (NO)
A	TIA-232	SERIAL INTERFACE BOARD
B	MODULAR	ETHERNET CONNECTION

APPROVED FOR ELECTRICAL WORK ONLY.

	BY	CHECKED
DESIGN	Inam U. Maher	Imran Saeed
DETAILS	Kathi Andreasen/KG	Inam U. Maher
QUANTITIES	Inam U. Maher	Imran Saeed

STATE OF CALIFORNIA
DEPARTMENT OF TRANSPORTATION

DIVISION OF ENGINEERING SERVICES
ELECTRICAL-MECHANICAL-WATER AND WASTEWATER DESIGN

BRIDGE NO.
POST MILE

SAN JUAN ROAD IC PROJECT

WELL PUMP CONTROL DETAILS

SHEET **EE-2**

TAEMWW Imperial Rev. 7/10

ORIGINAL SCALE IN INCHES FOR REDUCED PLANS 0 1 2 3

UNIT 3597
PROJECT NUMBER & PHASE 05000004951
EA 315801

DISREGARD PRINTS BEARING EARLIER REVISION DATES → 4/19/21 4/26/21 4/29/21 8/9/21 12/19/11

REVISION DATES (PRELIMINARY STAGE ONLY) SHEET OF

17-APR-2012 15:34

531580we002.dgn

DIST.	COUNTY	ROUTE	POST MILES TOTAL PROJECT	SHEET NO.	TOTAL SHEETS
05	Mon,SBt	101	100.0/101.3, 0.0/1.6	473	641

REGISTERED ELECTRICAL ENGINEER — 12-19-11 DATE

REGISTERED PROFESSIONAL ENGINEER IMRAN SAEED No. E 18781 Exp. 6-30-13 ELEC STATE OF CALIFORNIA

4-9-12
PLANS APPROVAL DATE

The State of California or its officers or agents shall not be responsible for the accuracy or completeness of electronic copies of this plan sheet.

WATER WELL INFORMATION AND EQUIPMENT SCHEDULE

IRRIGATION WELL PUMP					IRRIGATION WELL PUMP ENCLOSURE								REFERENCE SHEET
LOCATION	EQUIPMENT	SPEED (RPM)	HP	VOLTS	MAIN DISCONNECT	TYPE	RATING (HP)	INPUT REACTOR RATING	INPUT VOLTS	OUTPUT VOLTS	CONTROLS	OPTION	
SAN JUAN ROAD	SUBMERSIBLE WELL PUMP	3450	15	230/3Ø	80/3	VFD	20	15 HP	230/3Ø	230/3Ø	4-20 mA	EXTERNAL READOUT	E-4

Notes:

1. *1½"C, cables for the well pump and electrodes.*
2. *Pull box not shown. For size and exact location, see sheet E-4.*
3. *Type 1 conduit. Wrap underground metal conduit with two layers of 20 mil. thick tape. Tape overlap shall be at least 50% or more.*
4. *Type 4 conduit. For terminating the conduit at well head and at pressure transmitter, see sheet W-2.*
5. *For type of conduit, size of conduit and number of conductors, see sheet E-4.*
6. *Splice conductors to well pump motor cables inside the junction box. Contractor may splice the electrode conductors. For mounting detail, see (1/-).*
7. *1½"C, well pump motor cables, integrated with equipment grounding and 3#12 for electrodes.*
8. *¾"C, Type 1 with pressure transmitter cable.*
9. *For continuation and size of the concrete pad see "W" sheets, and for location of the pad see Irrigation sheets.*
10. *1"C, 2#12, 1#12G, 2#12, 1#12G.*

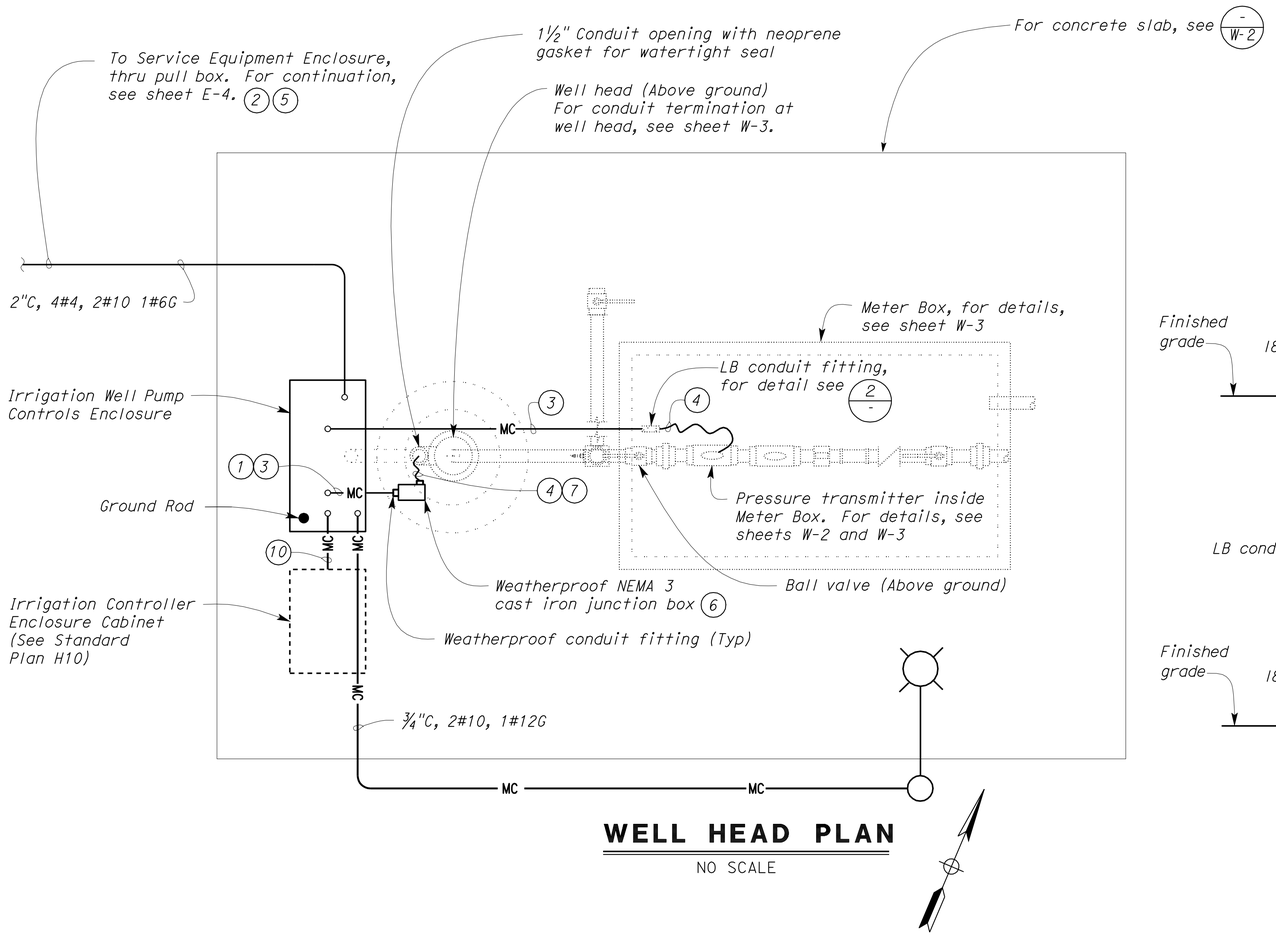

WELL HEAD PLAN
NO SCALE

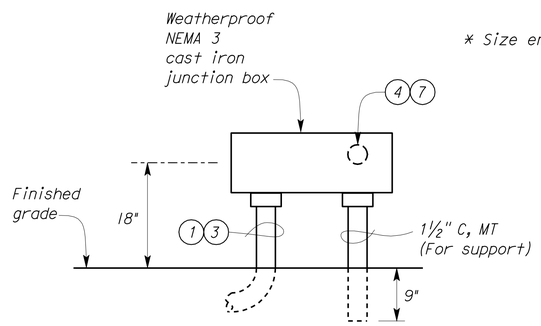

1 DETAIL
NO SCALE

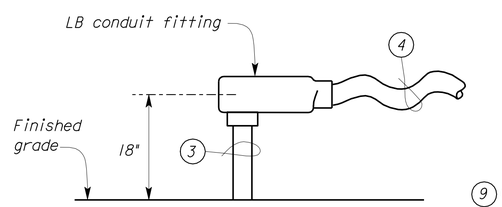

2 DETAIL
NO SCALE

* Size enclosure to fit all components shown

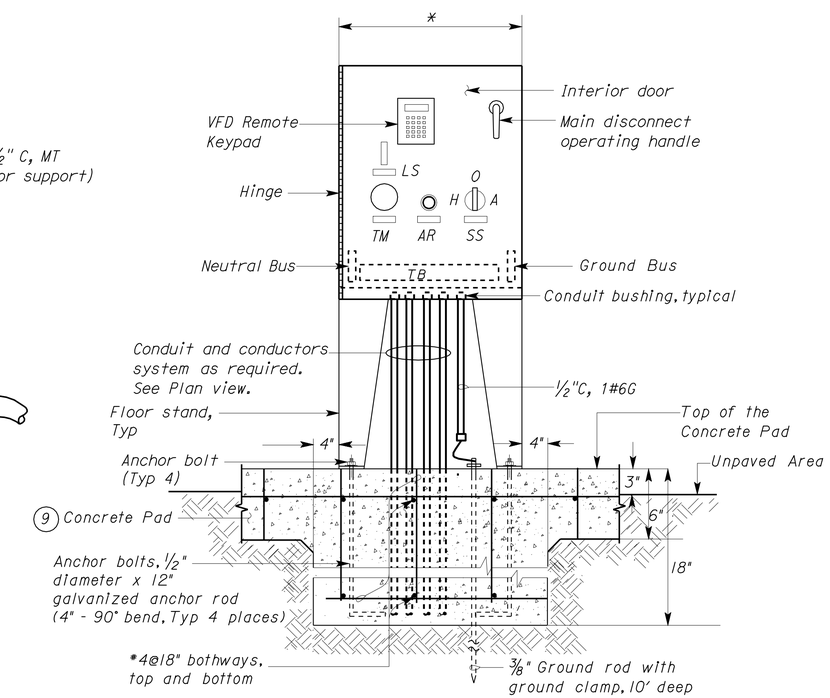

A ELEVATION
NO SCALE
(EXTERIOR WEATHERPROOF DOOR NOT SHOWN)

APPROVED FOR ELECTRICAL WORK ONLY

	BY	CHECKED
DESIGN	Inam U. Maher	Imran Saeed
DETAILS	Kathi Andreasen/KG	Inam U. Maher
QUANTITIES	Inam U. Maher	Imran Saeed

STATE OF CALIFORNIA
DEPARTMENT OF TRANSPORTATION

DIVISION OF ENGINEERING SERVICES
ELECTRICAL-MECHANICAL-WATER AND WASTEWATER DESIGN

BRIDGE NO.
POST MILE

SAN JUAN ROAD IC PROJECT

WELL ELECTRICAL DETAILS

SHEET **EE-3**

TAEMWW Imperial Rev. 7/10

ORIGINAL SCALE IN INCHES FOR REDUCED PLANS 0 1 2 3

UNIT 3597
PROJECT NUMBER & PHASE 05000004951
EA 315801

DISREGARD PRINTS BEARING EARLIER REVISION DATES →
REVISION DATES (PRELIMINARY STAGE ONLY) 4/26/11 4/28/11 6/8/11 6/28/11 7/7/11 8/9/11 10/06/11 12/19/11
SHEET OF

15-APR-2012 07:29
531580we003.dgn

DIST.	COUNTY	ROUTE	POST MILES TOTAL PROJECT	SHEET NO.	TOTAL SHEETS
05	Mon,SBt	101	100.0/101.3, 0.0/1.6	474	641

REGISTERED CIVIL ENGINEER — DATE 12-16-11

REGISTERED PROFESSIONAL ENGINEER — JEROME R. MARCOTTE — No. C 36844 — Exp. 06/30/12 — CIVIL — STATE OF CALIFORNIA

4-9-12
PLANS APPROVAL DATE

The State of California or its officers or agents shall not be responsible for the accuracy or completeness of electronic copies of this plan sheet.

ABBREVIATIONS

AB	AGGREGATE BASE
AC	ASPHALT CONCRETE
ACP	ASBESTOS CONCRETE PIPE
AVC	AIR VOLUME CONTROLLER
B	BUNG
Bldg	BUILDING
C	CONDUIT
C-C	CENTER TO CENTER
CI	CAST-IRON
CL	CHAIN LINK
CMP	CORRUGATED METAL PIPE
Conc	CONCRETE
COTF	CLEANOUT TO FLOOR
COTG	CLEANOUT TO GRADE
CSD	COMMUNITY SERVICES DISTRICT
DBH	DIAMETER AT BREAST HEIGHT
DI	DRAINAGE INLET
Dia	DIAMETER
DP	DRAIN PIPE
E	ELECTRICAL
(E)	EXISTING
EG	EXISTING GRADE
EL	ELEVATION
EP	EDGE OF PAVEMENT
FF	FINISH FLOOR
FG	FINISH GRADE
FL	FLOW LINE
FOC	FACE OF CONCRETE
FS	FLOAT SWITCH
ft	FEET
Galv	GALVANIZED
gpm	GALLONS PER MINUTE
GSP	GALVANIZED STEEL PIPE
HF	HOSE FAUCET
H	HEIGHT
HDPE	HIGH DENSITY POLYETHYLENE
HP	HORSEPOWER
Hz	HERTZ
ID	INSIDE DIAMETER
IE	INVERT ELEVATION
in	INCHES
JB	JUNCTION BOX
lbs	POUNDS
L/S	LANDSCAPE
Max	MAXIMUM
MBV	MOTORIZED BALL VALVE
MH	MANHOLE
Min	MINIMUM
NHT	NATIONAL HOSE THREAD
O.C.	ON CENTER
OD	OUTSIDE DIAMETER
OG	ORIGINAL GROUND
P/L	PROPERTY LINE
PCC	PORTLAND CEMENT CONCRETE
PG	PRESSURE GAUGE
PRV	PRESSURE REGULATING VALVE
PS	PRESSURE SWITCH
psi	POUNDS PER SQUARE INCH
PVC	POLYVINYL CHLORIDE
R	RADIUS
RCP	REINFORCED CONCRETE PIPE
RCVM	REMOTE CONTROL VALVE MASTER
RPM	REVOLUTIONS PER MINUTE
RT	RIGHT
R/W	RIGHT-OF-WAY
S	SLOPE
Sch	SCHEDULE
SD	STORM DRAIN
SP	SEWAGE PIPE
sq	SQUARE
Sta	STATION
TBM	TEMPORARY BENCHMARK
TOC	TOP OF CURB, CONCRETE
Tot	TOTAL
Typ	TYPICAL
V	VOLT
VCP	VITRIFIED CLAY PIPE
W	WATER
W/O	WITHOUT
WP	WEATHERPROOF
WSP	WELDED STEEL PIPE

LEGEND

S	SANITARY SEWER
D	DRAIN
RD	RETURN DRAIN
V	VENT
W	WATER
FM	FORCE MAIN
L	LEACH LINES
7 / SS-5	DETAIL / SHEET NUMBER
99.00	NEW GRADE IN FEET
X (100.00)	EXISTING SPOT GRADE IN FEET
	SURFACE DRAINAGE
	ABANDON (E)
	BENCHMARK ELEVATION
℄	CENTERLINE
ø	DIAMETER
	SECTION / ELEVATION LETTER / SHEET NUMBER
	TREE

GENERAL WORK NOTES

The Contractor shall verify all controlling field dimensions and conditions before ordering or fabricating any materials.

The Contractor shall verify exact location of all underground facilities and utilities prior to start of construction.

No 90° bends allowed on drain or sewer pipe.

Type of Fitting	90° Bend	45° Bend	11 1/4° or 22 1/2° Bend	Tee or Dead end	Cross w/plug	Tee w/plug
Typical Installation	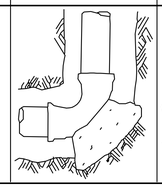	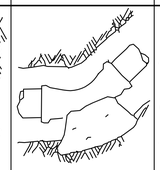	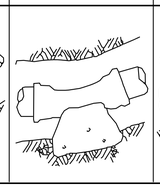	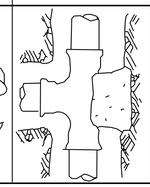	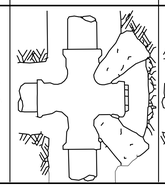	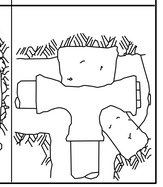

THRUST BLOCK BEARING AREA (SQ. FT.)

Type of Fitting / Size of Pipe	90° Bend	45° Bend	11 1/4° or 22 1/2° Bend	Tee or Dead end	Tee w/ Plug	Cross w/ plug
4"	2	1	1	2	2	2
6"	4	4	2	4	4	4
8"	7	4	2	5	7	7
10"	12	6	3	8	12	12
12"	16	10	5	12	16	16
14"	20	12	6	14	20	20
16"	27	15	8	18	27	27
18"	45	25	13	32	45	45
24"	65	35	18	46	65	65

PIPE FITTINGS AND VALVES

- CAP, THREADED
- ELBOW, TURNED DOWN
- FLEXIBLE CONNECTOR
- REDUCER, CONCENTRIC
- REDUCER, ECCENTRIC
- PRESSURE GAUGE (WITH VALVE AND SNUBBER)
- UNION
- UNION, INSULATING
- VALVE, BALL
- VALVE, CHECK
- VALVE, GATE
- VALVE, SAFETY RELIEF
- VALVE, PRESSURE REDUCING
- WATER METER

	BY	CHECKED
DESIGN	Laurie Vasquez	Don Hansen
DETAILS	Kerry Geoffroy	Laurie Vasquez
QUANTITIES	Laurie Vasquez	Don Hansen

STATE OF CALIFORNIA
DEPARTMENT OF TRANSPORTATION

DIVISION OF ENGINEERING SERVICES
ELECTRICAL-MECHANICAL-WATER AND WASTEWATER DESIGN

BRIDGE NO.
POST MILE 100.0/101.3 0.0/1.6

SAN JUAN ROAD IC PROJECT

NOTES, LEGENDS & ABBREVIATIONS

SHEET **W-0**

TAEMWW Imperial Rev. 7/10

ORIGINAL SCALE IN INCHES FOR REDUCED PLANS 0 1 2 3

UNIT 3616
PROJECT NUMBER & PHASE 05000004951
EA 31580

DISREGARD PRINTS BEARING EARLIER REVISION DATES → 04-12-11 05-18-11 08-09-11 12-16-11

REVISION DATES (PRELIMINARY STAGE ONLY) SHEET OF

15-APR-2012 07:29

531580wf001.dgn

DIST.	COUNTY	ROUTE	POST MILES TOTAL PROJECT	SHEET NO.	TOTAL SHEETS
05	Mon,SBt	101	100.0/101.3, 0.0/1.6	475	641

REGISTERED CIVIL ENGINEER — DATE: 12-16-11

REGISTERED PROFESSIONAL ENGINEER — JEROME R. MARCOTTE — No. C 36844 — Exp. 06/30/12 — CIVIL — STATE OF CALIFORNIA

4-9-12
PLANS APPROVAL DATE

The State of California or its officers or agents shall not be responsible for the accuracy or completeness of electronic copies of this plan sheet.

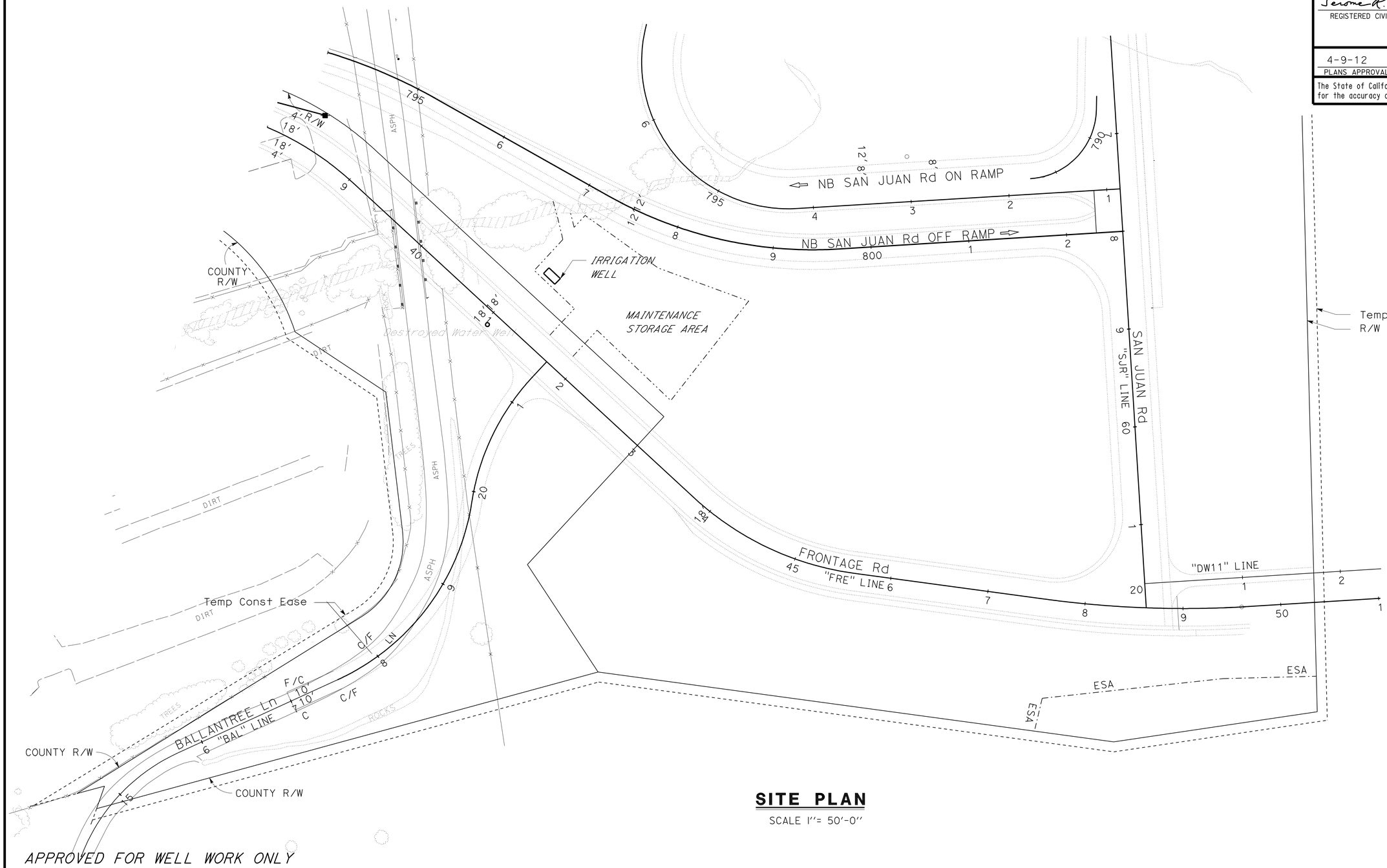

SITE PLAN

SCALE 1"= 50'-0"

APPROVED FOR WELL WORK ONLY

DESIGN SUPERVISOR	DESIGN	BY Laurie Vasquez	CHECKED Don Hansen
DESIGN ENGINEER	DETAILS	BY Kerry Geoffroy	CHECKED Laurie Vasquez
	QUANTITIES	BY Laurie Vasquez	CHECKED Don Hansen

STATE OF CALIFORNIA
DEPARTMENT OF TRANSPORTATION

DIVISION OF ENGINEERING SERVICES
ELECTRICAL-MECHANICAL-WATER AND WASTEWATER DESIGN

UNIT 3616
PROJECT NUMBER & PHASE 05000004951
EA 31580

BRIDGE NO.
POST MILE 100.0/101.3 0.0/1.6

SAN JUAN ROAD IC PROJECT

SITE PLAN

SHEET **W-1**

TAEMWW Imperial Rev. 7/10

ORIGINAL SCALE IN INCHES FOR REDUCED PLANS 0 1 2 3

DISREGARD PRINTS BEARING EARLIER REVISION DATES → 04-08-11 05-10-11 06-28-11 08-09-11 08-09-11

REVISION DATES (PRELIMINARY STAGE ONLY) SHEET OF

15-APR-2012 07:29

531580wf002.dgn

DIST.	COUNTY	ROUTE	POST MILES TOTAL PROJECT	SHEET NO.	TOTAL SHEETS
05	Mon,SBt	101	100.0/101.3, 0.0/1.6	476	641

REGISTERED CIVIL ENGINEER — 12-16-11 DATE

REGISTERED PROFESSIONAL ENGINEER — JEROME R. MARCOTTE No. C 36844 Exp. 06/30/12 CIVIL STATE OF CALIFORNIA

4-9-12
PLANS APPROVAL DATE

The State of California or its officers or agents shall not be responsible for the accuracy or completeness of electronic copies of this plan sheet.

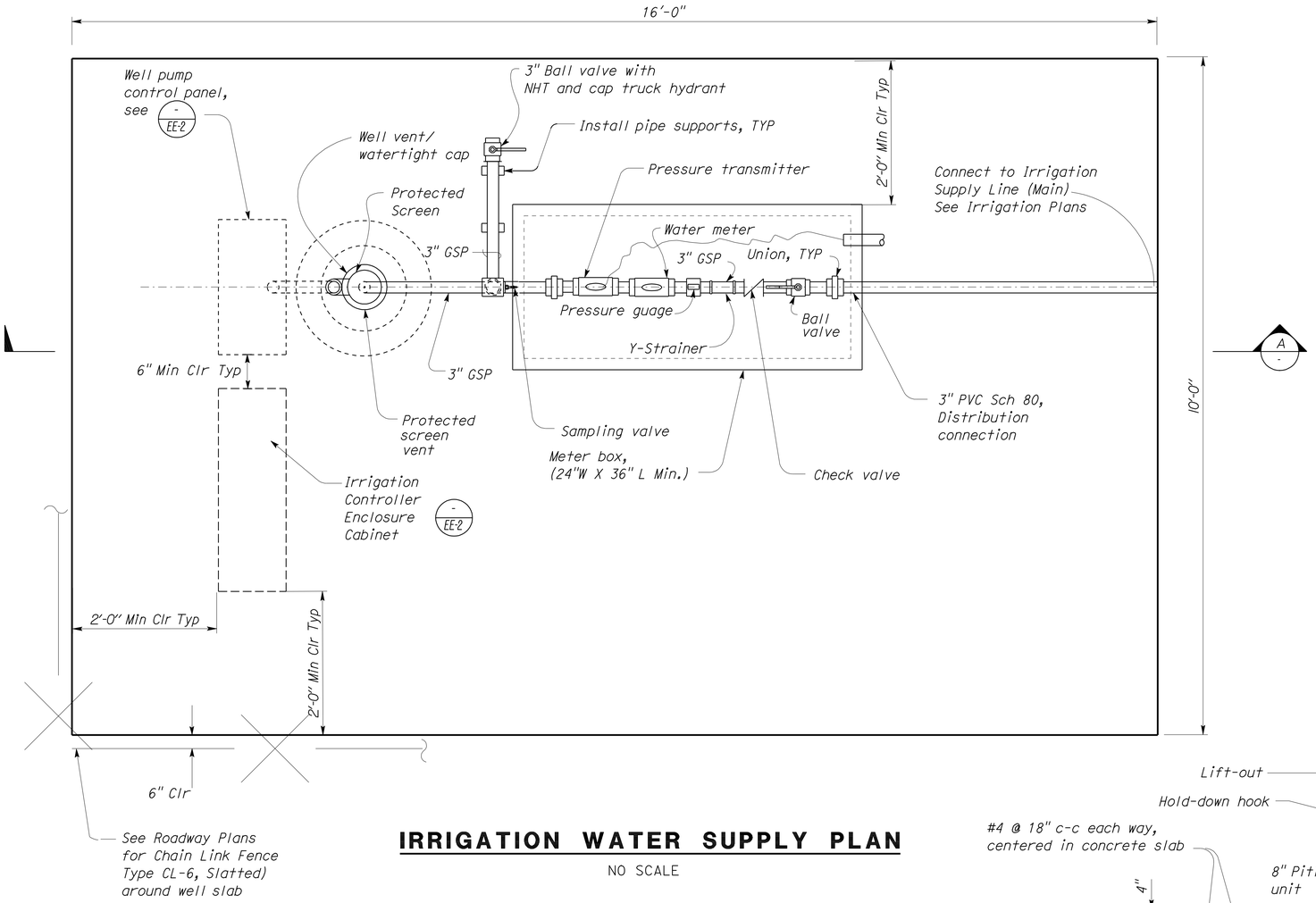

IRRIGATION WATER SUPPLY PLAN

NO SCALE

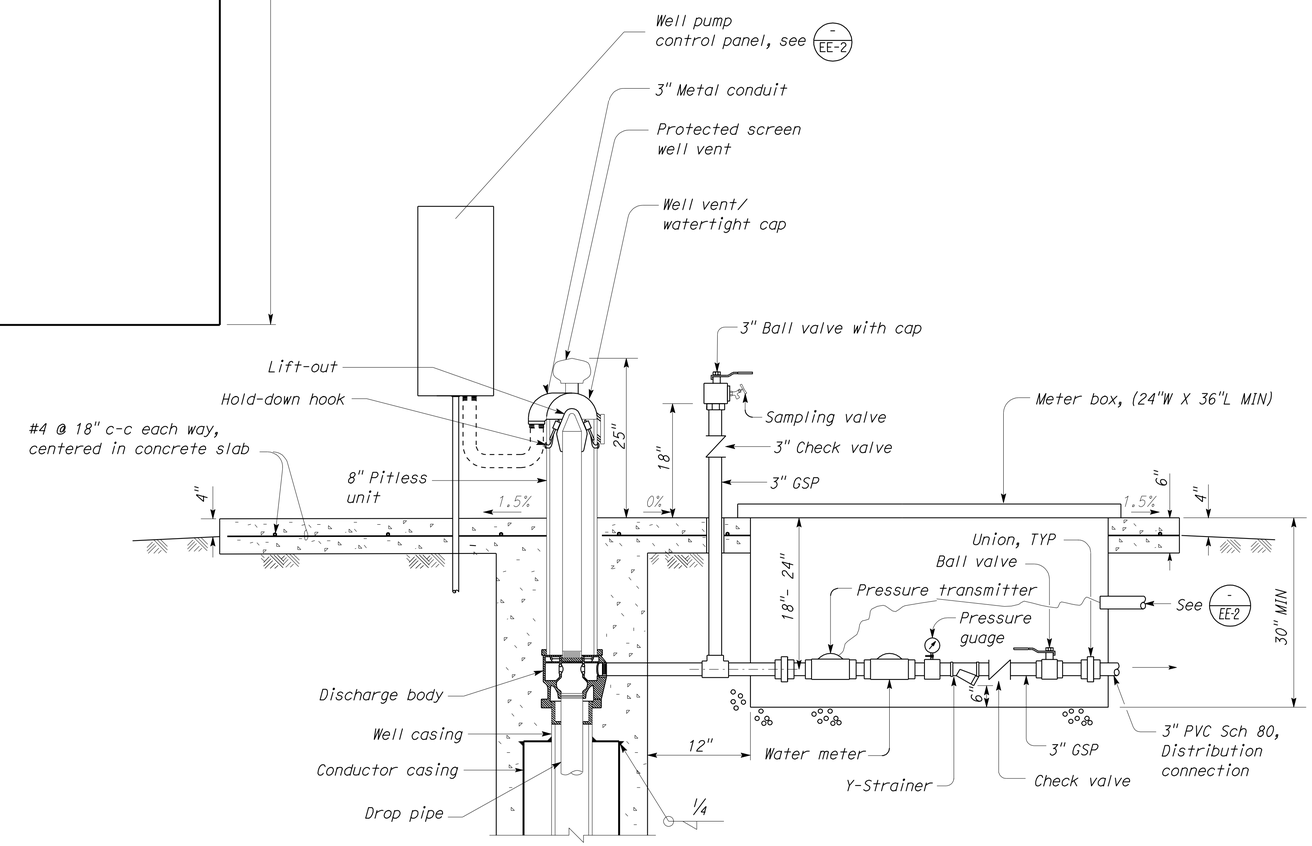

A IRRIGATION WATER SUPPLY SECTION

NO SCALE

APPROVED FOR WELL WORK ONLY

	BY	CHECKED
DESIGN	Laurie Vasquez	Don Hansen
DETAILS	Laurie Vasquez/KG	Don Hansen
QUANTITIES	Laurie Vasquez	Don Hansen

STATE OF CALIFORNIA
DEPARTMENT OF TRANSPORTATION

DIVISION OF ENGINEERING SERVICES
ELECTRICAL-MECHANICAL-WATER AND WASTEWATER DESIGN

BRIDGE NO.
POST MILE 100.0/101.3 0.0/1.6

SAN JUAN ROAD IC PROJECT

WATER SUPPLY PLAN

SHEET **W-2**

TAEMWW Imperial Rev. 7/10

ORIGINAL SCALE IN INCHES FOR REDUCED PLANS 0 1 2 3

UNIT 3616
PROJECT NUMBER & PHASE 05000004951
EA 31580

DISREGARD PRINTS BEARING EARLIER REVISION DATES → REVISION DATES (PRELIMINARY STAGE ONLY) 03-10-11 04-12-11 05-10-11 08-09-11 12-16-11 SHEET OF

531580wf003.dgn

15-APR-2012 07:29

DIST.	COUNTY	ROUTE	POST MILES TOTAL PROJECT	SHEET NO.	TOTAL SHEETS
05	Mon,SBt	101	100.0/101.3, 0.0/1.6	477	641

REGISTERED CIVIL ENGINEER — DATE 12-16-11

REGISTERED PROFESSIONAL ENGINEER — JEROME R. MARCOTTE — No. C 36844 — Exp. 06/30/12 — CIVIL — STATE OF CALIFORNIA

4-9-12
PLANS APPROVAL DATE

The State of California or its officers or agents shall not be responsible for the accuracy or completeness of electronic copies of this plan sheet.

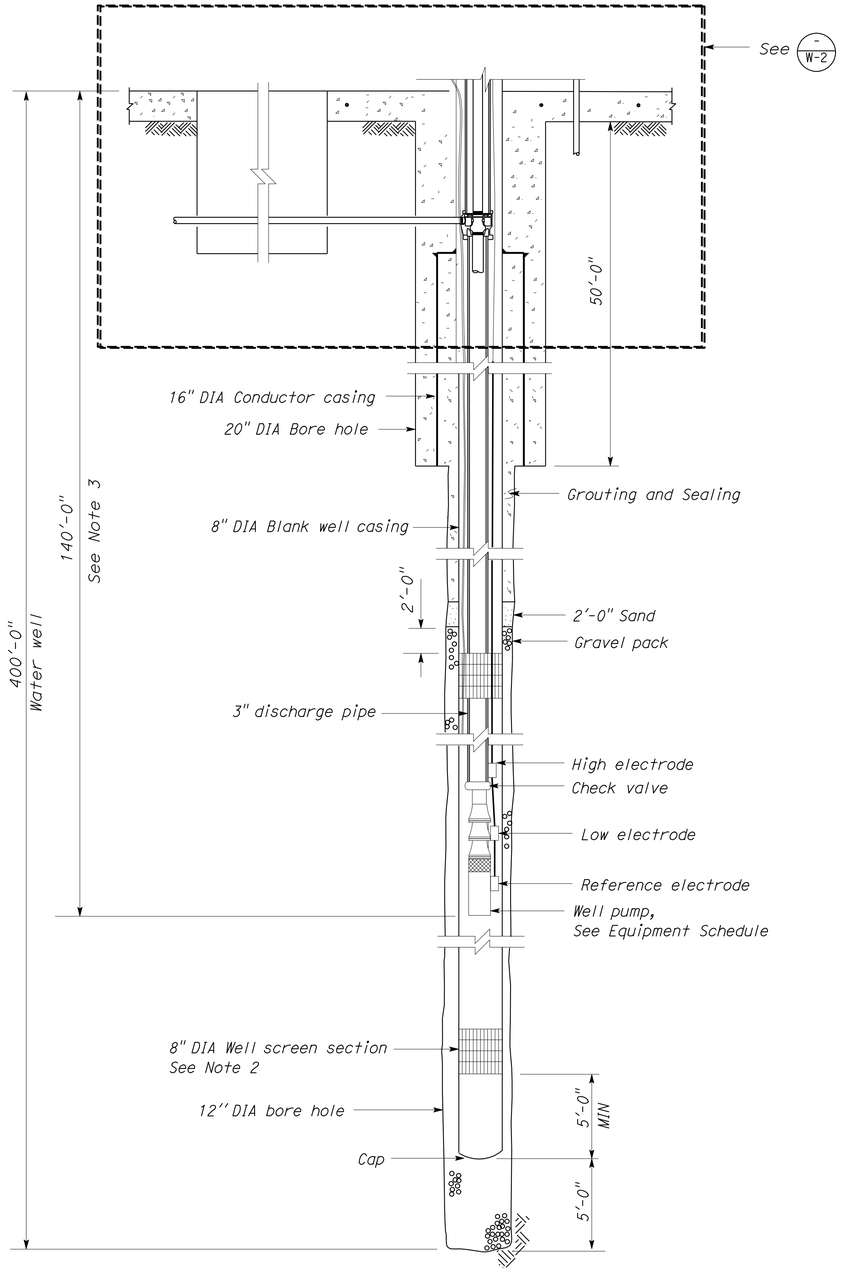

(A) WATER WELL - SECTION

APPROVED FOR WELL WORK ONLY

EQUIPMENT SCHEDULE

EQUIPMENT	SPEED (RPM)	HP	VOLTS	PHASE	PUMPING RATE (GPM)	TOTAL DYNAMIC HEAD AT WELL HEAD SURFACE (Ft.)
SUBMERSIBLE WELL PUMP	3450	15	240	3	70 80 90	450 425 400

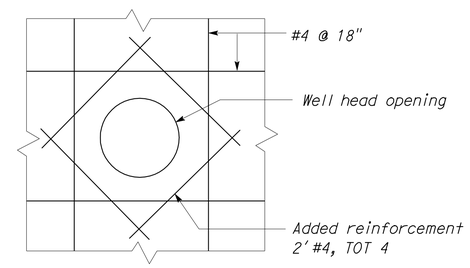

WELL OPENING REINFORCEMENT

NO SCALE

Notes:

1. Actual depth of well may vary. For bidding purposes, use depth shown.
2. Exact locations and lengths of well screen sections must be field determined. For bidding purposes use 40' of screen between 160 ft.-380 ft.
3. Actual depth of well pump must be determined from well testing data. For bidding purposes, use depth shown.
4. Electrodes locations shown are arbitrary only. Exact locations to be determined by well pump installer and the Engineer.

DESIGN	BY Laurie Vasquez	CHECKED Don Hansen
DETAILS	BY Laurie Vasquez/KG	CHECKED Don Hansen
QUANTITIES	BY Laurie Vasquez	CHECKED Don Hansen

STATE OF CALIFORNIA
DEPARTMENT OF TRANSPORTATION

DIVISION OF ENGINEERING SERVICES
ELECTRICAL-MECHANICAL-WATER AND WASTEWATER DESIGN

BRIDGE NO.
POST MILE 100.0/101.3 0.0/1.6

SAN JUAN ROAD IC PROJECT
WATER WELL DETAILS

SHEET W-3

TAEMWW Imperial Rev. 7/10

ORIGINAL SCALE IN INCHES FOR REDUCED PLANS 0 1 2 3

UNIT 3616
PROJECT NUMBER & PHASE 05000004951
EA 31580

DISREGARD PRINTS BEARING EARLIER REVISION DATES →
REVISION DATES (PRELIMINARY STAGE ONLY) 03-10-11 05-10-11 06-28-11 08-09-11 12-16-11
SHEET OF

15-APR-2012 07:29

531580wf004.dgn

DIST	COUNTY	ROUTE	POST MILES TOTAL PROJECT	SHEET NO.	TOTAL SHEETS
05	Mon,SBt	101	100.0/101.3, 0.0/1.6	478	641

REGISTERED CIVIL ENGINEER

June 6, 2008
PLANS APPROVAL DATE

REGISTERED PROFESSIONAL ENGINEER
Donald E. Howe
No. C46402
Exp. 3-31-09
CIVIL
STATE OF CALIFORNIA

The State of California or its officers or agents shall not be responsible for the accuracy or completeness of electronic copies of this plan sheet.

To accompany plans dated 4-9-12

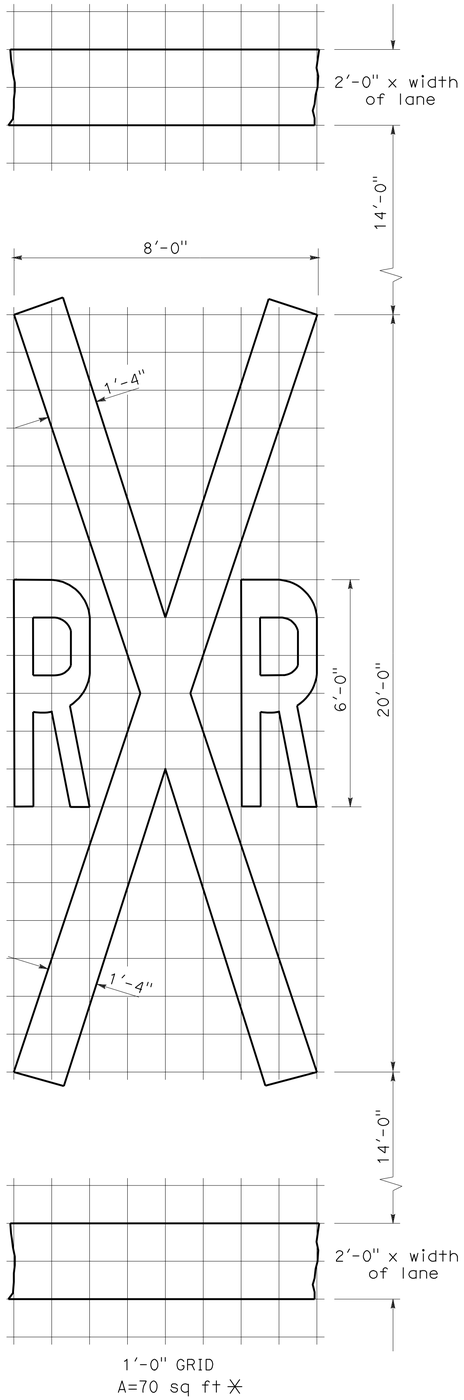

RAILROAD CROSSING SYMBOL

✳70 sq ft DOES NOT INCLUDE THE 2'-0" x VARIABLE WIDTH TRANSVERSE LINES.

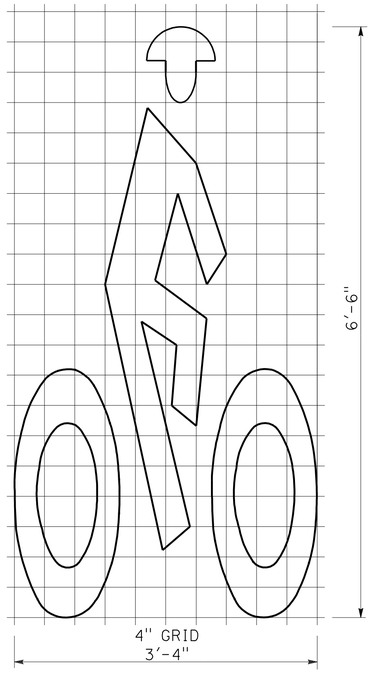

BIKE LANE SYMBOL

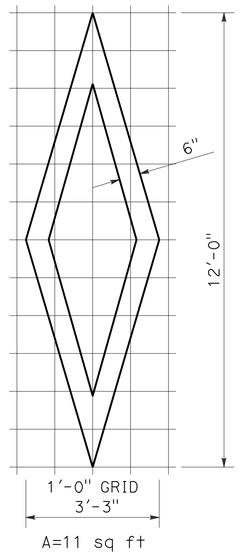

DIAMOND SYMBOL

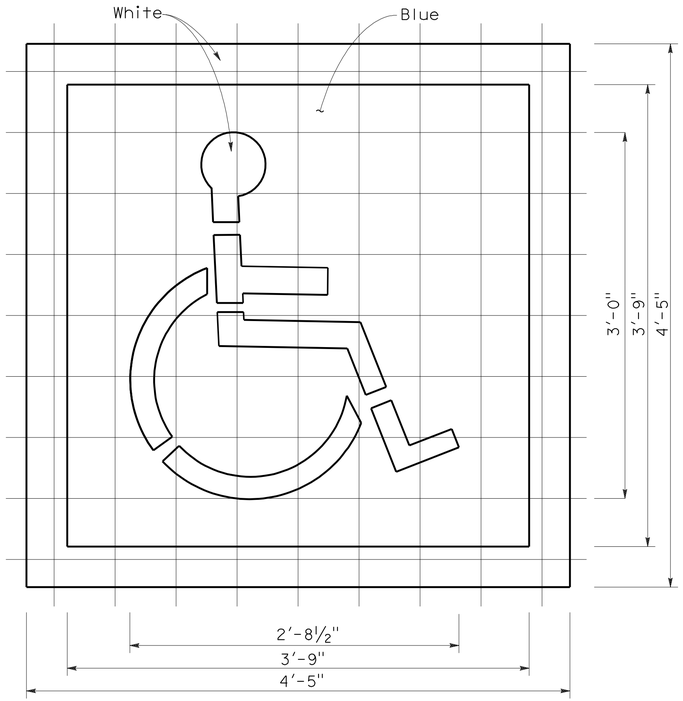

INTERNATIONAL SYMBOL OF ACCESSIBILITY MARKING

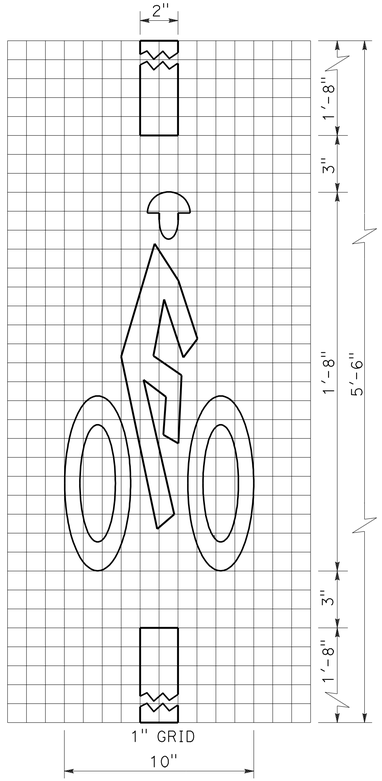

BICYCLE LOOP DETECTOR SYMBOL

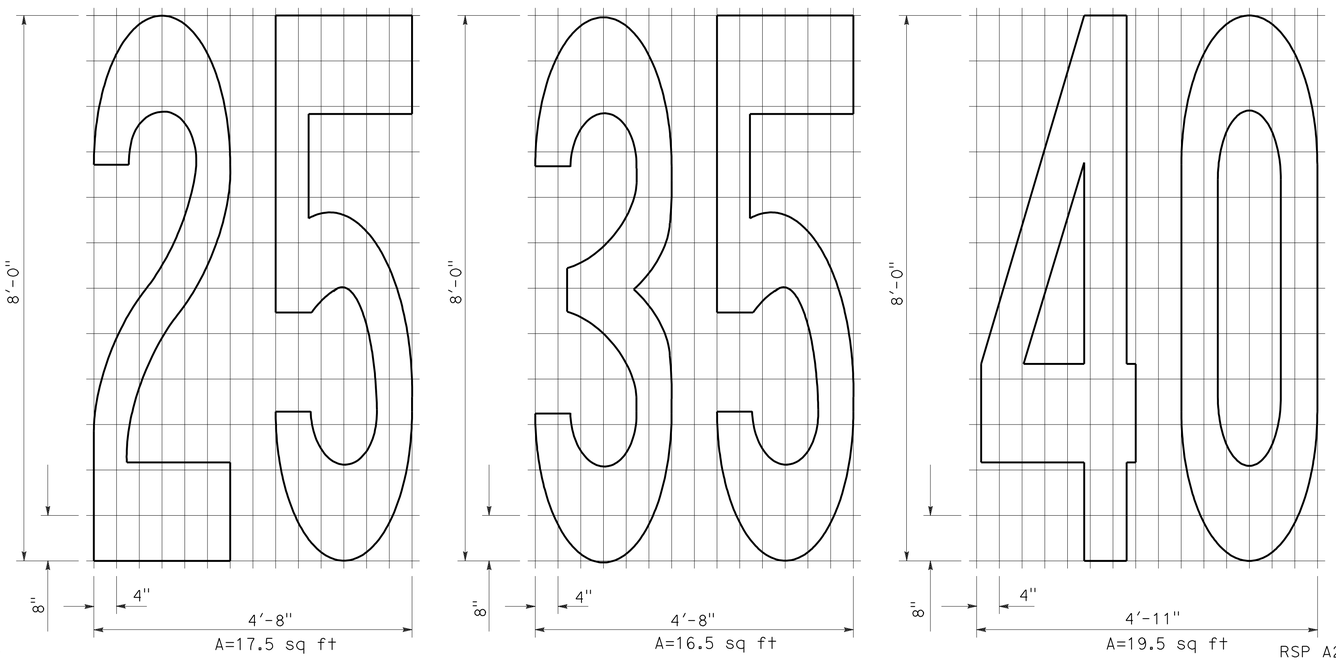

NUMERALS

NOTE:

1. Minor variations in dimensions may be accepted by the Engineer.

STATE OF CALIFORNIA
DEPARTMENT OF TRANSPORTATION

PAVEMENT MARKINGS SYMBOLS AND NUMERALS

NO SCALE

RSP A24C DATED JUNE 6, 2008 SUPERSEDES STANDARD PLAN A24C DATED MAY 1, 2006 - PAGE 11 OF THE STANDARD PLANS BOOK DATED MAY 2006.

REVISED STANDARD PLAN RSP A24C

2006 REVISED STANDARD PLAN RSP A24C

5-27-08

DIST	COUNTY	ROUTE	POST MILES TOTAL PROJECT	SHEET NO.	TOTAL SHEETS
05	Mon,SBt	101	100.0/101.3, 0.0/1.6	479	641

REGISTERED CIVIL ENGINEER

November 17, 2006
PLANS APPROVAL DATE

REGISTERED PROFESSIONAL ENGINEER Dallas Forester No. C37765 Exp. 12-31-06 CIVIL STATE OF CALIFORNIA

The State of California or its officers or agents shall not be responsible for the accuracy or completeness of electronic copies of this plan sheet.

To accompany plans dated 4-9-12

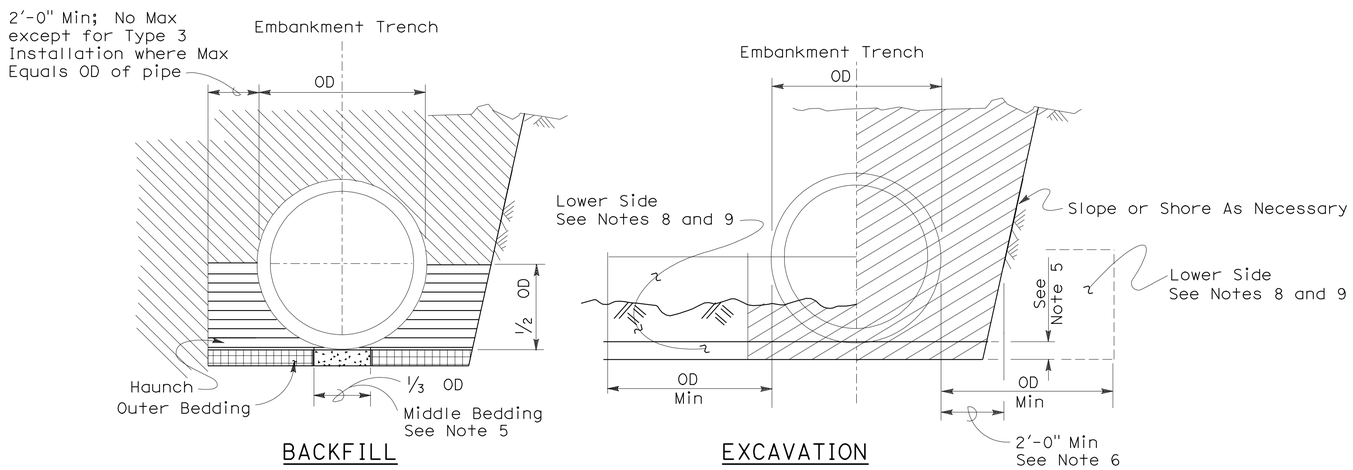

Roadway Embankment

Structure Backfill (Culvert) See Note 6

Structure Backfill (Culvert) See Note 6

Loose Backfill

Excavation Structure (Culvert)

TYPE 1 INSTALLATION:

The haunch and outer bedding shall be compacted to a minimum 90 percent relative compaction. In addition, the minimum sand equivalent in these areas shall be 30 and the maximum percentage passing the 75 μm sieve size shall be 12.

TYPE 2 INSTALLATION:

The haunch and outer bedding shall be compacted to a minimum 90 percent relative compaction. In addition, the minimum sand equivalent in these areas shall be 25.

TYPE 3 INSTALLATION:

The haunch and outer bedding shall be compacted to a minimum 85 percent relative compaction. 90 percent relative compaction will be required where the fill over the pipe is less than 4'-0" or 1/2 OD.

INSTALLATION TYPE 1

MINIMUM CLASS AND D-LOAD	COVER	
	108" Dia AND SMALLER	OVER 108" Dia
Class II 1000D	14.9'	12.9'
Class III 1350D	15.0' - 20.9'	13.0' - 18.9'
Class III Special 1700D	21.0' - 26.9'	19.0' - 24.9'
Class IV 2000D	27.0' - 31.9'	25.0' - 29.9'
Class IV Special 2500D	32.0' - 40.9'	30.0' - 38.9'
Class V 3000D	41.0' - 49.9'	39.0' - 46.9'
Class V Special 3600D	50.0' - 59.0'	47.0' - 58.0'

INSTALLATION TYPE 2

MINIMUM CLASS AND D-LOAD	COVER
Class II 1000D	9.9'
Class III 1350D	10.0'- 14.9'
Class III Special 1700D	15.0' - 19.9'
Class IV 2000D	20.0' - 24.9'
Class IV Special 2500D	25.0' - 31.9'
Class V 3000D	32.0' - 38.9'
Class V Special 3600D	39.0' - 47.0'

INSTALLATION TYPE 3

MINIMUM CLASS AND D-LOAD	COVER	
	48" Dia AND SMALLER	OVER 48" Dia
Class II 1000D	7.9'	5.9'
Class III 1350D	8.0' - 10.9'	6.0' - 8.9'
Class III Special 1700D	11.0' - 14.9'	9.0' - 12.9'
Class IV 2000D	15.0' - 17.9'	13.0' - 15.9'
Class IV Special 2500D	18.0' - 21.9'	16.0' - 19.9'
Class V 3000D	22.0' - 26.9'	20.0' - 24.9'
Class V Special 3600D	30.0' - 33.0'	25.0' - 31.0'

NOTES:

1. Unless otherwise shown on the plans or specified in the special provision, the Contractor shall have the option of selecting the class of RCP and the type of installation to be used, provided the height of cover does not exceed the value shown for the RCP selected.
   Example: 24" RCP culvert with maximum cover of 19'-0" the options are:
   a) Class III or stronger with Installation Type 1.
   b) Class III Special or stronger with Installation Type 2.
   c) Class IV Special or stronger with Installation Type 3.
   Cover is defined as the maximum vertical distance from top of the pipe to finished grade within the length of any given culvert.
2. The class of RCP and Installation Type selected shall be the same throughout the length of any given culvert.
3. The "length of any culvert" is defined as the culvert between:
   a) Successive drainage structure (inlets, junction boxes, headwalls, etc.).
   b) A drainage structure and the inlet or outlet end of the culvert.
   c) The inlet and outlet end of the culvert when there are no intervening drainage structures.
4. Oval and arch shaped RCP shall not be used.
5. 1/25 OD Min, not less than 3".
6. Slurry cement backfill may be substituted for backfill in the outer bedding and haunch areas. If slurry is used the outer and middle beddings shall be omitted. Prior to installation the soil under the middle 1/3 of the outside diameter of the pipe shall be softened by scarifying or other means to a minimum depth of 1/25 OD, but not less than 3". Where slurry cement backfill is used clear distance to trench wall may be reduced as set forth in Section 19-3.062 of the Standard Specifications.
7. Backfill shall be placed full width of excavation except where dimensions are shown for backfill width or thickness. Dimensions shown are minimums.
8. Lower side shall be suitable material as determined by the Engineer. Otherwise it shall be considered unsuitable as set forth in Section 19-2.02 of the Standard Specifications. See Note 9.
9. Where the pipe is placed in a trench, if the trench walls are sloped at 5 vertical to 1 horizontal or steeper for at least 90 percent of the trench height or up to not less than 12" from the grading plane, the firmness of the soil in the lower side need not be considered.
10. Non-reinforced precast concrete pipe sizes 3'-0" or smaller may be placed under installation Types 1, 2 or 3.

STATE OF CALIFORNIA
DEPARTMENT OF TRANSPORTATION

EXCAVATION AND BACKFILL CONCRETE PIPE CULVERTS

NO SCALE

RSP A62DA DATED NOVEMBER 17, 2006 SUPERSEDES STANDARD PLAN A62DA DATED MAY 1, 2006 - PAGE 20 OF THE STANDARD PLANS BOOK DATED MAY 2006.

REVISED STANDARD PLAN RSP A62DA

2006 REVISED STANDARD PLAN RSP A62DA

10-26-06

DIST	COUNTY	ROUTE	POST MILES TOTAL PROJECT	SHEET NO.	TOTAL SHEETS
05	Mon,SBt	101	100.0/101.3, 0.0/1.6	480	641

Mark S. Turner
PROFESSIONAL LAND SURVEYOR

June 30, 2006
PLANS APPROVAL DATE

LICENSED LAND SURVEYOR
Mark S. Turner
No. 6228
Exp. 3-31-08
STATE OF CALIFORNIA

The State of California or its officers or agents shall not be responsible for the accuracy or completeness of electronic copies of this plan sheet.

To accompany plans dated 4-9-12

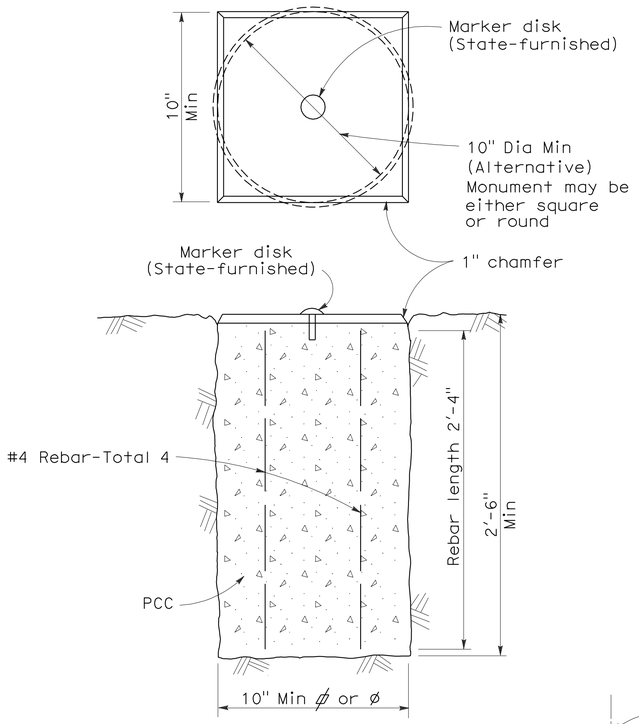

TYPE A

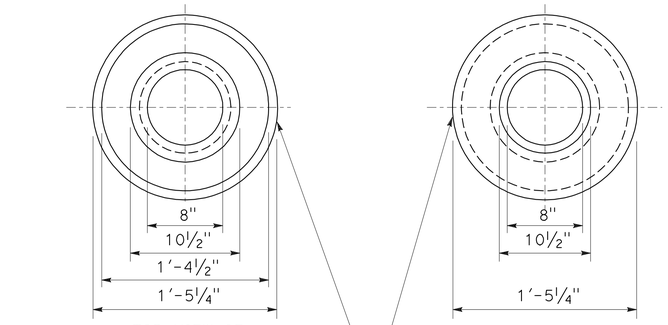

TOP VIEW OF
MONUMENT OF WELL RING

BOTTOM VIEW OF
MONUMENT OF WELL RING

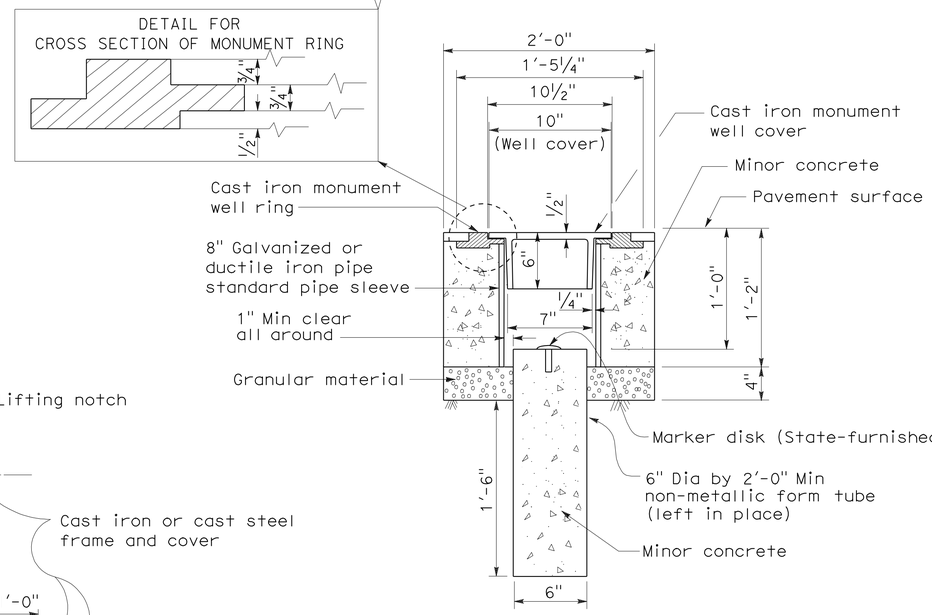

TYPE B

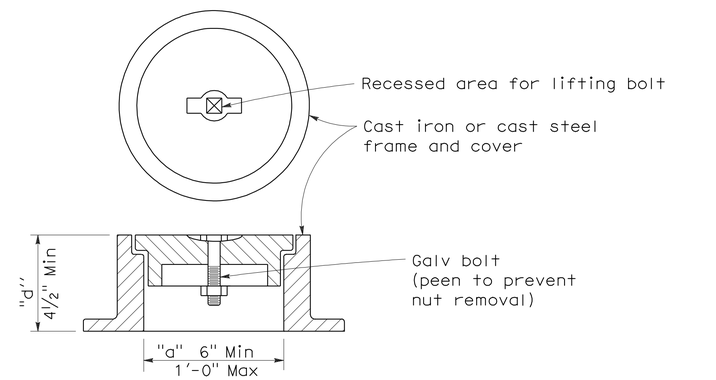

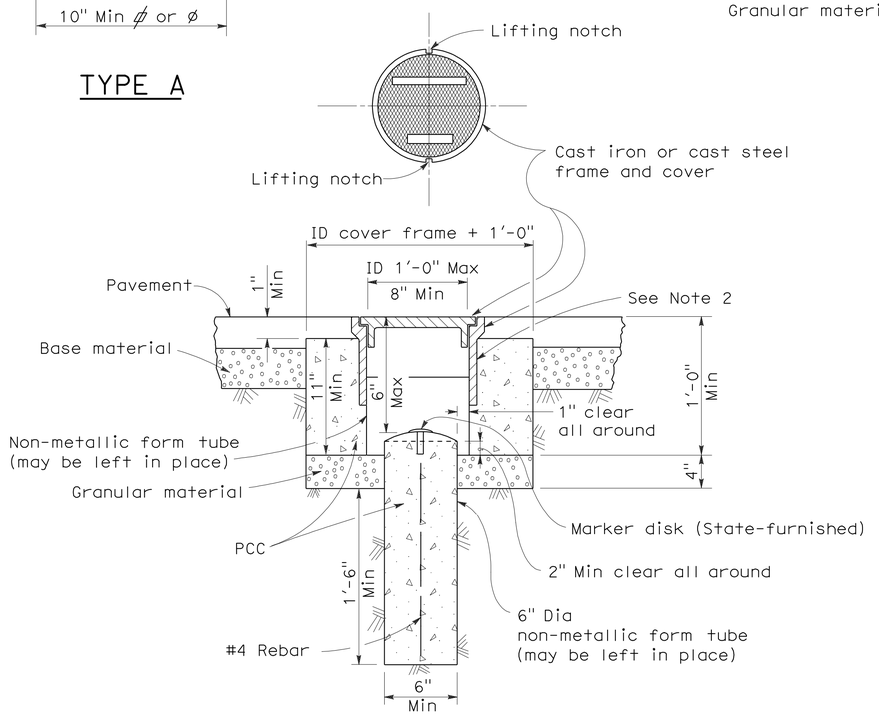

TYPE D
Alternative No. 1

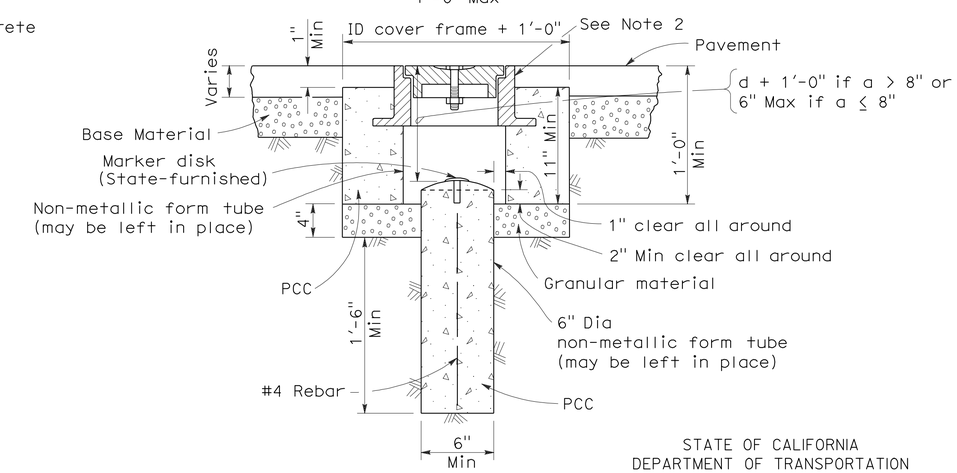

TYPE D
Alternative No. 2

NOTES:

1. The configuration of the cast iron or cast steel frame and cover may vary from that shown.
2. Frame shall be embedded in the concrete a minimum of 3".
3. Type D monument shall be either Alternative No. 1 or Alternative No. 2 at the contractor's option.
4. All portland cement concrete shall be Class 2 or minor concrete with 1" maximum aggregate.

STATE OF CALIFORNIA
DEPARTMENT OF TRANSPORTATION

SURVEY MONUMENTS

NO SCALE

RSP A74 DATED JUNE 30, 2006 SUPERSEDES STANDARD PLAN DATED MAY 1, 2006 - PAGE 28 OF THE STANDARD PLANS BOOK DATED MAY 2006.

REVISED STANDARD PLAN RSP A74

2006 REVISED STANDARD PLAN RSP A74

5-24-06

DIST	COUNTY	ROUTE	POST MILES TOTAL PROJECT	SHEET NO.	TOTAL SHEETS
05	Mon,SBt	101	100.0/101.3, 0.0/1.6	481	641

Randell D. Hiatt
REGISTERED CIVIL ENGINEER

June 6, 2008
PLANS APPROVAL DATE

REGISTERED PROFESSIONAL ENGINEER
Randell D. Hiatt
No. C50200
Exp. 6-30-09
CIVIL
STATE OF CALIFORNIA

The State of California or its officers or agents shall not be responsible for the accuracy or completeness of electronic copies of this plan sheet.

To accompany plans dated 4-9-12

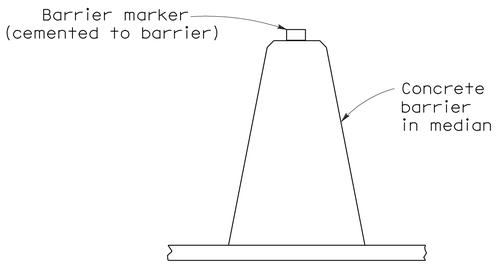

CONCRETE BARRIER TYPE 60 DELINEATION

See Notes 7 and 8

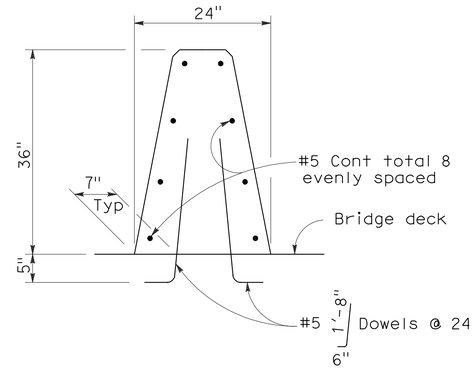

CONCRETE BARRIER TYPE 60A

Details similar to Type 60 except as noted.

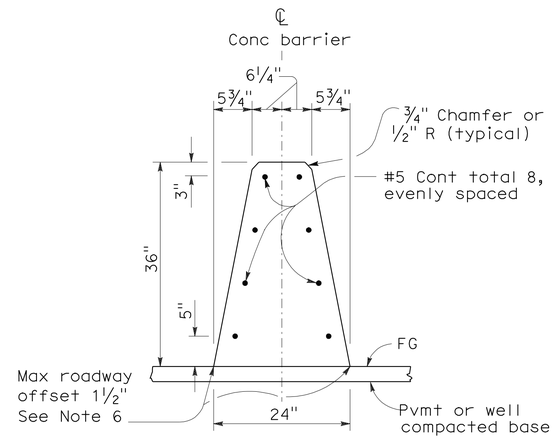

CONCRETE BARRIER TYPE 60

NOTES:

1. See Standard Plan A76B for details of Concrete Barrier Type 60 end anchors, connection to structures and transitions to Concrete Barrier Type 50 and Concrete Barrier Type 60S.
2. See Standard Plan A76C for Concrete Barrier Type 60 transitions at bridge column and sign pedestals.
3. Where glare screen is required on Concrete Barrier Type 60, use Concrete Barrier Type 60G.
4. Where the concrete barrier is added to the face of existing concrete structure, match existing weep holes.
5. Expansion joints in concrete barrier shall be located at all deck, pavement and principal wall joints. Expansion joint filler material shall be the same size as joint or ½" minimum.
6. Where roadway offset is greater than 1½", see Concrete Barrier Type 60C.
7. Barrier delineation to be used when required by the Special Provisions.
8. Spacing of barrier markers to match spacing of raised pavement markers on the adjacent median edgeline pavement delineation.
9. Reinforcing stirrup not required for roadway offsets less than 1'-0".
10. For roadway surfaces offset greater than 1½" to 3", no rebars required. For roadway surfaces offset greater than 3" to 8" use two #4 rebars at 3" above the lower roadway surface. For roadway surfaces offset greater than 8" to 12", use two #4 rebars at 3" above the lower roadway surface and two #4 rebars at 8" above the lower roadway surface. For roadway surfaces offset greater than 12" to 36", use two #4 rebars at 3" above the lower roadway surface and two #4 rebars at every 8" increment vertical spacing above the first two #4 rebars.

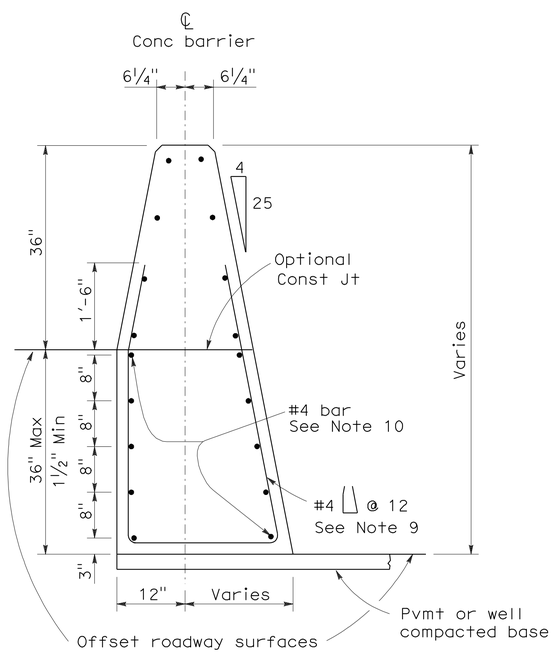

CONCRETE BARRIER TYPE 60C

Details similar to Type 60 except as noted.
Concrete barrier end anchor when necessary.
36" roadway surfaces offset shown.

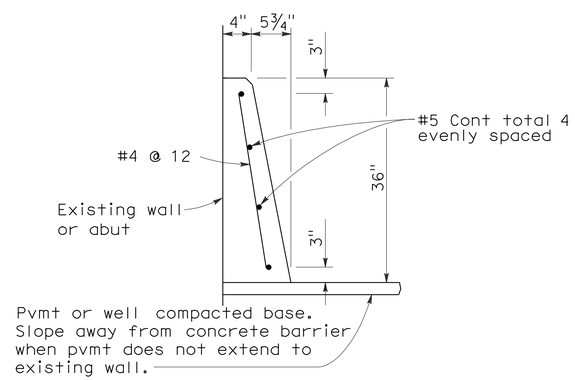

CONCRETE BARRIER TYPE 60D

STATE OF CALIFORNIA
DEPARTMENT OF TRANSPORTATION

CONCRETE BARRIER TYPE 60

NO SCALE

RSP A76A DATED JUNE 6, 2008 SUPERSEDES STANDARD PLAN A76A
DATED MAY 1, 2006 - PAGE 29 OF THE STANDARD PLANS BOOK DATED MAY 2006.

REVISED STANDARD PLAN RSP A76A

2006 REVISED STANDARD PLAN RSP A76A

5-21-08

Dist	COUNTY	ROUTE	POST MILES TOTAL PROJECT	SHEET No.	TOTAL SHEETS
05	Mon,SBt	101	100.0/101.3, 0.0/1.6	482	641

Randell D. Hiatt
REGISTERED CIVIL ENGINEER

May 20, 2011
PLANS APPROVAL DATE

REGISTERED PROFESSIONAL ENGINEER
Randell D. Hiatt
No. C50200
Exp. 6-30-11
CIVIL
STATE OF CALIFORNIA

The State of California or its officers or agents shall not be responsible for the accuracy or completeness of electronic copies of this plan sheet.

To accompany plans dated 4-9-12

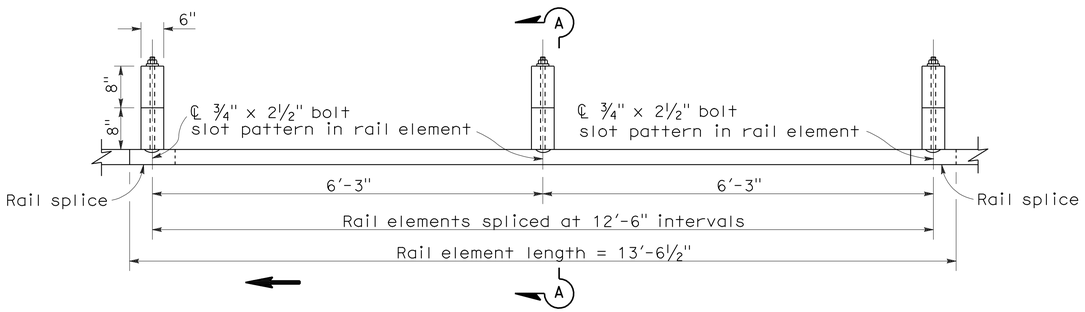

PLAN

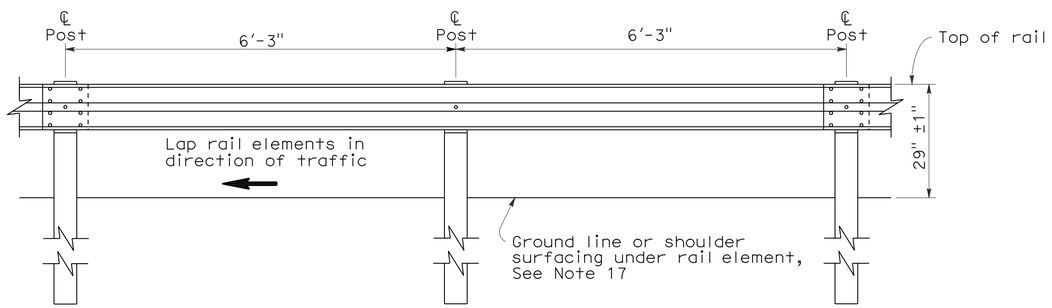

ELEVATION

METAL BEAM GUARD RAILING WITH WOOD POST AND BLOCKS

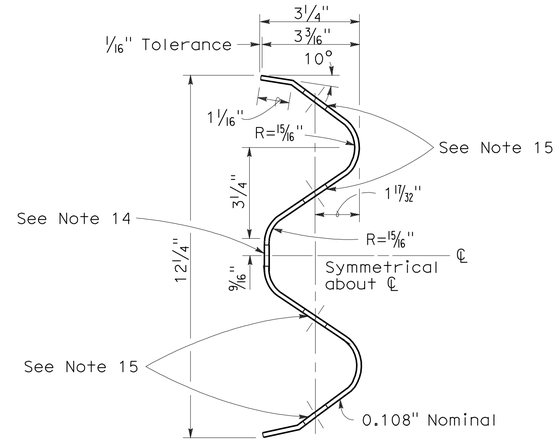

SECTION THRU RAIL ELEMENT

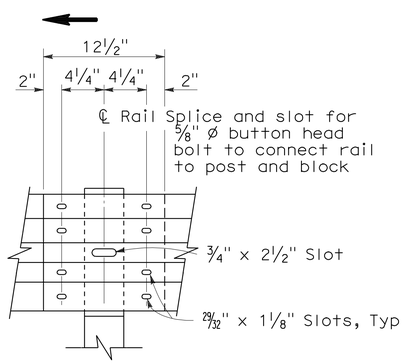

ELEVATION

RAIL ELEMENT SPLICE DETAIL

a) Connect the over lapped end of the rail elements with ⅝" ø x 1⅜" button head oval shoulder splice bolts inserted into the 29⁄32" x 1⅛" slots and bolted together with ⅝" ø recessed hex nuts. Recess of hex nut points toward rail element. A total of 8 bolts and nuts are to be used at each rail splice connection.

b) The ends of the rail elements are to be overlapped in the direction of traffic (see details).

c) Where end cap is to be attached to the end of a rail element, a total of 4 of the above described splice bolts and nuts are to be used.

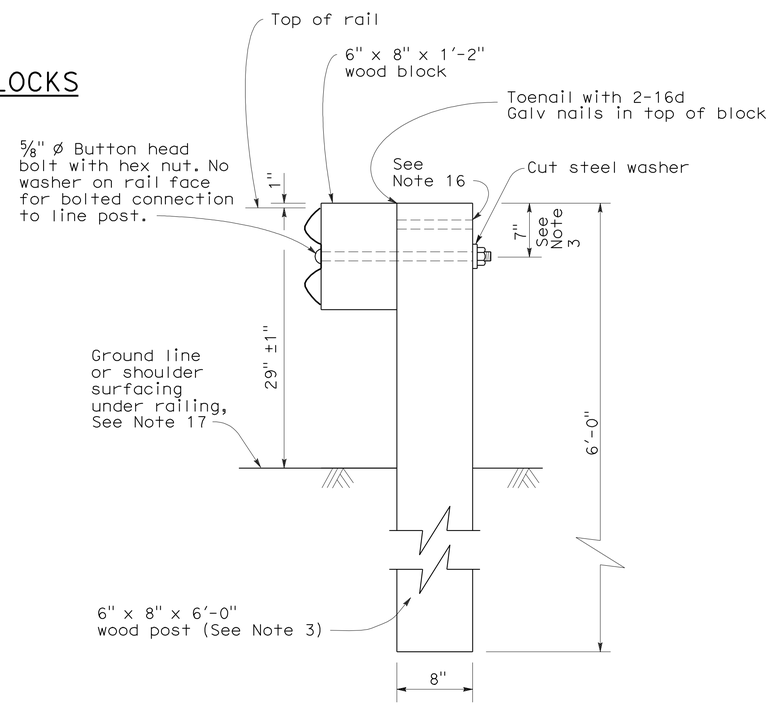

SECTION A-A

TYPICAL WOOD LINE POST INSTALLATION

See Note 4

NOTES:

1. For details of steel post installations, see Standard Plan A77A2.
2. For details of standard hardware used to construct guard railing, see Standard Plan A77B1.
3. For details of wood posts and wood blocks used to construct guard railing, see Standard Plan A77C1.
4. For additional installation details, see Standard Plan A77C3.
5. Guard railing post spacing to be 6'-3" center to center, except as otherwise noted.
6. For guard railing typical layouts, see the A77E, A77F and A77G Series of Standard Plans.
7. For terminal system end treatment details, see the A77L Series of Standard Plans. To connect railing to terminal system end treatment, transition the top of railing height at a ratio of 120:1 to terminal system end treatment height plus one 12'-6" standard railing section at the transitioned height for a horizontal connection to the end treatment.
8. For guard railing end anchor details, see Standard Plans A77H1 and A77I2.
9. For details of guard railing transition to bridge railing, see Standard Plan A77J4.
10. For additional details of guard railing connection to bridge railings, see Standard Plans A77J1, A77J2 and A77K1.
11. For guard railing connection details to abutments and walls, see Standard Plan A77J3.
12. Direction of adjacent traffic indicated by ➡.
13. For typical guard railing delineation and dike positioning details, see Standard Plan A77C4.
14. Slotted hole for bolted connection of rail element to block and post. See "Section Thru Rail Element".
15. Slotted holes for splice bolts to overlap ends of rail element. See "Section Thru Rail Element".
16. Additional hole in uppermost portion of line post is for potential future adjustments of railing height. See Standard Plan A77C1.
17. Install posts in soil.

STATE OF CALIFORNIA
DEPARTMENT OF TRANSPORTATION

METAL BEAM GUARD RAILING STANDARD RAILING SECTION (WOOD POST WITH WOOD BLOCK)

NO SCALE

RSP A77A1 DATED MAY 20, 2011 SUPERSEDES STANDARD PLAN A77A1 DATED MAY 1, 2006 - PAGE 41 OF THE STANDARD PLANS BOOK DATED MAY 2006.

REVISED STANDARD PLAN RSP A77A1

2006 REVISED STANDARD PLAN RSP A77A1

3-10-11

Dist	COUNTY	ROUTE	POST MILES TOTAL PROJECT	SHEET No.	TOTAL SHEETS
05	Mon,SBt	101	100.0/101.3, 0.0/1.6	483	641

Randell D. Hiatt
REGISTERED CIVIL ENGINEER

May 20, 2011
PLANS APPROVAL DATE

REGISTERED PROFESSIONAL ENGINEER
Randell D. Hiatt
No. C50200
Exp. 6-30-11
CIVIL
STATE OF CALIFORNIA

The State of California or its officers or agents shall not be responsible for the accuracy or completeness of electronic copies of this plan sheet.

To accompany plans dated 4-9-12

2006 REVISED STANDARD PLAN RSP A77A2

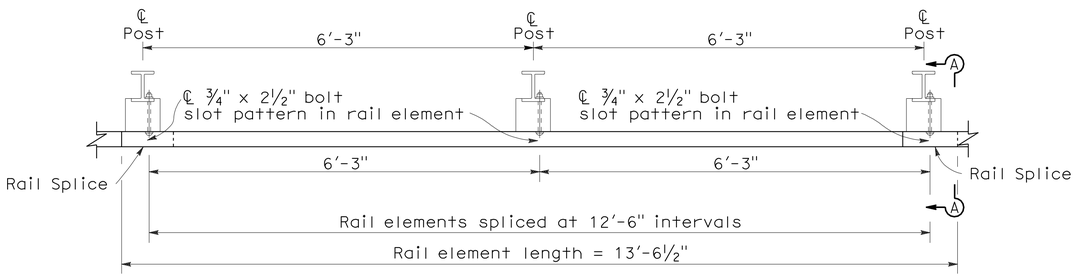

PLAN

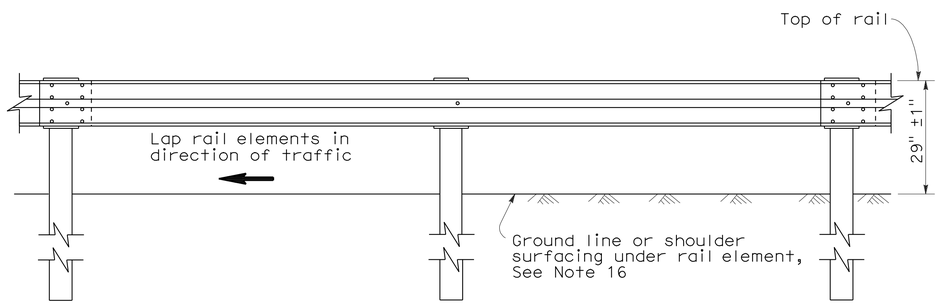

ELEVATION

METAL BEAM GUARD RAILING WITH STEEL POSTS AND NOTCHED WOOD OR NOTCHED RECYCLED PLASTIC BLOCKS

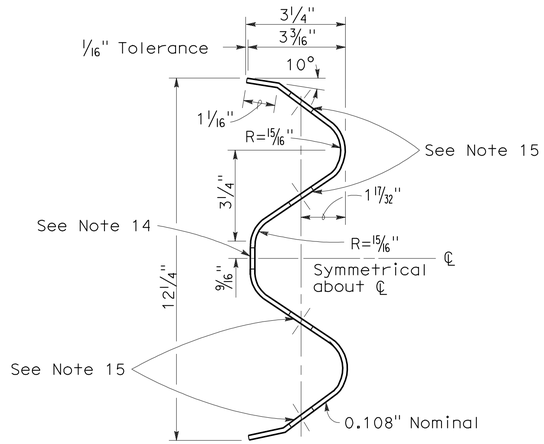

SECTION THRU RAIL ELEMENT

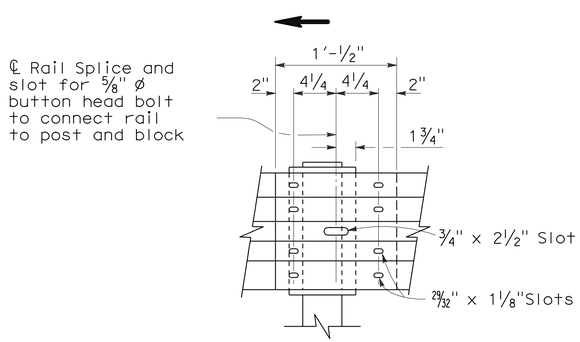

ELEVATION

RAIL ELEMENT SPLICE DETAIL

a) Connect the over lapped end of the rail elements with ⅝" ø x 1⅜" button head oval shoulder splice bolts inserted into the 29⁄₃₂" x 1⅛" slots and bolted together with ⅝" ø recessed hex nuts. Recess of hex nut points toward rail element. A total of 8 bolts and nuts are to be used at each rail splice connection.

b) The ends of the rail elements are to be overlapped in the direction of traffic (see details).

c) Where end cap is to be attached to the end of a rail element, a total of 4 of the above described splice bolts and nuts are to be used.

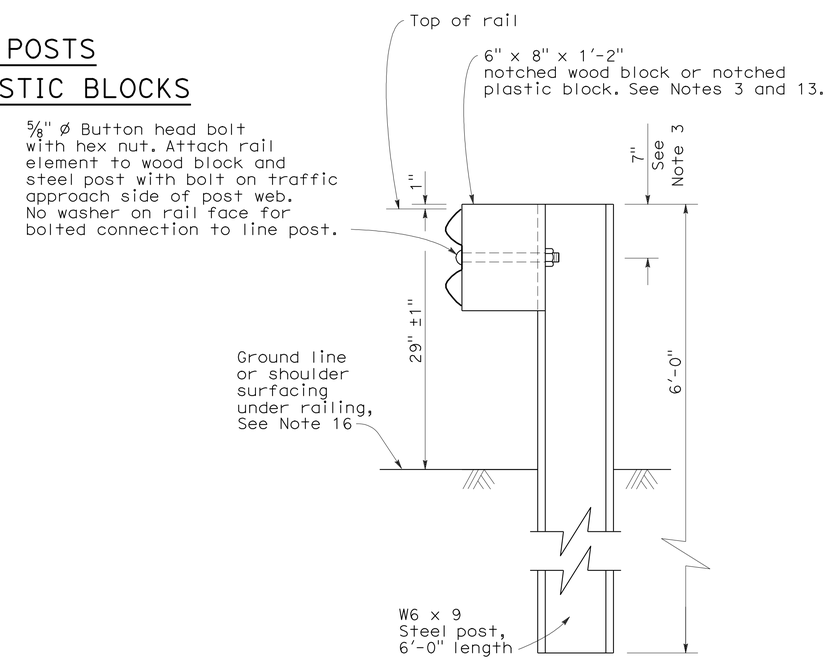

SECTION A-A

TYPICAL STEEL LINE POST INSTALLATION

See Note 4

NOTES:

1. For details of wood post installations, see Standard Plan A77A1.
2. For details of standard hardware used to construct guard railing, see Standard Plan A77B1.
3. For details of steel posts and notched wood blocks used to construct guard railing, see Standard Plan A77C2.
4. For additional installation details, see Standard Plan A77C3.
5. Guard railing post spacing to be 6'-3" center to center, except as otherwise noted.
6. For guard railing typical layouts, see the A77E, A77F and A77G Series of Standard Plans.
7. For terminal system end treatment details, see the A77L Series of Standard Plans. To connect railing to terminal system end treatment, transition the top of railing height at a ratio of 120:1 to terminal system end treatment height plus one 12'-6" standard railing section at the transitioned height for a horizontal connection to the end treatment.
8. For guard railing end anchor details, see Standard Plans A77H1 and A77I2.
9. For details of guard railing transition to bridge railing, see Standard Plan A77J4.
10. For additional details of guard railing connection to bridge railings, see Standard Plans A77J1, A77J2 and A77K1.
11. For dike positioning and guard railing delineation details, see Standard Plan A77C4.
12. Direction of adjacent traffic indicated by → .
13. Notched face of block faces steel post.
14. Slotted hole for bolted connection of rail element to block and post. See "Section Thru Rail Element".
15. Slotted holes for splice bolts to overlap ends of rail element. See "Section Thru Rail Element".
16. Install posts in soil.

STATE OF CALIFORNIA
DEPARTMENT OF TRANSPORTATION

METAL BEAM GUARD RAILING STANDARD RAILING SECTION (STEEL POST WITH NOTCHED WOOD OR NOTCHED RECYCLED PLASTIC BLOCK)

NO SCALE

RSP A77A2 DATED MAY 20, 2011 SUPERSEDES STANDARD PLAN A77A2 DATED MAY 1, 2006 - PAGE 42 OF THE STANDARD PLANS BOOK DATED MAY 2006.

REVISED STANDARD PLAN RSP A77A2

5-4-11

To accompany plans dated 4-9-12

Dist	COUNTY	ROUTE	POST MILES TOTAL PROJECT	SHEET No.	TOTAL SHEETS
05	Mon,SBt	101	100.0/101.3, 0.0/1.6	484	641

Randell D. Hiatt
REGISTERED CIVIL ENGINEER

May 20, 2011
PLANS APPROVAL DATE

REGISTERED PROFESSIONAL ENGINEER
Randell D. Hiatt
No. C50200
Exp. 6-30-11
CIVIL
STATE OF CALIFORNIA

The State of California or its officers or agents shall not be responsible for the accuracy or completeness of electronic copies of this plan sheet.

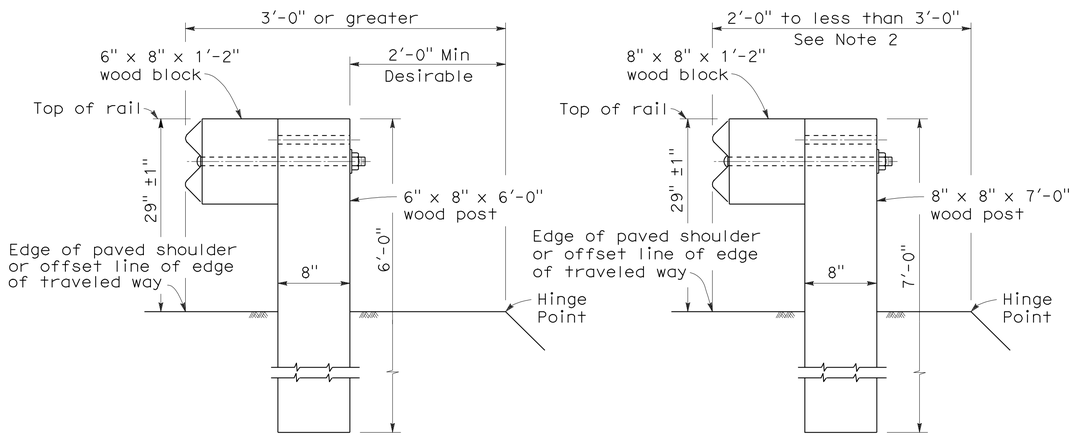

DETAIL A
TYPICAL ROADWAY INSTALLATION
See Note 1

DETAIL B
NARROW ROADWAY INSTALLATION
See Note 1

POST EMBEDMENT

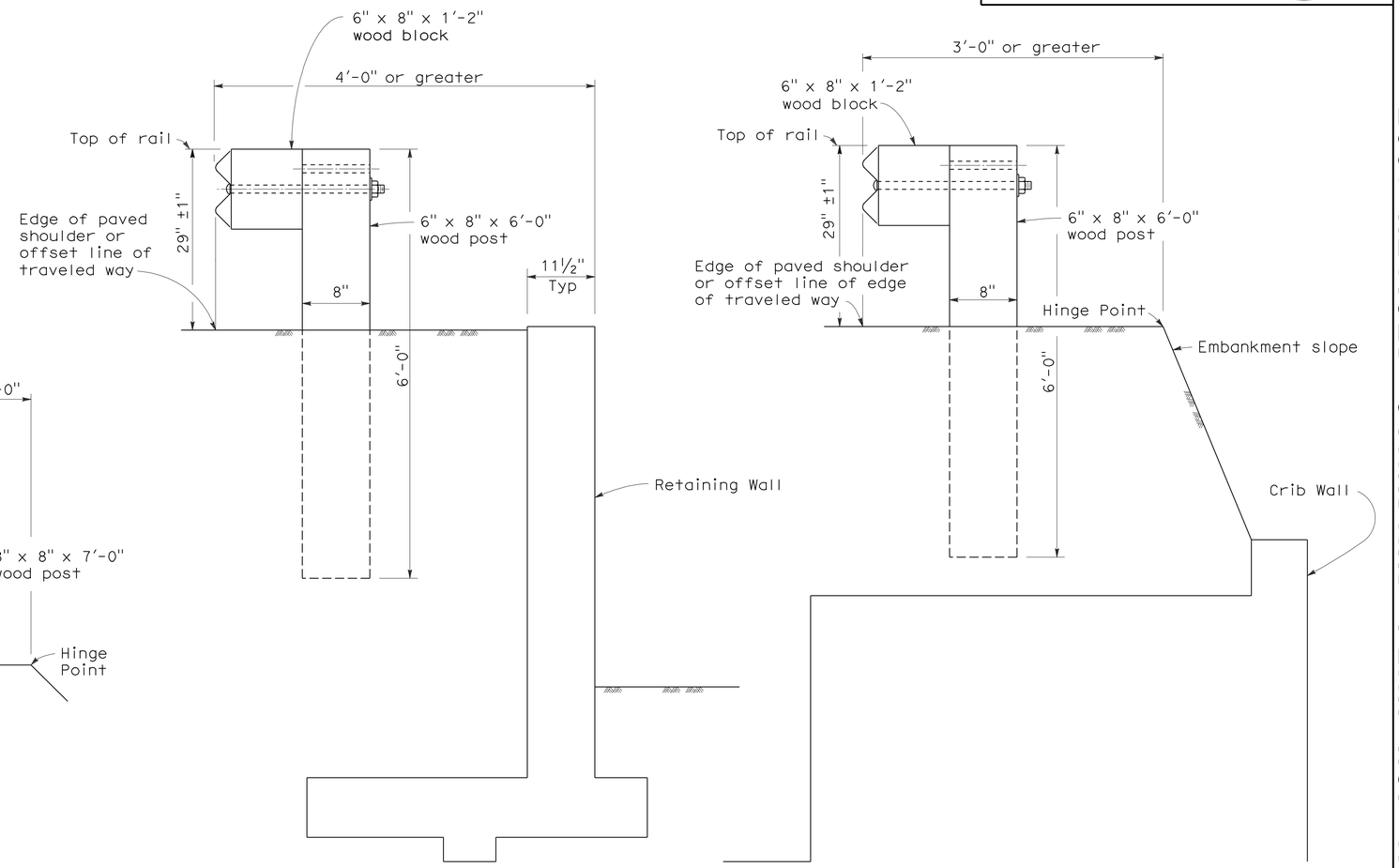

DETAIL C

DETAIL D

INSTALLATION AT EARTH RETAINING WALLS

NOTES:

1. These installation details also applicable to steel line post installations. For Detail A, C, and D, where steel line post installations are constructed, W6 x 9 steel post, 6'-0" in length, with 6" x 8" x 1'-2" notched wood blocks or notched recycled plastic blocks are to be used in place of the size of wood post and wood block shown. For Detail B, where steel line post installations are constructed, W6 x 9 steel post, 7'-0" in length, with 6" x 8" x 1'-2" notched wood blocks or notched recycled plastic blocks are to be used in place of the size of wood post and wood block shown. For additional installation details, see Standard Plans A77A1 and A77A2.
2. Where the distance between the face of the rail and the hinge point is less than 2'-0", see the Project Plans for special details.
3. For dike positioning with guard railing installations, see Standard Plan A77C4.

STATE OF CALIFORNIA
DEPARTMENT OF TRANSPORTATION

METAL BEAM GUARD RAILING TYPICAL LINE POST EMBEDMENT AND HINGE POINT OFFSET DETAILS

NO SCALE

RSP A77C3 DATED MAY 20, 2011 SUPERSEDES STANDARD PLAN A77C3
DATED MAY 1, 2006 - PAGE 46 OF THE STANDARD PLANS BOOK DATED MAY 2006.

REVISED STANDARD PLAN RSP A77C3

2006 REVISED STANDARD PLAN RSP A77C3

3-10-11

Dist	COUNTY	ROUTE	POST MILES TOTAL PROJECT	SHEET No.	TOTAL SHEETS
05	Mon,SBt	101	100.0/101.3, 0.0/1.6	485	641

Randell D. Hiatt
REGISTERED CIVIL ENGINEER

May 20, 2011
PLANS APPROVAL DATE

REGISTERED PROFESSIONAL ENGINEER
Randell D. Hiatt
No. C50200
Exp. 6-30-11
CIVIL
STATE OF CALIFORNIA

The State of California or its officers or agents shall not be responsible for the accuracy or completeness of electronic copies of this plan sheet.

To accompany plans dated 4-9-12

NOTES:

1. When necessary to place dike in front of face of guard railing, only Type C dike may be used. For dike details, see Standard Plan A87B.
2. For standard railing post embedment, see Standard Plans A77C3.
3. Guard railing delineation to be used where shown on the Project Plans.
4. When dike or curb is placed under guard railing, the maximum height of the dike or curb shall be 4". Mountable dike should not be used. For dike and curb details, see Standard Plans A87A and A87B.
5. For details of typical distance between the face of rail and hinge point, see Standard Plan A77C3.
6. For steel line posts, use ¼ - 20 self-tapping screws in 0.22" diameter holes or ¼" bolts in 9/32" diameter holes.

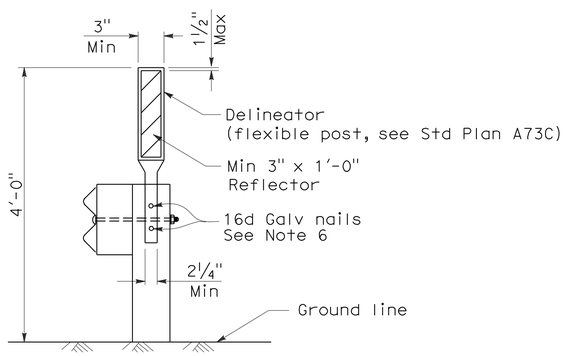

GUARD RAILING DELINEATION

See Note 3

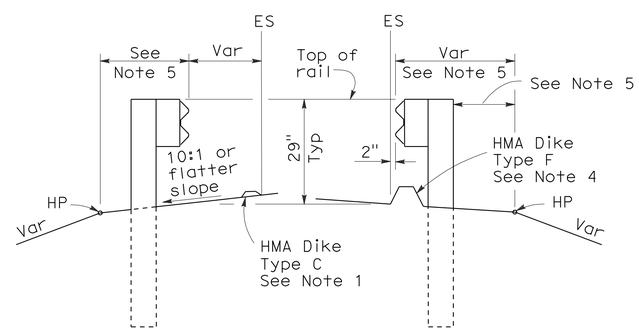

DIKE POSITIONING

See Note 1

STATE OF CALIFORNIA
DEPARTMENT OF TRANSPORTATION

METAL BEAM GUARD RAILING TYPICAL RAILING DELINEATION AND DIKE POSITIONING DETAILS

NO SCALE

RSP A77C4 DATED MAY 20, 2011 SUPERSEDES RSP A77C4 DATED JUNE 6, 2008 AND STANDARD PLAN A77C4 DATED MAY 1, 2006 - PAGE 47 OF THE STANDARD PLANS BOOK DATED MAY 2006.

REVISED STANDARD PLAN RSP A77C4

2006 REVISED STANDARD PLAN RSP A77C4

3-10-11

DIST	COUNTY	ROUTE	POST MILES TOTAL PROJECT	SHEET NO.	TOTAL SHEETS
05	Mon,SBt	101	100.0/101.3, 0.0/1.6	486	641

Randell D. Hiatt
REGISTERED CIVIL ENGINEER

October 20, 2006
PLANS APPROVAL DATE

REGISTERED PROFESSIONAL ENGINEER
Randell D. Hiatt
No. C50200
Exp. 6-30-07
CIVIL
STATE OF CALIFORNIA

The State of California or its officers or agents shall not be responsible for the accuracy or completeness of electronic copies of this plan sheet.

To accompany plans dated 4-9-12

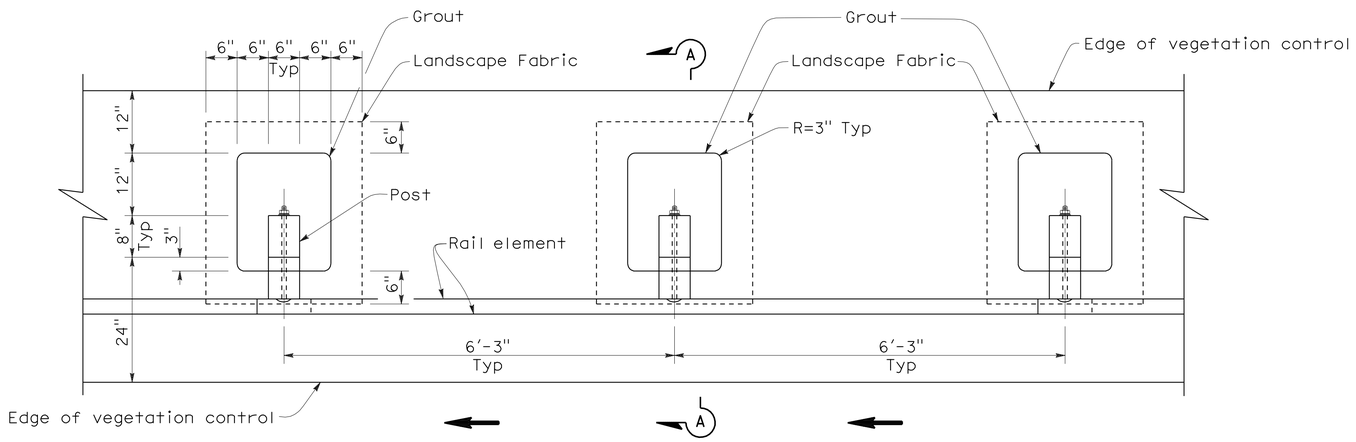

PLAN

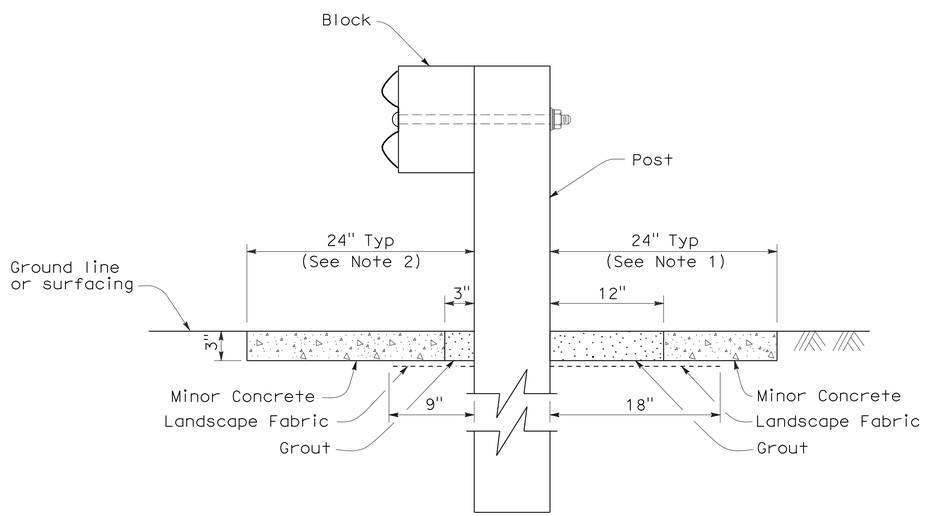

SECTION A-A

NOTES:

1. Where the distance between back of post and hinge point is less than 24", vegetation control to be constructed flush with the back edge of the post.
2. Where dike is constructed under railing, construct vegetation control to back edge of dike. Where paved shoulder is constructed within 24" in front of the post, construct vegetation control to the edge of paved shoulder.
3. Direction of adjacent traffic indicated by ← .

STATE OF CALIFORNIA
DEPARTMENT OF TRANSPORTATION

METAL BEAM GUARD RAILING TYPICAL VEGETATION CONTROL STANDARD RAILING SECTION

NO SCALE

NSP A77C5 DATED OCTOBER 20, 2006 SUPPLEMENTS THE STANDARD PLANS BOOK DATED MAY 2006.

NEW STANDARD PLAN NSP A77C5

2006 NEW STANDARD PLAN NSP A77C5

DIST	COUNTY	ROUTE	POST MILES TOTAL PROJECT	SHEET NO.	TOTAL SHEETS
05	Mon,SBt	101	100.0/101.3, 0.0/1.6	487	641

Randell D. Hiatt
REGISTERED CIVIL ENGINEER

October 20, 2006
PLANS APPROVAL DATE

REGISTERED PROFESSIONAL ENGINEER
Randell D. Hiatt
No. C50200
Exp. 6-30-07
CIVIL
STATE OF CALIFORNIA

The State of California or its officers or agents shall not be responsible for the accuracy or completeness of electronic copies of this plan sheet.

To accompany plans dated 4-9-12

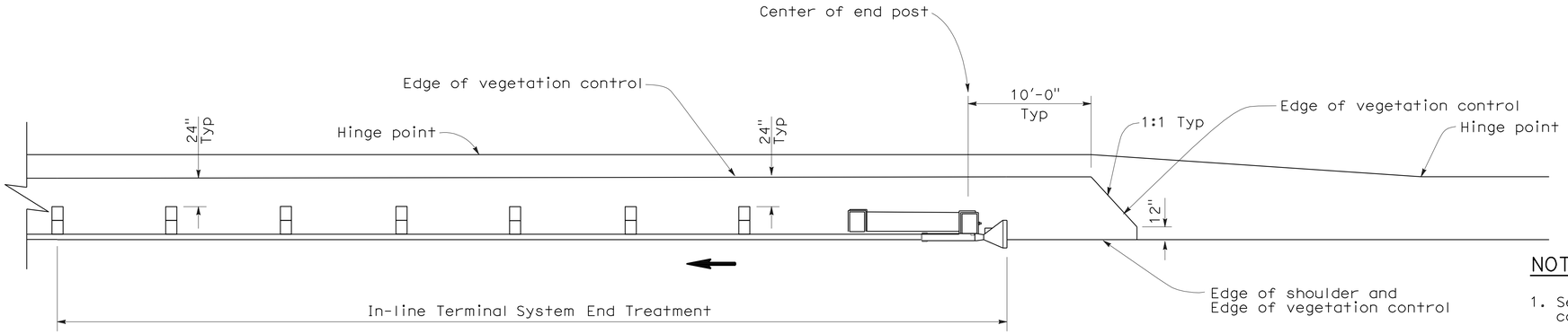

PLAN

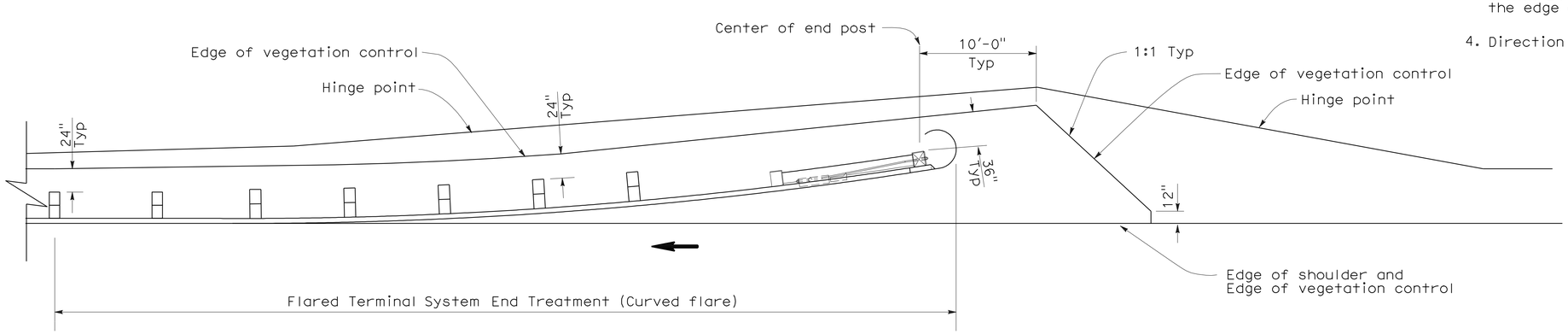

PLAN

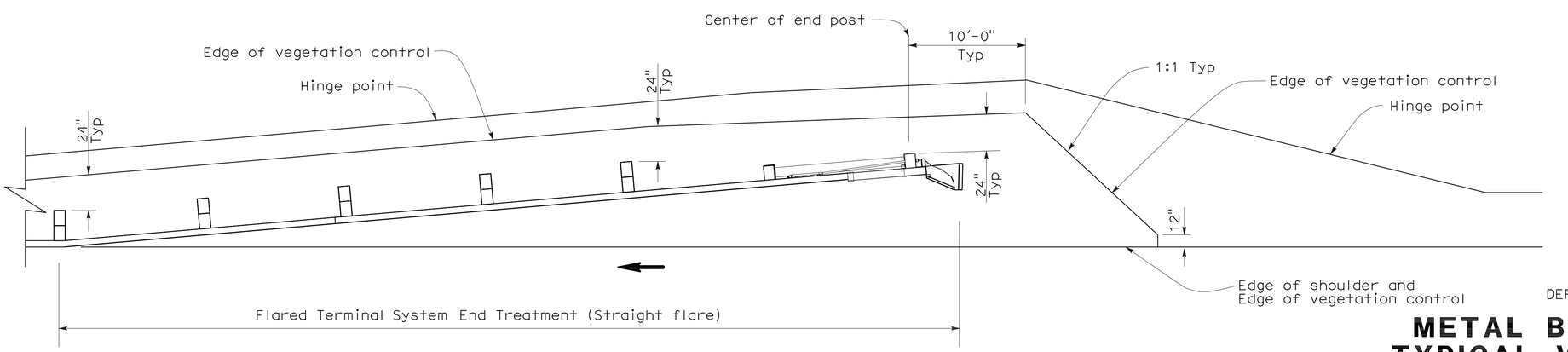

PLAN

NOTES:

1. See New Standard Plan NSP A77C5 for additional vegetation control details.
2. Where the distance between back of post and hinge point is less than 24", vegetation control to be constructed flush with the back edge of the post.
3. Where dike is constructed under railing, construct vegetation control to back edge of dike. Where paved shoulder is constructed within 24" in front of the post, construct vegetation control to the edge of paved shoulder.
4. Direction of adjacent traffic indicated by ←.

STATE OF CALIFORNIA
DEPARTMENT OF TRANSPORTATION

METAL BEAM GUARD RAILING TYPICAL VEGETATION CONTROL FOR TERMINAL SYSTEM END TREATMENTS

NO SCALE

NSP A77C6 DATED OCTOBER 20, 2006 SUPPLEMENTS THE STANDARD PLANS BOOK DATED MAY 2006.

NEW STANDARD PLAN NSP A77C6

2006 NEW STANDARD PLAN NSP A77C6

7-17-06

DIST	COUNTY	ROUTE	POST MILES TOTAL PROJECT	SHEET NO.	TOTAL SHEETS
05	Mon,SBt	101	100.0/101.3, 0.0/1.6	488	641

Randell D. Hiatt
REGISTERED CIVIL ENGINEER

October 20, 2006
PLANS APPROVAL DATE

REGISTERED PROFESSIONAL ENGINEER
Randell D. Hiatt
No. C50200
Exp. 6-30-07
CIVIL
STATE OF CALIFORNIA

The State of California or its officers or agents shall not be responsible for the accuracy or completeness of electronic copies of this plan sheet.

To accompany plans dated 4-9-12

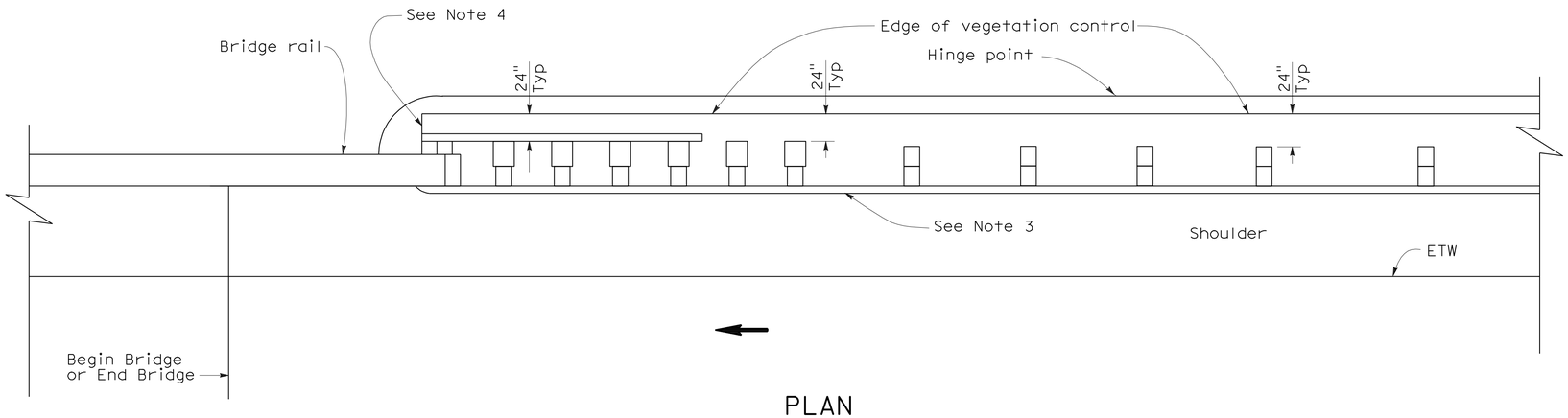

PLAN

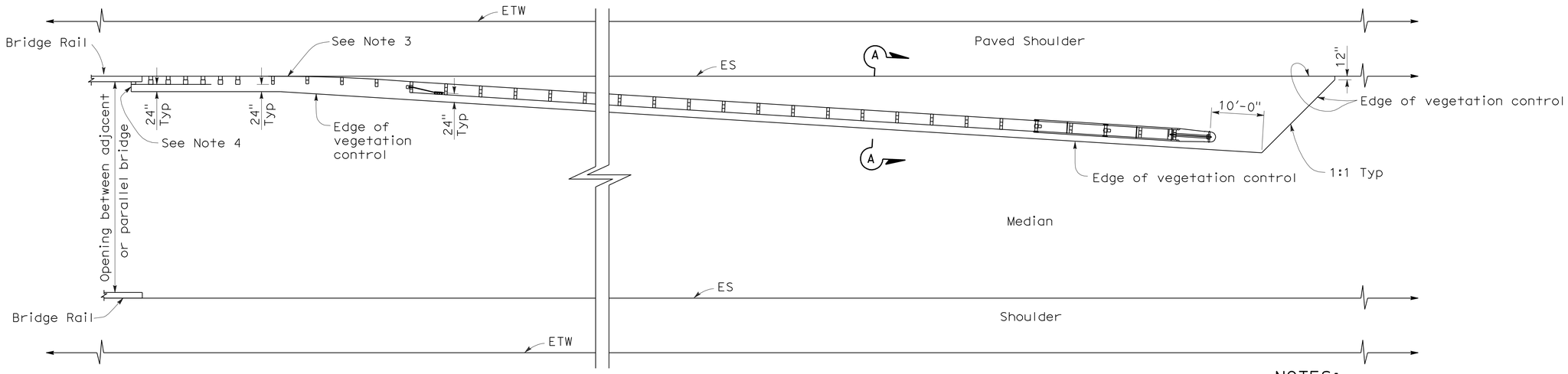

PLAN

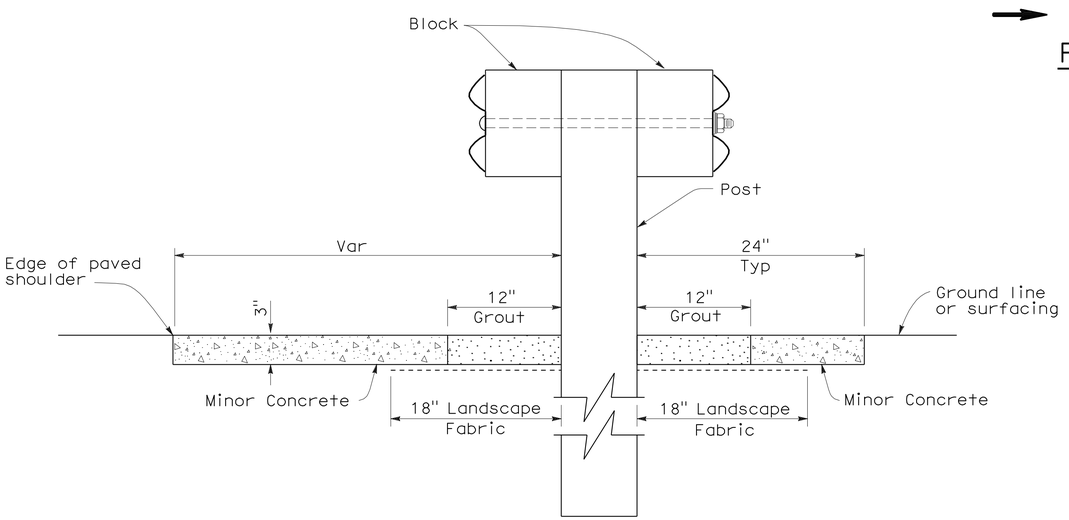

SECTION A-A

NOTES:

1. See New Standard Plan NSP A77C5 for additional vegetation control details.
2. Where the distance between back of post and hinge point is less than 24", vegetation control to be constructed flush with the back edge of the post.
3. Where dike is constructed under railing, construct vegetation control to back edge of dike. Where paved shoulder is constructed within 24" in front of the post, construct vegetation control to the edge of paved shoulder.
4. End vegetation control at end of backside rail element.
5. Direction of adjacent traffic indicated by ←.

STATE OF CALIFORNIA
DEPARTMENT OF TRANSPORTATION

METAL BEAM GUARD RAILING TYPICAL VEGETATION CONTROL AT STRUCTURE APPROACH AND DEPARTURE

NO SCALE

NSP A77C7 DATED OCTOBER 20, 2006 SUPPLEMENTS THE STANDARD PLANS BOOK DATED MAY 2006.

NEW STANDARD PLAN NSP A77C7

2006 NEW STANDARD PLAN NSP A77C7

7-17-06

DIST	COUNTY	ROUTE	POST MILES TOTAL PROJECT	SHEET NO.	TOTAL SHEETS
05	Mon,SBt	101	100.0/101.3, 0.0/1.6	489	641

Randell D. Hiatt
REGISTERED CIVIL ENGINEER

October 20, 2006
PLANS APPROVAL DATE

REGISTERED PROFESSIONAL ENGINEER
Randell D. Hiatt
No. C50200
Exp. 6-30-07
CIVIL
STATE OF CALIFORNIA

The State of California or its officers or agents shall not be responsible for the accuracy or completeness of electronic copies of this plan sheet.

To accompany plans dated 4-9-12

2006 NEW STANDARD PLAN NSP A77C8

NOTES:

1. See New Standard Plan NSP A77C5 for additional vegetation control details.
2. Where the distance between back of post and hinge point is less than 24", vegetation control to be constructed flush with the back edge of the post.
3. Where dike is constructed under railing, construct vegetation control to back edge of dike. Where paved shoulder is constructed within 24" in front of the post, construct vegetation control to the edge of paved shoulder.
4. Direction of adjacent traffic indicated by ←.

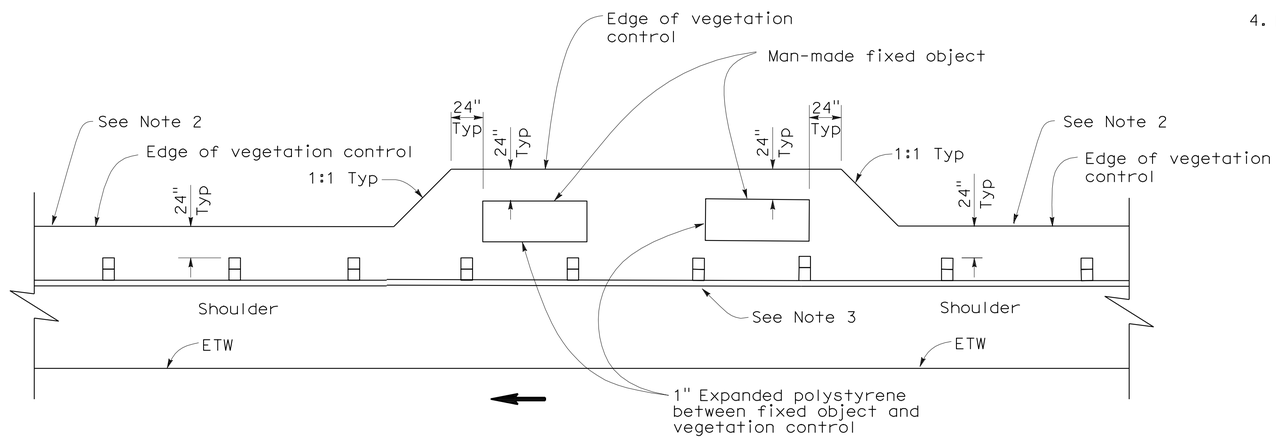

PLAN

FIXED OBJECT(S) ON SHOULDER

STATE OF CALIFORNIA
DEPARTMENT OF TRANSPORTATION

METAL BEAM GUARD RAILING TYPICAL VEGETATION CONTROL AT FIXED OBJECT

NO SCALE

NSP A77C8 DATED OCTOBER 20, 2006 SUPPLEMENTS THE STANDARD PLANS BOOK DATED MAY 2006.

NEW STANDARD PLAN NSP A77C8

7-17-06

DIST	COUNTY	ROUTE	POST MILES TOTAL PROJECT	SHEET NO.	TOTAL SHEETS
05	Mon,SBt	101	100.0/101.3, 0.0/1.6	490	641

Randell D. Hiatt
REGISTERED CIVIL ENGINEER

October 20, 2006
PLANS APPROVAL DATE

REGISTERED PROFESSIONAL ENGINEER
Randell D. Hiatt
No. C50200
Exp. 6-30-07
CIVIL
STATE OF CALIFORNIA

The State of California or its officers or agents shall not be responsible for the accuracy or completeness of electronic copies of this plan sheet.

To accompany plans dated 4-9-12

NOTES:

1. See New Standard Plan NSP A77C5 for additional vegetation control details.
2. Where dike is constructed under railing, construct vegetation control to back edge of dike. Where paved shoulder is constructed within 24" in front of the post, construct vegetation control to the edge of paved shoulder.
3. Direction of adjacent traffic indicated by ← .

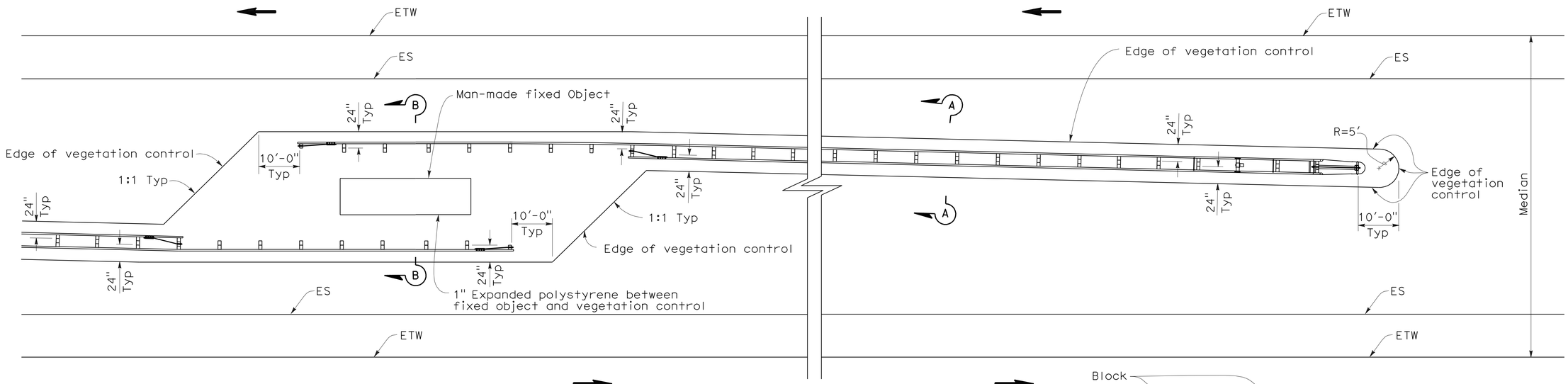

PLAN

FIXED OBJECT(S) IN MEDIAN

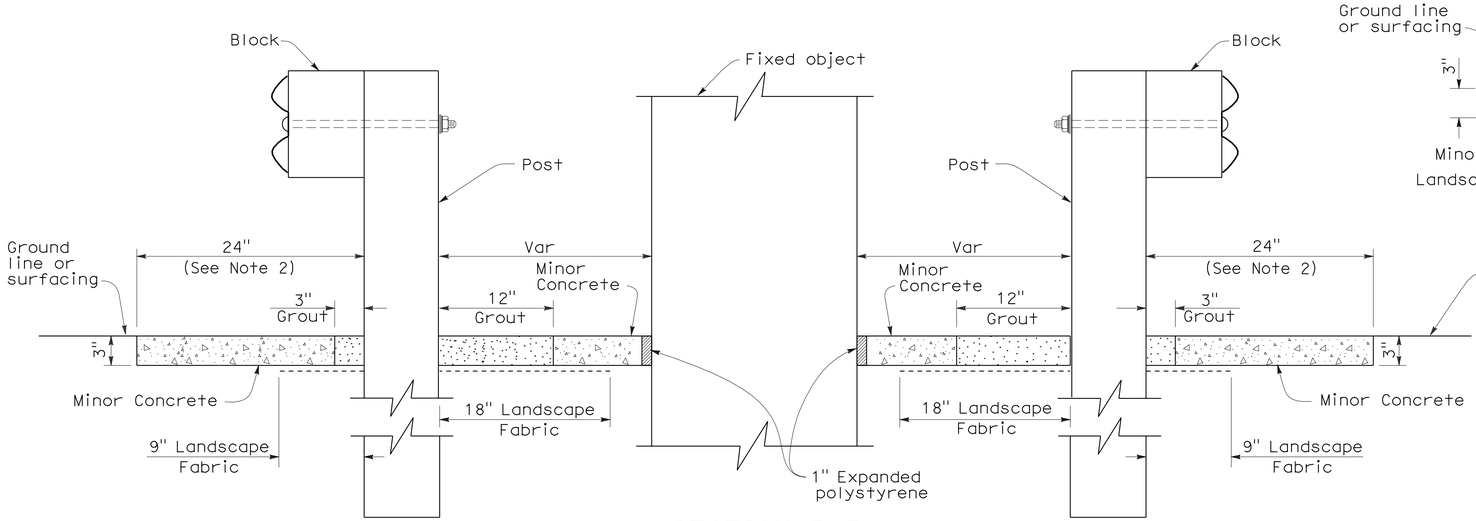

SECTION B-B

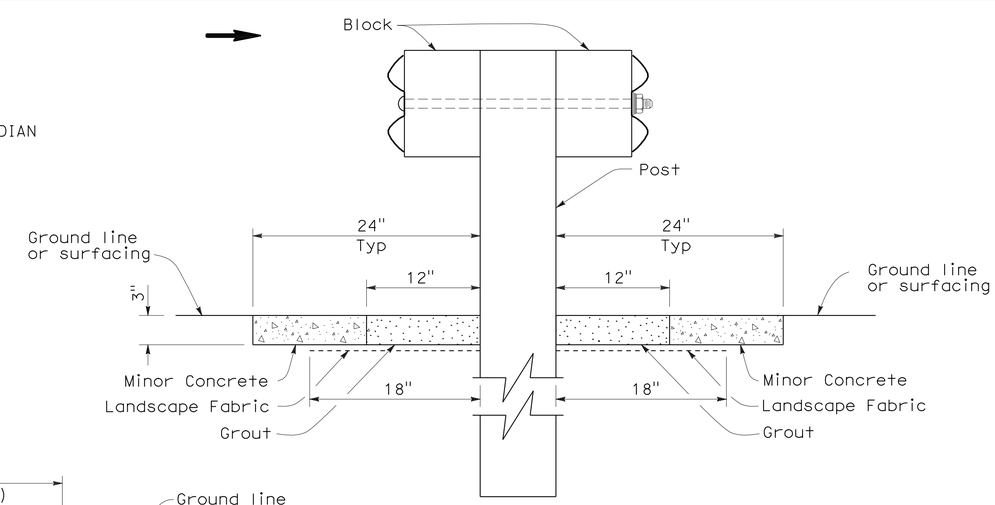

SECTION A-A

STATE OF CALIFORNIA
DEPARTMENT OF TRANSPORTATION

METAL BEAM GUARD RAILING TYPICAL VEGETATION CONTROL AT FIXED OBJECT

NO SCALE

NSP A77C9 DATED OCTOBER 20, 2006 SUPPLEMENTS THE STANDARD PLANS BOOK DATED MAY 2006.

NEW STANDARD PLAN NSP A77C9

2006 NEW STANDARD PLAN NSP A77C9

7-17-06

DIST	COUNTY	ROUTE	POST MILES TOTAL PROJECT	SHEET NO.	TOTAL SHEETS
05	Mon,SBt	101	100.0/101.3, 0.0/1.6	491	641

Randell D. Hiatt
REGISTERED CIVIL ENGINEER

October 20, 2006
PLANS APPROVAL DATE

REGISTERED PROFESSIONAL ENGINEER
Randell D. Hiatt
No. C50200
Exp. 6-30-07
CIVIL
STATE OF CALIFORNIA

The State of California or its officers or agents shall not be responsible for the accuracy or completeness of electronic copies of this plan sheet.

To accompany plans dated 4-9-12

NOTES:

1. See New Standard Plan NSP A77C5 for additional vegetation control details.
2. Where dike is constructed under railing, construct vegetation control to back edge of dike. Where paved shoulder is constructed within 24" in front of the post, construct vegetation control to the edge of paved shoulder.
3. Direction of adjacent traffic indicated by ←.

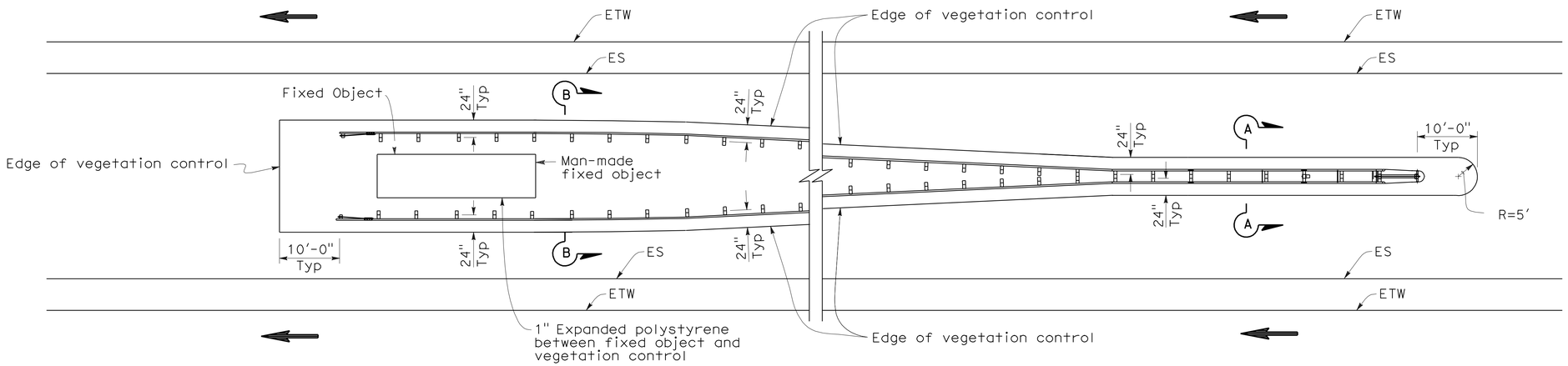

PLAN

FIXED OBJECT(S) BETWEEN SEPARATE ROADBEDS
(ONE-WAY TRAFFIC)

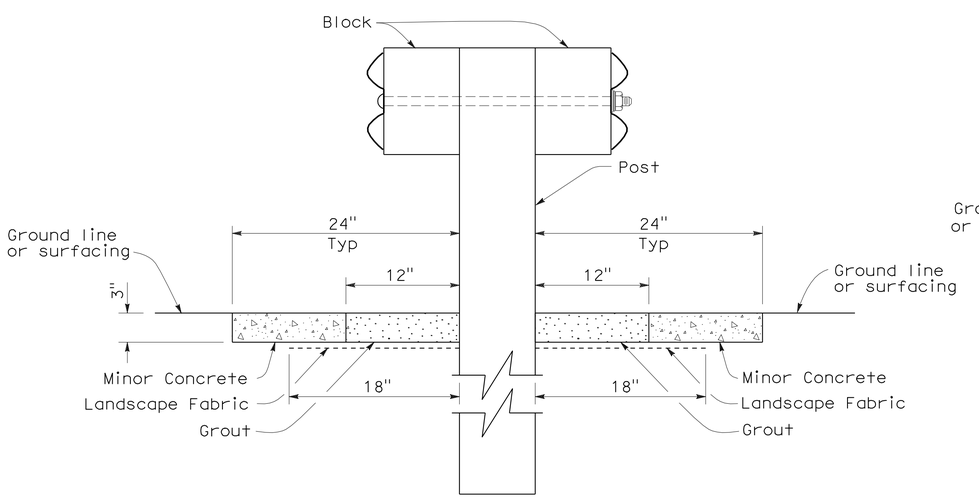

SECTION A-A

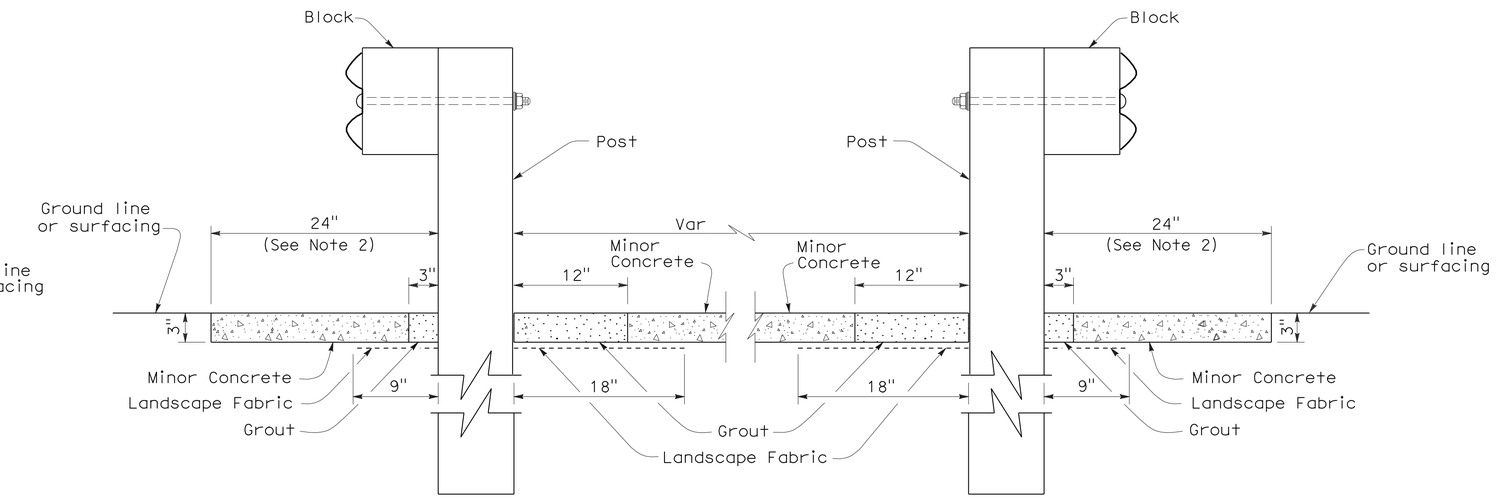

SECTION B-B

STATE OF CALIFORNIA
DEPARTMENT OF TRANSPORTATION

METAL BEAM GUARD RAILING TYPICAL VEGETATION CONTROL AT FIXED OBJECT

NO SCALE

NSP A77C10 DATED OCTOBER 20, 2006 SUPPLEMENTS THE STANDARD PLANS BOOK DATED MAY 2006.

NEW STANDARD PLAN NSP A77C10

2006 NEW STANDARD PLAN NSP A77C10

7-17-06

DIST	COUNTY	ROUTE	POST MILES TOTAL PROJECT	SHEET NO.	TOTAL SHEETS
05	Mon,SBt	101	100.0/101.3, 0.0/1.6	492	641

Randell D. Hiatt
REGISTERED CIVIL ENGINEER

June 6, 2008
PLANS APPROVAL DATE

REGISTERED PROFESSIONAL ENGINEER
Randell D. Hiatt
No. C50200
Exp. 6-30-09
CIVIL
STATE OF CALIFORNIA

The State of California or its officers or agents shall not be responsible for the accuracy or completeness of electronic copies of this plan sheet.

To accompany plans dated 4-9-12

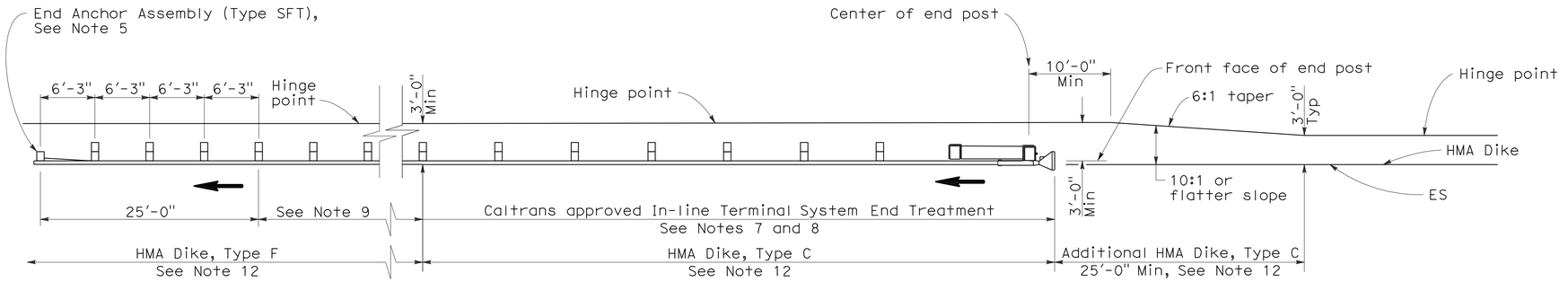

TYPE 11A LAYOUT

(EMBANKMENT GUARD INSTALLATION WITH IN-LINE END TREATMENT AT TRAFFIC APPROACH END OF RAILING)
See Note 6

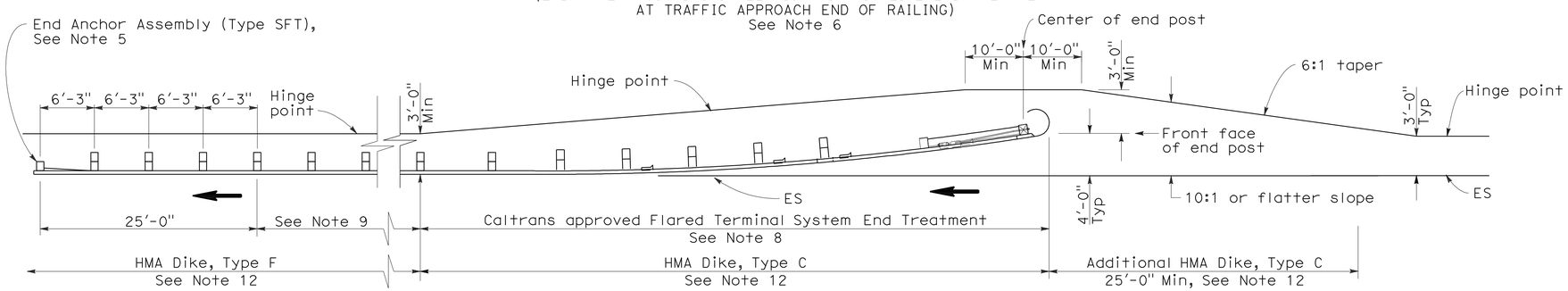

TYPE 11B LAYOUT

(EMBANKMENT GUARD RAILING INSTALLATION WITH FLARED END TREATMENT AT TRAFFIC APPROACH END OF RAILING)
See Note 6

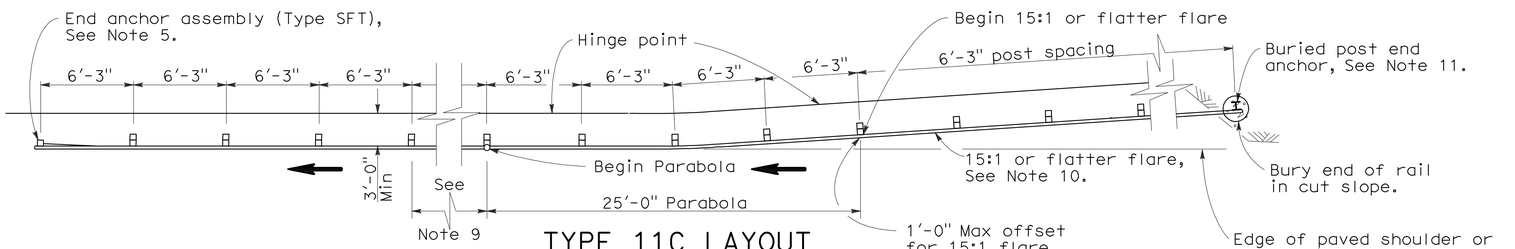

TYPE 11C LAYOUT

(EMBANKMENT GUARD RAILING INSTALLATION WITH BURIED END ANCHOR TREATMENT AT TRAFFIC APPROACH END OF RAILING)
See Notes 6 and 12

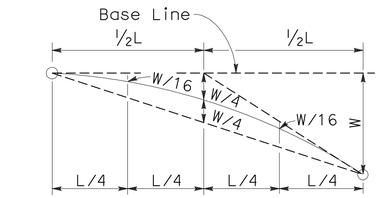

TYPICAL PARABOLIC LAYOUT

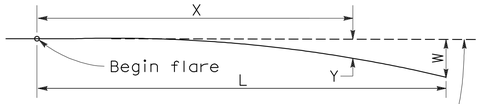

Base Line (Edge of paved shoulder or offset line of edge of traveled way)

$$Y = \frac{WX^2}{L^2}$$

Y = Offset from base line
W = Maximum offset
X = Distance along base line
L = Length of flare

PARABOLIC FLARE OFFSETS

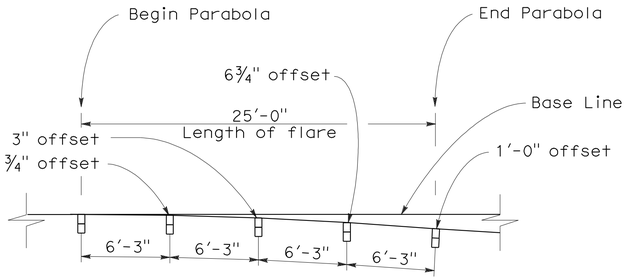

TYPICAL FLARE OFFSETS FOR 1 FOOT MAX END OFFSET

NOTES:

1. Line post, blocks and hardware to be used are shown on Standard Plans A77A1, A77A2, A77B1, A77C1, and A77C2.
2. Guard rail post spacing to be 6'-3" center to center, except as otherwise noted.
3. Except as noted, line posts are 6" x 8" x 6'-0" wood with 6" x 8" x 1'-2" wood blocks. W6 x 9 steel posts, 6'-0" in length, with 6" x 8" x 1'-2" notched wood blocks or recycled plastic blocks may be used for 6" x 8" x 6'-0" wood post with 6" x 8" x 1'-2" wood blocks where applicable and when specified.
4. Direction of adjacent traffic indicated by ⟶.
5. For End Anchor Assembly (Type SFT) details, see Standard Plan A77H1.
6. Layout Types 11A, 11B or 11C are typically used where guard railing is recommended to shield embankment slopes and a crashworthy end treatment is required for only one direction of traffic.
7. In-line Terminal System End Treatments are used where site conditions will not accommodate a flared end treatment.
8. The type of terminal system end treatment to be used will be shown on the Project Plans.
9. Dependent on site conditions (embankment height and side slope), construction of additional guard railing (length equal to multiples of 12'-6" with 6'-3" post spacing) may be advisable.
10. The 15:1 or flatter flare used with buried end anchors is based on the edge of the paved shoulder or offset line of edge of the traveled way. The length of guard railing within the 15:1 or flatter flare is based on site conditions and should be a length equal to multiples of 12'-6".
11. For details of the buried post end anchor used with Type 11C Layout, see Standard Plan A77I2.
12. Where placement of dike is required with guard railing installations, see Revised Standard Plan RSP A77C4 for dike positioning details.

STATE OF CALIFORNIA
DEPARTMENT OF TRANSPORTATION

METAL BEAM GUARD RAILING TYPICAL LAYOUTS FOR EMBANKMENTS

NO SCALE

RSP A77E1 DATED JUNE 6, 2008 SUPERSEDES STANDARD PLAN A77E1
DATED MAY 1, 2006 - PAGE 48 OF THE STANDARD PLANS BOOK DATED MAY 2006.

REVISED STANDARD PLAN RSP A77E1

2006 REVISED STANDARD PLAN RSP A77E1

12-10-07

DIST	COUNTY	ROUTE	POST MILES TOTAL PROJECT	SHEET NO.	TOTAL SHEETS
05	Mon,SBt	101	100.0/101.3, 0.0/1.6	493	641

Randell D. Hiatt
REGISTERED CIVIL ENGINEER

June 6, 2008
PLANS APPROVAL DATE

REGISTERED PROFESSIONAL ENGINEER
Randell D. Hiatt
No. C50200
Exp. 6-30-09
CIVIL
STATE OF CALIFORNIA

The State of California or its officers or agents shall not be responsible for the accuracy or completeness of electronic copies of this plan sheet.

To accompany plans dated 4-9-12

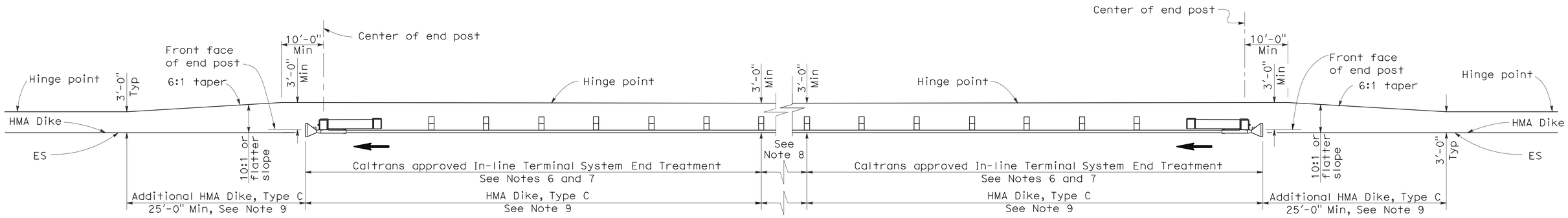

TYPE 11D LAYOUT

(EMBANKMENT GUARD RAILING INSTALLATION WITH IN-LINE END TREATMENT AT EACH END OF RAILING)
See Note 5

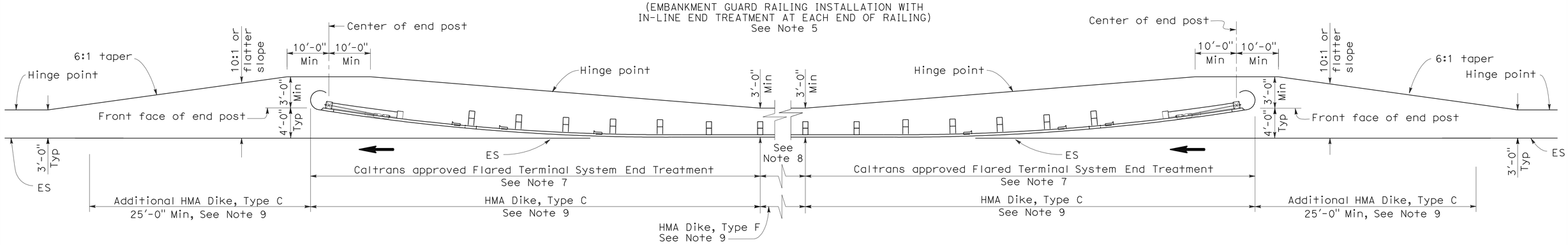

TYPE 11E LAYOUT

(EMBANKMENT GUARD RAILING INSTALLATION WITH FLARED END TREATMENT AT EACH END OF RAILING)
See Note 5

NOTES:

1. Line post, blocks and hardware to be used are shown on Standard Plans A77A1, A77A2, A77B1, A77C1 and A77C2.
2. Guard rail post spacing to be 6'-3" center to center, except as otherwise noted.
3. Except as noted, line posts are 6" x 8" x 6'-0" wood with 6" x 8" x 1'-2" wood blocks. W6 x 9 steel posts, 6'-0" in length, with 6" x 8" x 1'-2" notched wood blocks or plastic blocks may be used for 6" x 8" x 6'-0" wood post with 6" x 8" x 1'-2" wood blocks where applicable and when specified.
4. Direction of adjacent traffic indicated by ➡.
5. Layout Types 11D through 11L, shown on the A77E Series of Revised Standard Plans, are typically used where guard railing is recommended to shield embankment slopes and a crashworthy end treatment is required for both directions of traffic.
6. In-line Terminal System End Treatments are used where site conditions will not accommodate a flared end treatment.
7. The type of terminal system end treatment to be used will be shown on the Project Plans.
8. Dependent on site conditions (embankment height and side slope), construction of additional guard railing (length equal to multiples of 12'-6" with 6'-3" post spacing) may be advisable.
9. Where placement of dike is required with guard railing installations, see Revised Standard Plan RSP A77C4 for dike positioning details.

STATE OF CALIFORNIA
DEPARTMENT OF TRANSPORTATION

METAL BEAM GUARD RAILING TYPICAL LAYOUTS FOR EMBANKMENTS

NO SCALE

RSP A77E2 DATED JUNE 6, 2008 SUPERSEDES STANDARD PLAN A77E2
DATED MAY 1, 2006 - PAGE 49 OF THE STANDARD PLANS BOOK DATED MAY 2006.

REVISED STANDARD PLAN RSP A77E2

2006 REVISED STANDARD PLAN RSP A77E2

12-10-07

DIST	COUNTY	ROUTE	POST MILES TOTAL PROJECT	SHEET NO.	TOTAL SHEETS
05	Mon,SBt	101	100.0/101.3, 0.0/1.6	494	641

Randell D. Hiatt
REGISTERED CIVIL ENGINEER

June 6, 2008
PLANS APPROVAL DATE

REGISTERED PROFESSIONAL ENGINEER
Randell D. Hiatt
No. C50200
Exp. 6-30-09
CIVIL
STATE OF CALIFORNIA

The State of California or its officers or agents shall not be responsible for the accuracy or completeness of electronic copies of this plan sheet.

To accompany plans dated 4-9-12

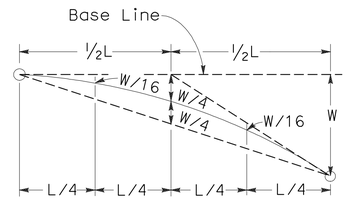

TYPICAL PARABOLIC LAYOUT

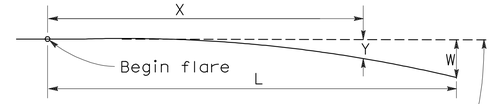

Base Line (Edge of paved shoulder or offset line of edge of traveled way)

$$Y = \frac{WX^2}{L^2}$$

Y = Offset from base line
W = Maximum offset
X = Distance along base line
L = Length of flare

PARABOLIC FLARE OFFSETS

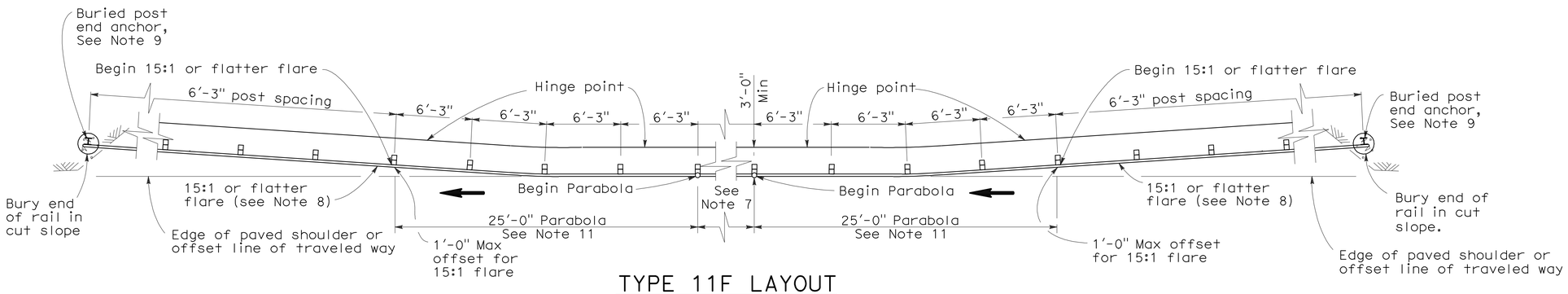

TYPE 11F LAYOUT

(EMBANKMENT GUARD RAILING INSTALLATION WITH A BURIED END ANCHOR TREATMENT AT EACH END OF RAILING)
See Notes 5 and 10

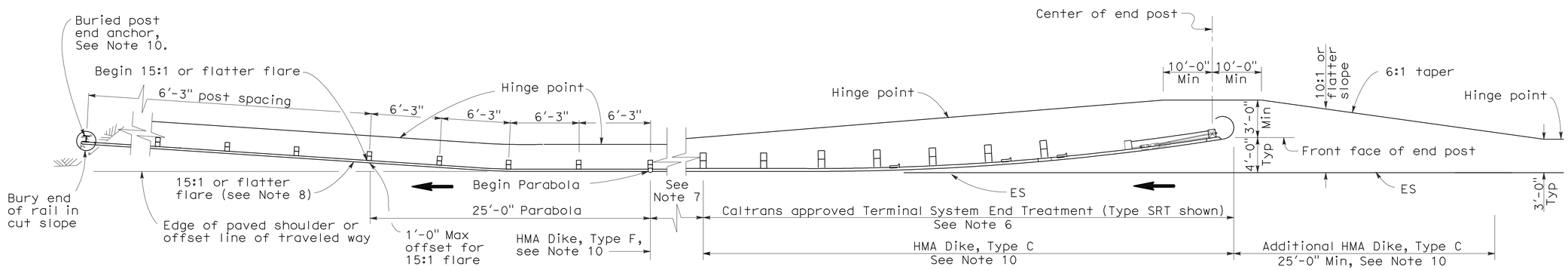

TYPE 11G LAYOUT

(EMBANKMENT GUARD RAILING INSTALLATION WITH FLARED END TREATMENT AND A BURIED END ANCHOR TREATMENT AT THE ENDS OF RAILING)
See Notes 5 and 10

NOTES:

1. Line post, blocks and hardware to be used are shown on Standard Plans A77A1, A77A2, A77B1, A77C1 and A77C2.
2. Guard rail post spacing to be 6'-3" center to center, except as otherwise noted.
3. Except as noted, line posts are 6" x 8" x 6'-0" wood with 6" x 8" x 1'-2" wood blocks. W6 x 9 steel posts, 6'-0" in length, with 6" x 8" x 1'-2" notched wood blocks or plastic blocks may be used for 6" x 8" x 6'-0" wood post with 6" x 8" x 1'-2" wood blocks where applicable and when specified.
4. Direction of adjacent traffic indicated by ⟶.
5. Layout Types 11D through 11L, shown on the A77E Series of Revised Standard Plans, are typically used where guard railing is recommended to shield embankment slopes and a crashworthy end treatment is required for both directions of traffic.
6. The type of terminal system end treatment to be used will be shown on the Project Plans.
7. Dependent on site conditions (embankment height and side slope), construction of additional guard railing (length equal to multiples of 12'-6" with 6'-3" post spacing) may be advisable.
8. The 15:1 or flatter flare used with buried end anchors is based on the edge of the paved shoulder or offset line of edge of the traveled way. The length of guard railing within the 15:1 or flatter flare is based on site conditions and should be a length equal to multiples of 12'-6".
9. For details of the buried post end anchor used with Type 11F and 11G Layouts, see Standard Plan A77I2.
10. Where placement of dike is required with guard railing installations, see Revised Standard Plan RSP A77C4 for dike positioning details.
11. For typical flare offsets for 25'-0" length parabola with maximum offset of 1'-0", see Revised Standard Plan RSP A77E1.

STATE OF CALIFORNIA
DEPARTMENT OF TRANSPORTATION

METAL BEAM GUARD RAILING TYPICAL LAYOUTS FOR EMBANKMENTS

NO SCALE

RSP A77E3 DATED JUNE 6, 2008 SUPERSEDES STANDARD PLAN A77E3 DATED MAY 1, 2006 - PAGE 50 OF THE STANDARD PLANS BOOK DATED MAY 2006.

REVISED STANDARD PLAN RSP A77E3

2006 REVISED STANDARD PLAN RSP A77E3

12-10-07

DIST	COUNTY	ROUTE	POST MILES TOTAL PROJECT	SHEET NO.	TOTAL SHEETS
05	Mon,SBt	101	100.0/101.3, 0.0/1.6	495	641

Randell D. Hiatt
REGISTERED CIVIL ENGINEER

June 6, 2008
PLANS APPROVAL DATE

REGISTERED PROFESSIONAL ENGINEER
Randell D. Hiatt
No. C50200
Exp. 6-30-09
CIVIL
STATE OF CALIFORNIA

The State of California or its officers or agents shall not be responsible for the accuracy or completeness of electronic copies of this plan sheet.

To accompany plans dated 4-9-12

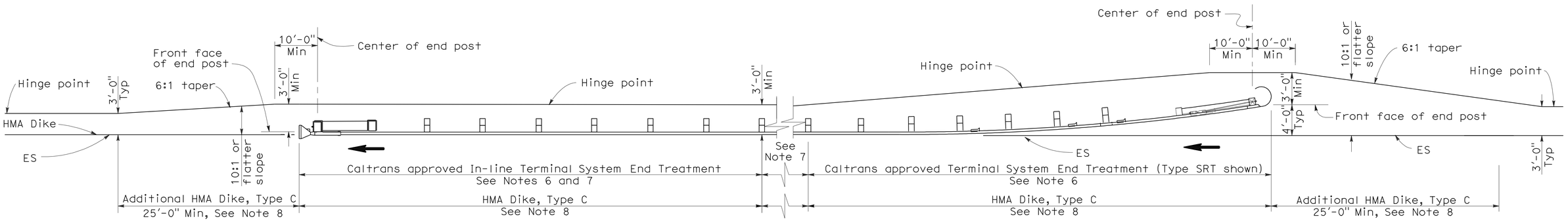

TYPE 11H LAYOUT

(EMBANKMENT GUARD RAILING INSTALLATION WITH FLARED END TREATMENT
AND AN IN-LINE TREATMENT AT THE ENDS OF RAILING)
See Notes 5 and 8

NOTES:

1. Line post, blocks and hardware to be used are shown on Standard Plans A77A1, A77A2, A77B1, A77C1 and A77C2.
2. Guard rail post spacing to be 6'-3" center to center, except as otherwise noted.
3. Except as noted, line posts are 6" x 8" x 6'-0" wood with 6" x 8" x 1'-2" wood blocks. W6 x 9 steel posts, 6'-0" in length, with 6" x 8" x 1'-2" notched wood blocks or plastic blocks may be used for 6" x 8" x 6'-0" wood post with 6" x 8" x 1'-2" wood blocks where applicable and when specified.
4. Direction of adjacent traffic indicated by ⟶.
5. Layout Types 11D through 11L, shown on the A77E Series of Revised Standard Plans, are typically used where guard railing is recommended to shield embankment slopes and a crashworthy end treatment is required for both directions of traffic.
6. The type of terminal system end treatment to be used will be shown on the Project Plans.
7. Dependent on site conditions (embankment height and side slope), construction of additional guard railing (length equal to multiples of 12'-6" with 6'-3" post spacing) may be advisable.
8. Where placement of dike is required with guard railing installations, see Revised Standard Plan RSP A77C4 for dike positioning details.

STATE OF CALIFORNIA
DEPARTMENT OF TRANSPORTATION

METAL BEAM GUARD RAILING TYPICAL LAYOUTS FOR EMBANKMENTS

NO SCALE

RSP A77E4 DATED JUNE 6, 2008 SUPERSEDES STANDARD PLAN A77E4
DATED MAY 1, 2006 - PAGE 51 OF THE STANDARD PLANS BOOK DATED MAY 2006.

REVISED STANDARD PLAN RSP A77E4

2006 REVISED STANDARD PLAN RSP A77E4

12-10-07

DIST	COUNTY	ROUTE	POST MILES TOTAL PROJECT	SHEET NO.	TOTAL SHEETS
05	Mon,SBt	101	100.0/101.3, 0.0/1.6	496	641

Randell D. Hiatt
REGISTERED CIVIL ENGINEER

June 6, 2008
PLANS APPROVAL DATE

REGISTERED PROFESSIONAL ENGINEER
Randell D. Hiatt
No. C50200
Exp. 6-30-09
CIVIL
STATE OF CALIFORNIA

The State of California or its officers or agents shall not be responsible for the accuracy or completeness of electronic copies of this plan sheet.

To accompany plans dated 4-9-12

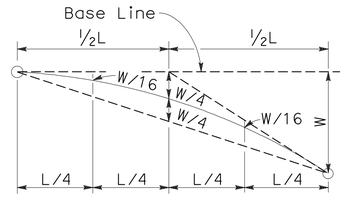

TYPICAL PARABOLIC LAYOUT

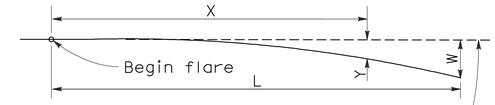

Base Line (Edge of paved shoulder or offset line of edge of traveled way)

$$Y = \frac{WX^2}{L^2}$$

Y = Offset from base line
W = Maximum offset
X = Distance along base line
L = Length of flare

PARABOLIC FLARE OFFSETS

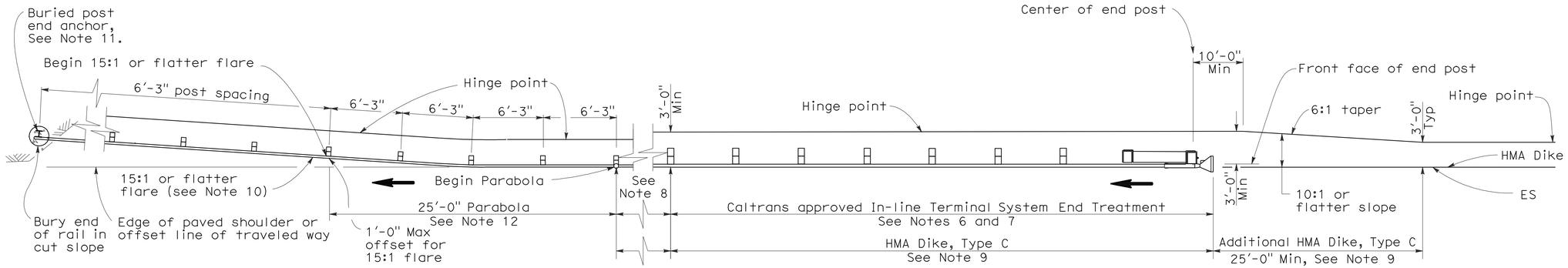

TYPE 11I LAYOUT

(EMBANKMENT GUARD RAILING INSTALLATION WITH IN-LINE END TREATMENT AND A BURIED END ANCHOR TREATMENT AT THE ENDS OF RAILING)
See Note 5

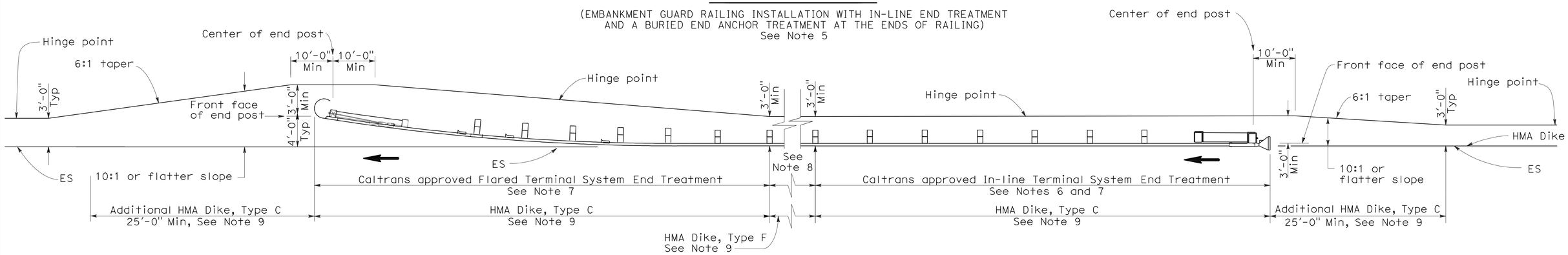

TYPE 11J LAYOUT

(EMBANKMENT GUARD RAILING INSTALLATION WITH IN-LINE END TREATMENT AND FLARED END TREATMENT AT THE ENDS OF RAILING)
See Note 5

NOTES:

1. Line post, blocks and hardware to be used are shown on Standard Plans A77A1, A77A2, A77B1, A77C1 and A77C2.
2. Guard rail post spacing to be 6'-3" center to center, except as otherwise noted.
3. Except as noted, line posts are 6" x 8" x 6'-0" wood with 6" x 8" x 1'-2" wood blocks. W6 x 9 steel posts, 6'-0" in length, with 6" x 8" x 1'-2" notched wood blocks or plastic blocks may be used for 6" x 8" x 6'-0" wood post with 6" x 8" x 1'-2" wood blocks where applicable and when specified.
4. Direction of adjacent traffic indicated by ⟶.
5. Layout Types 11D through 11L, shown on the A77E Series of Revised Standard Plans, are typically used where guard railing is recommended to shield embamkment slopes and a crashworthy end treatment is required for both directions of traffic.
6. In-line Terminal System End Treatments are used where site conditions will not accommodate a flared end treatment.
7. The type of terminal system end treatment to be used will be shown on the Project Plans.
8. Dependent on site conditions (embankment height and side slope), construction of additional guard railing (length equal to multiples of 12'-6" with 6'-3" post spacing) may be advisable.
9. Where placement of dike is required with guard railing installations, see Revised Standard Plan RSP A77C4 for dike positioning details.
10. The 15:1 or flatter flare used with buried end anchors is based on the edge of the paved shoulder or offset line of edge of the traveled way. The length of guard railing within the 15:1 or flatter flare is based on site conditions and should be a length equal to multiples of 12'-6".
11. For details of the buried post end anchor used with Type 11I Layout, see Standard Plan A77I2.
12. For typical flare offsets for 25'-0" length parabola with maximum offset of 1'-0", see Revised Standard Plan RSP A77E1.

STATE OF CALIFORNIA
DEPARTMENT OF TRANSPORTATION

METAL BEAM GUARD RAILING TYPICAL LAYOUTS FOR EMBANKMENTS

NO SCALE

RSP A77E5 DATED JUNE 6, 2008 SUPERSEDES STANDARD PLAN A77E5 DATED MAY 1, 2006 - PAGE 52 OF THE STANDARD PLANS BOOK DATED MAY 2006.

REVISED STANDARD PLAN RSP A77E5

2006 REVISED STANDARD PLAN RSP A77E5

12-10-07

DIST	COUNTY	ROUTE	POST MILES TOTAL PROJECT	SHEET NO.	TOTAL SHEETS
05	Mon,SBt	101	100.0/101.3, 0.0/1.6	497	641

Randell D. Hiatt
REGISTERED CIVIL ENGINEER

June 6, 2008
PLANS APPROVAL DATE

REGISTERED PROFESSIONAL ENGINEER
Randell D. Hiatt
No. C50200
Exp. 6-30-09
CIVIL
STATE OF CALIFORNIA

The State of California or its officers or agents shall not be responsible for the accuracy or completeness of electronic copies of this plan sheet.

To accompany plans dated 4-9-12

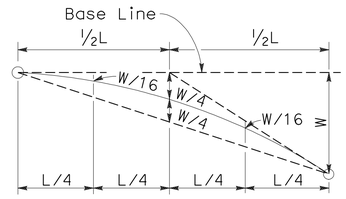

TYPICAL PARABOLIC LAYOUT

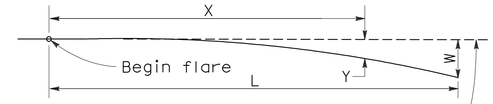

Base Line (Edge of paved shoulder or offset line of edge of traveled way)

$$Y = \frac{WX^2}{L^2}$$

Y = Offset from base line
W = Maximum offset
X = Distance along base line
L = Length of flare

PARABOLIC FLARE OFFSETS

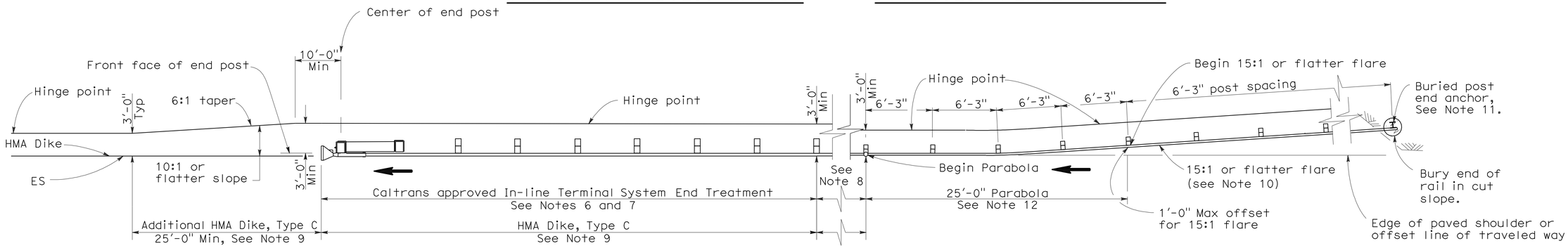

TYPE 11K LAYOUT

(EMBANKMENT GUARD RAILING INSTALLATION WITH A BURIED END ANCHOR TREATMENT AND AN IN-LINE END TREATMENT AT THE ENDS OF RAILING)
See Note 5

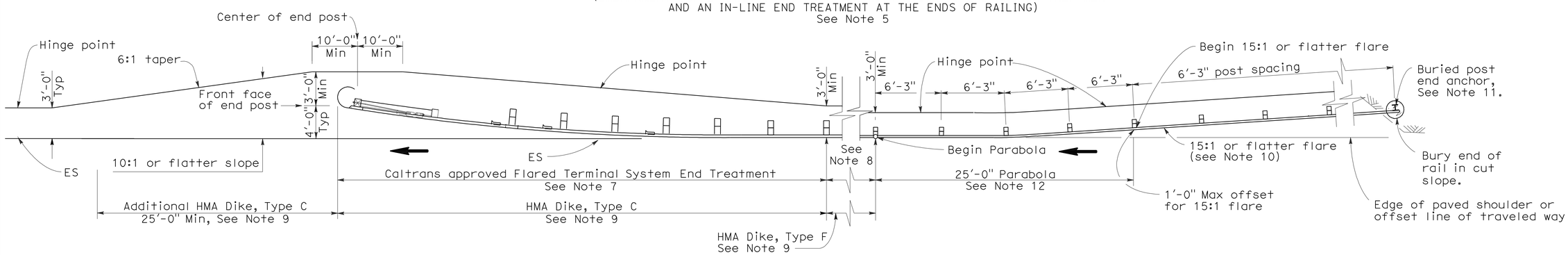

TYPE 11L LAYOUT

(EMBANKMENT GUARD RAILING INSTALLATION WITH A BURIED END ANCHOR TREATMENT AND A FLARED END TREATMENT AT THE ENDS OF RAILING)
See Note 5

NOTES:

1. Line post, blocks and hardware to be used are shown on Standard Plans A77A1, A77A2, A77B1, A77C1 and A77C2.
2. Guard rail post spacing to be 6'-3" center to center, except as otherwise noted.
3. Except as noted, line posts are 6" x 8" x 6'-0" wood with 6" x 8" x 1'-2" wood blocks. W6 x 9 steel posts, 6'-0" in length, with 6" x 8" x 1'-2" notched wood blocks or plastic blocks may be used for 6" x 8" x 6'-0" wood post with 6" x 8" x 1'-2" wood blocks where applicable and when specified.
4. Direction of adjacent traffic indicated by ⟶.
5. Layout Types 11D through 11L, shown on the A77E Series of Revised Standard Plans, are typically used where guard railing is recommended to shield embamkment slopes and a crashworthy end treatment is required for both directions of traffic.
6. In-line Terminal System End Treatments are used where site conditions will not accommodate a flared end treatment.
7. The type of terminal system end treatment to be used will be shown on the Project Plans.
8. Dependent on site conditions (embankment height and side slope), construction of additional guard railing (length equal to multiples of 12'-6" with 6'-3" post spacing) may be advisable.
9. Where placement of dike is required with guard railing installations, see Revised Standard Plan RSP A77C4 for dike positioning details.
10. The 15:1 or flatter flare used with buried end anchors is based on the edge of the paved shoulder or offset line of edge of the traveled way. The length of guard railing within the 15:1 or flatter flare is based on site conditions and should be a length equal to multiples of 12'-6".
11. For details of the buried post end anchor used with Type 11K and 11L Layouts, see Standard Plan A77I2.
12. For typical flare offsets for 25'-0" length parabola with maximum offset of 1'-0", see Revised Standard Plan RSP A77E1.

STATE OF CALIFORNIA
DEPARTMENT OF TRANSPORTATION

METAL BEAM GUARD RAILING TYPICAL LAYOUTS FOR EMBANKMENTS

NO SCALE

RSP A77E6 DATED JUNE 6, 2008 SUPERSEDES STANDARD PLAN A77E6
DATED MAY 1, 2006 - PAGE 53 OF THE STANDARD PLANS BOOK DATED MAY 2006.

REVISED STANDARD PLAN RSP A77E6

2006 REVISED STANDARD PLAN RSP A77E6

12-10-07

DIST	COUNTY	ROUTE	POST MILES TOTAL PROJECT	SHEET NO.	TOTAL SHEETS
05	Mon,SBt	101	100.0/101.3, 0.0/1.6	498	641

Randell D. Hiatt
REGISTERED CIVIL ENGINEER

June 6, 2008
PLANS APPROVAL DATE

REGISTERED PROFESSIONAL ENGINEER
Randell D. Hiatt
No. C50200
Exp. 6-30-09
CIVIL
STATE OF CALIFORNIA

The State of California or its officers or agents shall not be responsible for the accuracy or completeness of electronic copies of this plan sheet.

To accompany plans dated 4-9-12

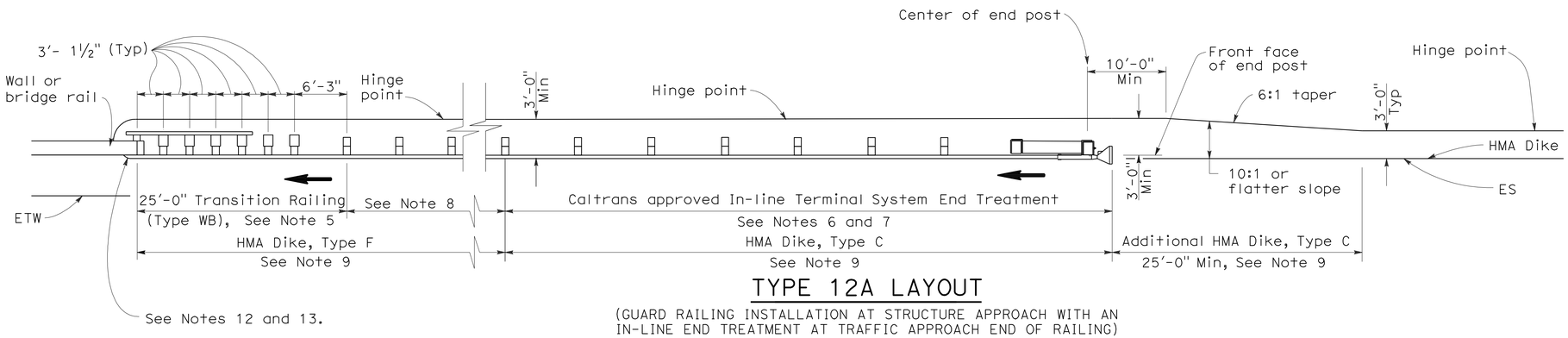

TYPE 12A LAYOUT

(GUARD RAILING INSTALLATION AT STRUCTURE APPROACH WITH AN IN-LINE END TREATMENT AT TRAFFIC APPROACH END OF RAILING)
See Notes 10

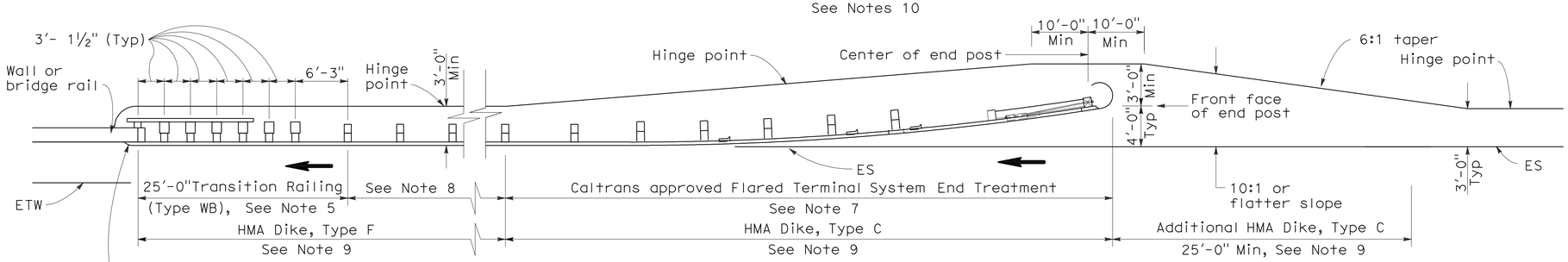

TYPE 12B LAYOUT

(GUARD RAILING INSTALLATION AT STRUCTURE APPROACH WITH A FLARED END TREATMENT AT TRAFFIC APPROACH END OF RAILING)
See Notes 10

NOTES:

1. Line post, blocks and hardware to be used are shown on Standard Plans A77A1, A77A2, A77B1, A77C1 and A77C2.
2. Guard rail post spacing to be 6'-3" center to center, except as otherwise noted.
3. Except as noted, line posts are 6" x 8" x 6'-0" wood with 6" x 8" x 1'-2" wood blocks. W6 x 9 steel posts, 6'-0" in length, with 6" x 8" x 1'-2" notched wood blocks or plastic blocks may be used for 6" x 8" x 6'-0" wood posts with 6" x 8" x 1'-2" wood blocks where applicable and when specified.
4. Direction of adjacent traffic indicated by ➡.
5. For Transition Railing (Type WB) details for Types 12A and 12B Layouts, see Standard Plan A77J4.
6. In-line Terminal System End Treatments are used where site conditions will not accommodate a flared end treatment.
7. The type of terminal system end treatment to be used will be shown on the Project Plans.
8. Dependent on site conditions (embankment height, side slopes, or other fixed objects), it may be advisable to construct additional guard railing (a length equal to multiples of 12'-6" with 6'-3" post spacing) between the transition railing and end treatment.
9. Where placement of dike is required with guard railing installations, see Revised Standard Plan RSP A77C4 for dike positioning details.
10. Type 12A or Type 12B Layouts are typically used:
    a. To the right of approaching traffic, at the end of a structure, on two-lane conventional highway where the roadbed width across the structure is less than 40 feet.
    b. To the left of approaching traffic, at the end of a structure, on two-lane conventional highway where the roadbed width across the structure is less than 40 feet.
    c. To the right of approaching traffic at the end of each structure on multilane freeways or expressways with separate adjacent or parallel bridges.
    d. To the right of approaching traffic at the end of the structure on multilane freeways or expressways with decked median on the bridge.
11. See Revised Standard Plan RSP A77F3 for typical layout used left of approaching traffic at the ends of each structure on multilane freeways or expressways with separate adjacent or parallel bridges.
12. For additional details of typical connections to bridge rail, see Connection Detail AA on Revised Standard Plans RSP A77J1 and RSP A77J2 and Connection Detail FF on Standard Plans A77K1 and A77K2.
13. For additional details of a typical connection to walls or abutments, see Standard Plan A77J3.

STATE OF CALIFORNIA
DEPARTMENT OF TRANSPORTATION

METAL BEAM GUARD RAILING TYPICAL LAYOUTS FOR STRUCTURE APPROACH

NO SCALE

RSP A77F1 DATED JUNE 6, 2008 SUPERSEDES STANDARD PLAN A77F1
DATED MAY 1, 2006 - PAGE 54 OF THE STANDARD PLANS BOOK DATED MAY 2006.

REVISED STANDARD PLAN RSP A77F1

2006 REVISED STANDARD PLAN RSP A77F1

DIST	COUNTY	ROUTE	POST MILES TOTAL PROJECT	SHEET NO.	TOTAL SHEETS
05	Mon,SBt	101	100.0/101.3, 0.0/1.6	499	641

Randell D. Hiatt
REGISTERED CIVIL ENGINEER

June 6, 2008
PLANS APPROVAL DATE

REGISTERED PROFESSIONAL ENGINEER
Randell D. Hiatt
No. C50200
Exp. 6-30-09
CIVIL
STATE OF CALIFORNIA

The State of California or its officers or agents shall not be responsible for the accuracy or completeness of electronic copies of this plan sheet.

To accompany plans dated 4-9-12

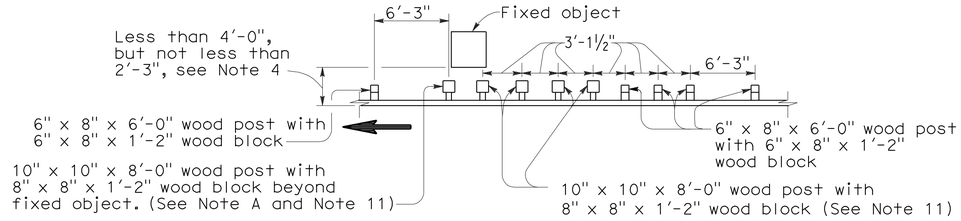

NOTE A: For a series of fixed objects (bridge columns, overhead sign supports, etc.) additional 10" x 10" x 8'-0" wood post with 8" x 8" x 1'-2" wood blocks at 3'-1½" center to center spacing are to be used between fixed object(s).

STRENGTHENED RAILING SECTIONS FOR FIXED OBJECT

Use strengthened railing sections with Layout Types 16D or 16E where minimum clearance between the guard railing and fixed object(s) is less than 4'-0", but not less than 2'-3". See Note 4.

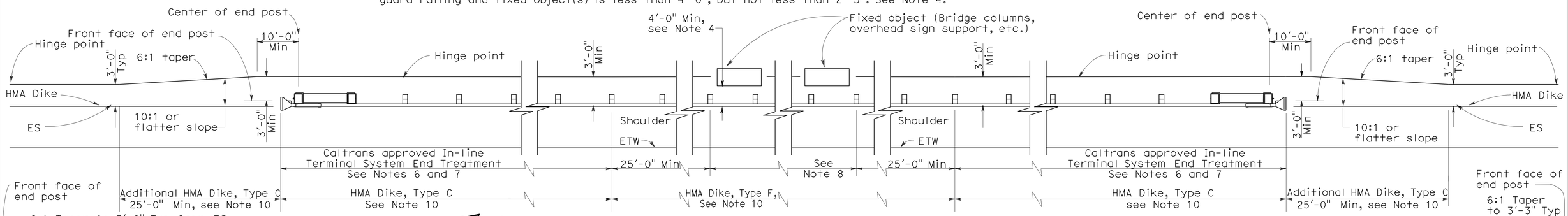

TYPE 16D LAYOUT

(GUARD RAILING INSTALLATION AT ROADSIDE FIXED OBJECT OR OBJECTS WITH AN IN-LINE END TREATMENT AT EACH END OF RAILING)
See Note 9

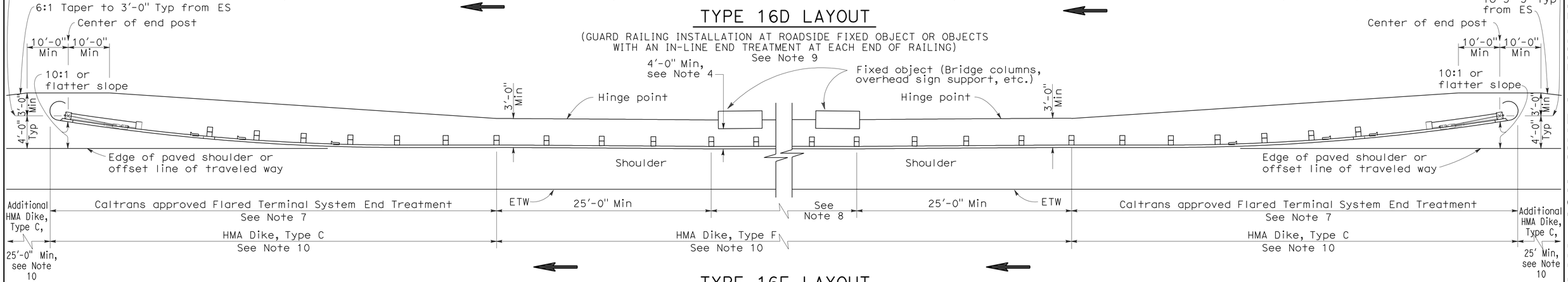

TYPE 16E LAYOUT

(GUARD RAILING INSTALLATION AT ROADSIDE FIXED OBJECT OR OBJECTS WITH A FLARED END TREATMENT AT EACH END OF RAILING)
See Note 9

NOTES:

1. Line post, blocks and hardware to be used are shown on Standard Plans A77A1, A77A2, A77B1, A77C1 and A77C2.
2. Guard railing post spacing to be 6'-3" center to center, except as otherwise noted.
3. Except as noted, line posts are 6" x 8" x 6'-0" wood with 6" x 8" x 1'-2" wood blocks. W6 x 9 steel posts, 6'-0" in length, with 6" x 8" x 1'-2" notched wood blocks or notched recycled plastic blocks may be used for 6" x 8" x 6'-0" wood line posts with 6" x 8" x 1'-2" wood blocks where applicable and when specified.
4. A 4'-0" minimum clearance is required between the face of the railing and the face of a fixed object located directly behind standard guard railing sections with post spacing at 6'-3". Construct guard railing as shown in the detail "Strengthened Railing Sections for Fixed Objects" on this plan, where the clearance between the face of the railing and the face of a fixed object is less than 4'-0", but not less than 2'-3". Where the clearance is less than 2'-3", a concrete wall or barrier should be constructed to shield the fixed object(s).
5. Direction of adjacent traffic indicated by ⟶ .
6. In-line Terminal System End Treatments are used where site conditions will not accommodate a flared end treatment.
7. The type of terminal system to be used will be shown on the Project Plans.
8. As site conditions dictate, construct additional guard railing to shield fixed object(s). Additional guard railing length equal to multiples of 12'-6". Post spacing at 6'-3", except as specified in Note 4.
9. Layout Types 16D through 16L, shown on the A77G Series of Revised Standard Plans, are typically used where guard railing is recommended to shield roadside fixed object(s) and a crashworthy end treatment is required for both directions of traffic.
10. Where placement of dike is required with guard railing, see Revised Standard Plan RSP A77C4 for dike positioning details.
11. W6 x 15 steel post, 8'-0" in length, with 8" x 8" x 1'-2" notched wood block or notched recycled plastic block may be used in place of the 10" x 10" x 8'-0" wood post with 8" x 8" x 1'-2" wood block shown in the "Strengthened Railing Sections Detail."

STATE OF CALIFORNIA
DEPARTMENT OF TRANSPORTATION

METAL BEAM GUARD RAILING TYPICAL LAYOUTS FOR ROADSIDE FIXED OBJECTS

NO SCALE

RSP A77G4 DATED JUNE 6, 2008 SUPERSEDES STANDARD PLAN A77G4
DATED MAY 1, 2006 - PAGE 62 OF THE STANDARD PLANS BOOK DATED MAY 2006.

REVISED STANDARD PLAN RSP A77G4

2006 REVISED STANDARD PLAN RSP A77G4

12-10-07

DIST	COUNTY	ROUTE	POST MILES TOTAL PROJECT	SHEET NO.	TOTAL SHEETS
05	Mon,SBt	101	100.0/101.3, 0.0/1.6	500	641

Randell D. Hiatt
REGISTERED CIVIL ENGINEER

June 6, 2008
PLANS APPROVAL DATE

REGISTERED PROFESSIONAL ENGINEER
Randell D. Hiatt
No. C50200
Exp. 6-30-09
CIVIL
STATE OF CALIFORNIA

The State of California or its officers or agents shall not be responsible for the accuracy or completeness of electronic copies of this plan sheet.

To accompany plans dated 4-9-12

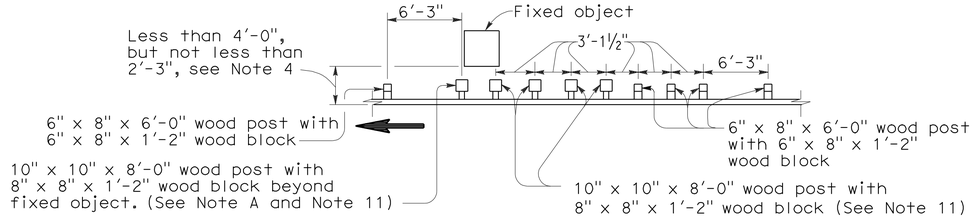

Note A. For a series of fixed objects (bridge columns, overhead sign supports, etc.) additional 10" x 10" x 8'-0" wood post with 8" x 8" x 1'-2" wood blocks at 3'-1½" center to center spacing are to be used between fixed object(s).

STRENGTHENED RAILING SECTIONS FOR FIXED OBJECT

Use strengthened railing sections with Layout Type 16H where minimum clearance between the face of the guard railing and fixed object(s) is less than 4'-0", but not less than 2'-3". See Note 4.

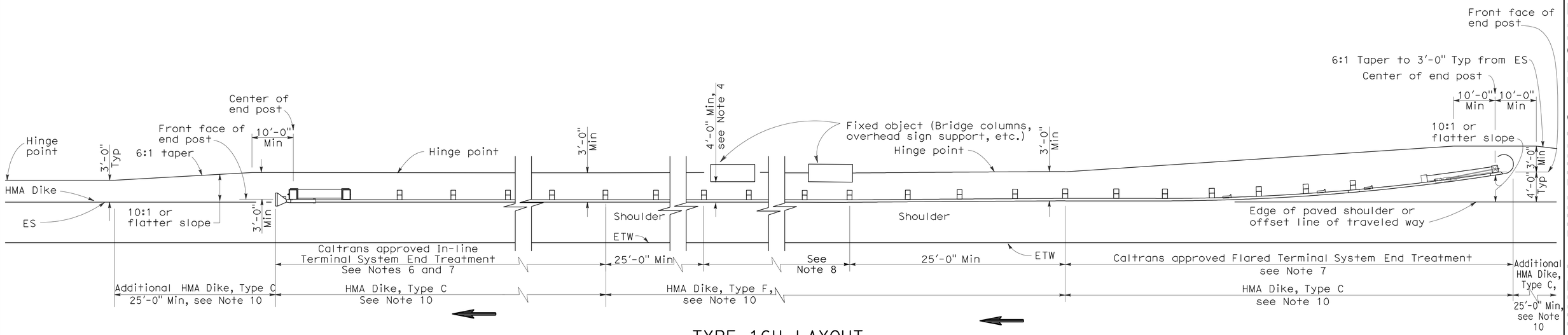

TYPE 16H LAYOUT

(GUARD RAILING INSTALLATION AT ROADSIDE FIXED OBJECT OR OBJECTS WITH A FLARED END TREATMENT AND AN IN-LINE TREATMENT AT THE ENDS OF RAILING)
See Note 9

NOTES:

1. Line post, blocks and hardware to be used are shown on Standard Plans A77A1, A77A2, A77B1, A77C1 and A77C2.
2. Guard railing post spacing to be 6'-3" center to center, except as otherwise noted.
3. Except as noted, line posts are 6" x 8" x 6'-0" wood with 6" x 8" x 1'-2" wood blocks. W6 x 9 steel posts, 6'-0" in length, with 6" x 8" x 1'-2" notched wood blocks or notched recycled plastic blocks may be used for 6" x 8" x 6'-0" wood posts with 6" x 8" x 1'-2" wood blocks where applicable and when specified.
4. A 4'-0" minimum clearance is required between the face of the railing and the face of a fixed object located directly behind standard guard railing sections with post spacing at 6'-3". Construct guard railing as shown in the detail "Strengthened Railing Sections for Fixed Objects" on this plan, where the clearance between the face of the railing and the face of a fixed object is less than 4'-0", but not less than 2'-3". Where the clearance is less than 2'-3", a concrete wall or barrier should be constructed to shield the fixed object(s).
5. Direction of adjacent traffic indicated by ⟶ .
6. In-line Terminal System End Treatments are used where site conditions will not accommodate a flared end treatment.
7. The type of terminal system to be used will be shown on the Project Plans.
8. As site conditions dictate, construct additional guard railing to shield fixed object(s). Additional guard railing length equal to multiples of 12'-6". Post spacing at 6'-3", except as specified in Note 4.
9. Layout Types 16D through 16L, shown on the A77G Series of Revised Standard PLans, typically used where guard railing is recommended to shield roadside fixed object(s) and a crashworthy end treatment is required for both directions of traffic.
10. Where placement of dike is required with guard railing, see Revised Standard Plan RSP A77C4 for dike positioning details.
11. W6 x 15 steel post, 8'-0" in length, with 8" x 8" x 1'-2" notched wood block or notched recycled plastic blocks may be used in place of the 10" x 10" x 8'-0" wood post with 8" x 8" x 1'-2" wood block shown in the "Strengthened Railing Sections Detail".

STATE OF CALIFORNIA
DEPARTMENT OF TRANSPORTATION

METAL BEAM GUARD RAILING TYPICAL LAYOUTS FOR ROADSIDE FIXED OBJECTS

NO SCALE

RSP A77G6 DATED JUNE 6, 2008 SUPERSEDES STANDARD PLAN A77G6 DATED MAY 1, 2006 - PAGE 64 OF THE STANDARD PLANS BOOK DATED MAY 2006.

REVISED STANDARD PLAN RSP A77G6

2006 REVISED STANDARD PLAN RSP A77G6

12-10-07