Dist	COUNTY	ROUTE	POST MILES TOTAL PROJECT	SHEET No.	TOTAL SHEETS
05	SCr	152	3.7/8.3	1	12

STATE OF CALIFORNIA **ACHSSTPG-S152(090)E**

DEPARTMENT OF TRANSPORTATION

PROJECT PLANS FOR CONSTRUCTION ON

STATE HIGHWAY

IN SANTA CRUZ COUNTY NEAR WATSONVILLE FROM CASSERLY/CARLTON ROAD TO SANTA CLARA COUNTY LINE

TO BE SUPPLEMENTED BY STANDARD PLANS DATED 2015

INDEX OF PLANS

SHEET No.	DESCRIPTION
1	TITLE AND LOCATION MAP
2	TYPICAL CROSS SECTIONS
3-4	CONSTRUCTION DETAILS
5	CONSTRUCTION AREA SIGNS
6	PAVEMENT DELINEATION QUANTITIES
7	SUMMARY OF QUANTITIES
8	ELECTRICAL PLANS
9-12	REVISED STANDARD PLANS

THE STANDARD PLANS LIST APPLICABLE TO THIS CONTRACT IS INCLUDED IN THE NOTICE TO BIDDERS AND SPECIAL PROVISIONS BOOK.

LOCATION MAP

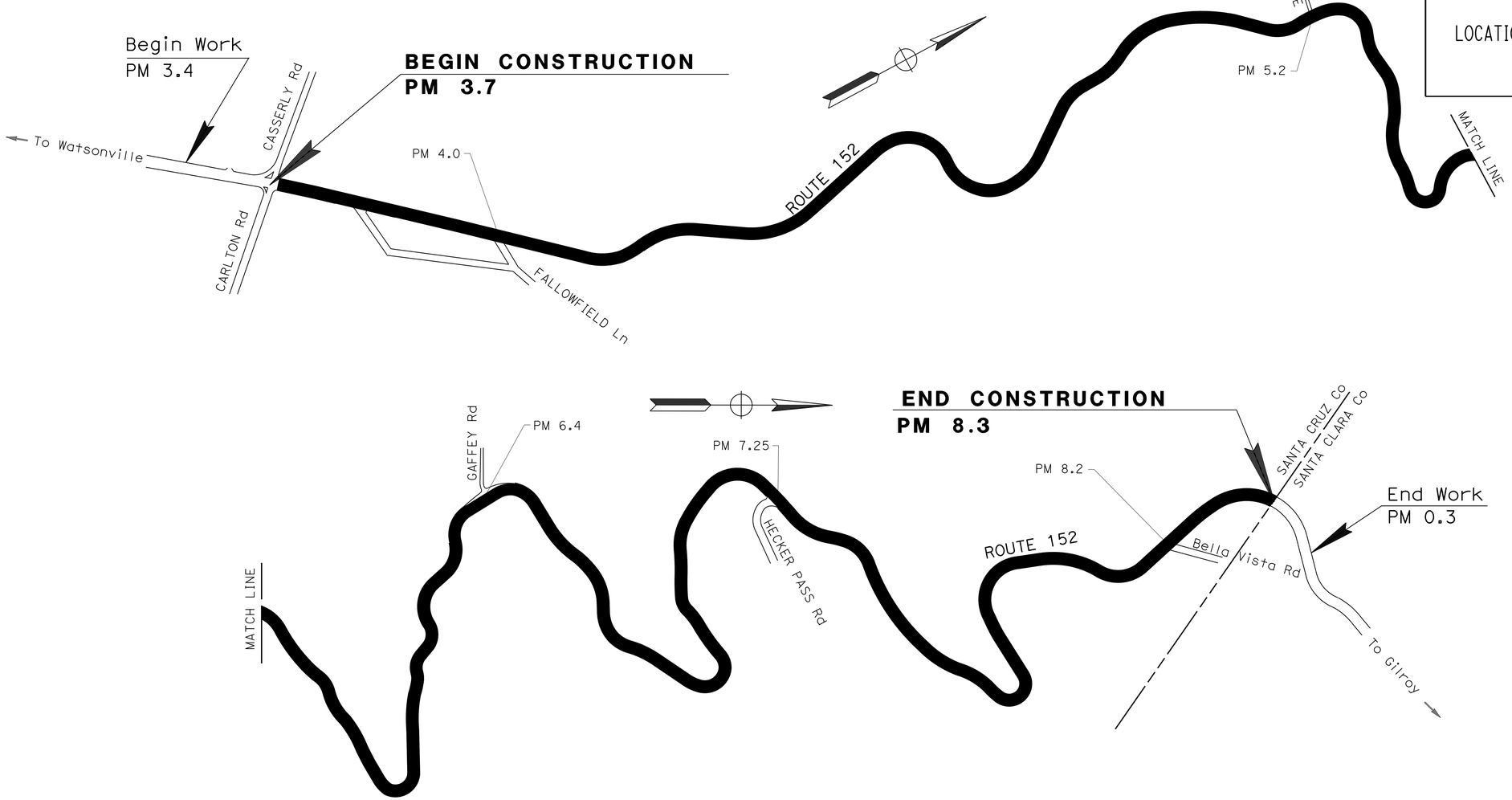

NO SCALE

THE CONTRACTOR SHALL POSSESS THE CLASS (OR CLASSES) OF LICENSE AS SPECIFIED IN THE "NOTICE TO BIDDERS."

PROJECT MANAGER: DOUG HESSING

DESIGN MANAGER: STEVEN McDONALD

PROJECT ENGINEER REGISTERED CIVIL ENGINEER — DATE 4-22-16

REGISTERED PROFESSIONAL ENGINEER — PETROS IYASU DEMOZ — No. 61652 — Exp. 6/30/17 — CIVIL — STATE OF CALIFORNIA

May 2, 2016
PLANS APPROVAL DATE

THE STATE OF CALIFORNIA OR ITS OFFICERS OR AGENTS SHALL NOT BE RESPONSIBLE FOR THE ACCURACY OR COMPLETENESS OF SCANNED COPIES OF THIS PLAN SHEET.

CONTRACT No.	05-1G4004
PROJECT ID	0515000009

LAST REVISION 03-25-16

DATE PLOTTED => 08-JUN-2016
TIME PLOTTED => 11:21

Dist	COUNTY	ROUTE	POST MILES TOTAL PROJECT	SHEET No.	TOTAL SHEETS
05	SCr	152	3.7/8.3	2	12

REGISTERED CIVIL ENGINEER 4-22-16 DATE

5-2-2016
PLANS APPROVAL DATE

REGISTERED PROFESSIONAL ENGINEER PETROS IYASU DEMOZ No. 61652 Exp 6/30/17 CIVIL STATE OF CALIFORNIA

THE STATE OF CALIFORNIA OR ITS OFFICERS OR AGENTS SHALL NOT BE RESPONSIBLE FOR THE ACCURACY OR COMPLETENESS OF SCANNED COPIES OF THIS PLAN SHEET.

NOTE:

1. FOR ACCURATE RIGHT OF WAY DATA, CONTACT RIGHT OF WAY ENGINEERING AT DISTRICT OFFICE.

DESIGN DESIGNATION (ROUTE 152)

2014	ADT=6,400	DHV=775	D=50.3%
2017	ADT=6,724	DHV=811	T=5.1%
2027	ADT=7,979	DHV=947	V=55 mph

CLIMATE REGION

CENTRAL COAST

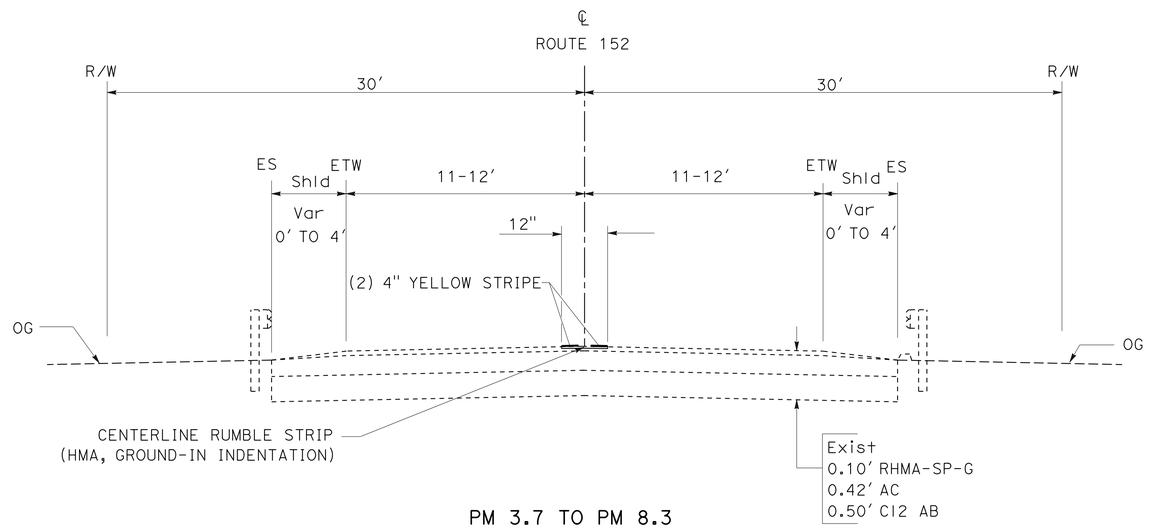

PM 3.7 TO PM 8.3

ROUTE 152

TYPICAL CROSS SECTION

NO SCALE

X-1

STATE OF CALIFORNIA - DEPARTMENT OF TRANSPORTATION

Caltrans® **06-DESIGN**

FUNCTIONAL SUPERVISOR: STEVEN McDONALD

CALCULATED-DESIGNED BY: ABRANA NARANJO

CHECKED BY: PETROS DEMOZ

REVISED BY

DATE REVISED

LAST REVISION 03-09-16 DATE PLOTTED => 08-JUN-2016 TIME PLOTTED => 11:21

Dist	COUNTY	ROUTE	POST MILES TOTAL PROJECT	SHEET No.	TOTAL SHEETS
05	SCr	152	3.7/8.3	3	12

REGISTERED CIVIL ENGINEER 04-22-16 DATE

5-2-16
PLANS APPROVAL DATE

REGISTERED PROFESSIONAL ENGINEER
PETROS IYASU DEMOZ
No. 61652
Exp. 6/30/17
CIVIL
STATE OF CALIFORNIA

THE STATE OF CALIFORNIA OR ITS OFFICERS OR AGENTS SHALL NOT BE RESPONSIBLE FOR THE ACCURACY OR COMPLETENESS OF SCANNED COPIES OF THIS PLAN SHEET.

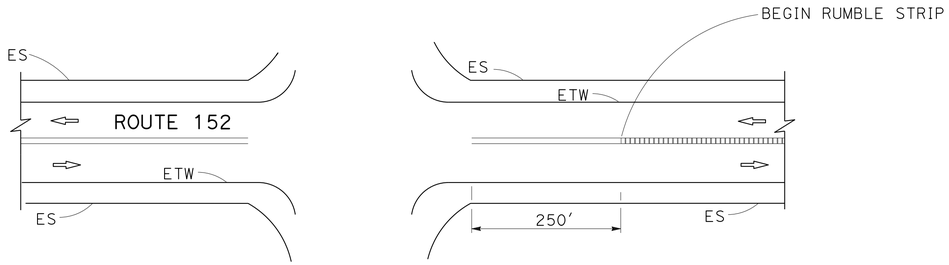

RUMBLE STRIP AT CARLTON Rd AND ROUTE 152 INTERSECTION

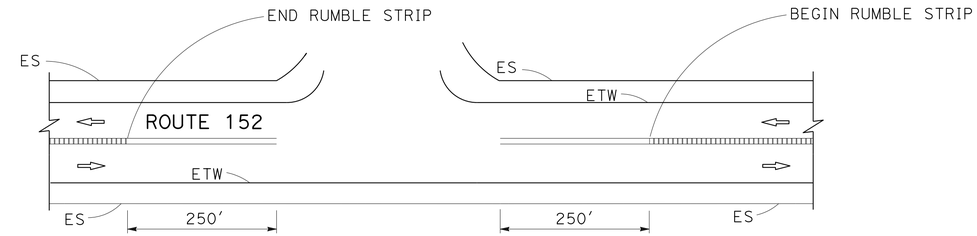

TYPICAL RUMBLE STRIP AT T-INTERSECTION

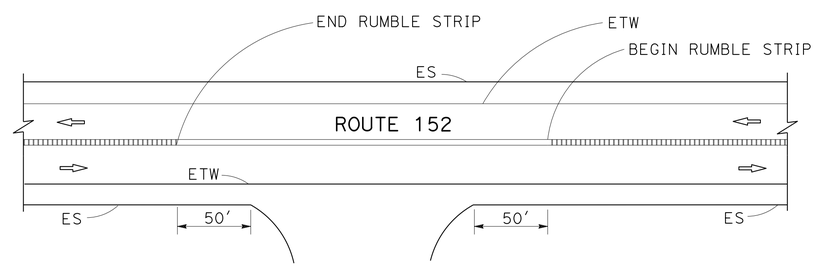

TYPICAL RUMBLE STRIP AT PRIVATE Dwy/ FARM ACCESS ROAD

CONSTRUCTION DETAILS

NO SCALE

C-1

STATE OF CALIFORNIA - DEPARTMENT OF TRANSPORTATION
Caltrans 06-DESIGN

FUNCTIONAL SUPERVISOR: STEVEN McDONALD
CALCULATED-DESIGNED BY: PETROS DEMOZ
CHECKED BY:
REVISED BY: ABRANA NARANJO
DATE REVISED:

LAST REVISION 03-09-16
DATE PLOTTED => 08-JUN-2016
TIME PLOTTED => 11:21

Dist	COUNTY	ROUTE	POST MILES TOTAL PROJECT	SHEET No.	TOTAL SHEETS
05	SCr	152	3.7/8.3	4	12

REGISTERED CIVIL ENGINEER 4-22-16 DATE

5-2-16
PLANS APPROVAL DATE

REGISTERED PROFESSIONAL ENGINEER PETROS IYASU DEMOZ No. 61652 Exp. 6/30/17 CIVIL STATE OF CALIFORNIA

THE STATE OF CALIFORNIA OR ITS OFFICERS OR AGENTS SHALL NOT BE RESPONSIBLE FOR THE ACCURACY OR COMPLETENESS OF SCANNED COPIES OF THIS PLAN SHEET.

LEGEND:

4" YELLOW THERMOPLASTIC TRAFFIC STRIPE (ENHANCED WET NIGHT VISIBILITY)

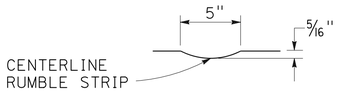

SECTION A-A

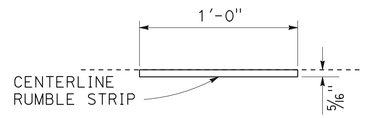

SECTION B-B

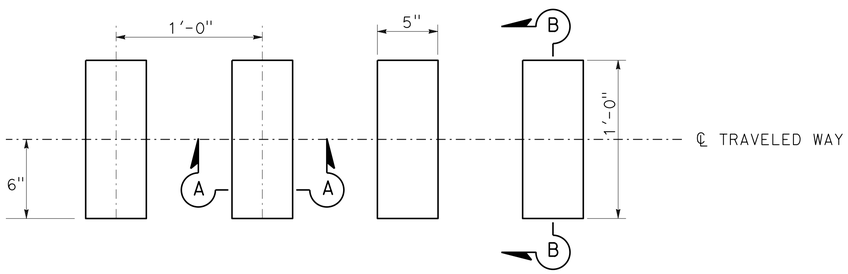

CENTERLINE RUMBLE STRIP
PLAN

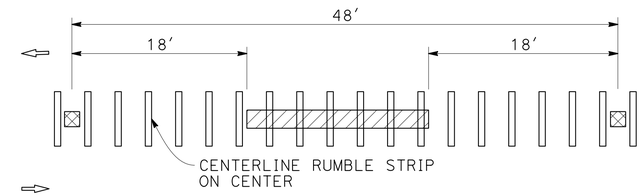

DETAIL 6
WITH CENTERLINE RUMBLE STRIP
PASSING ZONE

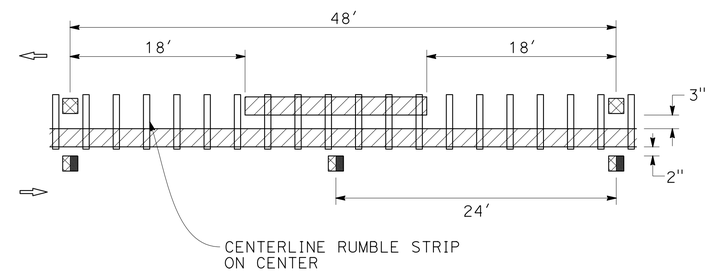

DETAIL 19
WITH CENTERLINE RUMBLE STRIP
NO PASSING ZONES-ONE DIRECTION

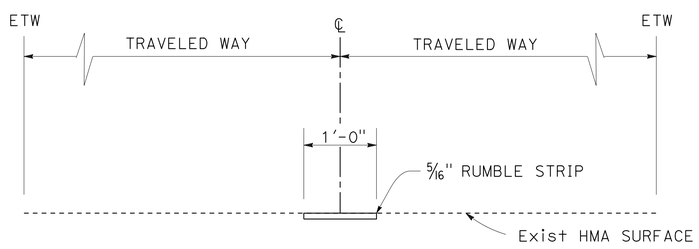

CENTERLINE RUMBLE STRIP PLACEMENT
PM 3.7/8.3

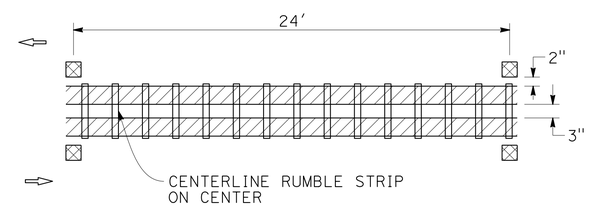

DETAIL 22
WITH CENTERLINE RUMBLE STRIP
NO PASSING ZONE

CONSTRUCTION DETAILS
NO SCALE

C-2

STATE OF CALIFORNIA - DEPARTMENT OF TRANSPORTATION
Caltrans® 06-DESIGN

FUNCTIONAL SUPERVISOR: STEVEN McDONALD
CALCULATED-DESIGNED BY: ABRANA NARANJO
CHECKED BY: PETROS DEMOZ
REVISED BY / DATE REVISED

LAST REVISION 03-17-16
DATE PLOTTED => 08-JUN-2016
TIME PLOTTED => 11:22

Dist	COUNTY	ROUTE	POST MILES TOTAL PROJECT	SHEET No.	TOTAL SHEETS
05	SCr	152	3.7/8.3	5	12

REGISTERED CIVIL ENGINEER 3-17-16 DATE

5-2-16
PLANS APPROVAL DATE

REGISTERED PROFESSIONAL ENGINEER FAWZI YAGHMOUR No. C-54750 Exp. 12/31/17 CIVIL STATE OF CALIFORNIA

THE STATE OF CALIFORNIA OR ITS OFFICERS OR AGENTS SHALL NOT BE RESPONSIBLE FOR THE ACCURACY OR COMPLETENESS OF SCANNED COPIES OF THIS PLAN SHEET.

NOTES:

1. LOCATIOS OF CONSTRUCTION SIGNS ARE APPROXIMATE, EXACT LOCATIONS TO BE DETERMINED BY THE ENGINEER.
2. FOR SIGN "C40" (TRAFFIC FINES DOUBLED IN CONSTRUCTION ZONES), ALL LETTERS SHALL BE BLACK ON WHITE BACKGROUND.

LEGEND:

(X) SIGN NUMBER

STATIONARY MOUNTED CONSTRUCTION AREA SIGNS

SIGN No.	SIGN CODE FEDERAL	SIGN CODE CALIFORNIA	PANEL SIZE	SIGN MESSAGE	No. OF POSTS POST SIZE	No. OF SIGNS
A	W20-1		48" x 48"	ROAD WORK AHEAD	2-4" x 6"	2
B	G20-2		36" x 18"	END ROAD WORK	1-4" x 4"	2
C		C40	108"x 42"	TRAFFIC FINES DOUBLED IN CONSTRUCTION ZONES	2-6" x 6"	2

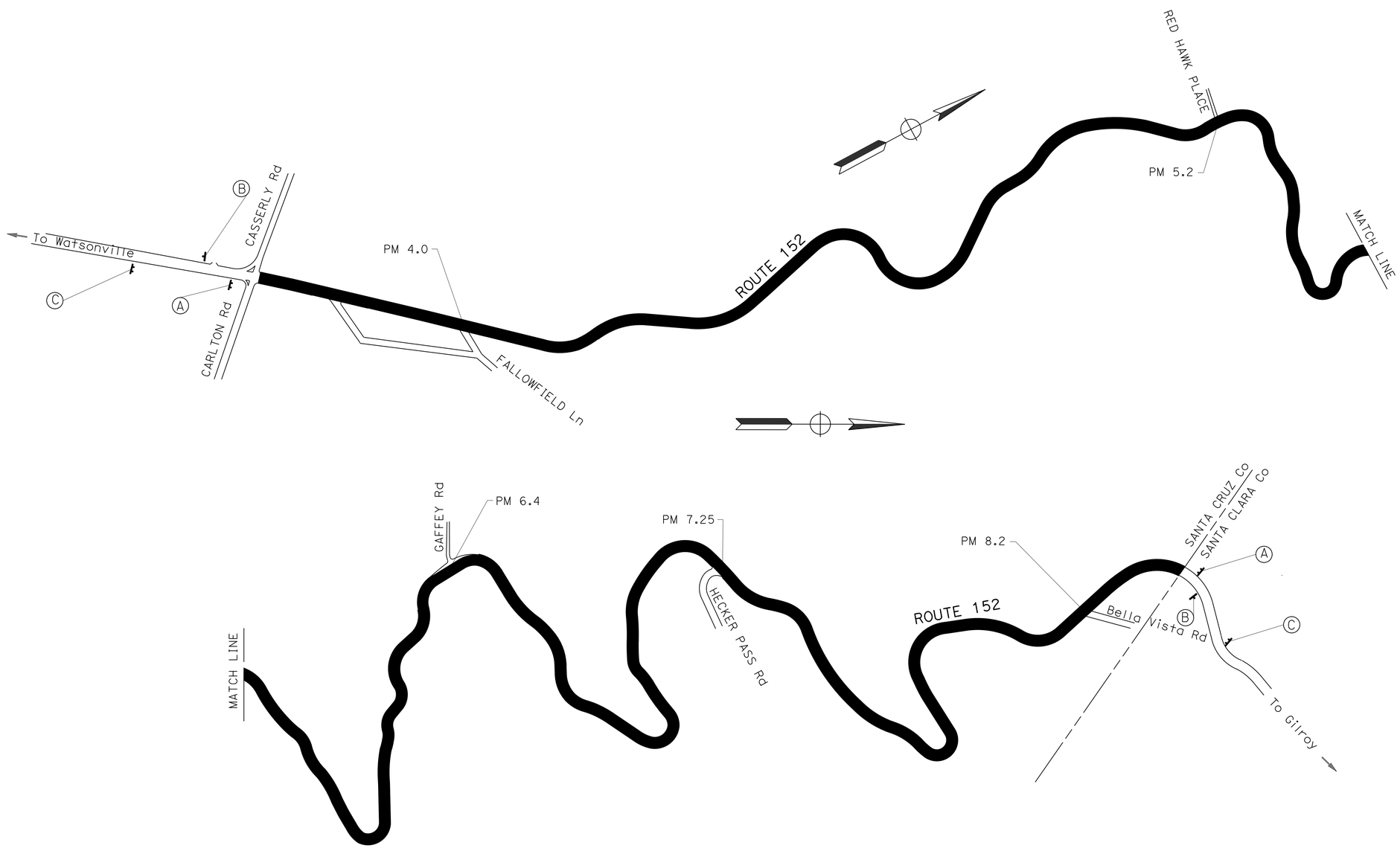

APPROVED FOR CONSTRUCTION AREA SIGN WORK ONLY

CONSTRUCTION AREA SIGNS

NO SCALE

CS-1

STATE OF CALIFORNIA - DEPARTMENT OF TRANSPORTATION
Caltrans
TRAFFIC DESIGN

FUNCTIONAL SUPERVISOR: MOHAMMED QATAMI
CALCULATED-DESIGNED BY: GURMIT GILL
CHECKED BY: FAWZI YAGHMOUR
REVISED BY
DATE REVISED

LAST REVISION 03-17-16
DATE PLOTTED => 08-JUN-2016
TIME PLOTTED => 11:22

Dist	COUNTY	ROUTE	POST MILES TOTAL PROJECT	SHEET No.	TOTAL SHEETS
05	SCr	152	3.7/8.3	6	12

REGISTERED CIVIL ENGINEER 3-29-16 DATE

5-2-16
PLANS APPROVAL DATE

REGISTERED PROFESSIONAL ENGINEER FAWZI YAGHMOUR No. C-54750 Exp. 12/31/17 CIVIL STATE OF CALIFORNIA

THE STATE OF CALIFORNIA OR ITS OFFICERS OR AGENTS SHALL NOT BE RESPONSIBLE FOR THE ACCURACY OR COMPLETENESS OF SCANNED COPIES OF THIS PLAN SHEET.

PAVEMENT DELINEATION QUANTITIES

POST MILE	DIRECTION	DETAIL No.	PAVEMENT MARKERS (RETROREFLECTIVE)			THERMOPLASTIC TRAFFIC STRIPE (ENHANCED WET NIGHT VISIBILITY)				REMOVE PAVEMENT MARKERS	THERMOPLASTIC PAVEMENT MARKING							REMOVE THERMOPLASTIC PAVEMENT MARKING	REMOVE THERMOPLASTIC TRAFFIC STRIPE	DESCRIPTIONS
			TYPE H	TYPE G	TYPE D	4" SOLID (YELLOW)	4" SOLID (WHITE)	8" SOLID (WHITE)	4" (BROKEN 36-12)		ARROW TYPE IV	YIELD	CROSS WLAK	LIMIT LINE	STOP	AHEAD	HATCH AREA			
			EA	EA	EA	LF	LF	LF	LF	EA	SQFT	SQFT	SQFT	SQFT	SQFT	SQFT	SQFT	SQFT	LF	
3.7 TO 8.3		22			1778	42,652				1778									42,652	
		29			178	8469				178									8469	
		19	54		28	1273			1273	82									1591	
		6			16				676	16									170	
		32			47	698			698	47									872	
		38		56				1,328		56									2656	
		27B					48,576												48,576	
3.74/3.754 & 3.747/3.754	EB										45							45		
3.754	EB												80	36				116		
3.754-3.76	EB												80					80		
3.791	EB										15							15		
3.854-3.87	EB										15		44					59		
3.879-3.942	EB										30		44					74		
3.942-3.955	EB										90		80					170		
4.049-4.112	EB										90							90		
4.112	EB													16	22			38		
4.219	EB													16	22			38		
4.338	EB													40				40		
4.352	EB													24				24		
4.363	EB												80					80		
4.35	EB													60				60		
4.45	EB										60							60		
4.495	EB																100	100		ISLAND WITH HATCHING
4.533-4.564	EB										30							30		
4.564	EB												80					80		
5.048	EB										15							15		
5.299	EB														22	31	35	88		
5.399	EB											24		12	22			58		
3.72	WB													12	22		60	94		HATCHING AREA
3.69	WB													12	22		100	134		ISLAND WITH HATCHING
3.821	WB														22	31		53		
SUB-TOTAL			54	56	2047	53,092	48,576	1328	2647	2157	390	24	488	228	154	62	295	1641	104,986	
TOTAL			2157			101,668		1328	2647	2157	1641							1641	104,986	

REVISED BY | DATE REVISED

DAVID BLACK | FAWZI YAGHMOUR

CALCULATED-DESIGNED BY | CHECKED BY

FUNCTIONAL SUPERVISOR: MOHAMMED QATAMI

STATE OF CALIFORNIA - DEPARTMENT OF TRANSPORTATION

Caltrans® TRAFFIC DESIGN

PAVEMENT DELINEATION QUANTITIES

PDQ-1

LAST REVISION 03-25-16 | DATE PLOTTED => 08-JUN-2016 | TIME PLOTTED => 11:30

Dist	COUNTY	ROUTE	POST MILES TOTAL PROJECT	SHEET No.	TOTAL SHEETS
05	SCr	152	3.7/8.3	7	12

REGISTERED CIVIL ENGINEER 4-22-16 DATE

5-2-16
PLANS APPROVAL DATE

REGISTERED PROFESSIONAL ENGINEER
PETROS IYASU DEMOZ
No. 61652
Exp. 6/30/17
CIVIL
STATE OF CALIFORNIA

THE STATE OF CALIFORNIA OR ITS OFFICERS OR AGENTS SHALL NOT BE RESPONSIBLE FOR THE ACCURACY OR COMPLETENESS OF SCANNED COPIES OF THIS PLAN SHEET.

CENTERLINE RUMBLE STRIP
(HMA, GROUND-IN INDENTATIONS)

LOCATION	(N) LENGTH		(N) ASPHALTIC EMULSION COAT (FOG SEAL COAT)
	LF	STA	TON
FROM PM 3.7 TO PM 8.3	24000	240	5
TOTAL	24000	240	5

(N) - NOT A SEPARATE PAY ITEM, FOR INFORMATION ONLY

TEMPORARY DRAINAGE INLET PROTECTION

LOCATION	EA	
	WB	EB
PM 4.25	1	
PM 4.74		2
PM 4.75	1	1
PM 4.80		1
PM 5.03	1	1
PM 5.13		1
PM 5.23	1	
PM 5.27		1
PM 5.38		1
PM 5.43		1
PM 5.57		1
PM 5.60	1	
PM 5.63		1
PM 5.68		1
PM 5.74		1
PM 5.89		1
PM 6.08		1
PM 6.16		1
PM 6.22	1	
PM 6.34		1
PM 6.43		1
PM 6.50		1
PM 6.60		1
PM 6.77		1
PM 6.85		1
PM 6.93		1
PM 6.99		1
PM 7.08		1
PM 7.16		1
PM 7.46		1
PM 7.61		1
PM 7.66	1	
PM 7.76		1
PM 7.90		1
PM 7.95		1
PM 8.04		1
PM 8.10		1
PM 8.11		1
SUB-TOTAL	7	34
TOTAL	41	

SUMMARY OF QUANTITIES
Q-1

REVISED BY | DATE REVISED
ABRANA NARANJO | PETROS DEMOZ
CALCULATED-DESIGNED BY | CHECKED BY
FUNCTIONAL SUPERVISOR: STEVEN McDONALD
STATE OF CALIFORNIA - DEPARTMENT OF TRANSPORTATION
Caltrans® 06-DESIGN

LAST REVISION 03-30-16 | DATE PLOTTED => 08-JUN-2016 | TIME PLOTTED => 11:22

Dist	COUNTY	ROUTE	POST MILES TOTAL PROJECT	SHEET No.	TOTAL SHEETS
05	SCr	152	3.7/8.3	8	12

Xavier Alfaro 4-25-16
REGISTERED ELECTRICAL ENGINEER

5-2-16
PLANS APPROVAL DATE

REGISTERED PROFESSIONAL ENGINEER XAVIER I. ALFARO No. E17488 Exp. 6-30-17 ELECTRICAL STATE OF CALIFORNIA

THE STATE OF CALIFORNIA OR ITS OFFICERS OR AGENTS SHALL NOT BE RESPONSIBLE FOR THE ACCURACY OR COMPLETENESS OF SCANNED COPIES OF THIS PLAN SHEET.

NOTE:

FOR ACCURATE RIGHT OF WAY DATA, CONTACT RIGHT OF WAY ENGINEERING AT THE DISTRICT OFFICE.

LEGEND:

1 COIL 10' OF LOOP WIRES IN PB.

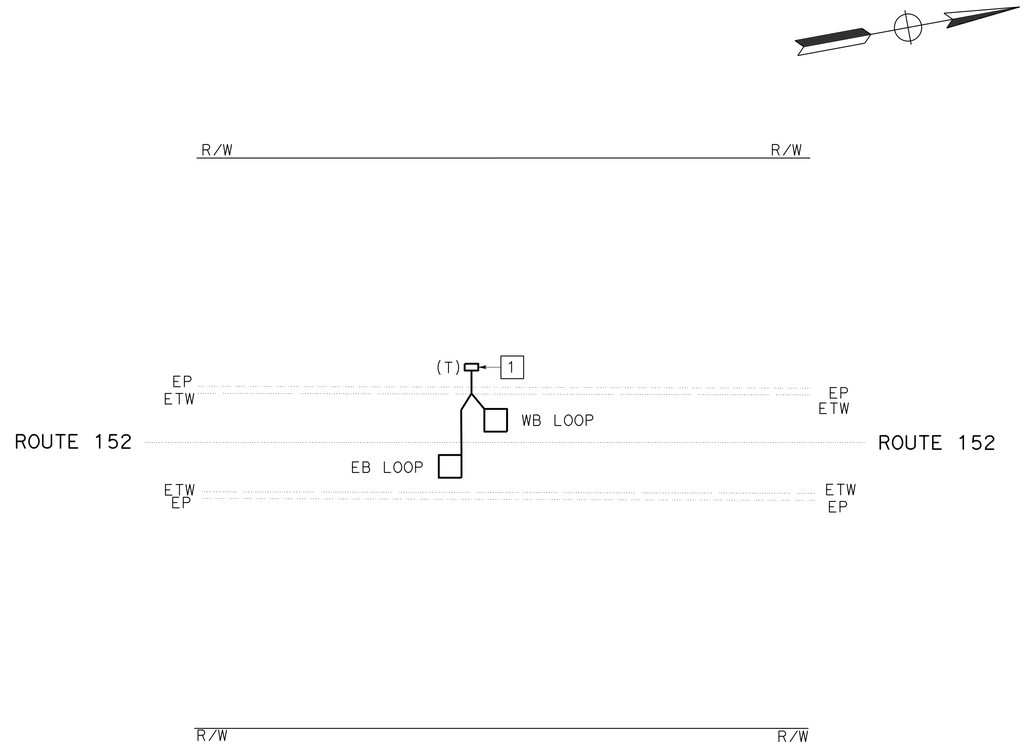

PM 6.8

CENSUS LOOP DETECTOR INSTALLATION

INDUCTIVE LOOP DETECTOR

SHEET No.	No.5(T) PB	TYPE A LOOP DETECTOR	1½"C TYPE 3
	EA		LF
E-1	1	2	10

THE QUANTITIES ON THIS TABLE ARE NOT A SEPARATE PAY ITEM, FOR INFORMATION ONLY.

APPROVED FOR ELECTRICAL WORK ONLY

INDUCTIVE LOOP DETECTOR

SCALE: 1"=20'

E-1

STATE OF CALIFORNIA - DEPARTMENT OF TRANSPORTATION
Caltrans® ELECTRICAL DESIGN

FUNCTIONAL SUPERVISOR: ALI BAKHDOUD
CALCULATED-DESIGNED BY: XAVIER ALFARO
CHECKED BY: JAIMIE KOJAK
REVISED BY: XIA
DATE REVISED: 05-02-16
JK 03-17-16

LAST REVISION 03-24-16
DATE PLOTTED => 08-JUN-2016
TIME PLOTTED => 11:22

Dist	COUNTY	ROUTE	POST MILES TOTAL PROJECT	SHEET No.	TOTAL SHEETS
05	SCr	152	3.7/8.3	9	12

Theresa Gabriel
REGISTERED ELECTRICAL ENGINEER

April 15, 2016
PLANS APPROVAL DATE

REGISTERED PROFESSIONAL ENGINEER
Theresa Aziz Gabriel
No. E15129
Exp. 6-30-16
ELECTRICAL
STATE OF CALIFORNIA

THE STATE OF CALIFORNIA OR ITS OFFICERS OR AGENTS SHALL NOT BE RESPONSIBLE FOR THE ACCURACY OR COMPLETENESS OF SCANNED COPIES OF THIS PLAN SHEET.

TO ACCOMPANY PLANS DATED 5-2-16

EQUIPMENT IDENTIFICATION

ILLUMINATED SIGN IDENTIFICATION:

SIGN No. 12345
10 ISL SCI 1.0

- SIGN EQUIPMENT IDENTIFICATION CHARACTERS - PLACE ON POST OR STRUCTURE
- TRANSFORMER RATING (kVA)
- LIGHTING CONTROL TYPE
- NUMBER AND TYPE OF FIXTURES

} DO NOT PLACE ON STANDARD OR STRUCTURE

ELECTROLIER OR EQUIPMENT IDENTIFICATION:

L2745 - 15'-0"

- MAST ARM LENGTH, IF SHOWN. DO NOT PLACE ON STANDARD OR STRUCTURE
- EQUIPMENT IDENTIFICATION CHARACTERS - PLACE ON STANDARD OR STRUCTURE. EXISTING EQUIPMENT IDENTIFICATION CHARACTERS ARE SHOWN IN PARENTHESIS

CONDUIT AND CONDUCTOR IDENTIFICATION:

1½"C, 2#10, 15#14, 2 DLC, 12P#18 (PAIR)

- NUMBER AND SIZE OF CONDUCTORS AND CABLES
- SIZE OF CONDUIT IN INCHES

ø1, ø2, ø2P, etc.	TRAFFIC PHASE IDENTIFICATION FOR SIGNALS, DETECTORS AND PHASE DIAGRAMS
1 2 3	LEGEND NUMBERS
A B C	EQUIPMENT, SIGNAL POLES, INSTALLATION OR ITEMS
1 2 3	CONDUIT RUN NUMBERS

SIGNAL AND LIGHTING STANDARD (TYPICAL DESIGNATION):

19A - 3 - 100

- WIND VELOCITY = 100 mph
- CASE 3 ARM LOADING
- STANDARD TYPE
- STANDARD PLAN SHEET NUMBER
- DETAIL, NUMBER, SECTION, TYPE OR ELEVATION

MISCELLANEOUS EQUIPMENT

NEW	EXISTING	
CMS	cms	CHANGEABLE MESSAGE SIGN
		CLOSED CIRCUIT TELEVISION CAMERA
		HIGHWAY ADVISORY RADIO POLE AND ANTENNA
EMS	ems	LED EXTINGUISHABLE MESSAGE SIGN
M V	m v	DETECTION DEVICE M = MICROWAVE SENSOR V = VIDEO IMAGE SENSOR

WIRING DIAGRAM LEGEND

- EXTERNAL CONDUCTOR
- CONDUCTOR OR BUS
- TIE POINT
- CONTACTOR COIL
- CONTACTOR, NO CONTACT
- TERMINAL BLOCKS
- CONTACTOR, NC CONTACT
- ENCLOSURE BOND
- GROUNDING ELECTRODE
- CIRCUIT BREAKER
- RECEPTACLE

PULL BOXES

NEW	EXISTING	
		PULL BOX, No. 5 UNLESS OTHERWISE INDICATED OR NOTED
3	9A(21)	PULL BOX, ADDITIONAL DESIGNATIONS OR DESCRIPTIONS

3 No. 3½ PULL BOX
5 No. 5 PULL BOX
6 No. 6 PULL BOX
7 No. 7 PULL BOX (CEILING)
8 No. 8 PULL BOX
9 No. 9 PULL BOX (STRUCTURE)
9A No. 9A PULL BOX (STRUCTURE)

(C) COMMUNICATIONS PULL BOX
(E) PULL BOX WITH EXTENSION
(S) SPRINKLER CONTROL PULL BOX
(21) ANCHOR BOLTS AND CONDUIT FOR FUTURE INSTALLATION OF TYPE 21 STANDARD
(T) TRAFFIC PULL BOX

VEHICLE DETECTORS

5 J 9 U

- VEHICLE DETECTOR DESIGNATION
- U = UPPER
  L = LOWER
- SLOT NUMBER IN INPUT FILE
- INPUT FILE (I OR J)
- PHASE

NEW	EXISTING	
		TYPE A LOOP DETECTOR. OUTLINE OF SAW CUT SHOWN
		TYPE B LOOP DETECTOR. OUTLINE OF SAW CUT SHOWN
		TYPE C LOOP DETECTOR. OUTLINE OF SAW CUT SHOWN
		TYPE D LOOP DETECTOR. OUTLINE OF SAW CUT SHOWN
		TYPE E LOOP DETECTOR. OUTLINE OF SAW CUT SHOWN
		TYPE Q LOOP DETECTOR. OUTLINE OF SAW CUT SHOWN
DH	dh	DETECTOR HANDHOLE
		MICROWAVE OR VIDEO DETECTION ZONE

STATE OF CALIFORNIA
DEPARTMENT OF TRANSPORTATION

ELECTRICAL SYSTEMS (LEGEND AND ABBREVIATIONS)

NO SCALE

RSP ES-1C DATED APRIL 15, 2016 SUPERSEDES RSP ES-1C DATED OCTOBER 30, 2015 AND RSP ES-1C DATED JULY 19, 2013 AND STANDARD PLAN ES-1C DATED MAY 20, 2011 - PAGE 427 OF THE STANDARD PLANS BOOK DATED 2010.

REVISED STANDARD PLAN RSP ES-1C

2010 REVISED STANDARD PLAN RSP ES-1C

1-22-16

Dist	COUNTY	ROUTE	POST MILES TOTAL PROJECT	SHEET No.	TOTAL SHEETS
05	SCr	152	3.7/8.3	10	12

Theresa Gabriel
REGISTERED ELECTRICAL ENGINEER

April 15, 2016
PLANS APPROVAL DATE

REGISTERED PROFESSIONAL ENGINEER Theresa Aziz Gabriel No. E15129 Exp. 6-30-16 ELECTRICAL STATE OF CALIFORNIA

THE STATE OF CALIFORNIA OR ITS OFFICERS OR AGENTS SHALL NOT BE RESPONSIBLE FOR THE ACCURACY OR COMPLETENESS OF SCANNED COPIES OF THIS PLAN SHEET.

TO ACCOMPANY PLANS DATED 5-2-16

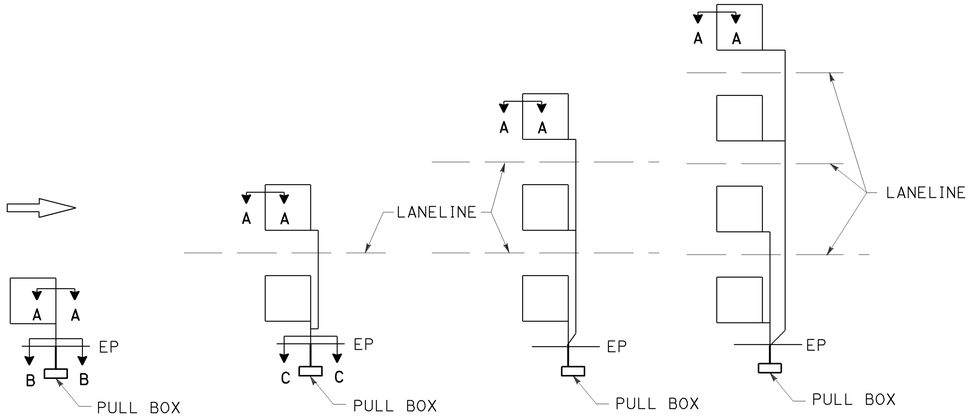

SAW CUT DETAILS

Type A loop detector configurations illustrated

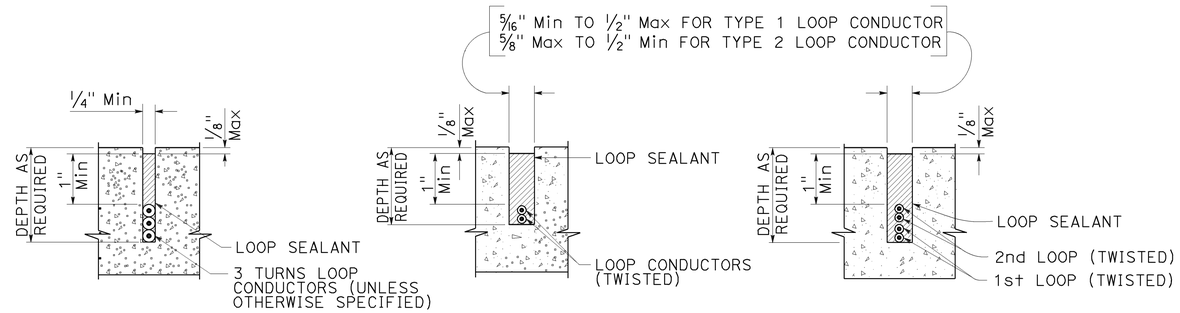

SECTION A-A SECTION B-B SECTION C-C

SLOT DETAILS - TYPE 1 AND TYPE 2 LOOP CONDUCTOR

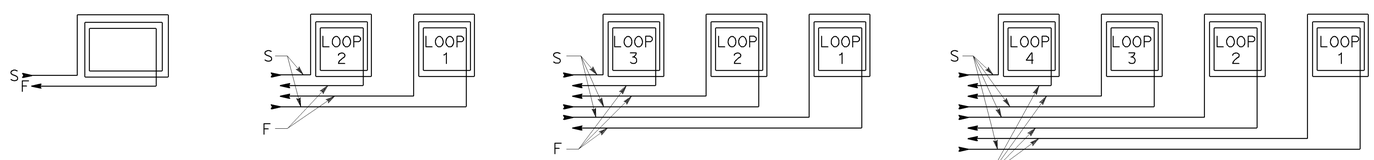

WINDING DETAILS

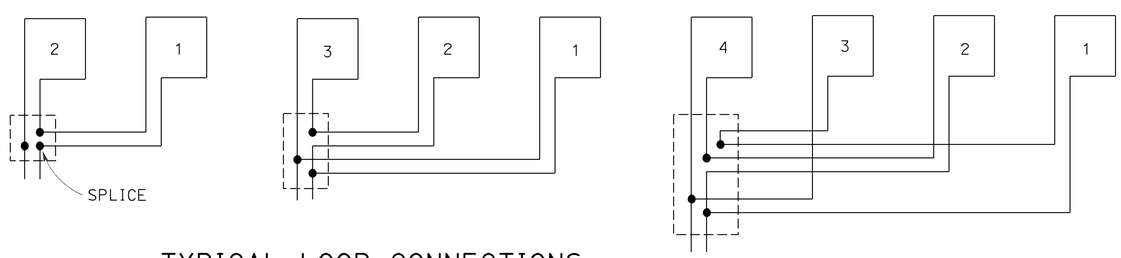

TYPICAL LOOP CONNECTIONS

Dashed lines represent the pull box

ABBREVIATIONS:

S - START
F - FINISH

STATE OF CALIFORNIA
DEPARTMENT OF TRANSPORTATION

ELECTRICAL SYSTEMS (LOOP DETECTORS)

NO SCALE

RSP ES-5A DATED APRIL 15, 2016 SUPERSEDES RSP ES-5A DATED OCTOBER 30, 2015 AND STANDARD PLAN ES-5A DATED MAY 20, 2011 - PAGE 448 OF THE STANDARD PLANS BOOK DATED 2010.

REVISED STANDARD PLAN RSP ES-5A

2010 REVISED STANDARD PLAN RSP ES-5A

Dist	COUNTY	ROUTE	POST MILES TOTAL PROJECT	SHEET No.	TOTAL SHEETS
05	SCr	152	3.7/8.3	11	12

Theresa Gabriel
REGISTERED ELECTRICAL ENGINEER

April 15, 2016
PLANS APPROVAL DATE

REGISTERED PROFESSIONAL ENGINEER
Theresa Aziz Gabriel
No. E15129
Exp. 6-30-16
ELECTRICAL
STATE OF CALIFORNIA

THE STATE OF CALIFORNIA OR ITS OFFICERS OR AGENTS SHALL NOT BE RESPONSIBLE FOR THE ACCURACY OR COMPLETENESS OF SCANNED COPIES OF THIS PLAN SHEET.

TO ACCOMPANY PLANS DATED 5-2-16

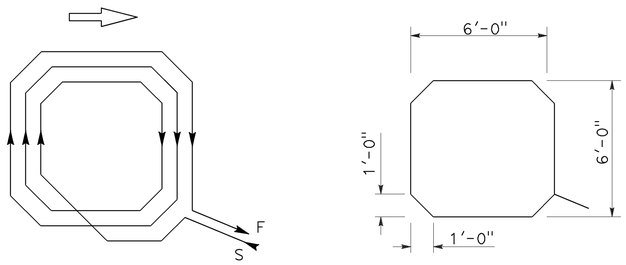

WINDING DETAIL SAW CUT DETAIL

TYPE A LOOP DETECTOR CONFIGURATION

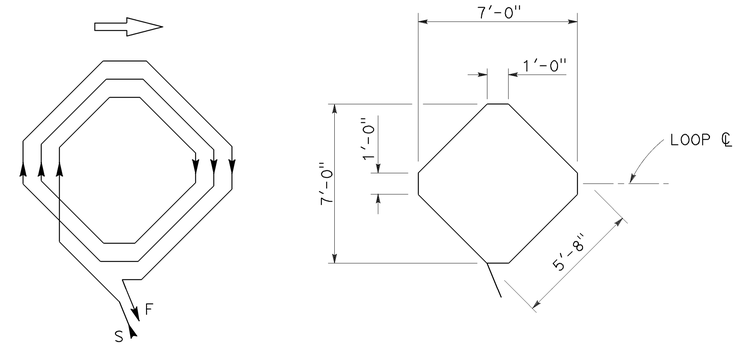

WINDING DETAIL SAW CUT DETAIL

TYPE B LOOP DETECTOR CONFIGURATION

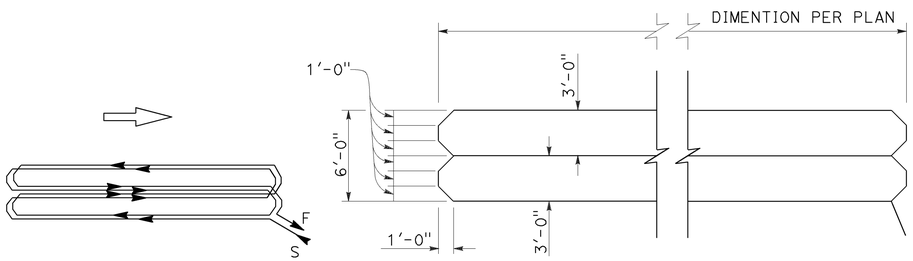

WINDING DETAIL SAW CUT DETAIL

TYPE C LOOP DETECTOR CONFIGURATION

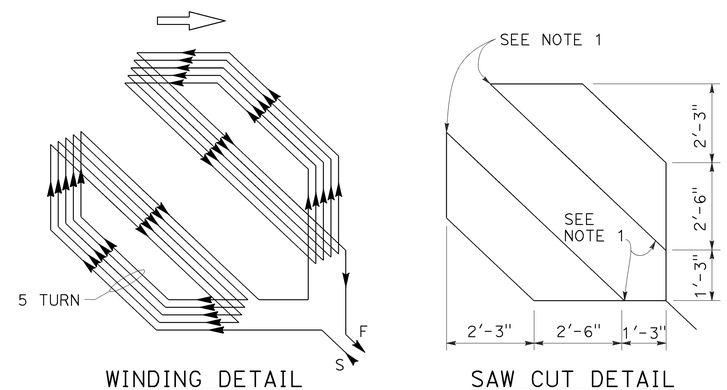

WINDING DETAIL SAW CUT DETAIL

TYPE D LOOP DETECTOR CONFIGURATION

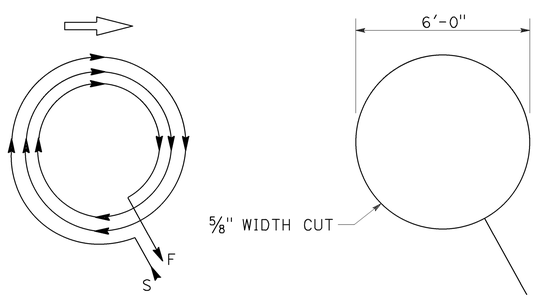

WINDING DETAIL SAW CUT DETAIL

TYPE E LOOP DETECTOR CONFIGURATION

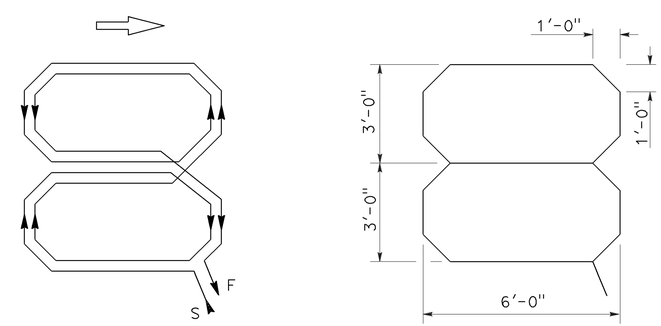

WINDING DETAIL SAW CUT DETAIL

TYPE Q LOOP DETECTOR CONFIGURATION

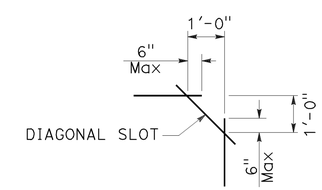

PLAN VIEW OF DIAGONAL SLOT AT CORNERS

NOTES:

1. Round corners of acute angle saw cuts to prevent damage to conductors.
2. Typical distance separating loops from edge to edge is 10' for Type A, B, D and E installation in single lane.
3. Use Type D loops for limit line detection and bicycle lanes.

STATE OF CALIFORNIA
DEPARTMENT OF TRANSPORTATION

ELECTRICAL SYSTEMS (DETECTORS)

NO SCALE

RSP ES-5B DATED APRIL 15, 2016 SUPERSEDES RSP ES-5B DATED OCTOBER 30, 2015 AND RSP ES-5B DATED JULY 19, 2013 AND STANDARD PLAN ES-5B DATED MAY 20, 2011 - PAGE 449 OF THE STANDARD PLANS BOOK DATED 2010.

REVISED STANDARD PLAN RSP ES-5B

2010 REVISED STANDARD PLAN RSP ES-5B

DIST	COUNTY	ROUTE	POST MILES TOTAL PROJECT	SHEET NO.	TOTAL SHEETS
05	SCr	152	3.7/8.3	12	12

Theresa Gabriel
REGISTERED ELECTRICAL ENGINEER

April 15, 2016
PLANS APPROVAL DATE

REGISTERED PROFESSIONAL ENGINEER
Theresa Aziz Gabriel
No. E15129
Exp. 6-30-16
ELECTRICAL
STATE OF CALIFORNIA

THE STATE OF CALIFORNIA OR ITS OFFICERS OR AGENTS SHALL NOT BE RESPONSIBLE FOR THE ACCURACY OR COMPLETENESS OF SCANNED COPIES OF THIS PLAN SHEET.

TO ACCOMPANY PLANS DATED 5-2-16

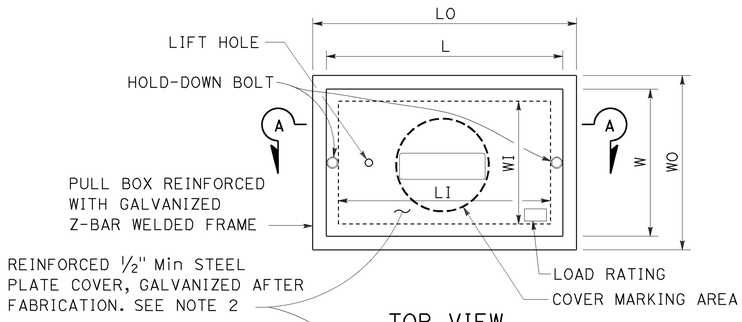

TOP VIEW

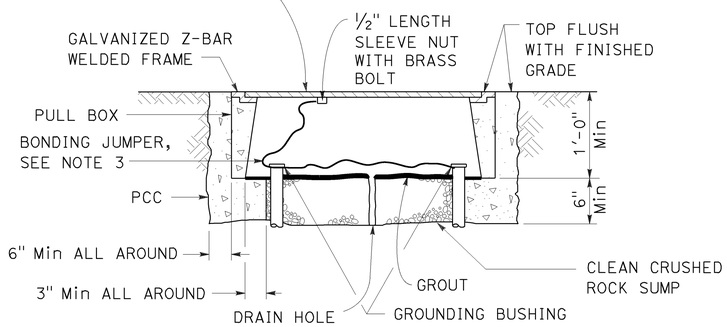

SECTION A-A

No. 3½(T), No. 5(T) AND No. 6(T) TRAFFIC PULL BOX

NOTES:

1. Traffic pull box shall be provided with steel cover and special concrete footing. Steel cover shall have embossed non-skid pattern.
2. Steel reinforcing shall be as regularly used in the standard products of the respective manufacturer.
3. Bonding jumper for metal covers shall be 3' long, minimum.
4. The nominal dimensions of the opening in which the cover sets shall be the same as the cover dimensions except the length and width dimensions shall be ⅛" greater.
5. Covers and boxes shall be interchangeable with California standard male and female gages. When interchanged with a standard male or female gage, the top surfaces shall be flush within ⅛".

DIMENSION TABLE

PULL BOX	PULL BOX						COVER	
	MINIMUM * THICKNESS	MINIMUM DEPTH BOX AND EXTENSION	LO	LI	WO	WI	L **	W **
No. 3½(T)	1½"	1'-0"	1'-10" - 1'-11"	1'-5" - 1'-6½"	1'-3" - 1'-4"	10" - 1'-0"	1'-8" -1'-8½"	1'-1" - 1'-2"
No. 5(T)	1¾"	1'-0"	2'-5" - 2'-6"	2'-0" - 2'-1"	1'-6" - 1'-7"	1'-1" - 1'-2"	2'-3" - 2'-3½"	1'-4" - 1'-4½"
No. 6(T)	2"	1'-0"	2'-11" - 3'-1"	2'-6" - 2'-7"	1'-10" - 2'-0"	1'-5" - 1'-6"	2'-9" - 2'-9½"	1'-8" - 1'-8½"

* EXCLUDING CONDUIT WEB ** TOP DIMENSION

STATE OF CALIFORNIA
DEPARTMENT OF TRANSPORTATION

ELECTRICAL SYSTEMS (TRAFFIC PULL BOX)

NO SCALE

RSP ES-8B DATED APRIL 15, 2016 SUPERSEDES RSP ES-8B DATED OCTOBER 30, 2015 AND RSP ES-8B DATED JULY 19, 2013 AND RSP ES-8B DATED JANUARY 20, 2012 THAT SUPPLEMENTS THE STANDARD PLANS BOOK DATED 2010.

REVISED STANDARD PLAN RSP ES-8B

2010 REVISED STANDARD PLAN RSP ES-8B

1-22-16