INFORMATION HANDOUT

For Contract No. 05-1C1804
At 05-SCr-17-9.4/9.8

Identified by
Project ID 0512000077

MATERIALS INFORMATION

Foundation Report Laurel Curve Soil Nail Wall, Dated January 14, 2013

Lindsay Transportation Solutions Moveable Barrier Estimat

Statewide Traffic Safety & Signs ABSORB 350 Estimate

Metal Beam Guard Railing, Transition Railing (Type WB)

State of California Business, Transportation and Housing Agency

M e m o r a n d u m ***Flex your power!***

Be energy efficient!

To: GARY JOE
Branch Chief
Division of Engineering Services, Structure Design
Office of Bridge Design – Central, Branch 17

Attn: Igor Chernioglo
Project Engineer

Date: January 14, 2013

File: 05-SCr-17-9.4/10.1
0512000077 (EA 05-1C1801)
Laurel Curve Soil Nail Wall
Br. No. 36E-0040

From: **DEPARTMENT OF TRANSPORTATION**
DIVISION OF ENGINEERING SERVICES
GEOTECHNICAL SERVICES

Subject: Foundation Report for Laurel Curve Soil Nail Wall

Scope of Work

A Foundation Report (FR) is provided for the Laurel Curve Soil Nail Wall per your request dated December 4, 2012.

Work performed for this report includes a literature search, field mapping, a subsurface investigation performed in August 2012, and geotechnical analyses.

Project Description

State Route 17 in the project area is a rural four-lane divided conventional highway that crosses the Santa Cruz Mountains. It connects the cities of Santa Cruz and San Jose. The route serves regional and interregional traffic, including motorists who commute daily to job centers in the Silicon Valley. The roadway in the project area includes sharp curves and steep grades. The roadway cross section consists of 0-foot to 2-foot inside shoulders, 11-foot to 12-foot lanes, and outside shoulders varying in width from less than one foot to over 8 feet. Concrete median barrier separates northbound and southbound traffic throughout the project area.

It is proposed to widen the northbound roadway to include a 5-foot inside shoulder, two 12-foot lanes, and an 8-foot outside shoulder. A soil nail retaining wall with an integral concrete barrier will be constructed along the edge of the outside shoulder through a portion of the project limits to minimize the excavation footprint.

The following datum was used to reference horizontal and vertical positions of the proposed structure:

- Horizontal: North American Datum of 1983 (NAD83 (1991.35))
- Vertical: North American Vertical Datum of 1988 (NAVD88)

Pertinent Reports and Investigations

The following publications were used to assist in the assessment of site conditions:

1. *Caltrans ARS Online*.
2. *Geotechnical Services Design Manual, Version 1.0,* Division of Engineering Services, August 2009.
3. *Geologic Map of Santa Cruz County, California, a Digital Database,* U.S. Geological Survey Open-File Report 97-489.
4. *Preliminary Foundation Report for Laurel Curve Soil Nail Wall,* Caltrans Office of Geotechnical Design – North, Branch D, October 1, 2012.

Field Investigation

A subsurface investigation consisting of two horizontal borings was conducted in August 2012 to determine in situ rock properties and conditions. The borings were advanced using mud rotary methods with declination angles of 6 to 7 degrees. Continuous rock samples were obtained from the borings using a core barrel apparatus retrieved via wire line. Rock cores were visually classified in accordance with the Caltrans Soil and Rock Logging, Classification, and Presentation Manual (June 2010).

Table 1: 2012 Subsurface Investigation Summary

Boring No.	Completion Date	Drill Rig Type	Location		Ground Surface Elevation (ft)	Boring Declination (°)	Boring Length (ft)
			Station ("B1" Line)	Offset			
R-12-001	8/8/2012	CS-2000	114+98	34' Rt	1255.4	7.1	52.3
R-12-002	8/9/2012	CS-2000	113+71	32' Rt	1249.6	6.2	48.5

Laboratory Testing Program

Rock samples obtained during the subsurface investigation were submitted to the Headquarters Geotechnical Laboratory for unconfined compressive strength testing and corrosion potential testing. See Table 2 and Attachment 3 for laboratory test results.

Physical Setting

The project is located in the Santa Cruz Mountains, in the Coast Ranges geomorphic province. Terrain consists of densely vegetated, steep sided mountains with steeply incised drainages.

The retaining wall location lies in the Bean Creek water shed. Bean Creek drains to Zayante Creek southwest of the project area. Zayante Creek is a tributary of the southward flowing San Lorenzo River, which drains into Monterey Bay.

The climate in the Santa Cruz Mountains is Mediterranean with annual rainfall varying locally between 25 inches and 60 inches or more. Most of the rain occurs during the winter months, but summer days are often foggy and wet. Due to these climatic conditions, vegetation is abundant with thick stands of redwood and fir in the valleys and on lower hills; and oak, pine, and chaparral on the higher ground.

Geologic Setting and Subsurface Conditions

Regional Geology

The project is located in the Santa Cruz Mountains, in the Coast Ranges geomorphic province. The terrain is controlled by a regional trending northwest structure of faults and folds. The Santa Cruz Mountains are composed mostly of Cenozoic marine rocks which unconformably overly crystalline basement composed of meta-sedimentary and granitic rock characteristic of the Salinian Block. Paleo-marine terraces such as those preserved in Ben Lomond Mountain were formed by transpression (compression and lateral movement) along a constraining bend in the San Andreas Fault, a few miles east of the proposed project site. The Santa Cruz Mountains continue to rise (0.5 mm/yr) as a result of the forces along the San Andreas Fault.

Site Geology

Locally, from south to north, Highway 17 crosses the Eocene Butano Sandstone, the Upper Miocene Santa Cruz Mudstone, and the Pliocence-Upper Miocene Purisma Formations. These formations have been folded into a northwest-southeast trending plunging syncline, the axis of which strikes with the Purisma Formation between milepost 9.3 and milepost 9.4. The Purisma Formation, which underlies the project area, is locally composed of fine, poorly indurated sandstone. Structurally, beds dip to the southwest.

Subsurface Conditions

The 2012 subsurface investigation in the project area encountered sandstone and siltstone of the Purisma Formation. The sandstone is described as poorly indurated, fine grained, from thickly bedded to massive, moderately weathered, soft, and moderately fractured to very intensely

fractured. The siltstone is described as poorly indurated, very thickly bedded, fresh, soft, and intensely to very intensely fractured.

Groundwater

Because the subsurface investigation consisted of horizontal borings, depth to groundwater was not determined. However, boring R-12-001 did intercept a spring, and water has been seeping from the hole continuously since it was first drilled.

Groundwater elevations and gradients are expected to be variable throughout the project area due to variable permeability of formation, structure, and other hydrogeologic properties. Caltrans Maintenance has observed springs intercepting the cut slope along the layout line of the proposed retaining wall. These springs appear to be ephemeral, subsiding after the rainy season. Groundwater may also occur in formation or at the contact between overlying loose soils and bedrock.

Scour Evaluation

Scour is not an issue of concern at the project location.

Corrosion Evaluation

Representative rock samples taken during the subsurface investigation were tested for corrosion potential. The Department considers a site corrosive to foundation elements if one or more of the following conditions exist for the representative soil and/or water samples taken at the site:

- Chloride concentration is greater than or equal to 500 ppm
- Sulfate concentration is greater than or equal to 2000 ppm
- The pH is 5.5 or less

Since resistivity serves as an indicator parameter for the possible presence of soluble salts, tests for sulfate and chloride are usually not performed unless the resistivity of the soil is 1,000 ohm-cm or less.

Table 2: Corrosion Test Summary

Boring	Length	Minimum Resistivity (Ohm-Cm)	pH	Chloride Content (ppm)	Sulfate Content (ppm)
RC-12-001	0'-6.8'	814	4.11	4	1986
RC-12-001	16.8'-20.8'	1160	6.38	N/A	N/A
RC-12-002	0'-4'	942	4.08	4	2295
RC-12-002	19'-22.5'	710	3.93	15	2302
Corrosive if:		**≤ 1000**	**≤ 5.5**	**≥ 500**	**≥ 2000**

Based on corrosion test results, the project site is considered to be corrosive due to a low pH and high sulfate concentrations.

Seismic Recommendations

The project site is potentially subject to strong ground motions from nearby earthquake sources. Table 3 lists the active and potentially active faults in the project vicinity as described in Caltran's 2007 Fault Database. Corresponding Moment Magnitudes and distances to the project site are also given. A fault map is included in the attachments to this report.

Table 3: Active and Potentially Active Faults

Fault	*Moment Magnitude of Maximum Credible Earthquake*[1]	*Fault ID*[2]	*Type of Fault*[3]	*Distance to Fault from Project Area (kilometers)*
San Andreas Fault Zone (Santa Cruz Mtn. section)	7.9	310	RLSS	4.0
Sargent Fault (Northwestern section)	6.8	410	RLSS	4.0
Zayante-Vergales Fault Zone	7.0	93	RLSS	12.3
Monte Vista-Shannon Fault Zone	6.7	91	R	16.6
Cascade Fault	6.9	92	R	17.4
Monterey Bay-Tularcitos (Monterey Bay section)	7.3	94	RLSS	24.6
San Gregorio Fault Zone (San Gregorio section)	7.0	197	RLSS	26.4
San Gregorio Fault Zone (Sur Region section)	7.2	41	RLSS	30.9

[1] According to *Caltrans 2007 Fault Database*
[2] *Caltrans 2007 Fault Database* Identifier
[3] LLSS=left-lateral strike-slip fault; RLSS=right-lateral strike-slip fault; R=reverse fault; N=normal fault

A design response spectrum for the project area was generated using the 2009 Caltrans Seismic Design Procedure. The procedure was developed to calculate the minimum seismic design requirements for bridges on State highways. The method calculates design response spectra over a range of periods. The design response spectrum is based on the envelope of a deterministic and a probabilistic spectrum. The deterministic spectrum is calculated as the arithmetic average of median response spectra computed using the Chiou & Youngs and Campbell & Bozorgnia ground motion prediction equations (CY-CB GMPE). These equations are applied to all faults in or near California considered to be active in the last 700,000 years (late Quaternary age) and capable of producing a moment magnitude earthquake of 6.0 or greater.

The probabilistic spectrum is obtained from the 2008 United States Geological Survey (USGS) Seismic Hazard Map for the 5% in 50 years probability of exceedance (or 975 year return period). The spectral values are adjusted with a soil amplification factor based on an average of the Boore-Atkinson (2008), Campbell Bozorgnia (2008), and Chiou-Youngs (2008) ground motion prediction models. For sites underlain by soils having an average shear wave velocity for the upper 30 meters of soil (V_{S30}) of less than 300 meters per second, the 2009 USGS Probabilistic Seismic Hazard Analysis Interactive Deaggregation Tool is used to develop the probabilistic spectrum.

The controlling fault in the project area is the San Andreas Fault Zone, Santa Cruz Mountains section, a right lateral strike-slip fault with a maximum magnitude of 7.9. At a distance of 4.0 kilometers from the fault, the peak ground acceleration in the project area is estimated to be 0.76 g (gravity). The design response spectrum was governed by the probabilistic spectrum with a soil amplification factor for a V_{S30} of 600 meters per second. The V_{S30} value is an estimated value for soft rock.

No known active or potentially active faults project towards or cross the highway alignment within the project limits. Therefore, there is low potential for surface fault rupture to occur and no mitigation efforts are necessary.

Soil liquefaction occurs when loose, water-saturated soils lose shear strength in response to the sudden shaking from an earthquake and begin behaving like a liquid, reducing their ability to support embankments and structures. Loose sands and gravels with 35 percent fines or less that have the potential of being saturated are susceptible to liquefaction. Generally, the younger and looser the sediment, and the shallower the water table, the more susceptible the soil is to liquefaction. Sediments most susceptible to liquefaction include historical and late Holocene age river channel and flood plain deposits, and poorly compacted fills. Bedrock and dense soils, including well-compacted fills have a low susceptibility to liquefaction. Liquefaction is most prevalent in areas where groundwater lies within 30 feet of the ground surface; liquefaction rarely occurs in areas with groundwater deeper than 50 feet.

Based on the prevalence of soft rock at shallow depths, the potential for liquefaction in the project area is considered low.

Geotechnical Analysis and Design

The design of the soil nail wall was accomplished using GoldNail software, developed by Golder Associates of Redmond, Washington. GoldNail is a slip-surface, limiting-equilibrium, slope-stability model that satisfies overall limiting equilibrium (translational and rotational) of individual free bodies defined by circular slip surfaces. This design approach is in accordance with the recommendations of Federal Highway Administration (FHWA) Geotechnical Engineering Circular No. 7, *Soil Nail Walls*, Publication No. FHWA0-IF-03-017. The search for the critical slip surface (the failure surface having the lowest factor of safety) was limited to a distance behind the soil nail wall of two times the design height of the wall. This methodology was recommended for the analysis of "infinite" slopes in a previous version of the FHWA manual to keep the soil nail lengths reasonable.

The Allowable Stress Design (ASD) method was used for the design of the proposed soil nail wall. Internal factors of safety recommended in the FHWA manual for Group I and Group VII load combinations were used. Factors of safety utilized for global (external) stability were based on Caltrans practice. A Group I global factor of safety of 1.35 and a Group VII global factor of safety of 1.01 were used for design.

Group I Loading Factors of Safety

Nail Head Strength =	1.5
Nail Tendon Tensile Strength =	1.8
Ground-Grout Pullout Resistance =	2.0
Minimum Global Soil Factor of Safety =	1.35

Group VII Loading Factors of Safety

Nail Head Strength =	1.1
Nail Tendon Tensile Strength =	1.35
Ground-Grout Pullout Resistance =	1.5
Minimum Global Soil Factor of Safety =	1.01

The following design parameters were used:

- The maximum contributory area of the soil nail assembly (S_v X S_h) ≤ 25 ft^2 where,
  S_v is the vertical spacing of the nails; S_v,Max = 5 ft
  S_h is the horizontal spacing of the nails; S_h,Max = 5 ft
- Declination angle (θ) of soil nails from horizontal = 15°
- The top nail profile line was assumed to be parallel to original ground (OG) at the top of the wall, 2 feet below the top of cut. The bottom nail profile line was designed 2 feet above the bottom of wall. The bottom of the wall was assumed to be 2 feet below

finished grade. Intermediate rows of soil nails were evenly spaced between the top and bottom rows.

Strength parameters for the in situ rock were back calculated from an analysis of the global stability of the existing slopes. The slopes were conservatively estimated to have a factor of safety against global failure of 1.0. Ultimate nail pullout resistance was calculated using ultimate grout to ground bond strengths recommended in the FHWA manual for weathered shale and dense silty sands. The design strength and nail pullout characteristics of the rock in the nailing zone were assumed as follows:

Unit Weight	=	125 pcf
Cohesion	=	300 psf
Friction Angle	=	34°
Design Nail Pullout Resistance	=	3200 lb/ft

A horizontal seismic coefficient, k_h, of 0.26 was used in the global stability analysis for Group VII load combinations. This value is one-half the design acceleration coefficient at the center of gravity, A_m, for a peak ground acceleration of 0.76 g. The FHWA manual recommends a value between $0.5A_m$ and $0.67A_m$.

The GoldNail software requires an input for nail head strength to determine the minimum required soil nail lengths. Nail head strength is the minimum of facing flexural strength, facing punching shear capacity, and headed stud tensile capacity. An ultimate nail head strength of 50 kips was used for the wall design. This value was calculated for permanent facing having the following design parameters (the temporary shotcrete facing was neglected in the calculations due to corrosion, durability, and quality of construction concerns). The critical failure mode was determined to be punching shear.

- Facing thickness = 8”.
- Facing reinforcement consisting of No. 6 deformed bars spaced at 9” vertically and horizontally, placed in the center of the facing.
- ASTM Grade 60 bars and head studs.
- Concrete 28-day compressive strength ≥ 4000 psi.
- Horizontal soil nail spacing = 5 feet.
- Vertical soil nail spacing = 5 feet.
- Bearing Plate dimensions = 1” x 9” x 9”.
- Headed Stud dimensions = ¾” diameter body, 1-1/8” diameter head, 3/8” head thickness, 5” length, 6” spacing.

The design of the wall facing system is the responsibility of the Office of Bridge Design in conjunction with the District Landscape Architect. The foregoing is provided for minimum design requirements. A sculpted shotcrete finish facing is proposed for the subject soil nail wall.

Soil Nail Lengths

Design cross sections along the retaining wall layout line were provided by Central Region Project Development, Office of Design II, Branch D. Required soils nail lengths were calculated at cross sections having the maximum spacing between rows of soil nails and at 10-foot intervals along the length of the wall. Minimum soil nail lengths and bar sizes are provided in Attachment 4 of this report. Soil nail bar sizes were determined assuming Grade 75 steel conforming to ASTM Designation A 615/A 615M. If specific bar sizes are unavailable in the designated steel grade, other steel grades may be used with adjusted bar sizes.

Once the Elevation View of the soil nail retaining wall is finalized, a schedule of soil nail lengths and bar sizes should be developed. Nail lengths and bar sizes should be generalized as much as possible to simplify construction inspection and minimize the likelihood of errors. The same grade steel should be used for all of the soil nails on the project.

Because the site is corrosive, soil nails will have to have corrosion protection. Splicing of nails should be avoided to maintain the integrity of the corrosion protection.

Soil Nail Wall Drainage

Construction of a proper drainage system is crucial to prevent the buildup of hydrostatic pore pressure behind the retaining wall facing. We recommend the following:

- Grade the slopes above the soil nail wall to drain over the wall.
- Place 16-inch wide prefabricated geocomposite drain strips vertically on 5-foot centers prior to applying temporary shotcrete facing. Install individual PVC pipe weep holes through the wall facing at the base of each of the prefabricated drainage strips. Geocomposite drains shall start 2 feet below the top of the cut and end 6 inches below weep hole inserts.

Soil Nail Pullout Tests

Field verification of the ultimate pullout resistance values used in the design shall be performed in accordance with the Standard Specifications to assure that the nail design loads can be carried without excessive movement and with an acceptable factor of safety during the service life of the retaining wall. Two verification test soil nails shall be installed and tested for each wall zone prior to installing production nails in that wall zone. Wall zones shall be designated as follows:

Table 4: Wall Zones

Wall Zone	Begin			End		
	Station ("RW1" Line)	Lower Elevation (ft)	Upper Elevation (ft)	Station ("RW1" Line)	Lower Elevation (ft)	Upper Elevation (ft)
1	112+05	1233.79	1239.59	112+40	1235.27	1254.51
2	112+40	1244.89	1254.51	113+50	1252.28	1264.66
3	113+50	1252.28	1264.66	114+55	1257.38	1270.54
4	114+50	1257.38	1270.54	115+65	1258.58	1268.32
5	115+65	1248.85	1268.32	116+10	1250.97	1257.00
6	112+40	1235.27	1244.89	113+50	1239.90	1252.28
7	113+50	1239.90	1252.28	114+55	1244.23	1257.38
8	114+55	1244.23	1257.38	115+65	1248.85	1258.58

Construction Considerations

Drilling the top rows of soils nails will likely have to be accomplished using an excavator mounted drill rig or a drill suspended from a crane because existing slopes are very steep and there will not be sufficient excavation to create a bench to work from. A crane will probably be necessary to install the soil nails.

Due to the excessive length of the soil nails for the higher sections of retaining wall, it will probably be necessary to close both northbound lanes to traffic while placing the nails into the drilled holes.

Caving conditions may be encountered during drilling for soil nails due to the intensely fractured nature of the in situ rock. Use of temporary casing may be necessary to control caving.

Depending on the time of year of construction and the yearly precipitation total, groundwater may be encountered while excavating for the wall and drilling the soil nail holes.

Grout loss may occur during the installation of soil nails due to the intensely fractured nature of the rock.

Additional Information

Standard Special Provision 2-1.06B "Project Information", discloses to bidders and contractors a list of pertinent information available for their inspection prior to bid opening. The following is information originating from Geotechnical Services. Items listed to be included in the Information Handout will be provided in Acrobat (.pdf) format to the Addressee of this report via electronic mail.

Data and information attached with the project plans are:

A. Log of Test Borings (Laurel Curve Soil Nail Wall, Bridge No. 36E-0040).

Data and information included in the Information Handout provided to the Bidders and Contractors are:

A. Foundation Report for Laurel Curve Soil Nail Wall dated January 14, 2013.

Data and information available for inspection at the District Office:

A. Core Samples.

Closure

The recommendations contained in this report are based on specific project information that has been provided by Central Region Project Development in their bridge submittal package. If any conceptual changes are made during final project design, the Office of Geotechnical Design – North, Branch D should review those changes to determine if the recommendations contained in this report are still applicable. Any questions regarding the recommendations contained herein should be directed to the attention of Dan Appelbaum, (805) 549-3745, or Mike Finegan, (805) 549-3194, at the Office of Geotechnical Design – North, Branch D.

Supervised by,

REGISTERED PROFESSIONAL ENGINEER
D.L. Appelbaum
No. C 50001
Exp. 6-30-13
CIVIL
STATE OF CALIFORNIA

DANIEL L. APPELBAUM, PE
Transportation Engineer
Geotechnical Design – North
Branch D

MICHAEL S. FINEGAN, PE, Chief
Geotechnical Design - North
Branch D

c: Roy Bibbens / GDN Records (E-copy)
Steve Wyatt – Design Engineer (E-copy)
GeoDOG - Digital Archive of Geotechnical Data (E-copy)
Steve DiGrazia – Project Manager (E-copy)
Structure Construction R.E. Pending File (email RE_pending_file@dot.ca.gov)
Doug Lambert – District Materials Engineer (E-copy)
Craig Whitten – DES Office Engineer, Office of PS&E (E-copy)
Job File / Branch D Records

LIST OF ATTACHMENTS

ATTACHMENT 1 **GEOLOGIC MAP**

ATTACHMENT 2 **EARTHQUAKE FAULTS**

ATTACHMENT 3 **MATERIAL PROPERTIES SUMMARY**

ATTACHMENT 4 **SOIL NAIL LENGTHS**

Geologic Map

Laurel Curve Soil Nail Wall
05-SCr-17-9.4/10.1
EA 05-1C1801

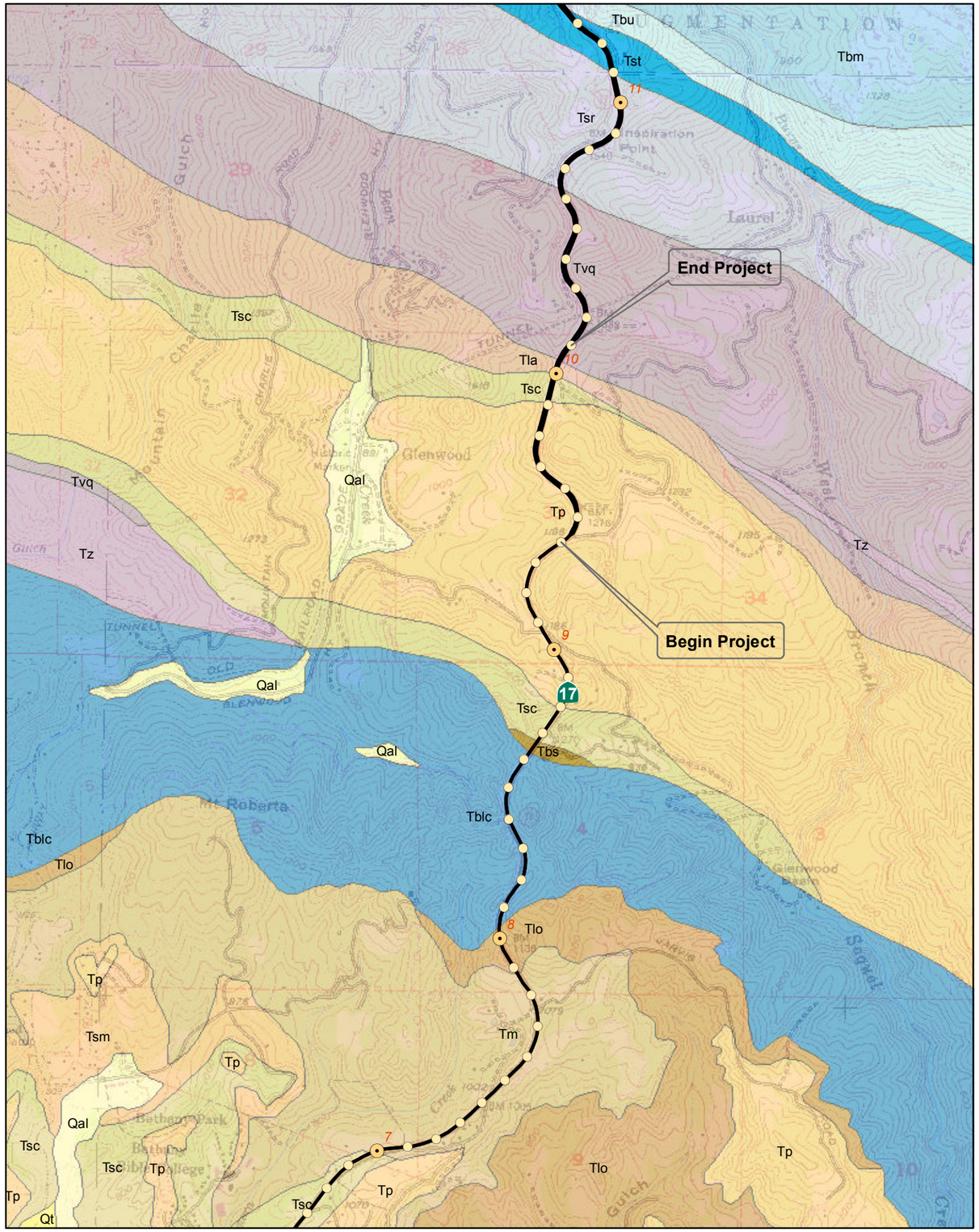

- Whole Postmiles
- Tenth Postmiles

Santa Cruz Geology

PTYPE

- Qal: Alluvial deposits, undifferentiated (Holocene)
- Qt: Terrace deposits, undifferentiated (Pleistocene)
- Tp: Purisima Formation (Pliocene and upper Miocene)
- Tsc: Santa Cruz Mudstone (Upper Miocene)
- Tsm: Santa Margarita Sandstone (upper Miocene)
- Tm: Monterey Formation (middle Miocene)
- Tlo: Lompico Sandstone (middle Miocene)
- Tla: Lambert Shale (lower Miocene)
- Tvq: Vaqueros Sandstone (lower Miocene and Oligocene)
- Tbs: Basalt (lower Miocene)
- Tz: Zayanite Sandstone (Oligocene)
- Tsr: Rices Mudstone Member (Oligocene and Eocene)
- Tst: Twobar Shale Member (Eocene)
- Tbu: Upper sandstone member - Butano Sandstone (Eocene)
- Tbm: Middle siltstone member - Butano Sandstone (Eocene)
- Tblc: Conglomerate - Butano Sandstone (Eocene)

N

0 2,000 4,000 8,000
Feet

Brabb, E. E. , Graham, S. E. , Wentworth, C., Knifong, D., Graymer, R., and Blissenbach, J., 1997, Geologic Map of Santa Cruz County, California: A digital database: U.S. Geological Survey Open-File Report 97-489.

ATTACHMENT 1

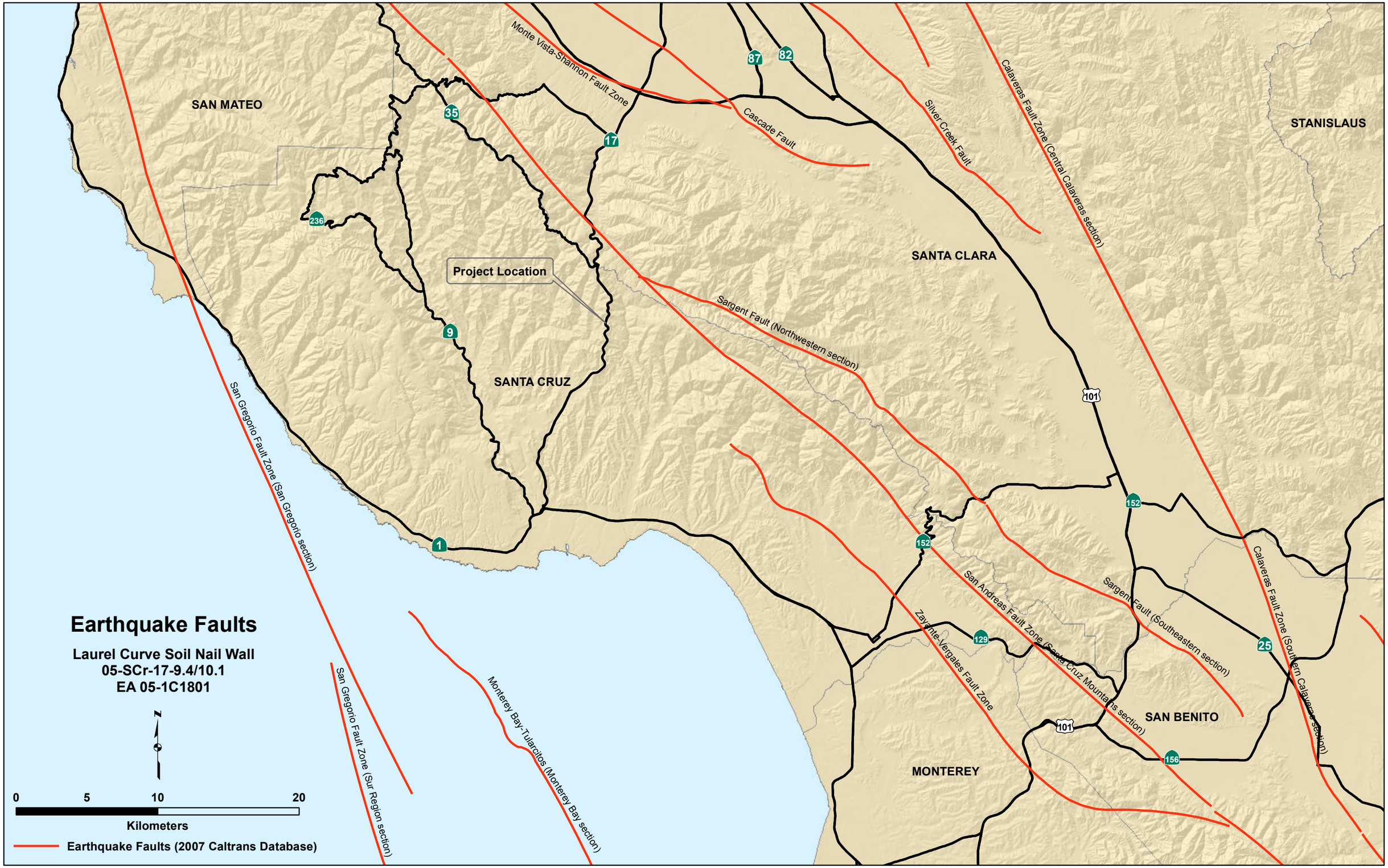

ATTACHMENT 2

MATERIALS PROPERTIES SUMMARY
LAUREL CURVE SOIL NAIL WALL

SCR-17-9.4/10.1

DESCRIPTION		Boring No.	RC-12-001					RC-12-002		
		Station	114+98					113+71		
		Line	"B1" LINE					"B1" LINE		
		Offset	34' Rt.						32' Rt.	
		Date Sampled	8/8/2012	8/8/2012	8/8/2012	8/8/2012	8/8/2012	8/9/2012	8/9/2012	8/9/2012
		Sample ID	3601701	3601702	3601703	3601704	3601705	3601706	3601707	3601708
		Length	0'-6.8'	13.8'-14.5'	14.5'-15.2'	16.8'-20.8'	23'-23.7'	0'-4'	18'-18.5'	19'-22.5'
		USCS Classification								
CORROSION		Resistivity (ohm-cm)	814			1160		942		710
		pH	4.11			6.38		4.08		3.93
		Chlorides (ppm)	4			N/A		4		15
		Sulfates (ppm)	1986			N/A		2295		2302
DENSITY AND MOISTURE CONTENT	In Situ	Dry Density (pcf)		110.5	112.5		110.4		114	
		Moisture (%)		12.3	11.85		16.93		14.58	
	Optimum	Dry Density (pcf)								
		Moisture (%)								
		Specific Gravity								
Unconfined Compressive Strength (psi)				348.8	190.3		553		334.2	

Soil Nail Lengths
Laurel Curve Soil Nail Wall
05-SCr-17-9.4/10.1
05-0C1801, Project Id # 0512000077

Station ("RW1" Line)	Bottom of Wall Elevation (ft)	Top of Wall Elevation (ft)	Design Height (ft)	# Rows	Nail Lengths (ft)	Bar Size (#)
112+07.5	1233.89	1240.95	7.07	2	5	6
112+17.5	1234.31	1246.34	12.03	3	8	6
112+22.5	1234.52	1248.10	13.58	3	10	6
112+27.5	1234.74	1250.00	15.26	4	11	6
112+37.5	1235.16	1253.95	18.79	4	13	6
112+47.5	1235.59	1256.08	20.50	5	14	6
112+57.5	1236.01	1258.13	22.12	5	19	6
112+67.5	1236.43	1260.37	23.94	5	21	7
112+77.5	1236.85	1262.57	25.73	6	21	8
112+87.5	1237.26	1261.21	23.95	5	25	8
112+97.5	1237.68	1259.96	22.28	5	24	8
113+07.5	1238.10	1261.13	23.03	5	25	9
113+17.5	1238.52	1261.72	23.20	5	28	9
113+27.5	1238.94	1261.94	23.00	5	29	10
113+37.5	1239.36	1262.67	23.31	5	33	10
113+42.5	1239.58	1263.21	23.64	5	35	10
113+47.5	1239.79	1264.27	24.49	6	32	10
113+57.5	1240.21	1265.29	25.07	6	34	11
113+67.5	1240.63	1267.37	26.74	6	36	11
113+72.5	1240.85	1268.79	27.95	6	38	11
113+77.5	1241.06	1270.21	29.15	7	35	10
113+87.5	1241.48	1272.42	30.94	7	37	11
113+97.5	1241.90	1271.68	29.79	7	35	10
114+02.5	1242.11	1270.25	28.14	6	37	11
114+07.5	1242.31	1268.81	26.50	6	35	10
114+17.5	1242.72	1267.65	24.93	6	32	10
114+27.5	1243.12	1268.04	24.92	6	31	10
114+37.5	1243.53	1267.19	23.66	5	33	10
114+47.5	1243.93	1267.93	24.01	6	28	10
114+57.5	1244.33	1270.90	26.58	6	33	10
114+67.5	1244.73	1271.51	26.78	6	33	10
114+72.5	1244.93	1273.54	28.61	6	35	11
114+77.5	1245.13	1274.57	29.44	7	33	10
114+87.5	1245.53	1274.19	28.66	6	38	11
114+97.5	1245.96	1274.85	28.89	6	38	11
115+02.5	1246.18	1278.36	32.18	7	36	11
115+07.5	1246.39	1277.73	31.34	7	35	10

Soil Nail Lengths
Laurel Curve Soil Nail Wall
05-SCr-17-9.4/10.1
05-0C1801, Project Id # 0512000077

Station ("RW1" Line)	Bottom of Wall Elevation (ft)	Top of Wall Elevation (ft)	Design Height (ft)	# Rows	Nail Lengths (ft)	Bar Size (#)
115+12.5	1246.62	1274.72	28.10	6	35	11
115+17.5	1246.85	1271.82	24.97	6	30	10
115+27.5	1247.32	1270.63	23.31	5	32	10
115+37.5	1247.80	1271.07	23.28	5	29	10
115+42.5	1248.03	1273.95	25.92	6	27	10
115+47.5	1248.26	1273.33	25.07	6	24	9
115+52.5	1248.50	1270.28	21.79	5	21	9
115+57.5	1248.74	1269.42	20.68	5	18	9
115+62.5	1248.99	1268.67	19.68	5	16	8
115+67.5	1249.24	1267.92	18.68	4	15	8
115+77.5	1249.76	1265.77	16.01	4	11	6
115+87.5	1250.27	1263.53	13.26	3	9	6
115+97.5	1250.77	1260.38	9.61	3	7	6
116+07.5	1251.31	1257.55	6.23	2	4	6

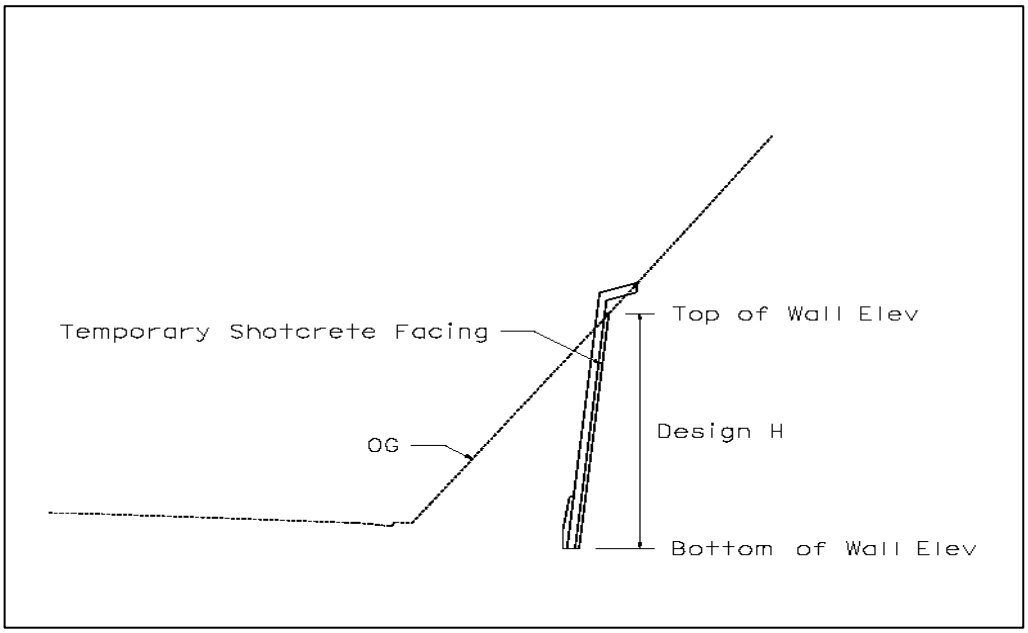

FOUNDATION REVIEW

DIVISION OF ENGINEERING SERVICES
GEOTECHNICAL SERVICES

To: **Structure Design**
1. Preliminary Report
2. R.E. Pending File
3. Specifications & Estimates
4. File

Geotechnical Services
1. GS (Sacramento)
2. GS

District Scott Kirkish
District Project Engineer

Date: 7-26-13

Laurel Curve Soil Nail Wall
Structure Name

District	County	Route	Postmile
05	SCr	17	9.6

E.A. Number	Structure Number
05-1C1801	36E0040

Foundation Report By: Dan Appelbaum

Dated: January 14, 2013

Reviewed By: _____ (OSD) Mike Finegan (GS)

General Plan Dated: 5-30-13

Wall Details Dated: _____

☒ No changes. ☐ The following changes are necessary.

FOUNDATION CHECKLIST (soil nail walls)

- ✓ Design Pullout Resistance, Qd
- ✓ Geotechnical Parameters
- ✓ Nail Lengths, Spacing, Inclination
- ✓ Nail Bar Size
- ✓ Punching Shear Capacity
- ✓ Proof Test Locations
- ✓ Location of Adjacent Structures and Utilities
- ✓ Corrosion Protection
- N/A Minimum Drill Hole Diameter
- ✓ Seismic Data
- ✓ Wall Zones & Verification Tests
- ✓ LOTB's
- ✓ Special Provision Issues
- Std Spec Instrumentation and Monitoring
- ✓ Drainage and Filtration
- ✓ Ground Water

Office of Structure Design

17
Branch No.

Geotechnical Services

Rev. 8/09

LINDSAY™
TRANSPORTATION SOLUTIONS

ESTIMATE FOR BUDGETING #1309-0043B

Scott D. Kirkish, P.E.
Caltrans

Project: SCR-17-PM 9.4/9.8

Dear Mr. Kirkish,

Lindsay Transportation Sales & Service (LTSS&S) is pleased to provide you with the following estimate for the above mentioned project. We will have to re-quote these numbers with updated prices as we get closer to the project start date. Prices will be adjusted and reflect increases BSI experiences. For planning purposes please use an inflation factor of 2.5% per year.

Series 200 Construction Barrier - Lease/Rental

4,600 LF (1,402M) "black" hardware and reinforcements (not painted, galvanized, or epoxy coated). The barriers do not include reflectors or striping. Barriers may be new or used.

Term of Lease	Price per foot*	Additional Months
6 months	$42.00	$3.60 per foot per month
9 months	$48.00	$3.60 per foot per month
12 months	$55.00	$3.60 per foot per month

Variable Length Barrier – VLB

All VLB's for the job as designed will be included in the price above. VLB units will be substituted one for one for concrete pieces and will be charged at the same unit price as concrete units.

180 River Road · Rio Vista CA 94571 · Tel. +1 (707) 374-6800 · Fax. +1 (707) 374-6801

Barrier Transfer Machine - BTM-3

One Standard Machine with No Options per Specification TB 960515 Rev-3
Machine may be new or reconditioned.

Term of Lease	Price Per Each*	Additional Months
6 months	$103,000.00	$14,000.00 per month
9 months	$138,000.00	$12,000.00 per month
12 months	$171,000.00	$12,000.00 per month

NOTE: Machine is shipped partially disassembled. The mainframe has lifting lugs and a 20-ton crane or similar equipment must be available for unloading. In conjunction with training, we will furnish a technician to supervise the assembly of the machines using your labor and equipment. The approximate time required is two men for a day. The equipment required in addition to the crane for unloading is a forklift and a set of general mechanic's tools.

Cost of machine includes 2 consecutive days set-up and training (2 weeks notice required). Additional days are available as follows:

- Consecutive days: $1,300.00 per day (Portal to portal) plus air fare.
- Non-consecutive days: $1,300.00 per day(Portal to portal) plus air fare.

Maintenance: Regular maintenance of the machine is required and periodic adjustment of the wall may be necessary.

Lessor will provide all parts to maintain the machine to factory specifications (not including consumables such as fuel, lubrication and hydraulic fluids). Lessor will also provide quarterly inspections to help Lessee maintain the machine to factory specifications. Lessee is responsible for providing access to the machine for Lessor's employees and for providing the labor for routine maintenance. Any parts damaged due to an accident or negligence will be the responsibility of Lessee.

If additional information is required, please contact our Field Services Department at 707-374-6800.

Any additional specifications, other than the standard, required to be performed to the machine to comply with local regulations will result in additional costs not included in this Estimate for Budgeting.

Taxes: This quotation is exclusive of federal, state and local taxes, which the parties agree are the responsibility of the buyer. Lindsay Transportation Sales & Service will add the amount of any applicable federal, state or local sales or equivalent taxes to the invoice unless the buyer provides seller with an acceptable resale or exemption certificate.

Delivery:

Barriers: All barriers will be delivered to and made available for pickup at a location within 120 miles from the jobsite to be designated by Lindsay Transportation Sales & Service LLC. Loading, trucking and unloading at the designated location is the responsibility of Lessee and shall be at the Lessee's Expense.

Machines: Ex-Works Rio Vista, CA
VLB's Ex-Works Rio Vista, CA

Terms of Payment: Lease/rental payments shall be due and payable as follows:

Barrier & VLB's: Lease Period starts upon delivery. The full lease amount is payable net 30 days from date of invoice, upon approval of credit. No retentions will be withheld from Lessor. No rebates will be allowed.

Machine: Lease Period starts upon delivery. The full lease amount is payable net 30 days from date of invoice, upon approval of credit. No retentions will be withheld from Lessor. No rebates will be allowed.

* If additional month-by-month lease/rental is continued, payment is due monthly, in advance.

Finance Charge:

A Financing Charge of 1-1/3% per month (16% per annum) will be computed on past due amounts. Lessee agrees that all collection costs, court costs, investigation costs, legal fees and all other incidental costs incurred in the collection of his past due account will be paid by the lessee.

PLEASE NOTE THAT THE TERMS OF THIS QUOTATION ARE INDEPENDENT OF THE TERMS OF PAYMENT BY THE STATE TO THE LESSEE.

Return on Completion: of Project:

All barriers shall be returned to a location within 120 miles from the jobsite to be designated by Lindsay Transportation Sales & Service.

Trucking, unloading and stacking (see TB-000626 Rev.0) at the designated return location is the responsibility of Lessee and shall be at the Lessee's Expense.

Machines and VLB's will be returned to Rio Vista, Ca. Freight Prepaid with Insurance.

Lessee will be responsible for unloading barriers at Lessor's yard and for loading machine for return to Rio Vista, Ca.

All items shall be returned in "as received" condition less ordinary wear and tear.

All barrier sections, which are not reusable, will be invoiced at $492 per 24" barrier and $6,000 per VLB.

Unusual damage or wear to the machine will be repaired at Lessee's expense.

Delivery Time:

Barrier:	Available 90-120 days after receipt and acceptance of a signed Lease Agreement.
Machines:	Available 90-120 days after receipt and acceptance of a signed Lease Agreement.

Note: Prices will be subject to change and be representative of cost increases Lindsay Transportation Sales & Service may have experienced at the time of signature and contract approval. This budget pricing is representative of what we quote for 180 days from the date of this document.

Warranty and Terms: This quotation is subject to the following attachments which are herewith made a part of this quotation:

Warranty - W030587 Rev. 8
24" QMB Barrier Specification - TB 950222 Rev. 3
Quick-Lock VLB Specification - TB990831 Rev. 3
BTM-3 Specification - TB 960515 Rev 3
Barrier Deployment – TB 941025 Rev 3
QMB 24" Barrier Stacking Specification – TB000626 Rev. 0

We are pleased to provide you with this quotation for your budgeting purposes. Prior to formalizing a final quote we would require additional information about the project which would allow us to develop the specifications for a system suited to your particular needs. In the meantime please feel free to contact us with additional questions.

Cordially,

Lindsay Transportation Solutions Sales & Service LLC

Erik Weber, P.E.
Applications Engineering Manager

Scott Kirkish

District 5 P.E.
(805) 594-6199
9.18.2013

Dear Scott,

The ABSORB 350 System is a non-redirective crash cushion that has been designed and tested to meet the rigorous requirements of NCHRP Report 350, Test Levels 2 (43 mph, 70 km/h) and 3 (62 mph, 100 km/h). This impact attenuator system offers maintenance workers and contractors a reliable and easy method to protect the ends of concrete barriers. The ABSORB 350 Crash Cushion can be attached to the end of permanent or portable concrete barrier (pcb) and steel barrier without the need to anchor the system to the roadway surface. At 24" [610 mm] wide, it is ideally suited for narrow areas where road and workspace is limited. ABSORB 350 is easy to install and is easier to restore after an impact than other non-redirective crash cushions because the system uses uniform modular components.

As the California Distributor for The ABSORB 350 System, Statewide Traffic Safety & Signs hereby agrees to sell the ABSORB 350 System to any contractor or subcontractor on any State Highway Contract. All sales are to be in accordance with Statewide Traffic Safety & Signs conditions and credit policies in effect at the time of the order submittal.

These products meet the requirements of California Department of Transportation's specifications and are manufactured by:

Lindsay Traffic Solutions/Barrier Sysytems

180 River Road

Rio Vista, Ca 94571
Phone: (707) 374-6800
Fax. (707) 374-6801

The ABSORB 350 is distributed by:

Northern California	Central California	Southern California
Statewide Traffic Safety & Signs	Statewide Traffic Safety & Signs	Statewide Traffic Safety & Signs
130 Grobric Court	522 Lindon Ln	13755 Blaisdell Pl.
Fairfield, Ca 94533	Nipomo, Ca 93444	Poway, Ca 92064
Phone 800.770.2644	Phone 800.559.7080	Phone 800.547.9683
Fax 707.864.9956	Fax 805.929.5786	Fax 858.679.7117

The prices shown below are guaranteed for all for all bidders. Price guarantee is good for orders received prior to March 31, 2014 with delivery within 60 days from receipt of the Purchase Order.

The following is quoted for EA for project 05-1C1801, Hwy 17 in Santa Cruz County, expected quantity 3 systems.

System Number	Description	Price Each
AB100PSB	ABSORB 350 9 Element Attenuator Attached to Standard Barrier	$8500.00

The price does not include installation or sales tax. All prices are FOB Fairfield, Ca

If you have questions or I can be of further assistance with Barrier Products, please contact me.

Regards,

Vance Ezell
Specialty Products Manager
3049 S. Golden State Frontage Rd.
Fresno, Ca 93725
Office 559.291.8500
Fax: 559.291.8501
Cell: 559.999.5015
E-Mail: vezell@stssi.com

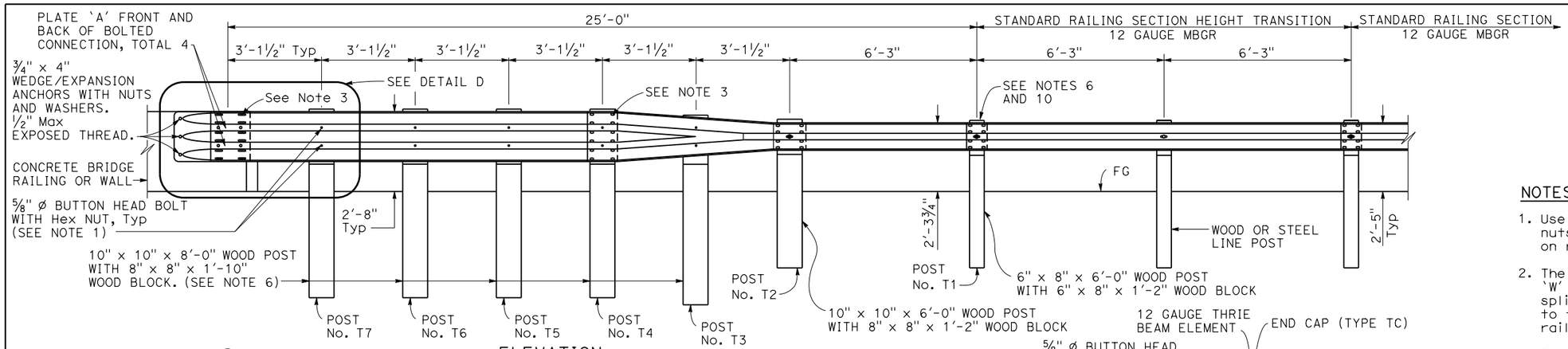

ELEVATION

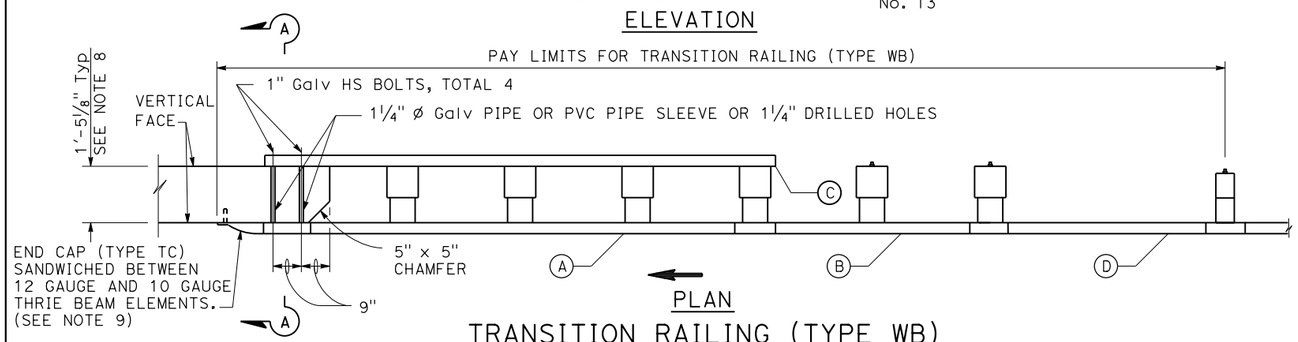

PLAN

TRANSITION RAILING (TYPE WB)

(No Blockout Attachment)

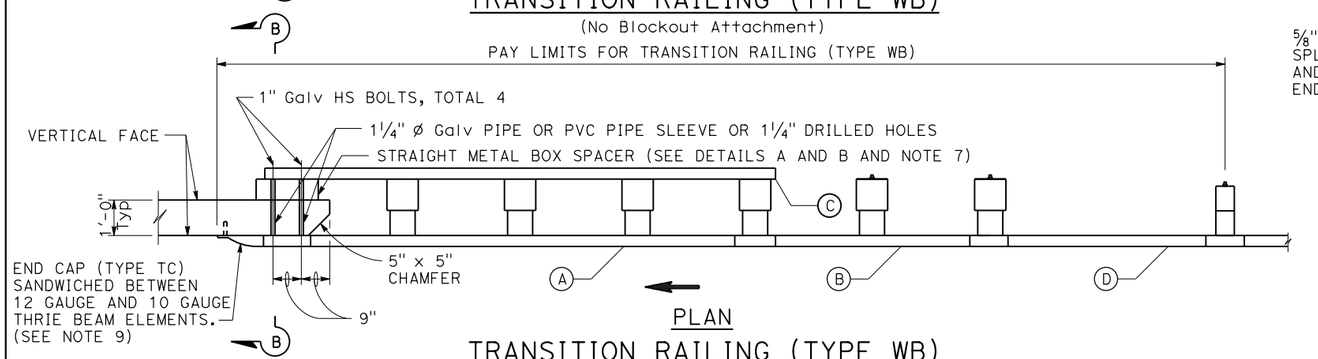

PLAN

TRANSITION RAILING (TYPE WB)

(Blockout Attachment)

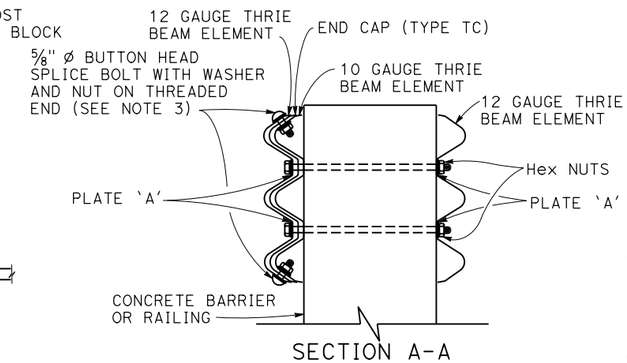

SECTION A-A

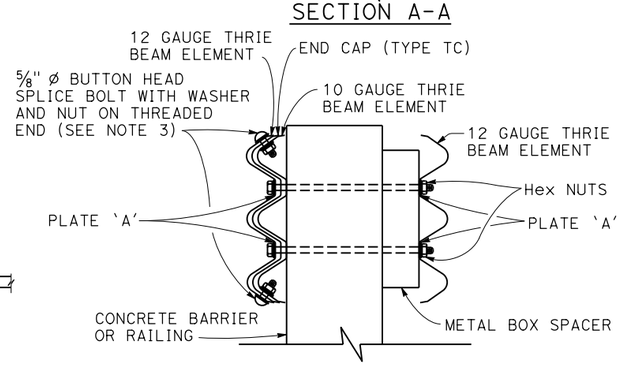

SECTION B-B

LEGEND

- (A) NESTED THRIE BEAM ELEMENTS (ONE 12 GAUGE ELEMENT NESTED OVER ONE 10 GAUGE ELEMENT).
- (B) ONE 10 GAUGE "W" BEAM TO THRIE BEAM ELEMENT.
- (C) ONE 12 GAUGE THRIE BEAM ELEMENT.
- (D) ONE 10 GAUGE "W" BEAM RAIL ELEMENT (7'-3½" LENGTH)

10 GAUGE = 0.135" THICK

12 GAUGE = 0.108" THICK

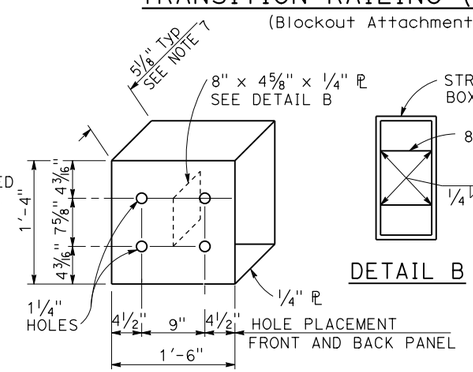

DETAIL A

STRAIGHT METAL BOX SPACER

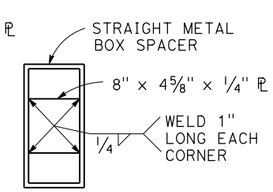

DETAIL B

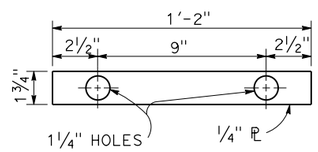

DETAIL C

PLATE 'A'

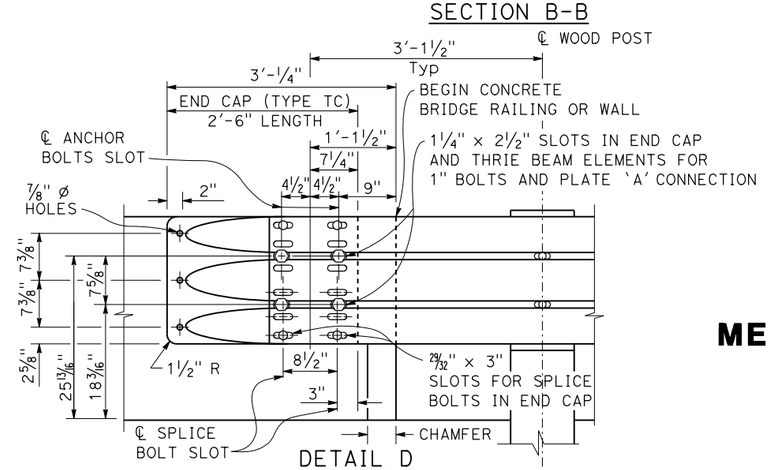

DETAIL D

NOTES:

1. Use ⅝" Ø Button head bolts and hex nuts for connections to posts. No washer on rail face for bolted connections to post.
2. The nested rail elements, end cap, and 'W' beam to thrie beam element may be spliced together prior to bolting the elements to the wood post and concrete barrier or railing.
3. Exterior splice bolt holes for rail element splices at Post No. T4 and the connection to the concrete barrier or railing shall be the standard 29/32" x 1⅛" slot size. Interior splice bolt holes at these locations may be increased up to 1¼" Ø. Only the top 2 and the bottom 2 splice bolts with washers and nuts are required for rail splices at Post No. T4 and the connection to the concrete barrier or railing.
4. Direction of adjacent traffic indicated by ⟶.
5. The top elevation of Posts No. T2 through No. T7 shall not project more than 1" above the top elevation of the rail element.
6. Typically, the railing connected to Transition Railing (Type WB) will be either standard railing section of metal beam guard railing with height transition ratio of 120:1 or an approved Caltrans end treatment attached to Post No. T1.
7. The depth of the metal box spacer varies from the 5⅛" to 1½" and is dependent on the width of the concrete railing or wall. The combined dimension for the depth of the metal box spacer plus the width of railing or wall is typically 17⅛". Where the space between the backside of the concrete railing or wall and the rear thrie beam element is less than 1½", metal plates similar to Plate 'A' are to be used as spacers.
8. Where the width of the concrete railing or wall is greater than 17⅛", wood blocks are to be used to fill the space created between the backside of Posts No. T4 through No. T7 and the rear thrie beam element. These wood blocks shall be 8" in width and 1'-2" in length. The dimension between the front thrie beam element and the rear thrie beam element is to match the width of the concrete railing or wall.
9. End cap may be installed over 12 gauge and 10 gauge thrie beam elements where transition railing is installed on the departure end of bridge railing.
10. Conform standard railing section height to 2'-3¾" at Post No. T1 using height transition ratio of 120:1.

METAL BEAM GUARD RAILING TRANSITION RAILING (TYPE WB)

NO SCALE