INFORMATION HANDOUT

For Contract No. 05-0T6404
At 05-SBt-25-18.8/19.5

Identified by
Project ID 0500020030

PERMITS

California Department of Fish and Wildlife

Incidental Take Permit No. 2081-2014-010-04

U.S. Fish and Wildlife Service

Biological Opinion (8-8-13-F-6)

Biological Opinion (8-8-10-F-58)

MATERIALS INFORMATION

Geotechnical Design Report

ALTERNATIVE FLARED TERMINAL SYSTEM

TYPE FLEAT-SP-MGS TERMINAL SYSTEM

TYPE SRT-31 TERMINAL SYSTEM

TYPE 31" X-TENSION TERMINAL SYSTEM

05-0T6404
05-SBt-25-18.8/19.5
Project ID 0500020030

ALTERNATIVE IN-LINE TERMINAL SYSTEM

TYPE SKT-SP-MGS TERMINAL SYSTEM

TYPE ET-31 TERMINAL SYSTEM

TYPE 31" X-TENSION TERMINAL SYSTEM

TEMPORARY ALTERNATIVE CRASH CUSHION

TYPE ABSORB-350 (TL-3), 9-ELEMENT SYSTEM

TYPE ADIEM 350 (TL-3)

TYPE QUADGUARD II CZ, TEST LEVEL 3, 5-BAY SYSTEM

TYPE ACZ-350, TEST LEVEL 3 MODEL

TYPE SLED END TREATMENT SYSTEM, TEST LEVEL 3 MODEL

TEMPORARY FENCE (WILDLIFE EXCLUSION)

E-Fence

California Department of Fish and Wildlife
Central Region
1234 East Shaw Avenue
Fresno, California 93710

California Endangered Species Act
Incidental Take Permit No. 2081-2014-010-04

SBT-25 CURVE CORRECTION PROJECT

Authority: This California Endangered Species Act (CESA) incidental take permit (ITP) is issued by the California Department of Fish and Wildlife (CDFW) pursuant to Fish and Game Code section 2081, subdivisions (b) and (c), and California Code of Regulations, Title 14, section 783.0 et seq. CESA prohibits the take[1] of any species of wildlife designated by the California Fish and Game Commission as an endangered, threatened, or candidate species.[2] CDFW may authorize the take of any such species by permit if the conditions set forth in Fish and Game Code section 2081, subdivisions (b) and (c) are met. (See Cal. Code Regs., tit. 14, § 783.4).

Permittee:	**California Department of Transportation (Caltrans)**
Principal Officer:	**Larry Bonner, Senior Environmental Planner, (805) 549-3337**
Contact Person:	**Geoff Hoetker, Associate Biologist, (805) 542-4670**
Mailing Address:	**Department of Transportation, District 5** **Central Coast Environmental Management Branch** **50 Higuera Street, San Luis Obispo, California 93501**

Effective Date and Expiration Date of this ITP:
This ITP shall be executed in duplicate original form and shall become effective once a duplicate original is acknowledged by signature of the Permittee on the last page of this ITP and returned to CDFW's Habitat Conservation Planning Branch at the address listed in the Notices section of this ITP. Unless renewed by CDFW, this ITP's authorization to take the Covered Species shall expire on **October 31, 2016.**

Notwithstanding the expiration date on the take authorization provided by this ITP, Permittee's obligations pursuant to this ITP do not end until CDFW accepts as complete the Permittee's Final Mitigation Report required by Condition of Approval 6.10 of this ITP.

---

[1]Pursuant to Fish and Game Code section 86, "'Take' means hunt, pursue, catch, capture, or kill, or attempt to hunt, pursue, catch, capture, or kill." See also *Environmental Protection Information Center v. California Department of Forestry and Fire Protection* (2008) 44 Cal.4th 459, 507 (for purposes of incidental take permitting under Fish and Game Code section 2081, subdivision (b), "'take' … means to catch, capture or kill").

[2]"The definition of an endangered, threatened, and candidate species for purposes of CESA are found in Fish and Game Code sections 2062, 2067, and 2068, respectively.

impacts to 0.87 acre of upland habitat, associated with temporary erosion controls along the new cut slopes, resulting in a total habitat disturbance of 2.73 acres of upland habitat.

All of the above will require grubbing and grading of the entire Project site, equipment storage, staging and laydown within the Caltrans ROW, cut and fill of the embankment slopes, and ground compaction.

Covered Species Subject to Take Authorization Provided by this ITP:

This ITP covers the following species:

Name	CESA Status
1. California tiger salamander (*Ambystoma californiense*) (CTS)	Threatened[3]

This species and only this species is the "Covered Species" for the purposes of this ITP.

Impacts of the Taking on Covered Species:

Project activities and their resulting impacts are expected to result in the incidental take of individuals of the Covered Species. Project-related activities expected to result in incidental take of individuals of the Covered Species include ground disturbance associated with tree removal and habitat clearing, grubbing, the removal and installation of barbed wire fence; installation and removal of Environmentally Sensitive Area (ESA) designation fences; installation and removal of exclusion fences; installation of erosion control materials including fiber rolls, silt fence, hydro-seeding, and other blown fiber soil stabilizing products; temporary sheet plastic installation for soil stabilization during storm events; installation of guard rails; decommissioning of the existing road surface; grading; excavation and stockpiling of material; deposition of new fill or back-fill; compaction from heavy equipment operations; road and shoulder construction and paving; use of equipment staging and storage areas; ground disturbance associated with the oak tree revegetation effort and follow-up revegetation maintenance; and maintenance of a portion of the old road as a soil storage area (Covered Activities). Operation and maintenance activities following construction are not Covered Activities.

Incidental take of individuals of the Covered Species in the form of mortality ("kill") may occur as a result of vehicle/equipment strikes during site preparation and hauling of materials and spoils; collapse or excavation of occupied burrows during vegetation removal, grubbing, cut/fill, grading, compaction, and trenching that results in crushing or suffocation of individuals residing underground; entombment of individuals from deposition of stockpiled material or spoils over occupied burrows; entombment of individuals during vegetation, compaction, and grading activities; entrapment and burial within uncovered excavations; crushing by equipment; and vehicle strikes on access roads from Project-related traffic. Incidental take of

[3]See Cal. Code Regs. tit. 14 § 670.5, subd. (b)(3)(G).

2. **CEQA Compliance:** Permittee shall implement and adhere to the mitigation measures related to the Covered Species in the Biological Resources section of the Mitigated Negative Declaration and Initial Study (SCH No.: 2012071077) adopted by State of California Department of Transportation on June 25, 2013, as lead agency for the Project pursuant to the California Environmental Quality Act (CEQA) (Pub. Resources Code, § 21000 et seq.).

3. **ESA Compliance:** Permittee shall implement and adhere to the terms and conditions related to the Covered Species in the Biological Opinion on the State Route 25 Curve Correction Project San Benito County, California (08EVEN00-2013-F-0077) for the Project pursuant to the Federal Endangered Species Act (ESA). For purposes of this ITP, where the terms and conditions for the Covered Species in the federal authorization are less protective of the Covered Species or otherwise conflict with this ITP, the conditions of approval set forth in this ITP shall control.

4. **ITP Time Frame Compliance:** Permittee shall fully implement and adhere to the conditions of this ITP within the time frames set forth below and as set forth in the Mitigation Monitoring and Reporting Program (MMRP), which is included as Attachment 1 to this ITP.

5. **General Provisions:**

5.1. Designated Representative. Before starting Covered Activities, Permittee shall designate a representative (Designated Representative) responsible for communications with CDFW and overseeing compliance with this ITP. Permittee shall notify CDFW in writing before starting Covered Activities of the Designated Representative's name, business address, and contact information, and shall notify CDFW in writing if a substitute Designated Representative is selected or identified at any time during the term of this ITP.

5.2. Designated Biologist. Permittee shall submit to CDFW in writing the name, qualifications, business address, and contact information of a biological monitor (Designated Biologist) before starting Covered Activities. Permittee shall ensure that the Designated Biologist is knowledgeable and experienced in the biology, natural history, collecting and handling of the Covered Species. The Designated Biologist shall be responsible for monitoring Covered Activities to help minimize and fully mitigate or avoid the incidental take of individual Covered Species and to minimize disturbance of Covered Species' habitat. Permittee shall obtain CDFW approval of the Designated Biologist in writing before starting Covered Activities, and shall also obtain approval in advance in writing if the Designated Biologist must be changed. The Designated Biologist(s) may be assisted by approved biologists identified as Designated Monitors that have Covered Species experience but do

5.8. Erosion Control Materials. Permittee shall prohibit use of erosion control materials potentially harmful to Covered Species and other species, such as monofilament netting (erosion control matting) or similar material, in potential Covered Species' habitat.

5.9. Delineation of Property Boundaries. Before starting Covered Activities, Permittee shall clearly delineate the boundaries of the Project Area with fencing, stakes, or flags. Permittee shall restrict all Covered Activities to within the fenced, staked, or flagged areas. Permittee shall maintain all fencing, stakes, and flags until the completion of Covered Activities.

5.10. Delineation of Habitat. Permittee shall clearly delineate habitat of the Covered Species within the Project Area with posted signs, posting stakes, flags, and/or rope or cord, and place fencing as necessary to minimize the disturbance of Covered Species' habitat.

5.11. Project Access. Project-related personnel shall access the Project Area using existing routes, and shall not cross Covered Species' habitat outside of or en route to the Project Area. Permittee shall restrict Project-related vehicle traffic to established roads, staging, and parking areas. If Permittee determines construction of routes for travel are necessary outside of the Project Area, the Designated Representative shall contact CDFW for written approval before carrying out such an activity. CDFW may require an amendment to this ITP, among other reasons, if additional take of Covered Species will occur as a result of the Project modification.

5.12. Staging Areas. Permittee shall confine all Project-related parking, storage areas, laydown sites, equipment storage, and any other surface-disturbing activities to the Project Area using, to the extent possible, previously disturbed areas. Additionally, Permittee shall not use or cross Covered Species' habitat outside of the marked Project Area unless provided for as described in Condition of Approval 5.11 of this ITP.

5.13. Hazardous Waste. Permittee shall immediately stop and, pursuant to pertinent state and federal statutes and regulations, arrange for repair and clean up by qualified individuals of any fuel or hazardous waste leaks or spills at the time of occurrence, or as soon as it is safe to do so. Permittee shall exclude the storage and handling of hazardous materials from the Project Area and shall properly contain and dispose of any unused or leftover hazardous products off-site.

5.14. CDFW Access. Permittee shall provide CDFW staff with reasonable access to the Project, and shall otherwise fully cooperate with CDFW efforts to verify compliance with or effectiveness of mitigation measures set forth in this ITP.

compliance inspections, observations of Covered Species and their sign, survey results, and monitoring activities required by this ITP.

6.6. Monthly Compliance Report. The Designated Representative or Designated Biologist shall compile the observation and inspection records identified in Condition of Approval 6.5 into a Monthly Compliance Report and submit it to CDFW along with a copy of the MMRP table with notes showing the current implementation status of each mitigation measure. Monthly Compliance Reports shall be submitted to CDFW's Regional Office at the office listed in the Notices section of this ITP and via e-mail to CDFW's Regional Representative. At the time of this ITP's approval, the CDFW Regional Representative is Laura Peterson-Diaz (laura.peterson-diaz@wildlife.ca.gov). CDFW may at any time increase the timing and number of compliance inspections and reports required under this provision depending upon the results of previous compliance inspections. If CDFW determines the reporting schedule must be changed, CDFW will notify Permittee in writing of the new reporting schedule.

6.7. Annual Status Report. Permittee shall provide CDFW with an Annual Status Report (ASR) no later than January 31 of every year beginning with issuance of this ITP and continuing until CDFW accepts the Final Mitigation Report identified below. Each ASR shall include, at a minimum: (1) a summary of all Monthly Compliance Reports for that year identified in Condition of Approval 6.6; (2) a general description of the status of the Project Area and Covered Activities, including actual or projected completion dates, if known; (3) a copy of the table in the MMRP with notes showing the current implementation status of each mitigation measure; (4) an assessment of the effectiveness of each completed or partially completed mitigation measure in avoiding, minimizing and mitigating Project impacts; (5) all available information about Project-related incidental take of the Covered Species; and (6) information about other Project impacts on the Covered Species.

6.8. CNDDB Observations. The Designated Biologist shall submit all observations of Covered Species to CDFW's California Natural Diversity Database (CNDDB) within 60 calendar days of the observation and the Designated Biologist shall include copies of the submitted forms with the next Monthly Compliance Report or ASR, whichever is submitted first relative to the observation.

6.9. Vegetation Restoration Plan. The Permittee shall prepare a Vegetation Restoration Plan within six (6) months of issuance of this ITP as described in Condition of Approval 8.2.

6.10. Final Mitigation Report. No later than 45 days after completion of all mitigation measures, Permittee shall provide CDFW with a Final Mitigation Report. The

Condition of Approval 6.3. These surveys shall cover the existing access routes and the proposed construction Project work area(s), with a 50-foot buffer zone.

7.3. Temporary Exclusion Fencing. Prior to any surface disturbance, Permittee shall install temporary exclusion fencing (exclusion fence) around the perimeter of all the Project work area(s). Permittee shall install exclusion fencing to avoid Covered Species burrows, so that the burrows are isolated from the active work area when possible. The Designated Biologist shall accompany the exclusion fence construction crew to ensure that Covered Species are not killed or injured during fence installation. An alternative exclusion fence design may be used if CDFW has provided written approval in advance of fence installation. The exclusion fence shall be supported sufficiently to maintain its integrity under all conditions such as wind and heavy rain for the duration of the active construction period. Silt fencing shall not be used as exclusion fencing under this requirement. Permittee shall check the exclusion fence at least once weekly and maintain/repair the fence when necessary.

7.4. Clearance Surveys. Prior to any ground disturbance within Project Area, the Designated Biologist(s) shall examine the portions of the Project Area to be disturbed for small mammal burrows and Covered Species. The survey shall provide 100 percent coverage of the Project limits. Any new small mammal burrows shall be marked with flagging. Any Covered Species detected within the Project Area shall be relocated as per an approved Relocation Plan prepared pursuant to Condition of Approval 6.3.

7.5. Burrow Excavation. After conducting the clearance survey required by Condition of Approval 7.4, all small mammal burrows present within the portion of the Project area to be disturbed or that cannot be avoided by 50 feet shall be fully excavated by hand by the Designated Biologist(s), and then collapsed. Any live Covered Species salvaged during burrow excavation shall be relocated as per an approved Relocation Plan prepared pursuant to Condition of Approval 6.3.

7.6. Covered Species in the Project Area. If any Covered Species are found in the Project Area during Covered Activities, all work that could potentially harm the Covered Species shall stop immediately until the Designated Biologist(s) can relocate the Covered Species following the CDFW approved Relocation Plan prepared pursuant to Condition of Approval 6.3 or it leaves the Project Area on its own accord.

7.7. Record of Handling. All Covered Species captures and sightings confirmed by the Designated Biologist(s) shall include the following documented information: the date, time, and location of each occurrence using Global Positioning System (GPS)

shall move the Covered Species out of harm's way outside of the Project Area and in compliance with the approved Relocation Plan required in Condition of Approval 6.3. The Designated Biologist shall relocate any Covered Species observed within the temporary exclusion fence (Condition of Approval 7.3).

7.11. Stockpiles. Permittee shall place soil stockpiles where soil shall not pass into potential Covered Species breeding pools; nor shall it pass into any other "Waters of the State," in accordance with Fish and Game Code 5650. Permittee shall appropriately protect stockpiles to prevent soil erosion.

7.12. Daily Entrapment Inspections. All trenches, holes or other excavations with sidewalls steeper than a 1:1 slope shall be covered when not actively being worked on, or shall have an escape ramp of earth of a non-slip material with a less than 1:1 slope. Either the Designated Biologist or Monitor shall inspect all open trenches, auger holes, and other excavations that may trap Covered Species prior to any work in or around them and immediately prior to being backfilled. Only the Designated Biologist(s) is/are authorized to safely remove and relocate any Covered Species found in accordance with the CDFW approved Relocation Plan prepared pursuant to Condition of Approval 6.3.

7.13. Covered Species Injury. If a Covered Species is injured as a result of Project-related activities, the Designated Biologist shall immediately take it to a CDFW-approved wildlife rehabilitation or veterinary facility. Permittee shall identify the facility before starting Covered Activities. Permittee shall bear any costs associated with the care or treatment of such injured Covered Species. The Permittee shall notify CDFW of the injury to the Covered Species immediately by telephone and e-mail followed by a written incident report as described in Condition of Approval 6.11. Notification shall include the name of the facility where the animal was taken.

8. Habitat Management Land Acquisition:

CDFW has determined that permanent protection and perpetual management of compensatory habitat is necessary and required pursuant to CESA to fully mitigate Project-related impacts of the taking on the Covered Species that will result with implementation of the Covered Activities. This determination is based on factors including an assessment of the importance of the habitat in the Project Area, the extent to which the Covered Activities will impact the habitat, and CDFW's estimate of the acreage required to provide for adequate compensation.

To meet this requirement, the Permittee shall purchase 6.54 acres of Covered Species credits from a CDFW-approved mitigation or conservation bank. Purchase of Covered Species Credits must be complete before starting Covered Activities or within 18 months

9.3. Security Timeline. The Security shall be provided to CDFW a minimum of 30 days before the start of Covered Activities.

9.4. Security Holder. The Security shall be held by CDFW or in a manner approved in advance in writing by CDFW.

9.5. Security Transmittal. If CDFW holds the Security, Permittee shall transmit it to CDFW with a completed Mitigation Payment Transmittal Form (see Attachment 2) or by way of an approved instrument such as escrow, irrevocable letter of credit, or other.

9.6. Security Drawing. The Security shall allow CDFW to draw on the principal sum if CDFW, in its sole discretion, determines that the Permittee has failed to comply with the Conditions of Approval of this ITP.

9.7. Security Release. The Security (or any portion of the Security then remaining) shall be released to the Permittee after CDFW has conducted an on-site inspection and received confirmation that all secured requirements have been satisfied, as evidenced by:

- Written documentation of the acquisition of the HM lands;
- Copies of all executed and recorded conservation easements;
- Written confirmation from the approved Endowment Manager of its receipt of the full Endowment; and
- Timely submission of all required reports.

Even if Security is provided, the Permittee must complete the purchase of Covered Species Credits from a CDFW-approved mitigation or conservation bank no later than 18 months from the effective date of this ITP. CDFW may require the Permittee to provide additional HM lands or Covered Species Credits and/or additional funding to ensure the impacts of the taking are minimized and fully mitigated, as required by law, if the Permittee does not complete these requirements within the specified timeframe.

Amendment:
This ITP may be amended as provided by California Code of Regulations, Title 14, section 783.6, subdivision (c), and other applicable law. This ITP may be amended without the concurrence of the Permittee as required by law, including if CDFW determines that continued implementation of the Project as authorized under this ITP would jeopardize the continued existence of the Covered Species or where Project changes or changed biological conditions necessitate an ITP amendment to ensure that all Project-related impacts of the taking to the Covered Species are minimized and fully mitigated.

Unless Permittee is notified otherwise, CDFW's Regional Representative for purposes of addressing issues that arise during implementation of this ITP is:

Laura Peterson-Diaz
California Department of Fish and Wildlife
Region 4 - Central Region
1234 East Shaw Avenue
Fresno, California 93710
Phone: (559) 243-4017, extension 225
Fax: (559) 243-4020
Laura.Peterson-Diaz@wildlife.ca.gov

Compliance with CEQA:
CDFW's issuance of this ITP is subject to CEQA. CDFW is a responsible agency pursuant to CEQA with respect to this ITP because of prior environmental review of the Project by the lead agency, California Department of Transportation. (See generally Pub. Resources Code, §§ 21067, 21069.) The lead agency's prior environmental review of the Project is set forth in the Mitigated Negative Declaration and Initial Study (State Clearinghouse No.: 2012122051) dated March 19, 2013 that the California Department of Transportation adopted for SR 25 Curve Correction on June 25, 2013. At the time the lead agency adopted the Mitigated Negative Declaration and approved the Project it also adopted various mitigation measures for the Covered Species as conditions of Project approval.

This ITP, along with CDFW's related CEQA findings, which are available as a separate document, provide evidence of CDFW's consideration of the lead agency's Mitigated Negative Declaration for the Project and the environmental effects related to issuance of this ITP (CEQA Guidelines, § 15096, subd. (f)). CDFW finds that issuance of this ITP will not result in any previously undisclosed potentially significant effects on the environment or a substantial increase in the severity of any potentially significant environmental effects previously disclosed by the lead agency. Furthermore, to the extent the potential for such effects exists, CDFW finds adherence to and implementation of the Conditions of Project Approval adopted by the lead agency, and that adherence to and implementation of the Conditions of Approval imposed by CDFW through the issuance of this ITP, will avoid or reduce to below a level of significance any such potential effects. CDFW consequently finds that issuance of this ITP will not result in any significant, adverse impacts on the environment.

Findings Pursuant to CESA:
These findings are intended to document CDFW's compliance with the specific findings requirements set forth in CESA and related regulations. (Fish & G. Code § 2081, subs. (b)-(c); Cal. Code Regs., tit. 14, §§ 783.4, subds, (a)-(b), 783.5, subd. (c)(2).)

this finding includes consideration of the species' capability to survive and reproduce, and any adverse impacts of the taking on those abilities in light of (1) known population trends; (2) known threats to the species; and (3) reasonably foreseeable impacts on the species from other related projects and activities. Moreover, CDFW's finding is based, in part, on CDFW's express authority to amend the terms and conditions of this ITP without concurrence of the Permittee as necessary to avoid jeopardy and as required by law.

Attachments:

FIGURE 1	Map of Project Location
FIGURE 2	Map of Project Area
ATTACHMENT 1	Mitigation Monitoring and Reporting Program
ATTACHMENT 2	Mitigation Payment Transmittal Form

ISSUED BY THE CALIFORNIA DEPARTMENT OF FISH AND WILDLIFE

on 6.13.14

Jeffrey R. Single, Ph.D.
Regional Manager
CENTRAL REGION

ACKNOWLEDGMENT

The undersigned: (1) warrants that he or she is acting as a duly authorized representative of the Permittee, (2) acknowledges receipt of this ITP, and (3) agrees on behalf of the Permittee to comply with all terms and conditions

By: Janet A. Newland Date: 6-23-2014

Printed Name: Janet A. Newland Title: Supervising Environmental Planner

Figure 1 Project Location Map

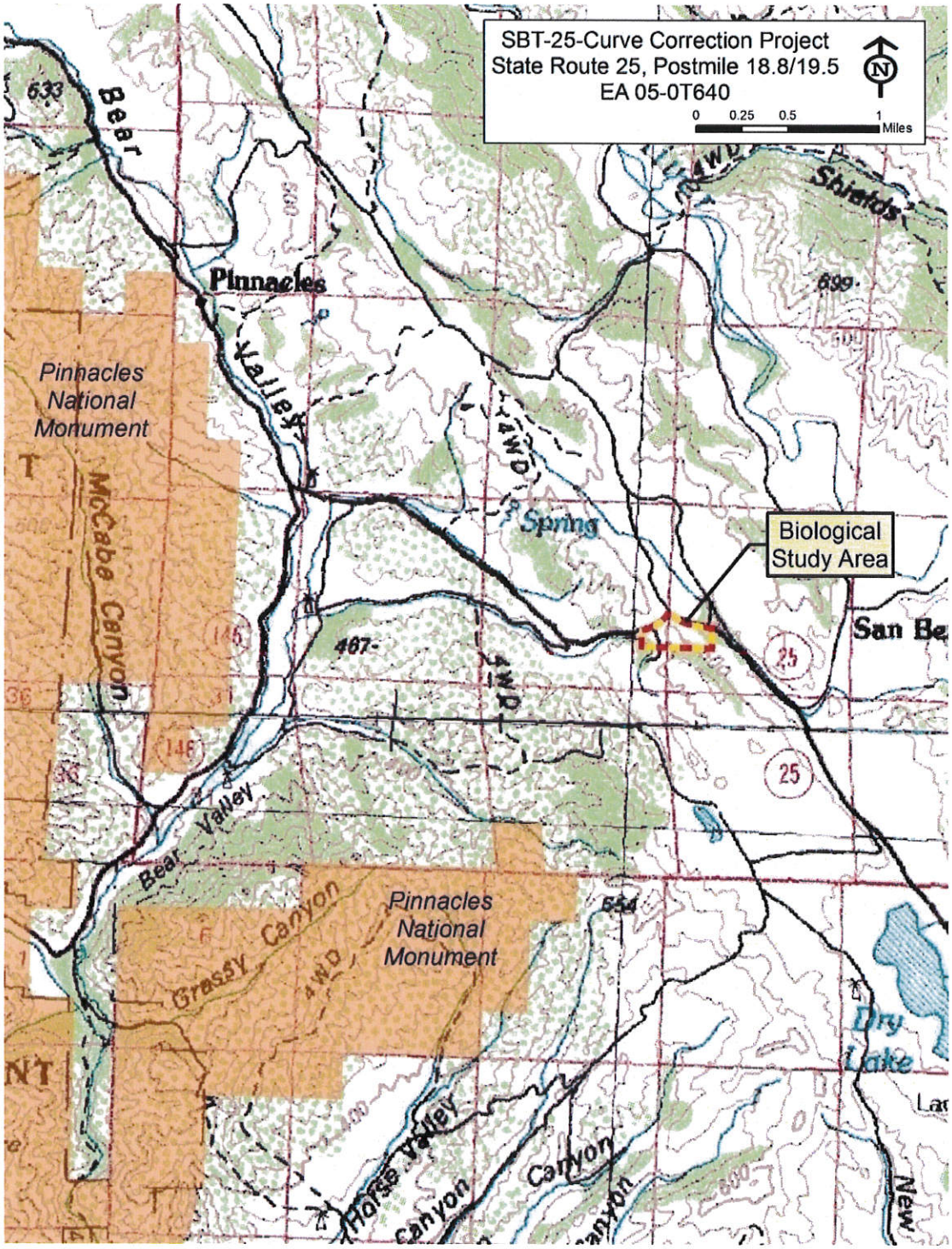

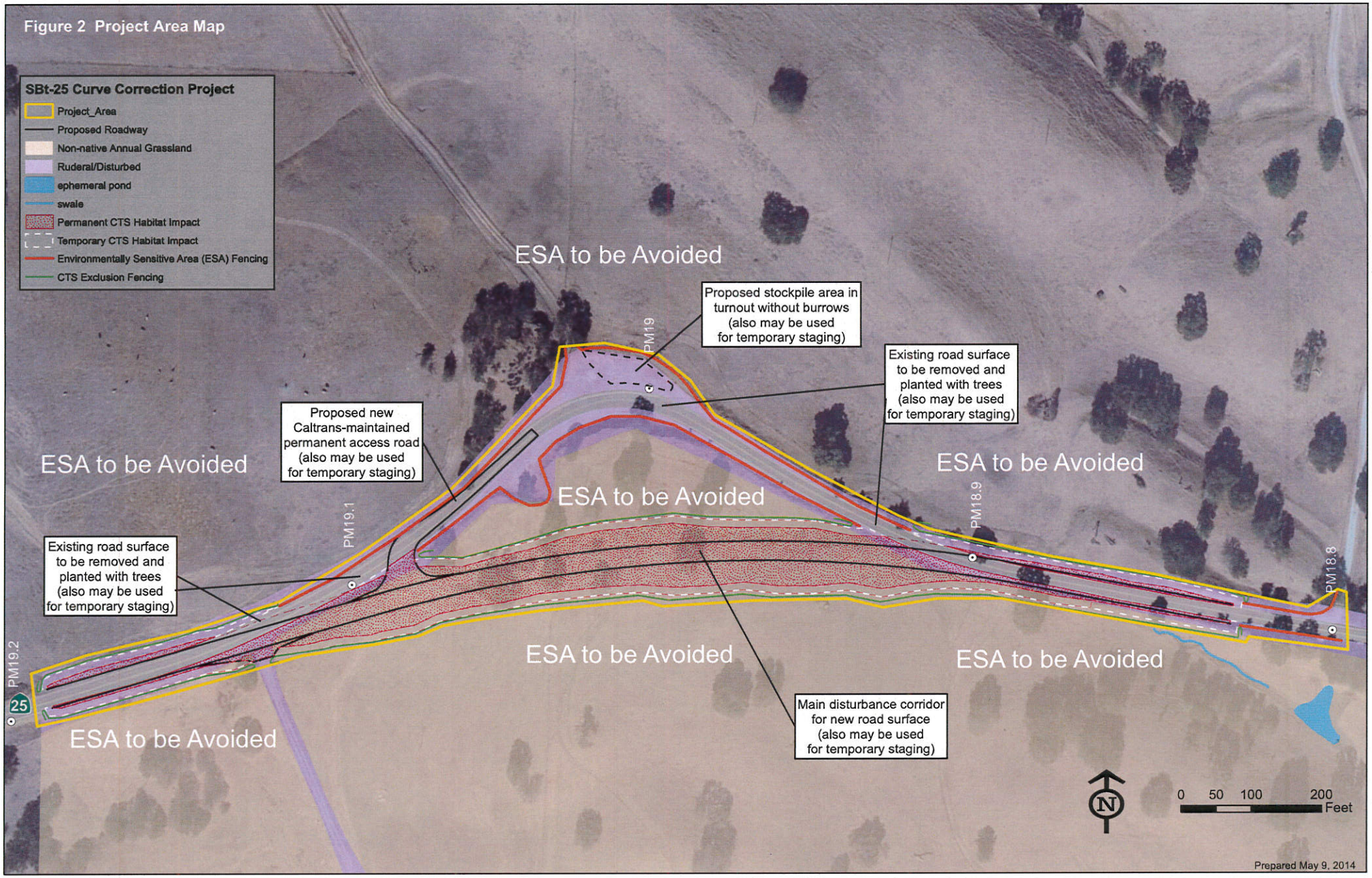
Figure 2 Project Area Map
SBt-25 Curve Correction Project
Project_Area
Proposed Roadway
Non-native Annual Grassland
Ruderal/Disturbed
ephemeral pond
swale
Permanent CTS Habitat Impact
Temporary CTS Habitat Impact
Environmentally Sensitive Area (ESA) Fencing
CTS Exclusion Fencing
ESA to be Avoided
Proposed stockpile area in turnout without burrows (also may be used for temporary staging)
PM19
Existing road surface to be removed and planted with trees (also may be used for temporary staging)
Proposed new Caltrans-maintained permanent access road (also may be used for temporary staging)
ESA to be Avoided
ESA to be Avoided
ESA to be Avoided
PM19.1
PM18.9
PM18.8
Existing road surface to be removed and planted with trees (also may be used for temporary staging)
PM19.2
25
ESA to be Avoided
ESA to be Avoided
ESA to be Avoided
Main disturbance corridor for new road surface (also may be used for temporary staging)
N
0 50 100 200 Feet
Prepared May 9, 2014

Attachment 1

CALIFORNIA DEPARTMENT OF FISH AND WILDLIFE
MITIGATION MONITORING AND REPORTING PROGRAM (MMRP)
CALIFORNIA ENDANGERED SPECIES ACT

INCIDENTAL TAKE PERMIT NO. 2081-2014-010-04

PERMITTEE: **California Department of Transportation (Caltrans)**

PROJECT: **SBt-25 Curve Correction**

PURPOSE OF THE MMRP

The purpose of the MMRP is to ensure that the impact minimization and mitigation measures required by the Department of Fish and Wildlife (CDFW) for the above-referenced Project are properly implemented, and thereby to ensure compliance with section 2081(b) of the Fish and Game Code and section 21081.6 of the Public Resources Code. A table summarizing the mitigation measures required by CDFW is attached. This table is a tool for use in monitoring and reporting on implementation of mitigation measures, but the descriptions in the table do not supersede the mitigation measures set forth in the California Incidental Take Permit (ITP) and in attachments to the ITP, and the omission of a permit requirement from the attached table does not relieve the Permittee of the obligation to ensure the requirement is performed.

OBLIGATIONS OF PERMITTEE

Mitigation measures must be implemented within the time periods indicated in the table that appears below. Permittee has the primary responsibility for monitoring compliance of all mitigation measures and for reporting to CDFW on the progress in implementing those measures. These monitoring and reporting requirements are set forth in the ITP itself and are summarized at the front of the attached table.

VERIFICATION OF COMPLIANCE, EFFECTIVENESS

CDFW may, at its sole discretion, verify compliance with any mitigation measure or independently assess the effectiveness of any mitigation measure.

TABLE OF MITIGATION MEASURES

The following items are identified for each mitigation measure: Mitigation Measure, Source, Implementation Schedule, Responsible Party, and Status/Date/Initials. The Mitigation Measure column summarizes the mitigation requirements of the ITP. The Source column identifies the ITP condition that sets forth the mitigation measure. The Implementation Schedule column shows the date or phase when each mitigation measure will be implemented. The Responsible Party column identifies the person or agency that is primarily responsible for implementing the mitigation measure. The Status/Date/Initials column shall be completed by the Permittee during preparation of each Status Report and the Final Mitigation Report, and must identify the implementation status of each mitigation measure, the date that status was determined, and the initials of the person determining the status.

	Mitigation Measure	Source	Implementation Schedule	Responsible Party	Status / Date / Initials
6	Delineation of Property Boundaries. Before starting Covered Activities, Permittee shall clearly delineate the boundaries of the Project Area with fencing, stakes, or flags. Permittee shall restrict all Covered Activities to within the fenced, staked, or flagged areas. Permittee shall maintain all fencing, stakes, and flags until the completion of Covered Activities.	ITP Condition # 5.9	Before commencing ground- or vegetation-disturbing activities/ Entire Project	Permittee	
7	Delineation of Habitat. Permittee shall clearly delineate habitat of the Covered Species within the Project Area with posted signs, posting stakes, flags, and/or rope or cord, and place fencing as necessary to minimize the disturbance of Covered Species' habitat.	ITP Condition # 5.10	Before commencing ground- or vegetation-disturbing activities / Entire Project	Permittee	
8	Project Access. Project-related personnel shall access the Project Area using existing routes, and shall not cross Covered Species' habitat outside of or en route to the Project Area. Permittee shall restrict Project-related vehicle traffic to established roads, staging, and parking areas. If Permittee determines construction of routes for travel are necessary outside of the Project Area, the Designated Representative shall contact CDFW for written approval before carrying out such an activity. CDFW may require an amendment to the ITP, among other reasons, if additional take of Covered Species will occur as a result of the Project modification.	ITP Condition # 5.11	Before commencing ground- or vegetation-disturbing activities / Entire Project	Permittee	
9	Notification Before Commencement. The Designated Representative shall notify CDFW 14 calendar days before starting Covered Activities and shall document compliance with all pre-Project Conditions of Approval before starting Covered Activities.	ITP Condition # 6.1	Before commencing ground- or vegetation-disturbing activities	Permittee	
10	California Tiger Salamander Relocation Plan. The Designated Biologist shall prepare a California tiger salamander relocation plan (Relocation Plan) and submit it to CDFW for approval prior to beginning Covered Activities. The Relocation Plan shall include, but not be limited to, identification of capture methods, handling methods, relocation methods, identification of relocation areas, and identification of a wildlife rehabilitation center or veterinary facility. Covered Activities may not proceed until CDFW approves the relocation plan in writing. Only approved Designated Biologist(s) are authorized to capture and handle Covered Species.	ITP Condition # 6.3	Before commencing ground- or vegetation-disturbing activities	Permittee	
11	Pre-construction Survey Report. The Designated Biologist shall submit a report documenting the results of the pre-construction survey to CDFW within five (5) days after performing the survey described in in Condition of Approval 7.2.	ITP Condition # 6.4	Before commencing ground- or vegetation-disturbing activities	Permittee	
12	Cost Estimates. CDFW has estimated the cost of CDFW-approved mitigation or conservation bank Covered Species credits and restoration of temporarily disturbed habitat as follows: Purchase of Covered Species Credits from a CDFW-approved mitigation or conservation bank identified in Condition of Approval 8 above, estimated at $40,000.00/acre for 6.54 acres: **$261,600.00**.; Restoration of on-site temporary effects to Covered Species habitat as described in [Condition of Approval 8.6], calculated at $37,000/acre for 0.87 acre: **$32,190.00**.	ITP Condition # 8.1	Before commencing ground- or vegetation-disturbing activities (or within 18 months of issuance of the ITP if Security is provided)	Permittee	

	Mitigation Measure	Source	Implementation Schedule	Responsible Party	Status / Date / Initials
DURING CONSTRUCTION					
14	Designated Biologist Authority. To ensure compliance with the Conditions of Approval of the ITP, the Designated Biologist and Designated Monitors shall have authority to immediately stop any activity that does not comply with the ITP, and/or to order any reasonable measure to avoid the unauthorized take of an individual of the Covered Species.	ITP Condition # 5.3	Entire Project	CDFW	
15	Construction Monitoring Notebook. The Designated Biologist shall maintain a construction-monitoring notebook on-site throughout the construction period, which shall include a copy of the ITP with attachments and a list of signatures of all personnel who have successfully completed the education program. Permittee shall ensure a copy of the construction-monitoring notebook is available for review at the Project site upon request by CDFW.	ITP Condition # 5.5	Entire Project	Permittee	
16	Erosion Control Materials. Permittee shall prohibit use of erosion control materials potentially harmful to Covered Species and other species, such as monofilament netting (erosion control matting) or similar material, in potential Covered Species' habitat.	ITP Condition # 5.8	Entire Project	Permittee	
17	Staging Areas. Permittee shall confine all Project-related parking, storage areas, laydown sites, equipment storage, and any other surface-disturbing activities to the Project Area using, to the extent possible, previously disturbed areas. Additionally, Permittee shall not use or cross Covered Species' habitat outside of the marked Project Area unless provided for as described in Condition of Approval 6.11 of the ITP.	ITP Condition # 5.12	Entire Project	Permittee	
18	Hazardous Waste. Permittee shall immediately stop and, pursuant to pertinent state and federal statutes and regulations, arrange for repair and clean up by qualified individuals of any fuel or hazardous waste leaks or spills at the time of occurrence, or as soon as it is safe to do so. Permittee shall exclude the storage and handling of hazardous materials from the Project Area and shall properly contain and dispose of any unused or leftover hazardous products off-site.	ITP Condition # 5.13	Entire Project	Permittee	
19	CDFW Access. Permittee shall provide CDFW staff with reasonable access to the Project, and shall otherwise fully cooperate with CDFW efforts to verify compliance with or effectiveness of mitigation measures set forth in the ITP.	ITP Condition # 5.14	Entire Project	Permittee	
20	Notification of Non-compliance. The Designated Representative shall immediately notify CDFW in writing if it determines that the Permittee is not in compliance with any Condition of Approval of the ITP, including but not limited to any actual or anticipated failure to implement measures within the time periods indicated in the ITP and/or this MMRP. The Designated Representative shall report any non-compliance with the ITP to CDFW within 24 hours.	ITP Condition # 6.2	Entire Project	Permittee	
21	Compliance Monitoring. The Designated Biologist shall be on-site daily during all initial surface-disturbing activities and shall conduct compliance inspections a minimum of once per week during periods of inactivity and after clearing, grubbing, and grading are completed. The Designated Biologist shall conduct compliance inspections to (1) minimize incidental take of the Covered Species; (2) prevent unlawful take of species; (3) check for compliance with all measures of the ITP; (4) check all exclusion zones; and (5) ensure that signs, stakes, and fencing are intact, and that Covered Activities are only occurring in the Project Area. The Designated Representative or Designated Biologist shall prepare daily written observation and inspection records summarizing: oversight activities and compliance inspections, observations of Covered Species and their sign, survey results, and monitoring activities required by the ITP.	ITP Condition # 6.5	Entire Project	Permittee	

	Mitigation Measure	Source	Implementation Schedule	Responsible Party	Status / Date / Initials
28	Pre-construction Surveys. Prior to ground-disturbance activities, the Designated Biologist shall be present to perform pre-construction surveys for the Covered Species, and shall remain on-site until temporary exclusion fencing has been installed to preclude Covered Species from entering the work area in accordance with Condition of Approval 7.3 below, clearance surveys have been completed in accordance with Condition of Approval 7.4, all burrows have been excavated in accordance with Condition of Approval 7.5, and any Covered Species within the exclusion fence have been relocated pursuant to the Relocation Plan required in Condition of Approval 6.3. These surveys shall cover the existing access routes and the proposed construction Project work area(s), with a 50-foot buffer zone.	ITP Condition # 7.2	Entire Project	Permittee	
29	Temporary Exclusion Fencing. Prior to any surface disturbance, Permittee shall install temporary exclusion fencing (exclusion fence) around the perimeter of all the Project work area(s). Permittee shall install exclusion fencing to avoid Covered Species burrows, so that the burrows are isolated from the active work area when possible. The Designated Biologist shall accompany the exclusion fence construction crew to ensure that Covered Species are not killed or injured during fence installation. An alternative exclusion fence design may be used if CDFW has provided written approval in advance of fence installation. The exclusion fence shall be supported sufficiently to maintain its integrity under all conditions such as wind and heavy rain for the duration of the active construction period. Silt fencing shall not be used as exclusion fencing under this requirement. Permittee shall check the exclusion fence at least once weekly and maintain/repair the fence when necessary.	ITP Condition # 7.3	Entire Project	Permittee	
30	Clearance Surveys. Prior to any ground disturbance within Project Area, the Designated Biologist(s) shall examine the portions of the Project Area to be disturbed for small mammal burrows and Covered Species. The survey shall provide 100 percent coverage of the Project limits. Any new small mammal burrows shall be marked with flagging. Any Covered Species detected within the Project Area shall be relocated as per an approved Relocation Plan prepared pursuant to Condition of Approval 6.3.	ITP Condition # 7.4	Entire Project	Permittee	
31	Burrow Excavation. After conducting the clearance survey required by Condition of Approval 7.4, all small mammal burrows present within the portion of the Project area to be disturbed or that cannot be avoided by 50 feet shall be fully excavated by hand by the Designated Biologist(s), and then collapsed. Any live Covered Species salvaged during burrow excavation shall be relocated as per an approved Relocation Plan prepared pursuant to Condition of Approval 6.3.	ITP Condition # 7.5	Entire Project	Permittee	
32	Covered Species in the Project Area. If any Covered Species are found in the Project Area during Covered Activities, all work that could potentially harm the Covered Species shall stop immediately until the Designated Biologist(s) can relocate the Covered Species following the CDFW approved Relocation Plan prepared pursuant to Condition of Approval 6.3 or it leaves the Project Area on its own accord.	ITP Condition # 7.6	Entire Project	Permittee	
33	Record of Handling. All Covered Species captures and sightings confirmed by the Designated Biologist(s) shall include the following documented information: the date, time, and location of each occurrence using Global Positioning System (GPS) technology, the name of the party that actually identified the animal, circumstances of the incident, the general condition and health of each individual, any diagnostic markings, sex, age (juvenile or adult), and actions undertaken and habitat description. Permittee shall submit this information to the CNDDB as per Condition of Approval 6.8. This information shall also be included in the Monthly Compliance Report.	ITP Condition # 7.7	Entire Project	Permittee	

	Mitigation Measure	Source	Implementation Schedule	Responsible Party	Status / Date / Initials
39	Covered Species Injury. If a Covered Species is injured as a result of Project-related activities, the Designated Biologist shall immediately take it to a CDFW-approved wildlife rehabilitation or veterinary facility. Permittee shall identify the facility before starting Covered Activities. Permittee shall bear any costs associated with the care or treatment of such injured Covered Species. The Permittee shall notify CDFW of the injury to the Covered Species immediately by telephone and e-mail followed by a written incident report as described in Condition of Approval 6.10. Notification shall include the name of the facility where the animal was taken.	ITP Condition # 7.13	Entire Project	Permittee	
POST-CONSTRUCTION					
40	Refuse Removal. Upon completion of Covered Activities, Permittee shall remove from the Project Area and properly dispose of all construction refuse, including, but not limited to, broken equipment parts, wrapping material, cords, cables, wire, rope, strapping, twine, buckets, metal or plastic containers, and boxes.	ITP Condition # 5.15	Post-construction	Permittee	
41	Habitat Restoration. Permittee shall restore on-site the 0.87 acre of Covered Species habitat that will be temporarily disturbed during construction to pre-project or better conditions. Within six (6) months of issuance of the ITP, the Permittee shall prepare a Vegetation Restoration Plan to facilitate revegetation of the 0.87 acre of temporary construction disturbance on-site, and shall ensure that the Plan is successfully implemented by the contractor. The Plan shall include detailed specifications for restoring all temporarily disturbed areas, such as seed mixes and application methods. The plan shall also indicate the best time of year for seeding to occur. The Permittee shall obtain CDFW written approval of the Vegetation Restoration Plan prior to commencement of restoration activities and shall ensure the Vegetation Restoration Plan is successfully implemented.	ITP Condition # 8.2	Post-construction	Permittee	
42	Final Mitigation Report. No later than 45 days after completion of all mitigation measures, Permittee shall provide CDFW with a Final Mitigation Report. The Designated Biologist shall prepare the Final Mitigation Report which shall include, at a minimum: (1) a summary of all Monthly Compliance Reports and all ASRs; (2) a copy of the table in this MMRP with notes showing when each of the mitigation measures was implemented; (3) all available information about Project-related incidental take of the Covered Species; (4) information about other Project impacts on the Covered Species; (5) beginning and ending dates of Covered Activities; (6) an assessment of the effectiveness of the ITP's Conditions of Approval in minimizing and fully mitigating Project impacts of the taking on Covered Species; (7) recommendations on how mitigation measures might be changed to more effectively minimize take and mitigate the impacts of future projects on the Covered Species; and (8) any other pertinent information.	ITP Condition # 6.10	Post-construction and after completion of mitigation	Permittee	

Attachment 2

California Department of Fish and Wildlife

Mitigation Payment Transmittal Form

Project Applicant Instructions: Please fill out and attach this form to payment. For conservation banks, also attach the Bill(s) of Sale for credits sold. One form may be used for multiple transactions, **BUT YOU MUST USE A SEPARATE FORM FOR EACH CHECK YOU TRANSMIT**. Make sure to include Project Name, Project Tracking Number, and FASB Mitigation Tracking Number (if available) on the attached payment type.

(1) **DATE:** _____

TO: _____
[CDFW Regional Manager]

_____
[CDFW Region Office Address]

(2) **FROM:** _____
Name

_____
Mailing Address

_____
City, State, Zip

_____
Telephone Number/FAX Number

(3) **RE:** _____
[Project Name as appears on permit/agreement]

(4) **AGREEMENT/ACCOUNT INFORMATION:**
(Check the applicable type)

☐ 2081 Permit ☐ Conservation Bank ☐ 1802 Agreement

☐ 2835 NCCP ☐ Other _____

XXXX-XXXX-XXX-XX
[Project Tracking Number]

_____
[FASB Mitigation Tracking Number (if available)]

Index _____ PCA_____

(5) PAYMENT TYPE (One check per form only): The following funds are being remitted in connection with the above referenced project:

Check information:

Total $_____ Check No. _____

Account No. _____ Bank Routing No. _____

a. Endowment: for Long-Term Management Subtotal $_____

b. Habitat Enhancement Subtotal $_____

c. Security:

1. Cash Refundable Security Deposit Subtotal $_____

2. Letter of Credit Subtotal $_____

1. Financial Institution: _____

2. Letter of Credit Number: _____

3. Date of Expiration: _____

United States Department of the Interior

FISH AND WILDLIFE SERVICE
Ventura Fish and Wildlife Office
2493 Portola Road, Suite B
Ventura, California 93003

IN REPLY REFER TO:
08EVEN00-2013-F-0077

February 14, 2013

Geoff Heotker
Associate Environmental Planner/Biologist
California Department of Transportation
50 Higuera Street
San Luis Obispo, California 93401

Subject: Biological Opinion on the State Route-25 Curve Correction Project, San Benito County, California (8-8-13-F-6)

Dear Mr. Hoetker:

This document transmits the U.S. Fish and Wildlife Service's (Service) biological opinion based on our review of the proposed State Route-25 Curve Correction Project, San Benito County, California. The California Department of Transportation (Caltrans), in conjunction with the Federal Highway Administration, proposes to improve the safety of State Route-25 in San Benito County.

Caltrans has requested our concurrence that the subject project may affect, but is not likely to adversely affect the federally threatened vernal pool fairy shrimp (*Branchinecta lynchi*) and the federally endangered San Joaquin kit fox (*Vulpes macrotis mutica*). Caltrans has made a determination of no effect to vernal pool fairy shrimp critical habitat (Caltrans 2012). Caltrans has requested formal consultation with our office regarding the potential effects of the subject project on the federally threatened California tiger salamander (*Ambystoma californiense*) and California red-legged frog (*Rana draytonii*). Your request, dated October 22, 2012, and received in our office October 24, 2012, and our response are in accordance with section 7 of the Endangered Species Act (Act) of 1973, as amended (16 U.S.C. 1531 et seq.).

We prepared this biological opinion using information provided in the biological assessment (Caltrans 2012) and information in our files. A complete record of this consultation can be made available at the Ventura Fish and Wildlife Office.

CONSULTATION HISTORY

May 6, 2011: Geoff Hoetker (Caltrans) corresponded with Steve Kirkland (Service) via phone call to discuss federally listed species and critical habitat that could be affected by the proposed project (informal consultation). Mr. Hoetker explained Caltrans would likely assume presence of California tiger salamander in the project area due to several regional occurrence records for the

species, the presence of several ponds in the vicinity of the project area, suitable upland habitat in the project area, and the fact that the project area was located within federally designated critical habitat. Mr. Kirkland agreed assuming presence of California tiger salamander was appropriate. Mr. Kirkland indicated although there were no records for California red-legged frog within 1 mile of the project site, project disturbance would be within the vicinity of a pond within federally designated critical habitat; therefore, he recommended protocol surveys to gather information. Mr. Hoetker requested in the interest of time, if the site assessment process could be bypassed so that protocol surveys could begin immediately to complete the six breeding-season surveys required by June 30, 2011. Mr. Kirkland agreed the site assessment process could be bypassed and protocol surveys could begin (including the first site visit/survey that occurred on April 27). Mr. Kirkland recommended Caltrans formally consult with the Service under the Programmatic Biological Opinion for Projects Funded or Approved under the Federal Highway Administration's Federal Aid Program (8-8-10-F-58) for California red-legged frog regardless whether California red-legged frogs were observed or not observed during the survey effort. Mr. Hoetker and Mr. Kirkland briefly discussed potential effects on San Joaquin kit fox.

May 25, 2011: Mr. Hoetker corresponded with Christopher Diel (Service) via email. Mr. Diel recommended conducting an early evaluation for San Joaquin kit fox following the Service's 1999 *San Joaquin Kit Fox Survey Protocol for the Northern Range* and indicated he was not aware of any other San Joaquin kit fox occurrence records from the region that are not already in the California Natural Diversity Database (CNDDB).

June 23, 2011: Caltrans submitted the Early Evaluation for San Joaquin Kit Fox to the Service's Ventura Field Office for review.

August 15, 2011: Mr. Diel contacted Mr. Hoetker via email and indicated the Early Evaluation for San Joaquin kit fox had been reviewed and avoidance/minimization measures were determined to be sufficient.

You have requested our concurrence that the proposed project may affect, but is not likely to adversely affect vernal pool fairy shrimp and San Joaquin kit fox. Disturbance caused by the proposed activities may affect habitat used by both species. However, Caltrans proposes to implement measures to avoid adverse effects to vernal pool fairy shrimp and San Joaquin kit fox.

1. Fencing will be placed and maintained around vernal pool habitat to prevent impacts from vehicles.

2. All on-site construction personnel will receive instruction regarding the presence of listed species and the importance of avoiding impacts to these species and their habitat.

3. Caltrans will ensure that construction and maintenance activities avoid impacts to the pond and watershed onsite.

4. A preconstruction survey will be conducted for San Joaquin kit fox no less than 14 days and no more than 30 days prior to any construction activities or any project activity likely to impact the San Joaquin kit fox. The survey will identify San Joaquin kit fox habitat features on the project site, evaluate use by San Joaquin kit fox, and, if possible, assess the potential impacts to San Joaquin kit fox by the proposed activity. The status of all dens should be determined and mapped. Known dens, if found occurring within the footprint of the activity, will be monitored for 3 days with tracking medium to determine the current use. If San Joaquin kit fox activity is observed at the den during this period, the den will be monitored for at least five consecutive days from the time of the observation to allow any resident animals to move to another den during its normal activity.

5. Caltrans will submit to the Service written results of the preconstruction/preactivity survey within 5 days after survey completion and prior to the start of ground disturbance and/or construction activities. Caltrans will immediately notify the Service if the preconstruction/preactivity survey reveals an active natal pupping den or new information regarding kit fox presence within 200 feet of the project boundary.

6. Prior to ground breaking, a Service approved biologist will conduct an environmental education and training session for all construction personnel.

7. Project employees will be directed to exercise caution when driving within the project area. A 20-mile-per-hour (mph) speed limit will be strongly encouraged within the project site. Cross-country travel by vehicles will be prohibited outside of the proposed areas of disturbance, unless authorized by Service. Project employees will be provided with written guidance governing vehicle use, speed limits on unpaved roads, fire prevention, and other hazards. Construction activity will be confined within the project site, which may include temporary access roads and staging areas specifically designated and marked for these purposes.

8. A litter control program will be instituted at each project site. No canine or feline pets or firearms (except for law enforcement officers and security personnel) will be permitted on construction sites in order to avoid harassment, killing, or injuring of San Joaquin kit fox.

9. Maintenance and construction excavations greater than 2 feet deep will be covered (e.g., with plywood, sturdy plastic, steel plates, or equivalent), filled in at the end of each working day, or have earthen escape ramps no greater than 200 feet apart to prevent trapping San Joaquin kit fox.

10. The resident engineer or their designee will be responsible for implementing these conservation measures and will be the point of contact.

11. All grindings and asphaltic-concrete waste will be stored within previously disturbed areas absent of habitat and at a minimum of 150 feet from any culvert, wash, pond, vernal pool, or stream crossing.

12. Restoration and revegetation work associated with temporary impacts will be done using California endemic plants appropriate for the location. To the maximum extent practicable, topsoil will be removed, cached, and returned to the site according to successful restoration protocols. Loss of soil from run-off or erosion will be prevented with straw bales, straw wattles, or similar means provided they do not entangle or block escape or dispersal routes of San Joaquin kit fox.

13. The project construction area will be delineated with high visibility temporary fencing, flagging, or other barrier to prevent encroachment of construction personnel and equipment onto any sensitive areas during project work activities. Such fencing will be inspected and maintained daily until completion of the project and will be removed only when all construction equipment is removed from the site. No project activities will occur outside the delineated project area.

We concur with your determination that the proposed project may affect, but is not likely to adversely affect vernal pool fairy shrimp and San Joaquin kit fox. Our concurrence is based on the following:

1. Aquatic habitat will be fully avoided in the project area;

2. We do not anticipate San Joaquin kit fox to occur in the immediate project area and the project activities would have minimal impact to potential habitat; and

3. Caltrans proposes to implement the aforementioned avoidance and minimization measures.

Based on this concurrence, the vernal pool fairy shrimp and San Joaquin kit fox will not be discussed further in this consultation.

In your October 24, 2012, request for consultation you indicated that the project meets the May 4, 2011, Programmatic Biological Opinion for Projects Funded or Approved under the Federal Highway Administration's Federal Aid Program (8-8-10-F-58) criteria for projects that may affect, and are likely to adversely affect California red-legged frog. You determined the proposed activities and anticipated effects fall within the scope of the programmatic biological opinion. We concur with this determination. California red-legged frog will not be discussed further in this document because the effects of the proposed action on California red-legged frog are fully addressed in the aforementioned programmatic biological opinion.

BIOLOGICAL OPINION

DESCRIPTION OF THE PROPOSED ACTION

Caltrans proposes to improve the safety of the segment of State Route-25 between postmile (PM) 18.8 and PM 19.2 by upgrading the rural 0.4-mile section of State Route-25 to current design standards and improve safety. The project proposes to realign the highway by replacing the existing curve with a 2,000-foot radius curve with a 300-foot tangent connecting the curves; the curves would be realigned into the hillside at 0.25:1 slope. Approximately 41,000 cubic yards of material would be excavated at a maximum depth of approximately 44 feet. The project would result in two 12-foot lanes and 4-foot shoulders.

The existing Right of Way (ROW) is approximately 22 feet from the centerline. Because the existing ROW cannot accommodate the proposed geometrics, additional ROW would be required for the improved roadway alignment and to accommodate the wider roadbed. The project would require acquisition of approximately 2.9 acres of ROW. The existing land is currently used for cattle grazing and agrarian interests.

In addition to the road improvements, a portion of the existing State Route-25 roadbed would be removed and rehabilitated to allow for revegetation with oak trees. A new driveway would be constructed for the landowner on the north side of State Route-25, which would connect to the new section of State Route-25. The portion of the existing State Route-25 not revegetated with oak trees would be left intact as permanent access to a stockpile area.

Equipment would be temporarily staged within the proposed new alignment. If additional space is needed, a currently disturbed area (verified by a biological monitor) would likely be rented from a nearby property owner.

Minimization Measures

Caltrans proposes to implement the following measures to minimize effects to the California tiger salamander:

1. Caltrans will obtain Service approval of Designated Biologist(s) and Designated Monitor(s) prior to project-related activities that may result in impacts to the California tiger salamander. The Designated Biologist(s) will hold all applicable State and Federal permits. Any proposed Biologist(s) that do not have the required permits must work under the supervision of one who does have the required permits. These individuals will be referred to as Designated Monitors. The Designated Biologist must be present at all surveys and during all initial ground disturbing activities in areas of potential California tiger salamander habitat to help minimize or avoid impact to the California tiger salamander and to minimize disturbance of habitat. Designated Biologists and/or Designated Monitors who handle California tiger salamanders will ensure that their activities do not transmit diseases or pathogens harmful to amphibians, such as chytrid

fungus (*Batrachochytrium dendrobatidis*), by following the fieldwork code of practice developed by the Declining Amphibians Task Force. Designated Monitors may monitor project activities after initial ground disturbing activities have been completed provided the Designated Biologist with the active permits can be contacted should the need arise to relocate a California tiger salamander. Work that could potentially harm the California tiger salamander will be stopped until the Designated Biologist arrived to relocate the California tiger salamander to the pre-approved location. If the Designated Biologist or Designated Monitor recommends that work be stopped they will notify the resident engineer immediately. The resident engineer will resolve the situation by requiring that all actions that are causing these effects be halted. When work is stopped, the Service will be notified as soon as possible.

2. Small mammal burrows within the proposed areas of permanent impact will be hand-excavated by a Service approved biologist prior to construction. The timing of hand excavation shall occur outside of the California tiger salamander breeding season. Excavation of burrows between June 15 and November 1 will avoid the breeding season (November to March) and most juvenile dispersal movements. Caltrans will hand-excavation of several dozen small mammal burrows that have the greatest potential to serve as refugia for California tiger salamanders, in coordination with and approval from Service and California Department of Fish and Wildlife. Determination of these burrows would include known parameters of preferred refugia, such as proximity to the pond within the project area and burrow-type. If a California tiger salamander is found in an excavated burrow, a Service approved biologist will relocate the animal to another suitable burrow that will be avoided by project-related activities.

3. Following hand excavation, exclusion fencing will be established around the proposed areas of disturbance and maintained through construction, to ensure no California tiger salamanders enter the work area. Caltrans will establish fencing along the outer limits of proposed disturbance to preserve small mammal burrows in upland areas outside of the limits of disturbance to the maximum extent feasible. Caltrans proposes to install fencing that would exclude salamanders from the work area. Fencing will be buried to a depth of 6 inches and will be a minimum of 3.3 feet tall following installation. Exclusionary fencing will be monitored daily, prior to the start of construction activities each day, to evaluate its effectiveness and ensure that no California tiger salamanders become trapped in the fencing. If a California tiger salamander is found along the fence, a Service approved biologist will relocate the animal to the small pond near the project area that will be avoided by project-related activities. All fencing will be maintained for the duration of construction and removed on project completion.

4. Effects to California tiger salamanders will be minimized during rainy weather and at night. Between November 1 and April 1, the project site will be surveyed nightly by the Designated Biologist or a Designated Monitor prior to any night work. When the chance of rainfall within 24 hours is predicted to be 70 percent or greater, only critical project

activities will be allowed at night within potential California tiger salamander habitat, until no further rain is forecast.

5. Designated Biologists or Monitors will inspect all open trenches, auger holes, and other excavations that may trap California tiger salamander prior to any work in or around these features and before they are back filled.

6. The Designated Biologist will conduct an education program for all persons employed or otherwise working on the project site prior to performing any work on-site. The program will include a discussion of the biology of the California tiger salamander and project-specific avoidance and minimizations measures. Upon completion of the program, employees will sign a form stating they attended the program and understand all protection measures.

7. Copies of all relevant agreements and permits (e.g., Biological Opinion) will be maintained at the worksite.

ANALYTICAL FRAMEWORK FOR THE JEOPARDY DETERMINATION

The jeopardy analysis in this Biological Opinion relies on four components: (1) the *Status of the Species*, which evaluates the range-wide condition of the California tiger salamander, the factors responsible for that condition, and the species' survival and recovery needs; (2) the *Environmental Baseline*, which evaluates the condition of the species in the action area, the factors responsible for that condition, and the relationship of the action area to the survival and recovery of the species; (3) the *Effects of the Action*, which determines the direct and indirect impacts of the proposed Federal action and the effects of any interrelated or interdependent activities on the species; and (4) the *Cumulative Effects*, which evaluates the effects of future, non-Federal activities in the action area on the species.

In accordance with policy and regulation, the jeopardy determination is made by evaluating the effects of the proposed Federal action in the context of the current status of the California tiger salamander, taking into account any cumulative effects, to determine if implementation of the proposed action is likely to cause an appreciable reduction in the likelihood of both the survival and recovery of the species in the wild.

The jeopardy analysis in this biological opinion places an emphasis on consideration of the range-wide survival and recovery needs of the California tiger salamander and the role of the action area in the survival and recovery of the species as the context for evaluating the significance of the effects of the proposed Federal action, taken together with cumulative effects, for purposes of making the jeopardy determination.

STATUS OF THE SPECIES

California tiger salamander

The Service recognizes three distinct populations of the California tiger salamander: Sonoma County, Central California, and northern Santa Barbara County. On August 4, 2004, we published a final rule listing the California tiger salamander as threatened range-wide, including the previously identified Sonoma and Santa Barbara distinct population segments (Service 2004). On August 19, 2005, U.S. District Judge William Alsup vacated the Service's downlisting of the Sonoma and Santa Barbara populations from endangered to threatened. Thus, the Sonoma and Santa Barbara populations are listed as endangered, and the Central California population is listed as threatened.

The California tiger salamander is endemic to the grassland community found in California's Central Valley, the surrounding foothills, and coastal valleys (Fisher and Shaffer 1996). The historic distribution for the California tiger salamander in the Central Valley and surrounding foothills included northern Yolo County southward to northwestern Kern County and northern Tulare County. Currently, the central California tiger salamander is known to occupy the Bay Area (central and southern Alameda, Santa Clara, western Stanislaus, western Merced, and the majority of San Benito counties), Central Valley (Yolo, Sacramento, Solano, eastern Contra Costa, northeastern Alameda, San Joaquin, Stanislaus, Merced, and northwestern Madera counties), southern San Joaquin Valley (portions of Madera, central Fresno, and northern Tulare and Kings Counties), and the Central Coast Range (southern Santa Cruz, Monterey, northern San Luis Obispo, and portions of western San Benito, Fresno, and Kern counties).

The central California tiger salamander has an obligate biphasic life cycle (Shaffer et al. 2004). Although the larvae develop in the vernal pools and ponds in which they were born, the species is otherwise terrestrial and spend most of their post-metamorphic lives in widely dispersed underground retreats (Shaffer et al. 2004; Trenham et al. 2001). Subadult and adult central California tiger salamanders typically spend the dry summer and fall months in the burrows of small mammals, such as California ground squirrels (*Otospermophilus beecheyi*) and Botta's pocket gopher (*Thomomys bottae*) (Storer 1925; Loredo and Van Vuren 1996; Petranka 1998; Trenham 1998). Movement of California tiger salamanders within and among burrow systems continues for at least several months after juveniles and adults leave the ponds (Trenham 2001). California tiger salamanders cannot dig their own burrows, and as a result, their presence is associated with burrowing mammals (Seymour and Westphal 1994). Central California tiger salamanders depend on persistent small mammal activity to create, maintain, and sustain sufficient underground refugia for the species. Loredo et al. (1996) found that California ground squirrel burrow systems collapsed within 18 months following abandonment by, or loss of, the mammals. Central California tiger salamanders may also use landscape features such as leaf litter or desiccation cracks in the soil for upland refugia. Because they spend most of their lives underground, the animals rarely are encountered even in areas where central California tiger salamanders are abundant.

Upland burrows inhabited by central California tiger salamanders have often been referred to as aestivation-sites. However, "aestivation" implies a state of inactivity, while most evidence suggests that the animals remain active in their underground dwellings. Van Hattem (2004) found that salamanders move, feed, and remain active in their burrows. Because adults arrive at breeding ponds in good condition and are heavier when entering the pond than when leaving, researchers have long inferred that they are feeding while underground. A number of direct observations have confirmed this (Trenham 2001; Van Hattem 2004). Thus, "upland habitat" is a more accurate description of the terrestrial areas used by central California tiger salamanders. The upland component of California tiger salamander habitat typically consists of grassland savannah, but includes grasslands with scattered oak trees, and scrub or chaparral habitats (Shaffer et al. 1993, Service 2000). California tiger salamanders spend the majority of their lives in upland habitats and cannot persist without them (Trenham and Shaffer 2005).

Central California tiger salamanders typically emerge from their underground refugia at night during the fall or winter rainy season (November-May) to migrate to their breeding ponds (Stebbins 1985, 1989; Shaffer et al. 1993; Trenham et al. 2000). The breeding period is closely associated with the rainfall patterns in any given year with less adults migrating and breeding in drought years (Loredo and Van Vuren 1996; Trenham et al. 2000). Males migrate to the breeding ponds before females (Twitty 1941, Shaffer et al. 1993, Loredo and Van Vuren 1996, Trenham 1998). Males usually remain in the ponds for an average of about 6 to 8 weeks, while females stay for approximately 1 to 2 weeks. In dry years, both sexes may stay for shorter periods (Loredo and Van Vuren 1996, Trenham 1998). Historically, natural ephemeral vernal pools were the primary breeding habitats for California tiger salamanders (Twitty 1941, Fisher and Shaffer 1996, Petranka 1998). However, with the conversion and loss of many vernal pools through farmland conversion and urban and suburban development, ephemeral and permanent ponds that have been created for livestock watering are now frequently used by the species (Fisher and Shaffer 1996, Robins and Vollmar 2002). Ideal breeding ponds are typically fishless, free of non-native predators, and seasonal or semi-permanent (Barry and Shaffer 1994; Petranka 1998). After breeding and egg laying is complete, adults leave the pool and return to their upland refugia (Loredo et al. 1996; Trenham 1998). Adult central California tiger salamanders often continue to emerge nightly for approximately the next two weeks to feed in their upland habitat (Shaffer et al. 1993).

Following metamorphosis in the late spring or early summer, juvenile central California tiger salamanders leave their pools and move to upland habitat, where they live continuously for several years. This emigration can occur in both wet and dry conditions (Loredo and Van Vuren 1996; Loredo et al. 1996). Wet conditions are more favorable for upland travel but summer rain events seldom occur as metamorphosis is completed and ponds begin to dry. As a result, juveniles may be forced to leave their ponds on rainless nights. The peak emergence of these metamorphs in ponds is typically between mid-June and mid-July (Loredo and Van Vuren 1996; Trenham et al. 2000). Juveniles remain active in their upland habitat, emerging from underground refugia during rainfall events to disperse or forage (Trenham and Shaffer 2005).

At a study in Monterey County, it was found that upon reaching sexual maturity, most individuals returned to their natal/birth pond to breed, while 22 percent dispersed to other ponds (Trenham et al. 2001). After breeding, adult central California tiger salamanders return to upland habitats, where they may live for one or more years before attempting to breed again (Trenham et al. 2000). In addition to traveling long distances during juvenile dispersal and adult migration, salamanders may reside in burrows far from their associated breeding ponds.

Central California tiger salamanders are known to travel long distances between breeding ponds and their upland refugia. Generally it is difficult to establish the maximum distances traveled by any species, but salamanders in Santa Barbara County have been recorded dispersing up to 1.3 miles from their breeding ponds (Sweet 1998). As a result of a 5-year capture and relocation study in Contra Costa County, Orloff (2007) estimated that captured central California tiger salamanders were traveling a minimum of 0.5 mile to the nearest breeding pond and that some individuals were likely traveling more than 1.3 miles to and from breeding ponds. Central California tiger salamanders are also known to travel between breeding ponds. One study found that 20 to 25 percent of the individuals captured at one pond were recaptured later at other ponds approximately 1,900 and 2,200 feet away (Trenham et al. 2001).

The central California tiger salamander is imperiled throughout its range due to a variety of human activities (Service 2004). Current factors associated with declining central California tiger salamander populations include continued habitat loss and degradation due to agriculture and urbanization; hybridization with the non-native eastern tiger salamander (*Ambystoma tigrinum*) (Fitzpatrick and Shaffer 2004; Riley et al. 2003); and predation by introduced species. Central California tiger salamander populations are likely threatened by multiple factors but continued habitat fragmentation and colonization of non-native salamanders may represent the most significant current threats. Habitat isolation and fragmentation within many watersheds have precluded dispersal between sub-populations and threatened the viability of metapopulations (broadly defined as multiple subpopulations that occasionally exchange individuals through dispersal, and are capable of colonizing or "rescuing" extirpated habitat patches). Other threats include disease, predation, interspecific competition, urbanization and population growth, exposure to contaminants, destructive rodent-control techniques (e.g., deep-ripping of burrow areas, use of fumigants) (Service 2003), reduced survival due to the presence of mosquitofish (*Gambusia affinis*) (Leyse and Lawlor 2000), road-crossing mortality (Service 2000), and hybridization with non-native salamanders. Currently, these various primary and secondary threats are largely not being offset by existing Federal, State, or local regulatory mechanisms. The central California tiger salamander is also prone to chance environmental or demographic events, to which small populations are particularly vulnerable.

ENVIRONMENTAL BASELINE

Action Area

Service regulations define the action area as "all areas affected directly or indirectly by the Federal action and not merely the immediate area involved in the action" (50 CFR 402.02). The

action area for this project includes approximately 14.7 acres of the existing State Route-25 alignment and ROW, cut and fill areas, and the new alignment. Areas not currently developed are predominately nonnative grasslands with scattered blue oak trees (*Quercus douglasii*) and numerous small mammal burrows (Caltrans 2012). A 0.05-acre ephemeral pond is located in the northeastern portion of the project area (Caltrans 2012).

Status of the California Tiger Salamander in the Action Area

The action area for the proposed project occurs within the range of the California tiger salamander. Numerous records of California tiger salamanders, including observed breeding, occur within 3 miles of the project area (CDFW 2013). One record of two individual California tiger salamanders, one adult and one juvenile, occurs near the east end of the project area (CDFW 2013). No recent surveys have been conducted at the project site, but it supports suitable habitat including a pond and rodent burrows in the surrounding uplands. Due to these factors, Caltrans determined that the action area is occupied by California tiger salamanders (Caltrans 2012).

EFFECTS OF THE ACTION

Direct adverse effects to California tiger salamanders in the action area may include injury or mortality from being crushed by heavy equipment, construction debris, and worker foot traffic. These impacts would be reduced by minimizing and clearly demarcating the boundaries of the project area and equipment access routes. Avoiding work activities during the dispersal season would further reduce adverse impacts.

Cut and fill activities in the action area could result in long-term and short-term effects on California tiger salamanders from permanent and temporary disturbance to upland habitat. The destruction of any rodent burrows could result in mortality or injury to any California tiger salamanders that remain in the project area. Hand excavation of small mammal burrows and capture and relocation of individuals would reduce the likelihood of California tiger salamanders becoming entombed during construction activities.

The capture and handling of California tiger salamanders to move them from a work area could result in injury or mortality as a result of improper handling, containment, or transport of individuals or from releasing them into unsuitable habitat. The use of a Service approved biologist, who is authorized to relocate any California tiger salamanders found alive during grading and construction activities, would help minimize injury to California tiger salamanders found alive during these activities.

Chytrid fungus is a water-borne fungus that can be spread through direct contact between aquatic animals and by a spore that can move short distances through the water. The fungus only attacks the parts of an animal's skin that have keratin (thickened skin), such as the mouthparts of tadpoles and the tougher parts of adults' skin, such as the toes. It can decimate amphibian

populations, causing fungal dermatitis, which usually results in death in 1 to 2 weeks. Infected animals may spread the fungal spores to other ponds and streams before they die. Once a pond has become infected with chytrid fungus, the fungus stays in the water for an undetermined amount of time. Infected equipment or footwear could introduce chytrid fungus into areas where it did not previously occur. If this occurs in the action area, many California tiger salamanders could be affected.

The potential exists for uninformed workers to intentionally or unintentionally injure or kill California tiger salamanders. The potential for this impact to occur would be reduced by informing workers of the presence and protected status of these species and the measures that are being implemented to protect it during project activities as described in the project description section of this biological opinion.

Trash left during or after project activities could attract predators to work sites, which could, in turn, prey on California tiger salamanders. For example, raccoons (*Procyon lotor*) are attracted to trash and also prey opportunistically on California tiger salamanders. This potential impact will be reduced or avoided by careful control of waste products at all work sites.

In summary, because Caltrans has proposed measures to protect the species, we anticipate that few, if any, California tiger salamanders are likely to be killed or injured during this work. The effects from implementing the proposed action on the California tiger salamander are likely to be minimal. Only a small portion of habitat of the entire range of California tiger salamanders would be affected by the project.

CUMULATIVE EFFECTS

Cumulative effects include the effects of future State, tribal, local, or private actions that are reasonably certain to occur in the action area considered in this biological opinion. Future Federal actions that are unrelated to the proposed action are not considered in this section because they require separate consultation pursuant to section 7 of the Act. At this time, we are unaware of any non-Federal actions that are reasonably certain to occur in the action area.

CONCLUSION

After reviewing the current status of the California tiger salamander, the environmental baseline for the action area, the effects of the proposed activities, and the cumulative effects, it is the Service's biological opinion that Caltrans' proposed activities are not likely to jeopardize the continued existence of the California tiger salamander.

We have reached this conclusion for the following reasons:

1. Approximately 14.7 acres of habitat for the California tiger salamander would be disturbed, which represents a small portion of the range of the taxon.

2. Few, if any, California tiger salamanders are likely to be killed or injured during project activities.

3. Caltrans will implement measures to reduce the adverse effects of the proposed project on the California tiger salamanders.

INCIDENTAL TAKE STATEMENT

Section 9 of the Act and Federal regulation pursuant to section 4(d) of the Act prohibit the take of endangered and threatened species, respectively, without special exemption. Take is defined as to harass, harm, pursue, hunt, shoot, wound, kill, trap, capture or collect, or to attempt to engage in any such conduct. Harm is further defined by the Service to include significant habitat modification or degradation that results in death or injury to listed species by significantly impairing essential behavioral patterns, including breeding, feeding, or sheltering. Harass is defined by the Service as intentional or negligent actions that create the likelihood of injury to a listed species by annoying it to such an extent as to significantly disrupt normal behavioral patterns which include, but are not limited to, breeding, feeding, or sheltering. Incidental take is defined as take that is incidental to, and not the purpose of, the carrying out of an otherwise lawful activity. Under the terms of section 7(b)(4) and section 7(o)(2), taking that is incidental to and not intended as part of the agency action is not considered to be prohibited taking under the Act provided that such taking is in compliance with the terms and conditions of this incidental take statement.

The measures described below are non-discretionary and Caltrans must ensure that they become binding conditions of the project for the exemption in section 7(o)(2) to apply. If Caltrans fails to assume and implement the terms and conditions of the incidental take statement, the protective coverage of section 7(o)(2) may lapse. To monitor the impact of incidental take, Caltrans must report the progress of the action and its impact on the species to the Service as specified in the incidental take statement [50 CFR 402.14(i)(3)].

We anticipate that the following level of take may result from the proposed activities: All California tiger salamanders found within the action area may be subject to take in the form of capture during relocation efforts. As a result of capture, a subset of captured California tiger salamanders may be injured or killed or may experience a substantial disruption of normal behavioral patterns to the point that they have been harassed. Any California tiger salamanders that remain in the action area may be crushed or otherwise injured or killed. California tiger salamanders may be taken only within the defined boundaries of the action area.

We cannot determine the precise number of California tiger salamanders that may be taken as a result of the State Route-25 Curve Correction Project. Numbers and locations of California tiger salamanders within a population vary from year to year. Incidental take of the California tiger salamander will be difficult to detect because of its small body size and finding a dead or injured specimen is unlikely.

This biological opinion does not exempt any activity from the prohibitions against take contained in section 9 of the Act that is not incidental to the action as described in the Description of the Proposed Action section, above. Take that occurs outside of the defined action area, or from any activity not described in this biological opinion, is not exempted from the prohibitions against take described in section 9 of the Act.

REASONABLE AND PRUDENT MEASURES

The Service believes the following reasonable and prudent measures are necessary and appropriate to minimize take of the California tiger salamander:

1. Caltrans must ensure that the level of incidental take that occurs during project implementation is commensurate with the analysis contained herein.

2. Biologists who will survey for, capture, and move California tiger salamanders must be authorized by the Service prior to the onset of ground-disturbing activities.

3. Caltrans and authorized biologists must implement well-defined measures to reduce take of California tiger salamanders during project activities.

The Service's evaluation of the effects of the proposed action includes consideration of the measures to minimize the adverse effects of the proposed action on the California tiger salamander that were developed by the Service and Caltrans, and repeated in the Description of the Proposed Action portion of this biological opinion. Any subsequent changes in these measures proposed by Caltrans may constitute a modification of the proposed action and may warrant re-initiation of formal consultation, as specified at 50 CFR 402.16. These reasonable and prudent measures are intended to supplement the protective measures that were proposed by Caltrans as part of the proposed action.

TERMS AND CONDITIONS

To be exempt from the prohibitions of section 9 of the Act, Caltrans must comply with the following terms and conditions, which implement the reasonable and prudent measures described above. These terms and conditions are non-discretionary.

1. The following term and condition implements reasonable and prudent measure 1:

> If one California tiger salamander is found dead or injured, Caltrans must contact our office immediately so we can review the project activities to determine if additional protective measures are needed. In instances where the amount or extent of incidental take is exceeded, the exemption issued pursuant to section 7(o)(2) will have lapsed and any further take would be a violation of section 9. Consequently, we recommend that any operations causing such take cease pending reinitiation.

2. The following terms and conditions implement reasonable and prudent measure 2:

   a. Caltrans must request our written approval of any biologists it wishes to survey for, monitor, conduct training sessions for, capture, handle, and relocate California tiger salamanders. The request must be in writing and be received by the Service's Ventura Fish and Wildlife Office at least 30 days prior to the commencement of any of these activities.

      Information included in a request for authorization should include, at a minimum: (1) relevant education; (2) relevant training on species identification, survey techniques, handling individuals of different age classes, and handling of different life stages by a permitted biologist or recognized species expert authorized for such activities by the Service; (3) a summary of field experience conducting requested activities (to include project/research information); (4) a summary of biological opinions under which they were authorized to work with the listed species and at what level (such as construction monitoring versus handling), this should also include the names and qualifications of persons under which the work was supervised as well as the amount of work experience on the actual project; (5) a list of Federal Recovery Permits [10(a)1(A)] held or under which are authorized to work with the species (to include permit #, authorized activities, and name of permit holder); and (6) any relevant professional references with contact information.

   b. The authorized biologist may designate a biological monitor to be onsite throughout project implementation, in lieu of himself or herself, to ensure California tiger salamanders are not killed, injured, or unintentionally disturbed. Either the authorized biologist or designated biological monitor must be onsite during any project-related activity.

3. The following terms and conditions implement reasonable and prudent measure 3:

   a. The authorized biologist for the California tiger salamanders must be onsite and conduct daily surveys of areas of ground disturbance within the project area for the presence of California tiger salamanders.

   b. Caltrans must condition any contracts to require a 20 mph speed limit for all construction personnel within the project area.

   c. Caltrans must limit construction activities at night between November 1 and April 1 to the maximum extent practicable.

   d. If construction activities occur between November 1 and April 1, the authorized biologist or designated biological monitor must conduct routine surveys of work

areas, including each morning before construction activities resume, to ensure California tiger salamanders have not moved back into a work area overnight.

REPORTING REQUIREMENTS

Caltrans must provide a written report to the Service within 90 days following completion of the proposed project. The report must also state the number of California tiger salamanders killed or injured, describing the circumstances of the mortalities or injuries if known. The report must contain information on the following: (1) the type of activities that occurred in the action area (e.g., construction activities, monitoring); (2) the location of these activities; (3) a description of the habitat in which these activities occurred; (4) the number of California tiger salamanders captured and relocated; (5) the locations from which California tiger salamanders were moved and where they were relocated to; (6) the results of any surveys conducted for any listed species; (7) an analysis of the effectiveness of the avoidance and minimization measures and recommendations for future measures; and (8) any other pertinent information. This reporting is not in lieu of reporting required immediately upon the take of California tiger salamander as described below.

DISPOSITION OF DEAD OR INJURED SPECIMENS

Within 3 days of locating any dead or injured California tiger salamanders, Caltrans must notify the Ventura Fish and Wildlife Office by telephone (805) 644-1766 and in writing (2493 Portola Road, Suite B, Ventura, California 93003). The report shall include the time and date, location of the carcass, cause of death, if known, likely source of injury, and any other pertinent information.

Care must be taken in handling dead specimens to preserve biological material in the best possible state for later analysis. Should any injured California tiger salamanders survive, the Service must be contacted regarding their final disposition. The remains of California tiger salamanders must be placed with the California Academy of Sciences Herpetology Department (Contact: Jens Vindum, Department of Herpetology, California Academy of Sciences, 875 Howard Street, San Francisco, California, 94103, (415) 321-8289). Caltrans must make arrangements regarding proper disposition of potential museum specimens with the California Academy of Sciences prior to implementation of any actions.

CONSERVATION RECOMMENDATIONS

Section 7(a)(1) of the Act directs Federal agencies to use their authorities to further the purposes of the Act by carrying out conservation programs for the benefit of endangered and threatened species. Conservation recommendations are discretionary agency activities to minimize or avoid adverse effects of a proposed action on listed species, to help implement recovery plans, or to develop information.

Caltrans should support efforts to raise public awareness of the threat of non-native species (including both plants and animals) to native species and methods to manage this threat.

REINITIATION NOTICE

This concludes formal consultation on the effects of the State Route-25 Curve Correction Project. As provided in 50 CFR 402.16, reinitiation of formal consultation is required where discretionary Federal agency involvement or control over the action has been retained (or is authorized by law) and if: (1) the amount or extent of incidental take is exceeded, (2) new information reveals effects of the agency action that may affect listed species or critical habitat in a manner or to an extent not considered in this opinion, (3) the agency action is subsequently modified in a manner that causes an effect to the listed species or critical habitat not considered in this opinion, or (4) a new species is listed or critical habitat designated that may be affected by the action. In instances where the amount or extent of incidental take is exceeded, any operations causing such take must cease pending reinitiation.

If you have any questions regarding this biological opinion, please contact Christopher Diel of my staff at (805) 644-1766, extension 305.

Sincerely,

Diane K. Noda
Field Supervisor

LITERATURE CITED

Barry, S.J., and H.B. Shaffer. 1994. The status of the California tiger salamander (*Ambystoma californiense*) at Lagunita: A 50-year update. Journal of Herpetology 28:159-164.

[CDFW] California Department of Fish and Wildlife. 2012. A database application for the California Natural Diversity Database search, Sacramento, California.

[Caltrans] California Department of Transportation. 2012. San Benito-25 curve correction project biological assessment, San Benito County, California. October 2012.

Fisher, R.N., and H.B. Shaffer. 1996. The decline of amphibians in California's Great Central Valley. Conservation Biology 10:1387-1397.

Fitzpatrick, B.M., and H.B. Shaffer. 2004. Environmental-dependent admixture dynamics in a tiger salamander hybrid zone. Evolution 58:1282-1293.

Leyse, K., and S.P. Lawler. 2000. Effect of mosquitofish (*Gambusia affinis*) on California tiger salamander (*Ambystoma californiense*) larvae in permanent ponds. Mosquito Control Research, annual report 2000.

Loredo, I., and D. Van Vuren. 1996. Reproductive ecology of a population of the California tiger salamander. Copeia 1996:895-901.

Loredo, I., D. Van Vuren, and M.L. Morrison. 1996. Habitat use and migration behavior of the California tiger salamander. Journal of Herpetology 30:282-285.

Orloff, S. 2007. Migratory movements of California tiger salamander in upland habitat - a five year study, Pittsburg, California. Prepared for Bailey Estates LLC. 47 + pp.

Petranka, J.W. 1998. Salamanders of the United States and Canada. Smithsonian Institution Press.

Riley, S.P.D., H.B. Shaffer, S.R. Voss, and B.M. Fitzpatrick. 2003. Hybridization between a rare, native tiger salamander (*Ambystoma californiense*) and its introduced congener. Biological Applications 13:1263-1275.

Robins, J.D., and J.E. Vollmar. 2002. Livestock grazing and vernal pools. Pages 401-430 in Vollmar, J.E. (Ed.). 2002. Wildlife and rare plant ecology of eastern Merced County's vernal pool grasslands. Vollmar Consulting, Berkeley, California.

Seymour, R., and M. Westphal. 1994. Final Report - Status and habitat correlates of California tiger salamanders in the eastern San Joaquin Valley: results of the 1994 survey. Report prepared by the Coyote Creek Riparian Station for the U.S. Fish and Wildlife Service, Sacramento Office. 33 pp.

United States Department of the Interior

FISH AND WILDLIFE SERVICE
Ventura Fish and Wildlife Office
2493 Portola Road, Suite B
Ventura, California 93003

IN REPLY REFER TO:
81440-2010-F-0382

May 4, 2011

Rich Krumholz, District Director
California Department of Transportation
50 Higuera Street
San Luis Obispo, California 93401-5415

Subject: Programmatic Biological Opinion for Projects Funded or Approved under the Federal Highway Administration's Federal Aid Program (8-8-10-F-58)

Dear Mr. Krumholz:

This document transmits the U.S. Fish and Wildlife Service's (Service) biological opinion regarding projects funded under the Federal Highway Administration's (FHWA) Federal Aid Program that are likely to adversely affect the federally threatened California red-legged frog (*Rana draytonii*) and its designated critical habitat. This document also contains our programmatic concurrence for projects conducted under the Federal Aid Program that are not likely to adversely affect the California red-legged frog or its critical habitat. The development of this programmatic biological opinion and concurrence are the result of a collaborative effort between the California Department of Transportation (Caltrans) and the Service.

Pursuant to the Safe, Accountable, Flexible, Efficient Transportation Equity Act: A Legacy for Users (SAFETEA-LU), the FHWA assigned and Caltrans assumed responsibilities for consultation and coordination with resource agencies for most projects within the state of California (FHWA 2007). The delegation of authority stipulates that correspondence regarding consultations be addressed to Caltrans, even if the FHWA initiated the consultation. Consequently, we have developed this biological opinion in accordance with this direction.

This biological opinion, which has been prepared in accordance with section 7(a)(2) of the Endangered Species Act of 1973, as amended (16 U.S.C. 1531 *et seq.*) (Act), evaluates the effects of certain activities, authorized by Caltrans, on the California red-legged frog and its critical habitat, within the Ventura Fish and Wildlife Office's area of responsibility in San Benito, Santa Cruz, Monterey, San Luis Obispo, and Santa Barbara, Counties, California. We believe that California red-legged frog populations in Ventura and Los Angeles Counties are so isolated from other California red-legged frog populations, that they do not meet the eligibility criteria described in the Description of the Proposed Action section of this biological opinion (Criterion 4.).

TAKE PRIDE® IN AMERICA

This biological opinion and programmatic concurrence were prepared primarily with information provided by the California Department of Transportation and information in our files. A complete record of this consultation can be made available upon on request.

CONSULTATION HISTORY

Since the listing of the California red-legged frog in 1996, the FHWA, in conjunction with Caltrans, consulted with the Service's Ventura Fish and Wildlife Office on numerous projects that the FHWA determined were likely to adversely affect the California red-legged frog. The FHWA, Caltrans, and the Service recognized that many of these projects resulted in minor effects to the California red-legged frog and its habitat. Additionally, many of the protective measures included in our previous biological opinions were very similar. Consequently, the Service, FHWA, and Caltrans determined that a programmatic approach to the consultation process was appropriate. Staff from the Service's Ventura Fish and Wildlife Office, FHWA, and Caltrans coordinated extensively during the preparation of a programmatic biological opinion we issued to FHWA in 2003 (Service 2003).

The Service designated critical habitat for the California red-legged frog, on March 17, 2010, (75 Federal Register (FR) 12816). The 2003 programmatic biological opinion does not address critical habitat for the California red-legged frog, so any biological opinion tiered from the 2003 programmatic and issued after critical habitat was designated must include a complete analysis of the effects of the proposed action on critical habitat for the California red-legged frog. Therefore, to further streamline the consultation process achieved with the 2003 programmatic, a complete analysis of the effects of the proposed actions on critical habitat for the California red-legged frog is included in this biological opinion.

Since 2003, we have issued 26 biological opinions that are tiered off of our programmatic biological opinion (Service 2003). Construction on 16 of those projects is complete and we have included additional information on those projects in the Environmental Baseline section of this biological opinion. Caltrans and the Service consider this biological opinion a reinitiation of formal consultation on the 14 projects that have not been completed, or where the proposed action would adversely affect critical habitat for the California red-legged frog.

Although we have strived to issue biological opinions tiered from the 2003 programmatic in a much shorter timeframe than required by Federal regulation (50 CFR 402), at times the large number of formal consultations to be completed has limited our ability to provide these documents within expedited timeframes. Therefore, Caltrans and the Service recognize that we could further streamline the 2003 programmatic by avoiding tiered biological opinions, resulting in a more efficient process.

ADMINISTRATION OF THE PROGRAMMATIC BIOLOGICAL OPINION

Caltrans will prepare all required environmental documents for individual projects that would be conducted pursuant to this biological opinion, including those needed to satisfy its

responsibilities under the Act, the National Environmental Policy Act, and the California Environmental Quality Act.

For all proposed actions that Caltrans determine are likely to adversely affect the California red-legged frog or its critical habitat, Caltrans will consider whether the action:

1. Meets the suitability criteria, as described in the Description of the Proposed Action section of this biological opinion; and

2. Whether the proposed activities and anticipated effects to California red-legged frogs fall within the scope of this biological opinion.

At least 90 days prior to conducting any activities that it determines are likely to adversely affect the California red-legged frog or its critical habitat, Caltrans will notify the Ventura Fish and Wildlife Office, in writing, of projects they propose to conduct under the auspices of this biological opinion. If the Service determines that use of this programmatic biological opinion is not appropriate for the proposed action, we will notify Caltrans in writing within 30 days, and the standard provisions for section 7 consultation will apply. The regulations which implement section 7 allow the Service up to 90 days to conclude formal consultation and an additional 45 days to prepare our biological opinion. If we require additional information to complete our biological opinion, we will describe our needs in our letter; if additional information is not required, we will consider consultation to have been initiated on the date we received the original notification of Caltrans' intent to conduct their proposed project pursuant to the programmatic consultation.

At a minimum, the following information will accompany Caltrans' project notification to the Service:

1. A 7.5-minute topographic map (and aerial photographs if possible) of the proposed project site, as well as photographs of the project site;

2. A written description of the activity, including, but not limited to, construction methods, time of year the work would occur, a habitat restoration plan, and a construction monitoring plan;

3. One cross-section and a minimum of one plan view indicating water bodies, vegetation types, work areas, roads (including temporary construction access roads), restoration sites, refueling and staging areas that will be located within the existing or proposed public right-of-way or temporary construction easements, and environmentally sensitive areas proposed to protect habitat of the California red-legged frog;

4. The names and credentials of biologists who will conduct surveys for, monitor, and handle California red-legged frogs will be provided to the Service 30 days prior to the start of construction. Once the Service approves a biologist, Caltrans would not need to

provide their credentials for subsequent projects conducted pursuant to this consultation; and

5. Information resulting from any site visits, surveys, or habitat assessments conducted for the proposed action.

By January 31 of each year this consultation is in effect, Caltrans will provide to the Service's Ventura Fish and Wildlife Office, a list of projects for which it used this consultation. Caltrans will provide sufficient information on the list to identify the projects that occurred in the previous year under the provisions of this biological opinion. The annual list will assist the Ventura Fish and Wildlife Office in ensuring that it has received the required Project Completion Reports that are described later in this document. Caltrans may also use the occasion of providing the list to recommend changes to the consultation that are more protective of the California red-legged frog and its habitat while simplifying compliance with the Act.

ADMINISTRATION OF THE PROGRAMMATIC INFORMAL CONSULTATION

For all proposed actions that Caltrans determines may affect, but are not likely to adversely affect, the California red-legged frog or its critical habitat, Caltrans will determine if the proposed action meets the suitability criteria for our programmatic concurrence, as described in the Description of the Proposed Action section of this biological opinion. If Caltrans determines the proposed action meets the suitability criteria for concurrence, it will notify our office in writing, at least 30 days prior to the start of construction. We will review Caltrans' notification and respond in in writing, or via electronic mail, if we have concerns or questions regarding the proposed action, or if we have any additional information that we believe may influence Caltrans' determination.

At a minimum the following information will accompany the notification:

1. Caltrans must include a rationale in its notification to us, as to how adverse effects to the California red-legged frog and its critical habitat will be avoided.

2. A 7.5-minute topographic map and aerial photographs of the project site, as well as photographs of the project site. The location of the project, any restoration sites, and all known locations of California red-legged frogs within 2 miles of the project site will be identified on the map and photographs;

3. A written description of the activity, including, but not limited to, construction methods, avoidance measures in addition to those required under this programmatic biological opinion, time of year the work would occur, habitat restoration plans, and construction monitoring plans;

4. One cross-section and a minimum of one plan view indicating water bodies, vegetation types, work areas, roads (including temporary construction access roads), restoration

sites, refueling and staging areas that will be located within the existing or proposed public right-of-way or temporary construction easements, and Environmentally Sensitive Areas proposed to protect habitat of the California red-legged frog; and

5. The results of information gathered by following the procedures in the Service's guidance for assessing habitat quality and field surveys for the California red-legged frog.

Staff from the Service's Ventura Fish and Wildlife Office will be available to provide technical assistance during all phases of consultation. Technical assistance can include assisting Caltrans with determinations of effects, development of project-specific designs and protective measures, modifications of survey protocols, and any other issues that may arise. Technical assistance may be transmitted by the Service in the form of telephone calls, electronic mail, or written correspondence.

BIOLOGICAL OPINION

ANALYTICAL FRAMEWORK FOR THE JEOPARDY AND ADVERSE MODIFICATION DETERMINATIONS

Jeopardy Determination

The jeopardy analysis in this biological opinion relies on four components: (1) the *Status of the Species*, which evaluates the range-wide condition of the California red-legged frog, the factors responsible for that condition, and the species' survival and recovery needs; (2) the *Environmental Baseline*, which evaluates the condition of the California red-legged frog in the action area, the factors responsible for that condition, and the relationship of the action area to the survival and recovery of the California red-legged frog; (3) the *Effects of the Action*, which determines the direct and indirect impacts of the proposed Federal action and the effects of any interrelated or interdependent activities on the California red-legged frog; and (4) the *Cumulative Effects*, which evaluates the effects of future, non-Federal activities in the action area on the California red-legged frog.

In accordance with policy and regulation, the jeopardy determination is made by evaluating the effects of the proposed federal action in the context of the current status of the California red-legged frog, taking into account any cumulative effects, to determine if implementation of the proposed action is likely to cause an appreciable reduction in the likelihood of both the survival and recovery of the California red-legged frog.

The jeopardy analysis in this biological opinion places an emphasis on consideration of the range-wide survival and recovery needs of the California red-legged frog and the role of the action area in the survival and recovery of the subspecies as the context for evaluation of the significance of the effects of the proposed federal action, taken together with cumulative effects, for purposes of making the jeopardy determination.

Adverse Modification Determination

This biological opinion does not rely on the regulatory definition of "destruction or adverse modification" of critical habitat at 50 CFR 402.02. Instead, we have relied on the statutory provisions of the ESA to complete the following analysis with respect to critical habitat.

In accordance with policy and regulation, the adverse modification analysis in this biological opinion relies on four components: (1) the *Status of Critical Habitat*, which evaluates the range-wide condition of designated critical habitat for the California red-legged frog in terms of primary constituent elements (PCEs), the factors responsible for that condition, and the intended recovery function of the critical habitat overall; (2) the *Environmental Baseline*, which evaluates the condition of the critical habitat in the action area, the factors responsible for that condition, and the recovery role of the critical habitat in the action area; (3) the *Effects of the Action*, which determines the direct and indirect impacts of the proposed Federal action and the effects of any interrelated and interdependent activities on the PCEs and how that will influence the recovery role of the affected critical habitat units; and (4) *Cumulative Effects*, which evaluates the effects of future non-Federal activities in the action area on the PCEs and how that will influence the recovery role of affected critical habitat units.

For purposes of the adverse modification determination, the effects of the proposed federal action on the critical habitat of the California red-legged frog are evaluated in the context of the range-wide condition of the critical habitat, taking into account any cumulative effects, to determine if the critical habitat range-wide would remain functional (or would retain the current ability for the PCEs to be functionally established in areas of currently unsuitable but capable habitat) to serve its intended recovery role for the California red-legged frog.

The analysis in this biological opinion places an emphasis on using the intended range-wide recovery function of critical habitat for the California red-legged frog and the role of the action area relative to that intended function as the context for evaluating the significance of the effects of the proposed Federal action, taken together with cumulative effects, for purposes of making the adverse modification determination.

DESCRIPTION OF THE PROPOSED ACTION

Eligibility Criteria for the Programmatic Biological Opinion

To make use of this programmatic biological opinion, the Caltrans must ensure that a proposed project satisfies the following criteria:

Criterion 1: Actions that would be appropriately considered in this biological opinion are likely to result in adverse effects to the California red-legged frog and its critical habitat, but would not affect the long-term viability of the population in the action area Caltrans and the Service have previously consulted on numerous projects that met these criteria. These projects include: retrofitting of bridges to reduce damage that may be caused by earthquakes; repair, widening,

and replacement of bridges; repair of stream bank protection; replacement of low-flow stream crossings with bridges; small-scale stabilization of stream slopes; minor improvement of drainage; replacement of culverts; rehabilitation of highway surfaces; and improvement of the safety and operation of highways.

Criterion 2: To qualify for use of this programmatic biological opinion, the measures to reduce or avoid adverse effects to the California red-legged frog and its critical habitat, provided herein, must be implemented; these measures may be modified on a project-specific basis upon the agreement of the Caltrans and the Service.

Criterion 3: The projects must be single and complete, and not part of larger actions or associated with other development projects including, but not limited to, housing subdivisions, commercial or industrial developments, or golf courses.

Criterion 4: The projects must not, in the Service's view, take place in areas where populations of California red-legged frogs are so isolated that even the small effects described in this biological opinion may have substantial impacts.

Minimization of Adverse Effects

Caltrans will ensure that projects implemented in accordance with this biological opinion will be designed to avoid or minimize adverse effects to the California red-legged frog and its critical habitat. At a minimum, the following measures will be incorporated into the projects:

1. Only Service-approved biologists will participate in activities associated with the capture, handling, and monitoring of California red-legged frogs. Biologists authorized under this biological opinion do not need to re-submit their qualifications for subsequent projects conducted pursuant to this biological opinion, unless we have revoked their approval at any time during the life of this biological opinion.

2. Ground disturbance will not begin until written approval is received from the Service that the biologist is qualified to conduct the work, unless the individual(s) has/have been approved previously and the Service has not revoked that approval.

3. A Service-approved biologist will survey the project site no more than 48 hours before the onset of work activities. If any life stage of the California red-legged frog is found and these individuals are likely to be killed or injured by work activities, the approved biologist will be allowed sufficient time to move them from the site before work begins. The Service-approved biologist will relocate the California red-legged frogs the shortest distance possible to a location that contains suitable habitat and that will not be affected by activities associated with the proposed project. The relocation site should be in the same drainage to the extent practicable. Caltrans will coordinate with the Service on the relocation site prior to the capture of any California red-legged frogs.

4. Before any activities begin on a project, a Service-approved biologist will conduct a training session for all construction personnel. At a minimum, the training will include a description of the California red-legged frog and its habitat, the specific measures that are being implemented to conserve the California red-legged frog for the current project, and the boundaries within which the project may be accomplished. Brochures, books, and briefings may be used in the training session, provided that a qualified person is on hand to answer any questions.

5. A Service-approved biologist will be present at the work site until all California red-legged frogs have been relocated out of harm's way, workers have been instructed, and disturbance of habitat has been completed. After this time, the State or local sponsoring agency will designate a person to monitor on-site compliance with all minimization measures. The Service-approved biologist will ensure that this monitor receives the training outlined in measure 4 above and in the identification of California red-legged frogs. If the monitor or the Service-approved biologist recommends that work be stopped because California red-legged frogs would be affected in a manner not anticipated by Caltrans and the Service during review of the proposed action, they will notify the resident engineer (the engineer that is directly overseeing and in command of construction activities) immediately. The resident engineer will either resolve the situation by eliminating the adverse effect immediately or require that all actions causing these effects be halted. If work is stopped, the Service will be notified as soon as possible.

6. During project activities, all trash that may attract predators will be properly contained, removed from the work site, and disposed of regularly. Following construction, all trash and construction debris will be removed from work areas.

7. All refueling, maintenance, and staging of equipment and vehicles will occur at least 60 feet from riparian habitat or water bodies and in a location from where a spill would not drain directly toward aquatic habitat (e.g., on a slope that drains away from the water). The monitor will ensure contamination of habitat does not occur during such operations. Prior to the onset of work, Caltrans will ensure that a plan is in place for prompt and effective response to any accidental spills. All workers will be informed of the importance of preventing spills and of the appropriate measures to take should a spill occur.

8. Habitat contours will be returned to their original configuration at the end of project activities. This measure will be implemented in all areas disturbed by activities associated with the project, unless the Service and Caltrans determine that it is not feasible or modification of original contours would benefit the California red-legged frog.

9. The number of access routes, size of staging areas, and the total area of the activity will be limited to the minimum necessary to achieve the project goals. Environmentally Sensitive Areas will be delineated to confine access routes and

construction areas to the minimum area necessary to complete construction, and minimize the impact to California red-legged frog habitat; this goal includes locating access routes and construction areas outside of wetlands and riparian areas to the maximum extent practicable.

10. Caltrans will attempt to schedule work activities for times of the year when impacts to the California red-legged frog would be minimal. For example, work that would affect large pools that may support breeding would be avoided, to the maximum degree practicable, during the breeding season (November through May). Isolated pools that are important to maintain California red-legged frogs through the driest portions of the year would be avoided, to the maximum degree practicable, during the late summer and early fall. Habitat assessments, surveys, and coordination between Caltrans and the Service during project planning will be used to assist in scheduling work activities to avoid sensitive habitats during key times of the year.

11. To control sedimentation during and after project implementation, Caltrans, and the sponsoring agency will implement best management practices outlined in any authorizations or permits issued under the authorities of the Clean Water Act that it receives for the specific project. If best management practices are ineffective, Caltrans will attempt to remedy the situation immediately, in coordination with the Service.

12. If a work site is to be temporarily dewatered by pumping, intakes will be completely screened with wire mesh not larger than 0.2 inch to prevent California red-legged frogs from entering the pump system. Water will be released or pumped downstream at an appropriate rate to maintain downstream flows during construction. Upon completion of construction activities, any diversions or barriers to flow will be removed in a manner that would allow flow to resume with the least disturbance to the substrate. Alteration of the stream bed will be minimized to the maximum extent possible; any imported material will be removed from the stream bed upon completion of the project.

13. Unless approved by the Service, water will not be impounded in a manner that may attract California red-legged frogs.

14. A Service-approved biologist will permanently remove any individuals of non-native species, such as bullfrogs (*Rana catesbeiana*), signal and red swamp crayfish (*Pacifasticus leniusculus; Procambarus clarkii*), and centrarchid fishes from the project area, to the maximum extent possible. The Service-approved biologist will be responsible for ensuring his or her activities are in compliance with the California Fish and Game Code.

15. If Caltrans demonstrates that disturbed areas have been restored to conditions that allow them to function as habitat for the California red-legged frog, these areas will not be included in the amount of total habitat permanently disturbed.

16. To ensure that diseases are not conveyed between work sites by the Service-approved biologist, the fieldwork code of practice developed by the Declining Amphibian Populations Task Force will be followed at all times. A copy of the code of practice is enclosed.

17. Project sites will be re-vegetated with an assemblage of native riparian, wetland, and upland vegetation suitable for the area. Locally collected plant materials will be used to the extent practicable. Invasive, exotic plants will be controlled to the maximum extent practicable. This measure will be implemented in all areas disturbed by activities associated with the project, unless the Service and Caltrans determine that it is not feasible or practical.

18. Caltrans will not use herbicides as the primary method used to control invasive, exotic plants. However, if Caltrans determines the use of herbicides is the only feasible method for controlling invasive plants at a specific project site, it will implement the following additional protective measures for the California red-legged frog:

    a. Caltrans will not use herbicides during the breeding season for the California red-legged frog;

    b. Caltrans will conduct surveys for the California red-legged frog immediately prior to the start of any herbicide use. If found, California red-legged frogs will be relocated to suitable habitat far enough from the project area that no direct contact with herbicides would occur;

    c. Giant reed and other invasive plants will be cut and hauled out by hand and the painted with glyphosate or glyphosate-based products, such as Aquamaster® or Rodeo®;

    d. Licensed and experienced Caltrans staff or a licensed and experienced contractor will use a hand-held sprayer for foliar application of Aquamaster® or Rodeo® where large monoculture stands occur at an individual project site;

    e. All precautions will be taken to ensure that no herbicide is applied to native vegetation.

    f. Herbicides will not be applied on or near open water surfaces (no closer than 60 feet from open water).

    g. Foliar applications of herbicide will not occur when wind speeds are in excess of 3 miles per hour.

    h. No herbicides will be applied within 24 hours of forecasted rain.

i. Application of all herbicides will be done by a qualified Caltrans staff or contractors to ensure that overspray is minimized, that all application is made in accordance with label recommendations, and with implementation of all required and reasonable safety measures. A safe dye will be added to the mixture to visually denote treated sites. Application of herbicides will be consistent with the U.S. Environmental Protection Agency's Office of Pesticide Programs, Endangered Species Protection Program county bulletins.

j. All herbicides, fuels, lubricants, and equipment will be stored, poured, or refilled at least 60 feet from riparian habitat or water bodies in a location where a spill would not drain directly toward aquatic habitat. Caltrans will ensure that contamination of habitat does not occur during such operations. Prior to the onset of work, Caltrans will ensure that a plan is in place for a prompt and effective response to accidental spills. All workers will be informed of the importance of preventing spills and of the appropriate measures to take should a spill occur.

19. Upon completion of any project for which this programmatic consultation is used, Caltrans will ensure that a Project Completion Report is completed and provided to the Ventura Fish and Wildlife Office. A copy of the form is enclosed. Caltrans should include recommended modifications of the protective measures if alternative measures would facilitate compliance with the provisions of this consultation. In addition, Caltrans will reinitiate formal consultation in the event any of the following thresholds are reached as a result of projects conducted under the provisions of this consultation:

Caltrans will reinitiate consultation when, as a result of projects conducted under the provisions of this consultation:

a. 10 California red-legged frog adults or juveniles have been killed or injured in any given year. (For this and all other standards, an egg mass is considered to be one California red-legged frog.);

b. 50 California red-legged frogs have been killed or injured in total;

c. 20 acres of critical habitat for the California red-legged frog that include the primary constituent elements of aquatic breeding and non-breeding aquatic habitat and upland and dispersal habitat have been permanently lost in any given year;

d. 100 acres of critical habitat for the California red-legged frog that include the primary constituent elements of aquatic breeding and non-breeding aquatic habitat and upland and dispersal habitat have been permanently lost in total;

e. 100 acres of critical habitat for the California red-legged frog that include the primary constituent elements of aquatic breeding and non-breeding aquatic habitat and upland and dispersal habitat have been temporarily disturbed in any given year; or

f. 500 acres of critical habitat for the California red-legged frog that include the primary constituent elements of aquatic breeding and non-breeding aquatic habitat and upland and dispersal habitat have been temporarily disturbed in total.

Total acreages of dispersal habitat that may be adversely affected would be confined to the Caltrans or County rights-of-way that occur adjacent to roads, and would be linear in nature. Dispersal habitat for the California red-legged frog adjacent to roads and highways, within these rights-of-way, is generally less ecologically valuable to the California red-legged frog than larger blocks of habitat. Road corridors and associated disturbances may lead to reduced habitat quality resulting in decreased abundance or density of breeding individuals (Forman et al. 2003).

PROGRAMMATIC INFORMAL CONSULTATION

In addition to the numerous formal consultations we have conducted with Caltrans, we have also conducted many informal consultations and concurred that many of Caltrans' proposed projects are not likely to adversely affect the California red-legged frog or its critical habitat. Many of these projects are very similar to the type of projects we are considering in the subject formal consultation (e.g., bridge and culvert replacements). Because many of the avoidance measures associated with our previous concurrences are very similar, and we are often working on multiple concurrence letters simultaneously, Caltrans and the Service believe a programmatic approach to projects that are not likely to adversely affect the California red-legged frog or its critical habitat is appropriate.

Criteria for the Programmatic Concurrence

Projects that are not likely to adversely affect the California red-legged frog, or its critical habitat, must have only discountable, insignificant, or completely beneficial effects to the subspecies and its critical habitat. The Services (1998) defines the term discountable as extremely unlikely and unexpected; the term insignificant relates to the size of the impact (i.e., unable to meaningfully measure, detect, or evaluate). To make use of this programmatic informal consultation for actions that may affect, but are not likely to adversely affect the California red-legged frog or its critical habitat, Caltrans must demonstrate that the project satisfies the following criteria:

Criterion 1: California red-legged frogs are not known to occur at the proposed project site and were not found during surveys following the Guidelines for surveys and habitat assessments (Service 2007); however, the potential may exist for individuals to occur at the proposed project site because no barriers exist to preclude dispersal of California red-legged frog from nearby suitable habitat.

Criterion 2: Any effects to critical habitat must be discountable, insignificant, or completely beneficial to the California red-legged frog.

Criterion 3: The measures to avoid adverse effects to the California red-legged frog and its critical habitat, provided herein, must be implemented; these measures may be modified on a

project-specific basis to achieve avoidance of adverse effects upon the agreement of Caltrans and the Service.

Measures to Avoid Adverse Effects

For projects to qualify for the programmatic concurrence, at a minimum Caltrans will ensure that the following measures are implemented to avoid adverse effects to the California red-legged frog and its critical habitat:

1. A biologist with experience in the identification of all life stages of the California red-legged frog, and its critical habitat (75 FR 12816), will survey the project site no more than 48 hours before the onset of work activities. If any life stage of the California red-legged frog is detected the Service will be notified prior to the start of construction. If Caltrans and the Service determine that adverse effects to the California red-legged frog or its critical habitat cannot be avoided, the proposed project will not commence until the Caltrans completes the appropriate level of consultation with the Service.

2. Work activities will take place during the dry season, between April 1 and November 1, when water levels are typically are at their lowest, and California red-legged frogs are likely to be more detectable. Should activities need to be conducted outside of this period, Caltrans may conduct or authorize such activities after obtaining the Service's written approval.

3. Before work begins on any proposed project, a biologist with experience in the ecology of the California red-legged frog, as well as the identification of all its life stages, will conduct a training session for all construction personnel, which will include a description of the California red-legged frog, its critical habitat, and specific measures that are being implemented to avoid adverse effects to the subspecies during the proposed project.

4. If any life stage of the California red-legged frog is detected in the project area during construction, work will cease immediately and the resident engineer, authorized biologist, or biological monitor will notify the Ventura Fish and Wildlife Office via telephone or electronic mail. If Caltrans and the Service determine that adverse effects to California red-legged frogs cannot be avoided, construction activities will remain suspended until Caltrans and the Service complete the appropriate level of consultation.

5. During project activities, all trash that may attract predators will be properly contained, removed from the work site, and disposed of regularly. Following construction, all trash and construction debris will be removed from work areas.

6. Prior to the onset of work, Caltrans will ensure that a plan is in place for prompt and effective response to any accidental spills. All workers will be informed of the importance of preventing spills and of the appropriate measures to implement should a spill occur.

7. All refueling, maintenance, and staging of equipment and vehicles will occur at least 60 feet from aquatic or riparian habitat and not in a location from where a spill would drain directly toward aquatic habitat. The monitor will ensure contamination of aquatic or riparian habitat does not occur during such operations by implementing the spill response plan described in measure 6.

8. Plants used in re-vegetation will consist of native riparian, wetland, and upland vegetation suitable for the area. Locally collected plant materials will be used to the extent practicable. Invasive, exotic plants will be controlled to the maximum extent practicable. This measure will be implemented in all areas disturbed by activities associated with the project, unless Caltrans and the Service determine that it is not feasible or practical.

9. Habitat contours will be returned to their original configuration at the end of project activities in all areas that have been temporarily disturbed by activities associated with the project, unless Caltrans and the Service determine that it is not feasible or modification of original contours would benefit the California red-legged frog.

10. The number of access routes, size of staging areas, and the total area of the activity will be limited to the minimum necessary to achieve the project goals. Environmentally Sensitive Areas will be delineated to confine access routes and construction areas to the minimum area necessary to complete construction, and minimize the impact to habitat for the California red-legged frog; this goal includes locating access routes and construction areas outside of aquatic habitat and riparian areas to the maximum extent practicable.

11. To control sedimentation during and after project implementation, Caltrans will implement best management practices outlined in any authorizations or permits, issued under the authorities of the Clean Water Act that it receives for the specific project. If best management practices are ineffective, Caltrans will attempt to remedy the situation immediately, in coordination with the Service.

12. If a work site is to be temporarily dewatered by pumping, the intake will be screened with wire mesh not larger than 0.2 inch to prevent any California red-legged frogs not initially detected from entering the pump system. If California red-legged frogs are detected during dewatering, and adverse effects to California red-legged frogs cannot be avoided, construction activities will remain suspended until Caltrans and the Service complete the appropriate level of consultation.

13. Upon completion of construction activities, any diversions or barriers to flow will be removed in a manner that would allow flow to resume with the least disturbance to the substrate. Alteration of the creek bed will be minimized to the maximum extent possible; any imported material will be removed from the stream bed upon completion of the project.

14. Unless approved by the Service, water will not be impounded in a manner that may attract California red-legged frogs.

15. A qualified biologist will permanently remove any individuals of exotic species, such as bullfrogs, crayfish, and centrarchid fishes from the project area, to the maximum extent possible. The biologist will be responsible for ensuring his or her activities are in compliance with the California Fish and Game Code.

16. To ensure that diseases are not conveyed between work sites by the Service-approved biologist, the enclosed fieldwork code of practice developed by the Declining Amphibian Populations Task Force will be followed at all times.

This concurrence is based on the proposed avoidance measures, as well as the other criteria that a specific project must meet to qualify for use of this informal consultation. This concurrence does not authorize capture, handling, or relocation of California red-legged frogs. If at any time Caltrans determines: 1) their proposed action is likely to adversely affect the California red-legged frog or its critical habitat; and 2) the proposed project meets criteria for the programmatic biological opinion, Caltrans should notify our office immediately. If Caltrans is able to adhere to the protective measures described previously in the programmatic biological opinion, the work may continue and Caltrans will notify the Service in writing that they are proceeding with the project under the programmatic biological opinion. If at any time Caltrans or the Service conclude that the proposed action does not meet the suitability criteria for the programmatic biological opinion, all work must cease until the appropriate level of consultation has been completed.

STATUS OF THE SPECIES/CRITICAL HABITAT

California red-legged frog

The California red-legged frog was federally listed as threatened on May 23, 1996 (61 FR 25813). The Service has published a recovery plan (Service 2002).

The historical range of the California red-legged frog extended coastally from southern Mendocino County and inland from the vicinity of Redding, California, southward to northwestern Baja California, Mexico (Jennings and Hayes 1985; Storer 1925). The California red-legged frog has been extirpated or nearly extirpated from 70 percent of its former range. Historically, this species was found throughout the Central Valley and Sierra Nevada foothills. Four additional occurrences have been recorded in the Sierra Nevada foothills since listing, bringing the total to five extant populations, compared to approximately 26 historical records (71 FR 19244). Currently, California red-legged frogs are only known from 3 disjunct regions in 26 California counties and 1 disjunct region in Baja California, Mexico (Grismer 2002; Fidenci 2004; R. Smith and D. Krofta, in litt. 2005).

California red-legged frogs have been found at elevations that range from sea level to about 5,000 feet. In the Sierra Nevada Mountains, California red-legged frogs typically occur below 4,000 feet and occurrences above this elevation are atypical for the subspecies (71 FR 19244).

The California red-legged frog uses a variety of habitat types, including various aquatic systems, riparian, and upland habitats. The diet of California red-legged frogs is highly variable. Hayes and Tennant (1985) found invertebrates to be the most common food item of adults. Vertebrates, such as Pacific chorus frogs (*Pseudacris regilla*) and California mice (*Peromyscus californicus*), represented over half of the prey mass eaten by larger frogs (Hayes and Tennant 1985). Feeding activity occurs along the shoreline and on the surface of the water. Hayes and Tennant (1985) found juveniles to be active diurnally and nocturnally, whereas adults were largely nocturnal.

California red-legged frogs breed from November through March; earlier breeding has been recorded in southern localities (Storer 1925). Males appear at breeding sites from 2 to 4 weeks before females (Storer 1925). Female California red-legged frogs deposit egg masses on emergent vegetation so that the masses float on the surface of the water (Hayes and Miyamoto 1984). Egg masses contain about 2,000 to 5,000 moderate-sized, dark reddish brown eggs (Storer 1925; Jennings and Hayes 1985). Eggs hatch in 6 to 14 days (Storer 1925). Larvae undergo metamorphosis 3.5 to 7 months after hatching (Storer 1925; Wright and Wright 1949). Sexual maturity can be attained at 2 years of age by males and 3 years of age by females (Jennings and Hayes 1985); adults may live 8 to 10 years (Jennings et al. 1992) although the average life span is considered to be much lower. The California red-legged frog is a relatively large aquatic frog ranging from 1.5 to 5 inches from the tip of the snout to the vent (Stebbins 1985).

California red-legged frogs breed in aquatic habitats. Larvae, juveniles and adults have been collected from streams, creeks, ponds, marshes, plunge pools and backwaters within streams, dune ponds, lagoons, and estuaries. California red-legged frogs frequently breed in artificial impoundments, such as stock ponds, if conditions are appropriate. Although California red-legged frogs successfully breed in streams and riparian systems, high spring flows and cold temperatures in streams often make these sites risky environments for eggs and tadpoles. The importance of riparian vegetation for this species is not well understood. When riparian vegetation is present, California red-legged frogs spend considerable time resting and feeding in it; the moisture and camouflage provided by the riparian plant community likely provide good foraging habitat and may facilitate dispersal in addition to providing pools and backwater aquatic areas for breeding.

Juvenile and adult California red-legged frogs may disperse long distances from breeding sites throughout the year. They can be encountered living within streams at distances exceeding 1.8 miles from the nearest breeding site, and have been found up to 400 feet from water in adjacent dense riparian vegetation (Bulger et. al 2003). During periods of wet weather, starting with the first rains of fall, some individuals may make overland excursions through upland habitats. Most of these overland movements occur at night. Bulger et al. (2003) found marked California red-legged frogs in Santa Cruz County making overland movements of up to 2 miles over the course

of a wet season. These individual frogs were observed to make long-distance movements that are straight-line, point to point migrations over variable upland terrain rather than using riparian corridors for movement between habitats. For the California red-legged frog, suitable habitat is potentially all aquatic and riparian areas within the range of the species and includes any landscape features that provide cover and moisture (61 FR 25813).

Habitat loss and alteration, combined with over-exploitation and introduction of exotic predators, were important factors in the decline of the California red-legged frog in the early to mid-1900s. Continuing threats to the California red-legged frog include direct habitat loss due to stream alteration and loss of aquatic habitat, indirect effects of expanding urbanization, competition or predation from non-native species including the bullfrog, catfish (*Ictalurus* spp.), bass (*Micropterus* spp.), mosquito fish (*Gambusia affinis*), red swamp crayfish, and signal crayfish. Chytrid fungus (*Batrachochytrium dendrobatidis*) is a waterborne fungus that can decimate amphibian populations, and is considered a threat to California red-legged frog populations.

Critical Habitat for the California Red-legged Frog

On March 17, 2010, the Service designated critical habitat for the California red-legged frog (75 FR 12816). In total, 1,636,609 million acres was designated as critical habitat for the California red-legged frog in 27 California counties. The current designation better reflects the lands containing those essential habitat features necessary for the conservation of the California red-legged frog than did earlier designations that had been subject to litigation. A detailed discussion of the methods used in developing proposed critical habitat can be found in the final rule (75 FR 12816).

We have identified the physical or biological features essential to the conservation of the species, the Primary Constituent Elements (PCEs), that may require special management considerations or protection. Because not all life-history functions require all the PCEs, not all areas designated as critical habitat will contain all the PCEs. Based on our current knowledge of the life-history, biology, and ecology of the California red-legged frog, we determined the California red-legged frog's PCEs to consist of: 1) aquatic breeding habitat; 2) aquatic non-breeding habitat; 3) upland habitat;, and 4) dispersal habitat. Detailed descriptions of these PCEs can be found in the final rule (75 FR 12816). The following is a brief summary of the PCEs:

1) Aquatic breeding habitat consists of standing bodies of fresh water (with salinities less than 4.5 part per thousand), including natural and manmade (stock) ponds, slow moving streams or pools within streams and other ephemeral or permanent water bodies that typically become inundated during winter rains and hold water for a minimum of 20 weeks in all but the driest of years.

2) Aquatic non-breeding habitat consists of the freshwater habitats as described for aquatic breeding habitat but which may or may not hold water long enough for the subspecies to complete the aquatic portion of its lifecycle but which provide for shelter, foraging,

predator avoidance, and aquatic dispersal habitat of juvenile and adult California red-legged frogs.

3) Upland habitat consists of upland areas adjacent to or surrounding breeding and non-breeding aquatic and riparian habitat up to a distance of one mile in most cases (i.e., depending on surrounding landscape and dispersal barriers) including various vegetation types such as grassland, woodland, forest, wetland, or riparian areas that provide shelter, forage, and predator avoidance for the California red-legged frog. Upland habitat should include structural features such as boulders, rocks and organic debris (e.g., downed trees, logs), small mammal burrows, or moist leaf litter.

4) Dispersal habitat consists of accessible upland or riparian habitat within and between occupied or previously occupied sites that are located within one mile of each other, and that support movement between such sites. Dispersal habitat includes various natural habitats, and altered habitats such as agricultural fields, that do not contain barriers (e.g., heavily traveled roads without bridges or culverts) to dispersal. Dispersal habitat does not include moderate- to high-density urban or industrial developments with large expanses of asphalt or concrete, nor does it include large lakes or reservoirs over 50 acres in size, or other areas that do not contain those features identified in PCE 1, 2, or 3 as essential to the conservation of the species.

ENVIRONMENTAL BASELINE

The implementing regulations for section 7(a)(2) of the Act define the "action area" as all areas to be affected directly or indirectly by the Federal action and not merely the immediate area involved in the action (50 CFR 402.02). For the purposes of this biological opinion, we consider the action area to include the areas within Santa Cruz, San Benito Monterey, San Luis Obispo, Santa Barbara Counties that support the California red-legged frog, or its critical habitat, and that have the potential to be affected directly or indirectly by federally-funded projects. Caltrans projects that would be appropriately conducted pursuant to this biological opinion would occur within the Caltrans or County rights-of-way. Based on the anticipated impacts of the 26 projects we have consulted on and the documented effects of the 15 projects that Caltrans has completed under our previous programmatic biological opinion (Service 2003), we are not aware of any indirect effects which extend beyond the Caltrans or County right-of-way. Therefore, we assume the area within the right-of-way of each of the projects conducted pursuant to this programmatic biological opinion will encompass the direct and indirect effects of the proposed action.

All or portions of the following three recovery units (as defined in the Recovery Plan for the California red-legged frog (Service 2002) are included in the action area:

The Central Coast Recovery Unit includes, generally, the coastal portions of Santa Cruz, Monterey, and San Luis Obispo Counties. This recovery unit supports the greatest number of drainages currently occupied by the California red-legged frog.

The Diablo Range and Salinas Valley Recovery Unit includes, generally, San Benito County and the inland portions of Santa Cruz, Monterey, and San Luis Obispo Counties. This recovery unit supports "no more than 10 percent of the historic localities (of the California red-legged frog) within the Salinas basin and inner Coast Ranges " (Service 2002). Santa Barbara County and portions of San Luis Obispo Counties are within the Northern Transverse Ranges and Tehachapi Mountains Recovery Unit. California red-legged frogs are patchily distributed in the interior portion of this recovery unit and occur in numerous coastal streams in Santa Barbara County.

From April 2003 through June 2010, we issued 26 biological opinions that were tiered off of our previous programmatic biological opinion with FHWA (Service 2003). Under those 26 biological opinions we authorized the incidental take of 34 California red-legged frogs in the form of injury or mortality. Five tiered biological opinions authorized the incidental take of two California red-legged frogs, one biological opinion authorized the incidental take of four California red-legged frogs, and 20 biological opinions authorized the incidental take of one California red-legged frog.

Based on the information contained in the requests for consultation, we calculated the amount of aquatic and upland habitats that we estimate will be permanently lost and temporarily disturbed when construction of these projects has been completed (Appendix 1).

Construction has been completed on 15 projects (Appendix 2) that were conducted under the programmatic biological opinion (Service 2003). No California red-legged frogs were injured or killed during construction of these 15 projects. Five of the Project Completion Reports for these 15 projects did not include the amount of wetland or upland habit impacts. Of the 10 other completed projects, none exceeded the reinitiation thresholds identified in our 2003 programmatic biological opinion (Service 2003).

Critical Habitat

Because our previous programmatic biological opinion (Service 2003) did not address critical habitat, the Project Completion Reports associated with that biological opinion do not include the amount of critical habitat affected by each completed project in terms of the PCEs. Instead, the Project Completion Reports require that the amount of wetland and riparian habitat temporarily and permanently affected by a project be reported. We interpret the amount of wetland habitat affected by a project to include either breeding, non-breeding habitat, or both, and the riparian habitat component to include upland habitat and/or dispersal habitat. The amount of critical habitat for the California red-legged frog that has been adversely affected as a result of the 15 completed projects consists of: 0.033-acre of aquatic habitat for the California red-legged frog that was permanently lost and 0.1-acre that was temporarily disturbed; 0.20-acre of upland habitat that were permanently lost and 0.12-acre that were temporarily disturbed.

Nineteen critical habitat units may be adversely affected by actions conducted pursuant to this biological opinion. These critical habitat units occur in Santa Cruz, San Benito, Monterey, San Luis Obispo, and Santa Barbara Counties. The physical and biological features important to the

conservation of the California red-legged frog are included in the following descriptions from the final rule 75(FR) 12816:

SCZ-1, North Coastal Santa Cruz County

This unit consists of approximately 72,249 acres of land and is located along the coastline of northern Santa Cruz County, plus a small area in southern San Mateo County, from approximately Green Oaks Creek to Wilder Creek. The unit includes the following watersheds: Green Oaks Creek, Waddell Creek, East Waddell Creek, Scott Creek, Big Creek, Little Creek, San Vicente Creek, Laguna Creek, and Majors Creek. The unit is mapped from occurrences recorded at the time of listing and subsequent to the time of listing and is currently occupied. SCZ-1 contains the features that are essential for the conservation of the species. The unit also contains aquatic habitat for breeding and non-breeding activities (PCE 1 and PCE 2), and upland habitat for foraging and dispersal activities (PCE 3 and PCE 4). SCZ-1 provides connectivity between occupied sites along the coast and farther inland. In addition, it contains high-quality habitat, indicated by high density of extant occurrences, permanent and ephemeral aquatic habitat suitable for breeding, and accessible upland areas for dispersal, shelter, and food. The unit represents one of two areas designated for critical habitat in Santa Cruz County and is the northern extent of the central coast recovery unit.

The physical and biological features essential to the conservation of California red-legged frog in the SCZ-1 unit may require special management considerations or protection due to water diversions, which may alter aquatic habitats and thereby result in the direct or indirect loss of egg masses, juveniles, or adults.

SCZ-2, Watsonville Slough

This unit consists of approximately 4,057 acres of land and is located along the coastal plain in southern Santa Cruz County, north of the mouth of the Pajaro River and seaward of California Highway 1. It includes locations in the Watsonville Slough system, including all or portions of Gallighan, Hanson, Harkins, Watsonville, Struve, and the West Branch of Struve sloughs. The unit includes portions of the Corralitos Lagoon and Mouth of the Pajaro River watersheds. The unit is mapped from occurrences recorded at the time of listing and subsequent to the time of listing. SCZ-2 contains the features that are essential for the conservation of the species. This unit is currently occupied, and contains permanent and ephemeral aquatic habitat for breeding and non-breeding activities (PCE 1 and PCE 2), and contains upland habitat for foraging, dispersal activities, and shelter (PCE 3 and PCE 4). SCZ-2 also provides connectivity between occupied sites along the coast and farther inland.

The physical and biological features essential to the conservation of California red-legged frog in the SCZ-2 unit may require special management considerations or protection due predation by nonnative species, and due to urbanization and the presence of introduced invasive plants, both of which may alter aquatic or upland habitats and thereby result in the direct or indirect loss of egg masses or adults.

MNT-1, Elkhorn Slough

This unit consists of approximately 519 acres of land and is located along the coastal plain in northern Monterey County, inland from the town of Moss Landing, and it is mapped from occurrences recorded at the time of listing and subsequent to the time of listing. This unit is currently occupied. The unit includes the eastern edge of the Elkhorn Slough watershed and the western edge of the Strawberry Canyon watershed. MNT-1 contains the features that are essential for the conservation of the species. This unit contains aquatic habitat for breeding and non-breeding activities (PCE 1 and PCE 2), and upland habitat for foraging and dispersal activities (PCE 3 and PCE 4). The designation of MNT-1 is expected to prevent further fragmentation of habitat in this portion of the species' range, contains permanent and ephemeral aquatic habitats suitable for breeding, and contains upland areas for dispersal, shelter, and food. We have determined that these attributes are essential to the conservation of the species. Elkhorn Slough is unique in that it is a large estuary/freshwater slough system not typically found on the California coast. The unit consists entirely of private land.

The physical and biological features essential to the conservation of California red-legged frog in the MNT-1 unit may require special management considerations or protection due to pesticide exposure, trematode infestation, disease, and predation by nonnative species, which may affect aquatic or upland habitats and thereby result in the direct or indirect loss of egg masses or adults.

MNT-2, Carmel River

This unit consists of approximately 119,492 acres of land, is located south and southeast of the city of Monterey, and includes locations in the Carmel River drainage and nearby San Jose Creek. The unit includes the following watersheds and portions of watersheds: the southern portion of Carmel Bay, Carmel Valley, Robinson Canyon, San Jose Creek, Las Garces Creek, Hitchcock Canyon, the western portion of Lower Tularcitos Creek, Klondike Canyon, Black Rock Creek, Pine Creek, Danish Creek, Cachagua Creek, Lower Finch Creek, Bear Canyon, Bruce Fork, and Miller Canyon. It is mapped from occurrences recorded at the time of listing and subsequent to the time of listing. MNT-2 contains the features that are essential for the conservation of the species. The unit is currently occupied and contains permanent and ephemeral aquatic habitat for breeding and non-breeding activities (PCE 1 and PCE 2), and upland habitat for foraging, dispersal activities, and shelter (PCE 3 and PCE 4). The unit is the largest designated within Monterey County.

The physical and biological features essential to the conservation of California red-legged frog in the MNT-2 unit may require special management considerations or protection due to predation by nonnative species, urbanization, and water pumping and diversions, which may alter aquatic or upland habitats and thereby result in the direct or indirect loss of egg masses or adults.

MNT-3, Big Sur Coast

This unit consists of approximately 27,542 acres of land; is located along the Big Sur coastline in Monterey County, approximately from the mouth of the Little Sur River south to McWay Canyon; and includes locations in and around the Big Sur River drainage. The unit includes the following watersheds: Point Sur, Big Sur River, Ventana Creek, Sycamore Canyon, and Partington Creek. This unit was not known to be occupied at the time of listing, but surveys conducted subsequent to the time of listing show that this unit is currently occupied. Based on life history and population dynamics of the species we have determined that the area was most likely occupied at the time of listing. MNT-3 is essential for the conservation of the species because it contains the largest coastal habitat within Monterey Bay region and provides for connectivity to more interior units further north. MNT-3 also contains permanent and ephemeral aquatic habitat for breeding and non-breeding activities (PCE 1 and PCE 2), and upland habitat for foraging, dispersal activities, and shelter (PCE 3 and PCE 4). MNT-3 is currently occupied by the species.

The physical and biological features essential to the conservation of California red-legged frog in the MNT-3 unit may require special management considerations or protection due to predation by non-native species, urbanization, and water pumping and diversions, which may alter aquatic or upland habitats and thereby result in the direct or indirect loss of egg masses or adults.

SNB-1, Hollister Hills/San Benito River

This unit consists of approximately 36,294 acres of land and is located in northwestern San Benito County in the San Benito River drainage. The unit includes the following watersheds and portions of watersheds: the southern portions of San Justo Reservoir, Northeast Hollister Hills, and Upper Bird Creek; Left Fork Bird Creek; Sulfur Canyon; and the western portions of Arroyo Hondo, Willow Grove School, Paicines Ranch, and Lower Pescadero Creek. It is mapped from occurrences recorded at the time of listing and subsequent to the time of listing near Saint Frances Retreat, San Juan Oaks, Azalea Canyon, Bird Creek, Hollister Hills State Vehicle Recreation Area, Paicines Reservoir, and Tres Pinos Creek. SNB-1 contains the features that are essential for the conservation of the species. The unit contains aquatic habitat for breeding and non-breeding activities (PCE 1 and PCE 2), and upland habitat for foraging and dispersal activities (PCE 3 and PCE 4). SNB-1 also provides essential connectivity between sites on the coast plain and inner Coast Range. SNB-1 is occupied by the species, is expected to prevent further fragmentation of habitat in this portion of the species' range, and contains permanent and ephemeral aquatic habitats suitable for breeding and accessible upland areas for dispersal, shelter, and food.

The physical and biological features essential to the conservation of California red-legged frog in the SNB-1 unit may require special management considerations or protection due to predation by nonnative species, and habitat disturbance, which may alter aquatic and upland habitats and thereby result in the direct or indirect loss of egg masses or adults.

SNB-2, Antelope Creek/Upper Tres Pinos Creek

This unit consists of approximately 17,356 acres of land and is located in central San Benito County along the Tres Pinos Creek drainage within the Antelope Creek watershed. This unit was not known to be occupied at the time of listing, but surveys conducted subsequent to the time of listing show that this unit is currently occupied, and based on life history and population dynamics of the species we have determined that the area was most likely occupied at the time of listing. It is mapped from occurrence records in and along Tres Pinos Creek between the confluences of Boulder and Willow Springs Creeks. SNB-2 is essential for the conservation of the species because it provides aquatic habitat for breeding and non-breeding activities (PCE 1 and PCE 2), and upland habitat for foraging and dispersal activities (PCE 3 and PCE 4). SNB-2 is occupied by the species, is expected to prevent fragmentation of habitat in this portion of the species' range, and contains permanent and ephemeral aquatic habitats suitable for breeding and accessible upland areas for dispersal, shelter, and food. The unit consists entirely of private land. The physical and biological features essential to the conservation of California red-legged frog in the SNB-2 unit may require special management considerations or protection due to predation by nonnative species, overgrazing and trampling of aquatic and upland habitat by feral pigs, and recreational activities, which may alter aquatic and upland habitats and thereby result in the direct or indirect loss of egg masses or adults.

SNB-3, Pinnacles National Monument

This unit consists of approximately 63,753 acres of land; is located in the Gabilan Range at Pinnacles National Monument, about 3.5 miles west of the town of San Benito in southern San Benito County; and is mapped from occurrences recorded at the time of listing and subsequent to the time of listing. The unit includes the following watersheds: Gloria Lake, Bickmore Canyon, Sulfur Creek, and George Hansen Canyon. SNB-3 contains the features that are essential for the conservation of the species. The unit contains aquatic habitat for breeding and non-breeding activities (PCE 1 and PCE 2), and upland habitat for foraging and dispersal activities (PCE 3 and PCE 4). SNB-3 is expected to prevent further fragmentation of habitat in this portion of the species' range; contains permanent and ephemeral aquatic habitat suitable for breeding; contains accessible upland areas for dispersal, shelter, and food; and is occupied by the species.

The physical and biological features essential to the conservation of California red-legged frog in the SNB-3 unit may require special management considerations or protection due to predation by nonnative species, overgrazing and trampling of aquatic and upland habitat by feral pigs, and recreational activities, which may alter aquatic and upland habitats and thereby result in the direct or indirect loss of egg masses or adults.

SLO-1, Cholame

This unit consists of approximately 18,018 acres of land; and is located in northeastern San Luis Obispo, northwestern Kern, and southwestern Kings Counties; includes locations in the Cholame Creek drainage; and is mapped from occurrences recorded at time of listing and subsequent to

the time of listing. The unit includes portions of the following watersheds: the southern portion of Blue Point, the western portion of Jack Canyon, and the eastern portion of Palo Prieto Canyon. SLO-1 contains the features that are essential for the conservation of the species. The unit contains aquatic habitat for breeding and non-breeding activities (PCE 1 and PCE 2), and upland habitat for foraging and dispersal activities (PCE 3 and PCE 4). SLO-1 contains permanent and ephemeral aquatic habitats suitable for breeding; contains accessible upland areas for dispersal, shelter, and food; and is occupied by the species.

The physical and biological features essential to the conservation of California red-legged frog in the SLO-1 unit may require special management considerations or protection due to highway construction, overgrazing, and water diversions, which may alter aquatic or upland habitats and thereby result in the direct or indirect loss of egg masses or adults.

SLO-2, Piedras Blancas to Cayucos Creek

This unit consists of approximately 82,673 acres of land and is located along the coast in northwestern San Luis Obispo County from approximately Arroyo de Los Chinos southward to just before but not including Whale Rock Reservoir. The unit includes the following watersheds: Arroyo de los Chinos, Lower Arroyo de la Cruz, Arroyo del Corral, Oak Knoll Creek, Broken Bridge Creek, Pico Creek, Upper San Simeon Creek, Lower San Simeon Creek, Steiner Creek, Upper Santa Rosa Creek, Lower Santa Rosa Creek, and Lower Green Valley Creek. The unit is mapped from occurrences recorded at the time of listing and subsequent to the time of listing. SLO-2 contains the features that are essential for the conservation of the species. The unit contains aquatic habitat for breeding and non-breeding activities (PCE 1 and PCE 2), and upland habitat for foraging and dispersal activities (PCE 3 and PCE 4). SLO-2 provides connectivity within the Santa Lucia Range, and between this range and the inner Coast Range in San Luis Obispo County. This unit is occupied by the species. The unit contains high-quality habitat, indicated by high density of extant occurrences, permanent and ephemeral aquatic habitats suitable for breeding, and accessible upland areas for dispersal, shelter, and food.

The physical and biological features essential to the conservation of California red-legged frog in the SLO-2 unit may require special management considerations or protection due to predation by nonnative species, water diversion, overgrazing, and urbanization, which may alter aquatic or upland habitats and thereby result in the direct or indirect loss of egg masses or adults due to habitat modification.

SLO-3, Willow and Toro Creeks to San Luis Obispo

This unit consists of approximately 116,517 acres of land and is located near the coast in central San Luis Obispo County and extends about 1.9 miles north of the town of Morro Bay southward to just north and east of the city of San Luis Obispo. The unit includes the following watersheds: Old Creek, Whale Rock Reservoir, the southern portion of Hale Creek, Morro Bay, San Luisito Creek, the western and southern portions of Santa Margarita Creek, Choro Reservoir, Stenner Lake, Reservoir Canyon, Trout Creek, and Big Falls Canyon. The unit is mapped from

occurrences recorded at the time of listing and subsequent to the time of listing. SLO-3 contains the features that are essential for the conservation of the species. The unit is currently occupied and contains permanent and ephemeral aquatic habitat for breeding and non-breeding activities (PCE 1 and PCE 2), and upland habitat for foraging, dispersal, and shelter (PCE 3 and PCE 4). SLO-3 provides connectivity within the Santa Lucia Range, and between this range and the inner Coast Range in San Luis Obispo County.

The physical and biological features essential to the conservation of California red-legged frog in the SLO-3 unit may require special management considerations or protection due to predation by nonnative species, water diversion, overgrazing, and urbanization, which may alter aquatic or upland habitats and thereby result in the direct or indirect loss of egg masses or adults due to habitat modification.

SLO-4, Upper Salinas River

This unit consists of approximately 34,463 acres of land, is located at the base of Garcia Mountain about 17 miles east of the City of San Luis Obispo, is mapped from occurrences recorded subsequent to the time of listing, and is currently occupied by the species. Based on the life history and population dynamics of the species we have determined that the area was most likely occupied at the time of listing. The unit includes the following watersheds: Horse Mesa, Douglas Canyon, American Canyon, and Coyote Hole. This unit is essential for the conservation of the species because it is the only unit in San Luis Obispo County entirely within the interior Coast Range and provides connectivity between populations in the coastal areas and populations farther inland. SLO-4 also contains permanent and ephemeral aquatic habitats consisting of natural and manmade ponds surrounded by emergent vegetation and marshland with upland dispersal habitat comprised of riparian areas for dispersal, shelter, and foraging.

The physical and biological features essential to the conservation of California red-legged frog in the SLO-4 unit may require special management considerations or protection due to predation by nonnative species, and due to water diversion, overgrazing, and urbanization, which may alter aquatic or upland habitats and thereby result in the direct or indirect loss of egg masses or adults due to habitat modification.

STB-1, La Brea Creek

This unit consists of approximately 25,164 acres of land, is located in Los Padres National Forest in northern Santa Barbara County, and is mapped from occurrences recorded at the time of listing and subsequent to the time of listing. The unit includes the following watersheds: Bear Canyon, the southern portion of Smith Canyon, Rattlesnake Canyon, Lower South Fork La Brea Creek, and the eastern portion of Lower La Brea Creek. STB-1 contains the features that are essential for the conservation of the species. The unit contains aquatic habitat for breeding and non-breeding activities (PCE 1 and PCE 2), and upland habitat for foraging and dispersal activities (PCE 3 and PCE 4).

The physical and biological features essential to the conservation of California red-legged frog in the STB-1 unit may require special management considerations or protection due to recreational activities, which may alter aquatic or upland habitats and thereby result in the direct or indirect loss of egg masses or adults.

STB-2, San Antonio Terrace

This unit consists of approximately 12,066 acres of land, is located in northwestern Santa Barbara County near the coast, extends from about Casmalia south to the Santa Lucia Canyon near the Purisima Hills, and is mapped from occurrences recorded subsequent to the time of listing. Based on the life history and population dynamics of the species we have determined that the area was most likely occupied at the time of listing. The unit includes the following watersheds: Graciosa Canyon and Lions Head. STB-2 provides connectivity between coastal populations and populations in the Transverse Ranges. STB-2 also contains aquatic habitat for breeding and non-breeding activities (PCE 1 and PCE 2), and upland habitat for foraging and dispersal activities (PCE 3 and PCE 4). This unit is currently occupied by the species.

The physical and biological features essential to the conservation of California red-legged frog in the STB-2 unit may require special management considerations or protection due to recreational activities, which may alter aquatic or upland habitats and thereby result in the direct or indirect loss of egg masses or adults.

STB-3, Sisquoc River

This unit consists of approximately 47,559 acres of land and is located in northern Santa Barbara County and includes locations in the Sisquoc River drainage and is mapped from occurrences recorded at the time of listing and subsequent to the time of listing. The unit contains the following watersheds: the southern portion of Tunnel Canyon, Burro Canyon, Sulphur Creek, Lower Manzano Creek, Middle Manzano Creek, Fir Canyon, Upper Cachuma Creek, and the northern portion of Happy Canyon. STB-3 contains the features that are essential for the conservation of the species. The unit contains aquatic habitat for breeding and non-breeding activities (PCE 1 and PCE 2), and upland habitat for foraging and dispersal activities (PCE 3 and PCE 4). STB-3 is occupied by the species, provides connectivity between locations along the coast and the Transverse Ranges, and is essential in stabilizing populations of the species in tributaries to the Santa Ynez River.

The physical and biological features essential to the conservation of California red-legged frog in the STB-3 unit may require special management considerations or protection due predation by nonnative species, recreational activities, and poor water management practices which may alter aquatic or upland habitats and thereby result in the direct or indirect loss of egg masses or adults.

STB-4, Jalama Creek

This unit consists of approximately 7,685 acres of land and is located along the coast in southwestern Santa Barbara County about 4.4 miles south of the City of Lompoc, and is mapped from occurrences recorded at the time of listing and subsequent to the time of listing. The unit includes the Casper Creek watershed. STB-4 contains the features that are essential for the conservation of the species. The unit includes aquatic habitat for breeding and non-breeding activities (PCE 1 and PCE 2), and upland habitat for foraging and dispersal activities (PCE 3 and PCE 4). STB-4 is occupied by the species and provides connectivity between locations along the coast and the Santa Ynez River watershed.

The physical and biological features essential to the conservation of California red-legged frog in the STB-4 unit may require special management considerations or protection due to predation by nonnative species and habitat disturbance, which may alter aquatic and upland habitats and thereby result in the direct or indirect loss of egg masses or adults.

STB-5, Gaviota Creek

This unit consists of approximately 12,888 acres of land, is located along the coast in southern Santa Barbara County about 3 miles southwest of the town of Buellton, and is mapped from occurrences recorded at the time of listing and subsequent to the time of listing. The unit includes the following watersheds: Cañada de las Cruces and Cañada de la Gavota. STB-5 contains the features that are essential for the conservation of the species. The unit contains aquatic habitat for breeding and non-breeding activities (PCE 1 and PCE 2), and upland habitat for shelter, foraging and dispersal activities (PCE 3 and PCE 4). STB-5 is occupied by the species and provides connectivity between locations along the coast and the Santa Ynez River watershed.

The physical and biological features essential to the conservation of California red-legged frog in the STB-5 unit may require special management considerations or protection due to predation by nonnative species and poor water management practices, which may alter aquatic or upland habitats and thereby result in the direct or indirect loss of egg masses or adults. Populations in this unit may also require special management or protection due to their potential importance in stabilizing California red-legged frog populations in tributaries to the Santa Ynez River.

STB-6, Arroyo Quemado to Refugio Creek

This unit consists of approximately 11,985 acres of land, is located along the coast in southern Santa Barbara County about 5 miles south of the town of Solvang, and is mapped from occurrences recorded at the time of listing and subsequent to the time of listing. The unit includes the Tajiguas Creek watershed. STB-6 contains the features that are essential for the conservation of the species. The unit contains aquatic habitat for breeding and non-breeding activities (PCE 1 and PCE 2), and upland habitat for foraging and dispersal activities (PCE 3 and PCE 4). STB-6 is occupied by the species, provides connectivity between locations along the

coast and the Santa Ynez River watershed, and contains permanent and ephemeral aquatic habitats suitable for breeding, and upland areas for dispersal, shelter, and food.

The physical and biological features essential to the conservation of California red-legged frog in the STB-6 unit may require special management considerations or protection due to predation by nonnative species and poor water management practices, which may alter aquatic or upland habitats and thereby result in the direct or indirect loss of egg masses or adults. Populations in this unit may also require special management or protection due to their potential importance in stabilizing California red-legged frog populations in tributaries to the Santa Ynez River.

STB-7, Upper Santa Ynez River and Matilija Creek

This unit consists of approximately 145,121 acres of land, is located in southeastern Santa Barbara County about 5 miles north of the City of Santa Barbara, and extends into western Ventura County at Matilija Creek. It is mapped from occurrences recorded at the time of listing and subsequent to the time of listing. The unit includes the following watersheds: Los Lauveles Canyon, Redrock Canyon, Oso Canyon, Buckhorn Creek, Camuesa Creek, Devils Canyon, Indian Creek Campground, Upper Mono Creek, Lower Mono Creek, Blue Canyon Upper Agua Caliente Canyon, Diablo Canyon, Lower Agua Caliente Canyon, Juncal Canyon, Lower Matilija Creek, North Fork Matilija Creek, and Cozy Dell Canyon. STB-7 contains the features that are essential for the conservation of the species. This unit contains aquatic habitat for breeding and non-breeding activities (PCE 1 and PCE 2), and upland habitat for foraging and dispersal activities (PCE 3 and PCE 4). STB-7 is occupied by the species and provides connectivity between locations along the coast, in the Sierra Madre Mountains, and in the Ventura River watershed. It is important to species conservation and the persistence of the species in the Matilija watershed because it contains permanent and ephemeral aquatic habitats suitable for breeding, and upland areas for dispersal, shelter, and food in that portion of the unit, which will provide connectivity between populations within the Transverse Ranges and will prevent further isolation of breeding locations near the limit of the geographic range of the species. The unit as a whole contains high-quality habitat, indicated by the high density of extant occurrences, permanent and ephemeral aquatic habitat suitable for breeding, and accessible upland areas for dispersal, shelter, and food.

The physical and biological features essential to the conservation of California red-legged frog in the STB-7 unit may require special management considerations or protection due to predation by nonnative species, flood control activities, road maintenance, and recreational activities, which may alter aquatic and upland habitats and thereby result in the direct or indirect loss of egg masses or direct death of adults.

EFFECTS OF THE ACTION

California Red-legged Frog

Activities that are evaluated under this biological opinion are those that would not cause ecosystem-scale changes and are not likely to contribute to the decline of the California red-legged frog. These activities would also not preclude any of the potentially affected critical habitat units from providing the primary constituent elements necessary to support the essential life history functions (i.e., reproduction, feeding, and sheltering) of the California red-legged frog.

Direct impacts to adults, sub-adults, tadpoles, and eggs of the California red-legged frog in the footprint of projects evaluated by this biological opinion may include injury or mortality from being crushed by earth moving equipment, construction debris, and worker foot traffic. These impacts will be reduced by minimizing and clearly demarcating the boundaries of the project areas and equipment access routes and locating staging areas outside of riparian areas or other water bodies. Scheduling work activities to avoid sensitive areas, such as breeding pools during the breeding season and isolated aquatic refuges during dry periods, as proposed by Caltrans, would substantially reduce adverse effects.

The capture and handling of California red-legged frogs to move them from a work area may result in injury or mortality. Mortality may occur as a result of improper handling, containment, or transport of individuals or from releasing them into unsuitable habitat. Improper handling, containment, or transport of individuals would be reduced or prevented by use of a Service-approved biologist. California red-legged frogs may attempt to return to the capture site, especially if it contains suitable breeding habitat and the relocation site is a different pond or creek than the capture site. California red-legged frogs attempting to return to capture sites are likely to be more susceptible to predation, exposure to the elements, and vehicle stikes if they attempt to return to the original capture site. Relocating California red-legged frogs within the same drainage or water body, if possible, will reduce this threat. Overall, relocation as proposed by Caltrans is intended to reduce the risk of injury or mortality from the direct effects described above.

Construction activities, including noise and vibration, may cause California red-legged frogs to temporarily abandon habitat adjacent to work areas. This disturbance may increase the potential for predation and desiccation when California red-legged frogs leave shelter sites.

Tadpoles may be entrained by pump intakes if such devices are used to dry out work areas. However, Caltrans will ensure that pump intakes are covered with wire mesh not larger than 0.2 inch to preclude juvenile California red-legged frogs and tadpoles from entering pump intakes.

Some potential also exists for disturbance of habitat to cause the spread or establishment of non-native invasive species, such as giant reed (*Arundo donax*) or salt cedar (*Tamarix* spp.). Once established, these species degrade habitat values through several mechanisms (Service 1999).

Breeding pools surrounded by large amounts of salt cedar and giant reed may dry faster because their rates of evapotranspiration are generally greater than those of native riparian species. The abundance and diversity of prey species are generally less in dense stands of giant reed and salt cedar than in areas dominated by native plants. Additionally, these invasive species can eventually out-compete native plant species and displace them; dense aggregations of salt cedar can cause soils to become hypersaline because these plants concentrate salt from water and then excrete it onto the surrounding ground. Caltrans has proposed measures to prevent the spread or introduction of these species, such as minimizing the number of access routes, size of staging areas, and the total area of the activity; restoring disturbed areas with native species. These measures should reduce or eliminate this adverse effect.

Some actions proposed by Caltrans may involve the use of herbicides to control or eliminate non-native plant species. There are currently 66 pesticides are not approved for use in habitat for the California red-legged frog (Center for Biological Diversity v. Johnson and Nastri; case number C-02-1580-JSW). Caltrans has been exempted from this injunction for upland and riparian projects and projects that are 60 feet or more from bodies of water (G. Ruggerone pers. comm. 2007). However because California red-legged frogs may occur in upland habitat up to one mile from suitable aquatic habitat, there is still a potential for California red-legged frogs to be adversely affected by Caltrans' use of herbicides in uplands.

If Caltrans uses herbicides, Glyphosate (formulated as Rodeo® or Aquamaster®) is probably the most likely herbicide to be used. Glyphosate is the active ingredient in a variety of herbicides including Roundup®, Rodeo®, Aquamaster®, Buccaneer®, Glyfos®, Honcho®, Touchdown®, Vision®, Duramax®, Rattler®, and others. Glyphosate is a systemic herbicide that will kill broadleaf and grass species by inhibiting the production of aromatic amino acids in plants and some microorganisms that are necessary to build proteins (Devine et al. 1993). Because many animals lack the synthesis pathway that glyphosate disrupts, it is considered to have low potential to cause toxicity in animals (Devine et al. 1993). Most glyphosate products are formulated to contain surfactants that allow the active ingredients to spread over and penetrate the plant cuticles. Surfactants can be the most toxic portion of a pesticide product. The surfactant associated with many glyphosate products is a polyethoxylated tallowamine (POEA) surfactant.

California red-legged frog eggs, tadpoles, juveniles and adults can be exposed to glyphosate products and POEA surfactants in aquatic habitats through direct overspray of wetlands, drift from treated areas, or contaminated runoff from treated areas. The half-life of glyphosate in pond water ranges between 12 days and 10 weeks (Extoxnet 1996). Additionally, juvenile and adult California red-legged frogs can also be exposed to glyphosate in terrestrial habitats that have been treated. Glyphosate and POEA readily binds to soil particles and can be degraded by microbes in 7 to 70 days depending on soil conditions (Giesy et al. 2000). The half-life of glyphosate in soil can range from three to 249 days and the POEA surfactant in Roundup has a soil half-life of less than one week (Forest Service 1997).

No information is available regarding the toxicity of glyphosate products specifically to California red-legged frogs. Studies exploring the lethal and sublethal effects of glyphosate products on other amphibians, including similar frog species classified in the same genus as the California red-legged frog (*Rana*) are available but are largely focused on aquatic life stages of the species and formulations of glyphosate that include surfactants. Roundup Original Max®, a glyphosate product with POEA surfactant, was demonstrated to be moderately to highly toxic to nine species of frog and toad tadpoles including five *Rana* species: wood frog (*Rana sylvatica)*, leopard frog (*Rana pipiens*), Cascades frog (*Rana cascadae*), green frog (*Rana clamitans*), and American bullfrog (*Rana catesbeiana*) (Relyea and Jones 2009). Because the biology of these species is very similar to the California red-legged frog, we assume the effects of POEA surfactants and glyphosate formulations containing POEA, would be the same on the California red-legged frog. Mann and Bidwell (1999) also found evidence of acute toxicity to four Australian frog species exposed to Roundup,® while the isopropylamine (IPA) salt of glyphosate (the active constituent in Roundup®) was found to be non-toxic. The mortality of tadpoles is hypothesized to be caused by the lysis of gill cells from exposure to surfactants (Lajmanovich et al. 2003, Edington et al. 2004) resulting in either to asphyxiation or loss of osmotic stability (Able 1974) indicating that the life stage during which frogs and toads have gills may be particularly vulnerable. Glyphosate products containing POEA surfactants have also been shown to have sub-lethal effects to amphibians including decreased size, increased time to metamorphosis, tail malformations, and gonadal abnormalities (Govindarajulu 2008, Howe et al. 2004).

Several studies suggest that the toxicity of glyphosate products is linked with the surfactant, and not the glyphosate. Howe et al. (2004) compared the toxicity of glyphosate alone, to glyphosate with POEA surfactant, and POEA alone, on green frogs. Results indicated that the toxicity of glyphosate with POEA surfactant was similar to the POEA surfactant alone, which was much greater than glyphosate alone, indicating that the POEA was responsible for the toxic effects. In a comprehensive review of studies involving the effects of glyphosate on amphibians Govindarajulu (2008) concluded that the toxic effect of glyphosate products containing POEA are due to the POEA rather than the active glyphosate ingredient.

These studies indicate that glyphosate products formulated with POEA surfactants will likely kill or injure California red-legged frogs in aquatic habitats, with tadpoles being particularly vulnerable. Because glyphosate and POEA readily bind to soil and sediments, these chemicals may be less available to California red-legged frogs in terrestrial habitats; however, research is needed to determine toxicity mechanisms and thresholds from terrestrial exposure. Based on the literature (Howe 2004, Govindarajulu 2008), adverse effects to California red-legged frogs from the use of glyphosate products can be minimized through the use of products that do not contain a surfactant. Formulations that lack a surfactant include Rodeo and Aquamaster, which have been approved by the Environmental Protection Agency, through their registration process, for aquatic use.

A low-toxicity, non-POEA surfactant that works well with Rodeo® or Aquamaster® is Agri-Dex®, produced by Helena Chemicals. We are not aware of any information regarding the

toxicity of Agri-Dex® on amphibians, but based on the data available, Monheit et al. (2004) concluded crop oil-based surfactants (i.e. Agri-Dex®) are probably less acutely toxic to fish, aquatic invertebrates and one frog species tested, than some other types of surfactants. The amount of Agri-Dex® that resulted in acute toxicity (i.e., >1000 parts per million (ppm) (Helena Chemical Company 2004, Washington State Department of Ecology and Agriculture 2004) was levels of magnitude higher than other surfactants tested including POEA (1.6 to 0.65ppm in Haller and Stocker 2003, Giesy et al. 2000, Folmar et al. 1979). It is important to note that so called crop oil-based surfactants, which suggest these products are vegetable-based, are actually petroleum products (Forest Service 1997). There could be sub-lethal adverse effects or long-term adverse effects to California red-legged frogs, from chronic exposure to these chemicals, that have not been documented. Overall, Agri-Dex® may be less toxic than other surfactants, but the use of glyphosate without a surfactant is probably even less toxic to the California red-legged frog.

The protective measures proposed by Caltrans, including surveys prior to the application of herbicides, capture and relocation of California red-legged frogs out of harm's way and restricting the use of herbicides to the non-breeding season (dry summer months) will greatly reduce the potential for injury or mortality of the California red-legged frog as a result of herbicide use.

If water that is impounded during or after work activities creates favorable habitat conditions fornon-native predators, such as bullfrogs, crayfish, and centrarchid fishes, California red-legged frogs may suffer abnormally high rates of predation. Additionally, any time California red-legged frogs are concentrated in a small area at unusually high densities, native predators such as herons, egrets, opossums (*Didelphis virginiana*), and raccoons (*Procyon lotor*) may feed on them opportunistically. Finally, if impoundments occupied by California red-legged frogs were to dry out as a result of construction activity, California red-legged frogs may die of desiccation or be eaten by predators as they attempt to find other suitable habitat. Caltrans' proposal to avoid creating impoundments of water within project areas is likely to reduce these effects.

Trash left during or after project activities could attract predators to work sites, which could, in turn, prey on California red-legged frogs. For example, raccoons are attracted to trash and also prey opportunistically on California red-legged frogs. This potential impact will be reduced or avoided by careful control of waste products at all work sites as proposed by Caltrans.

Chytridiomycosis is an infectious disease that affects amphibians worldwide, and is caused by the chytrid fungus. Chytrid fungus is a water-borne fungus that can be spread through direct contact between aquatic animals and by a spore that can move short distances through the water. The fungus only attacks the parts of a frog's skin that have keratin (thickened skin), such as the mouthparts of tadpoles and the tougher parts of adults' skin, such as the toes. The fungus can decimate amphibian populations, causing fungal dermatitis which usually results in death in 1 to 2 weeks, but not before infected animals may have spread the fungal spores to other ponds and streams. Once a pond or waterway has become infected with chytrid fungus, the fungus stays in the water for an undetermined amount of time. Chytrid fungus could be spread if infected

California red-legged frogs are relocated and introduced into areas with healthy California red-legged frogs. It is also possible during the relocation of California red-legged frogs that infected equipment or clothing could introduce chytrid fungus into areas where it did not previously occur. Caltrans proposes to implement the fieldwork code of practice developed by the Declining Amphibian Populations Task Force which should reduce or eliminate the potential for movement of chytrid fungus.

Accidental spills of hazardous materials or careless fueling or oiling of vehicles or equipment could degrade aquatic or upland habitat to a degree where California red-legged frogs are adversely affected or killed. The potential for this impact to occur will be reduced by Caltrans' proposal to require: all refueling, maintenance, and staging of equipment and vehicles to occur at least 60 feet from riparian habitat or water bodies and not in a location from where a spill would drain directly toward aquatic habitat; the monitor to ensure contamination of habitat does not occur during such operations; that a plan is in place for prompt and effective response to any accidental spills; and all workers to be informed of the importance of preventing spills and of the appropriate measures to take should a spill occur.

Workers may intentionally or unintentionally disturb, injure, or kill California red-legged frogs. The potential for this impact to occur will be reduced by Caltrans' proposal to conduct pre-construction training informing workers of the presence and protected status of this species and the measures that are being implemented to protect it during project activities.

Work in streams or in floodplains could cause unusually high levels of siltation downstream. This siltation could smother eggs of the California red-legged frog and alter the quality of habitat to the extent that use by individuals of the species is precluded. Implementing best management practices and reducing the area to be disturbed to the minimum necessary, as proposed by Caltrans, will likely assist in reducing the amount of sediment that is washed downstream, as a result of project activities.

Caltrans has proposed that consultation would be reinitiated if 10 California red-legged frogs or 20 tadpoles are killed or injured in any given year, or if 50 California red-legged frogs are killed or injured in total. However, because of the measures that Caltrans has proposed to reduce the level of injury or morality, we expect that few California red-legged frogs would be killed or injured in any given year. Additionally, based on reproductive biology the subspecies, loss of 10 California red-legged frogs or 20 tadpoles in any given year, throughout the seven counties covered by this consultation, is not likely to compromise the conservation of the subspecies because this number represents a very small portion of the total breeding individuals assumed to be present in this region.

Critical Habitat for the California Red-legged Frog

Actions conducted pursuant to this biological opinion may be located within any one of the 19 aforementioned critical habitat units in five counties. The PCEs of critical habitat for the

California red-legged frog include: (1) aquatic breeding habitat, (2) aquatic non-breeding habitat, (3) upland habitat, and (4) dispersal habitat.

The PCEs associated with individual project sites may be permanently or temporarily altered as a result of projects conducted pursuant to this biological opinion. However, we anticipate that the effects of those projects, which must meet the criteria for use of this biological opinion, will be of such a small scale that they will not preclude the PCEs from supporting the essential life history functions of the California red-legged frog. For example, a bridge retrofitted for earthquake safety may have slightly larger footings as a result of the project. Such a minor permanent loss of aquatic habitat is not likely to compromise the ability of a stream to support the aquatic life stages of the California red-legged frog.

The reinitiation thresholds that Caltrans has proposed will ensure that the conservation of the California red-legged frog is not compromised within the affected critical habitat units. These upper limits for permanent loss of aquatic, upland, and dispersal habitat (20 acres in any given year or 100 acres in total) and upland habitat (20 acres in any given year or 100 acres in total), and temporary disturbance (100 in any given year, or 500 acrestotal over the life of the biological opinion) would be spread across the 19 critical habitat units, in which the activities covered by this biological opinion would be implemented. Given the wide distribution of a relatively minor amount of disturbance or loss of aquatic, upland, and dispersal habitat, and the high potential that most disturbance would recover within a few years, we expect the PCEs in each of the affected critical habitat units to continue to provide the life history functions essential to the conservation of the California red-legged frog.

The protective measures included in the Description of the Proposed Action section of this biological opinion would minimize adverse effects to the PCEs of critical habitat for the California red-legged frog. Based on the suitability criteria to qualify for use of this biological opinion, and the protective measures Caltrans would implement, we anticipate that any effects to critical habitat for the California red-legged frog would be temporary or minor. We do not expect such minor or temporary effects to preclude a critical habitat unit from supporting the PCEs and associated life history functions (i.e., reproduction, dispersal, feeding, and sheltering) of critical habitat for the California red-legged frog.

CUMULATIVE EFFECTS

Cumulative effects include the effects of future State, tribal, local, or private actions that are reasonably certain to occur in the action area considered in this biological opinion. Future Federal actions unrelated to the proposed action are not considered in this section because they require separate consultation pursuant to section 7 of the Act.

At this time, we do not know the specific locations of future projects that may be conducted pursuant to this biological opinion, other than that they would be sited within the Caltrans rights-of-way in San Benito, Santa Cruz, Monterey, San Luis Obispo, and Santa Barbara Counties. We

are unaware of any future non-Federal actions that are reasonably certain to occur within the action area.

CONCLUSION

After reviewing the current status of the California red-legged frog, its critical habitat, the environmental baseline, the effects of the action, projects that could be authorized under the provisions of this programmatic biological opinion, and the cumulative effects, it is the Service's biological opinion that the Caltrans' proposed action is not likely to jeopardize the continued existence of the California red-legged frog or destroy or adversely modify its critical habitat.

We have reached this conclusion because:

1. The notification process described previously allows us to review each proposed action to determine if it meets falls within the scope of this programmatic biological opinion, and to ensure the effects are not likely to be outside of the limited levels we anticipate;

2. Few California red-legged frogs are likely to be killed or injured during project activities;

3. Caltrans has established a threshold that will trigger reinitiation of formal consultation (based on a finite number of California red-legged frogs that would be injured or killed), which would not result in population level impacts to this species;

4. In comparison with the amount of critical habitat available to the California red-legged frog in San Benito, Santa Cruz, Monterey, San Luis Obispo, and Santa Barbara Counties, a relatively small amount of critical habitat would be permanently lost within each critical habitat unit and relative to the entire critical habitat designation;

5. Although we anticipate that some minor or temporary adverse effects to the PCEs in each of the 19 affected critical habitat units may occur, we do not anticipate effects of this nature to preclude those PCEs from providing the essential life history functions (i.e., reproduction, dispersal, feeding, and sheltering) necessary to ensure the conservation of the California red-legged frog because Caltrans has established a threshold of affected acres of habitat types that comprise the PCEs, that will trigger reinitation of formal consultation; and

6. Caltrans has proposed numerous measures to reduce the adverse effects of the proposed activities on the California red-legged frog and its critical habitat.

INCIDENTAL TAKE STATEMENT

Section 9 of the Act and Federal regulation pursuant to section 4(d) of the Act prohibit the take of endangered and threatened species, respectively, without special exemption. Take is defined as to harass, harm, pursue, hunt, shoot, wound, kill, trap, capture or collect, or to attempt to engage in any such conduct. Harm is further defined by the Service to include significant habitat

modification or degradation that results in death or injury to listed species by significantly impairing essential behavioral patterns, including breeding, feeding, or sheltering. Harass is defined by the Service as intentional or negligent actions that create the likelihood of injury to listed species by annoying it to such an extent as to significantly disrupt normal behavioral patterns which include, but are not limited to, breeding, feeding or sheltering. Incidental take is defined as take that is incidental to, and not the purpose of, the carrying out of an otherwise lawful activity. Under the terms of section 7(b)(4) and section 7(o)(2), taking that is incidental to and not intended as part of the agency action is not considered to be prohibited taking under the Act provided that such taking is in compliance with the terms and conditions of an incidental take statement contained in a biological opinion.

The measures described below are non-discretionary and Caltrans must make them binding conditions of any contract, permit, or funding to contractors or County Governments for the exemption in 7(o)(2) to apply. Caltrans has a continuing duty to regulate the activities covered by this incidental take statement. If Caltrans fails to adhere to the terms and conditions of the incidental take statement, the protective coverage of section 7(o)(2) may lapse. To monitor the impact of incidental take, Caltrans must report the progress of the action and its impact on the species to the Service as specified in the incidental take statement [50 CFR 402.14(i)(3)].

This biological opinion evaluates the effects of a certain scope and scale of actions that Caltrans may undertake in San Benito, Santa Cruz, Monterey, San Luis Obispo, and Santa Barbara Counties on the California red-legged frog, and its critical habitat. Because of the protective measures that Caltrans has proposed, we expect that few California red-legged frogs would be killed in any given year. All California red-legged frogs found within project areas that meet the suitability criteria described in this biological opinion may be captured and relocated. However, because capture and relocation is intended to reduce the potential for injury or mortality, and Caltrans will use biologists experienced in the capture and handling of California red-legged frogs, we anticipate that few, if any, California red-legged frogs will be injured or killed as a result of capture and relocation efforts. Finally, there is a potential for a number of California red-legged frogs to be taken as a result of exposure to herbicides, during which some may be killed or injured. The protective measures Caltrans has proposed, including conducting surveys prior to the application of herbicides, capture and relocating California red-legged frogs out of harm's way, and restricting the use of herbicides to the non-breeding season (dry summer months) of the California red-legged frog will greatly reduce the potential for injury or mortality as a result of herbicide use.

Based on the triggers for reinitiation of formal consultation that Caltrans has identified in their proposed action, we anticipate that no more than 10 adult or subadult California red-legged frogs, 10 egg masses, or 20 tadpoles would be injured or killed in a given year, or 50 California red-legged frogs during the life of this biological opinion, will be injured or killed as a result of the proposed action.

Incidental take of California red-legged frog adults, subadults, or tadpoles may be difficult to detect for the following reasons: (1) the California red-legged frog is generally difficult to detect

due to its small body size; (2) finding a dead or impaired specimen is unlikely; (3) losses may be masked by seasonal fluctuations in hydrology unrelated to the project. However, the maximum number of individuals proposed to be killed or injured each year is a relatively small portion of the population of California red-legged frogs in the action area. We do not expect the loss of these few California red-legged frog adults, subadults, egg masses, or tadpoles to compromise the ability of the species to survive and recover. Given the reproductive biology of the species, described in the Status of the Species section of this biological opinion, this number also represents a very small portion of the total number of individuals assumed to be present throughout the sub species' range. Given the wide distribution of a relatively minor amount of disturbance or temporary loss of habitat, the high potential that most disturbed areas would recover within a few years, and the ability of the California red-legged frog to survive in varying conditions, we expect the overall effect on the habitat of the California red-legged frog by the proposed activities to be minor.

This biological opinion does not exempt any activity from the prohibitions against take contained in section 9 of the Act that is not incidental to the action as described in this biological opinion. Take that occurs outside of demarcated work areas or from any activity not described in this biological opinion is not exempted from the prohibitions against take described in section 9 of the Act.

REASONABLE AND PRUDENT MEASURES

The Service believes the following reasonable and prudent measures are necessary and appropriate to minimize the take of California red-legged frogs:

1. Biologists must be authorized by the Service before they survey for, capture, and relocate California red-legged frogs from work areas.

2. Caltrans must further minimize the potential for transmitting Chytrid fungus to new locations.

The Service's evaluation of the effects of the proposed action includes consideration of the measures to minimize the adverse effects of the proposed action on the California red-legged frog that were developed by Caltrans and the Service and repeated in the Description of the Proposed Action portion of this biological opinion. Any subsequent changes in these measures proposed by Caltrans may constitute a modification of the proposed action and may warrant reinitiation of formal consultation, as specified at 50 CFR 402.16. These reasonable and prudent measures are intended to supplement the protective measures that were proposed by Caltrans as part of the proposed action.

TERMS AND CONDITIONS

To be exempt from the prohibitions of section 9 of the Act, Caltrans must comply with the following terms and conditions, which implement the reasonable and prudent measures described above. These terms and conditions are non-discretionary.

1. The following terms and conditions implement reasonable and prudent measure 1:

   1.1 Chuck Cesena, Mitch Dallas, Tom Edell, Jennifer Moonjian, Morgan Robertson, Lisa Schicker, Nancy Siepel, Jim Walth, Lisa Schicker, Cathy Stettler, and Sarah Paulson are authorized to capture, handle, relocate, survey and monitor for California red-legged frogs. Paul Holmes is authorized to independently survey and monitor for California red-legged frogs, and may capture, handle, and relocate California red-legged frogs under the direct supervision of the biologists authorized above. If Caltrans wishes to use additional biologists, it must provide their qualifications to the Service at least 30 days before they are to begin work. Additional biologists must not capture, handle, or monitor California red-legged frogs (unless under the direct, on-site supervision of the biologists authorized above) without written approval from the Service.

   1.2 Prior to the onset of grading and construction activities, Service-approved biologists must identify appropriate areas to receive translocated California red-legged frog adults and tadpoles in the action area. These areas must be in proximity to the capture site, outside of any area likely to be adversely impacted by construction activities, provide suitable habitat, and be free of exotic predatory species (e.g., bullfrogs, crayfish) to the best of the Service-approved biologist's knowledge.

   1.3 If the affected aquatic habitat includes a creek or river system, the relocation site must be within the same drainage.

   1.4 If the affected aquatic habitat includes a pond or other isolated water body, Caltrans must receive the Services approval, in writing, prior to relocating any California red-legged frogs.

If Chytrid fungus is known to occur in the drainage or pond where the proposed action would occur, California red-legged frogs must not be relocated into different drainages or ponds, without prior written approval from the Service.

REPORTING REQUIREMENTS

In addition to the pre-project notification, Caltrans must submit an annual list of projects they conducted under this programmatic concurrence and programmatic biological opinion, as described in the Description of the Proposed Action section of this document. In addition, the

enclosed Project Completion form describes the information that Caltrans must provide to the Ventura Fish and Wildlife Office upon the completion of each specific project conducted under this programmatic concurrence and programmatic biological opinion.

DISPOSITION OF DEAD OR INJURED SPECIMENS

Within 3 days of locating any dead or injured California red-legged frogs, Caltrans must notify the Ventura Fish and Wildlife Office by telephone [(805) 644-1766] and in writing (2493 Portola Road, Suite B, Ventura, California 93003). The report must include the date, time, and location of the carcass, a photograph, cause of death, if known, and any other pertinent information.

Care must be taken in handling dead specimens to preserve biological material in the best possible state for later analysis. Should any injured California red-legged frogs survive, the Service must be contacted regarding their final disposition.

The remains of California red-legged frogs found in San Benito, Santa Cruz, or Monterey Counties must be placed with the California Academy of Sciences Herpetology Department (Contact: Jens Vindum, Senior Collections Manager, California Academy of Sciences Herpetology Department (herpetology@calacademy.org), 55 Music Concourse Drive, San Francisco, California 94118.

The remains of California red-legged frogs found in San Luis Obispo, Santa Barbara, Ventura, or Los Angeles Counties must be placed with the Santa Barbara Natural History Museum (Contact: Paul Collins, Santa Barbara Natural History Museum, Vertebrate Zoology Department, 2559 Puesta Del Sol, Santa Barbara, California 93460, (805) 682-4711, extension 321). Caltrans must make arrangements regarding proper disposition of potential museum specimens prior to implementation of any actions conducted pursuant to this biological opinion.

CONSERVATION RECOMMENDATIONS

Section 7(a)(1) of the Act directs Federal agencies to use their authorities to further the purposes of the Act by carrying out conservation programs for the benefit of endangered and threatened species. Conservation recommendations are discretionary agency activities to minimize or avoid adverse effects of a proposed action on listed species or critical habitat, to help implement recovery plans, or to develop information.

1. We recommend that Caltrans expand its regional planning efforts for the California red-legged frog to further facilitate an ecosystem approach to conservation while attempting to recognize, at an early stage of planning, where conflicts between conservation of the California red-legged frog and future transportation projects may arise.

2. We encourage Caltrans, biological consultants, and/or other researchers to participate in research on California red-legged frogs. Research topics could include, but are not limited to: metapopulation dynamics, dispersal and migration studies, and the effects of

predation and habitat quality on California red-legged frogs. We encourage Caltrans to coordinate with the Service and the California Department of Fish and Game to develop research proposals under the Service's Endangered Species Conservation Grants (Section 6 Traditional) Program.

The Service requests notification of the implementation of any conservation recommendations, so we may be kept informed of actions that minimize or avoid adverse effects to or benefit the California red-legged frog and its habitat.

REINITIATION NOTICE

This concludes formal consultation on projects funded under the Federal Highway Administration's Federal Aid program that are likely to adversely affect the California red-legged frog, its critical habitat, or its proposed critical habitat. As provided in 50 CFR 402.16, reinitiation of formal consultation is required where discretionary Federal agency involvement or control over the action has been maintained (or is authorized by law), and if (1) the amount or extent of incidental take is exceeded, (2) new information reveals effects of the agency action may affect listed species or critical habitat in a manner or to an extent not considered in this opinion, (3) the agency action is subsequently modified in a manner that causes an effect on listed species or critical habitat that was not considered in this opinion, or (4) a new species is listed or critical habitat is designated that may be affected by the action.

If you have any questions, please contact Steve Kirkland of my staff at (805) 644-1766, extension 267.

Sincerely,

Diane K. Noda

Diane K. Noda
Field Supervisor

Enclosures
Caltrans Project Completion Report
The Declining Amphibian Populations Task Force Fieldwork Code of Practice

Project	Biological Opinion	Permanent Aquatic	Permanent Upland	Temp Aquatic	Temp. Upland	Critical Habitat
Picachio Road Bridge	2006	.5	0.18		.39	no
Bob Jones Bike	2007	0	0		0.39	no
Chittendon Pass	2006	0	0.27	0	0.25	no
Harkin Slough Br. Over Struve slough	2006	0.004	0.12	.08	1.16	no
Harkin Slough Br. Over Watsonville Slough	2004	0.25	0.22	0	0.71	no
Cienega Rd. Bridge	2006	0.404	0.404	0	1.19	no
San Benito River Bridge	2006	0	0	0.002	0.159	no
Salinas Rd. Interchange	2006	0.9	0.09	0	0.43	no
Pfiefer Big Sur Left Turn Lane	2006	0.002	0.26	0.002	1.2	no
Hwy 101 widening-SR 135-166	2006	0	0.22	0.25	0	no
San Simeon Creek Bridges	2006	0.3	1.8	0.4	0.25	yes*
San Luis Bay Drive	2005	0	0.25	0.005	3	no
Hollister Ave. Interchange	2005	0	0.21	0	0.084	no
Lone Tree Rd. Bridge	2005	0.005	0.19	0.005	0.27	no
Breaker Point CURE	2004	0.06	0	0.006	0	no
Jalama Creek Bridge	2004	0	0	0.24	0	yes*
Murphy Rd. Bridge	2004	0	0	0	0.22	no
Paulsen-Whiting Bridge	2004	0	0.09	0.06	0.03	no
Hollister Road Bridge	2004	0.04	0.03	0.16	0.3	yes(proposed)
Amesti Road Repair (lost funding)	2003	0.04	0.03	0.16	0.323	no
Main Street Bridge Replacement, Cambria	2007	0.19	1.13	.03	0.03	yes*
Harmony Left turn lane	2007	0.1	0.8	0.029	0.28	no
Gilardi Road Bridge Replacement	2009	0	0.1	0.035	0.333	yes*
Los Osos Valley Road Widening	2008	0.35	1.75	0.5	4.2	yes*
California Coastal Trail Gaviota Segment	2009	0	0.15	0	0.5	yes*
Guadalupe Ditches Project	2010	0	0	3.42	0	no

Appendix 1. Amount of California red-legged frog habitat anticipated to be permanently lost and temporarily disturbed.
***Construction not completed and project within March 17, 2010 critical habitat designation**

Project	Biological Opinion	Construction completed	Perm. Aquatic	Temp. Aquatic	Perm. Upland	Temp. Upland
Picachio Road Bridge	2006	2007	Not reported	Not reported	Not reported	Not reported
Bob Jones Bike Path #3	2007	2008	None reported	None reported	None reported	0.138
Chittendon Pass	2006	2009	None reported	Not reported	Not reported	Not reported
Harkin Slough Road over Struve slough	2006	2008	0.004	0.61	0.44	0.71
Harkin Slough Road over Watsonville Slough	2004	2007	0.007	2.88	0	0
Cienega Rd. Bridge	2006	2007	0.032	None reported	0.404	0.159
Pfiefer Big Sur Left Turn Lane	2006	2009	Not reported	Not reported	Not reported	Not reported
Lone Tree Rd. Bridge	2005	2008	0.005	0.005	0.19	None reported
Breaker Point CURE	2004	2006	0.138	0.219	(Included in acres of riparian)	1.33
Murphy Rd. Bridge	2004	2006	Not reported	Not reported	Not reported	Not reported
Paulsen-Whiting Bridge	2004	2006	Not reported	Not reported	Not reported	0.3
San Luis Bay Drive Bridge	2005	2007	0.002	0.034	0.238	0.562
Hollister Road Bridge	2004	2009	0.033	0.15	0.20	0.12
Harmony Left turn lane	2007	2008	0.37	.014	0.016	0.10
San Benito River Bridge Seismic Retrofit	2006	2007	Not reported	Not reported	Not reported	Not reported

Appendix 2. Amount of California red-legged frog habitat permanently lost and temporarily disturbed as a result of the completed project.

REFERENCES CITED

Abel, P.D. 1974. Toxicity of synthetic detergents to fish and aquatic invertebrates. Journal of Fish Biology 6: 279-298.

Bulger, J.B., N.J. Scott, Jr., and R.B. Seymour. 2003. Terrestrial activity and conservation of adult red-legged frogs *Rana aurora draytonii* in coastal forests and grasslands. Biological Conservation 110:85-95.

Devine, M.D., Duke, S.O., and Fedtke, C. 1993. Physiology of herbicide action. Prentice Hall, Englewood Cliffs, NJ.

Edington, A.N., Sheridan, P.M., Stephenson, G.R., Thompson, D.G., and Boermans, H.J. 2004. Comparative effects of ph and Vision herbicide on two life stages of four anuran amphibian species. Environmental Toxicology and Chemistry. 23(4)815-822.

Extension Toxicology Network [EXTOXNET]. 1996. Glyphosate pesticide information profile. Available at: http://extoxnet.orst.edu/pips/glyphosa.htm. Accessed June 17, 2010.

Federal Highway Administration. 2007. Letter from Gene Fong, Division Administrator, California Division, to Diane Noda, Field Supervisor, Ventura Fish and Wildlife Office regarding the California Department of Transportation's Delegation Federal authority pursuant the Section 6005 of the Safe, Accountable, Flexible, Efficient Transportation Equity Act: A Legacy for Users (SAFETEA-LU). Dated July 17, 2007. Sacramento, California.

Fidenci, P. 2004. The California red-legged frog, *Rana aurora draytonii*, along the Arroyo Santo Domingo, Northern Baja California, Mexico. The Herpetological Journal, Volume 88. London, England.

Folmar, L.C., H.O. Sanders, and A.M. Julin. 1979. Toxicity of the herbicide glyphosate and several of its formulations to fish and aquatic invertebrates. Archives of Environmental Contamination and Toxicology 8:269-278.

Foreman, R.T.T., D. Sperling, J.A. Bissonette, A.P. Clevenger, C.D. Cutshall, V.H. Dale, L. Fahrig, R. France, C.R. Goldman, K. Heanue, J.A. Jones, F.J. Swanson, T. Turrentine, T.C. Winter. 2003. Road ecology: science and solutions. Island Press, Washington, Covelo, London. 481 pages. 2003. Road Ecology. Island Press. Washington D.C.

Gisey, J.P., Dobson, S., and Solomon, K.R. 2000. Ecotoxicological risk assessment for Roundup herbicide. Review of Environmental Contamination and Toxicology. 167:35-120.

Govindarajulu, P.P. 2008. Literature review of impacts of glyphosate herbicide on amphibians: What risks can the silvicultual use of this herbicide pose for amphibians in B.C.? Wildlife Report No. R-28. British Colombia, Ministry of Environment. Victoria, B.C.Grismer, L. 2002. Reptiles and amphibians of Baja California, Including its Pacific island and the islands in the Sea of Cortez. University of California Press, Berkeley and Los Angeles, California.

Haller, W.T. and R.K. Stocker. 2003. Toxicity of 19 adjuvants to juvenile Lepomis macrochirus (bluegill sunfish). Environmental Toxicology and Chemistry. 22(3).

Hayes, M.P. and M.M. Miyamoto. 1984. Biochemical, behavioral and body size differences between Rana aurora aurora and R. a. draytonii. Copeia 1984(4):1018-1022.

Hayes, M.P. and M.R. Jennings. 1988. Habitat correlates of distribution of the California red-legged frog (*Rana aurora draytonii*) and the foothill yellow-legged frog (*Rana boylii*): Implications for management. Pp. 144-158. In Proceedings of the symposium on the management of amphibians, reptiles, and small mammals in North America. R. Sarzo, K.E. Severson, and D.R. Patton (technical coordinators). U.S.D.A. Forest Service General Technical Report RM-166.

Hayes, M.P. and M.R. Tennant. 1985. Diet and feeding behavior of the California red-legged frog, *Rana aurora draytonii* (Ranidae). The Southwestern Naturalist 30(4):601-605.

Helena Chemical Company. 2004. Technical data sheet No. AGDX080596, for Agri-Dex product.

Howe, C.M., Berrill, M., Pauli, B.D., Helbing, C.C., Werry, K., Veldhoen, N. 2004. Toxicity of glyphosate-based pesticides to four North American frog species. Environmental Toxicology and Chemistry. 23(8)1928-1938.

Jennings, M.R., and M.P. Hayes. 1985. Pre-1900 over harvest of California red-legged frogs (*Rana aurora draytonii*): The inducement for bullfrog (*Rana catesbeiana*) introduction. Herpetologica 31(1):94-103.

Jennings, M.R., M.P. Hayes, and D.C. Holland. 1992. A petition to the U.S. Fish and Wildlife Service to place the California red-legged frog (*Rana aurora draytonii*) and the western pond turtle (*Clemmys marmorata*) on the list of endangered and threatened wildlife and plants.

Lajmanovich, R.C., Sandoval, M.T., Peltzer, P.M. 2003. Induction of Mortality and Malformation in *Scinax nasicus* tadpoles exposed to glyphosate formulations. Bulletin of Environmental Contamination and Toxicology. 70:612-618.

Mann, R.M. and J.R. Bidwell. 1999. The toxicity of glyphosate and several glyphosate formulations to four species of southwestern Australian frogs. Archives of Environmental Contamination and Toxicology. 36:193-199.

Monheit, S., J.R. Leavitt and J. Trumbo. 2004. The ecotoxicology of surfactants use with Glyphosate based herbicides. Noxious Times. Volume Number 6, Summer 2004.

Relyea, R.A. and Jones, D.K. 2009. The toxicity of Roundup Original Max to 13 species of larval amphibians. Environmental Toxicology and Chemistry. 28(9)2004-2008.

Smith, R. and D. Krofta. 2005. Field notes documenting the occurrence of California red-legged frogs in Baja California, Mexico. In litt.

Stebbins, R.C. 1985. A field guide to western reptiles and amphibians. Houghton Mifflin Company, Boston, Massachusetts.

Storer, T.I. 1925. A synopsis of the amphibia of California. University of California Publications in Zoology 27:1-342.

U.S. Fish and Wildlife Service. 1999. Recovery plan for the arroyo southwestern toad. Portland, Oregon.

U.S. Fish and Wildlife Service. 2002. Recovery plan for the California red-legged frog (*Rana aurora draytonii*). Portland, Oregon.

U.S. Fish and Wildlife Service. 2003. Programmatic biological opinion for projects funded or approved under the Federal Aid Program (HDA-CA, File #: Section 7 with Ventura USFWS, Document #: S38192) (1-8-02-F-68). Ventura, California.

U.S. Forest Service. 1997. Glyphosate herbicide information profile. U.S. Forest Service Pacific Northwest Region.

U.S. Fish and Wildlife Service and National Marine Fisheries Service. 1998. Endangered species consultation handbook - procedures for conducting consultation and conference activities under section 7 of the Endangered Species Act. U.S. Government printing office, Washingtion, D.C.

Washington State Department of Ecology and Agriculture. 2004. Summary of aquatic acute toxicity data for five spray adjuvants, and NPDES permit no. WAG-99 3000.

Wright, A.H. and A.A. Wright. 1949. Handbook of frogs and toads of the United States and Canada. Comstock Publishing Company, Inc., Ithaca, NY. xii + 640 pp.

PERSONAL COMMUNICATIONS

Ruggerone, G. 2007. Telephone conversation regarding the California Department of Transportation's exemption from the injunction of use of 66 pesticides (Center for Biological Diversity v. Johnson and Nastri). Dated April 9, 2007. Senior Environmental Planner. California Department of Transportation. San Luis Obispo, California.

Project Completion Report for Caltrans projects that may affect California red-legged frogs

Caltrans must ensure that this form is completed or that the requested information is provided in a written report upon completion of the project and restoration activities.

Mail completed form or report to: U.S. Fish and Wildlife Service, Ventura Fish and Wildlife Office, 2493 Portola Road, Suite B, Ventura, California 93003

1. Project title and location:
2. Project Completion Dates A. Construction: B: Restoration:
3. Type of actions that occurred: 4. 5. 6. 7. 8.
9. Habitat type and number of acres affected (e.g., upland, riparian) 10. 11. 12. 13. 14.
15. Linear feet of work in a stream:
16. How the site was restored and a description of the area after completion of the action: 17. 18. 19. 20. 21.
22. If no restoration occurred, the justification for not conducting this work: 23. 24. 25. 26. 27.
28. Which measures were employed to protect California red-legged frogs: 29. 30. 31. 32. 33.
34. The number of California red-legged frogs taken and the form of take: 35. 36. 37. 38. 39.
I. The number of California red-legged frogs removed from work areas to nearby undisturbed habitat and the location of that habitat: II. III. IV. V.
VI. Recommendations of any modifications to future measures to enhance protection of the California red-legged frog while simplifying compliance with the Endangered Species Act: VII. VIII. IX.

The Declining Amphibian Populations Task Force Fieldwork Code of Practice

1. Remove mud, snails, algae, and other debris from nets, traps, boots, vehicle tires, and all other surfaces. Rinse cleaned items with sterilized (e.g., boiled or treated) water before leaving each study site.

2. Scrub boots, nets, traps, and other types of equipment used in the aquatic environment with 70 percent ethanol solution or a bleach solution of one-half to one cup of bleach in one gallon of water and rinse clean with sterilized water between study sites. Avoid cleaning equipment in the immediate vicinity of a pond, wetland, or riparian area.

3. In remote locations, clean all equipment with 70 percent ethanol or a bleach solution, and rinse with sterile water upon return to the lab or a "base camp." Elsewhere, when laundry facilities are available, remove nets from poles and wash (in a protective mesh laundry bag) with bleach on a "delicate" cycle.

4. When working at sites with known or suspected disease problems, or when sampling populations of rare or isolated species, wear disposable vinyl[1] gloves and change them between handling each animal. Dedicate separate sets of nets, boots, traps, and other equipment to each site being visited. Clean and store them separately at the end of each field day.

5. Safely dispose of used cleaning materials and fluids. Do not dispose of cleaning materials and fluids in or near ponds, wetland, and riparian areas; if necessary, return them to the lab for proper disposal. Safely dispose of used disposable gloves in sealed bags.

6. When amphibians are collected, ensure the separation of animals from different sites and take great care to avoid indirect contact (e.g., via handling or reuse of containers) between them or with other captive animals. Do not expose animals to unsterilized vegetation or soils which have been taken from other sites. Always use disinfected and disposable husbandry equipment.

7. If a dead amphibian is found, place it in a sealable plastic bag and refrigerate (do not freeze). If any captured live amphibians appear unhealthy, retain each animal in a separate plastic container that allows air circulation and provides a moist environment from a damp sponge or sphagnum moss. For each collection of live or dead animals, record the date and time collected, location of collection, name of collector, condition of animal upon collection, and any other relevant environmental conditions observed at the time of collection. Immediately contact the Ventura Fish and Wildlife Office at (805) 644-1766 for further instructions.

The Fieldwork Code of Practice has been produced by the Declining Amphibian Populations Task Force with valuable assistance from Begona Arano, Andrew Cunningham, Tom Langton, Jamie Reaser, and Stan Sessions.

For further information on this Code, or on the Declining Amphibian Populations Task Force, contact John Wilkinson, Biology Department, the Open University, Walton Hall, Milton Keynes, MK7 6AA, UK. Email: DAPTF@open.ac.uk. Fax: +44 (0) 1908-65416

[1] Do not use latex gloves. Latex is toxic to amphibians.

M e m o r a n d u m

Flex your power!
Be energy efficient!

To: JAMES ESPINOSA
Design Engineer, Branch S
Design Office II
Central Region-Project Development Division

Date: November 3, 2011

File: SBt-025-18.81/19.52
SHOPP, HB-1 Program
05-0T640K
Project ID 0500020030

From: **DEPARTMENT OF TRANSPORTATION**
DIVISION OF ENGINEERING SERVICES
GEOTECHNICAL SERVICES

Subject: Geotechnical Design Report

Introduction

A Geotechnical design Report (GDR) is provided for the above referenced project. The proposed project will improve the horizontal highway alignment in order to minimize run-off-the-road and cross-centerline collisions.

Pertinent Reports and Investigations

The following publications were used to assist in the assessment of site conditions:

1. 2010 State Geologic Map of California, California Geological Survey, Jennings, Saucedo, et al.
2. Geology of the San Benito Quadrangle, California, Dissertation, University of California, Wilson, Ivan, F., 1938.
3. District Preliminary Geotechnical Report, Interoffice Memorandum, July 22, 2010, California Department of Transportation, Geotechnical Services, San Luis Obispo, California.

Physical Setting

The project is located in rural San Benito County. Sparse trees line Highway 25 as it meanders though rolling hills covered with low grasses near the eastern entrance to Pinnacles National Monument. Highway 25 travels north south and follows the eastern foothills of the Gabilan Range, paralleling the San Andreas Fault Zone.

The climate is semiarid, with little or no precipitation during the summer months and moderate precipitation including snow at higher elevations in the winter. Average annual precipitation in the region is 12 inches.

Man-made and Natural Features of Engineering and Construction Significance

Cuts along the existing highway alignment are standing at 0.5:1 to 1: 1 and are globally stable. Local instabilities, resulting in minor surface raveling in the soils and small rockfalls in the rock, are causing low volumes of material to accumulate in the available catchment at grade. Rock outcrops exposed on the surface are prevalent throughout the

area of the proposed alignment. South and adjacent of the proposed alignment there is a topographic low with desiccation cracks indicative of an area of high moisture or ponding during the wet season.

Regional Geology and Seismicity

Geology

Information regarding the site characteristics were obtained from published geologic maps and field observations.

Franciscan Complex geology was observed in cuts and on the surface in the vicinity of the project. Hard blocks of fractured metamorphosed undifferentiated fine-grained sedimentary rock (meta-sedimentary) were observed in the cuts along the current highway alignment and in outcrops in the project area. A veneer of soil of varying thicknesses overlies the rock. The soil layer is very thin between stations 18+00 and 21+00 thickening to the east and west along the proposed alignment. Fifty feet south of the proposed alignment, between stations 17+00 and 20+00, a slight topographic depression exists where soil desiccation cracks were observed. This area may at times be wet or temporarily pond water.

Seismicity

The nearest active fault is the San Andreas Fault 500 feet to the northeast. The maximum credible moment magnitude is 7.9.

Table 1: Project Area Faults and Activity Rating

Fault Name	*Maximum Credible Moment Magnitude*	*Approximate Distance*	*Acceleration (gravity)*
San Andreas Fault Zone	7.9	0.1 miles	1.15g

Three references for fault activity were used to develop this table:

- The Alquist-Priolo Fault-Rupture Hazard Zones in California study was mandated by the Alquist-Priolo Special Studies Zones Act of 1972. The purpose of this Act is to regulate development near active faults so as to mitigate the hazard of surface fault-rupture.
- The Monterey (1975) and San Luis Obispo County Seismic Safety and Safety Element study was completed as required by California Government Code. This document discusses active, potentially active, and inactive faults.
- The Peak Acceleration from Maximum Credible Earthquakes in California Map is a product of the California Geological Survey (formerly California Division of Mines and Geology) and the Division of Structures at Caltrans.

Exploration

Geophysical Studies

A seismic refraction study was performed to determine the sub surface conditions. Eight seismic lines were studied covering the proposed alignment from stations 16+00 to 22+00. The locations of the seismic lines are plotted on the attached layout. The interpretation of the seismic data is shown in Tables 1 and 2 and on the attached cross

sections and profile. A 12-channel, signal enhancing seismograph (EG&G Geometrics ES-1210F) was used for this investigation. Energy was introduced in the ground at the shot points using a sledge hammer. The seismic lines were run with 10 foot spacing between the geophones. Shot points were located 10 feet from the end geophones. The approximate depth of investigation (ADI) was 40 feet.

The data from the investigation indicates that there are three velocity layers for much of the area. This study detected a low, moderate, and higher velocity layer. The low velocity layer (roughly 1100 to 1400 feet per second) is the surface layer and varies in thickness from 2 to 11 feet. This low velocity layer is interpreted to be soil. The moderate velocity layer (roughly 2000 to 4300 feet per second) is interpreted to be moderately fractured meta-sedimentary rock. The higher velocity layer (roughly 4800 to 7000 feet per second) is interpreted to be slightly fractured meta-sedimentary rock. The velocity layers velocities, depths, and characteristics are shown on Tables 1 and 2 and the attached cross sections.

There is an empirical correlation between seismic velocity and rippability of rock. Rippability is also related to rock type, the degree of weathering and joint spacing. The following table is an estimate of the rippability of the meta-sediments at this location according to velocity range.

Table 2 Velocities, Depth and Excavation Characteristics.

Station	Low Velocity Layer V1	Thickness	Excavation Characteristics	Moderate Velocity Layer V2	Thickness	Excavation Characteristics	Higher Velocity Layer V3	Thickness	Excavation Characteristics
10+00 to 15+50	1266 fps	12 feet	Easy Ripping	n/a	n/a	n/a	n/a	n/a	n/a
15+50 to 17+00	1180 to 1266 fps	7 to10 feet	Easy Ripping	2988 to 4381 fps	9 to 18 feet	Moderate Ripping	n/a	n/a	n/a
17+00 to 18+50	1180 to 1291fps	7 to 11 feet	Easy Ripping	2515 to 2988 fps	22 to 34 feet	Moderate Ripping	n/a	n/a	n/a
18+50 to 20+50	1647 fps	1 to 6 feet	Easy Ripping	2488 fps	18 to 30 feet	Moderate Ripping	5115 fps	3 to 10 feet	Moderate to Difficult Ripping
20+50 to 22+00	1647 fps	5 to 7 feet	Easy Ripping	2488 fps	4 to 11 feet	Moderate Ripping	n/a	n/a	n/a
22+00 to 27+00	1266 fps	9 feet	Easy Ripping	n/a	n/a	n/a	n/a	n/a	n/a

- These velocity ranges are based on experience with similar rock where the ripping was done by D-9 type tractors with single tooth rippers.

There is also an empirical relationship between seismic velocity and the grading factor of a rock. The following table was prepared for the meta-sediments at this location according to seismic velocity layers.

Table 3 Velocity and Grading Factors.

Velocity Layer	Grading Factor
V1	0.91 to 0.95
V2	1.01 to 1.05
V3	1.05 to 1.1

- The grading factors are based on experience with similar sedimentary rock where the embankments were compacted to 93 to 95 % Relative Compaction.

Geologic Mapping

Field Mapping and Discontinuity data collection

Geologic mapping was done to determine the nature and extent of the materials throughout the project site. The area was mapped on foot. Rock outcrops, significant geomorphologic features, and signs of water were identified and recorded. This information is shown on the site geologic map. The rock structure was studied by performing a stereographic analysis which is a method to study three dimensional features in two dimensions. This analysis was used to determine the rock fracture pattern and orientation as it relates to stability of the proposed cut slope. Over 20 measurements of the rock structure were made on outcrops in the field. The data from this investigation indicates that there are two major fracture sets. The sets are nearly vertical and approximately orthogonal.

Geotechnical Conditions

Site Geology

Moderately hard Franciscan meta-sediments covered by a veneer of soils will be encountered during the excavation. The rock will be moderately to difficult to excavate. The soils will be easily excavated. The soil unit overlying the bedrock is very thin at the top of the hill thickening on the hill sides.

Natural Slope Stability

Slope Stability Summary

The existing rock cut slopes at ¼: 1 are globally stable due to the favorable orientated rock structure. Some minor rockfalls are occurring and some raveling in the overlying exposed soils layer. The existing catchment ditch is adequately catching and containing this material.

Project Site Seismicity

The nearest active fault is the San Andreas Fault 500 feet to the northeast. The maximum credible moment magnitude is 7.9.

Table 4 Project Area Faults and Activity Rating

Fault Name	*Maximum Credible Moment Magnitude*	*Approximate Distance*	*Acceleration (gravity)*

San Andreas Fault Zone	7.9	0.1 miles	1.15g

Subsurface Soil Conditions

Groundwater and Surface Water

Within the project limits there was no groundwater or surface water observed. Immediately to the south there is a topographic low where the surface soils have desiccation cracks. This could be indicative of seasonal groundwater or surface water ponding.

Erosion

Erosion is minor within the rock cut areas. The rock is metamorphosed by heat and pressure and as a result classified as hard. The loss of fines from this rock is relatively nonexistent. Small rock block fragments over time do destabilize. The sizes range from several inches to a foot. The cut sections in the surface soil layer is raveling and losing fines.

Geotechnical Analysis and Design

Geotechnical Conditions, Strength of Material, Groundwater

A study of the geologic structure of the rock (by stereographic analysis) indicates that slopes as steep as 1 ¼: 1 will be globally stable. Reconnaissance of existing cut slopes in the area also demonstrates that ¼: 1 cut slopes in rock have worked effectively. Cut slopes at ¼: 1 or flatter will be stable and are recommended. Seismic data indicates the majority of material encountered is rock. The rock material is identified as velocity layers 2 and 3 (V2 & V3). Cut slopes in the soil unit, identified by seismic velocity as velocity layer 1 (V1), will erode and should be constructed no steeper than 1: 1.

Landsliding

Landsliding within the project area and the surrounding area where the landsliding might impact the project were not observed.

Rockfall and Slope Erosion

In the rock mass there exist some minor joint sets that could, in time, cause minor rockfalls. A catchment area should be provided to catch and contain any rockfalls. Catchment is defined as the area between the base of the slope and the edge of traveled way. A total of 7 ½ feet is currently proposed for paved and unpaved shoulders. Ten feet of catchment is recommended for cut sections through station 17+50 to 20+50 to keep rocks from free falling onto the traveled way.

In the soil mass the material is erodible. Vegetation of exposed slopes where the soils are exposed is recommended to prevent erosion. These slopes should be laid back to one to

one or flatter and covered with erosion control material. Refer to the Landscape Architecture Branch for detailed recommendations.

Cuts and Excavation

The cut slope excavations will require equipment capable of ripping hard fractured rock. The rock encountered is classified as moderate to difficult ripping. There is adequate fracturing to favor ripping. The soils will be easily excavated. Subsurface water is not expected to be encountered. The estimated grading factors indicate that the soil will compact with a lower volume change from excavated volumes. The rock however will expand in volume from that which was excavated. Estimated gradings factors are presented in Table 3.

Construction Considerations

Rock excavation is required for this project. Equipment capable of ripping rock will be needed.

Hazardous Waste Considerations

The materials do not contain any hazardous materials. Although in the Franciscan formation the meta-sediments are of sedimentary origin and void of asbestos.

Differing Site Conditions

Based on the data and field conditions the materials appear to be relatively homogeneous locally. Rock hardness will increase with depth.

If you any questions or comments, please call John D Duffy at 805-549-3663

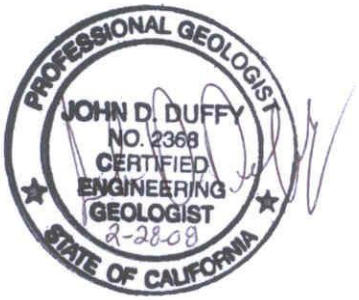

JOHN D. DUFFY, P.G., C.E.G.
Senior Engineering Geologist
Office of Geotechnical Design- North``

c: Roy Bibbens / GDN Records
GS Records
Job File / Branch D Records

LIST OF ATTACHMENTS

Vicinity Map	Attachment 1
Layout	Attachment 2
Profile	Attachment 3
Cross Sections	Attachment 4
Site Geologic Map	Attachment 5

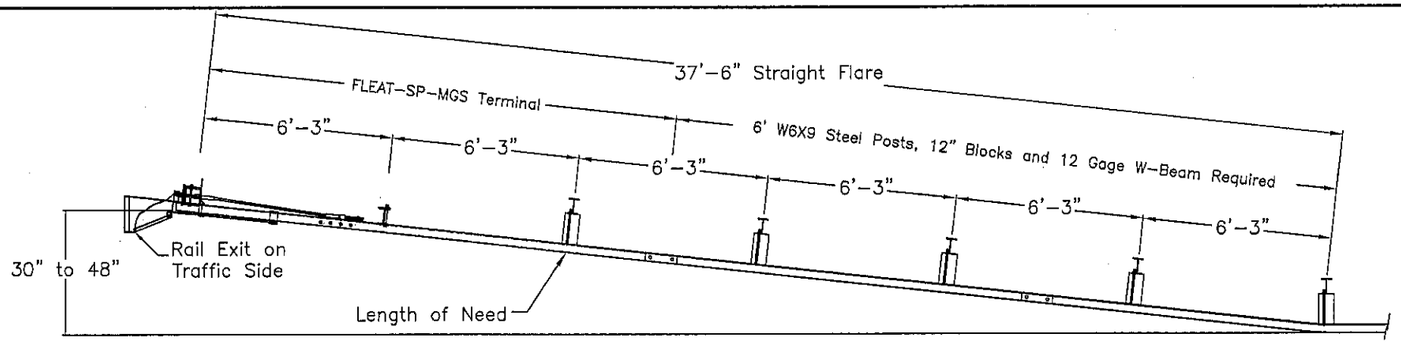

PLAN

TRAFFIC

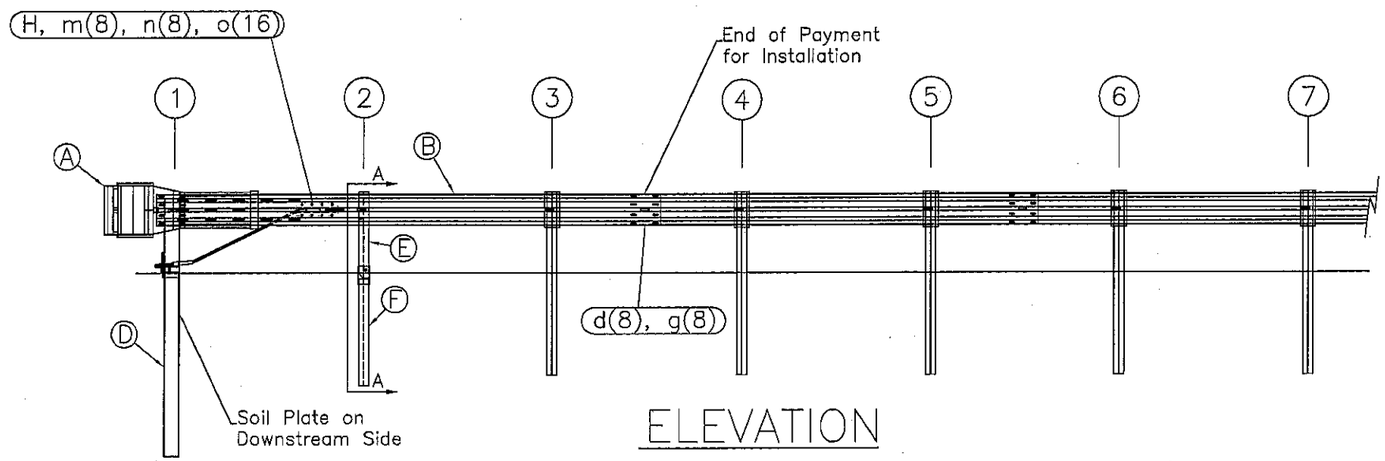

ELEVATION

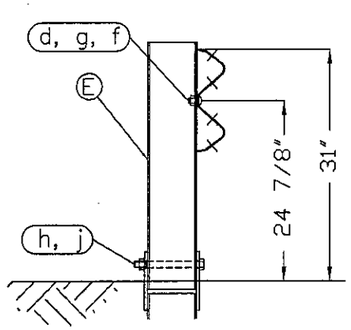

SECTION A-A
Post #2

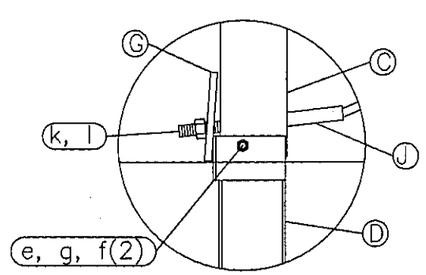

Post #1 Connection Detail

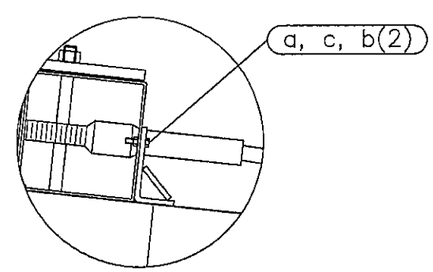

Impact Head Connection Detail

ITEM	QTY	BILL OF MATERIALS	ITEM NO.
A	1	IMPACT HEAD	F3000
B	1	W-BEAM GUARDRAIL END SECTION, 12 Ga.	MGS-SF1303
C	1	FIRST POST TOP (6X6X$\frac{1}{8}$" Tube)	TPHP1A
D	1	FIRST POST BOTTOM (6' W6X15)	TPHP1B
E	1	SECOND POST ASSEMBLY TOP	UHP2A
F	1	SECOND POST ASSEMBLY BOTTOM	HP3B
G	1	BEARING PLATE	E750
H	1	CABLE ANCHOR BOX	S760
J	1	BCT CABLE ANCHOR ASSEMBLY	E770
		HARDWARE (ALL DIMENSIONS IN INCHES)	
a	2	5/16 x 1 HEX BOLT GRD 5	B5160104A
b	4	5/16 WASHER	W0516
c	2	5/16 HEX NUT	N0516
d	9	5/8 Dia. x 1 1/4 SPLICE BOLT (POST #2)	B580122
e	1	5/8 Dia. x 9 HEX BOLT GRD 5	B580904A
f	3	5/8 WASHER	W050
g	10	5/8 Dia. H.G.R NUT	N050
h	1	3/4 Dia. x 8 1/2 HEX BOLT GRD A449	B340854A
j	1	3/4 Dia. HEX NUT	N030
k	2	1 ANCHOR CABLE HEX NUT	N100
l	2	1 ANCHOR CABLE WASHER	W100
m	8	CABLE ANCHOR BOX SHOULDER BOLT	SB58A
n	8	1/2 A325 STRUCTURAL NUT	N055A
o	16	1 1/16 OD x 9/16 ID A325 STR. WASHER	W050A

GENERAL NOTES:
1. All bolts, nuts, cable assemblies, cable anchors and bearing plates shall be galvanized.
2. The lower sections of the Posts 1&2 shall not protrude more than 4 in above the ground (measured along a 5' cord). Site grading may be necessary to meet this requirement.
3. The lower sections of the hinged posts should not be driven with the upper post attached. If the post is placed in a drilled hole, the backfill material must be satisfactorily compacted to prevent settlement.
4. When competent rock is encountered, a 12" Ø post hole, 20 in. deep cored into the rock surface may be used if approved by the engineer for post 1. Granular material will be placed in the bottom of the hole, approximately 2.5" deep to provide drainage. The first post can be field cut to length, placed in the hole and backfilled with suitable backfill. The soil plate may be trimmed if required.
5. The breakaway cable assembly must be taut. A locking device (vice grips or channel lock pliers) should be used to prevent the cable from twisting when tightening nuts.

RSI
Road Systems, Inc.
Big Spring, TX
Phone: 432-263-2435
or Phone: 330-346-0721

FLEAT-SP-MGS Terminal
Midwest Guardrail System
31" Top of Rail

Sheet: 1
Date: 02/24/10
By: JRR
Drawing Name: FLT-SP-S-MGS
Scale: None
Rev: 0

OFFSET NOTES:
1) POST OFFSET DIMENSIONS ARE GIVEN TO THE CENTER OF THE TRAFFIC FACE OF POSTS, EXCEPT AT POSTS #7 & #8, WHERE DIMENSION IS TO CENTER OF THE TRAFFIC FACE OF THE BLOCKOUTS.
2) GUARDRAIL BETWEEN POST 1-7 IS ON A STRAIGHT LINE FLARE.

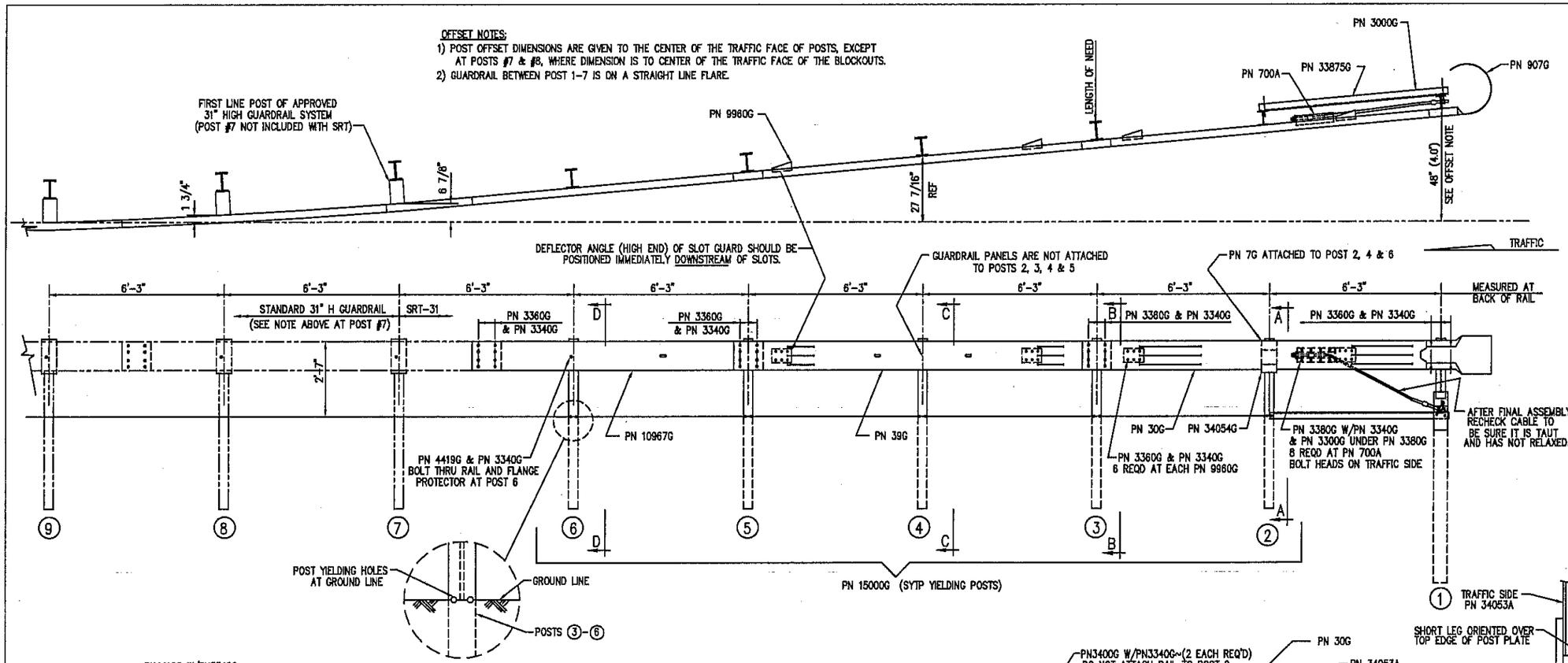

BILL OF MATERIAL

	PN	QTY	DESCRIPTION
	7G	3	12/6"/FLG PROTECTOR (AT POST 2, 4 & 6)
	30G	1	12/12'6/S SRT-1 (GUARDRAIL)
	39G	1	12/12'6/S SRT-2 (GUARDRAIL)
	700A	1	CABLE ANCHOR BRACKET
	907G	1	12/BUFFER/ROLLED (TERMINAL)
	3000G	1	3/4 x 6'-6" CABLE
HARDWARE	3240G	2	5/16" WASHER (AT POST 1)
HARDWARE	3245G	2	5/16" HEX NUT (AT POST 1)
HARDWARE	3300G	12	5/8" WASHER
HARDWARE	3340G	67	5/8" HEX HGR NUT
HARDWARE	3360G	52	5/8"ø x 1 1/4" HGR SPLICE BOLT
HARDWARE	3380G	8	5/8"ø x 1 1/2" HEX HD BOLT
HARDWARE	3400G	4	5/8"ø x 2" HGR POST BOLT (AT POSTS 1, 2 & 4)
HARDWARE	3391G	2	5/8"ø x 1 3/4" HEX BOLT (A325) (AT STRUT)
HARDWARE	3900G	2	1" WASHER (AT CABLE)
HARDWARE	3910G	2	1" HEX NUT (AT CABLE)
HARDWARE	4211G	2	5/16"ø x 1 3/4" HEX BOLT (AT POST 1)
HARDWARE	4419G	1	5/8"ø x 1 3/4" COUNTERSUNK HD BOLT (AT POST 6)
	9960G	4	SLOT GUARD BRACKET
	10967G	1	12/9'4.5/3'1.5/S SRT-3 (GUARDRAIL)
	15000G	5	6'-0" SYT POST (W6 X 8.5)
	33909G	1	CABLE ANCHOR BRACKET (AT POST 1)
	33875G	1	ANGLE STRUT 3 x 3 x 1/4
	34052A	1	CR POST 1 BOT (W6 x 15)
	34053A	1	CR POST 1 TOP (W6 x 8.5)
	34054G	1	POST SHELF ANGLE (AT POST 2)

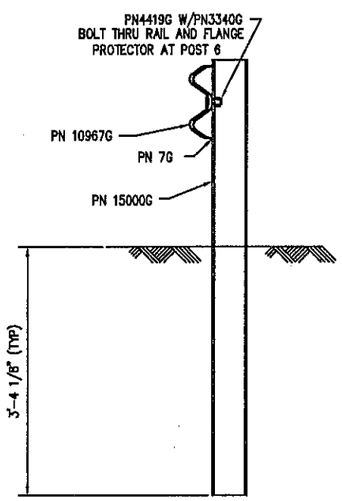

SECTION "D-D"
(@ POST #6)

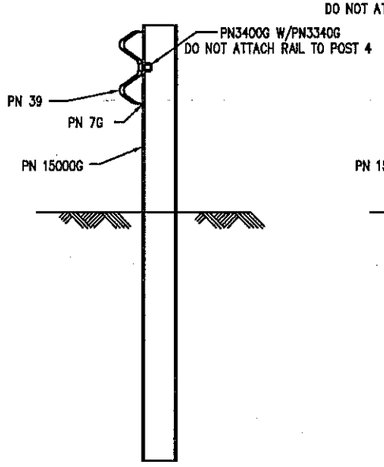

SECTION "C-C"
(@ POST #4)

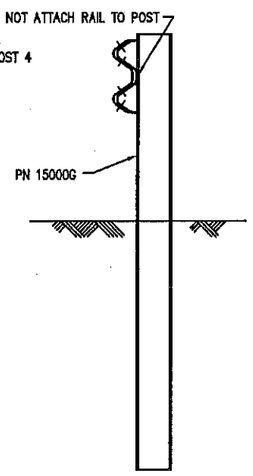

SECTION "B-B"
(@ POST #3 & #5)

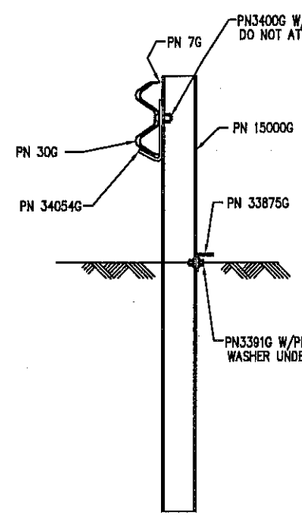

SECTION "A-A"
(@ POST #2)

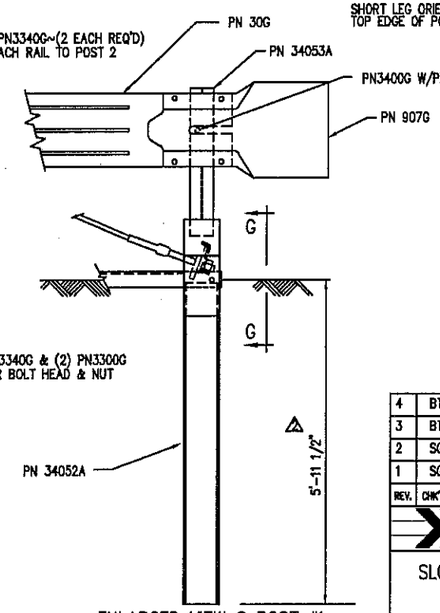

ENLARGED VIEW @ POST #1

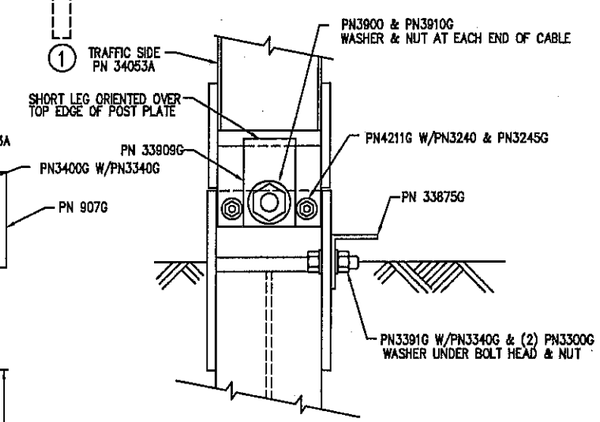

VIEW "G-G"
(@ POST #1)

REV.	CHK'D	BY	DATE	REMARKS
4	BT	LH	10/6/10	OFFSET POSTS #7 & #8
3	BT	LH	2/26/09	REVISED HARDWARE
2	SG	LH	7/28/08	REVISED POST #1 LENGTH IN GROUND
1	SG	LH	1/16/08	REVISED HARDWARE QUANTITY IN BILL OF MATERIAL

SRT-31

SLOTTED RAIL TERMINAL SRT-31 (31" H)
ERECTION DETAILS
(3 PANELS, CR AND SYT POSTS)

DRAWN	BT
CHECKED	SG
SCALE	NTS
DATE	10/30/07
ENG. FILE #	SS436-01E
SHT.No.	E1 OF 1
DRAWING NO.	SS 436
REV.	4

The drawings and the information shown thereon are copyrighted by Trinity Highway Products (2010) and the sole property of Trinity Highway Products. Neither the drawings nor such information is to be used for any purpose other than that for which it was specifically furnished from Trinity Highway Products, LLC., nor is any reproduction authorized without written permission.

TRINITY HIGHWAY PRODUCTS, LLC.
2525 STEMMONS FREEWAY
DALLAS, TX 75207

ITEM NO.	PART NUMBER	DESCRIPTION	QTY	UOM
1	BSI-1301252-KT	X-Tension Terminal Comp, 31 in	1	EACH
2	K070202	X-Tension Hardware Kit, GT,	1	EACH
3	K070206	X-Tension System Hardware Kit,	1	EACH
4	K070210	X-Tension GT Guardrail	1	EACH
5	B061100	BSI, I-Beam Post, Middle, X350	1	EACH
6	MANXT1	X-TENSION Installation Manual	1	EACH

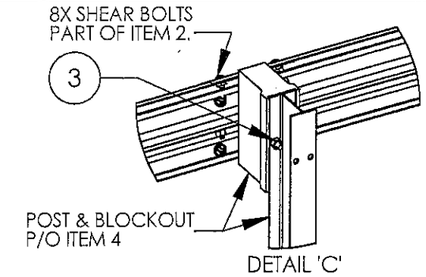

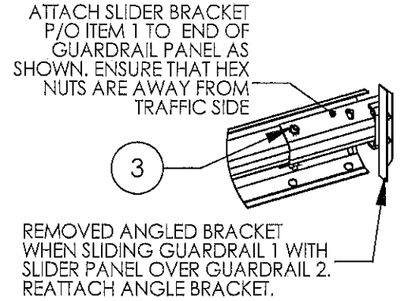

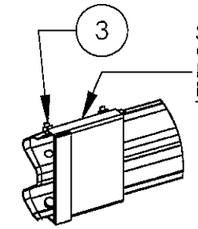

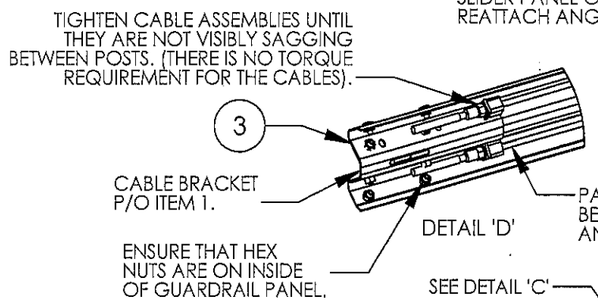

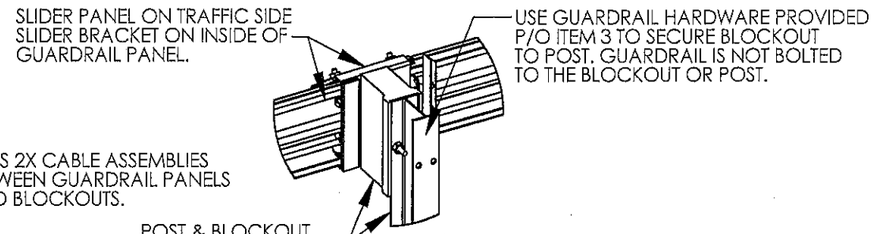

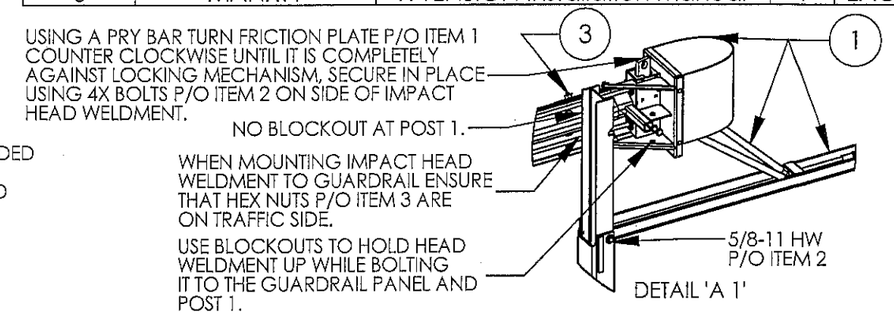

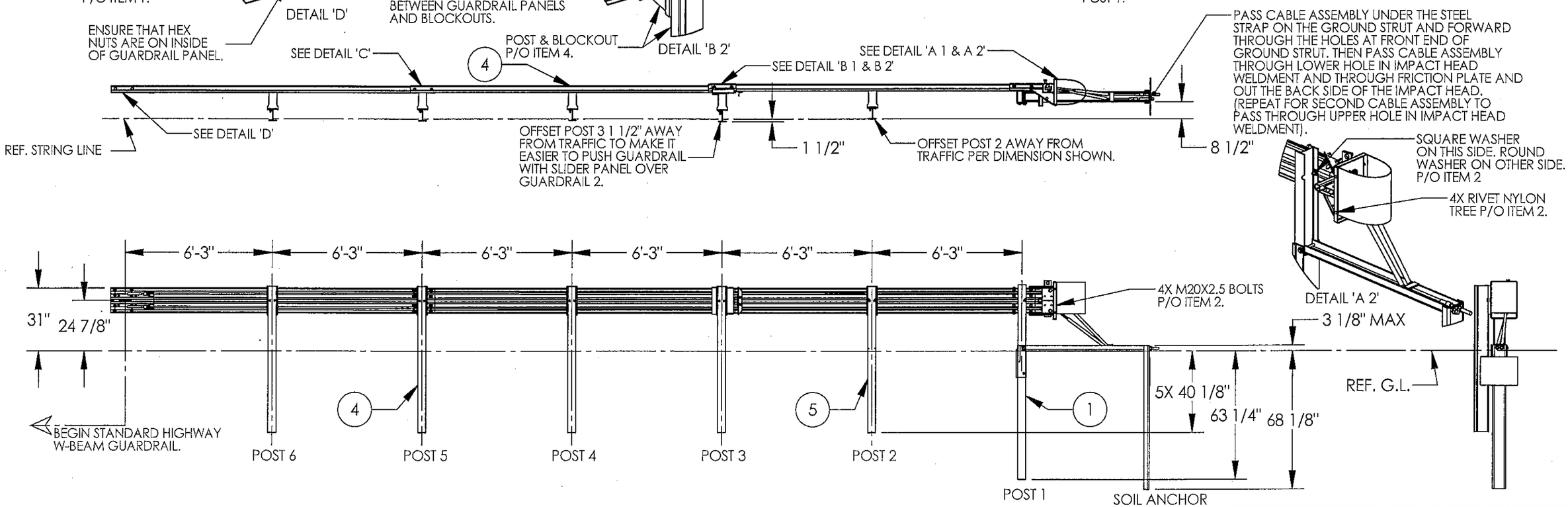

NOTES: UNLESS OTHERWISE SPECIFIED.

1. SYSTEM TO BE INSTALLED PER MANUFACTURER SPECIFICATIONS.
2. ONLY TIGHTEN THE CABLE ASSEMBLIES USING THE NUTS AT THE CABLE BRACKET (SEE DETAIL 'D'). DO NOT TIGHTEN THE CABLES AT THE FRONT OF THE GROUND ANCHOR.
3. WHEN DRIVING STEEL POST, ENSURE THAT A DRIVING CAP WITH TIMBER OR PLASTIC INSERT IS USED TO PREVENT DAMAGE TO THE GALVANIZING TO THE TOP OF THE POST.

© 2012 BARRIER SYSTEMS INC. THE INFORMATION CONTAINED IN THIS DRAWING IS THE SOLE PROPERTY OF BARRIER SYSTEMS INC. ANY REPRODUCTION IN PART OR WHOLE WITHOUT THE WRITTEN PERMISSION OF BARRIER SYSTEMS INC. IS PROHIBITED.

UNLESS OTHERWISE SPECIFIED DIMENSIONS ARE IN INCHES. TOLERANCES ARE:
FRACTIONS ±1/16 DECIMAL .XX = ±.03 .XXX = ±.010 ANGLES ±1/2°
INTERPRET DIMENSIONS AND TOLERANCES PER ASME Y14.5-1994

THIRD ANGLE PROJECTION

DO NOT SCALE DRAWING

APPROVALS	
DRAWN BY:	NMV
DRAWN DATE:	2/08/13
APPR'D BY:	JMT
APPR'D DATE:	2/08/13

REV	ECN#	DATE
B	2067	05/02/13
A	2022	2/08/13

LINDSAY™ TRANSPORTATION SOLUTIONS
BARRIER SYSTEMS INC.
3333 Vaca Valley Parkway Ste 800
Vacaville, CA 95688
Tel: 888-800-3691
www.barriersystemsinc.com

TITLE
X-TENSION GUARDRAIL TERMINAL SYSTEM STEEL POST WITH COMPOSITE BLOCKOUT 31" RAIL HEIGHT

SIZE	DWG NO.	REV.
B	XTGTSS5	B

SCALE 1:50 SHEET 1 OF 1

Doc. B100108

Last Saved by: jeff.thompson; Friday, May 03, 2013 1:23:29 PM

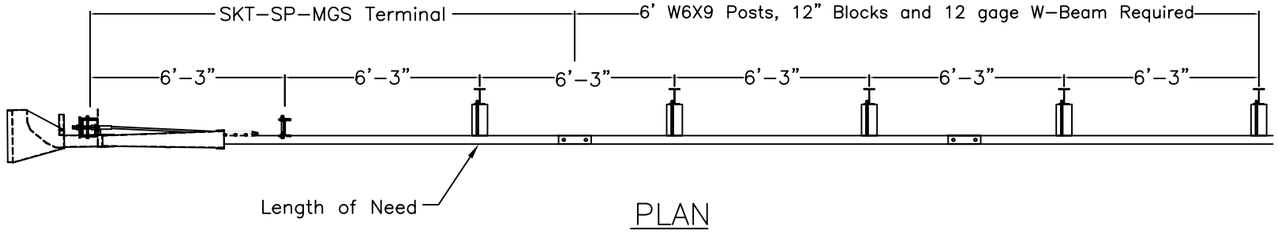

PLAN

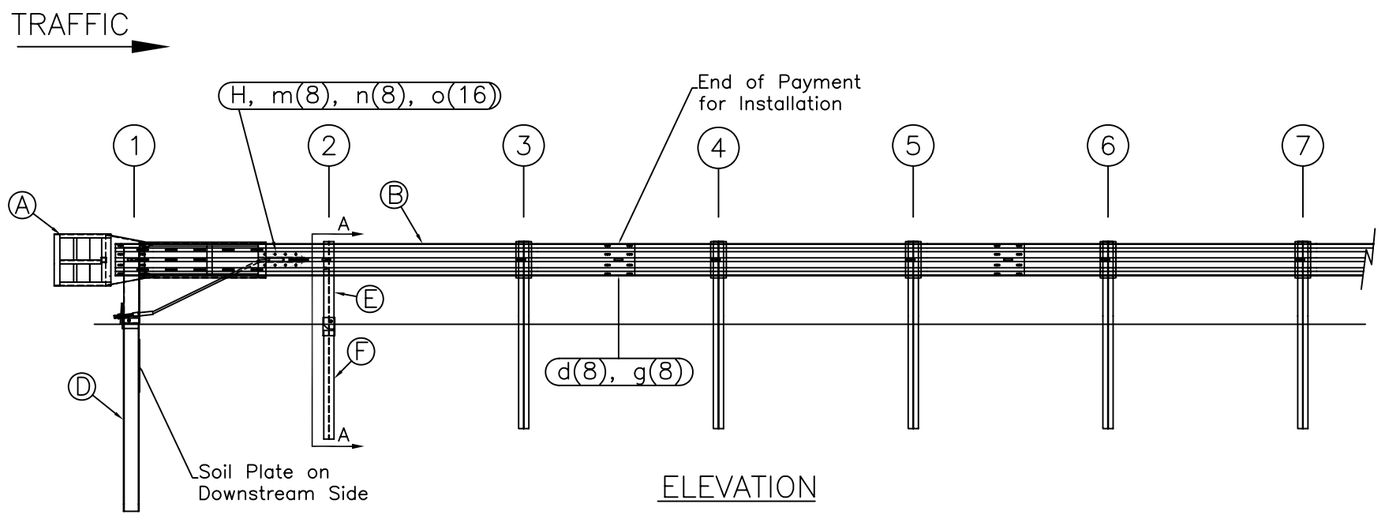

ELEVATION

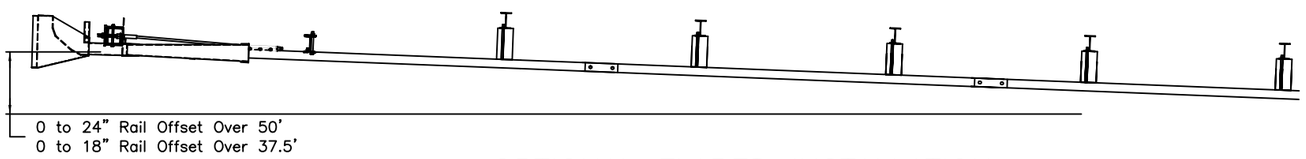

OPTIONAL FLARED INSTALLATION

25:1 maximum flare rate

ITEM	QTY	BILL OF MATERIALS	ITEM NO.
A	1	IMPACT HEAD	S3000
B	1	W-BEAM GUARDRAIL END SECTION, 12 Ga.	MGS-SF1303
C	1	FIRST POST TOP (6X6X$\frac{1}{8}$" Tube)	TPHP1A
D	1	FIRST POST BOTTOM (6' W6X15)	TPHP1B
E	1	SECOND POST ASSEMBLY TOP	UHP2A
F	1	SECOND POST ASSEMBLY BOTTOM	HP3B
G	1	BEARING PLATE	E750
H	1	CABLE ANCHOR BOX	S760
J	1	BCT CABLE ANCHOR ASSEMBLY	E770
		HARDWARE (ALL DIMENSIONS IN INCHES)	
a	2	5/16 x 1 HEX BOLT GRD 5	B5160104A
b	4	5/16 WASHER	W0516
c	2	5/16 HEX NUT	N0516
d	9	5/8 Dia. x 1 1/4 SPLICE BOLT (POST #2)	B580122
e	1	5/8 Dia. x 9 HEX BOLT GRD 5	B580904A
f	3	5/8 WASHER	W050
g	10	5/8 Dia. H.G.R NUT	N050
h	1	3/4 Dia. x 8 1/2 HEX BOLT GRD A449	B340854A
j	1	3/4 Dia. HEX NUT	N030
k	2	1 ANCHOR CABLE HEX NUT	N100
l	2	1 ANCHOR CABLE WASHER	W100
m	8	CABLE ANCHOR BOX SHOULDER BOLT	SB58A
n	8	1/2 A325 STRUCTURAL NUT	N055A
o	16	1 1/16 OD x 9/16 ID A325 STR. WASHER	W050A

GENERAL NOTES:

1. All bolts, nuts, cable assemblies, cable anchors and bearing plates shall be galvanized.
2. The lower sections of the Posts 1&2 shall not protrude more than 4 in above the ground (measured along a 5' cord). Site grading may be necessary to meet this requirement.
3. The lower sections of the hinged posts should not be driven with the upper post attached. If the post is placed in a drilled hole, the backfill material must be satisfactorily compacted to prevent settlement.
4. When competent rock is encountered, a 12" Ø post hole, 20 in. deep cored into the rock surface may be used if approved by the engineer for post 1. Granular material will be placed in the bottom of the hole, approximately 2.5" deep to provide drainage. The first post can be field cut to length, placed in the hole and backfilled with suitable backfill. The soil plate may be trimmed if required.
5. A site evaluation should be considered if there is less than 25' between the outlet side of the terminal and any adjacent driving lane.
6. The breakaway cable assembly must be taut. A locking device (vice grips or channel lock pliers) should be used to prevent the cable from twisting when tightening nuts.

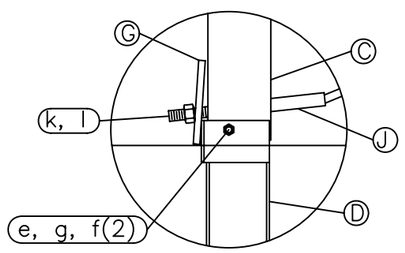

Post #1 Connection Detail

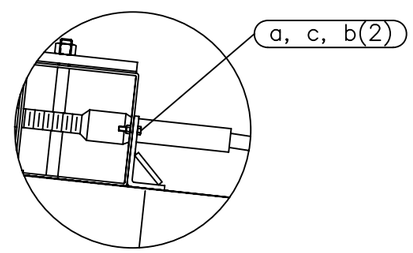

Impact Head Connection Detail

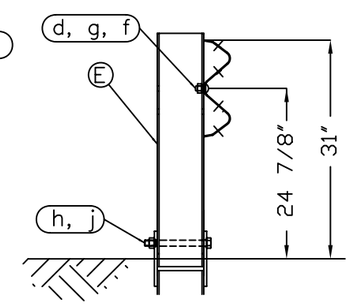

SECTION A-A

Post #2

RSI
Road Systems, Inc.
Big Spring, TX
Phone: 432-263-2435
or Phone: 330-346-0721

SKT-SP-MGS Terminal
Midwest Guardrail System
31" Top of Rail

Sheet: 1
Date: 02/24/10
By: JRR
Drawing Name: SKT-SP-S-MGS
Scale: None
Rev: 0

ET-31™ Guardrail End Treatment
NCHRP Report 350 Test Level 3
System Length 46'-10 1/2" (14.29 m)

For specific assembly, maintenance, or repair details refer to the state or specifying agency's standard drawings and/or Trinity standard layout drawings.

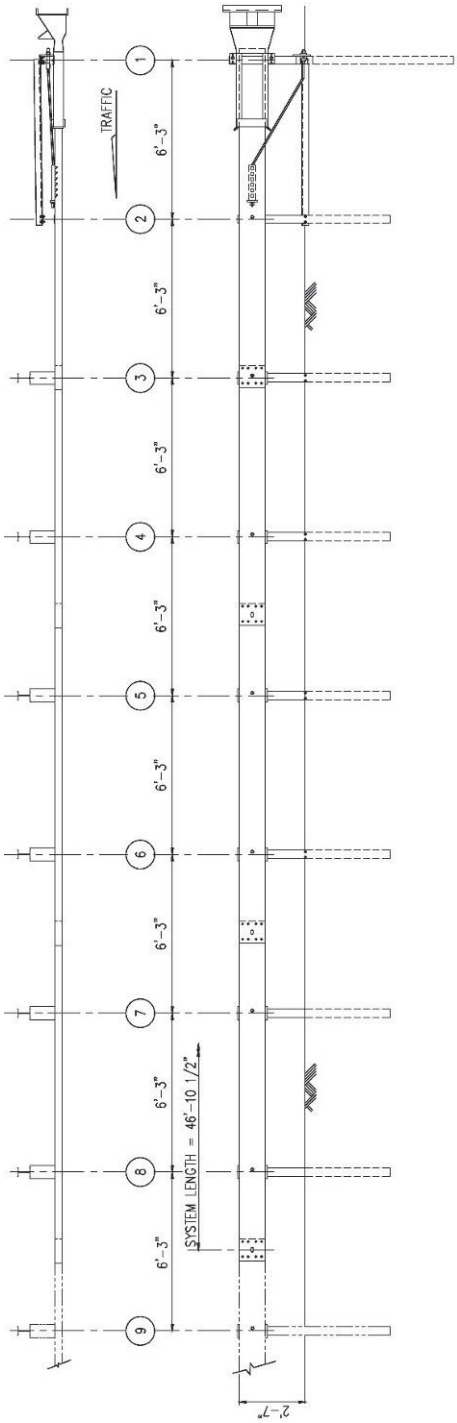

Figure 3 (TL-3)

[This drawing represents one version of the 46'-10 1/2" (14.29 m) system]

All rights in copyright reserved

ITEM NO.	PART NUMBER	DESCRIPTION	QTY	UOM
1	BSI-1301252-KT	X-Tension Terminal Comp, 31 in	1	EACH
2	K070202	X-Tension Hardware Kit, GT,	1	EACH
3	K070206	X-Tension System Hardware Kit,	1	EACH
4	K070210	X-Tension GT Guardrail	1	EACH
5	B061100	BSI, I-Beam Post, Middle, X350	1	EACH
6	MANXT1	X-TENSION Installation Manual	1	EACH

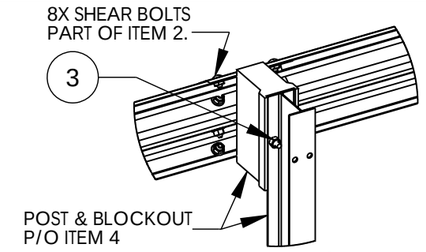

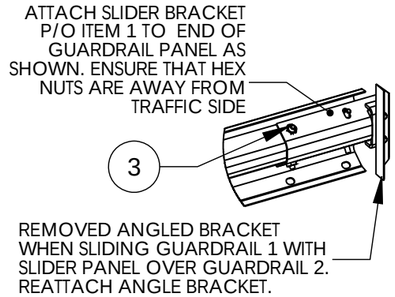

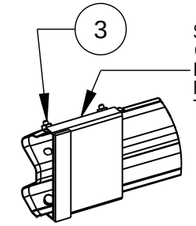

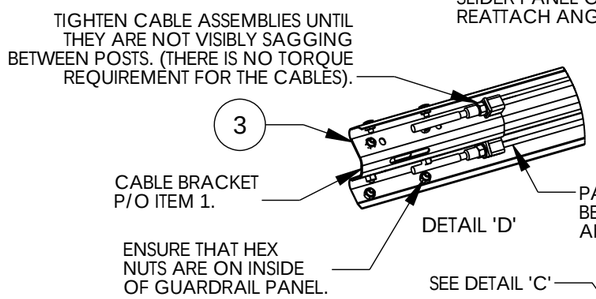

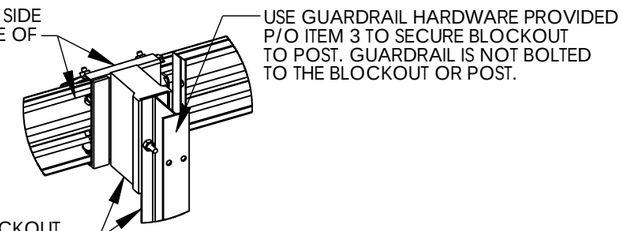

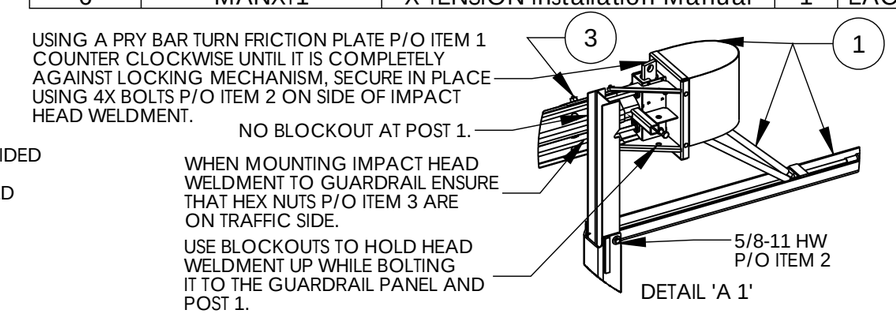

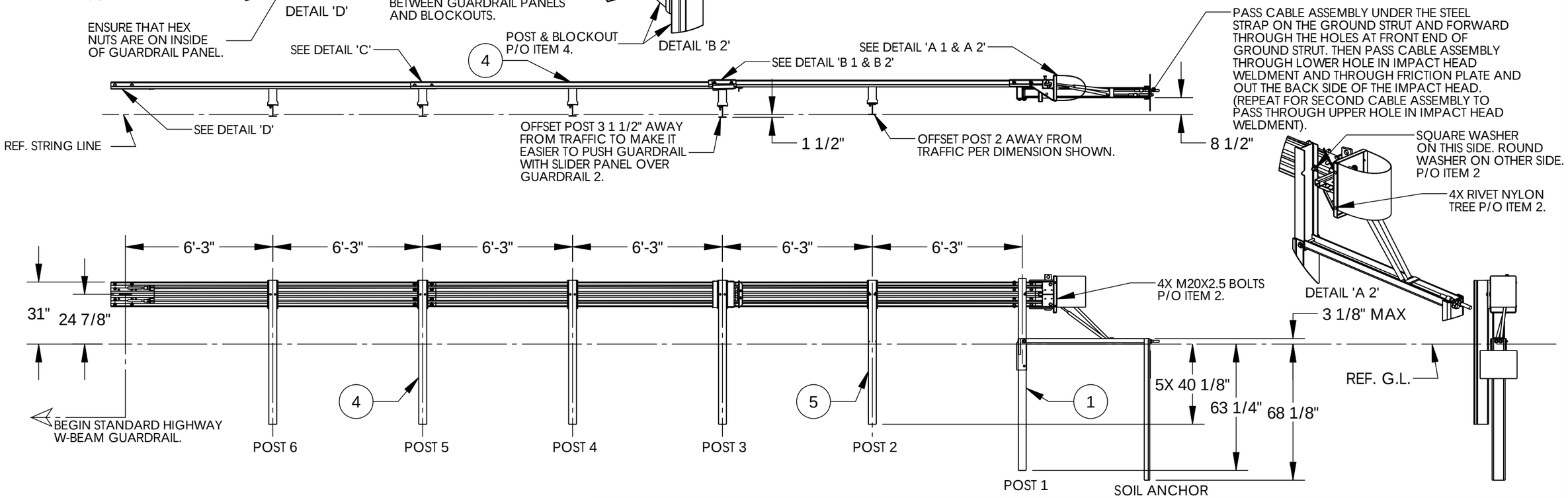

NOTES: UNLESS OTHERWISE SPECIFIED.

1. SYSTEM TO BE INSTALLED PER MANUFACTURER SPECIFICATIONS.
2. ONLY TIGHTEN THE CABLE ASSEMBLIES USING THE NUTS AT THE CABLE BRACKET (SEE DETAIL 'D'). DO NOT TIGHTEN THE CABLES AT THE FRONT OF THE GROUND ANCHOR.
3. WHEN DRIVING STEEL POST, ENSURE THAT A DRIVING CAP WITH TIMBER OR PLASTIC INSERT IS USED TO PREVENT DAMAGE TO THE GALVANIZING TO THE TOP OF THE POST.

© 2012 BARRIER SYSTEMS INC. THE INFORMATION CONTAINED IN THIS DRAWING IS THE SOLE PROPERTY OF BARRIER SYSTEMS INC. ANY REPRODUCTION IN PART OR WHOLE WITHOUT THE WRITTEN PERMISSION OF BARRIER SYSTEMS INC. IS PROHIBITED.

APPROVALS

DRAWN BY:	NMV
DRAWN DATE:	2/08/13
APPR'D BY:	JMT
APPR'D DATE:	2/08/13

UNLESS OTHERWISE SPECIFIED DIMENSIONS ARE IN INCHES. TOLERANCES ARE:
FRACTIONS ±1/16 DECIMAL .XX = ±.03 .XXX = ±.010 ANGLES ±1/2°
INTERPRET DIMENSIONS AND TOLERANCES PER ASME Y14.5-1994

THIRD ANGLE PROJECTION

DO NOT SCALE DRAWING

REV	ECN#	DATE
B	2067	05/02/13
A	2022	2/08/13

LINDSAY™ TRANSPORTATION SOLUTIONS

BARRIER SYSTEMS INC.
3333 Vaca Valley Parkway Ste 800
Vacaville, CA 95688
Tel: 888-800-3691
www.barriersystemsinc.com

TITLE
X-TENSION GUARDRAIL TERMINAL SYSTEM STEEL POST WITH COMPOSITE BLOCKOUT 31" RAIL HEIGHT

SIZE	DWG NO.	REV.
B	XTGTSS5	B

SCALE 1:50 SHEET 1 OF 1

Doc. B100108

Last Saved by: jeff.thompson; Friday, May 03, 2013 1:23:29 PM

BARRIER SYSTEMS INC

TECHNICAL BRIEF

180 River Road • Rio Vista, CA 94571 • Tel 707-374-6800 • Fax 707-374-6801
Email: info@barriersystemsinc.com • Website: barriersystemsinc.com

Product Specification

ABSORB 350™ TL-3
Non-Redirective, Gating, Crash Cushion
Applied to Permanent and Portable Concrete Barrier

I. General

The ABSORB 350™ TL-3 System is a Non-Redirective, Gating, Crash Cushion in accordance with the definitions in the National Cooperative Highway Research Program Report 350 (NCHRP 350). The system shall be tested and perform in an acceptable manner in accordance with the guidelines of NCHRP 350 at Test Level 3 (100 km/h).

II. Performance

The ABSORB 350 is designed to absorb the impact energy of an errant vehicle in accordance with NCHRP 350 guidelines for Non-Redirective, Gating, Crash Cushions. The system is designed to be attached to Permanent Concrete Barrier and Portable Concrete Barrier with section lengths of at least 3.1 meters (10 feet). When attached in accordance with the manufacturers instructions, the ABSORB 350 system is capable of safely stopping a 2000 kg (4400 pound) pickup truck impacting the system at 100 km/h (62.3 mph) and 0 degrees and an 820 kg (1800 pound) compact vehicle impacting the system at 100 km/h (62.3 mph), 0 degrees and with an offset of the vehicle and system centerlines of one-fourth the vehicle width.

A. When properly installed according to the manufacturer's recommendations the ABSORB 350 system shall be fully tested to and meet the recommended structural adequacy, occupant risk, and vehicle trajectory criteria set forth in NCHRP 350 for Test Level 3 Non-Redirective, Gating Crash Cushions (NCHRP 350 TL-3):

1. Impact at 0 degrees at w/4 offset (centerline of vehicle offset 1/4 width of vehicle from centerline of system) at 100 km/h with an 820C vehicle. This is Test 3-40 of NCHRP 35.

2. Impact at 0 degrees into center nose of device (0 offset from centerline of vehicle) at 100 km/h with a 2000P vehicle. This is Test 3-41 of NCHRP 350.

3. Impact at 15 degrees into center nose of device (0 offset from centerline of vehicle) at 100 km/h with an 820C vehicle unless the Federal Highway Administration, due to acceptable performance in test 3-40, waives this test. This is Test 3-42 of NCHRP 350.

4. Impact at 15 degrees into center nose of device (0 offset from centerline of vehicle) at 100 km/h with a 2000P vehicle. This is Test 3-43 of NCHRP 350.

5. Impact at 20 degrees along the side of the unit (with the centerline of the vehicle aligned with the centerline of the attachment of the barrier and the ABSORB 350™) at 100 km/h with a 2000P vehicle. This is Test 3-44 of NCHRP 350 as modified by the Federal Highway Administration.

B. The impact velocity of a hypothetical front seat passenger against the vehicle interior as calculated from the longitudinal vehicle acceleration and 600 mm [23 5/8 in] forward displacement, and the lateral vehicle acceleration and 300 mm [1 ft] lateral displacement shall be less than 12 m/s (39.3 ft/s] and the highest 10 ms average vehicle acceleration in the longitudinal and lateral directions subsequent to the instant of hypothetical occupant impact shall be less than 20 g's in NCHRP 350 tests 3-40, 41, 42 and 43.

For TL-3 impacts detached debris shall not show potential for penetrating the vehicle occupant compartment or presenting a hazard to other traffic, pedestrians, or workers in a work zone. The vehicle shall remain upright during and after the collision although moderate roll, pitch and yaw may occur.

III. Description of System

A. The ABSORB 350 system shall be made up of the following components and the system shall be fabricated from materials conforming to the following specifications:

1. ABSORB 350 Energy Absorbing Element – Each element of the system shall be composed of a plastic container, steel side bars, end plate/ hinge assemblies, an evaporation prevention cap with tether and appropriate fasteners. The overall dimensions of the assembled element are 610 mm (24 inches) wide, 812 mm (32 inches) tall and 1000 mm (39 1/2 inches) long, as shown in the attached drawing (B000524). Each element of the system shall weigh approximately 50 kg (110 pounds) when empty and 325 kg (717 pounds) when filled. The first element of the assembled system should always be empty of fluid with the evaporation prevention cap installed. All other elements of the system should be filled with fluid in accordance with the installation instructions and the evaporation prevention cap shall be securely installed. All elements shall be attached in accordance with the installation instructions and drawings supplied by the manufacturer.

a. The plastic elements shall be molded from Linear Low Density Polyethylene.

b. All steel sidebars, end plate/hinge assemblies shall be fabricated from mild steel in conformance with ASTM A-36 specifications.

c. The evaporation prevention cap shall be molded from low density polyethylene

2. ABSORB 350 Nose Piece – Each ABSORB 350 system shall contain one Nose Piece at the front of the system. The Nose Piece is approximately 620 mm (24 3/8inches) wide, 825mm (32 1/2inches) tall and 610mm (24 inches) long, as shown in the attached drawing (B000526). The Nose Piece shall weigh approximately 60 kg (132 pounds) and shall be attached to the first Energy Absorbing Element in accordance with the installation instructions and drawings supplied by the manufacturer.

   a. The Nose Piece shall be fabricated from mild steel in conformance with ASTM A-36.

   b. The Nose Piece shall also have an aluminum skin on the front portion to provide an aesthetic cover and a place for attaching traffic control signage, if needed. This skin shall be fabricated from 5052 H32 in conformance with ASTM B209 and shall be attached to the steel portion of the Nose Piece with adhesives and pop rivets.

3. ABSORB 350 Transition Hardware for PCB – The transition configuration is as shown in the attached drawing B000608.

   a. PCB Transition Hardware is fabricated from mild steel in conformance with ASTM A-36 as shown in the attached drawing (B000531). The steel components shall weigh approximately 80 kg (176 pounds).

B. Attachment of the ABSORB 350™ system to PCB systems shall require nine (9) Energy Absorbing Elements. Assembly should be in compliance with the manufactures drawings and written instructions.

C. The ABSORB 350™ system shall be able to be refurbished after a NCHRP 350 type impact in less than 1 hour with two people, an adequate fluid supply and refurbishment materials.

D. The ABSORB 350™ system shall not require attachment to a foundation. Attachment to the PCB system will require attachment in accordance with the manufacturer's drawings and instructions.

E. The ABSORB 350™ system shall be assembled and filled with fluid in accordance with the manufacturers instructions. If there is a possibility that the fluid in the system could freeze due to low temperatures, proper antifreeze agents should be used in accordance with local standards and environmental regulations.

IV. Application of Safety Appurtenances

Highway safety appurtenances should be applied to hazardous sites in accordance with the guidelines and recommendations in the American Association of State Highway Transportation Officials (AASHTO), "Roadside Design Guide," 1989, and other Federal Highway Administration and State Department of Transportation requirements. Placement and use of the ABSORB 350 system should comply with these specifications and guidelines.

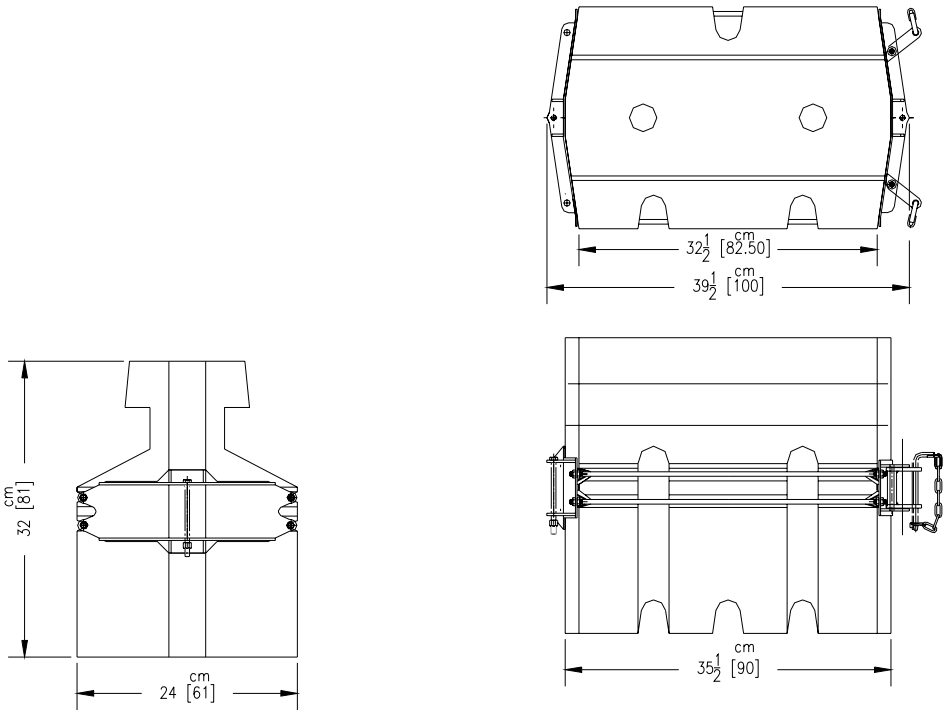

NOTE:
THICKNESS OF WELD TO BE EQUAL TO THE THINNER OF 2 PIECES BEING JOINED. WELD TO BE ALL AROUND UNLESS OTHERWISE NOTED.

© 2000 Barrier Systems, Inc.

The information heron is proprietary to Barrier Systems Inc. and shall not be disclosed, duplicated or used otherwise without the express written approval of Barrier Systems Inc.

REV.	CHANGES	DATE	BY	REQ'D	NEXT ASSY.	ITEM

SCALE: 1=10

	DATE	INIT.
DRAWN BY	3/2/00	R.R.C.
APPR'D BY		

Standard Tolerance
Angular ± 1/2°
Fractional ± 1/16
Decimal ± .010

TITLE : ABSORB 350 ELEMENT

MODEL	DRAWING NUMBER	REV.
	B000524	

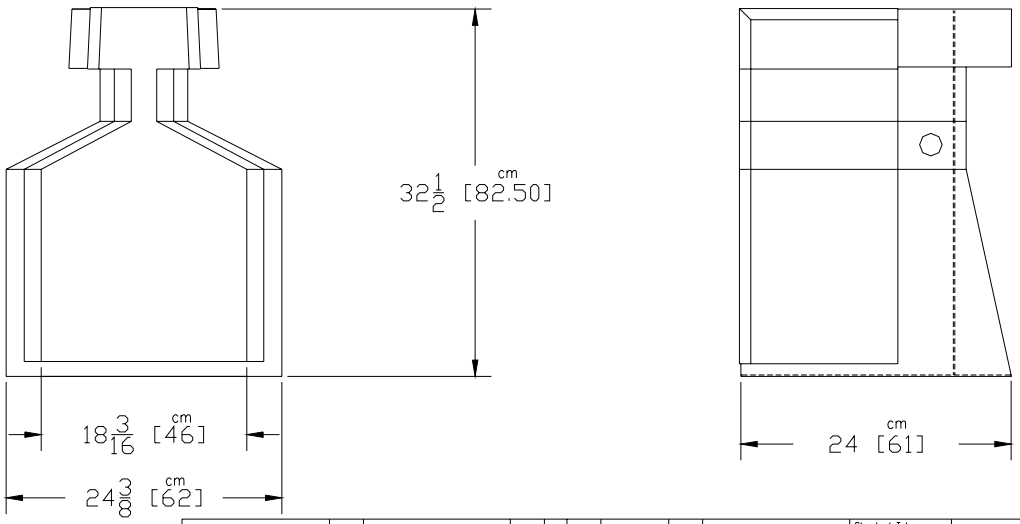

NOTE:
THICKNESS OF WELD TO BE EQUAL TO THE THINNER OF 2 PIECES BEING JOINED. WELD TO BE ALL AROUND UNLESS OTHERWISE NOTED.

© 1999 Barrier Systems, Inc.
The information heron is proprietary to Barrier Systems Inc. and shall not be disclosed, duplicated or used otherwise without the express written approval of Barrier Systems Inc.

REV.	CHANGES	DATE	BY	REQ'D	NEXT ASSY.	ITEM
						1

SCALE: EIGHTH

	DATE	INIT.
DRAWN BY	05/24/00	RSS
APPR'D BY		

TITLE : ABSORB 350
NOSE PIECE

Standard Tolerance
Angular ± 1/2°
Fractional ± 1/16
Decimal ± .010

MODEL	DRAWING NUMBER	REV.
	B000526	

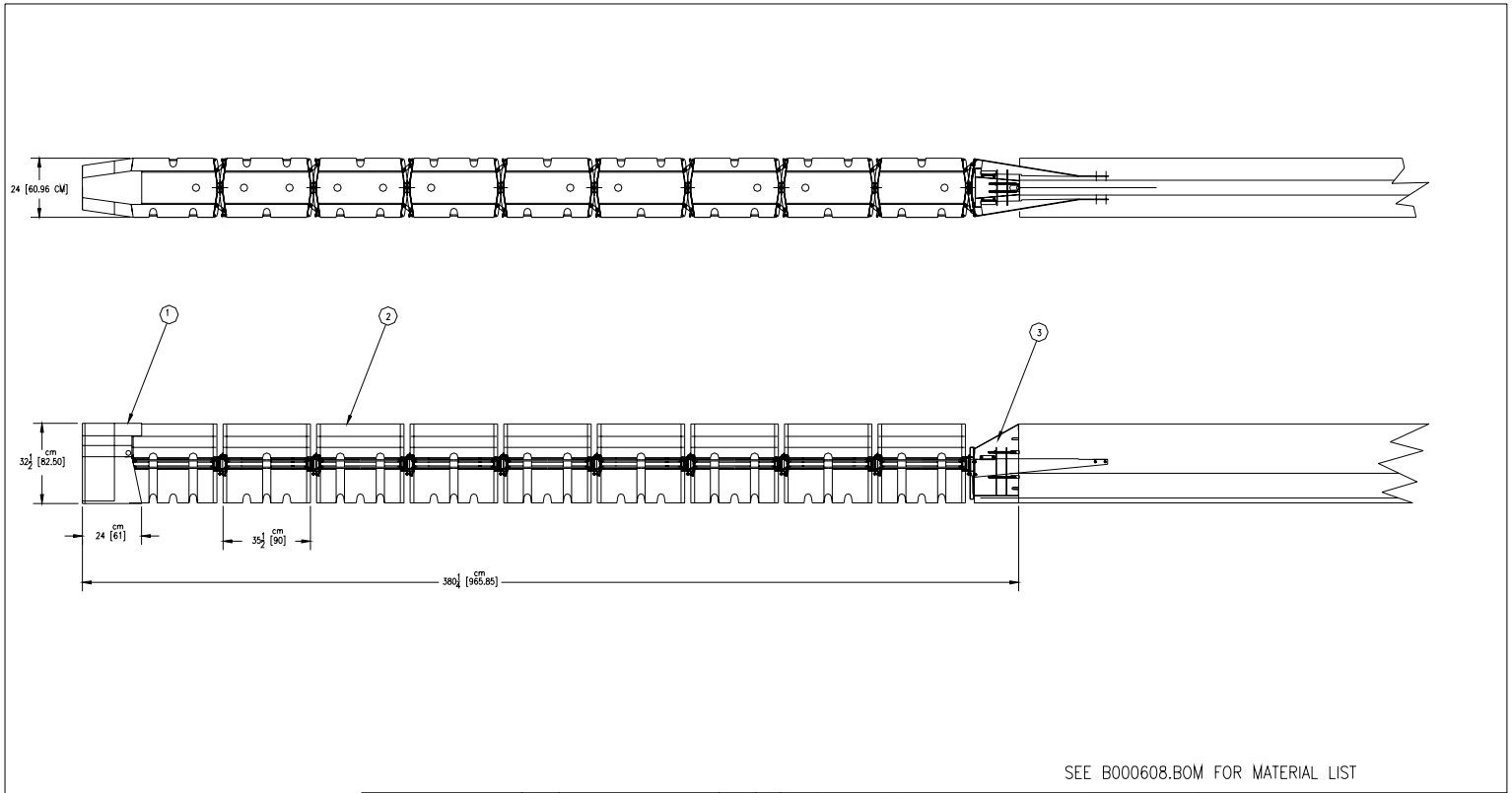

SEE B000608.BOM FOR MATERIAL LIST

NOTE:
THICKNESS OF WELD TO BE EQUAL TO THE THINNER OF 2 PIECES BEING JOINED. WELD TO BE ALL AROUND UNLESS OTHERWISE NOTED.

© 2000 Barrier Systems, Inc.

The information heron is proprietary to Barrier Systems Inc. and shall not be disclosed, duplicated or used otherwise without the express written approval of Barrier Systems Inc.

REV.	CHANGES	DATE	BY	REQ'D	NEXT ASSY.	ITEM

SCALE: 1=40

	DATE	INIT.
DRAWN BY	5/24/00	DGB
APPR'D BY		

Standard Tolerance
Angular ± 1/2°
Fractional ± 1/16
Decimal ± .010

TITLE : ASSEMBLY SYSTEM, ABSORB TL3 P.C.B.

MODEL

DRAWING NUMBER: B000608

REV.

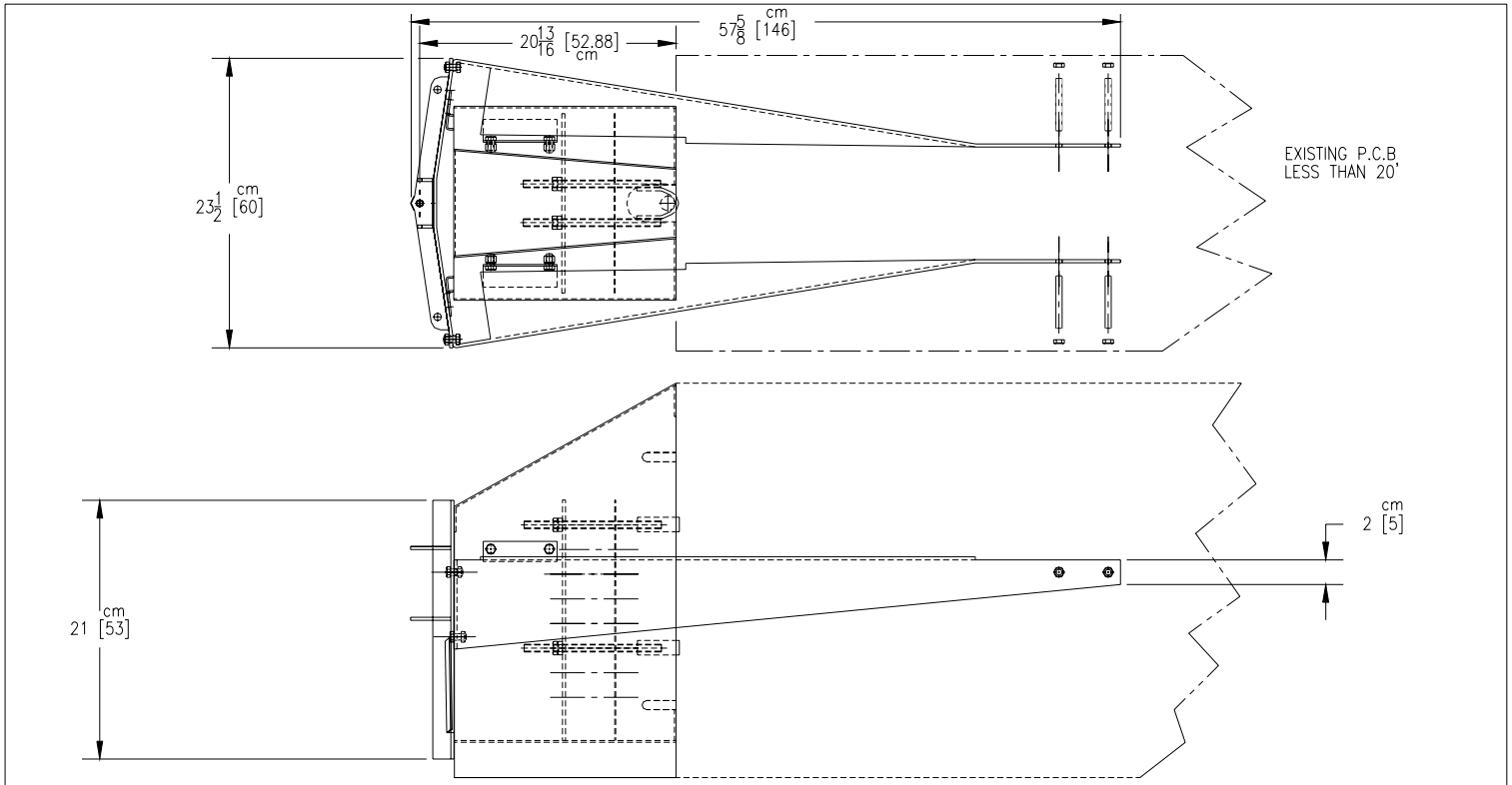

NOTE:
THICKNESS OF WELD TO BE EQUAL TO THE THINNER OF 2 PIECES BEING JOINED. WELD TO BE ALL AROUND UNLESS OTHERWISE NOTED.

© 2000 Barrier Systems, Inc.

The information heron is proprietary to Barrier Systems Inc. and shall not be disclosed, duplicated or used otherwise without the express written approval of Barrier Systems Inc.

REV.	CHANGES	DATE	BY	REQ'D	NEXT ASSY.	ITEM

SCALE: EIGHTH

	DATE	INIT.
DRAWN BY	05/24/00	R.R.C.
APPR'D BY		JM

Standard Tolerance
Angular ± 1/2°
Fractional ± 1/16
Decimal ± .010

TITLE : TRANSITION HARDWARE
ABSORB 350 TL2
P.C.B.

MODEL	DRAWING NUMBER	REV.
	B000531	

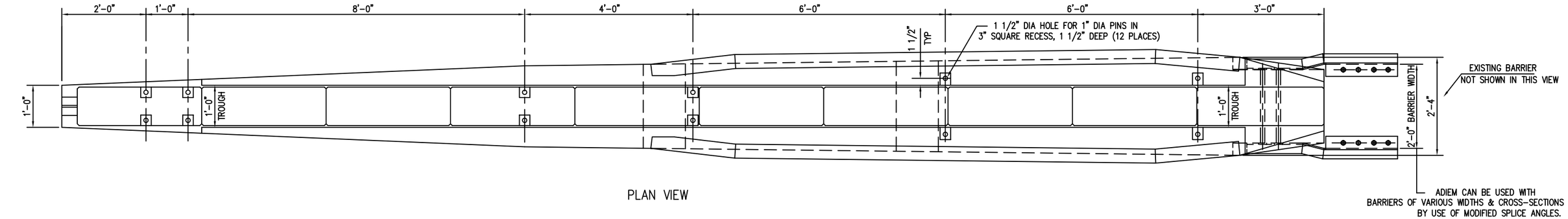

PLAN VIEW

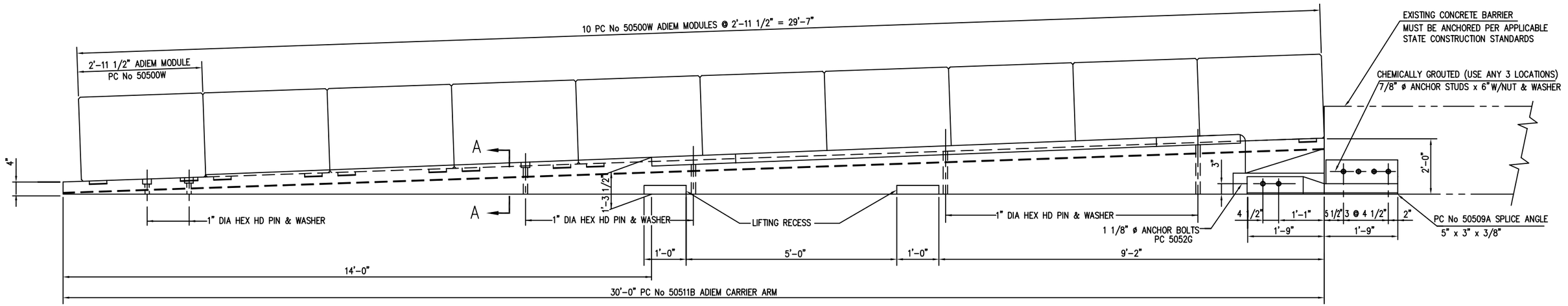

ELEVATION VIEW

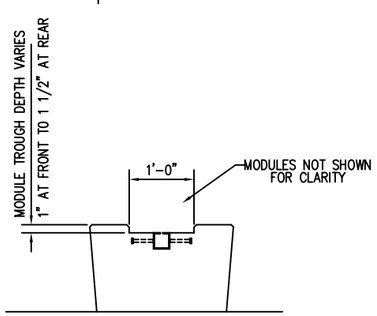

SECTION A–A

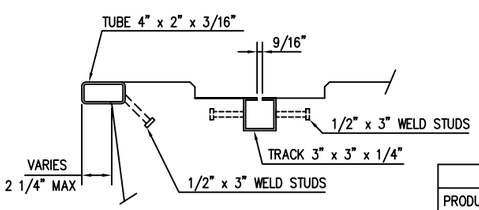

TRACK & BUMPER DETAIL

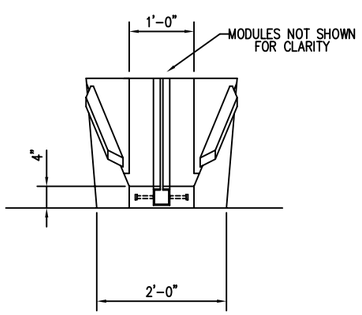

FRONT ELEVATION VIEW

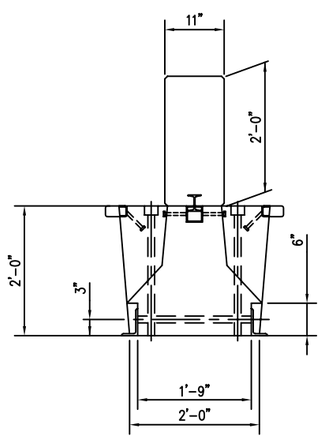

REAR ELEVATION VIEW

BILL OF MATERIAL

PRODUCT CODE	QTY	DESCRIPTION	REMARKS
50500W	10	MODULES x 2'-11 1/2"	
50511B	1	BASE x 30'-0"	
50508A	1	SPLICE ANGLE x 3'-6" RT	
50509A	1	SPLICE ANGLE x 3'-6" LT	
6549W	1	GARNA-THANE COATING (1 GAL)	
5052G	2	1 1/8" ø x 25" HEX HD BOLT	
4963G	4	1 1/8" WASHER	
3976G	2	1 1/8" HEX NUT	
4616G	6	7/8"ø STUD x 6" (FULL THD)	
3725G	6	7/8" WASHER	
3735G	6	7/8" HEX NUT	
☆ 5206B	1	ADHESIVE HY150 CARTRIDGE	
3900G	12	1" WASHER	
5665G	SEE SCH	1" ø HEX HD PIN x 48"	SEE NOTES 1-5
5642G	↓	1" ø HEX HD PIN x 42"	↓
5650G		1" ø HEX HD PIN x 36"	
5641G		1" ø HEX HD PIN x 30"	
5646G		1" ø HEX HD PIN x 24"	
5643G		1" ø HEX HD PIN x 18"	

ANCHOR PIN SCHEDULE PER SURFACE (SEE NOTES 1-5)		
PCC	ACP	BASE
		4
	4	
4		4
	4	4
4	4	
4		

☆ EACH CARTRIDGE INCLUDES 1 EACH : MIXER HY 150 CARTDIDGE(NOZZLE)
: FILLER HIT HY 150 (FILLER TUBE)

NOTES:
1) ANCHOR PINS ARE 1" DIA HEX HD, POINTED, GALV RODS (A307)
2) PORTLAND CEMENT CONCRETE (PCC)
3) ASPHALTIC CONCRETE (ACP)
4) BASE AND/OR COMPACTED SOIL (BASE)
5) ADIEM INSTALLATION NOT RECOMMENDED ON LOOSE SOIL.

ADIEM INSTALLATION INSTRUCTIONS

1. The ADIEM base is to be placed on a smooth surface (the same horizontal plane as the concrete barrier) and parallel to the mainline or ramp traveled lane(s).
2. Install anchor rods for ADIEM base by driving in soil or soft asphalt or driving in pre-drilled holes for hard asphalt or concrete (no epoxy required). The base should not be moved after the holes are drilled. The holes should be drilled using, at a mininum, a 35# hammer and minimum 36 inch long drill bit. (A 50# hammer is recommended.)
3. Attach connection brackets to base with two (2) 1 1/8" X 25" hex head bolts provided. Then field drill holes in the existing barrier and attach connection brackets to it with chemically grouted hardware provided.
4. Oil the ADIEM base track. Slide the modules onto the base. Be careful not to damage edges of the modules while sliding onto the base.
5. If the modules are scuffed or nicked, apply GARNA-THANE coating to the affected area.
6. Recommended tools and equipment:
   - 35/50# air hammer/drill
   - 1 3/8" ø x 36" rock drill
   - 1 1/4" ø x 12" rock drill
   - Sledge hammer
   - Oil
   - Wrenches

OPTIONAL ANCHOR ITEMS	
PRODUCT CODE	DESCRIPTION
5205B	ADHESIVE DISPENSER
5207B	MIXER HIT HY150 (NOZZLE)
5208B	FILLER HIT HY150 (FILLER TUBE)
5209B	BIT TE-C+ 11/16-18 (11/16" ø BIT)

ALTERNATE ADIEM INSTALLATION INSTRUCTIONS

1. At a holding site, the modules are slid into the ADIEM base after oiling the base track. Be careful not to damage the edges of the modules while sliding them onto the base.
2. If the modules are scuffed or nicked, apply GARNA-THANE coating to the affected area.
3. The unit is then delivered to the job site. The unit is to be placed on a smooth surface (the same horizontal slope as the concrete barrier) and parallel to the mailine or ramp traveled lane (s).
4. The front module should be removed so the remaining modules can be shifted for easy access for drilling the anchor rod holes.
5. Install anchor rods for ADIEM base by driving in soil or soft asphalt or driving in predrilled holes for hard asphalt or concrete (no epoxy required). The base should not be moved after the holes are drilled. The holes should be drilled using, at a minimum, a 35# hammer and a minimum 36 inch long drilling bit. (A 50# hammer is recommended.)
6. Attach connection brackets to base with two (2) 1 1/8" X 25" hex head bolts provided. Then field drill holes in the existing barrier and attach connection brackets to it with chemically grouted hardware provided.

REV.	CHK'D	BY	DATE	REMARKS
6	B.T.	L.H.	12/10/03	REPLACED GROUT WITH HILTI, UPDATED DWG
5		L.H.	03/12/03	DELETED NOTE #7, REVISED NOTE #3
4	D.D.	L.H.	12/17/99	REVISED COATING, CHANGED TITLE BLOCK
3		BT	3-14-97	DELETED PC 5484, ADDED PC 5052, CHG QTY PC 3976
2		BT	2-14-97	GENERAL UPDATES

ADIEM 30'

ERECTION DETAILS

TRINITY INDUSTRIES, INC.
HIGHWAY SAFETY PRODUCTS
2525 STEMMONS FREEWAY, DALLAS, TX 75207

DRAWN	B.TAKACH
CHECKED	D.D.
APPROVED	
DATE	3/19/96
ENG. FILE #	SS349-01E
SHT.No.	E1 OF 1
DRAWING NO.	SS 349
REV.	6

This drawing and the information shown thereon is the sole property of TRINITY INDUSTRIES, INC. Neither the drawing nor such information is to be used for any purpose other than that for which it was specifically furnished by TRINITY INDUSTRIES, INC., nor is any reproduction authorized without written permission.

U.S. Department of Transportation
Federal Highway Administration

1200 New Jersey Avenue, SE.
Washington, DC 20590

March 20, 2009

In Reply Refer To: HSSD/CC-35I

Mr. Barry D. Stephens, P.E.
Sr. Vice President Engineering
Energy Absorption Systems, Inc.
3617 Cincinnati Avenue
Rocklin, CA 95678

Dear Mr. Stephens:

This letter is in response to your request for the Federal Highway Administration (FHWA) acceptance of a roadside safety device for use on the National Highway System (NHS).

Name of device:	5-bay QuadGuard II
	5-bay QuadGuard II Wide
	2-bay QuadGuard II
Type of device:	Impact Attenuators
Test Level:	NCHRP Report 350 Test Levels 2 and 3
Testing conducted by:	E-Tech Testing Services, Inc.
Date of request:	December 8, 2008

You requested that we find this device acceptable for use on the NHS under the provisions of National Cooperative Highway Research Program (NCHRP) Report 350 "Recommended Procedures for the Safety Performance Evaluation of Highway Features."

Requirements
Roadside safety devices should meet the guidelines contained in the NCHRP Report 350." The FHWA Memorandum "Identifying Acceptable Highway Safety Features" of July 25, 1997, provides further guidance on crash testing requirements of longitudinal barriers.

Description
The QuadGuard® II is a redirective, non-gating crash cushion with a reduced length of 5 bays that is otherwise identical to the previously accepted Test Level 3 (TL-3) 6-bay unit (see FHWA Acceptance Letter CC-35, dated June 21, 1996). The difference is that one bay is removed from the rear of the system and a new sheet metal front nose is used. Likewise, the QuadGuard® II with a reduced length of 2 bays is identical to the previously accepted TL-2 3-bay unit (ref. CC-35C, dated June 17, 1999) with the exception of one of the rear bays being removed plus a new sheet metal front nose.

MOVING THE AMERICAN ECONOMY

Features of the 5-bay QuadGuard® II systems (narrow and wide) as well as the 2-bay QuadGuard® II narrow system are depicted in the enclosed drawings for reference. The QuadGuard® II 5-bay narrow system has an overall length of 5830 mm (19' 1") and can be configured with backup widths of 610 mm (24 inches), 762 mm (30 inches), 914 mm (36 inches), 1753 mm (69 inches), and 2286 mm (90 inches). The 2-bay QuadGuard® II system has an overall length of 3080 mm (10' 1") and can be configured with a backup width of 610 mm (24 inches). The system consists of energy absorbing cartridges surrounded by a framework of steel Quad-Beam® guardrail that can telescope rearward during head-on impacts. The system has a center monorail that will resist lateral movement during side angle impacts and a back up structure that will resist movement during head-on impacts. Simply removing a rear Bay from an existing 6-Bay or 3-Bay system will not be adequate to meet TL-3 and TL-2 impact speeds, respectively. As noted in your report, the QuadGuard II system requires an upgraded nose assembly.

Crash Testing

The original 6-bay test data of NCHRP 350 Test 3-31 and 3-32 demonstrated that the 2000P vehicle impacting at 0 degree and a nominal speed of 100km/h (63 mph) resulted in a ridedown g's of -14.52 and Occupant Impact Velocity (ΔV) of 10.55 m/s. An engineering review of this previous data indicated excess capacity in the device and prompted a crash test to be done after removing bay 6. The NCHRP 350 Tests 3-31 and 3-32 were conducted and the results are as follows:

<u>Narrow System 610mm (24 inches) width</u>:
Test 3-31: Impact speed: 101.1 km/h, ridedown of -17.3 g's, and ΔV 9.6 m/s.
Test 3-32: Impact speed: 98.3 km/h, ridedown of -17.4 g's, and ΔV 12.4 m/s.

<u>Wide System 2286mm (90 inches) width</u>:
Test 3-31: Impact speed: 99.7 km/h, ridedown of -17.0 g's, and ΔV 10.0 m/s.
Test 3-32: Impact speed: 97.7 km/h, ridedown of -17.4 g's, and ΔV 11.7 m/s.

Similarly the 3-bay narrow system test data demonstrated that the 2000P vehicle impacting at 0 degree and a nominal speed of 70km/h (43.5 mph) resulted in a ridedown g's of -19.57 and Occupant Impact Velocity (ΔV) of 8.89. Again an engineering review indicated excess capacity in the device and prompted the following crash tests with results as follows:

Test 2-31: Impact speed: 68.3 km/h, ridedown of -19.4 g's, and ΔV 10.7 m/s.
Test 2-32: Impact speed: 67.7 km/h, ridedown of -17.8 g's, and ΔV 10.8 m/s.

Due to the elimination of one bay at the rear of each system we concur that the tests performed provide adequate capacity of head-on impacts for all widths of TL-3 5-bay QuadGuard® II systems. In addition we also concur that the tests performed on the TL-2 2-bay QuadGuard® II system provide adequate capacity for head-on impacts for the 610mm (24 inches) width system. We agree that the front of the system was adequately tested for the 820C vehicle crash

characteristics. Based upon the multiple redirective test impacts into the QuadGuard® and the basic structure of the reduced 5-bay and 2-bay QuadGuard® II being unchanged, redirective tests are not required.

Findings

The QuadGuard® II 5-bay and 2-bay systems meet the evaluation criteria for NCHRP Report 350 redirective, non-gating crash cushion at TL-3 and TL-2 impact conditions respectively and are acceptable for use on the NHS when such use is acceptable to the contracting authority. It's further acknowledged that the QuadGuard® II can be installed with existing QuadGuard® Transition hardware (Reference CC-35B, dated October 17, 1996.)

Please note the following standard provisions that apply to the FHWA letters of acceptance:

- This acceptance is limited to the crashworthiness characteristics of the devices and does not cover their structural features, nor conformity with the Manual on Uniform Traffic Control Devices.
- Any changes that may adversely influence the crashworthiness of the device will require a new acceptance letter.
- Should the FHWA discover that the qualification testing was flawed, that in-service performance reveals unacceptable safety problems, or that the device being marketed is significantly different from the version that was crash tested, we reserve the right to modify or revoke our acceptance.
- You will be expected to supply potential users with sufficient information on design and installation requirements to ensure proper performance.
- You will be expected to certify to potential users that the hardware furnished has essentially the same chemistry, mechanical properties, and geometry as that submitted for acceptance, and that it will meet the crashworthiness requirements of the FHWA and the NCHRP Report 350.
- To prevent misunderstanding by others, this letter of acceptance is designated as number CC-35I and shall not be reproduced except in full. This letter and the test documentation upon which it is based are public information. All such letters and documentation may be reviewed at our office upon request.
- The QuadGuard and QuadGuard II families of crash cushions are patented products and considered proprietary. If proprietary devices are specified by a highway agency for use on Federal-aid projects, except exempt, non-NHS projects, (a) they must be supplied through competitive bidding with equally suitable unpatented items; (b) the highway agency must certify that they are essential for synchronization with the existing highway facilities or that no equally suitable alternative exists; or (c) they must be used for research or for a distinctive type of construction on relatively short sections of road for experimental purposes. Our regulations concerning proprietary products are contained in Title 23, Code of Federal Regulations, Section 635.411.
- This acceptance letter shall not be construed as authorization or consent by the FHWA to use, manufacture, or sell any patented device for which the applicant is not the patent holder. The acceptance letter is limited to the crashworthiness characteristics of the candidate device, and

the FHWA is neither prepared nor required to become involved in issues concerning patent law. Patent issues, if any, are to be resolved by the applicant.

Sincerely yours,

David A. Nicol, P.E.
Director, Office of Safety Design
Office of Safety

Enclosures

Table1: Table of TL- 3 Tests (5-Bay System).

Illustration	Test #	Completed	Notes
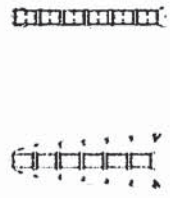	3-31	YES	Passed all ORV's. 5-Bay 24" Wide System was tested and passed all Occupant Risk Values. 5-Bay 90" Wide system was tested and passed all Occupant Risk Values.
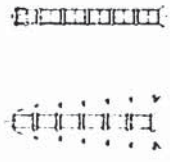	3-32	YES	Passed all ORV's. 5-Bay 24" Wide System was tested. 5-Bay 90" Wide System was tested.
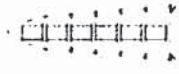	3-30	NO	Test 3-32 was completed as "Worst Case" for 820c.
	3-33	NO	Test 3-31 tested system capacity for 2000P and is considered worst case.
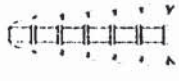	3-36	NO	Qualified under the Original QuadGuard Test Matrix. No changes in Structural Hardware therefore performance would remain unchanged.
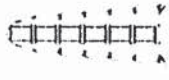	3-37	NO	Qualified under the Original QuadGuard Test Matrix. No changes in Structural Hardware – performance remains unchanged.

Illustration	Test #	Completed	Notes
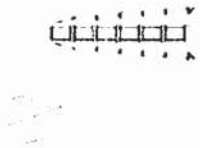	3-38	NO	Qualified under the Original QuadGuard Test Matrix. No changes in Structural Hardware – performance remains unchanged.
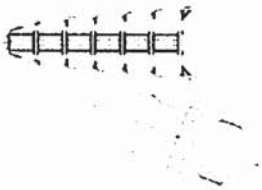	3-39	NO	Qualified under the Original QuadGuard Test Matrix. No changes in Structural Hardware / performance remains unchanged.

Table2: Table of TL-2 Tests (2-Bay System)

Illustration	Test#	Completed	Notes
	2-30	NO	Test 2-32 was completed as is considered "worst case" scenario for 820c.
	2-31	YES	Passed all ORV's on 2-Bay System.
	2-32	YES	Passed all ORV's on 2-Bay System.
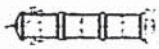	2-33	NO	Test 2-31 tested system capacity for 2000P and is considered worst case.

Illustration	Test#	Completed	Notes
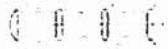	2-36	NO	Qualified under the Original QuadGuard Test Matrix. No changes in Structural Hardware – performance remains unchanged.
	2-37	NO	Qualified under the Original QuadGuard Test Matrix. No changes in Structural Hardware – performance remains unchanged.
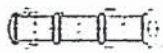	2-38	NO	Qualified under the Original QuadGuard Test Matrix. No changes in Structural Hardware – performance remains unchanged.
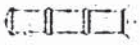	2-39	NO	Qualified under the Original QuadGuard Test Matrix. No changes in Structural Hardware – performance remains unchanged.

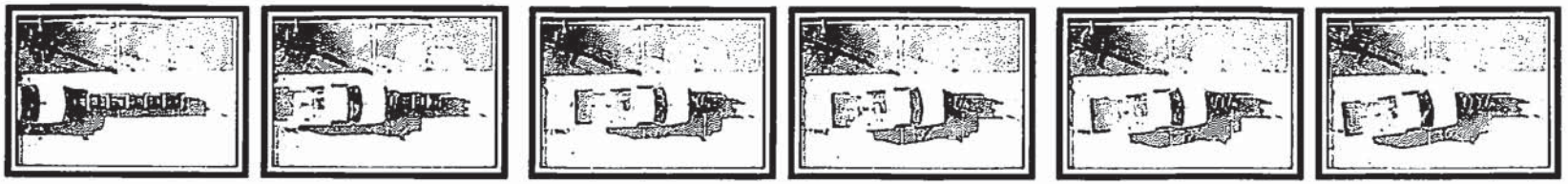

t = 0.000 sec | t = 0.120 sec | t = 0.240 sec | t = 0.360 sec | t = 0.480 sec | t = 0.600 sec

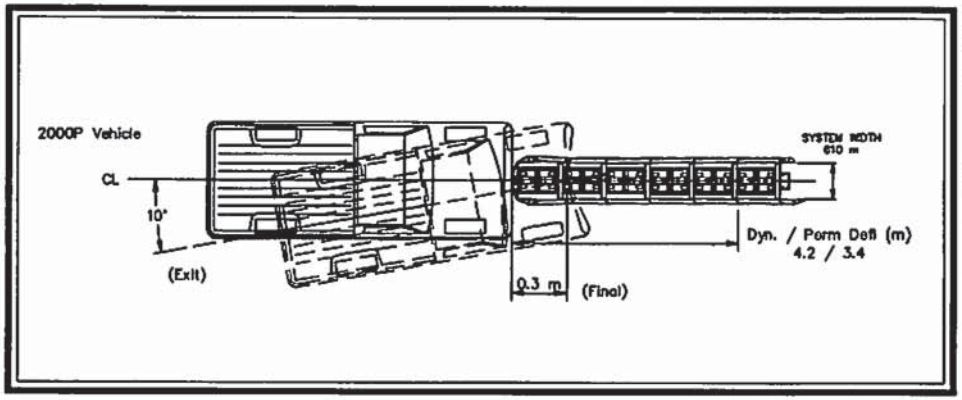

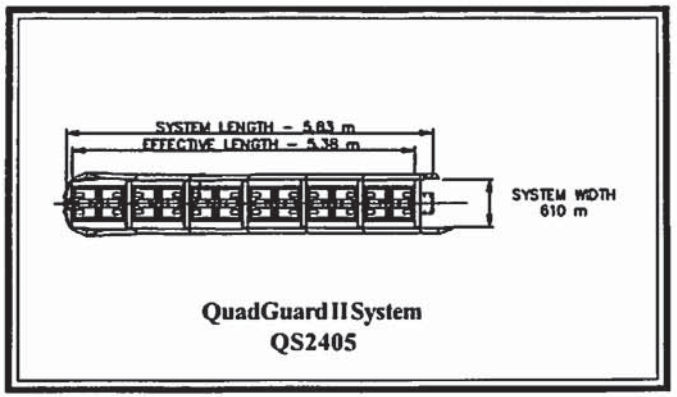

QuadGuard II System
QS2405

General Information	
Test Agency	E-TECH Testing Services, Inc.
Test Designation	NCHRP 350 Test 3-31
Test No.	01-4309-001
Date	1/5/06
Test Article	
Type	Energy Absorption System
	QuadGuard II System QS2405
Installation Length, (mm)	5 bay 5830 mm long 610 mm wide
Material and key elements	5 bay system, 6 energy absorbing cartridges (3) Type II and (3) Type I. P.C. Concrete, clean
Foundation Type and Condition	Unreinforced 27.6 Mpa concrete, clean and dry, with (46) 19 mm x 178 mm ASTM A193 Grade B-7 threaded studs and MP-3 Anchoring System
Test Vehicle	
Type	Production Model
Designation	2000P
Model	1988 Chevrolet Pickup
Mass (kg)	
Curb	1861
Test inertial	1984
Dummy	N/A
Gross Static	1984

Impact Conditions	
Speed (km/h)	101.1
Angle (deg)	0
Impact Severity (kJ)	781.6
Exit conditions	
Speed (km/h)	N/A
Angle (deg - veh. c.g.)	N/A
Occupant Risk Values	
Impact Velocity (m/s)	
x-direction	9.6
y-direction	0.5
Ridedown Acceleration (g's)	
x-direction	-17.3
y-direction	3.5
European Committee for Normalization (CEN) Values	
THIV (km/h)	34.7
PHD (g's)	17.4
ASI	1.3
Post-Impact Vehicular Behavior (deg - rate gyro)	
Maximum Roll Angle	3.2
Maximum Pitch Angle	-8.6
Maximum Yaw Angle	-10.2
Test Article Deflections (m)	
Dynamic	4.2
Permanent	3.4
Vehicle Damage (Primary Impact)	
Exterior	
VDS	FC-3
CDC	12FCEW3
Interior	
VCDI	AS0000000
Maximum Deformation (mm)	Negligible

Figure 1. Summary of Results - QuadGuard II System Test 01-4309-001

t = 0.000 sec | t = 0.138 sec | t = 0.276 sec | t = 0.414 sec | t = 0.552 sec | t = 0.965 sec

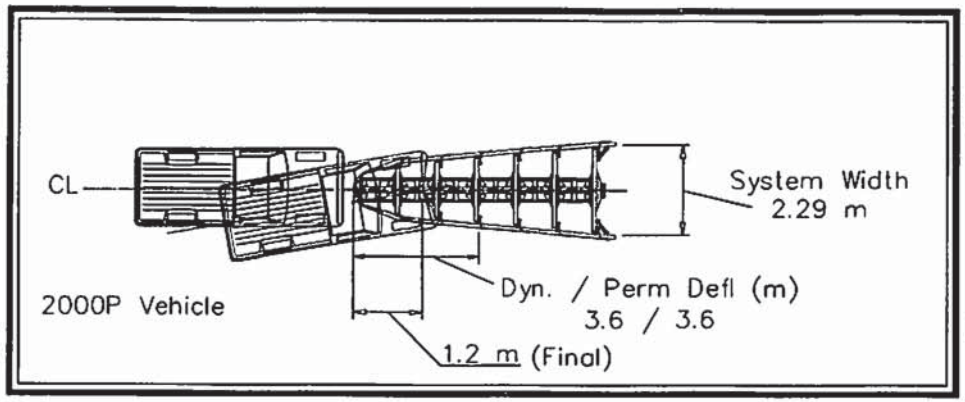

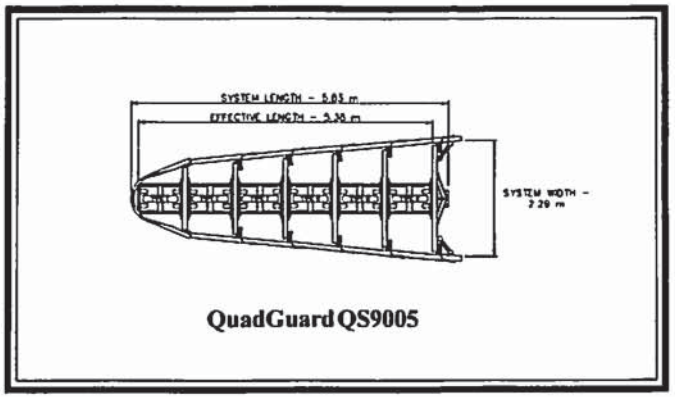

General Information
- Test Agency ..... E-TECH Testing Services, Inc.
- Test Designation ..... NCHRP 350 Test 3-31
- Test No. 01-4309-006
- Date 11/04/08

Test Article
- Type ..... Energy Absorption System
- ..... QuadGuard II System QS2405
- Installation Length, (mm) ..... 5 bay 5.83 m long 2.29 m wide
- Material and key elements ..... 5 bay system, 6 energy absorbing cartridges (3) Type II and (3) Type I.
- Foundation Type and Condition ..... Unreinforced 27.6 Mpa concrete, clean and dry, with (46) 19 mm x 178 mm ASTM A193 Grade B-7 threaded studs and MP-3 Anchoring System

Test Vehicle
- Type ..... Production Model
- Designation 2000P
- Model ..... 1991 GMC C2500
- Mass (kg)
  - Curb 1840
  - Test inertial 2000
  - Dummy ..... N/A
  - Gross Static 2000

Impact Conditions
- Speed (km/h) 99.7
- Angle (deg) 0
- Impact Severity (kJ) 766.5

Exit conditions
- Speed (km/h) ..... N/A
- Angle (deg - veh. c.g.) ..... N/A

Occupant Risk Values
- Impact Velocity (m/s)
  - x-direction 10.0
  - y-direction 0.0
- Ridedown Acceleration (g's)
  - x-direction ..... -17.0
  - y-direction ..... -3.3

European Committee for Normalization (CEN) Values
- THIV (km/h) 36.1
- PHD (g's) 17.1
- ASI 1.3

Post-Impact Vehicular Behavior (deg - rate gyro)
- Maximum Roll Angle ..... -2.6
- Maximum Pitch Angle 30.6
- Maximum Yaw Angle ..... -2.3

Test Article Deflections (m)
- Dynamic 3.6
- Permanent 3.6

Vehicle Damage (Primary Impact)
- Exterior
  - VDS FC-4
  - CDC 12FCEW4
- Interior
  - VCDI AS0000000
  - Maximum Deformation (mm) ..... Negligible

Figure 6. Summary of Results - QuadGuard II System Test 01-4309-006

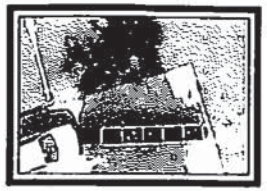
t = 0.000 sec

t = 0.173 sec

t = 0.341 sec

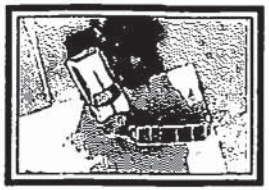
t = 0.511 sec

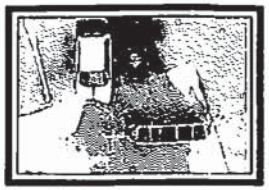
t = 0.680 sec

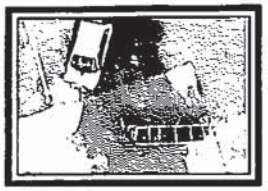
t = 0.851 sec

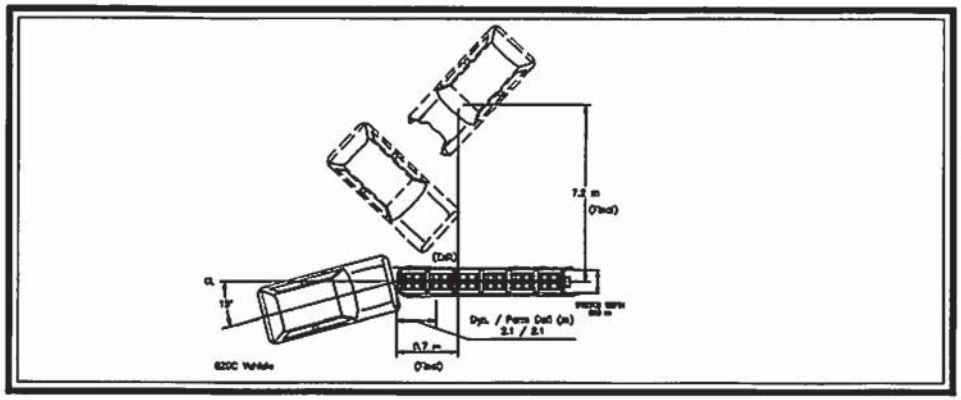

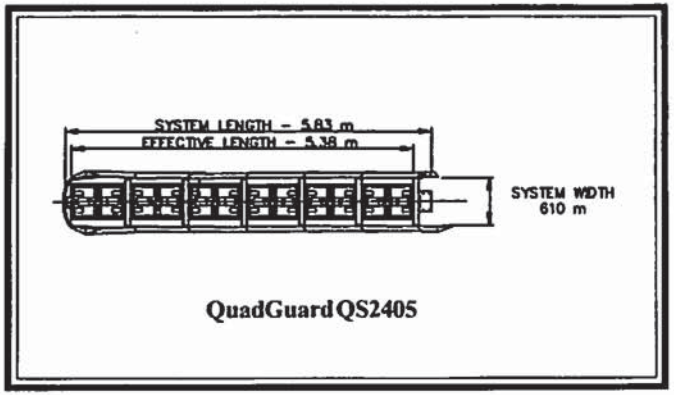

QuadGuard QS2405

General Information

Test Agency	E-TECH Testing Services, Inc.
Test Designation	NCHRP 350 Test 3-32
Test No.	01-4309-002
Date	6/04/08

Test Article

Type	Energy Absorption System
	QuadGuard System QS2405
Installation Length, (mm)	5 bay 5830 mm long 610 mm wide
Material and key elements	5 bay system, 6 energy absorbing cartridges (3) Type II and (3) Type I. P.C. Concrete, clean
Foundation Type and Condition	Unreinforced 27.6 Mpa concrete, clean and dry, with (46) 19 mm x 178 mm ASTM A193 Grade B-7 threaded studs and MP-3 Anchoring System

Test Vehicle

Type	Production Model
Designation	820C
Model	1988 Ford Festiva
Mass (kg)	
Curb	818
Test inertial	845
Dummy	75
Gross Static	920

Impact Conditions

Speed (km/h)	98.3
Angle (deg)	15
Impact Severity (kJ)	316.6

Exit conditions

Speed (km/h)	N/A
Angle (deg - veh. c.g.)	N/A

Occupant Risk Values

Impact Velocity (m/s)	
x-direction	12.4
y-direction	0.1
Ridedown Acceleration (g's)	
x-direction	-17.4
y-direction	-5.1

European Committee for Normalization (CEN) Values

THIV (km/h)	45.4
PHD (g's)	17.4
ASI	1.3

Post-Impact Vehicular Behavior (deg - rate gyro)

Maximum Roll Angle	25.7
Maximum Pitch Angle	-12.1
Maximum Yaw Angle	191.8

Test Article Deflections (m)

Dynamic	2.1
Permanent	2.1

Vehicle Damage (Primary Impact)

Exterior	
VDS	FC-3
CDC	12FCEW3
Interior	
VCDI	AS0000000
Maximum Deformation (mm)	Negligible

Figure 11. Summary of Results - QuadGuard II System Test 01-4309-002

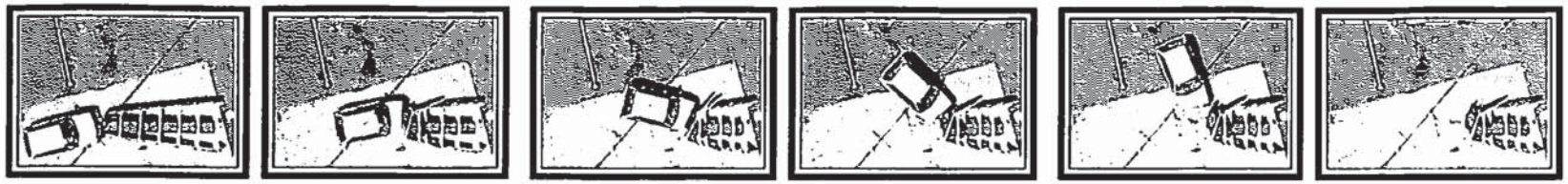

t = 0.000 sec | t = 0.118 sec | t = 0.236 sec | t = 0.354 sec | t = 0.472 sec | t = 1.295 sec

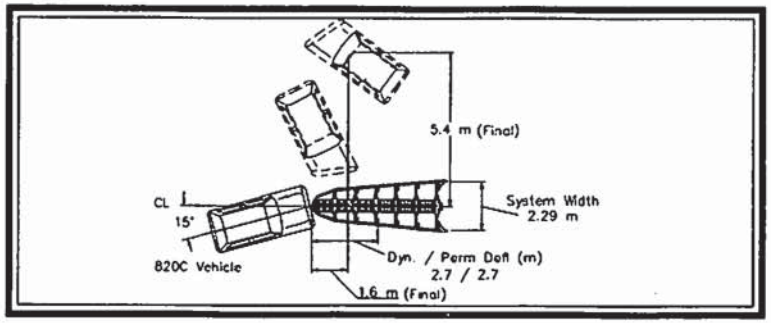

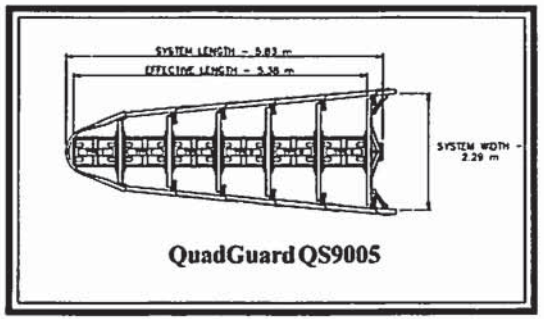

General Information

Test Agency	E-TECH Testing Services, Inc.
Test Designation	NCHRP 350 Test 3-32
Test No.	01-4309-005
Date	8/13/08

Test Article

Type	Energy Absorption System
	QuadGuard II System QS9005
Installation Length, (mm)	5 bay 5.83 m long 2.29 m wide
Material and key elements	5 bay system, 6 energy absorbing cartridges (3) Type II and (3) Type I.
Foundation Type and Condition	Unreinforced 27.6 Mpa concrete, clean and dry, with (46) 19 mm x 178 mm ASTM A193 Grade B-7 threaded studs and MP-3 Anchoring System

Test Vehicle

Type	Production Model
Designation	820C
Model	1990 Ford Festiva
Mass (kg)	
Curb	852
Test inertial	827
Dummy	75
Gross Static	902

Impact Conditions

Speed (km/h)	97.7
Angle (deg)	15
Impact Severity (kJ)	304.3

Exit conditions

Speed (km/h)	N/A
Angle (deg - veh. c.g.)	N/A

Occupant Risk Values

Impact Velocity (m/s)	
x-direction	11.7
y-direction	-0.1
Ridedown Acceleration (g's)	
x-direction	-17.4
y-direction	-3.1

European Committee for Normalization (CEN) Values

THIV (km/h)	42.6
PHD (g's)	17.7
ASI	1.3

Post-Impact Vehicular Behavior (deg - rate gyro)

Maximum Roll Angle	30.9
Maximum Pitch Angle	13.7
Maximum Yaw Angle	221.1

Test Article Deflections (m)

Dynamic	2.7
Permanent	2.7

Vehicle Damage (Primary Impact)

Exterior	
VDS	FC-3
CDC	01FCEW3
Interior	
VCDI	AS0000000
Maximum Deformation (mm)	Negligible

Figure 16. Summary of Results - QuadGuard II System Test 01-4309-005

t = 0.000 sec | t = 0.133 sec | t = 0.266 sec | t = 0.399 sec | t = 0.532 sec | t = 1.920 sec

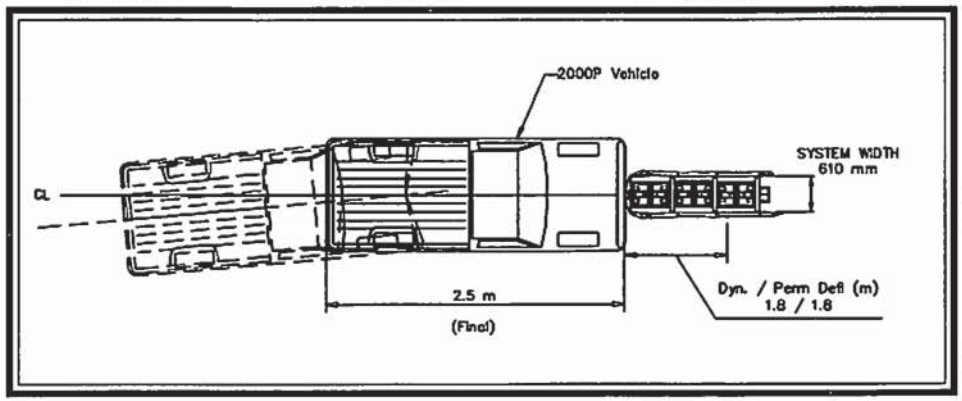

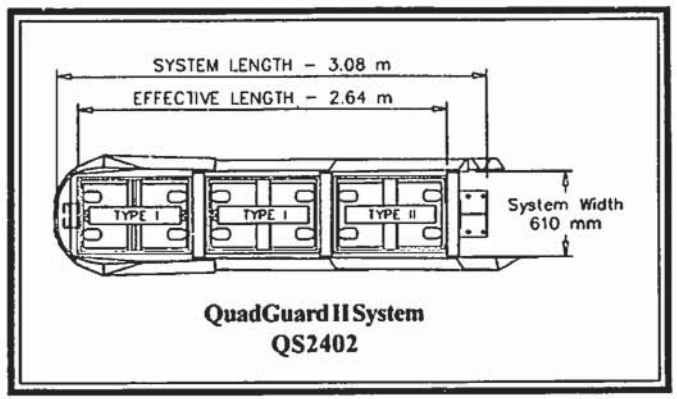

QuadGuard II System
QS2402

General Information	
Test Agency	E-TECH Testing Services, Inc.
Test Designation	NCHRP 350 Test 2-31
Test No.	01-4309-003
Date	7/16/08
Test Article	
Type	Energy Absorption System
	QuadGuard II System QS2402
Installation Length, (mm)	2 bay 3080 mm long 610 mm wide
Material and key elements	2 bay system, 3 energy absorbing cartridges (1) Type II and (2) Type I.
Foundation Type and Condition	Unreinforced 27.6 Mpa concrete, clean and dry, with (26) 19 mm x 178 mm ASTM A193 Grade B-7 threaded studs and MP-3 Anchoring System
Test Vehicle	
Type	Production Model
Designation	2000P
Model	1989 Chevrolet Pickup
Mass (kg)	
Curb	1961
Test inertial	2005
Dummy	N/A
Gross Static	2005

Impact Conditions	
Speed (km/h)	68.3
Angle (deg)	0
Impact Severity (kJ)	361.0
Exit conditions	
Speed (km/h)	N/A
Angle (deg - veh. c.g.)	N/A
Occupant Risk Values	
Impact Velocity (m/s)	
x-direction	10.7
y-direction	-0.7
Ridedown Acceleration (g's)	
x-direction	-19.4
y-direction	5.9
European Committee for Normalization (CEN) Values	
THIV (km/h)	38.7
PHD (g's)	19.9
ASI	1.3
Post-Impact Vehicular Behavior (deg - rate gyro)	
Maximum Roll Angle	1.5
Maximum Pitch Angle	5.4
Maximum Yaw Angle	-4.7
Test Article Deflections (m)	
Dynamic	1.8
Permanent	1.8
Vehicle Damage (Primary Impact)	
Exterior	
VDS	FC-3
CDC	12FCEW3
Interior	
VCDI	AS0000000
Maximum Deformation (mm)	Negligible

Figure 1. Summary of Results - QuadGuard II System Test 01-4309-003

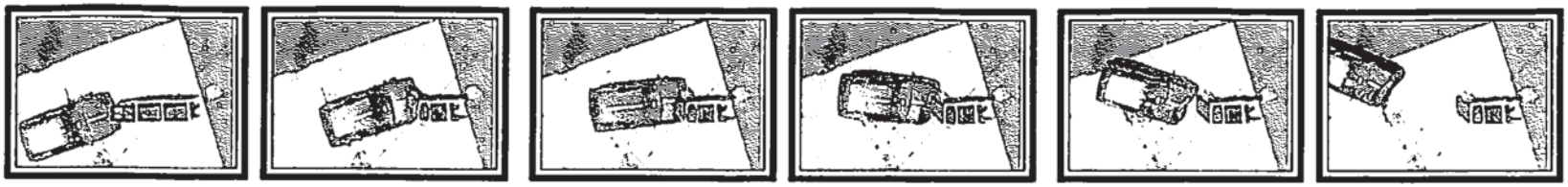

t = 0.000 sec | t = 0.125 sec | t = 0.250 sec | t = 0.375 sec | t = 0.500 sec | t = 1.285 sec

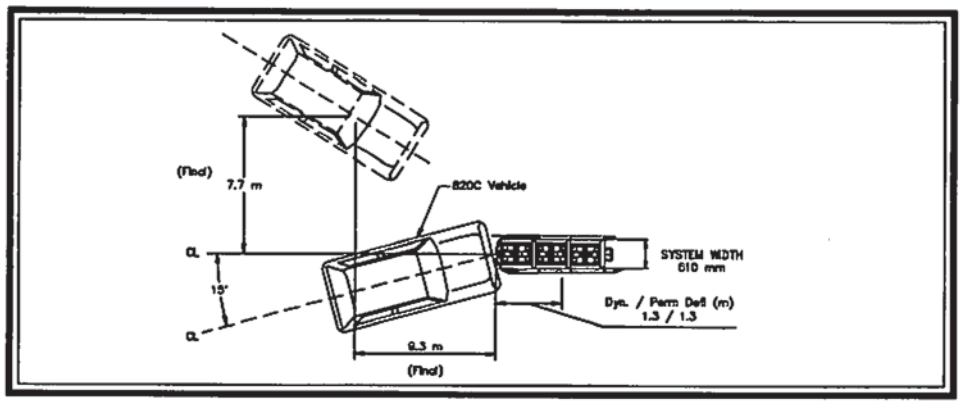

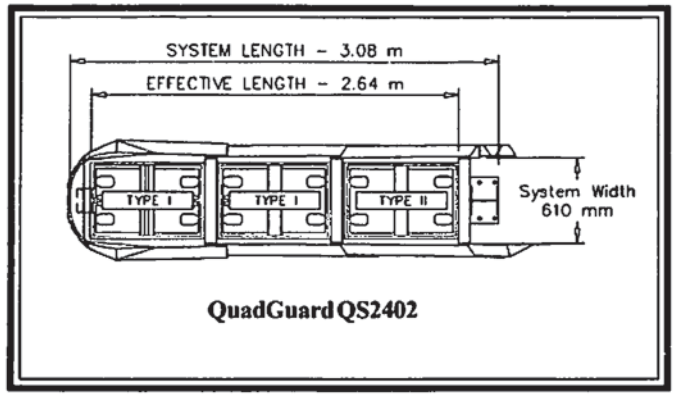

General Information

Test Agency	E-TECH Testing Services, Inc.
Test Designation	NCHRP 350 Test 2-32
Test No.	01-4309-004
Date	7/22/08
Test Article	
Type	Energy Absorption System
	QuadGuard System QS2402
Installation Length, (mm)	2 bay 3080 mm long 610 mm wide
Material and key elements	2 bay system, 3 energy absorbing cartridges (1) Type II and (2) Type I.
Foundation Type and Condition	Unreinforced 27.6 Mpa concrete, clean and dry, with (26) 19 mm x 178 mm ASTM A193 Grade B-7 threaded studs and MP-3 Anchoring System
Test Vehicle	
Type	Production Model
Designation	820C
Model	1990 Ford Festiva
Mass (kg)	
Curb	838
Test inertial	818
Dummy	75
Gross Static	993

Impact Conditions	
Speed (km/h)	67.7
Angle (deg)	15
Impact Severity (kJ)	144.6
Exit conditions	
Speed (km/h)	N/A
Angle (deg - veh. c.g.)	N/A
Occupant Risk Values	
Impact Velocity (m/s)	
x-direction	10.8
y-direction	-0.5
Ridedown Acceleration (g's)	
x-direction	-17.8
y-direction	-6.2
European Committee for Normalization (CEN) Values	
THIV (km/h)	39.0
PHD (g's)	18.0
ASI	1.5
Post-Impact Vehicular Behavior (deg - rate gyro)	
Maximum Roll Angle	7.3
Maximum Pitch Angle	11.3
Maximum Yaw Angle	47.0
Test Article Deflections (m)	
Dynamic	1.3
Permanent	1.3
Vehicle Damage (Primary Impact)	
Exterior	
VDS	FC-3
CDC	12FCEW3
Interior	
VCDI	AS0000000
Maximum Deformation (mm)	Negligible

Figure 6. Summary of Results - QuadGuard II System Test 01-4309-004

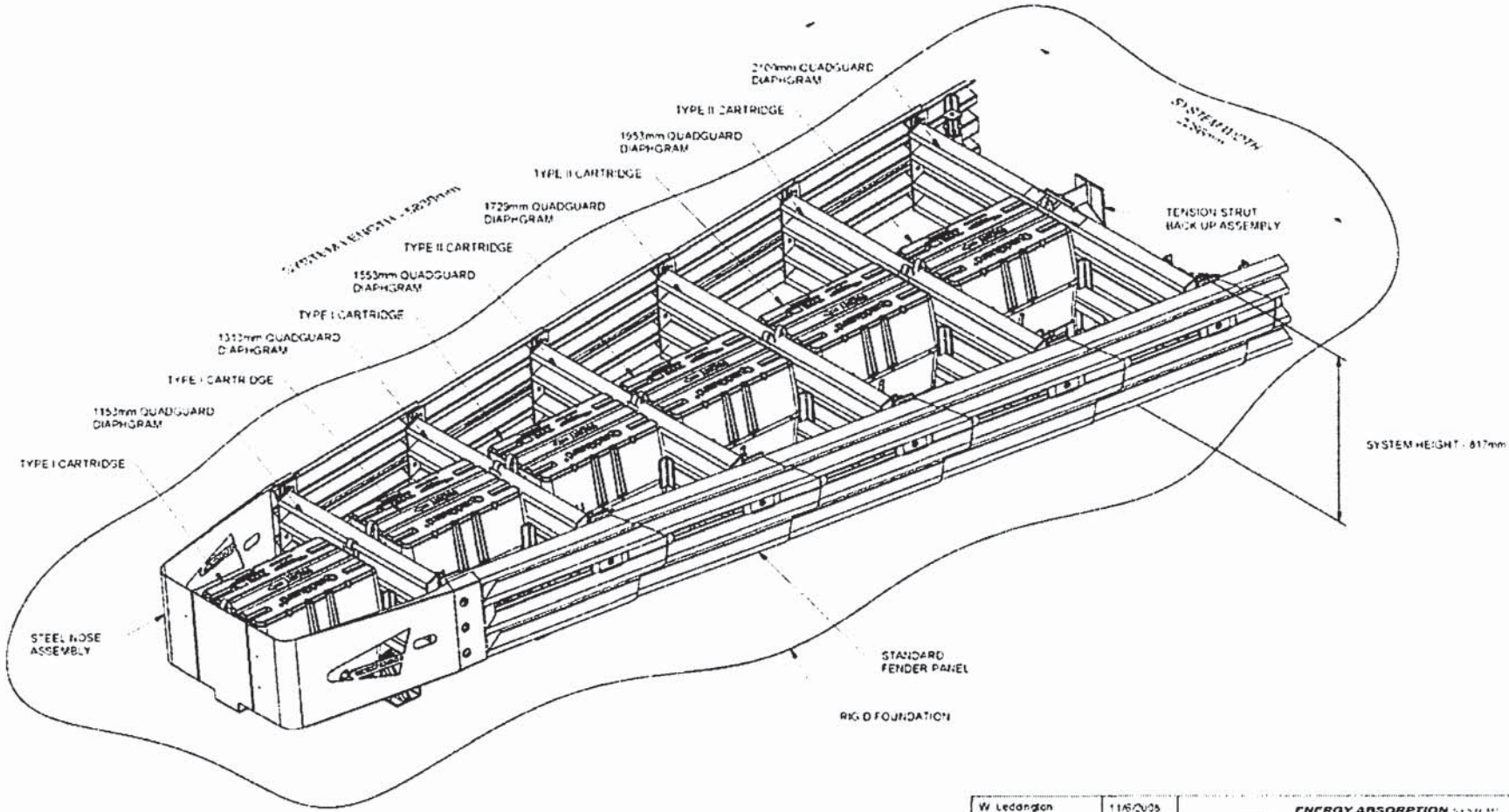

W. Ledonglon	11/6/2008	ENERGY ABSORPTION SYSTEMS, INC. ENGINEERING AND RESEARCH DEPARTMENT
M. Buehler	11/6/2008	5 BAY 90 WIDE QUADGUARD II SYSTEM
		QS90150GII 1 of 1

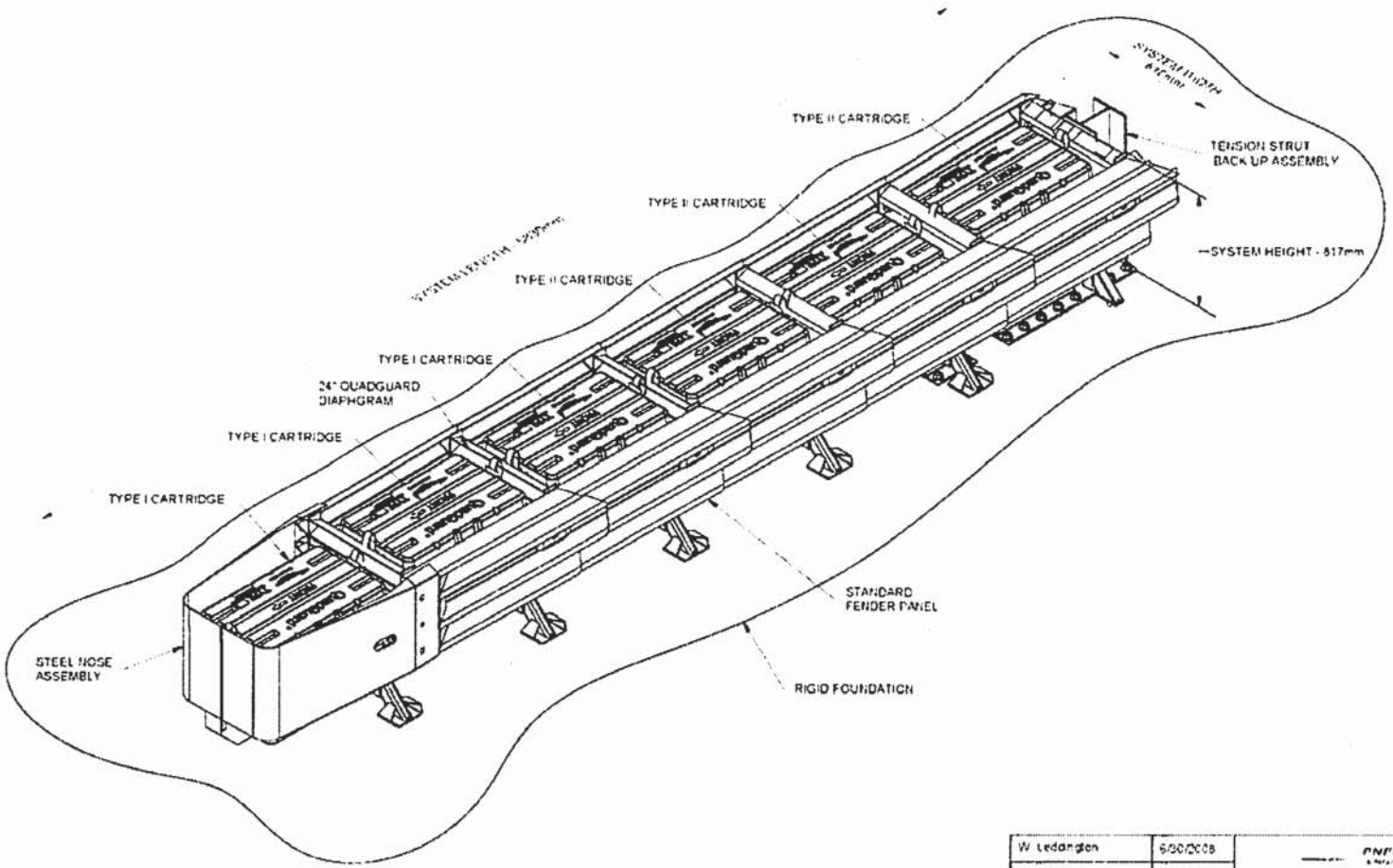

W. Ledanglen	6/30/2008	ENERGY ABSORPTION SYSTEMS, INC. ENGINEERING AND RESEARCH DEPARTMENT
M. Buehler	6/25/2008	5 BAY QUADGUARD II SYSTEM
		1 of 1

U.S. Department
of Transportation
**Federal Highway
Administration**

1200 New Jersey Avenue, SE.
Washington, DC 20590

February 13, 2009

In Reply Refer To: HSSD/CC-47D

Mr. Barry D. Stephens, P.E.
Senior Vice President of Engineering
Energy Absorption Systems, Inc.
3617 Cincinnati Avenue
Rocklin, CA 95765

Dear Mr. Stephens:

This letter is in response to your request for the Federal Highway Administration (FHWA) acceptance of a roadside safety system for use on the National Highway System (NHS).

Name of system: Mod. TRITON Concrete End Treatment ACZ-350™ System
Type of system: Non-redirecting barrier terminal
Test Level: NCHRP Report 350 TL-3
Testing conducted by: E-TECH Testing Services
Date of request: December 17, 2008

You requested that we find this system acceptable for use on the NHS under the provisions of National Cooperative Highway Research Program (NCHRP) Report 350 "Recommended Procedures for the Safety Performance Evaluation of Highway Features."

Requirements
Roadside safety systems should meet the guidelines contained in the NCHRP Report 350. The FHWA Memorandum "Identifying Acceptable Highway Safety Features" of July 25, 1997, provides further guidance on crash testing requirements of longitudinal barriers.

Description
The ACZ-350™ System is designed to perform as a narrow, non-redirecting crash cushion to shield the blunt ends of both permanent and variable length portable concrete median barrier (P/CMB), as well as crashworthy steel median barrier systems such as the Vulcan Barrier.

The ACZ-350™ System consists of a sheet metal nose, four water-filled plastic shell segments, and a steel transition pinned together to act as an end treatment. The nose is constructed of light gauge steel and connects directly to the front-most water filled segment. Each of the four water filled segments is equipped with an external, top-mounted steel stiffener which is rigidly fixed to each respective segment. The front two water filled segments do not contain an internal steel frame or external, side-mounted laminated steel straps. In contrast, the next (or last) two water

MOVING THE
AMERICAN
ECONOMY

filled Triton segments are equipped with an internal steel frame as well as external side-mounted steel laminated straps. A heavy duty non-crushable steel transition completes the system by connecting the last water filled segment to the blunt end of the downstream barrier, be it P/CMB or Vulcan barrier. The total length of the ACZ-350™ System is 9.6 meters (31'-7"). In bi-directional traffic applications, there are no rigid exposed vehicle snag points for traffic traveling from the reverse direction.

Crash Testing

You requested acceptance of the ACZ-350™ System based on the successful results of three NCHRP Report 350 crash tests. The first was Test 3-40 in which an 820C compact car impacted the unit head-on, and with the vehicle offset at w/4. The second test was Test 3-41 in which a 2000P pickup truck impacted the unit head-on. The third test was a modification of Test 3-44 in which a 2000P vehicle impacts the side of the system at 20 degrees with the centerline of the vehicle aligned with the centerline of the rigid hazard. The NCHRP Report 350 states that the intent of Test 3-44 is "...to evaluate the ability of the cushion to safely stop a large passenger car prior to a life-threatening impact with the corner of the hazard object being shielded." Aligning the centerline of the impacting vehicle at the center of the shielded concrete barrier is clearly the critical impact point for the ACZ-350 design and the impact conditions are essentially the same as Test 3-38 for redirecting crash cushions. Report 350 acknowledges that test 3-38 "would be difficult to pass for a nonredirective crash cushion", and thus does not require that the nominal limiting occupant impact velocities and ridedown accelerations be achieved. However, we recognize your newly designed ACZ-350™ System is a nonredirective crash cushion that meets the occupant impact velocities and ridedown accelerations with reported values of 10.5 m/s and 18.4 g's while the impacting vehicle showed no evidence of penetration, climbing or vaulting.

We agree with your conclusions that Tests 3-42 and 3-43 do not require retesting. There has been no significant change in system shape, system height or component weights between the original TRITON CET and the ACZ-350. Individual system sections near the front of the system are designed to articulate in the same fashion as the TRITON Concrete End Treatment. This articulation will allow the errant vehicle to pass through the system as expected for a gating system. Based on these design principals we believe the new ACZ-350™ system will behave with similar results as the TRITON Concrete End Treatment when tested to 3-42 and 3-43 criteria.

Findings

Based upon the results of the reported Tests 3-40, 3-41, and 3-44, and the discussions above, the FHWA concludes the ACZ-350™ System is acceptable for use on the NHS to act as a narrow, non-redirecting gating crash cushion for permanent and portable concrete median barrier of varying individual lengths as well as steel barrier such as Vulcan. It is acceptable for use on the NHS under the range of conditions tested, when such use is acceptable to a highway agency. The cushion should be used in locations where side impacts are unlikely, penetration behind the barrier is acceptable for angled nose impacts, and where the use of a redirective crash cushion is not feasible for reasons other than cost or convenience.

Please note the following standard provisions that apply to the FHWA letters of acceptance:

- This acceptance is limited to the crashworthiness characteristics of the systems and does not cover their structural features, nor conformity with the Manual on Uniform Traffic Control Devices.
- Any changes that may adversely influence the crashworthiness of the system will require a new acceptance letter.
- Should the FHWA discover that the qualification testing was flawed, that in-service performance reveals unacceptable safety problems, or that the system being marketed is significantly different from the version that was crash tested, we reserve the right to modify or revoke our acceptance.
- You will be expected to supply potential users with sufficient information on design and installation requirements to ensure proper performance.
- You will be expected to certify to potential users that the hardware furnished has essentially the same chemistry, mechanical properties, and geometry as that submitted for acceptance, and that it will meet the crashworthiness requirements of the FHWA and the NCHRP Report 350.
- To prevent misunderstanding by others, this letter of acceptance is designated as number CC-47D and shall not be reproduced except in full. This letter and the test documentation upon which it is based are public information. All such letters and documentation may be reviewed at our office upon request.
- The ACZ-350™ System is a patented product and considered proprietary. If proprietary systems are specified by a highway agency for use on Federal-aid projects, except exempt, non-NHS projects, (a) they must be supplied through competitive bidding with equally suitable unpatented items; (b) the highway agency must certify that they are essential for synchronization with the existing highway facilities or that no equally suitable alternative exists; or (c) they must be used for research or for a distinctive type of construction on relatively short sections of road for experimental purposes. Our regulations concerning proprietary products are contained in Title 23, Code of Federal Regulations, Section 635.411.
- This acceptance letter shall not be construed as authorization or consent by the FHWA to use, manufacture, or sell any patented system for which the applicant is not the patent holder. The acceptance letter is limited to the crashworthiness characteristics of the candidate system, and the FHWA is neither prepared nor required to become involved in issues concerning patent law. Patent issues, if any, are to be resolved by the applicant.

Sincerely yours,

David A. Nicol
Director, Office of Safety Design
Office of Safety

Enclosures

PARTS LIST			
ITEM	STOCK NO.	DESCRIPTION	QTY.
1		ACZ-350 SECTION 2	1
2		ACZ-350 TRANSITION ASSY	1
3		ACZ-350 SECTION 1	1
4		ACZ-350 NOSE ASSY	1

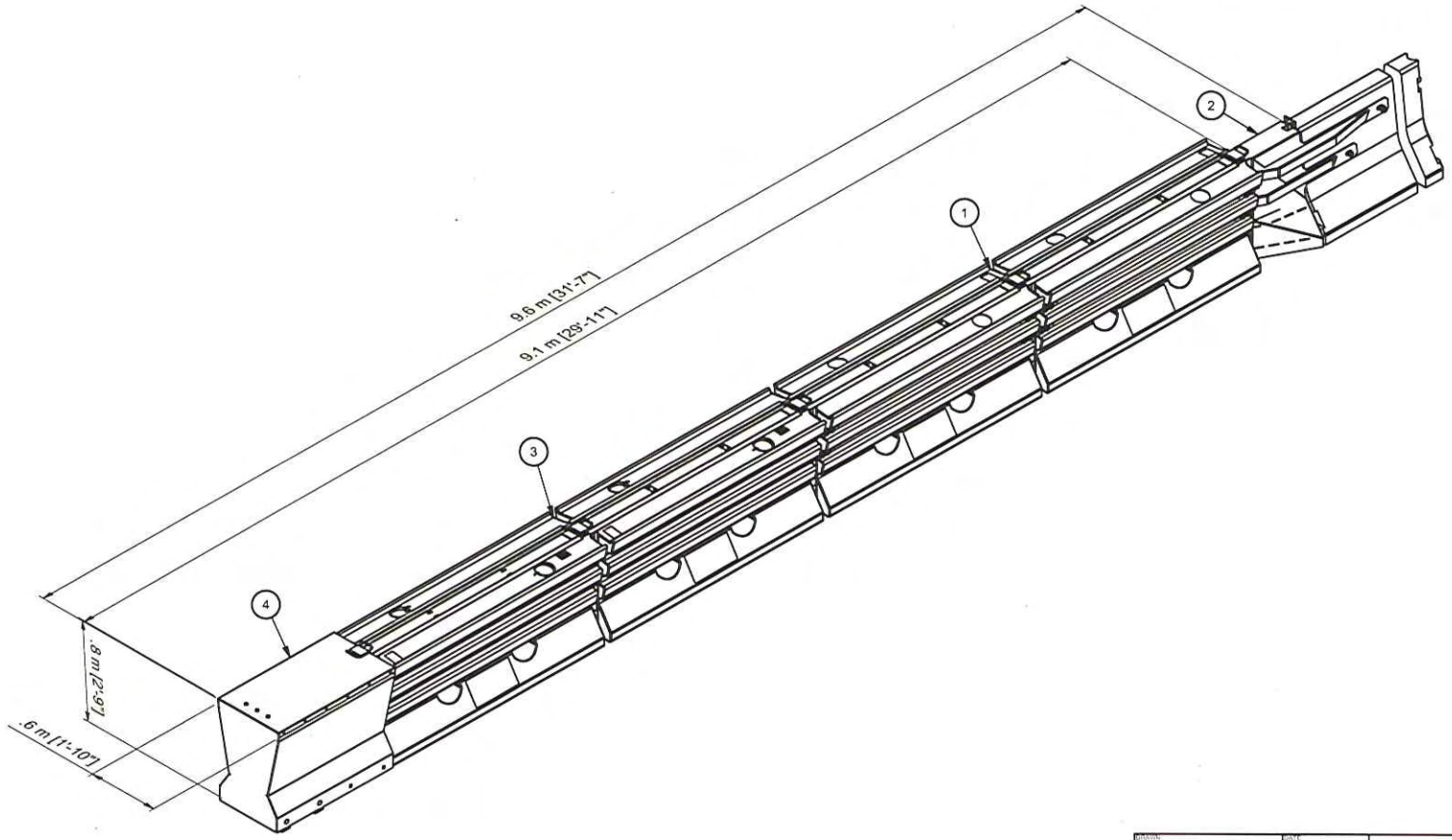

DRAWN aaron.cox	DATE 11/12/2008	ENERGY ABSORPTION SYSTEMS, INC. ENGINEERING AND RESEARCH DEPARTMENT
DESIGNED aaron.cox	DATE	ACZ-350 TL-3 CRASH CUSHION
CHECKED	DATE	
APPROVED	DATE	
Q.C.	DATE	
UNLESS OTHERWISE NOTED ALL DIMENSIONS ARE IN INCHES DIMENSIONS ACCORDING TO ASME Y14.5M-1994 UNLESS OTHERWISE SPECIFIED		DRAWING / SHEET 1 of 1 / REV

Figure 1

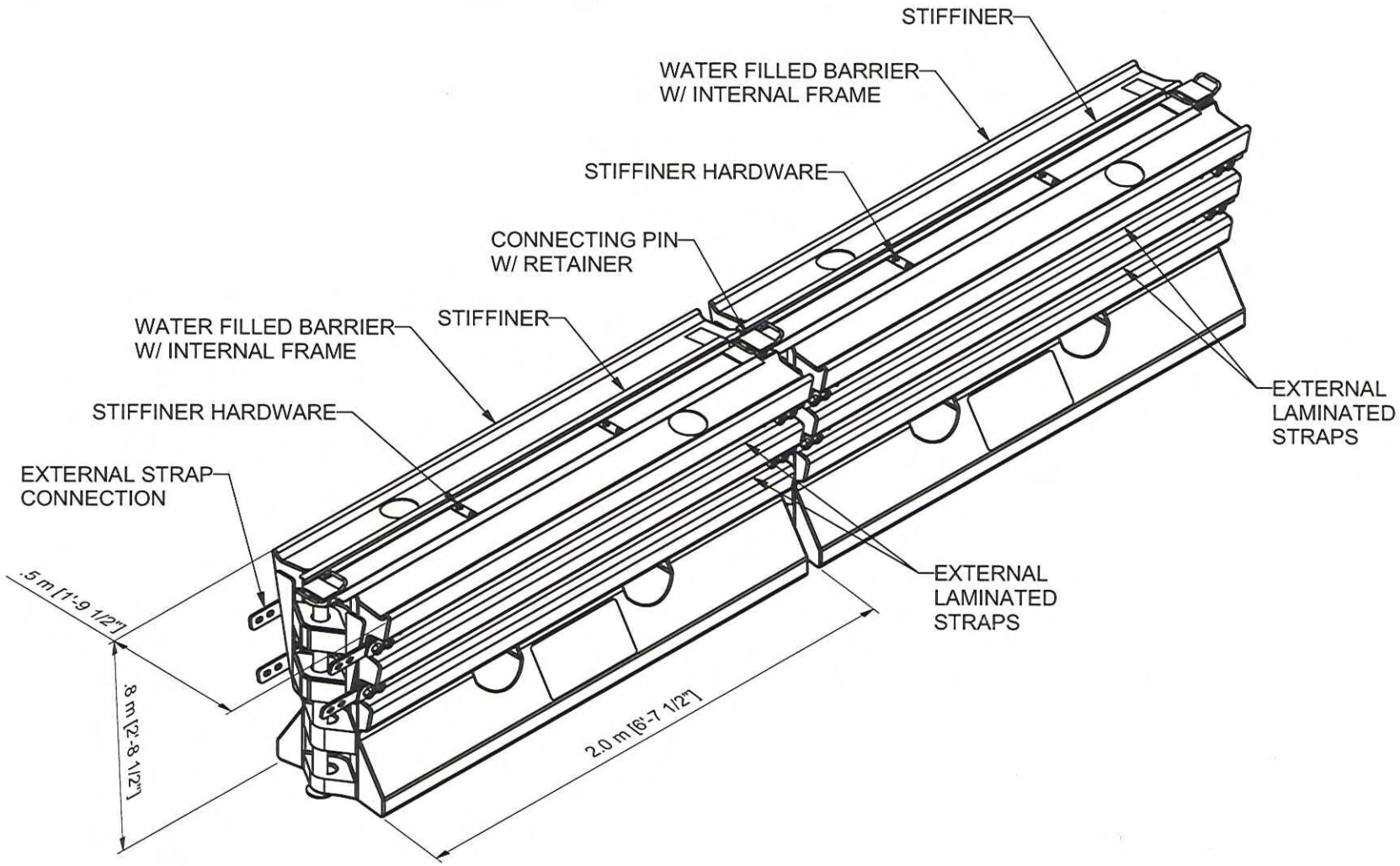

DRAWN: aaron.cox	DATE: 11/13/2008	ENERGY ABSORPTION SYSTEMS, INC. ENGINEERING AND RESEARCH DEPARTMENT
DESIGNED: aaron.cox	DATE:	
CHECKED:	DATE:	ACZ-350 SECTION 2
APPROVED:	DATE:	
Q.C.	DATE:	
UNLESS OTHERWISE NOTED, ALL DIMENSIONS ARE IN INCHES. DIMENSIONS ACCORDING TO ASME Y14.5M-1994 UNLESS OTHERWISE SPECIFIED.	DRAWING:	SHEET: 1 of 1 / REV

Figure 4

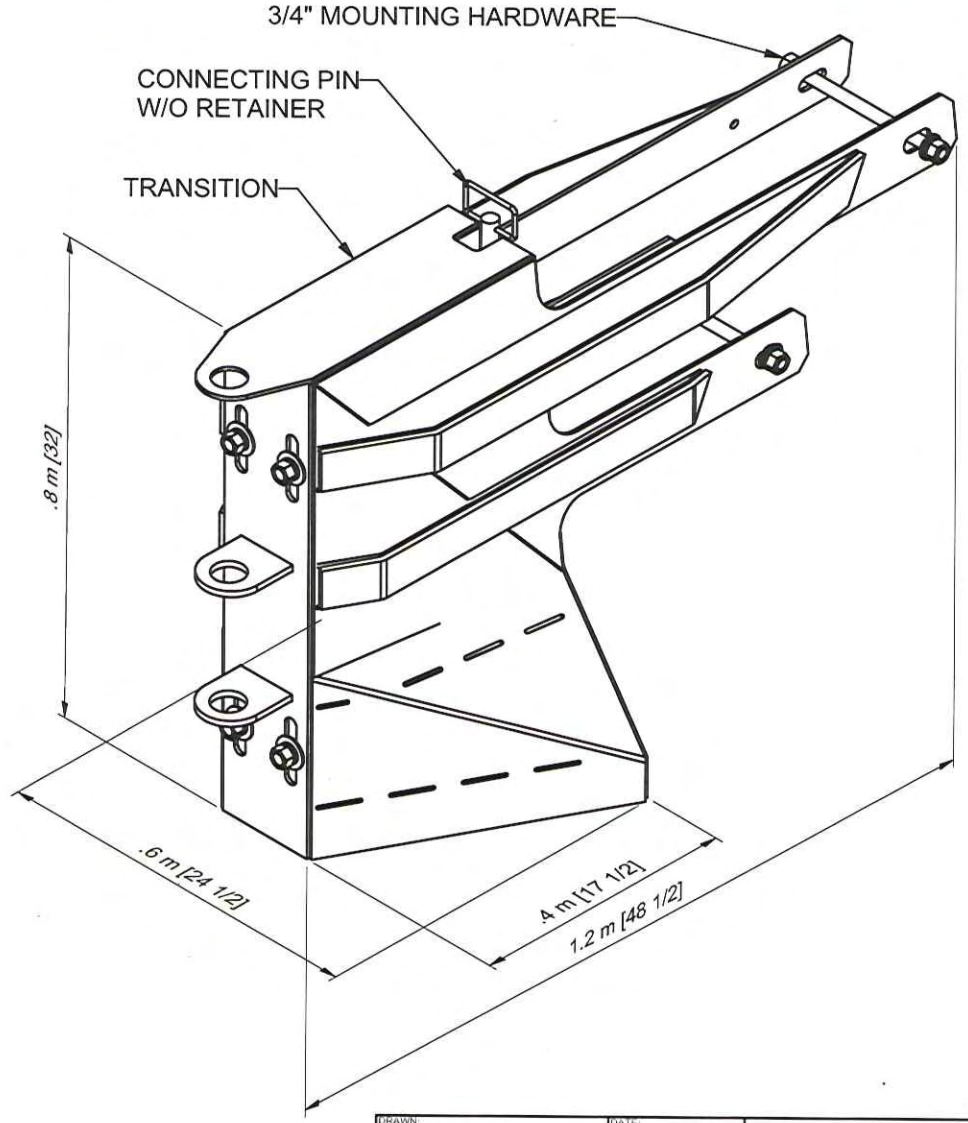

DRAWN: aaron.cox	DATE: 11/13/2008	ENERGY ABSORPTION SYSTEMS, INC. ENGINEERING AND RESEARCH DEPARTMENT
DESIGNED: aaron.cox	DATE:	
CHECKED:	DATE:	ACZ-350 TRANSITION ASSY
APPROVED:	DATE:	
Q.C.	DATE:	
UNLESS OTHERWISE NOTED, ALL DIMENSIONS ARE IN INCHES. DIMENSIONS ACCORDING TO ASME Y14.5M-1994 UNLESS OTHERWISE SPECIFIED.	DRAWING:	SHEET: 1 of 1 / REV

Figure 3

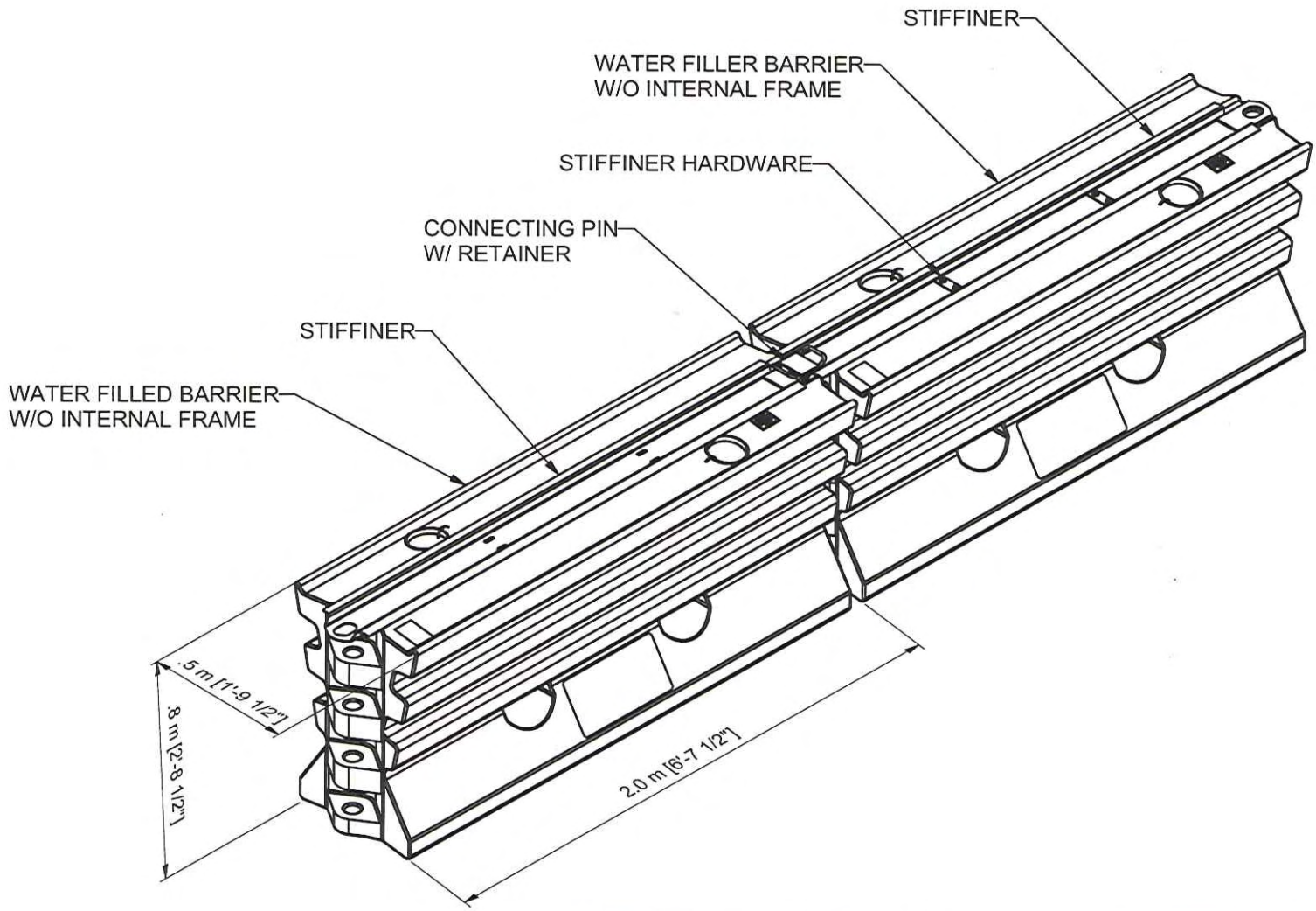

DRAWN: aaron.cox	DATE: 11/12/2008	ENERGY ABSORPTION SYSTEMS, INC. ENGINEERING AND RESEARCH DEPARTMENT
DESIGNED: aaron.cox	DATE:	
CHECKED:	DATE:	ACZ-350 SECTION 1
APPROVED:	DATE:	
Q.C.	DATE:	
UNLESS OTHERWISE NOTED, ALL DIMENSIONS ARE IN INCHES. DIMENSIONS ACCORDING TO ASME Y14.5M-1994 UNLESS OTHERWISE SPECIFIED.		DRAWING: / SHEET: 1 of 1 / REV

Figure 2

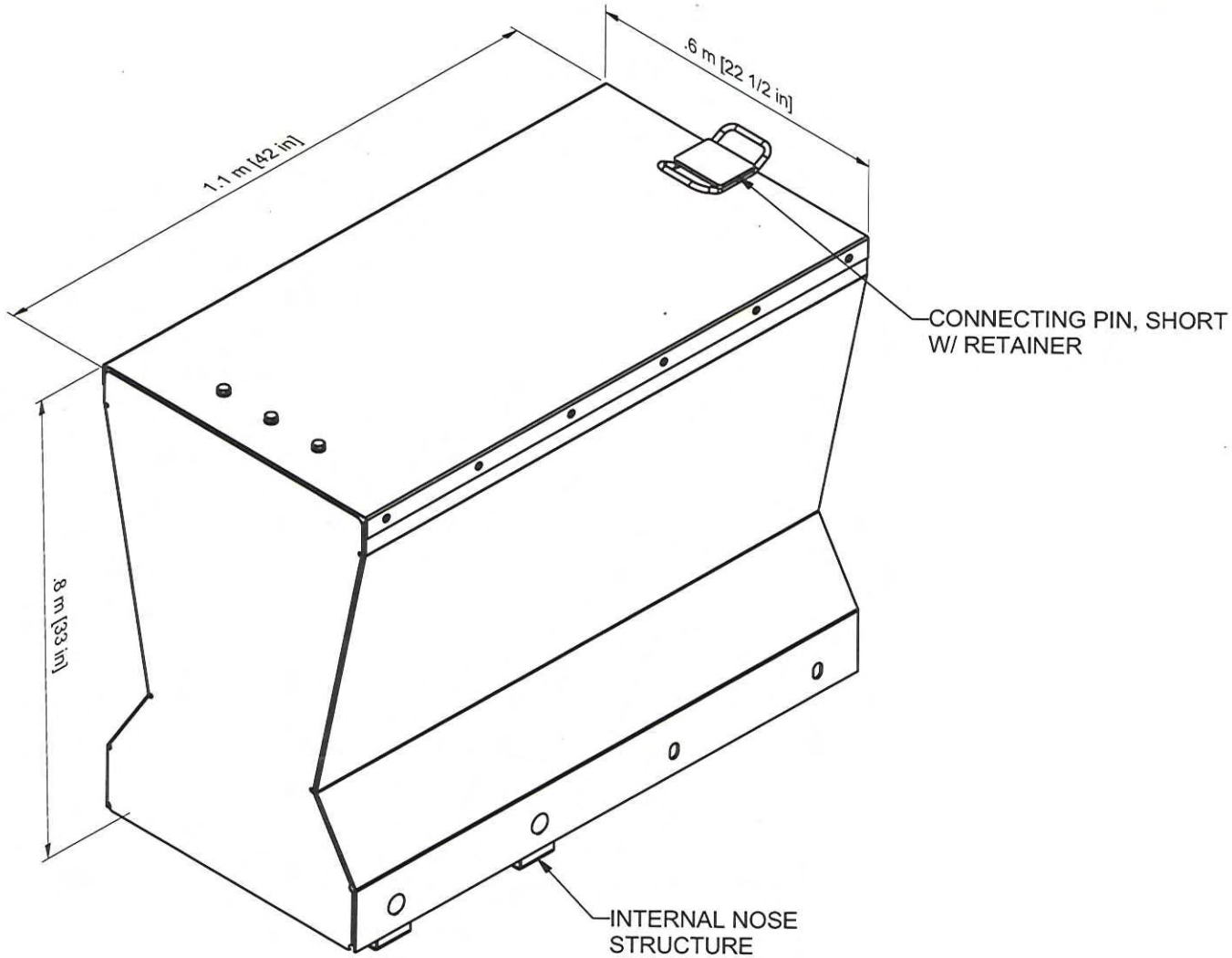

DRAWN: aaron.cox	DATE: 11/12/2008	ENERGY ABSORPTION SYSTEMS, INC. ENGINEERING AND RESEARCH DEPARTMENT
DESIGNED: aaron.cox	DATE:	
CHECKED:	DATE:	ACZ-350 NOSE ASSY
APPROVED:	DATE:	
Q.C.	DATE:	
UNLESS OTHERWISE NOTED, ALL DIMENSIONS ARE IN INCHES. DIMENSIONS ACCORDING TO ASME Y14.5M-1994 UNLESS OTHERWISE SPECIFIED.	DRAWING:	SHEET: 1 of 1 REV

Figure 5

TL-3 (100 km/h = 62.1 mph)

NCHRP 350
TEST MATRIX

TERMINALS & CRASH CUSHIONS

NONREDIRECTIVE GATING

ACZ-350 SYSTEM

= 820C

= 2000P

* F FOR TL-2 & TL-3; G FOR TL-1

PASSED

TEST 3-40
820C/100 km/h/0°
C,D,F*,H,I,(J),K,N

PASSED

TEST 3-41
2000P/100km/h/0°
C,D,F*,H,I,(J),K,N

PASSED

TEST 3-44
2000P/100km/h/20°
C,D,F*,K,N

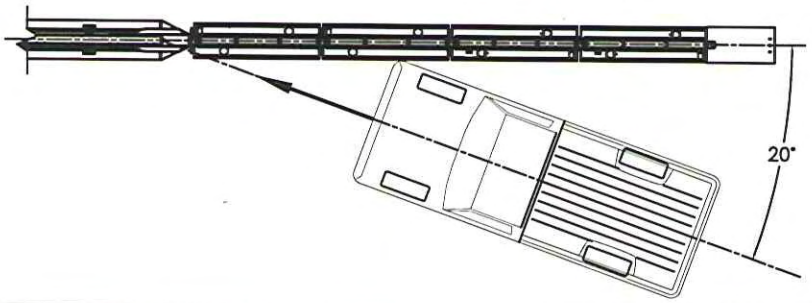

Figure 6

t = 0.000 sec | t = 0.160 sec | t = 0.320 sec | t = 0.480 sec | t = 0.640 sec | t = 0.800 sec

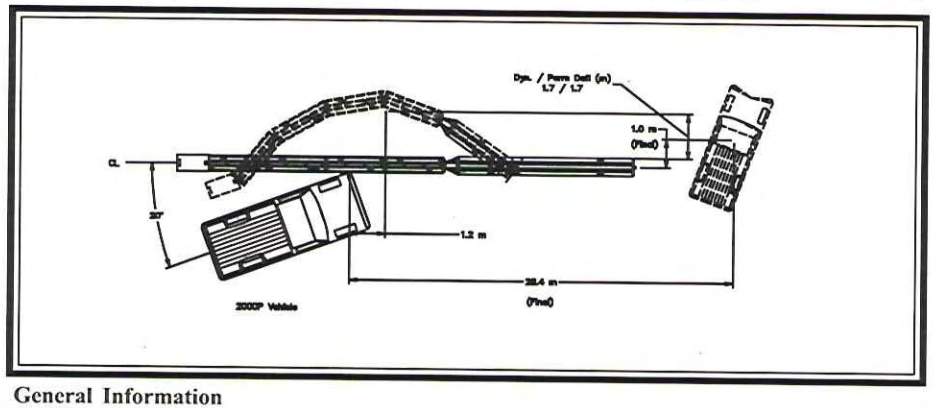

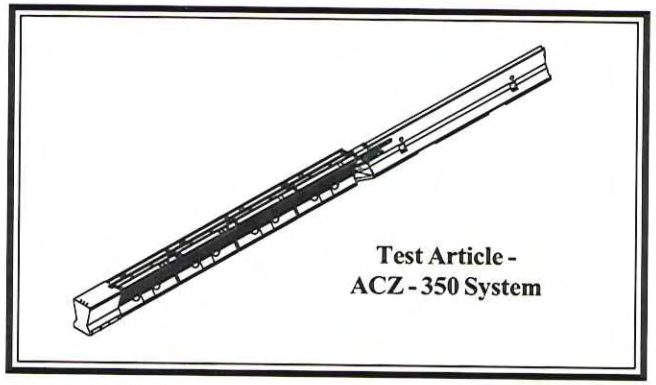

General Information	
Test Agency	E-TECH Testing Services, Inc.
Test Designation	NCHRP 350 Test 3-44 modified
Test No.	01-4317-003
Date	12/4/08
Test Article	
Type	Energy Absorption System
	ACZ - 350 System
Installation Length,	9.0 m - (4) segment total,
	pinned and freestanding
	w/ steel nose
Material and key elements	Polyethylene plastic segments
	(4 water filled), first two w/o frame and
	steel side straps, last two with, 14 ga
	hollow steel nose, transition to (3) 3 m
	freestanding PCMB with last section
	anchored
	Segment Length x Width x Height:
	(2021 mm x 533 mm x 813 mm)
Foundation Type and Condition	Portland Cement Concrete,
	clean and dry, unanchored
Test Vehicle	
Type	Production Model
Designation	2000P
Model	1988 Chevrolet C2500 Pickup
Mass (kg)	
Curb	1907
Test inertial	2000
Dummy	N/A
Gross Static	2000

Impact Conditions	
Speed (km/h)	96.4
Angle (deg)	20
Impact Severity (kJ)	717.0
Exit conditions	
Speed (km/h)	N/A
Angle (deg - veh. c.g.)	N/A
Occupant Risk Values	
Impact Velocity (m/s)	
x-direction	10.5
y-direction	6.9
Ridedown Acceleration (g's)	
x-direction	-18.4
y-direction	-12.0
European Committee for Normalization (CEN) Values	
THIV (km/h)	43.3
PHD (g's)	31.0
ASI	1.8
Post-Impact Vehicular Behavior (deg - rate gyro)	
Maximum Roll Angle	-17.5
Maximum Pitch Angle	24.9
Maximum Yaw Angle	-59.5
Test Article Deflections (m)	
Dynamic	1.7
Permanent	1.7
Vehicle Damage (Primary Impact)	
Exterior	
VDS	FL-4
CDC	11FLEW4
Interior	
VCDI	AS1020000
Maximum Deformation (mm)	195

Figure 11. Summary of Results - ACZ - 350 System Test 01-4317-003

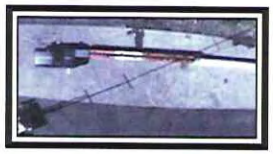
t = 0.0.0 sec

t = 0.129 sec

t = 0.258 sec

t = 0.387 sec

t = 0.516 sec

t = 0.968 sec

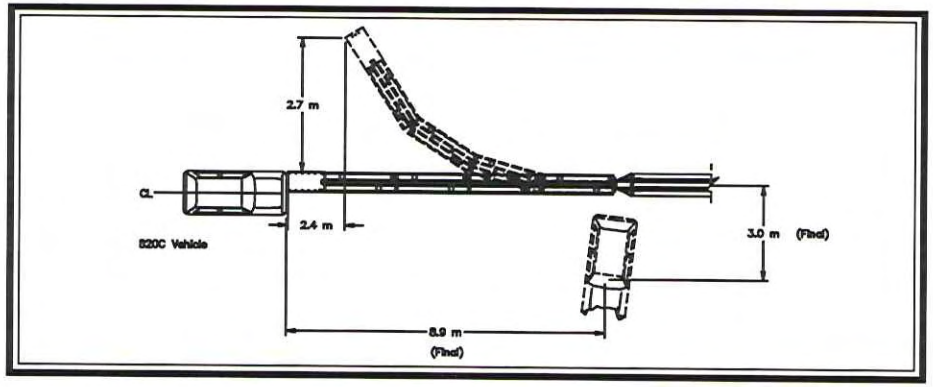

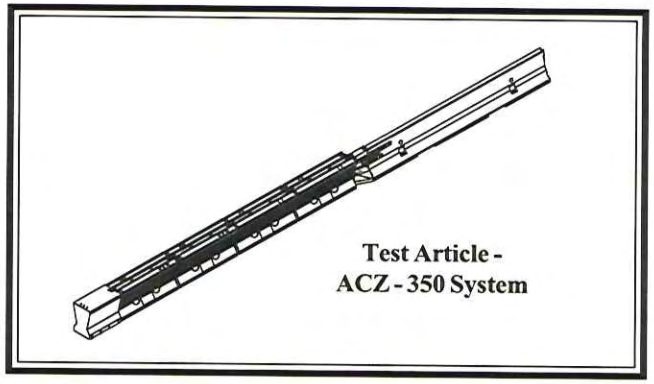

General Information	
Test Agency	E-TECH Testing Services, Inc.
Test Designation	NCHRP 350 Test 3-40
Test No.	01-4317-002
Date	11/6/08
Test Article	
Type	Energy Absorption System
	ACZ - 350 System
Installation Length,	9.0 m - (4) segment total,
	pinned and freestanding
	w/ steel nose
Material and key elements	Polyethylene plastic segments
	(4 water filled), first two w/o frame and
	steel side straps, last two with, 14 ga
	hollow steel nose, transition to (3) 3 m
	freestanding PCMB with last section
	anchored
	Segment Length x Width x Height:
	(2021 mm x 533 mm x 813 mm)
Foundation Type and Condition	Portland Cement Concrete,
	clean and dry, unanchored
Test Vehicle	
Type	Production Model
Designation	820C
Model	1993 Ford Festiva
Mass (kg)	
Curb	821
Test inertial	816
Dummy	75
Gross Static	891

Impact Conditions	
Speed (km/h)	99.0
Angle (deg)	0
Impact Severity (kJ)	308.5
Exit conditions	
Speed (km/h)	N/A
Angle (deg - veh. c.g.)	N/A
Occupant Risk Values	
Impact Velocity (m/s)	
x-direction	11.9
y-direction	-0.6
Ridedown Acceleration (g's)	
x-direction	-12.5
y-direction	-3.6
European Committee for Normalization (CEN) Values	
THIV (km/h)	44.2
PHD (g's)	12.5
ASI	1.1
Post-Impact Vehicular Behavior (deg - rate gyro)	
Maximum Roll Angle	20.1
Maximum Pitch Angle	-43.5
Maximum Yaw Angle	-244.9
Test Article Deflections (m)	
Dynamic	2.7
Permanent	2.7
Vehicle Damage (Primary Impact)	
Exterior	
VDS	FD-4
CDC	12FDEW4
Interior	
VCDI	AS0001000
Maximum Deformation (mm)	21 mm

Figure 1. Summary of Results - ACZ - 350 System Test 01-4317-002

t = 0.000 sec | t = 0.210 sec | t = 0.420 sec | t = 0.630 sec | t = 0.840 sec | t = 1.260 sec

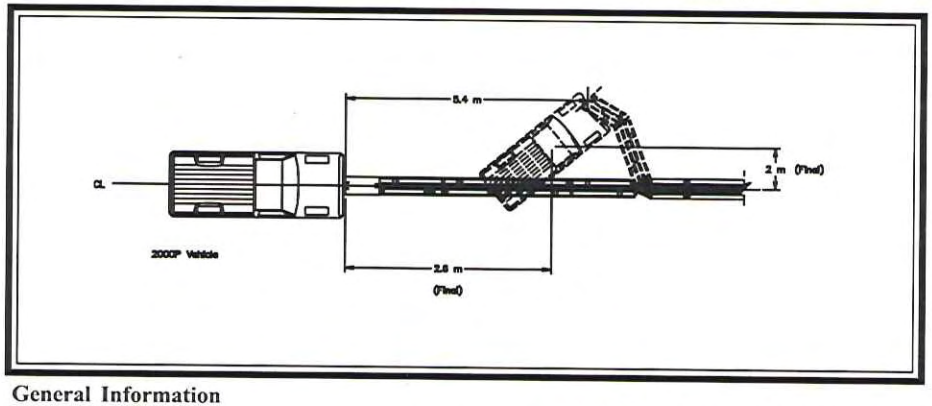

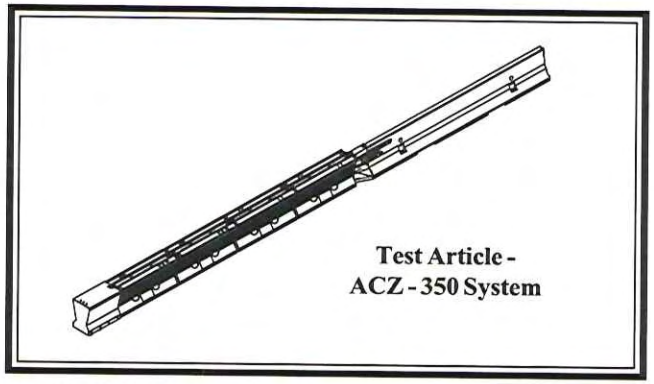

General Information	
Test Agency	E-TECH Testing Services, Inc.
Test Designation	NCHRP 350 Test 3-41
Test No.	01-4317-001
Date	10/30/08
Test Article Type	Energy Absorption System
	ACZ - 350 System
Installation Length,	9.0 m - (4) segment total,
	pinned and freestanding
	w/ steel nose
Material and key elements	Polyethylene plastic segments
	(4 water filled), first two w/o frame and
	steel side straps, last two with, 14 ga
	hollow steel nose, transition to (3) 3 m
	freestanding PCMB with last section
	anchored
	Segment Length x Width x Height:
	(2021 mm x 533 mm x 813 mm)
Foundation Type and Condition	Portland Cement Concrete,
	clean and dry, unanchored
Test Vehicle	
Type	Production Model
Designation	2000P
Model	1988 Chevrolet C2500 Pickup
Mass (kg)	
Curb	1853
Test inertial	1995
Dummy	N/A
Gross Static	1995

Impact Conditions	
Speed (km/h)	98.3
Angle (deg)	0
Impact Severity (kJ)	744.0
Exit conditions	
Speed (km/h)	N/A
Angle (deg - veh. c.g.)	N/A
Occupant Risk Values	
Impact Velocity (m/s)	
x-direction	9.9
y-direction	-0.3
Ridedown Acceleration (g's)	
x-direction	-11.1
y-direction	-5.7
European Committee for Normalization (CEN) Values	
THIV (km/h)	35.6
PHD (g's)	11.2
ASI	0.9
Post-Impact Vehicular Behavior (deg - rate gyro)	
Maximum Roll Angle	-7.6
Maximum Pitch Angle	20.0
Maximum Yaw Angle	-39.2
Test Article Deflections (m)	
Dynamic	5.4
Permanent	5.4
Vehicle Damage (Primary Impact)	
Exterior	
VDS	FD-4
CDC	12FDEW4
Interior	
VCDI	AS0000000
Maximum Deformation (mm)	14

Figure 6. Summary of Results - ACZ - 350 System Test 01-4317-001

U.S. Department of Transportation
Federal Highway Administration

1200 New Jersey Ave., SE
Washington, D.C. 20590

February 9, 2011

In Reply Refer To:
HSST/CC-114

Mr. Geoff Maus
Chief Design Engineer
TrafFix Devices, Inc.
160 Avenida La Pata
San Clemente, California 92673

Dear Mr. Maus:

This letter is in response to your request for the Federal Highway Administration (FHWA) acceptance of a roadside safety system for use on the National Highway System (NHS).

Name of system:	SLED – Sentry Longitudinal Energy Dissipater
Type of system:	Gating Crash Cushion/Impact Attenuator
Test Level:	NCHRP Report 350 Test Level 3 (TL-3)
Testing conducted by:	KARCO Engineering
Date of request:	August 31, 2010
Date initially acknowledged:	August 31, 2010

You requested that we find this system acceptable for use on the NHS under the provisions of the National Cooperative Highway Research Program (NCHRP) Report 350.

Requirements
Roadside safety devices should meet the guidelines contained in the Report 350. The FHWA memorandum "ACTION: Identifying Acceptable Highway Safety Features" of July 24, 1997, provides further guidance on crash testing requirements of longitudinal barriers.

Decision
The following device was found acceptable, with details provided below:

- TL-3 SLED – Sentry Longitudinal Energy Dissipater

Description
The SLED End Treatment is a high-density polyethylene (HDPE) water filled crash cushion designed to shield the end of permanent and portable barrier shapes including concrete, steel, and plastic. The SLED End Treatment modules are designed for uni- and bi-directional traffic applications where a gating device is acceptable to the road authority.

FHWA:HSST:NArtimovich:ms:x61331:2/9/11
File: s://directory folder/HSST/Artimovich CC114_Sled_TL3.dotx
cc: HSST (NArtimovich; JDewar)

The SLED End Treatment modules are designated by their yellow color, each module has overall dimensions of approximately 6.3 ft (1.93 m) x 1.875 ft (.57 m) x 3.8 ft (1.16 m) and weighs approximately 160 lbs empty and 2000 lbs filled. Each module has eleven connecting lugs, five on one end and six on the opposite end. The four upper lugs on every module contain an independent corrosion resistant wire rope. A 1.125 inch (28.6 mm) diameter steel t-pin drops through the 1.5 inch (38 mm) diameter holes in the lugs linking the sections together.
At the front of the end treatment, pinned directly to module #1 is the Containment Impact Sled (CIS). The CIS is made of all steel construction with a flat bottom, a curved sheet metal nose, and support frames made of structural rectangular steel tubes. The CIS is designed to attach to either the five or six knuckle ends of module #1. The CIS has a curved impact face to fit over the curved knuckle contour of module #1. The vertical t-pin connects the CIS to module #1 through the series of vertical knuckles and the internal molded-in cables. Module #1 is designed to be an empty module. To prevent module #1 from being filled, six holes are designed into the lower edge of the side walls. Modules 2, 3, and 4 are filled entirely and weigh approximately 2000lbs (907 kg) each when filled.

When the Sentry SLED End Treatment is used to shield an end of an array of Sentry Water Cable Barriers, one CIS, and one module #1 is attached. For TL-3 applications, the SLED End Treatment is attached to a minimum of ten (unlimited maximum number) Sentry Water Cable Barriers.

For shielding all permanent and portable barriers, an adjustable steel transition has been designed. This transition securely attaches the rear of the Sentry SLED End Treatment to the shielded object. The transition is designed to accommodate assorted safety barrier shapes and sizes by using hinged outboard transition panels. The transition panels are made of 0.188 inch (4.8 mm) thick steel, which when attached to the barrier, conforms to the contour of the barrier. The combination of hinging, and contouring, allow the panels allows the SLED End Treatment to be attached to narrow and wide and profile shapes with either converging, or diverging angles, up to 10 degrees. For testing, the contoured hinged panels were anchored to the barriers using a minimum of eight 1 inch diameter anchor bolts with expansion sleeves, minimum four per side.

Crash Testing

A non-redirective gating crash cushion requires the following tests be conducted:
3-40, 3-41, 3-42, 3-43, and 3-44. The following full-scale tests were conducted on the SLED:

Tests for Shielding Sentry Water Cable Barrier

NCHRP-350 Test Number	Test Vehicle Weight (kg)	Impact Speed (kph)	Impact Condition	Occ. Imp Velocity (m/s)	Ridedown Acceleration (G)
3-40	820	99.6	¼ offset	10.6	15.7
3-41	2000	102	0°	11.1	11.0
3-43	2000	102.4	15°	8.0	4.8

Tests for Shielding F-Shape CMB Unpinned and Permanently Anchored

NCHRP-350 Test Number	Test Vehicle Weight (kg)	Impact Speed (kph)	Impact Angle Degree	Occ. Imp Velocity (m/s)	Ridedown Acceleration (G)
3-41 Free Standing	2000	101.5	0°	9.2	9.6
3-41 Anchored	2000	99.1	0°	9.7	12.3
3-44 Anchored	2000	103.1	20°	9.8	10.6
3-44M Anchored	2000	96.2	15°	8.4	15.6

You requested waivers of the following tests:

Test 3-40 -Shielding permanent and portable concrete barriers.
Test 3-42 -Shielding Sentry Water Cable Barrier and permanent and portable concrete barriers.
Test 3-43- Shielding permanent and portable concrete barriers.
Test 3-44 -Shielding Sentry Water Cable Barrier.

You detailed your reasoning behind the waiver requests as follows:

Test 3-40 Shielding Permanent and Portable Concrete Barriers
The Sentry SLED End Treatment shielding Sentry Water Cable Barrier recorded an OIV of 10.6 m/s and a ridedown acceleration of 15.7 g's. These values are below accepted levels, and were recorded prior to movement of the fourth Sentry module. You expect little or no change in performance with the SLED End Treatment attached to a fixed object.

Tests 3-42 Shielding Sentry Water Cable Barrier and Permanent and Portable Concrete Barriers
You expect the impacting car to push the sled and first empty module aside, allowing the end treatment to act as a gating device, similar to the 3-43 test performed. Just as the 3-43 test had lower measured values than the 3-41 test, we would expect the 3-42 test would have lower values than the 3-40 test.

Test 3-43 Shielding Permanent and Portable Concrete Barriers
As tested, shielding the Sentry Water Cable Barrier, the trajectory of the impacting vehicle carried past the angled barrier and remained upright during and after the collision with only moderate, roll pitch, and yaw. It would be expected that the impacting vehicle would have similar test results regardless of the type of barrier that is being shielded.

Test 3-44 Shielding Sentry Water Cable Barriers
The SLED End Treatment was tested twice in the most severe condition, attached to rigid anchored F-shape safety concrete barrier, in test 3-44 and 3-44M parameters. In these tests, all specified evaluation criteria (C,D,F,K, and N) were met. In addition, evaluation criteria H and I (OIV and Ridedown) were well below the maximum accepted values. Based on the 3-11 performance of Sentry Water Cable Barriers, and the products ability to deflect, you expect equal or better performance for evaluation criteria C,D,F,K and N with the SLED End Treatment attached to Sentry Water Cable Barriers.

All physical crash test summaries are included as enclosures to this correspondence.

Findings
Because the SLED is a non-redirecting, gating cash cushion, it should be applied to hazards that are not likely to be impacted at an angle on the side at any significant velocity. We note also that proper antifreezing agents must be used as filler when the SLED and Sentry products are used in areas where low temperatures can be anticipated. All users of this device should be made aware of the factors that contribute to its proper performance.

Therefore, the system described in the requests above and detailed in the enclosed drawings is acceptable for use on the NHS under the range of conditions tested, when such use is acceptable to a highway agency.

Please note the following standard provisions that apply to FHWA letters of acceptance:

- This acceptance is limited to the crashworthiness characteristics of the systems and does not cover their structural features, nor conformity with the Manual on Uniform Traffic Control Devices.
- Any changes that may adversely influence the crashworthiness of the system will require a new acceptance letter.
- Should the FHWA discover that the qualification testing was flawed, that in-service performance reveals unacceptable safety problems, or that the system being marketed is significantly different from the version that was crash tested, we reserve the right to modify or revoke our acceptance.
- You will be expected to supply potential users with sufficient information on design and installation requirements to ensure proper performance.
- You will be expected to certify to potential users that the hardware furnished has essentially the same chemistry, mechanical properties, and geometry as that submitted for acceptance, and that it will meet the crashworthiness requirements of the FHWA and NCHRP Report 350.
- To prevent misunderstanding by others, this letter of acceptance is designated as number CC-114 and shall not be reproduced except in full. This letter and the test documentation upon which it is based are public information. All such letters and documentation may be reviewed at our office upon request.
- The Sentry and SLED are patented products and considered proprietary. If proprietary devices are specified by a highway agency for use on Federal-aid projects, except exempt, non-NHS projects, (a) they must be supplied through competitive bidding with equally suitable unpatented items; (b) the highway agency must certify that they are essential for synchronization with the existing highway facilities or that no equally suitable alternative exists; or (c) they must be used for research or for a distinctive type of construction on relatively short sections of road for experimental purposes. Our regulations concerning proprietary products are contained in Title 23, Code of Federal Regulations, Section 635.411.
- This acceptance letter shall not be construed as authorization or consent by the FHWA to use, manufacture, or sell any patented system for which the applicant is not the patent holder.

The acceptance letter is limited to the crashworthiness characteristics of the candidate system, and the FHWA is neither prepared nor required to become involved in issues concerning patent law. Patent issues, if any, are to be resolved by the applicant.

Sincerely,

Michael S. Griffith
Director, Office of Safety Technologies
Office of Safety

Enclosures

U.S. Department of Transportation
Federal Highway Administration

1200 New Jersey Ave., SE
Washington, D.C. 20590

February 9, 2011

In Reply Refer To:
HSST/CC-114

Mr. Geoff Maus
Chief Design Engineer
TrafFix Devices, Inc.
160 Avenida La Pata
San Clemente, California 92673

Dear Mr. Maus:

This letter is in response to your request for the Federal Highway Administration (FHWA) acceptance of a roadside safety system for use on the National Highway System (NHS).

Name of system:	SLED – Sentry Longitudinal Energy Dissipater
Type of system:	Gating Crash Cushion/Impact Attenuator
Test Level:	NCHRP Report 350 Test Level 3 (TL-3)
Testing conducted by:	KARCO Engineering
Date of request:	August 31, 2010
Date initially acknowledged:	August 31, 2010

You requested that we find this system acceptable for use on the NHS under the provisions of the National Cooperative Highway Research Program (NCHRP) Report 350.

Requirements
Roadside safety devices should meet the guidelines contained in the Report 350. The FHWA memorandum "ACTION: Identifying Acceptable Highway Safety Features" of July 24, 1997, provides further guidance on crash testing requirements of longitudinal barriers.

Decision
The following device was found acceptable, with details provided below:

- TL-3 SLED – Sentry Longitudinal Energy Dissipater

Description
The SLED End Treatment is a high-density polyethylene (HDPE) water filled crash cushion designed to shield the end of permanent and portable barrier shapes including concrete, steel, and plastic. The SLED End Treatment modules are designed for uni- and bi-directional traffic applications where a gating device is acceptable to the road authority.

The SLED End Treatment modules are designated by their yellow color, each module has overall dimensions of approximately 6.3 ft (1.93 m) x 1.875 ft (.57 m) x 3.8 ft (1.16 m) and weighs approximately 160 lbs empty and 2000 lbs filled. Each module has eleven connecting lugs, five on one end and six on the opposite end. The four upper lugs on every module contain an independent corrosion resistant wire rope. A 1.125 inch (28.6 mm) diameter steel t-pin drops through the 1.5 inch (38 mm) diameter holes in the lugs linking the sections together.
At the front of the end treatment, pinned directly to module #1 is the Containment Impact Sled (CIS). The CIS is made of all steel construction with a flat bottom, a curved sheet metal nose, and support frames made of structural rectangular steel tubes. The CIS is designed to attach to either the five or six knuckle ends of module #1. The CIS has a curved impact face to fit over the curved knuckle contour of module #1. The vertical t-pin connects the CIS to module #1 through the series of vertical knuckles and the internal molded-in cables. Module #1 is designed to be an empty module. To prevent module #1 from being filled, six holes are designed into the lower edge of the side walls. Modules 2, 3, and 4 are filled entirely and weigh approximately 2000lbs (907 kg) each when filled.

When the Sentry SLED End Treatment is used to shield an end of an array of Sentry Water Cable Barriers, one CIS, and one module #1 is attached. For TL-3 applications, the SLED End Treatment is attached to a minimum of ten (unlimited maximum number) Sentry Water Cable Barriers.

For shielding all permanent and portable barriers, an adjustable steel transition has been designed. This transition securely attaches the rear of the Sentry SLED End Treatment to the shielded object. The transition is designed to accommodate assorted safety barrier shapes and sizes by using hinged outboard transition panels. The transition panels are made of 0.188 inch (4.8 mm) thick steel, which when attached to the barrier, conforms to the contour of the barrier. The combination of hinging, and contouring, allow the panels allows the SLED End Treatment to be attached to narrow and wide and profile shapes with either converging, or diverging angles, up to 10 degrees. For testing, the contoured hinged panels were anchored to the barriers using a minimum of eight 1 inch diameter anchor bolts with expansion sleeves, minimum four per side.

Crash Testing

A non-redirective gating crash cushion requires the following tests be conducted:
3-40, 3-41, 3-42, 3-43, and 3-44. The following full-scale tests were conducted on the SLED:

Tests for Shielding Sentry Water Cable Barrier

NCHRP-350 Test Number	Test Vehicle Weight (kg)	Impact Speed (kph)	Impact Condition	Occ. Imp Velocity (m/s)	Ridedown Acceleration (G)
3-40	820	99.6	¼ offset	10.6	15.7
3-41	2000	102	0°	11.1	11.0
3-43	2000	102.4	15°	8.0	4.8

Tests for Shielding F-Shape CMB Unpinned and Permanently Anchored

NCHRP-350 Test Number	Test Vehicle Weight (kg)	Impact Speed (kph)	Impact Angle Degree	Occ. Imp Velocity (m/s)	Ridedown Acceleration (G)
3-41 Free Standing	2000	101.5	0°	9.2	9.6
3-41 Anchored	2000	99.1	0°	9.7	12.3
3-44 Anchored	2000	103.1	20°	9.8	10.6
3-44M Anchored	2000	96.2	15°	8.4	15.6

You requested waivers of the following tests:

Test 3-40 -Shielding permanent and portable concrete barriers.
Test 3-42 -Shielding Sentry Water Cable Barrier and permanent and portable concrete barriers.
Test 3-43- Shielding permanent and portable concrete barriers.
Test 3-44 -Shielding Sentry Water Cable Barrier.

You detailed your reasoning behind the waiver requests as follows:

Test 3-40 Shielding Permanent and Portable Concrete Barriers
The Sentry SLED End Treatment shielding Sentry Water Cable Barrier recorded an OIV of 10.6 m/s and a ridedown acceleration of 15.7 g's. These values are below accepted levels, and were recorded prior to movement of the fourth Sentry module. You expect little or no change in performance with the SLED End Treatment attached to a fixed object.

Tests 3-42 Shielding Sentry Water Cable Barrier and Permanent and Portable Concrete Barriers
You expect the impacting car to push the sled and first empty module aside, allowing the end treatment to act as a gating device, similar to the 3-43 test performed. Just as the 3-43 test had lower measured values than the 3-41 test, we would expect the 3-42 test would have lower values than the 3-40 test.

Test 3-43 Shielding Permanent and Portable Concrete Barriers
As tested, shielding the Sentry Water Cable Barrier, the trajectory of the impacting vehicle carried past the angled barrier and remained upright during and after the collision with only moderate, roll pitch, and yaw. It would be expected that the impacting vehicle would have similar test results regardless of the type of barrier that is being shielded.

Test 3-44 Shielding Sentry Water Cable Barriers
The SLED End Treatment was tested twice in the most severe condition, attached to rigid anchored F-shape safety concrete barrier, in test 3-44 and 3-44M parameters. In these tests, all specified evaluation criteria (C,D,F,K, and N) were met. In addition, evaluation criteria H and I (OIV and Ridedown) were well below the maximum accepted values. Based on the 3-11 performance of Sentry Water Cable Barriers, and the products ability to deflect, you expect equal or better performance for evaluation criteria C,D,F,K and N with the SLED End Treatment attached to Sentry Water Cable Barriers.

All physical crash test summaries are included as enclosures to this correspondence.

Findings
Because the SLED is a non-redirecting, gating cash cushion, it should be applied to hazards that are not likely to be impacted at an angle on the side at any significant velocity. We note also that proper antifreezing agents must be used as filler when the SLED and Sentry products are used in areas where low temperatures can be anticipated. All users of this device should be made aware of the factors that contribute to its proper performance.

Therefore, the system described in the requests above and detailed in the enclosed drawings is acceptable for use on the NHS under the range of conditions tested, when such use is acceptable to a highway agency.

Please note the following standard provisions that apply to FHWA letters of acceptance:

- This acceptance is limited to the crashworthiness characteristics of the systems and does not cover their structural features, nor conformity with the Manual on Uniform Traffic Control Devices.
- Any changes that may adversely influence the crashworthiness of the system will require a new acceptance letter.
- Should the FHWA discover that the qualification testing was flawed, that in-service performance reveals unacceptable safety problems, or that the system being marketed is significantly different from the version that was crash tested, we reserve the right to modify or revoke our acceptance.
- You will be expected to supply potential users with sufficient information on design and installation requirements to ensure proper performance.
- You will be expected to certify to potential users that the hardware furnished has essentially the same chemistry, mechanical properties, and geometry as that submitted for acceptance, and that it will meet the crashworthiness requirements of the FHWA and NCHRP Report 350.
- To prevent misunderstanding by others, this letter of acceptance is designated as number CC-114 and shall not be reproduced except in full. This letter and the test documentation upon which it is based are public information. All such letters and documentation may be reviewed at our office upon request.
- The Sentry and SLED are patented products and considered proprietary. If proprietary devices are specified by a highway agency for use on Federal-aid projects, except exempt, non-NHS projects, (a) they must be supplied through competitive bidding with equally suitable unpatented items; (b) the highway agency must certify that they are essential for synchronization with the existing highway facilities or that no equally suitable alternative exists; or (c) they must be used for research or for a distinctive type of construction on relatively short sections of road for experimental purposes. Our regulations concerning proprietary products are contained in Title 23, Code of Federal Regulations, Section 635.411.
- This acceptance letter shall not be construed as authorization or consent by the FHWA to use, manufacture, or sell any patented system for which the applicant is not the patent holder.

The acceptance letter is limited to the crashworthiness characteristics of the candidate system, and the FHWA is neither prepared nor required to become involved in issues concerning patent law. Patent issues, if any, are to be resolved by the applicant.

Sincerely,

Michael S. Griffith
Director, Office of Safety Technologies
Office of Safety

Enclosures

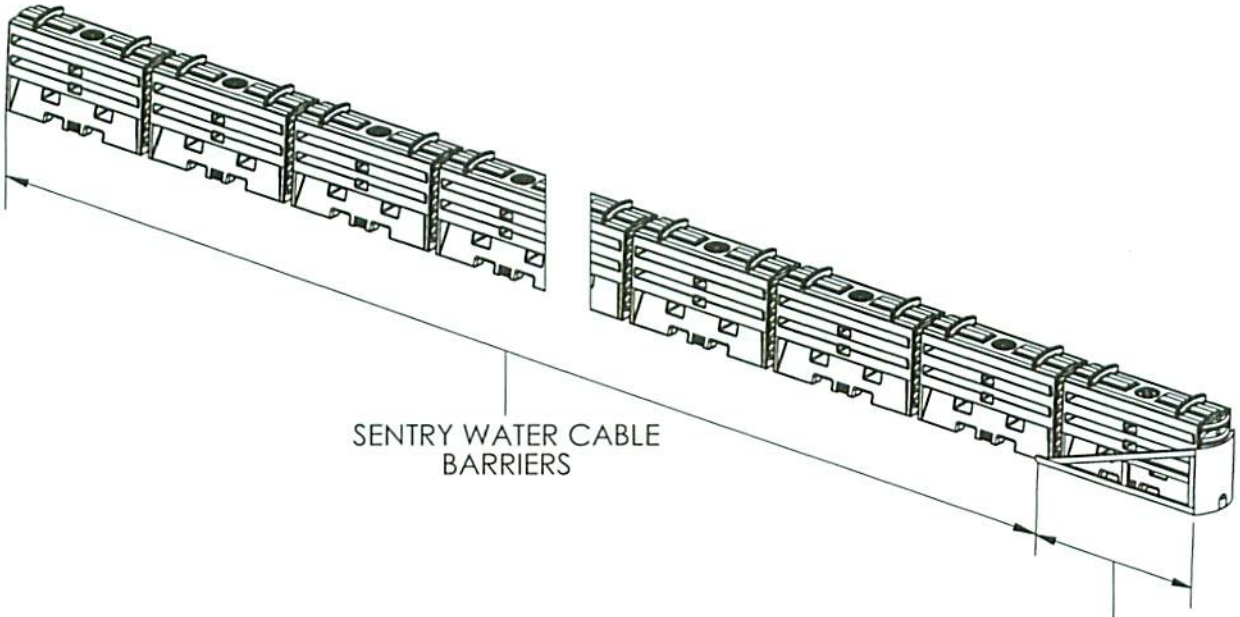

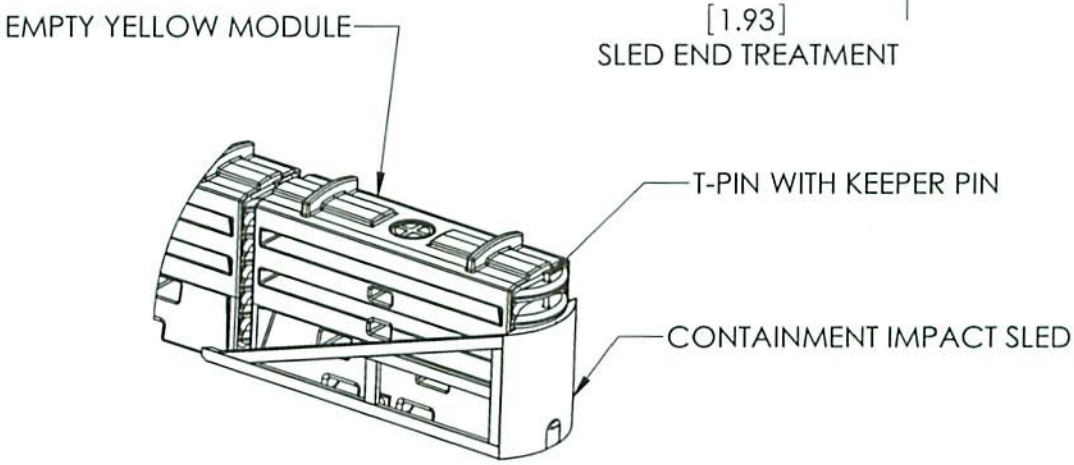

SLED END TREATMENT

TrafFix Devices Inc.

SER##

SHEET NO.	DATE:
1 OF 2	08/27/2010

INTENDED USE

The Sentry Longitudinal Energy Dissipater (SLED) End Treatment is a narrow water filled non-redirective, gating crash cushion designed to shield the Sentry Water Cable Barrier. Like the Sentry Water Cable Barrier the SLED End Treatment does not require foundation anchor bolts to be attached to road surface. The complete end treatment can be installed on firm soil, asphalt, and concrete.

The SLED End Treatment meets NCHRP-350 TL-3, TL-2, and TL-1 crashworthy test criteria as a non-redirective crash cushion. The complete end treatment consists of one yellow empty module and a Containment Impact Sled (CIS).

SLED End Treatment
Length: 75-3/4 in (1.93 m)
Height: 42-11/16 in (1.09 m)
Width: 22-1/2 in (0.57 m)

The SLED End Treatment has been fully tested to the recommended procedures of Report NCHRP-350.

ACCEPTANCE

FHWA Acceptance Letters:

CONTACT INFORMATION

TrafFix Devices, Inc.
Corporate Headquarters
160 Avenida La Pata
San Clemente, CA 92673
www.traffixdevices.com

Phone: +1(949)-361-5663
Fax: +1(949)-361-9205
Email: info@traffixdevices.com

SLED END TREATMENT

SER##	
SHEET NO.	DATE:
2 OF 2	08/27/2010

TrafFix Devices Inc.

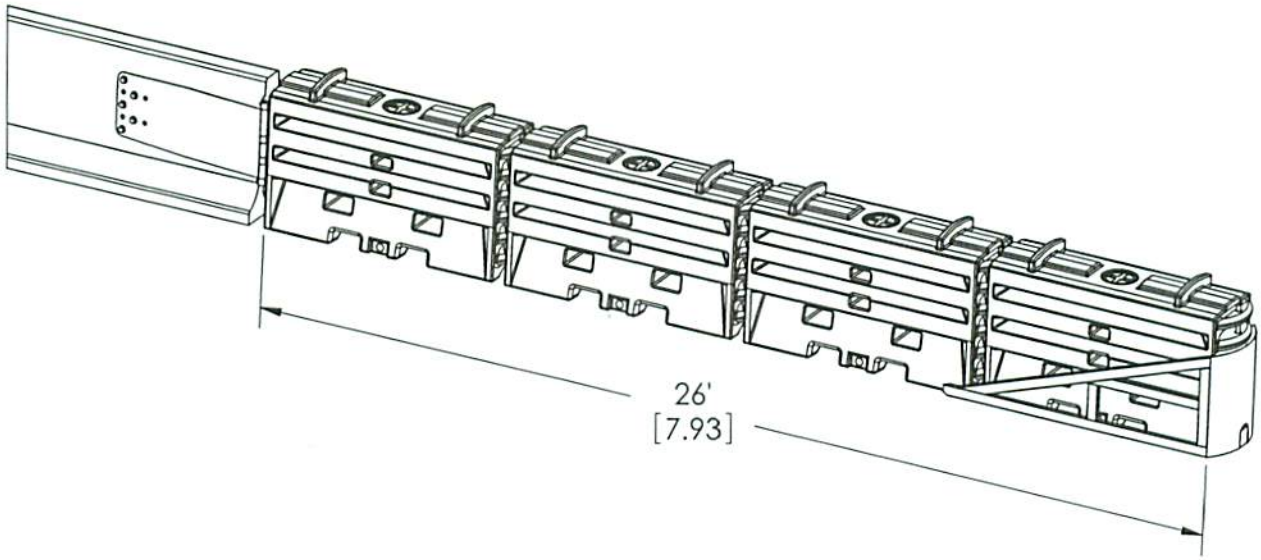

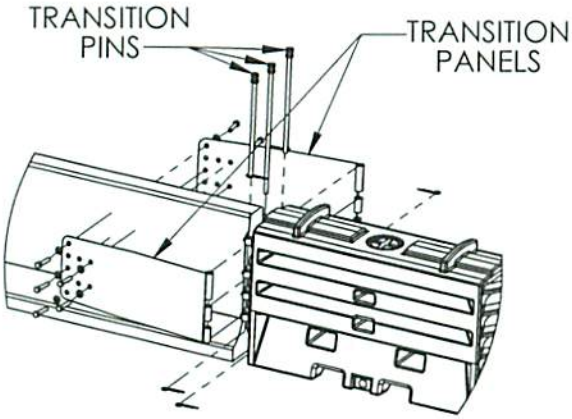

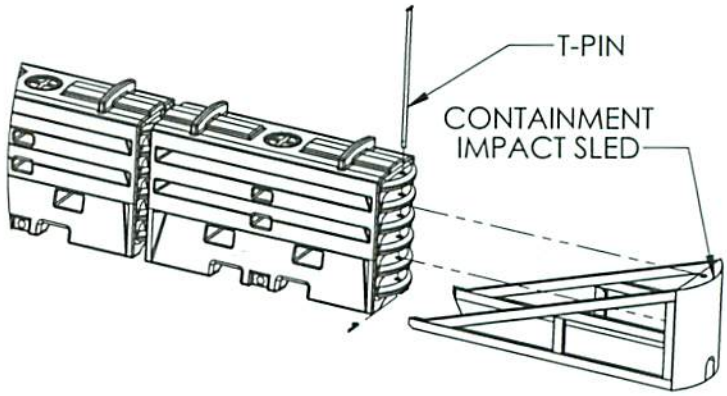

SLED END TREATMENT

TrafFix Devices Inc.

SER##

SHEET NO.	DATE:
1 OF 2	08/27/2010

INTENDED USE

The Sentry Longitudinal Energy Dissipater (SLED) End Treatment is a narrow water-filled non-redirective, gating crash cushion designed to shield the end of all permanent and portable barrier shapes including concrete, steel, and plastic. The SLED End Treatment does not require foundation anchor bolts to be attached to the road surface. The complete crash cushion can be installed on firm soil, asphalt, and concrete.

The SLED End Treatment meets NCHRP-350 TL-3, TL-2, and TL-1 crashworthy test requirements as a non-redirective crash cushion. Four yellow modules make up the complete crash cushion assembly. Front module 1 is left empty and weighs 160 lbs. [75.6 kg]. Modules 2, 3, and 4 are filled and weigh approximately 2000 lbs [907.2 kg]. The Containment Impact Sled is attached to the front of Module 1 and the Transition is attached to the rear of Module 4.

SLED End Treatment
Length: 26 ft (7.93 m) Four (4) Modules
Height: 42-11/16 in (1.09 m)
Width: 22-1/2 in (0.57 m)

The SLED End Treatment has been fully tested to the recommended procedures of NCHRP-350.

ACCEPTANCE

FHWA Acceptance Letters:

CONTACT INFORMATION

TrafFix Devices, Inc.
Corporate Headquarters
160 Avenida La Pata
San Clemente, CA 92673
www.traffixdevices.com

Phone: +1(949)-361-5663
Fax: +1(949)-361-9205
Email: info@traffixdevices.com

SLED END TREATMENT

SER##	
SHEET NO.	DATE:
2 OF 2	08/27/2010

TrafFix Devices Inc.

DATA SHEET 4

SUMMARY OF RESULTS

Test Article:	TrafFix Devices Sentry End Treatment	Project No.:	P30061-01
Test Program:	NCHRP 350 3-40	Test Date:	05/14/10
Test Vehicle:	1995 Geo Metro		

GENERAL INFORMATION		OCCUPANT RISK VALUES	
TEST AGENCY	KARCO Engineering, LLC	FLAIL SPACE VELOCITY (m/sec)	
TEST NO.	3-40	X DIRECTION	10.6
DATE	5/14/2010	Y DIRECTION	0.4
TEST ARTICLE		THIV (Optional)	
TYPE	Crash Cushion	RIDEDOWN ACCELERATION (g's)	
INSTALLATION LENGTH	25.0 m (82.1 ft.)	X DIRECTION	-15.7
SIZE AND/OR DIMENSION OF KEY ELEMENTS	Nominal Mass 79.4 kg (175 lbs)	Y DIRECTION	2.2
SOIL TYPE AND CONDITION	Concrete	PHD (Optional)	
TEST VEHICLE		ASI (Optional)	
TYPE	Production Model	**TEST ARTICLE DEFLECTIONS (m)**	
DESIGNATION	820C	DYNAMIC	
MODEL	1995 Geo Metro	PERMANENT	
MASS (CURB)	807.0 kg (1779 lbs)	**VEHICLE DAMAGE**	
MASS (TEST INERTIAL)	806.5 kg (1778 lbs)	EXTERIOR	
DUMMY MASS	75.0 kg (165 lbs)	VDS	12-FR-5
MASS (GROSS STATIC)	885.5 kg (1952 lbs)	CDC	12FREW2
IMPACT CONDITIONS		INTERIOR	
VELOCITY (km/h)	99.6 km/h (61.9 mi/h)	OCDI	FS0000000
ANGLE (°)	0.1		
IMPACT SEVERITY (kJ)	337.9	**POST-IMPACT VEHICULAR BEHAVIOR**	
EXIT CONDITIONS		MAXIMUM ROLL ANGLE (°)	-7.0
VELOCITY (km/h)		MAXIMUM PITCH ANGLE (°)	-7.4
ANGLE (°)		MAXIMUM YAW ANGLE (°)	-165.3

DATA SHEET 4

SUMMARY OF RESULTS

Test Article:	TrafFix Devices Sentry End Treatment	Project No.:	P30040-01
Test Program:	NCHRP 350 3-41	Test Date:	04/15/10
Test Vehicle:	1998 Chevrolet 2500 Cheyenne		

GENERAL INFORMATION		OCCUPANT RISK VALUES	
TEST AGENCY	KARCO Engineering, LLC	FLAIL SPACE VELOCITY (m/sec)	
TEST NO.	3-41	X DIRECTION	11.1
DATE	4/15/2010	Y DIRECTION	0.1
TEST ARTICLE		THIV (Optional)	
TYPE	Crash Cushion	RIDEDOWN ACCELERATION (g's)	
INSTALLATION LENGTH	25.0 m (82.1 ft.)	X DIRECTION	-11.0
SIZE AND/OR DIMENSION OF KEY ELEMENTS	Nominal Mass 79.4 kg (175 lbs)	Y DIRECTION	-2.7
SOIL TYPE AND CONDITION	Concrete	PHD (Optional)	
TEST VEHICLE		ASI (Optional)	
TYPE	Production Model	**TEST ARTICLE DEFLECTIONS (m)**	
DESIGNATION	2000P	DYNAMIC	
MODEL	1998 Chevrolet 2500 Cheyenne	PERMANENT	
MASS (CURB)	2155 kg (4752 lbs)	**VEHICLE DAMAGE**	
MASS (TEST INERTIAL)	2034 kg (4484 lbs)	EXTERIOR	
DUMMY MASS	N/A	VDS	12-FC-5
MASS (GROSS STATIC)	2034 kg (4484 lbs)	CDC	12FCEN2
IMPACT CONDITIONS		INTERIOR	
VELOCITY (km/h)	102.0 km/h (63.3 mi/h)	OCDI	FS0000000
ANGLE (°)	0.1		
IMPACT SEVERITY (kJ)	815.9	**POST-IMPACT VEHICULAR BEHAVIOR**	
EXIT CONDITIONS		MAXIMUM ROLL ANGLE (°)	-6.0
VELOCITY (km/h)		MAXIMUM PITCH ANGLE (°)	3.4
ANGLE (°)		MAXIMUM YAW ANGLE (°)	-6.6

DATA SHEET 4

SUMMARY OF RESULTS

Test Article:	TrafFix Devices Sentry End Treatment	Project No.:	P30075-01
Test Program:	NCHRP 350 3-43	Test Date:	06/17/10
Test Vehicle:	1998 Chevrolet Silverado 2500		

GENERAL INFORMATION		OCCUPANT RISK VALUES	
TEST AGENCY	KARCO Engineering, LLC	FLAIL SPACE VELOCITY (m/sec)	
TEST NO.	3-43	X DIRECTION	8.0
DATE	6/17/2010	Y DIRECTION	1.9
TEST ARTICLE		THIV (Optional)	
TYPE	Crash Cushion	RIDEDOWN ACCELERATION (g's)	
INSTALLATION LENGTH	25.1 m (82.4 ft.)	X DIRECTION	-4.8
SIZE AND/OR DIMENSION OF KEY ELEMENTS	Nominal Mass 79.4 kg (175 lbs)	Y DIRECTION	3.7
SOIL TYPE AND CONDITION	Concrete	PHD (Optional)	
TEST VEHICLE		ASI (Optional)	
TYPE	Production Model	**TEST ARTICLE DEFLECTIONS (m)**	
DESIGNATION	2000P	DYNAMIC	
MODEL	1998 Chevrolet Silverado 2500	PERMANENT	
MASS (CURB)	2122.5 kg (4679 lbs)	**VEHICLE DAMAGE**	
MASS (TEST INERTIAL)	2044.0 kg (4506 lbs)	EXTERIOR	
DUMMY MASS	N/A	VDS	11-FL-4
MASS (GROSS STATIC)	2044.0 kg (4506 lbs)	CDC	11FLEN2
IMPACT CONDITIONS		INTERIOR	
VELOCITY (km/h)	102.4 km/h (63.6 mi/h)	OCDI	FS0000000
ANGLE (°)	15.5		
IMPACT SEVERITY (kJ)	826.8	**POST-IMPACT VEHICULAR BEHAVIOR**	
EXIT CONDITIONS		MAXIMUM ROLL ANGLE (°)	6.3
VELOCITY (km/h)		MAXIMUM PITCH ANGLE (°)	-2.7
ANGLE (°)	23.0	MAXIMUM YAW ANGLE (°)	-14.3

DATA SHEET 4

SUMMARY OF RESULTS

Test Article:	TrafFix Devices Sentry End Treatment	Project No.:	P30043-01
Test Program:	NCHRP 350 3-41	Test Date:	05/27/10
Test Vehicle:	1994 GMC Sierra 2500		

GENERAL INFORMATION		OCCUPANT RISK VALUES	
TEST AGENCY	KARCO Engineering, LLC	FLAIL SPACE VELOCITY (m/sec)	
TEST NO.	3-41	X DIRECTION	9.2
DATE	5/27/2010	Y DIRECTION	0.1
TEST ARTICLE		THIV (Optional)	
TYPE	Crash Cushion	RIDEDOWN ACCELERATION (g's)	
INSTALLATION LENGTH	20.1 m (65.9 ft.)	X DIRECTION	-9.6
END TREATMENT LENGTH	7.9 m (25.9 ft.)	Y DIRECTION	-3.4
SIZE AND/OR DIMENSION OF KEY ELEMENTS	Nominal Mass 79.4 kg (175 lbs)	PHD (Optional)	
SOIL TYPE AND CONDITION	Concrete	ASI (Optional)	
TEST VEHICLE		**TEST ARTICLE DEFLECTIONS (m)**	
TYPE	Production Model	DYNAMIC	
DESIGNATION	2000P	PERMANENT	
MODEL	1994 GMC Sierra 2500		
MASS (CURB)	2092.5 kg (4614 lbs)	**VEHICLE DAMAGE**	
MASS (TEST INERTIAL)	2016 kg (4445 lbs)	EXTERIOR	
DUMMY MASS	N/A	VDS	12-FC-5
MASS (GROSS STATIC)	2016 kg (4445 lbs)	CDC	12FCEN2
IMPACT CONDITIONS		INTERIOR	
VELOCITY (km/h)	101.5 km/h (63.1 mi/h)	OCDI	FS0000000
ANGLE (°)	0.2		
IMPACT SEVERITY (kJ)	801.9	**POST-IMPACT VEHICULAR BEHAVIOR**	
EXIT CONDITIONS		MAXIMUM ROLL ANGLE (°)	-2.8
VELOCITY (km/h)		MAXIMUM PITCH ANGLE (°)	3.6
ANGLE (°)		MAXIMUM YAW ANGLE (°)	3.6

DATA SHEET 4

SUMMARY OF RESULTS

Test Article:	TrafFix Devices Sentry End Treatment	Project No.:	P30072-01
Test Program:	NCHRP 350 3-41	Test Date:	06/15/10
Test Vehicle:	1992 Chevrolet Silverado 2500		

GENERAL INFORMATION		OCCUPANT RISK VALUES	
TEST AGENCY	KARCO Engineering, LLC	FLAIL SPACE VELOCITY (m/sec)	
TEST NO.	3-41	X DIRECTION	9.7
DATE	6/15/2010	Y DIRECTION	0.3
TEST ARTICLE		THIV (Optional)	
TYPE	Crash Cushion	RIDEDOWN ACCELERATION (g's)	
INSTALLATION LENGTH	20.3 m (66.6 ft.)	X DIRECTION	-12.3
END TREATMENT LENGTH	8.0 m (26.2 ft.)	Y DIRECTION	3.5
SIZE AND/OR DIMENSION OF KEY ELEMENTS	Nominal Mass 79.4 kg (175 lbs)	PHD (Optional)	
SOIL TYPE AND CONDITION	Concrete	ASI (Optional)	
TEST VEHICLE		**TEST ARTICLE DEFLECTIONS (m)**	
TYPE	Production Model	DYNAMIC	
DESIGNATION	2000P	PERMANENT	
MODEL	1992 Chevrolet Silverado 2500		
MASS (CURB)	2130 kg (4696 lbs)	**VEHICLE DAMAGE**	
MASS (TEST INERTIAL)	2013.5 kg (4439 lbs)	EXTERIOR	
DUMMY MASS	N/A	VDS	12-FC-5
MASS (GROSS STATIC)	2013.5 kg (4439 lbs)	CDC	12FCEN2
IMPACT CONDITIONS		INTERIOR	
VELOCITY (km/h)	99.1 km/h (61.5 mi/h)	OCDI	FS0000000
ANGLE (°)	0.1		
IMPACT SEVERITY (kJ)	762.6	**POST-IMPACT VEHICULAR BEHAVIOR**	
EXIT CONDITIONS		MAXIMUM ROLL ANGLE (°)	-5.6
VELOCITY (km/h)		MAXIMUM PITCH ANGLE (°)	-2.6
ANGLE (°)		MAXIMUM YAW ANGLE (°)	-4.1

DATA SHEET 4

SUMMARY OF RESULTS

Test Article:	TrafFix Devices Sentry End Treatment CMB	Project No.:	P30077-01
Test Program:	NCHRP 350 3-44	Test Date:	06/28/10
Test Vehicle:	1996 Chevrolet Cheyenne 2500		

GENERAL INFORMATION		OCCUPANT RISK VALUES	
TEST AGENCY	KARCO Engineering, LLC	FLAIL SPACE VELOCITY (m/sec)	
TEST NO.	3-44	X DIRECTION	9.8
DATE	6/28/2010	Y DIRECTION	2.2
TEST ARTICLE		THIV (Optional)	
TYPE	Crash Cushion	RIDEDOWN ACCELERATION (g's)	
INSTALLATION LENGTH	20.3 m (66.6 ft)	X DIRECTION	-10.6
END TREATMENT LENGTH	8.0 m (26.2 ft)		
SIZE AND/OR DIMENSION OF KEY ELEMENTS	Nominal Mass 66.5 kg (146 lbs)	Y DIRECTION	4.3
SOIL TYPE AND CONDITION	Concrete	PHD (Optional)	
TEST VEHICLE		ASI (Optional)	
TYPE	Production Model	**TEST ARTICLE DEFLECTIONS (m)**	
DESIGNATION	2000P	DYNAMIC	
MODEL	1996 Chevrolet Cheyenne 2500	PERMANENT	
MASS (CURB)	2087.0 kg (4601 lbs)	**VEHICLE DAMAGE**	
MASS (TEST INERTIAL)	2044.5 kg (4507 lbs)	EXTERIOR	
DUMMY MASS	N/A	VDS	1-FR-5
MASS (GROSS STATIC)	2044.5 kg (4507 lbs)	CDC	01FREW2
IMPACT CONDITIONS		INTERIOR	
VELOCITY (km/h)	103.1 km/h (64.1 mi/h)	OCDI	FS0000000
ANGLE (°)	20.1		
IMPACT SEVERITY (kJ)	99.0	**POST-IMPACT VEHICULAR BEHAVIOR**	
EXIT CONDITIONS		MAXIMUM ROLL ANGLE (°)	-35.7
VELOCITY (km/h)		MAXIMUM PITCH ANGLE (°)	-5.2
ANGLE (°)		MAXIMUM YAW ANGLE (°)	-15.2

DATA SHEET 4

SUMMARY OF RESULTS

Test Article:	TrafFix Devices Sentry End Treatment CMB	Project No.:	P30074-01
Test Program:	NCHRP 350 3-44 (Modified)	Test Date:	06/16/10
Test Vehicle:	1990 Chevrolet Silverado		

GENERAL INFORMATION		OCCUPANT RISK VALUES	
TEST AGENCY	KARCO Engineering, LLC	FLAIL SPACE VELOCITY (m/sec)	
TEST NO.	NCHRP 350 3-44 (Modified)	X DIRECTION	8.4
DATE	6/16/2010	Y DIRECTION	2.0
TEST ARTICLE		THIV (Optional)	
TYPE	Crash Cushion	RIDEDOWN ACCELERATION (g's)	
INSTALLATION LENGTH	20.3 m (66.5 ft)	X DIRECTION	-15.6
END TREATMENT LENGTH	8.0 m (26.2 ft)		
SIZE AND/OR DIMENSION OF KEY ELEMENTS	Nominal Mass 71.7 kg (158 lbs)	Y DIRECTION	7.4
SOIL TYPE AND CONDITION	Concrete	PHD (Optional)	
TEST VEHICLE		ASI (Optional)	
TYPE	Production Model	**TEST ARTICLE DEFLECTIONS (m)**	
DESIGNATION	2000P	DYNAMIC	
MODEL	1990 Chevrolet Silverado	PERMANENT	
MASS (CURB)	2020.5 kg (4454 lbs)	**VEHICLE DAMAGE**	
MASS (TEST INERTIAL)	1983.0 kg (4372 lbs)	EXTERIOR	
DUMMY MASS	N/A	VDS	1-FR-5
MASS (GROSS STATIC)	1983.0 kg (4372 lbs)	CDC	01FREW2
IMPACT CONDITIONS		INTERIOR	
VELOCITY (km/h)	96.2 km/h (59.8 mi/h)	OCDI	FS0000000
ANGLE (°)	15.0		
IMPACT SEVERITY (kJ)	47.4	**POST-IMPACT VEHICULAR BEHAVIOR**	
EXIT CONDITIONS		MAXIMUM ROLL ANGLE (°)	-19.3
VELOCITY (km/h)		MAXIMUM PITCH ANGLE (°)	10.7
ANGLE (°)		MAXIMUM YAW ANGLE (°)	4.0

ERTEC® E-Fence™

Details

Color	Width	Roll Length
Orange	48"	100'
Black	10", 20", 30", 40"	150'
Black	40", 48"	100'

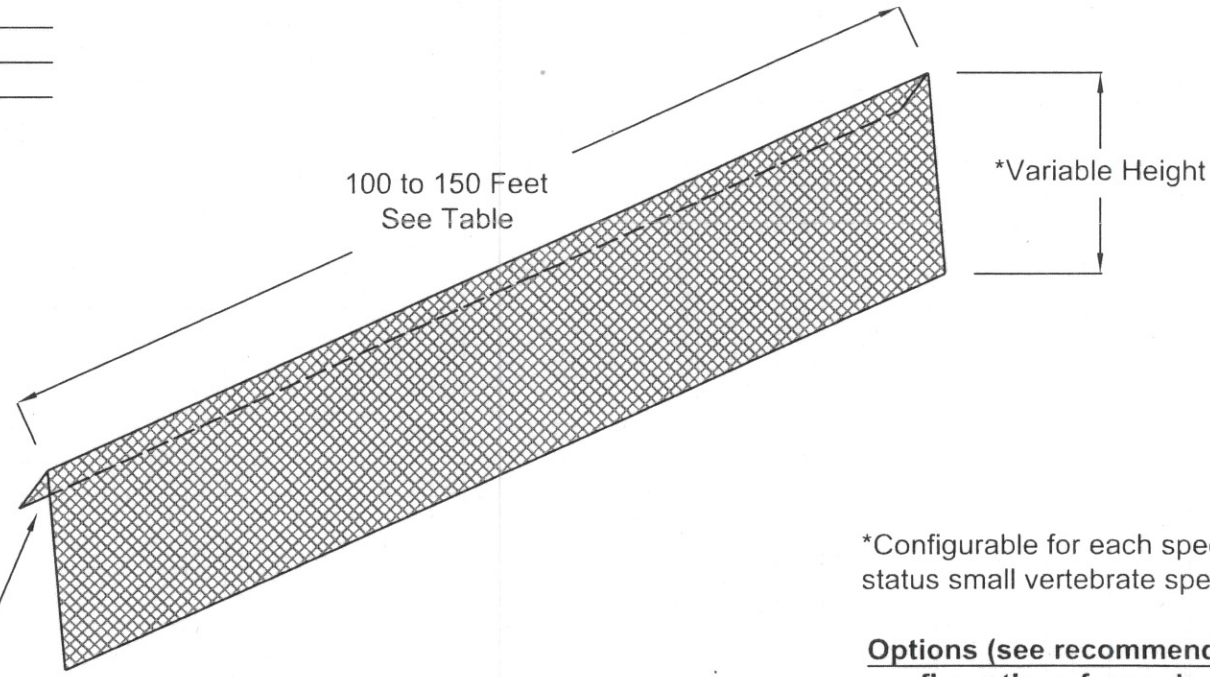

Optional Climber Barrier
Installed with brackets (brackets not shown)

*Configurable for each special status small vertebrate species.

Options (see recommended configurations for each animal in the product specifications):

- Barrier Height
- Trench Depth
- Barrier Lip
- Snake Funnel
- Salamander Gate

** NOT TO SCALE **

U.S. and International Patents Apply
© 2009 ERTEC Environmental Systems

ERTEC Environmental Systems
http://www.ertecsystems.com/
1150 Ballena Blvd.
Suite 250
Alameda, CA 94501
P. 866-521-0724
F. 510-521-3972

File Name: ERTEC - Installation Details - E-Fence.dwg
Layout Name: P1 Details
Default Print Size: 8.5" x 11"

ERTEC® E-Fence™
Installation Details:

WITH CLIMBER BARRIER

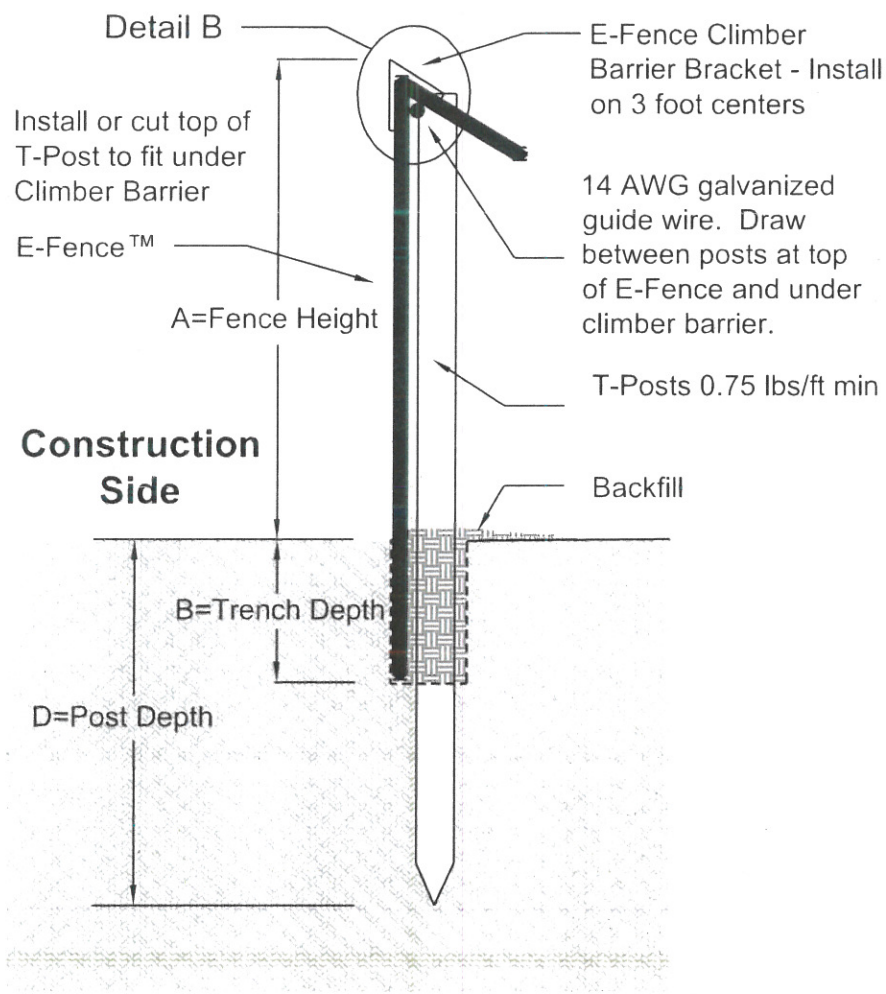

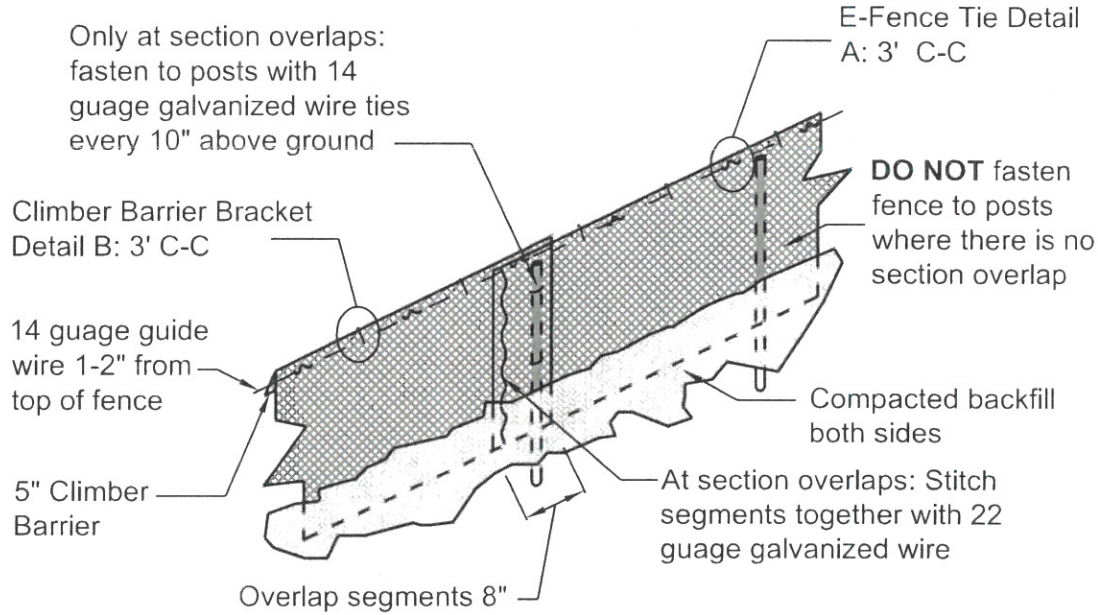

Place T-posts on 8' C-C. Top of post must be below climber barrier.

** NOT TO SCALE **

U.S. and International Patents Apply
© 2009 ERTEC Environmental Systems

ERTEC Environmental Systems
http://www.ertecsystems.com/
1150 Ballena Blvd.
Suite 250
Alameda, CA 94501
P. 866-521-0724
F. 510-521-3972

File Name: ERTEC - Installation Details - E-Fence.dwg
Layout Name: P3 Installation Details
Default Print Size: 8.5" x 11"

ERTEC® E-Fence™

Installation Details

Installation Notes (With Climber Barrier):

1. Excavate a trench a minimum of 4" wide and a minimum of 5" to 24" deep depending on species. See Table B in E-Fence specifications (www.ertecsystems.com). The trench shall be cleared of obstructions.
2. T-posts shall be a minimum of 0.75 lbs/ft. T-posts shall be driven a minimum 12" deep into the ground beyond the bottom of the trench. Top of post must be below climber barrier. For configuration with climber barrier, T-posts shall be on the side of the fence away from construction activities (on the same side of the fence as the climber barrier). Install T-Posts at maximum 8' centers. For very high wind or permanent installations install posts on 5' centers.
3. Wrap 14 gauge galvanized wire 2 times around the top of each T-post, so that the guide wire is 1 to 2 inches down from the top of the T-post. Pull the guide wire from post to post, wrap, secure and pull wire tight between each post.
4. Create climber barrier by bending top of E-Fence at the thermal crease (5" from one edge) downward 120 degrees. Top of fence should point down towards the ground. See Detail B in the E-Fence installation guidelines.
5. Insert E-Fence into trench against the posts and hang climber barrier over 14 gauge wire and T-posts.
6. At segment overlaps – overlap segments a minimum of 8". Install T-posts on one side of the section overlap. At 10" increments up and down the post, utilizing 14 gage galvanized wire (8" cut wire segments), tie the fence to the post. Close gaps at the other end of the overlap threading 22 gauge galvanized wire, closing the segments together.
7. At the top of the fence, using E-Fence wire ties, connect the guide wire to the fence at 3' intervals, as illustrated in Detail A of the installation guidelines. Crimp E-Fence wire-tie loops around the guide wire tightly.
8. Install E-Fence climber barrier brackets every 3 feet.
9. E-Fence must be installed in continuous lengths (100 or 150 feet rolls). Do not cut segments into shorter lengths unless necessary due to sudden change in elevation.
10. Backfill trench with native soil. Backfill from E-Fence side of posts first so that E-Fence is pushed up against T-posts. Back fill other side to complete backfill.

Installation Notes (NO Climber Barrier):

1. Excavate a trench a minimum of 4" wide and a minimum of 5" to 24" deep depending on species. See Table B in E-Fence specifications (www.ertecsystems.com). The trench shall be cleared of obstructions.
2. T-posts shall be a minimum of 0.75 lbs/ft. T-posts shall be driven a minimum 12" deep into the ground beyond the bottom of the trench. Installed T-Posts must be a few inches higher than fence. For configuration without climber barrier, T-posts shall be on the same side as construction activities. Install T-Posts at maximum 8' centers. For very high wind or permanent installations install posts on 5' centers.
3. Wrap 14 gauge galvanized wire 2 times around the top of each T- post, so that the guide wire is 3 to 4 inches down from where the top of the fence will reach. Pull the guide wire from post to post, wrap, secure and pull wire tight between each post.
4. Insert E-Fence into trench against the posts
5. At segment overlaps – overlap segments a minimum of 8". Install T-posts on one side of the section overlap. At 10" increments up and down the post, utilizing 14 gage galvanized wire (8" cut wire segments), tie the fence to the post. Close gaps at the other end of the overlap threading 22 gauge galvanized wire, closing the segments together.
6. Near the top of the fence, using E-Fence wire ties, connect the guide wire to the fence at 3' intervals, as illustrated in Detail A of the installation guidelines. Crimp E-Fence wire-tie loops around the guide wire tightly.
7. E-Fence must be installed in continuous lengths (100 or 150 feet rolls). Do not cut segments into shorter lengths unless necessary due to sudden change in elevation.
8. Backfill trench with native soil. Backfill from E-Fence side of posts first so that E-Fence is pushed up against T-posts. Back fill other side to complete backfill.

** NOT TO SCALE **		U.S. and International Patents Apply © 2009 ERTEC Environmental Systems
ERTEC Environmental Systems http://www.ertecsystems.com/		File Name: ERTEC - Installation Details - E-Fence.dwg
1150 Ballena Blvd. Suite 250 Alameda, CA 94501	P. 866-521-0724 F. 510-521-3972	Layout Name: P4 Installation Details
		Default Print Size: 8.5" x 11" / Page: 4 of 8

ERTEC® E-Fence™
Accessory Details:
Snake Funnel

SNAKE FUNNEL

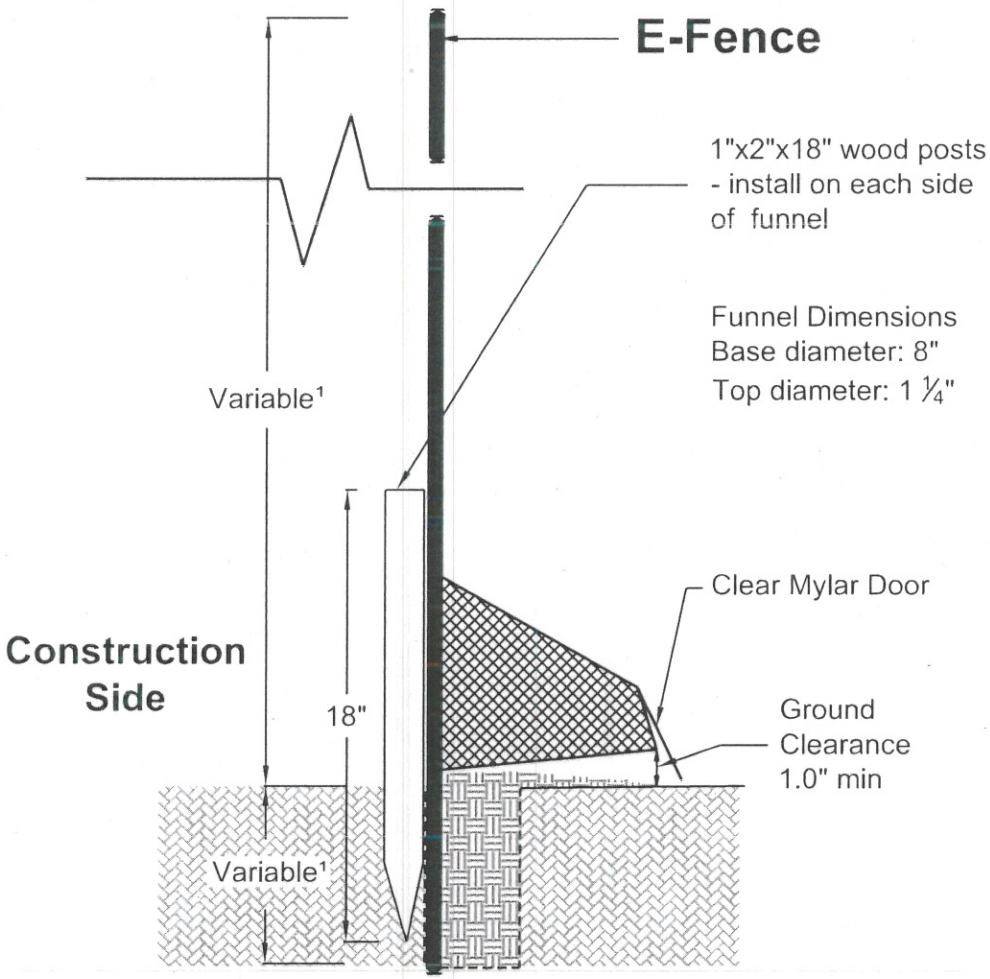

Install 1 Funnel every 60 feet or as otherwise specified by project biologist.

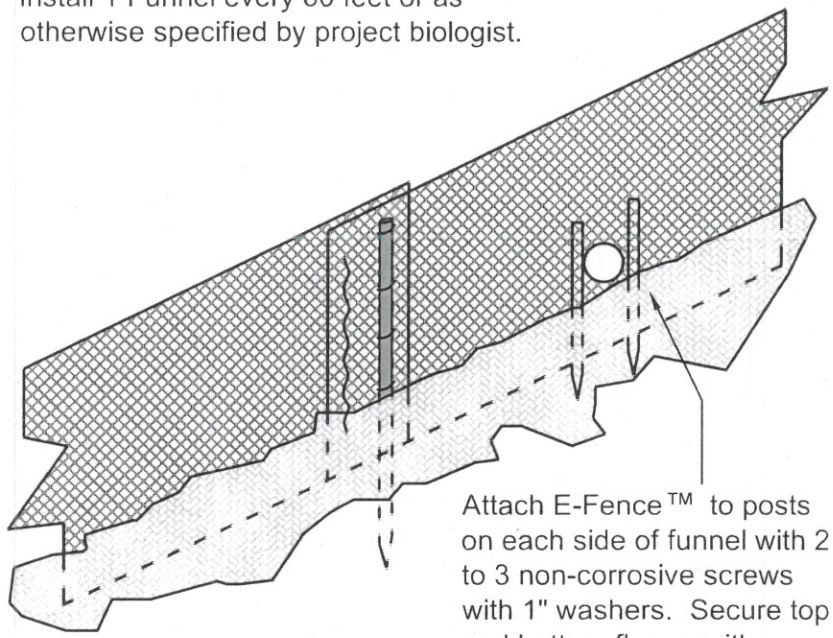

Attach E-Fence™ to posts on each side of funnel with 2 to 3 non-corrosive screws with 1" washers. Secure top and bottom flange with galvanized wire ties. Close all gaps.

** NOT TO SCALE **

U.S. and International Patents Apply
© 2009 ERTEC Environmental Systems

ERTEC Environmental Systems
http://www.ertecsystems.com/
1150 Ballena Blvd.
Suite 250
Alameda, CA 94501
P. 866-521-0724
F. 510-521-3972

File Name: ERTEC - Installation Details - E-Fence.dwg
Layout Name: P5 Accessory Details
Default Print Size: 8.5" x 11"

ERTEC® E-Fence™
Accessory Details:
Salamander Gateway

SALAMANDER GATEWAY

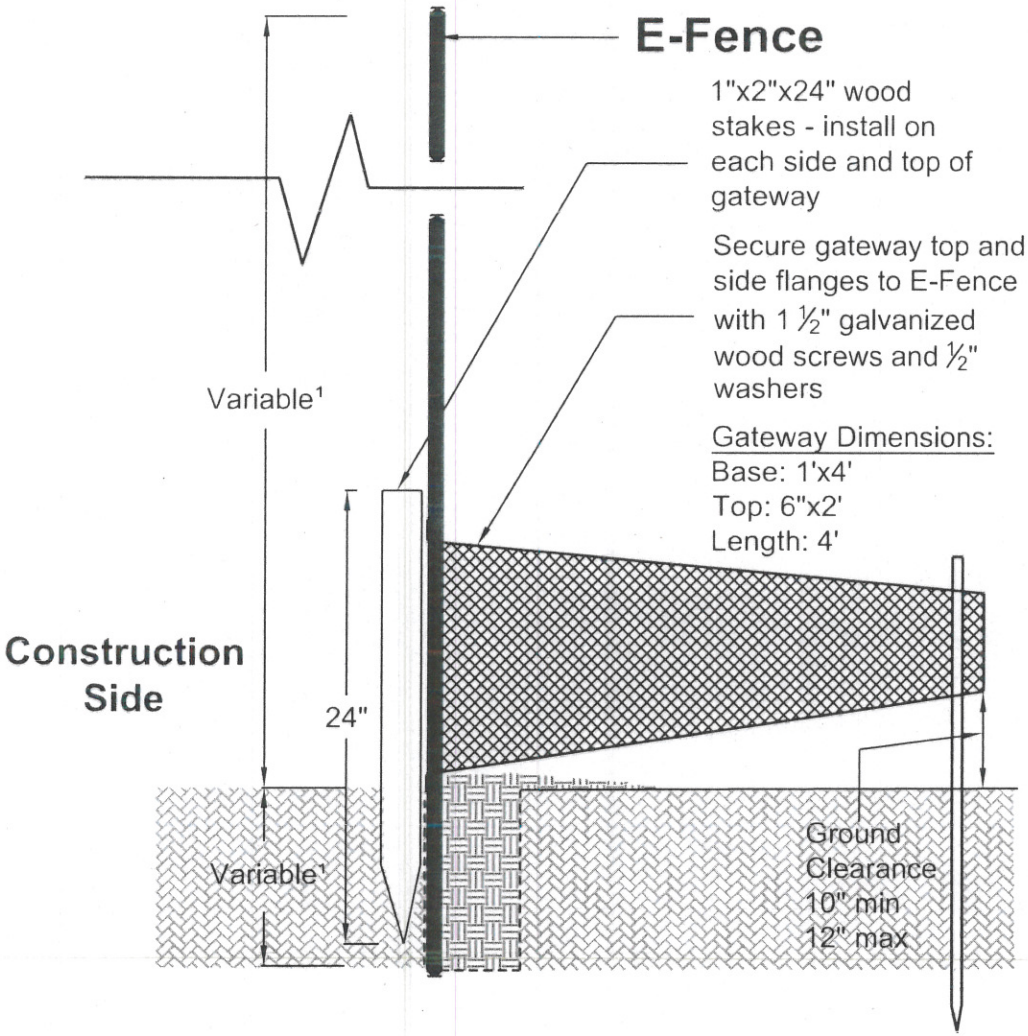

Gateway installed on 150' C-C or as otherwise specified by project biologist

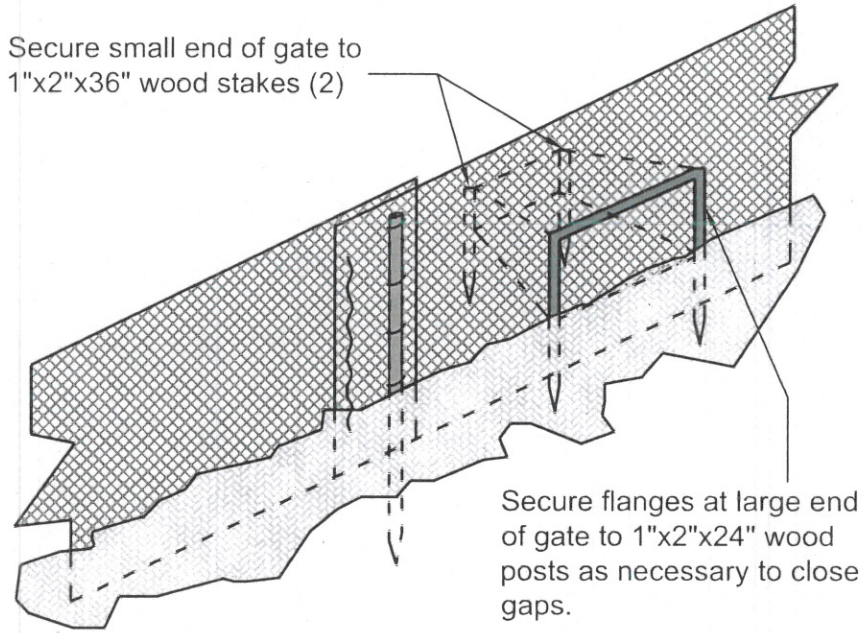

Bury bottom flange in trench. Secure side and top flanges to E-Fence™ and to posts with 1 ½" galvanized wood screws and ½"galvanized washers. Secure so that there are no gaps. If necessary, sew gaps closed with 20 guage galvanized wire.

** NOT TO SCALE **

U.S. and International Patents Apply
© 2009 ERTEC Environmental Systems

ERTEC Environmental Systems
http://www.ertecsystems.com/
1150 Ballena Blvd.
Suite 250
Alameda, CA 94501
P. 866-521-0724
F. 510-521-3972

File Name: ERTEC - Installation Details - E-Fence.dwg
Layout Name: P6 Accessory Details
Default Print Size: 8.5" x 11"
Page: 6 of 8

ERTEC® E-Fence™
Details

Nominal Barrier Dimensions:

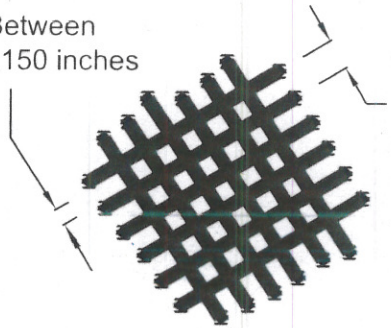

Detail B: E-Fence Climber Barrier

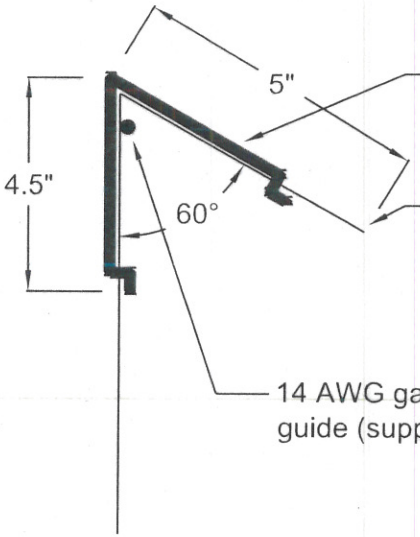

Detail A: Installing E-Fence Wire Ties:

1). Push E-Fence tie through barrier. 2). Expose hooks on side near guide wire. 3). Insert guide wire. 4). Crimp tightly.

1.

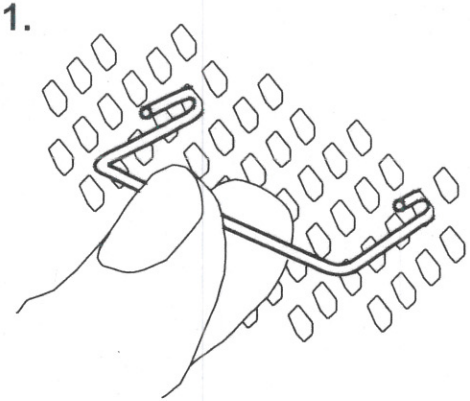

2.

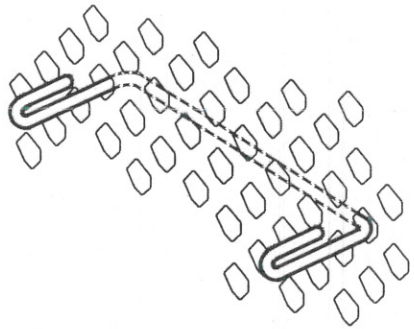

3.

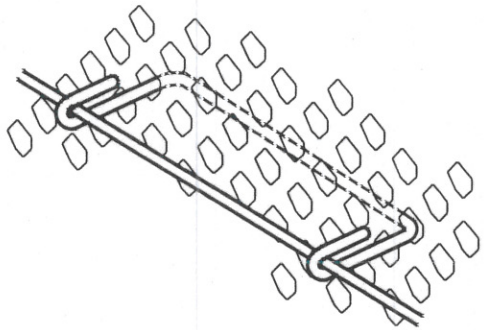

4.

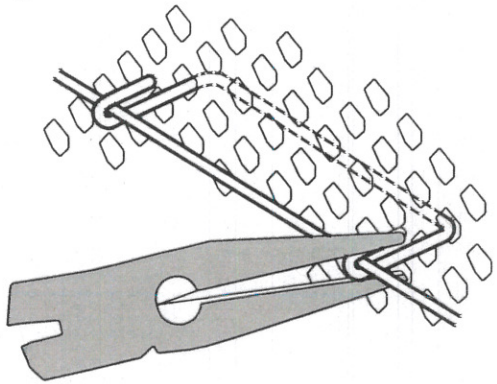

** NOT TO SCALE **

U.S. and International Patents Apply
© 2009 ERTEC Environmental Systems

ERTEC Environmental Systems
http://www.ertecsystems.com/
1150 Ballena Blvd.
Suite 250
Alameda, CA 94501
P. 866-521-0724
F. 510-521-3972

File Name: ERTEC - Installation Details - E-Fence.dwg
Layout Name: P7 Details
Default Print Size: 8.5" x 11"

ERTEC® E-Fence™

Detail B1: Installation of Climber Barrier

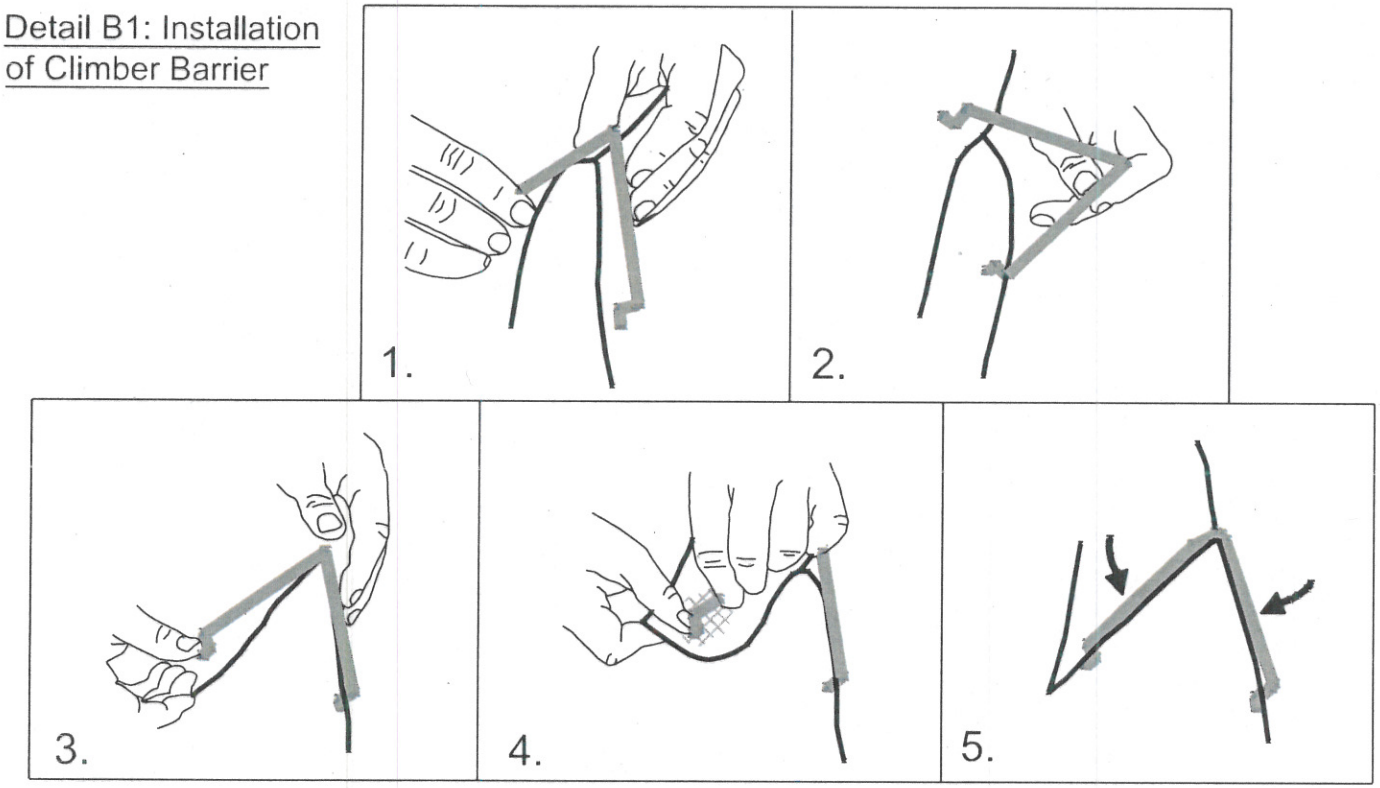

Step 1. Fit corner of bracket tightly over barrier. Measure distance down long side.

Step 2. Insert bracket through fence on long side first at measured point.

Step 3. Measure for insertion point on other side (short side).

Step 4. Bend short side to allow bracket insertion at measured point.

Step 5. Bracket must fit snugly over the top of the climber barrier.

Purpose

E-Fence is a patent pending, durable and low cost system designed for areas where construction can occur in a habitat where threatened small vertebrates are widely distributed. The fence is designed to exclude small vertebrates from work areas.

Design Criteria

For detailed product characteristics contact ERTEC Environmental Systems at (866) 521-0724 or www.ertecsystems.com. For installation procedures, follow the most current installation guidelines available at www.ertecsystems.com.

Maintenance

Inspect E-Fence periodically for holes or openings. Holes can be patched with pieces of E-Fence using black UV stable cable ties or galvanized wire. Openings at overlaps should be secured with galvanized wire, or wire ties. Opening can also be caulked with caulking material.

Important: All information, including illustrations, is believed to be reliable. Users, however, should independently evaluate the suitability of each project for their application. ERTEC Environmental Systems makes no warranties as to the accuracy of completeness of the information, and disclaims any liability regarding is use. ERTEC Environmental System's only obligations are those in the ERTEC Environmental Systems Standard Terms and Conditions of Sale for this product, and in no case will ERTEC Environmental Systems or its distributors be liable for any incidental indirect or consequential damages arising for the sale, resale, use or misuse of the product. Specifications are subject to change without notice. In addition, ERTEC Environmental Systems reserves the right to make changes, without notification to Buyer, to processing or materials that do not affect compliance with any applicable specification.

** NOT TO SCALE **

U.S. and International Patents Apply
© 2009 ERTEC Environmental Systems

ERTEC Environmental Systems
http://www.ertecsystems.com/
1150 Ballena Blvd.
Suite 250
Alameda, CA 94501
P. 866-521-0724
F. 510-521-3972

File Name: ERTEC - Installation Details - E-Fence.dwg
Layout Name: P8
Default Print Size: 8.5" x 11"