Dist	COUNTY	ROUTE	POST MILES TOTAL PROJECT	SHEET No.	TOTAL SHEETS
04	CC	680	22.7/24.8	101	186

REGISTERED CIVIL ENGINEER

April 20, 2012
PLANS APPROVAL DATE

REGISTERED PROFESSIONAL ENGINEER Gary Wang No. C58298 Exp. 6-30-12 CIVIL STATE OF CALIFORNIA

THE STATE OF CALIFORNIA OR ITS OFFICERS OR AGENTS SHALL NOT BE RESPONSIBLE FOR THE ACCURACY OR COMPLETENESS OF SCANNED COPIES OF THIS PLAN SHEET.

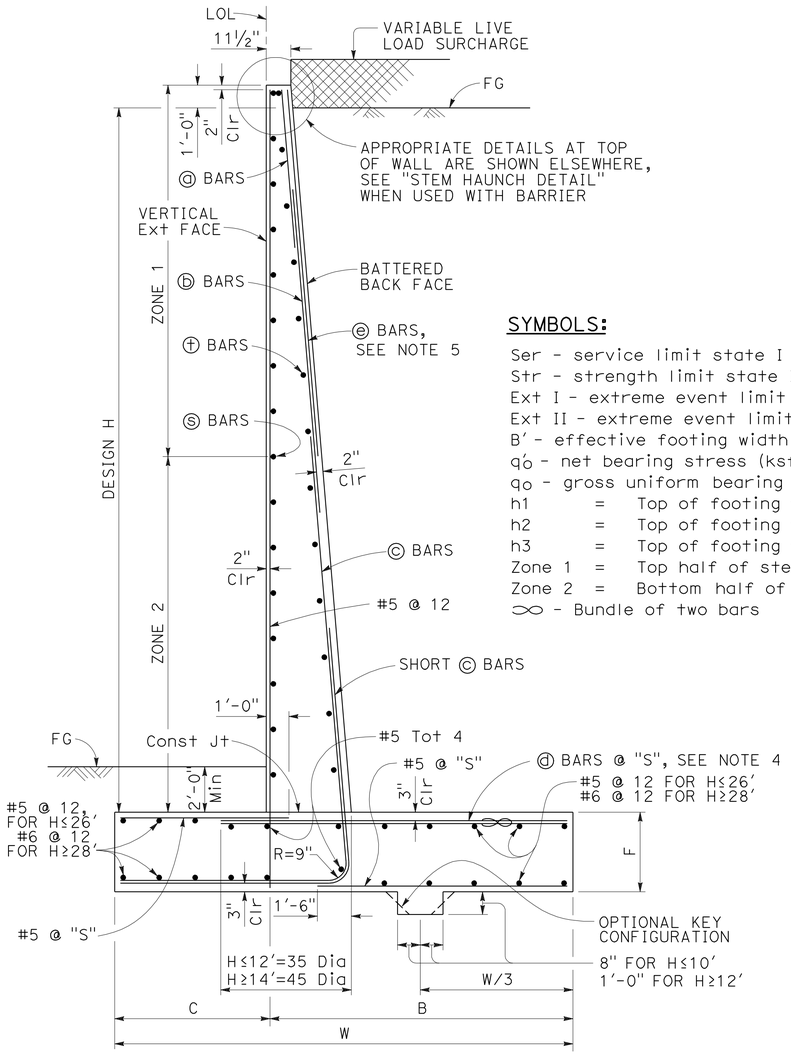

TYPICAL SECTION

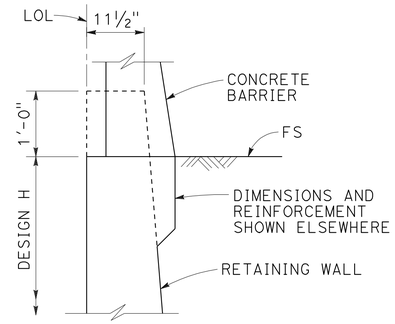

STEM HAUNCH DETAIL

SYMBOLS:

Ser - service limit state I
Str - strength limit state I
Ext I - extreme event limit state I
Ext II - extreme event limit state II
B' - effective footing width (ft)
q_o' - net bearing stress (ksf), OG assumed to be FG at toe
q_o - gross uniform bearing stress (ksf)
h1 = Top of footing to top of short ⓒ bar
h2 = Top of footing to top of ⓒ bar
h3 = Top of footing to top of ⓑ bar
Zone 1 = Top half of stem height
Zone 2 = Bottom half of stem height
∞ - Bundle of two bars

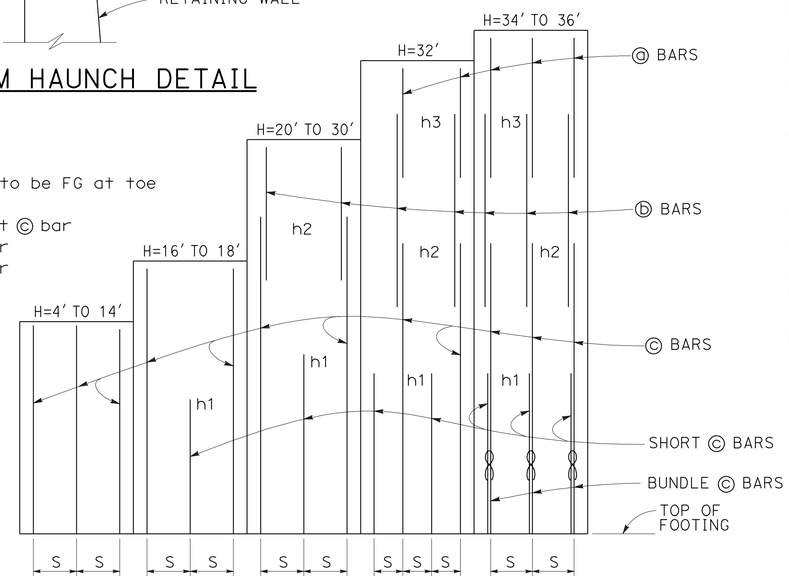

ELEVATION

DESIGN CONDITIONS:

Design H may be exceeded by 6" before going to the next size. Special footing design is required where foundation material is incapable of supporting bearing stress listed in the table.

DESIGN NOTES:

TO ACCOMPANY PLANS DATED 5-20-13

DESIGN: AASHTO LRFD Bridge Design Specifications, 4th Edition with California Amendments

LS: Varied surcharge on level ground surface

DC: Stem Architectural Treatment of thickness up to 6" of concrete (75 psf) considered

CT: 54 kip transverse force applied at He = 32", distributed over 10 feet at the top of wall and 1 : 1 distribution down and outward. Distribution below footing taken no less than 40'.

SEISMIC: $k_h = 0.2$, $k_v = 0.0$

SOIL: $\phi = 34°$, $\gamma = 120$ pcf

REINFORCED CONCRETE: f'c = 3,600 psi
fy = 60,000 psi

LOAD COMBINATIONS AND LIMIT STATES:

Service I	Q = 1.00DC+1.00EV+1.00EH+1.00LS
Strength I	Q = αDC+βEV+ηEH+1.75LS
Extreme I	Q = 1.00DC+1.00EV+1.00EH+1.00EQD+1.00EQE
Extreme II	Q = 1.00DC+1.00EV+1.00EH+1.00CT

Where:

Q:	Force Effects
α:	1.25 or 0.90, Whichever Controls Design
β:	1.35 or 1.00, Whichever Controls Design
η:	1.50 or 0.90, Whichever Controls Design
DC:	Dead Load of Structure Components
EH:	Horizontal Earth Fill Pressure
EV:	Vertical Earth Pressure from Earth Fill Weight
LS:	Live Load Surcharge
EQE:	Seismic Earth Pressure
EQD:	Soil and Structural and Nonstructural Components Inertia
CT:	Vehicular Collision Force

TABLE OF REINFORCING STEEL, DIMENSIONS AND DATA

DESIGN H	4'	6'	8'	10'	12'	14'	16'	18'	20'	22'	24'	26'	28'	30'	32'	34'	36'
W	6'-10"	7'-0"	7'-3"	7'-7"	8'-4"	9'-7"	10'-9"	12'-0"	13'-3"	14'-6"	15'-9"	17'-1"	18'-5"	19'-10"	21'-2"	22'-7"	24'-0"
C	2'-2"	2'-3"	2'-3"	2'-4"	2'-6"	3'-0"	3'-6"	4'-0"	4'-6"	5'-0"	5'-5"	6'-0"	6'-6"	7'-2"	7'-8"	8'-2"	9'-0"
B	4'-8"	4'-9"	5'-0"	5'-3"	5'-10"	6'-7"	7'-3"	8'-0"	8'-9"	9'-6"	10'-4"	11'-1"	11'-11"	12'-8"	13'-6"	14'-5"	15'-0"
F	1'-4"	1'-4"	1'-4"	1'-4"	1'-6"	1'-8"	1'-8"	1'-9"	1'-9"	1'-11"	2'-2"	2'-5"	2'-10"	3'-3"	3'-6"	4'-0"	4'-3"
BATTER	½: 12	½: 12	½: 12	½: 12	½: 12	½: 12	½: 12	½: 12	½: 12	½: 12	⅝: 12	⅝: 12	¾: 12	⅞: 12	1 : 12	1 : 12	1 : 12
SPACING "S"	9"	9"	9"	9"	9"	7"	6"	5"	6"	6"	6"	6"	6"	6"	6"	10"	8"
ⓐ BARS	-	-	-	-	-	-	-	-	-	-	-	-	-	-	#7	#7	#6
ⓑ BARS	-	-	-	-	-	-	-	-	#7	#7	#7	#7	#7	#7	#9	#9	#8
ⓒ BARS	#6	#6	#6	#6	#6	#6	#7	#7	#8	#9	#9	#10	#10	#10	#11	#11	#11
ⓓ BARS	#5	#5	#6	#6	#6	#6	#9	#8	#8	#9	#9	#10	#10	#10	#11	#11	#11
h1	-	-	-	-	-	-	5'-9"	5'-10"	8'-0"	9'-0"	10'-1"	11'-0"	12'-1"	13'-0"	13'-0"	12'-7"	11'-6"
h2	-	-	-	-	-	-	-	-	10'-5"	13'-0"	14'-7"	17'-6"	19'-0"	20'-5"	19'-0"	18'-0"	20'-2"
h3	-	-	-	-	-	-	-	-	-	-	-	-	-	-	21'-2"	21'-10"	24'-0"
ZONE 1 ⓢ BARS	#5 @ 18	#5 @ 18	#5 @ 18	#5 @ 18	#5 @ 18	#5 @ 18	#5 @ 18	#5 @ 18	#5 @ 18	#5 @ 18	#5 @ 12	#5 @ 12	#5 @ 12	#5 @ 12	#5 @ 12	#5 @ 12	#5 @ 12
ZONE 2 ⓢ BARS	#5 @ 18	#5 @ 18	#5 @ 18	#5 @ 18	#5 @ 18	#5 @ 18	#5 @ 12	#5 @ 12	#5 @ 12	#5 @ 12	#5 @ 12	#5 @ 12	#6 @ 12	#6 @ 12	#6 @ 12	#7 @ 12	#7 @ 12
ZONE 1 ⓣ BARS	#4 @ 18	#4 @ 18	#4 @ 18	#4 @ 18	#4 @ 18	#4 @ 18	#4 @ 18	#4 @ 18	#4 @ 18	#4 @ 18	#4 @ 12	#4 @ 12	#4 @ 18	#4 @ 12	#4 @ 12	#4 @ 12	#4 @ 12
ZONE 2 ⓣ BARS	#4 @ 18	#4 @ 18	#4 @ 18	#4 @ 18	#4 @ 18	#4 @ 18	#4 @ 18	#4 @ 18	#4 @ 18	#4 @ 18	#4 @ 12	#4 @ 12	#4 @ 12	#4 @ 12	#5 @ 12	#5 @ 12	#5 @ 12
Ser: B', q_o'	6.8, 0.7	6.5, 1.0	6.2, 1.3	6.0, 1.6	6.3, 2.0	7.5, 2.1	8.6, 2.2	9.8, 2.3	11.0, 2.4	12.1, 2.5	13.2, 2.8	14.4, 2.9	15.5, 3.1	16.8, 3.3	18.0, 3.5	19.2, 3.7	20.6, 3.7
Str: B', q_o	6.6, 1.6	5.0, 1.8	3.6, 2.3	3.0, 3.3	3.2, 4.0	4.3, 3.8	5.3, 3.7	6.4, 3.7	7.4, 3.8	8.2, 4.1	9.0, 4.4	9.9, 4.6	10.7, 4.9	11.7, 5.2	12.6, 5.4	13.6, 5.8	14.6, 5.9
Ext I: B', q_o	5.2, 1.1	4.7, 1.5	3.9, 2.2	3.1, 3.4	2.8, 4.8	3.2, 5.3	3.6, 5.7	4.1, 6.1	4.6, 6.4	5.0, 6.9	5.3, 7.6	5.8, 8.1	6.1, 8.9	6.7, 9.4	7.1, 10.0	7.5, 10.7	8.2, 10.9
Ext II: B', q_o	2.6, 2.2	2.7, 2.6	2.8, 3.1	2.9, 3.6	3.7, 3.6	5.2, 3.3	6.7, 3.1	8.3, 3.0	9.8, 3.0	11.2, 3.1	12.5, 3.2	13.9, 3.4	15.2, 3.6	16.7, 3.8	18.0, 4.0	19.3, 4.2	20.8, 4.3

NOTES:

1. For details not shown and drainage notes see RSP B3-5
2. For wall stem joint details see B0-3 / 3-3 and B0-3 / 3-4
3. At ⓒ bars:
   H ≤ 6', no splices are allowed within 1'-8" above the top of footing.
   H > 6', no splices are allowed within H/4 above the top of footing.
4. Bundle ⓓ bars for H = 34' & 36'.
5. Provide #6 @ 10" x 15'-0" ⓔ bars over a distance of 8'-0" measured from all expansion joints, begin wall and end wall locations. For H ≤ 14', hook ⓔ bar into footing and reduce bar length as needed to maintain Min Clr cover.

STATE OF CALIFORNIA
DEPARTMENT OF TRANSPORTATION

RETAINING WALL TYPE 1 (CASE 1)

NO SCALE

RSP B3-1A DATED APRIL 20, 2012 SUPPLEMENTS THE STANDARD PLANS BOOK DATED 2010.

REVISED STANDARD PLAN RSP B3-1A

2010 REVISED STANDARD PLAN RSP B3-1A

2-22-12

Dist	COUNTY	ROUTE	POST MILES TOTAL PROJECT	SHEET No.	TOTAL SHEETS
04	CC	680	22.7/24.8	102	186

REGISTERED CIVIL ENGINEER

April 20, 2012
PLANS APPROVAL DATE

REGISTERED PROFESSIONAL ENGINEER Gary Wang No. C58298 Exp. 6-30-12 CIVIL STATE OF CALIFORNIA

THE STATE OF CALIFORNIA OR ITS OFFICERS OR AGENTS SHALL NOT BE RESPONSIBLE FOR THE ACCURACY OR COMPLETENESS OF SCANNED COPIES OF THIS PLAN SHEET.

TO ACCOMPANY PLANS DATED 5-20-13

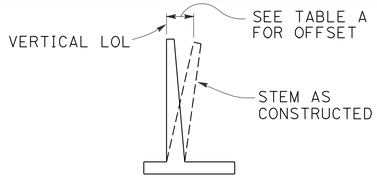

APPROXIMATE WALL OFFSET VALUES

Values for offseting forms to be determined by the Engineer.

TABLE A

H	OFFSET
4'-12'	H/200
14'-16'	H/160
18'-20'	H/140
22'-24'	H/130
26'-36'	2½"

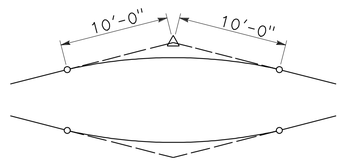

20'-0" VC AT TOP OF WALL SLOPE CHANGE

Where shown on the plans

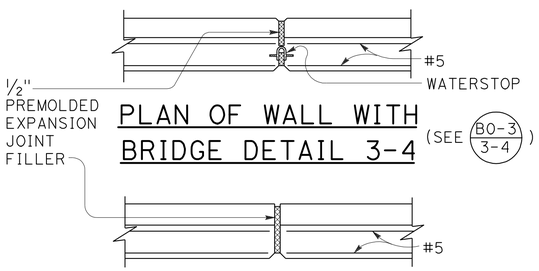

PLAN OF WALL WITH BRIDGE DETAIL 3-4

(SEE B0-3 / 3-4)

PLAN OF WALL WITH EXPANSION JOINT ONLY

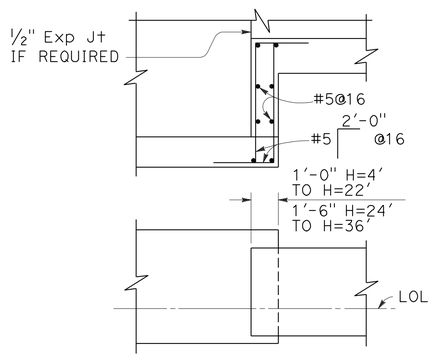

FOOTING STEP

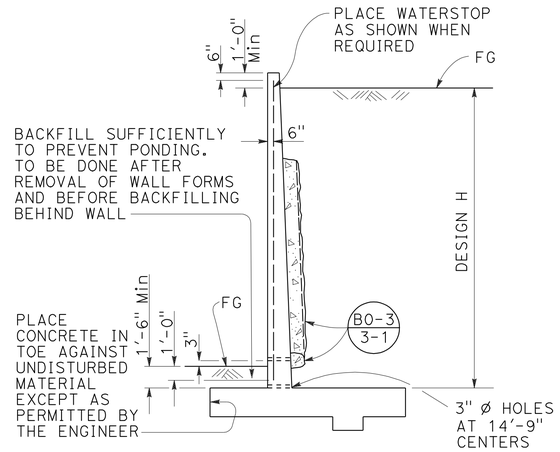

DESIGN AND DRAINAGE

DESIGN CONDITIONS:

Design "H" may be exceeded by 6" before going to the next size. Special footing design is required where foundation material is incapable of supporting bearing stress listed in table

Return wall not required unless shown elsewhere

DESIGN NOTES:

DESIGN: AASHTO LRFD Bridge Design Specifications, 4th edition with California Amendments

LIVE LOAD: Surcharge on level ground surface

SOIL: ϕ = 34°
γ = 120 pcf

REINFORCED CONCRETE: fy = 60,000 psi
fc' = 3,600 psi

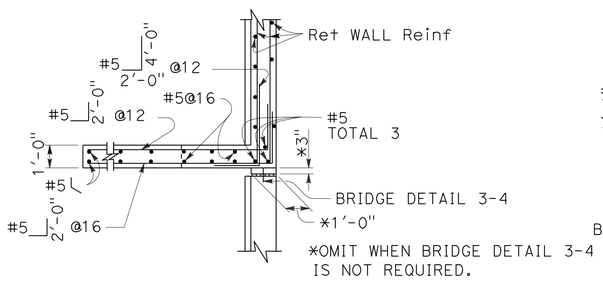

PLAN

(For return wall Type "A")

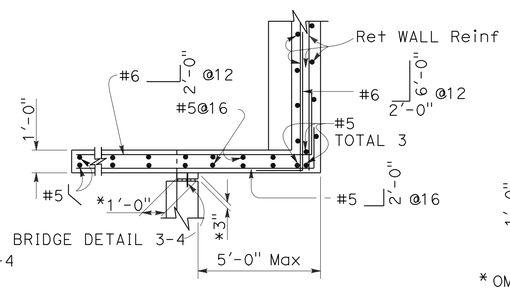

PLAN

(For return wall Type "B")

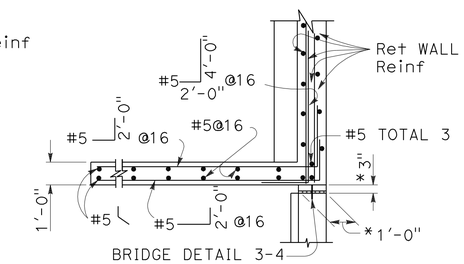

*OMIT WHEN BRIDGE DETAIL 3-4 IS NOT REQUIRED.

PLAN

(For return wall Type "C")

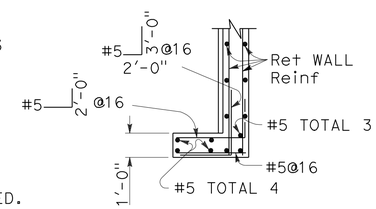

PLAN

(For return wall Type "D")

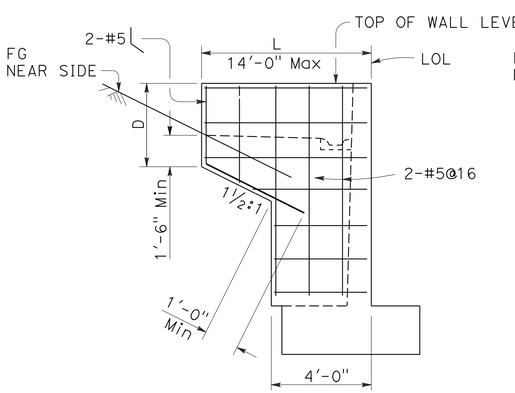

ELEVATION

RETURN WALL TYPE "A"

Use where H=8' or less

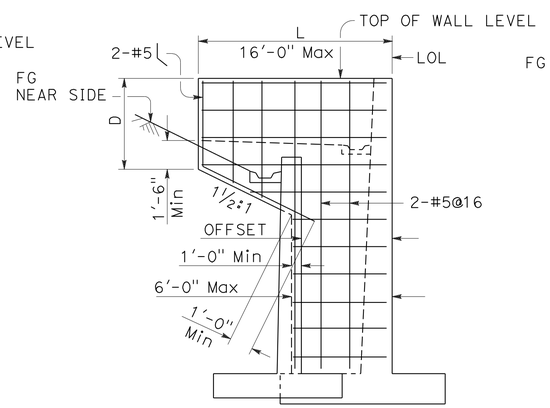

ELEVATION

RETURN WALL TYPE "B"

Use where H=10' or more on offset walls

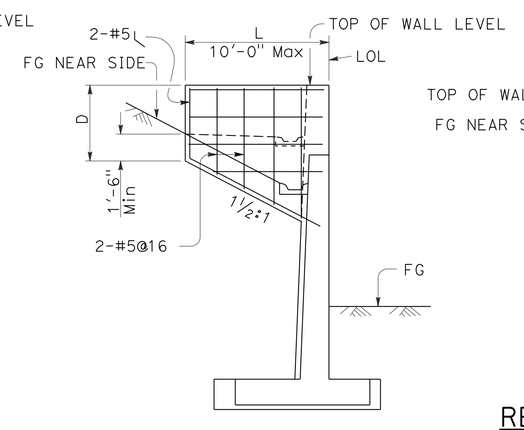

ELEVATION

RETURN WALL TYPE "C"

Use where H=10' or more on straight walls

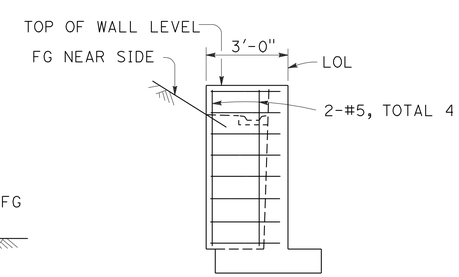

ELEVATION

RETURN WALL TYPE "D"

Use where H=6' or less

STATE OF CALIFORNIA
DEPARTMENT OF TRANSPORTATION

RETAINING WALL DETAILS No. 1

NO SCALE

RSP B3-5 DATED APRIL 20, 2012 SUPERSEDES STANDARD PLAN B3-5 DATED MAY 20, 2011 - PAGE 277 OF THE STANDARD PLANS BOOK DATED 2010.

REVISED STANDARD PLAN RSP B3-5

2010 REVISED STANDARD PLAN RSP B3-5

2-22-12

Dist	COUNTY	ROUTE	POST MILES TOTAL PROJECT	SHEET No.	TOTAL SHEETS
04	CC	680	22.7/24.8	103	186

REGISTERED CIVIL ENGINEER

July 19, 2013
PLANS APPROVAL DATE

REGISTERED PROFESSIONAL ENGINEER
Tillat Satter
No. C42892
Exp. 3-31-14
CIVIL
STATE OF CALIFORNIA

THE STATE OF CALIFORNIA OR ITS OFFICERS OR AGENTS SHALL NOT BE RESPONSIBLE FOR THE ACCURACY OR COMPLETENESS OF SCANNED COPIES OF THIS PLAN SHEET.

TO ACCOMPANY PLANS DATED 5-20-13

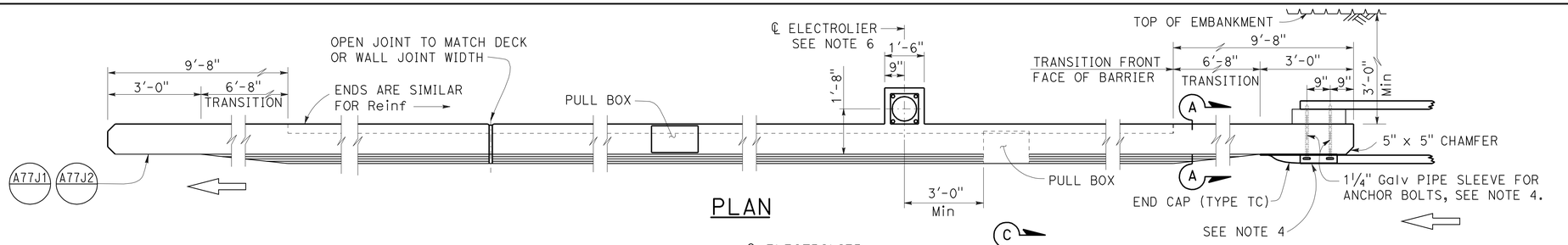

PLAN

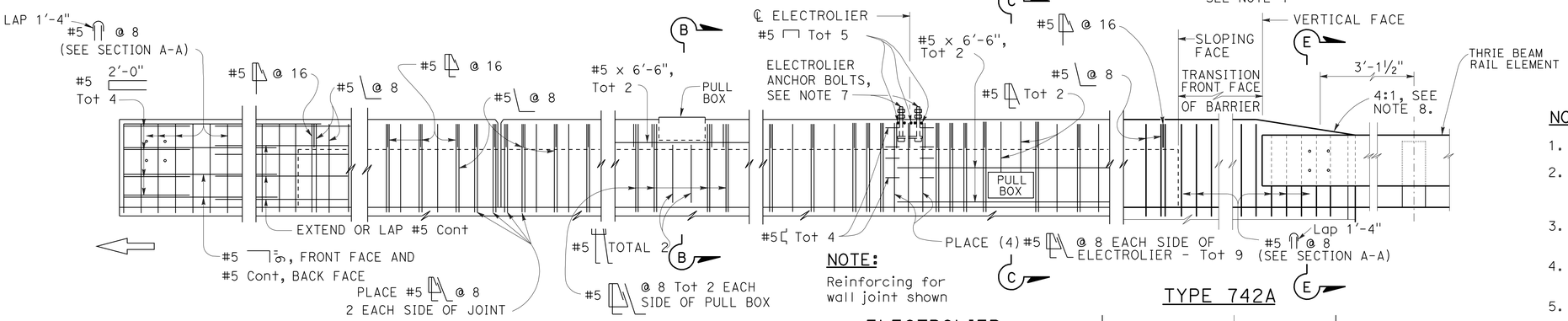

METAL RAILING CONNECTION

DECK OR WALL JOINT

ELEVATION

NOTE:
Reinforcing for wall joint shown

ELECTROLIER
(See Note 5)

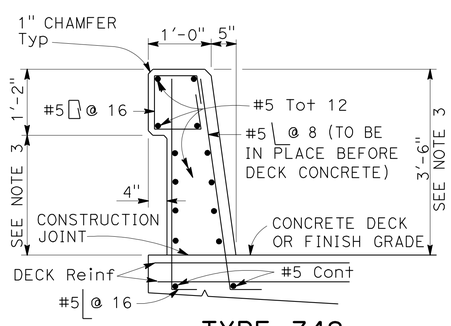

TYPE 742

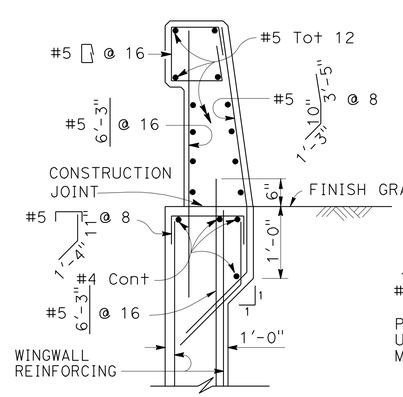

TYPE 742A

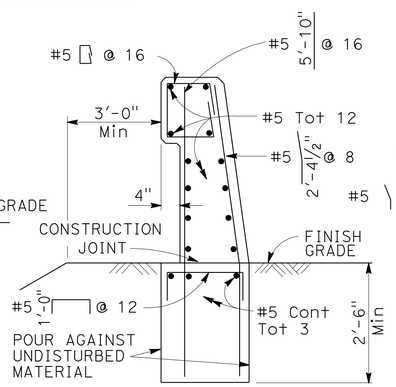

TYPE 742B

NOTE:
Types 742A & 742B are similar to Type 742 except as noted

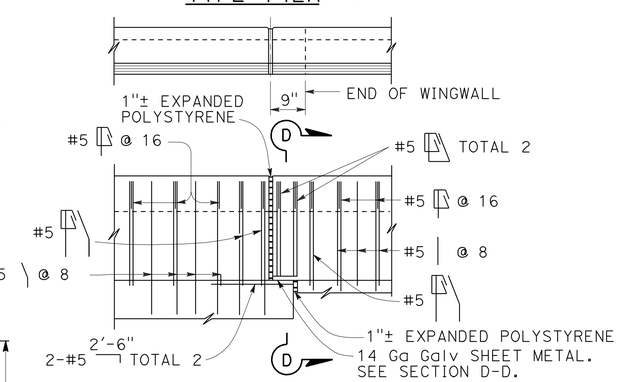

TYPE 742A TYPE 742B

NOTES:

1. Walls are to be backfilled before barrier is placed.
2. Clearance to reinforcing steel in barrier to be 1", except as noted. Longitudinal reinforcement to stop at all expansion joints.
3. Dimensions may vary with roadway cross slope and with certain thickness of surfacing. See Project Plans.
4. For typical metal railing connection details not shown, see Revised Standard Plans RSP A77U1 and RSP A77U2.
5. See Standard Plans ES-9A, ES-9B, ES-9C, ES-9D and ES-9E for electrical details. The maximum number of conduits in the barrier is limited to two 2" conduits along with one 3" conduit. When a 3" conduit is used, it is restricted to the base of the barrier.
6. For electrolier mounting details, See Standard Plans ES-6A and ES-6B.
7. Minimum concrete edge distance, to the reinforcing shown, shall be maintained. Edge distance may be adjusted to accommodate increase in concrete cover for architectual treatment.
8. Taper the top of the end of the bridge railing at 4:1 to match the top elevation of the thrie beam rail element.

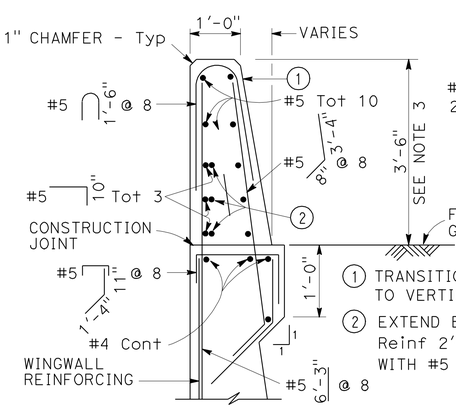

SECTION A-A

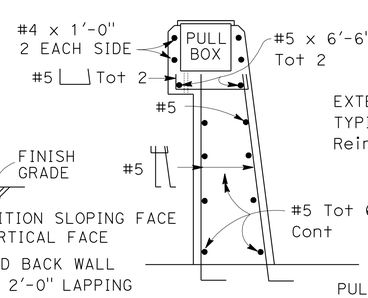

SECTION B-B

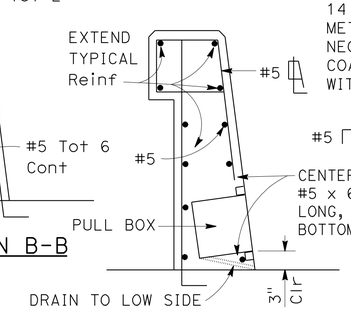

SECTION C-C
See Notes

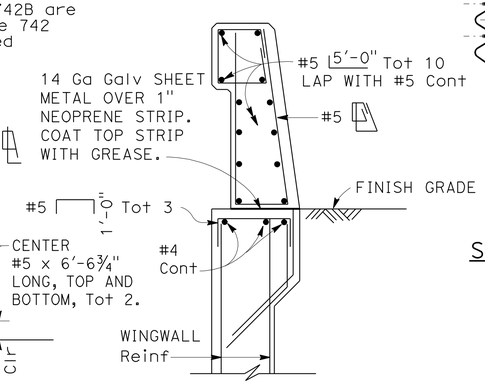

SECTION D-D

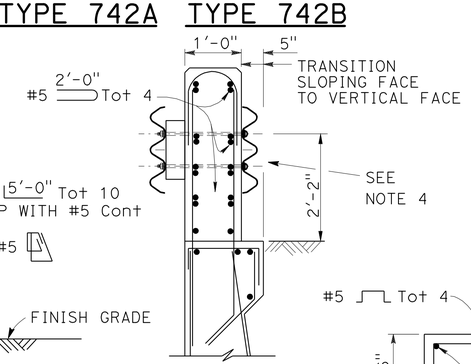

SECTION E-E
See Note 4

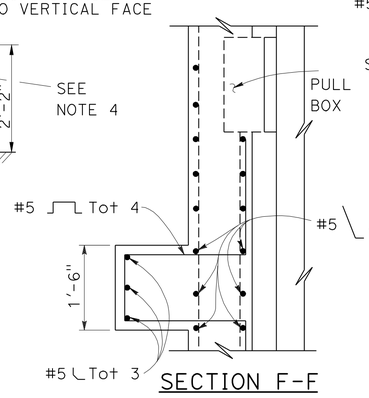

SECTION F-F

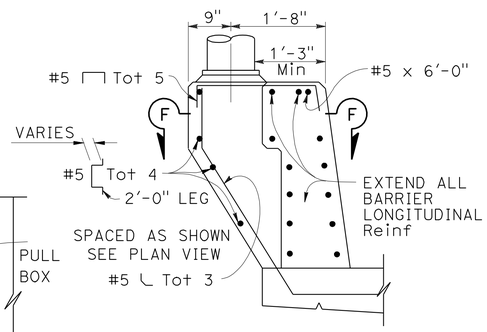

PEDESTAL ELEVATION

Details shown for barrier anchorage to Type 742A. Anchorage for barrier Types 742 and 742A are similar to their respective details.

STATE OF CALIFORNIA
DEPARTMENT OF TRANSPORTATION

CONCRETE BARRIER TYPE 742

NO SCALE

RSP B11-57 DATED JULY 19, 2013 SUPERSEDES STANDARD PLAN B11-57 DATED MAY 20, 2011 - PAGE 299 OF THE STANDARD PLANS BOOK DATED 2010.

REVISED STANDARD PLAN RSP B11-57

2010 REVISED STANDARD PLAN RSP B11-57

6-27-13

Dist	COUNTY	ROUTE	POST MILES TOTAL PROJECT	SHEET No.	TOTAL SHEETS
04	CC	680	22.7/24.8	104	186

Theresa Gabriel
REGISTERED ELECTRICAL ENGINEER

July 19, 2013
PLANS APPROVAL DATE

REGISTERED PROFESSIONAL ENGINEER
Theresa Aziz Gabriel
No. E15129
Exp. 6-30-14
ELECTRICAL
STATE OF CALIFORNIA

THE STATE OF CALIFORNIA OR ITS OFFICERS OR AGENTS SHALL NOT BE RESPONSIBLE FOR THE ACCURACY OR COMPLETENESS OF SCANNED COPIES OF THIS PLAN SHEET.

TO ACCOMPANY PLANS DATED 5-20-13

LEGEND:

AB	ABANDON. IF APPLIED TO CONDUIT, REMOVE CONDUCTORS
BC	INSTALL PULL BOX IN EXISTING CONDUIT RUN
BP	PEDESTRIAN BARRICADE, TYPE AS INDICATED ON PLAN
CB	INSTALL CONDUIT INTO EXISTING PULL BOX
CC	CONNECT NEW AND EXISTING CONDUIT. REMOVE EXISTING CONDUCTORS AND INSTALL CONDUCTORS AS INDICATED
CF	CONDUIT TO REMAIN FOR FUTURE USE. REMOVE CONDUCTORS. INSTALL PULL TAPE
DH	DETECTOR HANDHOLE
FA	FOUNDATION TO BE ABANDONED
IS	INSTALL SIGN ON SIGNAL MAST ARM
NS	NO SLIP BASE ON STANDARD
PEC	PHOTOELECTRIC CONTROL
PEU	PHOTOELECTRIC UNIT
RC	EQUIPMENT OR MATERIAL TO BE REMOVED AND BECOME THE PROPERTY OF THE CONTRACTOR
RE	REMOVE ELECTROLIER, FUSES AND BALLAST. TAPE ENDS OF CONDUCTORS
RL	RELOCATE EQUIPMENT
RR	REMOVE AND REUSE EQUIPMENT
RS	REMOVE AND SALVAGE EQUIPMENT
SC	SPLICE NEW TO EXISTING CONDUCTORS
SD	SERVICE DISCONNECT
TSP	TELEPHONE SERVICE POINT

ABBREVIATIONS

APS	ACCESSIBLE PEDESTRIAN SIGNAL
BBS	BATTERY BACKUP SYSTEM
BC	BOLT CIRCLE
BPB	BICYCLE PUSH BUTTON
C	CONDUIT
CB	CIRCUIT BREAKER
CCTV	CLOSED CIRCUIT TELEVISION
Ckt	CIRCUIT
CMS	CHANGEABLE MESSAGE SIGN
Ctid	CALTRANS IDENTIFICATION
Comm	COMMUNICATION
DLC	LOOP DETECTOR LEAD-IN CABLE
EMS	EXTINGUISHABLE MESSAGE SIGN
EVUC	EMERGENCY VEHICLE UNIT CABLE
EVUD	EMERGENCY VEHICLE UNIT DETECTOR
FB	FLASHING BEACON
FBCA	FLASHING BEACON CONTROL ASSEMBLY
FBS	FLASHING BEACON WITH SLIP BASE
FO	FIBER OPTIC
G	EQUIPMENT GROUNDING CONDUCTOR
GB	GROUND BUS
GFCI	GROUND FAULT CIRCUIT INTERRUPTER
HAR	HIGHWAY ADVISORY RADIO
Hex	HEXAGONAL
HPS	HIGH PRESSURE SODIUM
IISNS	INTERNALLY ILLUMINATED STREET NAME SIGN
ISL	INDUCTION SIGN LIGHTING
LED	LIGHT EMITTING DIODE
LMA	LUMINAIRE MAST ARM
LPS	LOW PRESSURE SODIUM
Ltg	LIGHTING
Lum	LUMINAIRE
M	METERED
MAT	MAST ARM MOUNTING TOP ATTACHMENT
MAS	MAST ARM MOUNTING SIDE ATTACHMENT
M/M	MULTIPLE TO MULTIPLE TRANSFORMER
Mtg	MOUNTING
MV	MERCURY VAPOR LIGHTING FIXTURE
MVDS	MICROWAVE VEHICLE DETECTION SYSTEM
N	NEUTRAL (GROUNDED CONDUCTOR)
NB	NEUTRAL BUS
NC	NORMALLY CLOSE
NO	NORMALLY OPEN
P	CIRCUIT BREAKER'S POLE
PB	PULL BOX
PBA	PUSH BUTTON ASSEMBLY
PEC	PHOTOELECTRIC CONTROL
Ped	PEDESTRIAN
PEU	PHOTOELECTRIC UNIT
PT	CONDUIT WITH PULL TAPE
RE	RELOCATED EQUIPMENT
RM	RAMP METERING
RWIS	ROADSIDE WEATHER INFORMATION SYSTEM
SB	SLIP BASE
SIC	SIGNAL INTERCONNECT CABLE
Sig	SIGNAL
SMA	SIGNAL MAST ARM
SNS	STREET NAME SIGN
SP	SERVICE POINT
TDC	TELEPHONE DEMARCATION CABINET
TMS	TRAFFIC MONITORING STATION
TOS	TRAFFIC OPERATIONS SYSTEM
Veh	VEHICLE
VIVDS	VIDEO IMAGE VEHICLE DETECTION SYSTEM
WIM	WEIGH-IN-MOTION
Xfmr	TRANSFORMER

SOFFIT AND WALL MOUNTED LUMINAIRES

PENDANT, 70 W HPS UNLESS OTHERWISE SPECIFIED

FLUSH, 70 W HPS UNLESS OTHERWISE SPECIFIED

WALL SURFACE, 70 W HPS UNLESS OTHERWISE SPECIFIED

EXISTING SOFFIT OR WALL LUMINAIRE TO REMAIN UNMODIFIED

EXISTING SOFFIT OR WALL LUMINAIRE TO BE MODIFIED AS SPECIFIED

NOTE:

Arrow indicates "street side" of luminaire.

COMMONLY USED SYMBOLS FOR UNITED STATES CUSTOMARY UNITS OF MEASUREMENT:

SYMBOL USED	DEFINITIONS
Ω	OHMS
min	MINUTE
s	SECOND
bps	BITS PER SECOND
Bps	BYTES PER SECOND
A	AMPERE
V	VOLT
V(dc)	VOLT (DIRECT CURRENT)
V(ac)	VOLT (ALTERNATING CURRENT)
FC	FOOT - CANDLE
W	WATTS
VA	VOLT-AMPERE
M	MEGA
k	KILO
m	MILLI
μ	MICRO
P	PICO
Hz	HERTZ

MISCELLANEOUS ELECTROLIERS

NEW	EXISTING	
		LUMINAIRE ON WOOD POLE
		NON-STANDARD ELECTROLIER (SEE PROJECT NOTES OR PROJECT PLANS)
		CITY ELECTROLIER
		ELECTROLIER FOUNDATION (FUTURE INSTALLATION)

NOTES:

1. HPS luminaires shall be 310 W HPS when installed on Type 21, 21D, 30, 31 and 32 Standards, unless otherwise specified. HPS luminaires shall be 200 W when installed on other type standards or poles, unless otherwise specified.
2. LED luminaires shall be 235 W when installed on Type 21, 21D, 30, 31 and 32 Standards, unless otherwise specified. LED luminaires shall be 165 W when installed on other type standards or poles, unless otherwise specified.
3. Luminaires shall be the cutoff type, ANSI Type III medium cutoff lighting distribution, unless otherwise specified.

STANDARD ELECTROLIER

NEW	EXISTING	STANDARD TYPE
		15
		15D
		15 STRUCTURE
		15D STRUCTURE
		21
		21D
		21 STRUCTURE
		21D STRUCTURE
		30
		31
		32

STATE OF CALIFORNIA
DEPARTMENT OF TRANSPORTATION

ELECTRICAL SYSTEMS (LEGEND AND ABBREVIATIONS)

NO SCALE

RSP ES-1A DATED JULY 19, 2013 SUPERSEDES STANDARD PLAN ES-1A DATED MAY 20, 2011 - PAGE 425 OF THE STANDARD PLANS BOOK DATED 2010.

REVISED STANDARD PLAN RSP ES-1A

2010 REVISED STANDARD PLAN RSP ES-1A

Dist	COUNTY	ROUTE	POST MILES TOTAL PROJECT	SHEET No.	TOTAL SHEETS
04	CC	680	22.7/24.8	105	186

Theresa Gabriel
REGISTERED ELECTRICAL ENGINEER

July 19, 2013
PLANS APPROVAL DATE

REGISTERED PROFESSIONAL ENGINEER
Theresa Aziz Gabriel
No. E15129
Exp. 6-30-14
ELECTRICAL
STATE OF CALIFORNIA

THE STATE OF CALIFORNIA OR ITS OFFICERS OR AGENTS SHALL NOT BE RESPONSIBLE FOR THE ACCURACY OR COMPLETENESS OF SCANNED COPIES OF THIS PLAN SHEET.

TO ACCOMPANY PLANS DATED 5-20-13

2010 REVISED STANDARD PLAN RSP ES-1B

CONDUIT

NEW	EXISTING	
		LIGHTING CONDUIT, UNLESS OTHERWISE INDICATED OR NOTED
		TRAFFIC SIGNAL CONDUIT
C	c	COMMUNICATION CONDUIT
T	t	TELEPHONE CONDUIT
F	f	FIRE ALARM CONDUIT
FO	fo	FIBER OPTIC CONDUIT
		CONDUIT TERMINATION
R	r	CONDUIT RISER ATTACHED TO THE STRUCTURE OR SERVICE POLE

SERVICE EQUIPMENT

NEW	EXISTING	
OH	oh	OVERHEAD LINES
U	U	WOOD POLE, "U" INDICATES UTILITY OWNED
		POLE GUY WITH ANCHOR
		UTILITY TRANSFORMER - GROUND MOUNTED
III	III	SERVICE EQUIPMENT ENCLOSURE TYPE. DOOR INDICATES FRONT OF ENCLOSURE
T	t	TELEPHONE DEMARCATION CABINET

POLE-MOUNTED SERVICE DESIGNATION

TYPE H SERVICE, 28'-10" — TYPE OF INSTALLATION AND POLE HEIGHT ABOVE GRADE

FLASHING BEACON

NEW	EXISTING	
R	R	FLASHING BEACON (ONE VEHICLE SIGNAL HEAD WITH BACKPLATE AND VISOR) "R" INDICATES RED INDICATION, "Y" INDICATES YELLOW INDICATION
Y Y	Y Y	FLASHING BEACON WITH TYPE 15-FBS STANDARD AND A SIGN.
R R	R R	FLASHING BEACON WITH TYPES 9, 9A OR 9B SIGN UNLESS OTHERWISE SPECIFIED OR INDICATED

SIGNAL EQUIPMENT

NEW	EXISTING	
C	C	PEDESTRIAN SIGNAL HEAD "C" INDICATES COUNTDOWN PEDESTRIAN HEAD
		PUSH BUTTON ASSEMBLY POST
		PEDESTRIAN BARRICADE
		VEHICLE SIGNAL HEAD (WITH BACKPLATE AND 3-SECTIONS: RED, YELLOW AND GREEN)
		VEHICLE SIGNAL HEAD WITH ANGLE VISOR
PV	PV	MODIFICATIONS OF BASIC SYMBOL: "L" INDICATES ALL NON-ARROW SECTIONS LOUVERED "LG" INDICATES LOUVERED GREEN SECTION ONLY "PV" INDICATES ALL 12" SECTIONS PROGRAMMED VISIBILITY "8" INDICATES ALL 8" SECTIONS (ONLY WHEN SPECIFIED)
		VEHICLE SIGNAL HEAD CONSISTING OF RED, YELLOW AND GREEN LEFT ARROW SECTIONS
		VEHICLE SIGNAL HEAD CONSISTING OF RED AND YELLOW SECTIONS WITH AN UP GREEN ARROW SECTION
		VEHICLE SIGNAL HEAD (5 SECTION) CONSISTING OF RED, YELLOW AND GREEN SECTIONS WITH YELLOW AND GREEN RIGHT ARROW SECTIONS
		TYPE 15TS STANDARD WITH VEHICLE SIGNAL HEAD AND LUMINAIRE
		TYPE 21TS STANDARD WITH VEHICLE SIGNAL HEAD AND LUMINAIRE
		STANDARD WITH LUMINAIRE AND SIGNAL MAST ARMS AND ATTACHED VEHICLE SIGNAL HEADS
		TYPE 1 STANDARD WITH ATTACHED VEHICLE SIGNAL HEADS
		STANDARD WITH A SIGNAL MAST ARM, ATTACHED VEHICLE SIGNAL HEADS AND INTERNALLY ILLUMINATED STREET NAME SIGN
		CONTROLLER ASSEMBLY. DOOR INDICATES FRONT OF CABINET

SIGNAL EQUIPMENT Cont

NEW	EXISTING	
		GUARD POST
		TYPE 1 STANDARD WITH RAMP METERING SIGN
		OPTICAL DETECTOR FOR THE EMERGENCY VEHICLE DETECTION SYSTEM

NOTES:

1. All signal sections shall be 12" unless shown otherwise.
2. Signal heads shall be provided with backplates unless shown otherwise.

ILLUMINATED OVERHEAD SIGN

NEW	EXISTING	
		SINGLE POST, SINGLE ILLUMINATED SIGN, BALANCED BUTTERFLY
		SINGLE POST, DOUBLE ILLUMINATED SIGN, BALANCED BUTTERFLY
		SINGLE POST, SINGLE ILLUMINATED SIGN, FULL CANTILEVER
		DOUBLE POST, SINGLE ILLUMINATED SIGN
		SINGLE ILLUMINATED SIGN MOUNTED ON STRUCTURE
		DOUBLE POST, SINGLE ILLUMINATED SIGN WITH ELECTROLIER

STATE OF CALIFORNIA
DEPARTMENT OF TRANSPORTATION

ELECTRICAL SYSTEMS (LEGEND AND ABBREVIATIONS)

NO SCALE

RSP ES-1B DATED JULY 19, 2013 SUPERSEDES STANDARD PLAN ES-1B DATED MAY 20, 2011 - PAGE 426 OF THE STANDARD PLANS BOOK DATED 2010.

REVISED STANDARD PLAN RSP ES-1B

Dist	COUNTY	ROUTE	POST MILES TOTAL PROJECT	SHEET No.	TOTAL SHEETS
04	CC	680	22.7/24.8	106	186

Theresa Gabriel
REGISTERED ELECTRICAL ENGINEER

July 19, 2013
PLANS APPROVAL DATE

REGISTERED PROFESSIONAL ENGINEER
Theresa Aziz Gabriel
No. E15129
Exp. 6-30-14
ELECTRICAL
STATE OF CALIFORNIA

THE STATE OF CALIFORNIA OR ITS OFFICERS OR AGENTS SHALL NOT BE RESPONSIBLE FOR THE ACCURACY OR COMPLETENESS OF SCANNED COPIES OF THIS PLAN SHEET.

TO ACCOMPANY PLANS DATED 5-20-13

EQUIPMENT IDENTIFICATION

ILLUMINATED SIGN IDENTIFICATION NUMBER:

SIGN No. 12345

10 ISL SCI 1.0

- SIGN NUMBER - PLACE ON POST OR STRUCTURE
- TRANSFORMER RATING (kVA)
- LIGHTING CONTROL TYPE
- NUMBER AND TYPE OF FIXTURES

} DO NOT PLACE ON STANDARD OR STRUCTURE

ELECTROLIER OR EQUIPMENT IDENTIFICATION NUMBER:

12345 - 15'-0"

- MAST ARM LENGTH, IF SHOWN. DO NOT PLACE ON STANDARD OR STRUCTURE
- EQUIPMENT NUMBER - PLACE ON STANDARD OR STRUCTURE. EXISTING EQUIPMENT NUMBERS ARE SHOWN IN PARENTHESIS

CONDUIT AND CONDUCTOR IDENTIFICATION:

1½"C, 2#10, 15#14, 2 DLC, 12P#18 (PAIR)

- NUMBER AND SIZE OF CONDUCTORS AND CABLES
- SIZE OF CONDUIT IN INCHES

Ø1, Ø2, Ø2P, etc.	TRAFFIC PHASE IDENTIFICATION FOR SIGNAL FACES, DETECTORS AND PHASE DIAGRAMS
1 2 3	LEGEND NUMBERS
A B C	EQUIPMENT, SIGNAL POLES, INSTALLATION OR ITEMS
1 2 3	CONDUIT RUN NUMBERS

SIGNAL AND LIGHTING STANDARD (TYPICAL DESIGNATION):

19A - 3 - 100

- WIND VELOCITY = 100 mph
- CASE 3 ARM LOADING
- STANDARD TYPE
- STANDARD PLAN SHEET NUMBER
- DETAIL, NUMBER, SECTION, TYPE OR ELEVATION

MISCELLANEOUS EQUIPMENT

NEW	EXISTING	
CMS	cms	CHANGEABLE MESSAGE SIGN
		CLOSED CIRCUIT TELEVISION CAMERA
		HIGHWAY ADVISORY RADIO POLE AND ANTENNA
EMS	ems	EXTINGUISHABLE MESSAGE SIGN
M V	m v	DETECTION DEVICE M = MICROWAVE SENSOR V = VIDEO IMAGE SENSOR

WIRING DIAGRAM LEGEND

- EXTERNAL CONDUCTOR
- CONDUCTOR OR BUS
- TIE POINT
- CONTACTOR COIL
- CONTACTOR, NO CONTACT
- TERMINAL BLOCKS
- CONTACTOR, NC CONTACT
- ENCLOSURE BOND
- GROUNDING ELECTRODE
- CIRCUIT BREAKER
- RECEPTACLE

PULL BOXES

NEW	EXISTING	
		PULL BOX, No. 5 UNLESS OTHERWISE INDICATED OR NOTED
3	9A(21)	PULL BOX, ADDITIONAL DESIGNATIONS OR DESCRIPTIONS

3 No. 3½ PULL BOX
5 No. 5 PULL BOX
6 No. 6 PULL BOX
7 No. 7 (CEILING PULL BOX)
8 No. 8 (PENDANT SOFFIT PULL BOX)
9 No. 9 PULL BOX
9A No. 9A PULL BOX

(C) COMMUNICATIONS PULL BOX
(E) PULL BOX WITH EXTENSION
(S) SPRINKLER CONTROL PULL BOX
(21) ANCHOR BOLTS AND CONDUIT FOR FUTURE INSTALLATION OF TYPE 21 STANDARD
(T) TRAFFIC PULL BOX

VEHICLE DETECTORS

5 J 9 U

- VEHICLE DETECTOR DESIGNATION
- U = UPPER
  L = LOWER
- SLOT NUMBER IN INPUT FILE
- INPUT FILE (I OR J)
- PHASE

NEW	EXISTING	
		TYPE A DETECTOR LOOP. OUTLINE OF SAWCUT SHOWN
		TYPE B DETECTOR LOOP. OUTLINE OF SAWCUT SHOWN
		TYPE C DETECTOR LOOP. OUTLINE OF SAWCUT SHOWN
		TYPE D DETECTOR LOOP. OUTLINE OF SAWCUT SHOWN
		TYPE E DETECTOR LOOP. OUTLINE OF SAWCUT SHOWN
		TYPE Q DETECTOR LOOP. OUTLINE OF SAWCUT SHOWN
		MAGNETIC DETECTOR
DH	dh	DETECTOR HANDHOLE
		MICROWAVE OR VIDEO DETECTION ZONE

STATE OF CALIFORNIA
DEPARTMENT OF TRANSPORTATION

ELECTRICAL SYSTEMS (LEGEND AND ABBREVIATIONS)

NO SCALE

RSP ES-1C DATED JULY 19, 2013 SUPERSEDES STANDARD PLAN ES-1C DATED MAY 20, 2011 - PAGE 427 OF THE STANDARD PLANS BOOK DATED 2010.

REVISED STANDARD PLAN RSP ES-1C

2010 REVISED STANDARD PLAN RSP ES-1C

7-11-13

Dist	COUNTY	ROUTE	POST MILES TOTAL PROJECT	SHEET No.	TOTAL SHEETS
04	CC	680	22.7/24.8	107	186

Theresa Gabriel
REGISTERED ELECTRICAL ENGINEER

July 19, 2013
PLANS APPROVAL DATE

REGISTERED PROFESSIONAL ENGINEER
Theresa Aziz Gabriel
No. E15129
Exp. 6-30-14
ELECTRICAL
STATE OF CALIFORNIA

THE STATE OF CALIFORNIA OR ITS OFFICERS OR AGENTS SHALL NOT BE RESPONSIBLE FOR THE ACCURACY OR COMPLETENESS OF SCANNED COPIES OF THIS PLAN SHEET.

TO ACCOMPANY PLANS DATED 5-20-13

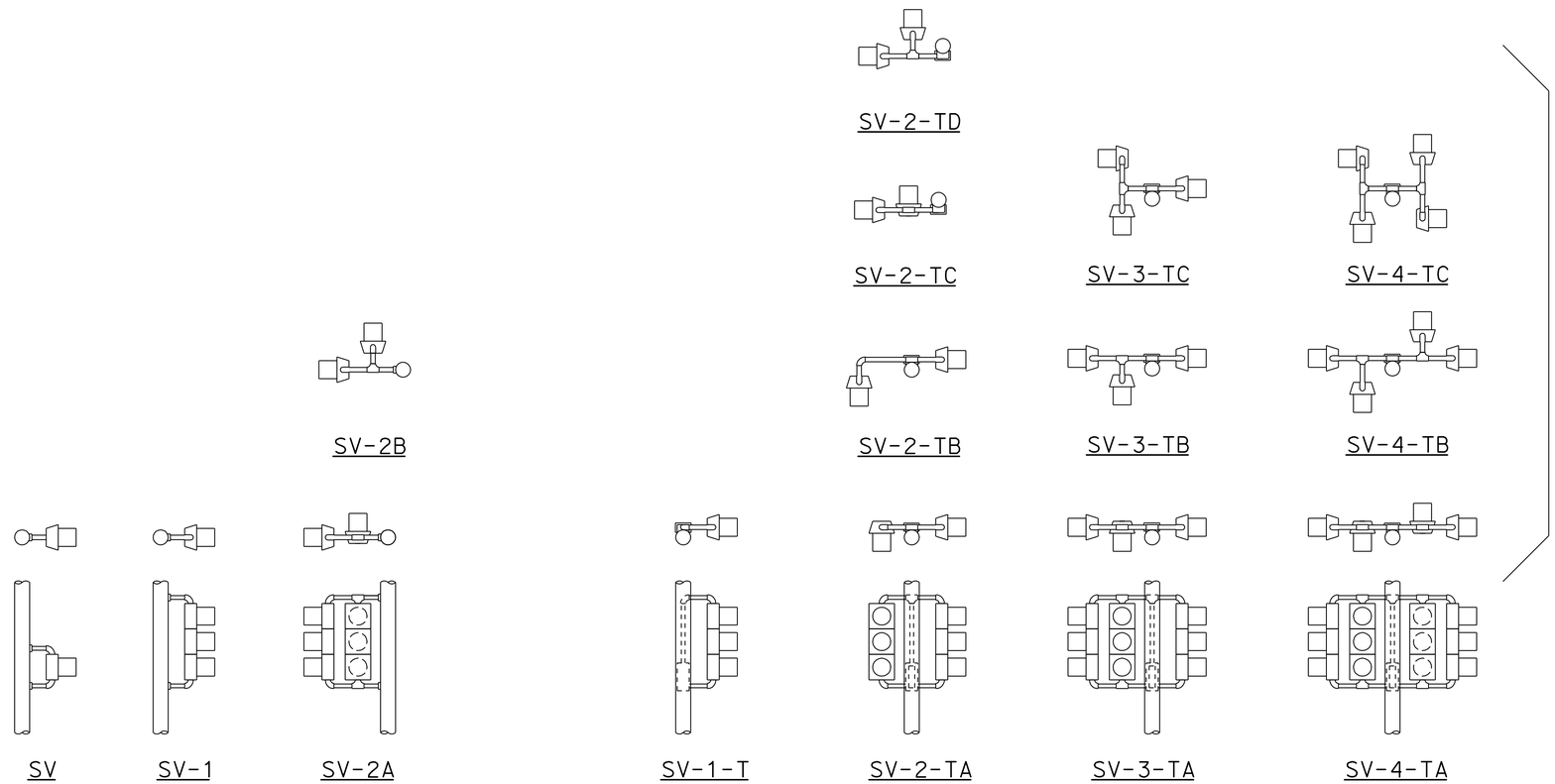

SIDE MOUNTINGS

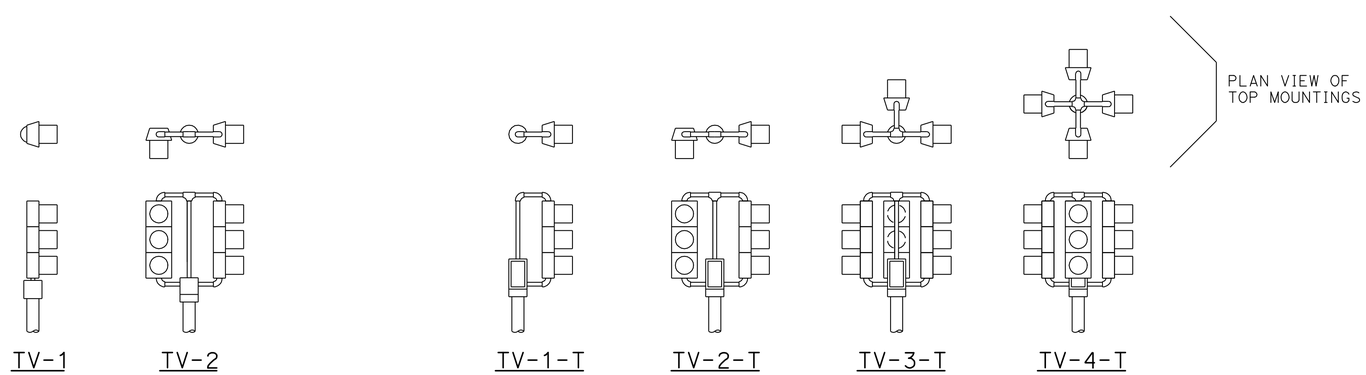

TOP MOUNTINGS

ABBREVIATIONS:

SV	SIDE MOUNTED VEHICLE SIGNALS
T	TERMINAL COMPARTMENT
TV	TOP MOUNTED VEHICLE SIGNALS
1, 2, 3, 4	NUMBER OF SIGNAL FACES (3 - SECTION, UNLESS OTHERWISE INDICATED)
A, B, C, D	CONFIGURATION OF SIGNALS

NOTES:

1. Mountings shall be oriented to provide maximum horizontal clearance to adjacent roadway.
2. Bracket arms shall be long enough to permit proper alignment of signals and backplate installation.
3. See Standard Plans ES-4D and ES-4E for attachment fitting details.

STATE OF CALIFORNIA
DEPARTMENT OF TRANSPORTATION

ELECTRICAL SYSTEMS (VEHICULAR SIGNAL HEADS AND MOUNTINGS)

NO SCALE

RSP ES-4A DATED JULY 19, 2013 SUPERSEDES STANDARD PLAN ES-4A DATED MAY 20, 2011 - PAGE 443 OF THE STANDARD PLANS BOOK DATED 2010.

REVISED STANDARD PLAN RSP ES-4A

2010 REVISED STANDARD PLAN RSP ES-4A

7-9-13

Dist	COUNTY	ROUTE	POST MILES TOTAL PROJECT	SHEET No.	TOTAL SHEETS
04	CC	680	22.7/24.8	108	186

Theresa Gabriel
REGISTERED ELECTRICAL ENGINEER

July 19, 2013
PLANS APPROVAL DATE

REGISTERED PROFESSIONAL ENGINEER
Theresa Aziz Gabriel
No. E15129
Exp. 6-30-14
ELECTRICAL
STATE OF CALIFORNIA

THE STATE OF CALIFORNIA OR ITS OFFICERS OR AGENTS SHALL NOT BE RESPONSIBLE FOR THE ACCURACY OR COMPLETENESS OF SCANNED COPIES OF THIS PLAN SHEET.

TO ACCOMPANY PLANS DATED 5-20-13

VISORS

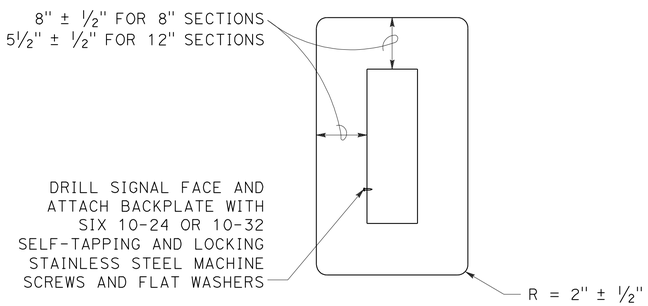

8" AND 12" SECTIONS

BACKPLATE

1/16" minimum thickness
3001-14 aluminum or plastic
when specified

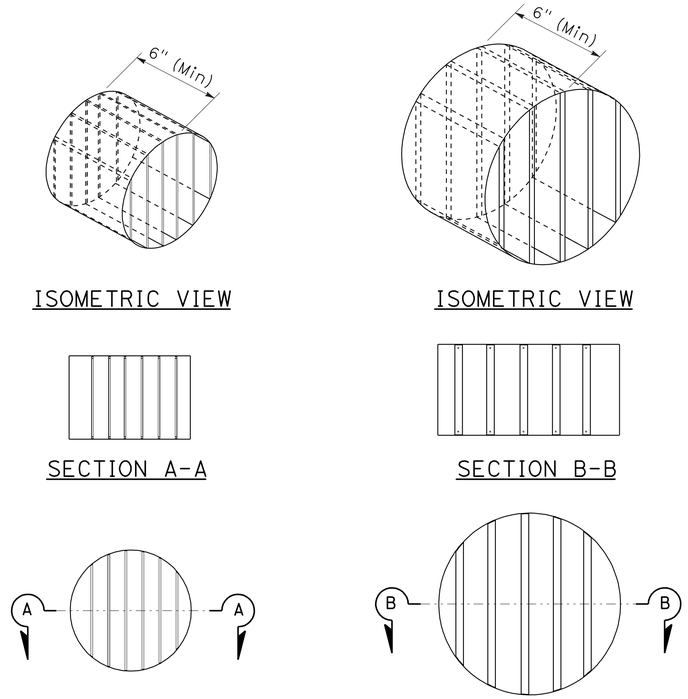

DIRECTIONAL LOUVER

Directional louvers shall be oriented as directed by the Engineer and secured in place with one plated brass machine screw and nut.

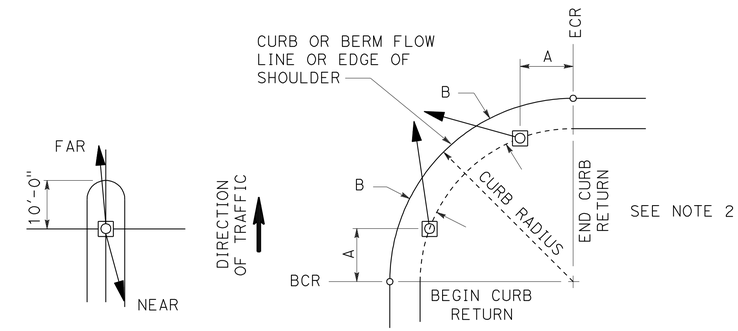

NOTES:

1. Typical signal pole placement unless dimensioned on plans.
2. For A and B dimensions, see Pole Schedule, or as directed by the Engineer.

SIGNAL STANDARD PLACEMENT DIMENSIONS AND EQUIPMENT LOCATIONS

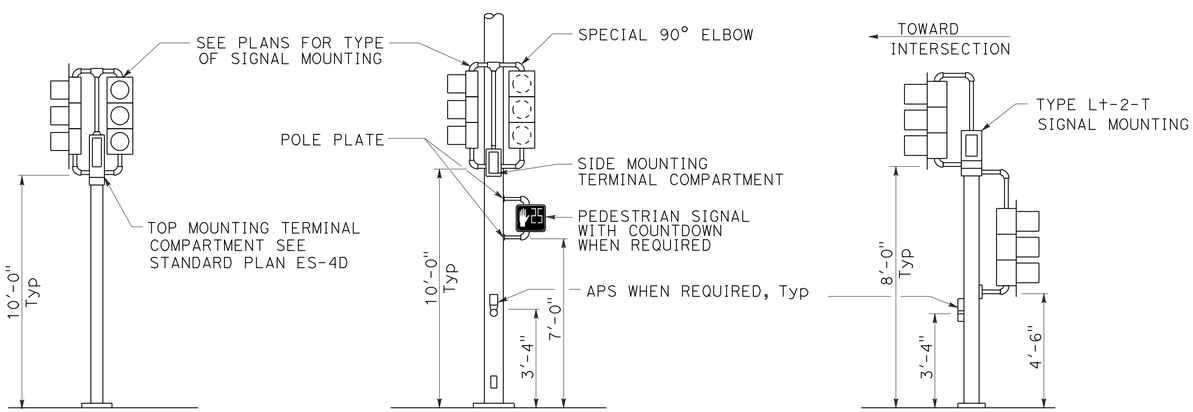

TOP MOUNTED SIGNALS (TV)
Type 1-A, 1-B, 1-C and 1-D standard as indicated on the plans

SIDE MOUNTED SIGNALS (SV AND SP)
Normally used on standards with luminaire or signal mast arm

LEFT TURN LANE SIGNAL
Type 1-A, 1-B, 1-C and 1-D standard as indicated on plans

TYPICAL SIGNAL INSTALLATIONS

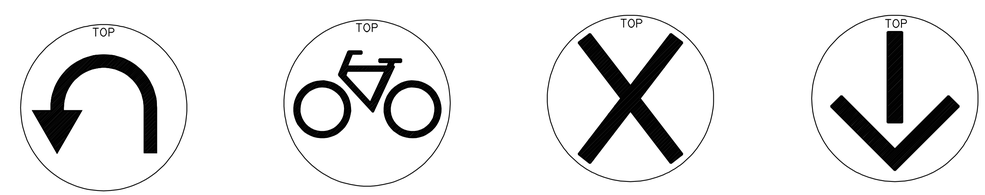

U-TURN | BICYCLE | LANE CONTROL | LANE CONTROL

SIGNAL FACES

STATE OF CALIFORNIA
DEPARTMENT OF TRANSPORTATION

ELECTRICAL SYSTEMS (VEHICULAR SIGNAL HEADS AND MOUNTINGS)

NO SCALE

RSP ES-4C DATED JULY 19, 2013 SUPERSEDES STANDARD PLAN ES-04C DATED MAY 20, 2011 - PAGE 445 OF THE STANDARD PLANS BOOK DATED 2010.

REVISED STANDARD PLAN RSP ES-4C

2010 REVISED STANDARD PLAN RSP ES-4C

Dist	COUNTY	ROUTE	POST MILES TOTAL PROJECT	SHEET No.	TOTAL SHEETS
04	CC	680	22.7/24.8	109	186

Theresa Gabriel
REGISTERED ELECTRICAL ENGINEER

July 19, 2013
PLANS APPROVAL DATE

REGISTERED PROFESSIONAL ENGINEER
Theresa Aziz Gabriel
No. E15129
Exp. 6-30-14
ELECTRICAL
STATE OF CALIFORNIA

THE STATE OF CALIFORNIA OR ITS OFFICERS OR AGENTS SHALL NOT BE RESPONSIBLE FOR THE ACCURACY OR COMPLETENESS OF SCANNED COPIES OF THIS PLAN SHEET.

TO ACCOMPANY PLANS DATED 5-20-13

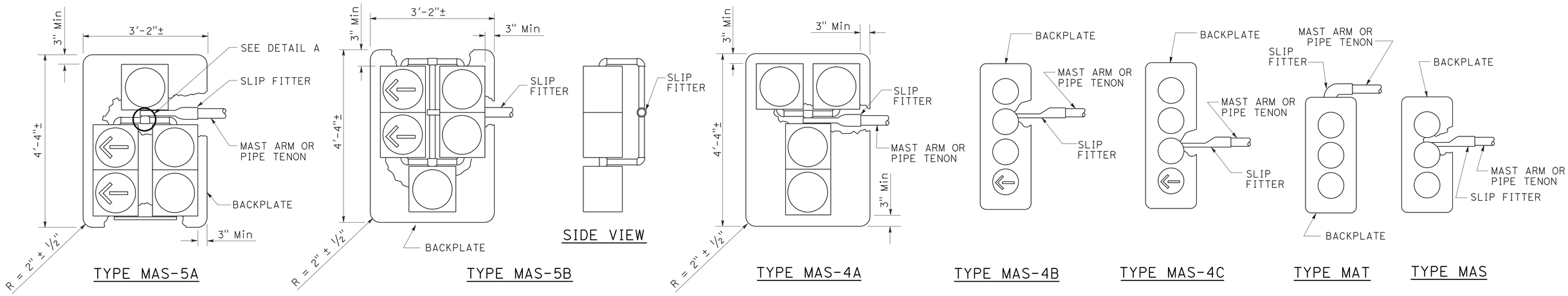

MAST ARM MOUNTINGS

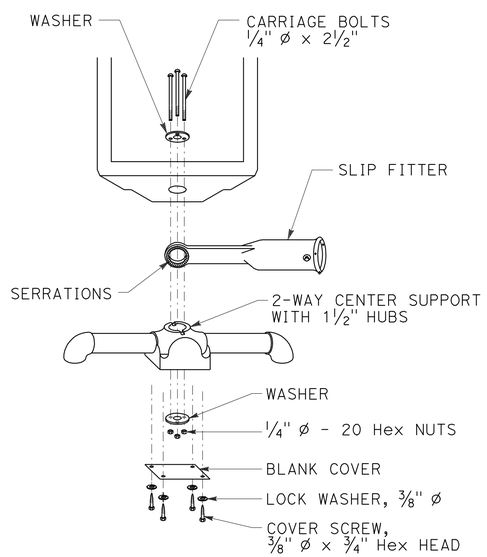

DETAIL A

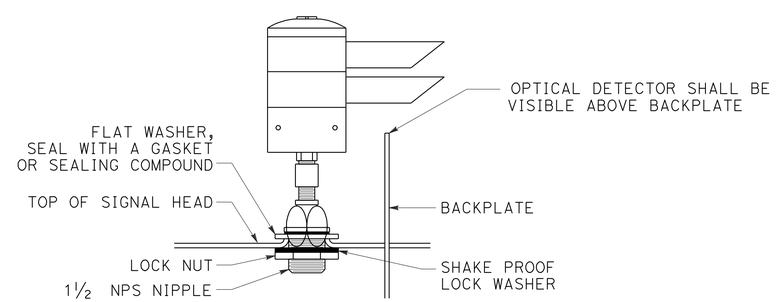

OPTICAL DETECTOR MOUNTING FOR EMERGENCY VEHICLE DETECTION SYSTEM

DETAIL B

STATE OF CALIFORNIA
DEPARTMENT OF TRANSPORTATION

ELECTRICAL SYSTEMS (VEHICULAR SIGNAL HEADS AND OPTICAL DETECTOR MOUNTING)

NO SCALE

RSP ES-4E DATED JULY 19, 2013 SUPERSEDES STANDARD PLAN ES-4E DATED MAY 20, 2011 - 447 OF THE STANDARD PLANS BOOK DATED 2010.

REVISED STANDARD PLAN RSP ES-4E

2010 REVISED STANDARD PLAN RSP ES-4E

7-9-13

Dist	COUNTY	ROUTE	POST MILES TOTAL PROJECT	SHEET No.	TOTAL SHEETS
04	CC	680	22.7/24.8	110	186

Theresa Gabriel
REGISTERED ELECTRICAL ENGINEER

July 19, 2013
PLANS APPROVAL DATE

REGISTERED PROFESSIONAL ENGINEER
Theresa Aziz Gabriel
No. E15129
Exp. 6-30-14
ELECTRICAL
STATE OF CALIFORNIA

THE STATE OF CALIFORNIA OR ITS OFFICERS OR AGENTS SHALL NOT BE RESPONSIBLE FOR THE ACCURACY OR COMPLETENESS OF SCANNED COPIES OF THIS PLAN SHEET.

TO ACCOMPANY PLANS DATED 5-20-13

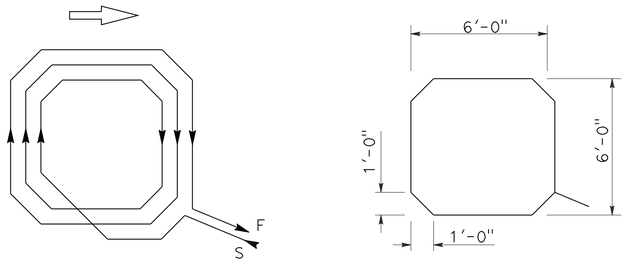

WINDING DETAIL SAWCUT DETAIL

TYPE A LOOP DETECTOR CONFIGURATION

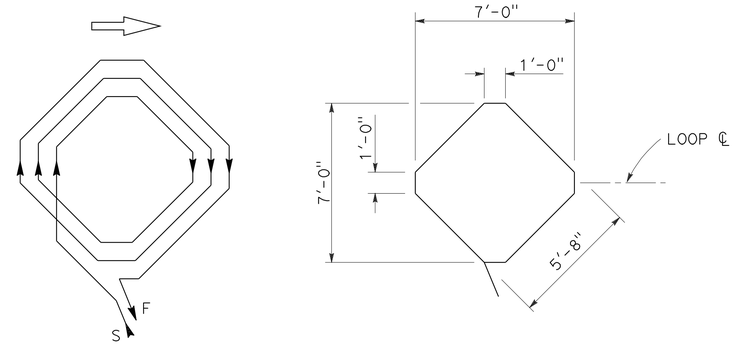

WINDING DETAIL SAWCUT DETAIL

TYPE B LOOP DETECTOR CONFIGURATION

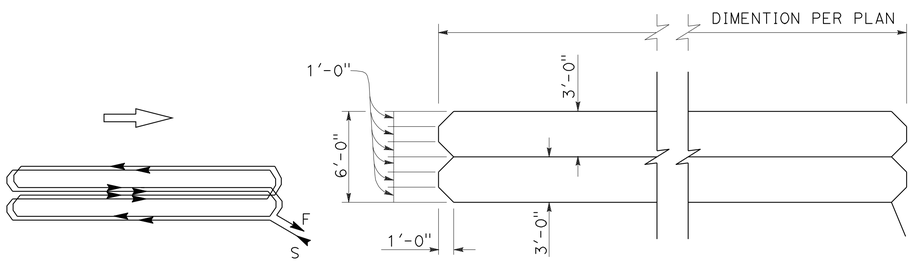

WINDING DETAIL SAWCUT DETAIL

TYPE C LOOP DETECTOR CONFIGURATION

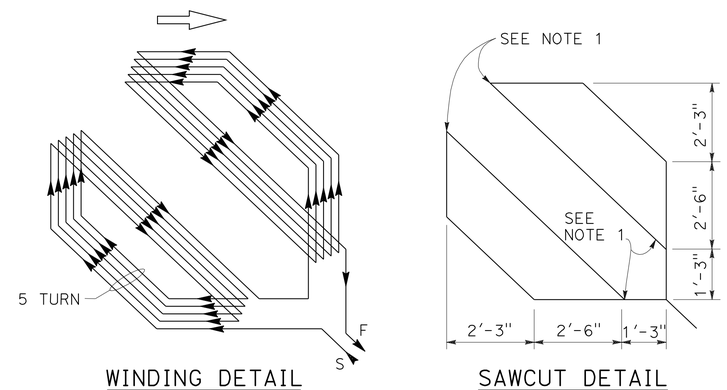

WINDING DETAIL SAWCUT DETAIL

TYPE D LOOP DETECTOR CONFIGURATION

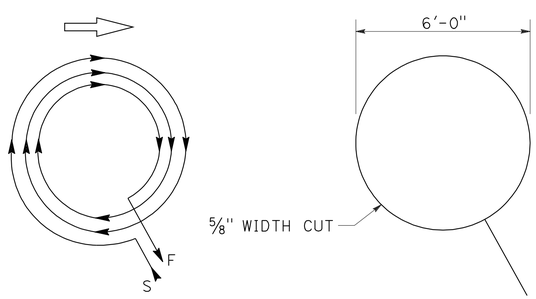

WINDING DETAIL SAWCUT DETAIL

TYPE E LOOP DETECTOR CONFIGURATION

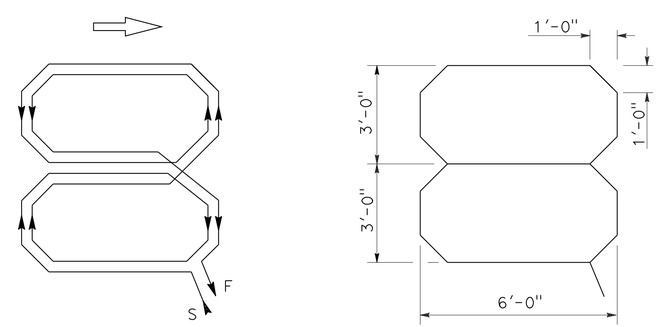

WINDING DETAIL SAWCUT DETAIL

TYPE Q LOOP DETECTOR CONFIGURATION

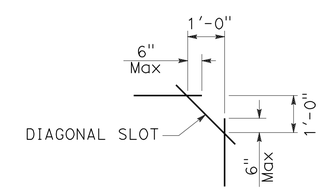

PLAN VIEW OF DIAGONAL SLOT AT CORNERS

NOTES:

1. Round corners of acute angle sawcuts to prevent damage to conductors.
2. Typical distance separating loops from edge to edge is 10' for Type A, B, D and E installation in single lane.

STATE OF CALIFORNIA
DEPARTMENT OF TRANSPORTATION

ELECTRICAL SYSTEMS (DETECTORS)

NO SCALE

RSP ES-5B DATED JULY 19, 2013 SUPERSEDES STANDARD PLAN ES-5B DATED MAY 20, 2011 - PAGE 449 OF THE STANDARD PLANS BOOK DATED 2010.

REVISED STANDARD PLAN RSP ES-5B

2010 REVISED STANDARD PLAN RSP ES-5B

7-9-13

Dist	COUNTY	ROUTE	POST MILES TOTAL PROJECT	SHEET No.	TOTAL SHEETS
04	CC	680	22.7/24.8	111	186

Theresa Gabriel
REGISTERED ELECTRICAL ENGINEER

July 19, 2013
PLANS APPROVAL DATE

REGISTERED PROFESSIONAL ENGINEER Theresa Aziz Gabriel No. E15129 Exp. 6-30-14 ELECTRICAL STATE OF CALIFORNIA

THE STATE OF CALIFORNIA OR ITS OFFICERS OR AGENTS SHALL NOT BE RESPONSIBLE FOR THE ACCURACY OR COMPLETENESS OF SCANNED COPIES OF THIS PLAN SHEET.

TO ACCOMPANY PLANS DATED 5-20-13

2010 REVISED STANDARD PLAN RSP ES-5D

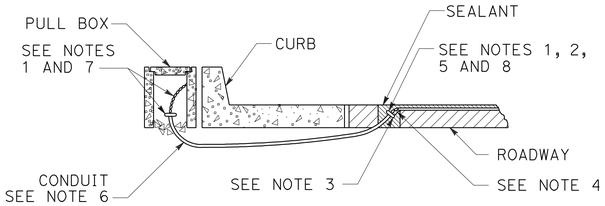

TYPE A
CURB TERMINATION DETAIL

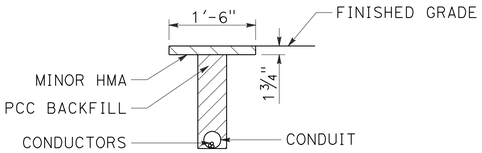

"T" TRENCH
DETAIL T

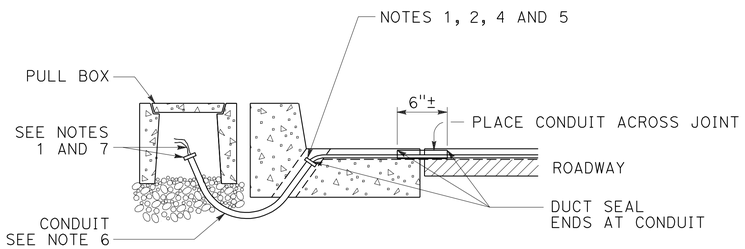

CROSS SECTION

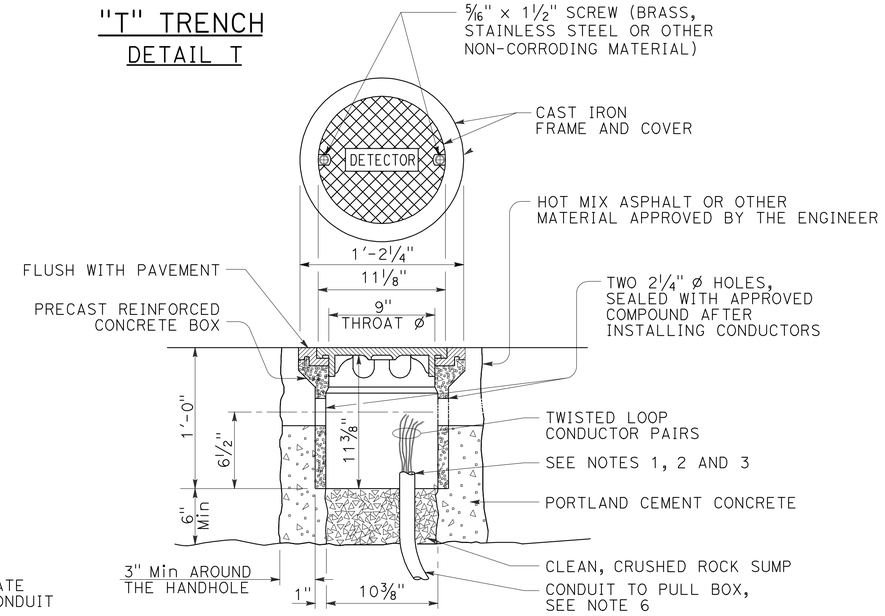

DETECTOR HANDHOLE DETAIL

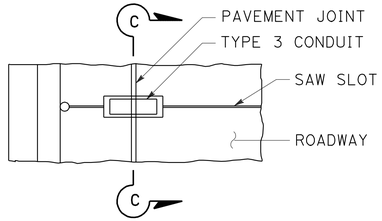

PLAN VIEW

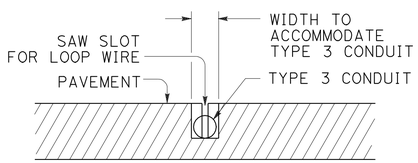

SECTION C-C

TYPE B
CURB TERMINATION DETAIL

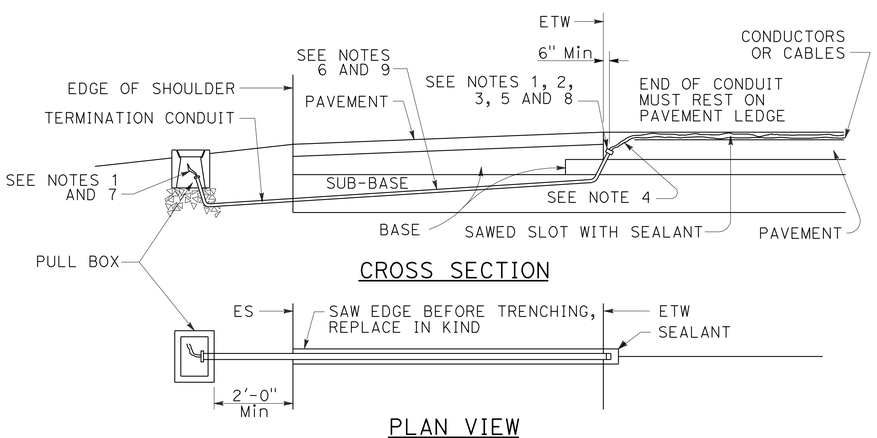

CROSS SECTION

PLAN VIEW

SHOULDER TERMINATION DETAILS

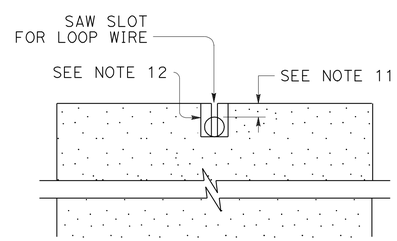

SECTION A-A

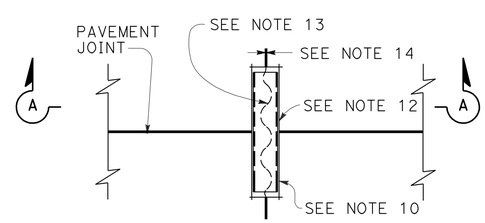

PLAN VIEW

TYPICAL LOOP LEAD-IN DETAIL AT PAVEMENT JOINT

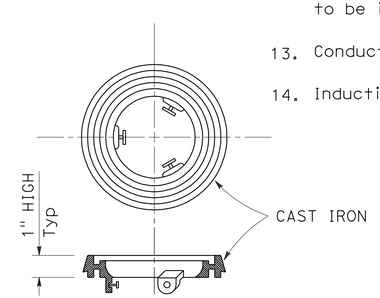

LOCKING GRADE RING

NOTES:

1. Bushing shall be used at end of conduit.
2. Tape detector conductors or cables 3" each side of bushings.
3. Install duct seal compound to each end of termination conduit before installing sealant.
4. Round all sharp edges where detector conductors or cables have to pass.
5. End of conduit shall be 3⅛" below roadway surface.
6.

Conduit size	Loop conductors
1"C minimum	1 to 2 pairs
1½"C minimum	3 to 4 pairs
2"C minimum	5 or more pairs

7. Splice detector conductors or cables to detector lead-in-cable.
8. Location of detector handhole when shown on plans.
9. When the shoulder and traveled way are paved with the same material and there is no joint between them, the conduit shall extend only 2'-0" into the shoulder pavement.
10. ¾"C, Type 3 conduit 6" long minimum, plug both ends with duct compound to keep out sealant.
11. ½" Minimum between top of conduit and pavement surface.
12. Sawcut shall not exceed 1" in width and ⅛" longer than conduit to be installed.
13. Conductors with ½" minimum slack inside conduit.
14. Inductive loop detector saw slot.

STATE OF CALIFORNIA
DEPARTMENT OF TRANSPORTATION

ELECTRICAL SYSTEMS (CURB TERMINATION AND HANDHOLE)

NO SCALE

RSP ES-5D DATED JULY 19, 2013 SUPERSEDES STANDARD PLAN ES-5D DATED MAY 20, 2011 - PAGE 451 OF THE STANDARD PLANS BOOK DATED 2010.

REVISED STANDARD PLAN RSP ES-5D

Dist	COUNTY	ROUTE	POST MILES TOTAL PROJECT	SHEET No.	TOTAL SHEETS
04	CC	680	22.7/24.8	112	186

REGISTERED CIVIL ENGINEER

July 19, 2013
PLANS APPROVAL DATE

REGISTERED PROFESSIONAL ENGINEER Stanley P. Johnson No. C57793 Exp. 3-31-14 CIVIL STATE OF CALIFORNIA

THE STATE OF CALIFORNIA OR ITS OFFICERS OR AGENTS SHALL NOT BE RESPONSIBLE FOR THE ACCURACY OR COMPLETENESS OF SCANNED COPIES OF THIS PLAN SHEET.

NOTE: TO ACCOMPANY PLANS DATED 5-20-13

Handhole shall be located on the downstream side of traffic.

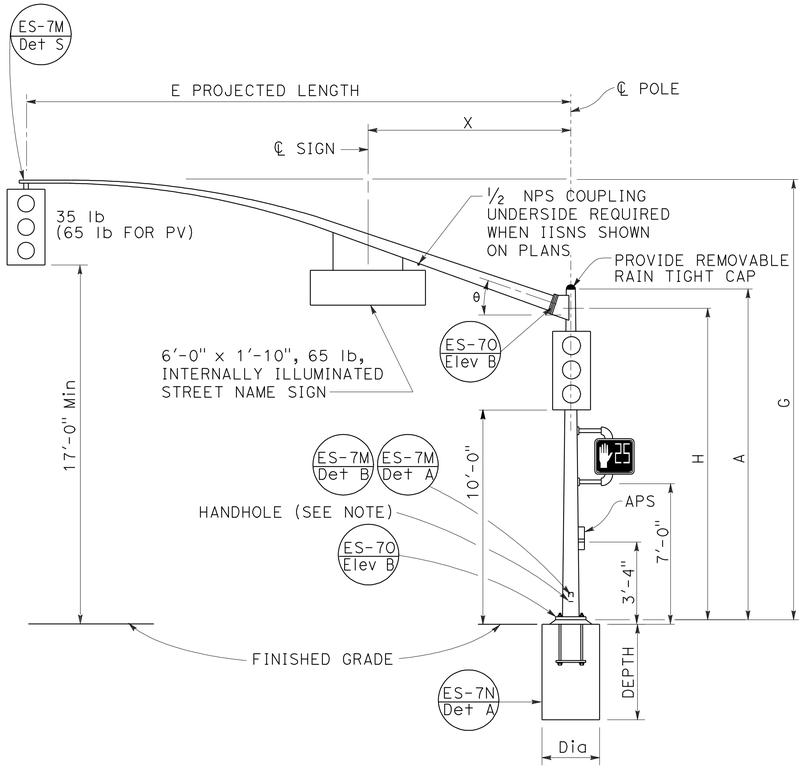

TYPE 16-2-100, 18-2-100

ELEVATION A

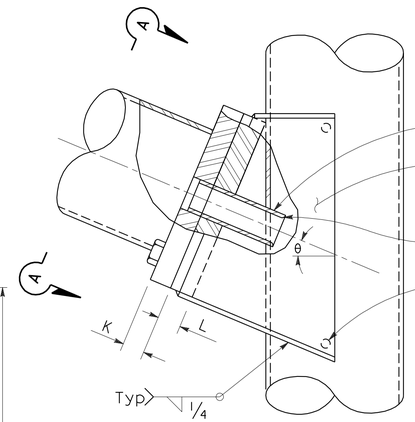

ELEVATION C

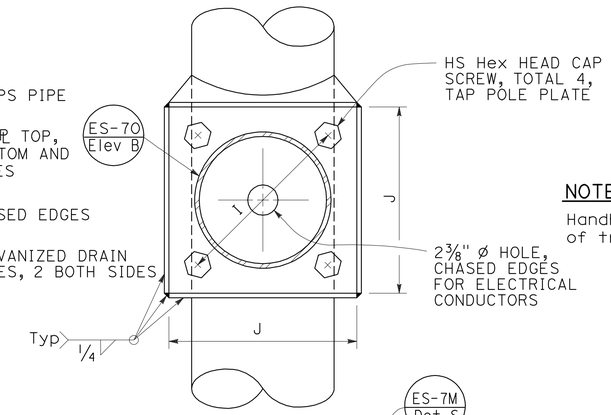

VIEW A-A

SIGNAL MAST ARM CONNECTION

DETAIL A

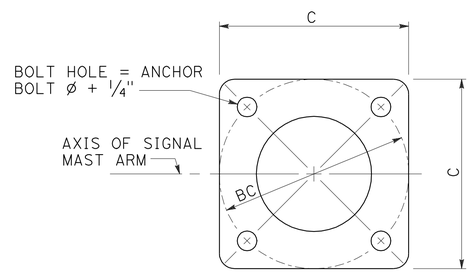

BASE PLATE

DETAIL B

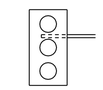

REQUIRED FOR
TYPE 17-2-100
TYPE 17A-2-100

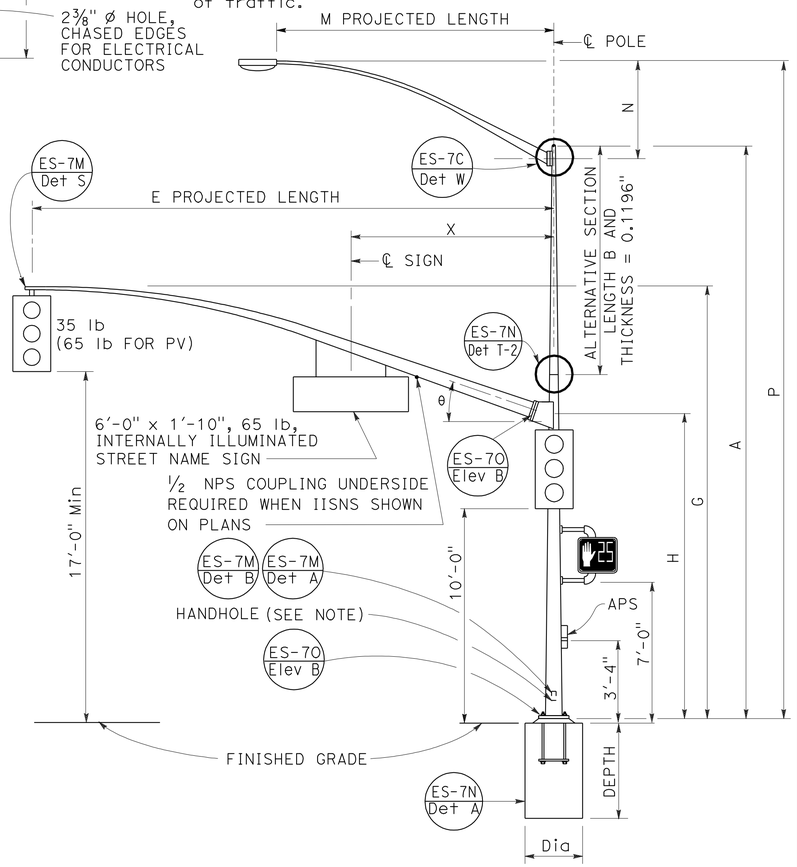

TYPE 17-2-100, 17A-2-100,
19-2-100, 19A-2-100

ELEVATION B

SIGNAL MAST ARM DATA											
E PROJECTED LENGTH	G MOUNTING HEIGHT	H	Min OD AT POLE	THICKNESS	I BOLT CIRCLE	HS CAP SCREWS	J PLATE SIZE	K MAST ARM ℙ THICKNESS	L POLE ℙ THICKNESS	θ	X Max
15′-0″	21′-8″±	17′-6″	7⅜″	0.1793″	12″	1¼″-7NC-3″	1′-0″	1¼″	1½″	23°	10′-6″
20′-0″	21′-8″±		7⅜″								
25′-0″	22′-8″±	16′-0″	7⅜″								
30′-0″	23′-0″±		8″								

LUMINAIRE MAST ARM DATA					
M PROJECTED LENGTH	N RISE	Min OD AT POLE	THICKNESS	P MOUNTING HEIGHT 30′-0″ POLE	P MOUNTING HEIGHT 35′-0″ POLE
6′-0″	2′-0″±	3¼″	0.1196″	31′-6″±	36′-6″±
8′-0″	2′-6″±	3½″		32′-0″±	37′-0″±
10′-0″	3′-3″±	3⅞″		32′-9″±	37′-9″±
12′-0″	4′-3″±			33′-9″±	38′-9″±
15′-0″	4′-9″±	4¼″		34′-3″±	39′-3″±

POLE TYPE	LOAD CASE	WIND VELOCITY (mph)	POLE DATA: A HEIGHT	Min OD BASE	Min OD TOP	THICKNESS	ALTERNATIVE SECTION B LENGTH	ALTERNATIVE SECTION BOTTOM	ALTERNATIVE SECTION TOP	BASE PLATE DATA: C	BC = BOLT CIRCLE	THICKNESS	ANCHOR BOLT SIZE	LUMINAIRE MAST ARM	SIGNAL MAST ARM	CIDH PILE FOUNDATION: DIAMETER	DEPTH	REINFORCED
16-2-100	2	100	18′-6″	10¾″	8 1/16″	0.1793″	NONE			1′-5½″	1′-5½″	3″	1½″Ø x 42″	NONE	15′-0″, 20′-0″	2′-6″	9′-0″	YES
17-2-100			30′-0″		6 7/16″		10′-0″	7⅞″	6 7/16″					6′-15′ 12′-0″				
17A-2-100			35′-0″		5 11/16″		15′-0″		5 11/16″					6′-15′ 15′-0″				
18-2-100			17′-0″		8 5/16″		NONE							None	25′-0″, 30′-0″			
19-2-100			30′-0″		6 7/16″	0.2391″	10′-0″	7⅞″	6 7/16″	1′-7″			2″Ø x 42″	6′-15′ 12′-0″			9′-6″	
19A-2-100			35′-0″		5 11/16″		15′-0″		5 11/16″					6′-15′ 15′-0″				

☐ INDICATES MAST ARM LENGTH TO BE USED UNLESS OTHERWISE NOTED ON PLANS.

STATE OF CALIFORNIA
DEPARTMENT OF TRANSPORTATION

ELECTRICAL SYSTEMS (SIGNAL AND LIGHTING STANDARD, CASE 2 SIGNAL MAST ARM LOADING, WIND VELOCITY=100 MPH AND SIGNAL MAST ARM LENGTHS 15' TO 30')

NO SCALE

RSP ES-7D DATED JULY 19, 2013 SUPERSEDES STANDARD PLAN ES-7D DATED MAY 20, 2011 - PAGE 465 OF THE STANDARD PLANS BOOK DATED 2010.

REVISED STANDARD PLAN RSP ES-7D

2010 REVISED STANDARD PLAN RSP ES-7D

6-18-13

DIST	COUNTY	ROUTE	POST MILES TOTAL PROJECT	SHEET NO.	TOTAL SHEETS
04	CC	680	22.7/24.8	113	186

Theresa Gabriel
REGISTERED ELECTRICAL ENGINEER

July 19, 2013
PLANS APPROVAL DATE

REGISTERED PROFESSIONAL ENGINEER
Theresa Aziz Gabriel
No. E15129
Exp. 6-30-14
ELECTRICAL
STATE OF CALIFORNIA

THE STATE OF CALIFORNIA OR ITS OFFICERS OR AGENTS SHALL NOT BE RESPONSIBLE FOR THE ACCURACY OR COMPLETENESS OF SCANNED COPIES OF THIS PLAN SHEET.

TO ACCOMPANY PLANS DATED 5-20-13

2010 REVISED STANDARD PLAN RSP ES-8A

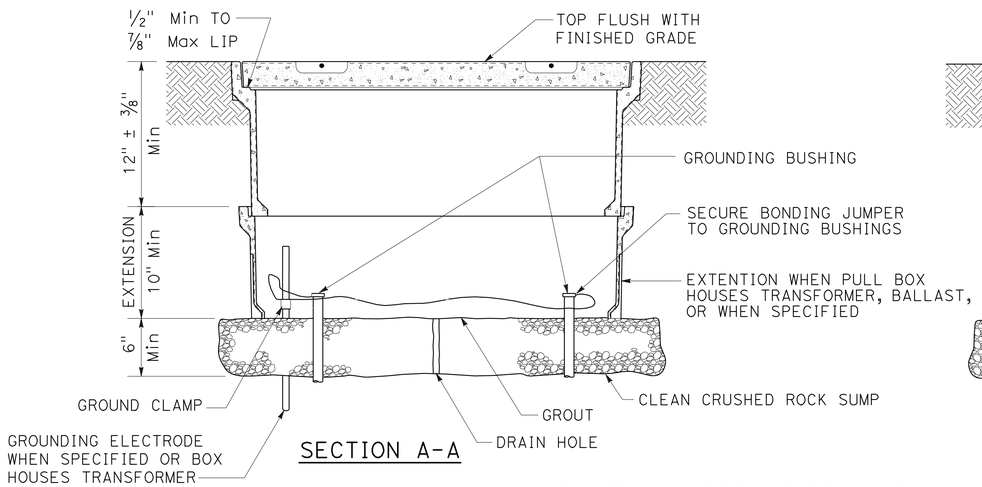

SECTION A-A

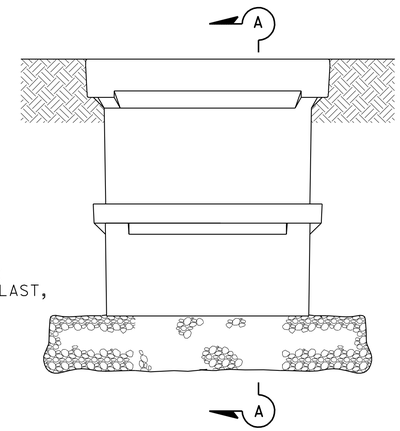

SIDE VIEW

INSTALLATION DETAILS

DETAIL A

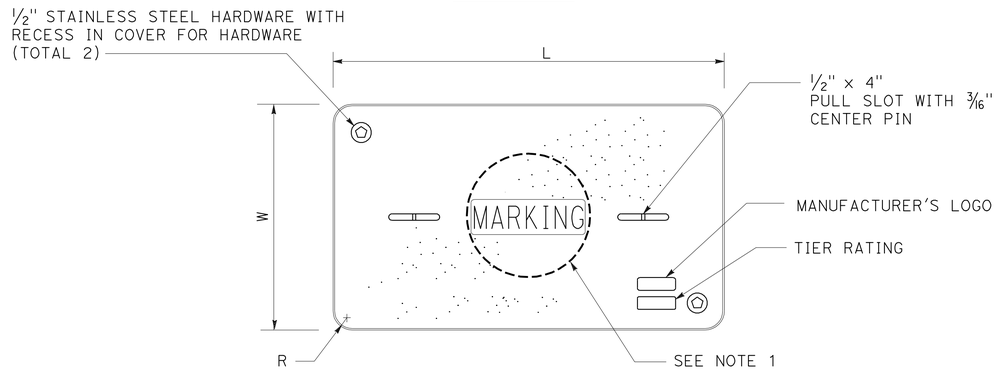

COVER TOP VIEW

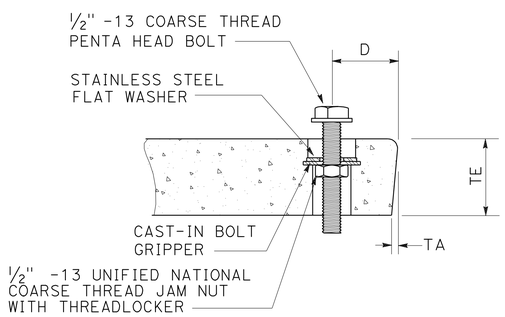

TYPICAL COVER CAPTIVE BOLT

OR SIMILAR

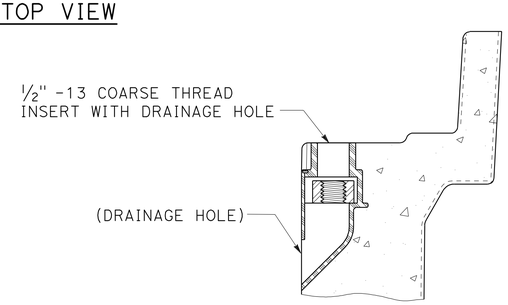

TYPICAL THREADED INSERT

OR SIMILAR

DIMENSION TABLE

PULL BOX	PULL BOX			COVER						
	MINIMUM DEPTH BOX	MINIMUM DEPTH EXTENSION	MAXIMUM WEIGHT	L	W	R	TE	TA	D	MAXIMUM WEIGHT
No. 3 1/2	12"	N/A	40 lb	1' - 3 3/8"	10 1/8"	1 3/8"	2"	1/8"	1 3/4"	30 lb
No. 5	12"	10"	55 lb	1' - 11 1/4"	1' - 1 3/4"	1 3/8"	2"	1/8"	1 3/4"	60 lb
No. 6	12"	10"	70 lb	2' - 6 1/2"	1' - 5 1/2"	1 3/8"	2"	1/8"	2"	85 lb

NOTES:

1. Pull box covers shall be marked as follows: "SERVICE" Service circuits between service point and service disconnect; "SPRINKLER-CONTROL" sprinkler control circuits, 50 V or less; "CALTRANS" on all pull boxes, except pull boxes marked "SPRINKLER-CONTROL"; and "TELEPHONE" Telephone service;
   - A) No. 3 1/2 pull box.
     - 1) "SIGNAL" - Traffic signal circuits with or without lighting or sign lighting circuits.
     - 2) "LIGHTING" - Lighting or sign lighting circuits where voltage is under 600 V.
   - B) No. 5, 6, 9 or 9A pull box.
     - 1) "TRAFFIC SIGNAL" - Traffic signal circuits with or without lighting or sign lighting circuits.
     - 2) "LIGHTING" - Lighting or sign lighting circuits where voltage is under 600 V.
     - 3) "LIGHTING-HIGH VOLTAGE" - Lighting or sign lighting circuits where voltage is above 600 V.
     - 4) "IRRIGATION" - Circuits to irrigation controller 120 V or more.
     - 5) "RAMP METER" - Ramp meter circuits.
     - 6) "COUNT STATION" - Count or speed monitor circuits.
     - 7) "COMMUNICATIONS" - Communication circuits.
     - 8) "TOS COMMUNICATIONS" - TOS communication line.
     - 9) "TOS POWER" - TOS power.
     - 10) "TDC POWER" - Telephone demarcation cabinet power.
     - 11) "CCTV" - Closed circuit television circuits.
     - 12) "TMS" - Traffic monitoring station circuits.
     - 13) "CMS" - Changeable message sign circuits.
     - 14) "HAR" - Highway advisory radio circuits.
     - 15) "BOOSTER PUMP" - Booster pump circuit.
2. The nominal dimensions of the opening in which the cover sets shall be the same as the cover dimensions except the length and width dimensions shall be 1/8" greater.
3. Covers and boxes shall be interchangeable with California standard male and female gages. When interchanged with a standard male or female gage, the top surfaces shall be flush within 1/8". Top outside radius of covers and pull boxes shall have a 1/8" radius.
4. Pull box extension may be another pull box as long as the bottom edge of the pull box can fit into the cover opening.
5. All dimensions for the cover for non-traffic pull box are nominal values.

STATE OF CALIFORNIA
DEPARTMENT OF TRANSPORTATION

ELECTRICAL SYSTEMS (NON-TRAFFIC PULL BOX)

NO SCALE

RSP ES-8A DATED JULY 19, 2013 SUPERSEDES RSP ES-8A DATED JANUARY 20, 2012 THAT SUPPLEMENTS THE STANDARD PLANS BOOK DATED 2010.

REVISED STANDARD PLAN RSP ES-8A

7-15-13

Dist	COUNTY	ROUTE	POST MILES TOTAL PROJECT	SHEET No.	TOTAL SHEETS
04	CC	680	22.7/24.8	114	186

Theresa Gabriel
REGISTERED ELECTRICAL ENGINEER

July 19, 2013
PLANS APPROVAL DATE

REGISTERED PROFESSIONAL ENGINEER
Theresa Aziz Gabriel
No. E15129
Exp. 6-30-14
ELECTRICAL
STATE OF CALIFORNIA

THE STATE OF CALIFORNIA OR ITS OFFICERS OR AGENTS SHALL NOT BE RESPONSIBLE FOR THE ACCURACY OR COMPLETENESS OF SCANNED COPIES OF THIS PLAN SHEET.

TO ACCOMPANY PLANS DATED 5-20-13

ISOFOOTCANDLE CURVE - MINIMUM

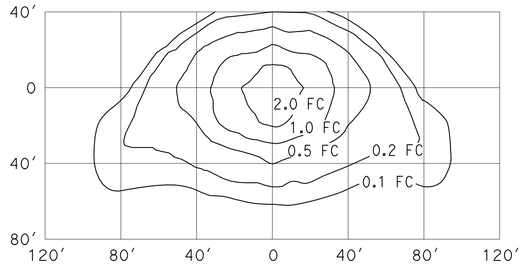

TYPE III MEDIUM CUTOFF

Cutoff Luminaire
34′ Mounting Height
Lamp operated at 22,000 lm
200-W high pressure sodium lamp
ANSI Designation S66

ISOFOOTCANDLE CURVE - MINIMUM

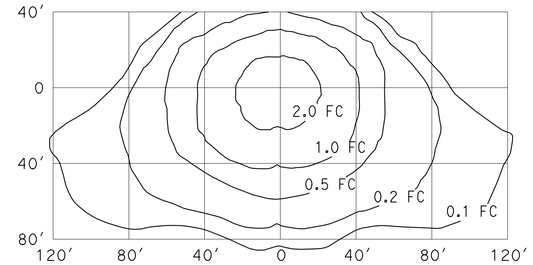

TYPE III MEDIUM CUTOFF

Cutoff Luminaire
40′ Mounting Height
Lamp operated at 37,000 lm
310-W high pressure sodium lamp
ANSI Designation S67

ISOFOOTCANDLE CURVE - MINIMUM

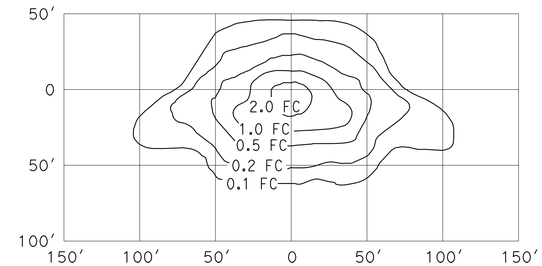

TYPE III MEDIUM CUTOFF

Cutoff Luminaire
30′ Mounting Height
Lamp operated at 16,000 lm
150-W high pressure sodium lamp
ANSI Designation S55

ISOFOOTCANDLE CURVE - MINIMUM

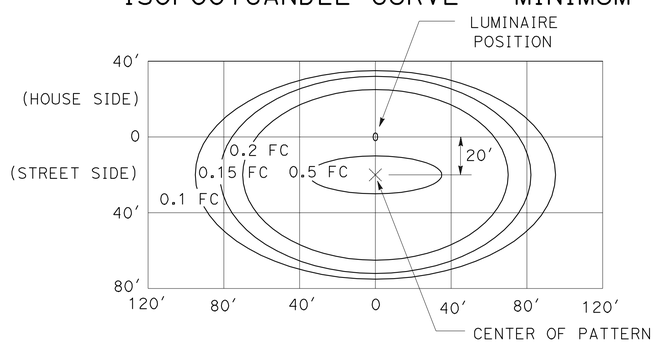

LED LUMINAIRE ROADWAY 1

165-W at 34′ Mounting Height

ISOFOOTCANDLE CURVE - MINIMUM

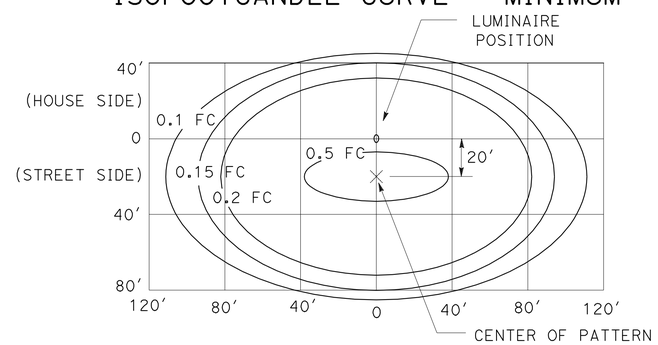

LED LUMINAIRE ROADWAY 2

235-W at 40′ Mounting Height

ISOFOOTCANDLE CURVE - MINIMUM

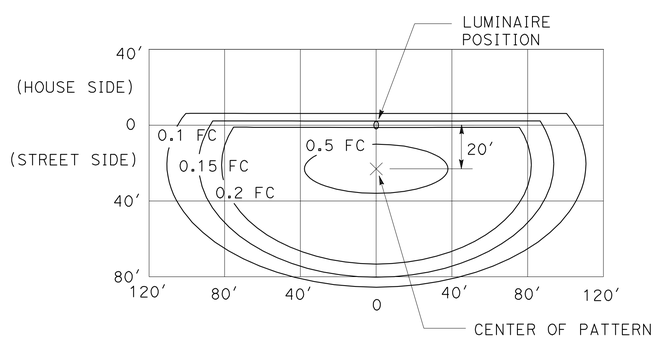

LED LUMINAIRE ROADWAY 3

235-W at 40′ Mounting Height
with back side control

ISOFOOTCANDLE CURVE - MINIMUM

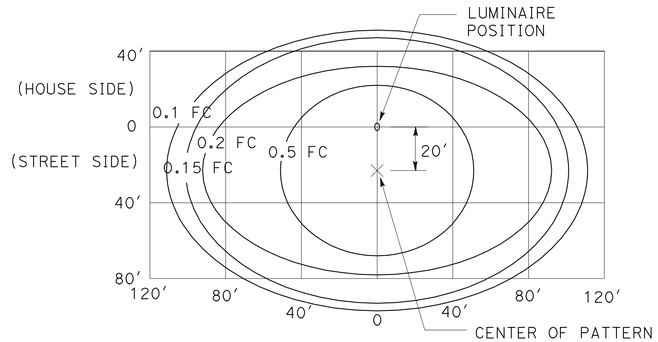

LED LUMINAIRE ROADWAY 4

300-W at 40′ Mounting Height

ISOFOOTCANDLE CURVE - MINIMUM

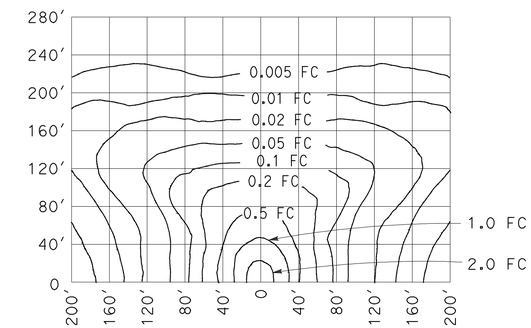

LOW PRESSURE SODIUM LUMINAIRE

40′ Mounting Height
Lamp operated at 33,000 lm
180-W low pressure sodium lamp

STATE OF CALIFORNIA
DEPARTMENT OF TRANSPORTATION

ELECTRICAL SYSTEMS (ISOFOOTCANDLE DIAGRAMS)

NO SCALE

RSP ES-10A DATED JULY 19, 2013 SUPERSEDES RSP ES-10A DATED JULY 20, 2012 THAT SUPPLEMENTS THE STANDARD PLANS BOOK DATED 2010.

REVISED STANDARD PLAN RSP ES-10A

2010 REVISED STANDARD PLAN RSP ES-10A

DIST	COUNTY	ROUTE	POST MILES TOTAL PROJECT	SHEET No.	TOTAL SHEETS
04	CC	680	22.7/24.8	115	186

REGISTERED CIVIL ENGINEER 10-10-12 DATE

5-20-13
PLANS APPROVAL DATE

REGISTERED PROFESSIONAL ENGINEER PHILIP E. LUTZ No. C58839 Exp. 12-31-14 CIVIL STATE OF CALIFORNIA

The State of California or its officers or agents shall not be responsible for the accuracy or completeness of electronic copies of this plan sheet.

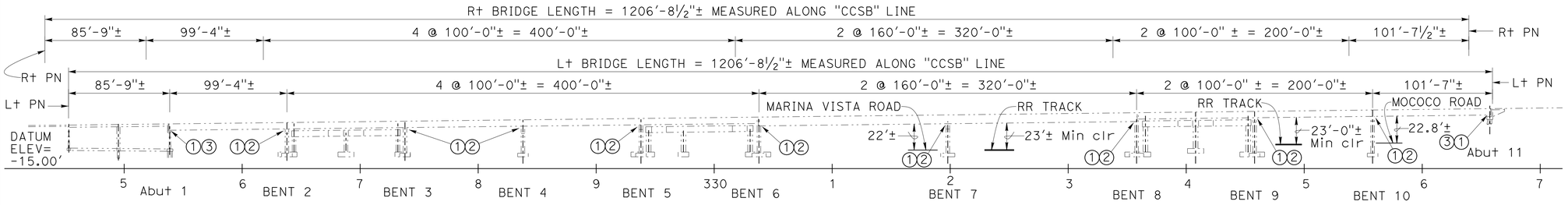

DEVELOPED ELEVATION

1" = 50'

LEGEND:

- Existing structure
- New structure
- ① Remove all Existing Restrainer Cables and Replace with New Cables
- ② Steel Corbel catcher blocks
- ③ Concrete Corbels
- ④ Petroleum Pipe Lines, see "ROAD PLANS".
- ⑤ Temporary protective fence 12' away from ℄ of each of exterior tracks. See "ROAD PLANS".
- ⑥ 10"ø Steel water pipe to remain in place.
- ⊗ Indicates Point of Minimum Vertical Clearance over existing roadways Note : Temporary minimum clearance is 15 ft.

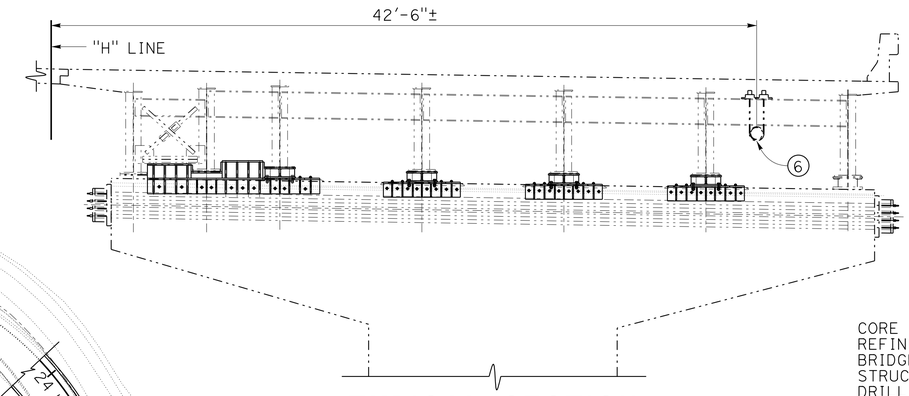

TYPICAL SECTION

No Scale

QUANTITIES:

CORE AND PRESSURE GROUT DOWEL	1,035	LF
REFINISH BRIDGE DECK	4	SQFT
BRIDGE REMOVAL (PORTION)	LUMP	SUM
STRUCTURAL CONCRETE, BRIDGE	23	CY
DRILL AND BOND DOWEL	1,703	LF
BAR REINFORCING STEEL (BRIDGE)	5,520	LB
STRUCTURAL STEEL (BRIDGE)	284,000	LB
CLEAN AND PAINT STRUCTURAL STEEL	LUMP	SUM
MISCELLANEOUS METAL (RESTRAINER - CABLE TYPE)	36,000	LB
CONCRETE BARRIER (TYPE 25R MODIFIED)	4	LF

NOTES:
1. All dimensions, stations and elevations shown for existing structures are ±.
2. For general notes, index to plans and quantity estimates, see "INDEX TO PLANS" sheet.

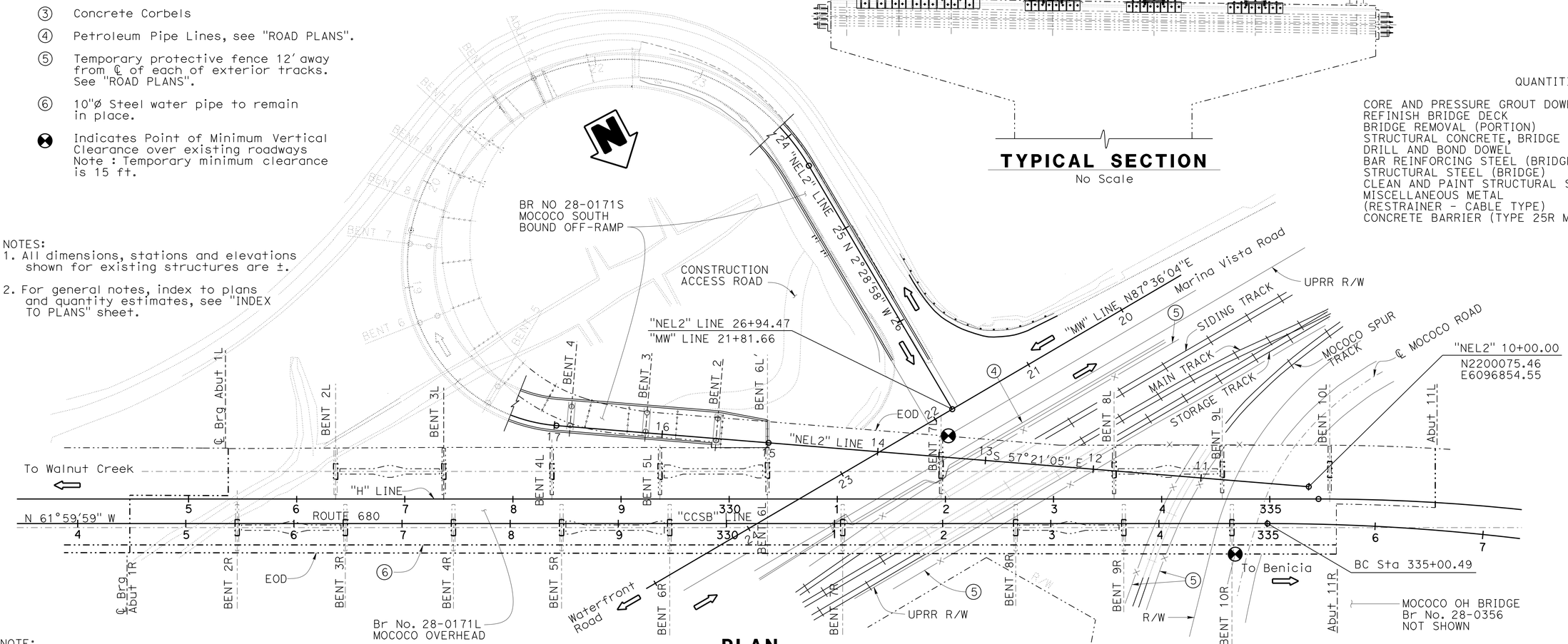

PLAN

1" = 50'

NOTE:
THE CONTRACTOR SHALL VERIFY ALL CONTROLLING FIELD DIMENSIONS BEFORE ORDERING OR FABRICATING ANY MATERIAL.

GORDON DANKE DESIGN ENGINEER	DESIGN	BY John Railey	CHECKED Mike Van De Pol	LOAD & RESISTANCE FACTOR DESIGN	LIVE LOADING: HL93 W/"LOW-BOY"; PERMIT DESIGN VEHICLE	
	DETAILS	BY JFCasarino / CCancino	CHECKED Mike Van De Pol	LAYOUT	BY Glenn Matthews	CHECKED John Railey
	QUANTITIES	BY John Railey	CHECKED E. Franciliso / I. Yalan	SPECIFICATIONS	BY Tina Chen	PLANS AND SPECS COMPARED John Railey

STATE OF CALIFORNIA
DEPARTMENT OF TRANSPORTATION

DIVISION OF ENGINEERING SERVICES
STRUCTURE DESIGN
DESIGN BRANCH 9

BRIDGE NO. 28-0171L
POST MILE 24.3

MOCOCO OVERHEAD RETROFIT
GENERAL PLAN

ORIGINAL SCALE IN INCHES FOR REDUCED PLANS 0 1 2 3

UNIT: 3594
PROJECT NUMBER & PHASE: 0400000967 1
CONTRACT NO.: 04-3A8701

DISREGARD PRINTS BEARING EARLIER REVISION DATES

REVISION DATES: 10-11-11 11-13-12 10-16-12

SHEET 1 OF 34

USERNAME => s123631 DATE PLOTTED => 30-SEP-2013 TIME PLOTTED => 11:45

STRUCTURES DESIGN GENERAL PLAN SHEET (ENGLISH) (REV.09-01-10)

FILE => 28-0171-a-gp.dgn

DIST	COUNTY	ROUTE	POST MILES TOTAL PROJECT	SHEET No.	TOTAL SHEETS
04	CC	680	22.7/24.8	116	186

REGISTERED CIVIL ENGINEER 10-10-12 DATE

5-20-13
PLANS APPROVAL DATE

REGISTERED PROFESSIONAL ENGINEER PHILIP E. LUTZ No. C55839 Exp. 12-31-14 CIVIL STATE OF CALIFORNIA

The State of California or its officers or agents shall not be responsible for the accuracy or completeness of electronic copies of this plan sheet.

GENERAL NOTES
LOAD AND RESISTANCE FACTOR DESIGN

DESIGN:

AASHTO LRFD Bridge Design Specifications, 4th edition with the California Amendments

SEISMIC DESIGN:

Caltrans Seismic Design Criteria (SDC), Version 1.6 dated 2010

DEAD LOAD:

Includes 35 psf for future wearing surface.
(Add deck load statement where appropriate)

LIVE LOADING:

HL93 and permit design load.

SEISMIC LOADING:

(Alternatively, show site-specific acceleration response spectra curve.)

CONCRETE:

fy = 60 ksi
f'c = 4.0 ksi
n = 8

STRUCTURAL STEEL (new construction):

Unless otherwise noted all steel shall be ASTM A709 Grade 50

STRUCTURAL STEEL:
(assumed for evaluation of existing structure):

ASTM A7
fy = 39 ksi

FASTENERS:

Unless otherwise noted all anchor bolts, nuts and threaded rods are ASTM A449, type 1 high strenth

NOTES (CONSTRUCTION SEQUENCE FOR STEEL CORBELS):

1. Coring and drilling operations shall be performed before the fabrication of steel corbels. Holes in plates, shall match the field conditions of the cored and drilled holes in concrete.
2. Hole dimensions shown on the plans for steel corbels may deviate by a tolerance of no more than plus or minus $1\frac{3}{8}$" to accommodate variations in actual locations of the cored and drilled holes.

NOTE:
THE CONTRACTOR SHALL VERIFY ALL CONTROLLING FIELD DIMENSIONS BEFORE ORDERING OR FABRICATING ANY MATERIAL.

INDEX TO PLANS

SHEET No.	TITLE
1	GENERAL PLAN
2	INDEX TO PLANS
3	RAILROAD CLEARANCES
4	STRUCTURE PLAN No. 1
5	STRUCTURE PLAN No. 2
6	STRUCTURE PLAN No. 3
7	STRUCTURE SECTION No. 1
8	STRUCTURE SECTION No. 2
9	STRUCTURE SECTION No. 3
10	STRUCTURE SECTION No. 4
11	STRUCTURE SECTION No. 5
12	SHEAR KEY REMOVAL
13	ABUTMENT 1 - CONCRETE CORBEL
14	CORBEL - TYPE B DETAILS
15	CORBEL - TYPE C DETAILS No. 1
16	CORBEL - TYPE C DETAILS No. 2
17	CORBEL - TYPE C (MODIFIED) DETAILS
18	CORBEL - TYPE D DETAILS
19	BENT 6L' - CORBEL DETAILS
20	BENT 6L' - MISCELLANEOUS DETAILS
21	CORBEL - TYPE E DETAILS No. 1
22	CORBEL - TYPE E DETAILS No. 2
23	CORBEL - TYPE E DETAILS No. 3
24	CORBEL - TYPE E DETAILS No. 4
25	CORBEL - TYPE E DETAILS No. 5
26	CORBEL - TYPE F DETAILS
27	CORBEL - TYPE G DETAILS
28	CORBEL - TYPE H DETAILS
29	RESTRAINER DETAILS No. 1
30	RESTRAINER DETAILS No. 2
31	RESTRAINER DETAILS No. 3
32	RESTRAINER DETAILS No. 4
33	RESTRAINER UNIT - MISCELLANEOUS DETAILS
34	BARRIER DETAILS

STANDARD PLANS 2010 EDITION

A10A	ABBREVIATIONS (SHEET 1 OF 2)
A10B	ABBREVIATIONS (SHEET 2 OF 2)
A10C	LINES AND SYMBOLS (SHEET 1 OF 3)
A10D	LINES AND SYMBOLS (SHEET 2 OF 3)
A10E	LINES AND SYMBOLS (SHEET 3 OF 3)

STANDARD PLAN No.

DETAIL No.

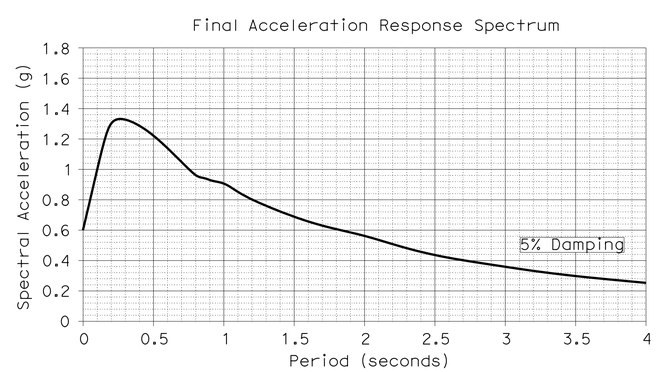

ARS CURVES

DESIGN	BY John Railey	CHECKED Mike Van De Pol	
DETAILS	BY JFCasarino / CCancino	CHECKED Mike Van De Pol	
QUANTITIES	BY John Railey	CHECKED E. Franciliso / I. Yalan	

STATE OF CALIFORNIA
DEPARTMENT OF TRANSPORTATION

DIVISION OF ENGINEERING SERVICES
STRUCTURE DESIGN
DESIGN BRANCH 9

BRIDGE NO. 28-0171L
POST MILE 24.3

MOCOCO OVERHEAD RETROFIT
INDEX TO PLANS

STRUCTURES DESIGN DETAIL SHEET (ENGLISH) (REV. 09-01-10)

ORIGINAL SCALE IN INCHES FOR REDUCED PLANS 0 1 2 3

UNIT: 3594
PROJECT NUMBER & PHASE: 0400000967 1
CONTRACT NO.: 04-3A8701

DISREGARD PRINTS BEARING EARLIER REVISION DATES

REVISION DATES 1-10-12 10-19-12 01-23-13

SHEET 2 OF 34

DIST	COUNTY	ROUTE	POST MILES TOTAL PROJECT	SHEET No.	TOTAL SHEETS
04	CC	680	22.7/24.8	117	186

REGISTERED CIVIL ENGINEER 10-10-12 DATE

5-20-13
PLANS APPROVAL DATE

REGISTERED PROFESSIONAL ENGINEER PHILIP E. LUTZ No. C58839 Exp. 12-31-14 CIVIL STATE OF CALIFORNIA

The State of California or its officers or agents shall not be responsible for the accuracy or completeness of electronic copies of this plan sheet.

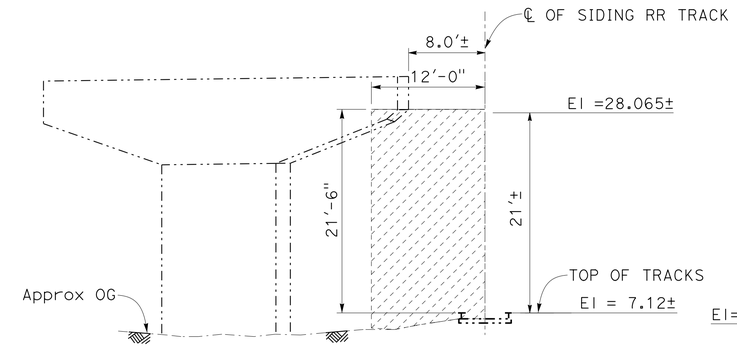

SECTION A-A (BENT 7R)
No Scale

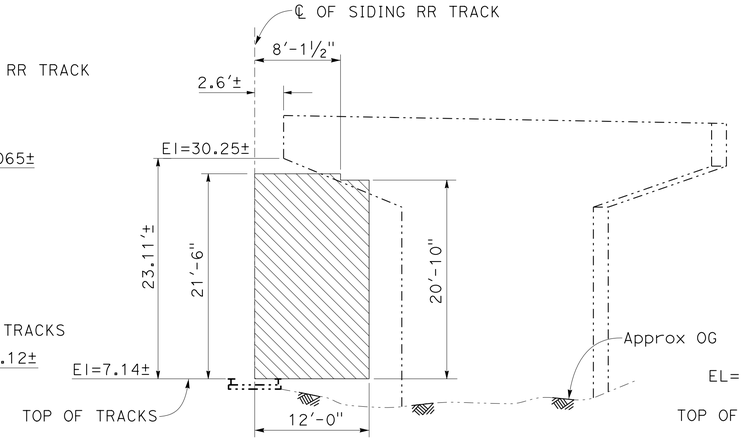

SECTION B-B (BENT 7L)
No Scale

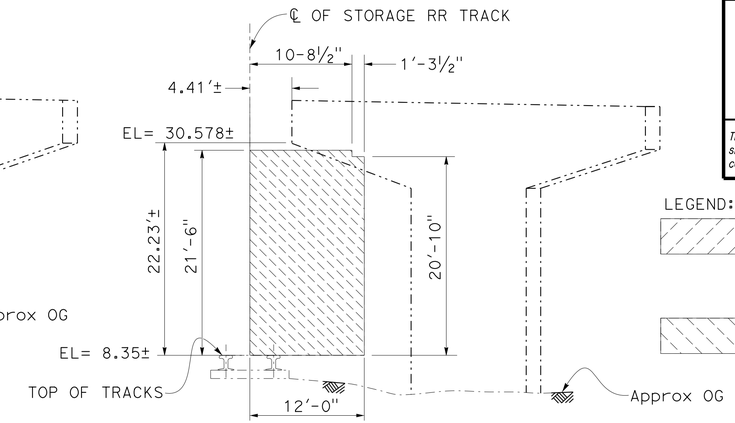

SECTION C-C (BENT 8R)
No Scale

LEGEND:

Denotes UPRR clearance envelope for temporary construction limits. All temporary clearances shall remain outside these envelope for all Bents except Bent 7L and Bent 8L.

Denotes UPRR clearance envelope for Bents 7L and Bent 8R. All temporary clearances shall remain outside these envelopes.

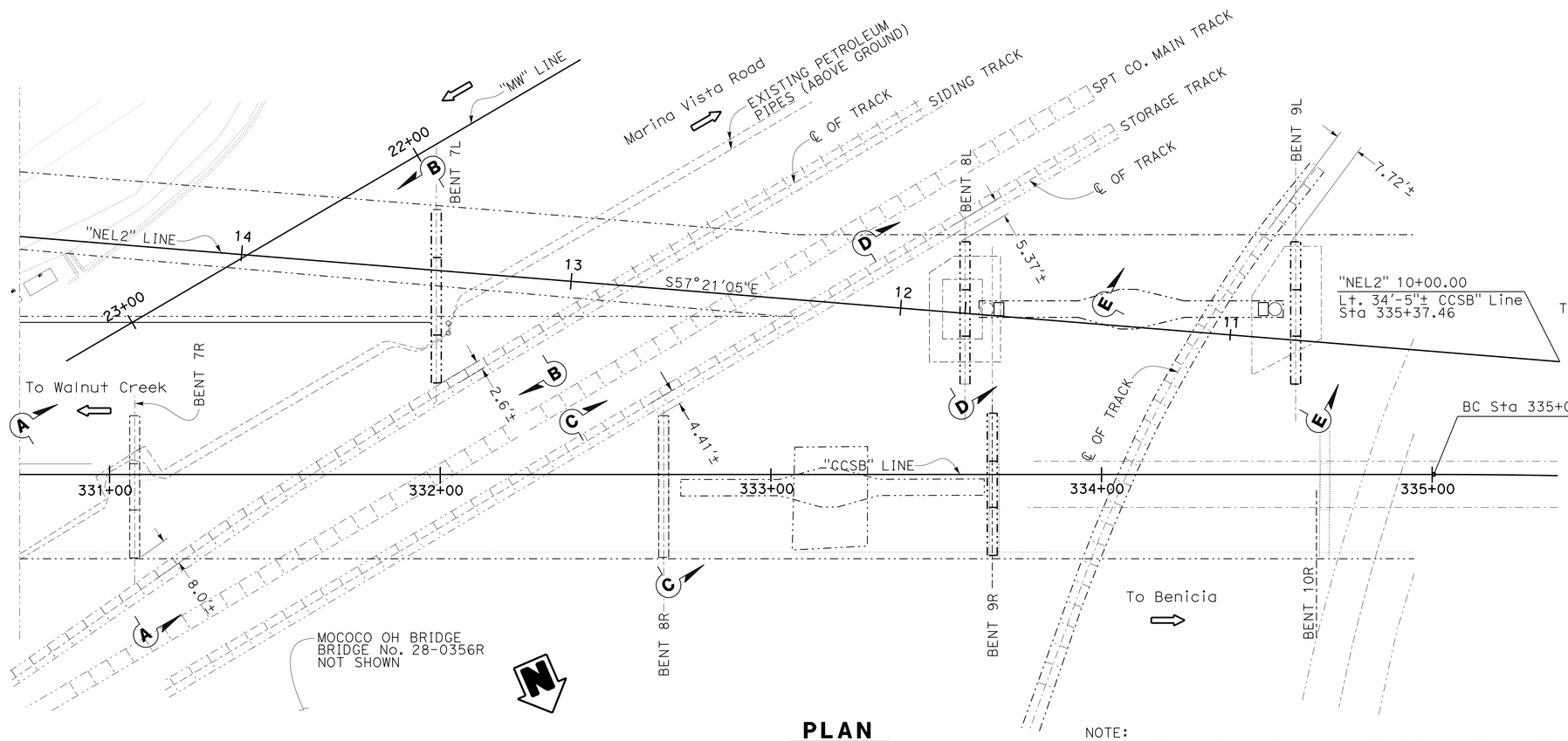

PLAN
1" = 20'

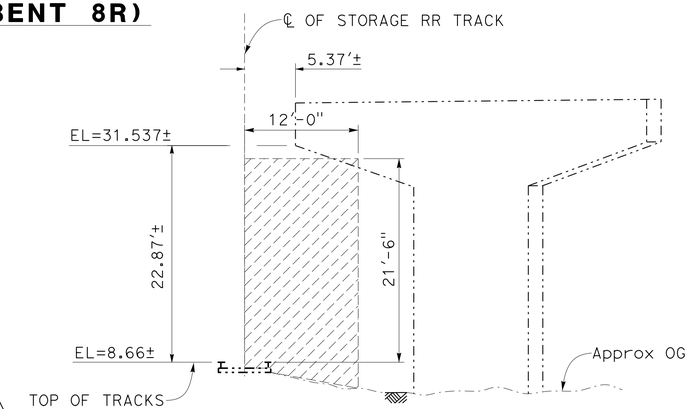

SECTION D-D (BENT 8L)
No Scale

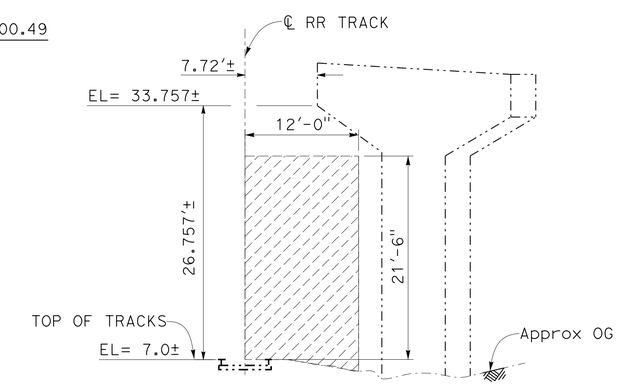

SECTION E-E (BENT 9L)
No Scale

NOTE:
THE CONTRACTOR SHALL VERIFY ALL CONTROLLING FIELD DIMENSIONS BEFORE ORDERING OR FABRICATING ANY MATERIAL.

NOTE:
ALL EXISTING CLEARANCES SHOWN ARE APPROXIMATE. CONTRACTOR SHALL FIELD VERIFY EXISTING CLEARANCES. EXISTING CLEARANCES SHALL BE SUBMITTED IN ADDITION TO SUBMITTALS REQUIRED FOR WORKING PLATFORMS, SCAFFOLDING AND PROTECTIVE COVERS.

	BY	CHECKED
DESIGN	John Railey	Mike Van De Pol
DETAILS	CCancino	Mike Van De Pol
QUANTITIES	John Railey	E. Franciliso

STATE OF CALIFORNIA
DEPARTMENT OF TRANSPORTATION

DIVISION OF ENGINEERING SERVICES
STRUCTURE DESIGN
DESIGN BRANCH 9

BRIDGE NO. 28-0171L
POST MILE 24.3

MOCOCO OVERHEAD RETROFIT
RAILROAD CLEARANCES

STRUCTURES DESIGN DETAIL SHEET (ENGLISH) (REV. 09-01-10)

ORIGINAL SCALE IN INCHES FOR REDUCED PLANS 0 1 2 3

UNIT: 3594
PROJECT NUMBER & PHASE: 0400000967 1
CONTRACT NO.: 04-3A8701

DISREGARD PRINTS BEARING EARLIER REVISION DATES

REVISION DATES 6-15-12 09-14-12 11-02-12

SHEET 3 OF 34

FILE => 28-0171-b-rrclear.dgn

USERNAME => s123631 DATE PLOTTED => 30-SEP-2013 TIME PLOTTED => 11:45

NOTE:
THE CONTRACTOR SHALL VERIFY ALL CONTROLLING FIELD DIMENSIONS BEFORE ORDERING OR FABRICATING ANY MATERIAL.

DIST	COUNTY	ROUTE	POST MILES TOTAL PROJECT	SHEET No.	TOTAL SHEETS
04	CC	680	22.7/24.8	118	186

REGISTERED CIVIL ENGINEER 10-10-12 DATE

5-20-13
PLANS APPROVAL DATE

REGISTERED PROFESSIONAL ENGINEER
PHILIP E. LUTZ
No. C58839
Exp. 12-31-14
CIVIL
STATE OF CALIFORNIA

The State of California or its officers or agents shall not be responsible for the accuracy or completeness of electronic copies of this plan sheet.

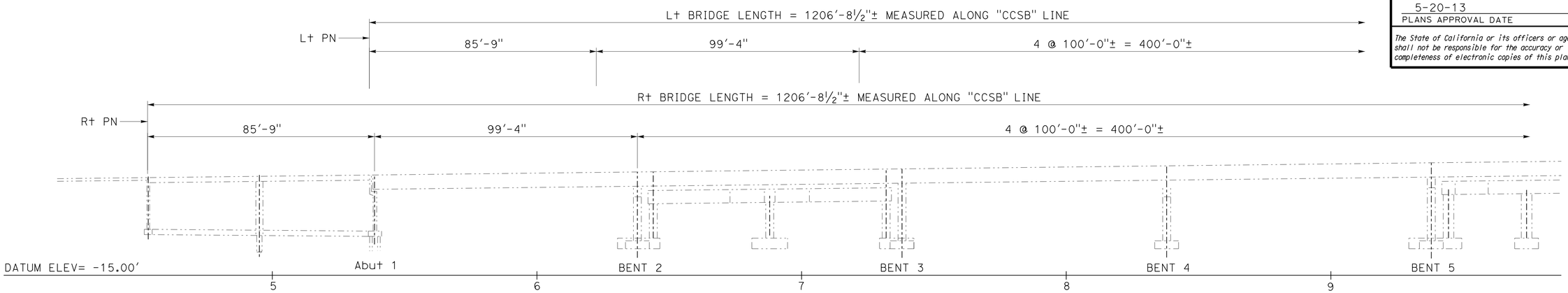

ELEVATION
1" = 20'

NOTE:

1. For "TYPICAL SECTION", see "STRUCTURE SECTION No. 1" sheet.

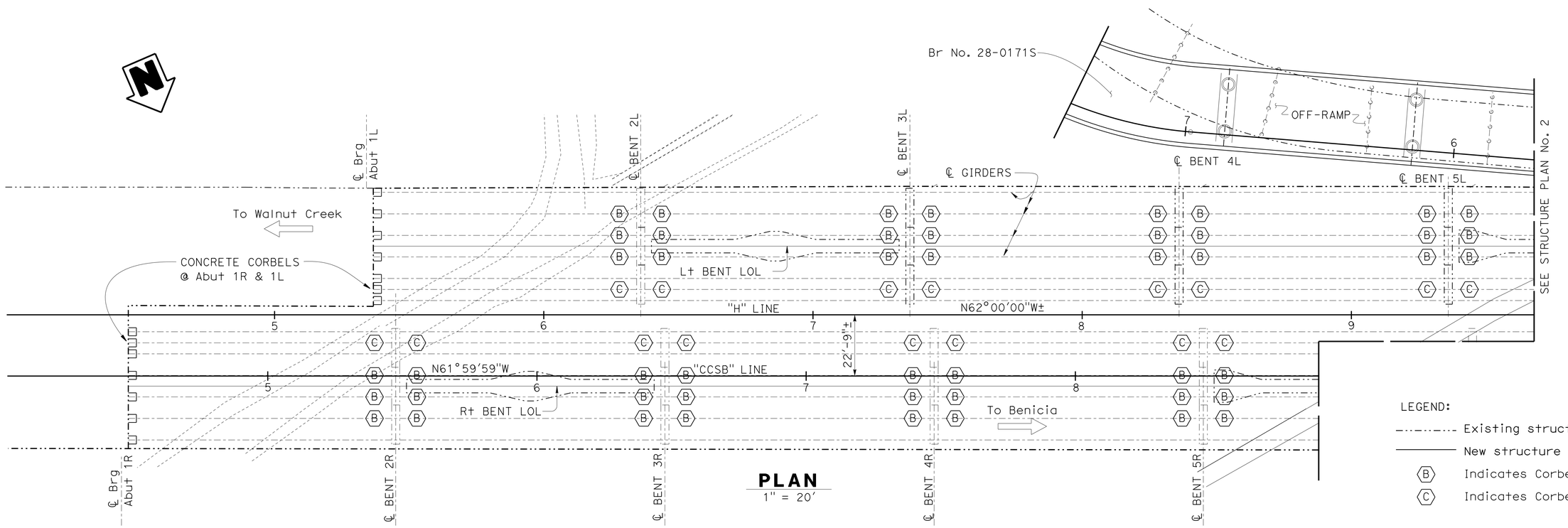

PLAN
1" = 20'

	BY	CHECKED
DESIGN	John Railey	Mike Van De Pol
DETAILS	JFCasarino / CCancino	Mike Van De Pol
QUANTITIES	John Railey	E. Franciliso

STATE OF CALIFORNIA
DEPARTMENT OF TRANSPORTATION

DIVISION OF ENGINEERING SERVICES
STRUCTURE DESIGN
DESIGN BRANCH 9

BRIDGE NO. 28-0171L
POST MILE 24.3

MOCOCO OVERHEAD RETROFIT
STRUCTURE PLAN NO. 1

STRUCTURES DESIGN DETAIL SHEET (ENGLISH) (REV. 09-01-10)

ORIGINAL SCALE IN INCHES FOR REDUCED PLANS 0 1 2 3

UNIT: 3594
PROJECT NUMBER & PHASE: 0400000967 1
CONTRACT NO.: 04-3A8701

DISREGARD PRINTS BEARING EARLIER REVISION DATES

REVISION DATES 6-18-12 10-08-12

SHEET 4 OF 34

FILE => 28-0171-c-sp1.dgn

USERNAME => s123631 DATE PLOTTED => 30-SEP-2013 TIME PLOTTED => 11:45

NOTE:
THE CONTRACTOR SHALL VERIFY ALL CONTROLLING FIELD DIMENSIONS BEFORE ORDERING OR FABRICATING ANY MATERIAL.

DIST	COUNTY	ROUTE	POST MILES TOTAL PROJECT	SHEET No.	TOTAL SHEETS
04	CC	680	22.7/24.8	119	186

REGISTERED CIVIL ENGINEER 10-10-12 DATE

5-20-13
PLANS APPROVAL DATE

REGISTERED PROFESSIONAL ENGINEER PHILIP E. LUTZ No. C58839 Exp. 12-31-14 CIVIL STATE OF CALIFORNIA

The State of California or its officers or agents shall not be responsible for the accuracy or completeness of electronic copies of this plan sheet.

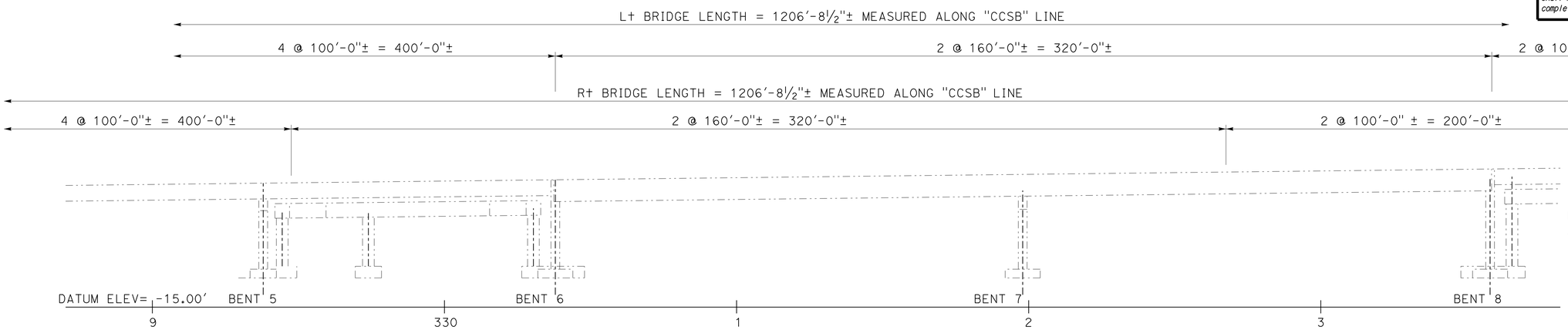

LEGEND:
- Indicates existing structure
- (C)* Indicates Corbel - Type C (Mod)
- (D) Indicates Corbel - Type D
- (E) Indicates Corbel - Type E

ELEVATION
1" = 20'

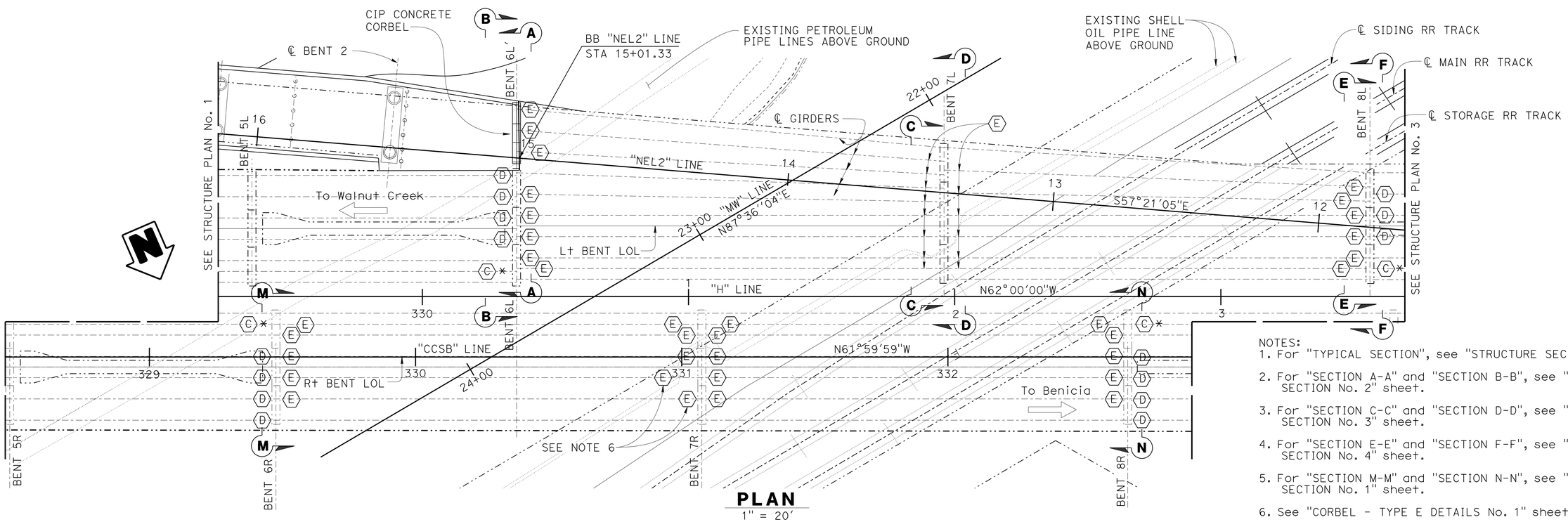

PLAN
1" = 20'

NOTES:
1. For "TYPICAL SECTION", see "STRUCTURE SECTION No. 1" sheet.
2. For "SECTION A-A" and "SECTION B-B", see "STRUCTURE SECTION No. 2" sheet.
3. For "SECTION C-C" and "SECTION D-D", see "STRUCTURE SECTION No. 3" sheet.
4. For "SECTION E-E" and "SECTION F-F", see "STRUCTURE SECTION No. 4" sheet.
5. For "SECTION M-M" and "SECTION N-N", see "STRUCTURE SECTION No. 1" sheet.
6. See "CORBEL - TYPE E DETAILS No. 1" sheet.

	BY	CHECKED
DESIGN	John Railey	Mike Van De Pol
DETAILS	JFCasarino / D. Elliott	Mike Van De Pol
QUANTITIES	John Railey	E. Franciliso

STATE OF CALIFORNIA
DEPARTMENT OF TRANSPORTATION

DIVISION OF ENGINEERING SERVICES
STRUCTURE DESIGN
DESIGN BRANCH 9

BRIDGE NO. 28-0171L
POST MILE 24.3

MOCOCO OVERHEAD RETROFIT
STRUCTURE PLAN NO. 2

STRUCTURES DESIGN DETAIL SHEET (ENGLISH) (REV. 09-01-10)

ORIGINAL SCALE IN INCHES FOR REDUCED PLANS 0 1 2 3

UNIT: 3594
PROJECT NUMBER & PHASE: 0400000967 1
CONTRACT NO.: 04-3A8701

DISREGARD PRINTS BEARING EARLIER REVISION DATES

REVISION DATES 6-14-12 10-08-12 10-08-12

SHEET 5 OF 34

FILE => 28-0171-c-sp2.dgn

USERNAME => s123631 DATE PLOTTED => 30-SEP-2013 TIME PLOTTED => 11:45

NOTE:
THE CONTRACTOR SHALL VERIFY ALL CONTROLLING FIELD DIMENSIONS BEFORE ORDERING OR FABRICATING ANY MATERIAL.

DIST	COUNTY	ROUTE	POST MILES TOTAL PROJECT	SHEET No.	TOTAL SHEETS
04	CC	680	22.7/24.8	120	186

REGISTERED CIVIL ENGINEER 10-10-12 DATE

5-20-13
PLANS APPROVAL DATE

REGISTERED PROFESSIONAL ENGINEER
PHILIP E. LUTZ
No. C58839
Exp. 12-31-14
CIVIL
STATE OF CALIFORNIA

The State of California or its officers or agents shall not be responsible for the accuracy or completeness of electronic copies of this plan sheet.

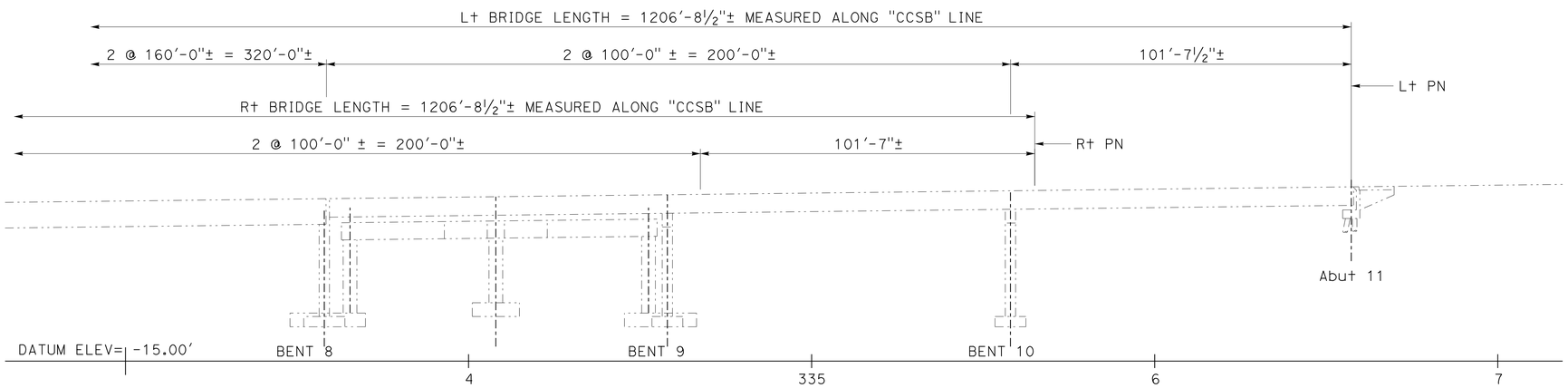

ELEVATION
1" = 20'

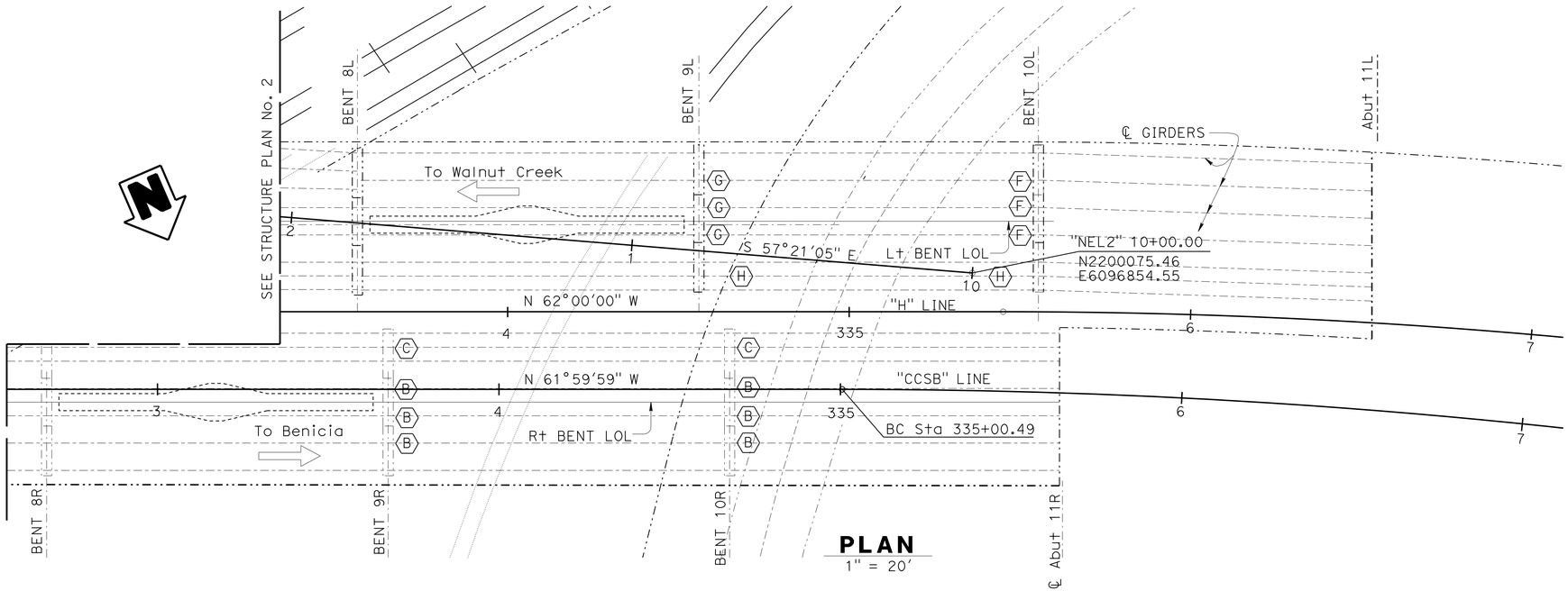

PLAN
1" = 20'

LEGEND:

- Existing structure
- New structure
- (B) Indicates Corbel - Type B
- (C) Indicates Corbel - Type C
- (F) Indicates Corbel - Type F
- (G) Indicates Corbel - Type G
- (H) Indicates Corbel - Type H

NOTE:

1. For "TYPICAL SECTION", see "STRUCTURE SECTION No. 1" sheet.

	BY	CHECKED
DESIGN	John Railey	Mike Van De Pol
DETAILS	JFCasarino	Mike Van De Pol
QUANTITIES	John Railey	E. Franciliso

STATE OF CALIFORNIA
DEPARTMENT OF TRANSPORTATION

DIVISION OF ENGINEERING SERVICES
STRUCTURE DESIGN
DESIGN BRANCH 9

BRIDGE NO. 28-0171L
POST MILE 24.3

MOCOCO OVERHEAD RETROFIT
STRUCTURE PLAN NO. 3

STRUCTURES DESIGN DETAIL SHEET (ENGLISH) (REV. 09-01-10)

ORIGINAL SCALE IN INCHES FOR REDUCED PLANS 0 1 2 3

UNIT: 3594
PROJECT NUMBER & PHASE: 0400000967 1
CONTRACT NO.: 04-3A8701

DISREGARD PRINTS BEARING EARLIER REVISION DATES

REVISION DATES: 6-14-12 6-15-12 09-14-12

SHEET 6 OF 34

FILE => 28-0171-c-sp3.dgn

USERNAME => s123631 DATE PLOTTED => 30-SEP-2013 TIME PLOTTED => 11:45

DIST	COUNTY	ROUTE	POST MILES TOTAL PROJECT	SHEET No.	TOTAL SHEETS
04	CC	680	22.7/24.8	121	186

REGISTERED CIVIL ENGINEER 10-10-12 DATE

5-20-13
PLANS APPROVAL DATE

REGISTERED PROFESSIONAL ENGINEER
PHILIP E. LUTZ
No. C58839
Exp. 12-31-14
CIVIL
STATE OF CALIFORNIA

The State of California or its officers or agents shall not be responsible for the accuracy or completeness of electronic copies of this plan sheet.

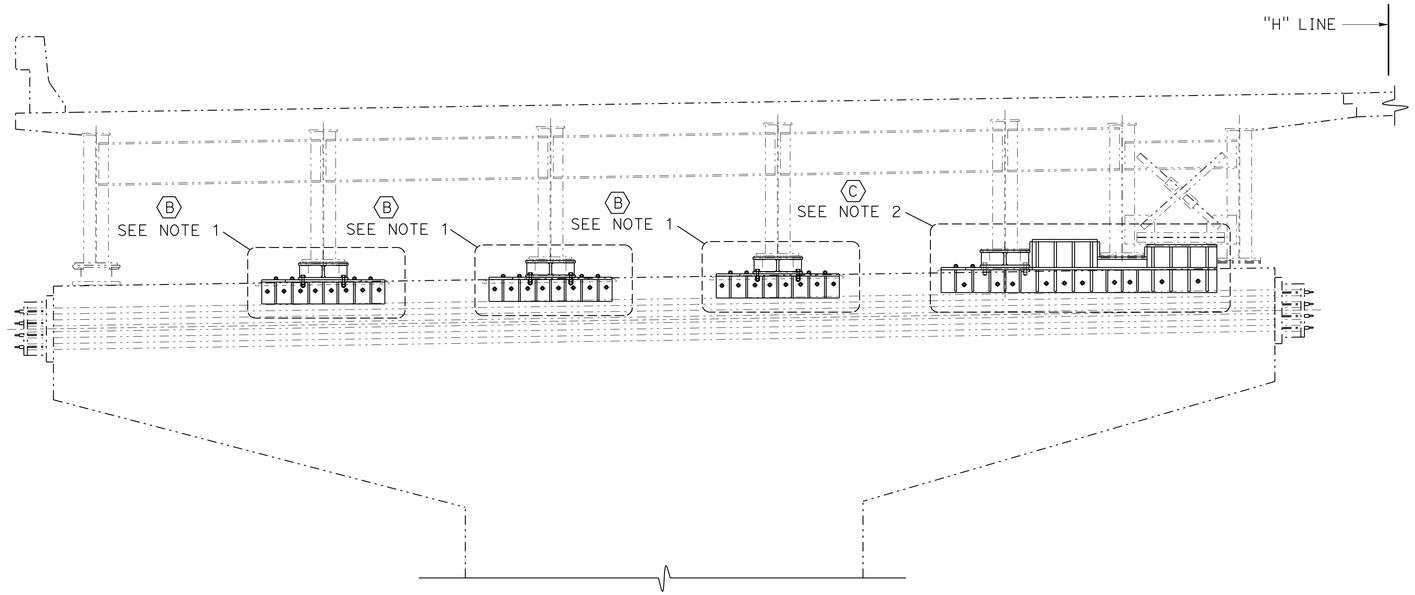

TYPICAL SECTION

3/8" = 1'-0"

BENTS 2 - 5 R & L AND BENTS 9R & 10R (TYPICAL SECTION SHOWN IS LEFT OF "H" LINE, RIGHT BENTS ARE SYMMETRICAL ABOUT "H" LINE).

LEGEND:

- Indicates existing structure
- (B) Indicates Corbel - Type B
- (C) Indicates Corbel - Type C
- (C)* Indicates Corbel - Type C (Mod)
- (D) Indicates Corbel - Type D

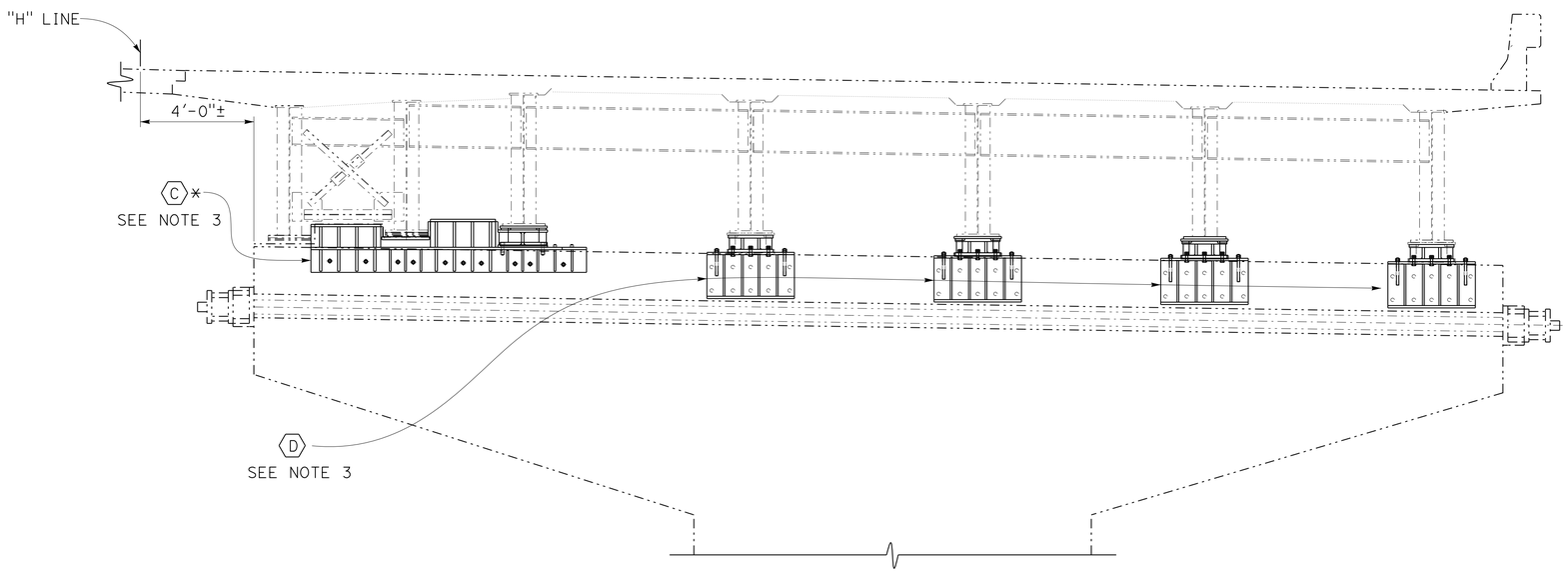

SECTION M-M

3/8" = 1'-0"

BENT 6R SHOWN, BENT 8R "SECTION N-N" IS SIMILAR TO BENT 6R "SECTION M-M" MIRRORED AT BENT ℄, SEE NOTE 4

NOTES:

1. Details are shown on "CORBEL - TYPE B DETAILS" sheet.
2. Details are shown on "CORBEL - TYPE C DETAILS No. 1" sheet.
3. For Corbel Types and Details, see "CORBEL - TYPE C (MODIFIED) DETAILS" for Corbel Type C (Modified) and "CORBEL - TYPE D DETAILS" for Corbel Type D sheet.
4. "SECTION M-M" girder configuration and Bent cap is identical for Bents 7R & 8R.

NOTE:
THE CONTRACTOR SHALL VERIFY ALL CONTROLLING FIELD DIMENSIONS BEFORE ORDERING OR FABRICATING ANY MATERIAL.

	BY	CHECKED
DESIGN	John Railey	Mike Van De Pol
DETAILS	D. Elliott / CCancino	Mike Van De Pol
QUANTITIES	John Railey	E. Franciliso / I. Yalan

STATE OF CALIFORNIA
DEPARTMENT OF TRANSPORTATION

DIVISION OF ENGINEERING SERVICES
STRUCTURE DESIGN
DESIGN BRANCH 9

BRIDGE NO. 28-0171L
POST MILE 24.3

MOCOCO OVERHEAD RETROFIT
STRUCTURE SECTION NO. 1

STRUCTURES DESIGN DETAIL SHEET (ENGLISH) (REV. 09-01-10)

ORIGINAL SCALE IN INCHES FOR REDUCED PLANS 0 1 2 3

UNIT: 3594
PROJECT NUMBER & PHASE: 0400000967 1
CONTRACT NO.: 04-3A8701

DISREGARD PRINTS BEARING EARLIER REVISION DATES

REVISION DATES 10-02-12

SHEET 7 OF 34

FILE => 28-0171-c-ss1.dgn

USERNAME => s123631 DATE PLOTTED => 30-SEP-2013 TIME PLOTTED => 11:45

NOTE:
THE CONTRACTOR SHALL VERIFY ALL CONTROLLING FIELD DIMENSIONS BEFORE ORDERING OR FABRICATING ANY MATERIAL.

NOTES:

1. For details, see "BENT 6L' - CORBEL DETAILS" sheet.
2. For Corbel Types and Details, see "CORBEL - TYPE C (MODIFIED) DETAILS" for Corbel Type C (Modified), "CORBEL - TYPE D DETAILS" for Corbel Type D, and "CORBEL - TYPE E DETAILS" for Corbel Type E sheet.

LEGEND:

-·-·-·- Indicates existing structure
(C)* Indicates Corbel - Type C (Mod)
(D) Indicates Corbel - Type D
(E) Indicates Corbel - Type E

DIST	COUNTY	ROUTE	POST MILES TOTAL PROJECT	SHEET No.	TOTAL SHEETS
04	CC	680	22.7/24.8	122	186

REGISTERED CIVIL ENGINEER 10-10-12 DATE

5-20-13
PLANS APPROVAL DATE

REGISTERED PROFESSIONAL ENGINEER
PHILIP E. LUTZ
No. C58839
Exp. 12-31-14
CIVIL
STATE OF CALIFORNIA

The State of California or its officers or agents shall not be responsible for the accuracy or completeness of electronic copies of this plan sheet.

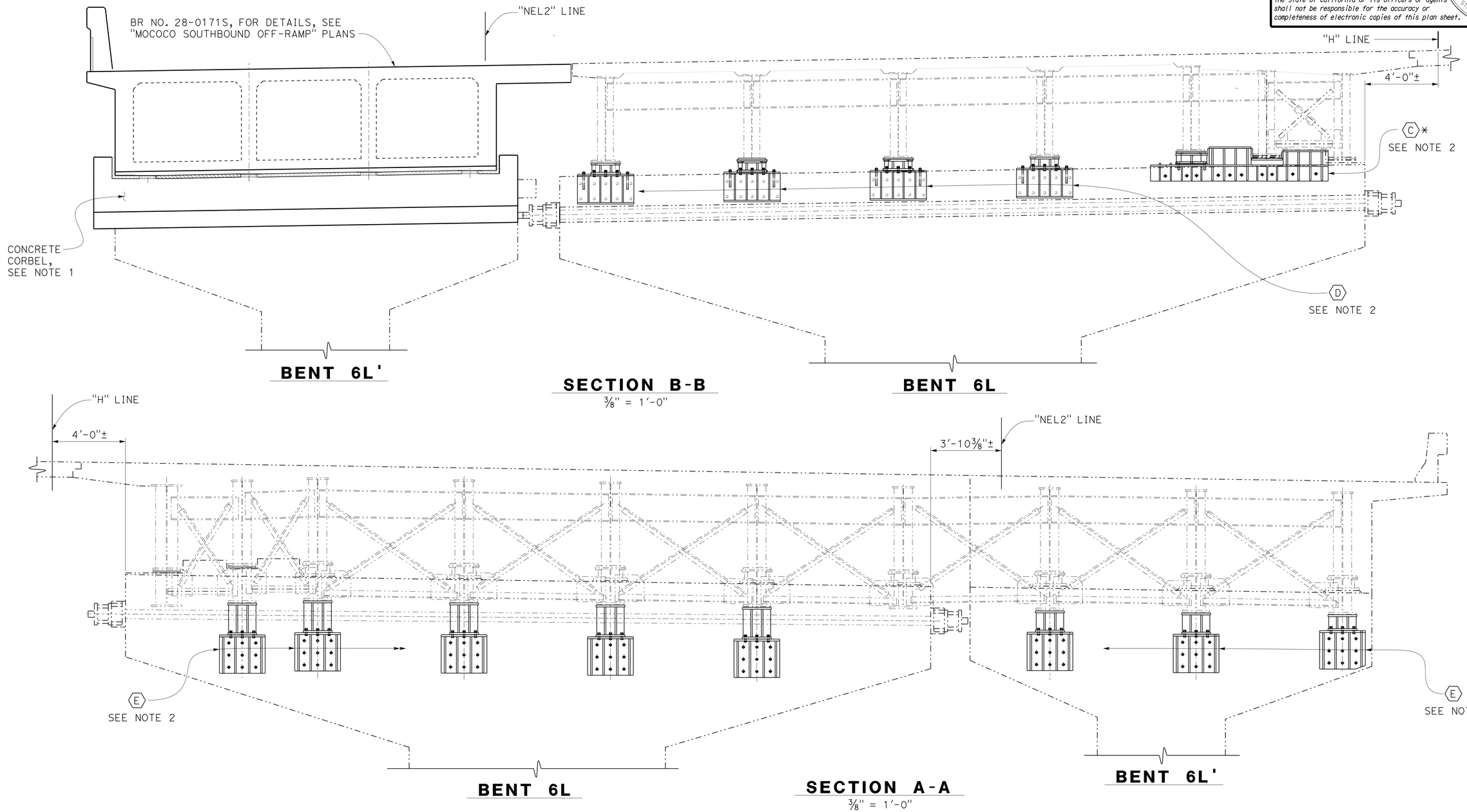

	BY	CHECKED
DESIGN	John Railey	Mike Van De Pol
DETAILS	D. Elliott / CCancino	Mike Van De Pol
QUANTITIES	John Railey	E. Franciliso / I. Yalan

STATE OF CALIFORNIA
DEPARTMENT OF TRANSPORTATION

DIVISION OF ENGINEERING SERVICES
STRUCTURE DESIGN
DESIGN BRANCH 9

BRIDGE NO. 28-0171L
POST MILE 24.3

MOCOCO OVERHEAD RETROFIT
STRUCTURE SECTION NO. 2

STRUCTURES DESIGN DETAIL SHEET (ENGLISH) (REV. 09-01-10)

ORIGINAL SCALE IN INCHES FOR REDUCED PLANS 0 1 2 3

UNIT: 3594 FILE => 28-0171-c-ss2.dgn
PROJECT NUMBER & PHASE: 0400000967 1 CONTRACT NO.: 04-3A8701

DISREGARD PRINTS BEARING EARLIER REVISION DATES

REVISION DATES: 07-16-13

SHEET 8 OF 34

USERNAME => s123631 DATE PLOTTED => 30-SEP-2013 TIME PLOTTED => 11:45

DIST	COUNTY	ROUTE	POST MILES TOTAL PROJECT	SHEET No.	TOTAL SHEETS
04	CC	680	22.7/24.8	123	186

REGISTERED CIVIL ENGINEER 10-10-12 DATE

5-20-13
PLANS APPROVAL DATE

REGISTERED PROFESSIONAL ENGINEER PHILIP E. LUTZ No. C58839 Exp. 12-31-14 CIVIL STATE OF CALIFORNIA

The State of California or its officers or agents shall not be responsible for the accuracy or completeness of electronic copies of this plan sheet.

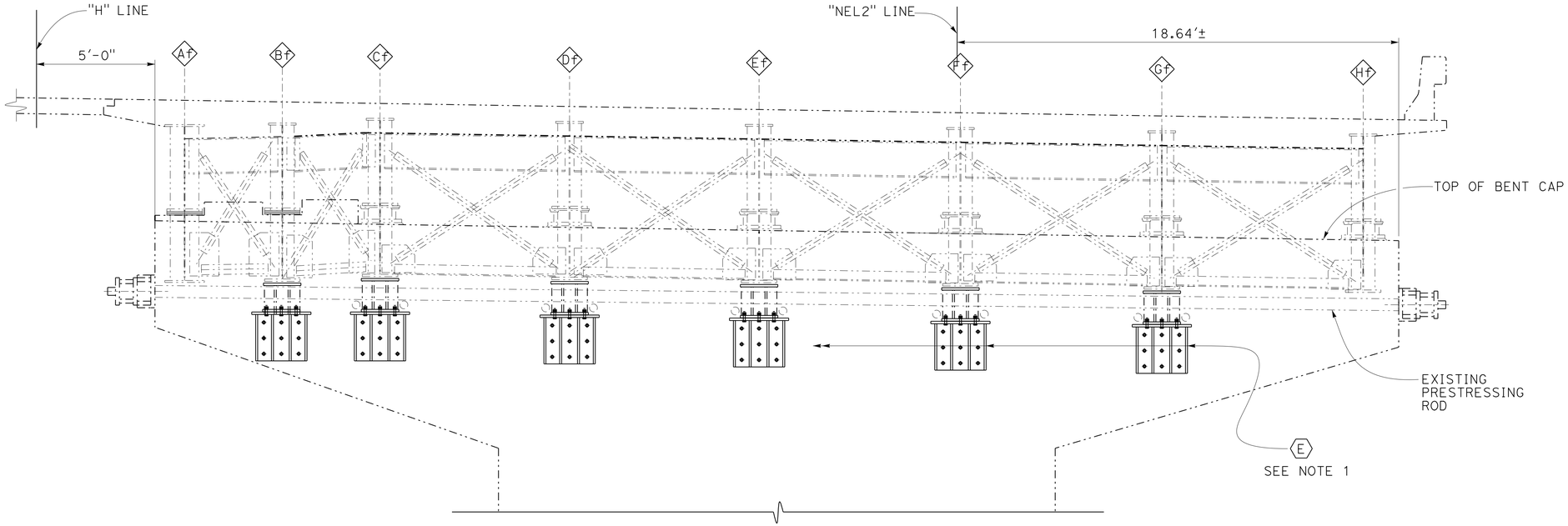

SECTION D-D
BENT 7L
3/8" = 1'-0"

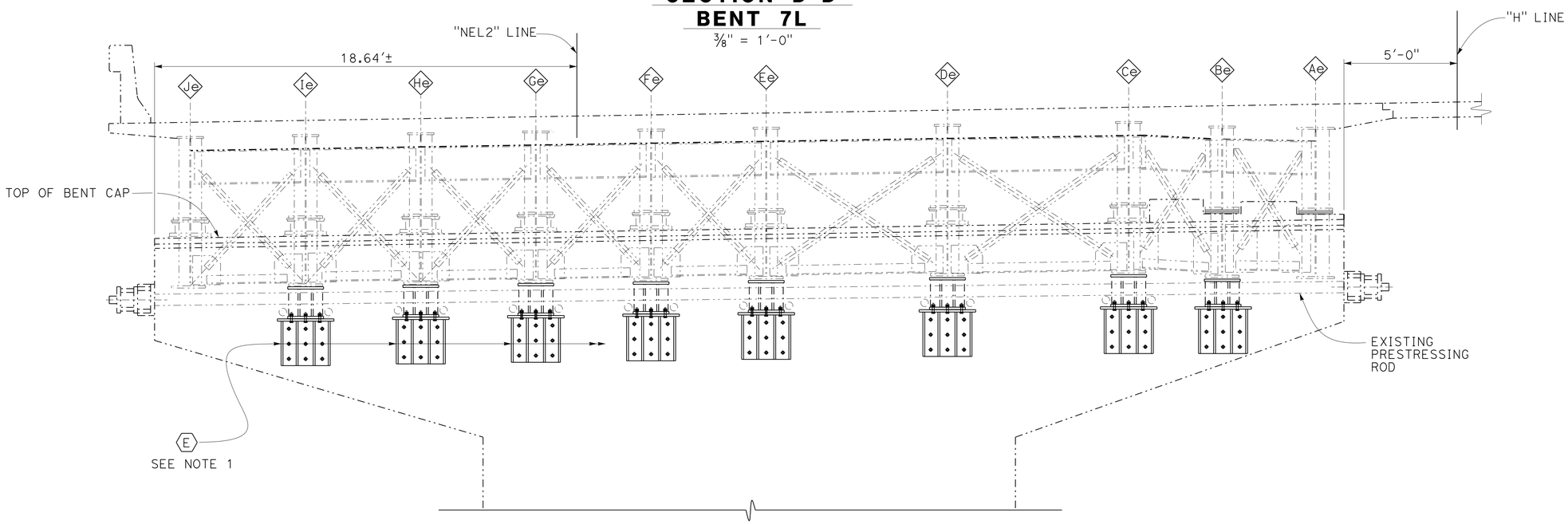

SECTION C-C
BENT 7L
3/8" = 1'-0"

LEGEND:

-·-·-·- Indicates existing structure

(E) Indicates Corbel - Type E

(Ae) Denotes Girder Designation

NOTE:
THE CONTRACTOR SHALL VERIFY ALL CONTROLLING FIELD DIMENSIONS BEFORE ORDERING OR FABRICATING ANY MATERIAL.

NOTE:

1. Details are shown on "CORBEL - TYPE E DETAILS" sheets.

	BY	CHECKED
DESIGN	John Railey	Mike Van De Pol
DETAILS	JFCasarino / CCancino	Mike Van De Pol
QUANTITIES	John Railey	E. Franciliso

STATE OF CALIFORNIA
DEPARTMENT OF TRANSPORTATION

DIVISION OF ENGINEERING SERVICES
STRUCTURE DESIGN
DESIGN BRANCH 9

BRIDGE NO. 28-0171L
POST MILE 24.3

MOCOCO OVERHEAD RETROFIT
STRUCTURE SECTION NO. 3

STRUCTURES DESIGN DETAIL SHEET (ENGLISH) (REV. 09-01-10)

ORIGINAL SCALE IN INCHES FOR REDUCED PLANS 0 1 2 3

UNIT: 3594
PROJECT NUMBER & PHASE: 0400000967 1
CONTRACT NO.: 04-3A8701

DISREGARD PRINTS BEARING EARLIER REVISION DATES

REVISION DATES 8-16-12

SHEET 9 OF 34

FILE => 28-0171-c-ss3.dgn

USERNAME => s123631 DATE PLOTTED => 30-SEP-2013 TIME PLOTTED => 11:45

DIST	COUNTY	ROUTE	POST MILES TOTAL PROJECT	SHEET No.	TOTAL SHEETS
04	CC	680	22.7/24.8	124	186

REGISTERED CIVIL ENGINEER 10-10-12 DATE

5-20-13
PLANS APPROVAL DATE

REGISTERED PROFESSIONAL ENGINEER
PHILIP E. LUTZ
No. C58839
Exp. 12-31-14
CIVIL
STATE OF CALIFORNIA

The State of California or its officers or agents shall not be responsible for the accuracy or completeness of electronic copies of this plan sheet.

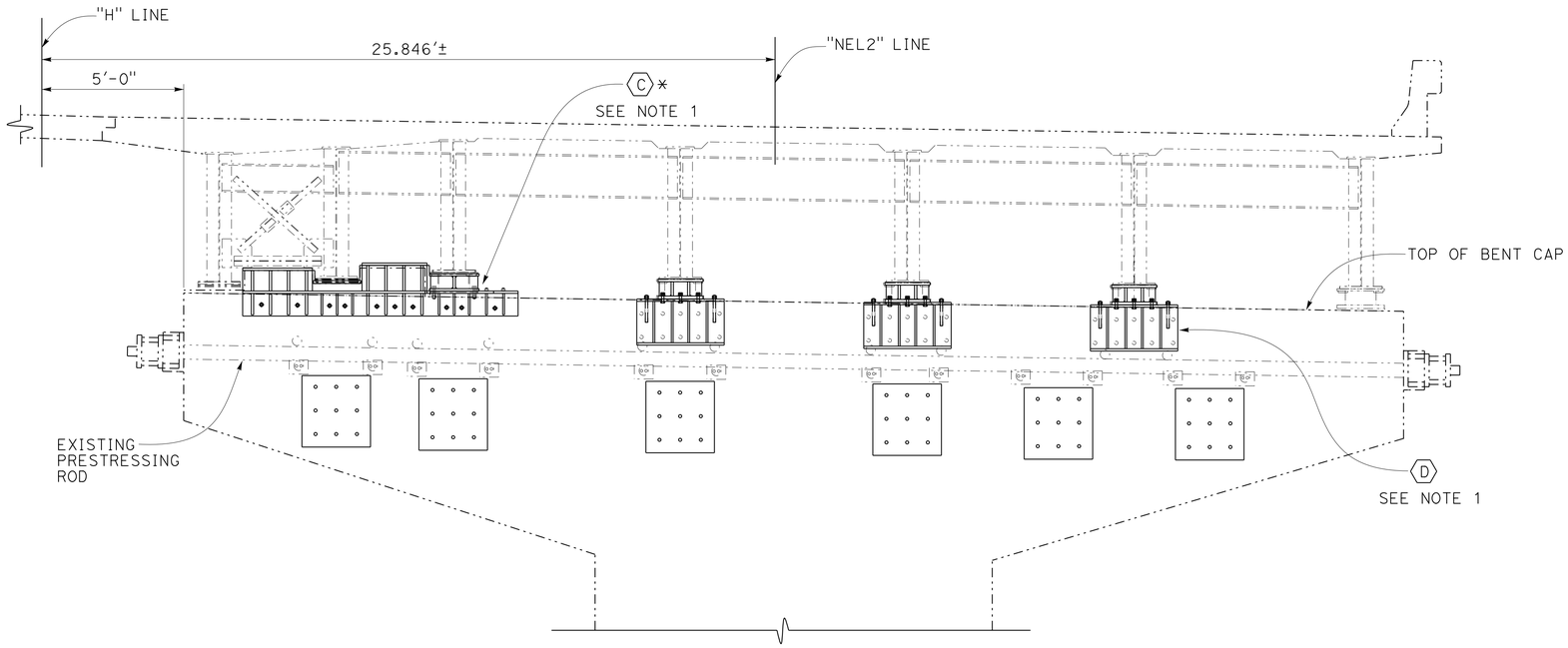

SECTION F-F
BENT 8L

3/8" = 1'-0"

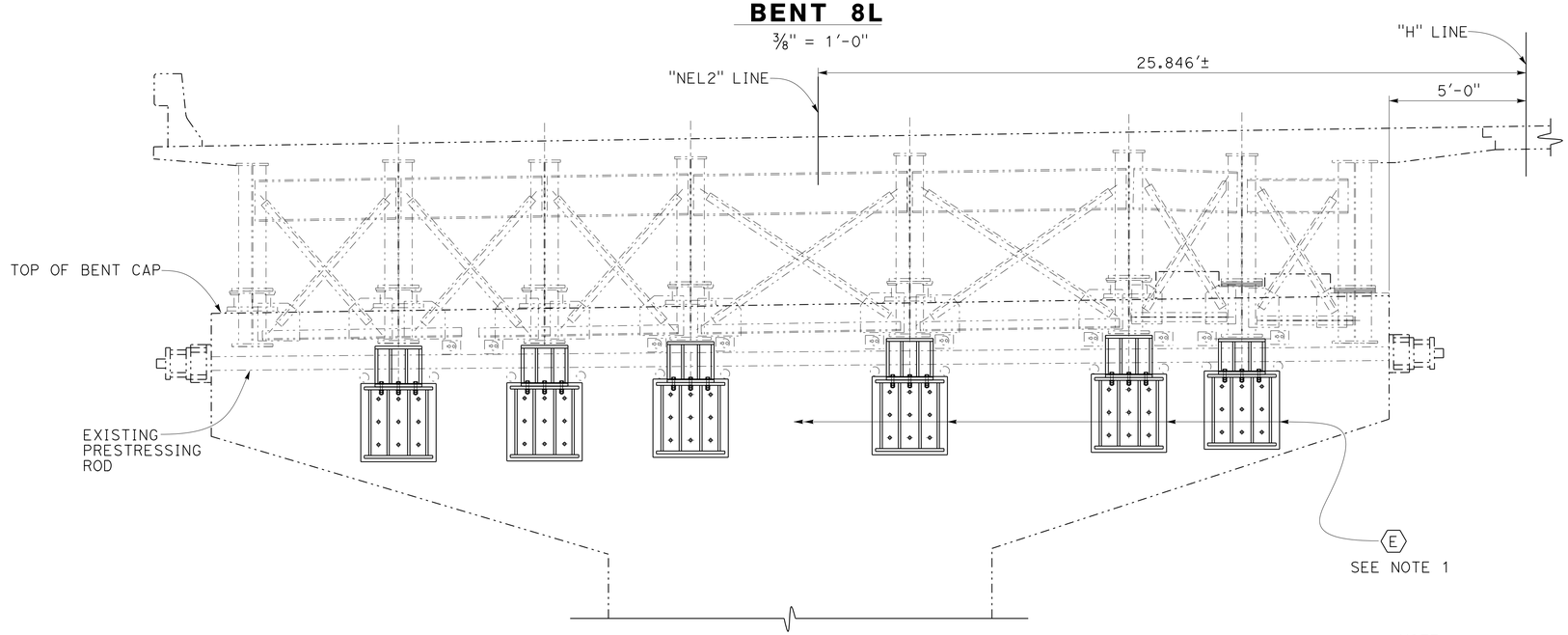

SECTION E-E
BENT 8L

3/8" = 1'-0"

LEGEND:

- -·-·- Indicates existing structure
- C * Indicates Corbel - Type C (Mod)
- D Indicates Corbel - Type D
- E Indicates Corbel - Type E

NOTE:
THE CONTRACTOR SHALL VERIFY ALL CONTROLLING FIELD DIMENSIONS BEFORE ORDERING OR FABRICATING ANY MATERIAL.

NOTE:

1. For Corbel Types and Details, see "CORBEL - TYPE C (MODIFIED) DETAILS" for Corbel Type C (Modified), "CORBEL - TYPE D DETAILS" for Corbel Type D, and "CORBEL - TYPE E DETAILS" for Corbel Type E sheet.

	BY	CHECKED
DESIGN	John Railey	Mike Van De Pol
DETAILS	CCancino	Mike Van De Pol
QUANTITIES	John Railey	I. Yalan

STATE OF CALIFORNIA
DEPARTMENT OF TRANSPORTATION

DIVISION OF ENGINEERING SERVICES
STRUCTURE DESIGN
DESIGN BRANCH 9

BRIDGE NO. 28-0171L
POST MILE 24.3

MOCOCO OVERHEAD RETROFIT
STRUCTURE SECTION NO. 4

STRUCTURES DESIGN DETAIL SHEET (ENGLISH) (REV. 09-01-10)

ORIGINAL SCALE IN INCHES FOR REDUCED PLANS 0 1 2 3

UNIT: 3594 FILE => 28-0171-c-ss4.dgn
PROJECT NUMBER & PHASE: 0400000967 1 CONTRACT NO.: 04-3A8701

DISREGARD PRINTS BEARING EARLIER REVISION DATES

REVISION DATES: 6-18-12 07-16-13

SHEET 10 OF 34

USERNAME => s123631 DATE PLOTTED => 30-SEP-2013 TIME PLOTTED => 11:46

DIST	COUNTY	ROUTE	POST MILES TOTAL PROJECT	SHEET No.	TOTAL SHEETS
04	CC	680	22.7/24.8	125	186

REGISTERED CIVIL ENGINEER 10-10-12 DATE

5-20-13
PLANS APPROVAL DATE

REGISTERED PROFESSIONAL ENGINEER
PHILIP E. LUTZ
No. C58839
Exp. 12-31-14
CIVIL
STATE OF CALIFORNIA

The State of California or its officers or agents shall not be responsible for the accuracy or completeness of electronic copies of this plan sheet.

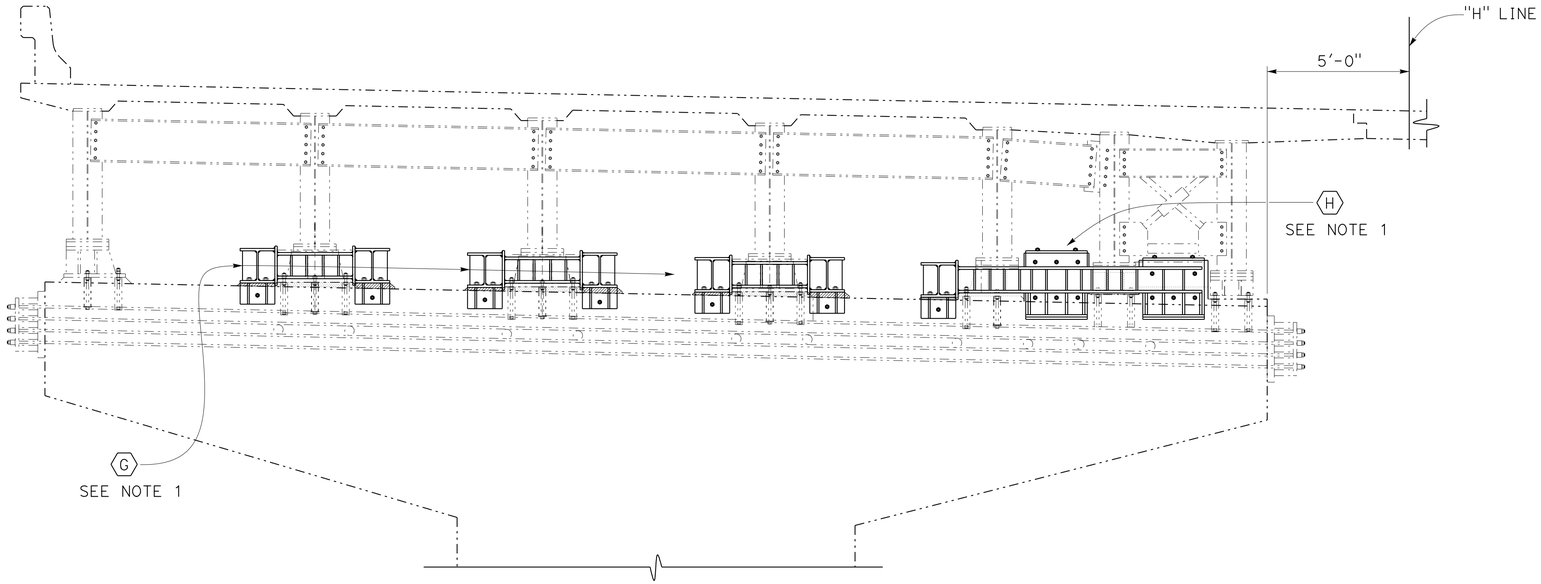

TYPICAL BENT ELEVATION
BENT 9L

3/8" = 1'-0"

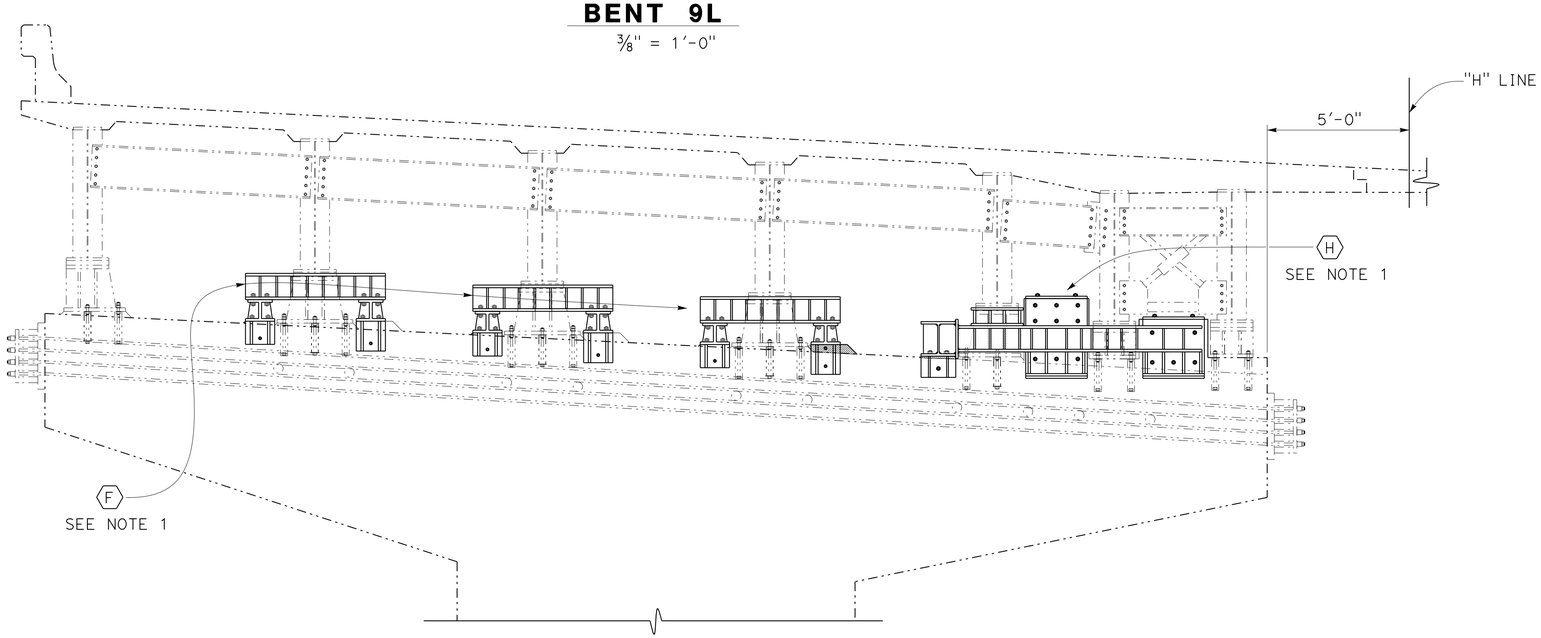

TYPICAL BENT ELEVATION
BENT 10L

3/8" = 1'-0"

LEGEND:

-·-·-·- Indicates existing structure

F Indicates Corbel - Type F

G Indicates Corbel - Type G

H Indicates Corbel - Type H

NOTE:
THE CONTRACTOR SHALL VERIFY ALL CONTROLLING FIELD DIMENSIONS BEFORE ORDERING OR FABRICATING ANY MATERIAL.

NOTE:

1. Details are shown on "CORBEL - TYPE F DETAILS", "CORBEL - TYPE G DETAILS" and "CORBEL - TYPE H DETAILS" sheets.

	BY	CHECKED
DESIGN	John Railey	Mike Van De Pol
DETAILS	CCancino / D. Elliot	Mike Van De Pol
QUANTITIES	John Railey	I. Yalan

STATE OF CALIFORNIA
DEPARTMENT OF TRANSPORTATION

DIVISION OF ENGINEERING SERVICES
STRUCTURE DESIGN
DESIGN BRANCH 9

BRIDGE NO. 28-0171L
POST MILE 24.3

MOCOCO OVERHEAD RETROFIT
STRUCTURE SECTION NO. 5

STRUCTURES DESIGN DETAIL SHEET (ENGLISH) (REV. 09-01-10)

ORIGINAL SCALE IN INCHES FOR REDUCED PLANS 0 1 2 3

UNIT: 3594
PROJECT NUMBER & PHASE: 0400000967 1
CONTRACT NO.: 04-3A8701

DISREGARD PRINTS BEARING EARLIER REVISION DATES

REVISION DATES: 6-18-12 09-04-12

SHEET 11 OF 34

FILE => 28-0171-c-ss5.dgn

USERNAME => s123631 DATE PLOTTED => 30-SEP-2013 TIME PLOTTED => 11:46

DIST	COUNTY	ROUTE	POST MILES TOTAL PROJECT	SHEET No.	TOTAL SHEETS
04	CC	680	22.7/24.8	126	186

REGISTERED CIVIL ENGINEER 10-10-12 DATE

5-20-13
PLANS APPROVAL DATE

REGISTERED PROFESSIONAL ENGINEER
PHILIP E. LUTZ
No. C58839
Exp. 12-31-14
CIVIL
STATE OF CALIFORNIA

The State of California or its officers or agents shall not be responsible for the accuracy or completeness of electronic copies of this plan sheet.

LEGEND:

Indicates existing structure

Indicates concrete removal

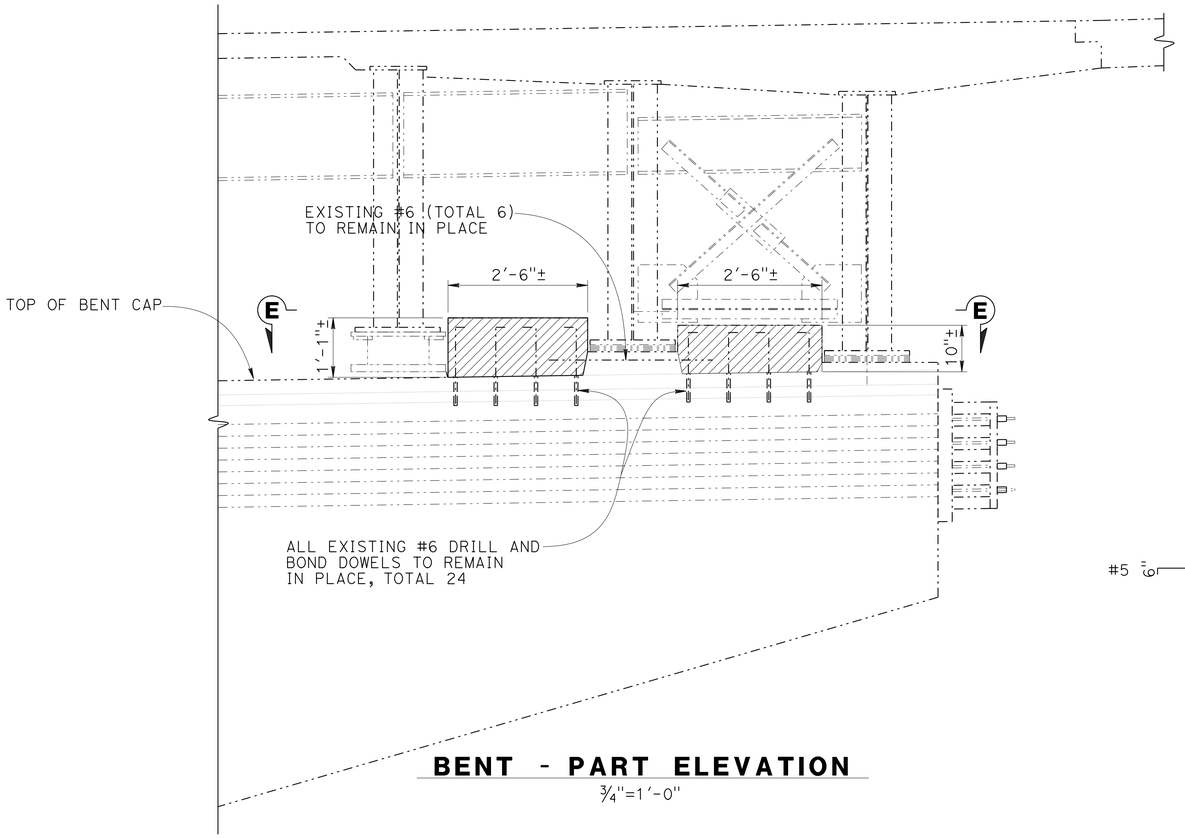

BENT - PART ELEVATION
3/4"=1'-0"

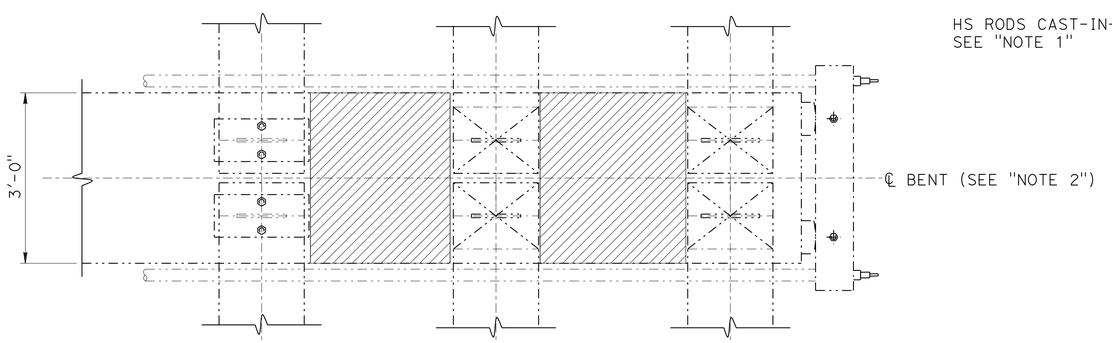

SECTION E-E
3/4"=1'-0"

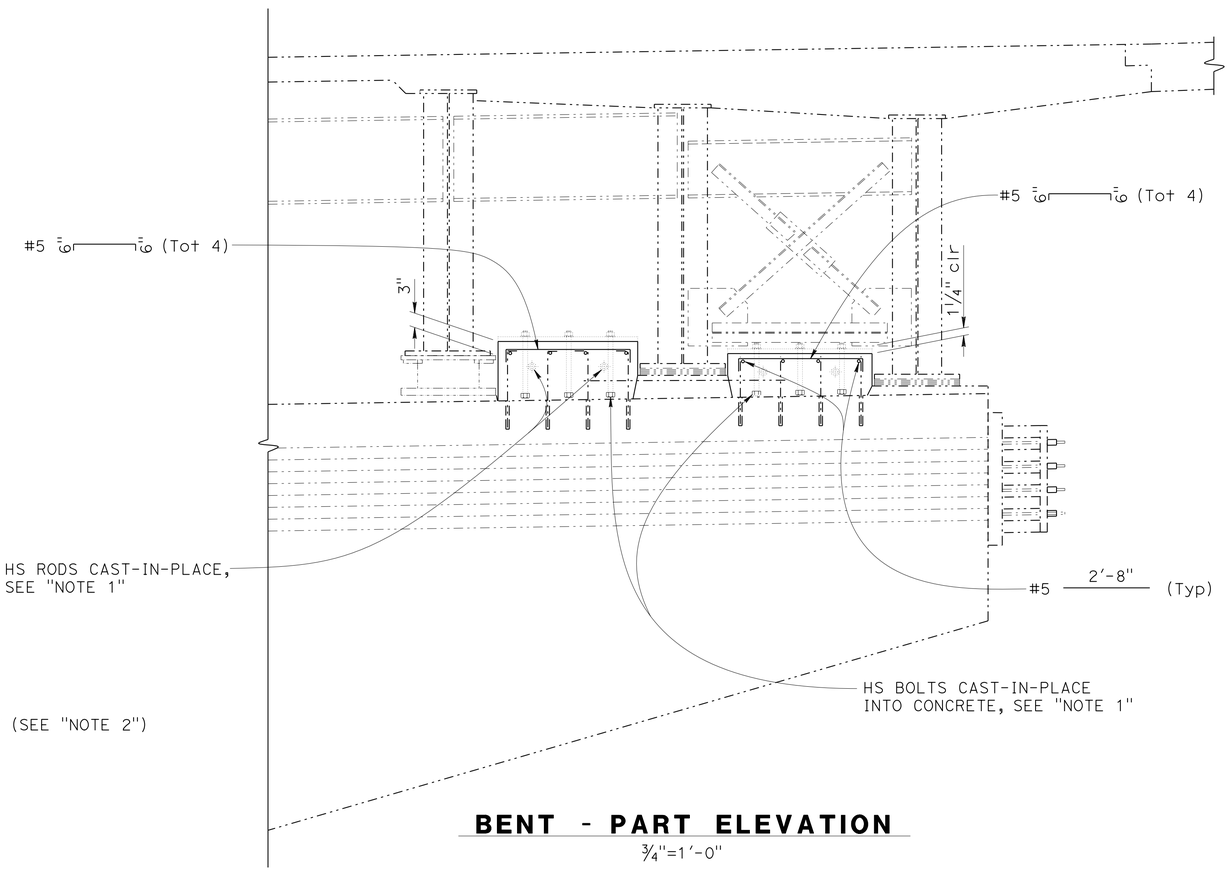

BENT - PART ELEVATION
3/4"=1'-0"

NOTES:

1. See "CORBEL - TYPE C DETAILS" sheet for locations of HS Rods and Bolts.
2. Removal applies to Bents 2 - 5 R & L, Bents 6 and 8 R & L, and Bents 9 - 10 R & L.

NOTE:
THE CONTRACTOR SHALL VERIFY ALL CONTROLLING FIELD DIMENSIONS BEFORE ORDERING OR FABRICATING ANY MATERIAL.

	BY	CHECKED
DESIGN	John Railey	Mike Van De Pol
DETAILS	CCancino	Mike Van De Pol
QUANTITIES	John Railey	I. Yalan

STATE OF CALIFORNIA
DEPARTMENT OF TRANSPORTATION

DIVISION OF ENGINEERING SERVICES
STRUCTURE DESIGN
DESIGN BRANCH 9

BRIDGE NO. 28-0171L
POST MILE 24.3

MOCOCO OVERHEAD RETROFIT
SHEAR KEY REMOVAL

STRUCTURES DESIGN DETAIL SHEET (ENGLISH) (REV. 09-01-10)

ORIGINAL SCALE IN INCHES FOR REDUCED PLANS 0 1 2 3

UNIT: 3594
PROJECT NUMBER & PHASE: 0400000967 1
CONTRACT NO.: 04-3A8701

DISREGARD PRINTS BEARING EARLIER REVISION DATES

REVISION DATES: ~~6-13-12~~ 8-15-12

SHEET 12 OF 34

FILE => 28-0171-d-shearkey.dgn

USERNAME => s123631 DATE PLOTTED => 30-SEP-2013 TIME PLOTTED => 11:46

DIST	COUNTY	ROUTE	POST MILES TOTAL PROJECT	SHEET No.	TOTAL SHEETS
04	CC	680	22.7/24.8	127	186

REGISTERED CIVIL ENGINEER 10-10-12 DATE

5-20-13
PLANS APPROVAL DATE

REGISTERED PROFESSIONAL ENGINEER
PHILIP E. LUTZ
No. C58839
Exp. 12-31-14
CIVIL
STATE OF CALIFORNIA

The State of California or its officers or agents shall not be responsible for the accuracy or completeness of electronic copies of this plan sheet.

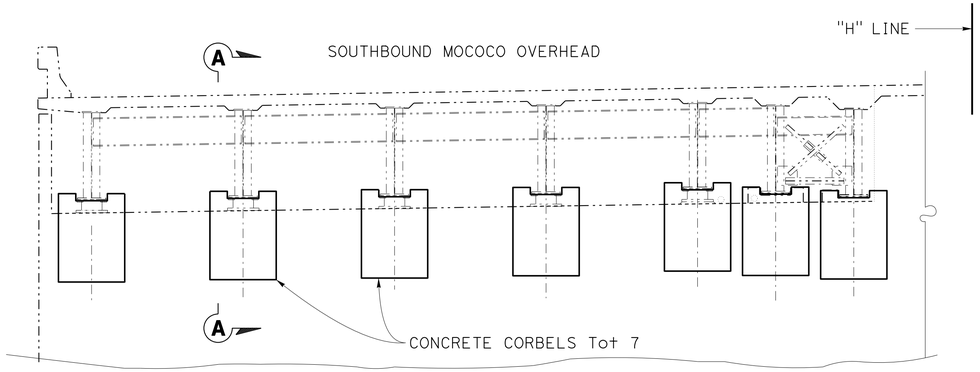

Note: Abutment 1R shown, abutment 1L, symmetrical.

ELEVATION

1/4" = 1'-0"

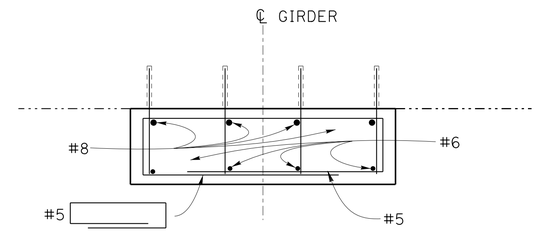

SECTION C-C

1"=1'-0"

LEGEND:

-·-·-·- Indicates existing structure

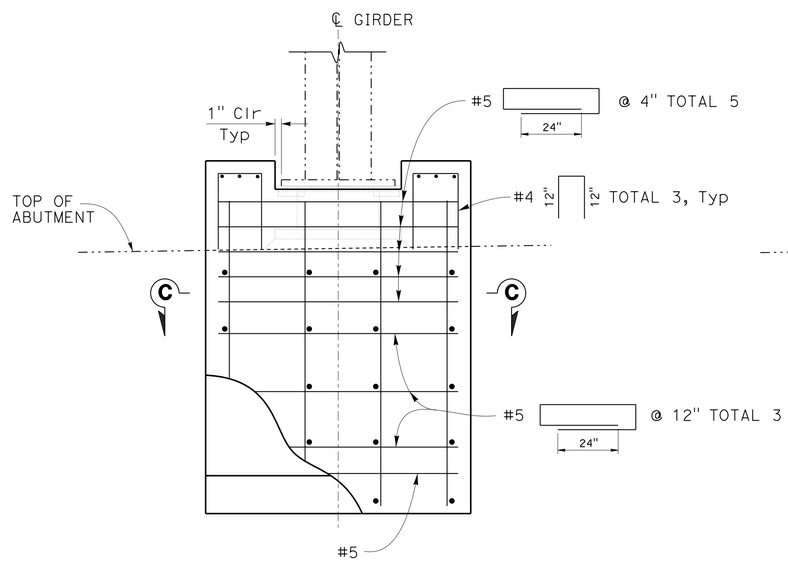

CONCRETE CORBEL DETAIL

1"=1'-0"

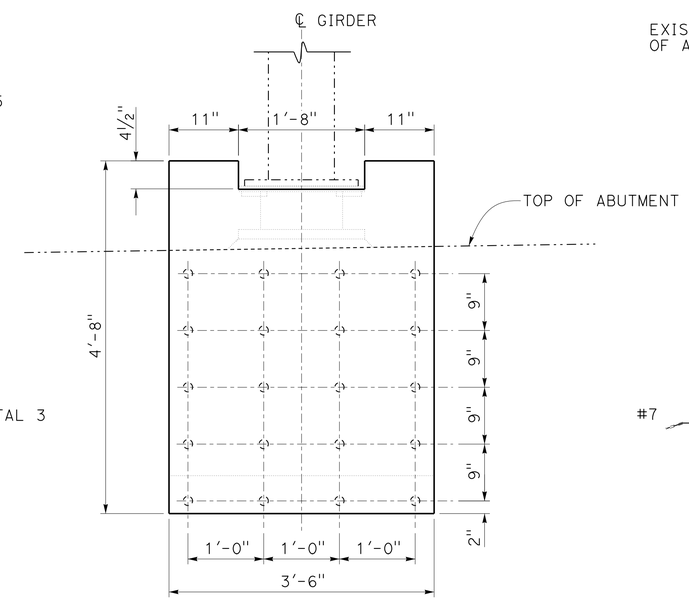

DRILL AND BOND DOWEL PATTERN

1"=1'-0"

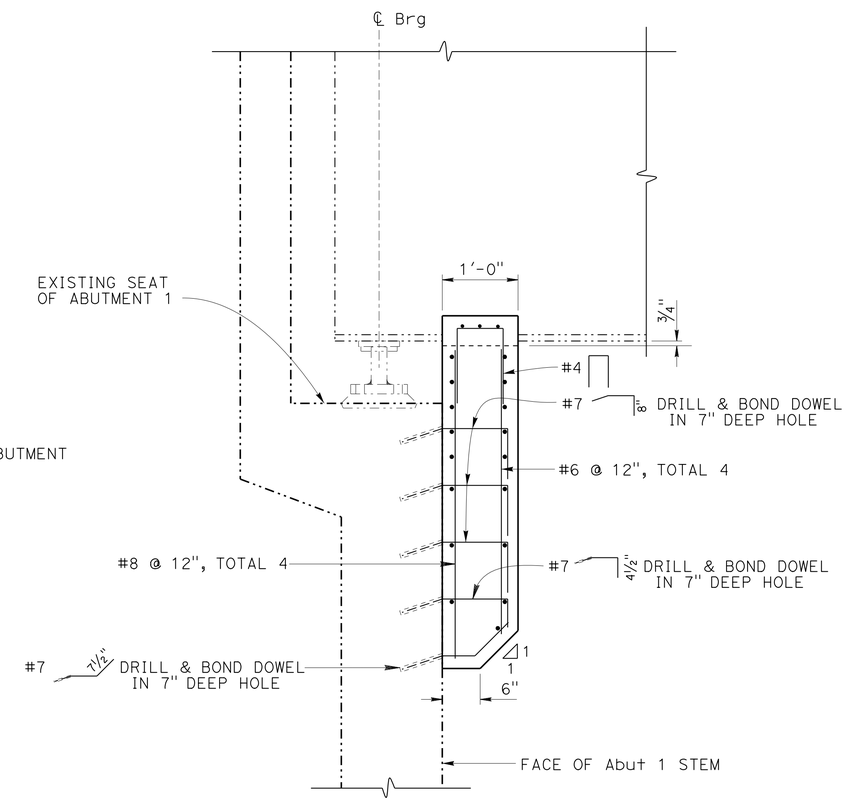

SECTION A-A

1"=1'-0"

NOTE:
THE CONTRACTOR SHALL VERIFY ALL CONTROLLING FIELD DIMENSIONS BEFORE ORDERING OR FABRICATING ANY MATERIAL.

	BY	CHECKED
DESIGN	John Railey	Mike Van De Pol
DETAILS	JFCasarino / CCancino	Mike Van De Pol
QUANTITIES	John Railey	E. Franciliso

STATE OF CALIFORNIA
DEPARTMENT OF TRANSPORTATION

DIVISION OF ENGINEERING SERVICES
STRUCTURE DESIGN
DESIGN BRANCH 9

BRIDGE NO. 28-0171L
POST MILE 24.3

MOCOCO OVERHEAD RETROFIT
ABUTMENT 1 - CONCRETE CORBEL

STRUCTURES DESIGN DETAIL SHEET (ENGLISH) (REV. 09-01-10)

ORIGINAL SCALE IN INCHES FOR REDUCED PLANS 0 1 2 3

UNIT: 3594 FILE => 28-0171-e-abut1.dgn
PROJECT NUMBER & PHASE: 0400000967 1 CONTRACT NO.: 04-3A8701

DISREGARD PRINTS BEARING EARLIER REVISION DATES

REVISION DATES: 6-13-12 9-11-12 07-16-13

SHEET 13 OF 34

USERNAME => s123631 DATE PLOTTED => 30-SEP-2013 TIME PLOTTED => 11:46

DIST	COUNTY	ROUTE	POST MILES TOTAL PROJECT	SHEET No.	TOTAL SHEETS
04	CC	680	22.7/24.8	128	186

REGISTERED CIVIL ENGINEER 10-10-12 DATE

5-20-13
PLANS APPROVAL DATE

REGISTERED PROFESSIONAL ENGINEER PHILIP E. LUTZ No. C58839 Exp. 12-31-14 CIVIL STATE OF CALIFORNIA

The State of California or its officers or agents shall not be responsible for the accuracy or completeness of electronic copies of this plan sheet.

NOTE:
THE CONTRACTOR SHALL VERIFY ALL CONTROLLING FIELD DIMENSIONS BEFORE ORDERING OR FABRICATING ANY MATERIAL.

LEGEND:
-·-·-·- Indicates existing structure

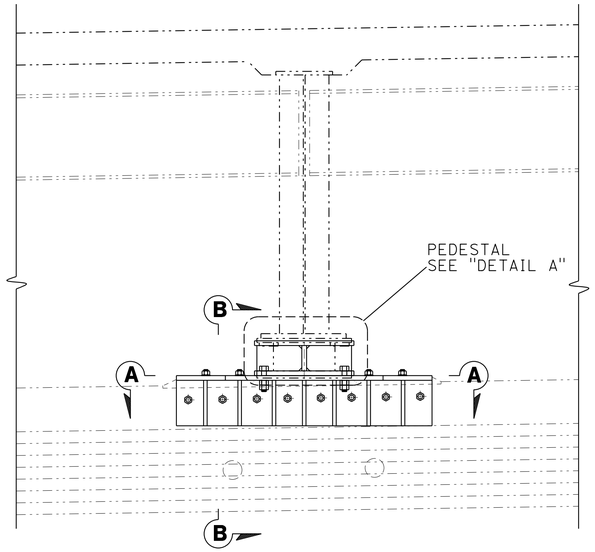

BENT PART ELEVATION
3/4"=1'-0"

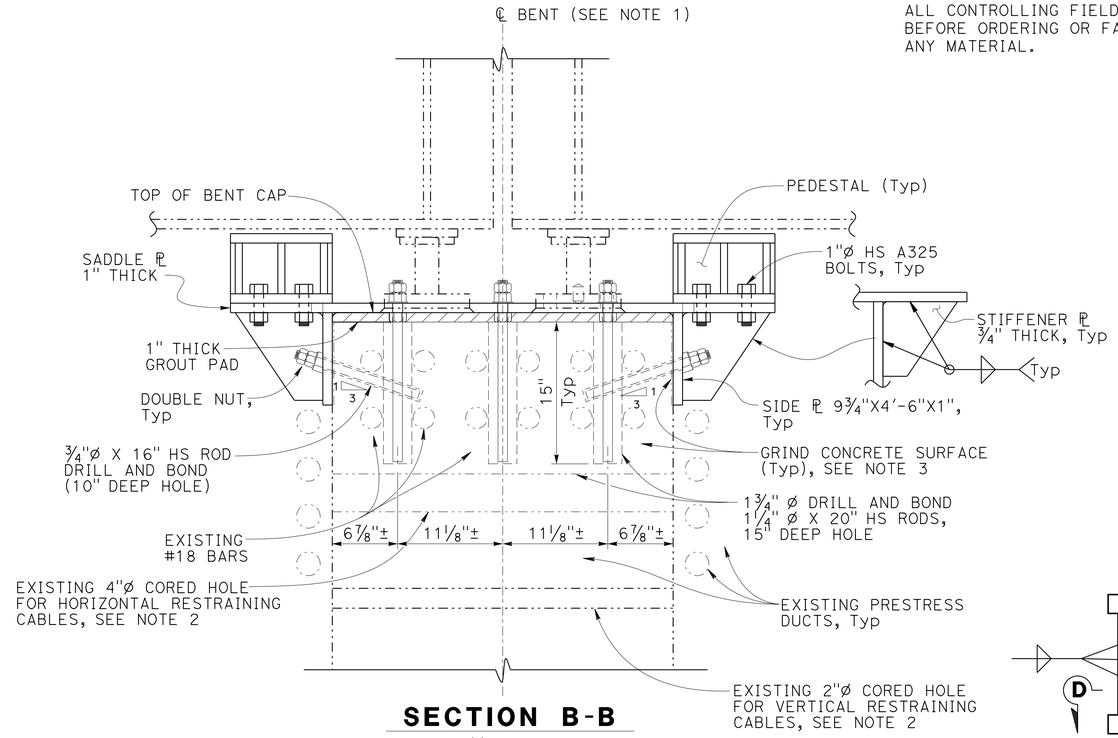

SECTION B-B
1 1/2"=1'-0"

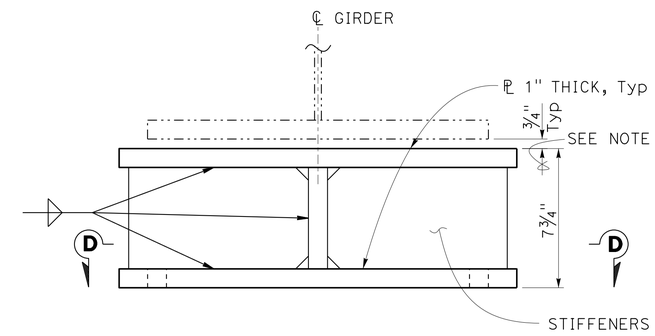

DETAIL A
3"=1'-0"

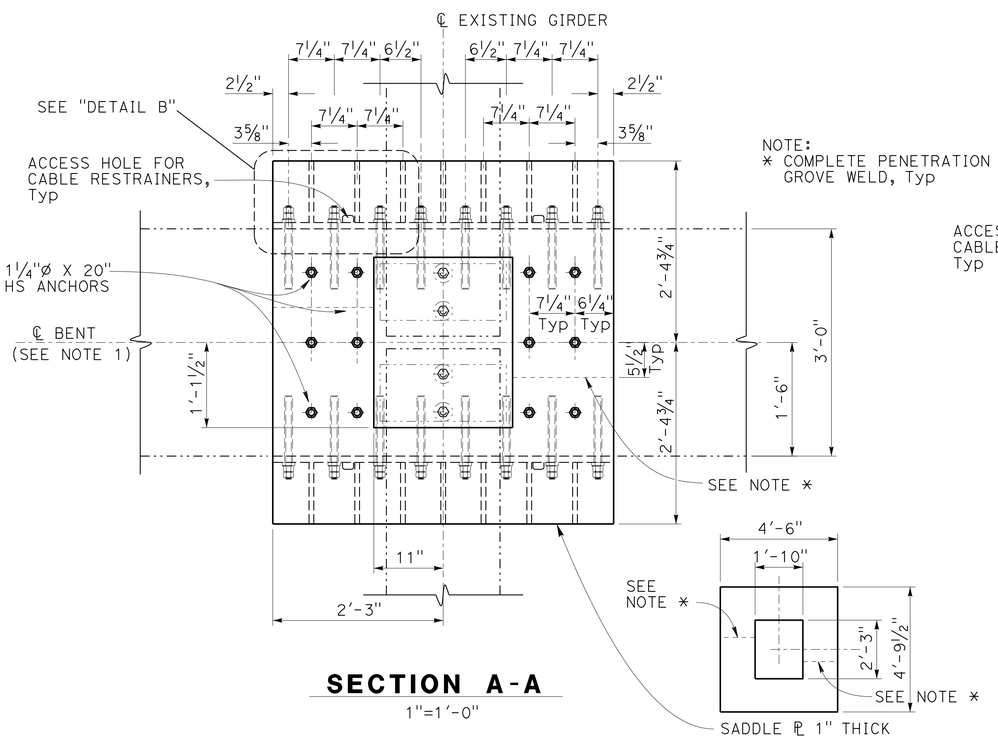

SECTION A-A
1"=1'-0"

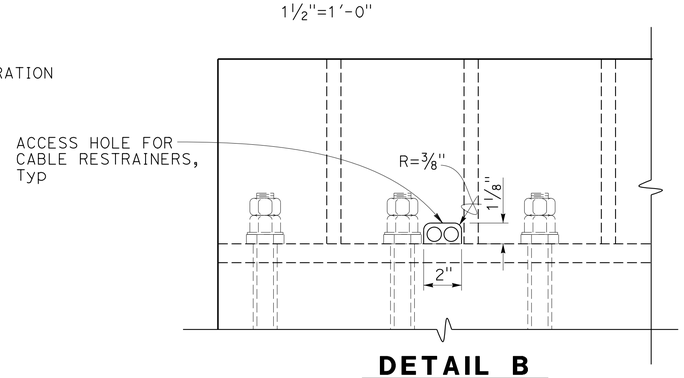

DETAIL B
3"=1'-0"

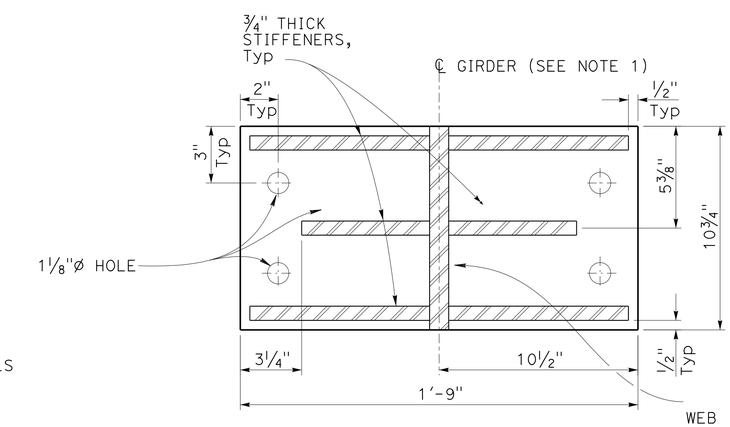

SECTION D-D
3"=1'-0"

NOTES:

1. For Bents 2RL thru 5RL, 9R and 10R.
2. For Restraining Cable Details, see "RESTRAINER DETAILS CORBEL B" on "RESTRAINER DETAILS NO. 3" sheet.
3. Grind concrete surface to 1/16"± tolerance to assure full bearing of side plates.
4. See "NOTES: CONSTRUCTION SEQUENCE FOR STEEL CORBLES" on "INDEX TO PLANS" sheet.
5. Gap between corbel plate and bottom flange is 3/4" (TYPICAL FOR ALL CORBEL TYPES).

	BY	CHECKED
DESIGN	John Railey	Mike Van De Pol
DETAILS	CCancino	Mike Van De Pol
QUANTITIES	John Railey	E. Franciliso

STATE OF CALIFORNIA
DEPARTMENT OF TRANSPORTATION

DIVISION OF ENGINEERING SERVICES
STRUCTURE DESIGN
DESIGN BRANCH 9

BRIDGE NO. 28-0171L
POST MILE 24.3

MOCOCO OVERHEAD RETROFIT
CORBEL - TYPE B DETAILS

STRUCTURES DESIGN DETAIL SHEET (ENGLISH) (REV. 09-01-10)

ORIGINAL SCALE IN INCHES FOR REDUCED PLANS 0 1 2 3

UNIT: 3594 FILE => 28-0171-e-bent2-5.dgn
PROJECT NUMBER & PHASE: 0400000967 1 CONTRACT NO.: 04-3A8701

DISREGARD PRINTS BEARING EARLIER REVISION DATES

REVISION DATES: 8-16-12 07-16-13 01-23-13

SHEET 14 OF 34

USERNAME => s123631 DATE PLOTTED => 30-SEP-2013 TIME PLOTTED => 11:46

DIST	COUNTY	ROUTE	POST MILES TOTAL PROJECT	SHEET No.	TOTAL SHEETS
04	CC	680	22.7/24.8	129	186

REGISTERED CIVIL ENGINEER 10-10-12 DATE

5-20-13
PLANS APPROVAL DATE

REGISTERED PROFESSIONAL ENGINEER PHILIP E. LUTZ No. C58839 Exp. 12-31-14 CIVIL STATE OF CALIFORNIA

The State of California or its officers or agents shall not be responsible for the accuracy or completeness of electronic copies of this plan sheet.

LEGEND:
-·-·-·- Indicates existing structure

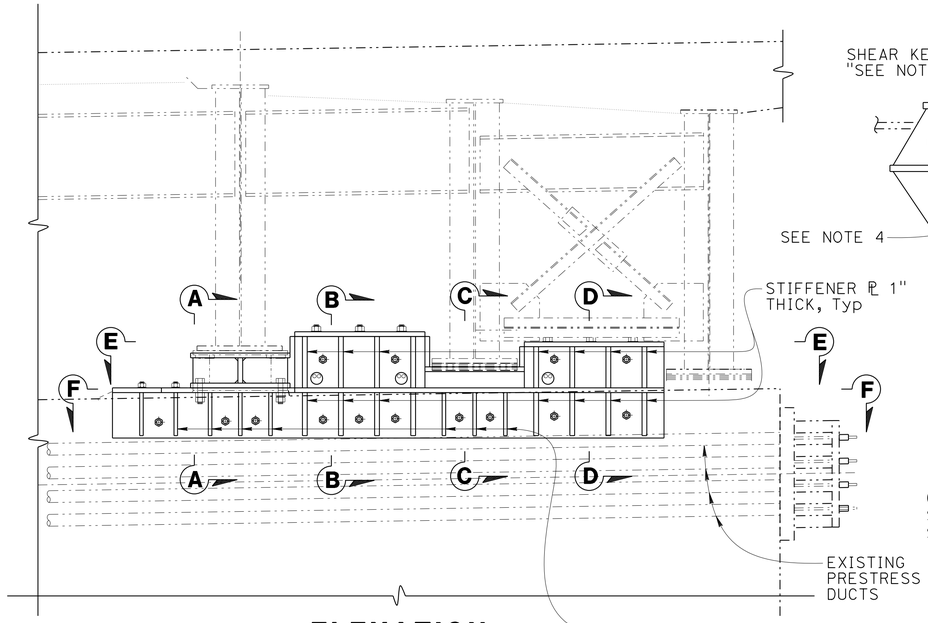

ELEVATION
¾"=1'-0"

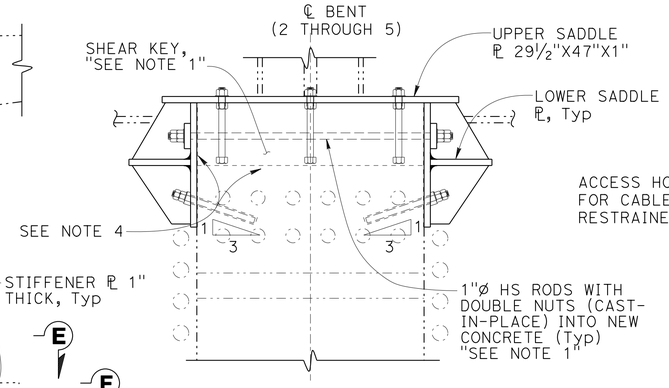

SECTION D-D
1"=1'-0"

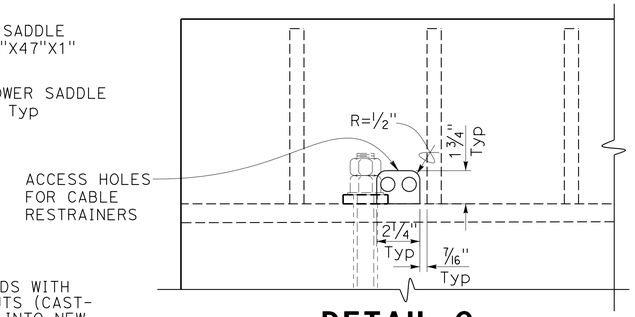

DETAIL C
3"=1'-0"

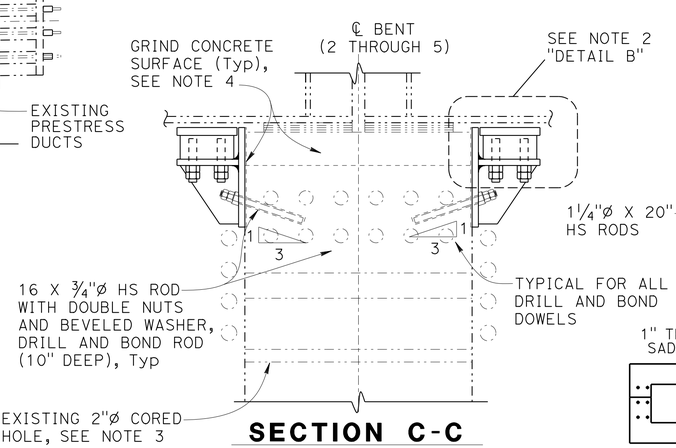

SECTION C-C
1"=1'-0"

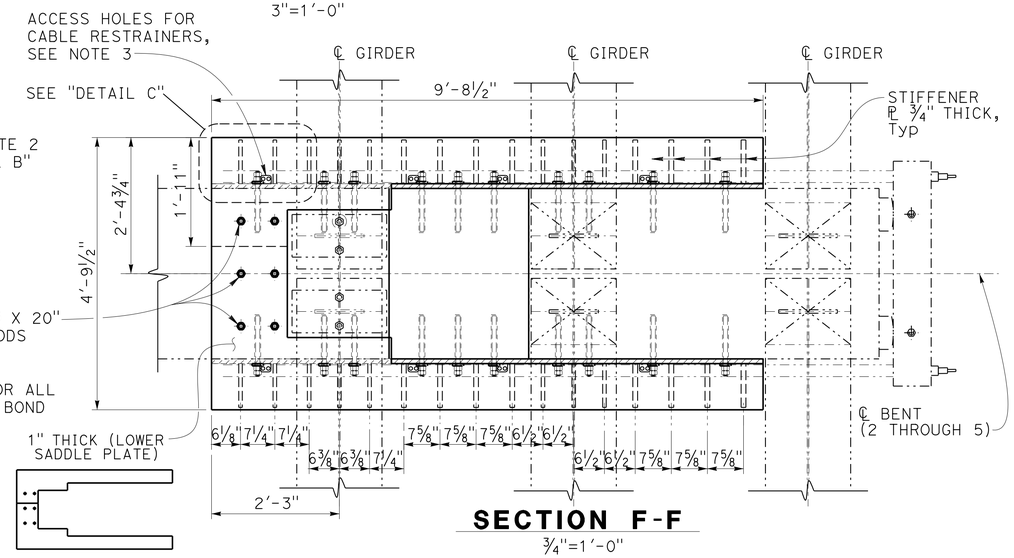

SECTION F-F
¾"=1'-0"

NOTES:
1. For further shear key details, see "SHEAR KEY REMOVAL" sheet.
2. For Pedestals "DETAIL A" and "DETAIL B", see "CORBEL - TYPE C DETAILS NO. 2" sheet.
3. Cable Restrainers not shown, see "RESTRAINER DETAILS NO. 3" sheet for details omitted.
4. Grind concrete surface to 1/16"± tolerance to assure full bearing of side plates.
5. See "NOTES: CONSTRUCTION SEQUENCE FOR STEEL CORBELS" on "INDEX TO PLANS" sheet.
6. Gap between corbel plate and bottom flange is ¾".

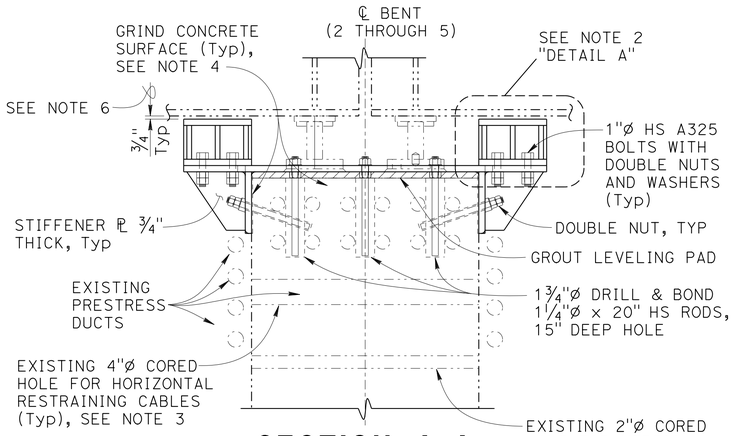

SECTION A-A
1"=1'-0"

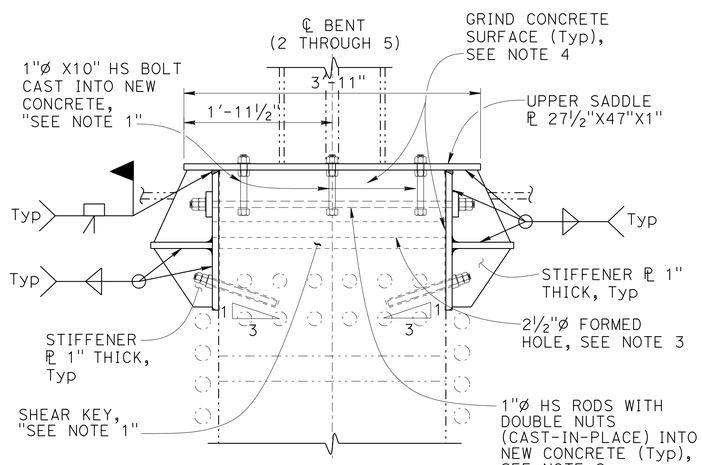

SECTION B-B
1"=1'-0"

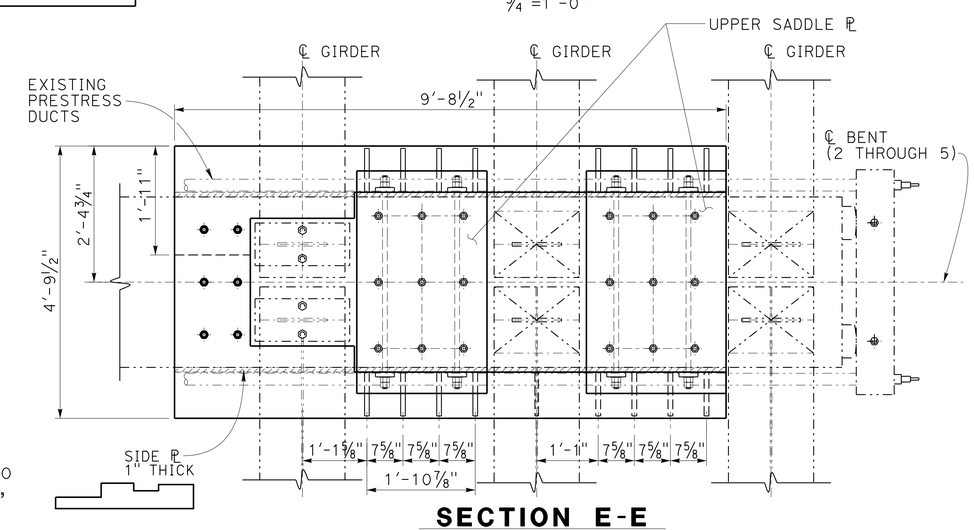

SECTION E-E
¾"=1'-0"

NOTE:
THE CONTRACTOR SHALL VERIFY ALL CONTROLLING FIELD DIMENSIONS BEFORE ORDERING OR FABRICATING ANY MATERIAL.

	BY	CHECKED
DESIGN	John Railey	Mike Van De Pol
DETAILS	CCancino	Mike Van De Pol
QUANTITIES	John Railey	I. Yalan

STATE OF CALIFORNIA
DEPARTMENT OF TRANSPORTATION

DIVISION OF ENGINEERING SERVICES
STRUCTURE DESIGN
DESIGN BRANCH 9

BRIDGE NO. 28-0171L
POST MILE 24.3

MOCOCO OVERHEAD RETROFIT
CORBEL - TYPE C DETAILS NO. 1

STRUCTURES DESIGN DETAIL SHEET (ENGLISH) (REV. 09-01-10)

ORIGINAL SCALE IN INCHES FOR REDUCED PLANS 0 1 2 3

UNIT: 3594 FILE => 28-0171-e-bent2-5_1.dgn
PROJECT NUMBER & PHASE: 0400000967 1 CONTRACT NO.: 04-3A8701

DISREGARD PRINTS BEARING EARLIER REVISION DATES

REVISION DATES 6-13-12 07-16-13 01-23-13

SHEET 15 OF 34

USERNAME => s123631 DATE PLOTTED => 30-SEP-2013 TIME PLOTTED => 11:46

DIST	COUNTY	ROUTE	POST MILES TOTAL PROJECT	SHEET No.	TOTAL SHEETS
04	CC	680	22.7/24.8	130	186

REGISTERED CIVIL ENGINEER 10-10-12 DATE

5-20-13
PLANS APPROVAL DATE

REGISTERED PROFESSIONAL ENGINEER
PHILIP E. LUTZ
No. C58839
Exp. 12-31-14
CIVIL
STATE OF CALIFORNIA

The State of California or its officers or agents shall not be responsible for the accuracy or completeness of electronic copies of this plan sheet.

LEGEND:
-·-·-·- Indicates existing structure

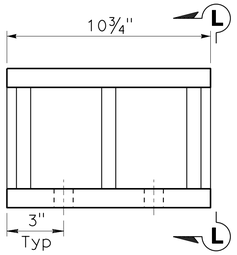

DETAIL A
3"=1'-0"

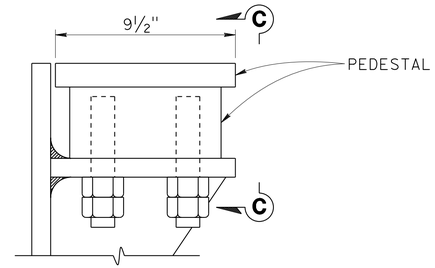

DETAIL B
3"=1'-0"

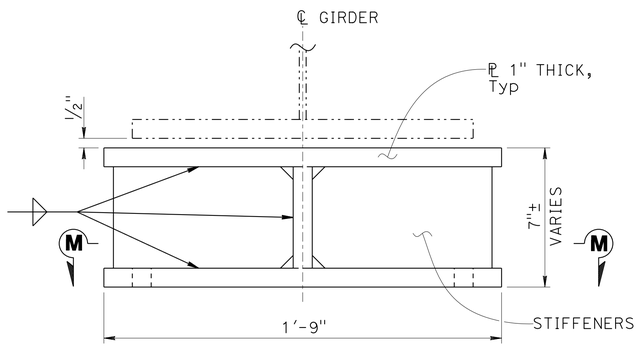

VIEW L-L
3"=1'-0"

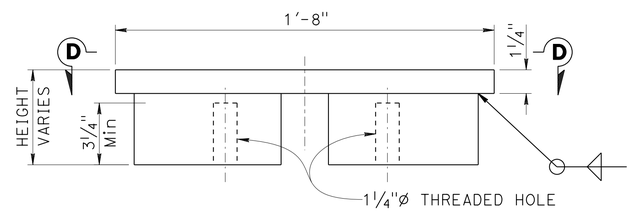

VIEW C-C
3"=1'-0"

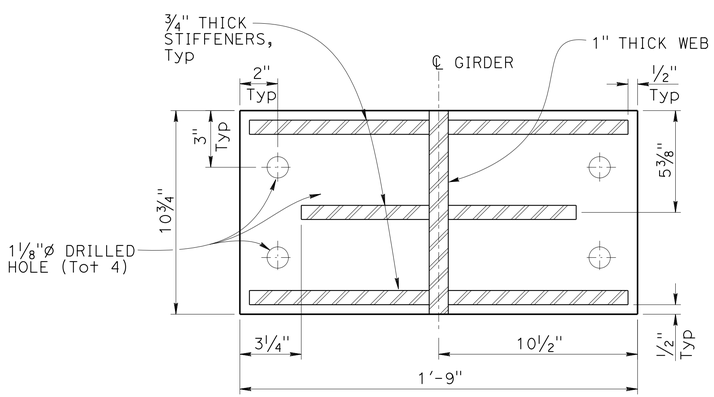

SECTION M-M
3"=1'-0"

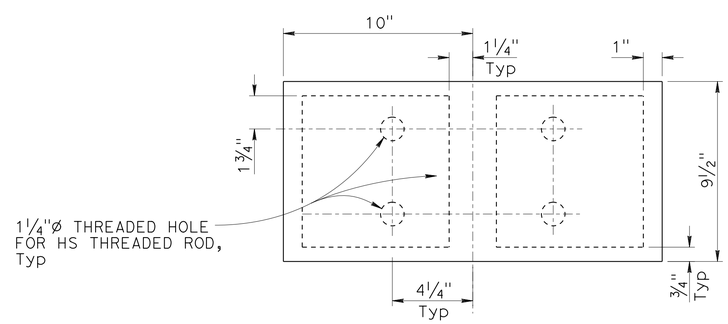

VIEW D-D
3"=1'-0"

NOTE:
THE CONTRACTOR SHALL VERIFY ALL CONTROLLING FIELD DIMENSIONS BEFORE ORDERING OR FABRICATING ANY MATERIAL.

	BY	CHECKED
DESIGN	John Railey	Mike Van De Pol
DETAILS	CCancino	Mike Van De Pol
QUANTITIES	John Railey	I. Yalan

STATE OF CALIFORNIA
DEPARTMENT OF TRANSPORTATION

DIVISION OF ENGINEERING SERVICES
STRUCTURE DESIGN
DESIGN BRANCH 9

BRIDGE NO. 28-0171L
POST MILE 24.3

MOCOCO OVERHEAD RETROFIT
CORBEL - TYPE C DETAILS NO. 2

STRUCTURES DESIGN DETAIL SHEET (ENGLISH) (REV. 09-01-10)

ORIGINAL SCALE IN INCHES FOR REDUCED PLANS 0 1 2 3

UNIT: 3594
PROJECT NUMBER & PHASE: 0400000967 1
CONTRACT NO.: 04-3A8701

DISREGARD PRINTS BEARING EARLIER REVISION DATES

REVISION DATES

SHEET 16 OF 34

FILE => 28-0171-e-bent2-5_2.dgn

USERNAME => s123631 DATE PLOTTED => 30-SEP-2013 TIME PLOTTED => 11:46

DIST	COUNTY	ROUTE	POST MILES TOTAL PROJECT	SHEET No.	TOTAL SHEETS
04	CC	680	22.7/24.8	131	186

REGISTERED CIVIL ENGINEER 10-10-12 DATE

5-20-13
PLANS APPROVAL DATE

REGISTERED PROFESSIONAL ENGINEER PHILIP E. LUTZ No. C58839 Exp. 12-31-14 CIVIL STATE OF CALIFORNIA

The State of California or its officers or agents shall not be responsible for the accuracy or completeness of electronic copies of this plan sheet.

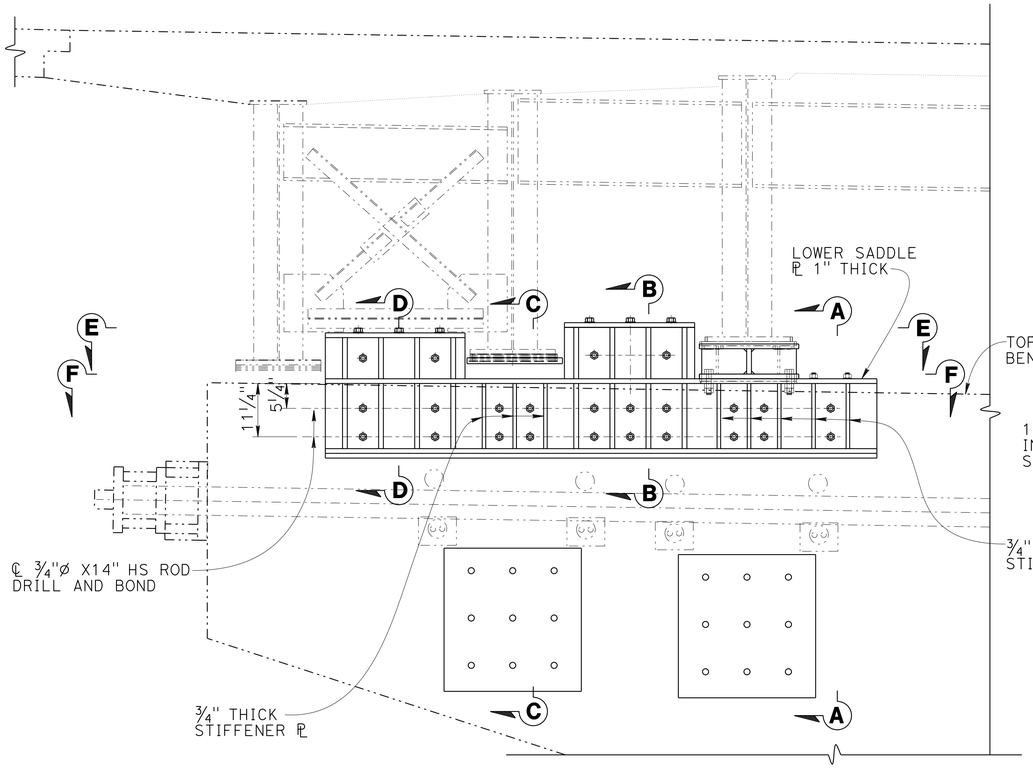

BENT ELEVATION
¾"=1'-0"

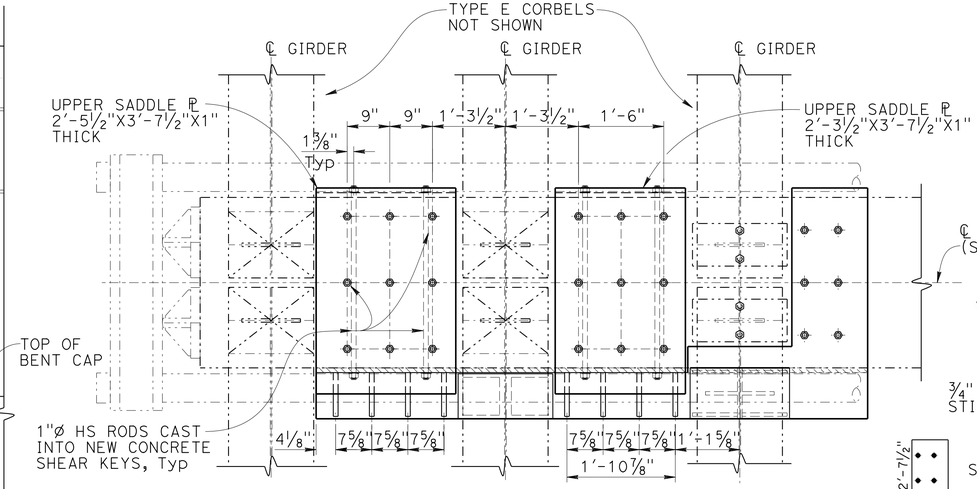

SECTION E-E
¾"=1'-0"

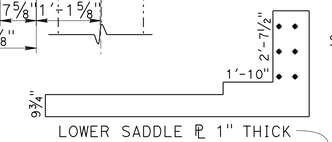

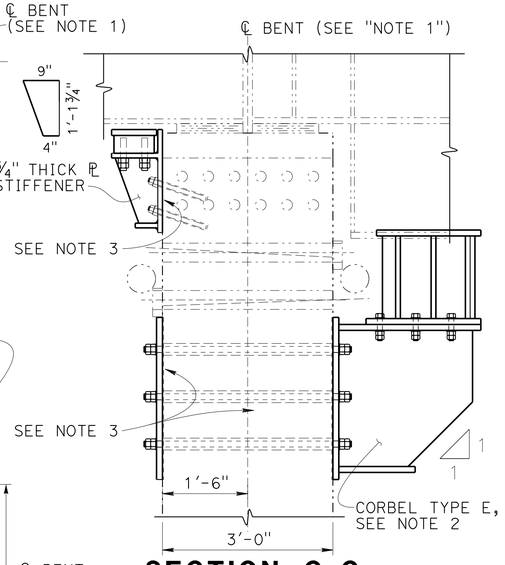

SECTION C-C
¾"=1'-0"

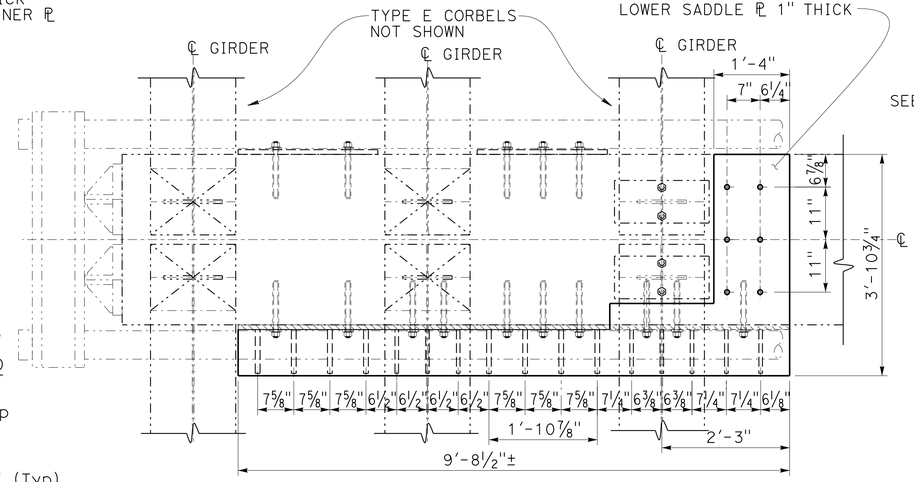

SECTION F-F
¾"=1'-0"

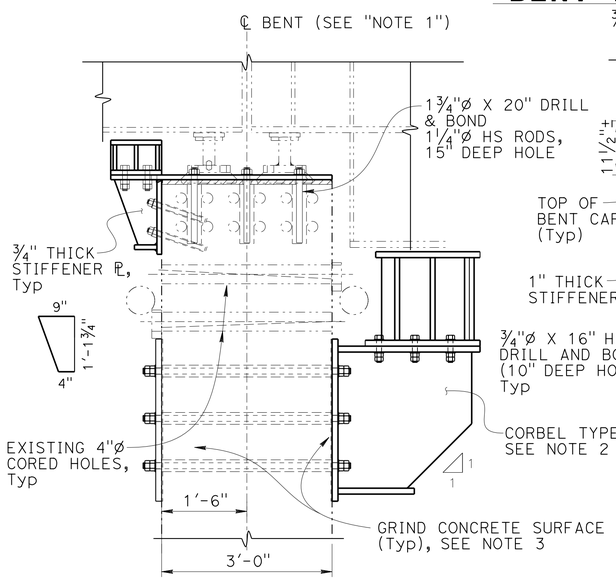

SECTION A-A
¾"=1'-0"

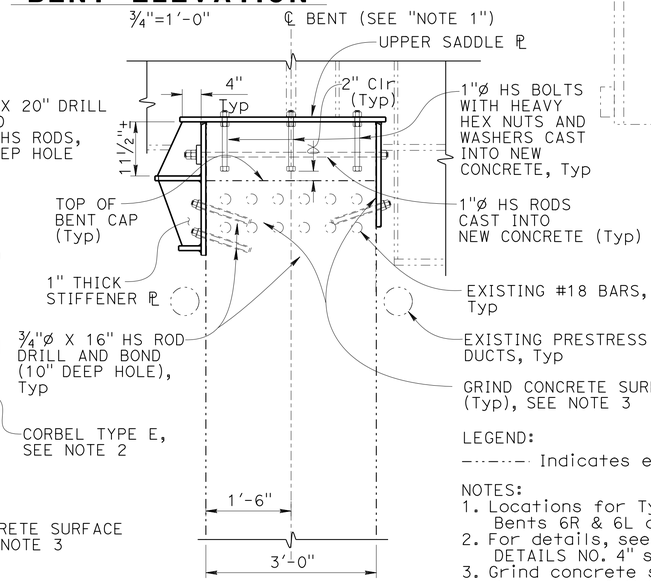

SECTION B-B
¾"=1'-0"

LEGEND:

-·-·-·- Indicates existing structure

NOTES:
1. Locations for Type C (Mod) Corbels are at Bents 6R & 6L and Bents 8R & 8L.
2. For details, see "CORBEL - TYPE E DETAILS NO. 4" sheet.
3. Grind concrete surface to 1/16"± tolerance to assure full bearing of side plates.
4. See "NOTES: CONSTRUCTION SEQUENCE FOR STEEL CORBELS" on "INDEX TO PLANS" sheet.

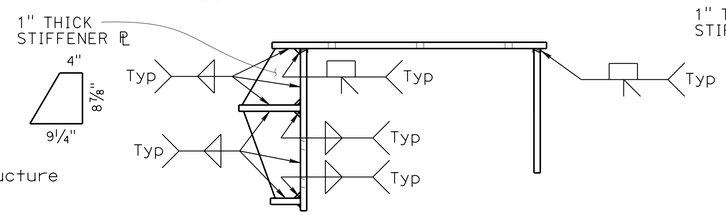

DETAIL X
1"=1'-0"

NOTE:
THE CONTRACTOR SHALL VERIFY ALL CONTROLLING FIELD DIMENSIONS BEFORE ORDERING OR FABRICATING ANY MATERIAL.

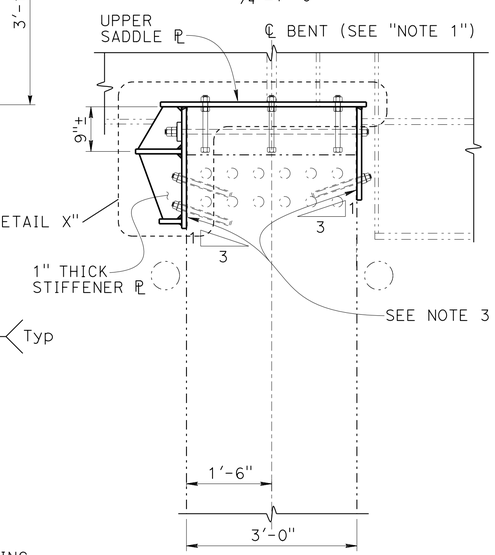

SECTION D-D
¾"=1'-0"

	BY	CHECKED
DESIGN	John Railey	Mike Van De Pol
DETAILS	CCancino	Mike Van De Pol
QUANTITIES	John Railey	I. Yalan

STATE OF CALIFORNIA
DEPARTMENT OF TRANSPORTATION

DIVISION OF ENGINEERING SERVICES
STRUCTURE DESIGN
DESIGN BRANCH 9

BRIDGE NO. 28-0171L
POST MILE 24.3

MOCOCO OVERHEAD RETROFIT
CORBEL - TYPE C (MODIFIED) DETAILS

STRUCTURES DESIGN DETAIL SHEET (ENGLISH) (REV. 09-01-10)

ORIGINAL SCALE IN INCHES FOR REDUCED PLANS 0 1 2 3

UNIT: 3594 FILE => 28-0171-e-bent2-6.dgn
PROJECT NUMBER & PHASE: 0400000967 1 CONTRACT NO.: 04-3A8701

DISREGARD PRINTS BEARING EARLIER REVISION DATES

REVISION DATES: 8-16-12 01-23-13 07-16-13

SHEET 17 OF 34

USERNAME => s123631 DATE PLOTTED => 30-SEP-2013 TIME PLOTTED => 11:46

DIST	COUNTY	ROUTE	POST MILES TOTAL PROJECT	SHEET No.	TOTAL SHEETS
04	CC	680	22.7/24.8	132	186

REGISTERED CIVIL ENGINEER 10-10-12 DATE

5-20-13
PLANS APPROVAL DATE

REGISTERED PROFESSIONAL ENGINEER PHILIP E. LUTZ No. C58839 Exp. 12-31-14 CIVIL STATE OF CALIFORNIA

The State of California or its officers or agents shall not be responsible for the accuracy or completeness of electronic copies of this plan sheet.

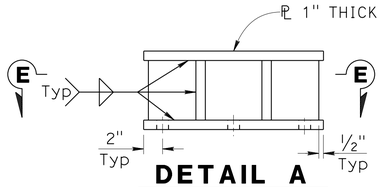

DETAIL A
1½"=1'-0"

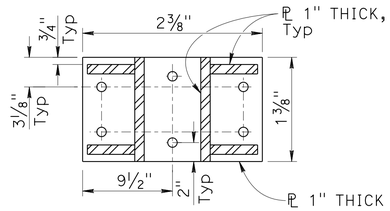

SECTION E-E
1½"=1'-0"

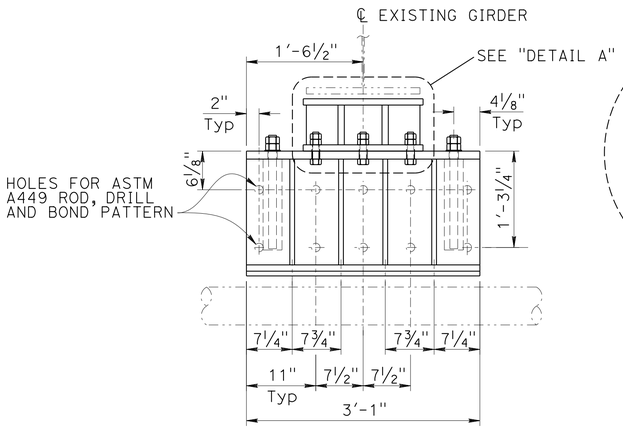

TYPE D ELEVATION
1"=1'-0"

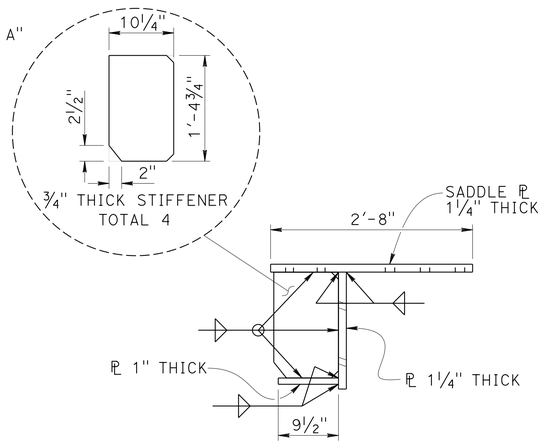

DETAIL B
1"=1'-0"

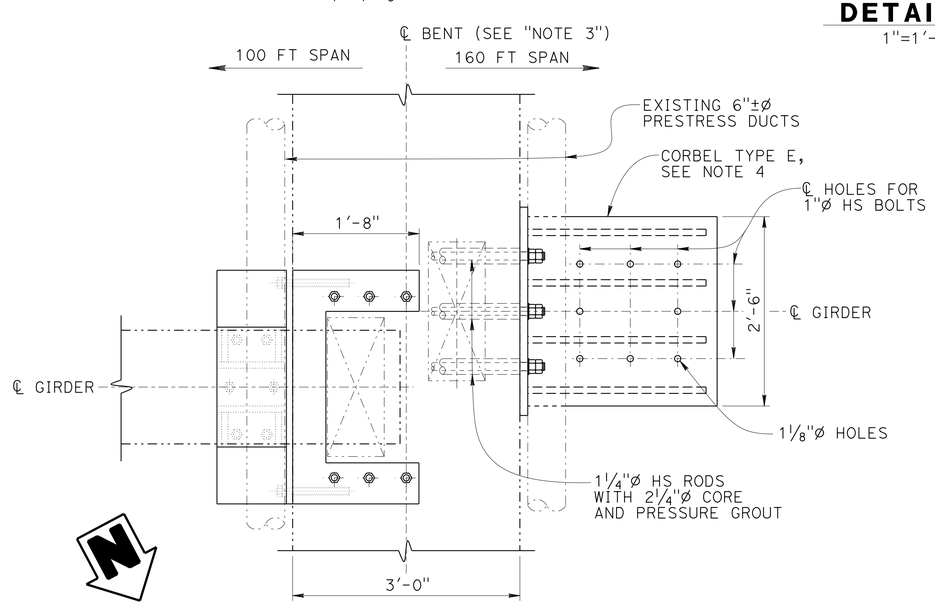

BENT PART PLAN
1"=1'-0"

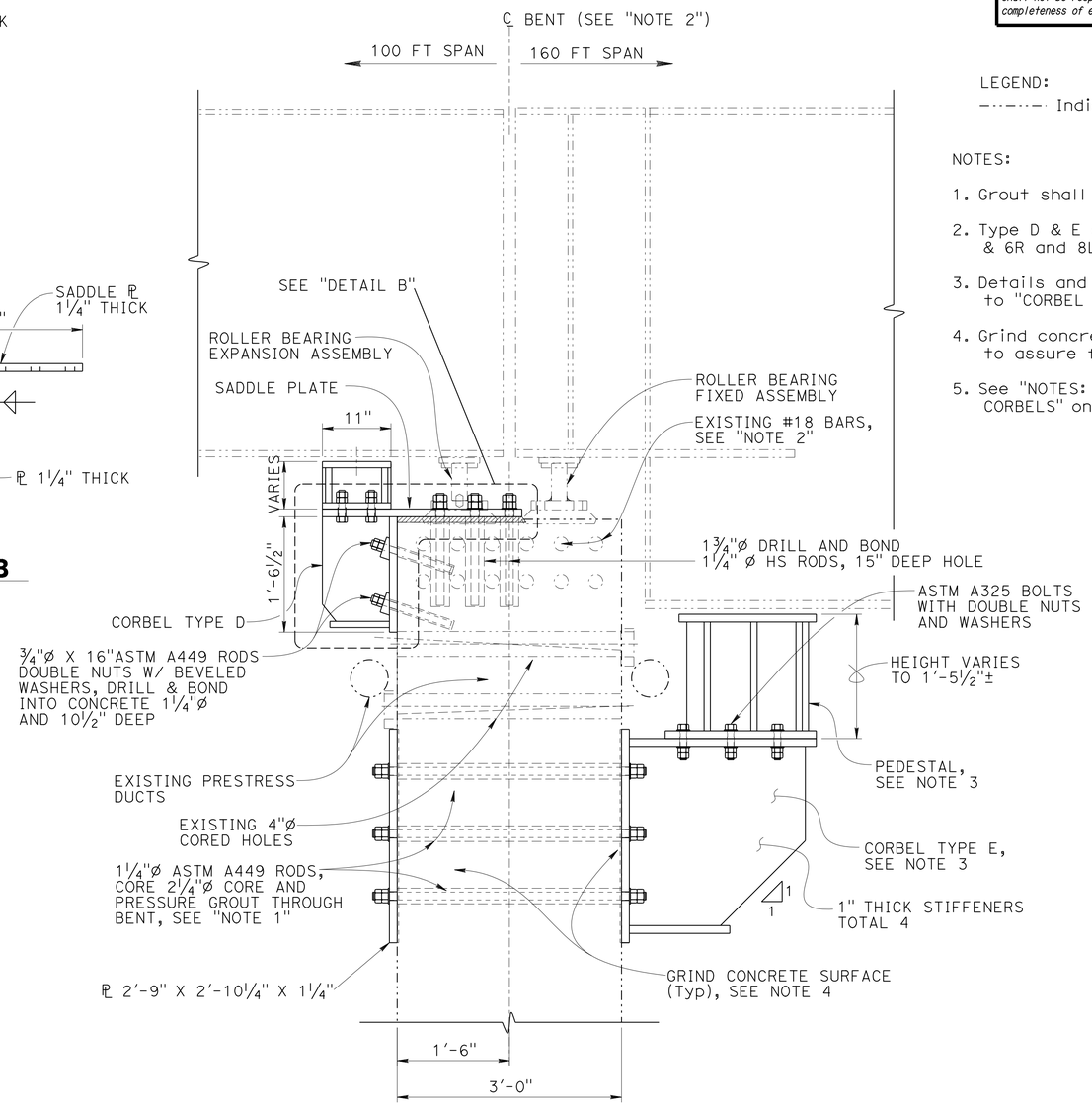

BENT SECTION
1"=1'-0"

LEGEND:

-·-·-·- Indicates existing structure

NOTES:

1. Grout shall be "NON-SHRINK" grout.
2. Type D & E corbels are located at Bents 6L & 6R and 8L & 8R.
3. Details and Notes for Corbel Type E, refer to "CORBEL - TYPE E DETAILS NO. 4" sheet.
4. Grind concrete surface to 1/16"± tolerance to assure full bearing of side plates.
5. See "NOTES: CONSTRUCTION SEQUENCE FOR STEEL CORBELS" on "INDEX TO PLANS" sheet.

NOTE:
THE CONTRACTOR SHALL VERIFY ALL CONTROLLING FIELD DIMENSIONS BEFORE ORDERING OR FABRICATING ANY MATERIAL.

	BY	CHECKED
DESIGN	John Railey	Mike Van De Pol
DETAILS	CCancino	Mike Van De Pol
QUANTITIES	John Railey	I. Yalan

STATE OF CALIFORNIA
DEPARTMENT OF TRANSPORTATION

DIVISION OF ENGINEERING SERVICES
STRUCTURE DESIGN
DESIGN BRANCH 9

BRIDGE NO. 28-0171L
POST MILE 24.3

MOCOCO OVERHEAD RETROFIT
CORBEL - TYPE D DETAILS

STRUCTURES DESIGN DETAIL SHEET (ENGLISH) (REV. 09-01-10)

ORIGINAL SCALE IN INCHES FOR REDUCED PLANS 0 1 2 3

UNIT: 3594 FILE => 28-0171-e-bent61_det02.dgn
PROJECT NUMBER & PHASE: 0400000967 1 CONTRACT NO.: 04-3A8701

DISREGARD PRINTS BEARING EARLIER REVISION DATES

REVISION DATES: 06-15-12 01-23-13 07-16-13

SHEET 18 OF 34

USERNAME => s123631 DATE PLOTTED => 30-SEP-2013 TIME PLOTTED => 11:46

DIST	COUNTY	ROUTE	POST MILES TOTAL PROJECT	SHEET No.	TOTAL SHEETS
04	CC	680	22.7/24.8	133	186

REGISTERED CIVIL ENGINEER 10-10-12 DATE

5-20-13
PLANS APPROVAL DATE

REGISTERED PROFESSIONAL ENGINEER
PHILIP E. LUTZ
No. C58839
Exp. 12-31-14
CIVIL
STATE OF CALIFORNIA

The State of California or its officers or agents shall not be responsible for the accuracy or completeness of electronic copies of this plan sheet.

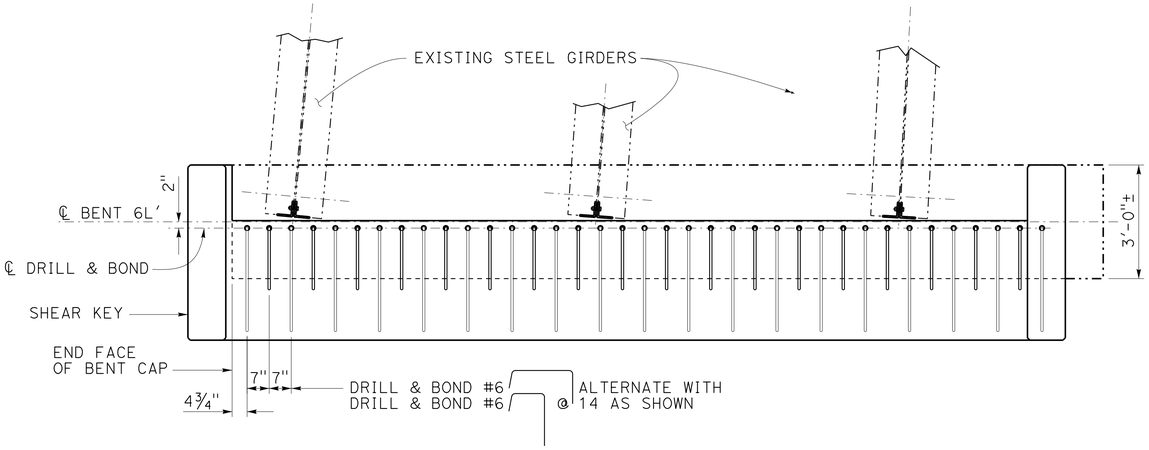

PLAN
½"=1'-0"

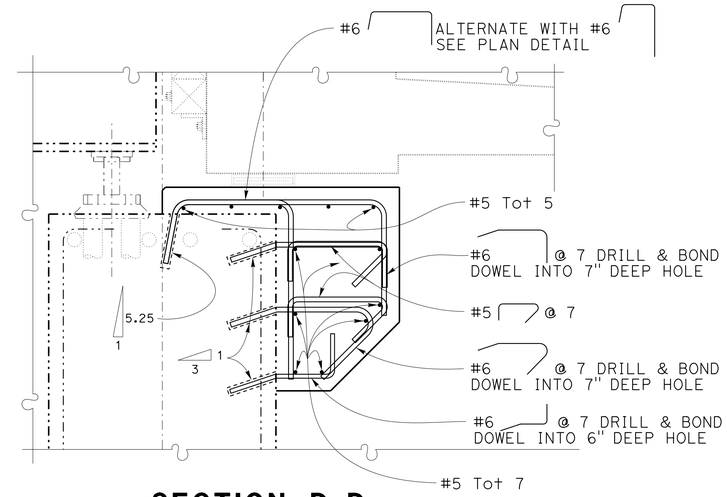

SECTION D-D
1"=1'-0"

LEGEND:

-·-·-·- Indicates existing structure

..... Indicates new replacement structure, see "MOCOCO SOUTHBOUND OFF-RAMP" Br No 28-0171s for details.

NOTES:

1. For details, see "BENT 6L' - MISC DETAILS" sheet.
2. For corbel Type E details, see "CORBEL - TYPE E DETAILS NO. 4" sheet.

* Existing #18 bars to remain in place and not to be damaged.

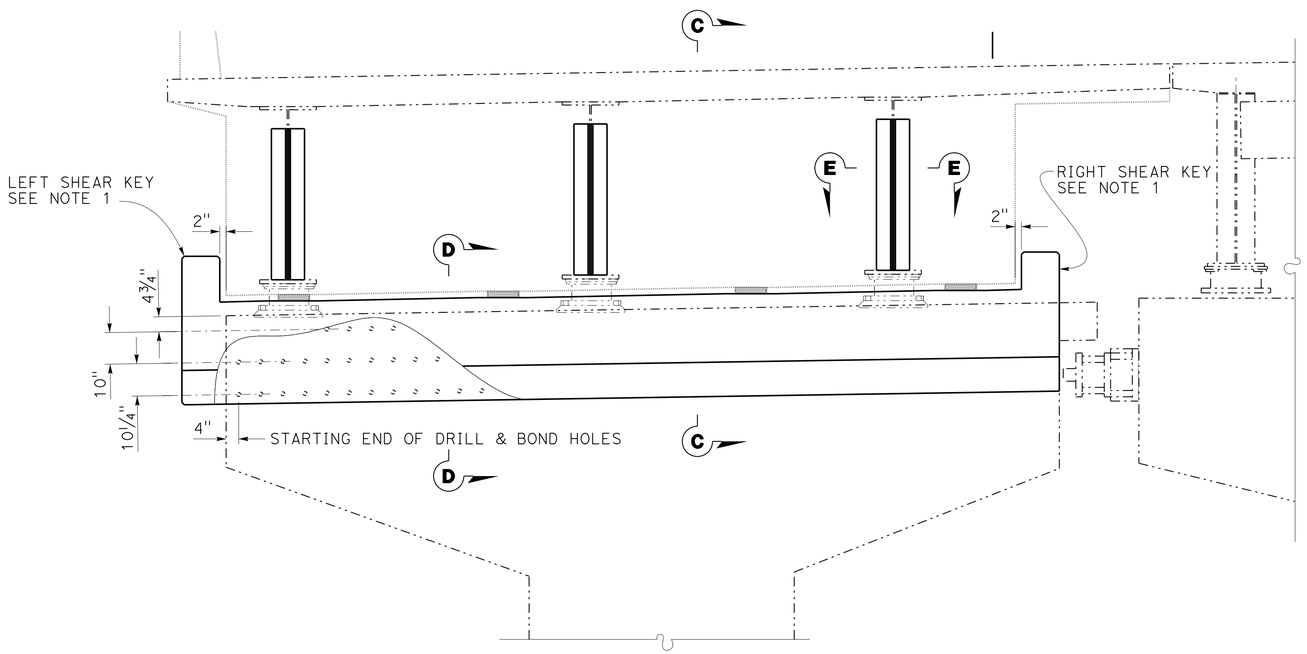

ELEVATION
½"=1'-0"

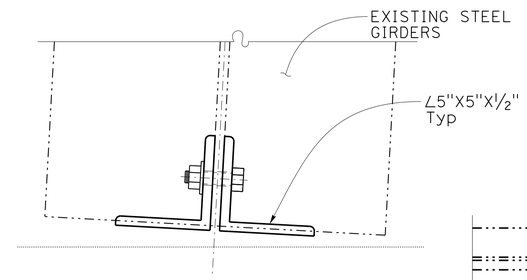

SECTION E-E
1½" =1'-0"

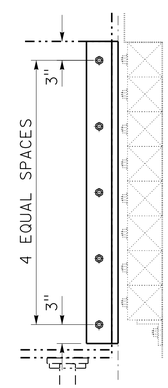

DETAIL Y
1" =1'-0"

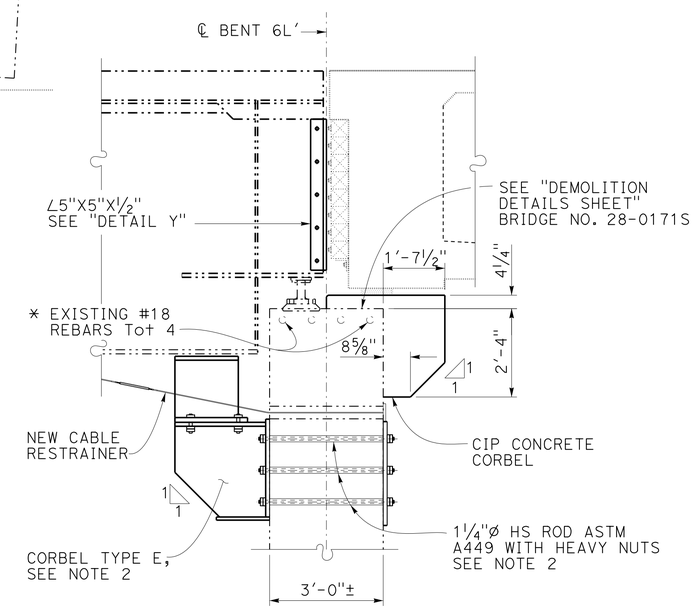

SECTION C-C
½"=1'-0"

NOTE:
THE CONTRACTOR SHALL VERIFY ALL CONTROLLING FIELD DIMENSIONS BEFORE ORDERING OR FABRICATING ANY MATERIAL.

	BY	CHECKED
DESIGN	John Railey	Mike Van De Pol
DETAILS	JFCasarino	Mike Van De Pol
QUANTITIES	John Railey	E. Franciliso

STATE OF CALIFORNIA
DEPARTMENT OF TRANSPORTATION

DIVISION OF ENGINEERING SERVICES
STRUCTURE DESIGN
DESIGN BRANCH 9

BRIDGE NO. 28-0171L
POST MILE 24.3

MOCOCO OVERHEAD RETROFIT
BENT 6L' - CORBEL DETAILS

STRUCTURES DESIGN DETAIL SHEET (ENGLISH) (REV. 09-01-10)

ORIGINAL SCALE IN INCHES FOR REDUCED PLANS 0 1 2 3

UNIT: 3594 FILE => 28-0171-e-bent6l1.dgn
PROJECT NUMBER & PHASE: 0400000967 1 CONTRACT NO.: 04-3A8701

DISREGARD PRINTS BEARING EARLIER REVISION DATES

REVISION DATES: 7-11-12 10-22-12 07-16-13

SHEET 19 OF 34

USERNAME => s123631 DATE PLOTTED => 30-SEP-2013 TIME PLOTTED => 11:46

DIST	COUNTY	ROUTE	POST MILES TOTAL PROJECT	SHEET No.	TOTAL SHEETS
04	CC	680	22.7/24.8	134	186

REGISTERED CIVIL ENGINEER 10-10-12 DATE

5-20-13
PLANS APPROVAL DATE

REGISTERED PROFESSIONAL ENGINEER PHILIP E. LUTZ No. C58839 Exp. 12-31-14 CIVIL STATE OF CALIFORNIA

The State of California or its officers or agents shall not be responsible for the accuracy or completeness of electronic copies of this plan sheet.

LEGEND:

Indicates existing structure

Indicates new replacement structure, see "MOCOCO SOUTHBOUND OFF-RAMP" Br No 28-0171s for details.

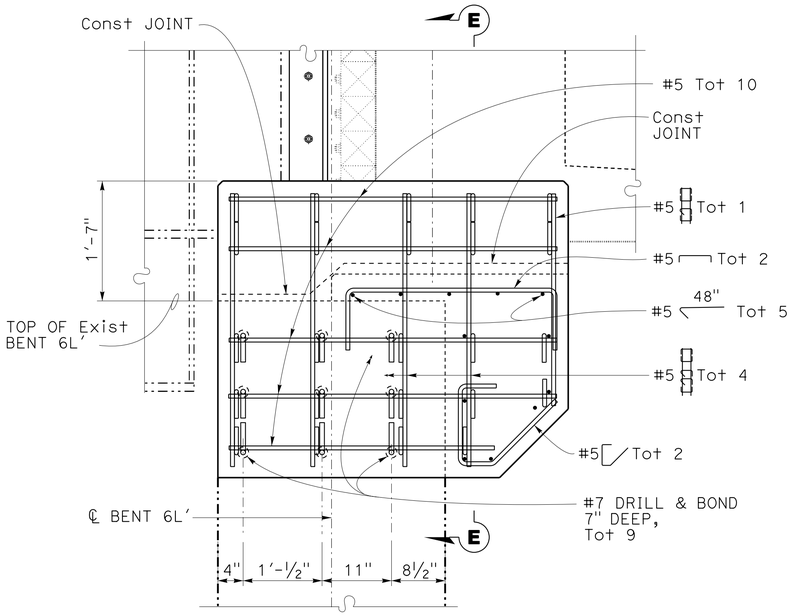

LEFT SHEAR KEY DETAIL

½"=1'-0"

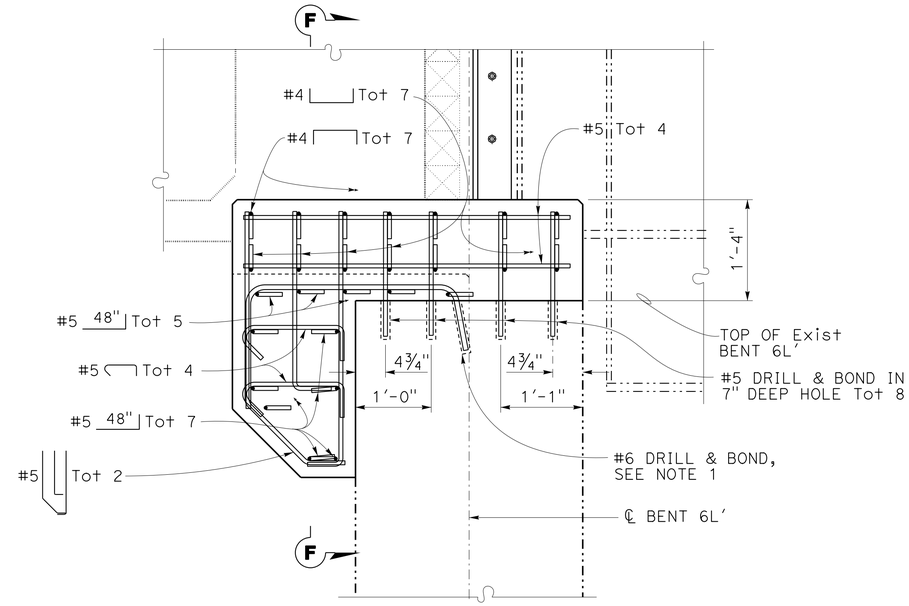

RIGHT SHEAR KEY DETAIL

½"=1'-0"

NOTE:

1. Drill & Bond #6, see "BENT 6L' - CORBEL DETAILS" sheet for details.

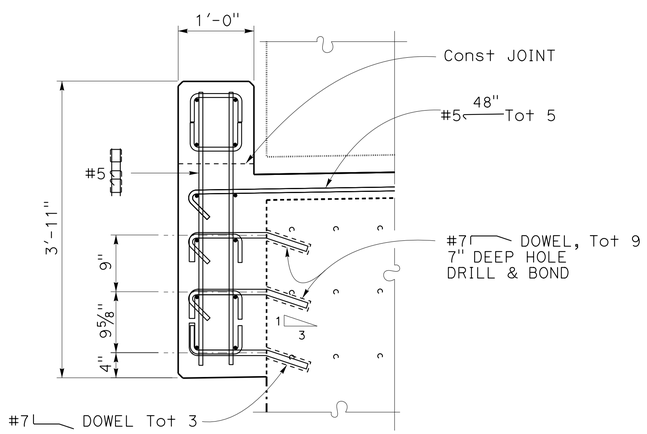

SECTION E-E

½"=1'-0"

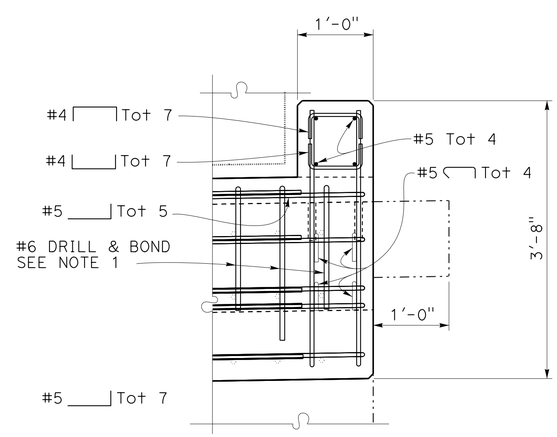

SECTION F-F

½"=1'-0"

NOTE:
THE CONTRACTOR SHALL VERIFY ALL CONTROLLING FIELD DIMENSIONS BEFORE ORDERING OR FABRICATING ANY MATERIAL.

	BY	CHECKED
DESIGN	John Railey	Mike Van De Pol
DETAILS	JFCasarino	Mike Van De Pol
QUANTITIES	John Railey	E. Franciliso

STATE OF CALIFORNIA
DEPARTMENT OF TRANSPORTATION

DIVISION OF ENGINEERING SERVICES
STRUCTURE DESIGN
DESIGN BRANCH 9

BRIDGE NO. 28-0171L
POST MILE 24.3

MOCOCO OVERHEAD RETROFIT
BENT 6L' - MISCELLANEOUS DETAILS

STRUCTURES DESIGN DETAIL SHEET (ENGLISH) (REV. 09-01-10)

ORIGINAL SCALE IN INCHES FOR REDUCED PLANS 0 1 2 3

UNIT: 3594
PROJECT NUMBER & PHASE: 0400000967 1
CONTRACT NO.: 04-3A8701

DISREGARD PRINTS BEARING EARLIER REVISION DATES

REVISION DATES 7-11-12 09-14-12 10-02-12

SHEET 20 OF 34

FILE => 28-0171-e-bent612.dgn

USERNAME => s123631 DATE PLOTTED => 30-SEP-2013 TIME PLOTTED => 11:46

DIST	COUNTY	ROUTE	POST MILES TOTAL PROJECT	SHEET No.	TOTAL SHEETS
04	CC	680	22.7/24.8	135	186

REGISTERED CIVIL ENGINEER 10-10-12 DATE

5-20-13
PLANS APPROVAL DATE

REGISTERED PROFESSIONAL ENGINEER PHILIP E. LUTZ No. C58839 Exp. 12-31-14 CIVIL STATE OF CALIFORNIA

The State of California or its officers or agents shall not be responsible for the accuracy or completeness of electronic copies of this plan sheet.

LEGEND:

- - - - - Indicates existing structure

Be Denotes Girder Designation

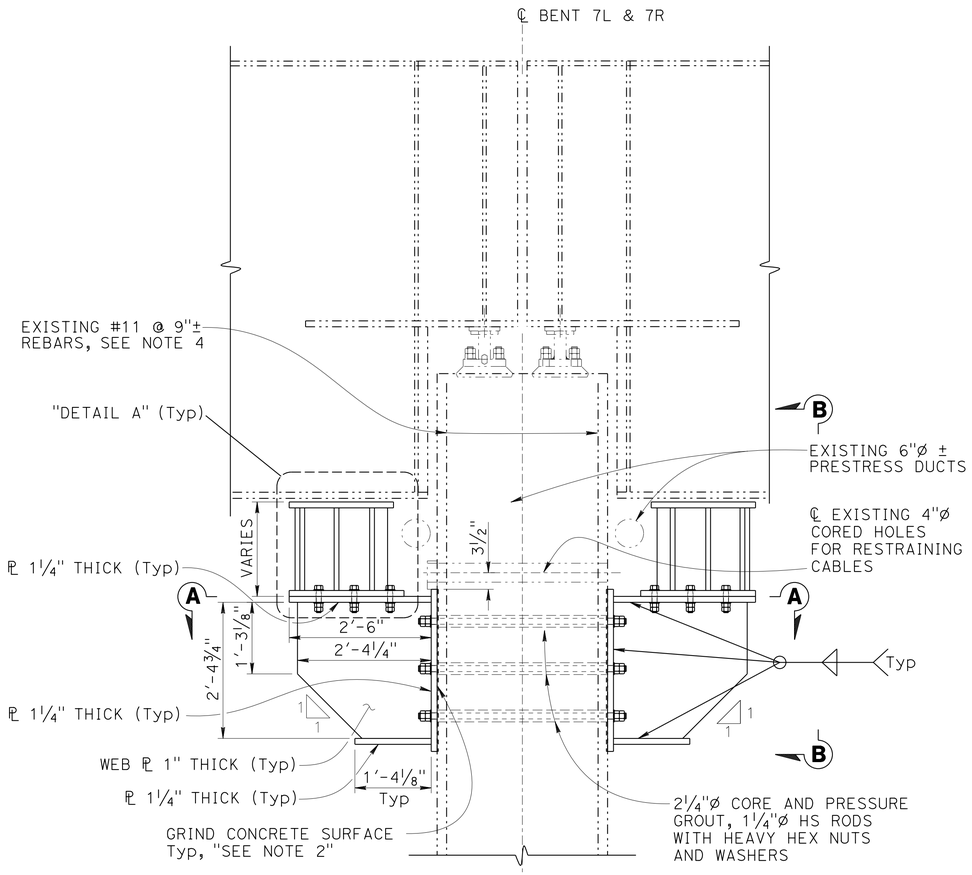

BENT SIDE ELEVATION
¾"=1'-0"

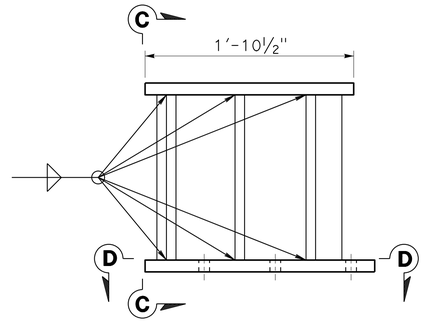

DETAIL A
1½"=1'-0"

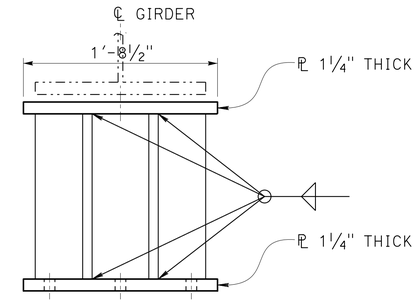

VIEW C-C
1½"=1'-0"

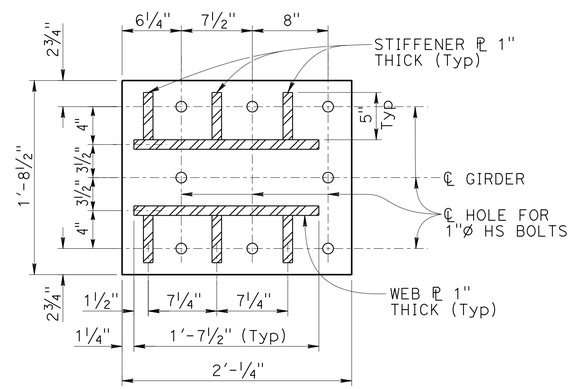

SECTION D-D
1½"=1'-0"

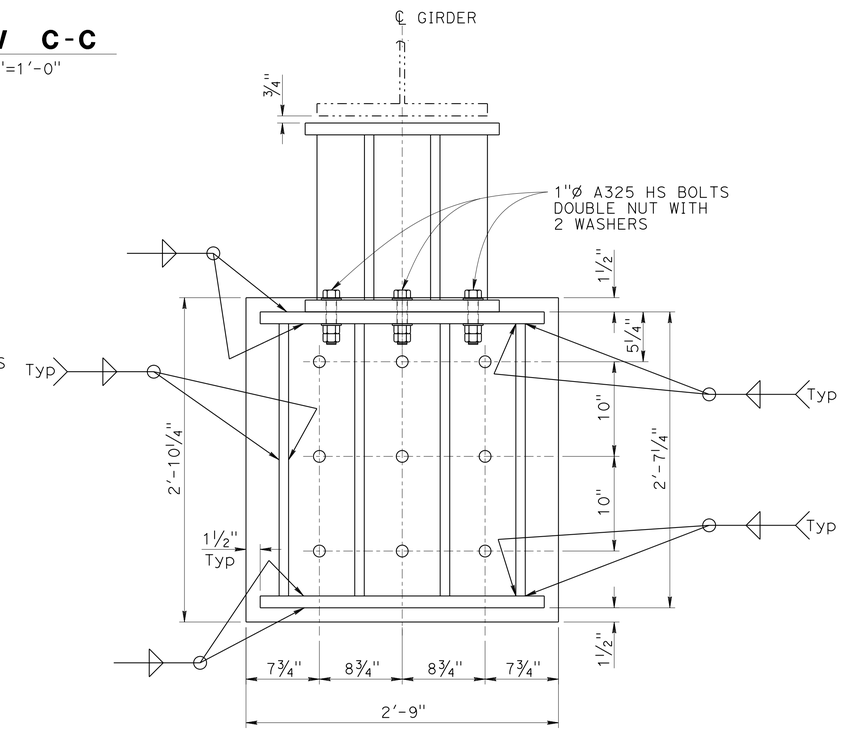

VIEW B-B
1½"=1'-0"

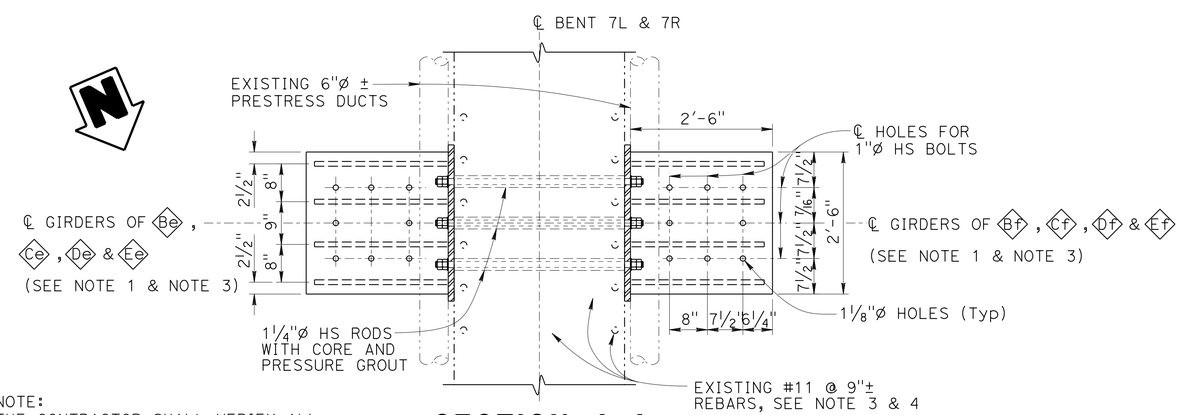

SECTION A-A
¾"=1'-0"

NOTE:
THE CONTRACTOR SHALL VERIFY ALL CONTROLLING FIELD DIMENSIONS BEFORE ORDERING OR FABRICATING ANY MATERIAL.

NOTES:

1. For location of girders, see "STRUCTURE SECTION NO. 3" sheet.
2. Grind concrete surface to 1/16"± tolerance to assure full bearing of side plates.
3. Configuration of Corbel - Type E to be used at Bent 7R.
4. Contractor shall locate existing #11 @ 9"± column rebars prior to coring 2½"Ø holes (Typical for all corbels).
5. See "NOTES: CONSTRUCTION SEQUENCE FOR STEEL CORBELS" on "INDEX TO PLANS" sheet.

	BY	CHECKED
DESIGN	John Railey	Mike Van De Pol
DETAILS	CCancino	Mike Van De Pol
QUANTITIES	John Raily	E. Franciliso

STATE OF CALIFORNIA
DEPARTMENT OF TRANSPORTATION

DIVISION OF ENGINEERING SERVICES
STRUCTURE DESIGN
DESIGN BRANCH 9

BRIDGE NO. 28-0171L
POST MILE 24.3

MOCOCO OVERHEAD RETROFIT
CORBEL - TYPE E DETAILS NO. 1

STRUCTURES DESIGN DETAIL SHEET (ENGLISH) (REV. 09-01-10)

ORIGINAL SCALE IN INCHES FOR REDUCED PLANS 0 1 2 3

UNIT: 3594
PROJECT NUMBER & PHASE: 0400000967 1
CONTRACT NO.: 04-3A8701

DISREGARD PRINTS BEARING EARLIER REVISION DATES

REVISION DATES: 08-15-12 01-23-13 10-22-13

SHEET 21 OF 34

FILE => 28-0171-e-bent7_01.dgn

USERNAME => s123631 DATE PLOTTED => 30-SEP-2013 TIME PLOTTED => 11:46

DIST	COUNTY	ROUTE	POST MILES TOTAL PROJECT	SHEET No.	TOTAL SHEETS
04	CC	680	22.7/24.8	136	186

REGISTERED CIVIL ENGINEER 10-10-12 DATE

5-20-13
PLANS APPROVAL DATE

REGISTERED PROFESSIONAL ENGINEER PHILIP E. LUTZ No. C58839 Exp. 12-31-14 CIVIL STATE OF CALIFORNIA

The State of California or its officers or agents shall not be responsible for the accuracy or completeness of electronic copies of this plan sheet.

LEGEND:

-·-·-·- Indicates existing structure

◇F† Denotes Girder Designation

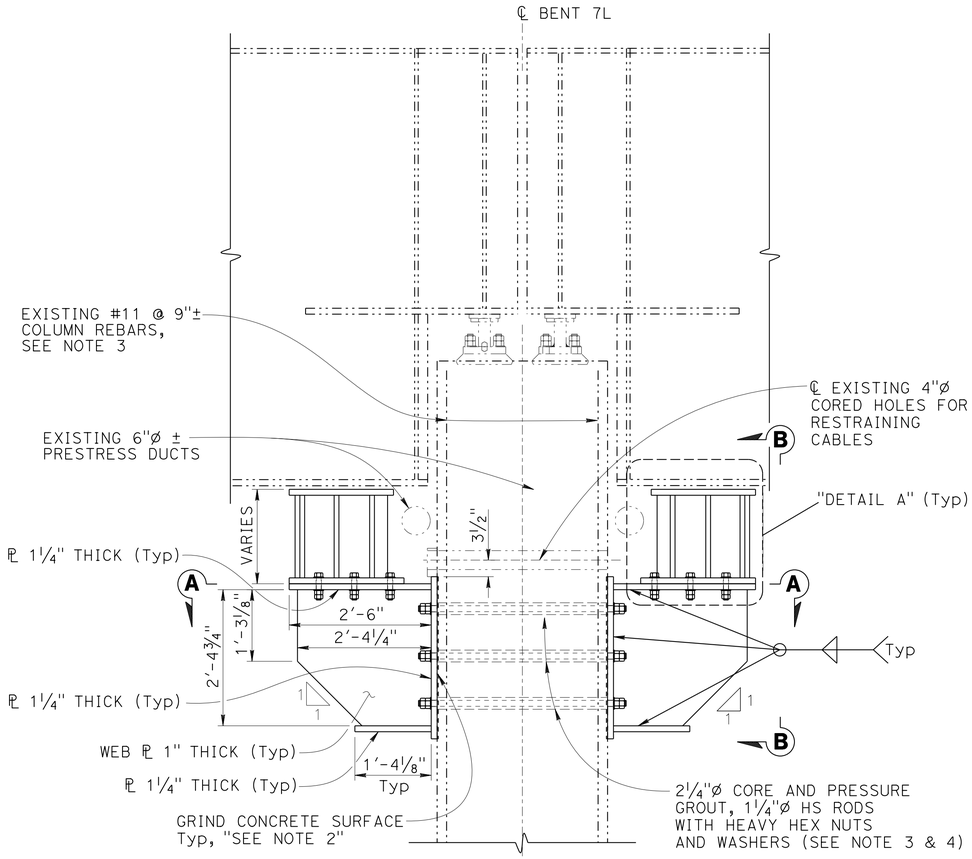

BENT SIDE ELEVATION
¾"=1'-0"

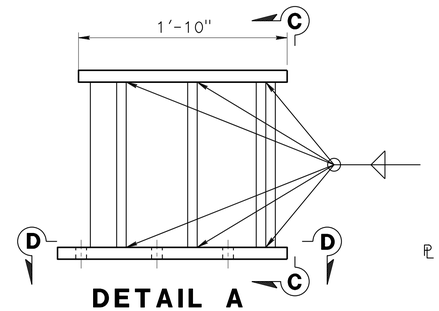

DETAIL A
1½"=1'-0"

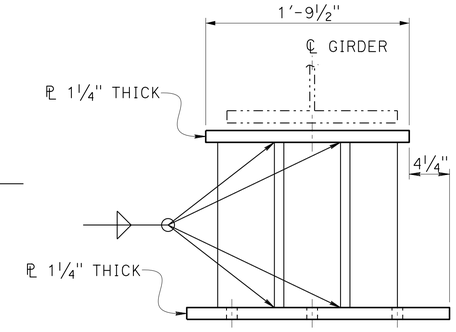

VIEW C-C
1½"=1'-0"

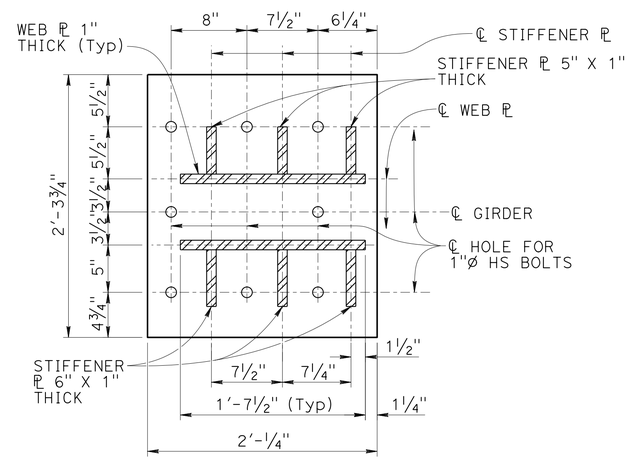

SECTION D-D
1½"=1'-0"

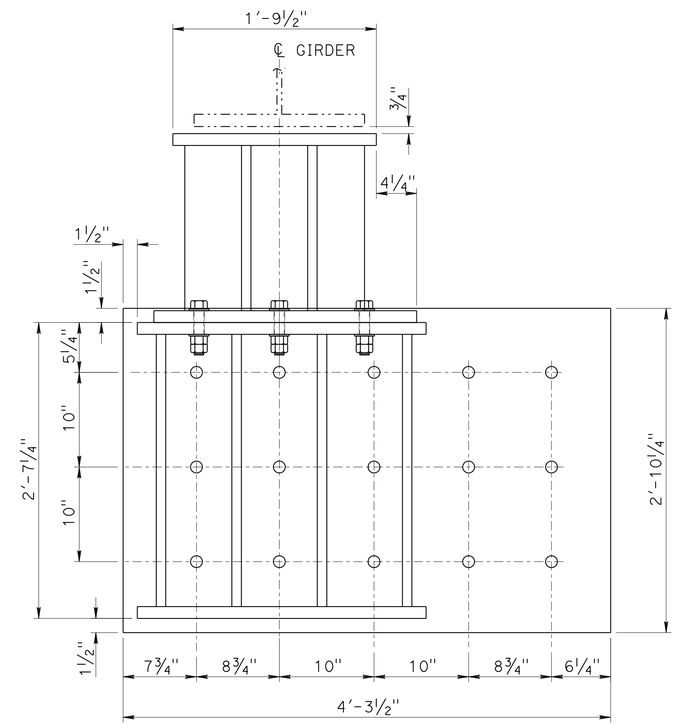

VIEW B-B
1½"=1'-0"

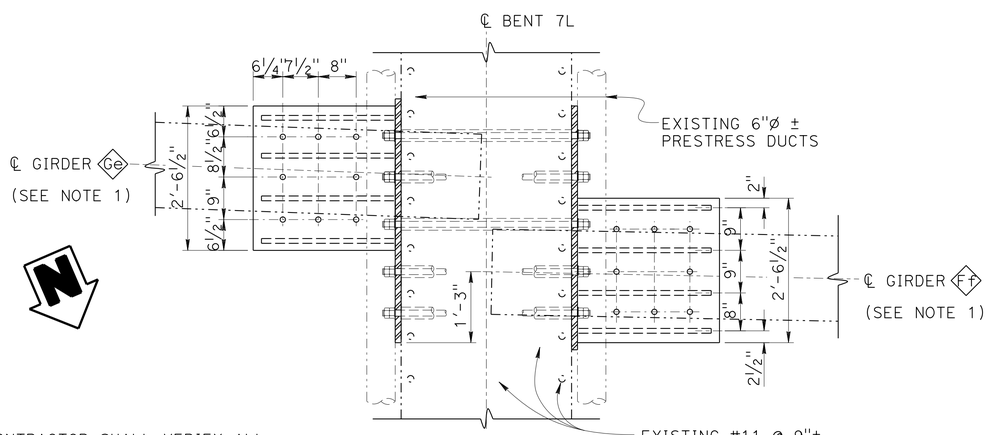

SECTION A-A
¾"=1'-0"

NOTES:

1. For location of girders, see "STRUCTURE SECTION NO. 3" sheet.
2. Grind concrete surface to 1/16"± tolerance to assure full bearing of side plates.
3. Contractor shall locate existing #11 column rebars prior to coring holes.
4. See "NOTES: CONSTRUCTION SEQUENCE FOR STEEL CORBELS" on "INDEX TO PLANS" sheet.

NOTE:
THE CONTRACTOR SHALL VERIFY ALL CONTROLLING FIELD DIMENSIONS BEFORE ORDERING OR FABRICATING ANY MATERIAL.

	BY	CHECKED
DESIGN	John Railey	Mike Van De Pol
DETAILS	CCancino	Mike Van De Pol
QUANTITIES	John Raily	E. Franciliso

STATE OF CALIFORNIA
DEPARTMENT OF TRANSPORTATION

DIVISION OF ENGINEERING SERVICES
STRUCTURE DESIGN
DESIGN BRANCH 9

BRIDGE NO. 28-0171L
POST MILE 24.3

MOCOCO OVERHEAD RETROFIT
CORBEL - TYPE E DETAILS NO. 2

STRUCTURES DESIGN DETAIL SHEET (ENGLISH) (REV. 09-01-10)

ORIGINAL SCALE IN INCHES FOR REDUCED PLANS 0 1 2 3

UNIT: 3594
PROJECT NUMBER & PHASE: 0400000967 1
CONTRACT NO.: 04-3A8701

DISREGARD PRINTS BEARING EARLIER REVISION DATES

REVISION DATES: 8-16-12 01-23-13 10-22-12

SHEET 22 OF 34

FILE => 28-0171-e-bent7_02.dgn

USERNAME => s123631 DATE PLOTTED => 30-SEP-2013 TIME PLOTTED => 11:47

DIST	COUNTY	ROUTE	POST MILES TOTAL PROJECT	SHEET No.	TOTAL SHEETS
04	CC	680	22.7/24.8	137	186

REGISTERED CIVIL ENGINEER 10-10-12 DATE

5-20-13
PLANS APPROVAL DATE

REGISTERED PROFESSIONAL ENGINEER PHILIP E. LUTZ No. C58839 Exp. 12-31-14 CIVIL STATE OF CALIFORNIA

The State of California or its officers or agents shall not be responsible for the accuracy or completeness of electronic copies of this plan sheet.

LEGEND:

-·-·-·- Indicates existing structure

◇ Gt Denotes Girder Designation

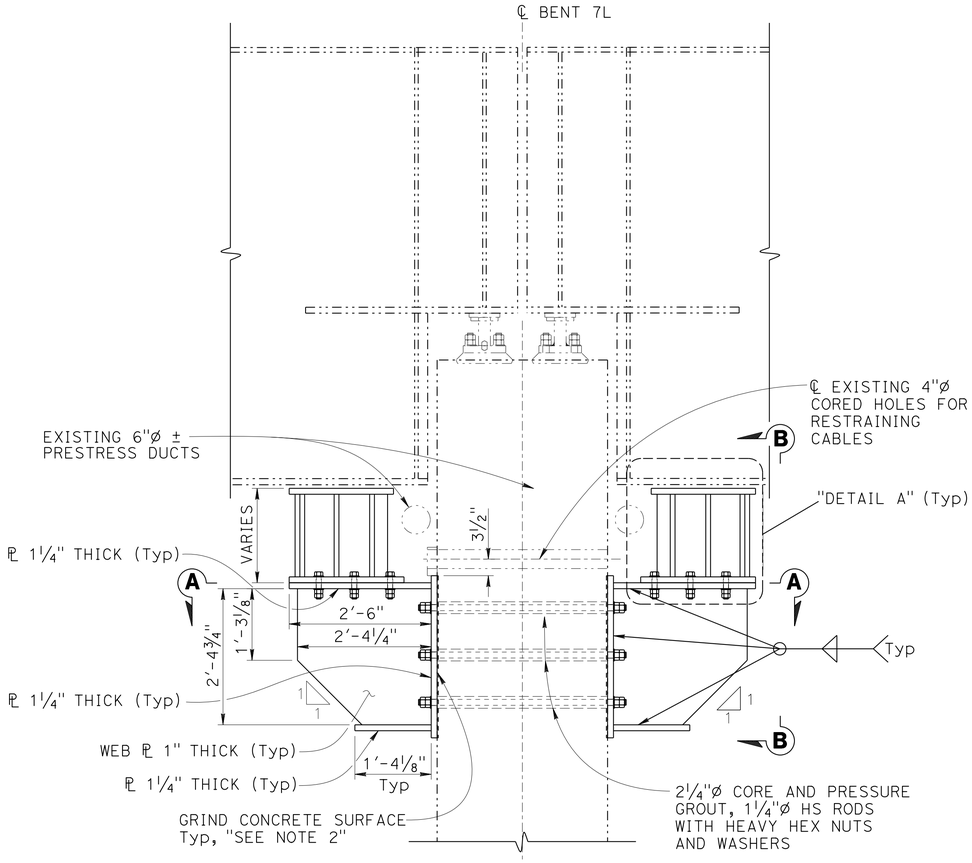

BENT SIDE ELEVATION
¾"=1'-0"

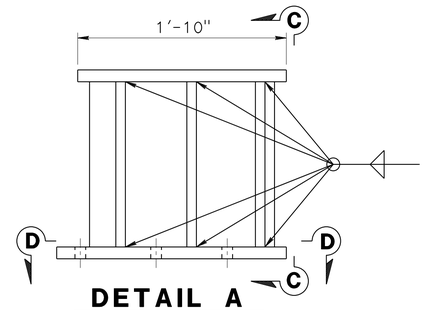

DETAIL A
1½"=1'-0"

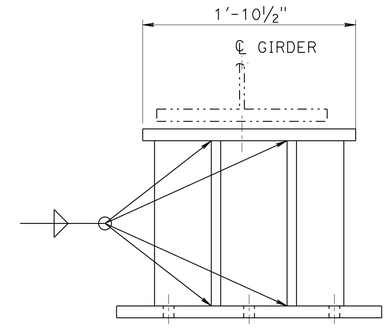

VIEW C-C
1½"=1'-0"

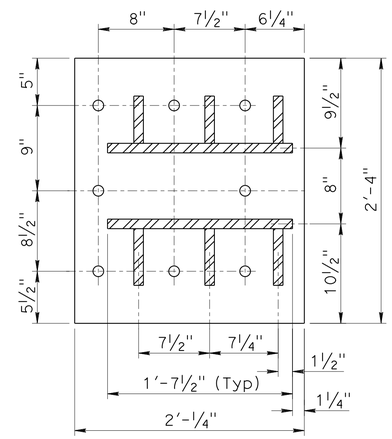

SECTION D-D
1½"=1'-0"

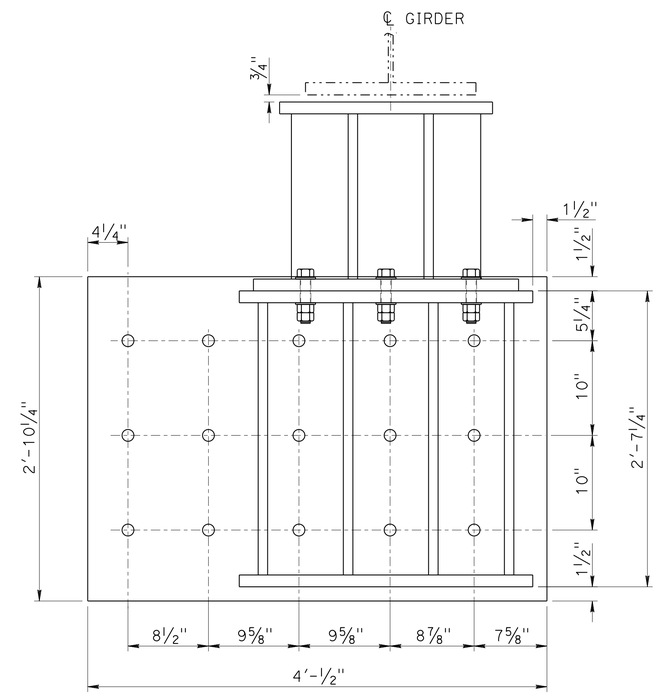

VIEW B-B
1½"=1'-0"

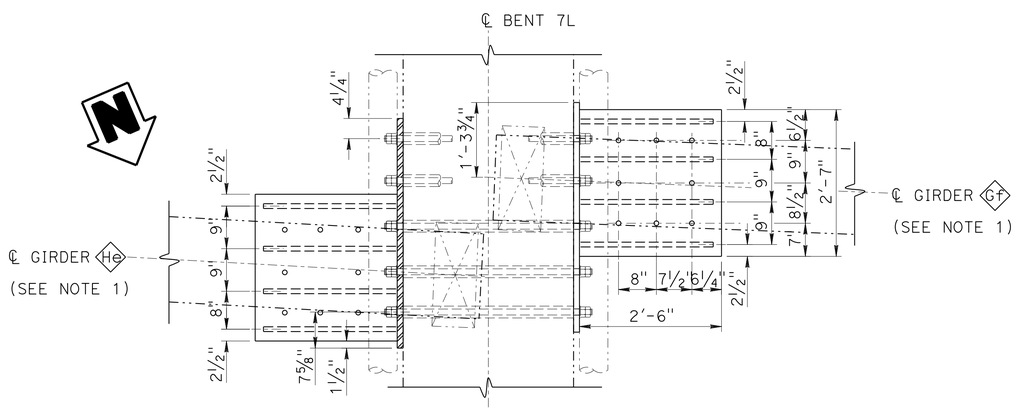

SECTION A-A
¾"=1'-0"

NOTE:
THE CONTRACTOR SHALL VERIFY ALL CONTROLLING FIELD DIMENSIONS BEFORE ORDERING OR FABRICATING ANY MATERIAL.

NOTES:

1. For location of girders, see "STRUCTURE SECTION NO. 3" sheet.
2. Grind concrete surface to 1/16"± tolerance to assure full bearing of side plates.
3. See "NOTES: CONSTRUCTION SEQUENCE FOR STEEL CORBELS" on "INDEX TO PLANS" sheet.

	BY	CHECKED
DESIGN	John Railey	Mike Van De Pol
DETAILS	CCancino	Mike Van De Pol
QUANTITIES	John Raily	E. Franciliso

STATE OF CALIFORNIA
DEPARTMENT OF TRANSPORTATION

DIVISION OF ENGINEERING SERVICES
STRUCTURE DESIGN
DESIGN BRANCH 9

BRIDGE NO. 28-0171L
POST MILE 24.3

MOCOCO OVERHEAD RETROFIT
CORBEL- TYPE E DETAILS NO. 3

STRUCTURES DESIGN DETAIL SHEET (ENGLISH) (REV. 09-01-10)

ORIGINAL SCALE IN INCHES FOR REDUCED PLANS 0 1 2 3

UNIT: 3594
PROJECT NUMBER & PHASE: 0400000967 1
CONTRACT NO.: 04-3A8701

DISREGARD PRINTS BEARING EARLIER REVISION DATES

REVISION DATES: ~~08-15-12~~ ~~10-02-12~~ 01-23-13

SHEET 23 OF 34

FILE => 28-0171-e-bent7_03.dgn

USERNAME => s123631 DATE PLOTTED => 30-SEP-2013 TIME PLOTTED => 11:47

DIST	COUNTY	ROUTE	POST MILES TOTAL PROJECT	SHEET No.	TOTAL SHEETS
04	CC	680	22.7/24.8	138	186

REGISTERED CIVIL ENGINEER 10-10-12 DATE

5-20-13
PLANS APPROVAL DATE

REGISTERED PROFESSIONAL ENGINEER PHILIP E. LUTZ No. C58839 Exp. 12-31-14 CIVIL STATE OF CALIFORNIA

The State of California or its officers or agents shall not be responsible for the accuracy or completeness of electronic copies of this plan sheet.

LEGEND:

Indicates existing structure

Denotes Girder Designation

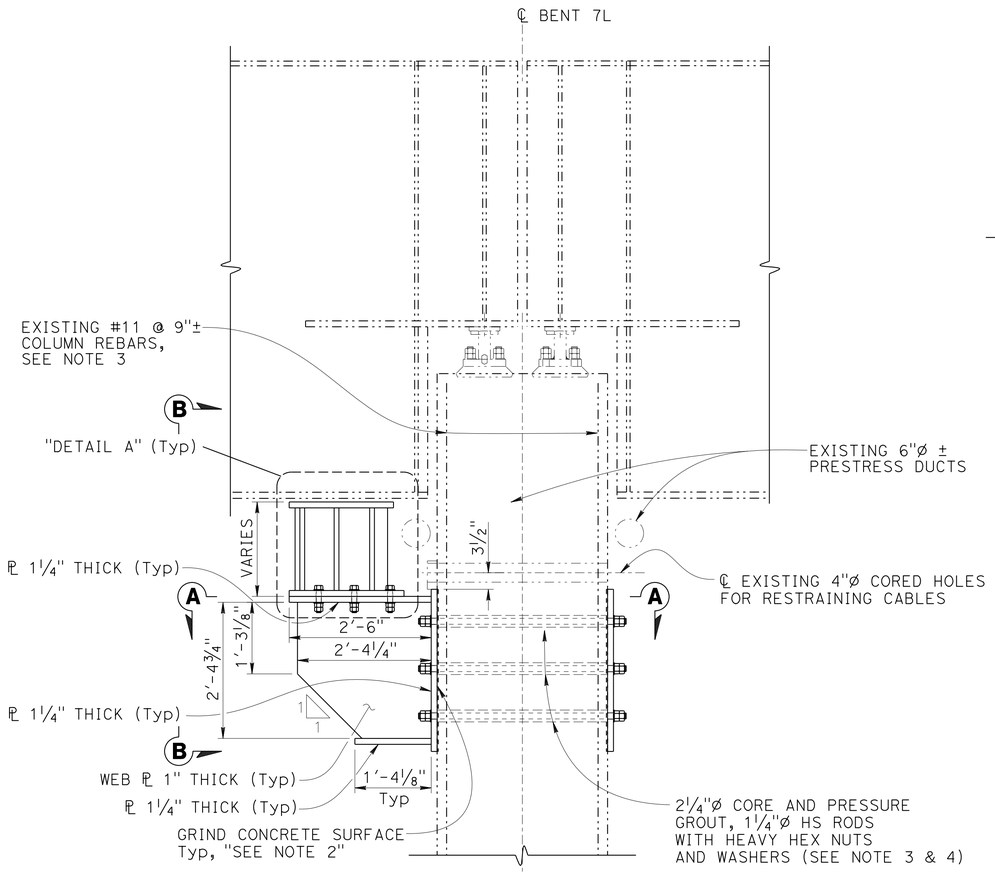

BENT SIDE ELEVATION
¾"=1'-0"

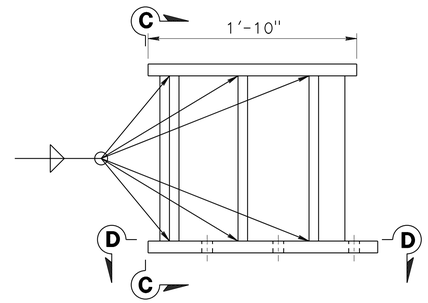

DETAIL A
1½"=1'-0"

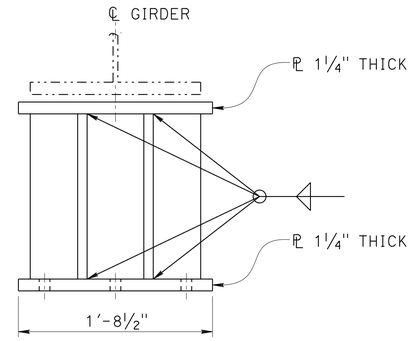

VIEW C-C
1½"=1'-0"

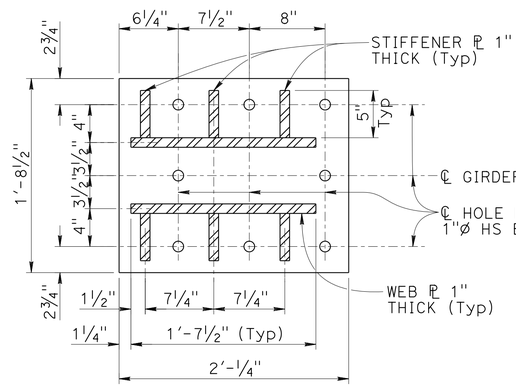

SECTION D-D
1½"=1'-0"

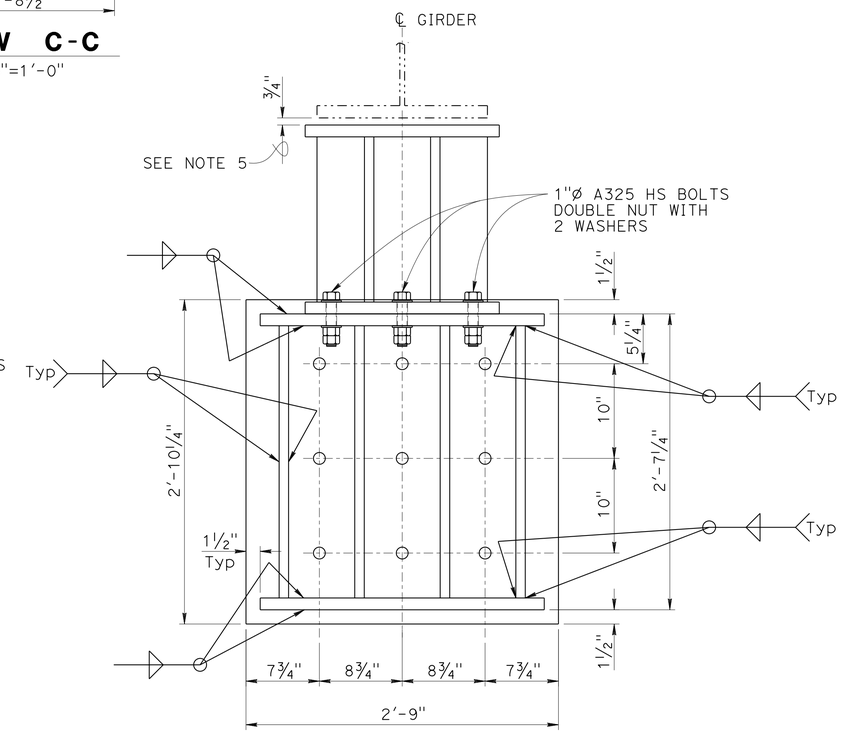

VIEW B-B
1½"=1'-0"

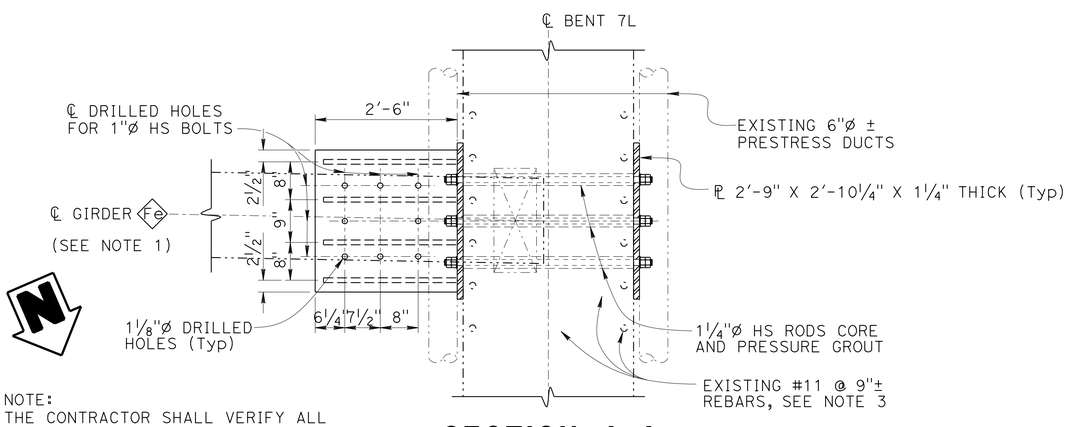

SECTION A-A
¾"=1'-0"

NOTE:
THE CONTRACTOR SHALL VERIFY ALL CONTROLLING FIELD DIMENSIONS BEFORE ORDERING OR FABRICATING ANY MATERIAL.

NOTES:

1. For location of girder, see "STRUCTURE SECTION NO. 3" sheet.
2. Grind concrete surface to 1/16"± tolerance to assure full bearing of side plates.
3. Contractor shall locate existing #11 @ 9"± column rebars prior to coring 2½"Ø holes.
4. See "NOTES: CONSTRUCTION SEQUENCE FOR STEEL CORBELS" on "INDEX TO PLANS" sheet.
5. Gap between corbel plate and bottom flange is ¾" (Typical for all corbel types).

	BY	CHECKED
DESIGN	John Railey	Mike Van De Pol
DETAILS	CCancino	Mike Van De Pol
QUANTITIES	John Raily	E. Franciliso

STATE OF CALIFORNIA
DEPARTMENT OF TRANSPORTATION

DIVISION OF ENGINEERING SERVICES
STRUCTURE DESIGN
DESIGN BRANCH 9

BRIDGE NO. 28-0171L
POST MILE 24.3

MOCOCO OVERHEAD RETROFIT
CORBEL - TYPE E DETAILS NO. 4

STRUCTURES DESIGN DETAIL SHEET (ENGLISH) (REV. 09-01-10)

ORIGINAL SCALE IN INCHES FOR REDUCED PLANS 0 1 2 3

UNIT: 3594 FILE => 28-0171-e-bent7_04.dgn
PROJECT NUMBER & PHASE: 0400000967 1 CONTRACT NO.: 04-3A8701

DISREGARD PRINTS BEARING EARLIER REVISION DATES

REVISION DATES 08-15-12 01-23-13 07-17-13

SHEET 24 OF 34

USERNAME => s123631 DATE PLOTTED => 30-SEP-2013 TIME PLOTTED => 11:47

DIST	COUNTY	ROUTE	POST MILES TOTAL PROJECT	SHEET No.	TOTAL SHEETS
04	CC	680	22.7/24.8	139	186

REGISTERED CIVIL ENGINEER 10-10-12 DATE

5-20-13
PLANS APPROVAL DATE

REGISTERED PROFESSIONAL ENGINEER PHILIP E. LUTZ No. C58839 Exp. 12-31-14 CIVIL STATE OF CALIFORNIA

The State of California or its officers or agents shall not be responsible for the accuracy or completeness of electronic copies of this plan sheet.

LEGEND:

- - - - - Indicates existing structure

◇ Ie Denotes Girder Designation

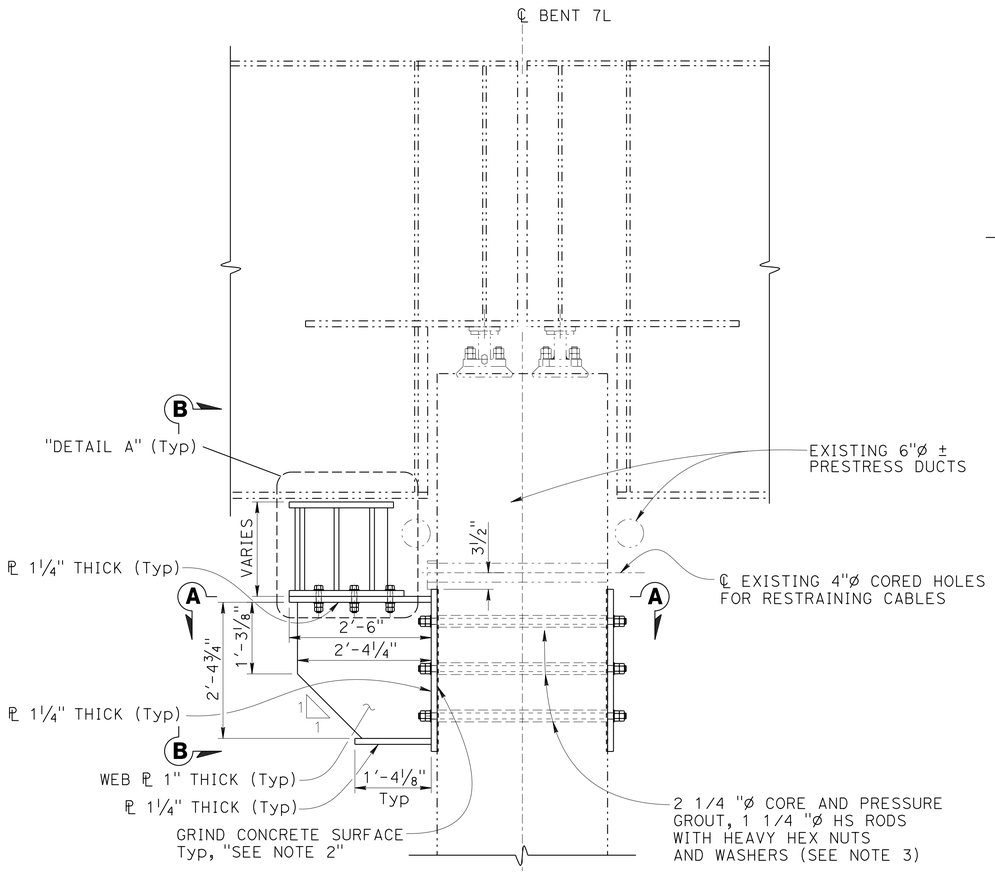

BENT SIDE ELEVATION
¾"=1'-0"

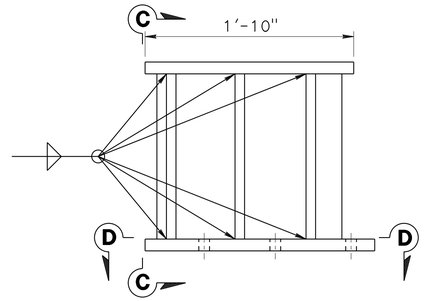

DETAIL A
1½"=1'-0"

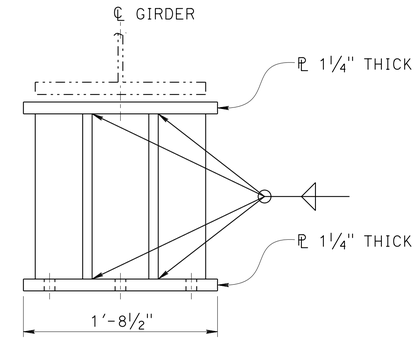

VIEW C-C
1½"=1'-0"

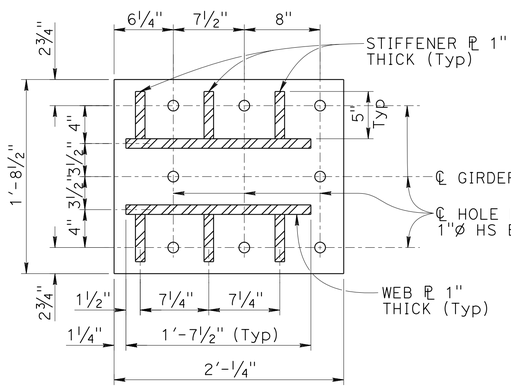

SECTION D-D
1½"=1'-0"

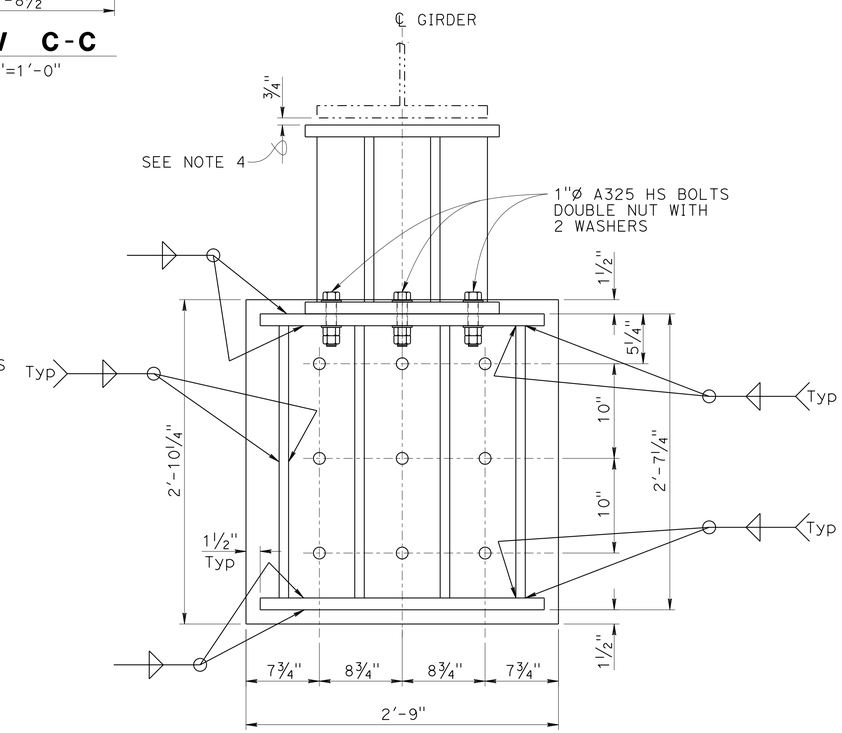

VIEW B-B
1½"=1'-0"

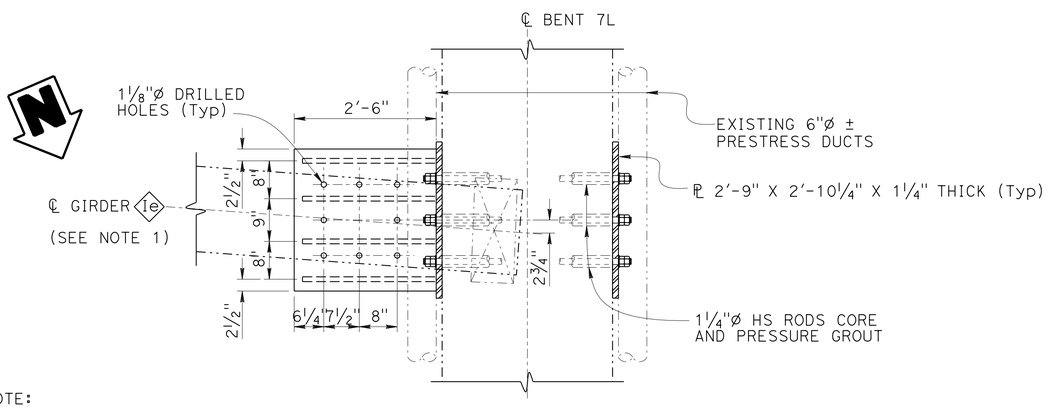

SECTION A-A
¾"=1'-0"

NOTE:
THE CONTRACTOR SHALL VERIFY ALL CONTROLLING FIELD DIMENSIONS BEFORE ORDERING OR FABRICATING ANY MATERIAL.

NOTES:

1. For location of girder, see "STRUCTURE SECTION NO. 3" sheet.
2. Grind concrete surface to 1/16"± tolerance to assure full bearing of side plates.
3. See "NOTES: CONSTRUCTION SEQUENCE FOR STEEL CORBELS" on "INDEX TO PLANS" sheet.
4. Gap between corbel plate and bottom flange is ¾" (Typical for all corbel types).

	BY	CHECKED
DESIGN	John Railey	Mike Van De Pol
DETAILS	CCancino	Mike Van De Pol
QUANTITIES	John Raily	E. Franciliso

STATE OF CALIFORNIA
DEPARTMENT OF TRANSPORTATION

DIVISION OF ENGINEERING SERVICES
STRUCTURE DESIGN
DESIGN BRANCH 9

BRIDGE NO. 28-0171L
POST MILE 24.3

MOCOCO OVERHEAD RETROFIT
CORBEL - TYPE E DETAILS NO. 5

STRUCTURES DESIGN DETAIL SHEET (ENGLISH) (REV. 09-01-10)

ORIGINAL SCALE IN INCHES FOR REDUCED PLANS 0 1 2 3

UNIT: 3594 FILE => 28-0171-e-bent7_05.dgn
PROJECT NUMBER & PHASE: 0400000967 1 CONTRACT NO.: 04-3A8701

DISREGARD PRINTS BEARING EARLIER REVISION DATES

REVISION DATES: 08-15-12 01-23-13 07-17-13

SHEET 25 OF 34

USERNAME => s123651 DATE PLOTTED => 30-SEP-2013 TIME PLOTTED => 11:47

DIST	COUNTY	ROUTE	POST MILES TOTAL PROJECT	SHEET No.	TOTAL SHEETS
04	CC	680	22.7/24.8	140	186

REGISTERED CIVIL ENGINEER 10-10-12 DATE

5-20-13
PLANS APPROVAL DATE

REGISTERED PROFESSIONAL ENGINEER PHILIP E. LUTZ No. C58839 Exp. 12-31-14 CIVIL STATE OF CALIFORNIA

The State of California or its officers or agents shall not be responsible for the accuracy or completeness of electronic copies of this plan sheet.

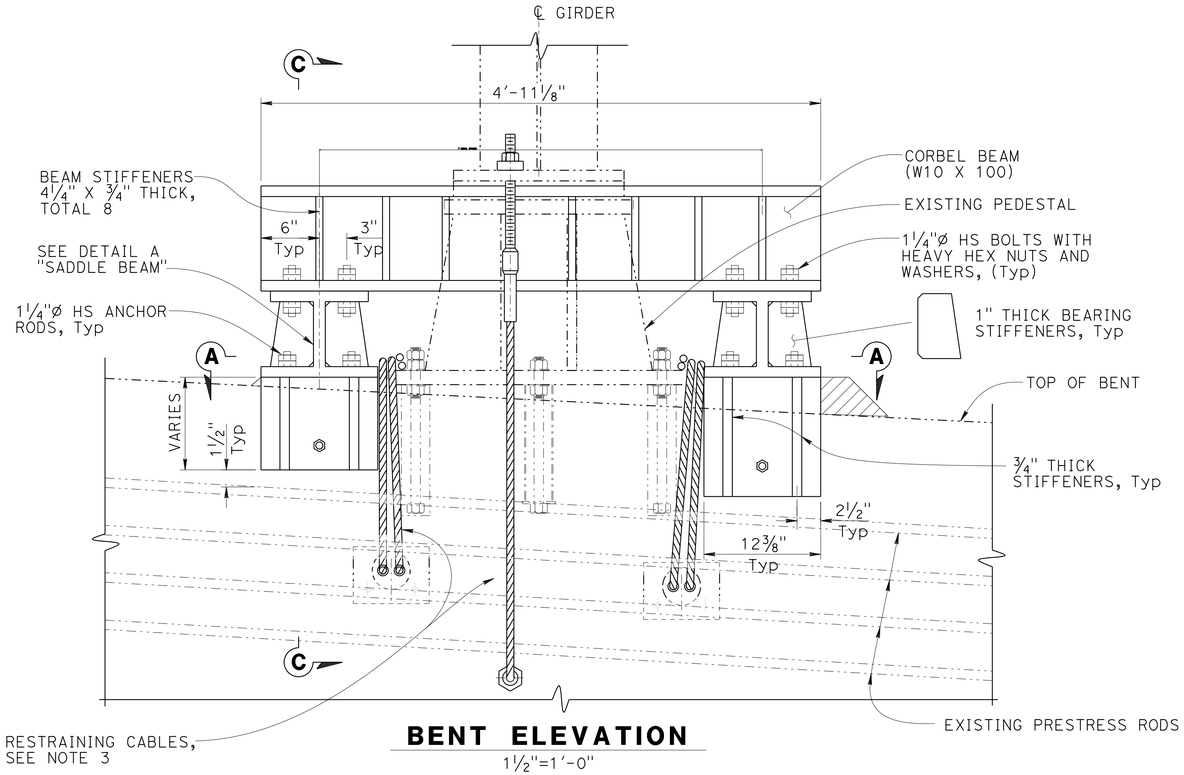

BENT ELEVATION
1 1/2"=1'-0"

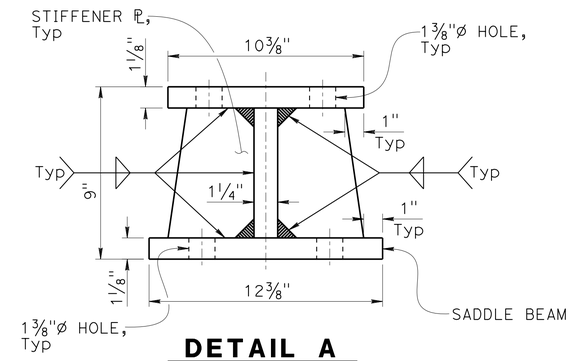

DETAIL A
3"=1'-0"

LEGEND:
-·-·-·- Indicates existing structure

NOTES:

1. Corbel Type F - located at Bent 10L.
2. Grind concrete surface to 1/16"± tolerance to assure full bearing of side plates.
3. See, "RESTRAINER DETAILS NO. 3" sheet, "RESTRAINER DETAILS CORBEL B" for further details. Note, Corbel F restrainers similar to Corbel B details.
4. See "NOTES: CONSTRUCTION SEQUENCE FOR STEEL CORBELS" on "INDEX TO PLANS" sheet.

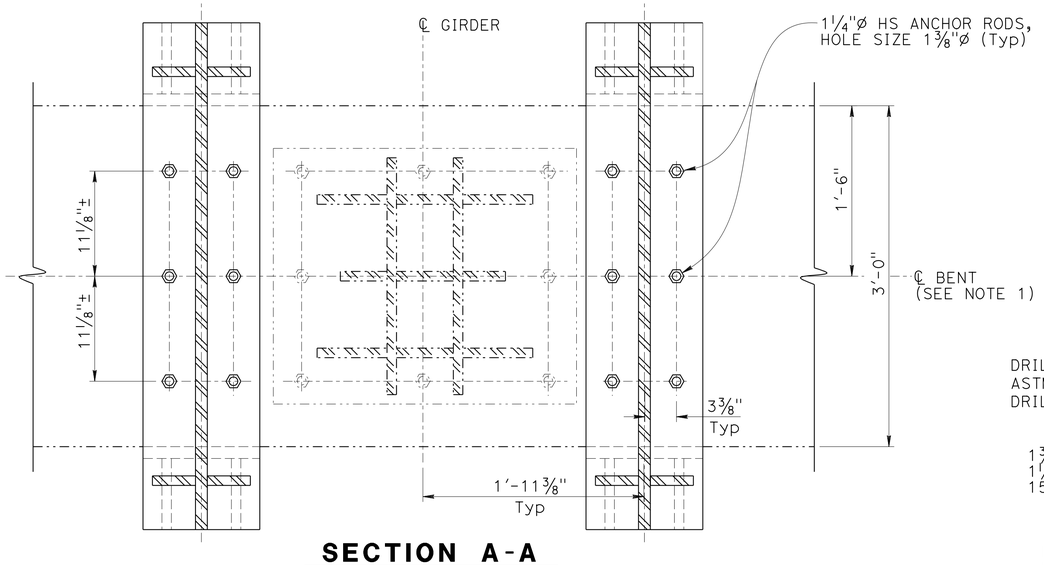

SECTION A-A
1 1/2"=1'-0"

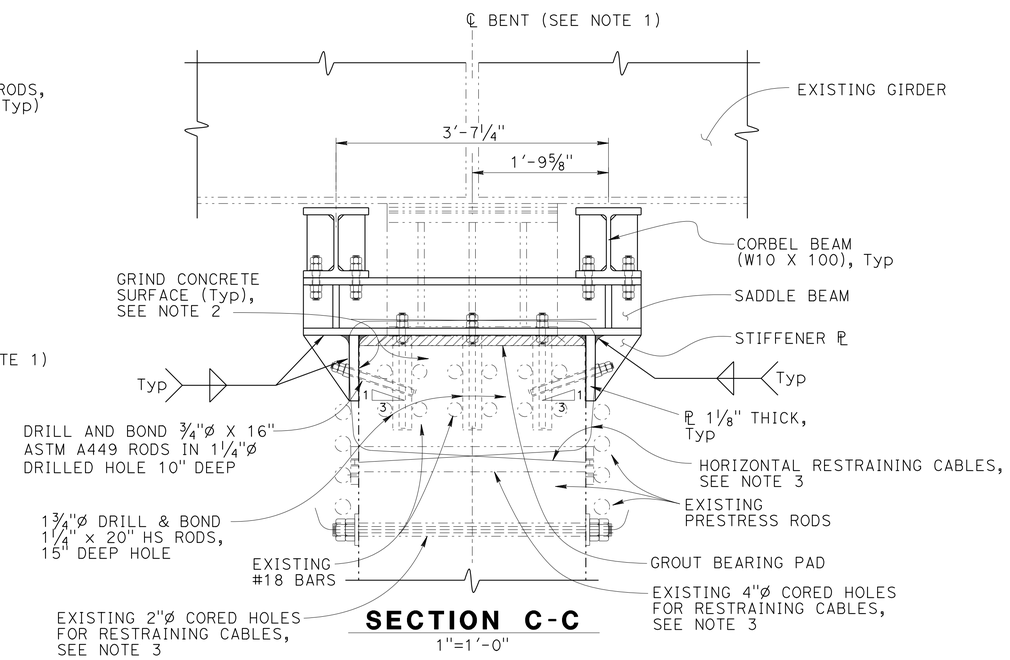

SECTION C-C
1"=1'-0"

NOTE:
THE CONTRACTOR SHALL VERIFY ALL CONTROLLING FIELD DIMENSIONS BEFORE ORDERING OR FABRICATING ANY MATERIAL.

	BY	CHECKED
DESIGN	John Railey	Mike Van De Pol
DETAILS	CCancino	Mike Van De Pol
QUANTITIES	John Railey	E. Franciliso

STATE OF CALIFORNIA
DEPARTMENT OF TRANSPORTATION

DIVISION OF ENGINEERING SERVICES
STRUCTURE DESIGN
DESIGN BRANCH 9

BRIDGE NO. 28-0171L
POST MILE 24.3

MOCOCO OVERHEAD RETROFIT
CORBEL - TYPE F DETAILS

STRUCTURES DESIGN DETAIL SHEET (ENGLISH) (REV. 09-01-10)

ORIGINAL SCALE IN INCHES FOR REDUCED PLANS 0 1 2 3

UNIT: 3594 FILE => 28-0171-e-bent9_10.dgn
PROJECT NUMBER & PHASE: 0400000967 1 CONTRACT NO.: 04-3A8701

DISREGARD PRINTS BEARING EARLIER REVISION DATES

REVISION DATES: 08-21-12 07-18-13 01-23-13

SHEET 26 OF 34

USERNAME => s123631 DATE PLOTTED => 30-SEP-2013 TIME PLOTTED => 11:47

DIST	COUNTY	ROUTE	POST MILES TOTAL PROJECT	SHEET No.	TOTAL SHEETS
04	CC	680	22.7/24.8	141	186

REGISTERED CIVIL ENGINEER 10-10-12 DATE

5-20-13
PLANS APPROVAL DATE

REGISTERED PROFESSIONAL ENGINEER PHILIP E. LUTZ No. C58839 Exp. 12-31-14 CIVIL STATE OF CALIFORNIA

The State of California or its officers or agents shall not be responsible for the accuracy or completeness of electronic copies of this plan sheet.

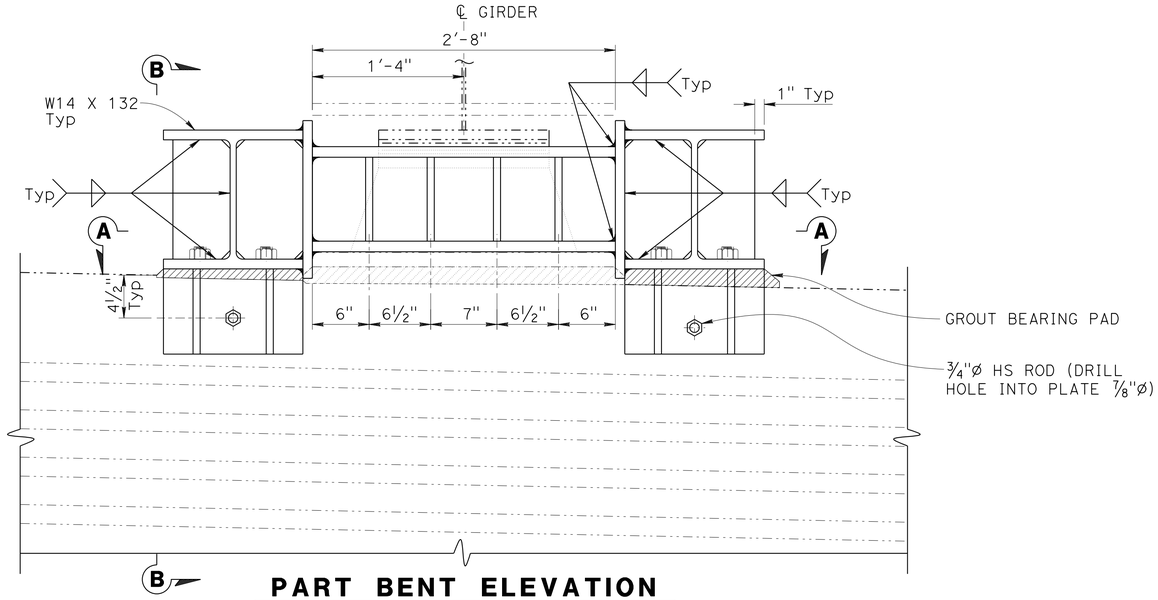

PART BENT ELEVATION

1½"=1'-0"

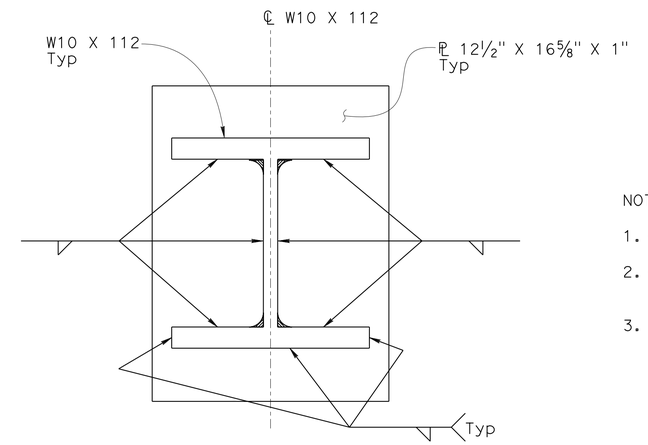

VIEW C-C

3"=1'-0"

LEGEND:

-·-·-·- Indicates existing structure

NOTES:

1. Corbel Type G - located at Bent 9L.
2. Grind concrete surface to 1/16"± tolerance to assure full bearing of side plates.
3. See "NOTES: CONSTRUCTION SEQUENCE FOR STEEL CORBELS" on "INDEX TO PLANS" sheet.

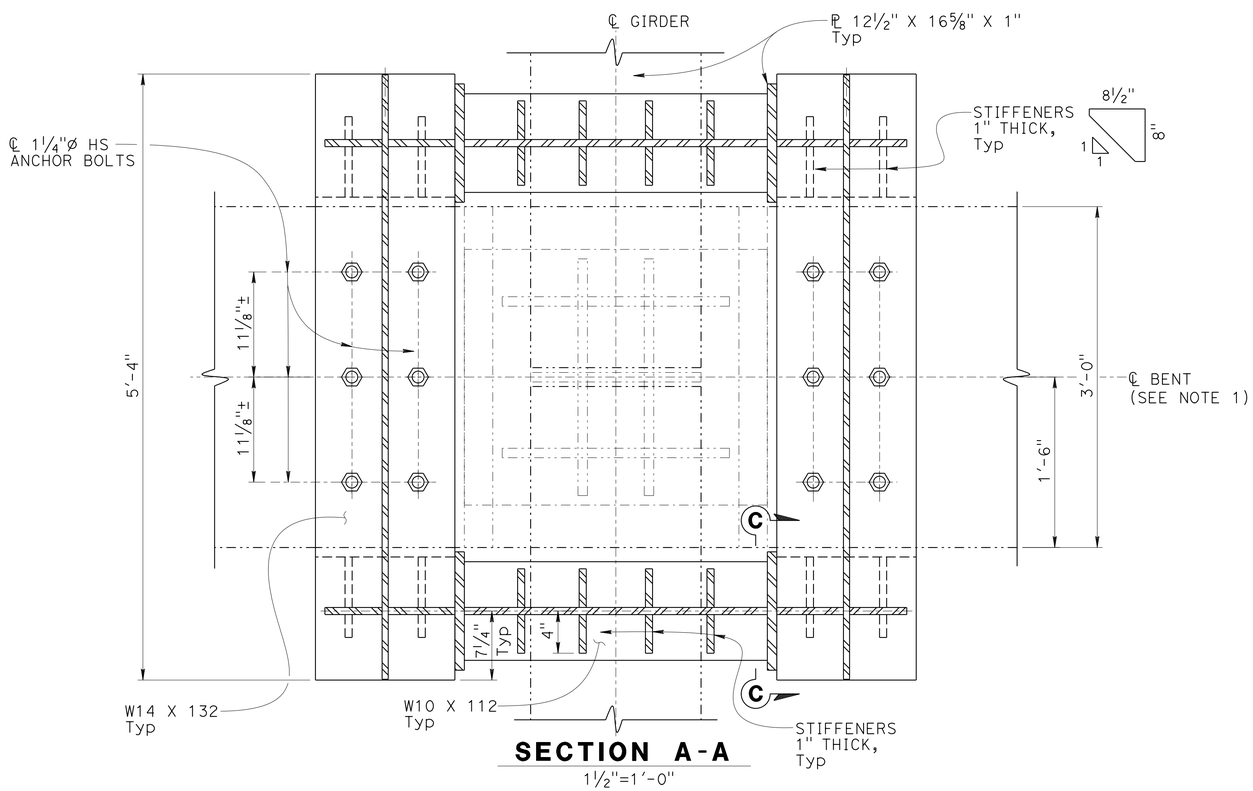

SECTION A-A

1½"=1'-0"

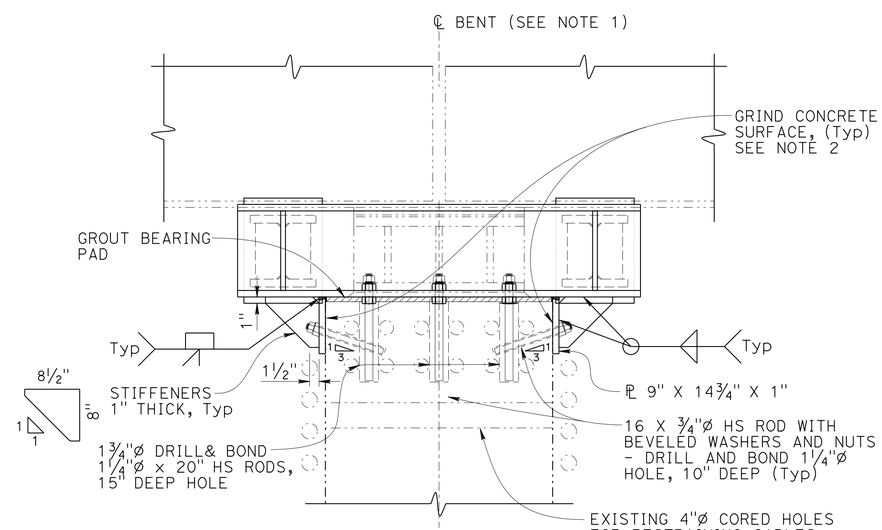

VIEW B-B

1"=1'-0"

NOTE:
THE CONTRACTOR SHALL VERIFY ALL CONTROLLING FIELD DIMENSIONS BEFORE ORDERING OR FABRICATING ANY MATERIAL.

	BY	CHECKED
DESIGN	John Railey	Mike Van De Pol
DETAILS	CCancino	Mike Van De Pol
QUANTITIES	John Railey	E. Franciliso

STATE OF CALIFORNIA
DEPARTMENT OF TRANSPORTATION

DIVISION OF ENGINEERING SERVICES
STRUCTURE DESIGN
DESIGN BRANCH 9

BRIDGE NO. 28-0171L
POST MILE 24.3

MOCOCO OVERHEAD RETROFIT
CORBEL - TYPE G DETAILS

STRUCTURES DESIGN DETAIL SHEET (ENGLISH) (REV. 09-01-10)

ORIGINAL SCALE IN INCHES FOR REDUCED PLANS 0 1 2 3

UNIT: 3594 FILE => 28-0171-e-bent911.dgn
PROJECT NUMBER & PHASE: 0400000967 1 CONTRACT NO.: 04-3A8701

DISREGARD PRINTS BEARING EARLIER REVISION DATES

REVISION DATES: 8-16-12 01-28-13 07-17-13

SHEET 27 OF 34

USERNAME => s123631 DATE PLOTTED => 30-SEP-2013 TIME PLOTTED => 11:47

DIST	COUNTY	ROUTE	POST MILES TOTAL PROJECT	SHEET No.	TOTAL SHEETS
04	CC	680	22.7/24.8	142	186

REGISTERED CIVIL ENGINEER 10-10-12 DATE

5-20-13
PLANS APPROVAL DATE

REGISTERED PROFESSIONAL ENGINEER PHILIP E. LUTZ No. C58839 Exp. 12-31-14 CIVIL STATE OF CALIFORNIA

The State of California or its officers or agents shall not be responsible for the accuracy or completeness of electronic copies of this plan sheet.

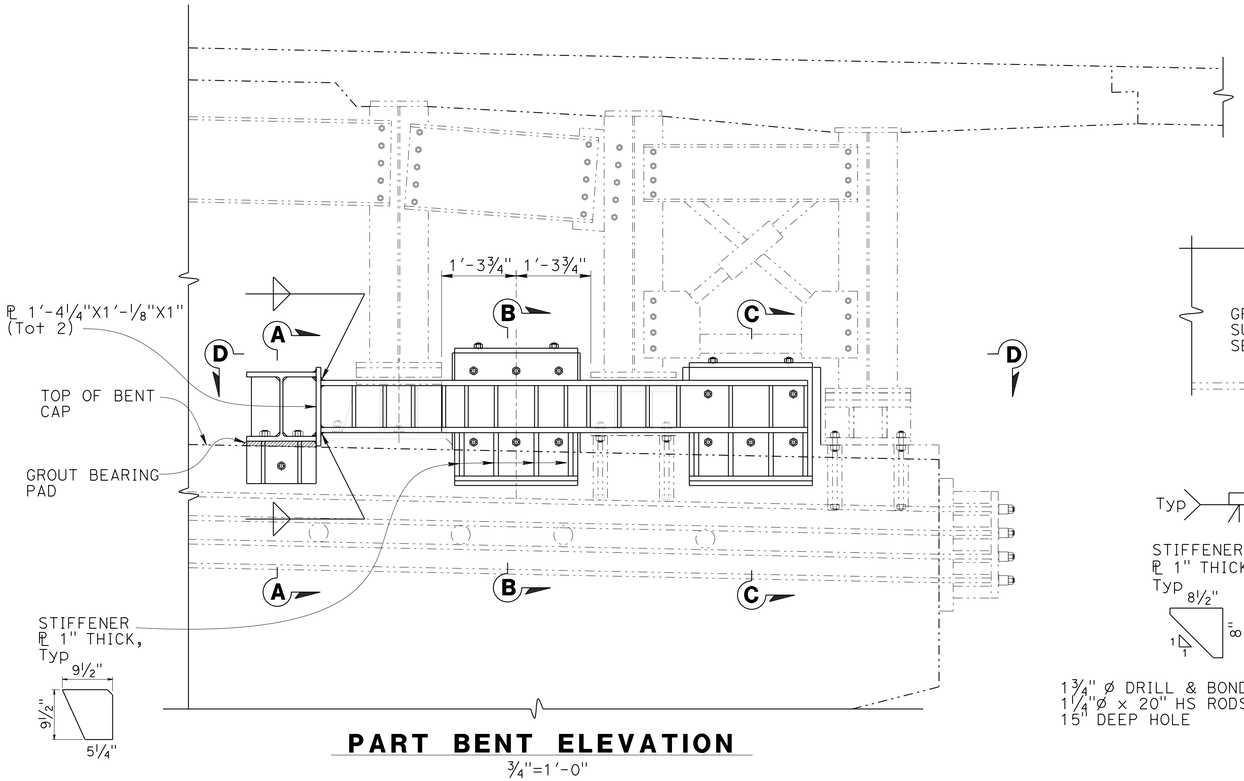

PART BENT ELEVATION

¾"=1'-0"

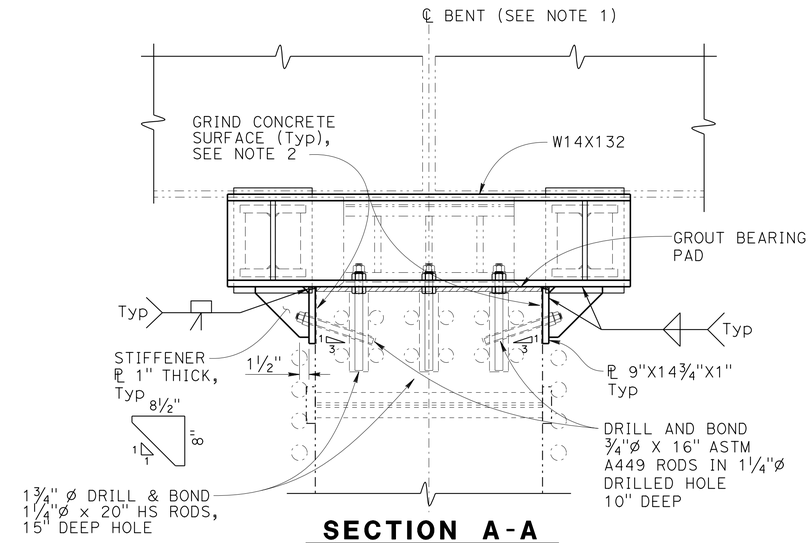

SECTION A-A

1"=1'-0"

LEGEND:

-·-·-·- Indicates existing structure

NOTES:

1. Corbel Type H - located at Bents 9L and 10L.
2. Grind concrete surface to 1/16"± tolerance to assure full bearing of side plates.
3. See "NOTES: CONSTRUCTION SEQUENCE FOR STEEL CORBELS" on "INDEX TO PLANS" sheet.

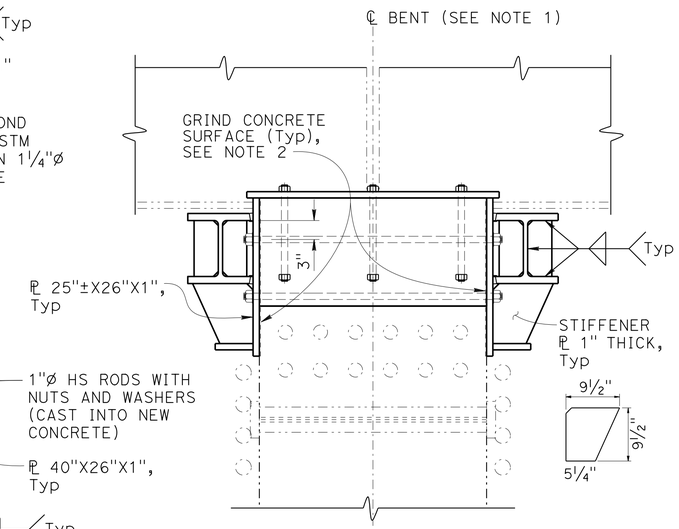

SECTION C-C

1"=1'-0"

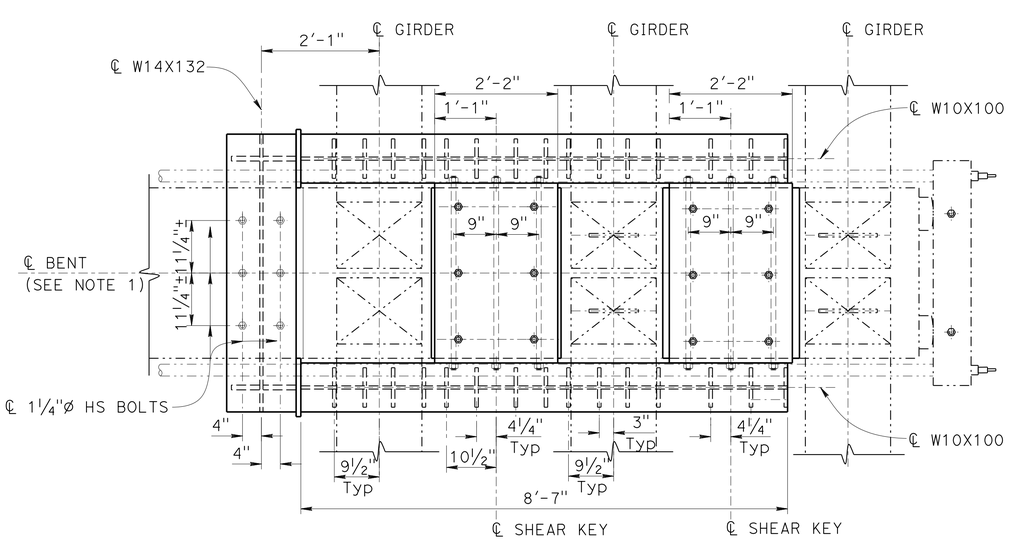

SECTION D-D

¾"=1'-0"

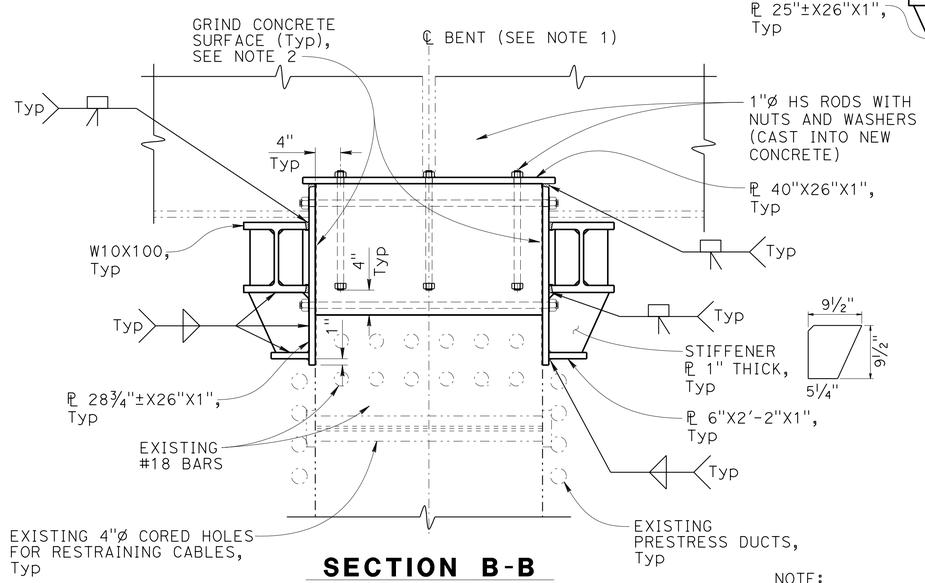

SECTION B-B

1"=1'-0"

NOTE:
THE CONTRACTOR SHALL VERIFY ALL CONTROLLING FIELD DIMENSIONS BEFORE ORDERING OR FABRICATING ANY MATERIAL.

	BY	CHECKED
DESIGN	John Railey	Mike Van De Pol
DETAILS	CCancino	Mike Van De Pol
QUANTITIES	John Railey	E. Franciliso

STATE OF CALIFORNIA
DEPARTMENT OF TRANSPORTATION

DIVISION OF ENGINEERING SERVICES
STRUCTURE DESIGN
DESIGN BRANCH 9

BRIDGE NO. 28-0171L
POST MILE 24.3

MOCOCO OVERHEAD RETROFIT
CORBEL - TYPE H DETAILS

STRUCTURES DESIGN DETAIL SHEET (ENGLISH) (REV. 09-01-10)

ORIGINAL SCALE IN INCHES FOR REDUCED PLANS 0 1 2 3

UNIT: 3594 FILE => 28-0171-e-bent912.dgn
PROJECT NUMBER & PHASE: 0400000967 1 CONTRACT NO.: 04-3A8701

DISREGARD PRINTS BEARING EARLIER REVISION DATES

REVISION DATES: 8-16-12 07-17-13 01-23-13

SHEET 28 OF 34

USERNAME => s123631 DATE PLOTTED => 30-SEP-2013 TIME PLOTTED => 11:47

DIST	COUNTY	ROUTE	POST MILES TOTAL PROJECT	SHEET No.	TOTAL SHEETS
04	CC	680	22.7/24.8	143	186

REGISTERED CIVIL ENGINEER 10-10-12 DATE

5-20-13
PLANS APPROVAL DATE

REGISTERED PROFESSIONAL ENGINEER PHILIP E. LUTZ No. C58839 Exp. 12-31-14 CIVIL STATE OF CALIFORNIA

The State of California or its officers or agents shall not be responsible for the accuracy or completeness of electronic copies of this plan sheet.

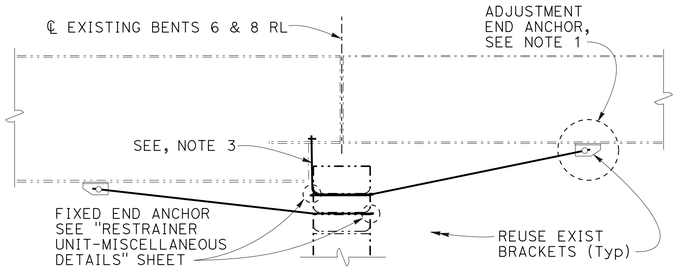

DETAIL A
No Scale

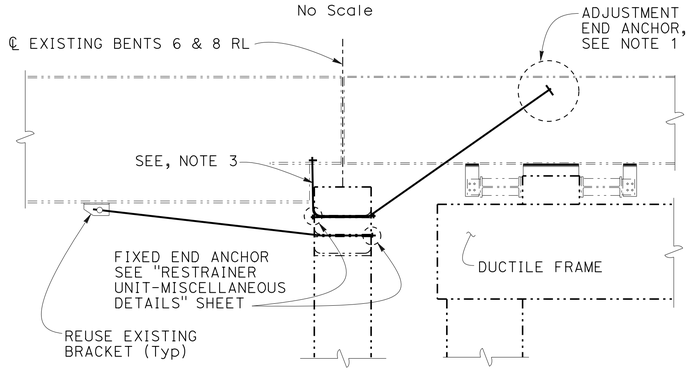

DETAIL B
No Scale

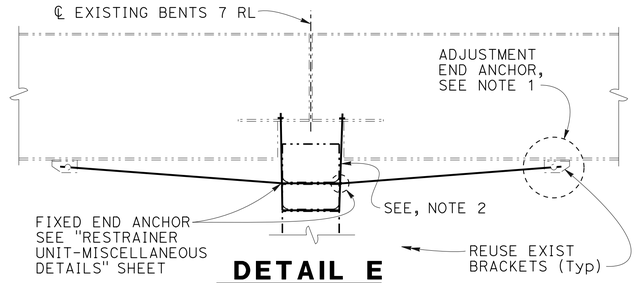

DETAIL E
No Scale

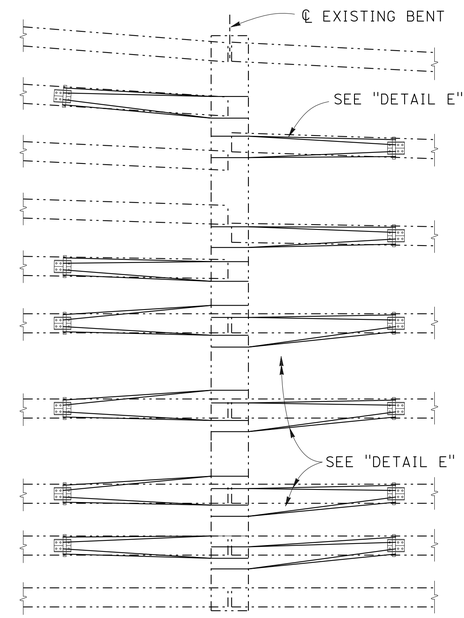

RESTRAINER UNIT
No Scale

LEGEND:
-·-·-·- Indicates existing structure

NOTES:

1. Replace existing anchor and cable with a new anchor and cable system, see "RESTRAINER UNIT-MISCELLANEOUS DETAILS" sheet.
2. Replace existing vertical restrainer cables with new ¾" galvanized cable. See "RESTRAINER DETAILS NO. 3" sheet for further details.
3. Replace existing vertical restrainer cables with new ¾" galvanized cable. See "RESTRAINER DETAILS NO. 4" sheet for further details.

** Denotes Bents 2, 3, 5, 9 & 10 RL
*** Denotes Bents 2, 3, 4, 5, 9 & 10 RL

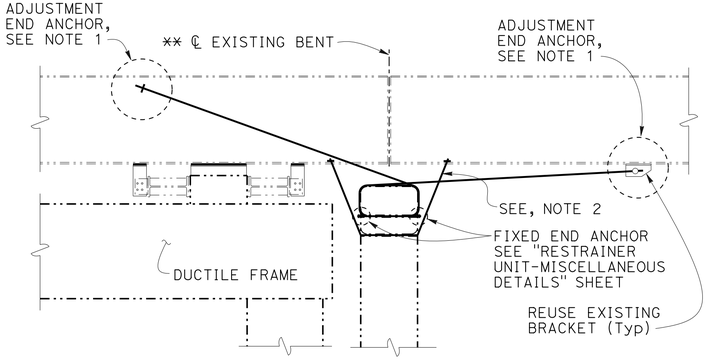

DETAIL C
No Scale

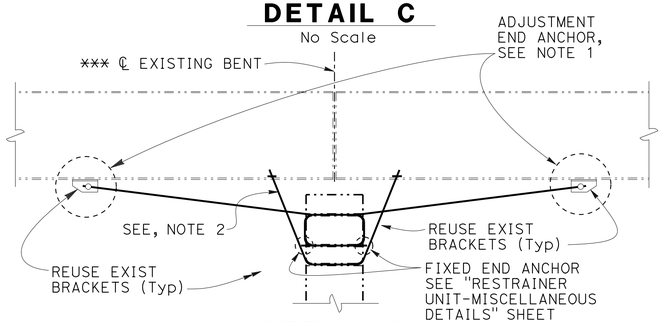

DETAIL D
No Scale

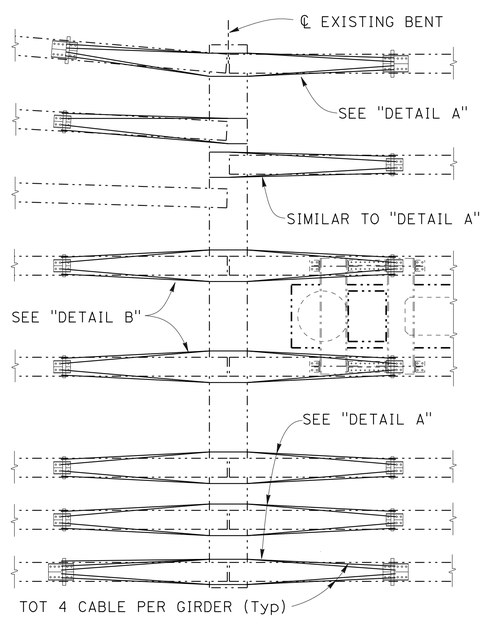

RESTRAINER UNIT
No Scale

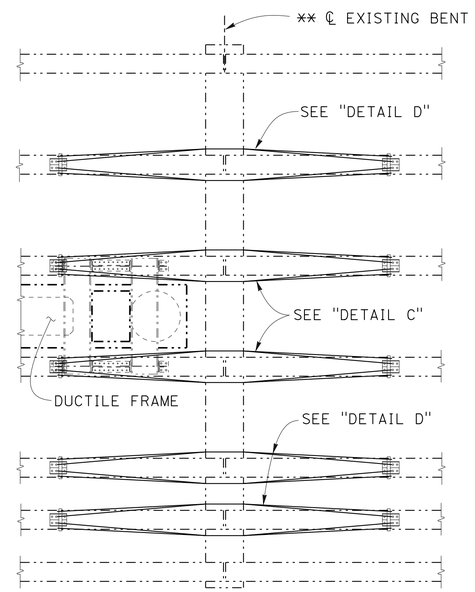

RESTRAINER UNIT
No Scale

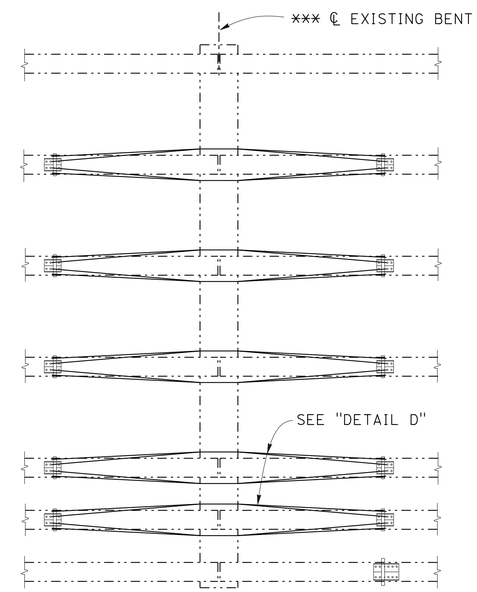

RESTRAINER UNIT
No Scale

NOTE:
THE CONTRACTOR SHALL VERIFY ALL CONTROLLING FIELD DIMENSIONS BEFORE ORDERING OR FABRICATING ANY MATERIAL.

	BY	CHECKED
DESIGN	John Railey	Mike Van De Pol
DETAILS	CCancino	Mike Van De Pol
QUANTITIES	John Railey	Glenn Matthews

STATE OF CALIFORNIA
DEPARTMENT OF TRANSPORTATION

DIVISION OF ENGINEERING SERVICES
STRUCTURE DESIGN
DESIGN BRANCH 9

BRIDGE NO. 28-0171L
POST MILE 24.3

MOCOCO OVERHEAD RETROFIT
RESTRAINER DETAILS NO. 1

STRUCTURES DESIGN DETAIL SHEET (ENGLISH) (REV. 09-01-10)

ORIGINAL SCALE IN INCHES FOR REDUCED PLANS 0 1 2 3

UNIT: 3594
PROJECT NUMBER & PHASE: 0400000967 1
CONTRACT NO.: 04-3A8701

DISREGARD PRINTS BEARING EARLIER REVISION DATES

REVISION DATES 09-16-12 10-16-12 10-16-12

SHEET 29 OF 34

FILE => 28-0171-h-rest_det01.dgn

USERNAME => s123631 DATE PLOTTED => 30-SEP-2013 TIME PLOTTED => 11:47

DIST	COUNTY	ROUTE	POST MILES TOTAL PROJECT	SHEET No.	TOTAL SHEETS
04	CC	680	22.7/24.8	144	186

REGISTERED CIVIL ENGINEER 10-10-12 DATE

5-20-13
PLANS APPROVAL DATE

REGISTERED PROFESSIONAL ENGINEER
PHILIP E. LUTZ
No. C58839
Exp. 12-31-14
CIVIL
STATE OF CALIFORNIA

The State of California or its officers or agents shall not be responsible for the accuracy or completeness of electronic copies of this plan sheet.

LEGEND:
-·-·-·- Indicates existing structure

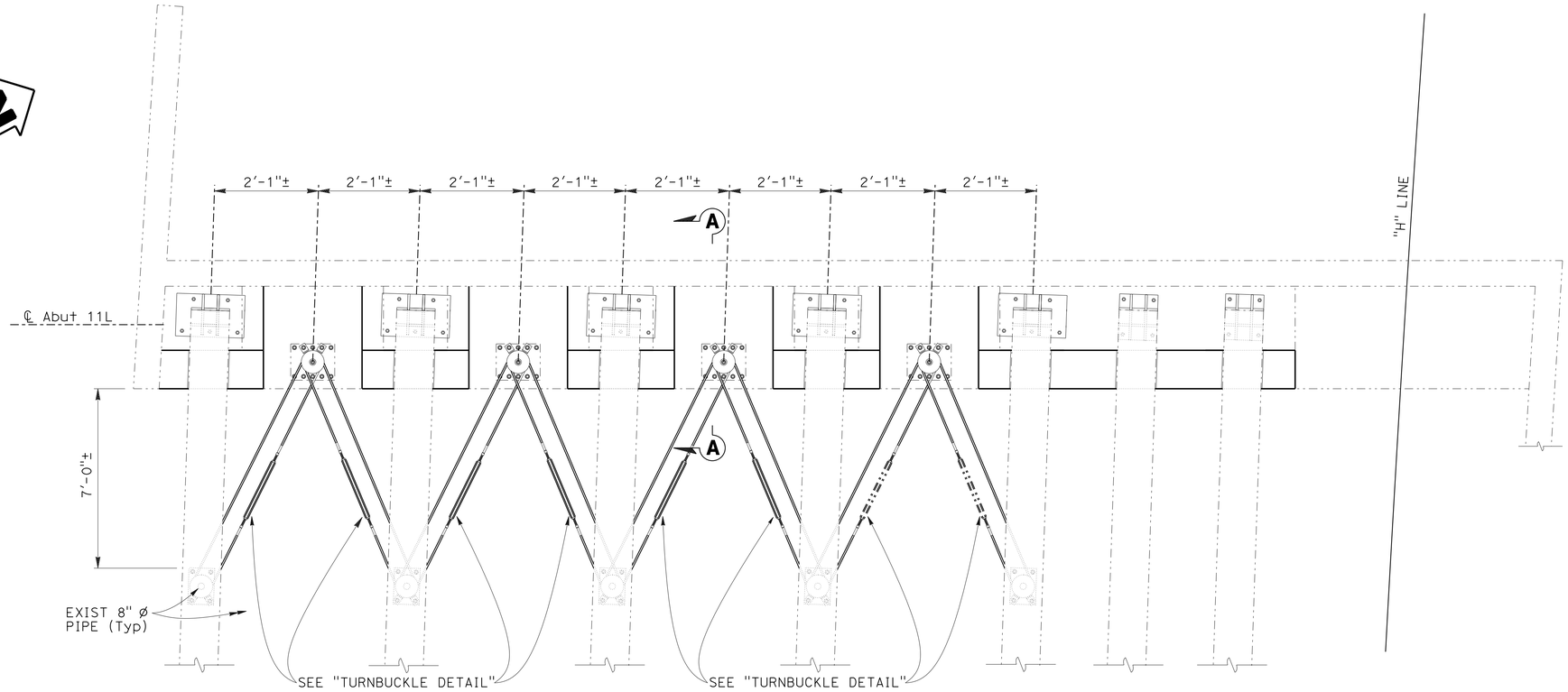

RESTRAINER AT ABUTMENT- PLAN
No Scale

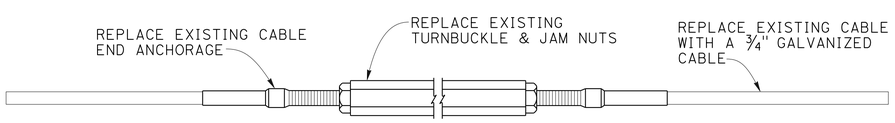

NOTE:
Tighten turnbuckle to 20 ft-lbs, back off 5 turns and tighten jam nuts.

TURNBUCKLE DETAIL
No Scale

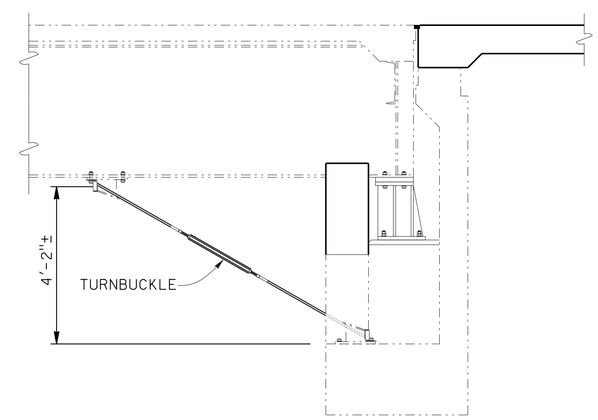

SECTION A-A
No Scale

NOTE:
THE CONTRACTOR SHALL VERIFY ALL CONTROLLING FIELD DIMENSIONS BEFORE ORDERING OR FABRICATING ANY MATERIAL.

	BY	CHECKED
DESIGN	John Railey	Mike Van De Pol
DETAILS	CCancino	Mike Van De Pol
QUANTITIES	John Railey	Glenn Matthews

STATE OF CALIFORNIA
DEPARTMENT OF TRANSPORTATION

DIVISION OF ENGINEERING SERVICES
STRUCTURE DESIGN
DESIGN BRANCH 9

BRIDGE NO. 28-0171L
POST MILE 24.3

MOCOCO OVERHEAD RETROFIT
RESTRAINER DETAILS NO. 2

STRUCTURES DESIGN DETAIL SHEET (ENGLISH) (REV. 09-01-10)

ORIGINAL SCALE IN INCHES FOR REDUCED PLANS 0 1 2 3

UNIT: 3594
PROJECT NUMBER & PHASE: 0400000967 1
CONTRACT NO.: 04-3A8701

DISREGARD PRINTS BEARING EARLIER REVISION DATES

REVISION DATES

SHEET 30 OF 34

FILE => 28-0171-h-rest_det02.dgn

USERNAME => s123631 DATE PLOTTED => 30-SEP-2013 TIME PLOTTED => 11:47

DIST	COUNTY	ROUTE	POST MILES TOTAL PROJECT	SHEET No.	TOTAL SHEETS
04	CC	680	22.7/24.8	145	186

REGISTERED CIVIL ENGINEER 10-10-12 DATE

5-20-13
PLANS APPROVAL DATE

REGISTERED PROFESSIONAL ENGINEER PHILIP E. LUTZ No. C58839 Exp. 12-31-14 CIVIL STATE OF CALIFORNIA

The State of California or its officers or agents shall not be responsible for the accuracy or completeness of electronic copies of this plan sheet.

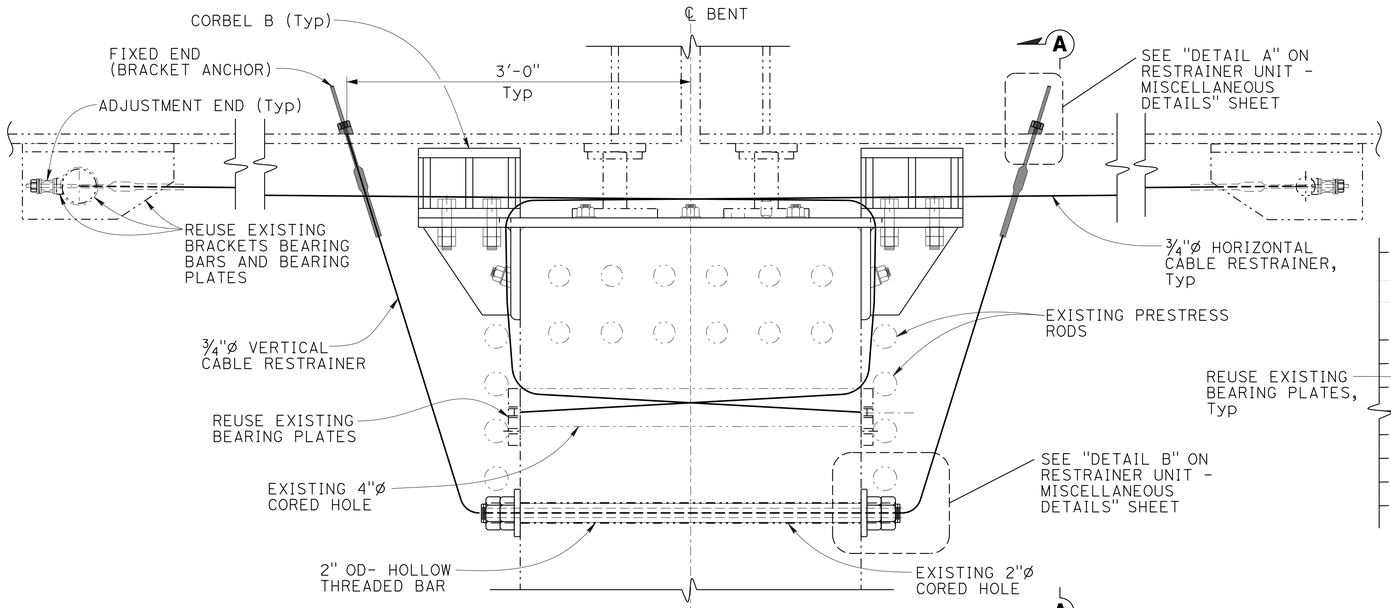

RESTRAINER DETAILS
CORBEL B
1½"=1'-0"

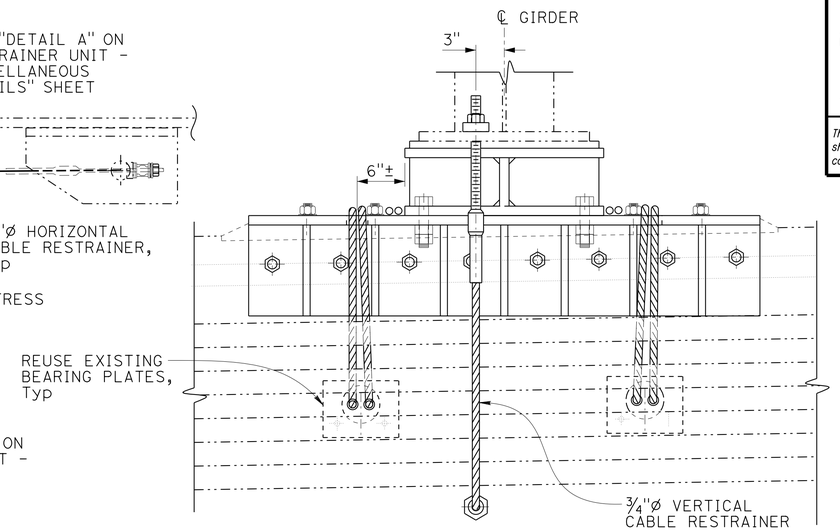

VIEW A-A
No Scale

LEGEND:
-·-·-·- Indicates existing structure

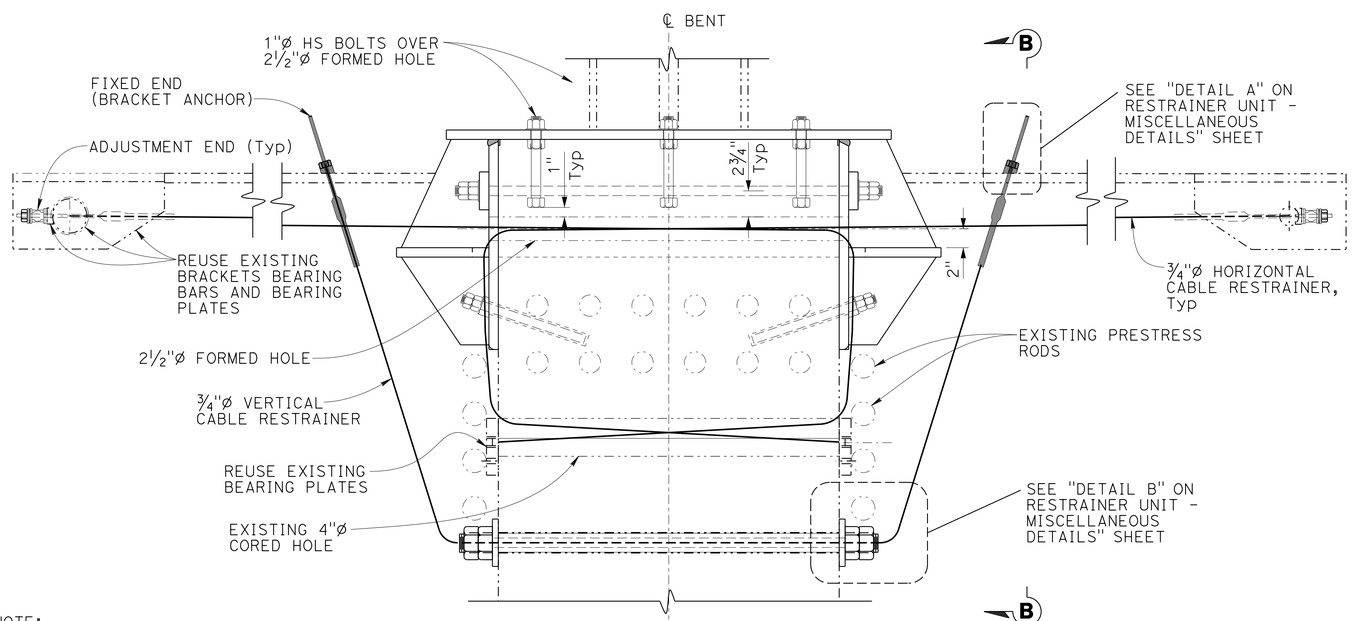

RESTRAINER DETAILS
CORBEL C
1½"=1'-0"

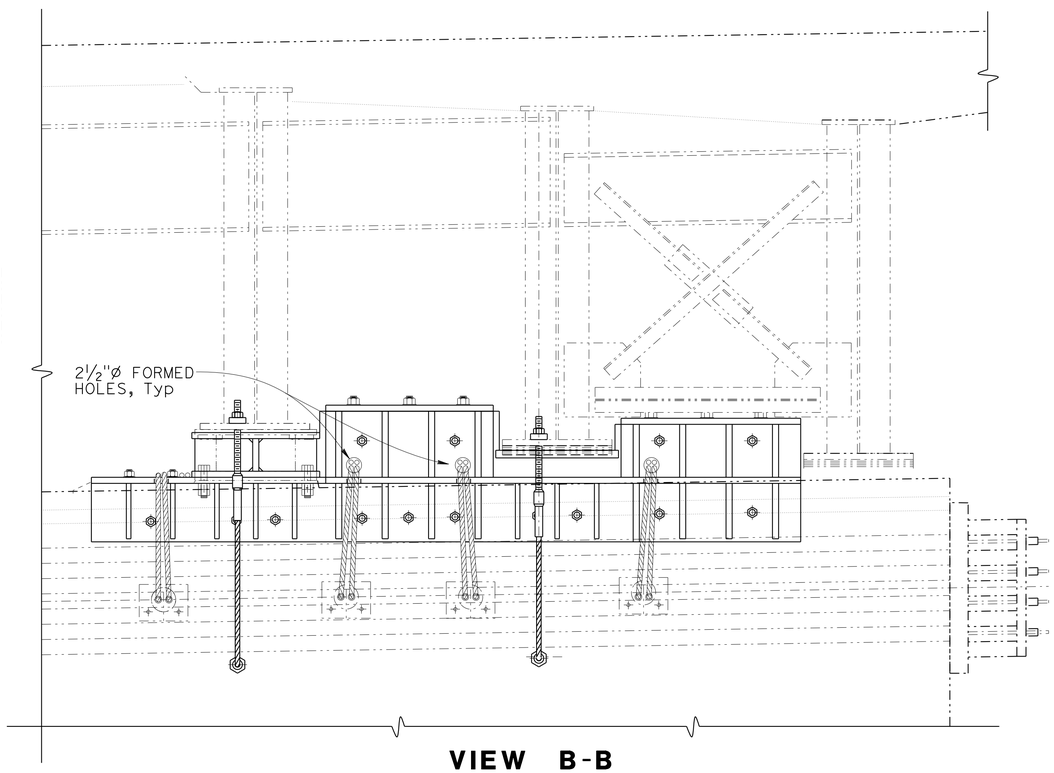

VIEW B-B
No Scale

NOTE:
THE CONTRACTOR SHALL VERIFY ALL CONTROLLING FIELD DIMENSIONS BEFORE ORDERING OR FABRICATING ANY MATERIAL.

	BY	CHECKED
DESIGN	John Railey	Phil Lutz
DETAILS	CCancino	John Railey
QUANTITIES	John Railey	Evan Franciliso

STATE OF CALIFORNIA
DEPARTMENT OF TRANSPORTATION

DIVISION OF ENGINEERING SERVICES
STRUCTURE DESIGN
DESIGN BRANCH 9

BRIDGE NO. 28-0171L
POST MILE 24.3

MOCOCO OVERHEAD RETROFIT
RESTRAINER DETAILS NO. 3

STRUCTURES DESIGN DETAIL SHEET (ENGLISH) (REV. 09-01-10)

ORIGINAL SCALE IN INCHES FOR REDUCED PLANS 0 1 2 3

UNIT: 3594
PROJECT NUMBER & PHASE: 0400000967 1
CONTRACT NO.: 04-3A8701

DISREGARD PRINTS BEARING EARLIER REVISION DATES

REVISION DATES

SHEET 31 OF 34

USERNAME => s123631 DATE PLOTTED => 30-SEP-2013 TIME PLOTTED => 11:47

FILE => 28-0171-h-rest_det03.dgn

DIST	COUNTY	ROUTE	POST MILES TOTAL PROJECT	SHEET No.	TOTAL SHEETS
04	CC	680	22.7/24.8	146	186

REGISTERED CIVIL ENGINEER 10-10-12 DATE

5-20-13
PLANS APPROVAL DATE

REGISTERED PROFESSIONAL ENGINEER
PHILIP E. LUTZ
No. C58839
Exp. 12-31-14
CIVIL
STATE OF CALIFORNIA

The State of California or its officers or agents shall not be responsible for the accuracy or completeness of electronic copies of this plan sheet.

LEGEND:
-·-·-·- Indicates existing structure

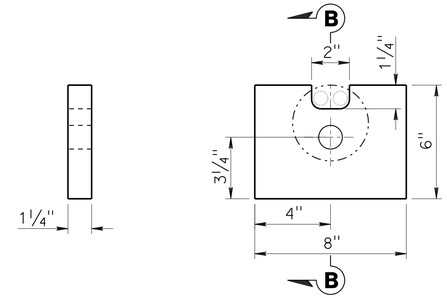

SECTION B-B **DETAIL C**

BEARING PLATES
3"=1'-0"

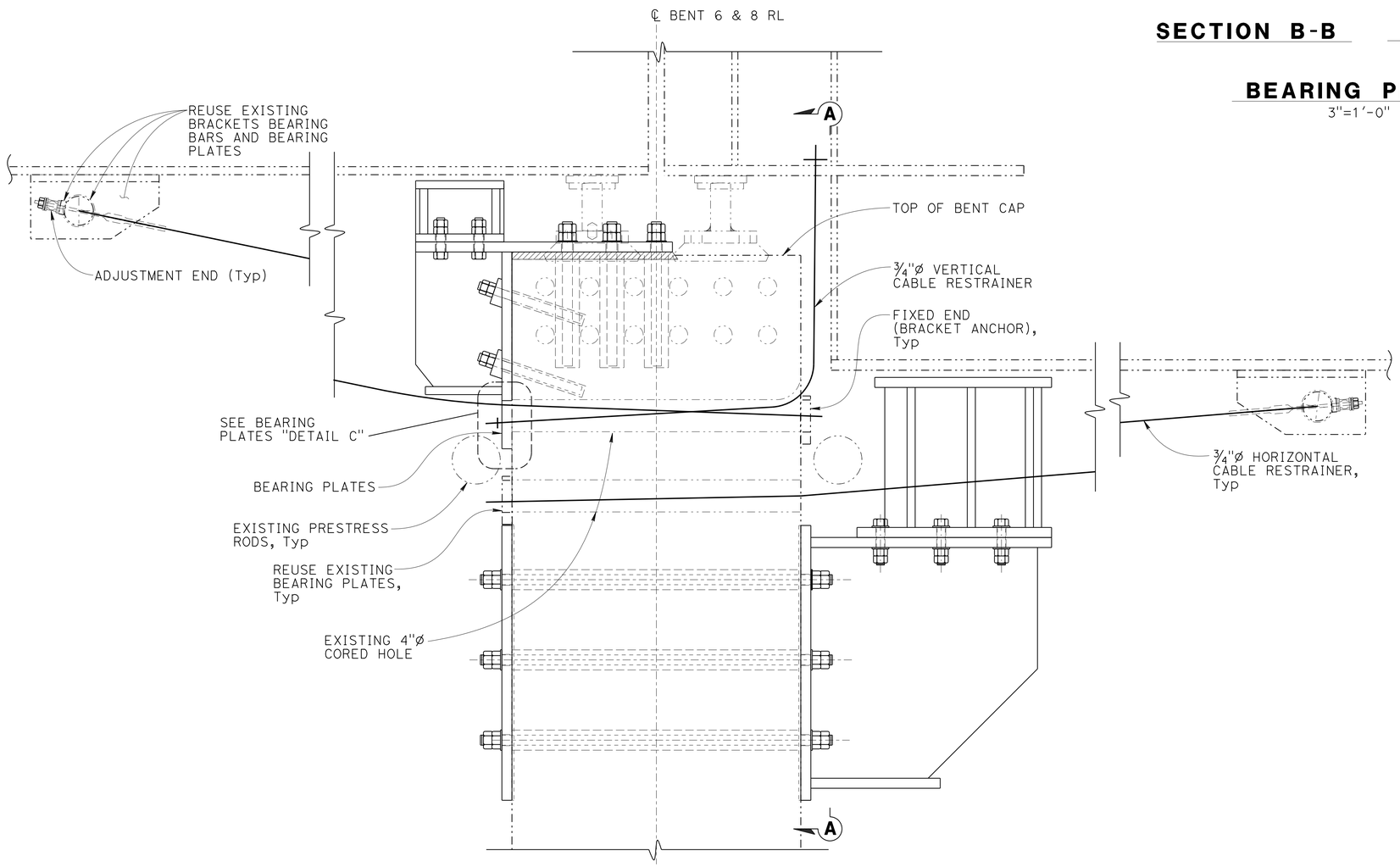

RESTRAINER DETAILS
CORBEL D AND E
1½"=1'-0"

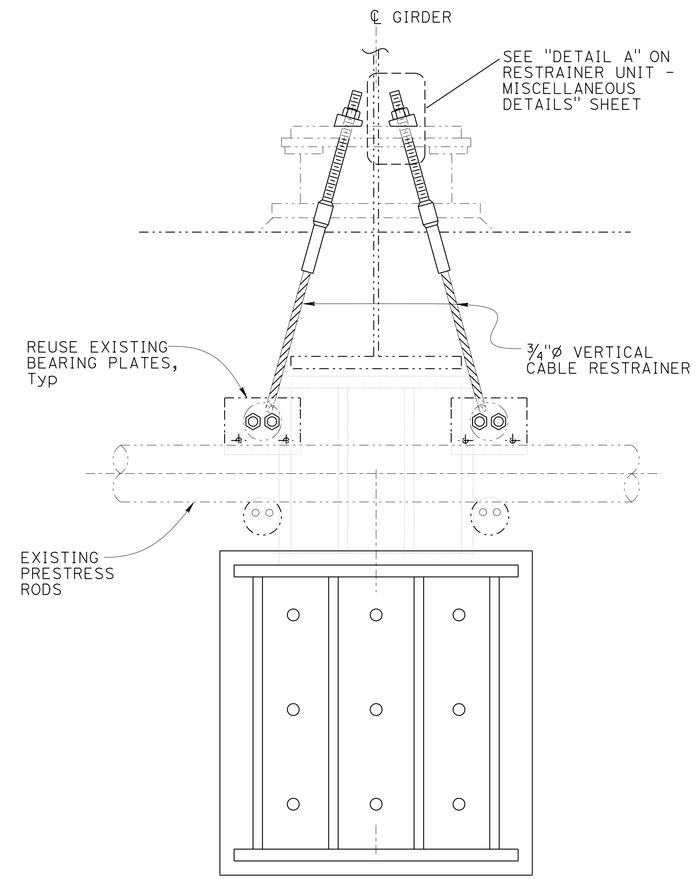

VIEW A-A
No Scale

NOTE:
THE CONTRACTOR SHALL VERIFY ALL CONTROLLING FIELD DIMENSIONS BEFORE ORDERING OR FABRICATING ANY MATERIAL.

	BY	CHECKED
DESIGN	John Railey	Phil Lutz
DETAILS	CCancino	John Railey
QUANTITIES	John Railey	Evan Franciliso

STATE OF CALIFORNIA
DEPARTMENT OF TRANSPORTATION

DIVISION OF ENGINEERING SERVICES
STRUCTURE DESIGN
DESIGN BRANCH 9

BRIDGE NO. 28-0171L
POST MILE 24.3

MOCOCO OVERHEAD RETROFIT
RESTRAINER DETAILS NO. 4

STRUCTURES DESIGN DETAIL SHEET (ENGLISH) (REV. 09-01-10)

ORIGINAL SCALE IN INCHES FOR REDUCED PLANS 0 1 2 3

UNIT: 3594
PROJECT NUMBER & PHASE: 0400000967 1
CONTRACT NO.: 04-3A8701

DISREGARD PRINTS BEARING EARLIER REVISION DATES

REVISION DATES

SHEET 32 OF 34

FILE => 28-0171-h-rest_det04.dgn

USERNAME => s123631 DATE PLOTTED => 30-SEP-2013 TIME PLOTTED => 11:47

DIST	COUNTY	ROUTE	POST MILES TOTAL PROJECT	SHEET No.	TOTAL SHEETS
04	CC	680	22.7/24.8	147	186

REGISTERED CIVIL ENGINEER 10-10-12 DATE

5-20-13
PLANS APPROVAL DATE

REGISTERED PROFESSIONAL ENGINEER PHILIP E. LUTZ No. C58839 Exp. 12-31-14 CIVIL STATE OF CALIFORNIA

The State of California or its officers or agents shall not be responsible for the accuracy or completeness of electronic copies of this plan sheet.

NOTE:
THE CONTRACTOR SHALL VERIFY ALL CONTROLLING FIELD DIMENSIONS BEFORE ORDERING OR FABRICATING ANY MATERIAL.

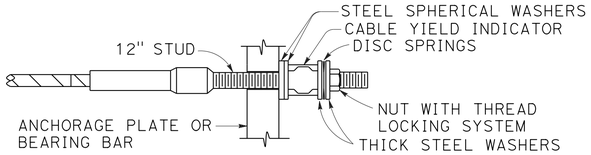

ADJUSTMENT END

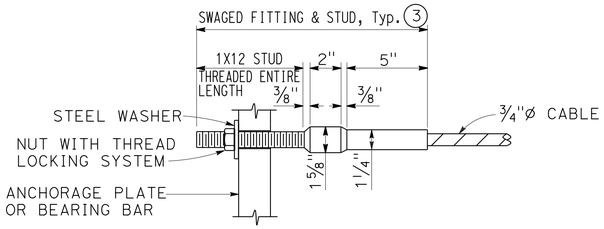

FIXED END (TYPICAL BRACKET ANCHOR)

(SINGLE-END ADJUSTMENT RESTRAINER UNITS)

CABLE END ANCHORAGE DETAILS

No Scale

NOTE:
For locations of fixed and adjusted ends, see "RESTRAINER DETAILS NO. 1" sheet

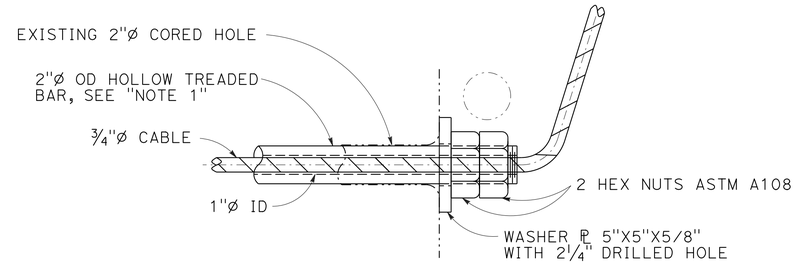

DETAIL B

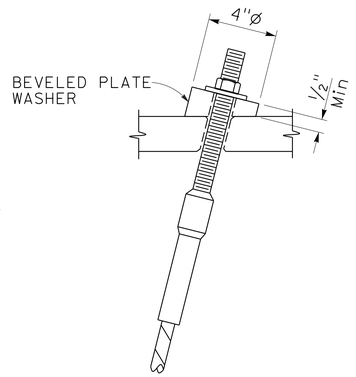

DETAIL A

DISC SPRINGS AND WASHERS

ALL DIMENSIONS IN INCHES, EXCEPT AS NOTED

	DISC SPRING					STEEL SPHERICAL WASHER			THICK WASHER		
L*	ID	OD	†	H	COLOR CODE	ID	OD	NOMINAL THICKNESS	ID	OD	†**
00.0 - 25.0	1.00	2.00	0.065	0.130	WHITE	1.19	2.25	0.50	1.03	2.00	0.25
25.1 - 31.9	1.00	2.00	0.084	0.136	RED	1.19	2.25	0.50	1.03	2.00	0.25
32.0 - 37.9	1.00	2.00	0.097	0.145	BLUE	1.19	2.25	0.50	1.03	2.00	0.25
38.0 - 45.0	1.25	2.50	0.120	0.180	YELLOW	1.31	2.50	0.50	1.16	2.00	0.25

* For limits of length L (ft), use effective length of cable, from face-to-face outer surfaces of anchorage plate or bearing bar. Refer to Bridge detail sheets for approximate length required.

** MINIMUM VALUE

NOTE: All OD and ID dimensions for washers and disc springs shall meet the dimensional tolerances for hardened steel washers, ASTM F436

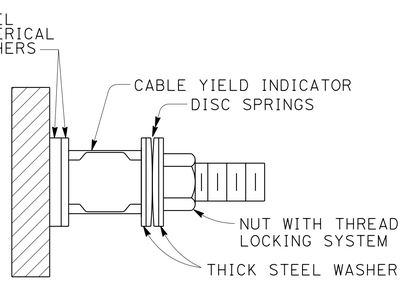

ADJUSTMENT END

(NEW CONSTRUCTION SHOWN)

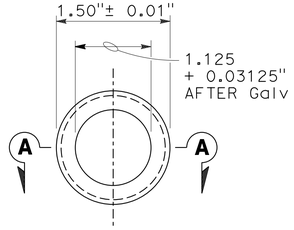

END VIEW

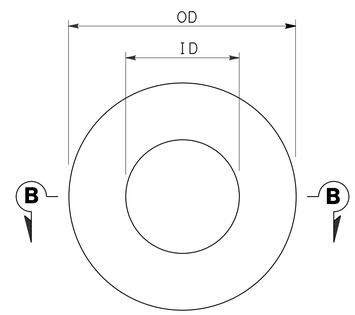

PLAN

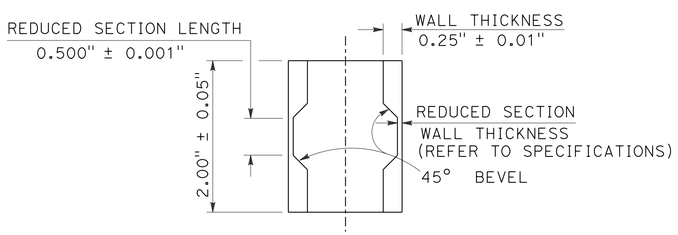

SECTION A-A

"ALL DIMENSIONS ARE BEFORE GALVANIZING EXCEPT AS NOTED"

CABLE YIELD INDICATOR

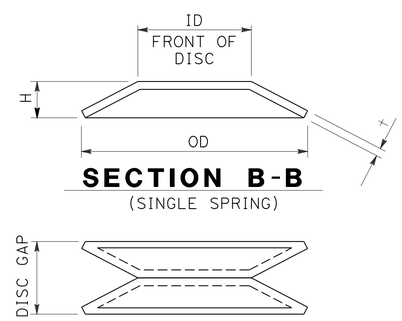

SECTION B-B

(SINGLE SPRING)

AS INSTALLED ON STUD

NOTE: FOR DIMENSIONS NOT SHOWN, SEE TABLE

DISC SPRING

RESTRAINER UNIT INSTALLATION PROCEDURE

1a. For typical 'girder to opposite girder' or 'bent cap to girder' restrainers with one adjustment end:

Place nut, washer and Thread Locking System on fixed end stud prior to tightening the cable.

The adjustment end shall be at the same end of the cable for all restrainers at a specific hinge or bent.

Tighten the nuts on the cable from the Adjustment End of restrainer until the disc springs collapse and there is no disc gap remaining between the discs.

1b. For typical "U" or "V" shaped restrainers units with two adjustment ends:

Install Cable Yield Indicator, spherical washers, disc springs, washers and nuts on both adjustment ends of cable type restrainers.

The ends of the cable must be adjusted simultaneously.
Tighten the nuts on the cable from the adjustment ends of restrainer until the disc springs collapse and there is no disc gap remaining between the discs on either end of the cable.

2. Place thread locking system on adjustment end(s) after tightening the cable but before backing off the nut(s).

Back off the nut(s) at the adjustable anchorage(s) a distance equal to the maximum additional amount that the hinge is expected to open, relative to existing ambient conditions, as shown on the plans for movement rating.

3 CONTRACTOR SHALL HAVE THE OPTION TO FIELD SWAG THE FIXED END OF TYPICAL BRACKET ANCHOR.

NOTE:

1. For 2"ø Hollow Threaded Bar minimum yield strength shall be 152 kips, minimum ultimate strength shall be 188 kips, minimum inside diameter shall be 1". The Hollow Threaded Bar shall be heavy wall steel tubing conforming to ASTM A519 continously threaded over its entire length.

NO SCALE

	BY	CHECKED
DESIGN	John Railey	Mike Van De Pol
DETAILS	CCancino	Mike Van De Pol
QUANTITIES	John Railey	Glenn Matthews

STATE OF CALIFORNIA
DEPARTMENT OF TRANSPORTATION

DIVISION OF ENGINEERING SERVICES
STRUCTURE DESIGN
DESIGN BRANCH 9

BRIDGE NO. 28-0171L
POST MILE 24.3

MOCOCO OVERHEAD RETROFIT

RESTRAINER UNIT - MISCELLANEOUS DETAILS

STRUCTURES DESIGN DETAIL SHEET (ENGLISH) (REV. 09-01-10)

ORIGINAL SCALE IN INCHES FOR REDUCED PLANS 0 1 2 3

UNIT: 3594
PROJECT NUMBER & PHASE: 0400000967 1
CONTRACT NO.: 04-3A8701

DISREGARD PRINTS BEARING EARLIER REVISION DATES

REVISION DATES 10-08-12

SHEET 33 OF 34

FILE => 28-0171-h-rest_miscdet.dgn

USERNAME => s123631 DATE PLOTTED => 30-SEP-2013 TIME PLOTTED => 11:47

DIST	COUNTY	ROUTE	POST MILES TOTAL PROJECT	SHEET No.	TOTAL SHEETS
04	CC	680	22.7/24.8	148	186

REGISTERED CIVIL ENGINEER 10-10-12 DATE

5-20-13
PLANS APPROVAL DATE

REGISTERED PROFESSIONAL ENGINEER PHILIP E. LUTZ No. C55839 Exp. 12-31-14 CIVIL STATE OF CALIFORNIA

The State of California or its officers or agents shall not be responsible for the accuracy or completeness of electronic copies of this plan sheet.

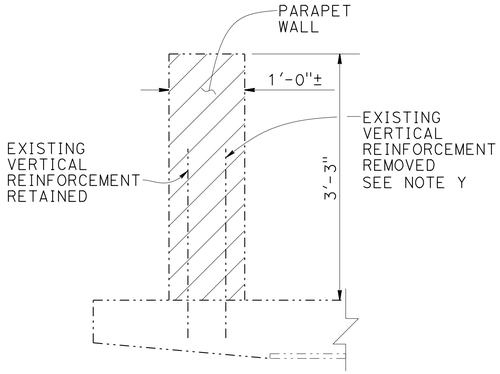

SECTION A-A
1" = 1'-0"

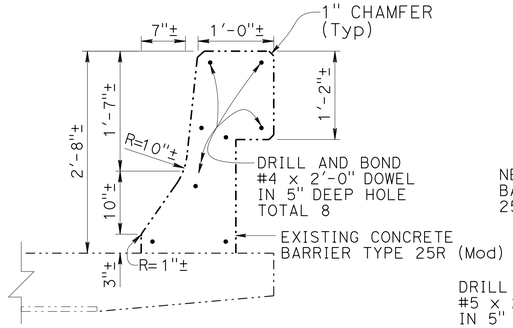

SECTION B-B
1" = 1'-0"

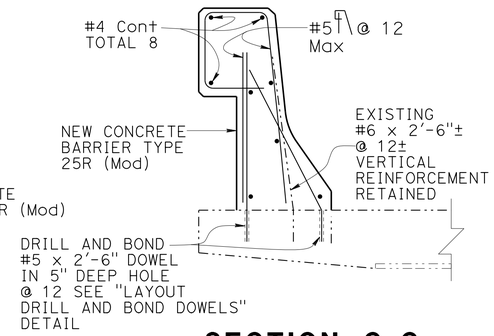

SECTION C-C
1" = 1'-0"

NOTE Y: Remove all existing vertical reinforcement to 1" below top of deck surface and patch.

LEGEND:

○ Denotes new #5 drill and bond dowel, locate in relation to existing reinforcement as shown

× Denotes approximate location existing #6 reinforcement

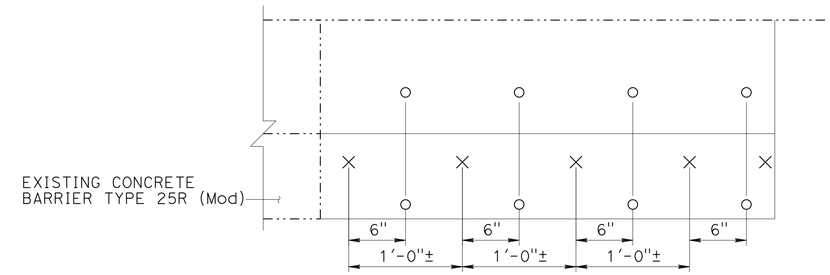

LAYOUT DRILL AND BOND DOWELS
1½" = 1'-0"

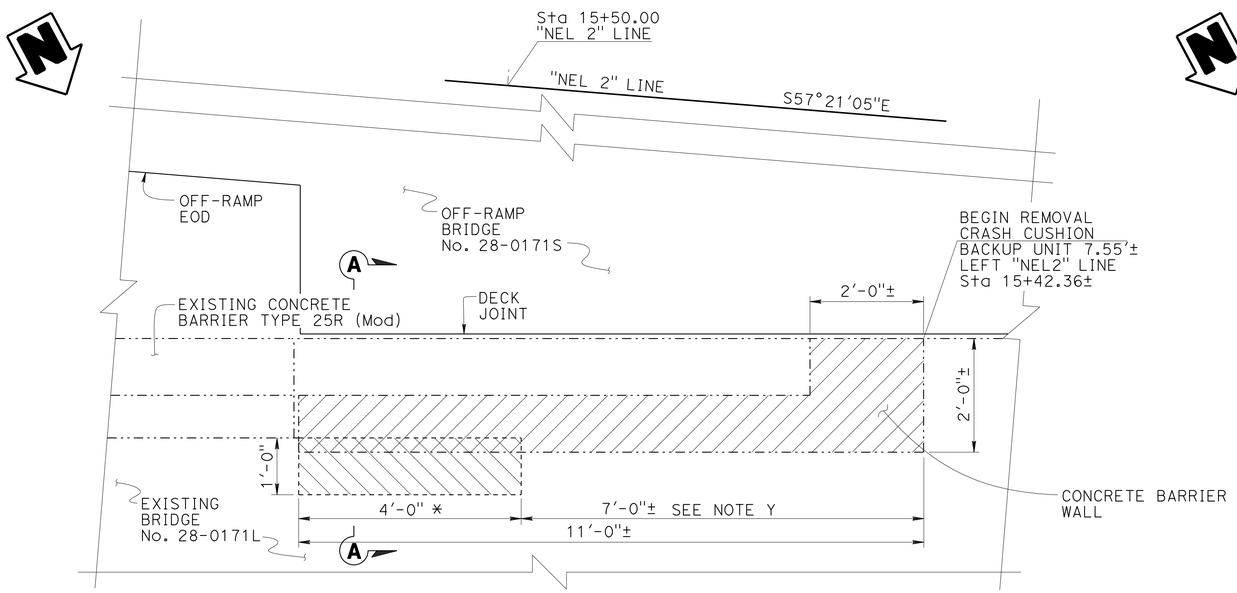

* SEE SECTION A-A FOR EXISTING VERTICAL REINFORCEMENT DETAILS

EXISTING

PLAN
¾" = 1'-0"

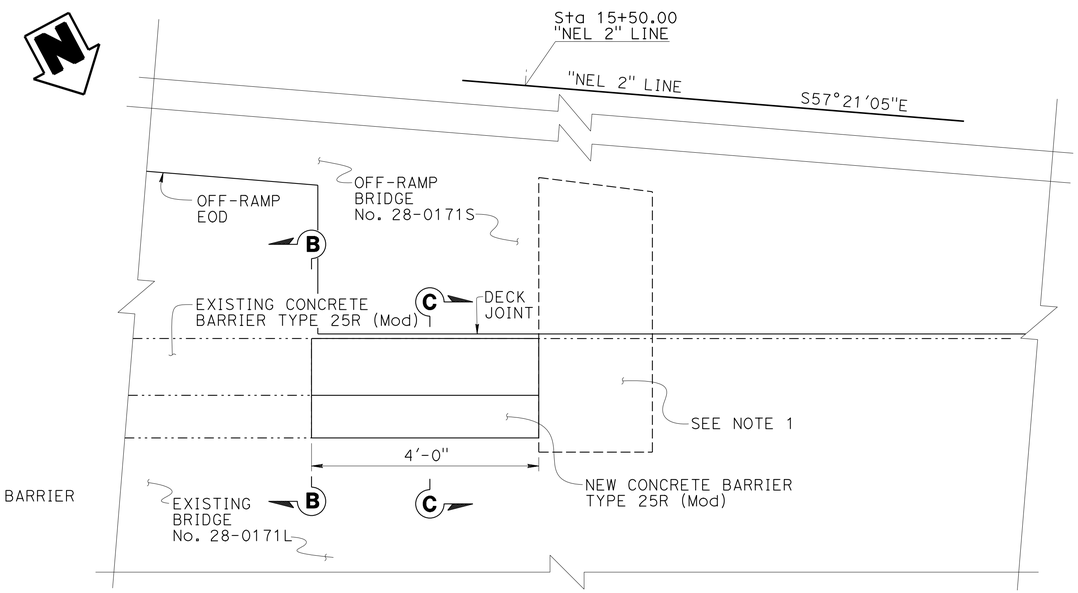

NEW

LEGEND:

Denotes limits of bridge removal

Denotes limits of resurface bridge deck

Denotes existing structure

Denotes new construction

NOTE:
THE CONTRACTOR SHALL VERIFY ALL CONTROLLING FIELD DIMENSIONS BEFORE ORDERING OR FABRICATING ANY MATERIAL.

NOTE:
1. For concrete block details, see Bridge no. 28-0171S "BENT 2 DETAILS" sheet.

	BY	CHECKED
DESIGN	John Railey	Mike Van De Pol
DETAILS	Tim Fairall	Mike Van De Pol
QUANTITIES	John Railey	Glenn Matthews

STATE OF CALIFORNIA
DEPARTMENT OF TRANSPORTATION

DIVISION OF ENGINEERING SERVICES
STRUCTURE DESIGN
DESIGN BRANCH 9

BRIDGE NO. 28-0171L
POST MILE 24.3

MOCOCO OVERHEAD RETROFIT
BARRIER DETAILS

STRUCTURES DESIGN DETAIL SHEET (ENGLISH) (REV. 09-01-10)

ORIGINAL SCALE IN INCHES FOR REDUCED PLANS 0 1 2 3

UNIT: 3594
PROJECT NUMBER & PHASE: 0400000967 1
CONTRACT NO.: 04-3A8701

DISREGARD PRINTS BEARING EARLIER REVISION DATES

REVISION DATES: 8-16-12 10-09-12 10-12-12

SHEET 34 OF 34

FILE => 28-0171-1-brdet.dgn

USERNAME => s123631 DATE PLOTTED => 30-SEP-2013 TIME PLOTTED => 11:47

DIST	COUNTY	ROUTE	POST MILES TOTAL PROJECT	SHEET No.	TOTAL SHEETS
04	CC	680	22.7/24.8	149	186

REGISTERED CIVIL ENGINEER 10-10-12 DATE

5-20-13
PLANS APPROVAL DATE

REGISTERED PROFESSIONAL ENGINEER PHILIP E. LUTZ No. C55839 Exp. 12-31-14 CIVIL STATE OF CALIFORNIA

The State of California or its officers or agents shall not be responsible for the accuracy or completeness of electronic copies of this plan sheet.

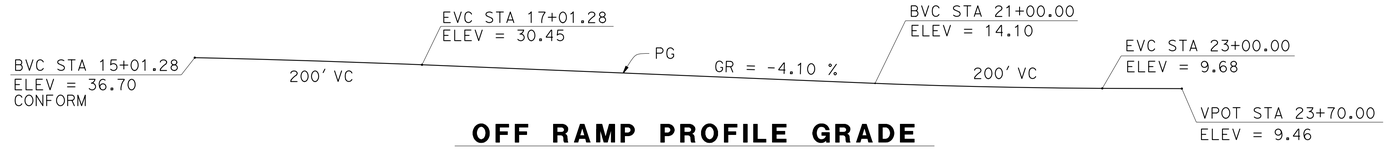

OFF RAMP PROFILE GRADE

NO SCALE

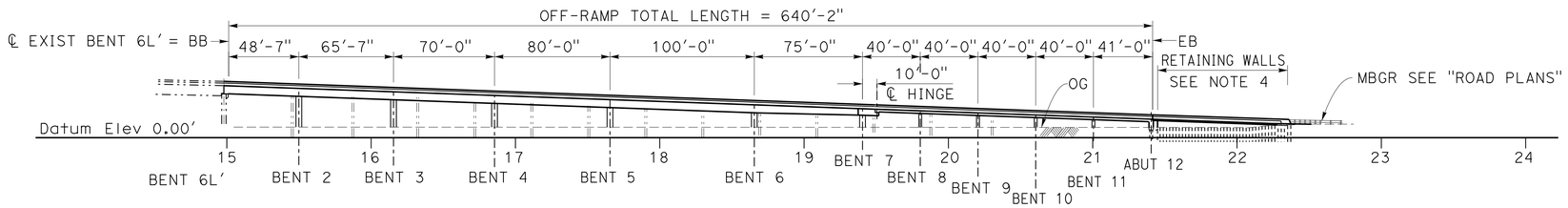

DEVELOPED ELEVATION

1" = 50'

NOTES:

1. All dimensions, stations and elevations shown for existing structures are ±.
2. For specified pile tip elevation, see "INDEX TO PLANS" sheet.
3. For Index to Plans and General Notes, see "INDEX TO PLANS" sheet.
4. Sheet Piles Retaining Walls, see "STRUCTURE PLAN NO. 2" sheet.
5. For existing structure to be removed, see "DEMOLITION DETAILS" sheet.

LEGEND:

Existing structure

New structure

NOTE:
THE CONTRACTOR SHALL VERIFY ALL CONTROLLING FIELD DIMENSIONS BEFORE ORDERING OR FABRICATING ANY MATERIAL.

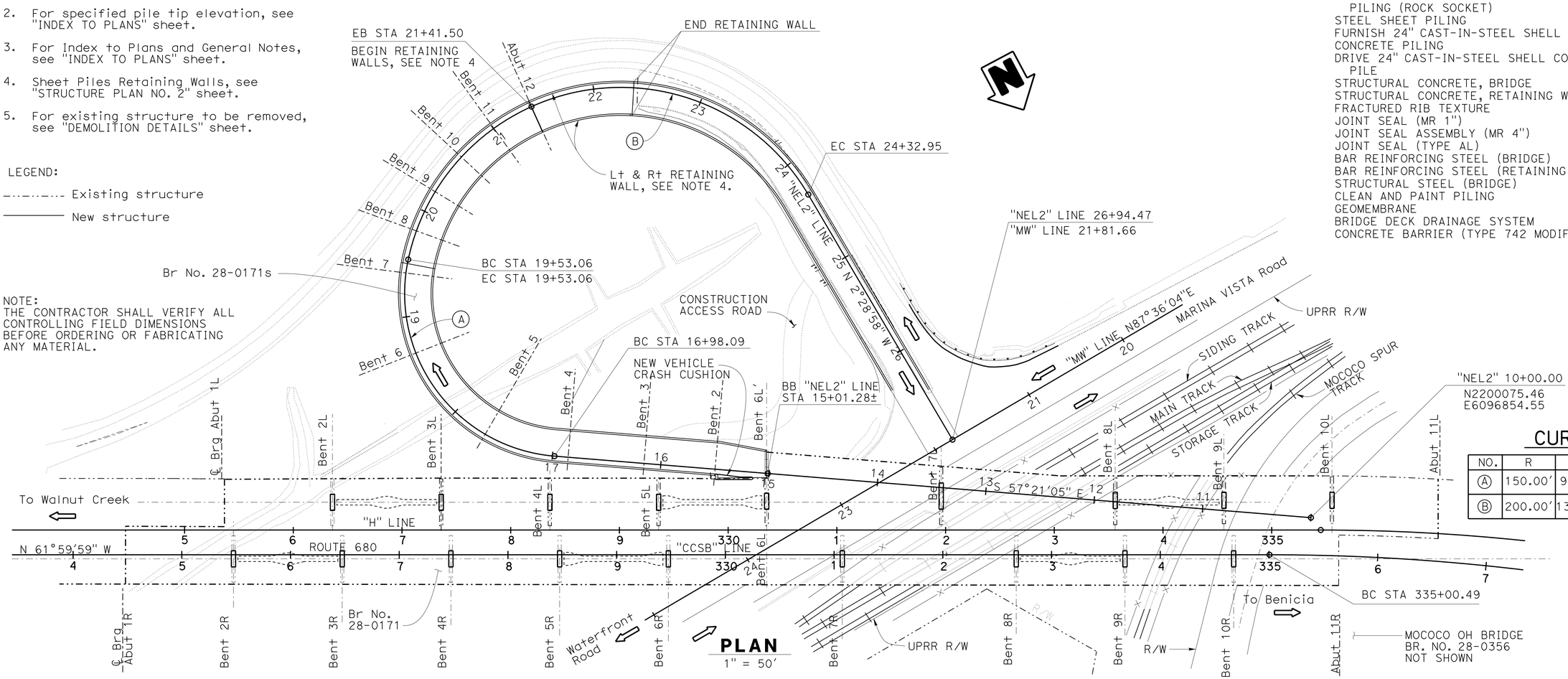

PLAN

1" = 50'

QUANTITIES

BRIDGE REMOVAL	LUMP	SUM
STRUCTURE EXCAVATION (BRIDGE)	570	CY
STRUCTURE EXCAVATION (RETAINING WALL)	45	CY
STRUCTURE BACKFILL (BRIDGE)	6	CY
STRUCTURE BACKFILL (RETAINING WALL)	20	CY
LIGHTWEIGHT EMBANKMENT MATERIAL (CELLULAR CONCRETE)(CLASS III)	1,070	CY
CLASS 3 PERMEABLE MATERIAL	65	CY
IMPORTED BORROW (LIGHTWEIGHT AGGREGATE)	35	CY
60" PERMANENT STEEL CASING	913	LF
60" CAST-IN-DRILLED-HOLE CONCRETE PILING	913	LF
54" CAST-IN-DRILLED-HOLE CONCRETE PILING (ROCK SOCKET)	370	LF
STEEL SHEET PILING	5,260	SQFT
FURNISH 24" CAST-IN-STEEL SHELL CONCRETE PILING	1,550	LF
DRIVE 24" CAST-IN-STEEL SHELL CONCRETE PILE	20	EA
STRUCTURAL CONCRETE, BRIDGE	1,690	CY
STRUCTURAL CONCRETE, RETAINING WALL	50	CY
FRACTURED RIB TEXTURE	1,100	SQFT
JOINT SEAL (MR 1")	58	LF
JOINT SEAL ASSEMBLY (MR 4")	32	LF
JOINT SEAL (TYPE AL)	52	LF
BAR REINFORCING STEEL (BRIDGE)	803,000	LB
BAR REINFORCING STEEL (RETAINING WALL)	1,800	LB
STRUCTURAL STEEL (BRIDGE)	425	LB
CLEAN AND PAINT PILING	LUMP	SUM
GEOMEMBRANE	290	SQYD
BRIDGE DECK DRAINAGE SYSTEM	880	LB
CONCRETE BARRIER (TYPE 742 MODIFIED)	1,360	LF

CURVE DATA

NO.	R	Δ	T	L
Ⓐ	150.00'	97°23'20"	170.71'	254.96'
Ⓑ	200.00'	137°28'47"	514.03'	479.89'

Gordon Danke
DESIGN ENGINEER

	BY	CHECKED			
DESIGN	Glenn Matthews	Phil Lutz	LOAD & RESISTANCE FACTOR DESIGN	LIVE LOADING: HL93 W/"LOW-BOY": PERMIT DESIGN VEHICLE	
DETAILS	JFCasarino	Phil Lutz	LAYOUT	G. Matthews	P. Lutz
QUANTITIES	Phil Lutz	Glenn Matthews	SPECIFICATIONS	T. Chen	PLANS AND SPECS COMPARED P. Lutz

ORIGINAL SCALE IN INCHES FOR REDUCED PLANS 0 1 2 3

STATE OF CALIFORNIA
DEPARTMENT OF TRANSPORTATION

DIVISION OF ENGINEERING SERVICES
STRUCTURE DESIGN
DESIGN BRANCH 9

BRIDGE NO. 28-0171S
POST MILE 24.3

MOCOCO SOUTHBOUND OFF-RAMP
GENERAL PLAN

UNIT: 3594
PROJECT NUMBER & PHASE: 0400000967 1
CONTRACT NO.: 04-3A8701

DISREGARD PRINTS BEARING EARLIER REVISION DATES

REVISION DATES 08-06-12 01-18-12 04-30-12 6-13-12

SHEET 1 OF 38

USERNAME => s123631 DATE PLOTTED => 30-SEP-2013 TIME PLOTTED => 11:48

STRUCTURES DESIGN GENERAL PLAN SHEET (ENGLISH) (REV.09-01-10)

FILE => 28-0171s-a-gp.dgn

DIST	COUNTY	ROUTE	POST MILES TOTAL PROJECT	SHEET No.	TOTAL SHEETS
04	CC	680	22.7/24.8	150	186

REGISTERED CIVIL ENGINEER 10-10-12 DATE

5-20-13
PLANS APPROVAL DATE

REGISTERED PROFESSIONAL ENGINEER PHILIP E. LUTZ No. C55839 Exp. 12-31-14 CIVIL STATE OF CALIFORNIA

The State of California or its officers or agents shall not be responsible for the accuracy or completeness of electronic copies of this plan sheet.

NOTE:
THE CONTRACTOR SHALL VERIFY ALL CONTROLLING FIELD DIMENSIONS BEFORE ORDERING OR FABRICATING ANY MATERIAL.

PILE DATA TABLE

SUPPORT	PILE TYPE*	NOMINAL RESISTANCE (kips) COMPRESSION	NOMINAL RESISTANCE (kips) TENSION	CUT-OFF ELEV (FT)	DESIGN TIP ELEVATION (FT)	SPECIFIED TIP ELEVATION (FT)	PERMANENT STEEL CASING SPECIFIED TIP ELEV (FT)	NOMINAL DRIVING RESISTANCE (KIPS)	BEDROCK ELEV (FT)
Bent 2	60" CIDH	1380	410	3.2	-80(a),-58(c), -53(d)	-80	-52	N/A	-32
Bent 3	60" CIDH	1520	520	3.5	-81(a),-59(c), -49(d)	-81	-48	N/A	-27
Bent 4	60" CIDH	1680	520	2.8	-107(a),-79(c), -91(d)	-107	-77	N/A	-46
Bent 5	60" CIDH	1890	470	2.7	-121(a),-89(c), -96(d)	-121	-83	N/A	-52
Bent 6	60" CIDH	1720	490	3	-119(a),-90(c),-101(d)	-119	-88	N/A	-57
Bent 7	60" CIDH	1590	500	3.1	-115(a),-89(c),-104(d)	-115	-90	N/A	-57
Bent 8	24" CISS	430	0	N/A	-86(a),-67(c), -60(d)	-86	N/A	430	-50
Bent 9	24" CISS	450	0	N/A	-84(a),-64(c), -62(d)	-84	N/A	450	-47
Bent 10	24" CISS	430	0	N/A	-58(a),-40(c), -43(d)	-58	N/A	430	-20
Bent 11	24" CISS	430	0	N/A	-58(a),-40(c), -42(d)	-58	N/A	430	-20
Abut 12	24" CISS	300	0	2.1	-45(a), -33(c) -35(d)	-45	N/A	300	-20

NOTES:

1. Design Tip Elevations are controlled by: (a) Compression (Strength Limit), (c) Settlement, and (d) Lateral Load, Respectively.
2. The CIDH specified tip elevations shall not be raised.
3. The specified tip elevation for CISS piles shall not be raised above the design tip elevation for lateral load or settlement, whichever is lower.
4. The nominal driving resistance required is equal to the nominal resistance needed to support the factored load plus driving resistance from the unsuitable penetrated soil layers (very soft, liquefiable, scourable, etc.), if any, which do not contribute to the design resistance.

* The 60" CIDH Piles are 60 inches in diameter with a permanent steel casing extending from the CUT-OFF ELEV. to the PERMANENT STEEL CASING SPECIFIED TIP ELEV. extending below the PERMANENT STEEL CASING SPECIFIED TIP ELEV., the remainder of the pile consists of a 54" diameter CIDH Rock Socket extending to the SPECIFIED TIP ELEVATION.

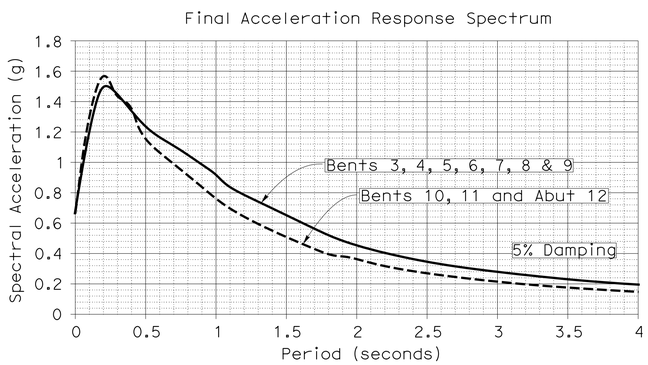

ARS CURVES

FALSEWORK RELEASE

Alternative 1:

Falsework shall be released as soon as permitted by the specifications. Closure pour shall not be placed sooner than 60 days after the falsework had been released.

Alternative 2:

Falsework shall not be released less than 28 days after the last concrete has been placed. Closure pour shall not be placed sooner than 14 days after the falsework has been released.
When Falsework Release Alternative 2 is used, camber values are 0.75 times those shown.

GENERAL NOTES

LOAD AND RESISTANCE FACTOR DESIGN

DESIGN:
AASHTO LRFD Bridge Design Specifications, 4th edition with the California Amendments

SEISMIC DESIGN:
Caltrans Seismic Design Criteria (SDC), Version 1.6 dated 2010

DEAD LOAD:
Includes 35 psf for future wearing surface.

LIVE LOADING:
HL93 and permit design load.

SEISMIC LOADING:
See site-specific acceleration response spectra curves on "INDEX TO PLANS" sheet.

CONCRETE:
fy = 60 ksi
f'c = 4.0 ksi
n = 8.

STRUCTURAL STEEL (new construction):
Steel permanent pile casings and CISS shells - ASTM A252 grade 3

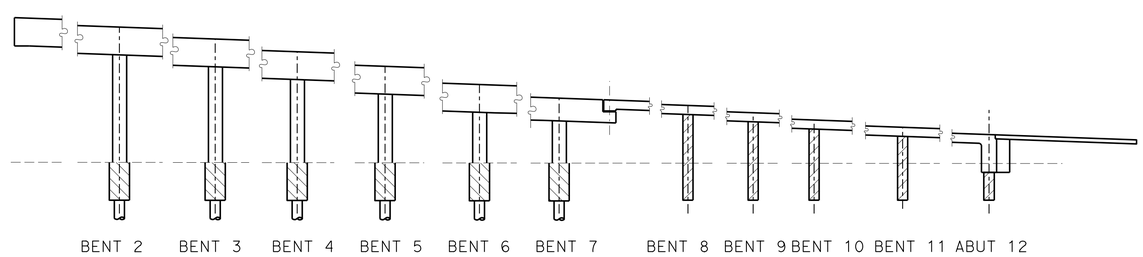

Structural Concrete, Bridge (f'c = 4.0 Ksi @ 28 days)

24" CISS Pile (f'c = 4.0 Ksi @ 28 days)

CIDH Concrete Pile (f'c = 4.0 Ksi @ 28 days)

CONCRETE STRENGTH AND TYPE LIMITS

No Scale

STANDARD PLAN NO.
DETAIL NO.

INDEX TO PLANS

SHEET NO.	TITLE
1	GENERAL PLAN
2	INDEX TO PLANS
3	STRUCTURE PLAN NO. 1
4	STRUCTURE PLAN NO. 2
5	DECK CONTOURS 1 OF 3
6	DECK CONTOURS 2 OF 3
7	DECK CONTOURS 3 OF 3
8	FOUNDATION PLAN 1
9	FOUNDATION PLAN 2
10	DEMOLITION DETAILS
11	BENT 6L' - END DIAPHRAGM
12	BENT 2 DETAILS
13	BENTS 3 THRU 6 DETAILS
14	BENT 7 DETAILS
15	BENTS 8 THRU 11 DETAILS
16	COLUMN DETAILS
17	HINGE 7 LAYOUT
18	HINGE 7 DETAILS
19	ABUTMENT 12 LAYOUT
20	ABUTMENT 12 DETAILS
21	RETAINING WALL DETAILS
22	TYPICAL SECTION
23	GIRDER LAYOUT 1 OF 2
24	GIRDER LAYOUT 2 OF 2
25	GIRDER REINFORCEMENT NO. 1
26	GIRDER REINFORCEMENT NO. 2
27	LONGITUDINAL REINFORCEMENT
28	FRACTURED RIB TEXTURE
29	JOINT SEAL ASSEMBLY MAXIMUM MR = 4"
30	DECK DRAIN - TYPE D-2 MODIFIED
31	STRUCTURE APPROACH DRAINAGE DETAILS
32	LOG OF TEST BORINGS 1 OF 7
33	LOG OF TEST BORINGS 2 OF 7
34	LOG OF TEST BORINGS 3 OF 7
35	LOG OF TEST BORINGS 4 OF 7
36	LOG OF TEST BORINGS 5 OF 7
37	LOG OF TEST BORINGS 6 OF 7
38	LOG OF TEST BORINGS 7 OF 7

STANDARD PLANS 2010 EDITION

A10A	ABBREVIATIONS (SHEET 1 OF 2)
A10B	ABBREVIATIONS (SHEET 2 OF 2)
A10C	LINES AND SYMBOLS (SHEET 1 OF 3)
A10D	LINES AND SYMBOLS (SHEET 2 OF 3)
A10E	LINES AND SYMBOLS (SHEET 3 OF 3)
A62C	LIMITS OF PAYMENT FOR EXCAVATION AND BACKFILL BRIDGE
B0-1	BRIDGE DETAILS
B0-3	BRIDGE DETAILS
B0-5	BRIDGE DETAILS
B6-21	JOINT SEALS (MAXIMUM MOVEMENT RATING = 2")
B7-1	BOX GIRDER DETAILS
B7-6	DECK DRAINS TYPE D-1 AND D-2
B7-8	DECK DRAINAGE DETAILS
RSP B11-57	CONCRETE BARRIER TYPE 742

	BY	CHECKED
DESIGN	Glenn Matthews	Phil Lutz
DETAILS	JFCasarino	Phil Lutz
QUANTITIES	Phil Lutz	Glenn Matthews

STATE OF CALIFORNIA
DEPARTMENT OF TRANSPORTATION

DIVISION OF ENGINEERING SERVICES
STRUCTURE DESIGN
DESIGN BRANCH 9

BRIDGE NO. 28-0171S
POST MILE 24.3

MOCOCO SOUTHBOUND OFF-RAMP
INDEX TO PLANS

STRUCTURES DESIGN DETAIL SHEET (ENGLISH) (REV. 09-01-10)

ORIGINAL SCALE IN INCHES FOR REDUCED PLANS 0 1 2 3

UNIT: 3594
PROJECT NUMBER & PHASE: 0400000967 1
CONTRACT NO.: 04-3A8701

DISREGARD PRINTS BEARING EARLIER REVISION DATES

REVISION DATES: 8-29-12 9-18-12 6-13-12 08-06-12

SHEET 2 OF 38

FILE => 28-0171s-a-itp.dgn

USERNAME => s123631 DATE PLOTTED => 30-SEP-2013 TIME PLOTTED => 11:48

DIST	COUNTY	ROUTE	POST MILES TOTAL PROJECT	SHEET No.	TOTAL SHEETS
04	CC	680	22.7/24.8	151	186

REGISTERED CIVIL ENGINEER 10-10-12 DATE

5-20-13
PLANS APPROVAL DATE

REGISTERED PROFESSIONAL ENGINEER PHILIP E. LUTZ No. C55839 Exp. 12-31-14 CIVIL STATE OF CALIFORNIA

The State of California or its officers or agents shall not be responsible for the accuracy or completeness of electronic copies of this plan sheet.

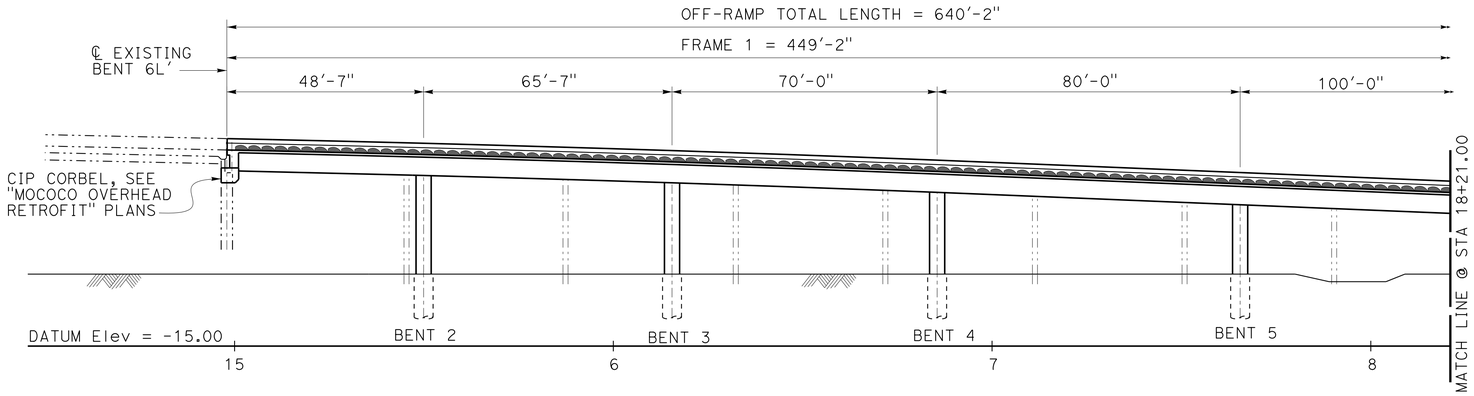

DEVELOPED ELEVATION

1" = 20'

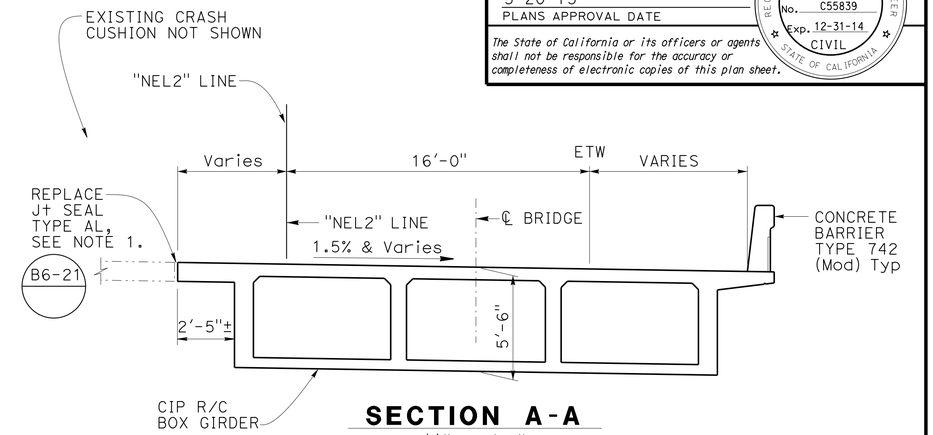

SECTION A-A

¼" = 1'-0"

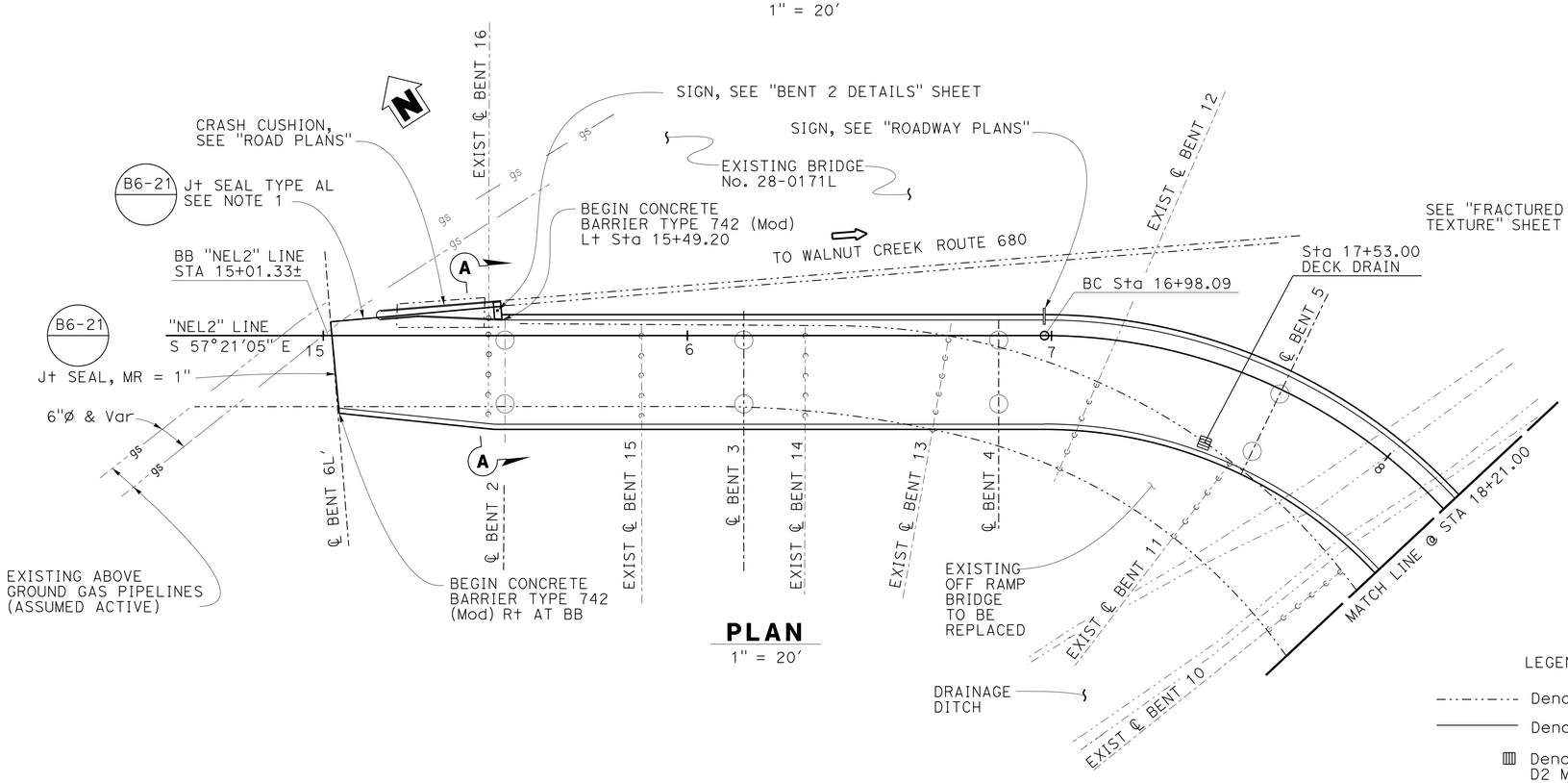

PLAN

1" = 20'

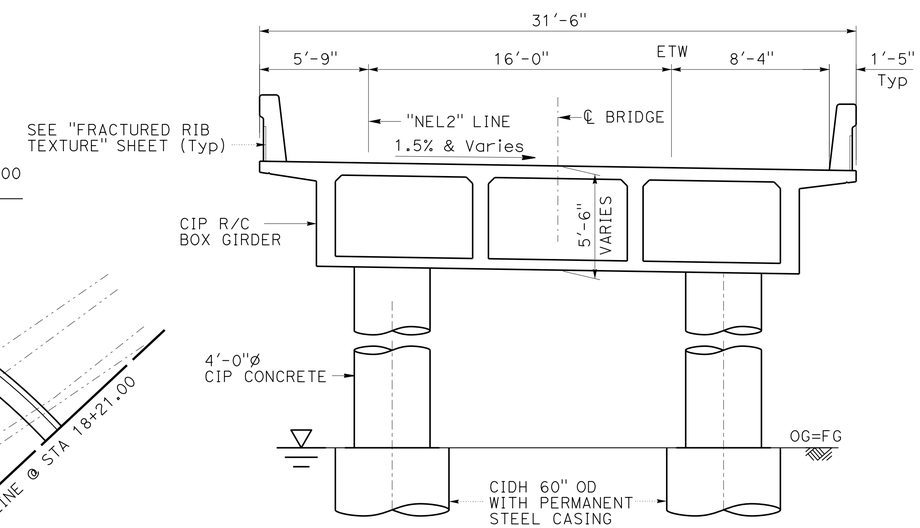

TYPICAL SECTION

¼" = 1'-0"

LEGEND:

-·-·-·- Denotes Existing

——— Denotes New Construction

▥ Denotes Deck Drain Type D2 Modified

NOTE:

1. From BB (Left EOD) to back of Concrete Block at Bent 2.

	BY	CHECKED
DESIGN	Glenn Matthews	Phil Lutz
DETAILS	Tim Fairall	Phil Lutz
QUANTITIES	Phil Lutz	Glenn Matthews

STATE OF CALIFORNIA DEPARTMENT OF TRANSPORTATION

DIVISION OF ENGINEERING SERVICES STRUCTURE DESIGN DESIGN BRANCH 9

BRIDGE NO. 28-0171S
POST MILE 24.3

MOCOCO SOUTHBOUND OFF-RAMP
STRUCTURE PLAN NO. 1

STRUCTURES DESIGN DETAIL SHEET (ENGLISH) (REV. 09-01-10)

ORIGINAL SCALE IN INCHES FOR REDUCED PLANS 0 1 2 3

UNIT:3594 FILE => 28-0171s-c-sp1.dgn
PROJECT NUMBER & PHASE: 0400000967 1 CONTRACT NO.: 04-3A8701

DISREGARD PRINTS BEARING EARLIER REVISION DATES

REVISION DATES 11-16-11 6-13-12 08-01-12 7-16-13

SHEET 3 OF 38

USERNAME => s123631 DATE PLOTTED => 30-SEP-2013 TIME PLOTTED => 11:48

DIST	COUNTY	ROUTE	POST MILES TOTAL PROJECT	SHEET No.	TOTAL SHEETS
04	CC	680	22.7/24.8	152	186

REGISTERED CIVIL ENGINEER 10-10-12 DATE

5-20-13
PLANS APPROVAL DATE

REGISTERED PROFESSIONAL ENGINEER PHILIP E. LUTZ No. C55839 Exp. 12-31-14 CIVIL STATE OF CALIFORNIA

The State of California or its officers or agents shall not be responsible for the accuracy or completeness of electronic copies of this plan sheet.

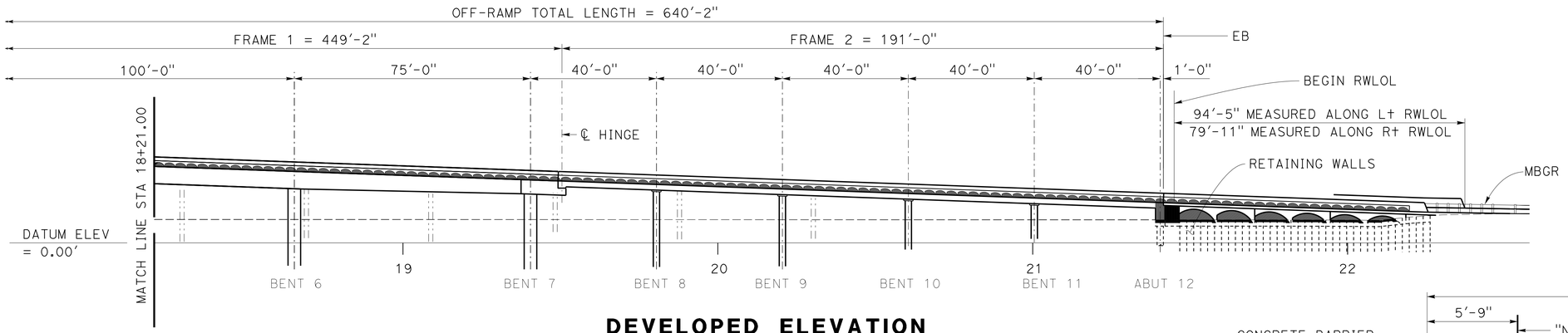

DEVELOPED ELEVATION

1" = 20'

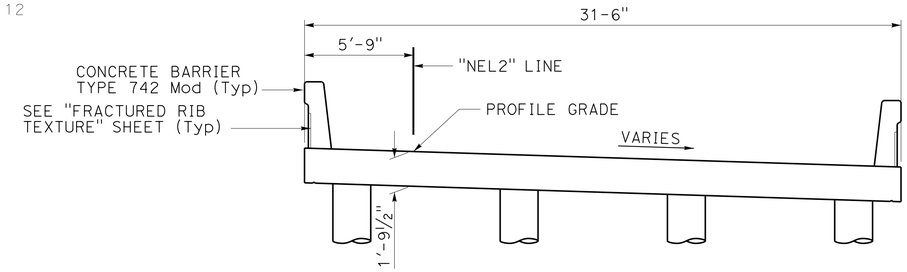

REINFORCED SLAB SECTION

1/4" = 1'-0"

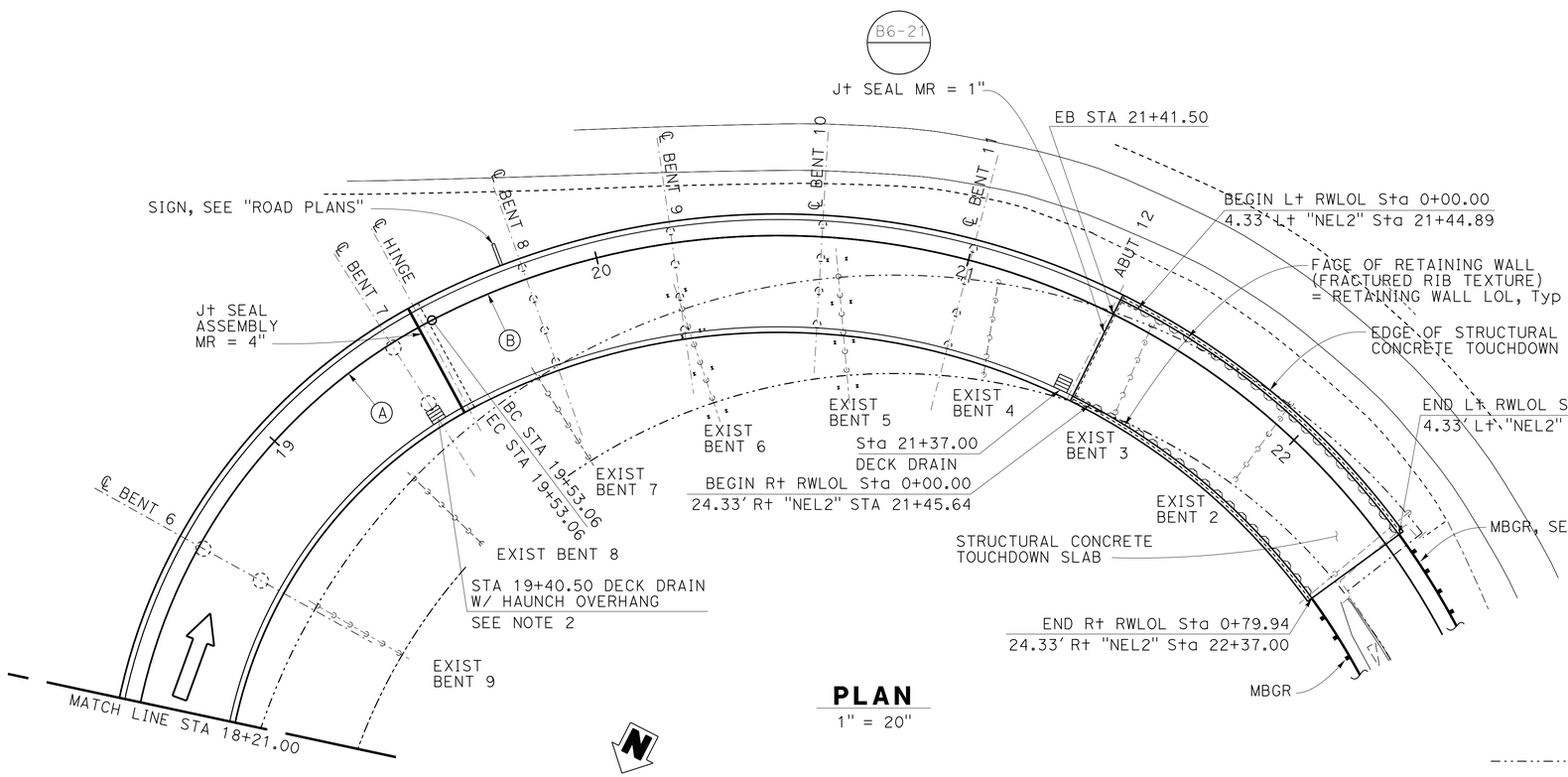

PLAN

1" = 20"

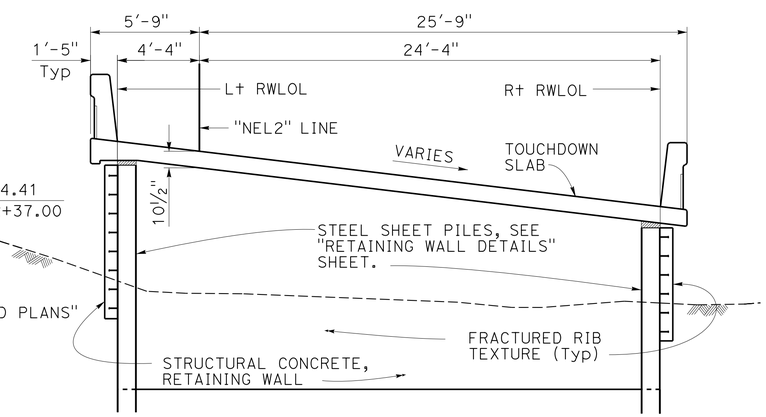

RETAINING WALL SECTION

1/4" = 1'-0"

CURVE DATA

CURVE	R	Δ	T	L
(A)	150.00'	97°23'20"	170.71'	254.96'
(B)	200.00'	137°28'47"	514.03'	479.89'

LEGEND:

- Denotes Existing
- Denotes New Construction
- Denotes Deck Drain Type D-2 Modified, see Note 2.

NOTES:

1. For Box Girder typical section, see "STRUCTURE PLAN NO. 1" sheet.
2. Depth of 6 inch drain inlet should be designed to avoid conflict with bent cap main longitudinal reinforcement. See "DECK DRAIN - TYPE D-2 (MODIFIED)" sheet.

	BY	CHECKED
DESIGN	Glenn Matthews	Phil Lutz
DETAILS	JFCasarino	Phil Lutz
QUANTITIES	Phil Lutz	Glenn Matthews

STATE OF CALIFORNIA
DEPARTMENT OF TRANSPORTATION

DIVISION OF ENGINEERING SERVICES
STRUCTURE DESIGN
DESIGN BRANCH 9

BRIDGE NO. 28-0171S
POST MILE 24.3

MOCOCO SOUTHBOUND OFF-RAMP
STRUCTURE PLAN NO. 2

STRUCTURES DESIGN DETAIL SHEET (ENGLISH) (REV. 09-01-10)

ORIGINAL SCALE IN INCHES FOR REDUCED PLANS 0 1 2 3

UNIT: 3594
PROJECT NUMBER & PHASE: 0400000967 1
CONTRACT NO.: 04-3A8701

DISREGARD PRINTS BEARING EARLIER REVISION DATES

REVISION DATES: 01-18-12 05-08-12 6-13-12 8-7-12

SHEET 4 OF 38

FILE => 28-0171s-c-sp2.dgn

USERNAME => s123631 DATE PLOTTED => 30-SEP-2013 TIME PLOTTED => 11:48

DIST	COUNTY	ROUTE	POST MILES TOTAL PROJECT	SHEET No.	TOTAL SHEETS
04	CC	680	22.7/24.8	153	186

REGISTERED CIVIL ENGINEER 10-10-12 DATE

5-20-13
PLANS APPROVAL DATE

REGISTERED PROFESSIONAL ENGINEER
PHILIP E. LUTZ
No. C55839
Exp. 12-31-14
CIVIL
STATE OF CALIFORNIA

The State of California or its officers or agents shall not be responsible for the accuracy or completeness of electronic copies of this plan sheet.

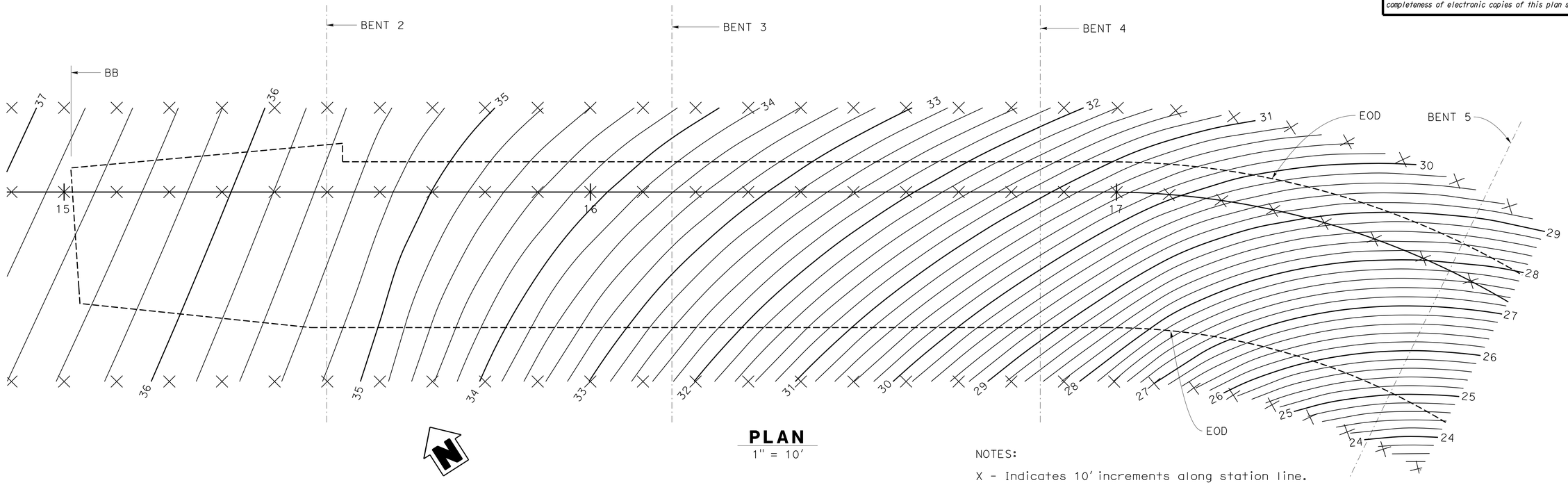

PLAN
1" = 10'

NOTES:

X - Indicates 10' increments along station line.

Contour does not include camber.

Contour interval = 0.2'

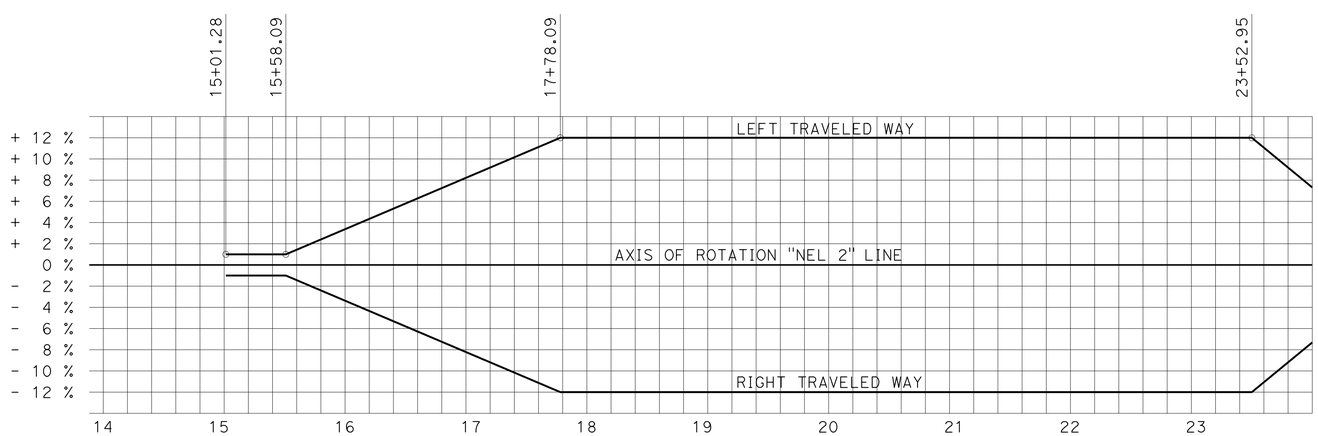

SUPER ELEVATION
No Scale

DESIGN	BY Glenn Matthews	CHECKED Phil Lutz	
DETAILS	BY JFCasarino	CHECKED Phil Lutz	
QUANTITIES	BY Phil Lutz	CHECKED Glenn Matthews	

STATE OF CALIFORNIA
DEPARTMENT OF TRANSPORTATION

DIVISION OF ENGINEERING SERVICES
STRUCTURE DESIGN
DESIGN BRANCH 9

BRIDGE NO. 28-0171S
POST MILE 24.3

MOCOCO SOUTHBOUND OFF-RAMP
DECK CONTOURS 1 OF 3

STRUCTURES DESIGN DETAIL SHEET (ENGLISH) (REV. 09-01-10)

ORIGINAL SCALE IN INCHES FOR REDUCED PLANS 0 1 2 3

UNIT: 3594
PROJECT NUMBER & PHASE: 0400000967 1
CONTRACT NO.: 04-3A8701

DISREGARD PRINTS BEARING EARLIER REVISION DATES

REVISION DATES: 12-28-11 05-10-12

SHEET 5 OF 38

FILE => 28-0171s-d-dcon1.dgn

USERNAME => s123631 DATE PLOTTED => 30-SEP-2013 TIME PLOTTED => 11:48

DIST	COUNTY	ROUTE	POST MILES TOTAL PROJECT	SHEET No.	TOTAL SHEETS
04	CC	680	22.7/24.8	154	186

REGISTERED CIVIL ENGINEER 10-10-12 DATE

5-20-13
PLANS APPROVAL DATE

REGISTERED PROFESSIONAL ENGINEER
PHILIP E. LUTZ
No. C55839
Exp. 12-31-14
CIVIL
STATE OF CALIFORNIA

The State of California or its officers or agents shall not be responsible for the accuracy or completeness of electronic copies of this plan sheet.

NOTES:

X - Indicates 10′ increments along station line.

Contour does not include camber.

Contour interval = 0.2′

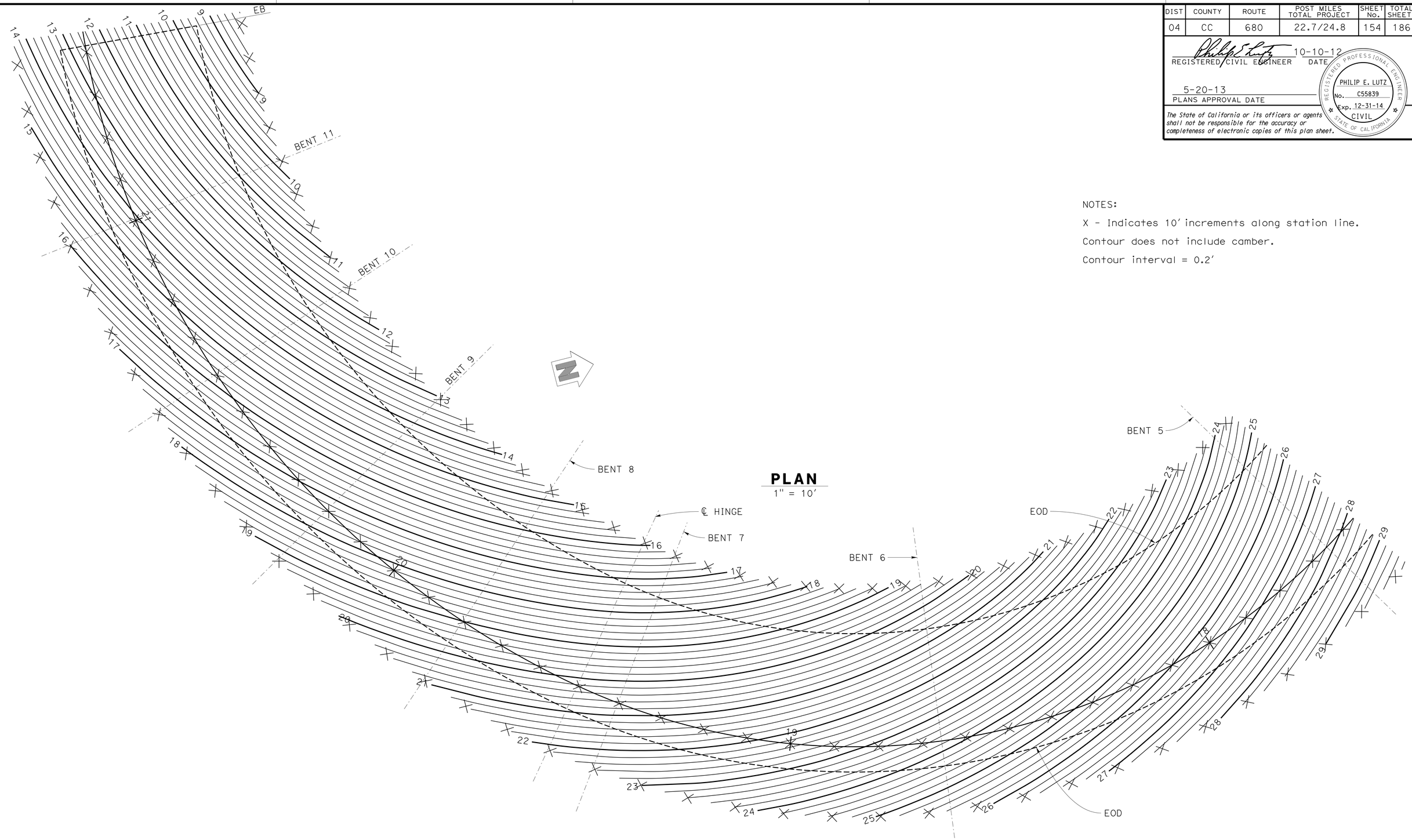

PLAN
1" = 10′

DESIGN	BY Glenn Matthews	CHECKED Phil Lutz	STATE OF CALIFORNIA DEPARTMENT OF TRANSPORTATION	DIVISION OF ENGINEERING SERVICES STRUCTURE DESIGN DESIGN BRANCH 9	BRIDGE NO. 28-0171S	MOCOCO SOUTHBOUND OFF-RAMP
DETAILS	BY JFCasarino	CHECKED Phil Lutz			POST MILE 24.3	DECK CONTOURS 2 of 3
QUANTITIES	BY Phil Lutz	CHECKED Glenn Matthews				

STRUCTURES DESIGN DETAIL SHEET (ENGLISH) (REV. 09-01-10)

ORIGINAL SCALE IN INCHES FOR REDUCED PLANS 0 1 2 3

UNIT: 3594
PROJECT NUMBER & PHASE: 0400000967 1
CONTRACT NO.: 04-3A8701

DISREGARD PRINTS BEARING EARLIER REVISION DATES

REVISION DATES 01-03-12 06-06-12

SHEET 6 OF 38

FILE => 28-0171s-d-dcon2.dgn

USERNAME => s123631 DATE PLOTTED => 30-SEP-2013 TIME PLOTTED => 11:48

DIST	COUNTY	ROUTE	POST MILES TOTAL PROJECT	SHEET No.	TOTAL SHEETS
04	CC	680	22.7/24.8	155	186

REGISTERED CIVIL ENGINEER 10-10-12 DATE

5-20-13
PLANS APPROVAL DATE

REGISTERED PROFESSIONAL ENGINEER
PHILIP E. LUTZ
No. C55839
Exp. 12-31-14
CIVIL
STATE OF CALIFORNIA

The State of California or its officers or agents shall not be responsible for the accuracy or completeness of electronic copies of this plan sheet.

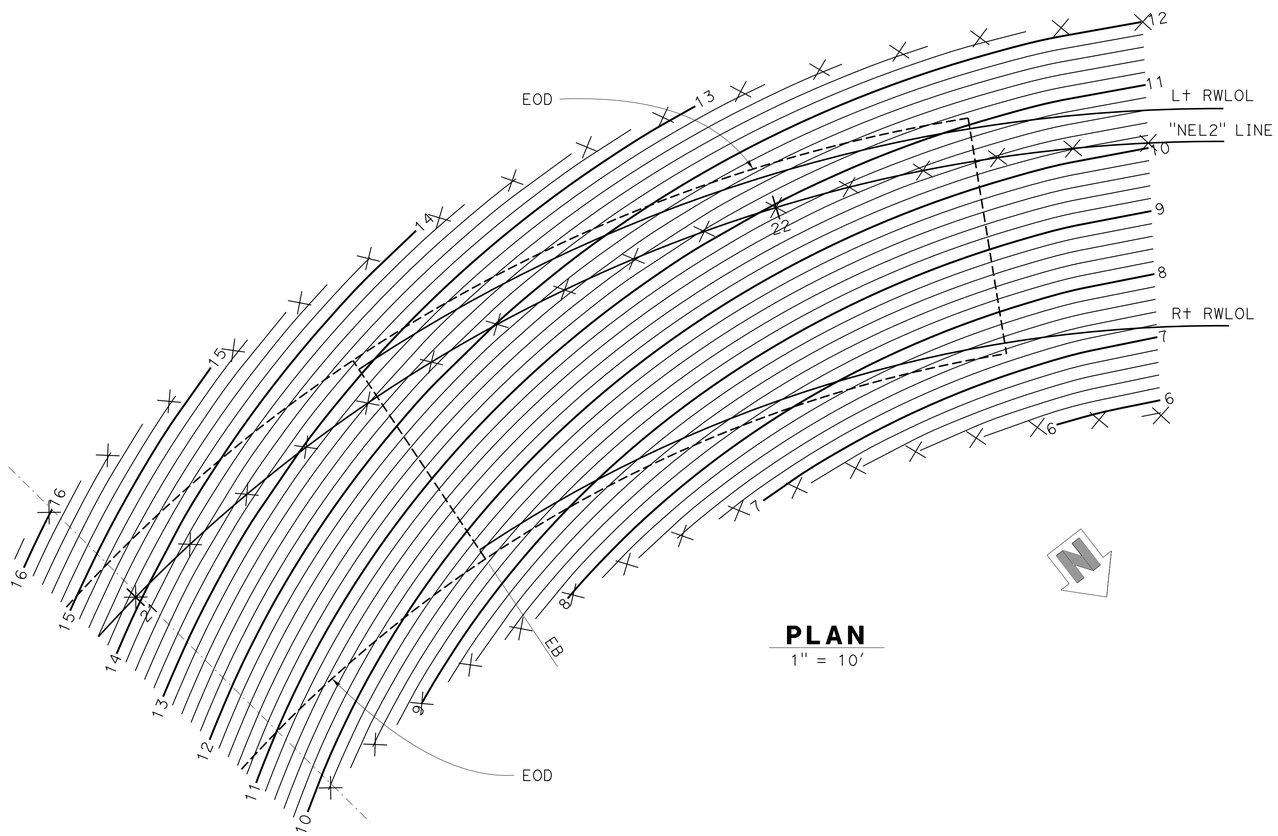

PLAN
1" = 10'

NOTES:

X - Indicates 10' increments along station line.

Contour does not include camber.

Contour interval = 0.2'

DESIGN	BY Glenn Matthews	CHECKED Phil Lutz	
DETAILS	BY JFCasarino	CHECKED Phil Lutz	
QUANTITIES	BY Phil Lutz	CHECKED Glenn Matthews	

STATE OF CALIFORNIA
DEPARTMENT OF TRANSPORTATION

DIVISION OF ENGINEERING SERVICES
STRUCTURE DESIGN
DESIGN BRANCH 9

BRIDGE NO. 28-0171S
POST MILE 24.3

MOCOCO SOUTHBOUND OFF-RAMP
DECK CONTOURS 3 of 3

STRUCTURES DESIGN DETAIL SHEET (ENGLISH) (REV. 09-01-10)

ORIGINAL SCALE IN INCHES FOR REDUCED PLANS 0 1 2 3

UNIT: 3594
PROJECT NUMBER & PHASE: 0400000967 1
CONTRACT NO.: 04-3A8701

DISREGARD PRINTS BEARING EARLIER REVISION DATES

REVISION DATES: 06-06-12

SHEET 7 OF 38

FILE => 28-0171s-d-dcon3.dgn

USERNAME => s123631 DATE PLOTTED => 30-SEP-2013 TIME PLOTTED => 11:48

DIST	COUNTY	ROUTE	POST MILES TOTAL PROJECT	SHEET No.	TOTAL SHEETS
04	CC	680	22.7/24.8	156	186

REGISTERED CIVIL ENGINEER — DATE 10-10-12

5-20-13
PLANS APPROVAL DATE

REGISTERED PROFESSIONAL ENGINEER — PHILIP E. LUTZ — No. C55839 — Exp. 12-31-14 — CIVIL — STATE OF CALIFORNIA

The State of California or its officers or agents shall not be responsible for the accuracy or completeness of electronic copies of this plan sheet.

CURVE DATA

No.	R	Δ	T	L
Ⓐ	150.00	97°23'20"	170.71	254.96

Bridge Location #28-0171L (PN Points)

Ⓐ - 19.38 Rt. "NEL" LINE, WATERFRONT RD OFF RAMP, Sta.15+02.83, Elev=36.51±
Ⓑ - 4.49 Lt. "NEL" LINE, WATERFRONT RD OFF RAMP, Sta.15+00.98, Elev=36.78±
Ⓒ - 6.05 Lt. "NEL" LINE, WATERFRONT RD OFF RAMP, Sta.15+19.27, Elev=36.32±
Ⓓ - 15.72 Rt. "NEL" LINE, WATERFRONT RD OFF RAMP, Sta.22+37.82, Elev= 8.13± *
Ⓔ - 7.76 Lt. "NEL" LINE, WATERFRONT RD OFF RAMP, Sta.22+36.13, Elev=11.16± *

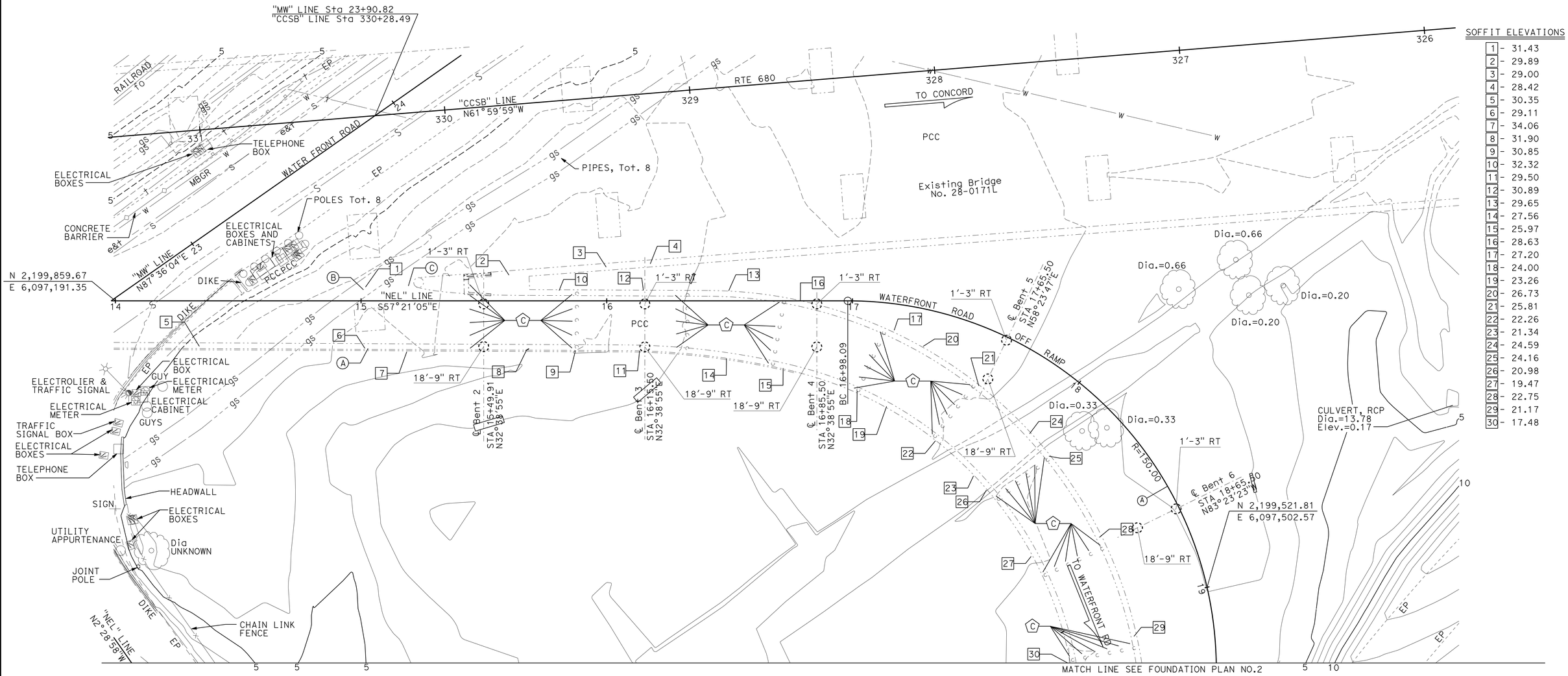

SOFFIT ELEVATIONS

1	31.43
2	29.89
3	29.00
4	28.42
5	30.35
6	29.11
7	34.06
8	31.90
9	30.85
10	32.32
11	29.50
12	30.89
13	29.65
14	27.56
15	25.97
16	28.63
17	27.20
18	24.00
19	23.26
20	26.73
21	25.81
22	22.26
23	21.34
24	24.59
25	24.16
26	20.98
27	19.47
28	22.75
29	21.17
30	17.48

NOTES:
1. For additional Soffit Elevations see construction class on Level 252
2. As Built Bridge limits shown on Foundation Plan sheets may not match bridge elements measured in the field
3. Utilites indicated per district Utility plan sheet "U-2"
4. ——·——·—— Indicates Bridge "AS BUILT" data
5. Ⓒ Indicates Surveyed Column, For OG elevations see construction class, level 252
6. *=See "FOUNDATION PLAN NO. 2" for Bridge Location Points

SURVEY CONTROL

DH 127 (See, "FOUNDATION PLAN NO.2")
Fnd: 1" I.P. W/ TACK AND CAP
35.77 Lt. "NEL" Line, WATERFRONT Rd OFFRAMP
Sta. 24+99.68
N 2,199,661.17
E 6,097,084.70
Elev.=9.28

DH128 (Not shown on plan)
Fnd: 1" I.P. W/ TACK AND CAP
308.33 Rt. "NEL" Line, WATERFRONT Rd OFFRAMP
Sta. 11+21.90
N 2,199,750.09
E 6,096,790.85
Elev.=4.55

PRELIMINARY INVESTIGATION SECTION

SCALE 1"=20'	VERT.DATUM NAVD88	PHOTOGRAMMETRY AS OF: N/A			
	HORZ.DATUM NAD83	SURVEYED	BY District/Fassett 09/2011	CHECKED	BY C. Fassett 11/2011
	ALIGNMENT TIES Dist. Traverse Sheet	DRAFTED	BY T.ZOLNIKOV 12/2011	CHECKED	BY T. Schmalz 12/2011

DESIGN	BY Glenn Matthews	CHECKED Phil Lutz
DETAILS	BY JFCasarino	CHECKED Phil Lutz
QUANTITIES	BY Phil Lutz	CHECKED Glenn Matthews

STATE OF CALIFORNIA
DEPARTMENT OF TRANSPORTATION

DIVISION OF ENGINEERING SERVICES
STRUCTURE DESIGN
DESIGN BRANCH 9

BRIDGE NO. 28-0171S
POST MILE 24.3

MOCOCO SOUTHBOUND OFF-RAMP
FOUNDATION PLAN NO.1

STRUCTURES FOUNDATION PLAN SHEET (ENGLISH) (REV. 09-01-10)

ORIGINAL SCALE IN INCHES FOR REDUCED PLANS 0 1 2 3

UNIT: 3646
PROJECT NUMBER & PHASE: 0400000967 1
CONTRACT NO.: 04-3A8701

DISREGARD PRINTS BEARING EARLIER REVISION DATES

REVISION DATES: 12/19/11 12/22/11 5-6-12

SHEET 8 OF 38

FILE => 28-0171s-e-fp101.dgn

DIST	COUNTY	ROUTE	POST MILES TOTAL PROJECT	SHEET No.	TOTAL SHEETS
04	CC	680	22.7/24.8	157	186

REGISTERED CIVIL ENGINEER — DATE 10-10-12

PLANS APPROVAL DATE 5-20-13

REGISTERED PROFESSIONAL ENGINEER — PHILIP E. LUTZ — No. C55839 — Exp. 12-31-14 — CIVIL — STATE OF CALIFORNIA

The State of California or its officers or agents shall not be responsible for the accuracy or completeness of electronic copies of this plan sheet.

CURVE DATA

No.	R	Δ	T	L
Ⓑ	200.00	137°28'47"	514.03	479.89

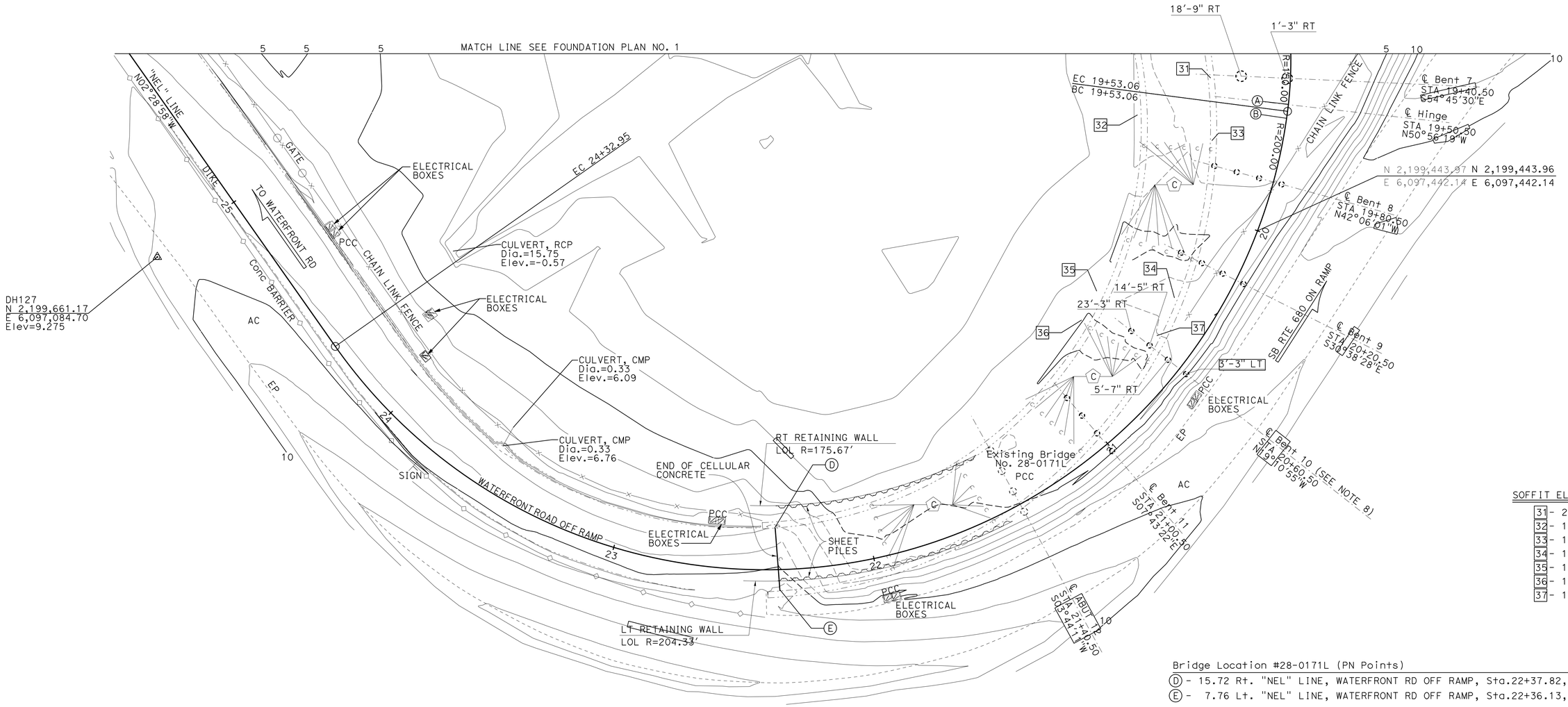

SOFFIT ELEVATIONS

31	20.14
32	16.37
33	19.27
34	16.57
35	13.30
36	12.82
37	15.90

Bridge Location #28-0171L (PN Points)

Ⓓ - 15.72 Rt. "NEL" LINE, WATERFRONT RD OFF RAMP, Sta.22+37.82, Elev= 8.13±

Ⓔ - 7.76 Lt. "NEL" LINE, WATERFRONT RD OFF RAMP, Sta.22+36.13, Elev=11.16±

NOTES:
1. For additional Soffit Elev see construction class, level 252
2. As Built Bridge limits shown on Foundation Plan sheets may not match bridge elements measured in the field
3. Utilites indicated per district Utility plan sheet "U-2"
4. — · — · — · — Indicates Bridge "AS BUILT" data
5. (C) Indicates Surveyed Column, For OG Elev see construction class, level 252
6. See "FOUNDATION PLAN NO. 1" for additional Bridge Location Points
7. For Survey Control data, see "FOUDNATION PLAN NO. 1"
8. Offsets are typical for Bents 8 through Abut 12

PRELIMINARY INVESTIGATION SECTION

SCALE 1"=20'	VERT.DATUM NAVD88	PHOTOGRAMMETRY AS OF: N/A			
	HORZ.DATUM NAD83	SURVEYED	BY District/Fassett 09/2011	CHECKED	BY C. Fassett 11/2011
ALIGNMENT TIES Dist. Traverse Sheet		DRAFTED	BY T.Zolnikov 12/2011	CHECKED	BY T. Schmalz 12/2011

DESIGN	BY Glenn Matthews	CHECKED Phil Lutz
DETAILS	BY JFCasarino	CHECKED Phil Lutz
QUANTITIES	BY Phil Lutz	CHECKED Glenn Matthews

STATE OF CALIFORNIA
DEPARTMENT OF TRANSPORTATION

DIVISION OF ENGINEERING SERVICES
STRUCTURE DESIGN
DESIGN BRANCH 9

BRIDGE NO. 28-0171S
POST MILE 24.3

MOCOCO SOUTHBOUND OFF-RAMP
FOUNDATION PLAN NO.2

STRUCTURES FOUNDATION PLAN SHEET (ENGLISH) (REV. 09-01-10)

ORIGINAL SCALE IN INCHES FOR REDUCED PLANS 0 1 2 3

UNIT: 3646
PROJECT NUMBER & PHASE: 0400000967 1
CONTRACT NO.: 04-3A8701

DISREGARD PRINTS BEARING EARLIER REVISION DATES

REVISION DATES 12/19/11 5-8-12

SHEET 9 OF 38

FILE => 28-0171s-e-fp102.dgn

DIST	COUNTY	ROUTE	POST MILES TOTAL PROJECT	SHEET No.	TOTAL SHEETS
04	CC	680	22.7/24.8	158	186

REGISTERED CIVIL ENGINEER — DATE 10-10-12

5-20-13
PLANS APPROVAL DATE

REGISTERED PROFESSIONAL ENGINEER — PHILIP E. LUTZ — No. C55839 — Exp. 12-31-14 — CIVIL — STATE OF CALIFORNIA

The State of California or its officers or agents shall not be responsible for the accuracy or completeness of electronic copies of this plan sheet.

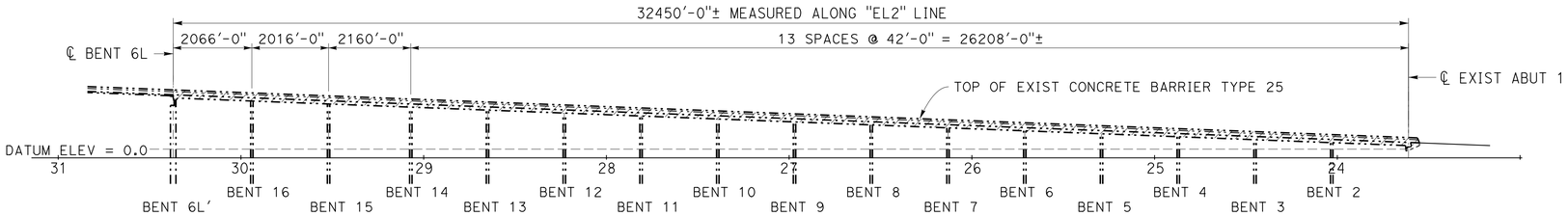

DEVELOPED ELEVATION

1" = 40'

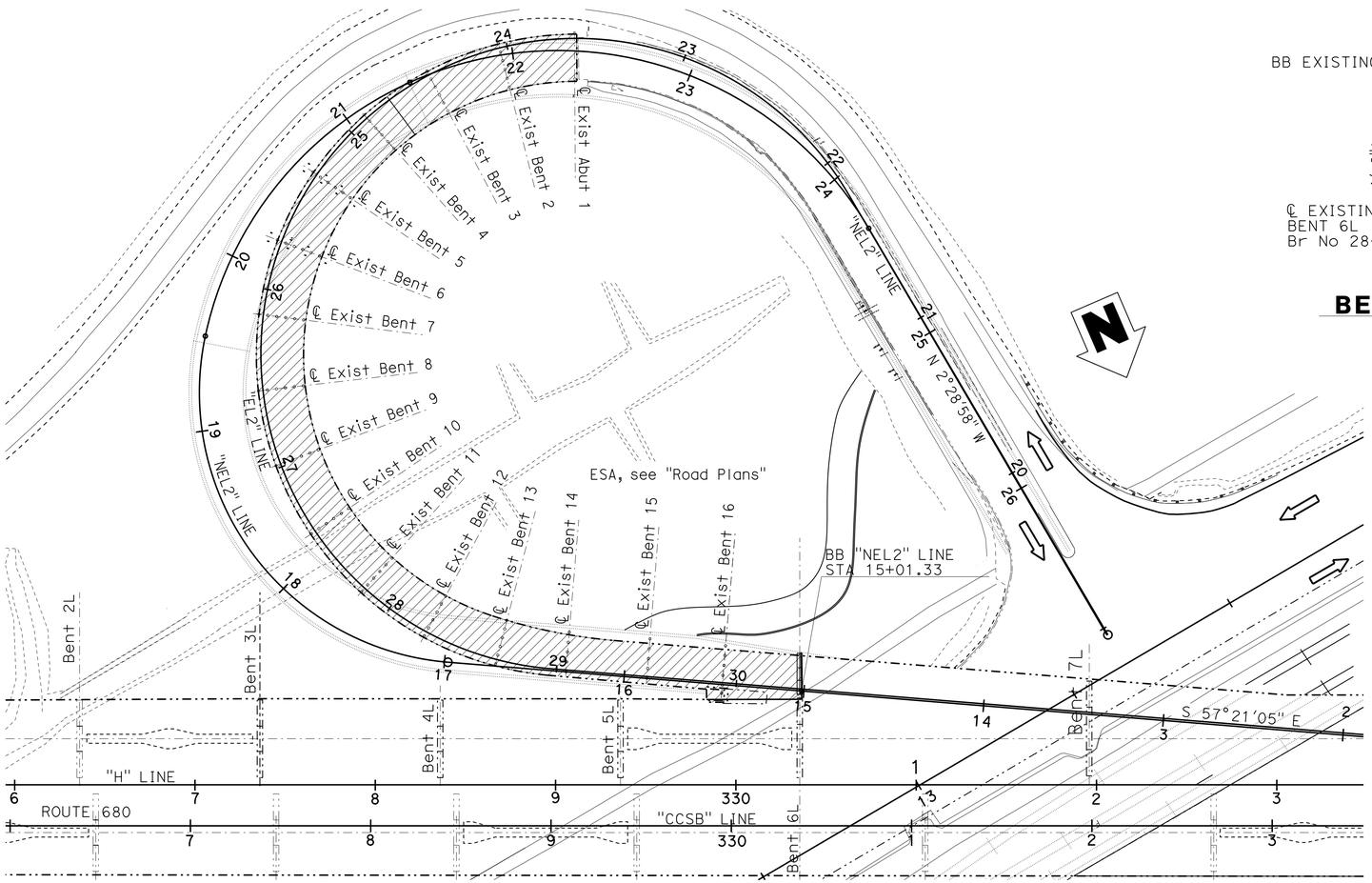

PLAN

1" = 40'

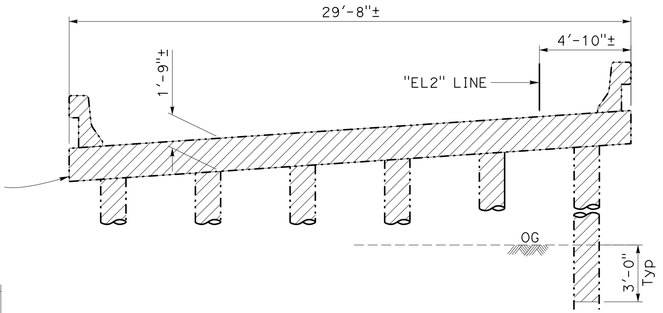

TYPICAL SECTION

1/4" = 1'-0"

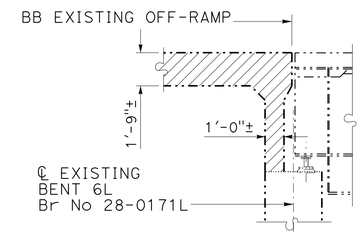

BENT 6 LEFT

1/4" = 1'-0"

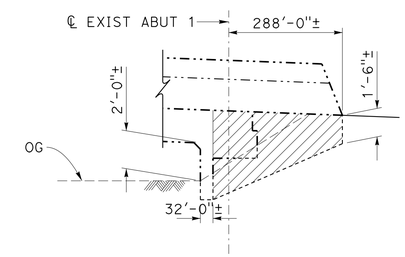

WINGWALL REMOVAL

1/4" = 1'-0"

LEGEND

- Denotes limits of Bridge removal.
- Denotes existing structure.
- Denotes replacement off-ramp.

	BY	CHECKED
DESIGN	Glenn Matthews	Phil Lutz
DETAILS	JFCasarino	Phil Lutz
QUANTITIES	Phil Lutz	Glenn Matthews

STATE OF CALIFORNIA
DEPARTMENT OF TRANSPORTATION

DIVISION OF ENGINEERING SERVICES
STRUCTURE DESIGN
DESIGN BRANCH 9

BRIDGE NO. 28-0171S
POST MILE 24.3

MOCOCO SOUTHBOUND OFF-RAMP
DEMOLITION DETAILS

STRUCTURES DESIGN DETAIL SHEET (ENGLISH) (REV. 09-01-10)

ORIGINAL SCALE IN INCHES FOR REDUCED PLANS 0 1 2 3

UNIT: 3594 FILE => 28-0171s-f-demo.dgn
PROJECT NUMBER & PHASE: 0400000967 1 CONTRACT NO.: 04-3A8701

DISREGARD PRINTS BEARING EARLIER REVISION DATES

REVISION DATES: 2-17-12 6-28-12 8-2-12 7-16-13

SHEET 10 OF 38

USERNAME => s123631 DATE PLOTTED => 30-SEP-2013 TIME PLOTTED => 11:48

DIST	COUNTY	ROUTE	POST MILES TOTAL PROJECT	SHEET No.	TOTAL SHEETS
04	CC	680	22.7/24.8	159	186

REGISTERED CIVIL ENGINEER 10-10-12 DATE

5-20-13
PLANS APPROVAL DATE

REGISTERED PROFESSIONAL ENGINEER PHILIP E. LUTZ No. C55839 Exp 12-31-14 CIVIL STATE OF CALIFORNIA

The State of California or its officers or agents shall not be responsible for the accuracy or completeness of electronic copies of this plan sheet.

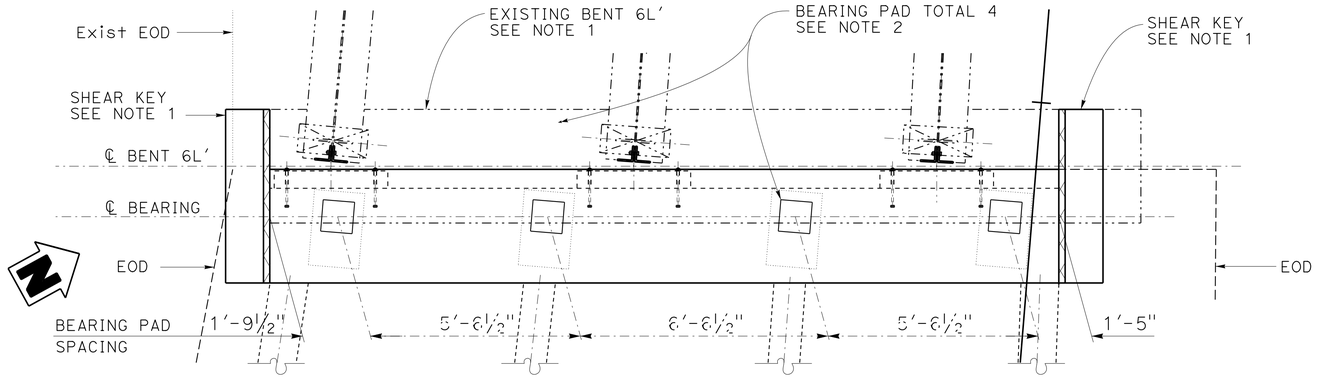

PLAN

½" = 1'-0"

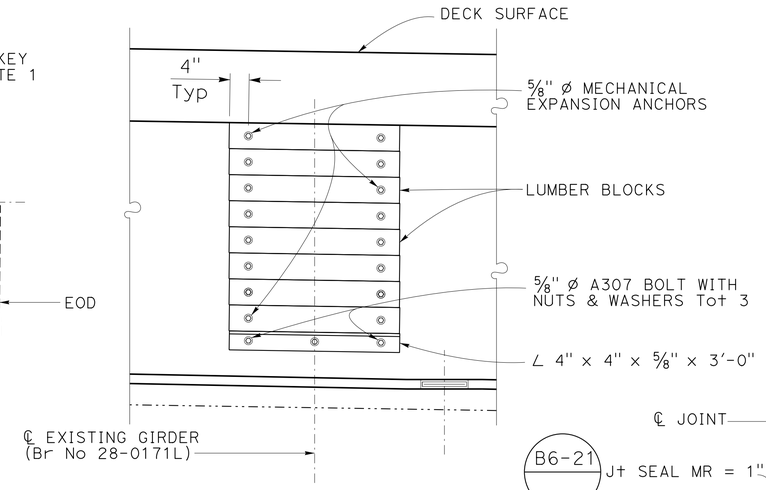

LUMBER BLOCKING

¾" = 1'-0"

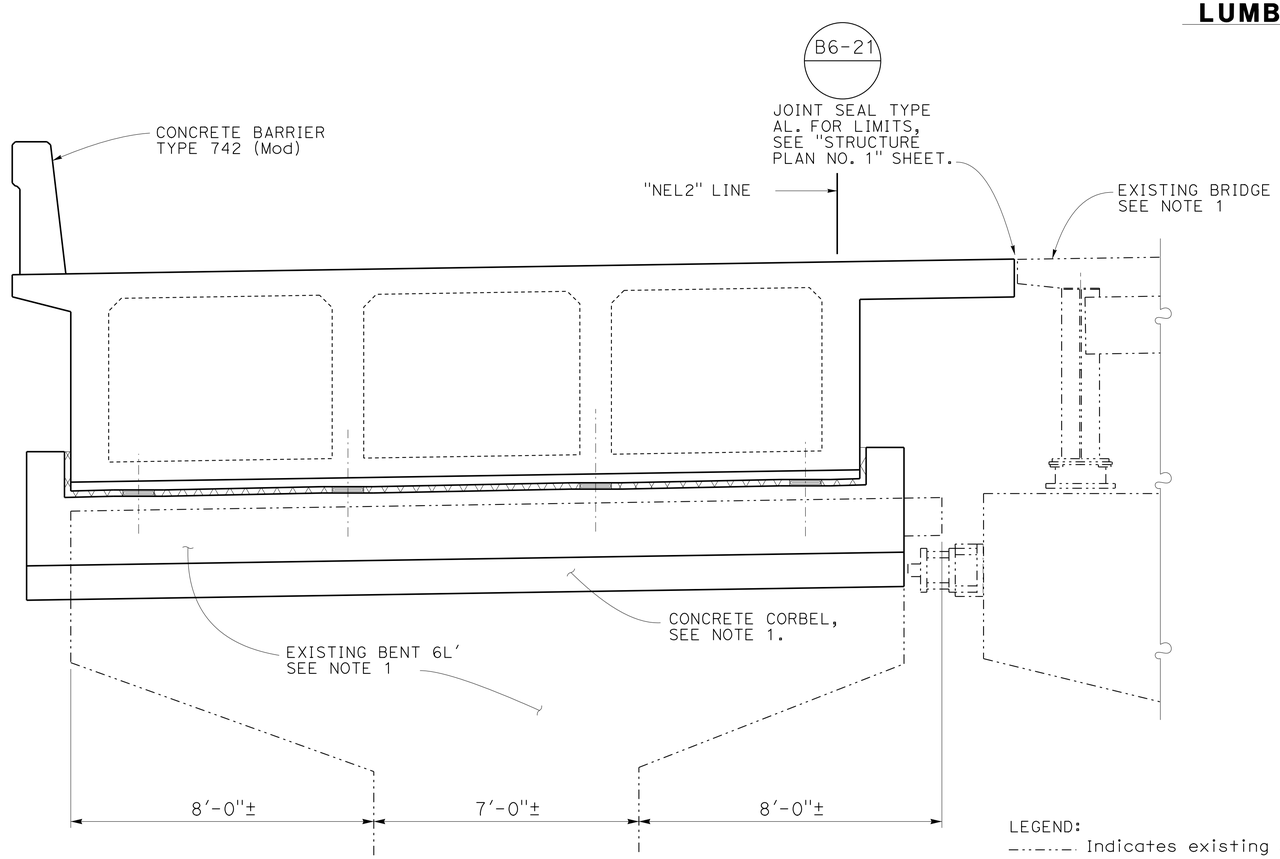

ELEVATION

½" = 1'-0"

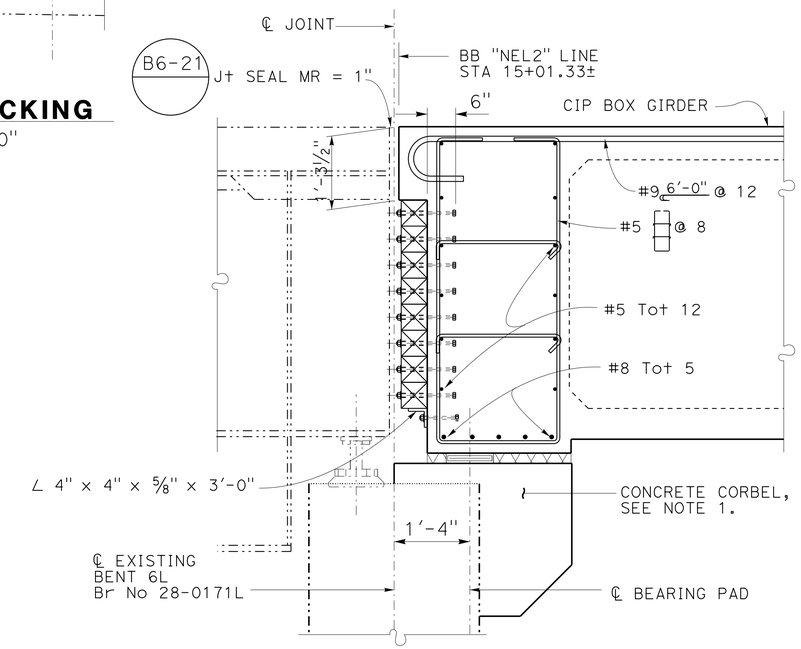

END DIAPHRAGM DETAILS

¾" = 1'-0"

NOTES:

1. For details, see "MOCOCO OH RETROFIT" Plans Br No 28-0171L.
2. For details, see "HINGE 7 LAYOUT" sheet.

LEGEND:

Indicates existing structure

6" x 6" x 3'-0" Lumber Blocking

NOTE:
CONTRACTOR SHALL VERIFY ALL CONTROLLING FIELD DIMENSIONS BEFORE ORDERING OR FABRICATING ANY MATERIALS.

	BY	CHECKED
DESIGN	John Railey	Mike Van De Pol
DETAILS	JFCasarino	John Railey
QUANTITIES	Phil Lutz	Glenn Matthews

STATE OF CALIFORNIA
DEPARTMENT OF TRANSPORTATION

DIVISION OF ENGINEERING SERVICES
STRUCTURE DESIGN
DESIGN BRANCH 9

BRIDGE NO. 28-0171S
POST MILE 24.3

MOCOCO SOUTHBOUND OFF-RAMP
BENT 6L' - END DIAPHRAM

STRUCTURES DESIGN DETAIL SHEET (ENGLISH) (REV. 09-01-10)

ORIGINAL SCALE IN INCHES FOR REDUCED PLANS 0 1 2 3

UNIT: 3594
PROJECT NUMBER & PHASE: 0400000967 1
CONTRACT NO.: 04-3A8701

DISREGARD PRINTS BEARING EARLIER REVISION DATES

REVISION DATES: 6-18-12 7-24-12 8-7-12

SHEET 11 OF 38

FILE => 28-0171s-g-bent6l.dgn

USERNAME => s123631 DATE PLOTTED => 30-SEP-2013 TIME PLOTTED => 11:48

DIST	COUNTY	ROUTE	POST MILES TOTAL PROJECT	SHEET No.	TOTAL SHEETS
04	CC	680	22.7/24.8	160	186

REGISTERED CIVIL ENGINEER 10-10-12 DATE

5-20-13
PLANS APPROVAL DATE

REGISTERED PROFESSIONAL ENGINEER PHILIP E. LUTZ No. C55839 Exp. 12-31-14 CIVIL STATE OF CALIFORNIA

The State of California or its officers or agents shall not be responsible for the accuracy or completeness of electronic copies of this plan sheet.

NOTES:

1. For Section M-M, see "BENTS 3 THRU 6 DETAILS" sheet.
2. For Column Details, see "COLUMN DETAILS" sheets.
3. Spacing may be minimally adjusted to clear column and bottom reinforcement. See "BENTS 2 THRU 6 DETAILS" sheet for details.
4. Existing sign shall be reset and remount on new concrete block with new anchor fasteners, see "ROAD PLANS."
5. For details, see " GIRDER REINFORCEMENT NO. 1" sheet.
6. Denotes bundled bar (vertically)

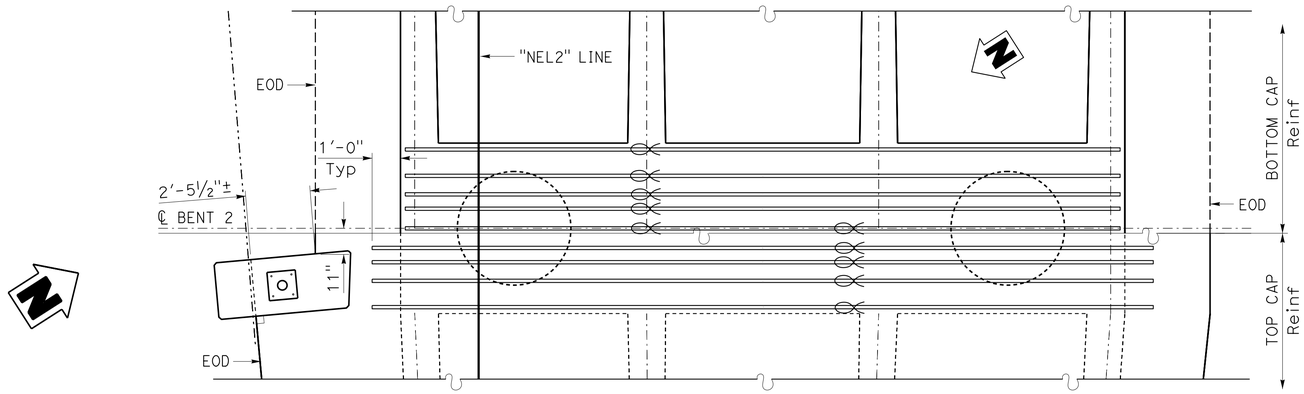

PLAN
⅜" = 1'-0"

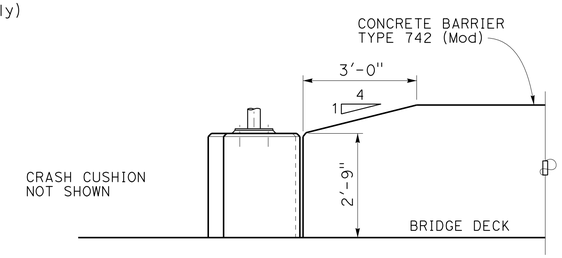

BARRIER TRANSITION
½" = 1'-0"

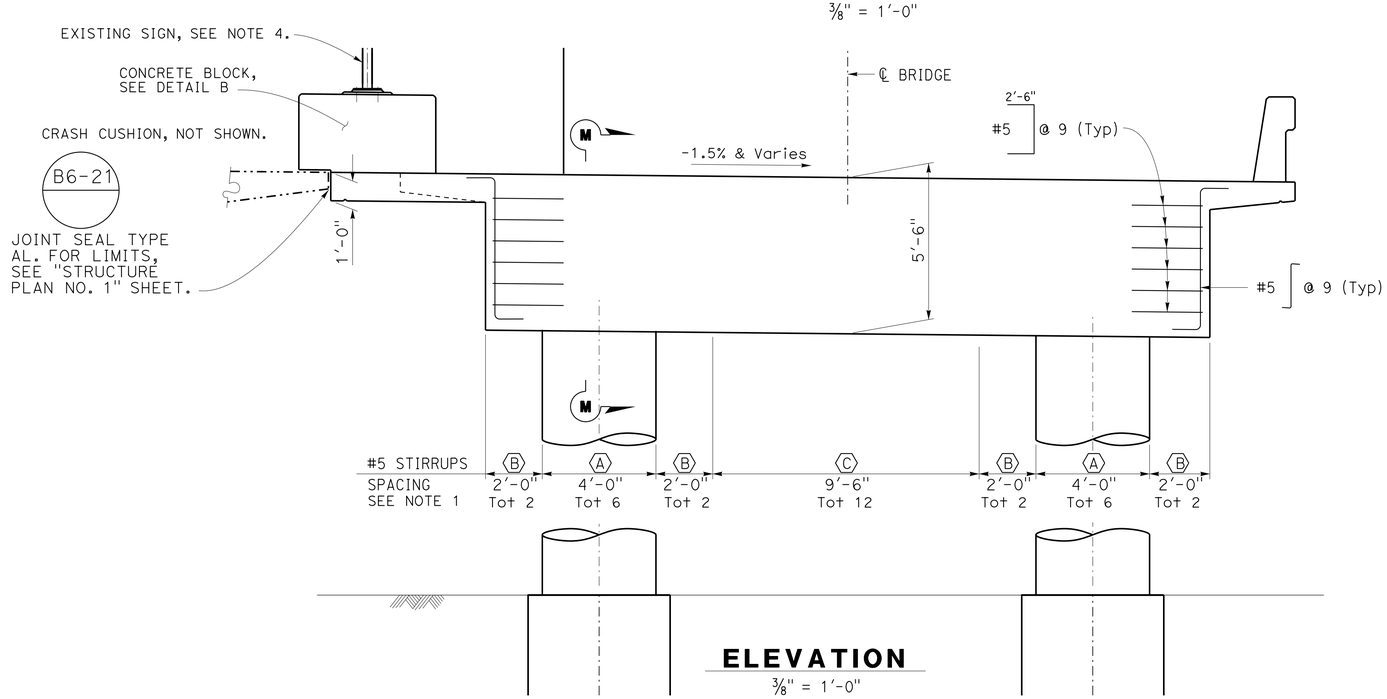

ELEVATION
⅜" = 1'-0"

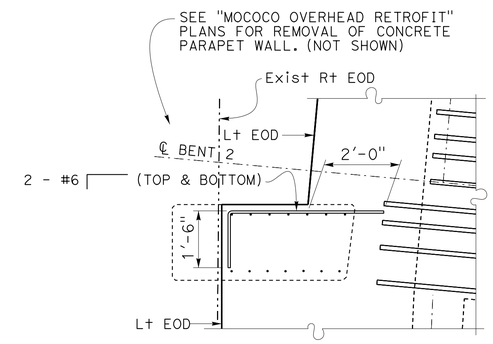

SECTION D-D
½" = 1'-0"

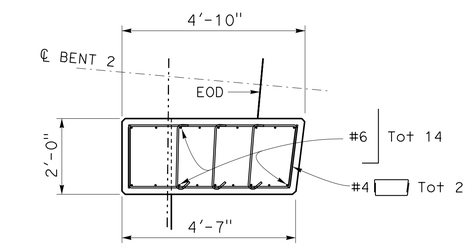

SECTION C-C
½" = 1'-0"

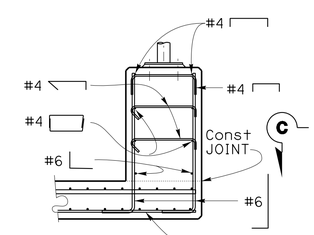

SECTION B-B
½" = 1'-0"

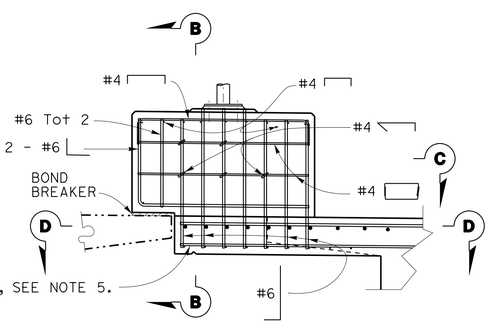

DETAIL B
½" = 1'-0"

NOTE:
CONTRACTOR SHALL VERIFY ALL CONTROLLING FIELD DIMENSIONS BEFORE ORDERING OR FABRICATING ANY MATERIALS.

	BY	CHECKED
DESIGN	P. Lutz	Glenn Matthews
DETAILS	JFCasarino	Phil Lutz
QUANTITIES	P. Lutz	Glenn Matthews

STATE OF CALIFORNIA
DEPARTMENT OF TRANSPORTATION

DIVISION OF ENGINEERING SERVICES
STRUCTURE DESIGN
DESIGN BRANCH 9

BRIDGE NO. 28-0171S
POST MILE 24.3

MOCOCO SOUTHBOUND OFF-RAMP
BENT 2 DETAILS

STRUCTURES DESIGN DETAIL SHEET (ENGLISH) (REV. 09-01-10)

ORIGINAL SCALE IN INCHES FOR REDUCED PLANS 0 1 2 3

UNIT: 3594
PROJECT NUMBER & PHASE: 0400000967 1
CONTRACT NO.: 04-3A8701

DISREGARD PRINTS BEARING EARLIER REVISION DATES

REVISION DATES 6-1-12 7-3-12 8-7-12

SHEET 12 OF 38

FILE => 28-0171s-g-bnt01.dgn

USERNAME => s123631 DATE PLOTTED => 30-SEP-2013 TIME PLOTTED => 11:48

DIST	COUNTY	ROUTE	POST MILES TOTAL PROJECT	SHEET No.	TOTAL SHEETS
04	CC	680	22.7/24.8	161	186

REGISTERED CIVIL ENGINEER 10-10-12 DATE

5-20-13
PLANS APPROVAL DATE

REGISTERED PROFESSIONAL ENGINEER PHILIP E. LUTZ No. C55839 Exp. 12-31-14 CIVIL STATE OF CALIFORNIA

The State of California or its officers or agents shall not be responsible for the accuracy or completeness of electronic copies of this plan sheet.

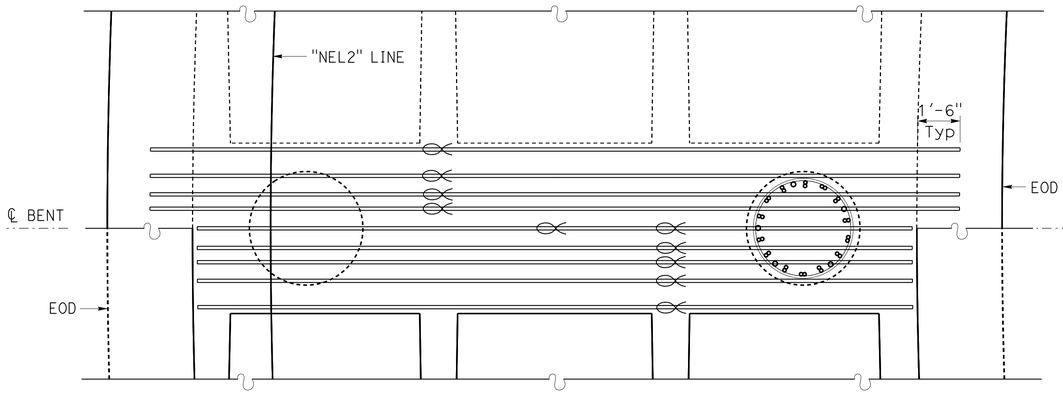

PLAN

3/8" = 1'-0"

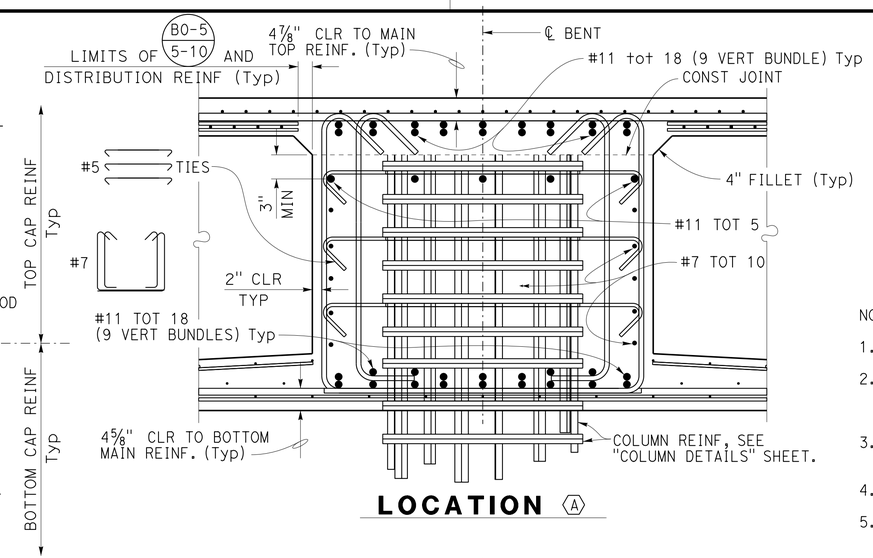

LOCATION Ⓐ

NOTES:

1. For Column Details, see "COLUMN DETAILS" sheet.
2. For drain locations, see "STRUCTURE PLAN NO. 1 & 2" sheets and "DECK DRAIN - TypE D-2 MODIFIED" sheet for details.
3. Spacing may be minimally adjusted to clear column and bottom reinformcement.
4. ⌒ Denotes bundled reinforcement.
5. #5 ⌒ ties to be spaced the same as the #7 stirrups.

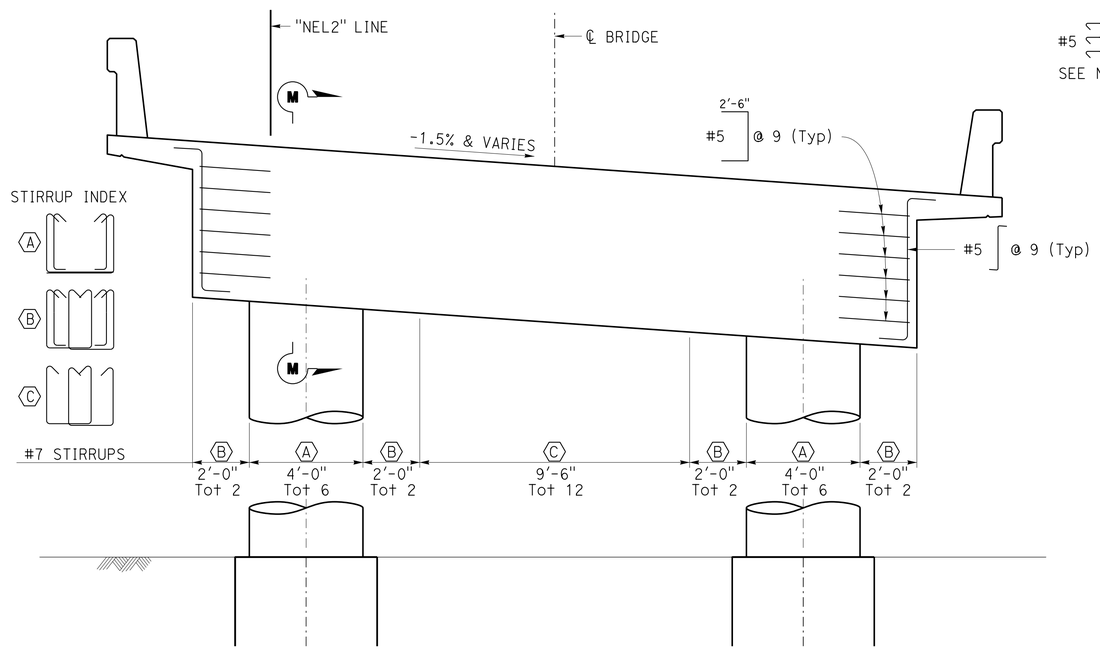

ELEVATION

3/8" = 1'-0"

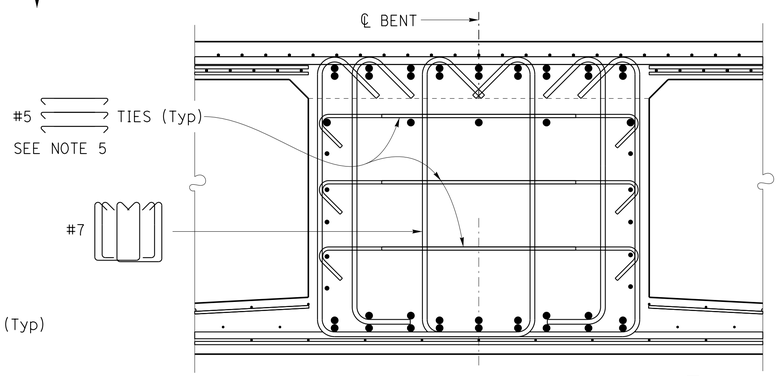

Note: For items not described, see LOCATION Ⓐ

LOCATION Ⓑ

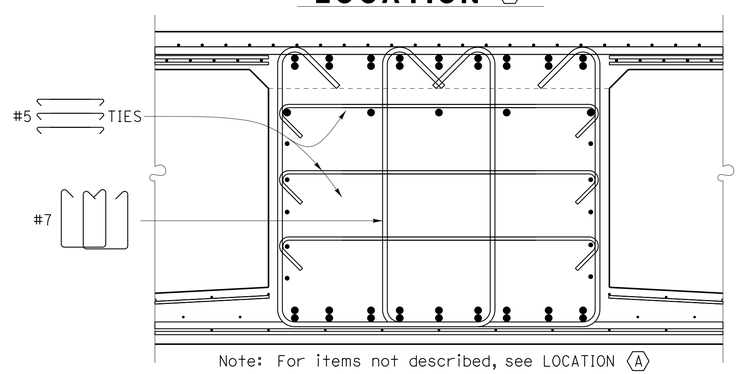

Note: For items not described, see LOCATION Ⓐ

LOCATION Ⓒ

SECTION M-M

3/4" = 1'-0"

DESIGN	BY Van H. Nguyen	CHECKED Phil Lutz	
DETAILS	BY JFCasarino	CHECKED Phil Lutz	
QUANTITIES	BY Phil Lutz	CHECKED Glenn Matthews	

STATE OF CALIFORNIA DEPARTMENT OF TRANSPORTATION

DIVISION OF ENGINEERING SERVICES STRUCTURE DESIGN DESIGN BRANCH 9

BRIDGE NO. 28-0171S
POST MILE 24.3

MOCOCO SOUTHBOUND OFF-RAMP
BENTS 3 THRU 6 DETAILS

STRUCTURES DESIGN DETAIL SHEET (ENGLISH) (REV. 09-01-10)

ORIGINAL SCALE IN INCHES FOR REDUCED PLANS 0 1 2 3

UNIT: 3594
PROJECT NUMBER & PHASE: 0400000967 1
CONTRACT NO.: 04-3A8701

DISREGARD PRINTS BEARING EARLIER REVISION DATES

REVISION DATES 6-27-12 6-7-12

SHEET 13 OF 38

FILE => 28-0171s-g-bnt02.dgn

USERNAME => s123631 DATE PLOTTED => 30-SEP-2013 TIME PLOTTED => 11:49

DIST	COUNTY	ROUTE	POST MILES TOTAL PROJECT	SHEET No.	TOTAL SHEETS
04	CC	680	22.7/24.8	162	186

REGISTERED CIVIL ENGINEER 10-10-12 DATE

5-20-13
PLANS APPROVAL DATE

REGISTERED PROFESSIONAL ENGINEER
PHILIP E. LUTZ
No. C55839
Exp. 12-31-14
CIVIL
STATE OF CALIFORNIA

The State of California or its officers or agents shall not be responsible for the accuracy or completeness of electronic copies of this plan sheet.

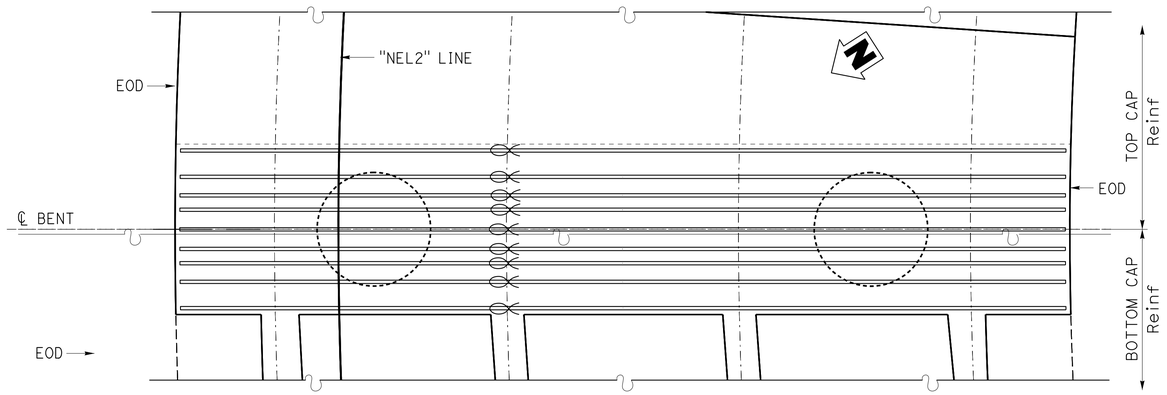

PLAN
3/8" = 1'-0"

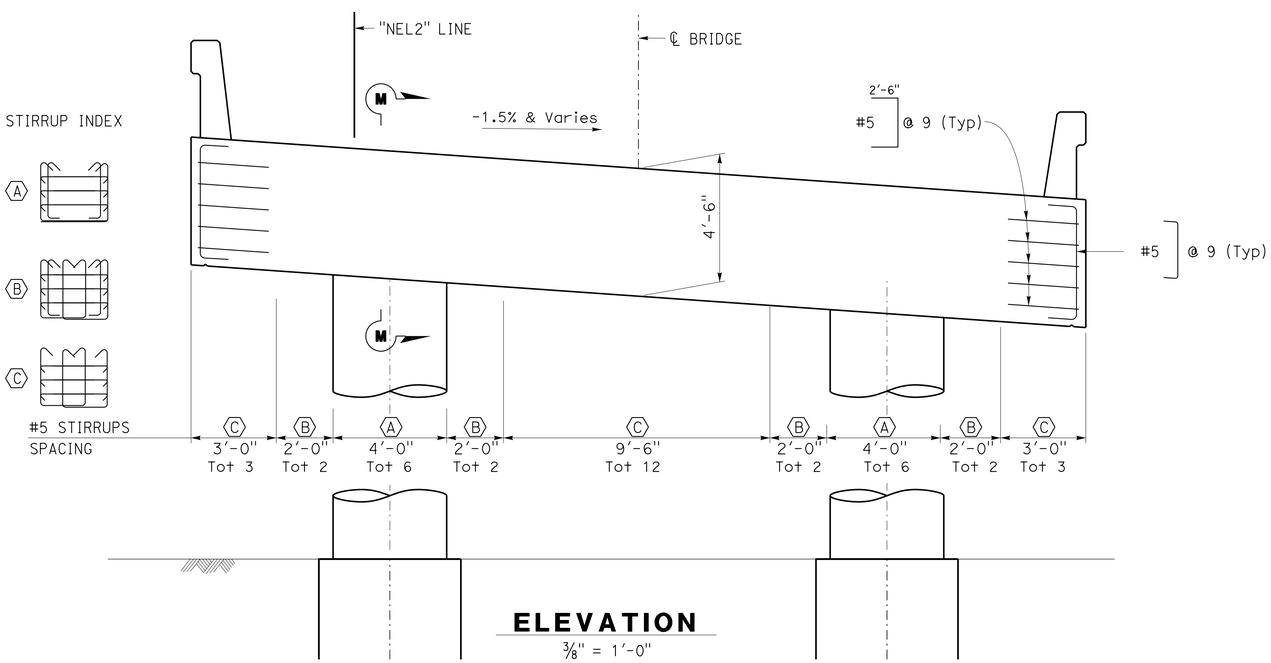

ELEVATION
3/8" = 1'-0"

NOTES:

1. For Section M-M, see "BENTS 3 THRU 6 DETAILS" sheet.
2. For Column Details, see "COLUMN DETAILS" sheets.
3. For drain locations, see "STRUCTURE PLAN NO. 1 & 2" sheets and "DECK DRAIN - TypE D-2 MODIFIED" sheet for details.
4. Spacing may be minimally adjusted to clear column and bottom reinforcement. See "BENTS 2 THRU 6 DETAILS" sheet for details.
5. ⌭ Denotes bundled reinforcement (vertically)

	BY	CHECKED
DESIGN	Glenn Matthews	Phil Lutz
DETAILS	JFCasarino	Phil Lutz
QUANTITIES	Phil Lutz	Glenn Matthews

STATE OF CALIFORNIA
DEPARTMENT OF TRANSPORTATION

DIVISION OF ENGINEERING SERVICES
STRUCTURE DESIGN
DESIGN BRANCH 9

BRIDGE NO. 28-0171S
POST MILE 24.3

MOCOCO SOUTHBOUND OFF-RAMP
BENT 7 DETAILS

STRUCTURES DESIGN DETAIL SHEET (ENGLISH) (REV. 09-01-10)

ORIGINAL SCALE IN INCHES FOR REDUCED PLANS 0 1 2 3

UNIT: 3594
PROJECT NUMBER & PHASE: 0400000967 1
CONTRACT NO.: 04-3A8701

DISREGARD PRINTS BEARING EARLIER REVISION DATES

REVISION DATES: 4-17-12

SHEET 14 OF 38

FILE => 28-0171s-g-bnt03.dgn

USERNAME => s123631 DATE PLOTTED => 30-SEP-2013 TIME PLOTTED => 11:49

DIST	COUNTY	ROUTE	POST MILES TOTAL PROJECT	SHEET No.	TOTAL SHEETS
04	CC	680	22.7/24.8	163	186

REGISTERED CIVIL ENGINEER 10-10-12 DATE

5-20-13
PLANS APPROVAL DATE

REGISTERED PROFESSIONAL ENGINEER
PHILIP E. LUTZ
No. C55839
Exp. 12-31-14
CIVIL
STATE OF CALIFORNIA

The State of California or its officers or agents shall not be responsible for the accuracy or completeness of electronic copies of this plan sheet.

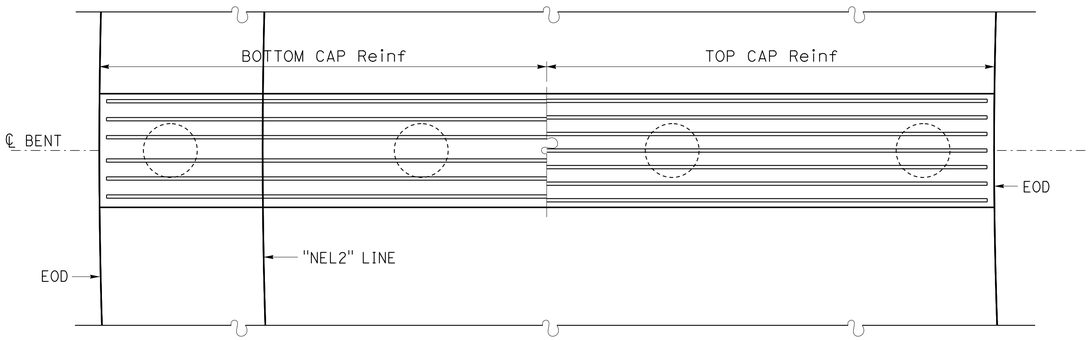

PLAN
3/8" = 1'-0"

NOTES:

1. For Column Details, see "COLUMN DETAILS" sheet.
2. Spacing may be minimally adjusted to clear column and bottom reinformcement.

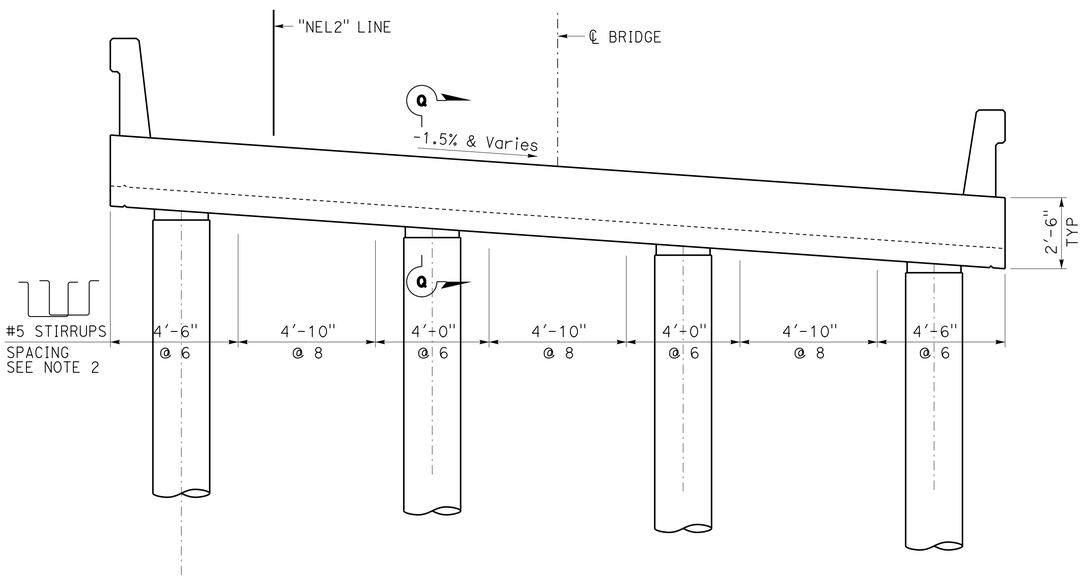

ELEVATION
3/8" = 1'-0"

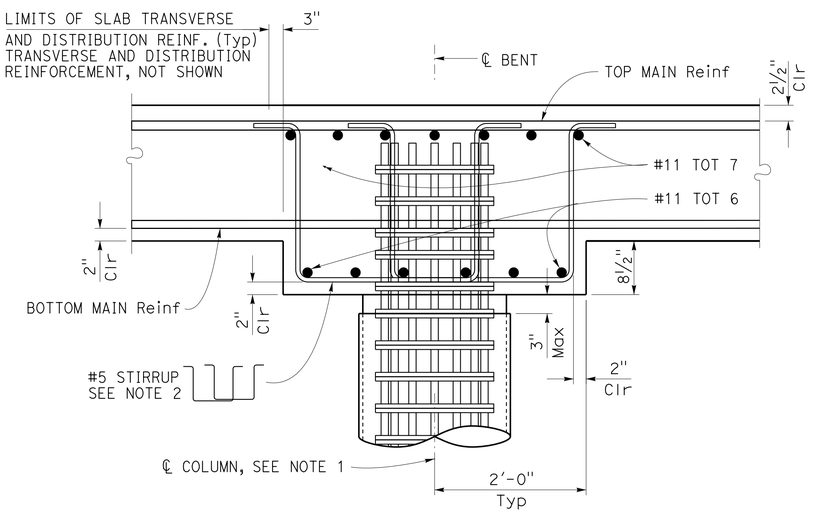

SECTION Q-Q
1" = 1'-0"

DESIGN	BY Van H. Nguyen	CHECKED Phil Lutz	
DETAILS	BY JFCasarino	CHECKED Phil Lutz	
QUANTITIES	BY Phil Lutz	CHECKED Glenn Matthews	

STATE OF CALIFORNIA
DEPARTMENT OF TRANSPORTATION

DIVISION OF ENGINEERING SERVICES
STRUCTURE DESIGN
DESIGN BRANCH 9

BRIDGE NO. 28-0171S
POST MILE 24.3

MOCOCO SOUTHBOUND OFF-RAMP
BENTS 8 THRU 11 DETAILS

STRUCTURES DESIGN DETAIL SHEET (ENGLISH) (REV. 09-01-10)

ORIGINAL SCALE IN INCHES FOR REDUCED PLANS 0 1 2 3

UNIT: 3594
PROJECT NUMBER & PHASE: 0400000967 1
CONTRACT NO.: 04-3A8701

DISREGARD PRINTS BEARING EARLIER REVISION DATES

REVISION DATES 5-21-12 6-19-12 9-4-12

SHEET 15 OF 38

FILE => 28-0171s-g-bnt04.dgn

USERNAME => s123631 DATE PLOTTED => 30-SEP-2013 TIME PLOTTED => 11:49

DIST	COUNTY	ROUTE	POST MILES TOTAL PROJECT	SHEET No.	TOTAL SHEETS
04	CC	680	22.7/24.8	164	186

REGISTERED CIVIL ENGINEER 10-10-12 DATE

5-20-13
PLANS APPROVAL DATE

REGISTERED PROFESSIONAL ENGINEER PHILIP E. LUTZ No. C55839 Exp. 12-31-14 CIVIL STATE OF CALIFORNIA

The State of California or its officers or agents shall not be responsible for the accuracy or completeness of electronic copies of this plan sheet.

NOTES:

1. For cap reinforcement, see "BENTS 3 THRU 6 DETAILS" and "BENTS 8 THRU 11 DETAILS" sheets.
2. For Bent locations, see "FOUNDATION PLAN 1 & 2" sheets.
3. A template for placement of column main bars should be used to insure clearance for bottom cap reinforcement placement is maintained.
4. For limits of Frame 1 & 2, see "STRUCTURE PLAN NO. 1" and "STRUCTURE PLAN NO. 2" sheets.
5. For various Tip Elevations and Bedrock Elevation, see "PILE DATA TABLE" on "INDEX TO PLAN" sheet.

LEGEND:

Indicates bundled bars

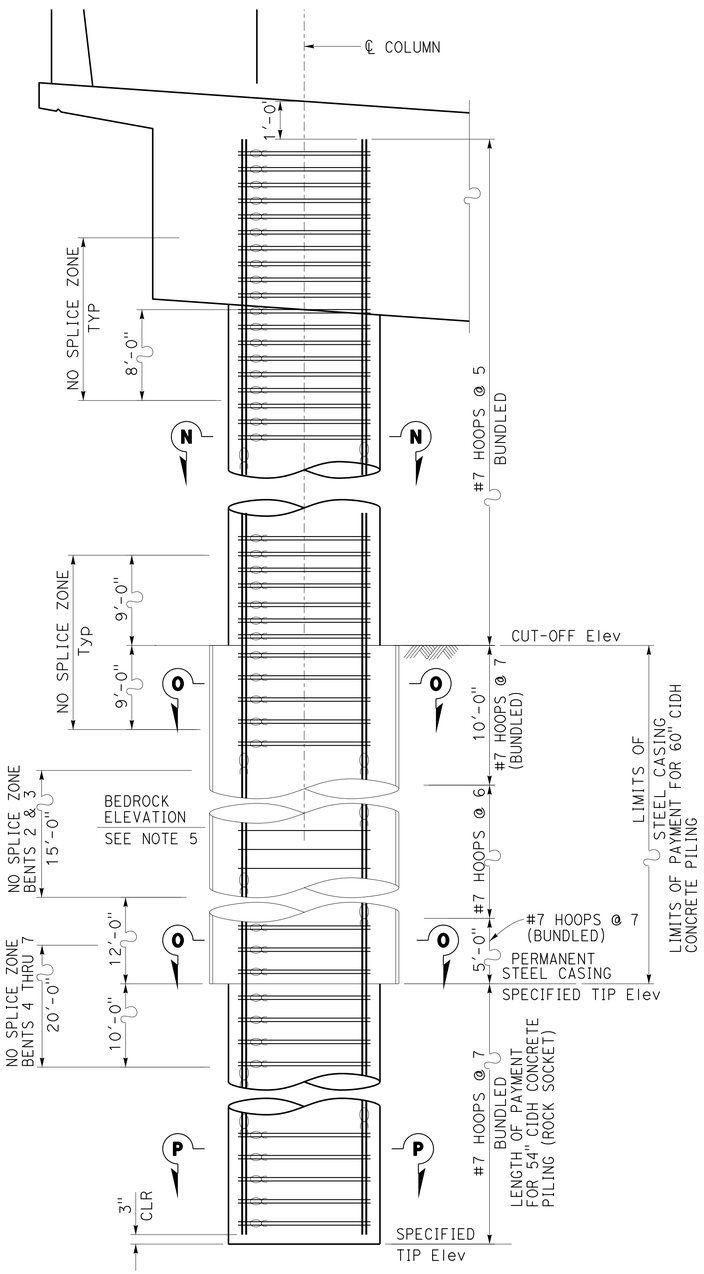

NOTE: Bents 2 & 3 shown, bents 4 through 7 similar except as noted.

ELEVATION FRAME 1

3/8" = 1'-0"

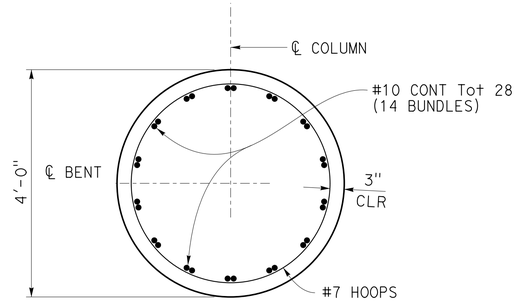

SECTION N-N

3/4" = 1'-0"

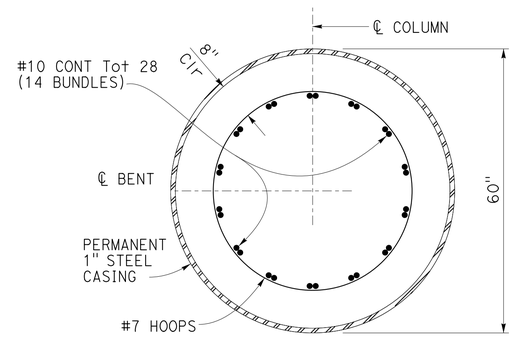

SECTION O-O

3/4" = 1'-0"

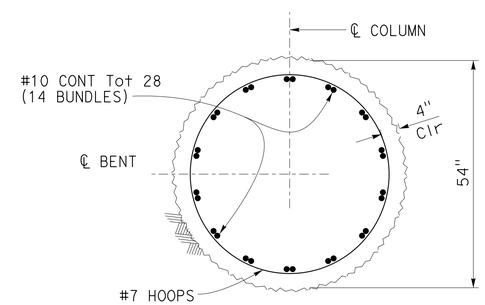

SECTION P-P

3/4" = 1'-0"

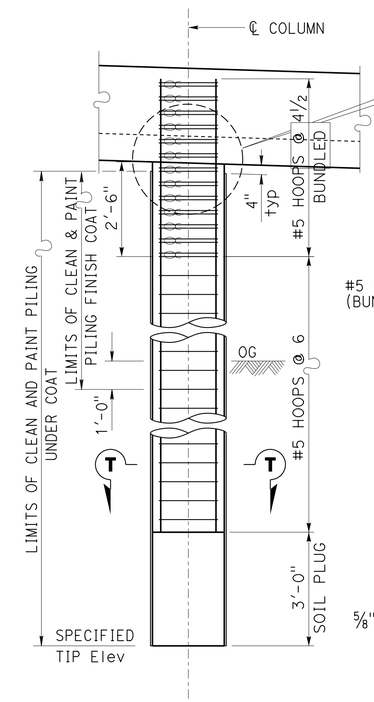

ELEVATION FRAME 2

3/8" = 1'-0"

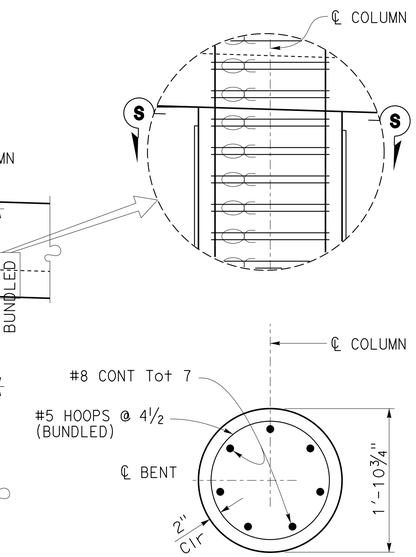

SECTION S-S

3/4" = 1'-0"

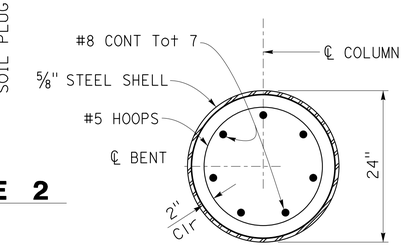

SECTION T-T

3/4" = 1'-0"

	BY	CHECKED
DESIGN	Van H. Nguyen	Phil Lutz
DETAILS	JFCasarino	Phil Lutz
QUANTITIES	Phil Lutz	Glenn Matthews

STATE OF CALIFORNIA DEPARTMENT OF TRANSPORTATION

DIVISION OF ENGINEERING SERVICES STRUCTURE DESIGN DESIGN BRANCH 9

BRIDGE NO. 28-0171S
POST MILE 24.3

MOCOCO SOUTHBOUND OFF-RAMP
COLUMN DETAILS

STRUCTURES DESIGN DETAIL SHEET (ENGLISH) (REV. 09-01-10)

ORIGINAL SCALE IN INCHES FOR REDUCED PLANS 0 1 2 3

UNIT: 3594
PROJECT NUMBER & PHASE: 0400000967 1
CONTRACT NO.: 04-3A8701

DISREGARD PRINTS BEARING EARLIER REVISION DATES

REVISION DATES 6-15-12 6-18-12 8-7-12

SHEET 16 OF 38

DIST	COUNTY	ROUTE	POST MILES TOTAL PROJECT	SHEET No.	TOTAL SHEETS
04	CC	680	22.7/24.8	165	186

REGISTERED CIVIL ENGINEER 10-10-12 DATE

5-20-13
PLANS APPROVAL DATE

REGISTERED PROFESSIONAL ENGINEER
PHILIP E. LUTZ
No. C55839
Exp. 12-31-14
CIVIL
STATE OF CALIFORNIA

The State of California or its officers or agents shall not be responsible for the accuracy or completeness of electronic copies of this plan sheet.

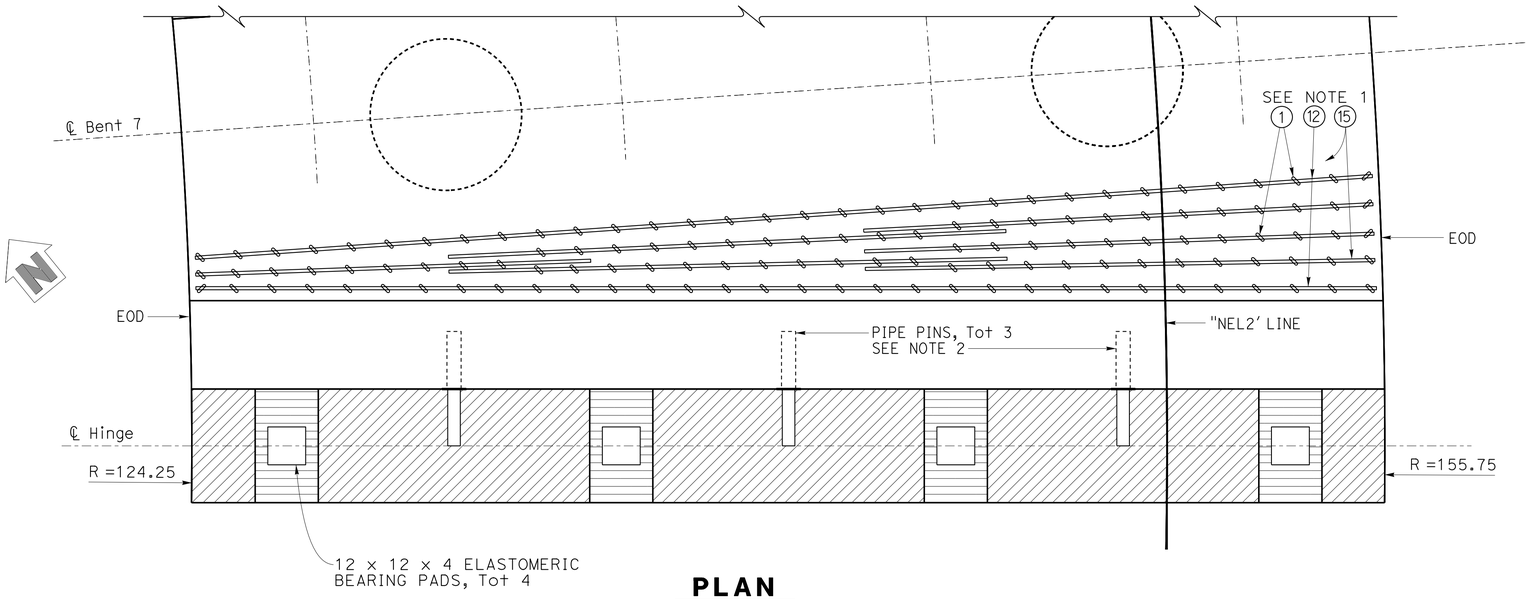

PLAN

½" = 1'-0"

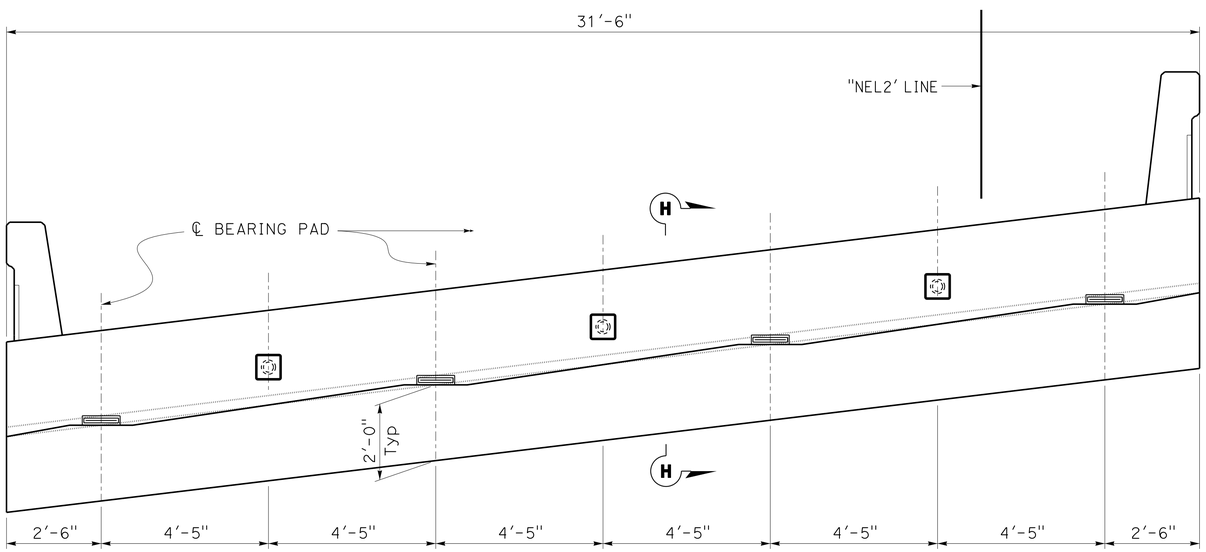

ELEVATION

½" = 1'-0"

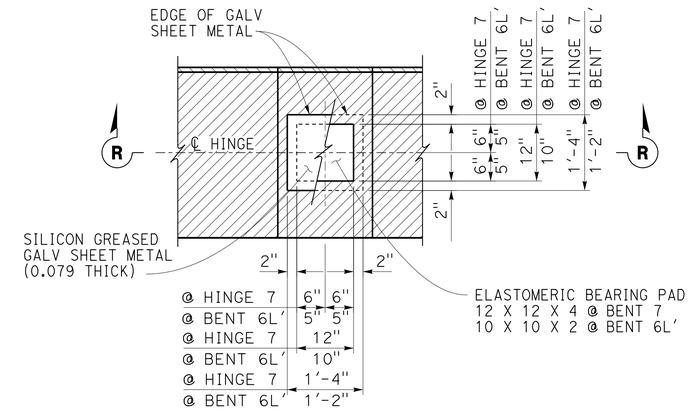

PLAN

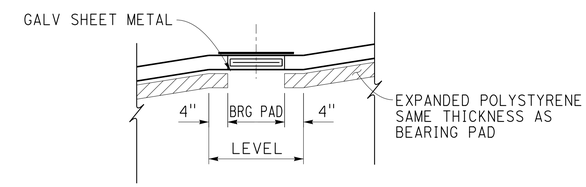

SECTION R-R

BEARING PAD DETAIL

NO SCALE
TYPICAL AT ALL BEARING PADS

NOTES:

1. See "Section H-H" on "HINGE 7 DETAILS" sheet.
2. For Pipe Pin details, see "HINGE 7 DETAILS" sheet.

NOTE:
CONTRACTOR SHALL VERIFY ALL CONTROLLING FIELD DIMENSIONS BEFORE ORDERING OR FABRICATING ANY MATERIALS.

	BY	CHECKED
DESIGN	Glenn Matthews	Phil Lutz
DETAILS	JFCasarino	Phil Lutz
QUANTITIES	Phil Lutz	Glenn Matthews

STATE OF CALIFORNIA
DEPARTMENT OF TRANSPORTATION

DIVISION OF ENGINEERING SERVICES
STRUCTURE DESIGN
DESIGN BRANCH 9

BRIDGE NO. 28-0171S
POST MILE 24.3

MOCOCO SOUTHBOUND OFF-RAMP
HINGE 7 LAYOUT

STRUCTURES DESIGN DETAIL SHEET (ENGLISH) (REV. 09-01-10)

ORIGINAL SCALE IN INCHES FOR REDUCED PLANS 0 1 2 3

UNIT: 3594
PROJECT NUMBER & PHASE: 0400000967 1
CONTRACT NO.: 04-3A8701

DISREGARD PRINTS BEARING EARLIER REVISION DATES

REVISION DATES: 1-10-12 1-24-12 8-7-12

SHEET 17 OF 38

FILE => 28-0171s-h-hing1.dgn

USERNAME => s123631 DATE PLOTTED => 30-SEP-2013 TIME PLOTTED => 11:49

DIST	COUNTY	ROUTE	POST MILES Total PROJECT	SHEET No.	Total SHEETS
04	CC	680	22.7/24.8	166	186

REGISTERED CIVIL ENGINEER 10-10-12 DATE

5-20-13
PLANS APPROVAL DATE

REGISTERED PROFESSIONAL ENGINEER PHILIP E. LUTZ No. C55839 Exp. 12-31-14 CIVIL STATE OF CALIFORNIA

The State of California or its officers or agents shall not be responsible for the accuracy or completeness of electronic copies of this plan sheet.

REBAR INDEX

1. #6 6'-9" @ 6
2. #6 6'-0" 2'-0" @ 6
3. #6 @ 9
4. #6
5. #5 1'-0" 1'-10" 2'-0" @ 12
6. #5 1'-9" 5'-0" @ 12
7. #6 1'-9" 6'-0" @ 6
8. #6 1'-0" 6'-0" @6
8. #6 1'-0" 1'-9" @6
9. #6 Cont Tot 9
10. #6 5'-6"
11. #5 @ 6, ALTERNATE ENDS
12. #6 CONT Tot 11
13. #6 8'-3" @ 6
14. #6 Cont Tot 12
15. #5 5'-0" @ 6 Tot 5 BELOW BEARING PADS
16. #5 Cont Tot 2
17. #8 Cont Tot 6
18. #8 Tot 12 TOP & BOTTOM, SEE PLAN ON "HINGE 7 LAYOUT" SHEET

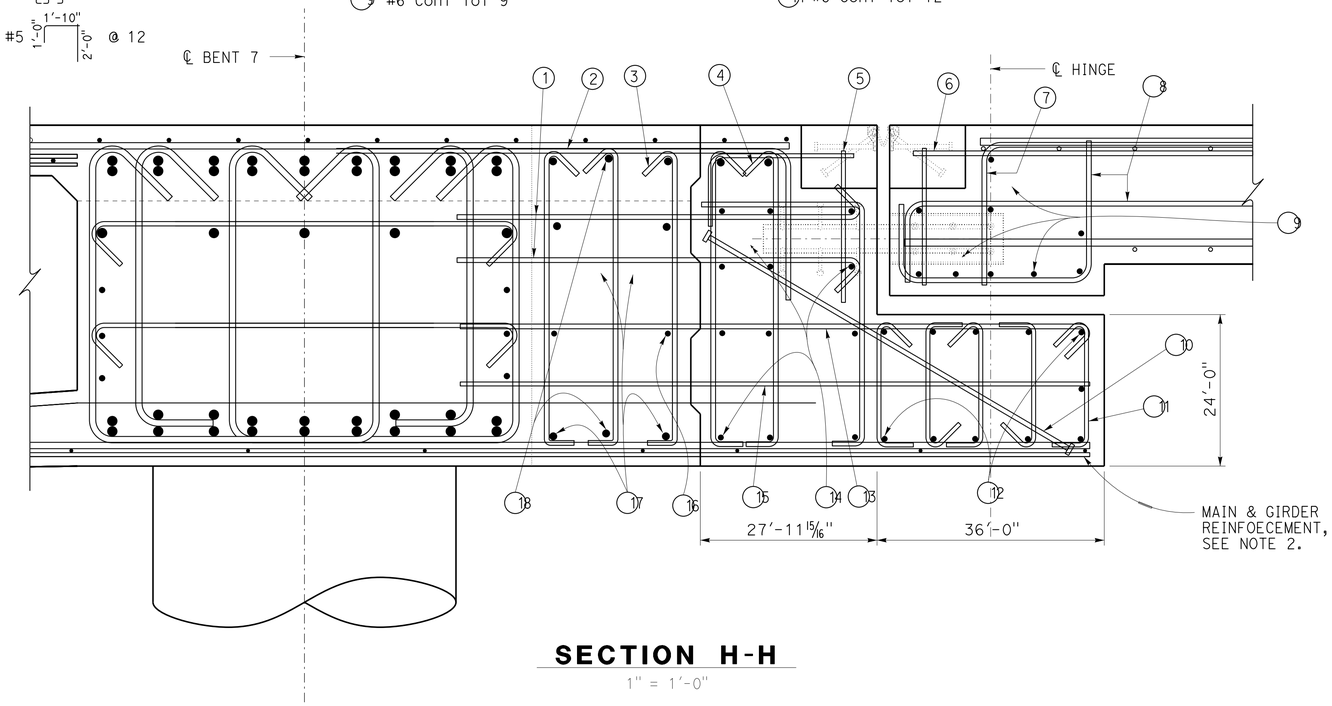

SECTION H-H

1" = 1'-0"

NOTES:

1. For cap reinforcement, see "BENT 7 DETAILS" sheet.
2. Extend main and girder reinforcement.

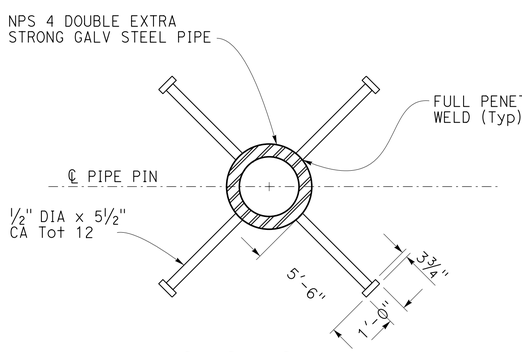

SECTION I-I

3" = 1'-0"

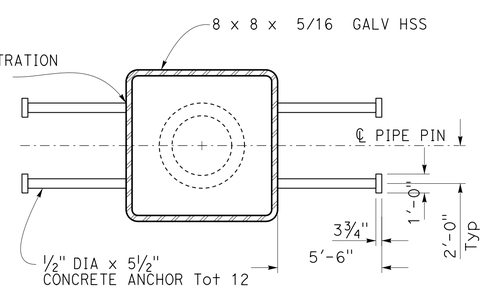

SECTION J-J

3" = 1'-0"

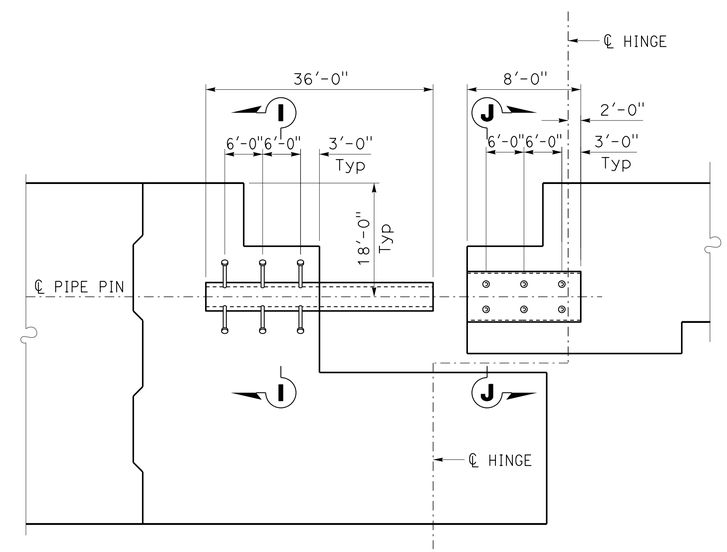

PIPE PIN DETAILS

1" = 1'-0"

	BY	CHECKED
DESIGN	Glenn Matthews	Phil Lutz
DETAILS	JFCasarino	Phil Lutz
QUANTITIES	Phil Lutz	Glenn Matthews

STATE OF CALIFORNIA DEPARTMENT OF TRANSPORTATION

DIVISION OF ENGINEERING SERVICES STRUCTURE DESIGN DESIGN BRANCH 9

BRIDGE NO. 28-0171S POST MILE 24.3

MOCOCO SOUTHBOUND OFF-RAMP
HINGE 7 DETAILS

STRUCTURES DESIGN DETAIL SHEET (ENGLISH) (REV. 09-01-10)

ORIGINAL SCALE IN INCHES FOR REDUCED PLANS 0 1 2 3

UNIT: 3594 FILE => 28-0171s-h-hing2.dgn
PROJECT NUMBER & PHASE: 0400000967 1 CONTRACT NO.: 04-3A8701

DISREGARD PRINTS BEARING EARLIER REVISION DATES

REVISION DATES 6-26-12 07-26-12 7-16-13

SHEET 18 OF 38

USERNAME => s123631 DATE PLOTTED => 30-SEP-2013 TIME PLOTTED => 11:49

DIST	COUNTY	ROUTE	POST MILES TOTAL PROJECT	SHEET No.	TOTAL SHEETS
04	CC	680	22.7/24.8	167	186

REGISTERED CIVIL ENGINEER 10-10-12 DATE

5-20-13
PLANS APPROVAL DATE

REGISTERED PROFESSIONAL ENGINEER
PHILIP E. LUTZ
No. C55839
Exp. 12-31-14
CIVIL
STATE OF CALIFORNIA

The State of California or its officers or agents shall not be responsible for the accuracy or completeness of electronic copies of this plan sheet.

NOTE:

1. For details, see "FRACTURED RIB TEXTURE" sheet.

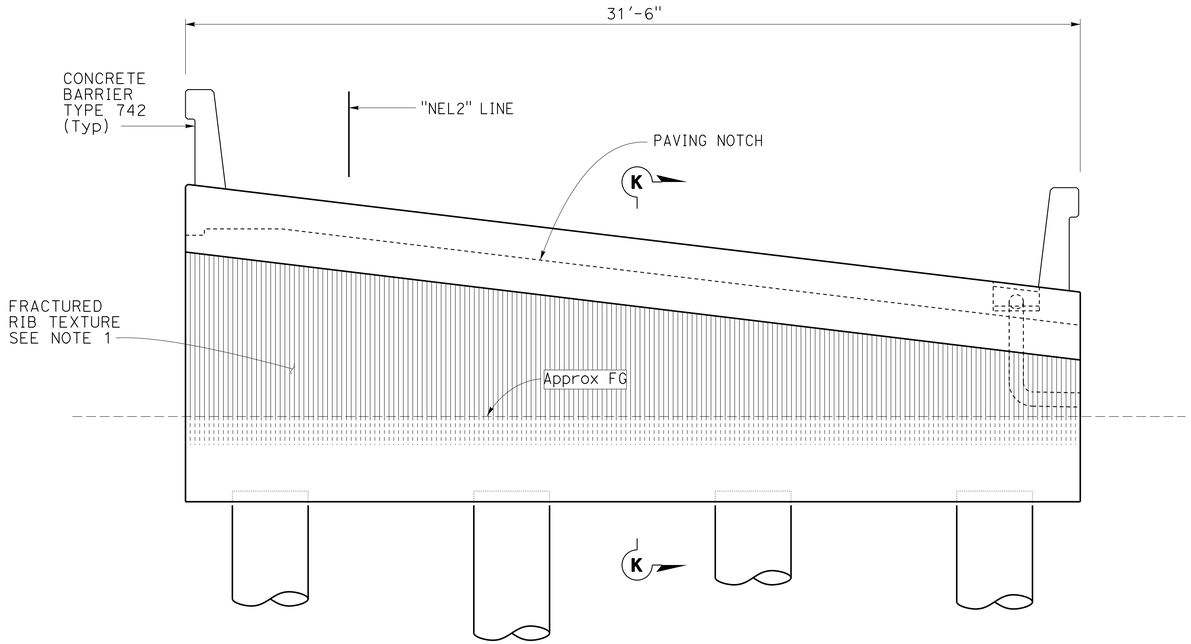

ELEVATION

3/8" = 1'-0"

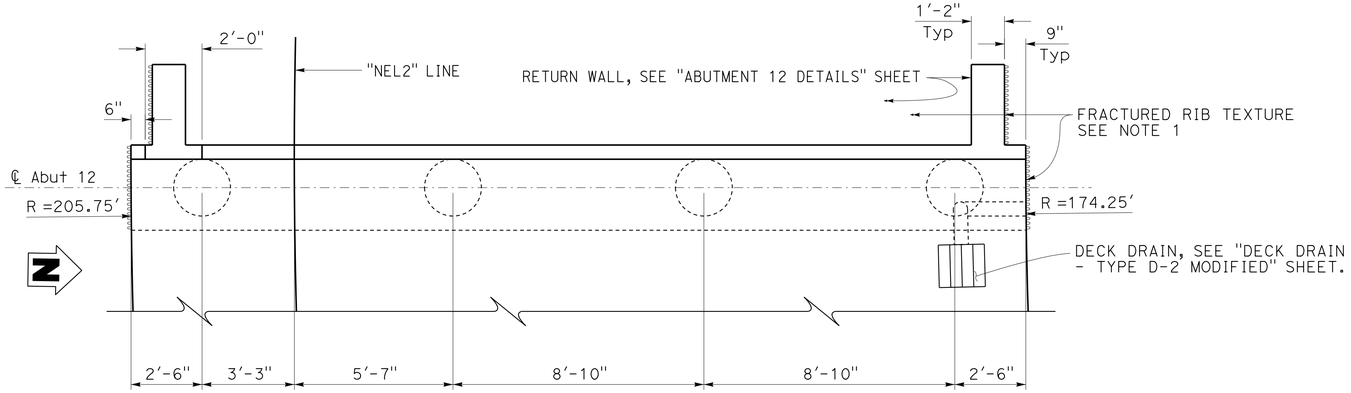

PLAN

3/8" = 1'-0"

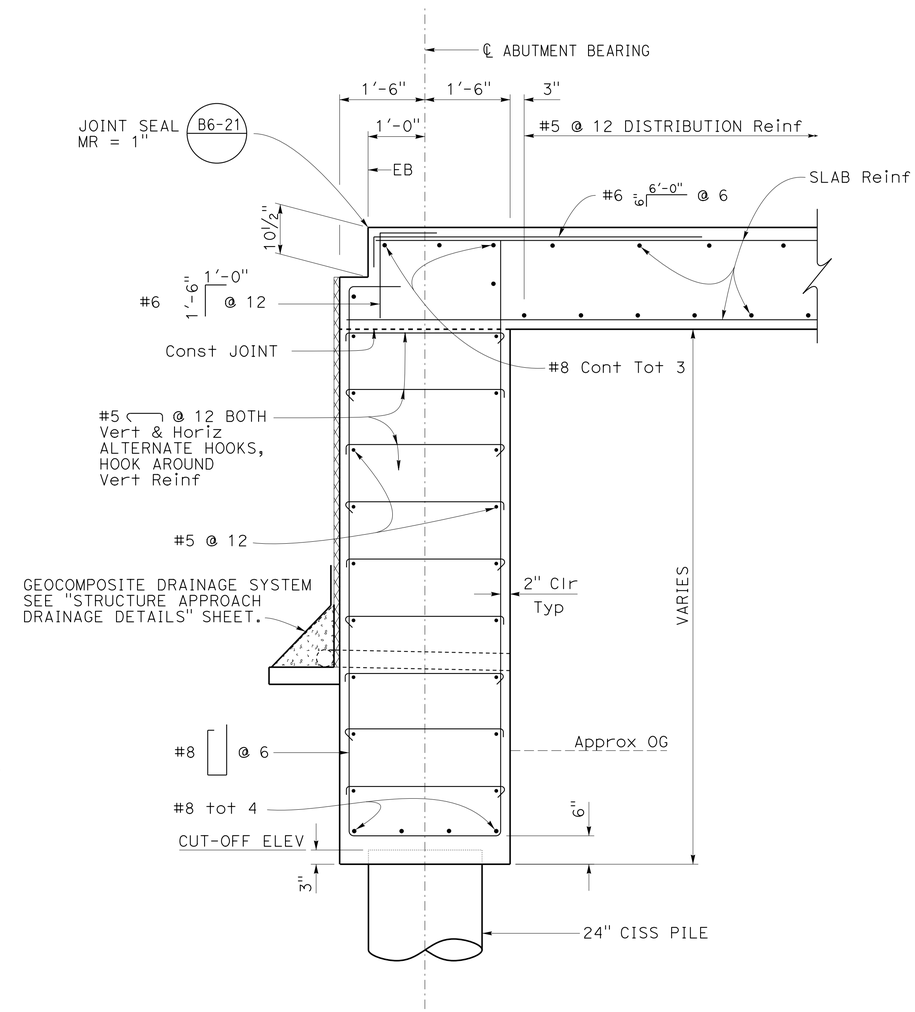

SECTION K-K

3/4" = 1'-0"

DESIGN	BY Isaias Yalan	CHECKED Phil Lutz	
DETAILS	BY JFCasarino	CHECKED Phil Lutz	
QUANTITIES	BY Phil Lutz	CHECKED Glenn Matthews	

STATE OF CALIFORNIA
DEPARTMENT OF TRANSPORTATION

DIVISION OF ENGINEERING SERVICES
STRUCTURE DESIGN
DESIGN BRANCH 9

BRIDGE NO. 28-0171S
POST MILE 24.3

MOCOCO SOUTHBOUND OFF-RAMP
ABUTMENT 12 LAYOUT

STRUCTURES DESIGN DETAIL SHEET (ENGLISH) (REV. 09-01-10)

ORIGINAL SCALE IN INCHES FOR REDUCED PLANS 0 1 2 3

UNIT: 3594
PROJECT NUMBER & PHASE: 0400000967 1
CONTRACT NO.: 04-3A8701

DISREGARD PRINTS BEARING EARLIER REVISION DATES

REVISION DATES 08-07-12

SHEET 19 OF 38

FILE => 28-0171s-i-abt_10.dgn

USERNAME => s123631 DATE PLOTTED => 30-SEP-2013 TIME PLOTTED => 11:40

DIST	COUNTY	ROUTE	POST MILES TOTAL PROJECT	SHEET No.	TOTAL SHEETS
04	CC	680	22.7/24.8	168	186

REGISTERED CIVIL ENGINEER 10-10-12 DATE

5-20-13
PLANS APPROVAL DATE

REGISTERED PROFESSIONAL ENGINEER PHILIP E. LUTZ No. C55839 Exp. 12-31-14 CIVIL STATE OF CALIFORNIA

The State of California or its officers or agents shall not be responsible for the accuracy or completeness of electronic copies of this plan sheet.

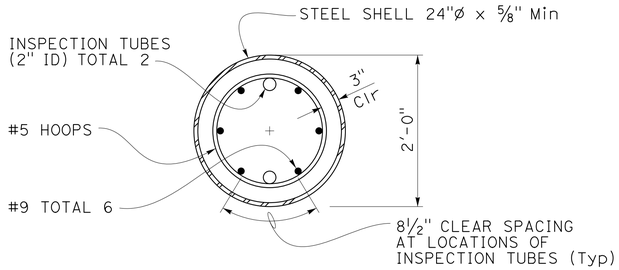

SECTION B-B

1" = 1'-0"

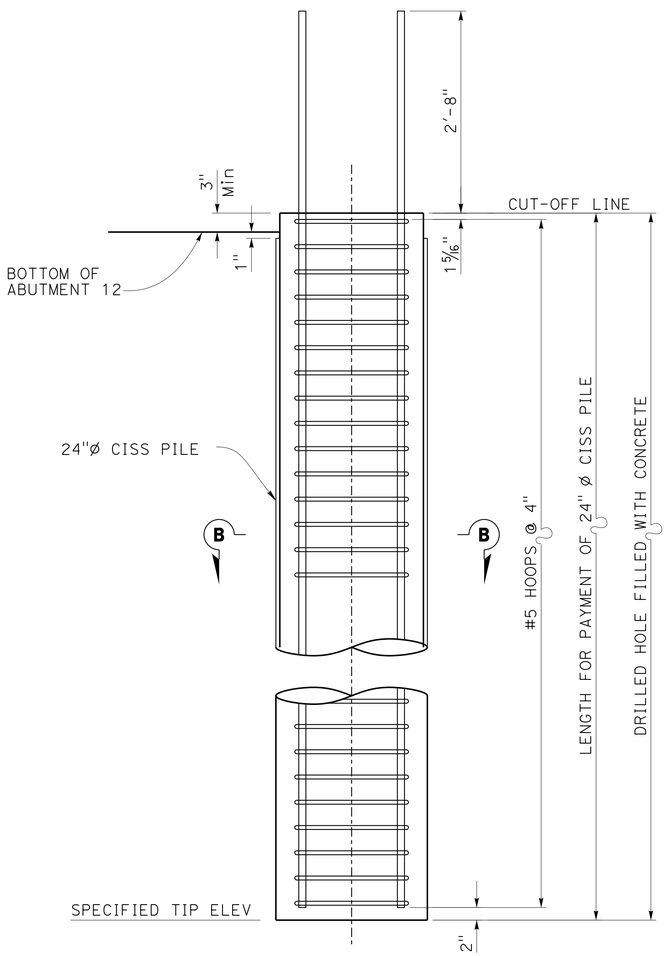

CAST-IN-STEEL SHELL CONCRETE PILE

1"=1'-0"

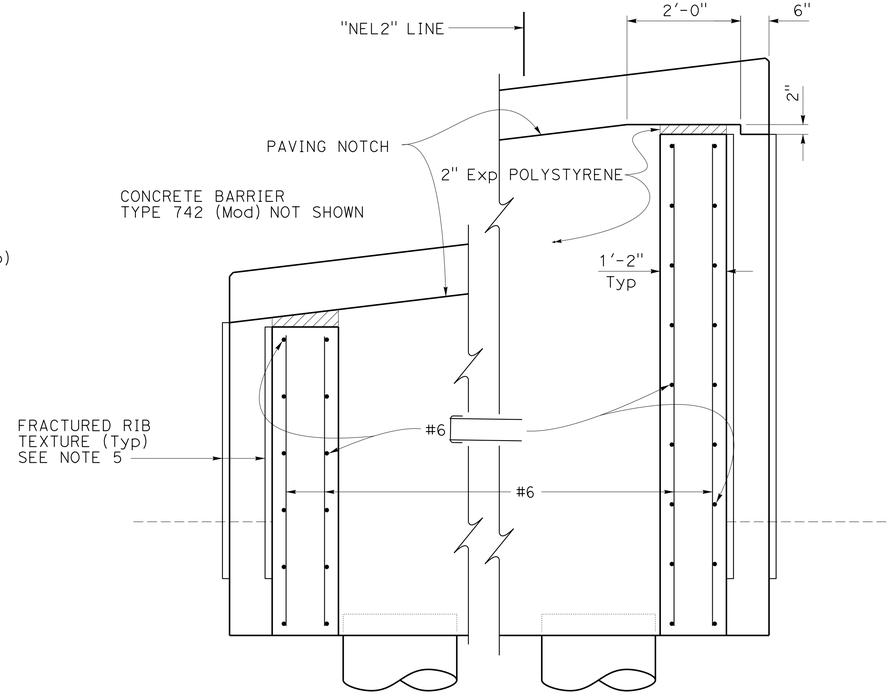

SECTION V-V

3/4" = 1'-0"

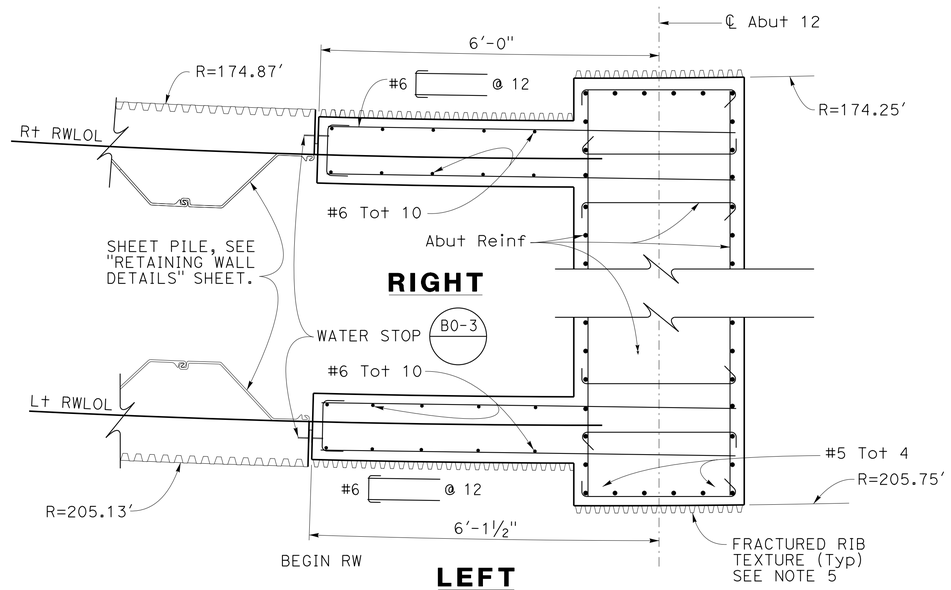

SECTION U-U

3/4" = 1'-0"

NOTES:

1. Reiforcement extending into footing shall be hooked as required to provide clearance to top of footing.
2. Piles shall be extended only in accordance with details shown.
3. All hoops shall be Ultimate Butt Splice continuous.
4. For specified Pile Tip Elevation, see "INDEX TO PLAN" sheet.
5. See "FRACTURED RIB TEXTURE" sheet for details.

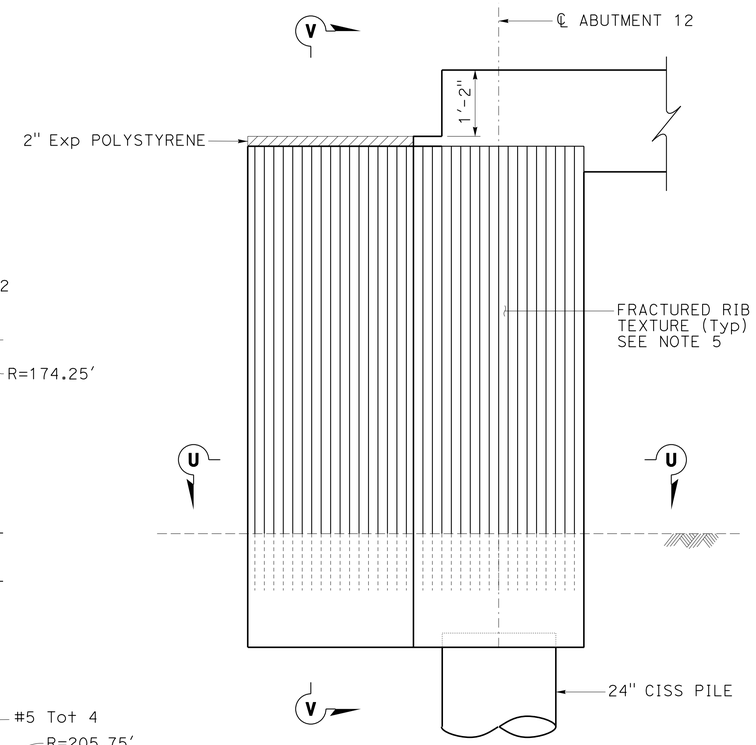

RETURN WALL

3/4" = 1'-0"

Note:

High side shown, low side similar except Paving Notch.

DESIGN	BY Isaias Yalan	CHECKED Phil Lutz	
DETAILS	BY JFCasarino	CHECKED Phil Lutz	
QUANTITIES	BY Phil Lutz	CHECKED Glenn Matthews	

STATE OF CALIFORNIA
DEPARTMENT OF TRANSPORTATION

DIVISION OF ENGINEERING SERVICES
STRUCTURE DESIGN
DESIGN BRANCH 9

BRIDGE NO. 28-0171S
POST MILE 24.3

MOCOCO SOUTHBOUND OFF-RAMP
ABUTMENT 12 DETAILS

STRUCTURES DESIGN DETAIL SHEET (ENGLISH) (REV. 09-01-10)

ORIGINAL SCALE IN INCHES FOR REDUCED PLANS 0 1 2 3

UNIT: 3594
PROJECT NUMBER & PHASE: 0400000967 1
CONTRACT NO.: 04-3A8701

DISREGARD PRINTS BEARING EARLIER REVISION DATES

REVISION DATES: 5-20-12 06-19-12

SHEET 20 OF 38

FILE => 28-0171s-1-abut_det1.dgn

USERNAME => s123631 DATE PLOTTED => 30-SEP-2013 TIME PLOTTED => 11:49

DIST	COUNTY	ROUTE	POST MILES TOTAL PROJECT	SHEET No.	TOTAL SHEETS
04	CC	680	22.7/24.8	169	186

REGISTERED CIVIL ENGINEER 10-10-12 DATE

5-20-13
PLANS APPROVAL DATE

REGISTERED PROFESSIONAL ENGINEER PHILIP E. LUTZ No. C55839 Exp. 12-31-14 CIVIL STATE OF CALIFORNIA

The State of California or its officers or agents shall not be responsible for the accuracy or completeness of electronic copies of this plan sheet.

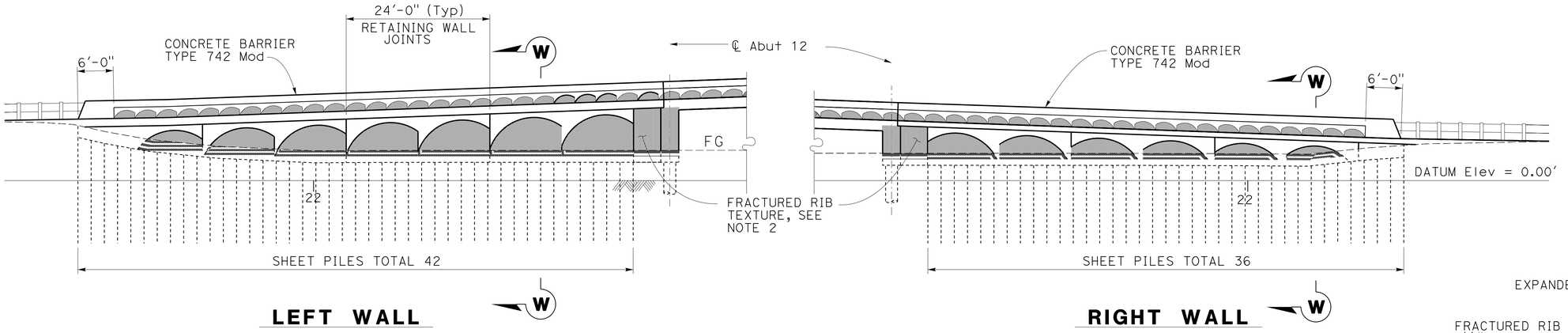

LEFT WALL **RIGHT WALL**

DEVELOPED ELEVATION
1" = 10'-0"

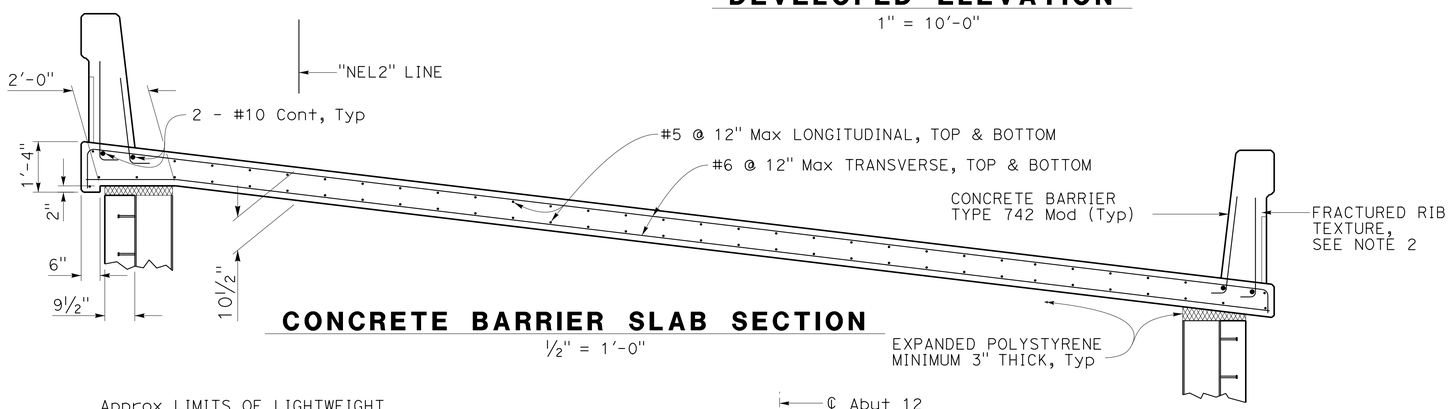

CONCRETE BARRIER SLAB SECTION
½" = 1'-0"

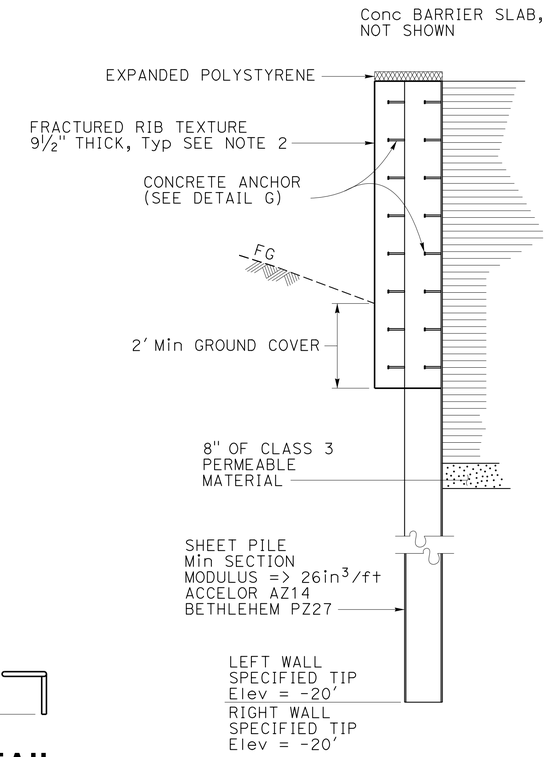

SECTION W-W
½" = 1'-0"

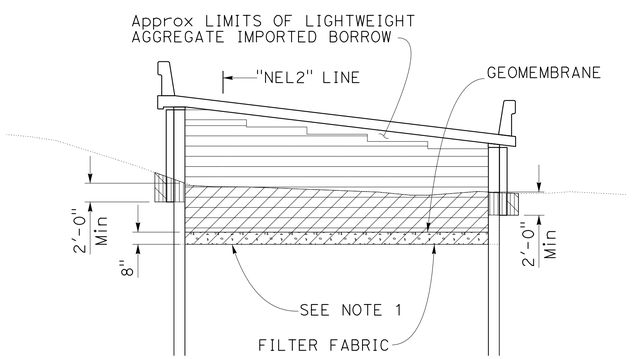

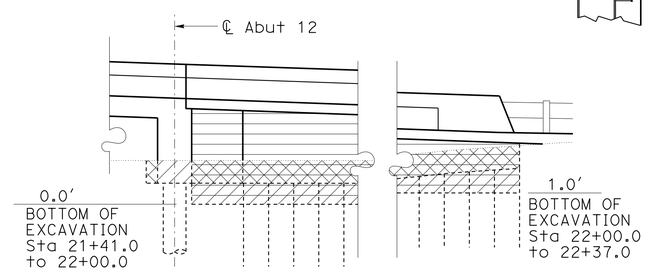

- Structure Excavation, Bridge
- Structure Backfill, Retaining Wall
- Lightweight Embankment Material, (Cellular Concrete, CLASS III)
- Structure Excavation, Retaining Wall
- Class 3 Permeable Material

EXCAVATION, BACKFILL & CELLULAR FILL LIMITS
No Scale

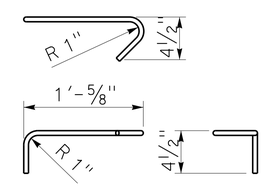

STIRRUP DETAIL
1½" = 1'-0"

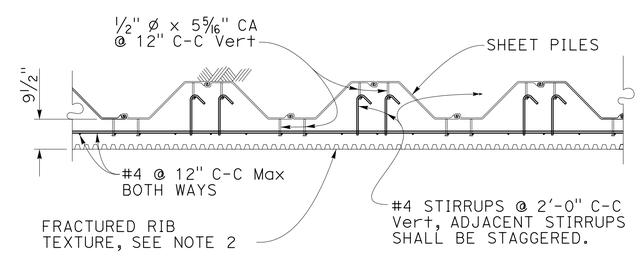

DETAIL G
½" = 1'-0"

NOTES:

1. Excavate to a depth of 0.0' between Abutment 12 and Station 22+00 and to a depth of +1.0' between Stations 22+00 and 22+37.
2. See "FRACTURED RIB TEXTURE" sheet for details.

	BY	CHECKED
DESIGN	EVAN FRANCILISO	Phil Lutz
DETAILS	JFCasarino	Phil Lutz
QUANTITIES	Phil Lutz	Glenn Matthews

STATE OF CALIFORNIA DEPARTMENT OF TRANSPORTATION

DIVISION OF ENGINEERING SERVICES STRUCTURE DESIGN DESIGN BRANCH 9

BRIDGE NO. 28-0171S POST MILE 24.3

MOCOCO SOUTHBOUND OFF-RAMP
RETAINING WALL DETAILS

STRUCTURES DESIGN DETAIL SHEET (ENGLISH) (REV. 09-01-10)

ORIGINAL SCALE IN INCHES FOR REDUCED PLANS 0 1 2 3

UNIT: 3594
PROJECT NUMBER & PHASE: 0400000967 1 CONTRACT NO.: 04-3A8701

DISREGARD PRINTS BEARING EARLIER REVISION DATES

REVISION DATES 5-29-12 7-24-12 8-30-12

SHEET 21 OF 38

FILE => 28-0171s-i-rw_det.dgn

USERNAME => s123631 DATE PLOTTED => 30-SEP-2013 TIME PLOTTED => 11:49

DIST	COUNTY	ROUTE	POST MILES TOTAL PROJECT	SHEET No.	TOTAL SHEETS
04	CC	680	22.7/24.8	170	186

REGISTERED CIVIL ENGINEER 10-10-12 DATE

5-20-13
PLANS APPROVAL DATE

REGISTERED PROFESSIONAL ENGINEER PHILIP E. LUTZ No. C58839 Exp. 12-31-14 CIVIL STATE OF CALIFORNIA

The State of California or its officers or agents shall not be responsible for the accuracy or completeness of electronic copies of this plan sheet.

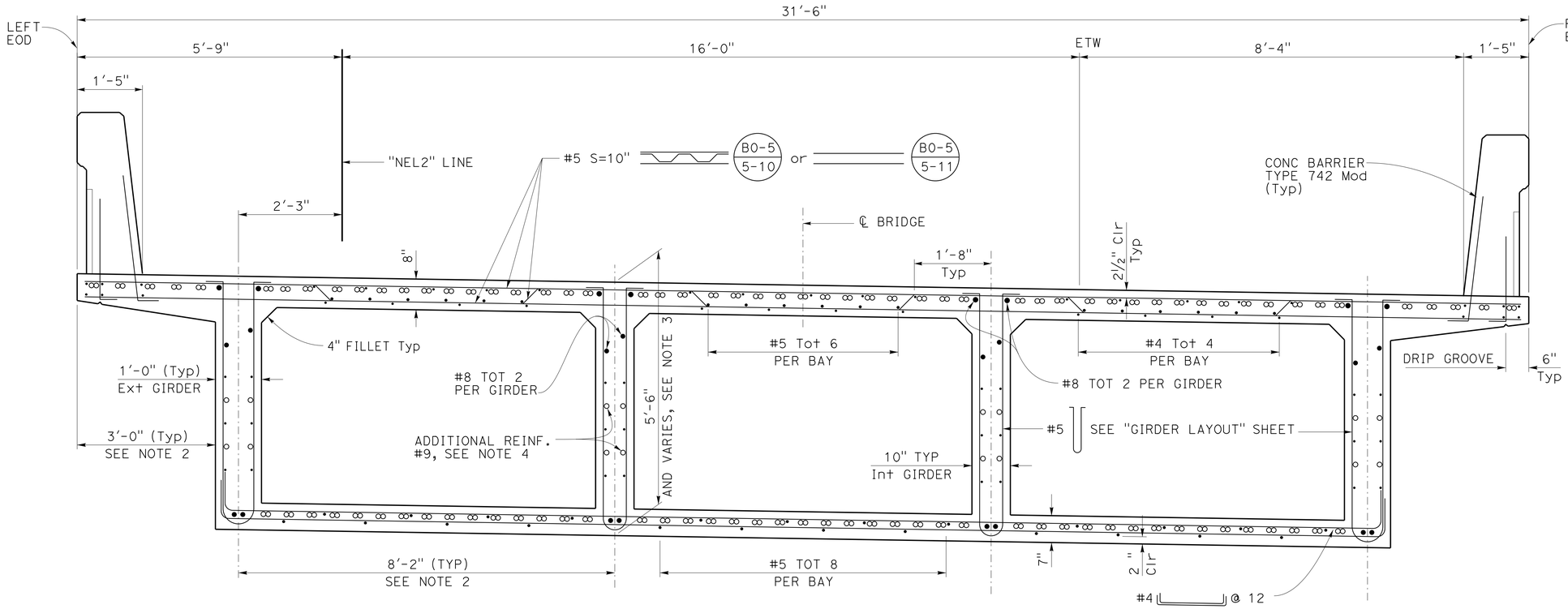

REINFORCED BOX GIRDER

B7-1 RSP B11-57

¾" = 1'-0"

NOTES:

1. Longitudinal per bay reinforcements are symmetric about ℄ of bay.
2. See "GIRDER LAYOUT NO. 1 OF 2" sheet for Span 1 girder spacing.
3. Frame 1 superstructure depth varies linearly from 5'-6" at down station face of Bent 6 cap to 4'-6" at up station face of Bent 7 cap.
4. Additional reinforcement #9 bars Bents 5 & 6 only.

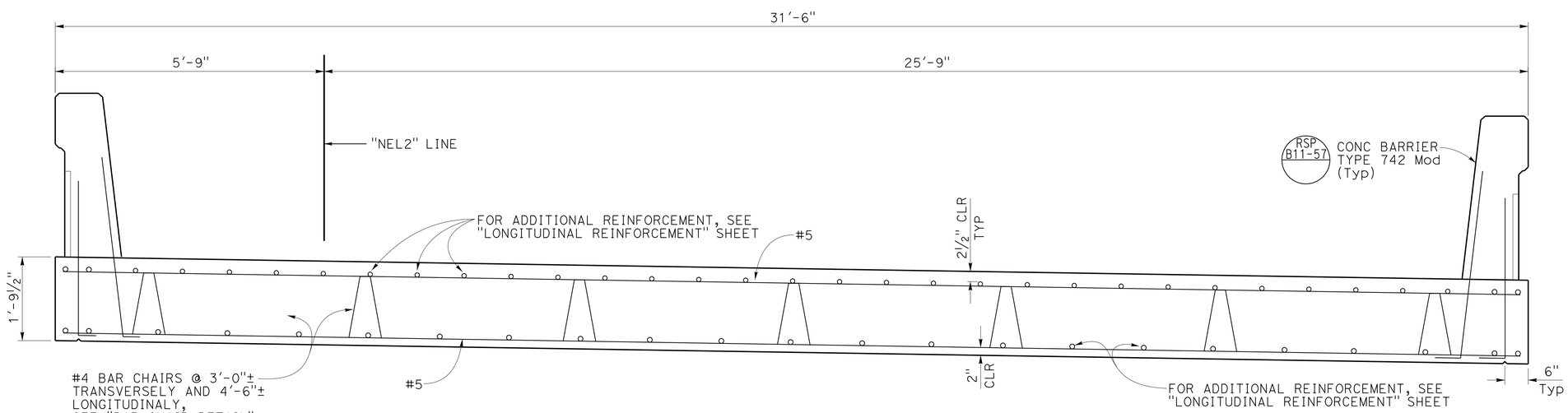

REINFORCED DECK SLAB

¾" = 1'-0"

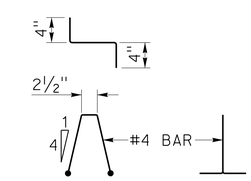

BAR CHAIR DETAIL

No Scale

DESIGN	BY Glenn Matthews	CHECKED Phil Lutz	
DETAILS	BY JFCasarino / CCancino	CHECKED Phil Lutz	
QUANTITIES	BY Phil Lutz	CHECKED Glenn Matthews	

STATE OF CALIFORNIA
DEPARTMENT OF TRANSPORTATION

DIVISION OF ENGINEERING SERVICES
STRUCTURE DESIGN
DESIGN BRANCH 9

BRIDGE NO. 28-0171S
POST MILE 24.3

MOCOCO SOUTHBOUND OFF-RAMP
TYPICAL SECTION

STRUCTURES DESIGN DETAIL SHEET (ENGLISH) (REV. 09-01-10)

ORIGINAL SCALE IN INCHES FOR REDUCED PLANS 0 1 2 3

UNIT: 3594
PROJECT NUMBER & PHASE: 0400000967 1
CONTRACT NO.: 04-3A8701

DISREGARD PRINTS BEARING EARLIER REVISION DATES

REVISION DATES 01-04-12 05-15-12

SHEET 22 OF 38

FILE => 28-0171s-K-tsec.dgn

USERNAME => s123631 DATE PLOTTED => 30-SEP-2013 TIME PLOTTED => 11:49

DIST	COUNTY	ROUTE	POST MILES TOTAL PROJECT	SHEET No.	TOTAL SHEETS
04	CC	680	22.7/24.8	171	186

REGISTERED CIVIL ENGINEER 10-10-12 DATE

5-20-13
PLANS APPROVAL DATE

REGISTERED PROFESSIONAL ENGINEER PHILIP E. LUTZ No. C55839 Exp. 12-31-14 CIVIL STATE OF CALIFORNIA

The State of California or its officers or agents shall not be responsible for the accuracy or completeness of electronic copies of this plan sheet.

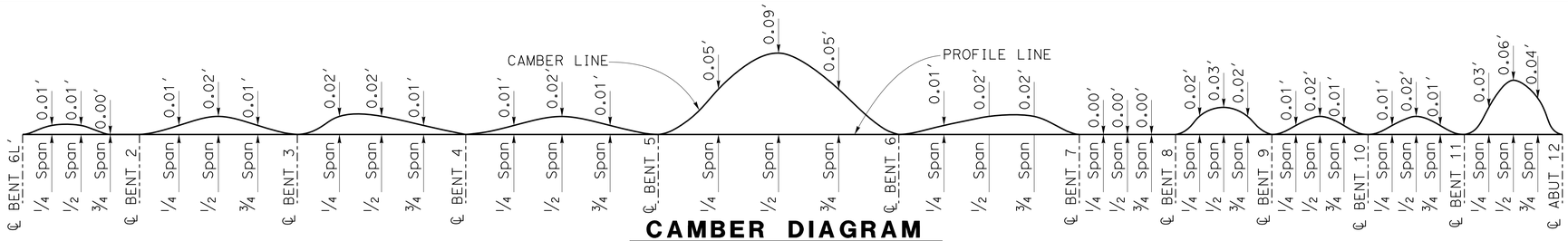

CAMBER DIAGRAM

No Scale (Does not include allowance for falsework settlement)

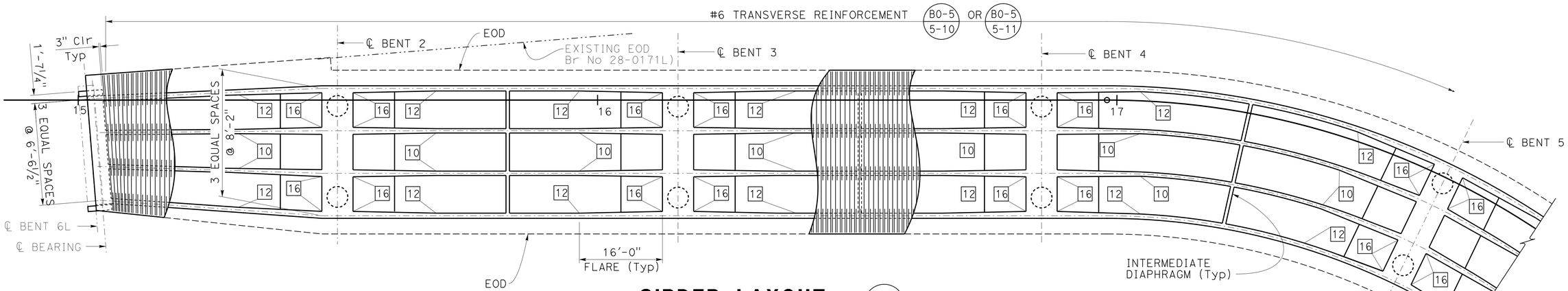

GIRDER LAYOUT

1" = 10'

B7-1

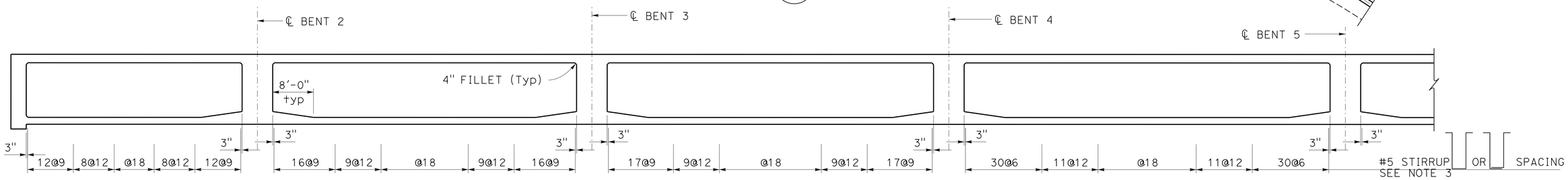

LONGITUDINAL SECTION

No Scale

B7-1

NOTES:

1. For details not shown, see "Standard Plan" sheets.
2. Intermediate diaphragms are spaced at third or half points of clear span lengths.
3. Stirrup lengths varies at first and last spans.

LEGEND:

[__] Indicates girder thickness in inches at the beginning and ending of flares.

	BY	CHECKED
DESIGN	Glenn Matthews	Phil Lutz
DETAILS	JFCasarino / CCancino	Phil Lutz
QUANTITIES	Phil Lutz	Glenn Matthews

STATE OF CALIFORNIA
DEPARTMENT OF TRANSPORTATION

DIVISION OF ENGINEERING SERVICES
STRUCTURE DESIGN
DESIGN BRANCH 9

BRIDGE NO. 28-0171S
POST MILE 24.3

MOCOCO SOUTHBOUND OFF-RAMP
GIRDER LAYOUT 1 OF 2

STRUCTURES DESIGN DETAIL SHEET (ENGLISH) (REV. 09-01-10)

ORIGINAL SCALE IN INCHES FOR REDUCED PLANS 0 1 2 3

UNIT: 3594
PROJECT NUMBER & PHASE: 0400000967 1
CONTRACT NO.: 04-3A8701

DISREGARD PRINTS BEARING EARLIER REVISION DATES

REVISION DATES: 12-22-11 05-03-12

SHEET 23 OF 38

FILE => 28-0171s-1-girl1.dgn

USERNAME => s123631 DATE PLOTTED => 30-SEP-2013 TIME PLOTTED => 11:49

DIST	COUNTY	ROUTE	POST MILES TOTAL PROJECT	SHEET No.	TOTAL SHEETS
04	CC	680	22.7/24.8	172	186

REGISTERED CIVIL ENGINEER 10-10-12 DATE

5-20-13
PLANS APPROVAL DATE

REGISTERED PROFESSIONAL ENGINEER
PHILIP E. LUTZ
No. C55839
Exp. 12-31-14
CIVIL
STATE OF CALIFORNIA

The State of California or its officers or agents shall not be responsible for the accuracy or completeness of electronic copies of this plan sheet.

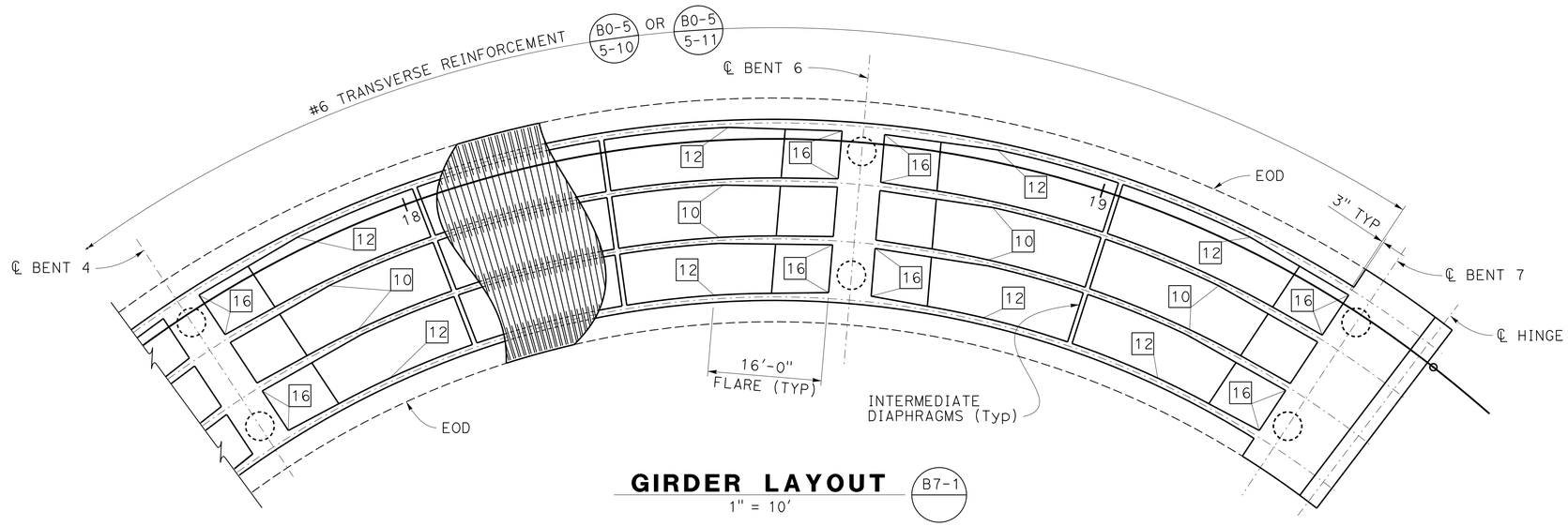

GIRDER LAYOUT

1" = 10'

B7-1

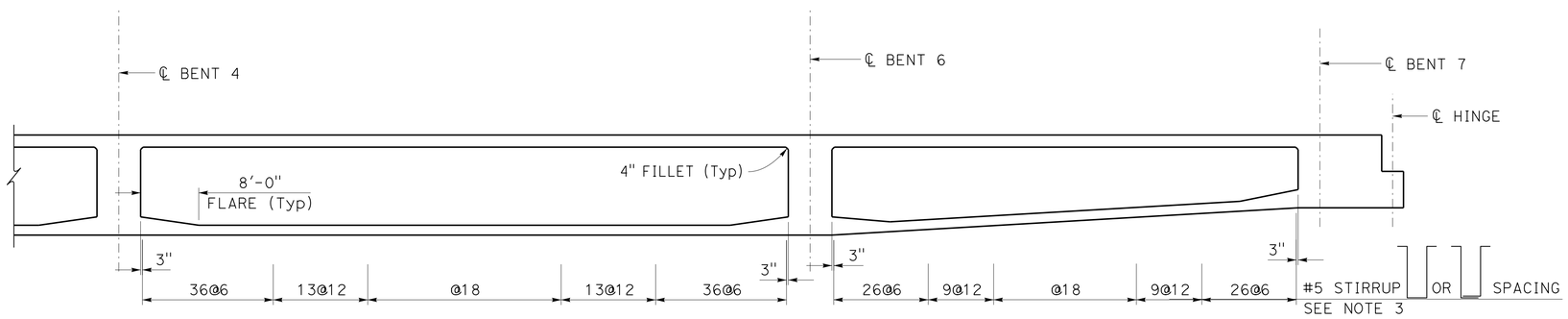

LONGITUDINAL SECTION

No Scale

B7-1

NOTES:

1. For details not shown, see "Standard Plan" sheets.
2. Intermediate diaphragms are spaced at third ar half points of clear span lengths.
3. Stirrup lengths varies at first and last spans.

LEGEND:

[__] Indicates girder thickness in inches at the beginning and ending of flares.

	BY	CHECKED
DESIGN	Glenn Matthews	Phil Lutz
DETAILS	JFCasarino	Phil Lutz
QUANTITIES	Phil Lutz	Glenn Matthews

STATE OF CALIFORNIA
DEPARTMENT OF TRANSPORTATION

DIVISION OF ENGINEERING SERVICES
STRUCTURE DESIGN
DESIGN BRANCH 9

BRIDGE NO. 28-0171S
POST MILE 24.3

MOCOCO SOUTHBOUND OFF-RAMP
GIRDER LAYOUT 2 OF 2

STRUCTURES DESIGN DETAIL SHEET (ENGLISH) (REV. 09-01-10)

ORIGINAL SCALE IN INCHES FOR REDUCED PLANS 0 1 2 3

UNIT: 3594
PROJECT NUMBER & PHASE: 0400000967 1
CONTRACT NO.: 04-3A8701

DISREGARD PRINTS BEARING EARLIER REVISION DATES

REVISION DATES 12-22-11

SHEET 24 OF 38

FILE => 28-0171s-1-girl2.dgn

USERNAME => s123631 DATE PLOTTED => 30-SEP-2013 TIME PLOTTED => 11:49

DIST	COUNTY	ROUTE	POST MILES TOTAL PROJECT	SHEET No.	TOTAL SHEETS
04	CC	680	22.7/24.8	173	186

REGISTERED CIVIL ENGINEER 10-10-12 DATE

5-20-13
PLANS APPROVAL DATE

REGISTERED PROFESSIONAL ENGINEER PHILIP E. LUTZ No. C55839 Exp. 12-31-14 CIVIL STATE OF CALIFORNIA

The State of California or its officers or agents shall not be responsible for the accuracy or completeness of electronic copies of this plan sheet.

NOTES:

1. For Frame 1, lap all discontinuous main longitudinal bars with #5 bars. All girder and main reinforcment are #10 bars unless noted otherwise.
2. Numbers at ends of bars are lengths in feet from ℄ Bents.

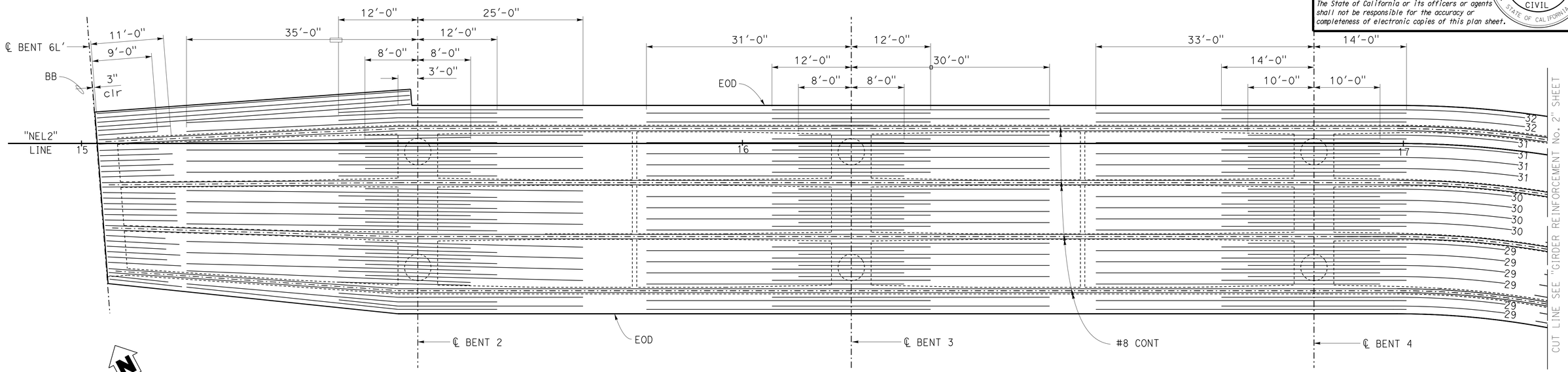

TOP GIRDER REINFORCEMENT

NO SCALE

#11 rebar tot 12

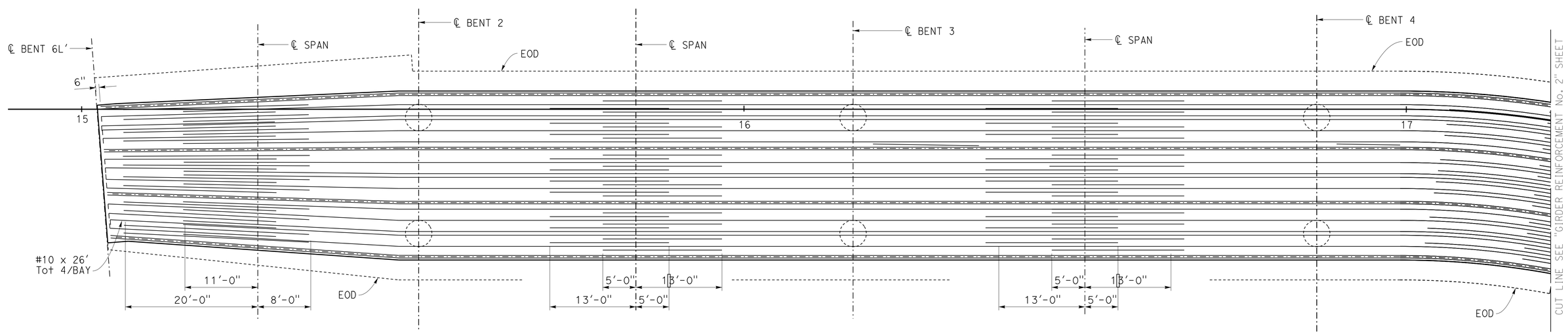

BOTTOM GIRDER REINFORCEMENT

NO SCALE

DESIGN	BY Glenn Matthews	CHECKED Phil Lutz	
DETAILS	BY JFCasarino	CHECKED Phil Lutz	
QUANTITIES	BY Phil Lutz	CHECKED Glenn Matthews	

STATE OF CALIFORNIA
DEPARTMENT OF TRANSPORTATION

DIVISION OF ENGINEERING SERVICES
STRUCTURE DESIGN
DESIGN BRANCH 9

BRIDGE NO. 28-0171S
POST MILE 24.3

MOCOCO SOUTHBOUND OFF-RAMP
GIRDER REINFORCEMENT NO. 1

STRUCTURES DESIGN DETAIL SHEET (ENGLISH) (REV. 09-01-10)

ORIGINAL SCALE IN INCHES FOR REDUCED PLANS 0 1 2 3

UNIT: 3594
PROJECT NUMBER & PHASE: 0400000967 1
CONTRACT NO.: 04-3A8701

DISREGARD PRINTS BEARING EARLIER REVISION DATES

REVISION DATES: 2-28-12 5-14-12

SHEET 25 OF 38

FILE => 28-0171s-o-grein1.dgn

USERNAME => s123631 DATE PLOTTED => 30-SEP-2013 TIME PLOTTED => 11:50

DIST	COUNTY	ROUTE	POST MILES TOTAL PROJECT	SHEET No.	TOTAL SHEETS
04	CC	680	22.7/24.8	174	186

REGISTERED CIVIL ENGINEER 10-10-12 DATE

5-20-13
PLANS APPROVAL DATE

REGISTERED PROFESSIONAL ENGINEER
PHILIP E. LUTZ
No. C55839
Exp. 12-31-14
CIVIL
STATE OF CALIFORNIA

The State of California or its officers or agents shall not be responsible for the accuracy or completeness of electronic copies of this plan sheet.

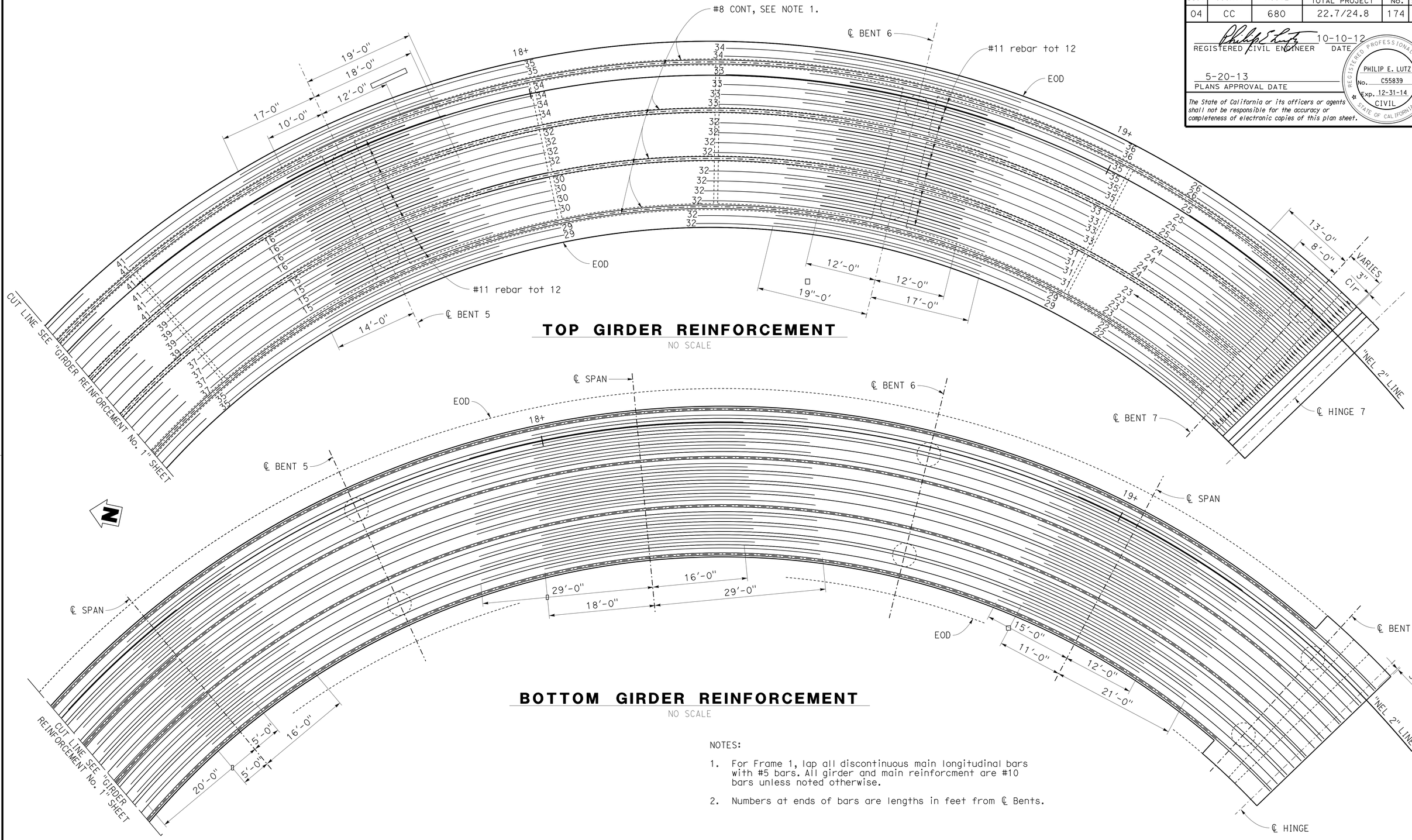

TOP GIRDER REINFORCEMENT

NO SCALE

BOTTOM GIRDER REINFORCEMENT

NO SCALE

NOTES:

1. For Frame 1, lap all discontinuous main longitudinal bars with #5 bars. All girder and main reinforcment are #10 bars unless noted otherwise.
2. Numbers at ends of bars are lengths in feet from ℄ Bents.

	BY	CHECKED
DESIGN	Glenn Matthews	Phil Lutz
DETAILS	JFCasarino	Phil Lutz
QUANTITIES	Phil Lutz	Glenn Matthews

STATE OF CALIFORNIA
DEPARTMENT OF TRANSPORTATION

DIVISION OF ENGINEERING SERVICES
STRUCTURE DESIGN
DESIGN BRANCH 9

BRIDGE NO. 28-0171S
POST MILE 24.3

MOCOCO SOUTHBOUND OFF-RAMP
GIRDER REINFORCEMENT NO. 2

STRUCTURES DESIGN DETAIL SHEET (ENGLISH) (REV. 09-01-10)

ORIGINAL SCALE IN INCHES FOR REDUCED PLANS 0 1 2 3

UNIT: 3594
PROJECT NUMBER & PHASE: 0400000967 1
CONTRACT NO.: 04-3A8701

DISREGARD PRINTS BEARING EARLIER REVISION DATES

REVISION DATES: 2-28-12 5-15-12

SHEET 26 OF 38

FILE => 28-0171s-o-grein2.dgn

USERNAME => s123631 DATE PLOTTED => 30-SEP-2013 TIME PLOTTED => 11:50

DIST	COUNTY	ROUTE	POST MILES TOTAL PROJECT	SHEET No.	TOTAL SHEETS
04	CC	680	22.7/24.8	175	186

REGISTERED CIVIL ENGINEER 10-10-12 DATE

5-20-13
PLANS APPROVAL DATE

REGISTERED PROFESSIONAL ENGINEER PHILIP E. LUTZ No. C55839 Exp. 12-31-14 CIVIL STATE OF CALIFORNIA

The State of California or its officers or agents shall not be responsible for the accuracy or completeness of electronic copies of this plan sheet.

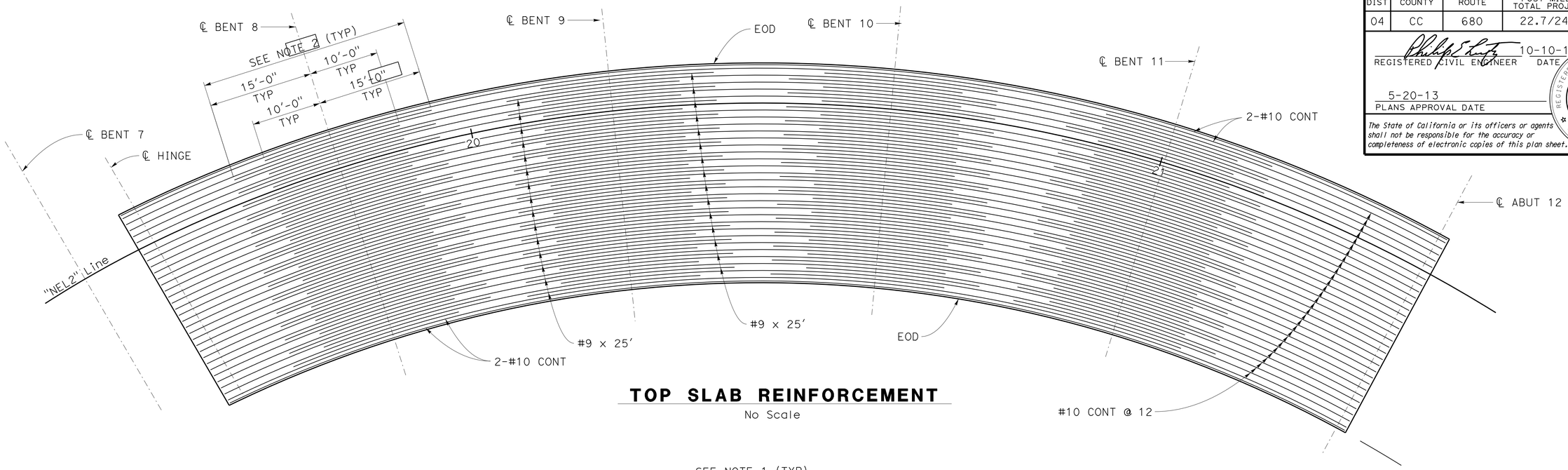

TOP SLAB REINFORCEMENT

No Scale

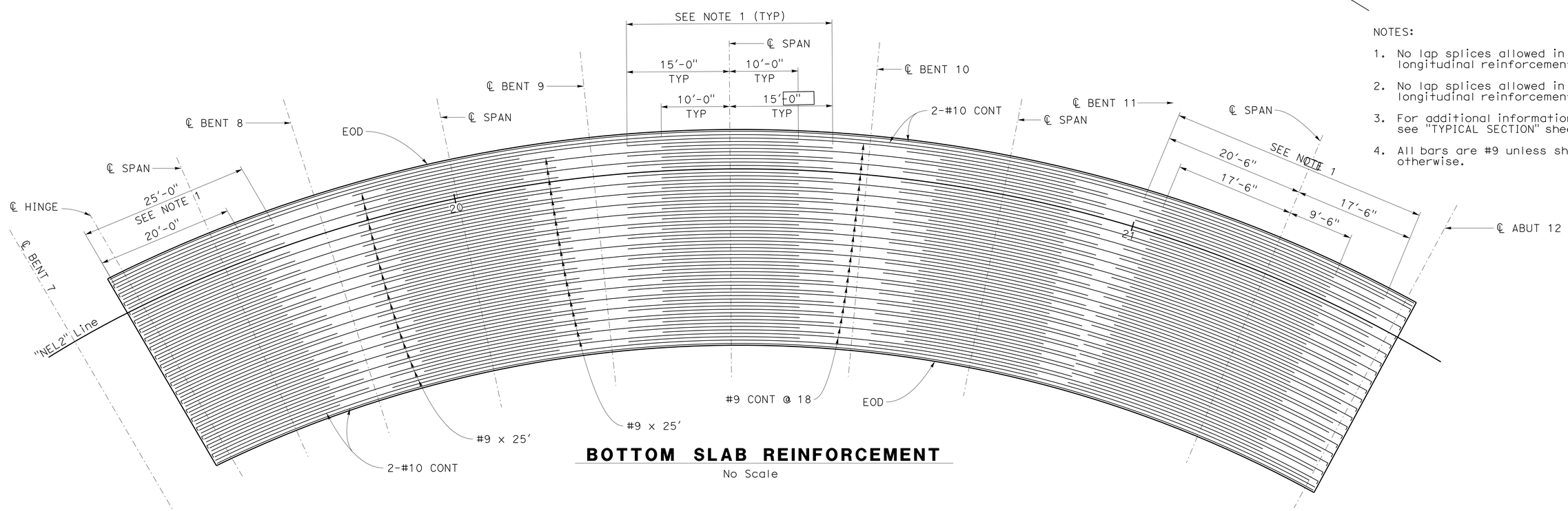

BOTTOM SLAB REINFORCEMENT

No Scale

NOTES:

1. No lap splices allowed in bottom longitudinal reinforcement.
2. No lap splices allowed in top longitudinal reinforcement.
3. For additional information, see "TYPICAL SECTION" sheet.
4. All bars are #9 unless shown otherwise.

	BY	CHECKED
DESIGN	Van H. Nguyen	Phil Lutz
DETAILS	JFCasarino	Phil Lutz
QUANTITIES	Phil Lutz	Glenn Matthews

STATE OF CALIFORNIA
DEPARTMENT OF TRANSPORTATION

DIVISION OF ENGINEERING SERVICES
STRUCTURE DESIGN
DESIGN BRANCH 9

BRIDGE NO. 28-0171S
POST MILE 24.3

MOCOCO SOUTHBOUND OFF-RAMP
LONGITUDINAL REINFORCEMENT

STRUCTURES DESIGN DETAIL SHEET (ENGLISH) (REV. 09-01-10)

ORIGINAL SCALE IN INCHES FOR REDUCED PLANS 0 1 2 3

UNIT: 3594
PROJECT NUMBER & PHASE: 0400000967 1
CONTRACT NO.: 04-3A8701

DISREGARD PRINTS BEARING EARLIER REVISION DATES

REVISION DATES 11-16-11 12-14-11

SHEET 27 OF 38

FILE => 28-0171s-o-ionr.dgn

USERNAME => s126631 DATE PLOTTED => 30-SEP-2013 TIME PLOTTED => 11:50

DIST	COUNTY	ROUTE	POST MILES TOTAL PROJECT	SHEET No.	TOTAL SHEETS
04	CC	680	22.7/24.8	176	186

REGISTERED CIVIL ENGINEER 10-10-12 DATE

5-20-13
PLANS APPROVAL DATE

REGISTERED PROFESSIONAL ENGINEER
PHILIP E. LUTZ
No. C55839
Exp 12-31-14
CIVIL
STATE OF CALIFORNIA

The State of California or its officers or agents shall not be responsible for the accuracy or completeness of electronic copies of this plan sheet.

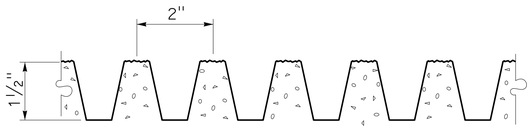

FRACTURED RIB DETAIL
2" = 1'-0"

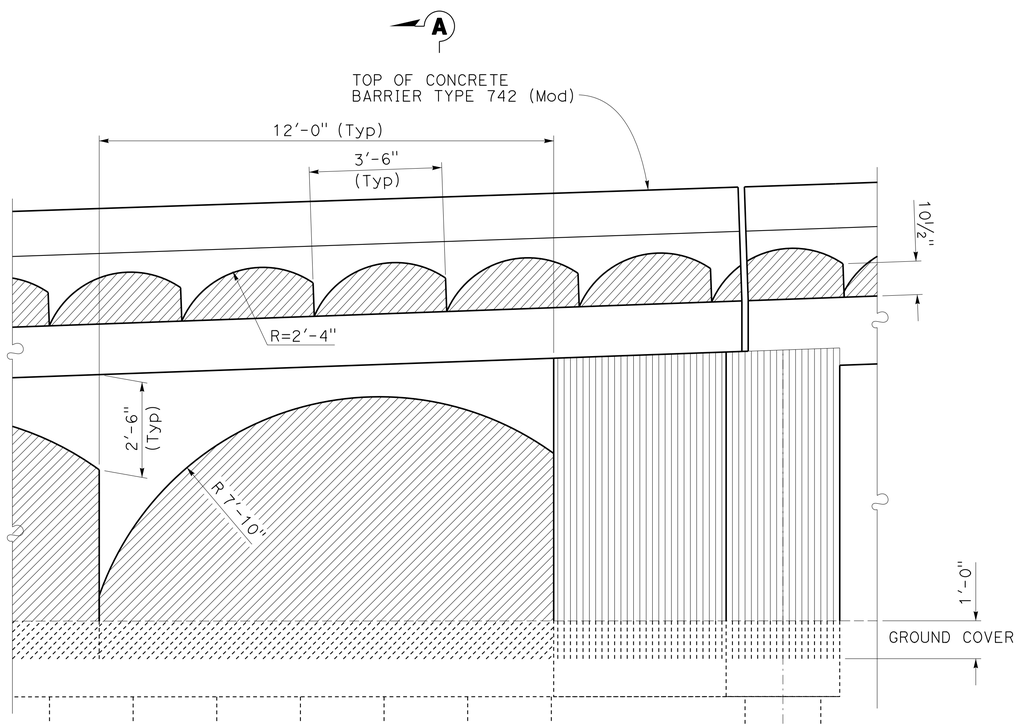

WALL SCALLOP DETAIL
1/2" = 1'-0"

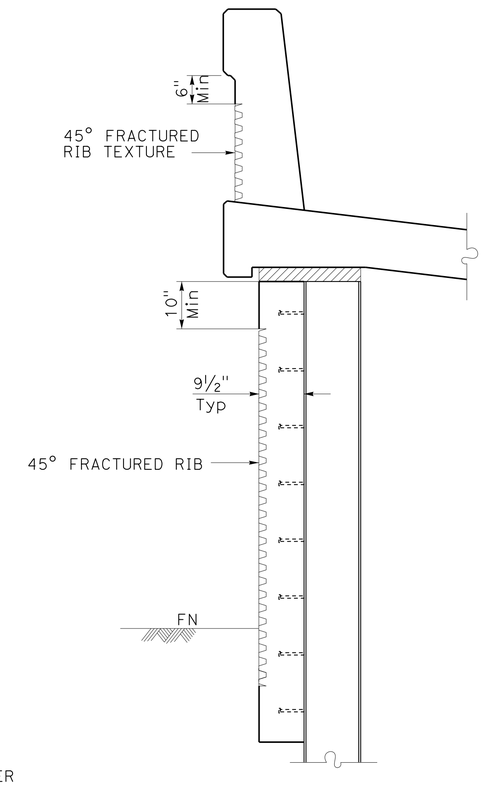

SECTION A-A
3/4" = 1'-0"

NOTE:

1. Fractured Ribs are angled 45° as shown and vertical at Abutment stem and Return Walls.

DESIGN	BY Glenn Matthews	CHECKED Phil Lutz	
DETAILS	BY JFCasarino	CHECKED Phil Lutz	
QUANTITIES	BY Phil Lutz	CHECKED Glenn Matthews	

STATE OF CALIFORNIA
DEPARTMENT OF TRANSPORTATION

DIVISION OF ENGINEERING SERVICES
STRUCTURE DESIGN
DESIGN BRANCH 9

BRIDGE NO. 28-0171S
POST MILE 24.3

MOCOCO SOUTHBOUND OFF-RAMP
FRACTURED RIB TEXTURE

STRUCTURES DESIGN DETAIL SHEET (ENGLISH) (REV. 09-01-10)

ORIGINAL SCALE IN INCHES FOR REDUCED PLANS 0 1 2 3

UNIT: 3594
PROJECT NUMBER & PHASE: 0400000967 1
CONTRACT NO.: 04-3A8701

DISREGARD PRINTS BEARING EARLIER REVISION DATES

REVISION DATES: 07-31-12

SHEET 28 OF 38

FILE => 28-0171s-p-arch.dgn

USERNAME => s123631 DATE PLOTTED => 30-SEP-2013 TIME PLOTTED => 11:50

DIST	COUNTY	ROUTE	POST MILES TOTAL PROJECT	SHEET No.	TOTAL SHEETS
04	CC	680	22.7/24.8	177	186

REGISTERED CIVIL ENGINEER 10-10-12 DATE

5-20-13
PLANS APPROVAL DATE

The State of California or its officers or agents shall not be responsible for the accuracy or completeness of electronic copies of this plan sheet.

REGISTERED PROFESSIONAL ENGINEER PHILIP E. LUTZ No. C55839 Exp. 12-31-14 CIVIL STATE OF CALIFORNIA

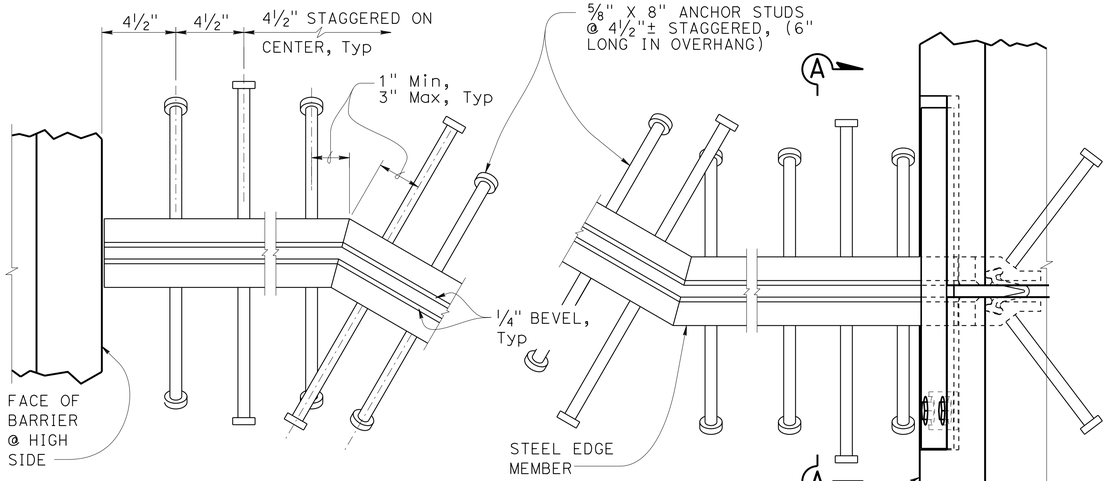

PLAN
SKEW > 20°

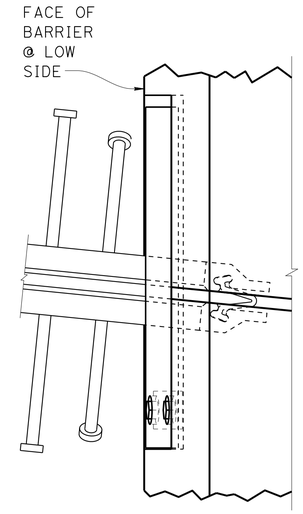

PLAN
SKEW ≤ 20°

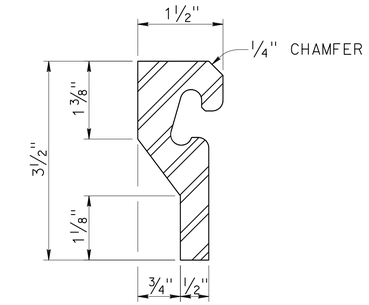

STEEL EDGE MEMBER

NOTES:

1. Full penetration butt welds may be substituted for fillet welds on all anchor studs
2. Alternate types of anchor studs may be permitted subject to the approval by the Engineer
3. Joint seal assembly to be used in conjunction with closure pour. (See other sheets for limits). Closure pour shall not be placed until final deck surface is within the tolerances specified
4. Use joint at crown of roadway, at any change in traverse slope in deck and at changes in horizontal direction. Place other joints at or near lanes. All metal parts to be painted or galvanized after fabrication
5. Sheet Neoprene shall be fabricated in one continuous piece and shall be fabricated to bend around corners
6. Insert assembly or expansion anchorage for ⅝" x 1¾" bolts. Use installation bolts extended ½" minimum past nut and coat with bond breaker, after concrete has cured, remove installation bolts, install A325 bolts and sheet neoprene
7. Sidewalk Detail similar to Barrier Detail on low side at both sides if the roadway is crowned or if the difference in elevation between the ends of the seal is 0.5′ or less
8. a_C, a_S, are the thermal expansion coefficients for concrete and steel respectfully.

JOINT INFORMATION			"a" DIMENSIONS		
LOCATION	MOVEMENT RATING (MR)	SKEW	WINTER	SPRING & FALL	SUMMER
HINGE	4"	0°	1.72"	2.58"	3.44"

✳ TO SET MINIMUM JOINT OPENING "W"

"W" = { ½"+[(Max Str temperature in F°)-(actual Str temperature in F°)]✳(a_C or a_S)(12)(contributory L in feet)
½" Minimum
a_C = 0.0000060
a_S = 0.0000065 }

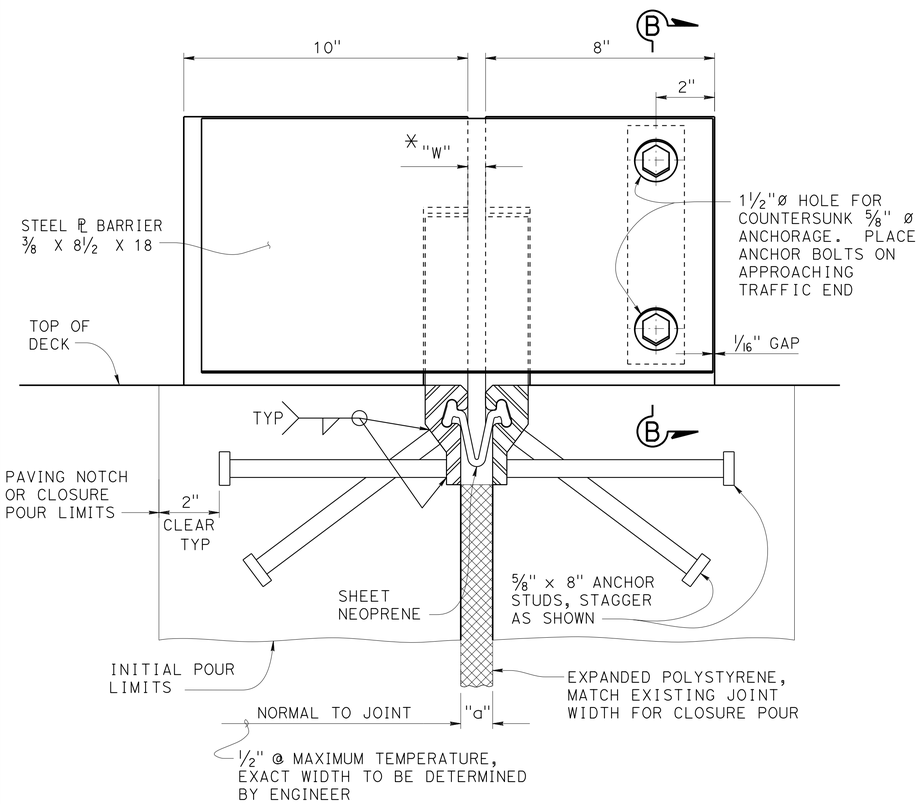

SECTION A-A

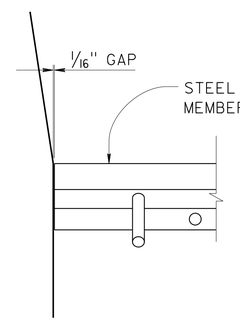

BARRIER DETAIL
HIGH SIDE

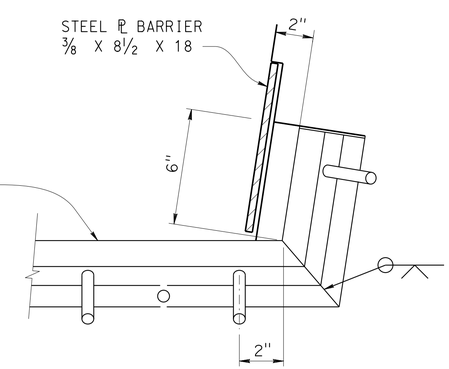

BARRIER DETAIL
LOW SIDE

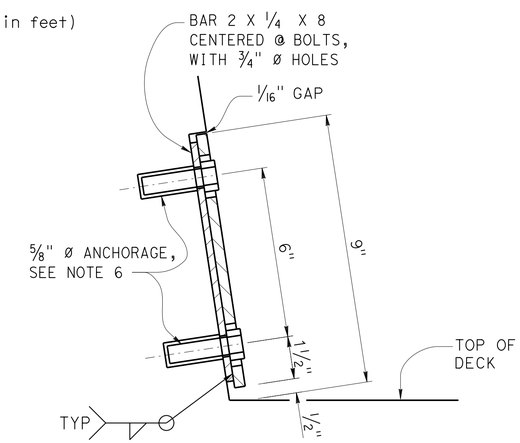

SECTION B-B

NO SCALE

MOCOCO SOUTHBOUND OFF-RAMP

JOINT SEAL ASSEMBLY

MAXIMUM MOVEMENT RATING = 4"

STANDARD DRAWING

FILE NO. **xs8-010**

APPROVAL DATE October 2011

STATE OF **CALIFORNIA** DEPARTMENT OF TRANSPORTATION

DIVISION OF ENGINEERING SERVICES

BRIDGE NO. 28-0171S

POST MILE 24.3

DS OSD 2147A (ENGLISH STANDARD DRAWING "XS" BORDER REV. (02-02-11)

ORIGINAL SCALE IN INCHES FOR REDUCED PLANS 0 1 2 3

UNIT: 3594
PROJECT NUMBER & PHASE: 0400000967 1
CONTRACT NO.: 04-3A8701

DISREGARD PRINTS BEARING EARLIER REVISION DATES

REVISION DATES 8/22/11 5-7-12

SHEET 29 OF 38

USERNAME => s123631 DATE PLOTTED => 30-SEP-2013 TIME PLOTTED => 11:50

FILE => 28-0171s-w-jtseal_mr4.dgn

DIST	COUNTY	ROUTE	POST MILES TOTAL PROJECT	SHEET No.	TOTAL SHEETS
04	CC	680	22.7/24.8	178	186

REGISTERED CIVIL ENGINEER 10-10-12 DATE

5-20-13
PLANS APPROVAL DATE

REGISTERED PROFESSIONAL ENGINEER PHILIP E. LUTZ No. C55839 Exp. 12-31-14 CIVIL STATE OF CALIFORNIA

The State of California or its officers or agents shall not be responsible for the accuracy or completeness of electronic copies of this plan sheet.

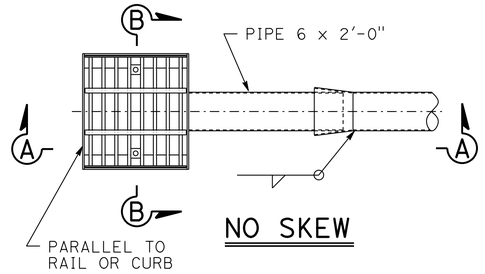

NO SKEW

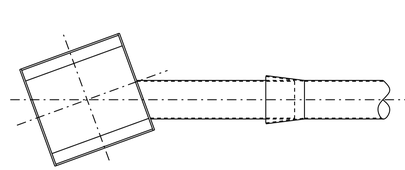

SKEW TO 20°

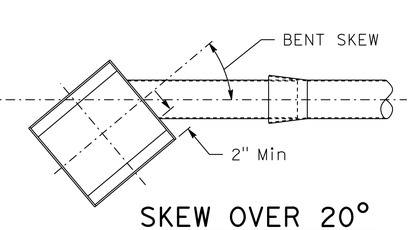

SKEW OVER 20°

PLAN-DECK DRAIN ASSEMBLY

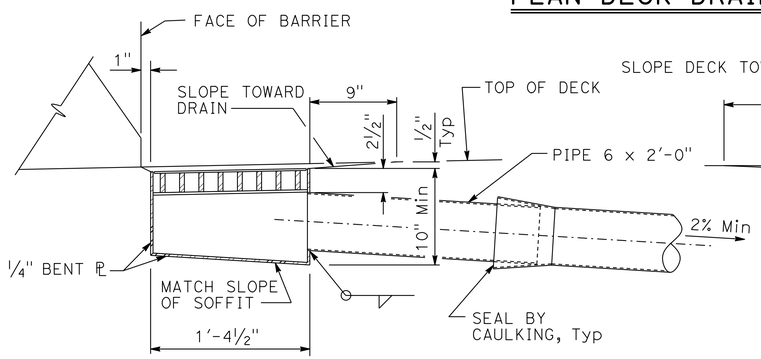

SECTION A-A

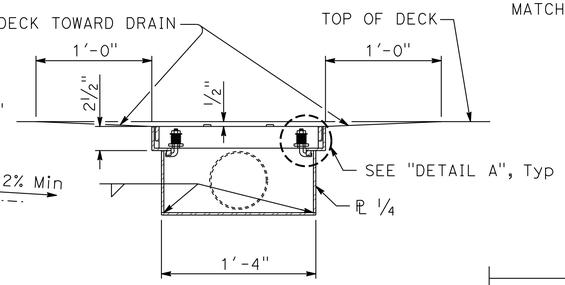

SECTION B-B

DECK DRAIN ASSEMBLY DETAIL

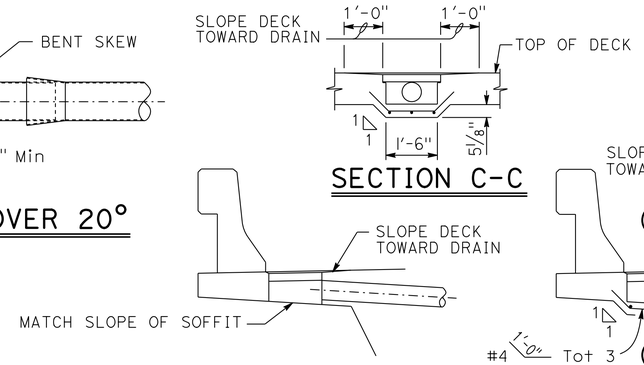

SECTION C-C

DRAIN FLUSH W/OVERHANG

DRAIN W/HAUNCH OVERHANG

ELEVATION-DECK DRAIN LOCATIONS

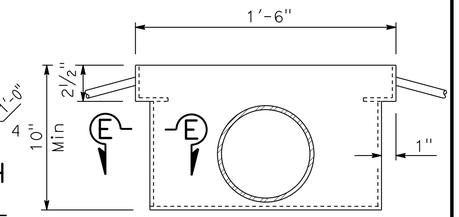

VIEW D-D

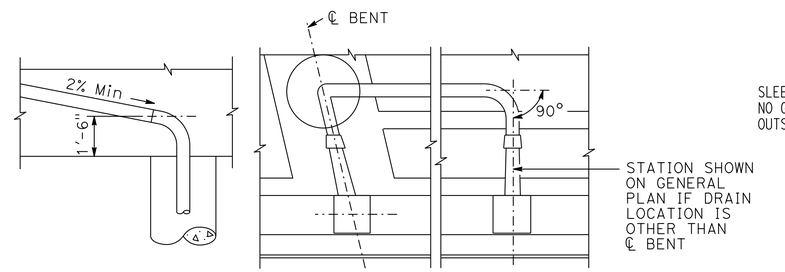

VERTICAL

HORIZONTAL

DRAIN PIPE ALIGNMENT

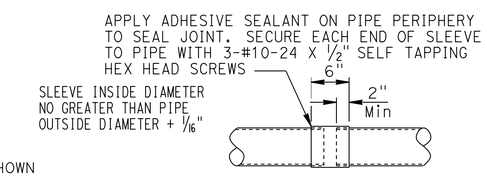

SLEEVE CONNECTION

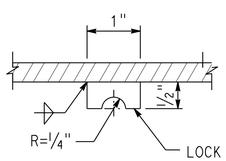

LOCK BAR

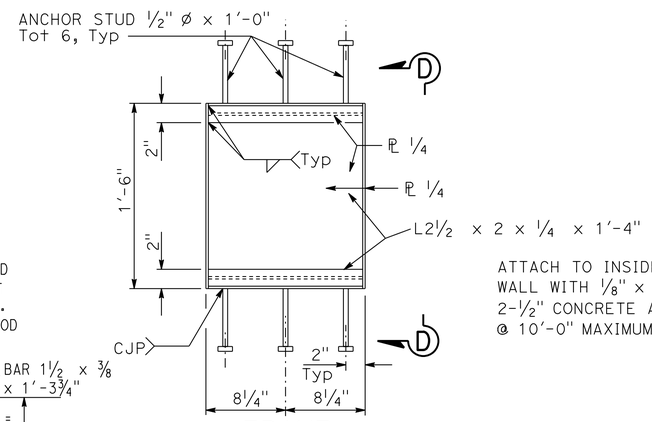

FRAME

ATTACH TO INSIDE FACE OF BENT WALL WITH ⅛" x 1½" STRAPS WITH 2-½" CONCRETE ANCHORAGE DEVICES @ 10'-0" MAXIMUM CENTERS

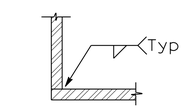

SECTION E-E

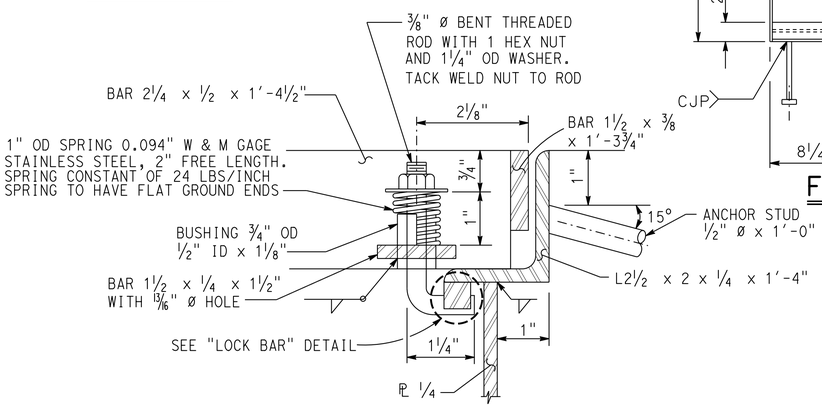

DETAIL A

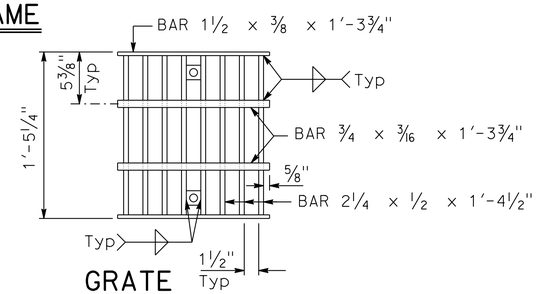

GRATE

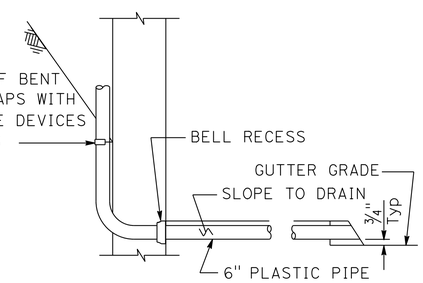

AT WALL TYPE BENT

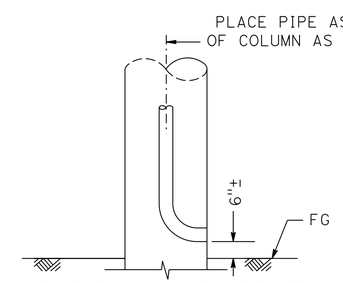

AT COLUMN TYPE BENT ABOVE GROUND

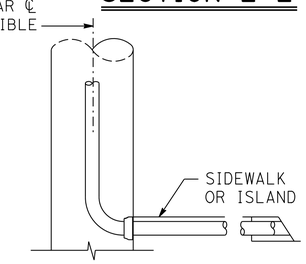

AT COLUMN TYPE BENT UNDER CURB

DRAIN OUTLET

NOTE:

All pipe to be NPS 6 x 0.135" welded steel pipe except as noted and galvanized if not encased in concrete. Fittings and bends shall have a minimum wall thickness of ⅛". All joints or connections to be butt welded or connected by a steel pipe sleeve and to be smooth throughout inside of pipe except as noted. All bends to be on 1'-6" minimum radius measured along ℄ pipe. All bends to be supported by suitable galvanized hangers @ 10'-0" maximum spacing throughout. Galvanize deck drain assembly after fabrication

NO SCALE

STANDARD DRAWING

FILE NO. xs10-020

APPROVAL DATE July 2011

STATE OF CALIFORNIA DEPARTMENT OF TRANSPORTATION

DIVISION OF ENGINEERING SERVICES

BRIDGE NO. 28-0171S

POST MILE 24.3

MOCOCO SOUTHBOUND OFF-RAMP
DECK DRAIN - TYPE D-2 MODIFIED

DS OSD 2147A (ENGLISH STANDARD DRAWING "XS" BORDER REV. (02-02-11)

ORIGINAL SCALE IN INCHES FOR REDUCED PLANS 0 1 2 3

UNIT: 3594
PROJECT NUMBER & PHASE: 0400000967 1
CONTRACT NO.: 04-3A8701

DISREGARD PRINTS BEARING EARLIER REVISION DATES

REVISION DATES 5-7-12

SHEET 30 OF 38

FILE => 28-0171s-x-ddrain_d2.dgn

USERNAME => s123631 DATE PLOTTED => 30-SEP-2013 TIME PLOTTED => 11:50

DIST	COUNTY	ROUTE	POST MILES TOTAL PROJECT	SHEET No.	TOTAL SHEETS
04	CC	680	22.7/24.8	179	186

REGISTERED CIVIL ENGINEER 10-10-12 DATE

5-20-13
PLANS APPROVAL DATE

REGISTERED PROFESSIONAL ENGINEER PHILIP E. LUTZ No. C55839 Exp. 12-31-14 CIVIL STATE OF CALIFORNIA

The State of California or its officers or agents shall not be responsible for the accuracy or completeness of electronic copies of this plan sheet.

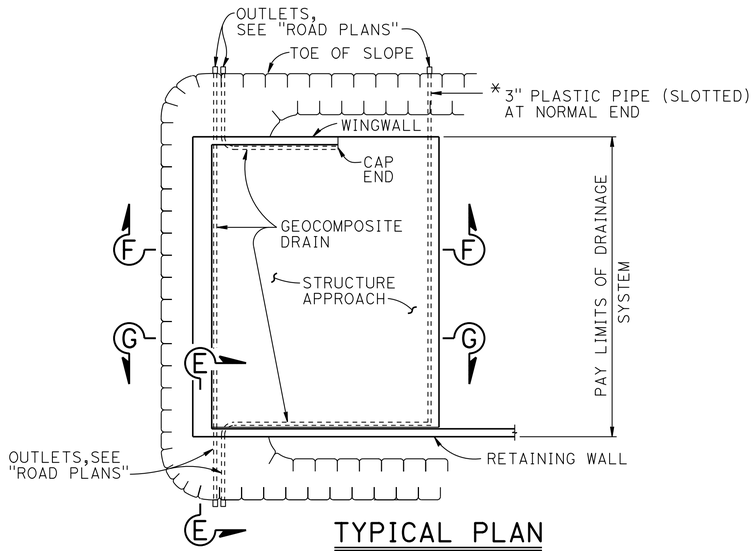

TYPICAL PLAN

1" = 10'

* FOR PIPE LAYOUT AT STAGGERED END, SEE "DETAIL B"

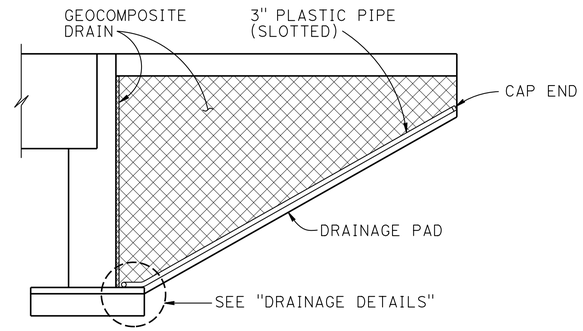

CANTILEVER WINGWALL

SECTION F-F

1/4" = 1'-0"

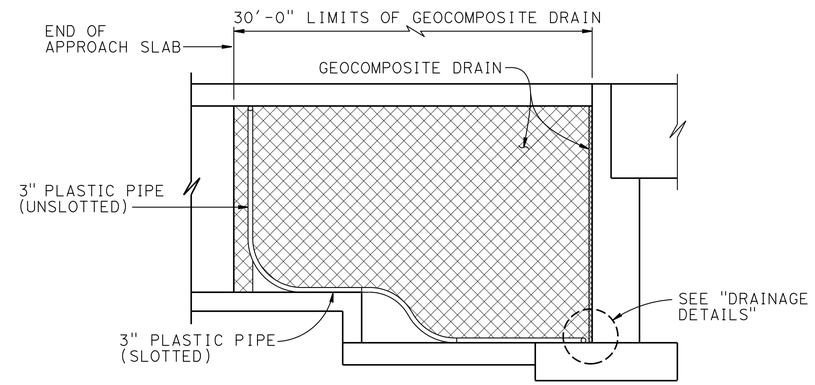

RETAINING WALL WINGWALL DRAINAGE DETAILS

SECTION G-G

1/4" = 1'-0"

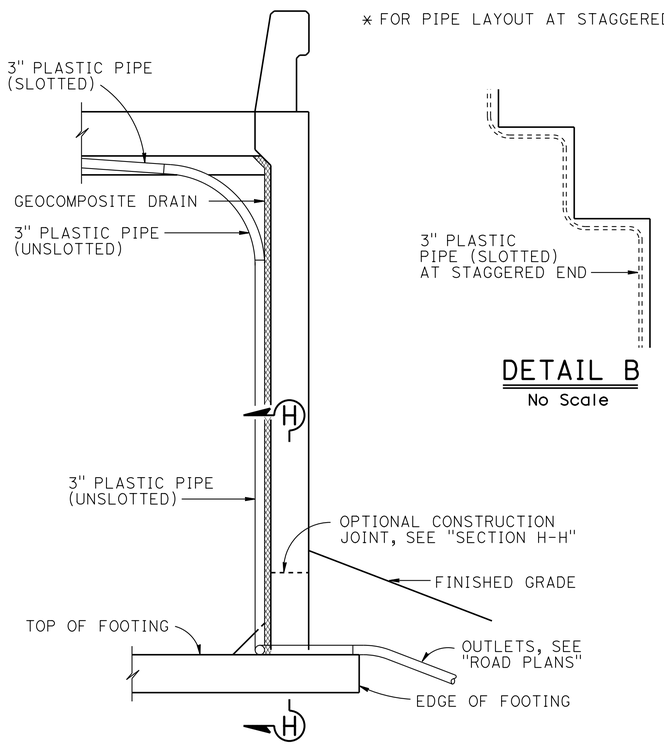

DETAIL B

No Scale

SECTION E-E

1/2" = 1'-0"

NOTE: Bends and junctions in 3" plastic pipe are 30" radius Min

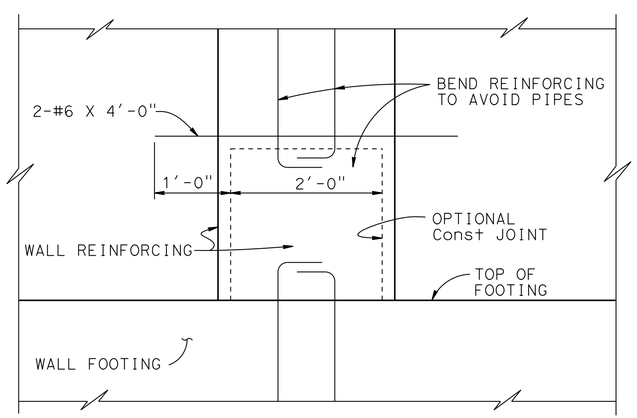

SECTION H-H

1" = 1'-0"

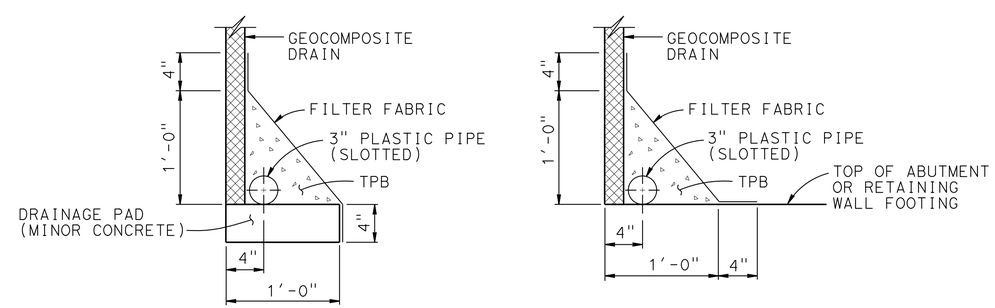

WITHOUT FOOTING

WITH FOOTING

DRAINAGE DETAILS

1 1/2" = 1'-0"

NOTE: Bends and junctions in 3" plastic pipe are 30" radius Min

STANDARD DRAWING

FILE NO. xs3-110

APPROVAL DATE July 2011

STATE OF CALIFORNIA DEPARTMENT OF TRANSPORTATION

DIVISION OF ENGINEERING SERVICES

BRIDGE NO. 28-0171S

POST MILE X

MOCOCO SOUTHBOUND OFF-RAMP

STRUCTURE APPROACH DRAINAGE DETAILS

DS OSD 2147A (ENGLISH STANDARD DRAWING "XS" BORDER REV. (02-02-11)

ORIGINAL SCALE IN INCHES FOR REDUCED PLANS 0 1 2 3

UNIT: 3594
PROJECT NUMBER & PHASE: 0400000967 1
CONTRACT NO.: 04-3A8701

DISREGARD PRINTS BEARING EARLIER REVISION DATES

REVISION DATES 5-7-12

SHEET 31 OF 38

FILE => 28-0171s-y-sadrain.dgn

USERNAME => s123631 DATE PLOTTED => 30-SEP-2013 TIME PLOTTED => 11:50

DIST	COUNTY	ROUTE	POST MILES TOTAL PROJECT	SHEET No	TOTAL SHEETS
04	CC	680	22.7/24.8	180	186

REGISTERED CIVIL ENGINEER 05-11-12

5-20-13
PLANS APPROVAL DATE

REGISTERED PROFESSIONAL ENGINEER
Zhaohui Yang
No. 71801
Exp. 12-31-13
CIVIL
STATE OF CALIFORNIA

The State of California or its officers or agents shall not be responsible for the accuracy or completeness of electronic copies of this plan sheet.

This LOTB sheet was prepared in accordance with the Caltrans Soil & Rock Logging, Classification, & Presentation Manual (2010 Edition).

BENCH MARK

V. Datum: NAD 83

SUHV127
1: ø I pipe with railroad spike
Elev. 9.28'

SUHV5
1"ø I pipe with railroad spike
Elev. 7.96

SUHV2
mag-nail
Elev. 13.46

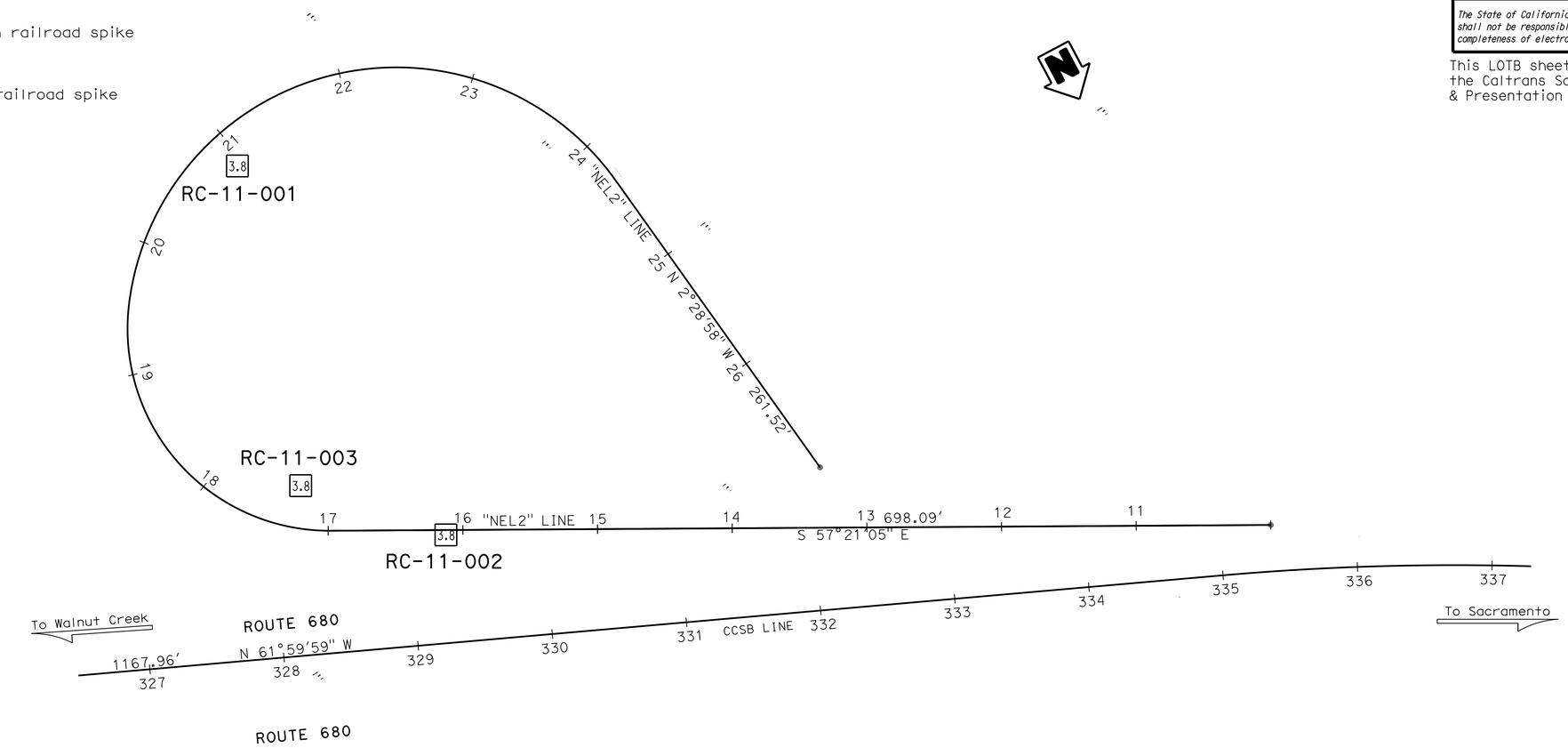

PLAN
1"=50'

ENGINEERING SERVICES			GEOTECHNICAL SERVICES	STATE OF CALIFORNIA DEPARTMENT OF TRANSPORTATION	DIVISION OF ENGINEERING SERVICES OFFICE OF GEOTECHNICAL DESIGN BRANCH	BRIDGE NO. 28-0171S POST MILES 24.26	MOCOCO SOUTHBOUND OFF-RAMP LOG OF TEST BORINGS 1 of 7
FUNCTIONAL SUPERVISOR	DRAWN BY: M. Reynolds	09/11	FIELD INVESTIGATION BY: S. Awad				
NAME: H. Nikoui	CHECKED BY: R. Karpowicz						

ORIGINAL SCALE IN INCHES FOR REDUCED PLANS 0 1 2 3

UNIT: 3660
PROJECT NUMBER & PHASE: 04000009671 CONTRACT NO.: 043A8701

DISREGARD PRINTS BEARING EARLIER REVISION DATES

REVISION DATES: 5-14-12

SHEET 32 OF 38

FILE => 28-0171s-z-ltb01.dgn

USERNAME => s123631 DATE PLOTTED => 24-SEP-2013 TIME PLOTTED => 13:05

(For Boring Location See Plan, LOTB Sheet 1 of 5)

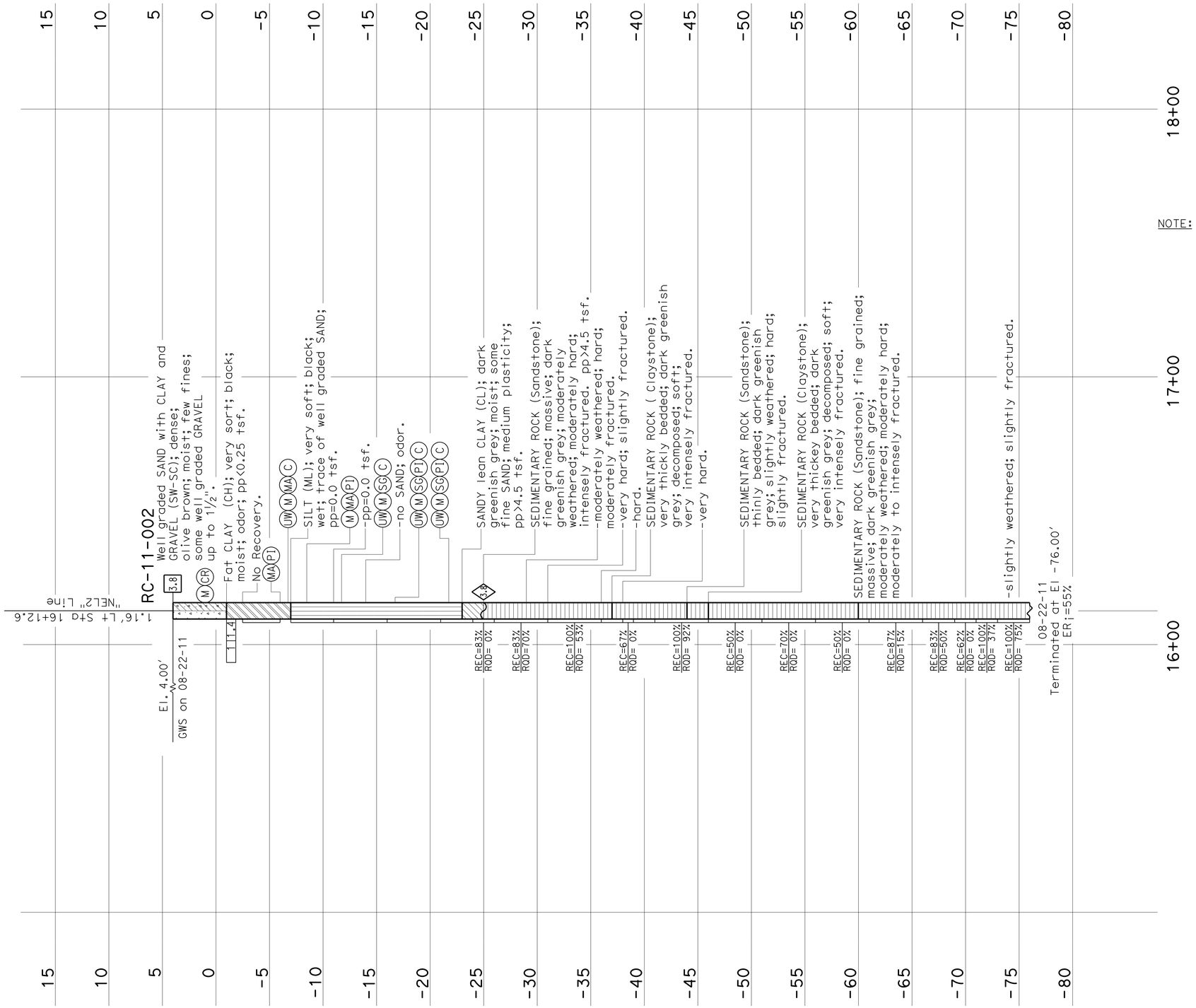

DIST	COUNTY	ROUTE	POST MILES TOTAL PROJECT	SHEET No	TOTAL SHEETS
04	CC	680	22.7/24.8	181	186

REGISTERED CIVIL ENGINEER 05-11-12

5-20-13
PLANS APPROVAL DATE

REGISTERED PROFESSIONAL ENGINEER Zhaohui Yang No. 71801 Exp. 12-31-13 CIVIL STATE OF CALIFORNIA

The State of California or its officers or agents shall not be responsible for the accuracy or completeness of electronic copies of this plan sheet.

This LOTB sheet was prepared in accordance with the Caltrans Soil & Rock Logging, Classification, & Presentation Manual (2010 Edition).

NOTE: 1. pp = unconfined compressive strength (tsf) as measured by pocket penetrometer.

PROFILE
HOR. 1"=20'
VER. 1"= 5'

ENGINEERING SERVICES	GEOTECHNICAL SERVICES	STATE OF CALIFORNIA DEPARTMENT OF TRANSPORTATION	DIVISION OF ENGINEERING SERVICES OFFICE OF GEOTECHNICAL DESIGN BRANCH	BRIDGE NO. 28-0171S / POST MILES 24.26	MOCOCO SOUTHBOUND OFF-RAMP
FUNCTIONAL SUPERVISOR	DRAWN BY: M. Reynolds 09/11	FIELD INVESTIGATION BY:			LOG OF TEST BORINGS 2 of 7
NAME: H. Nikoui	CHECKED BY: R. Karpowicz	S. Awad			

ORIGINAL SCALE IN INCHES FOR REDUCED PLANS 0 1 2 3

UNIT: 3660
PROJECT NUMBER & PHASE: 04000009671 CONTRACT NO.: 043A8701

DISREGARD PRINTS BEARING EARLIER REVISION DATES → 5-14-12

REVISION DATES | SHEET 33 | OF 38

FILE => 28-0171s-z-lltb02.dgn

USERNAME => s123631 DATE PLOTTED => 24-SEP-2013 TIME PLOTTED => 13:05

(For Boring Location See Plan, LOTB Sheet 1 of 7)

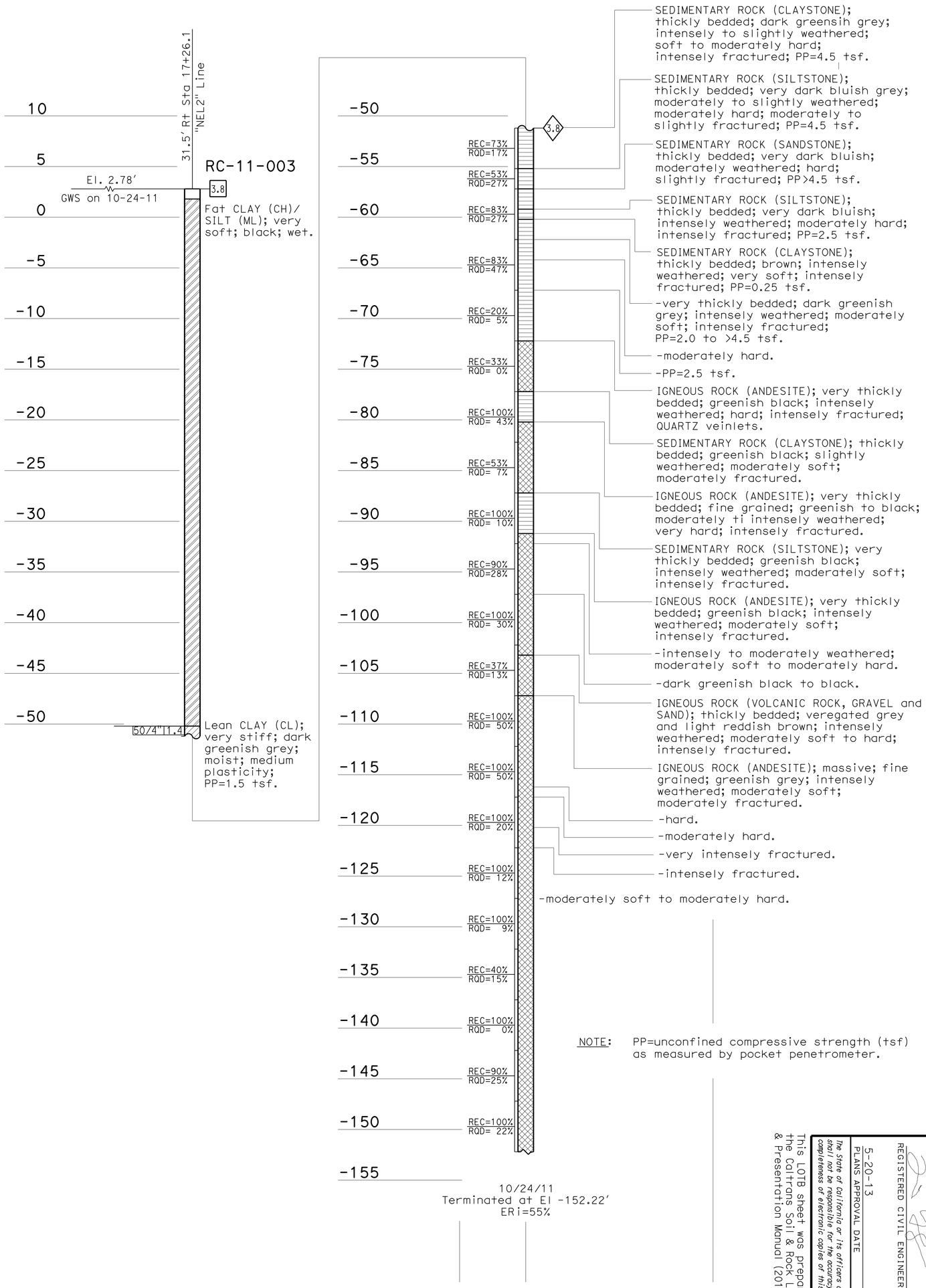

NOTE: PP=unconfined compressive strength (tsf) as measured by pocket penetrometer.

PROFILE
HOR. 1"=20'
VER. 1"= 5'

This LOTB sheet was prepared in accordance with the Caltrans Soil & Rock Logging, Classification, & Presentation Manual (2010 Edition).

REGISTERED CIVIL ENGINEER 05-11-12
Zhaohui Yang No. 71801 Exp. 12-31-13 CIVIL STATE OF CALIFORNIA REGISTERED PROFESSIONAL ENGINEER
5-20-13
PLANS APPROVAL DATE

The state of California or its officers or agents shall not be responsible for the accuracy or completeness of electronic copies of this plan sheet.

DIST	COUNTY	ROUTE	POST MILES TOTAL PROJECT	SHEET NO	TOTAL SHEETS
04	CC	680	22.7/24.8	182	186

ENGINEERING SERVICES
GEOTECHNICAL SERVICES
FUNCTIONAL SUPERVISOR
NAME: H. Nikoui
DRAWN BY: M. Reynolds 09/11
CHECKED BY: R. Karpowicz
FIELD INVESTIGATION BY: S. Awad
ORIGINAL SCALE IN INCHES FOR REDUCED PLANS 0 1 2 3
STATE OF CALIFORNIA DEPARTMENT OF TRANSPORTATION
DIVISION OF ENGINEERING SERVICES OFFICE OF GEOTECHNICAL DESIGN BRANCH
BRIDGE NO. 28-0171
POST MILES 24.26
UNIT: 3660
PROJECT NUMBER & PHASE: 0400000971 CONTRACT NO.: 043A8701
DISREGARD PRINTS BEARING EARLIER REVISION DATES
REVISION DATES 08-08-13
SHEET 34 OF 38

MOCOCO SOUTHBOUND OFF-RAMP
LOG OF TEST BORINGS 3 of 7

FILE => 28-0171s-z-lb03.dgn

USERNAME => s117606 DATE PLOTTED => 24-SEP-2013 TIME PLOTTED => 14:28

(For Boring Location See Plan, LOTB Sheet 1 of 5)

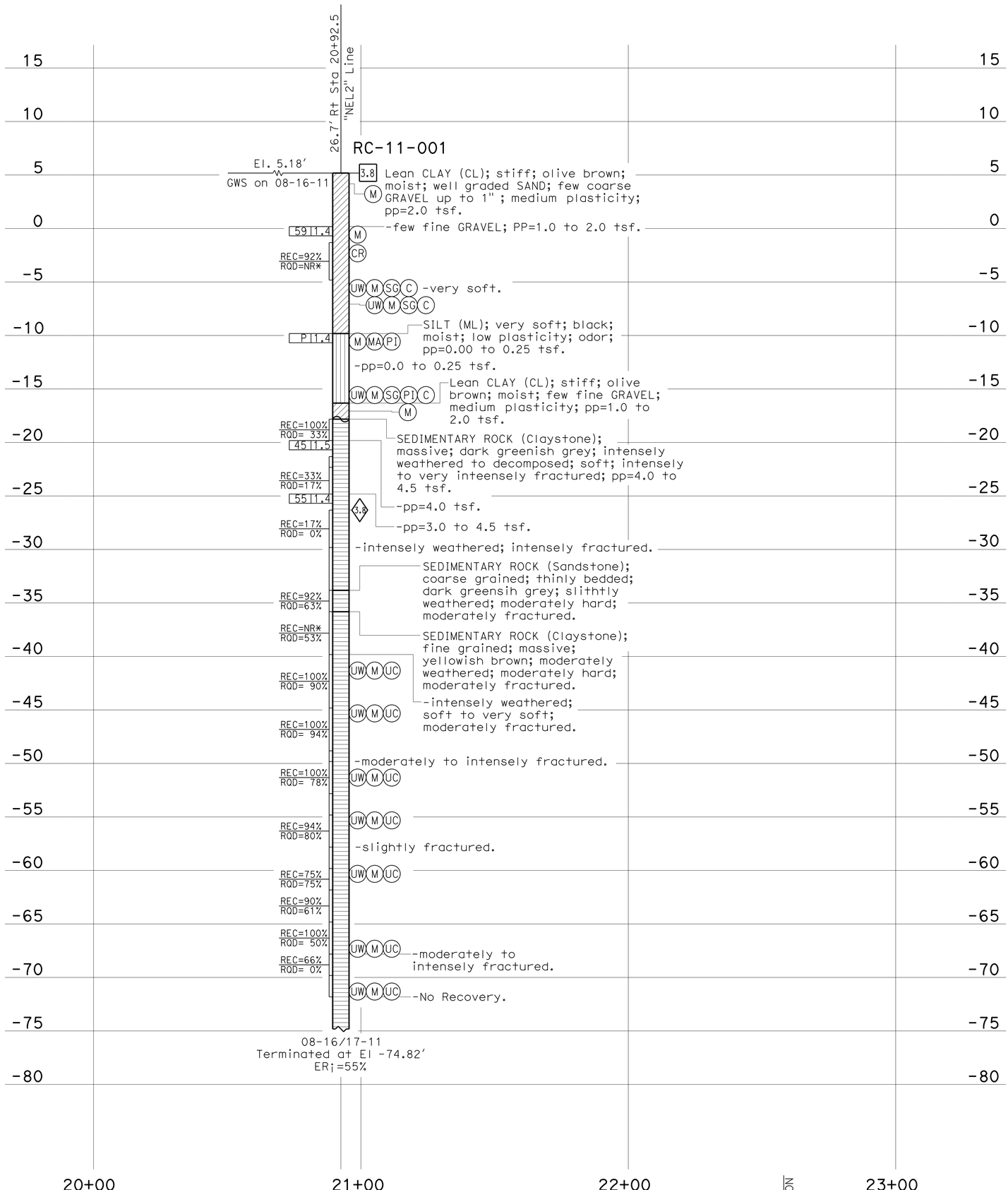

PROFILE
HOR. 1"=20'
VER. 1"= 5'

NOTE: 1. pp = unconfined compressive strength (tsf) as measured by pocket penetrometer.

This LOTB sheet was prepared in accordance with the Caltrans Soil & Rock Logging, Classification, & Presentation Manual (2010 Edition).

REGISTERED CIVIL ENGINEER 05-11-12
Zhaohui Yang No. 71801 Exp. 12-31-13 CIVIL STATE OF CALIFORNIA REGISTERED PROFESSIONAL ENGINEER
5-20-13
PLANS APPROVAL DATE

The state of California or its officers or agents shall not be responsible for the accuracy or completeness of electronic copies of this plan sheet.

DIST	COUNTY	ROUTE	POST MILES TOTAL PROJECT	SHEET NO	TOTAL SHEETS
04	CC	680	22.7/24.8	183	186

ENGINEERING SERVICES
FUNCTIONAL SUPERVISOR
NAME: H. Nikoui
DRAWN BY: M. Reynolds 09/11
CHECKED BY: R. Karpowicz

GEOTECHNICAL SERVICES
FIELD INVESTIGATION BY: S. Awad

ORIGINAL SCALE IN INCHES FOR REDUCED PLANS 0 1 2 3

STATE OF CALIFORNIA
DEPARTMENT OF TRANSPORTATION
DIVISION OF ENGINEERING SERVICES
OFFICE OF GEOTECHNICAL
DESIGN BRANCH

BRIDGE NO. 28-0171S
POST MILES 24.26

MOCOCO SOUTHBOUND OFF-RAMP
LOG OF TEST BORINGS 4 of 7

UNIT: 3660
PROJECT NUMBER & PHASE: 0400000971
CONTRACT NO.: 043A8701

DISREGARD PRINTS BEARING EARLIER REVISION DATES
REVISION DATES 5-14-12

SHEET 35 OF 38

FILE => 28-0171s-z-lb004.dgn

USERNAME => s123631 DATE PLOTTED => 24-SEP-2013 TIME PLOTTED => 13:05

DIST	COUNTY	ROUTE	POST MILES TOTAL PROJECT	SHEET No	TOTAL SHEETS
04	CC	680	22.7/24.8	184	186

REGISTERED CIVIL ENGINEER 05-11-12 DATE

5-20-13
PLANS APPROVAL DATE

REGISTERED PROFESSIONAL ENGINEER Zhaohui Yang No. 71801 Exp. 12-31-13 CIVIL STATE OF CALIFORNIA

The State of California or its officers or agents shall not be responsible for the accuracy or completeness of electronic copies of this plan sheet.

REFERENCE: CALTRANS SOIL & ROCK LOGGING, CLASSIFICATION, AND PRESENTATION MANUAL (2010)

CEMENTATION

Description	Criteria
Weak	Crumbles or breaks with handling or little finger pressure.
Moderate	Crumbles or breaks with considerable finger pressure.
Strong	Will not crumble or break with finger pressure.

BOREHOLE IDENTIFICATION

Symbol	Hole Type	Description
Size	A	Auger Boring (hollow or solid stem bucket)
Size	R RW RC P	Rotary drilled boring (conventional) Rotary drilled with self-casing wire-line Rotary core with continuously-sampled, self-casing wire-line Rotary percussion boring (air)
Size	R	Rotary drilled diamond core
Size	HD HA	Hand driven (1-inch soil tube) Hand Auger
●	D	Dynamic Cone Penetration Boring
▲	CPT	Cone Penetration Test (ASTM D 5778)
⬚	O	Other (note on LOTB)

Note: Size in inches.

CONSISTENCY OF COHESIVE SOILS

Description	Shear Strength (tsf)	Pocket Penetrometer Measurement, PP, (tsf)	Torvane Measurement, TV, (tsf)	Vane Shear Measurement, VS, (tsf)
Very Soft	Less than 0.12	Less than 0.25	Less than 0.12	Less than 0.12
Soft	0.12 - 0.25	0.25 - 0.5	0.12 - 0.25	0.12 - 0.25
Medium Stiff	0.25 - 0.5	0.5 - 1	0.25 - 0.5	0.25 - 0.5
Stiff	0.5 - 1	1 - 2	0.5 - 1	0.5 - 1
Very Stiff	1 - 2	2 - 4	1 - 2	1 - 2
Hard	Greater than 2	Greater than 4	Greater than 2	Greater than 2

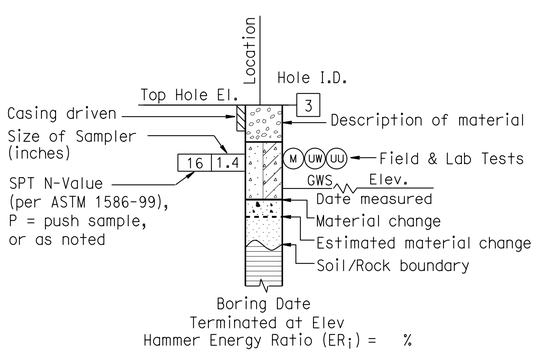

ROTARY BORING

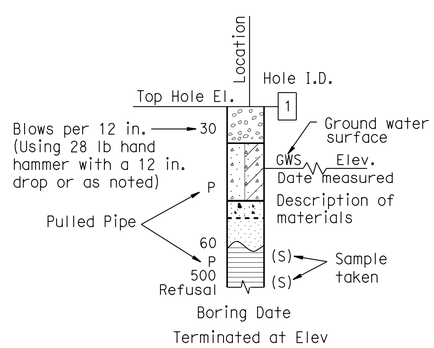

HAND BORING

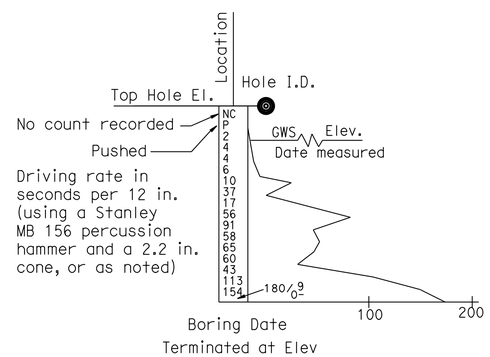

DYNAMIC CONE PENETRATION BORING

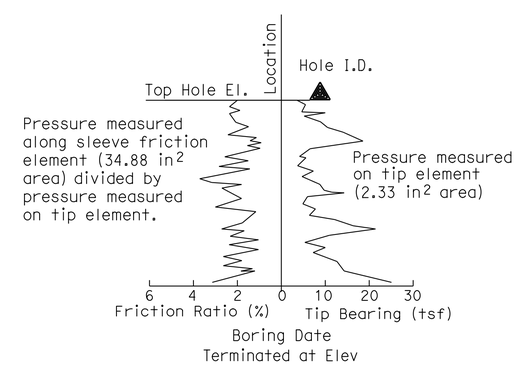

CONE PENETRATION TEST (CPT) BORING

ENGINEERING SERVICES	GEOTECHNICAL SERVICES	STATE OF CALIFORNIA DEPARTMENT OF TRANSPORTATION	DIVISION OF ENGINEERING SERVICES OFFICE OF GEOTECHNICAL DESIGN BRANCH	BRIDGE NO. 28-0171S POST MILE 24.26	MOCOCO SOUTHBOUND OFF-RAMP LOG OF TEST BORINGS 5 of 7
GS LOTB SOIL LEGEND	PREPARED BY: M. Reynolds 09/11	ORIGINAL SCALE IN INCHES FOR REDUCED PLANS 0 1 2 3	UNIT: 3660 PROJECT NUMBER & PHASE: 04000009671 CONTRACT NO.: 043A8701	DISREGARD PRINTS BEARING EARLIER REVISION DATES	REVISION DATES 5-14-12 SHEET 36 OF 38

FILE => 28-0171s-z-ltb05.dgn

USERNAME => s123631 DATE PLOTTED => 24-SEP-2013 TIME PLOTTED => 13:05

REFERENCE: CALTRANS SOIL & ROCK LOGGING, CLASSIFICATION, AND PRESENTATION MANUAL (2010)

DIST	COUNTY	ROUTE	POST MILES TOTAL PROJECT	SHEET No	TOTAL SHEETS
04	CC	680	22.7/24.8	185	186

05-11-12
REGISTERED CIVIL ENGINEER DATE

5-20-13
PLANS APPROVAL DATE

REGISTERED PROFESSIONAL ENGINEER Zhaohui Yang No. 71801 Exp. 12-31-13 CIVIL STATE OF CALIFORNIA

The State of California or its officers or agents shall not be responsible for the accuracy or completeness of electronic copies of this plan sheet.

GROUP SYMBOLS AND NAMES

Graphic/Symbol	Group Names	Graphic/Symbol	Group Names
GW	Well-graded GRAVEL Well-graded GRAVEL with SAND	CL	Lean CLAY Lean CLAY with SAND Lean CLAY with GRAVEL SANDY lean CLAY SANDY lean CLAY with GRAVEL GRAVELLY lean CLAY GRAVELLY lean CLAY with SAND
GP	Poorly-graded GRAVEL Poorly-graded GRAVEL with SAND		
GW-GM	Well-graded GRAVEL with SILT Well-graded GRAVEL with SILT and SAND	CL-ML	SILTY CLAY SILTY CLAY with SAND SILTY CLAY with GRAVEL SANDY SILTY CLAY SANDY SILTY CLAY with GRAVEL GRAVELLY SILTY CLAY GRAVELLY SILTY CLAY with SAND
GW-GC	Well-graded GRAVEL with CLAY (or SILTY CLAY) Well-graded GRAVEL with CLAY and SAND (or SILTY CLAY and SAND)		
GP-GM	Poorly-graded GRAVEL with SILT Poorly-graded GRAVEL with SILT and SAND	ML	SILT SILT with SAND SILT with GRAVEL SANDY SILT SANDY SILT with GRAVEL GRAVELLY SILT GRAVELLY SILT with SAND
GP-GC	Poorly-graded GRAVEL with CLAY (or SILTY CLAY) Poorly-graded GRAVEL with CLAY and SAND (or SILTY CLAY and SAND)		
GM	SILTY GRAVEL SILTY GRAVEL with SAND	OL	ORGANIC lean CLAY ORGANIC lean CLAY with SAND ORGANIC lean CLAY with GRAVEL SANDY ORGANIC lean CLAY SANDY ORGANIC lean CLAY with GRAVEL GRAVELLY ORGANIC lean CLAY GRAVELLY ORGANIC lean CLAY with SAND
GC	CLAYEY GRAVEL CLAYEY GRAVEL with SAND		
GC-GM	SILTY, CLAYEY GRAVEL SILTY, CLAYEY GRAVEL with SAND	OL	ORGANIC SILT ORGANIC SILT with SAND ORGANIC SILT with GRAVEL SANDY ORGANIC SILT SANDY ORGANIC SILT with GRAVEL GRAVELLY ORGANIC SILT GRAVELLY ORGANIC SILT with SAND
SW	Well-graded SAND Well-graded SAND with GRAVEL		
SP	Poorly-graded SAND Poorly-graded SAND with GRAVEL	CH	Fat CLAY Fat CLAY with SAND Fat CLAY with GRAVEL SANDY fat CLAY SANDY fat CLAY with GRAVEL GRAVELLY fat CLAY GRAVELLY fat CLAY with SAND
SW-SM	Well-graded SAND with SILT Well-graded SAND with SILT and GRAVEL		
SW-SC	Well-graded SAND with CLAY (or SILTY CLAY) Well-graded SAND with CLAY and GRAVEL (or SILTY CLAY and GRAVEL)	MH	Elastic SILT Elastic SILT with SAND Elastic SILT with GRAVEL SANDY elastic SILT SANDY elastic SILT with GRAVEL GRAVELLY elastic SILT GRAVELLY elastic SILT with SAND
SP-SM	Poorly-graded SAND with SILT Poorly-graded SAND with SILT and GRAVEL		
SP-SC	Poorly-graded SAND with CLAY (or SILTY CLAY) Poorly-graded SAND with CLAY and GRAVEL (or SILTY CLAY and GRAVEL)	OH	ORGANIC fat CLAY ORGANIC fat CLAY with SAND ORGANIC fat CLAY with GRAVEL SANDY ORGANIC fat CLAY SANDY ORGANIC fat CLAY with GRAVEL GRAVELLY ORGANIC fat CLAY GRAVELLY ORGANIC fat CLAY with SAND
SM	SILTY SAND SILTY SAND with GRAVEL		
SC	CLAYEY SAND CLAYEY SAND with GRAVEL	OH	ORGANIC elastic SILT ORGANIC elastic SILT with SAND ORGANIC elastic SILT with GRAVEL SANDY ORGANIC elastic SILT SANDY ORGANIC elastic SILT with GRAVEL GRAVELLY ORGANIC elastic SILT GRAVELLY ORGANIC elastic SILT with SAND
SC-SM	SILTY, CLAYEY SAND SILTY, CLAYEY SAND with GRAVEL		
PT	PEAT	OL/OH	ORGANIC SOIL ORGANIC SOIL with SAND ORGANIC SOIL with GRAVEL SANDY ORGANIC SOIL SANDY ORGANIC SOIL with GRAVEL GRAVELLY ORGANIC SOIL GRAVELLY ORGANIC SOIL with SAND
	COBBLES COBBLES and BOULDERS BOULDERS		

FIELD AND LABORATORY TESTING

- (C) Consolidation (ASTM D 2435)
- (CL) Collapse Potential (ASTM D 5333)
- (CP) Compaction Curve (CTM 216)
- (CR) Corrosivity Testing (CTM 643, CTM 422, CTM 417)
- (CU) Consolidated Undrained Triaxial (ASTM D 4767)
- (DS) Direct Shear (ASTM D 3080)
- (EI) Expansion Index (ASTM D 4829)
- (M) Moisture Content (ASTM D 2216)
- (OC) Organic Content-% (ASTM D 2974)
- (P) Permeability (CTM 220)
- (PA) Particle Size Analysis (ASTM D 422)
- (PI) Plasticity Index (AASHTO T 90) Liquid Limit (AASHTO T 89)
- (PL) Point Load Index (ASTM D 5731)
- (PM) Pressure Meter
- (R) R-Value (CTM 301)
- (SE) Sand Equivalent (CTM 217)
- (SG) Specific Gravity (AASHTO T 100)
- (SL) Shrinkage Limit (ASTM D 427)
- (SW) Swell Potential (ASTM D 4546)
- (UC) Unconfined Compression-Soil (ASTM D 2166) Unconfined Compression-Rock (ASTM D 2938)
- (UU) Unconsolidated Undrained Triaxial (ASTM D 2850)
- (UW) Unit Weight (ASTM D 4767)

APPARENT DENSITY OF COHESIONLESS SOILS

Description	SPT N_{60} (Blows / 12 in.)
Very Loose	0 - 5
Loose	5 - 10
Medium Dense	10 - 30
Dense	30 - 50
Very Dense	Greater than 50

MOISTURE

Description	Criteria
Dry	No discernable moisture
Moist	Moisture present, but no free water
Wet	Visible free water

PERCENT OR PROPORTION OF SOILS

Description	Criteria
Trace	Particles are present but estimated to be less than 5%
Few	5% - 10%
Little	15% - 25%
Some	30% - 45%
Mostly	50% - 100%

PARTICLE SIZE

Description		Size (in.)
Boulder		Greater than 12
Cobble		3 - 12
Gravel	Coarse	3/4 - 3
	Fine	1/5 - 3/4
Sand	Coarse	1/16 - 1/5
	Medium	1/64 - 1/16
	Fine	1/300 - 1/64
Silt and Clay		Less than 1/300

ENGINEERING SERVICES

GEOTECHNICAL SERVICES
PREPARED BY: M. Reynolds 09/11

STATE OF CALIFORNIA
DEPARTMENT OF TRANSPORTATION

DIVISION OF ENGINEERING SERVICES
OFFICE OF GEOTECHNICAL
DESIGN BRANCH

BRIDGE NO. 28-0171S
POST MILE 24.26

MOCOCO SOUTHBOUND OFF-RAMP
LOG OF TEST BORINGS 6 of 7

GS LOTB SOIL LEGEND

ORIGINAL SCALE IN INCHES FOR REDUCED PLANS 0 1 2 3

UNIT: 3660
PROJECT NUMBER & PHASE: 04000009671
CONTRACT NO.: 043A8701

DISREGARD PRINTS BEARING EARLIER REVISION DATES

REVISION DATES 5-14-12

SHEET 37 OF 38

FILE => 28-0171s-z-ltb06.dgn

USERNAME => s123631 DATE PLOTTED => 24-SEP-2013 TIME PLOTTED => 13:05

DIST	COUNTY	ROUTE	POST MILES TOTAL PROJECT	SHEET No	TOTAL SHEETS
04	CC	680	22.7/24.8	186	186

REGISTERED CIVIL ENGINEER 05-11-12 DATE

5-20-13
PLANS APPROVAL DATE

REGISTERED PROFESSIONAL ENGINEER Zhaohui Yang No. 71801 Exp. 12-31-13 CIVIL STATE OF CALIFORNIA

The State of California or its officers or agents shall not be responsible for the accuracy or completeness of electronic copies of this plan sheet.

REFERENCE: CALTRANS SOIL & ROCK LOGGING, CLASSIFICATION, AND PRESENTATION MANUAL (2010)

PERCENT CORE RECOVERY (REC) & ROCK QUALITY DESIGNATION (RQD)

$$REC = \frac{\sum \text{Length of the recovered core pieces (in.)}}{\text{Total length of core run (in.)}} \times 100\%$$

$$RQD = \frac{\sum \text{Length of intact core pieces} \geq 4 \text{ in.}}{\text{Total length of core run (in.)}} \times 100\%$$

RQD* Indicates soundness criteria not met.

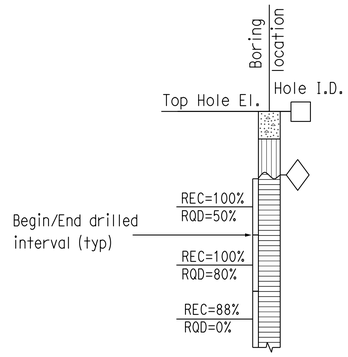

BEDDING SPACING

Description	Thickness / Spacing
Massive	Greater than 10 ft
Very Thickly Bedded	3 ft - 10 ft
Thickly Bedded	1 ft - 3 ft
Moderately Bedded	4 in. - 1 ft
Thinly Bedded	1 in. - 4 in.
Very Thinly Bedded	1/4 in. - 1 in.
Laminated	Less than 1/4 in.

LEGEND OF ROCK MATERIALS

- IGNEOUS ROCK
- SEDIMENTARY ROCK
- METAMORPHIC ROCK

ROCK HARDNESS

Description	Criteria
Extremely Hard	Cannot be scratched with a pocketknife or sharp pick. Can only be chipped with repeated heavy hammer blows.
Very Hard	Cannot be scratched with a pocketknife or sharp pick. Breaks with repeated heavy hammer blows.
Hard	Can be scratched with a pocketknife or sharp pick with difficulty (heavy pressure). Breaks with heavy hammer blows.
Moderately Hard	Can be scratched with pocketknife or sharp pick with light or moderate pressure. Breaks with moderate hammer blows.
Moderately Soft	Can be grooved 1/16 in. deep with a pocketknife or sharp pick with moderate or heavy pressure. Breaks with light hammer blow or heavy manual pressure.
Soft	Can be grooved or gouged easily by a pocketknife or sharp pick with light pressure, can be scratched with fingernail. Breaks with light to moderate manual pressure.
Very Soft	Can be readily indented, grooved or gouged with fingernail, or carved with a pocketknife. Breaks with light manual pressure.

FRACTURE DENSITY

Description	Observed Fracture Density
Unfractured	No fractures.
Very Slightly Fractured	Core lengths greater than 3 ft.
Slightly Fractured	Core lengths mostly from 1 to 3 ft.
Moderately Fractured	Core lengths mostly from 4 in. to 1 ft.
Intensely Fractured	Core lengths mostly from 1 to 4 in.
Very Intensely Fractured	Mostly chips and fragments.

WEATHERING DESCRIPTORS FOR INTACT ROCK

Description	Diagnostic Features					General Characteristics
	Chemical Weathering-Discoloration and/or Oxidation		Mechanical Weathering-Grain Boundary Conditions (Disaggregation) Primarily for Granitics and Some Coarse-Grained Sediments	Texture and Leaching		
	Body of Rock	Fracture Surfaces		Texture	Leaching	
Fresh	No discoloration, not oxidized.	No discoloration or oxidation.	No separation, intact (tight).	No change	No leaching	Hammer rings when crystalline rocks are struck.
Slightly Weathered	Discoloration or oxidation is limited to surface of, or short distance from, fractures; some feldspar crystals are dull.	Minor to complete discoloration or oxidation of most surfaces.	No visible separation, intact (tight).	Preserved	Minor leaching of some soluble minerals.	Hammer rings when crystalline rocks are struck. Body of rock not weakened.
Moderately Weathered	Discoloration or oxidation extends from fractures usually throughout; Fe-Mg minerals are "rusty," feldspar crystals are "cloudy."	All fracture surfaces are discolored or oxidized.	Partial separation of boundaries visible.	Generally preserved	Soluble minerals may be mostly leached.	Hammer does not ring when rock is struck. Body of rock is slightly weakened.
Intensely Weathered	Discoloration or oxidation throughout; all feldspars and Fe-Mg minerals are altered to clay to some extent; or chemical alteration produces in-situ disaggregation, see grain boundary conditions.	All fracture surfaces are discolored or oxidized, surfaces friable.	Partial separation, rock is friable; in semiarid conditions granitics are disaggregated.	Texture altered by chemical disintegration (hydration, argillation).	Leaching of soluble minerals may be complete.	Dull sound when struck with hammer, usually can be broken with moderate to heavy manual pressure or by light hammer blow without reference to planes of weakness such as incipient or hairline fractures, or veinlets. Rock is significantly weakened.
Decomposed	Discolored or oxidized throughout, but resistant minerals such as quartz may be unaltered; all feldspars and Fe-Mg minerals are completely altered to clay.		Complete separation of grain boundaries (disaggregated).	Resembles a soil, partial or complete remnant rock structure may be preserved; leaching of soluble minerals usually complete.		Can be granulated by hand. Resistant minerals such as quartz may be present as "stringers" or "dikes."

ENGINEERING SERVICES

GEOTECHNICAL SERVICES
PREPARED BY: M. Reynolds 09/11

STATE OF CALIFORNIA DEPARTMENT OF TRANSPORTATION

DIVISION OF ENGINEERING SERVICES OFFICE OF GEOTECHNICAL DESIGN BRANCH

BRIDGE NO. 28-0171S
POST MILE 24.26

MOCOCO SOUTHBOUND OFF-RAMP
LOG OF TEST BORINGS 7 of 7

GS LOTB SOIL LEGEND

ORIGINAL SCALE IN INCHES FOR REDUCED PLANS 0 1 2 3

UNIT: 3660
PROJECT NUMBER & PHASE: 04000009671 CONTRACT NO.: 043A8701

DISREGARD PRINTS BEARING EARLIER REVISION DATES 5-14-12

REVISION DATES | SHEET 38 | OF 38

FILE => 28-0171s-z-ltb07.dgn

USERNAME => s123631 DATE PLOTTED => 24-SEP-2013 TIME PLOTTED => 13:05