| Dist | COUNTY | ROUTE | KILOMETER POST TOTAL PROJECT | SHEET No. | TOTAL SHEETS |
|---|---|---|---|---|---|
| 04 | Ala, CC | 24 | 8.2/10.0, 0.0/2.7 | 9 | 1435 |

REGISTERED CIVIL ENGINEER 7-17-08 DATE

1-5-09
PLANS APPROVAL DATE

REGISTERED PROFESSIONAL ENGINEER Dennis B. Ocampo No. 53523 Exp. 6-30-09 CIVIL STATE OF CALIFORNIA

*THE STATE OF CALIFORNIA OR ITS OFFICERS OR AGENTS SHALL NOT BE RESPONSIBLE FOR THE ACCURACY OR COMPLETENESS OF ELECTRONIC COPIES OF THIS PLAN SHEET.*

Caltrans Metric

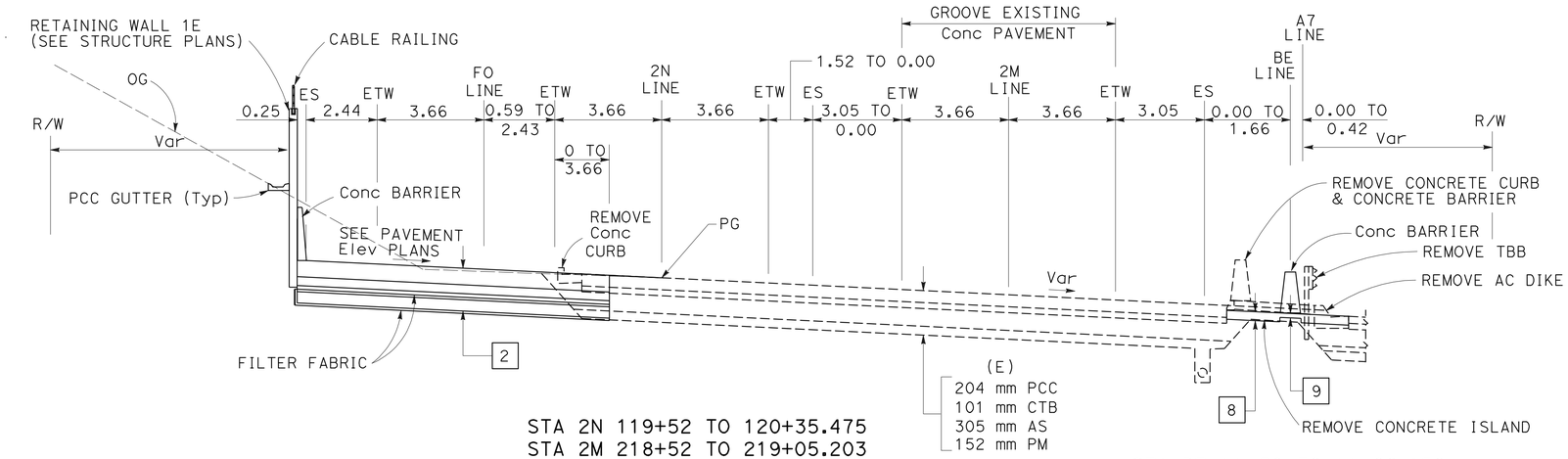


STA 2N 119+52 TO 120+35.475
STA 2M 218+52 TO 219+05.203
STA FO 1+28 TO 2+20

STA BE 11+50 TO 11+92.152
STA A7 47+05.624 TO 47+55.587

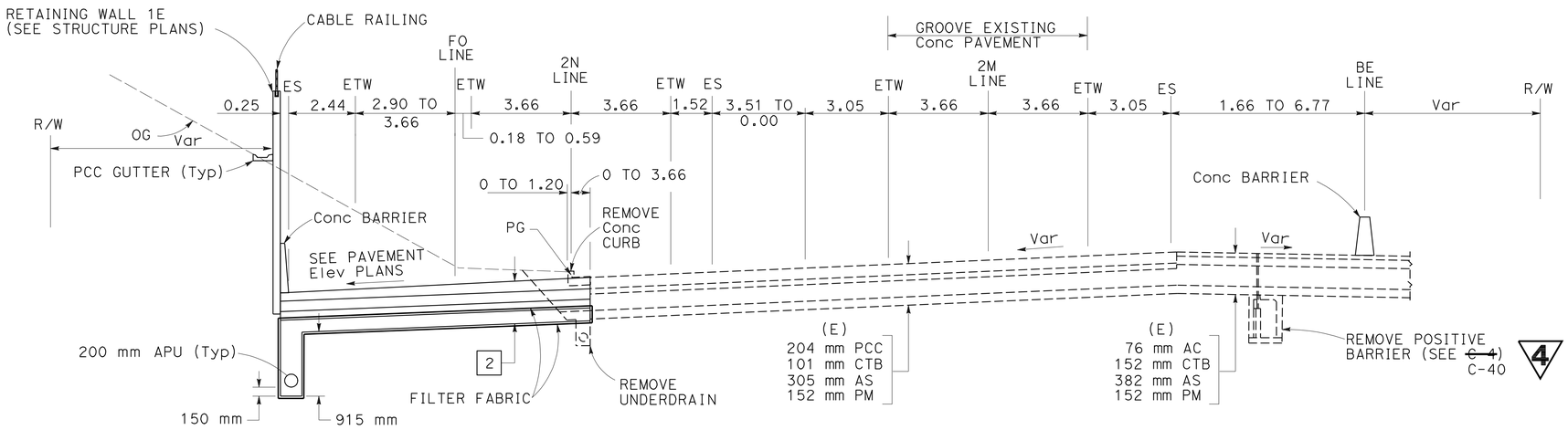


STA 2N 119+31 TO 119+52
STA 2M 218+31 TO 218+52
STA FO 1+07 TO 1+28

STA BE 11+28 TO 11+50

4 **REVISED PER ADDENDUM No. 4 DATED SEPTEMBER 3, 2009**

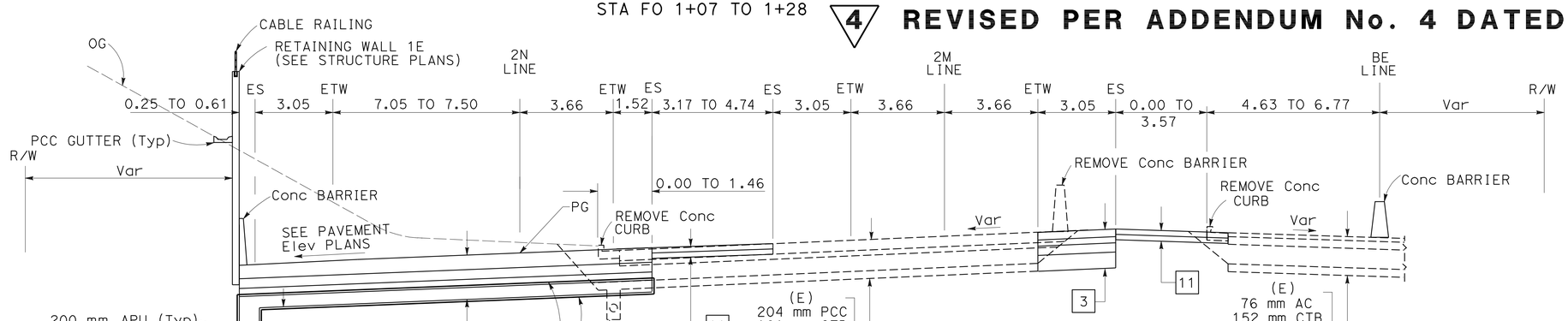


STA 2N 119+15 TO 119+31
STA 2M 218+15 TO 218+31

STA BE 11+20 TO 11+28

FOR NOTES, ABBREVIATIONS &/OR LEGEND, SEE SHEET X-1

ALL DIMENSIONS ARE IN METERS UNLESS OTHERWISE SHOWN

# TYPICAL CROSS SECTIONS

NO SCALE

X-8

STATE OF CALIFORNIA - DEPARTMENT OF TRANSPORTATION
Caltrans DESIGN

FUNCTIONAL SUPERVISOR: VINCE BONNER
CALCULATED-DESIGNED BY: JAY FONG
CHECKED BY: DENNIS OCAMPO
REVISED BY / DATE REVISED

LAST REVISION 05-14-08
DATE PLOTTED => 01-SEP-2009
TIME PLOTTED => 10:50

| Dist | COUNTY | ROUTE | KILOMETER POST TOTAL PROJECT | SHEET No. | TOTAL SHEETS |
|---|---|---|---|---|---|
| 04 | Ala, CC | 24 | 8.2/10.0, 0.0/2.7 | 12 | 1435 |

Caltrans Metric

7-17-08
REGISTERED CIVIL ENGINEER DATE

1-5-09
PLANS APPROVAL DATE

REGISTERED PROFESSIONAL ENGINEER Dennis B. Ocampo No. 53523 Exp. 6-30-09 CIVIL STATE OF CALIFORNIA

*THE STATE OF CALIFORNIA OR ITS OFFICERS OR AGENTS SHALL NOT BE RESPONSIBLE FOR THE ACCURACY OR COMPLETENESS OF ELECTRONIC COPIES OF THIS PLAN SHEET.*

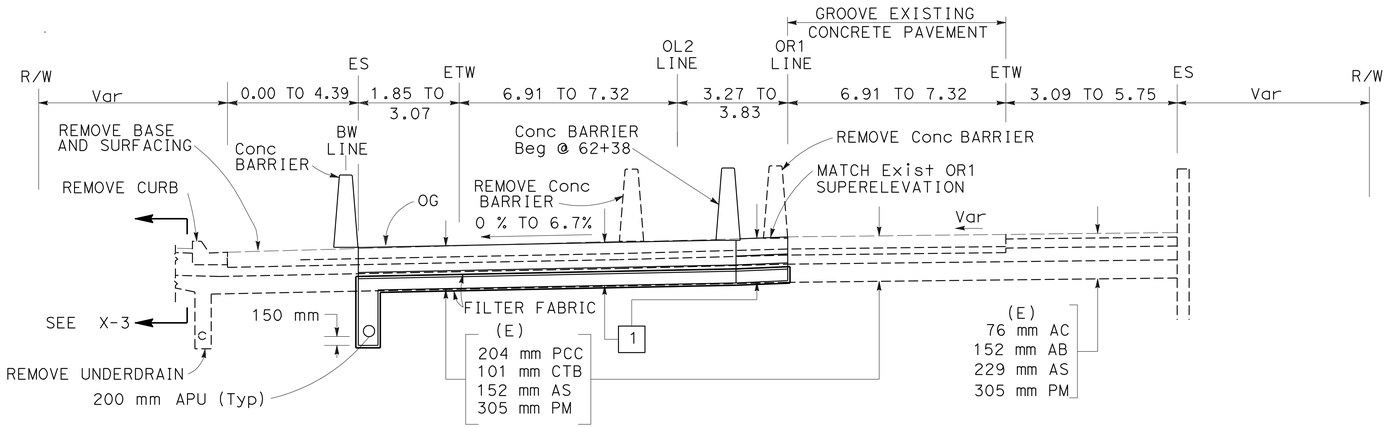


STA BW 71+05 TO 71+87

STA OL2 62+15 TO 62+95
STA OR1 62+15 TO 62+95

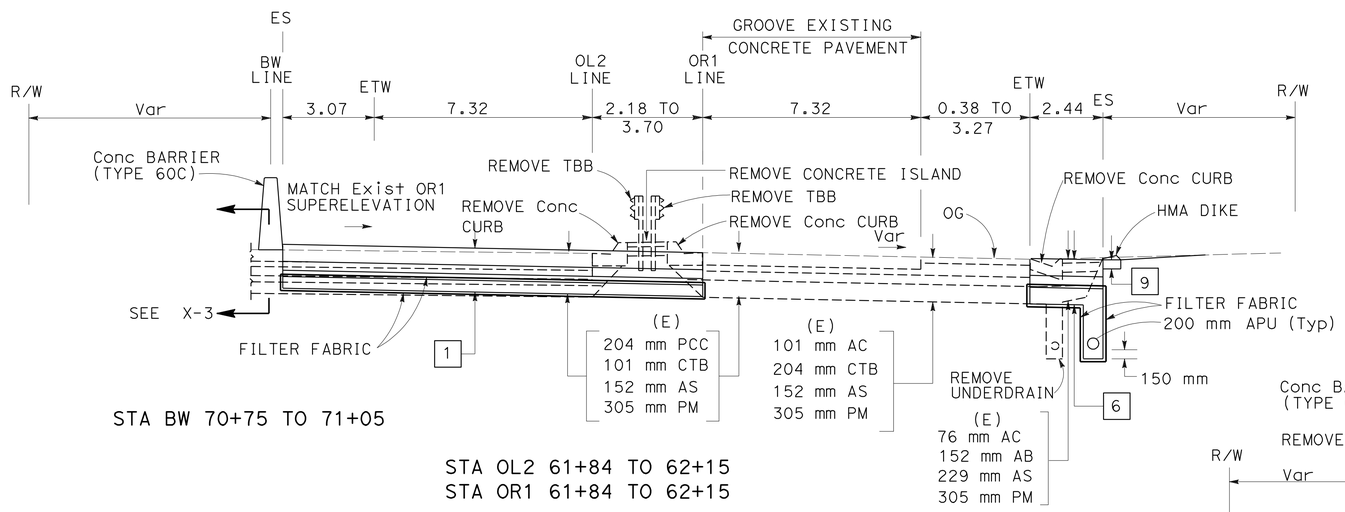


STA BW 70+75 TO 71+05

STA OL2 61+84 TO 62+15
STA OR1 61+84 TO 62+15

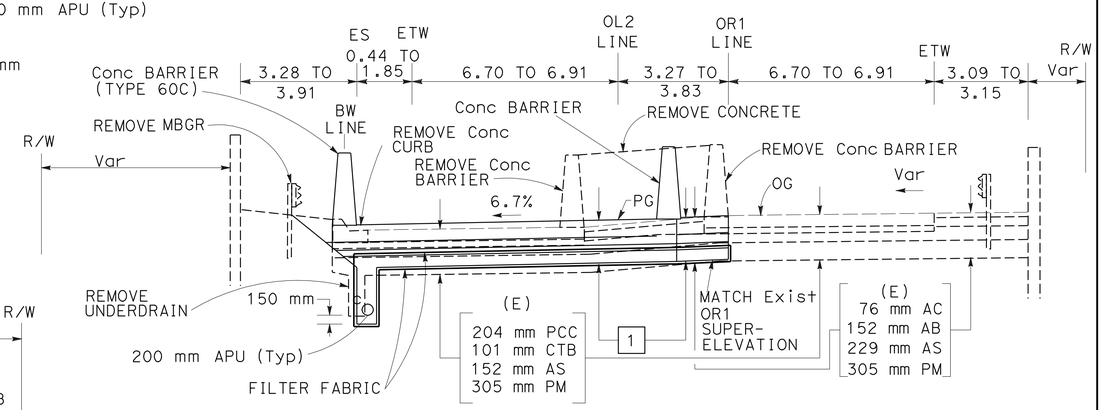


STA BW 71+87 TO 72+42.788

STA OL2 62+95 TO 63+52.69
STA OR1 62+95 TO 63+52.69

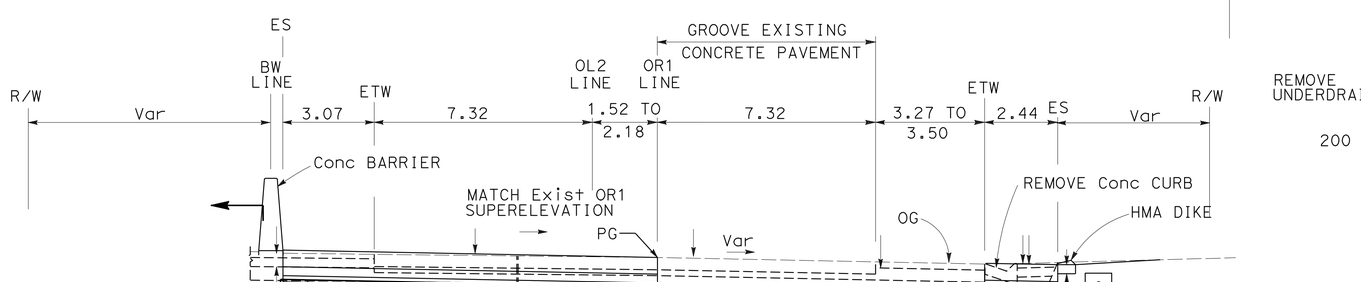


STA BW 70+60 TO 70+75

STA OL2 61+70 TO 61+84
STA OR1 61+70 TO 61+84

FOR NOTES, ABBREVIATIONS &/OR LEGEND, SEE SHEET X-1

4 **REVISED PER ADDENDUM No. 4 DATED SEPTEMBER 3, 2009**

# TYPICAL CROSS SECTIONS

NO SCALE

ALL DIMENSIONS ARE IN METERS UNLESS OTHERWISE SHOWN

**X-11**

| REVISED BY | DATE REVISED |
|---|---|
| | |

| CALCULATED-DESIGNED BY | CHECKED BY |
|---|---|
| JAY FONG | DENNIS OCAMPO |

FUNCTIONAL SUPERVISOR: VINCE BONNER

STATE OF CALIFORNIA - DEPARTMENT OF TRANSPORTATION
Caltrans DESIGN

LAST REVISION 07-23-08 | DATE PLOTTED => 01-SEP-2009 | TIME PLOTTED => 10:51

| Dist | COUNTY | ROUTE | KILOMETER POST TOTAL PROJECT | SHEET No. | TOTAL SHEETS |
|---|---|---|---|---|---|
| 04 | Ala,CC | 24 | 8.2/10.0, 0.0/2.7 | 19 | 1435 |

REGISTERED CIVIL ENGINEER 7-17-08 DATE

1-5-09
PLANS APPROVAL DATE

REGISTERED PROFESSIONAL ENGINEER Dennis B. Ocampo No. 53523 Exp. 6-30-09 CIVIL STATE OF CALIFORNIA

*THE STATE OF CALIFORNIA OR ITS OFFICERS OR AGENTS SHALL NOT BE RESPONSIBLE FOR THE ACCURACY OR COMPLETENESS OF ELECTRONIC COPIES OF THIS PLAN SHEET.*

Caltrans Metric

FOR COMPLETE RIGHT OF WAY AND ACCURATE ACCESS DATA, SEE RIGHT OF WAY RECORD MAPS AT DISTRICT OFFICE.

## CURVE DATA

| ALIGNMENT | No. | R | Δ | T | L | N | E |
|---|---|---|---|---|---|---|---|
| BW | 25 | 259.692 | 7° 06′ 31.9″ | 16.131 | 32.221 | 651727.1395 | 1848854.1711 |
| OR1 | 26 | 339.842 | 15° 36′ 14.0″ | 46.564 | 92.552 | 651691.8680 | 1848674.7562 |
| OR1 | 27 | 685.795 | 8° 38′ 30.0″ | 51.816 | 103.435 | 651715.8457 | 1848855.4026 |
| | 28 | 34.136 | 15° 51′ 39″ | 4.755 | 9.450 | 651583.8830 | 1848591.7070 |
| | 29 | 9.000 | 117° 29′ 33″ | 14.830 | 18.456 | 651576.9462 | 1848573.3915 |
| | 30 | 63.145 | 46° 56′ 08″ | 27.414 | 51.727 | 651618.8971 | 1848578.3570 |
| | 31 | 328.017 | 08° 28′ 31″ | 24.305 | 48.521 | 651649.5256 | 1848620.0312 |
| | 58 | 414.418 | 22° 02′ 37″ | 80.719 | 159.441 | 651699.8139 | 1848583.4366 |
| 2N | 59 | 365.281 | 46° 19′ 42.7″ | 156.290 | 295.361 | 651622.2852 | 1848466.8849 |
| OT | 61 | 152.400 | 19° 27′ 39.2″ | 26.134 | 51.764 | 651738.0142 | 1848599.8966 |

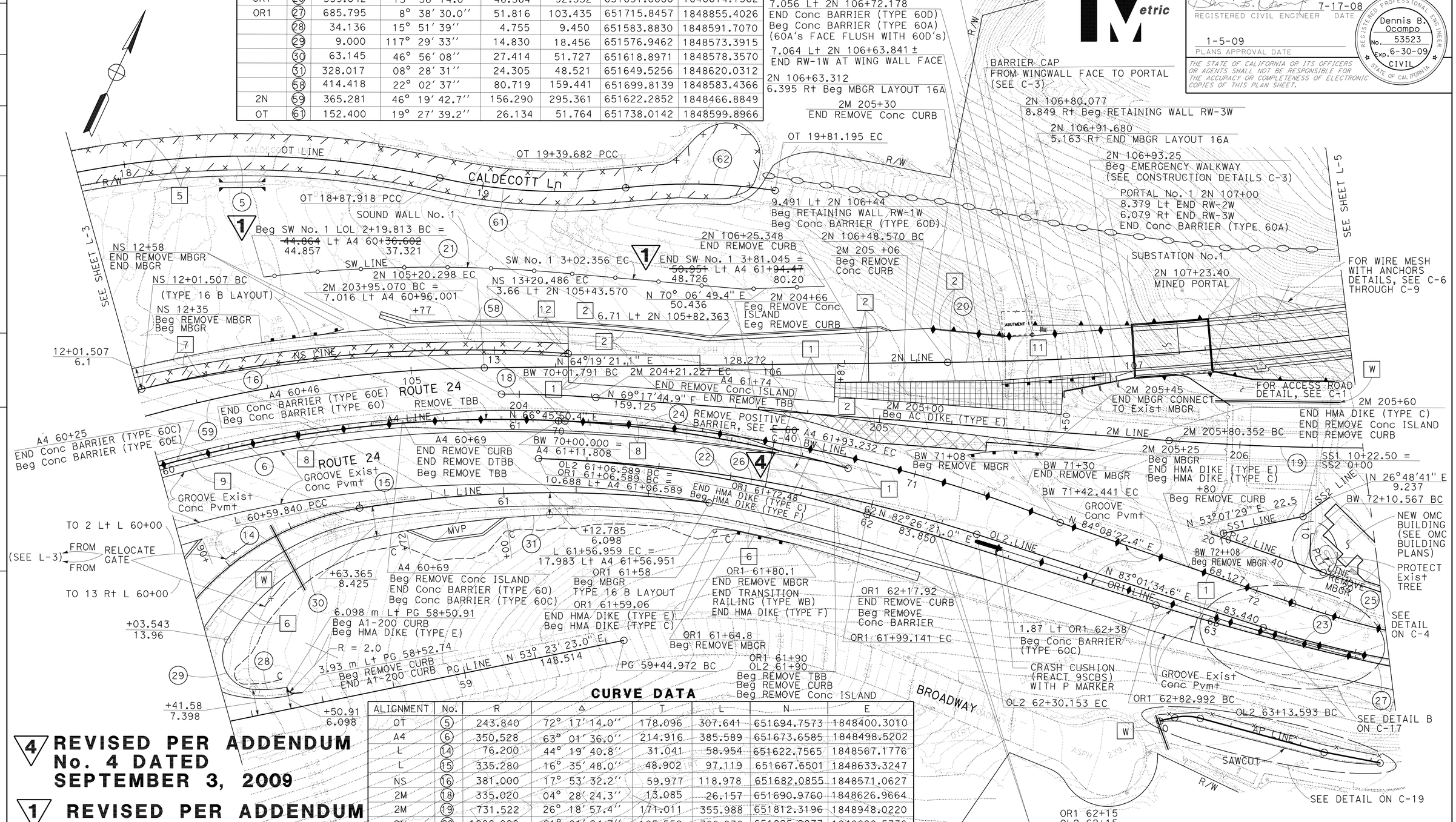


## CURVE DATA

| ALIGNMENT | No. | R | Δ | T | L | N | E |
|---|---|---|---|---|---|---|---|
| OT | 5 | 243.840 | 72° 17′ 14.0″ | 178.096 | 307.641 | 651694.7573 | 1848400.3010 |
| A4 | 6 | 350.528 | 63° 01′ 36.0″ | 214.916 | 385.589 | 651673.6585 | 1848498.5202 |
| L | 14 | 76.200 | 44° 19′ 40.8″ | 31.041 | 58.954 | 651622.7565 | 1848567.1776 |
| L | 15 | 335.280 | 16° 35′ 48.0″ | 48.902 | 97.119 | 651667.6501 | 1848633.3247 |
| NS | 16 | 381.000 | 17° 53′ 32.2″ | 59.977 | 118.978 | 651682.0855 | 1848571.0627 |
| 2M | 18 | 335.020 | 04° 28′ 24.3″ | 13.085 | 26.157 | 651690.9760 | 1848626.9664 |
| 2M | 19 | 731.522 | 26° 18′ 57.4″ | 171.011 | 355.988 | 651812.3196 | 1848948.0220 |
| 2N | 20 | 1000.000 | 21° 01′ 24.7″ | 185.552 | 366.930 | 651825.9877 | 1848890.5736 |
| SW | 21 | 400.000 | 11° 49′ 24.6″ | 41.419 | 82.544 | 651708.7513 | 1848576.9993 |
| OL2 | 22 | 430.726 | 16° 26′ 12.0″ | 62.209 | 123.564 | 651698.2673 | 1848689.0342 |
| OL2 | 23 | 260.000 | 8° 36′ 56.6″ | 19.585 | 39.097 | 651718.3292 | 1848853.0465 |
| BW | 24 | 409.999 | 19° 39′ 18.9″ | 71.023 | 140.650 | 651714.1014 | 1848699.4693 |
| OT | 62 | 153.010 | 15° 32′ 42.0″ | 20.885 | 41.513 | 651762.7135 | 1848639.9052 |

**4 REVISED PER ADDENDUM No. 4 DATED SEPTEMBER 3, 2009**

**1 REVISED PER ADDENDUM No. 1 DATED JUNE 17, 2009**

ALL DIMENSIONS ARE IN METERS UNLESS OTHERWISE SHOWN

# LAYOUT

SCALE 1:500

FOR NOTES, ABBREVIATIONS &/OR LEGEND, SEE SHEET L-1

L-4

STATE OF CALIFORNIA - DEPARTMENT OF TRANSPORTATION
Caltrans DESIGN

FUNCTIONAL SUPERVISOR: VINCE BONNER
CALCULATED-DESIGNED BY: PAUL J ENGSTROM
CHECKED BY: JAY FONG
REVISED BY / DATE REVISED

LAST REVISION 09-05-08
DATE PLOTTED => 01-SEP-2009
TIME PLOTTED => 10:51

FOR COMPLETE RIGHT OF WAY AND ACCURATE ACCESS DATA, SEE RIGHT OF WAY RECORD MAPS AT DISTRICT OFFICE.

## CURVE DATA

| ALIGNMENT | No. | R | Δ | T | L | N | E |
|---|---|---|---|---|---|---|---|
| 2M | 32 | 731.521 | 29° 35′ 09.9″ | 193.181 | 377.739 | 652466.8290 | 1849557.9319 |
| 2N | 33 | 730.000 | 24° 54′ 46.2″ | 161.255 | 317.412 | 652514.1493 | 1849539.6074 |
| FO | 34 | 61.358 | 59° 10′ 28.1″ | 34.838 | 63.370 | 652497.3700 | 1849436.2353 |
| EP | 35 | 360.003 | 03° 34′ 08.2″ | 11.216 | 22.425 | 652541.3563 | 1849607.5827 |
| EP | 36 | 999.450 | 01° 44′ 50.4″ | 9.533 | 19.066 | 652562.0180 | 1849609.4863 |
| EP | 37 | 379.998 | 17° 01′ 52.6″ | 56.897 | 112.955 | 652738.6037 | 1849629.1566 |
| FR | 38 | 91.442 | 37° 57′ 44.0″ | 31.452 | 60.586 | 652640.3800 | 1849650.2671 |
| FR | 39 | 60.961 | 61° 02′ 09.0″ | 35.935 | 64.941 | 652685.3637 | 1849700.4417 |

Caltrans Metric

| Dist | COUNTY | ROUTE | KILOMETER POST TOTAL PROJECT | SHEET No. | TOTAL SHEETS |
|---|---|---|---|---|---|
| 04 | Ala, CC | 24 | 8.2/10.0, 0.0/2.7 | 23 | 1435 |

REGISTERED CIVIL ENGINEER 7-17-08 DATE

1-5-09
PLANS APPROVAL DATE

REGISTERED PROFESSIONAL ENGINEER Dennis B. Ocampo No. 53523 Exp. 6-30-09 CIVIL STATE OF CALIFORNIA

*THE STATE OF CALIFORNIA OR ITS OFFICERS OR AGENTS SHALL NOT BE RESPONSIBLE FOR THE ACCURACY OR COMPLETENESS OF ELECTRONIC COPIES OF THIS PLAN SHEET.*

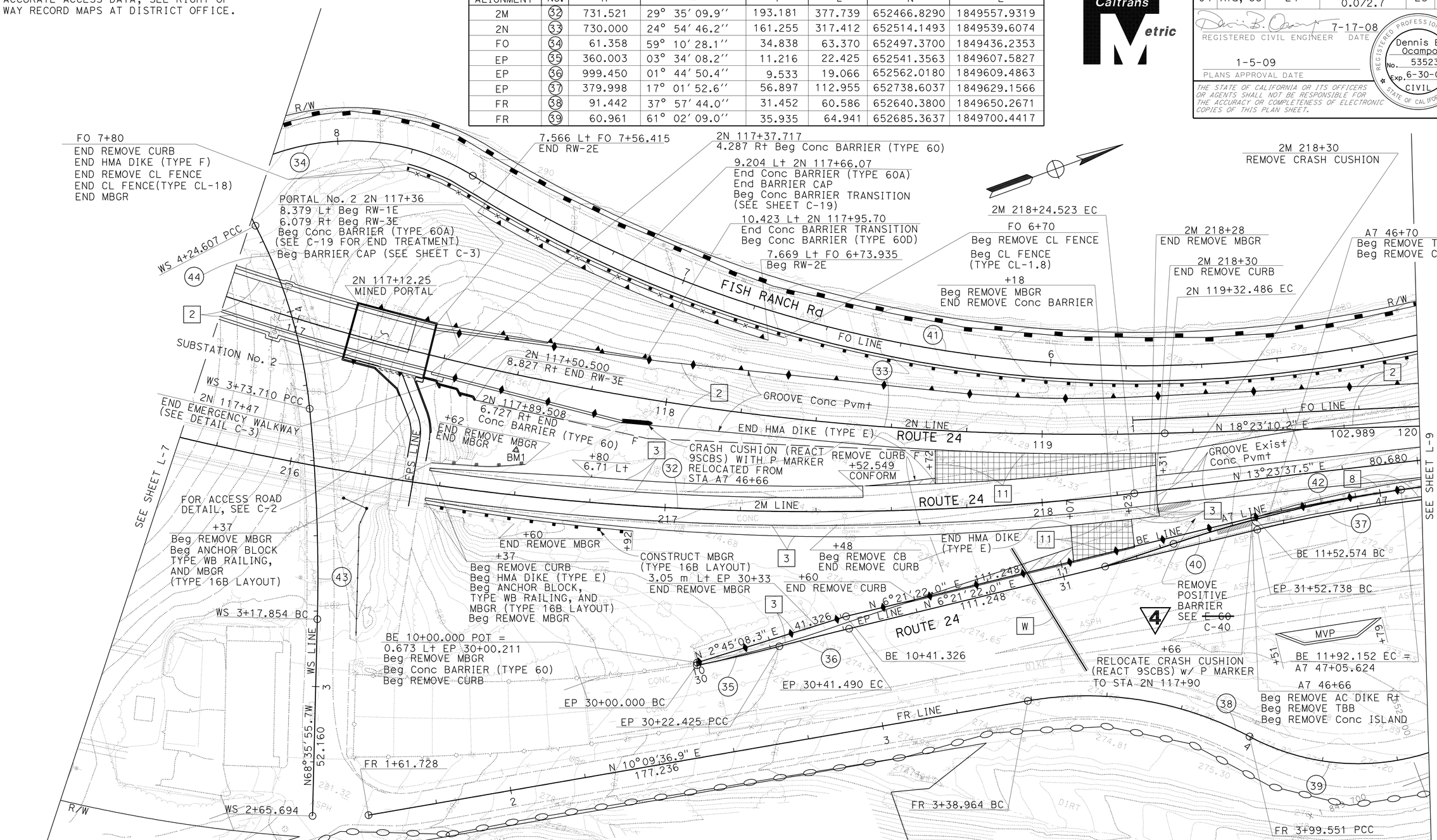


## CURVE DATA

| ALIGNMENT | No. | R | Δ | T | L | N | E |
|---|---|---|---|---|---|---|---|
| A7 | 40 | 350.528 | 68° 38′ 28.6″ | 239.299 | 419.939 | 652899.1648 | 1849625.2932 |
| FO | 41 | 334.940 | 53° 36′ 19.1″ | 169.210 | 313.366 | 652623.4677 | 1849596.6567 |
| BE | 42 | 383.350 | 05° 54′ 55.6″ | 19.807 | 39.579 | 652702.1124 | 1849621.7211 |
| WS | 43 | 457.200 | 06° 59′ 59.0" | 27.962 | 55.855 | 652450.1980 | 1849533.9780 |
| WS | 44 | 134.112 | 21° 44′ 40.4" | 25.759 | 50.897 | 652463.5592 | 1849481.9451 |

**4 REVISED PER ADDENDUM No. 4 DATED SEPTEMBER 3, 2009**

ALL DIMENSIONS ARE IN METERS UNLESS OTHERWISE SHOWN

# LAYOUT

SCALE 1:500

FOR NOTES, ABBREVIATIONS &/OR LEGEND, SEE SHEET L-1

L-8

STATE OF CALIFORNIA - DEPARTMENT OF TRANSPORTATION
Caltrans DESIGN

FUNCTIONAL SUPERVISOR: VINCE BONNER
CALCULATED-DESIGNED BY: DENNIS OCAMPO
CHECKED BY: JAY FONG
REVISED BY / DATE REVISED

LAST REVISION 09-17-08
DATE PLOTTED => 01-SEP-2009
TIME PLOTTED => 10:51

| Dist | COUNTY | ROUTE | KILOMETER POST TOTAL PROJECT | SHEET No. | TOTAL SHEETS |
|---|---|---|---|---|---|
| 04 | Ala,CC | 24 | 8.2/10.0, 0.0/2.7 | 104 | 1435 |

Kenneth P. Kuhn 7-22-08
REGISTERED CIVIL ENGINEER DATE

1-5-09
PLANS APPROVAL DATE

REGISTERED PROFESSIONAL ENGINEER Kenneth P. KUHN No. 22271 Exp. 9-30-09 CIVIL STATE OF CALIFORNIA

*THE STATE OF CALIFORNIA OR ITS OFFICERS OR AGENTS SHALL NOT BE RESPONSIBLE FOR THE ACCURACY OR COMPLETENESS OF ELECTRONIC COPIES OF THIS PLAN SHEET.*

Caltrans Metric

FOR COMPLETE RIGHT OF WAY AND ACCURATE ACCESS DATA, SEE RIGHT OF WAY RECORD MAPS AT DISTRICT OFFICE.

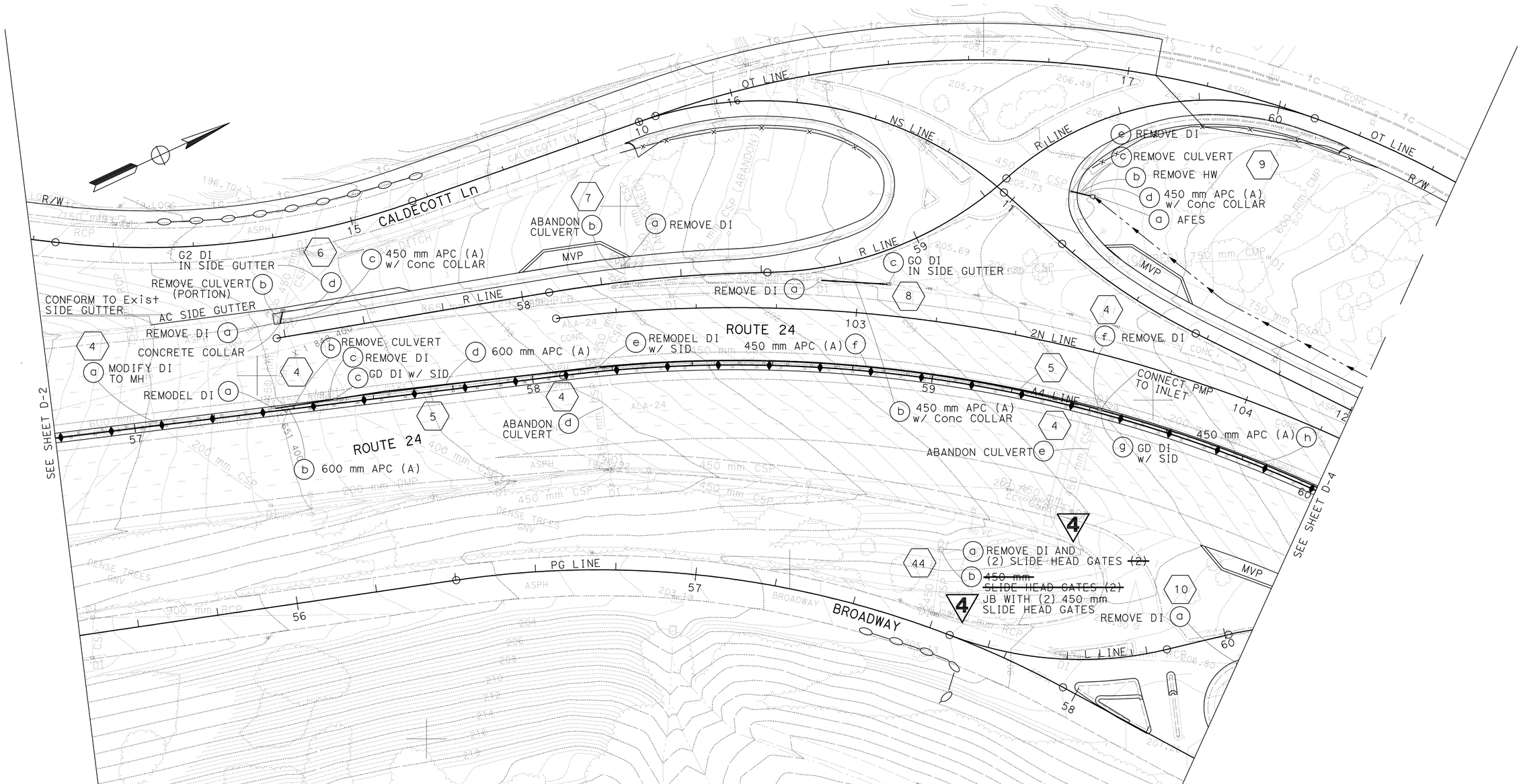


4 REVISED PER ADDENDUM No. 4 DATED SEPTEMBER 3, 2009

FOR NOTES, ABBREVIATIONS &/OR LEGEND, SEE SHEET D-1

THIS PLAN ACCURATE FOR DRAINAGE WORK ONLY

ALL DIMENSIONS ARE IN METERS UNLESS OTHERWISE SHOWN

# DRAINAGE PLAN

SCALE 1:500

D-3

STATE OF CALIFORNIA - DEPARTMENT OF TRANSPORTATION
HYDRAULICS DESIGN
Caltrans

FUNCTIONAL SUPERVISOR: VINCE BONNER
CALCULATED-DESIGNED BY: KENNETH KUHN
CHECKED BY: DENNIS OCAMPO
REVISED BY
DATE REVISED

LAST REVISION 07-01-08
DATE PLOTTED => 01-SEP-2009
TIME PLOTTED => 10:52

| Dist | COUNTY | ROUTE | KILOMETER POST TOTAL PROJECT | SHEET No. | TOTAL SHEETS |
|---|---|---|---|---|---|
| 04 | Ala,CC | 24 | 8.2/10.0, 0.0/2.7 | 121 | 1435 |

Kenneth P. Kuhn 7-22-08
REGISTERED CIVIL ENGINEER DATE

1-5-09
PLANS APPROVAL DATE

REGISTERED PROFESSIONAL ENGINEER Kenneth P. KUHN No. 22271 Exp. 9-30-09 CIVIL STATE OF CALIFORNIA

*THE STATE OF CALIFORNIA OR ITS OFFICERS OR AGENTS SHALL NOT BE RESPONSIBLE FOR THE ACCURACY OR COMPLETENESS OF ELECTRONIC COPIES OF THIS PLAN SHEET.*

Caltrans Metric

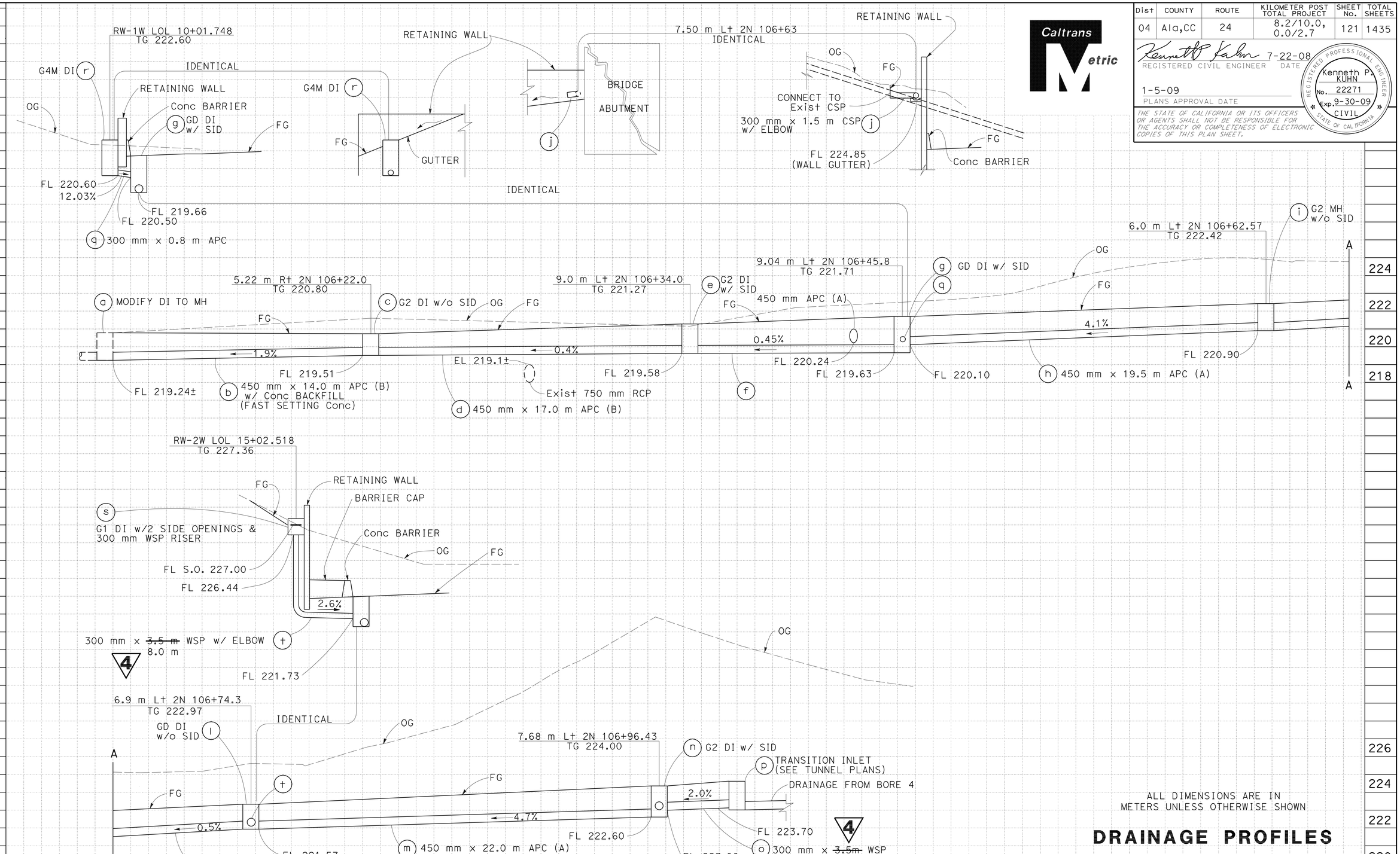


ALL DIMENSIONS ARE IN METERS UNLESS OTHERWISE SHOWN

# DRAINAGE PROFILES

SCALE HORIZ 1:100 VERT 1:100

DRAINAGE SYSTEM No. 14

4 REVISED PER ADDENDUM No. 4 DATED SEPTEMBER 3, 2009

DP-6

| Station | |
|---|---|
| $m^3$ | Exc |
| | Emb |

STATE OF CALIFORNIA - DEPARTMENT OF TRANSPORTATION
Caltrans DESIGN

FUNCTIONAL SUPERVISOR: VINCE BONNER
CALCULATED-DESIGNED BY: KENNETH KUHN
CHECKED BY: PAUL J ENGSTROM
REVISED BY / DATE REVISED

LAST REVISION 09-10-08
DATE PLOTTED => 01-SEP-2009
TIME PLOTTED => 10:52

| Dist | COUNTY | ROUTE | KILOMETER POST TOTAL PROJECT | SHEET No. | TOTAL SHEETS |
|---|---|---|---|---|---|
| 04 | Ala,CC | 24 | 8.2/10.0, 0.0/2.7 | 125 | 1435 |

Kenneth P. Kuhn 7-22-08
REGISTERED CIVIL ENGINEER DATE

1-5-09
PLANS APPROVAL DATE

REGISTERED PROFESSIONAL ENGINEER Kenneth P. KUHN No. 22271 Exp. 9-30-09 CIVIL STATE OF CALIFORNIA

*THE STATE OF CALIFORNIA OR ITS OFFICERS OR AGENTS SHALL NOT BE RESPONSIBLE FOR THE ACCURACY OR COMPLETENESS OF ELECTRONIC COPIES OF THIS PLAN SHEET.*

Caltrans Metric

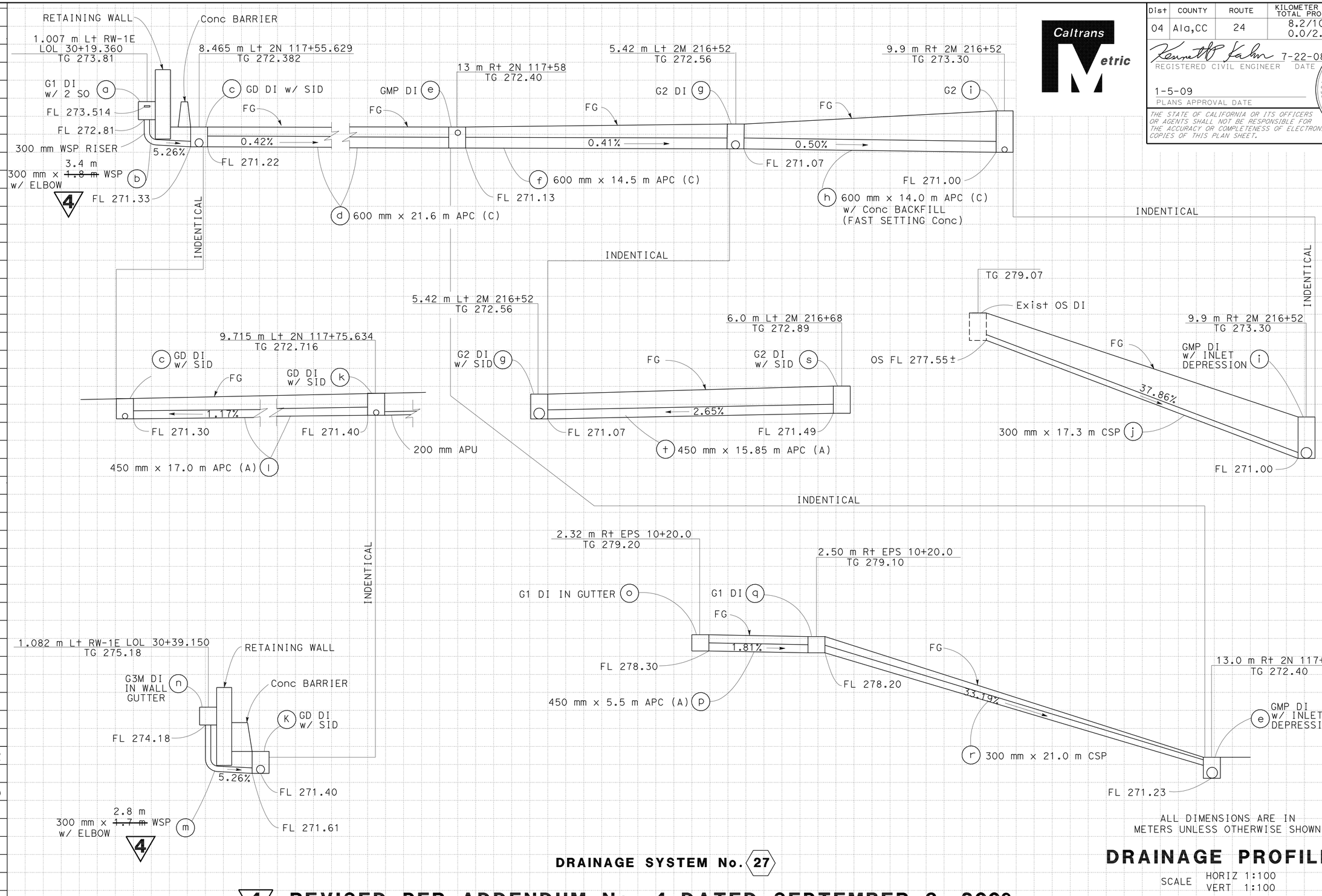


ALL DIMENSIONS ARE IN METERS UNLESS OTHERWISE SHOWN

**DRAINAGE SYSTEM No. 27**

# DRAINAGE PROFILES

SCALE HORIZ 1:100 VERT 1:100

**DP-10**

4 **REVISED PER ADDENDUM No. 4 DATED SEPTEMBER 3, 2009**

REVISED BY | DATE REVISED
KENNETH KUHN | PAUL J ENGSTROM
CALCULATED-DESIGNED BY | CHECKED BY
FUNCTIONAL SUPERVISOR | VINCE BONNER

STATE OF CALIFORNIA - DEPARTMENT OF TRANSPORTATION
DESIGN
Caltrans

Station
$m^3$ Exc Emb

LAST REVISION 09-16-08 | DATE PLOTTED => 01-SEP-2009 | TIME PLOTTED => 10:52

| Dist | COUNTY | ROUTE | KILOMETER POST TOTAL PROJECT | SHEET No. | TOTAL SHEETS |
|---|---|---|---|---|---|
| 04 | Ala,CC | 24 | 8.2/10.0, 0.0/2.7 | 142A | 1435 |

Craig M. Tomimatsu 8-6-09
REGISTERED CIVIL ENGINEER DATE

1-5-09
PLANS APPROVAL DATE

REGISTERED PROFESSIONAL ENGINEER Craig M. Tomimatsu No. 43072 Exp. 3-31-10 CIVIL STATE OF CALIFORNIA

*THE STATE OF CALIFORNIA OR ITS OFFICERS OR AGENTS SHALL NOT BE RESPONSIBLE FOR THE ACCURACY OR COMPLETENESS OF ELECTRONIC COPIES OF THIS PLAN SHEET.*

Caltrans Metric

4

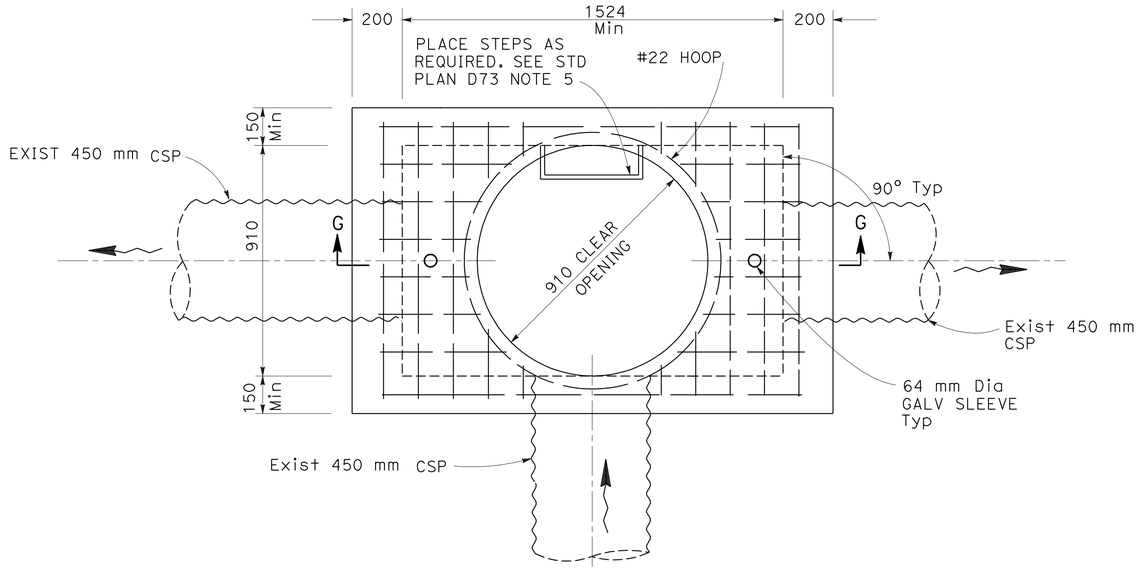


PLAN

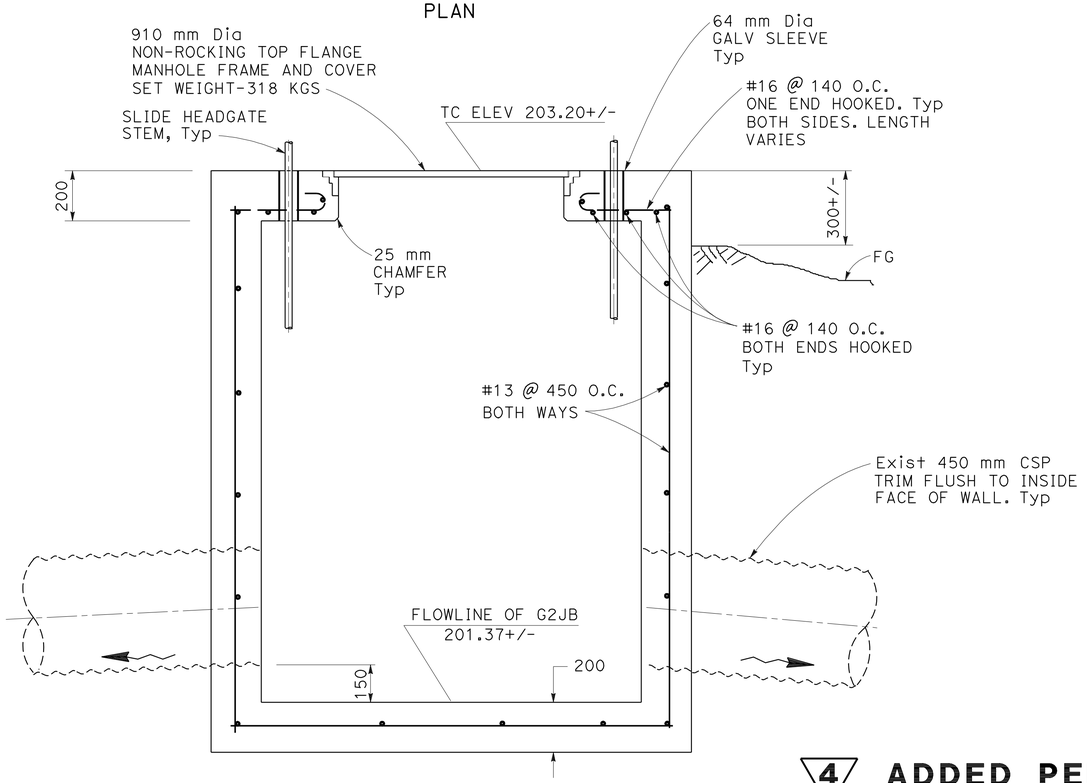


SECTION G-G

**G2JB W/ SLIDE HEADGATES**

44 b

NOTES

1. SLIDE HEADGATES SHALL BE INSTALLED INSIDE STRUCTURE AT OUTLET PIPE LOCATIONS.
2. SLIDE HEADGATES NOT SHOWN SEE SPECIAL PROVISIONS.
3. JB TO BE CONSTRUCTED SO THAT OUTLET PIPE HORIZONTAL ALIGNMENT IS 90° TO INSIDE FACE OF WALL.
4. 64 mm GALV PIPE SLEEVE FOR HEADGATE STEM SHALL BE LOCATED PER HEADGATE MANUFACTURERS SPECIFICATIONS.

4 **ADDED PER ADDENDUM No. 4 DATED SEPTEMBER 3, 2009**

**DRAINAGE DETAILS**

NO SCALE

ALL DIMENSIONS ARE IN MILLIMETERS UNLESS OTHERWISE SHOWN

**DD-13A**

STATE OF CALIFORNIA - DEPARTMENT OF TRANSPORTATION
Caltrans **HYDRAULICS**

FUNCTIONAL SUPERVISOR: CRAIG M. TOMIMATSU
CALCULATED-DESIGNED BY: CRAIG M. TOMIMATSU
CHECKED BY: KENNETH KUHN
REVISED BY
DATE REVISED

LAST REVISION 08-06-09 | DATE PLOTTED => 01-SEP-2009 | TIME PLOTTED => 10:52

| Dist | COUNTY | ROUTE | KILOMETER POST TOTAL PROJECT | SHEET No. | TOTAL SHEETS |
|---|---|---|---|---|---|
| 04 | Ala, CC | 24 | 8.2/10.0, 0.0/2.7 | 147 | 1435 |

Kenneth P. Kuhn 7-22-08
REGISTERED CIVIL ENGINEER DATE

1-5-09
PLANS APPROVAL DATE

REGISTERED PROFESSIONAL ENGINEER Kenneth P. KUHN No. 22271 Exp. 9-30-09 CIVIL STATE OF CALIFORNIA

*THE STATE OF CALIFORNIA OR ITS OFFICERS OR AGENTS SHALL NOT BE RESPONSIBLE FOR THE ACCURACY OR COMPLETENESS OF ELECTRONIC COPIES OF THIS PLAN SHEET.*

Caltrans Metric

# DRAINAGE QUANTITIES

| DRAINAGE SYSTEM No. | DRAINAGE UNIT | ABANDON CULVERT (m) | SAND BACKFILL ($m^3$) | REMOVE CULVERT (m) | ABANDON INLET (EA) | REMOVE INLET (EA) | CAP INLET (EA) | MODIFY INLET TO MANHOLE (EA) | REMODEL INLET (EA) | REMOVE HEADWALL (EA) | MINOR Conc STRUCTURE ($m^3$) | MINOR Conc BACKFILL ($m^3$) | HEIGHT OF DI "H" (N) (m) | Misc IRON & STEEL (Kg) | FRAME & GRATE AND COVER (N) U-45 (EA) | U-46 (EA) | 450-9 (EA) | 450-9X (EA) | 900-RX (EA) | 600-12 (EA) | 600-12X (EA) | CHECKERED PLATE (EA) | ALTERNATIVE PIPE CULVERT 300 mm APC (m) | 450 mm APC (A) (m) | 450 mm APC (B) (m) | 600 mm APC (A) (m) | 600 mm APC (B) (m) | 600 mm APC (C) (m) | 750 mm APC (m) | 300 mm WELDED STEEL PIPE (3.40 mm THICK) (m) | 300 mm CORGTD. STL. PIPE BIT. CTD.,1.63 mm THICK (m) | 900 mm BIT.COT.,2.77 mm THICK CORRUGATED STEEL PIPE INLET (m) | MAXIMUM COVER (N) (m) | SLURRY CEMENT BACKFILL ($m^3$) | Conc BACKFILL (FAST SETTING Conc) ($m^3$) | DESCRIPTION | STATION | DRAINAGE PLAN SHEET No. | DRAINAGE SYSTEM No. | DRAINAGE UNIT |
|---|---|---|---|---|---|---|---|---|---|---|---|---|---|---|---|---|---|---|---|---|---|---|---|---|---|---|---|---|---|---|---|---|---|---|---|---|---|---|---|---|
| 13 | a | | | | | 1 | | | | | | | | | | | | | | | | | | | | | | | | | | | | | REMOVE INLET | 2.0 m R+ BW 70+25.5 | D-4 | 13 | a |
| | b | | | | | | | | | | | | | | | | | | | | | | | 3.0 | | | | | | | | 1.67 | | | 450 mm APC(A) w/ Conc COLLAR | 2.0 m R+ BW 70+25.5 TO 0.35 m L+ BW 70+27.5 | | | b |
| | c | | | | | | | | | | 2.82 | | 1.68 | 296 | | | | | | 2 | | | | | | | | | | | | | | GD INLET w/ SID | 0.35 m L+ BW 70+27.5 | | | c |
| | d | | | | | | | | | | | | | | | | | | | | | | | | | | 53.7 | | | | | 1.14 | | | 600 mm APC (B) | 0.35 m L+ BW 70+27.5 TO 0.301 m L+ BW 70+82 | | | d |
| | e | | | | | | | | | | 2.43 | | 1.74 | 148 | | | | | | 1 | | | | | | | | | | | | | | G2 INLET w/ SID | 0.301 m L+ BW 70+82 | | | e |
| | f | | | | | | 1 | | | | | | | | | | | | | | | | | | | | | | | | | | | | CAP INLET | 11.0 m R+ BW 70+83 | | | f |
| | g | 11.5 | 1.83 | | | | | | | | | | | | | | | | | | | | | | | | | | | | | | | | ABANDON CULVERT (450 mm RCP) | | | | g |
| | h | | | | | | | | | | | | | | | | | | | | | | | | | | 27.2 | | | | | 1.14 | | | 600 mm APC (B) | 0.301 m L+ BW 70+82 TO 0.30 m R+ BW 71+10 | | | h |
| | i | | | | | | | | | | 2.3 | | 1.53 | 148 | | | | | | 1 | | | | | | | | | | | | | | G2 INLET w/ SID | 0.30 m R+ BW 71+10 | | | i |
| | j | | | | | | | | | | | | | | | | | | | | | | | | | | 10.6 | | | | | 0.93 | | | 600 mm APC (B) | 0.30 m R+ BW 71+10 TO 0.30 m R+ BW 71+21.5 | | | j |
| | k | | | | | | | | | | 2.3 | | 1.53 | 148 | | | | | | 1 | | | | | | | | | | | | | | G2 INLET w/ SID | 0.30 m R+ BW 71+21.5 | | | k |
| | l | | | | | | | | | | | | | | | | | | | | | | | | | | 8.6 | | | | | 0.93 | | | 600 mm APC (B) | 0.30 m R+ BW 70+21.5 TO 0.30 m R+ BW 71+31 | | | l |
| | m | | | | | | | | | | 2.29 | | 1.52 | 148 | | | | | | 1 | | | | | | | | | | | | | | G2 INLET w/ SID | 0.30 m R+ BW 71+31 | | | m |
| | n | | | | | | | | | | | 11.8 | | | | | | | | | | | | | | | 11.8 | | | | | 1.69 | | 8.5 | 600 mm APC (B) w/ Conc BACKFILL (FSC) | 0.30 m R+ BW 71+31 TO 1.51 m L+ OR1 62+40 | | | n |
| | o | | | | | | | | | | 1.40 | | 1.52 | 148 | | | | | | 1 | | | | | | | | | | | | | | G2 INLET w/o SID | 1.51 m L+ OR1 62+40 | | | o |
| | p | | | | | | | | | | | 5.5 | | | | | | | | | | | | | | | 9.1 | | | | | 0.81 | | 2.9 | 600 mm APC (B) w/ Conc BACKFILL (FSC) | 1.51 m L+ OR1 62+40 TO 1.51 m L+ OR1 62+50 | | | p |
| | q | | | | | | | | | | 1.41 | | 1.53 | 148 | | | | | | 1 | | | | | | | | | | | | | | G2 INLET w/o SID | 1.51 m L+ OR1 62+50 | | | q |
| | r | | | | | | | | | | | 36.6 | | | | | | | | | | | | | | | 54.1 | | | | | 0.86 | | 21.3 | 600 mm APC (B) w/ Conc BACKFILL (FSC) | 1.51 m L+ OR1 62+50 TO 0.92 m L+ OR1 63+05 | | | r |
| | s | | | | | | | | | | 1.56 | | 1.78 | 148 | | | | | | 1 | | | | | | | | | | | | | | G2 INLET w/o SID | 0.92 m L+ OR1 63+05 | | | s |
| 14 | a | | | | | | | 1 | | | | | | 200 | 1 | | | | | | | | | | | | | | | | | | | | MODIFY INLET TO MANHOLE | 19.22 m R+ 2N 106+22 | D-4 | 14 | a |
| | b | | | | | | | | | | | | | | | | | | | | | | | | 14 | | | | | | | 0.81 | | 3.6 | 450 mm APC (B) w/ Conc BACKFILL (FSC) | 19.22 m R+ 2N 106+22 TO 5.22 m R+ 2N 106+22 | | | b |
| | c | | | | | | | | | | 1.26 | | 1.29 | 148 | | | | | | 1 | | | | | | | | | | | | | | G2 INLET w/ SID | 5.22 m R+ 2N 106+22 | | | c |
| | d | | | | | | | | | | | | | | | | | | | | | | | | 17 | | | | | | | 1.23 | | | 450 mm APC (B) | 5.22 m R+ 2N 106+22 TO 8.0 m L+ 2N 106+34 | | | d |
| | e | | | | | | | | | | 2.4 | | 1.69 | 148 | | | | | | 1 | | | | | | | | | | | | | | G2 INLET w/ SID | 8.0 m L+ 2N 106+34 | | | e |
| | f | | | | | | | | | | | | | | | | | | | | | | | | 11 | | | | | | | 1.24 | | | 450 mm APC (B) | 8.0 m L+ 2N 106+34 TO 9.04 m L+ 2N 106+45.8 | | | f |
| | g | | | | | | | | | | 2.77 | | 1.61 | 296 | | | | | | 2 | | | | | | | | | | | | | | GD INLET w/ SID | 9.04 m L+ 2N 106+45.8 | | | g |
| | h | | | | | | | | | | | | | | | | | | | | | | | 19.5 | | | | | | | | 1.16 | | | 450 mm APC (A) | 9.04 m L+ 2N 106+45.8 TO 7.0 m L+ 2N 106+62.57 | | | h |
| | i | | | | | | | | | | 1.35 | | 1.44 | 200 | 1 | | | | | | | | | | | | | | | | | | | | G2 MH w/o SID | 7.0 m L+ 2N 106+62.57 | | | i |
| | j | | | | | | | | | | | | | | | | | | | | | | | | | | | | | | 1.5 | | | | 300 mm CSP w/ ELBOW | | | | j |
| | k | | | | | | | | | | | | | | | | | | | | | | | 11.5 | | | | | | | | 0.99 | | | 450 mm APC (A) | | | | k |
| | l | | | | | | | | | | 1.35 | | 1.40 | 296 | | | | | | 2 | | | | | | | | | | | | | | GD INLET w/o SID | 6.9 m L+ 2N 106+74.3 | | | l |
| | m | | | | | | | | | | | | | | | | | | | | | | | 22 | | | | | | | | 0.95 | | | 450 mm APC (A) | | | | m |
| | n | | | | | | | | | | 1.96 | | 1.0 | 148 | | | | | | 1 | | | | | | | | | | | | | | G2 INLET w/ SID | 7.68 m R+ 2N 106+96.43 | | | n |
| | o | | | | | | | | | | | | | | | | | | | | | | | | | | | | | 4 ~~3.5~~ 4.0 | | 0.9 | | | 300 mm WSP | | | | o |
| | p | | | | | | | | | | | | | | | | | | | | | | | | | | | | | | | | | | TRANSITION INLET | SEE TUNNEL PLANS | | | p |
| | q | | | | | | | | | | | | | | | | | | | | | | 0.8 | | | | | | | | | 1.3 | | | 300 mm APC | | | | q |
| | r | | | | | | | | | | 1.62 | | 2.00 | 148 | | | | | | 1 | | | | | | | | | | | | | | G4M INLET IN WALL GUTTER | 0.0 m L+ RW-1W LOL 10+01.748 | | | r |
| | s | | | | | | | | | | 0.70 | | 0.92 | 148 | | | | | | 1 | | | | | | | | | | | | | | G1 INLET w/ 2 SIDE OPENNINGS | 10.09 m L+ 2N 106+74.8 | | | s |
| | t | | | | | | | | | | | | | | | | | | | | | | | | | | | | | 4 ~~3.5~~ 8.0 | | 1.1 | | | 300 mm WSP w/ ELBOW | | | | t |
| | | | | | | | | | | | | | | | | | | | | | | | | | | | | | | 4 ~~7.0~~ 12.0 | 1.5 | | | 36.3 | | | | | |
| SHEET TOTAL | | 11.5 | 1.83 | | | 1 | 1 | 1 | | | 29.92 | 53.9 | | 3064 | 2 | | | | | 18 | | | 0.8 | 56 | 42 | | 175.1 | | | | | | | | SHEET TOTAL | | | | |

4 REVISED PER ADDENDUM No. 4 DATED SEPTEMBER 3, 2009

DRAINAGE QUANTITIES DQ-5

STATE OF CALIFORNIA - DEPARTMENT OF TRANSPORTATION
Caltrans DESIGN

FUNCTIONAL SUPERVISOR: VINCE BONNER
CALCULATED-DESIGNED BY: KENNETH KUHN
CHECKED BY: GURIND JOSHI
REVISED BY / DATE REVISED

LAST REVISION 09-16-08 DATE PLOTTED => 01-SEP-2009 TIME PLOTTED => 10:52

| Dist | COUNTY | ROUTE | KILOMETER POST TOTAL PROJECT | SHEET No. | TOTAL SHEETS |
|---|---|---|---|---|---|
| 04 | Ala, CC | 24 | 8.2/10.0, 0.0/2.7 | 151 | 1435 |

Kenneth P. Kuhn 7-22-08
REGISTERED CIVIL ENGINEER DATE

1-5-09
PLANS APPROVAL DATE

REGISTERED PROFESSIONAL ENGINEER Kenneth P. KUHN No. 22271 Exp. 9-30-09 CIVIL STATE OF CALIFORNIA

*THE STATE OF CALIFORNIA OR ITS OFFICERS OR AGENTS SHALL NOT BE RESPONSIBLE FOR THE ACCURACY OR COMPLETENESS OF ELECTRONIC COPIES OF THIS PLAN SHEET.*

Caltrans Metric

# DRAINAGE QUANTITIES

| DRAINAGE SYSTEM No. | DRAINAGE UNIT | ABANDON CULVERT (m) | SAND BACKFILL ($m^3$) | REMOVE CULVERT (m) | ABANDON INLET (EA) | REMOVE INLET (EA) | CAP INLET (EA) | MODIFY INLET TO MANHOLE (EA) | REMODEL INLET (EA) | REMOVE HEADWALL (EA) | MINOR Conc STRUCTURE ($m^3$) | MINOR Conc BACKFILL ($m^3$) | HEIGHT OF DI "H" (N) (m) | Misc IRON & STEEL (Kg) | FRAME & GRATE AND COVER (N) U-45 (EA) | U-46 (EA) | 450-9 (EA) | 450-9X (EA) | 900-RX (EA) | 600-12 (EA) | 600-12X (EA) | CHECKERED PLATE (EA) | ALTERNATIVE PIPE CULVERT 300 mm APC (m) | 450 mm APC (A) (m) | 450 mm APC (B) (m) | 600 mm APC (A) (m) | 600 mm APC (B) (m) | 600 mm APC (C) (m) | 750 mm APC (m) | 300 mm WELDED STEEL PIPE (3.40 mm THICK) (m) | 300 mm CORGTD. STL. PIPE BIT. CTD.,1.63 mm THICK (m) | 900 mm BIT.COT.,2.77 mm THICK CORRUGATED STEEL PIPE INLET (m) | MAXIMUM COVER (N) | SLURRY CEMENT BACKFILL ($m^3$) | Conc BACKFILL (FAST SETTING Conc) ($m^3$) | DESCRIPTION | STATION | DRAINAGE PLAN SHEET No. | DRAINAGE SYSTEM No. | DRAINAGE UNIT |
|---|---|---|---|---|---|---|---|---|---|---|---|---|---|---|---|---|---|---|---|---|---|---|---|---|---|---|---|---|---|---|---|---|---|---|---|---|---|---|---|---|
| 23 | a | | | | | | | | | | 0.94 | | 1.25 | 113 | | | 1 | | | | | | | | | | | | | | | | | | G5M INLET IN WALL GUTTER | 19.26 m Lt PL2 20+30.72 | D-4 | 23 | a |
| | b | | | | | | | | | | | 4.08 | | | | | | | | | | | 7.5 | | | | | | | | | 0.95 | | | 300 mm APC w/ Conc BACKFILL | 19.26 m Lt PL2 20+30.72 TO 19.0 m Lt PL2 20+22.75 | | | b |
| | c | | | | | | | | | | 0.86 | | 1.10 | 148 | | | | | | 1 | | | | | | | | | | | | | | G3 INLET | 19.0 m Lt PL2 20+22.75 | | | c |
| | d | | | | | | | | | | 12.2 | 13.9 | | | | | | | | | | | | 25.1 | | | | | | | | 0.65 | | | 450 mm APC (A) w/ Conc BACKFILL | 19.0 m Lt PL2 20+22.75 TO 3.29 m Lt PL2 20+01.46 | | | d |
| 24 | a | | | | | | | | | | 0.75 | | 0.9 | 148 | | | | | | 1 | | | | | | | | | | | | | | G3 INLET | 0.0 m Rt PL2 20+32.5 | D-4 | 24 | a |
| | b | | | | | | | | | | | | | | | | | | | | | | 4.6 | | | | | | | | | 0.6 | | | 300 mm APC | 0.0 m Rt PL2 20+32.5 TO 2.25 m Lt PL2 20+30.81 | | | b |
| | c | | | | | | | | | | | 7.4 | | | | | | | | | | | 30 | | | | | | | | | 0.6 | | | 300 mm APC w/ Conc BACKFILL | 0.0 m Lt PL2 20+32.5 TO 0.0 m Rt PL1 20+32.26 | | | c |
| | d | | | | | | | | | | 0.51 | | 0.46 | 148 | | | | | | | 1 | | | | | | | | | | | | | | G3 INLET | 0.0 m Rt PL1 20+32.26 | | | d |
| 25 | a | 15 | 1.06 | | | | | | | | | | | | | | | | | | | | | | | | | | | | | | | | ABANDON CULVERT (300 mm CSP) | | D-6 | 25 | a |
| | b | | | | | 1 | | | | | | | | | | | | | | | | | | | | | | | | | | | | | REMOVE INLET | 6 m Lt WS 3+27.5 | | | b |
| | c | 17 | 2.70 | | | | | | | | | | | | | | | | | | | | | | | | | | | | | | | | ABANDON CULVERT (450 mm CSP) | | | | c |
| | d | | | | 1 | | | | | | | | | | | | | | | | | | | | | | | | | | | | | | ABANDON INLET | | | | d |
| | e | 10 | 1.59 | | | | | | | | | | | | | | | | | | | | | | | | | | | | | | | | ABANDON CULVERT (450 mm CSP) | 11 m Lt WS 3+24 | | | e |
| 26 | a | | | | | | | | | | 1.25 | | 1.20 | 79 | | | | | | | | 1 | | | | | | | | | | | | OS INLET | 5.71 m Lt WS 3+27.08 | D-6 | 26 | a |
| | b | | | | | | | | | | | | | | | | | | | | | | | 13.3 | | | | | | | | 0.84 | 8.8 | | 450 mm APC (A) w/ SCB | 5.71 m Lt WS 3+27.08 TO 7.62 m Rt WS 3+22.36 | | | b |
| | c | | | | | | | | | | 1.52 | | 1.29 | 296 | | | | | | 2 | | | | | | | | | | | | | | GDO INLET | 7.6 m Rt WS 3+22.36 | | | c |
| | d | | | | | | | | | | | | | | | | | | | | | | | 10.6 | | | | | | | | 0.84 | | | 450 mm APC (A) | 7.6 m Rt WS 3+22.36 TO 18.56 m Rt WS 3+17.35 | | | d |
| 27 | a | | | | | | | | | | 0.75 | | 1.0 | 148 | | | | | | 1 | | | | | | | | | | | | | | G1 INLET w/ 2 S O | 1.0 m Lt RW1-E 30+19.36 | D-6 | 27 | a |
| | b | | | | | | | | | | | | | | | | | | | | | | | | | | | | | | | 0.9 | | | 300 mm WSP RISER w/ Elbow | 1.0 m Lt RW1-E 30+19.36 TO 8.37 m Lt 2N 117+55.63 | | | b |
| | c | | | | | | | | | | 2.45 | | 1.16 | 296 | | | | | | 2 | | | | | | | | | | | | | | GD INLET w/ SID | 8.465 m Lt 2N 117+55.63 | | | c |
| | d | | | | | | | | | | | | | | | | | | | | | | | | | | | | | 21.6 | | 0.67 | | | 600 mm APC(C) | 8.37 m Lt 2N 117+55.63 TO 13.0 m Rt 2N 117+58 | | | d |
| | e | | | | | | | | | | 0.89 | | 1.27 | 107 | | | | | 1 | | | | | | | | | | | | 1.42 | | | | GMP INLET w/ DEPRESSION | 13.0 m Rt 2N 117+58 | | | e |
| | f | | | | | | | | | | | | | | | | | | | | | | | | | | | | | 14.5 | | 0.9 | | | 600 mm APC (C) | 13.0 m Rt 2N 117+58 TO 5.42 m Lt 2M 216+52 | | | f |
| | g | | | | | | | | | | 2.28 | | 1.50 | 148 | | | | | | 1 | | | | | | | | | | | | | | G2 INLET w/SID | 5.42 m Lt 2M 216+52 | | | g |
| | h | | | | | | | | | | | | | | | | | | | | | | | | | | | | | 14 | | 1.7 | | 10.7 | 600 mm APC (C) W/ Conc BACKFILL (FSC) | 5.42 m Lt 2M 216+52 TO 9.9 m Rt 2M 216+52 | | | h |
| | i | | | | | | | | | | 0.89 | | 2.3 | 107 | | | | | 1 | | | | | | | | | | | | 2.45 | | | | GMP INLET w/ DEPRESSION | 9.9 m Rt 2M 216+52 | | | i |
| | j | | | | | | | | | | | | | | | | | | | | | | | | | | | | | | 17.3 | 2.0 | | | 300 mm CSP | 9.9 m Rt 2M 216+52 TO 6.2 m Rt 2M 216+34.7 | | | j |
| | k | | | | | | | | | | 2.56 | | 1.32 | 296 | | | | | | 2 | | | | | | | | | | | | | | GD INLET w/ SID | 9.715 m Lt 2N 117+75.63 | | | k |
| | l | | | | | | | | | | | | | | | | | | | | | | | 17.0 | | | | | | | | 0.87 | | | 450 mm APC (A) | 9.515 m Lt 2N 117+75.63 TO 8.37 m Lt 2N 117+55.63 | | | l |
| | m | | | | | | | | | | | | | | | | | | | | | | | | | | | | | | | | | | 300 mm WSP w/ Elbow | 9.515 m Lt 2N 117+75.63 TO 1.08 m Lt RW-1E 30+39.15 | | | m |
| | n | | | | | | | | | | 0.81 | | 1.0 | 148 | | | | | | 1 | | | | | | | | | | | | | | G3M INLET IN WALL GUTTER | 1.08 m Lt RW-1E 30+39.15 | | | n |
| | o | | | | | | | | | | 0.69 | | 0.9 | 148 | | | | | | 1 | | | | | | | | | | | | | | G1 INLET IN GUTTER | 2.32 m Rt EPS 10+20.0 | | | o |
| | p | | | | | | | | | | | | | | | | | | | | | | | 5.5 | | | | | | | | 0.45 | | | 450 mm APC (A) | 2.32 m Rt EPS 10+20.0 TO 2.46 m Lt EPS 10+20.0 | | | p |
| | q | | | | | | | | | | 0.69 | | 0.9 | 148 | | | | | | 1 | | | | | | | | | | | | | | G1 INLET | 2.50 m Lt EPS 10+20.0 | | | q |
| | r | | | | | | | | | | | | | | | | | | | | | | | | | | | | | | 21.0 | 0.97 | | | 300 mm CSP | 2.50 m Lt EPS 10+20.0 TO 13.0 m Rt 2N 117+58 | | | r |
| | s | | | | | | | | | | 2.29 | | 1.52 | 148 | | | | | | 1 | | | | | | | | | | | | | | G2 INLET w/ SID | 6.28 m Lt 2M 216+68 | | | s |
| | t | | | | | | | | | | | | | | | | | | | | | | | 15.8 | | | | | | | | 1.07 | | | 450 mm APC (A) | 6.28 m Lt 2M 216+68 TO 6.28 m Lt 2M 216+52 | | | t |
| SHEET TOTAL | | 42 | 5.35 | | 1 | 1 | | | | | 32.33 | 25.38 | | 2626 | | | 1 | | 2 | 14 | 1 | 1 | 42.1 | 87.3 | | | | | | 50 | 38.3 | 3.87 | | 8.8 | 10.7 | SHEET TOTAL | | | | |

4 3.4 ~~1.8~~

4 4.5 ~~1.7~~

4 7.9 ~~3.5~~

4 REVISED PER ADDENDUM No. 4 DATED SEPTEMBER 3, 2009

DRAINAGE QUANTITIES DQ- 9

STATE OF CALIFORNIA - DEPARTMENT OF TRANSPORTATION
Caltrans DESIGN

KENNETH KUHN — CALCULATED-DESIGNED BY
GURIND JOSHI — CHECKED BY
VINCE BONNER — FUNCTIONAL SUPERVISOR
REVISED BY — DATE REVISED

LAST REVISION 09-16-08 | DATE PLOTTED => 01-SEP-2009 | TIME PLOTTED => 10:53

| Dist | COUNTY | ROUTE | KILOMETER POST TOTAL PROJECT | SHEET No. | TOTAL SHEETS |
|---|---|---|---|---|---|
| 04 | Ala, CC | 24 | 8.2/10.0, 0.0/2.7 | 157 | 1435 |

Kenneth P. Kuhn 7-22-08
REGISTERED CIVIL ENGINEER DATE

1-5-09
PLANS APPROVAL DATE

REGISTERED PROFESSIONAL ENGINEER Kenneth P. KUHN No. 22271 Exp. 9-30-09 CIVIL STATE OF CALIFORNIA

*THE STATE OF CALIFORNIA OR ITS OFFICERS OR AGENTS SHALL NOT BE RESPONSIBLE FOR THE ACCURACY OR COMPLETENESS OF ELECTRONIC COPIES OF THIS PLAN SHEET.*

Caltrans Metric

4 **REVISED PER ADDENDUM No. 4 DATED SEPTEMBER 3, 2009**

# DRAINAGE QUANTITIES

| DRAINAGE SYSTEM No. | DRAINAGE UNIT | ABANDON CULVERT (m) | SAND BACKFILL (m³) | REMOVE CULVERT (m) | ABANDON INLET (EA) | REMOVE INLET (EA) | CAP INLET (EA) | MODIFY INLET TO MANHOLE (EA) | REMODEL INLET (EA) | REMOVE HEADWALL (EA) | MINOR Conc STRUCTURE (m³) | MINOR Conc BACKFILL (m³) | HEIGHT OF DI "H" (N) (m) | Misc IRON & STEEL (Kg) | FRAME & GRATE AND COVER (N) U-45 (EA) | U-46 (EA) | 450-9 (EA) | 450-9X (EA) | 900-RX (EA) | 600-12 (EA) | 600-12X (EA) | CHECKERED PLATE (EA) | ALTERNATIVE PIPE CULVERT 300 mm APC (m) | 450 mm APC (A) (m) | 450 mm APC (B) (m) | 600 mm APC (A) (m) | 600 mm APC (B) (m) | 600 mm APC (C) (m) | 750 mm APC (m) | 300 mm WELDED STEEL PIPE (3.40 mm THICK) (m) | 300 mm CORGTD. STL. PIPE BIT. CTD.,1.63 mm THICK (m) | 900 mm BIT.COT.,2.77 mm THICK CORRUGATED STEEL PIPE INLET (m) | MAXIMUM COVER (N) (m) | SLURRY CEMENT BACKFILL (m³) | Conc BACKFILL (FAST SETTING Conc) (m³) | DESCRIPTION | STATION | DRAINAGE PLAN SHEET No. | DRAINAGE SYSTEM No. | DRAINAGE UNIT |
|---|---|---|---|---|---|---|---|---|---|---|---|---|---|---|---|---|---|---|---|---|---|---|---|---|---|---|---|---|---|---|---|---|---|---|---|---|---|---|---|---|
| 40 | a | | | | | | | | | | 2.58 | | 1.35 | 296 | | | | | | 2 | | | | | | | | | | | | | | | GD INLET w/ SID | 0.305 m Lt A7 50+70.5 | D-8 | 40 | a |
| ↓ | b | | | | | | | | | | | | | | | | | | | | | | | 18.4 | | | | | | | | | 0.9 | | | 450 mm APC (A) | 0.305 m Lt A7 50+70.5 TO 0.305 m Lt A7 50+88.8 | ↓ | ↓ | b |
| 42 | a | | | 17.5 | | | | | | | | | | | | | | | | | | | | | | | | | | | | | | | | REMOVE CULVERT (300 mm CSP) | 6.19 m Rt 2M 216+35.92 TO 10 m Rt 2M 216+49 | D-6 | 42 | a |
| | b | | | | | 1 | | | | | | | | | | | | | | | | | | | | | | | | | | | | | | REMOVE INLET | 10 m Rt 2M 216+49 | | | b |
| | c | 15 | 2.39 | | | | | | | | | | | | | | | | | | | | | | | | | | | | | | | | | ABANDON CULVERT (450 mm RCP) | 10 m Rt 2M 216+49 TO 5.5 m Lt 2M 216+11 | | | c |
| | d | | | | | 1 | | | | | | | | | | | | | | | | | | | | | | | | | | | | | | REMOVE INLET | 5.5 m Lt 2M 216+11 | | | d |
| | e | 30 | 4.77 | | | | | | | | | | | | | | | | | | | | | | | | | | | | | | | | | ABANDON CULVERT (450 mm CSP) | 5.5 m Lt 2M 216+11 TO 2 m Lt 2N 117+58.5 | | | e |
| | f | | | | | 1 | | | | | | | | | | | | | | | | | | | | | | | | | | | | | | REMOVE INLET | 2 m Lt 2N 117+58.5 | | | f |
| ↓ | g | 23 | 3.66 | | | | | | | | | | | | | | | | | | | | | | | | | | | | | | | | | ABANDON CULVERT (450 mm RCP) | 1.12 m Lt 2M 216+26.40 TO 5.5 m Lt 2M 216+11 | ↓ | ↓ | g |
| 43 | a | | | | | 1 | | | | | | | | | | | | | | | | | | | | | | | | | | | | | | REMOVE INLET | 0.3 m Lt FO 3+18 | D-7 | 43 | a |
| | b | 66 | 10.5 | | | | | | | | | | | | | | | | | | | | | | | | | | | | | | | | | ABANDON CULVERT (450 mm CSP) | 0.3 m Lt FO 3+18 TO 21 m Lt A7 49+03 | | | b |
| ↓ | c | | | | | | | 1 | | | | | | | | | | | | | | | | | | | | | | | | | | | | MODIFY INLET TO MANHOLE | 21 m Lt A7 49+03 | ↓ | ↓ | c |
| 44 | a | | | | | | | | | | 4 | | | | | | | | | | | | | | | | | | | | | | | | 4 | REMOVE DI AND (2) SLIDE HEADGATES | 19.55 m Lt PG 57+56.4 | D-3 | 44 | a |
| ↓ | b | | | | | | | | | | 2.49 | | 1.8 | 318 | | | | | | | | | | | | | | | | | | | | | | JB w/ (2) 450 mm SLIDE HEADGATES | 19.55 m Lt PG 57+56.4 | ↓ | ↓ | b |
| 45 | a | | | | | | | | | | 1.12 | | 1.57 | 113 | | | | 1 | | | | | | | | | | | | | | | | | | G5M INLET IN WALL GUTTER | | D-5 | 45 | a |
| 46 | a | | | | | | | | | | 0.6 | | | | | | | | | | | | | | | | | | | | | | | | | PCC CUTOFF WALL WITH RSP | 32.8 m Rt F1 3+82 | | 46 | a |
| ↓ | b | | | | | | | | | | | | | | | | | | | | | | | | | | | | | | | | | | | REMOVE CONCRETE (CHANNEL) | 32.8 m Rt F1 3+82 TO 41.6 m Rt F1 4+34 | | ↓ | b |
| | | | | | | | | | | | 4 | | | | | | | | | | | | | | | | | | | | | | | | | | | | | |
| SHEET TOTAL | | 134 | 21.32 | 17.5 | | 4 | | 1 | | | 6.79 ~~4.3~~ | | | 727 ~~409~~ | | | | 1 | | 2 | | | | 18.4 | | | | | | | | | | | | SHEET TOTAL | | | | |
| TOTAL | | 921.8 | 155.72 | 239.5 | 5 | 21 | 5 | 4 | 5 | 1 | ~~161.43~~ 163.92 | 25.38 | | ~~16058~~ 16376 | | | | 1 | | 87 | | | 51.8 | 1357.8 | 213.5 | 294.95 | 192 | 326.8 | 163.3 | ~~10.8~~ 19.9 | 39.8 | 5.32 | | 414.1 | 67.2 | TOTAL | | | | |

* FOR TOTAL, SEE MINOR CONCRETE (BACKFILL) ON Q-3

STATE OF CALIFORNIA - DEPARTMENT OF TRANSPORTATION
Caltrans DESIGN

| REVISED BY | DATE REVISED |
|---|---|
| KENNETH KUHN | GURIND JOSHI |
| CALCULATED-DESIGNED BY | CHECKED BY |
| FUNCTIONAL SUPERVISOR | VINCE BONNER |

**DRAINAGE QUANTITIES** **DQ-15**

LAST REVISION 09-17-08 DATE PLOTTED => 01-SEP-2009 TIME PLOTTED => 10:53

| Dist | COUNTY | ROUTE | KILOMETER POST TOTAL PROJECT | SHEET No. | TOTAL SHEETS |
|---|---|---|---|---|---|
| 04 | Ala,CC | 24 | 8.2/10.0, 0.0/2.7 | 158 | 1435 |

Kenneth P. Kuhn 7-22-08
REGISTERED CIVIL ENGINEER DATE

1-5-09
PLANS APPROVAL DATE

REGISTERED PROFESSIONAL ENGINEER Kenneth P. KUHN No. 22271 Exp. 9-30-09 CIVIL STATE OF CALIFORNIA

*THE STATE OF CALIFORNIA OR ITS OFFICERS OR AGENTS SHALL NOT BE RESPONSIBLE FOR THE ACCURACY OR COMPLETENESS OF ELECTRONIC COPIES OF THIS PLAN SHEET.*

Caltrans Metric

# DRAINAGE QUANTITIES

| DRAINAGE SYSTEM No. | DRAINAGE UNIT | REMOVE SLIDE HEADGATE (EA) | 450 mm SLIDE HEADGATE (EA) | RSP (FACING, METHOD B) ($m^3$) | RSP FILTER FABRIC ($m^2$) | Conc (DITCH LINING) ($m^3$) | 450 mm AFES (EA) | Conc COLLAR (N) | JOINT CLASSIFICATION (N) | CAP MH (EA) | REMOVE CONCRETE (CHANNEL) (N) ($m^3$) | DESCRIPTION | STATION | DRAINAGE PLAN SHEET No. | DRAINAGE SYSTEM No. | DRAINAGE UNIT |
|---|---|---|---|---|---|---|---|---|---|---|---|---|---|---|---|---|
| 40 | a | | | | | | | | | | | GD INLET w/ SID | 0.305 m Lt A7 50+70.5 | D-8 | 40 | a |
| ↓ | b | | | | | | | | S | | | 450 mm APC (A) | 0.305 m Lt A7 50+70.5 TO 0.305 m Lt A7 50+88.8 | ↓ | ↓ | b |
| 42 | a | | | | | | | | | | | REMOVE CULVERT (300 mm CSP) | 6.19 m Rt 2M 216+35.92 TO 10 m Rt 2M 216+49 | D-6 | 42 | a |
| ↓ | b | | | | | | | | | | | REMOVE INLET | 10 m Rt 2M 216+49 | ↓ | ↓ | b |
| | c | | | | | | | | | | | ABANDON CULVERT (450 mm RCP) | 10 m Rt 2M 216+49 TO 5.5 m Lt 2M 216+11 | | | c |
| | d | | | | | | | | | | | REMOVE INLET | 5.5 m Lt 2M 216+11 | | | d |
| | e | | | | | | | | | | | ABANDON CULVERT (450 mm CSP) | 5.5 m Lt 2M 216+11 TO 2 m Lt 2N 117+58.5 | | | e |
| | f | | | | | | | | | | | REMOVE INLET | 2 m Lt 2N 117+58.5 | | | f |
| | g | | | | | | | | | | | ABANDON CULVERT (450 mm RCP) | 1.12 m Lt 2M 216+26.40 TO 5.5 m Lt 2M 216+11 | | | g |
| 43 | a | | | | | | | | | | | REMOVE INLET | 0.3 m Lt FO 3+18 | D-7 | 43 | a |
| ↓ | b | | | | | | | | | | | ABANDON CULVERT (450 mm CSP) | 0.3 m Lt FO 3+18 TO 21 m Lt A7 49+03 | ↓ | ↓ | b |
| | c | | | | | | | | | | | MODIFY INLET TO MANHOLE | 21 m Lt A7 49+03 | | | c |
| 44 | a | 2 | | | | | | | | | | 4 REMOVE DI AND (2) SLIDE HEADGATES | 19.55 m Lt PG 57+56.4 | D-3 | 44 | a |
| ↓ | b | | 2 | | | | | | | | | JB w/ (2) 450 mm SLIDE HEADGATES | 19.55 m Lt PG 57+56.4 | ↓ | ↓ | b |
| 45 | a | | | | | | | | | | | G5M INLET IN WALL GUTTER | | D-5 | 45 | a |
| 46 | a | | | 1.5 | 5 | | | | | | | PCC CUTOFF WALL WITH RSP | 32.8 m Rt F1 3+82 | | 46 | a |
| ↓ | b | | | | | | | | | | 17 | REMOVE CONCRETE (CHANNEL) | 32.8 m Rt F1 3+82 TO 41.6 m Rt F1 4+34 | | ↓ | b |
| SHEET TOTAL | | 2 | 2 | 1.5 | 5 | | | | | | | | SHEET TOTAL | | | |
| TOTAL | | 2 | 2 | 4.5 | 10 | 3.5 | 2 | 6 | | 1 | 17 | | TOTAL | | | |

4 REVISED PER ADDENDUM No. 4 DATED SEPTEMBER 3, 2009

DRAINAGE QUANTITIES DQ-16

STATE OF CALIFORNIA - DEPARTMENT OF TRANSPORTATION
Caltrans DESIGN

FUNCTIONAL SUPERVISOR: VINCE BONNER
CALCULATED-DESIGNED BY: KENNETH KUHN
CHECKED BY: GURIND JOSHI
REVISED BY / DATE REVISED

LAST REVISION 09-16-08 DATE PLOTTED => 01-SEP-2009 TIME PLOTTED => 10:53

| Dist | COUNTY | ROUTE | KILOMETER POST TOTAL PROJECT | SHEET No. | TOTAL SHEETS |
|---|---|---|---|---|---|
| 04 | Ala, CC | 24 | 8.2/10.0, 0.0/2.7 | 252 | 1435 |

REGISTERED CIVIL ENGINEER 7-17-08 DATE

1-5-09
PLANS APPROVAL DATE

REGISTERED PROFESSIONAL ENGINEER Dennis B. Ocampo No. 53523 Exp. 6-30-09 CIVIL STATE OF CALIFORNIA

*THE STATE OF CALIFORNIA OR ITS OFFICERS OR AGENTS SHALL NOT BE RESPONSIBLE FOR THE ACCURACY OR COMPLETENESS OF ELECTRONIC COPIES OF THIS PLAN SHEET.*

Caltrans Metric

## REMOVE METAL BEAM GUARD RAILING

| STATION | LOCATION | m |
|---|---|---|
| EP 30+00 TO 30+33 | L+ | 33 |
| 2M 218+18 TO 218+28 | R+ | 20 |
| 2M 216+37 TO 216+60 | R+ | 24 |
| A7 51+54 TO 51+84 | R+ | 30 |
| OR1 61+64 TO 61+80 | R+ | 16 |
| BW 72+08 TO 72+42.78 | L+ | 35 |
| BW 71+08 TO 71+30 | L+ | 22 |
| NS 12+35 TO 12+58 | L+ | 23 |
| TOTAL | | 203 |

## REMOVE THRIE BEAM BARRIER

| STATION | LOCATION | m |
|---|---|---|
| A4 60+69 TO 61+74 | L+ & R+ | 210 |
| A7 47+80 TO 48+00 | L+ | 20 |
| A7 46+66 TO 48+00 | R+ | 134 |
| A7 46+70 TO 48+00 | L+ | 130 |
| OL2 61+90 TO 62+15 | L+ & R+ | 25 |
| OR1 61+90 TO 62+15 | L+ | 25 |
| TOTAL | | 544 |

## REMOVE CHAIN LINK FENCE

| STATION | LOCATION | m |
|---|---|---|
| FO 4+60 TO 7+80 | L+ | 320 |
| OT 15+68.8 TO NS 10+62.1 | R+ | 65 |
| R 59+47.5 TO OT 17+67.4 | R+ | 75 |
| TOTAL | | 460 |

## REMOVE CRASH CUSHION

| STATION | LOCATION | EA |
|---|---|---|
| 2M 218+30 | R+ | 1 |
| A7 48+00 | L+ | 1 |
| TOTAL | | 2 |

## RELOCATE CRASH CUSHION

| STATION | EA |
|---|---|
| FROM A7 46+66 TO 2N 117+90 | 1 |
| TOTAL | 1 |

## REMOVE RETAINING WALL

| STATION | LOCATION | m |
|---|---|---|
| RW-7W 0+07 TO 0+30 | R+ | 23 |
| TOTAL | | 23 |

## REMOVE CONCRETE

| STATION | LOCATION | CURB | ISLAND PORTIONS | SIDEWALK |
|---|---|---|---|---|
| | | m | $m^3$ | |
| A4 59+63 TO 60+69 | ℄ | 106 | | |
| A4 60+69 TO 61+74 | ℄ | | 152 | |
| 2N 105+44 TO 106+25 | R+ | 81 | | |
| 2N 119+32 TO 120+36 | R+ | 104 | | |
| BW 71+80 TO 72+43 | L+ | 63 | | |
| OR1 61+07 TO 63+40 | R+ | 108 | 116 | |
| 2M 204+66 TO 205+60 | R+ | 215 | 42 | |
| OL2 61+90 TO 62+15 | ℄ | 25 | 156 | |
| 2M 216+37 TO 218+30 | R+ | 193 | | |
| 2M 216+37 TO 218+31 | L+ | 194 | | |
| BE 10+00 TO 11+28 | L+ | 128 | | |
| A7 46+66 TO 48+00 | ℄ | 110 | 164 | |
| FO 4+60 TO 7+80 | L+ | 230 | | |
| EP 30+00 TO 30+60 | L+ | 60 | | |
| PG 58+53 TO OR1 62+18 | L+/R+ | 237 | | |
| PG 58+15.05 TO 58+14.97 | L+ | 35 | | |
| PG 58+21 TO 58+22 | L+ | 13 | | |
| R 57+38 TO OT 17+59<br>OT 15+71 TO 2N 106+25 | L+ | 617 | | |
| L 59+62 TO 59+77<br>L 59+83.6 TO 59+85.5 | R+ | | 55 | |
| RW-7W 0+07 TO 0+30 | R+ | 23 | | |
| AP 10+00 TO 10+63 | R+ | 63 | | |
| 2M 205+06 TO 205+30 | L+ | 24 | | |
| PL 10+00 TO 10+14 | ℄ | 14 | | 1.7 |
| TOTAL | | 2643 | 685 | 1.7 |

## REMOVE UNDERDRAIN (N)

| UNDERDRAIN LOCATION | LOCATION | LENGTH (N) | MINOR CONCRETE (BACKFILL) |
|---|---|---|---|
| | | m | $m^3$ |
| OR1 61+50 TO 62+14 | R+ | 64 | 29.5 |
| 2M 204+87 TO 205+35 | R+ | 48 | 22.1 |
| 2M 216+37 TO 217+49 | L+ | 102 | 46.9 |
| A7 49+60 TO 50+76 | R+ | 115 | 52.9 |
| A7 50+75 TO 51+87 | R+ | 112 | 51.6 |
| TOTAL | | 441 | * 203.0 |

* FOR TOTAL, SEE MINOR CONCRETE (BACKFILL) ON Q-3.
(N) NOT A SEPARATE PAY ITEM, FOR INFORMATION ONLY.

## REMOVE DOUBLE THRIE BEAM BARRIER

| STATION | LOCATION | m |
|---|---|---|
| A4 54+44 TO 60+69 | ℄ | 625 |
| A7 48+00 TO 48+40 | ℄ | 40 |
| TOTAL | | 665 |

## CRASH CUSHION (REACT 9CBB)

| STATION | LOCATION | EA |
|---|---|---|
| 2N 120+26.697 | L+ | 1 |
| TOTAL | | 1 |

## CRASH CUSHION (REACT 9SCBS)

| STATION | LOCATION | EA |
|---|---|---|
| OR1 62+38 | ℄ | 1 |
| | | |
| TOTAL | | 1 |

## CHAIN LINK FENCE (TYPE CL-1.8)

| STATION | LOCATION | m |
|---|---|---|
| FO 4+60 TO 7+80 | L+ | 320 |
| OT 15+68.8 TO NS 10+62.1 | R+ | 65 |
| R 59+47.5 TO OT 17+67.4 | R+ | 75 |
| TOTAL | | 460 |

## CHAIN LINK FENCE (TYPE CL-1.2)

| STATION | LOCATION | m |
|---|---|---|
| AP 10+00 TO 10+63 | L+ | 63 |
| TOTAL | | 63 |

## REMOVE CONCRETE BARRIER

| STATION | LOCATION | m |
|---|---|---|
| 2M 217+48 TO 218+18 | R+ | 70 |
| A7 56+6 TO 56+12 | CI | 6 |
| A7 60+17 TO 60+23 | CI | 6 |
| A7 64+28 TO 64+34 | CI | 6 |
| OR1 62+15 TO OR1 63+45 | CI | 180 |
| TOTAL | | ~~88~~ 268 |

4

## REMOVE ASPHALT CONCRETE DIKE

| STATION | LOCATION | m |
|---|---|---|
| A7 46+66 TO 50+75 | R+/L+ | 409 |
| A4 54+44 TO 57+50 | R+ | 306 |
| A4 57+50 TO 50+63 | L+ | 213 |
| TOTAL | | 928 |

4 **REVISED PER ADDENDUM No. 4 DATED SEPTEMBER 3, 2009**

# SUMMARY OF QUANTITIES

Q-2

| REVISED BY | DATE REVISED |
|---|---|
| | |

| CALCULATED-DESIGNED BY | CHECKED BY |
|---|---|
| DENNIS OCAMPO | JAY FONG |

FUNCTIONAL SUPERVISOR: VINCE BONNER

STATE OF CALIFORNIA - DEPARTMENT OF TRANSPORTATION
Caltrans DESIGN

LAST REVISION 09-09-08 DATE PLOTTED => 01-SEP-2009 TIME PLOTTED => 10:53

| Dist | COUNTY | ROUTE | KILOMETER POST TOTAL PROJECT | SHEET No. | TOTAL SHEETS |
|---|---|---|---|---|---|
| 04 | Ala,CC | 24 | 8.2/10.0, 0.0/2.7 | 255 | 1435 |

Caltrans Metric

7-17-08
REGISTERED CIVIL ENGINEER DATE

1-5-09
PLANS APPROVAL DATE

REGISTERED PROFESSIONAL ENGINEER Dennis B. Ocampo No. 53523 Exp. 6-30-09 CIVIL STATE OF CALIFORNIA

*THE STATE OF CALIFORNIA OR ITS OFFICERS OR AGENTS SHALL NOT BE RESPONSIBLE FOR THE ACCURACY OR COMPLETENESS OF ELECTRONIC COPIES OF THIS PLAN SHEET.*

# ROADWAY QUANTITIES

| STATION | ROADWAY EXCAVATION | ROADWAY EXCAVATION (TYPE Z-2) ADL | ROADWAY EXCAVATION (TYPE Z-3) ADL | EMBANKMENT (N) | HMA (TYPE A) | CONCRETE PAVEMENT | LEAN CONCRETE BASE | LEAN CONCRETE BASE (RAPID SETTING) | CLASS 4 AGGREGATE SUBBASE | CLASS 3 PERMEABLE MATERIAL (BLANKET) | CONSTRUCT CONCRETE PAVEMENT (RAPID STRENGTH CONCRETE) | CEMENT TREATED BASE (CLASS A) | CLASS 3 AGGREGATE BASE | TACK COAT | REPLACE CONCRETE PAVEMENT (RAPID STRENGTH CONCRETE) |
|---|---|---|---|---|---|---|---|---|---|---|---|---|---|---|---|
| | $m^3$ | | | | Tonne | $m^3$ | | | | | | | | Tonne | $m^3$ |
| A4 54+44 TO 61+11.808 | | 400 | | | 653 | | | | | | | | | 2.08 | |
| 2N 105+43.570 TO 107+00 | 4418 | | | 52 | | 488 | 257 | 81 | 236 | 439 | 154 | | 36 | | |
| 2N 117+36 TO 120+35.475 | 8811 | 640 | | 234 | | 1229 | 647 | | 453 | 841 | | | 51 | | |
| 2M 204+00 TO 205+60 | | 227 | | | 4 | 77 | 41 | | 29 | 53 | | | | 0.191 | |
| 2M 216+37 TO 219+05.203 | 348 | | 107 | | 270 | | | | 131 | 227 | | 87 | 10 | 1.0 | |
| BW 70+00 TO 72+42.788 | | | 220 | | 110 | | | | | | | | | 0.35 | |
| OR1 61+06.589 TO 63+40 | 283 | | | | 107 | | | 17 | 12 | 73 | 32 | 23 | | 0.18 | |
| OL2 61+50 TO 63+40 | 1445 | | | | 1 | | | 295 | 206 | 383 | 560 | | | 0.009 | |
| BE 10+00 TO 10+43 | 20 | | 54 | | 54 | | | | 13 | 22 | | 9 | | 0.08 | |
| A7 47+05.624 TO 51+87 | 392 | 498 | | | 1009 | | | | 237 | 411 | | 158 | | 3.50 | |
| FO 2+20 TO 3+58.622 | | | | | 552 | | | | | 318 | | | 302 | 1.60 | |
| FO 6+74 TO 7+56 | 4303 | | | | | | | | | | | | | | |
| OT 13+80 TO 19+76 | | | | | 650 | | | | | | | | | 7 | |
| R 57+37.830 TO OT 17+59 & OT 15+70.765 TO NS 13+20.483 | 387 | 395 | | 59 | 1058 | | | | 617 | | | | 199 | 5 | |
| OT 16+28 TO 16+42 | | | | | | | | | | | | | 8 | | |
| OT 16+89 TO 16+98 | | | | | | | | | | | | | 5 | | |
| A4 58+67 TO 58+84 | | | | | | | | | | | | | 9 | | |
| A4 59+43 TO 59+58 | | | | | | | | | | | | | 10 | | |
| L 59+96 TO 61+56.959 & PG 58+35.237 TO 58+52.739 | 876 | 292 | | | 626 | | | | 383 | | | | 123 | 1.08 | |
| L 59+62 TO 59+77 & L 59+83.6 TO 59+85.5 | 56 | | | | 24 | | | | | 16 | | | 29 | 0.084 | |
| SOUNDWALL BERM | | | | 23820 | | | | | | | | | | | |
| MAINTENANCE VEHICLE PULLOUTS | 280 | | | | 308 | | | | | | | | 168 | 0.88 | |
| HMA DIKE | | | | | 53 | | | | | | | | | 0.39 | |
| 2N 107+00 TO 117+36 (4) | ~~8356~~ | | | | | 3240 | 1705 | | 1194 | 2217 | | | | | |
| PAVING (Misc AREAS) | | | | | | | | | | | | | 249 | | |
| SERVICE ROAD AT WEST PORTAL (C-1) | 210 | | | | 55 | | | | | | | | 29 | 0.356 | |
| SERVICE ROAD AT EAST PORTAL (C-2) | | | | | 36 | | | | | | | | 19 | 0.26 | |
| HMA AC SIDE GUTTER | | | | | 14 | | | | | | | | 9 | 0.08 | |
| AP 10+00 TO 10+62.687 | | | | 217 | 18 | | | | 19 | | | | | | |
| BIO-SWALE DITCH | 424 | | | | | | | | | | | | | | |
| FROM TRENCH PAVING | 200 | | | | 100 | | | 7 | 57 | 89 | | 5 | | | 12.39 |
| ACCESS 0+04.21 TO 0+49.30 (1) | 140 | | | | | | | | | | | | 12 | | |
| TOTAL | ~~30809~~ ~~30949~~ (4) 22453 | 2452 | 381 | 24434 | 5702 | 5034 | 2650 | 400 | 3587 | 5089 | 746 | 282 | ~~1256~~ 1268 | 24.12 | 12.39 |

(N) NOT A SEPARATE PAY ITEM, FOR INFORMATION ONLY.

(4) REVISED PER ADDENDUM No. 4 DATED SEPTEMBER 3, 2009

(1) REVISED PER ADDENDUM No. 1 DATED JUNE 17, 2009

## SUMMARY OF QUANTITIES

Q-5

STATE OF CALIFORNIA - DEPARTMENT OF TRANSPORTATION
Caltrans DESIGN

FUNCTIONAL SUPERVISOR: VINCE BONNER
CALCULATED-DESIGNED BY: DENNIS OCAMPO
CHECKED BY: JAY FONG
REVISED BY / DATE REVISED

LAST REVISION 09-17-08 DATE PLOTTED => 01-SEP-2009 TIME PLOTTED => 10:54

| DIST | COUNTY | ROUTE | KILOMETER POST TOTAL PROJECT | SHEET NO. | TOTAL SHEETS |
|---|---|---|---|---|---|
| 04 | Ala,CC | 24 | 8.2/10.0, 0.0/2.7 | 324A | 1435 |

REGISTERED CIVIL ENGINEER

April 28, 2005
PLANS APPROVAL DATE

REGISTERED PROFESSIONAL ENGINEER Tillat Sattar No. C42892 Exp. 03-31-2006 CIVIL STATE OF CALIFORNIA

*The State of California or its officers or agents shall not be responsible for the accuracy or completeness of electronic copies of this plan sheet.*

*To get to the Caltrans web site, go to: http://www.dot.ca.gov*

Caltrans Metric

4

*To accompany plans dated* 1-5-09

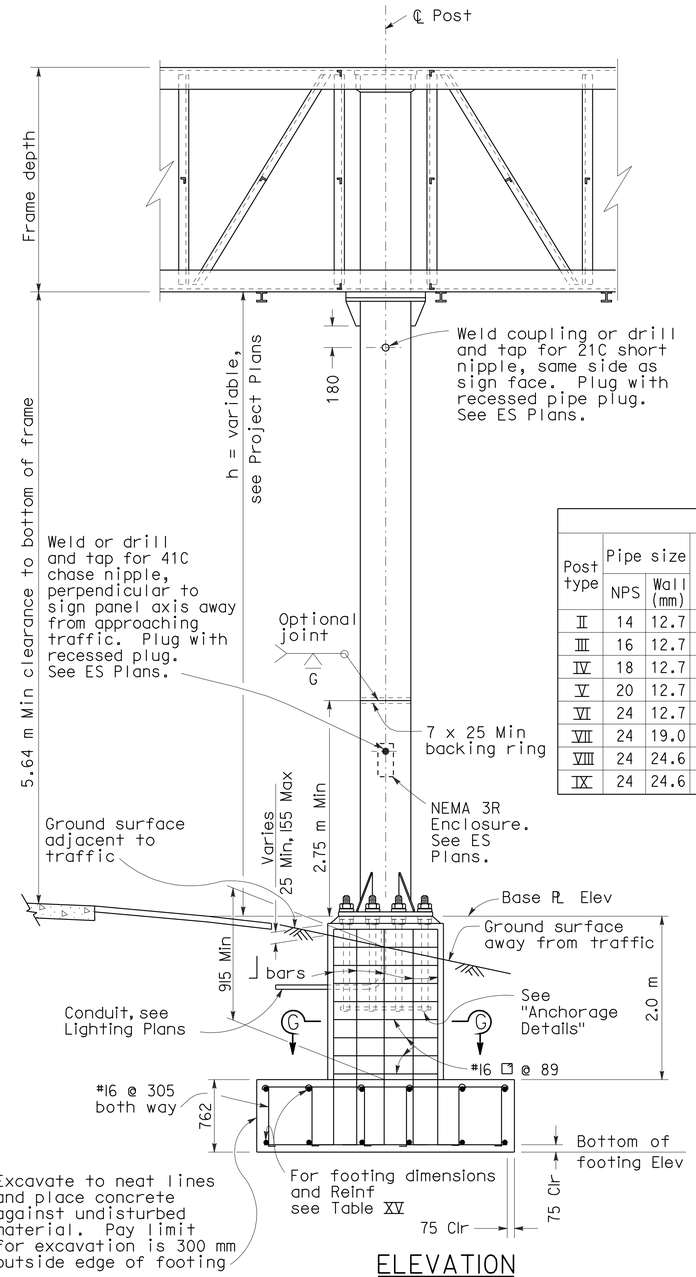


ELEVATION

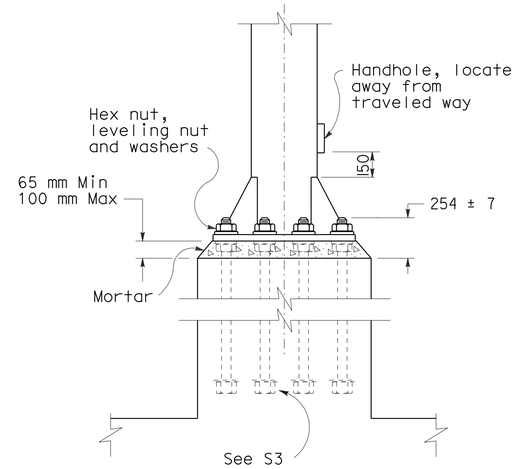


ANCHORAGE DETAILS

4 **ADDED PER ADDENDUM No. 4 DATED SEPTEMBER 3, 2009**

TABLE XV

| Post type | Pipe size NPS | Pipe size Wall (mm) | Cap Plate for L 127x127 (mm) | Cap Plate for L 152x152 (mm) | Round Pedestal: Pedestal Size Dia (mm) | Round Pedestal: Vertical ⌋-Bars Equally spaced total | Round Pedestal: Vertical ⌋-Bars Bar Size | Round Pedestal: Vertical ⌋-Bars Bar B.C. (mm) | Round Pedestal: Spiral Bar Size | Round Pedestal: Spiral Pitch (mm) | Square Pedestal: Pedestal Size Square (mm) | Square Pedestal: Vertical ⌋-Bars Equally spaced total | Square Pedestal: Vertical ⌋-Bars Bar Size | Square Pedestal: Vertical ⌋-Bars Spacing ea face (mm) | Square Pedestal: Hoop Bar Size | Square Pedestal: Hoop Spacing (mm) | Pile footing Dia (mm) | Pile footing Depth (m) | Alternate: Spread Footing See note 2 (mm) | Alternate: Spread Footing Reinforcement: Width Top | Alternate: Spread Footing Reinforcement: Width Bottom | Alternate: Spread Footing Reinforcement: Longitudinal Top | Alternate: Spread Footing Reinforcement: Longitudinal Bottom | Alternate: Spread Footing Reinforcement: Footing Stirrups |
|---|---|---|---|---|---|---|---|---|---|---|---|---|---|---|---|---|---|---|---|---|---|---|---|---|
| II | 14 | 12.7 | 610 x 610 x 25 | 660 x 660 x 25 | 1600 | 16 | 32 | 1372 | 16 | 89 | 1600 | 16 | 32 | 346 | 16 | 89 | 1372 | 4.5 | 3658 x 4267 x 762 | 14-#19 | 14-#22 | 13-#29 | 13-#29 | #16 @ 305 |
| III | 16 | 12.7 | 660 x 660 x 25 | 711 x 711 x 25 | 1600 | 16 | 32 | 1372 | 16 | 89 | 1600 | 16 | 32 | 346 | 16 | 89 | 1372 | 4.9 | 3658 x 4267 x 762 | 15-#19 | 15-#22 | 13-#29 | 13-#29 | #16 @ 305 |
| IV | 18 | 12.7 | 711 x 711 x 25 | 762 x 762 x 25 | 1600 | 16 | 32 | 1372 | 16 | 89 | 1600 | 16 | 32 | 346 | 16 | 89 | 1372 | 5.5 | 3658 x 4267 x 762 | 15-#19 | 15-#22 | 13-#29 | 13-#29 | #16 @ 305 |
| V | 20 | 12.7 | 762 x 762 x 25 | 813 x 813 x 25 | 1600 | 16 | 32 | 1372 | 16 | 89 | 1600 | 16 | 32 | 346 | 16 | 89 | 1372 | 5.8 | 3962 x 4267 x 762 | 15-#19 | 15-#22 | 14-#29 | 14-#29 | #16 @ 305 |
| VI | 24 | 12.7 | 864 x 864 x 25 | 914 x 914 x 25 | 1753 | 16 | 36 | 1534 | 16 | 89 | 1753 | 16 | 36 | 381 | 16 | 89 | 1524 | 6.7 | 3962 x 4877 x 762 | 17-#22 | 17-#22 | 14-#29 | 14-#36 | #16 @ 305 |
| VII | 24 | 19.0 | 864 x 864 x 25 | 914 x 914 x 25 | 1753 | 16 | 36 | 1534 | 16 | 89 | 1753 | 16 | 36 | 381 | 16 | 89 | 1524 | 7.0 | 3962 x 5182 x 762 | 18-#22 | 18-#22 | 14-#29 | 14-#36 | #16 @ 305 |
| VIII | 24 | 24.6 | 864 x 864 x 25 | 914 x 914 x 25 | 1753 | 16 | 36 | 1534 | 16 | 89 | 1753 | 16 | 36 | 381 | 16 | 89 | 1524 | 7.6 | 3962 x 5486 x 762 | 19-#22 | 19-#22 | 14-#29 | 14-#36 | #16 @ 305 |
| IX | 24 | 24.6 | 864 x 864 x 25 | 914 x 914 x 25 | 1753 | 16 | 36 | 1534 | 16 | 89 | 1753 | 16 | 36 | 381 | 16 | 89 | 1524 | 7.6 | 3962 x 5486 x 762 | 19-#22 | 19-#22 | 14-#29 | 14-#36 | #16 @ 305 |

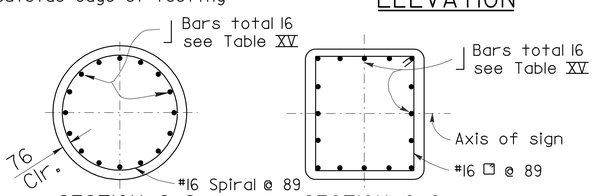


SECTION G-G
ROUND PEDESTAL

SECTION G-G
RECTANGLE PEDESTAL

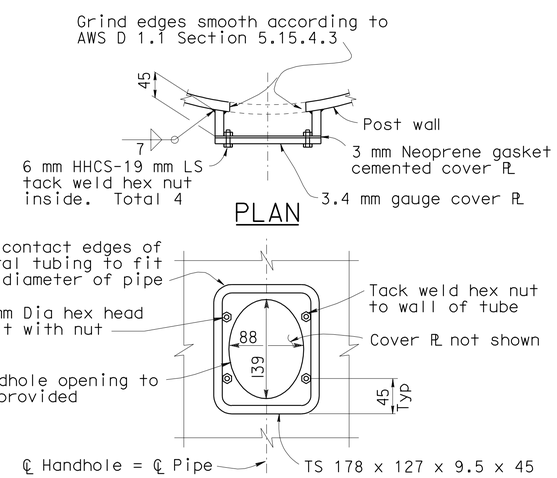


PLAN

ELEVATION

TYPICAL DETAILS OF HANDHOLE AND COVER

**Notes:**

1. For "General Notes" see Revised Standard Plan RSP S1.
2. Longer side of footing shall be normal to axis of sign.
3. Backfill shall be in place prior to erection of post.
4. Thread upper 254 mm of anchor bolts and galvanize upper 305 mm.
5. Spread footing shown, use Pile Foundation when shown on the Project Plans.
6. Anchor plates may be retained with hexagon nut or formed head as alternatives to details shown.
7. On single post sign structures, the post shall be raked out of plumb, with the use of the leveling nuts to make the bottom of the sign frame level.
8. At final position of post all top and bottom nuts shall be tightened against base plate.
9. When foundation is located on a steep slope with exposed face of concrete adjacent to traffic, see "Detail C" on Revised Standard Plan RSP S7 or RSP S8, as applicable.
10. Slope protection required when indicated on the Project Plans.

STATE OF CALIFORNIA
DEPARTMENT OF TRANSPORTATION

# OVERHEAD SIGNS-TRUSS SINGLE POST TYPE POST TYPES II THROUGH IX

NO SCALE

ALL DIMENSIONS ARE IN MILLIMETERS UNLESS OTHERWISE SHOWN

RSP S2 DATED APRIL 28, 2005 SUPERSEDES RSP S2 DATED JANUARY 24,2005 AND STANDARD PLAN S2 DATED JULY 1, 2004-PAGE 311 OF THE STANDARD PLANS BOOK DATED JULY 2004.

**REVISED STANDARD PLAN RSP S2**

**2004 REVISED Std PLAN RSP S2**

| DIST | COUNTY | ROUTE | KILOMETER POST TOTAL PROJECT | SHEET No | TOTAL SHEETS |
|---|---|---|---|---|---|
| 04 | Ala,CC | 24 | 8.2/10.0, 0.0/2.7 | 414 | 1435 |

REGISTERED CIVIL ENGINEER — DATE 7-09-2009

1-5-09
PLANS APPROVAL DATE

*The State of California or its officers or agents shall not be responsible for the accuracy or completeness of electronic copies of this plan sheet.*

REGISTERED PROFESSIONAL ENGINEER R.P.MATHUR No. C49400 Exp. 09/30/10 CIVIL STATE OF CALIFORNIA

**PARSONS**
50 FREMONT STREET, SUITE 1500
SAN FRANCISCO, CA 94105

Caltrans Metric

4

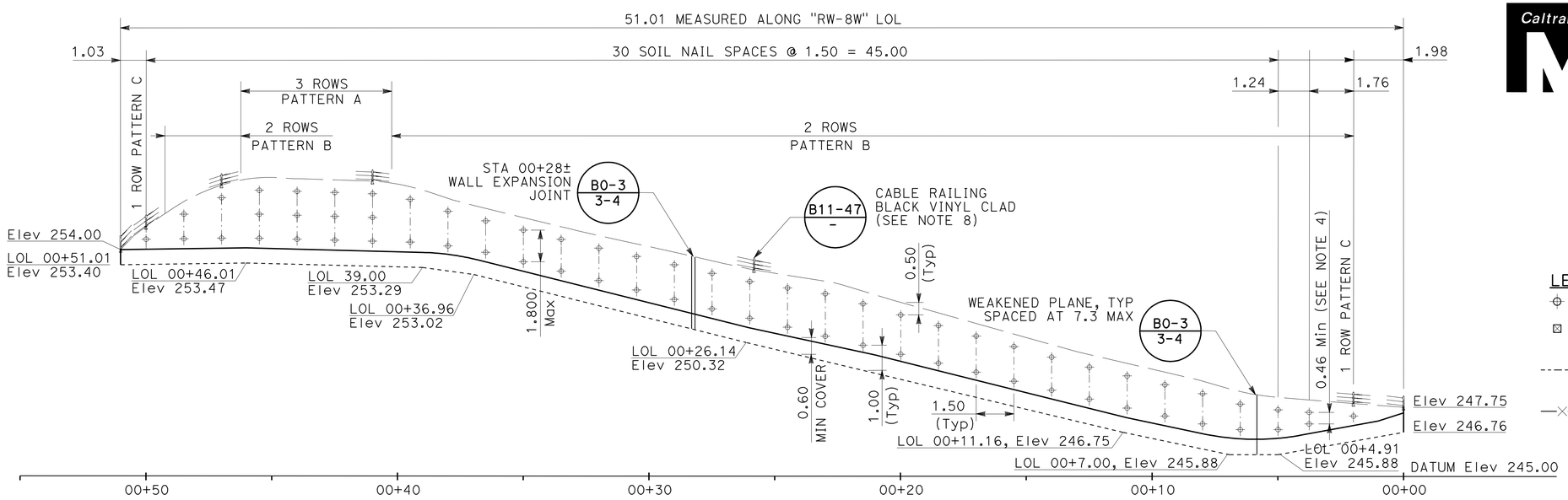


## DEVELOPED ELEVATION "RW-8W"

SCALE 1:100

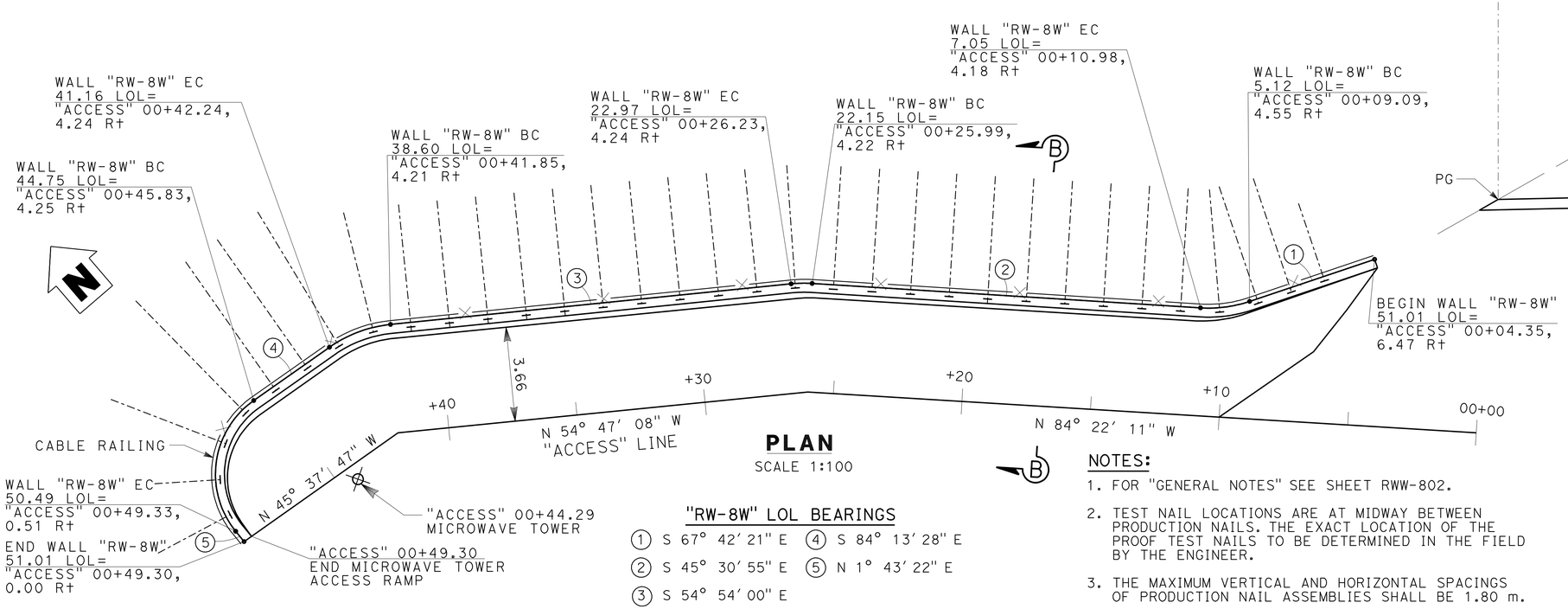


## PLAN

SCALE 1:100

### "RW-8W" LOL BEARINGS

1. S 67° 42' 21" E
2. S 45° 30' 55" E
3. S 54° 54' 00" E
4. S 84° 13' 28" E
5. N 1° 43' 22" E

### LEGEND:

- INDICATES LOCATION OF PRODUCTION NAIL ASSEMBLY
- INDICATES LOCATION OF THE TEST SOIL NAILS. LOCATE MIDWAY BETWEEN PRODUCTION NAILS.
- INDICATES PLAN VIEW LOCATION OF PRODUCTION NAIL ASSEMBLY.
- CABLE RAILING, BLACK VINYL CLAD.

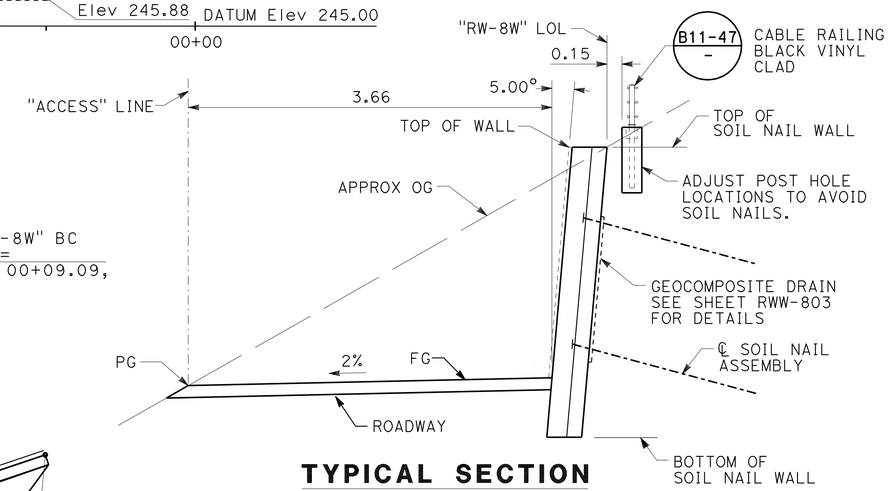


## TYPICAL SECTION

1:30

### NOTES:

1. FOR "GENERAL NOTES" SEE SHEET RWW-802.
2. TEST NAIL LOCATIONS ARE AT MIDWAY BETWEEN PRODUCTION NAILS. THE EXACT LOCATION OF THE PROOF TEST NAILS TO BE DETERMINED IN THE FIELD BY THE ENGINEER.
3. THE MAXIMUM VERTICAL AND HORIZONTAL SPACINGS OF PRODUCTION NAIL ASSEMBLIES SHALL BE 1.80 m.
4. THE MINIMUM VERTICAL AND HORIZONTAL SPACINGS OF PRODUCTION NAIL ASSEMBLIES SHALL NOT BE LESS THAN 0.46m.
5. FOR SECTION B-B, AND LIMITS OF STRUCTURE EXCAVATION, SEE SHEET RWW-804.
6. FOR SOIL NAIL LENGTHS OF PATTERN A, PATTERN B AND PATTERN C, SEE SHEET RWW-802.
7. FOR ARCHITECTURAL TREATMENT (TEXTURED SHOTCRETE) OF SOIL NAIL WALL, SEE SHEET C-42.
8. ALL CABLE RAILING POST LOCATIONS SHOWN ARE FOR ILLUSTRATION ONLY. ALL SPACING SHALL CONFORM TO STANDARD PLAN B11-47.
9. FOR LOG OF TEST BORINGS, SEE SHEETS LTB-101 TO 138.

ALL DIMENSIONS ARE IN METERS UNLESS OTHERWISE SHOWN

**RWW-801**

4 **REVISED PER ADDENDUM No. 4 DATED SEPTEMBER 3, 2009**

THE CONTRACTOR SHALL VERIFY ALL CONTROLLING FIELD DIMENSIONS BEFORE ORDERING OR FABRICATING ANY MATERIAL

# CALDECOTT IMPROVEMENT PROJECT

## RETAINING WALL NO. 8W

## RW-8W GENERAL PLAN

RANDY R. ANDERSON RRA
DESIGN OVERSIGHT
Feb. 13, 2009
SIGN OFF DATE

| | BY | CHECKED |
|---|---|---|
| DESIGN | L. HUANG | K. CHARAN |
| DETAILS | A. GURA | K. CHARAN |
| QUANTITIES | G. UANG | K. CHARAN |

PREPARED FOR THE STATE OF CALIFORNIA DEPARTMENT OF TRANSPORTATION

R. MATHUR
PROJECT ENGINEER

BRIDGE NO. 33E0071
KILOMETER POST 0.55

CU 04
EA 294911

DISREGARD PRINTS BEARING EARLIER REVISION DATES → 12/18/08 12/29/08 1/15/09 1/21/09 2/13/09 7/09/09

REVISION DATES (PRELIMINARY STAGE ONLY)

SHEET 1 OF 5

DESIGN DETAIL SHEET (METRIC) (REV. 6/21/04)

SCALE: ALL DIMENSIONS ARE IN METERS UNLESS OTHERWISE NOTED.

ORIGINAL SCALE IN MILLIMETERS FOR REDUCED PLANS 0 10 20 30 40 50 60 70 80 90 100

FILE => gb-28-e0107-rww801.add

USERNAME => trmikesl DATE PLOTTED => 01-SEP-2009 TIME PLOTTED => 10:54

| DIST | COUNTY | ROUTE | KILOMETER POST TOTAL PROJECT | SHEET No | TOTAL SHEETS |
|---|---|---|---|---|---|
| 04 | Ala,CC | 24 | 8.2/10.0, 0.0/2.7 | 415 | 1435 |

R.P. Mathur 7-10-2009
REGISTERED CIVIL ENGINEER DATE

1-5-09
PLANS APPROVAL DATE

REGISTERED PROFESSIONAL ENGINEER R.P.MATHUR No. C49400 Exp. 09/30/10 CIVIL STATE OF CALIFORNIA

*The State of California or its officers or agents shall not be responsible for the accuracy or completeness of electronic copies of this plan sheet.*

**PARSONS**
**50 FREMONT STREET, SUITE 1500**
**SAN FRANCISCO, CA 94105**

Caltrans Metric

4

## INDEX TO PLANS


| SHEET NO. | TITLE |
|---|---|
| RWW-801 | RW-8W GENERAL PLAN |
| RWW-802 | RW-8W INDEX TO PLANS |
| RWW-803 | RW-8W TYPICAL SECTION |
| RWW-804 | RW-8W SOIL NAIL WALL DETAILS NO. 1 |
| RWW-805 | RW-8W SOIL NAIL WALL DETAILS NO. 2 |


## STANDARD PLANS DATED JULY 2004

A10A ACRONYMS AND ABBREVIATIONS (A-L)

A10B ACRONYMS AND ABBREVIATIONS (M-2)

B0-3 BRIDGE DETAILS

B3-9 RETAINING WALL DETAILS NO. 2

B11-47 CABLE RAILING

STANDARD PLAN SHEET NO.

DETAIL NO.

## GENERAL NOTES:

DESIGN: BRIDGE DESIGN SPECIFICATIONS-2004 (1996 AASHTO WITH INTERIMS AND REVISIONS BY CALTRANS).

MANUAL FOR DESIGN AND CONSTRUCTION MONITORING OF SOIL NAIL WALLS - AASHTO 1998.

**SOIL PARAMETERS**

(FOR DETERMINATION OF DESIGN LATERAL EARTH PRESSURE ON WALL)

c = 32.5 KPa

$\phi$ = 30; $\gamma$ = 22.8 kN/m$^3$

DESIGN PULLOUT RESISTANCE = 33.4 kN/m

**GROUT**

fc′ = 21 MPa AT 28 DAYS (ASTM C109)

**STEEL REINFORCED SHOTCRETE**

fc′ = 25 MPa AT 28 DAYS

fy = 420 MPa

**SOIL NAILS**

ASTM DESIGNATION: A615/A615M

fy = 420 MPa

**STRUCTURE STEEL**

ASTM DESIGNATION: A709/A709M

fy = 250 MPa

**NUMBER OF NAILS AT EACH NAIL LENGTH**

| SECTION (ROW) | NAIL EMBEDMENT LENGTH ($L_e$) | |
|---|---|---|
| | 4.6 m | 3.1 m |
| A (1) | 4 | |
| A (2) | 4 | |
| A (3) | | 4 |
| B (1) | 27 | |
| B (2) | | 27 |
| C (1) | | 2 |

**RETAINING WALL RW-8W (33E0071) QUANTITIES**

| | |
|---|---|
| STRUCTURE EXCAVATION (SOIL NAIL WALL) | 92 m$^3$ |
| STRUCTURE BACKFILL (SOIL NAIL WALL) | 8 m$^3$ |
| SOIL NAIL ASSEMBLY (RW-8W) | 264 m |
| BAR REINFORCING STEEL (RETAINING WALL) | 2220 kg |
| SHOTCRETE | 50 m$^3$ |
| GEOCOMPOSITE DRAIN | 10 m$^2$ |
| CABLE RAILING | 53 m |
| ARCHITECTURAL TREATMENT (TEXTURED SHOTCRETE) | 116 m$^2$ |
| PREPARE AND STAIN SHOTCRETE | 116 m$^2$ |

4 **REVISED PER ADDENDUM No. 4 DATED SEPTEMBER 3, 2009**

ALL DIMENSIONS ARE IN METERS UNLESS OTHERWISE SHOWN

**RWW-802**

THE CONTRACTOR SHALL VERIFY ALL CONTROLLING FIELD DIMENSIONS BEFORE ORDERING OR FABRICATING ANY MATERIAL

RANDY R. ANDERSON RRA
DESIGN OVERSIGHT
Feb. 13, 2009
SIGN OFF DATE

| | BY | CHECKED |
|---|---|---|
| DESIGN | L. HUANG | K. CHARAN |
| DETAILS | A. GURA | K. CHARAN |
| QUANTITIES | G. UANG | K. CHARAN |

**PREPARED FOR THE STATE OF CALIFORNIA DEPARTMENT OF TRANSPORTATION**

R. MATHUR
PROJECT ENGINEER

BRIDGE NO. 33E0071
KILOMETER POST 0.55

**CALDECOTT IMPROVEMENT PROJECT**
**RETAINING WALL NO. 8W**
**RW-8W INDEX TO PLANS**

DESIGN DETAIL SHEET (METRIC) (REV. 6/21/04)

SCALE: ALL DIMENSIONS ARE IN METERS UNLESS OTHERWISE NOTED.

ORIGINAL SCALE IN MILLIMETERS FOR REDUCED PLANS 0 10 20 30 40 50 60 70 80 90 100

CU 04
EA 294911

DISREGARD PRINTS BEARING EARLIER REVISION DATES → 12/18/08 12/29/08 1/15/09 2/13/09 7/10/09

REVISION DATES (PRELIMINARY STAGE ONLY)

SHEET 2 OF 5

FILE => gb-28-e0107-rww802.add

gb-28-e0107-rww802.add

USERNAME => trmikes| DATE PLOTTED => 01-SEP-2009 TIME PLOTTED => 10:54

| DIST | COUNTY | ROUTE | KILOMETER POST TOTAL PROJECT | SHEET No | TOTAL SHEETS |
|---|---|---|---|---|---|
| 04 | Ala,CC | 24 | 8.2/10.0, 0.0/2.7 | 416 | 1435 |

Caltrans Metric

4

R.P. Mathur 7-07-2009
REGISTERED CIVIL ENGINEER DATE

1-5-09
PLANS APPROVAL DATE

REGISTERED PROFESSIONAL ENGINEER R.P.MATHUR No. C49400 Exp. 09/30/10 CIVIL STATE OF CALIFORNIA

*The State of California or its officers or agents shall not be responsible for the accuracy or completeness of electronic copies of this plan sheet.*

**PARSONS**
50 FREMONT STREET, SUITE 1500
SAN FRANCISCO, CA 94105

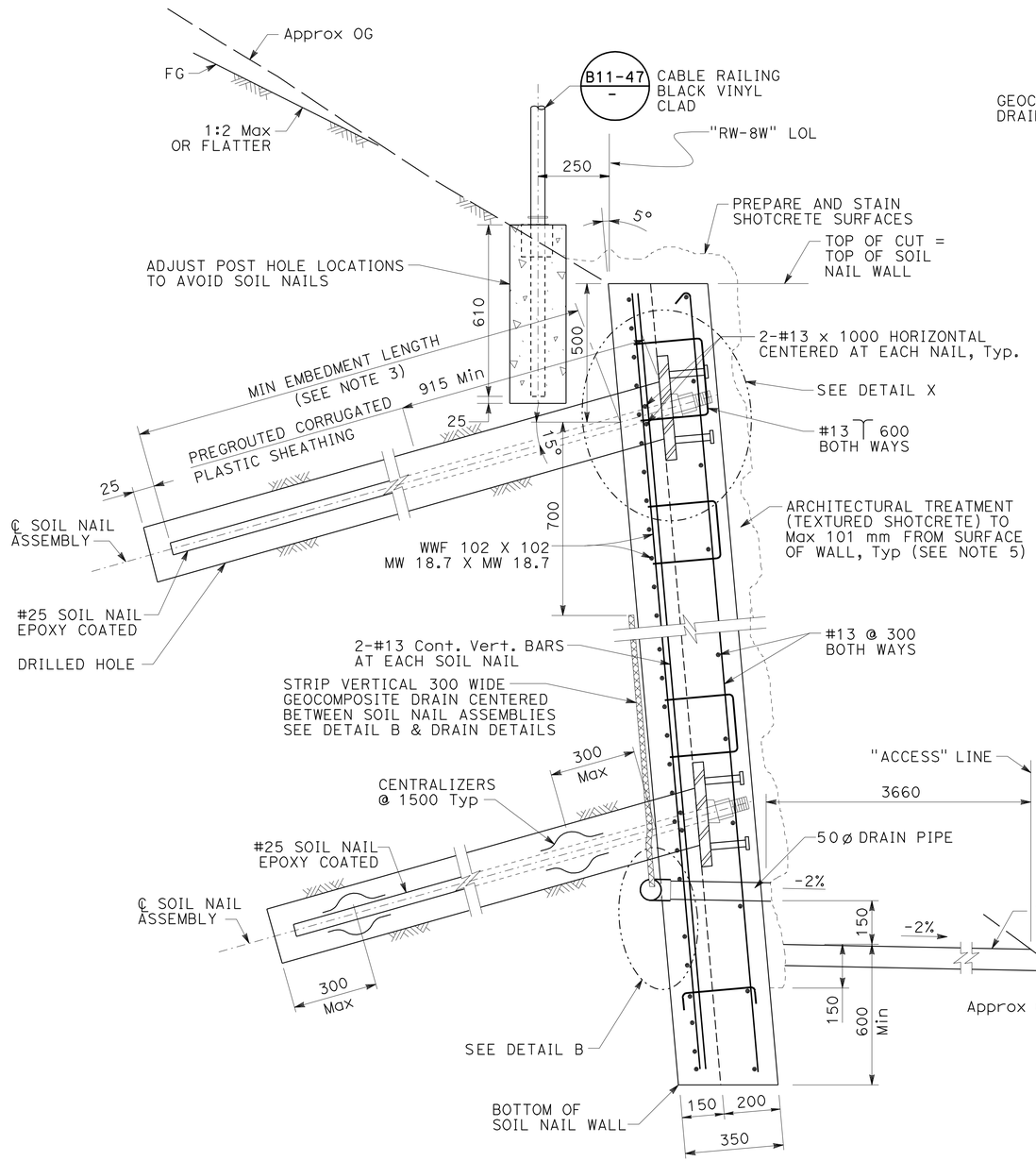


**TYPICAL SECTION**
1:10

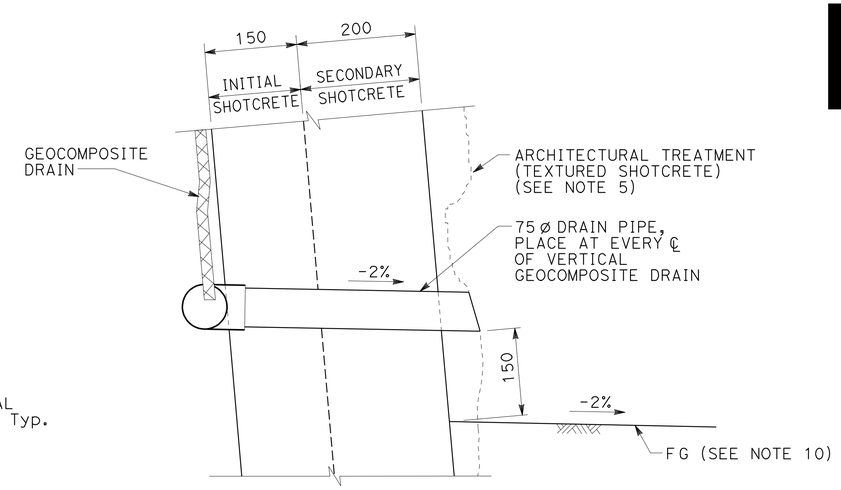


**DETAIL B**
NO SCALE

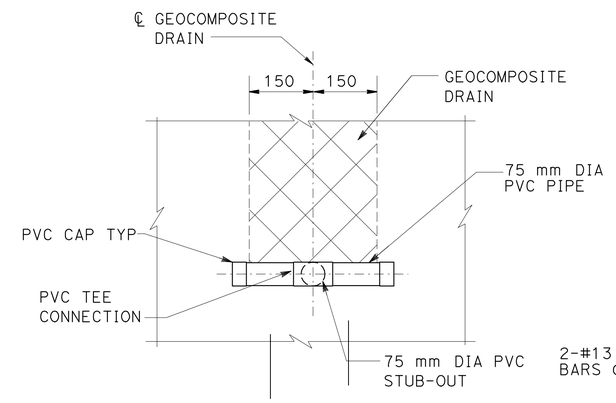


**DRAIN DETAILS**
NO SCALE

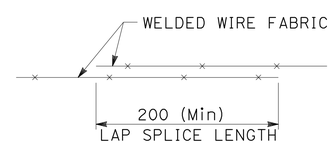


**LAP SPLICE DETAIL**
NO SCALE

NOTES:

1. FOR SOIL NAIL SPACING, SEE SHEET RWW-801.
2. BOTTOM OF WALL TO BE PLACED AGAINST UNDISTRUBED MATERIAL.
3. FOR MINIMUM NAIL EMBEDMENT LENGTHS SEE SHEET RWW-802.
4. THE ANCHORAGE IS ASSUMED TO REQUIRE 150 mm AND IS NOT INCLUDED IN THE EMBEDMENT LENGTH.
5. FOR ARCHITECTURAL TREATMENT (TEXTURED SHOTCRETE) DETAILS, SEE SHEET C-42.
6. CENTER GEOCOMPOSITE DRAIN BETWEEN SOIL NAIL ASSEMBLIES.
7. GEOCOMPOSITE DRAIN MAY BE RELOCATED WHEN CONFLICTING WITH TEST SOIL NAILS.
8. GEOCOMPOSITE DRAIN IS NOT REQUIRED FOR WALL HEIGHTS LESS THAN 2100 mm.
9. 300 mm MIN SPLICE LENGTH REQUIRED FOR GEOCOMPOSITE DRAINS.
10. SEE SHEETS C-41 AND C-42 FOR MICROWAVE TOWER ACCESS RAMP DETAILS.

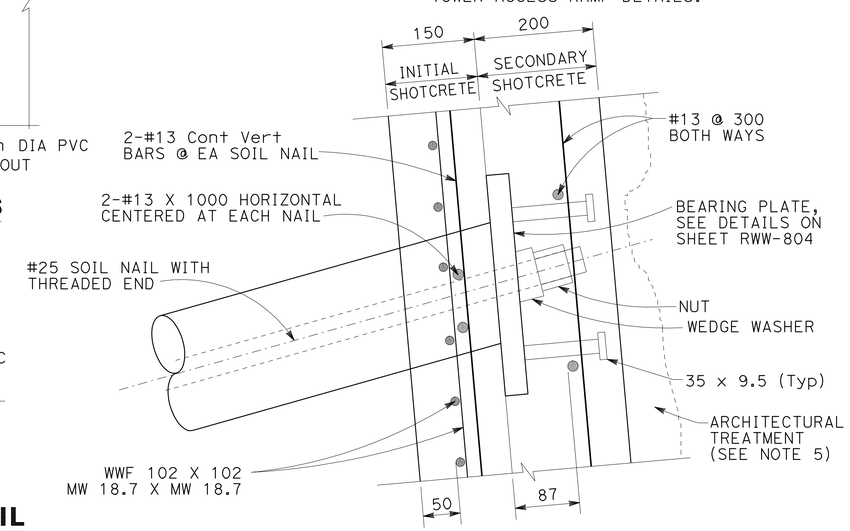


**DETAIL X**
1:5
ALL DIMENSIONS ARE IN MILLIMETERS UNLESS OTHERWISE SHOWN

**RWW-803**

4 **REVISED PER ADDENDUM No. 4 DATED SEPTEMBER 3, 2009**

THE CONTRACTOR SHALL VERIFY ALL CONTROLLING FIELD DIMENSIONS BEFORE ORDERING OR FABRICATING ANY MATERIAL

**CALDECOTT IMPROVEMENT PROJECT**
**RETAINING WALL NO. 8W**
**RW-8W TYPICAL SECTION**

RANDY R. ANDERSON RRA
DESIGN OVERSIGHT
Feb. 13, 2009
SIGN OFF DATE

| | BY | CHECKED |
|---|---|---|
| DESIGN | L. HUANG | K. CHARAN |
| DETAILS | A. GURA | K. CHARAN |
| QUANTITIES | G. UANG | K. CHARAN |

**PREPARED FOR THE STATE OF CALIFORNIA DEPARTMENT OF TRANSPORTATION**

R. MATHUR
PROJECT ENGINEER

BRIDGE NO. 33E0071
KILOMETER POST 0.55

DISREGARD PRINTS BEARING EARLIER REVISION DATES → 12/18/08 12/29/08 1/15/09 2/13/09 7/07/09

SHEET 3 OF 5

DESIGN DETAIL SHEET (METRIC) (REV. 6/21/04)

SCALE: ALL DIMENSIONS ARE IN MILLIMETERS UNLESS OTHERWISE NOTED.

ORIGINAL SCALE IN MILLIMETERS FOR REDUCED PLANS 0 10 20 30 40 50 60 70 80 90 100

CU 04
EA 294911

FILE => gb-28-e0107-rww803.add

gb-28-e0107-rww803.add

USERNAME => trmikes1 DATE PLOTTED => 01-SEP-2009 TIME PLOTTED => 10:55

| DIST | COUNTY | ROUTE | KILOMETER POST TOTAL PROJECT | SHEET No | TOTAL SHEETS |
|---|---|---|---|---|---|
| 04 | Ala,CC | 24 | 8.2/10.0, 0.0/2.7 | 417 | 1435 |

Caltrans Metric

R.P. Mathur 2-13-2009
REGISTERED CIVIL ENGINEER DATE

1-5-09
PLANS APPROVAL DATE

REGISTERED PROFESSIONAL ENGINEER R.P.MATHUR No. C49400 Exp. 09/30/10 CIVIL STATE OF CALIFORNIA

*The State of California or its agents shall not be responsible for the accuracy or completeness of electronic copies of this plan sheet.*

**PARSONS**
50 FREMONT STREET, SUITE 1500
SAN FRANCISCO, CA 94105

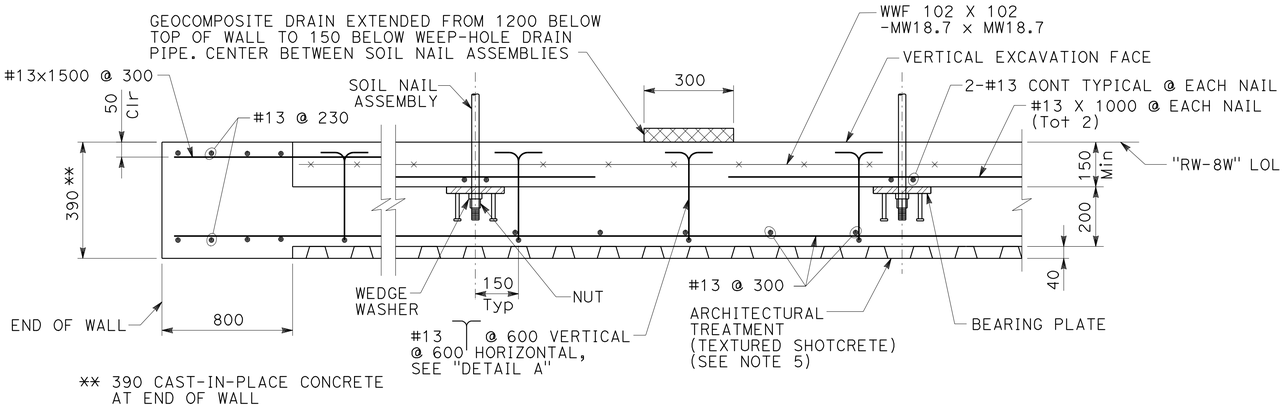


PART PLAN
SCALE: 1:10

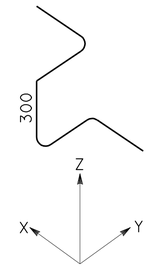


DETAIL A
NO SCALE

NOTES:

1. FOR SOIL NAIL SPACING, SEE SHEET RWW-801.
2. FOR DETAILS AND DIMENSIONS NOT SHOWN, SEE SHEET RWW-803.
3. ALL NAILS HAVE A MINUMUM DIAMETER OF 25.0 mm.
4. SEE SHEETS C-41 AND C-42 FOR MICROWAVE TOWER ACCESS RAMP DETAILS.
5. FOR ARCHITECTURAL TREATMENT (TEXTURED SHOTCRETE) DETAILS SEE SHEET C-42.

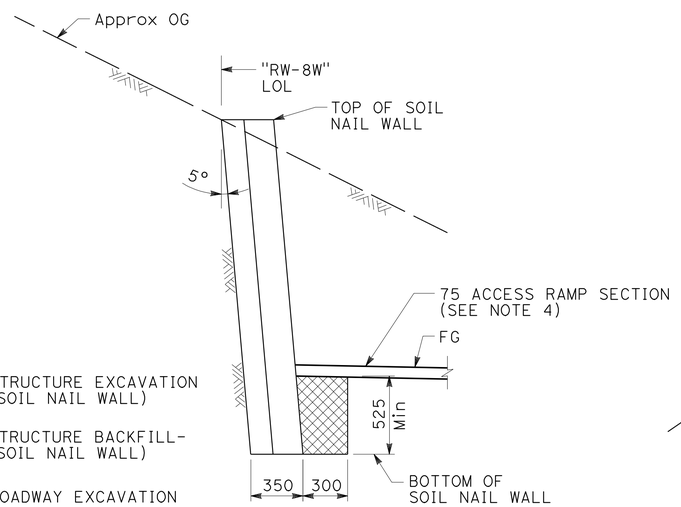


BACKFILL

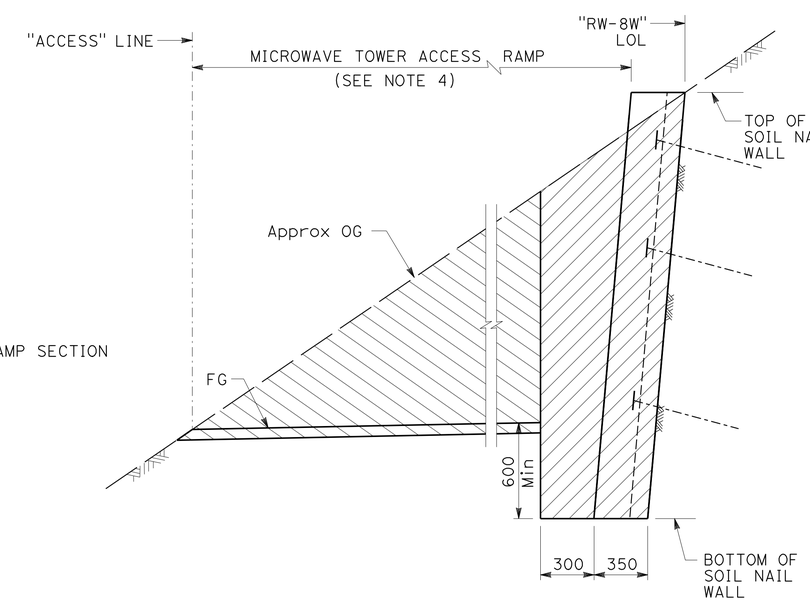


EXCAVATION

SECTION B-B
NO SCALE

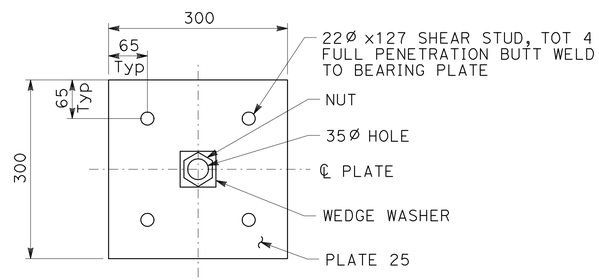


BEARING PLATE DETAIL
NO SCALE

LEGEND:

- STRUCTURE EXCAVATION (SOIL NAIL WALL)
- STRUCTURE BACKFILL-(SOIL NAIL WALL)
- ROADWAY EXCAVATION

**LIMITS OF PAYMENT FOR EXCAVATION AND BACKFILL**

**4 REVISED PER ADDENDUM No. 4 DATED SEPTEMBER 3, 2009**

ALL DIMENSIONS ARE IN MILLIMETERS UNLESS OTHERWISE SHOWN

**RWW-804**

THE CONTRACTOR SHALL VERIFY ALL CONTROLLING FIELD DIMENSIONS BEFORE ORDERING OR FABRICATING ANY MATERIAL

**CALDECOTT IMPROVEMENT PROJECT**
**RETAINING WALL NO. 8W**
**RW-8W SOIL NAIL WALL DETAILS NO.1**

RANDY R. ANDERSON RRA
DESIGN OVERSIGHT
Feb. 13, 2009
SIGN OFF DATE

| | BY | CHECKED |
|---|---|---|
| DESIGN | L. HUANG | K. CHARAN |
| DETAILS | A. GURA | K. CHARAN |
| QUANTITIES | G. UANG | K. CHARAN |

PREPARED FOR THE STATE OF CALIFORNIA DEPARTMENT OF TRANSPORTATION

R. MATHUR
PROJECT ENGINEER

BRIDGE NO. 33E0071
KILOMETER POST 0.55

DISREGARD PRINTS BEARING EARLIER REVISION DATES → 12/18/08 12/29/08 1/15/09 2/13/09

REVISION DATES (PRELIMINARY STAGE ONLY)

SHEET 4 OF 5

DESIGN DETAIL SHEET (METRIC) (REV. 6/21/04)

SCALE: ALL DIMENSIONS ARE IN MILLIMETERS UNLESS OTHERWISE NOTED.

ORIGINAL SCALE IN MILLIMETERS FOR REDUCED PLANS 0 10 20 30 40 50 60 70 80 90 100

CU 04
EA 294911

FILE => gb-28-e0107-rww804.add

USERNAME => trmikesl DATE PLOTTED => 01-SEP-2009 TIME PLOTTED => 10:55

gb-28-e0107-rww804.add

| DIST | COUNTY | ROUTE | KILOMETER POST TOTAL PROJECT | SHEET No | TOTAL SHEETS |
|---|---|---|---|---|---|
| 04 | Ala,CC | 24 | 8.2/10.0, 0.0/2.7 | 418 | 1435 |

Caltrans Metric

4

R.P. Mathur 7-01-2009
REGISTERED CIVIL ENGINEER DATE

1-5-09
PLANS APPROVAL DATE

REGISTERED PROFESSIONAL ENGINEER R.P.MATHUR No. C49400 Exp. 09/30/10 CIVIL STATE OF CALIFORNIA

*The State of California or its officers or agents shall not be responsible for the accuracy or completeness of electronic copies of this plan sheet.*

**PARSONS**
50 FREMONT STREET, SUITE 1500
SAN FRANCISCO, CA 94105

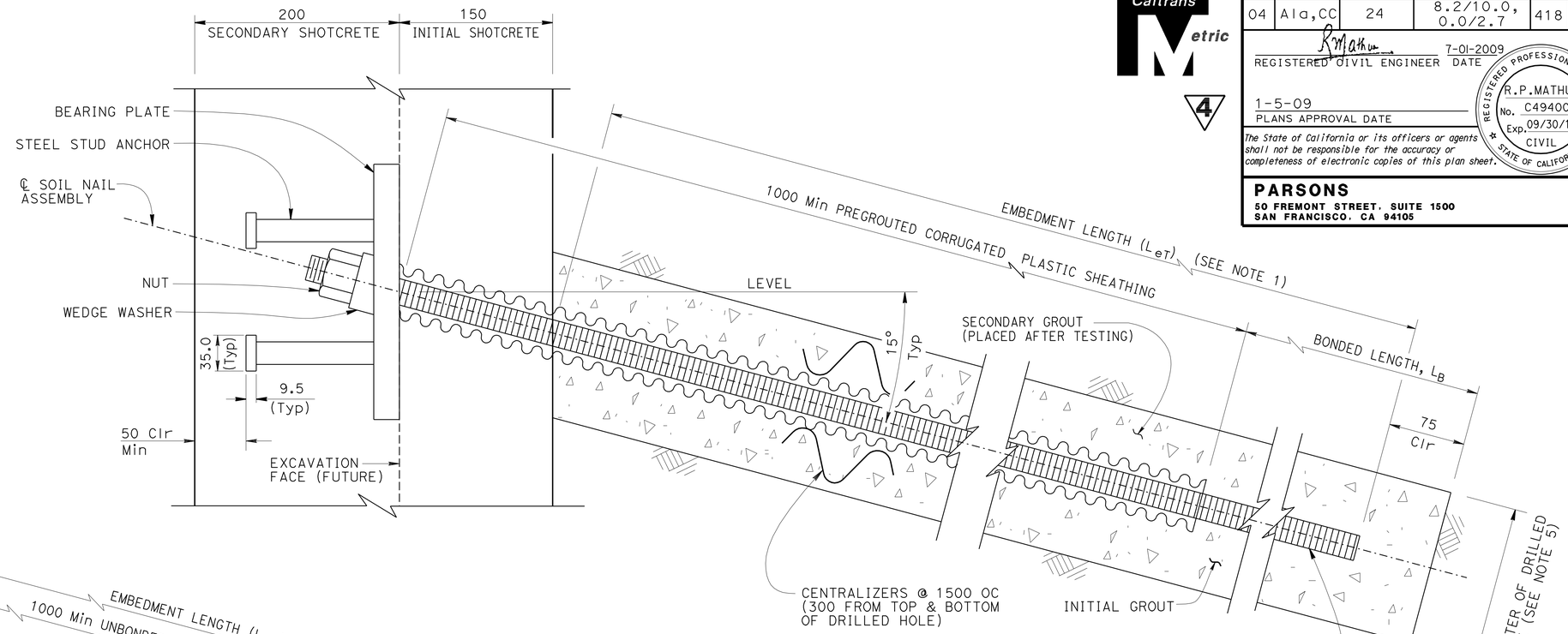


## TEST SOIL NAIL ASSEMBLY DETAIL

1:2.5

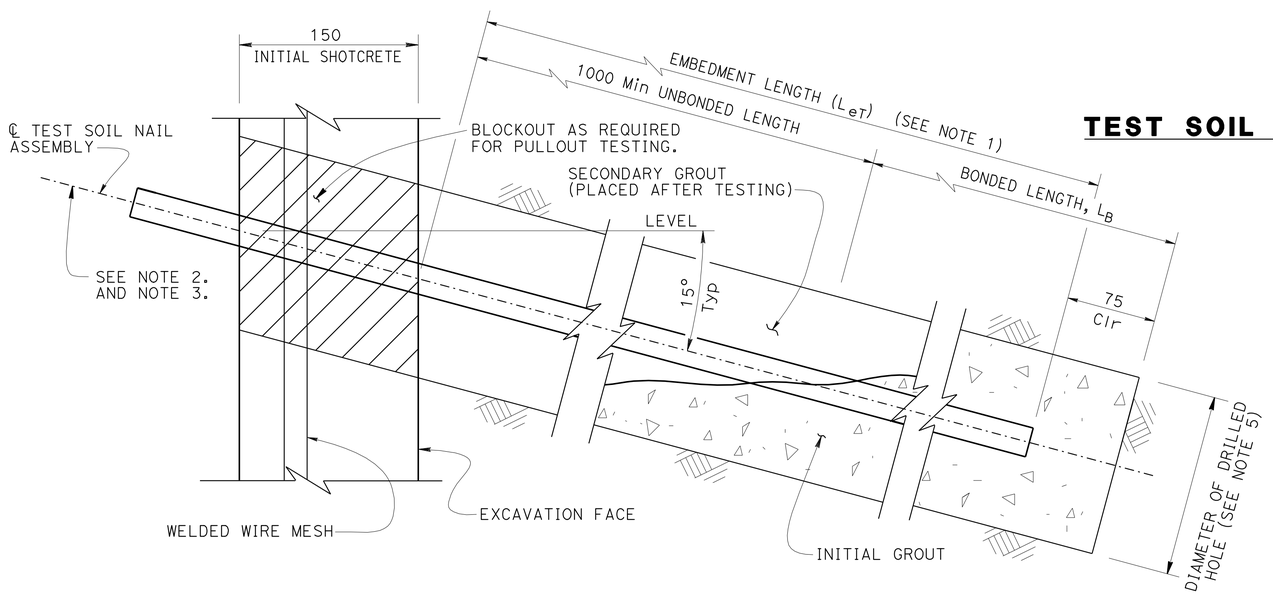


## VERIFICATION TEST SOIL NAIL ASSEMBLY DETAIL

1:2.5

NOTES:

1. THE $L_{eT}$, EMBEDMENT LENGTH, OF PROOF TEST NAILS AND VERIFICATION TEST NAILS SHALL BE EQUAL TO 2/3 OF THE EMBEDMENT LENGTH, $L_e$ OF ADJACENT SOIL NAIL ASSEMBLY, BUT NOT LESS THAN 3.66 m
2. TOTAL LENGTH OF THE PROOF TEST SOIL NAIL ASSEMBLY IS EQUAL TO THE EMBEDMENT LENGTH PLUS THE LENGTH REQUIRED FOR JACKING EQUIPMENT.
3. FOR EMBEDMENT LENGTH $L_e$ OF PRODUCTION NAILS SEE SHEET RWW-802.
4. FOR LOCATION OF PROOF TEST SOIL NAIL ASSEMBLIES, SEE SHEET RWW-801. ADDITIONAL PROOF TEST SOIL NAILS WILL BE INSTALLED AND TESTED PER SPECIAL PROVISIONS.
5. THE DIAMETER OF DRILLED HOLE WILL BE DETERMINED BY THE CONTRACTOR.
6. FOR BONDED LENGTH $L_B$, SEE SPECIAL PROVISIONS.
7. NOT ALL REINFORCEMENT SHOWN. SEE SHEETS RWW-803 AND RWW-804 FOR REINFORCEMENT DETAILS.
8. THE LOCATION OF VERIFICATION TEST SOIL NAILS TO BE DETERMINED IN THE FIELD BY THE ENGINEER.

4 **REVISED PER ADDENDUM No. 4 DATED SEPTEMBER 3, 2009**

ALL DIMENSIONS ARE IN MILLIMETERS UNLESS OTHERWISE SHOWN

**RWW-805**

THE CONTRACTOR SHALL VERIFY ALL CONTROLLING FIELD DIMENSIONS BEFORE ORDERING OR FABRICATING ANY MATERIAL

**CALDECOTT IMPROVEMENT PROJECT**
**RETAINING WALL NO. 8W**
**RW-8W SOIL NAIL WALL DETAILS NO.2**

RANDY R. ANDERSON RRA
DESIGN OVERSIGHT
Feb. 13, 2009
SIGN OFF DATE

| | BY | CHECKED |
|---|---|---|
| DESIGN | L. HUANG | K. CHARAN |
| DETAILS | A. GURA | K. CHARAN |
| QUANTITIES | G. UANG | K. CHARAN |

PREPARED FOR THE STATE OF CALIFORNIA DEPARTMENT OF TRANSPORTATION

R. MATHUR
PROJECT ENGINEER

BRIDGE NO. 33E0071
KILOMETER POST 0.55

DESIGN DETAIL SHEET (METRIC) (REV. 6/21/04)

SCALE: ALL DIMENSIONS ARE IN MILLIMETERS UNLESS OTHERWISE NOTED.

ORIGINAL SCALE IN MILLIMETERS FOR REDUCED PLANS 0 10 20 30 40 50 60 70 80 90 100

CU 04
EA 294911

DISREGARD PRINTS BEARING EARLIER REVISION DATES → 12/18/08 12/29/08 1/15/09 2/13/09 7/01/09

REVISION DATES (PRELIMINARY STAGE ONLY) | SHEET 5 | OF 5

FILE => gb-28-e0107-rww805.add

STRUCTURES DESIGN DETAIL SHEET (METRIC) (REV.03-17-04)

USERNAME => trmikesl DATE PLOTTED => 01-SEP-2009 TIME PLOTTED => 10:55

| DIST | COUNTY | ROUTE | KILOMETER POST TOTAL PROJECT | SHEET No | TOTAL SHEETS |
|---|---|---|---|---|---|
| 04 | Ala,CC | 24 | 8.2/10.0, 0.0/2.7 | 439 | 1435 |

REGISTERED CIVIL ENGINEER 7-10-08 DATE

1-5-09
PLANS APPROVAL DATE

REGISTERED PROFESSIONAL ENGINEER Linan Wang No. 54714 Exp. 12-31-09 CIVIL STATE OF CALIFORNIA

The State of California or its officers or agents shall not be responsible for the accuracy or completeness of electronic copies of this plan sheet.

*To get to the Caltrans web site, go to: http://www.dot.ca.gov*

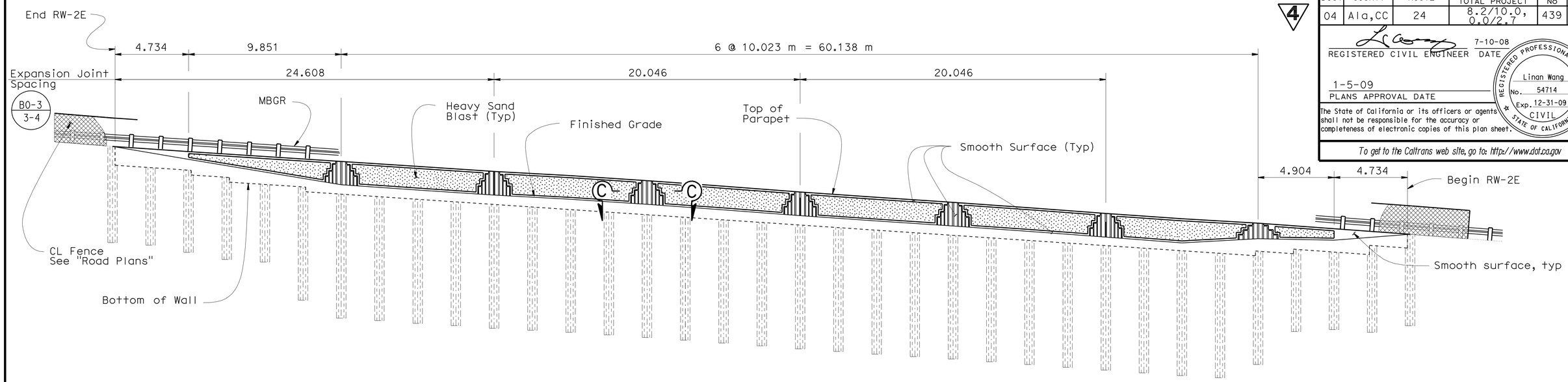


Datum Elev = 270.000

+80 +60 +40 +20 35+00

## ELEVATION

No Scale

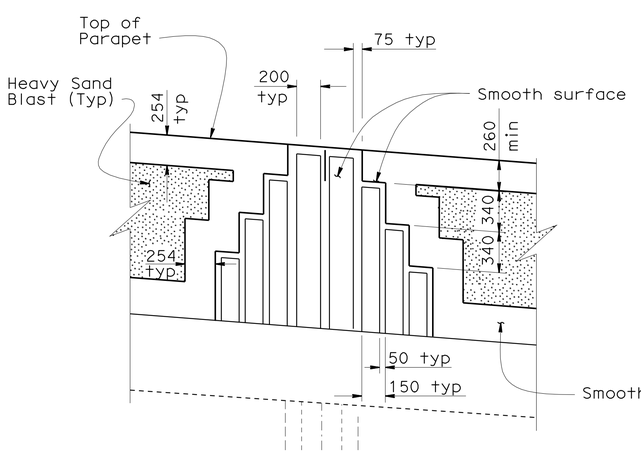


## PART ELEVATION

1:25

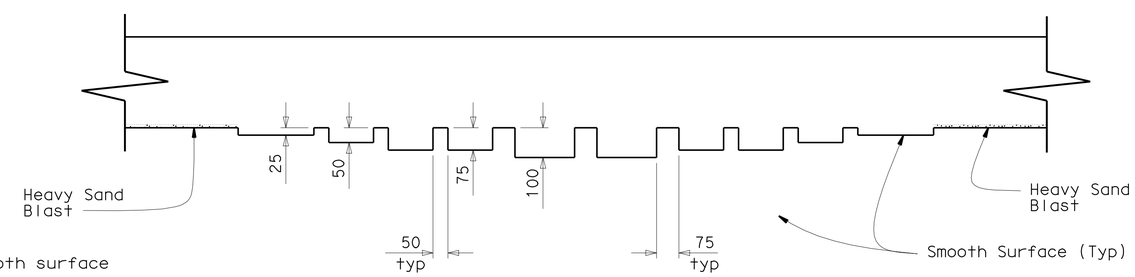


## SECTION C-C

1:10

**4 REVISED PER ADDENDUM No. 4 DATED SEPTEMBER 3, 2009**

RWE-206

Caltrans Metric

| | BY | CHECKED |
|---|---|---|
| DESIGN | Utin Nwe | Linan Wang |
| DETAILS | Marvin Lane | Linan Wang |
| QUANTITIES | Sergio Damian | Gordy D |

STATE OF CALIFORNIA DEPARTMENT OF TRANSPORTATION

DIVISION OF ENGINEERING SERVICES STRUCTURE DESIGN DESIGN BRANCH 4

BRIDGE NO. 28E0102
KILOMETER POST 0.41

CALDECOTT IMPROVEMENT PROJECT

RETAINING WALL NO. 2E

RW-2E ARCHITECTURAL TREATMENT DETAILS

ALL DIMENSIONS ARE IN MILLIMETERS UNLESS OTHERWISE SHOWN

ORIGINAL SCALE IN MILLIMETERS FOR REDUCED PLANS 0 10 20 30 40 50 60 70 80 90 100

CU 04
EA 294911

DISREGARD PRINTS BEARING EARLIER REVISION DATES

REVISION DATES: ~~12-20-07~~ ~~3-3-08~~ ~~5-6-08~~ ~~7-16-08~~ 7-23-09

SHEET 6 OF 6

FILE => gb-28-e0102-rwe206.add

STRUCTURES DESIGN DETAIL SHEET (METRIC) (REV.03-17-04)

USERNAME => ttmikes1 DATE PLOTTED => 01-SEP-2009 TIME PLOTTED => 10:55

| DIST. | COUNTY | ROUTE | KILOMETER POST TOTAL PROJECT | SHEET NO. | TOTAL SHEETS |
|---|---|---|---|---|---|
| 04 | Ala,CC | 24 | 8.2/10.0, 0.0/2.7 | 651 | 1435 |

Douglas Slakey 7-07-2009
REGISTERED CIVIL ENGINEER

1-5-09
PLANS APPROVAL DATE

REGISTERED PROFESSIONAL ENGINEER DOUGLAS SLAKEY No. 30879 Exp. 03-31-10 CIVIL STATE OF CALIFORNIA

*The State of California or its officers or agents shall not be responsible for the accuracy or completeness of electronic copies of this plan sheet.*

**PARSONS**
50 FREMONT STREET, SUITE 1500
SAN FRANCISCO, CA 94105

Caltrans Metric

4

LEGEND:

STRUCTURES TO BE DEMOLISHED

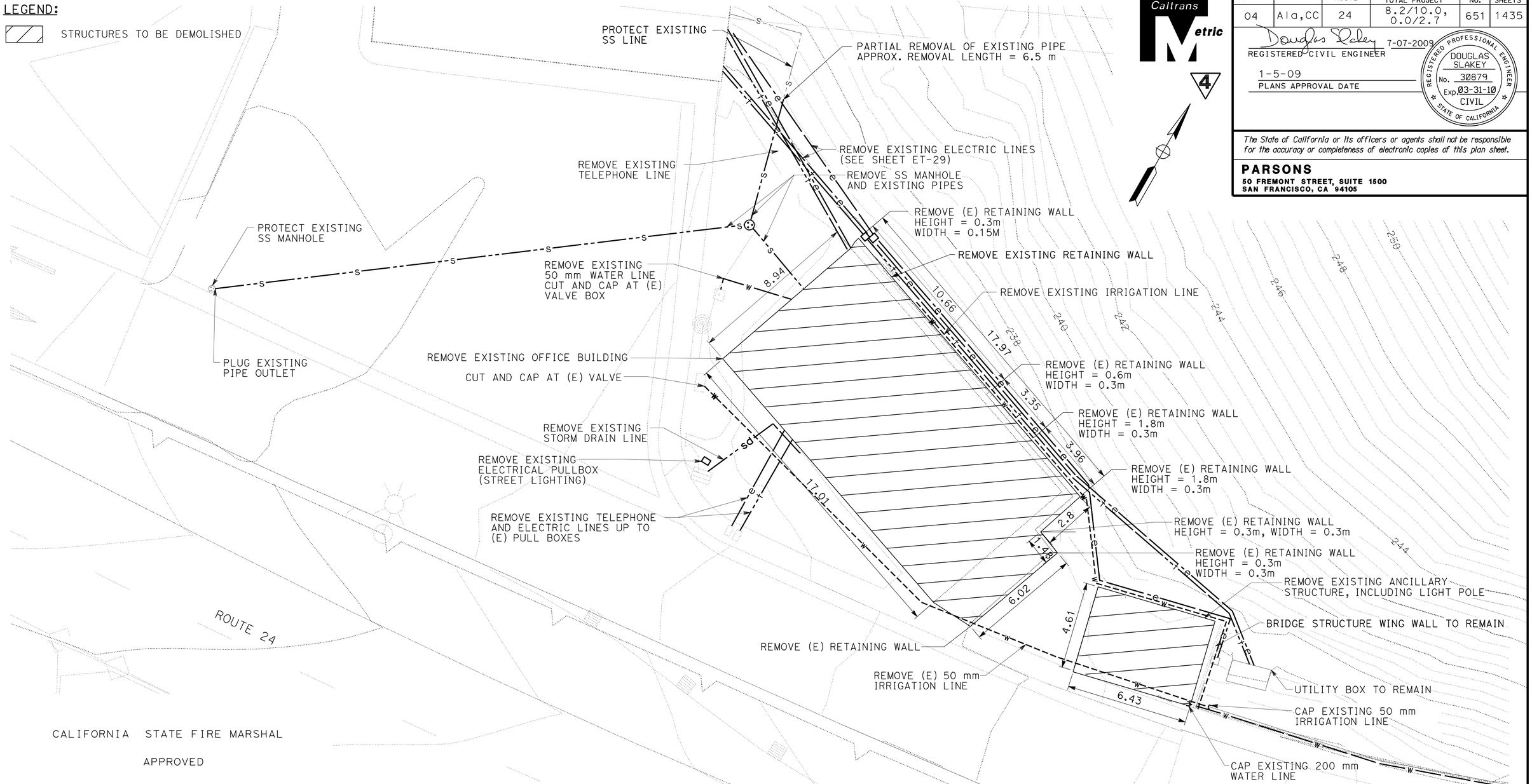


CALIFORNIA STATE FIRE MARSHAL

APPROVED

Approval of this plan does not authorize or approve any omission or deviation from applicable regulations. Final approval is subject to field inspection. One set of approved plans shall be available on the project site at all times.

Reviewed by: _____

Date: 07/10/08

IDENTIFICATION STAMP
DIVISION OF THE STATE ARCHITECT

APPL 01 109761
AC KW FLS ____ SS ____
DATE 6/26/2008

4 **REVISED PER ADDENDUM No. 4 DATED SEPTEMBER 3, 2009**

**PLAN**
1:100

THE CONTRACTOR SHALL VERIFY ALL CONTROLLING FIELD DIMENSIONS BEFORE ORDERING OR FABRICATING ANY MATERIAL

**CALDECOTT IMPROVEMENT PROJECT**

**OMC BUILDING**

**DEMOLITION PLAN**

SHEET **CB-2**

RANDY R. ANDERSON
DESIGN OVERSIGHT
12-01-2008
SIGN OFF DATE

| | BY | CHECKED |
|---|---|---|
| DESIGN | | |
| DETAILS | | |
| QUANTITIES | | |

**PREPARED FOR THE STATE OF CALIFORNIA DEPARTMENT OF TRANSPORTATION**

PROJECT ENGINEER

BRIDGE NO. 33-0737
KM POST 9.51

DS OSD metric Rev. 9/02 01-SEP-2009 10:56

SCALE: ALL DIMENSIONS ARE IN METERS UNLESS OTHERWISE NOTED.

ORIGINAL SCALE IN MILLIMETERS FOR REDUCED PLANS 0 10 20 30 40 50 60 70 80 90 100

CU 04
EA 294911

DISREGARD PRINTS BEARING EARLIER REVISION DATES →

REVISION DATES (PRELIMINARY STAGE ONLY) SHEET OF

01-SEP-2009 10:56

s-28-0015k-cb-02.add

| DIST. | COUNTY | ROUTE | KILOMETER POST TOTAL PROJECT | SHEET NO. | TOTAL SHEETS |
|---|---|---|---|---|---|
| 04 | Ala,CC | 24 | 8.2/10.0, 0.0/2.7 | 655 | 1435 |

Caltrans Metric

4

Douglas Slakey 7-07-2009
REGISTERED CIVIL ENGINEER

1-5-09
PLANS APPROVAL DATE

REGISTERED PROFESSIONAL ENGINEER DOUGLAS SLAKEY No. 30879 Exp. 03-31-10 CIVIL STATE OF CALIFORNIA

*The State of California or its officers or agents shall not be responsible for the accuracy or completeness of electronic copies of this plan sheet.*

**PARSONS**
50 FREMONT STREET, SUITE 1500
SAN FRANCISCO, CA 94105

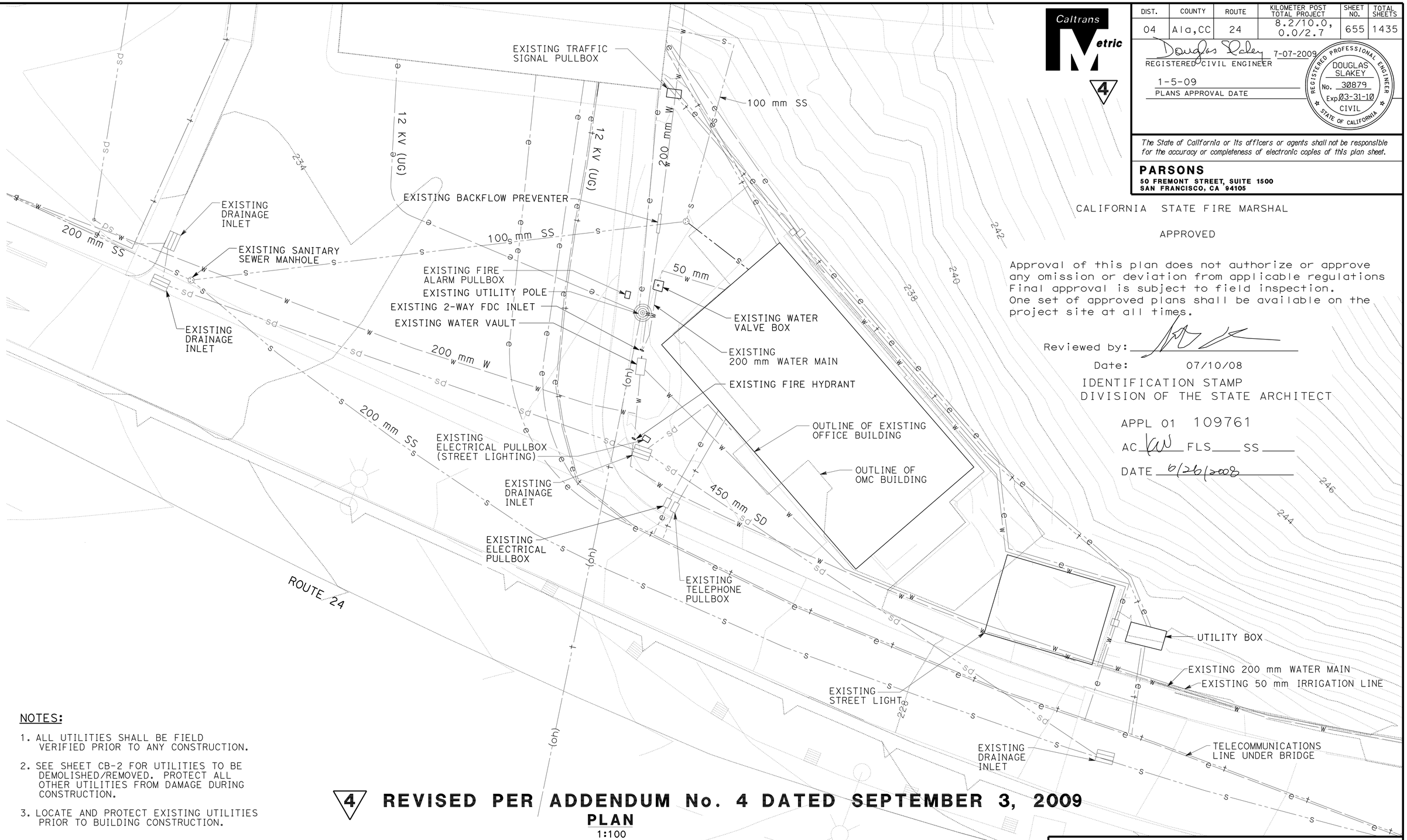


CALIFORNIA STATE FIRE MARSHAL

APPROVED

Approval of this plan does not authorize or approve any omission or deviation from applicable regulations. Final approval is subject to field inspection. One set of approved plans shall be available on the project site at all times.

Reviewed by: _____

Date: 07/10/08

IDENTIFICATION STAMP
DIVISION OF THE STATE ARCHITECT

APPL 01 109761

AC KW FLS ____ SS ____

DATE 6/26/2008

NOTES:

1. ALL UTILITIES SHALL BE FIELD VERIFIED PRIOR TO ANY CONSTRUCTION.
2. SEE SHEET CB-2 FOR UTILITIES TO BE DEMOLISHED/REMOVED. PROTECT ALL OTHER UTILITIES FROM DAMAGE DURING CONSTRUCTION.
3. LOCATE AND PROTECT EXISTING UTILITIES PRIOR TO BUILDING CONSTRUCTION.

4 **REVISED PER ADDENDUM No. 4 DATED SEPTEMBER 3, 2009**

**PLAN**
1:100

THE CONTRACTOR SHALL VERIFY ALL CONTROLLING FIELD DIMENSIONS BEFORE ORDERING OR FABRICATING ANY MATERIAL

# CALDECOTT IMPROVEMENT PROJECT

## OMC BUILDING

## EXISTING SITE UTILITIES

SHEET CB-6

RANDY R. ANDERSON
DESIGN OVERSIGHT
12-01-2008
SIGN OFF DATE

| | BY | CHECKED |
|---|---|---|
| DESIGN | | |
| DETAILS | | |
| QUANTITIES | | |

PREPARED FOR THE STATE OF CALIFORNIA DEPARTMENT OF TRANSPORTATION

PROJECT ENGINEER

BRIDGE NO. 33-5737
KM POST 9.51

CU 04
EA 294911

DISREGARD PRINTS BEARING EARLIER REVISION DATES →

REVISION DATES (PRELIMINARY STAGE ONLY) SHEET OF

DS OSD metric Rev. 9/02 01-SEP-2009 10:56

SCALE: ALL DIMENSIONS ARE IN METERS UNLESS OTHERWISE NOTED.

ORIGINAL SCALE IN MILLIMETERS FOR REDUCED PLANS 0 10 20 30 40 50 60 70 80 90 100

01-SEP-2009 10:56

s-28-0015k-cb-06.add

| DIST. | COUNTY | ROUTE | KILOMETER POST TOTAL PROJECT | SHEET NO. | TOTAL SHEETS |
|---|---|---|---|---|---|
| 04 | Ala,CC | 24 | 8.2/10.0, 0.0/2.7 | 656 | 1435 |

Caltrans Metric

4

Douglas Slakey 7-07-2009
REGISTERED CIVIL ENGINEER

1-5-09
PLANS APPROVAL DATE

REGISTERED PROFESSIONAL ENGINEER
DOUGLAS SLAKEY
No. 30879
Exp. 03-31-10
CIVIL
STATE OF CALIFORNIA

*The State of California or its officers or agents shall not be responsible for the accuracy or completeness of electronic copies of this plan sheet.*

**PARSONS**
50 FREMONT STREET, SUITE 1500
SAN FRANCISCO, CA 94105

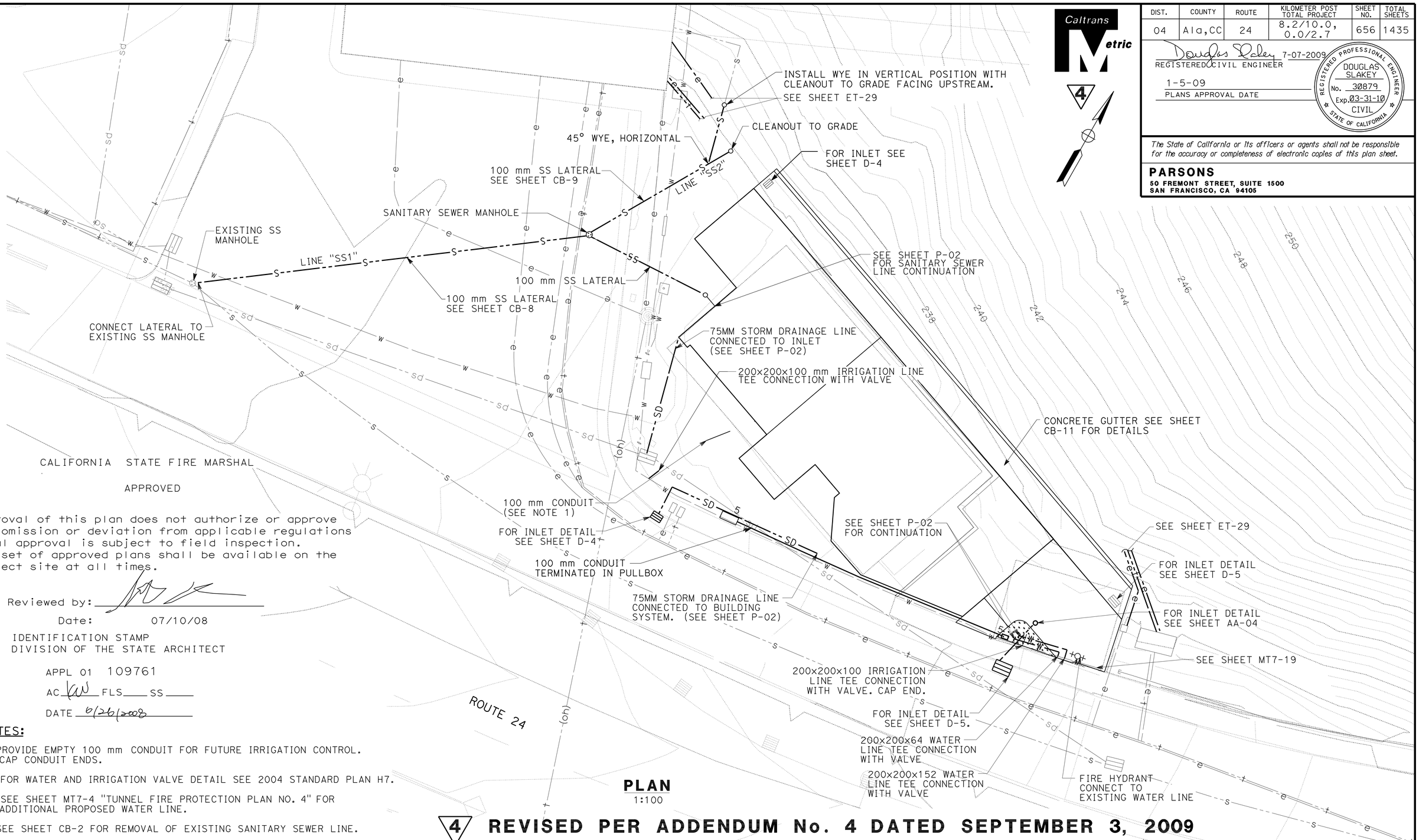


**PLAN**
1:100

**NOTES:**

1. PROVIDE EMPTY 100 mm CONDUIT FOR FUTURE IRRIGATION CONTROL. CAP CONDUIT ENDS.
2. FOR WATER AND IRRIGATION VALVE DETAIL SEE 2004 STANDARD PLAN H7.
3. SEE SHEET MT7-4 "TUNNEL FIRE PROTECTION PLAN NO. 4" FOR ADDITIONAL PROPOSED WATER LINE.
4. SEE SHEET CB-2 FOR REMOVAL OF EXISTING SANITARY SEWER LINE.
5. FOR DRAINAGE DETAILS NOT SHOWN SEE SHEETS D-4 AND D-5.

4 **REVISED PER ADDENDUM No. 4 DATED SEPTEMBER 3, 2009**

THE CONTRACTOR SHALL VERIFY ALL CONTROLLING FIELD DIMENSIONS BEFORE ORDERING OR FABRICATING ANY MATERIAL

**CALDECOTT IMPROVEMENT PROJECT**

**OMC BUILDING**

**SITE UTILITY PLAN**

SHEET **CB-7**

RANDY R. ANDERSON
DESIGN OVERSIGHT
12-01-2008
SIGN OFF DATE

| | BY | CHECKED |
|---|---|---|
| DESIGN | | |
| DETAILS | | |
| QUANTITIES | | |

**PREPARED FOR THE STATE OF CALIFORNIA DEPARTMENT OF TRANSPORTATION**

PROJECT ENGINEER

BRIDGE NO. 33-5737
KM POST 9.51

DS OSD metric Rev. 9/02 01-SEP-2009 10:56

SCALE: ALL DIMENSIONS ARE IN METERS UNLESS OTHERWISE NOTED.

ORIGINAL SCALE IN MILLIMETERS FOR REDUCED PLANS 0 10 20 30 40 50 60 70 80 90 100

CU 04
EA 294911

DISREGARD PRINTS BEARING EARLIER REVISION DATES →

REVISION DATES (PRELIMINARY STAGE ONLY) SHEET OF

01-SEP-2009 10:56

s-28-0015k-cb-07.dgn

| DIST. | COUNTY | ROUTE | KILOMETER POST TOTAL PROJECT | SHEET NO. | TOTAL SHEETS |
|---|---|---|---|---|---|
| 04 | Ala, CC | 24 | 8.2/10.0, 0.0/2.7 | 666 | 1435 |

## LEGEND

- IHR RATED WALL, SEE WALL SCHEDULE AA44
- CONCRETE WALL
- NON-RATED PARTITION, SEE WALL SCHEDULE AA44
- FE — FIRE EXTINGUISHER CABINET
- FLOOR MOUNTED DIFFUSER
- ENTRY MAT
- WINDOW, SEE AA52
- ORNAMENTAL GRILLE, SEE BI/AA37
- DOOR AND FRAME, SEE DOOR SCHEDULE AA51
- HI-LO DRINKING FOUNTAIN, SEE DETAIL C3/AA50
- PERMEABLE CONC. PAVERS

## SHEET NOTES

GROSS FIRST FLOOR AREA = 213 m2
GROSS SECOND FLOOR AREA = 193 m2
GROSS BUILDING AREA = 406 m2

1. REFERENCE ELEVATION 0 = +236 300
2. FOR ELEVATOR SHAFT ENLARGED PLANS, SEE AA42.
3. SEE AA44 FOR WALL TYPES
4. DIMENSIONING:
   - 4.1. FACE OF PLYWOOD OF ALL EXTERIOR WALLS ALIGNS WITH GRID LINE, WHERE OCCURS.
   - 4.2. ALL EXTERIOR WALLS ARE DIMENSIONED TO FACE OF PLYWOOD, UNLESS OTHERWISE NOTED.
   - 4.3. ALL INTERIOR WALLS ARE DIMENSIONED TO FACE OF STUD, UNLESS OTHERWISE NOTED.
   - 4.4 WINDOWS ARE DIMENSIONED TO FACE OF WINDOW OPENINGS, UNLESS OTHERWISE NOTED.
   - 4.5 DOORS ARE DIMENSIONED TO FINISH FACE OF DOOR OPENINGS, UNLESS OTHERWISE NOTED.
   - 4.6 FOR LOCATIONS OF DOOR NOT DIMENSIONED ON PLAN OR OTHERWISE DETAILED, LOCATE DOOR 102 FROM FACE OF NEAREST PERPENDICULAR WALL TO FINISH FACE OF DOOR OPENING.

Caltrans Metric

THE CONTRACTOR SHALL VERIFY ALL CONTROLLING FIELD DIMENSIONS BEFORE ORDERING OR FABRICATING ANY MATERIAL

LICENSED ARCHITECT 07-01-08

1-5-09
PLANS APPROVAL DATE

LICENSED ARCHITECT — ELIEZER NAOR No. C 17923 Exp. 5/13/09 — STATE OF CALIFORNIA

*The State of California or its officers or agents shall not be responsible for the accuracy or completeness of electronic copies of this plan sheet.*


**PARSONS**
50 FREMONT STREET, SUITE 1500
SAN FRANCISCO, CA 94105

**VBN ARCHITECT**
560 14TH STREET
OAKLAND, CA 94612


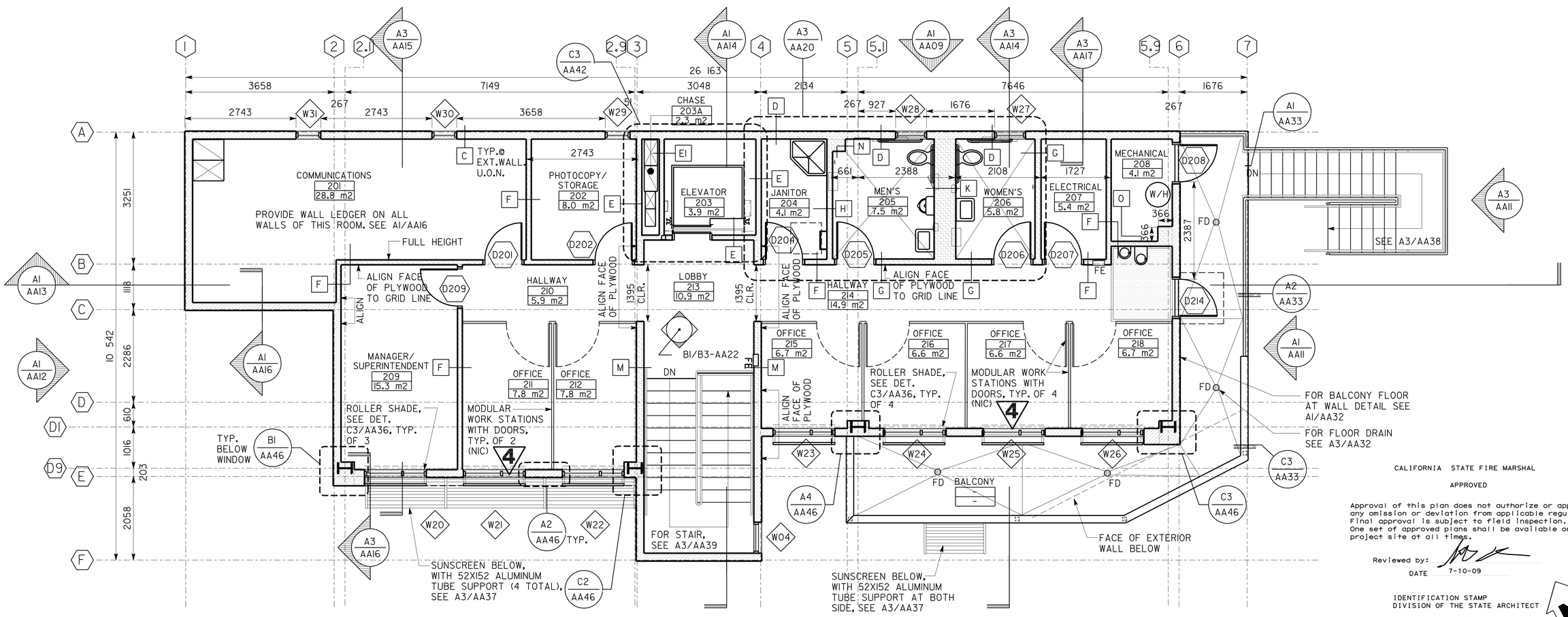


CALIFORNIA STATE FIRE MARSHAL

APPROVED

Approval of this plan does not authorize or approve any omission or deviation from applicable regulations. Final approval is subject to field inspection. One set of approved plans shall be available on the project site at all times.

Reviewed by: [signature]
DATE 7-10-09

IDENTIFICATION STAMP
DIVISION OF THE STATE ARCHITECT
APPL 01 109761
AC KW FLS SS
DATE 8/26/2008

## OMC BUILDING - SECOND FLOOR PLAN

A1 SCALE 1:50

**4 REVISED PER ADDENDUM No. 4 DATED SEPTEMBER 3, 2009**

**CALDECOTT IMPROVEMENT PROJECT**

RANDY R. ANDERSON RRA
DESIGN OVERSIGHT
JULY 01, 2008
SIGN OFF DATE

| | BY | CHECKED |
|---|---|---|
| DESIGN | C. ALMEIDA | I. LARSEN |
| DETAILS | M. YEUNG | I. LARSEN |
| QUANTITIES | I. LARSEN | O. RUBIN |

PREPARED FOR THE STATE OF CALIFORNIA DEPARTMENT OF TRANSPORTATION

OREN RUBIN
PROJECT ENGINEER

BRIDGE NO. 33-5737
KM POST 9.51

**OMC BUILDING**
**SECOND FLOOR PLAN**

SHEET **AA05**

t-28-0015k-aa-05.add
DS OSD metric Rev. 9/02 01-SEP-2009 10:56

SCALE: ALL DIMENSIONS ARE IN MILLIMETERS UNLESS OTHERWISE NOTED.

ORIGINAL SCALE IN MILLIMETERS FOR REDUCED PLANS 0 10 20 30 40 50 60 70 80 90 100

CU 04
EA 294911

DISREGARD PRINTS BEARING EARLIER REVISION DATES →

REVISION DATES (PRELIMINARY STAGE ONLY): 06-26-07 03-16-07 06-22-07 10-10-07 01-28-08 05/07/08 07/01/08 07/18/08

SHEET 20 OF 126

01-SEP-2009 10:56
t-28-0015k-aa-05.add

| DIST | COUNTY | ROUTE | KILOMETER POST TOTAL PROJECT | SHEET No. | TOTAL SHEETS |
|---|---|---|---|---|---|
| 04 | Ala,CC | 24 | 8.2/10.0, 0.0/2.7 | 798 | 1435 |

Dev Paul 07-01-08
REGISTERED ELECTRICAL ENGINEER

1-5-09
PLANS APPROVAL DATE

REGISTERED PROFESSIONAL ENGINEER DEV PAUL No. E8856 Exp. 03-31-10 ELECT STATE OF CALIFORNIA

*The State of California or its officers or agents shall not be responsible for the accuracy or completeness of electronic copies of this plan sheet.*

**PARSONS**
50 FREMONT STREET, SUITE 1500
SAN FRANCISCO, CA 94105

**EARTH TECH**
2101 WEBSTER STREET, SUITE 1000
OAKLAND, CA. 94612-3060

*To get to the Caltrans web site, go to: http://www.dot.ca.gov*

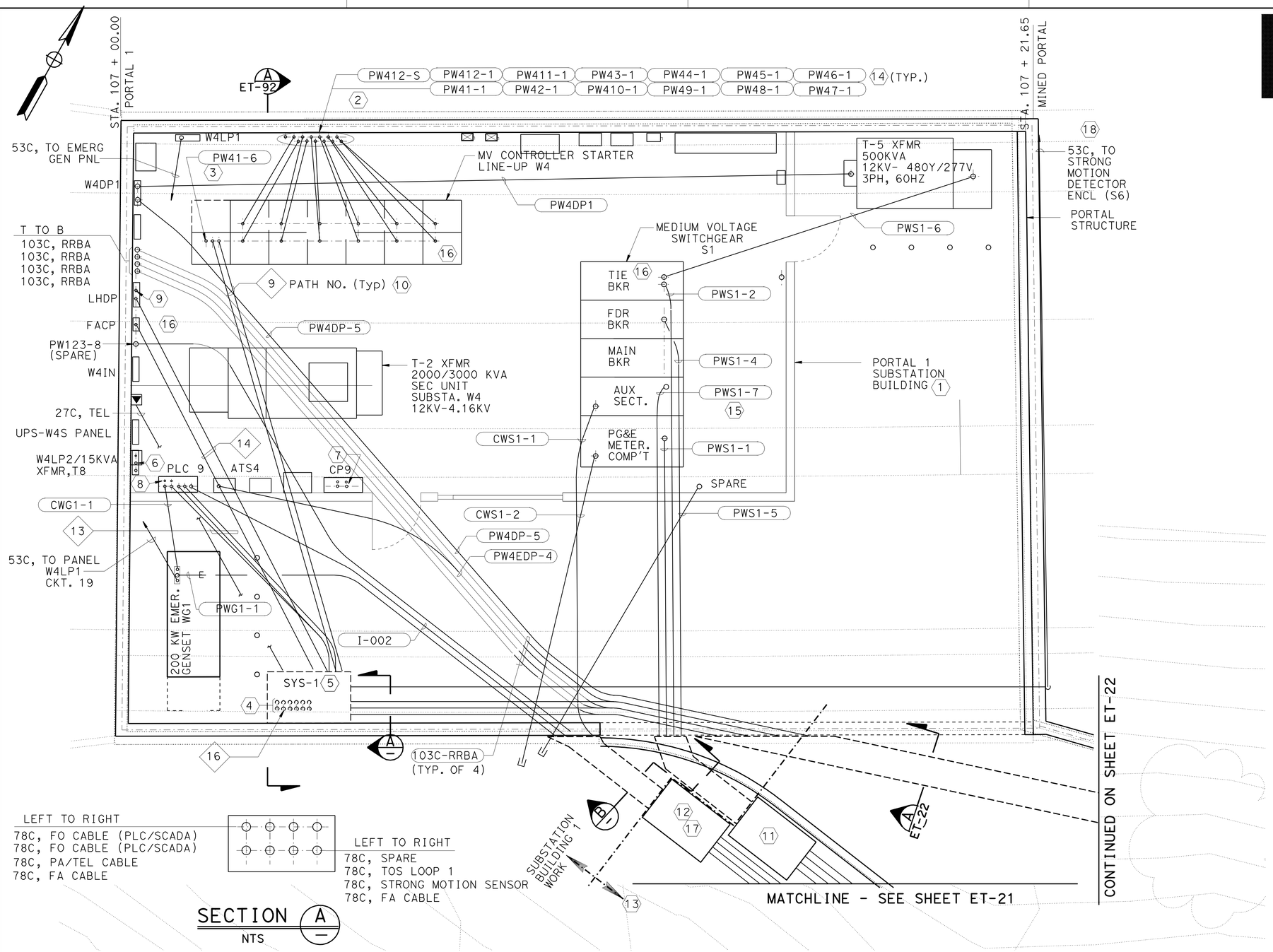





SECTION A
NTS

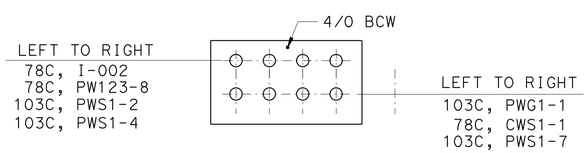


SECTION B
NTS

PLAN

## SHEET NOTES:

1. FOR SUBSTATION GENERAL ARRANGEMENT SEE SHEET ESS-1.
2. DOWN TO MV-1, SEE SHEET ET-31.
3. FOR CONTINUATION, SEE SHEET ET-71
4. DOWN TO JB-S1, SEE SHEET ET-31.
5. SYS-1 SYSTEM VAULT 1982Lx1219Wx1676H
6. 21C,(LHD) , PW4S-12 & 53C(SPARE)
7. TO TUNNEL LTG FIXTURE CIRCUITS 2-L5 & 2L-10. SEE SHEET ET-51.
8. I-021 & I-022. FOR CONTINUATION, SEE SHEET ET-80.
9. DOWN TO LD1. FOR CONTINUATION, SEE SHEET ET-361
10. REFER TO SYSTEM CABLE SCHEDULE SHEET ET-418 AND ET-419.
11. MEDIUM VOLTAGE VAULT 1750Lx~~1443~~ 1143Wx1954H
12. LOW VOLTAGE VAULT 1750Lx~~1443~~ 1143Wx1954H
13. PART OF OUTSIDE PORTAL UNDERGROUND DUCTS (PORTAL 1).
14. REFER TO CONDUIT SCHEDULES ON SHEETS ET-181 & ET-182
15. POWER SUPPLY TO FIRE PUMP CONTROLLERS SEE DWGS. ET-18 AND ET-94.
16. FOR CONDUIT STUB-UP, SEE SHEET ESS-6.
17. CONTRACTOR TO PROVIDE SEPARATION BETWEEN INSTRUMENTATION CABLES AND LOW VOLTAGE POWER CABLES INSIDE LV VAULT.
18. CONTRACTOR TO VERIFY LOCATION AND ROUTE CONDUIT TO FINAL STRONG MOTION DETECTOR ENCLOSURE(S6) LOCATION. REFER TO ET-350 FOR BLOCK DIAGRAM.

4

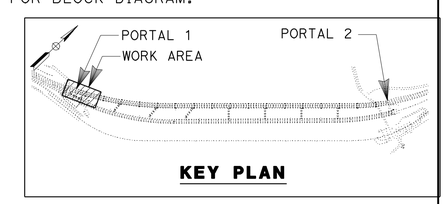


**4 REVISED PER ADDENDUM No. 4 DATED SEPTEMBER 3, 2009**

THE CONTRACTOR SHALL VERIFY ALL CONTROLLING FIELD DIMENSIONS BEFORE ORDERING OR FABRICATING ANY MATERIAL

ALL DIMENSIONS ARE IN MILLIMETERS UNLESS OTHERWISE SHOWN

# SUBSTATION BUILDING No. 1
## UNDERGROUND PLAN
SCALE 1:50

**ESS-2**

| DATE | REVISED BY | DATE REVISED |
|---|---|---|
| 01/08 | R. ALFONSO/ L. IFURUNG | D. PAUL/ R. BELARDO |

CALCULATED/ DESIGNED BY — CHECKED BY

CONSULTANT FUNCTIONAL SUPERVISOR: NADER SHAHCHERAGHI

STATE OF CALIFORNIA - DEPARTMENT OF TRANSPORTATION

Caltrans

Caltrans Metric

LAST REVISION 00-00-00 — DATE PLOTTED => 01-SEP-2009 TIME PLOTTED => 10:57

z-28-0015k-b-ess-02.add

RELATIVE BORDER SCALE IS IN MILLIMETERS 0 20 40 60 80

USERNAME => trmikesl
DGN FILE => z-28-0015k-b-ess-02.add

CU

EA 294911

| DIST | COUNTY | ROUTE | KILOMETER POST TOTAL PROJECT | SHEET No. | TOTAL SHEETS |
|---|---|---|---|---|---|
| 04 | Ala,CC | 24 | 8.2/10.0, 0.0/2.7 | 800 | 1435 |

Dev Paul 07-01-08
REGISTERED ELECTRICAL ENGINEER

1-5-09
PLANS APPROVAL DATE

REGISTERED PROFESSIONAL ENGINEER DEV PAUL No. E8856 Exp. 03-31-10 ELECT STATE OF CALIFORNIA

*The State of California or its officers or agents shall not be responsible for the accuracy or completeness of electronic copies of this plan sheet.*

**PARSONS**
50 FREMONT STREET, SUITE 1500
SAN FRANCISCO, CA 94105

**EARTH TECH**
2101 WEBSTER STREET, SUITE 1000
OAKLAND, CA. 94612-3060

*To get to the Caltrans web site, go to: http://www.dot.ca.gov*

Caltrans Metric

4

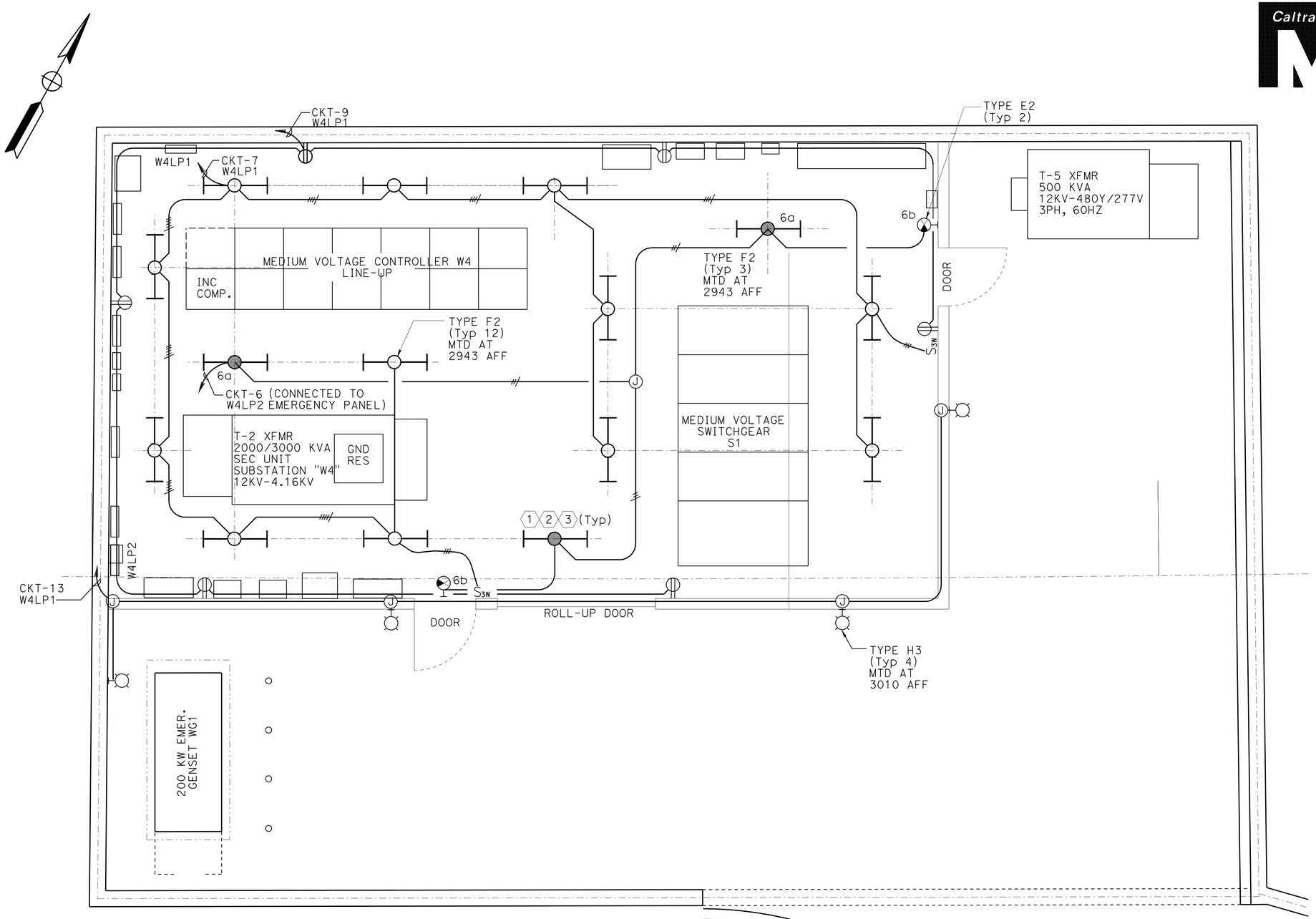


PLAN

## SHEET NOTES:

1. FOR MOUNTING LIGHT FIXTURE, SEE SHEET ET-147.
2. PROVIDE LATERAL AND LONGITUDINAL BRACE. SEE DETAIL ON SHEET ET-147.
3. FOR LIGHTING FIXTURE SCHEDULE, SEE SHEET ET-160.

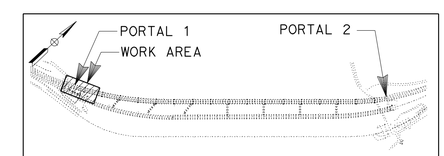


KEY PLAN

4 **REVISED PER ADDENDUM No. 4 DATED SEPTEMBER 3, 2009**

THE CONTRACTOR SHALL VERIFY ALL CONTROLLING FIELD DIMENSIONS BEFORE ORDERING OR FABRICATING ANY MATERIAL

ALL DIMENSIONS ARE IN MILLIMETERS UNLESS OTHERWISE SHOWN

# SUBSTATION BUILDING NO. 1
## LIGHTING PLAN
SCALE 1:40

**ESS-4**

| DATE | REVISED BY | DATE REVISED |
|---|---|---|
| 01/08 | R. ALFONSO/ L. TFURUNG | |
| | D. PAUL/ R. BELARDO | |

CALCULATED/ DESIGNED BY
CHECKED BY

CONSULTANT FUNCTIONAL SUPERVISOR
NADER SHAHCHERAGHI

STATE OF CALIFORNIA - DEPARTMENT OF TRANSPORTATION
Caltrans

z-28-0015k-b-ess-04.dgn

RELATIVE BORDER SCALE IS IN MILLIMETERS 0 20 40 60 80

USERNAME => trmikesl
DGN FILE => z-28-0015k-b-ess-04.dgn

EA 294911

LAST REVISION 00-00-00
DATE PLOTTED => 01-SEP-2009
TIME PLOTTED => 10:57

| DIST | COUNTY | ROUTE | KILOMETER POST TOTAL PROJECT | SHEET No. | TOTAL SHEETS |
|---|---|---|---|---|---|
| 04 | Ala,CC | 24 | 8.2/10.0, 0.0/2.7 | 806 | 1435 |

Dev Paul 07-01-08
REGISTERED ELECTRICAL ENGINEER

1-5-09
PLANS APPROVAL DATE

REGISTERED PROFESSIONAL ENGINEER — DEV PAUL No. E8856 Exp. 03-31-10 ELECT — STATE OF CALIFORNIA

*The State of California or its officers or agents shall not be responsible for the accuracy or completeness of electronic copies of this plan sheet.*

**PARSONS**
50 FREMONT STREET, SUITE 1500
SAN FRANCISCO, CA 94105

**EARTH TECH**
2101 WEBSTER STREET, SUITE 1000
OAKLAND, CA. 94612-3060

*To get to the Caltrans web site, go to: http://www.dot.ca.gov*

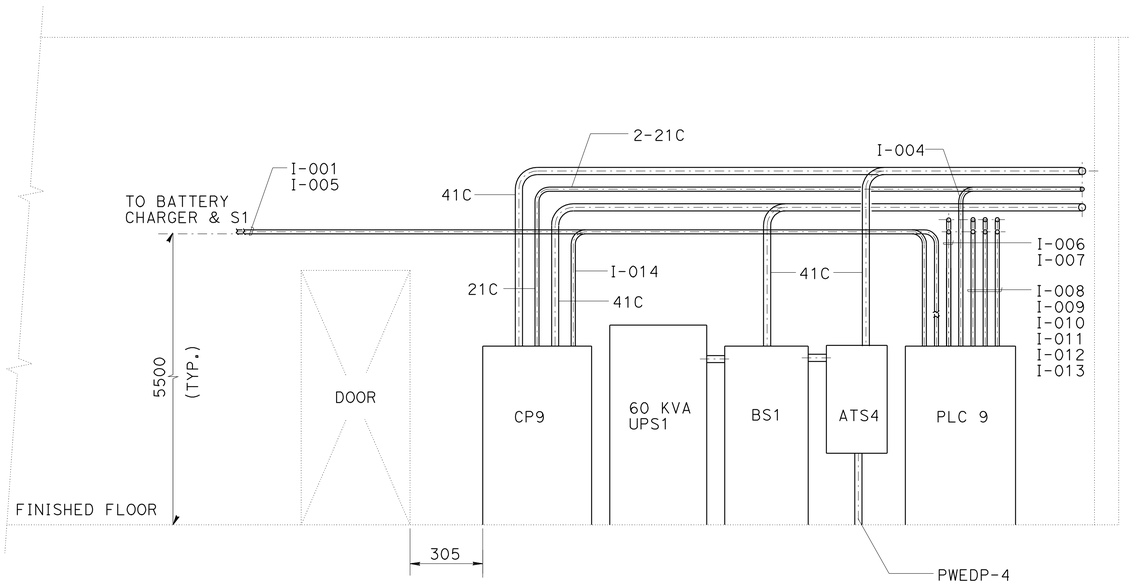


A SECTION

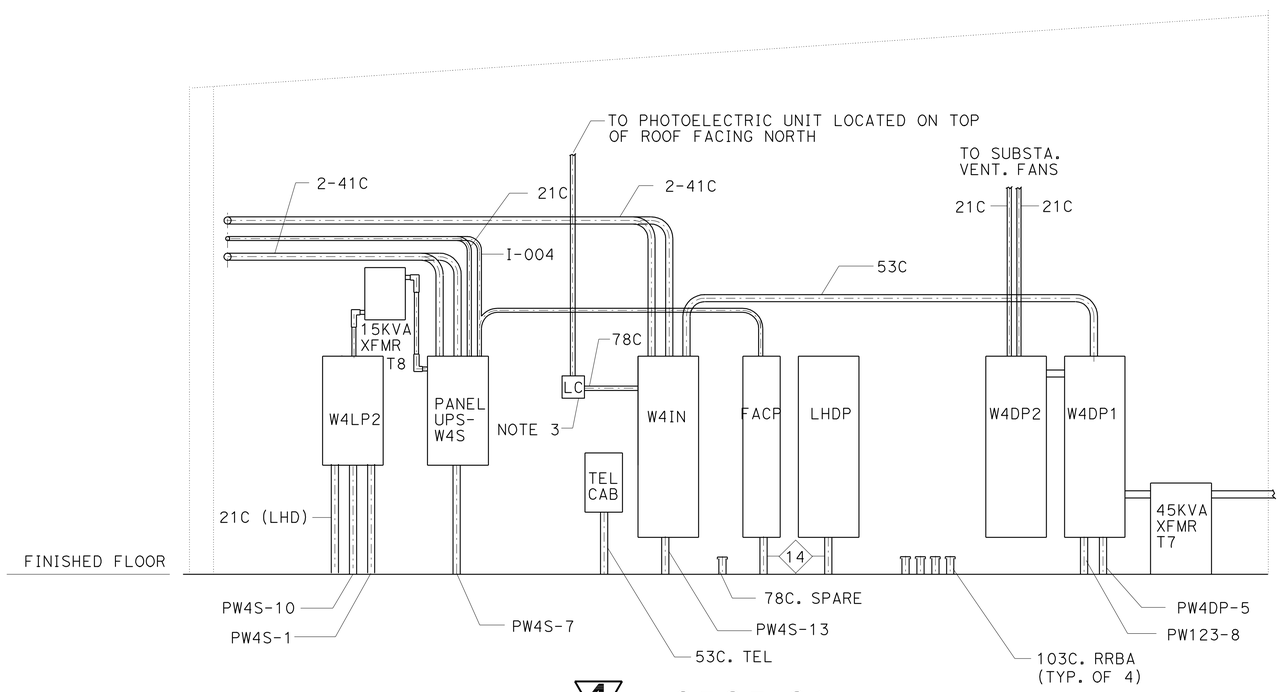


4 B SECTION

4 REVISED PER ADDENDUM No. 4 DATED SEPTEMBER 3, 2009

## SHEET NOTES:

1. ALL WALL MOUNTED EQUIPMENT SHALL HAVE ADEQUATE SUPPORT FOR SEISMIC ACTIVITY.
2. CONDUIT AND EQUIPMENT SUPPORT SHALL MEET LOCAL AND NEC CODE REQUIREMENTS.
3. LC - LIGHTING CONTACTOR FOR OUTSIDE ROADWAY LIGHTING. SEE ESS-4 FOR LIGHTING CONTROL DIAGRAM.

4

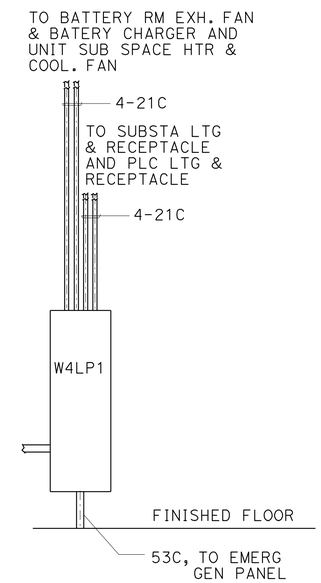


C SECTION

THE CONTRACTOR SHALL VERIFY ALL CONTROLLING FIELD DIMENSIONS BEFORE ORDERING OR FABRICATING ANY MATERIAL

ALL DIMENSIONS ARE IN MILLIMETERS UNLESS OTHERWISE SHOWN

# SECTIONS AND DETAILS
## SUBSTATION BUILDING NO. 1

NO SCALE

ESS-10

| | | | |
|---|---|---|---|
| CALCULATED/DESIGNED BY | R. ALFONSO/L. TFURUNG | DATE 01/08 | REVISED BY |
| CHECKED BY | D. PAUL/R. BELARDO | | DATE REVISED |

CONSULTANT FUNCTIONAL SUPERVISOR: NADER SHAHCHERAGHI

STATE OF CALIFORNIA - DEPARTMENT OF TRANSPORTATION

Caltrans

V:\Projects\PSEWorking\d4\294911-add\429491et135.add

RELATIVE BORDER SCALE IS IN MILLIMETERS 0 20 40 60 80

USERNAME => trmikesl
DGN FILE => 429491et135.add

CU

EA 294911

LAST REVISION 00-00-00 DATE PLOTTED => 01-SEP-2009 TIME PLOTTED => 10:57

| DIST | COUNTY | ROUTE | KILOMETER POST TOTAL PROJECT | SHEET No. | TOTAL SHEETS |
|---|---|---|---|---|---|
| 04 | Ala,CC | 24 | 8.2/10.0, 0.0/2.7 | 807 | 1435 |

Dev Paul 07-01-08
REGISTERED ELECTRICAL ENGINEER

1-5-09
PLANS APPROVAL DATE

REGISTERED PROFESSIONAL ENGINEER DEV PAUL No. E8856 Exp. 03-31-10 ELECT STATE OF CALIFORNIA

*The State of California or its officers or agents shall not be responsible for the accuracy or completeness of electronic copies of this plan sheet.*

**PARSONS**
50 FREMONT STREET, SUITE 1500
SAN FRANCISCO, CA 94105

**EARTH TECH**
2101 WEBSTER STREET, SUITE 1000
OAKLAND, CA. 94612-3060

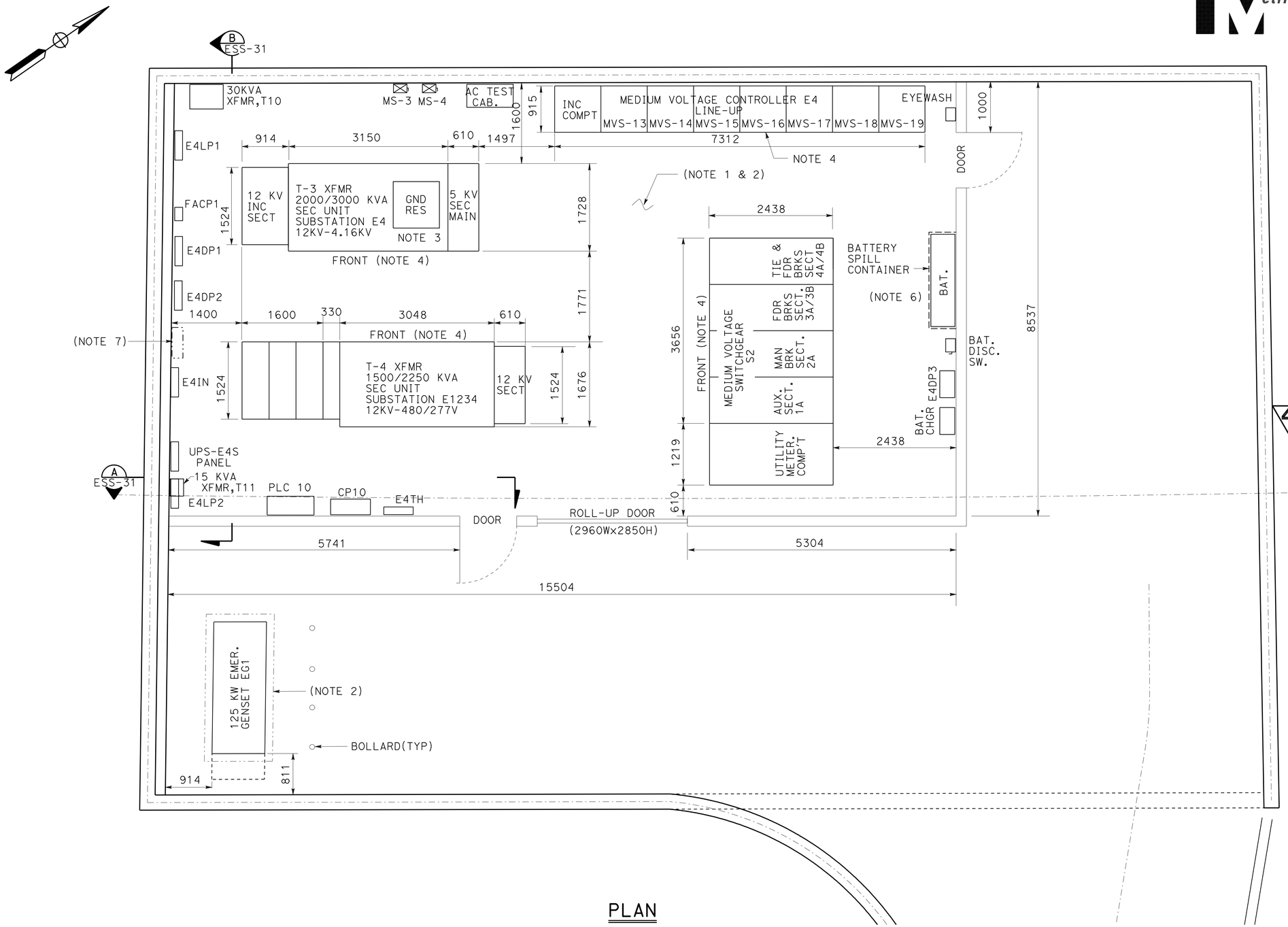


PLAN

## NOTES:

1. CONTRACTOR TO MAKE SURE EQUIPMENT INSTALLED SHALL NOT EXCEED EQUIPMENT DIMENSIONS SHOWN. HEIGHT OF ROOM IS 3658 (CLEAR).
2. ELECTRICAL ROOM FLOOR AND GENERATOR FOUNDATION SHALL BE 152 ABOVE SUBSTATION BLDG 1 FINISHED GRADE.
3. GROUND RESISTOR TO BE MOUNTED ON SUBSTATION BUILDING CEILING OR ON TRANSFORMER.
4. FOR EQUIPMENT ELEVATION SEE SHEET ~~ET-133~~ AND ~~ET-134~~. ESS-29 ESS-30
5. SEE SHEET ET-101 FOR POWER FOR DISTRIBUTION SINGLE LINE DIAGRAM.
6. SEE SHEET ET-130 FOR 125V DC POWER INTERCONNECTION DIAGRAM.
7. WALL SPACE FOR RADIO EQUIPMENT; - TWO-WAY RADIO

4

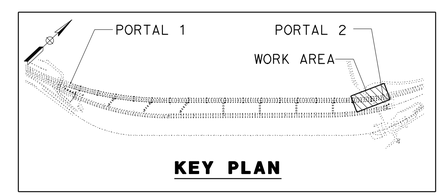


KEY PLAN

4 **REVISED PER ADDENDUM No. 4 DATED SEPTEMBER 3, 2009**

THE CONTRACTOR SHALL VERIFY ALL CONTROLLING FIELD DIMENSIONS BEFORE ORDERING OR FABRICATING ANY MATERIAL

ALL DIMENSIONS ARE IN MILLIMETERS UNLESS OTHERWISE SHOWN

# SUBSTATION BUILDING NO. 2
## GENERAL ARRANGEMENT PLAN

SCALE 1:40

**ESS-21**

| | DATE | REVISED BY | DATE REVISED |
|---|---|---|---|
| CALCULATED/DESIGNED BY | 01/08 | R. ALFONSO/ L. TFURUNG | |
| CHECKED BY | | D. PAUL/ R. BELARDO | |

CONSULTANT FUNCTIONAL SUPERVISOR: NADER SHAHCHERAGHI

STATE OF CALIFORNIA - DEPARTMENT OF TRANSPORTATION
Caltrans

zz-28-0015k-b-ess-21.add

RELATIVE BORDER SCALE IS IN MILLIMETERS 0 20 40 60 80

USERNAME => trmikesl
DGN FILE => zz-28-0015k-b-ess-21.add

EA 294911

LAST REVISION 00-00-00
DATE PLOTTED => 01-SEP-2009
TIME PLOTTED => 10:57

| DIST | COUNTY | ROUTE | KILOMETER POST TOTAL PROJECT | SHEET No. | TOTAL SHEETS |
|---|---|---|---|---|---|
| 04 | Ala,CC | 24 | 8.2/10.0, 0.0/2.7 | 810 | 1435 |

Dev Paul 07-01-08
REGISTERED ELECTRICAL ENGINEER

1-5-09
PLANS APPROVAL DATE

REGISTERED PROFESSIONAL ENGINEER DEV PAUL No. E8856 Exp. 03-31-10 ELECT STATE OF CALIFORNIA

*The State of California or its officers or agents shall not be responsible for the accuracy or completeness of electronic copies of this plan sheet.*

**PARSONS**
50 FREMONT STREET, SUITE 1500
SAN FRANCISCO, CA 94105

**EARTH TECH**
2101 WEBSTER STREET, SUITE 1000
OAKLAND, CA. 94612-3060

*To get to the Caltrans web site, go to: http://www.dot.ca.gov*

4

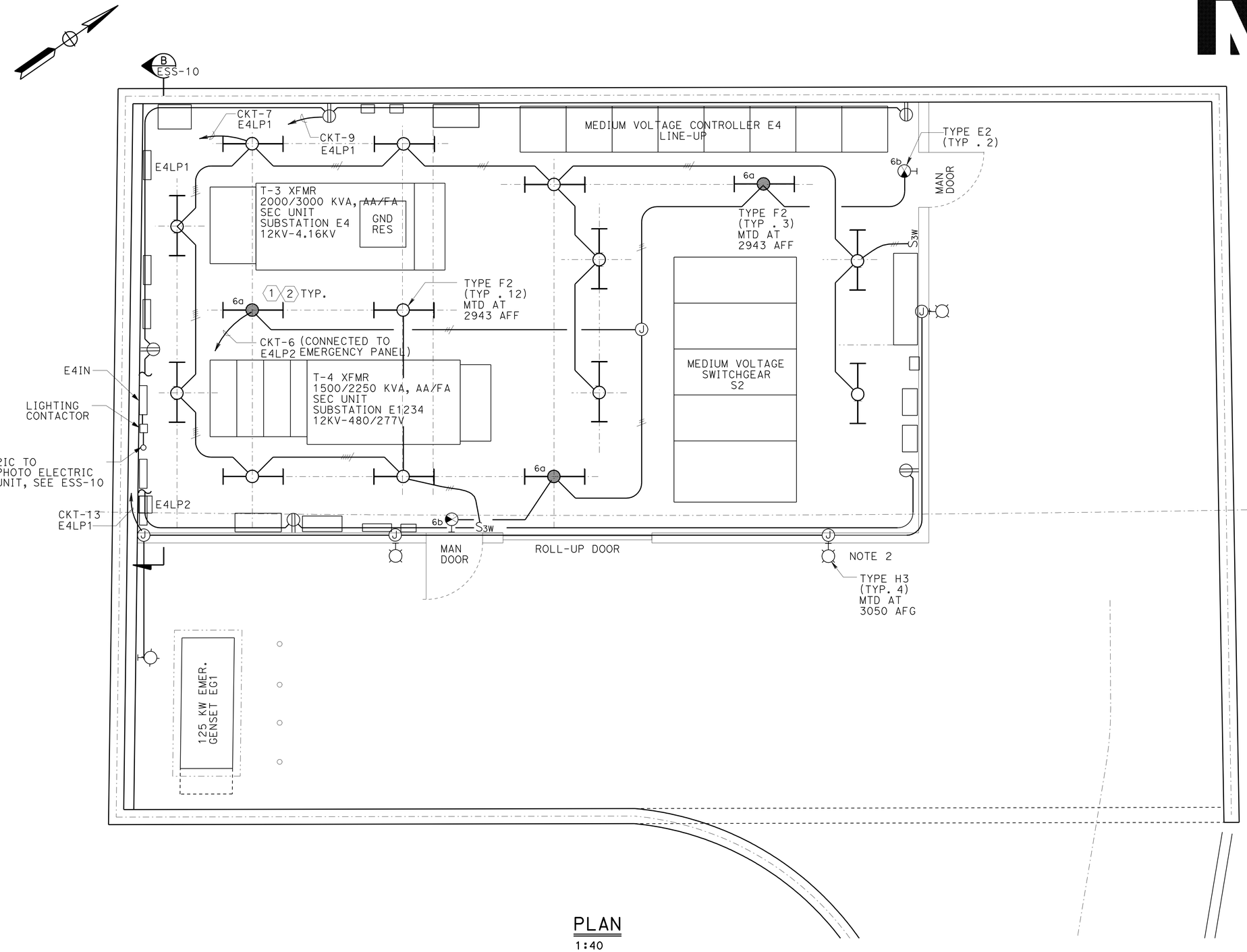


PLAN
1:40

## SHEET NOTES:

1. PROVIDE LATERAL AND LONGITUDINAL BRACE. SEE DETAILS 2 & 5 ON SHEET ET-147.
2. FOR LIGHTING FIXTURE SCHEDULE, SEE SHEET ET-160.

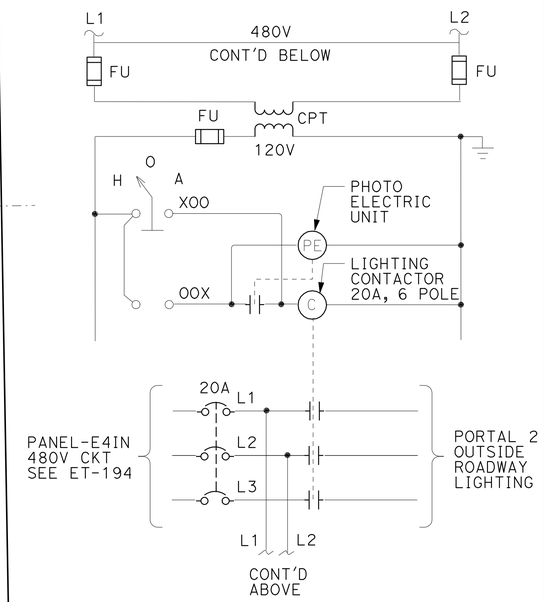


## LIGHTING CONTROL DIAGRAM

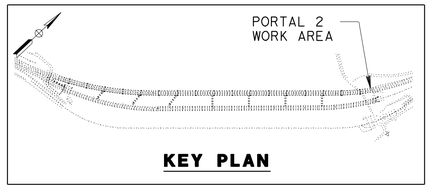


4 **REVISED PER ADDENDUM No. 4 DATED SEPTEMBER 3, 2009**

THE CONTRACTOR SHALL VERIFY ALL CONTROLLING FIELD DIMENSIONS BEFORE ORDERING OR FABRICATING ANY MATERIAL

ALL DIMENSIONS ARE IN MILLIMETERS UNLESS OTHERWISE SHOWN

# SUBSTATION BUILDING NO. 2
## LIGHTING PLAN
SCALE 1:40

**ESS-24**

| DATE | REVISED BY | DATE REVISED |
|---|---|---|
| 01/08 | R. ALFONSO/ L. TFURUNG | |
| | D. PAUL/ R. BELARDO | |

CALCULATED/ DESIGNED BY
CHECKED BY

CONSULTANT FUNCTIONAL SUPERVISOR
NADER SHAHCHERAGHI

STATE OF CALIFORNIA - DEPARTMENT OF TRANSPORTATION
Caltrans

V:\Project\Plans\PSE\Working\04\04-294911-add\429491ess024.add

RELATIVE BORDER SCALE IS IN MILLIMETERS 0 20 40 60 80

USERNAME => trmikesl
DGN FILE => 429491ess024.add

CU

EA 294911

LAST REVISION 00-00-00
DATE PLOTTED => 01-SEP-2009
TIME PLOTTED => 10:58

| DIST | COUNTY | ROUTE | KILOMETER POST TOTAL PROJECT | SHEET No. | TOTAL SHEETS |
|---|---|---|---|---|---|
| 04 | Ala,CC | 24 | 8.2/10.0, 0.0/2.7 | 817 | 1435 |

Dev Paul 07-01-08
REGISTERED ELECTRICAL ENGINEER

1-5-09
PLANS APPROVAL DATE

REGISTERED PROFESSIONAL ENGINEER — DEV PAUL No. E8856 Exp. 03-31-10 ELECT — STATE OF CALIFORNIA

*The State of California or its officers or agents shall not be responsible for the accuracy or completeness of electronic copies of this plan sheet.*

**PARSONS**
50 FREMONT STREET, SUITE 1500
SAN FRANCISCO, CA 94105

**EARTH TECH**
2101 WEBSTER STREET, SUITE 1000
OAKLAND, CA. 94612-3060

*To get to the Caltrans web site, go to: http://www.dot.ca.gov*

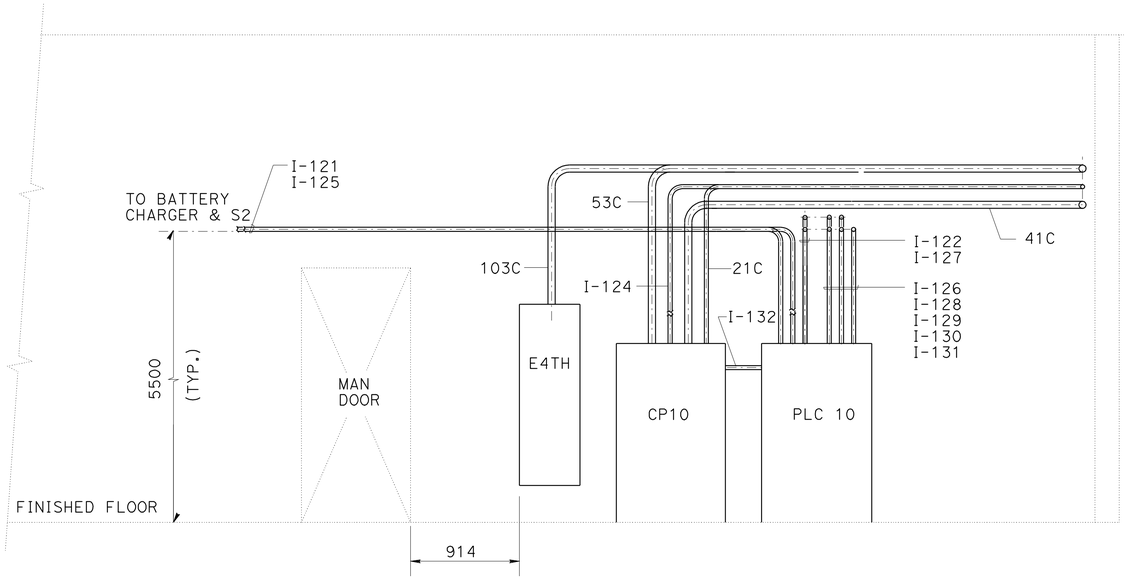


**A SECTION**
FACING NORTH

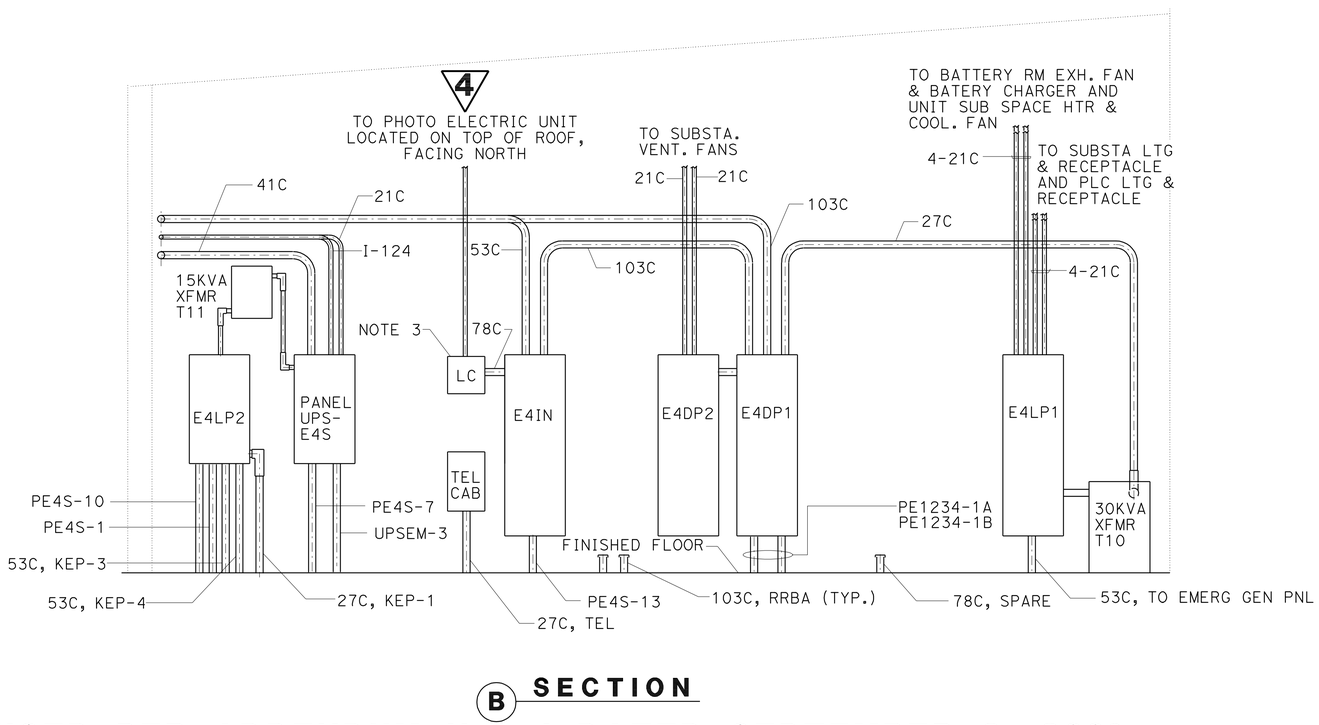


**B SECTION**

## SHEET NOTES:

1. ALL WALL MOUNTED EQUIPMENT SHALL HAVE ADEQUATE SUPPORT FOR SEISMIC ACTIVITY.
2. CONDUIT AND EQUIPMENT SUPPORT SHALL MEET LOCAL AND NEC CODE REQUIREMENTS.
3. (4) LC - LIGHTING CONTACTOR FOR OUTSIDE ROADWAY LIGHTING. SEE ESS-24 FOR LIGHTING CONTROL DIAGRAM.

# SECTIONS AND DETAILS
## SUBSTATION BUILDING NO. 2
NO SCALE

**ESS-31**

**4 REVISED PER ADDENDUM No. 4 DATED SEPTEMBER 3, 2009**

THE CONTRACTOR SHALL VERIFY ALL CONTROLLING FIELD DIMENSIONS BEFORE ORDERING OR FABRICATING ANY MATERIAL

ALL DIMENSIONS ARE IN MILLIMETERS UNLESS OTHERWISE SHOWN

| | DATE | REVISED BY | DATE REVISED |
|---|---|---|---|
| CALCULATED/DESIGNED BY | R. ALFONSO/ L. TFURUNG | 01/08 | |
| CHECKED BY | D. PAUL/ R. BELARDO | | |

CONSULTANT FUNCTIONAL SUPERVISOR: NADER SHAHCHERAGHI

STATE OF CALIFORNIA - DEPARTMENT OF TRANSPORTATION
Caltrans

429491et136.dgn

LAST REVISION 00-00-00 | DATE PLOTTED => 01-SEP-2009 | TIME PLOTTED => 10:58

RELATIVE BORDER SCALE IS IN MILLIMETERS 0 20 40 60 80

USERNAME => trmikesl
DGN FILE => 429491et136.dgn

CU | EA 294911

| DIST | COUNTY | ROUTE | KILOMETER POST TOTAL PROJECT | SHEET No | TOTAL SHEETS |
|---|---|---|---|---|---|
| 04 | Ala,CC | 24 | 8.2/10.0, 0.0/2.7 | 865 | 1435 |

REGISTERED CIVIL ENGINEER 07-01-08 DATE

1-5-09
PLANS APPROVAL DATE

REGISTERED PROFESSIONAL ENGINEER JOHANNES VAN GREUNEN No. C52885 Exp. 12-31-10 CIVIL STATE OF CALIFORNIA

*The State of California or its officers or agents shall not be responsible for the accuracy or completeness of electronic copies of this plan sheet.*

**PARSONS**
50 FREMONT STREET, SUITE 1500
SAN FRANCISCO, CA 94105

**JACOBS ASSOCIATES**
465 CALIFORNIA STREET, SUITE 1000
SAN FRANCISCO, CA 94104

Caltrans Metric

# QUANTITIES

| | | |
|---|---|---|
| TEMPORARY RAILING (TYPE K) | 85 | m |
| BREAKTHROUGHS AT RETAINING WALLS 5W AND 5E | LUMP | SUM |
| TUNNEL EXCAVATION AND SUPPORT - TOP HEADING - (CATEGORY IA) | 90 | m |
| TUNNEL EXCAVATION AND SUPPORT - TOP HEADING - (CATEGORY IB) | 179 | m |
| TUNNEL EXCAVATION AND SUPPORT - TOP HEADING - (CATEGORY II A) | 35 | m |
| TUNNEL EXCAVATION AND SUPPORT - TOP HEADING - (CATEGORY II B) | 377 | m |
| TUNNEL EXCAVATION AND SUPPORT - TOP HEADING - (CATEGORY III A) | 219 | m |
| TUNNEL EXCAVATION AND SUPPORT - TOP HEADING - (CATEGORY III B) | 38 | m |
| TUNNEL EXCAVATION AND SUPPORT - TOP HEADING - (CATEGORY IV) | 52 | m |
| TUNNEL EXCAVATION AND SUPPORT - BENCH - (CATEGORY IA) | 90 | m |
| TUNNEL EXCAVATION AND SUPPORT - BENCH - (CATEGORY IB) | 179 | m |
| TUNNEL EXCAVATION AND SUPPORT - BENCH - (CATEGORY II A) | 35 | m |
| TUNNEL EXCAVATION AND SUPPORT - BENCH - (CATEGORY II B) | 377 | m |
| TUNNEL EXCAVATION AND SUPPORT - BENCH - (CATEGORY III A) | 219 | m |
| TUNNEL EXCAVATION AND SUPPORT - BENCH - (CATEGORY III B) | 38 | m |
| TUNNEL EXCAVATION AND SUPPORT - BENCH - (CATEGORY IV) | 52 | m |
| TUNNEL MONITORING | LUMP | SUM |
| CONTAMINATED EXCAVATED MATERIAL | 37 000 | $m^3$ |
| INITIAL LINING FIBER REINFORCED SHOTCRETE (ADDITIONAL SUPPORT) | 116 | $m^3$ |
| DRILL AND GROUT ROCK DOWEL (2 M LONG) (ADDITIONAL SUPPORT) | 42 | EA |
| DRILL AND GROUT ROCK DOWEL (4 M LONG) (ADDITIONAL SUPPORT) | 359 | EA |
| DRILL AND GROUT ROCK DOWEL (6 M LONG) (ADDITIONAL SUPPORT) | 100 | EA |
| SELF DRILL AND GROUT ROCK DOWEL (2 M LONG)(ADDITIONAL SUPPORT) | 26 | EA |
| SELF DRILL AND GROUT ROCK DOWEL (2.5 M LONG)(ADDITIONAL SUPPORT) | 40 | EA |
| SELF DRILL AND GROUT ROCK DOWEL (4 M LONG)(ADDITIONAL SUPPORT) | 196 | EA |
| SELF DRILL AND GROUT ROCK DOWEL (6 M LONG)(ADDITIONAL SUPPORT) | 31 | EA |
| DRILL AND GROUT SPILES (3 M LONG) (ADDITIONAL SUPPORT) | 55 | EA |
| DRILL AND GROUT SPILES (4 M LONG) (ADDITIONAL SUPPORT) | 849 | EA |
| SELF DRILL AND GROUT SPILES (3 M LONG) (ADDITIONAL SUPPORT) | 55 | EA |
| SELF DRILL AND GROUT SPILES (4 M LONG) (ADDITIONAL SUPPORT) | 695 | EA |
| LATTICE GIRDERS (ADDITIONAL SUPPORT) | 15 | EA |
| FIBERGLASS FACE DOWELS (6 M LONG) (ADDITIONAL SUPPORT) | 208 | EA |
| FIBERGLASS FACE DOWELS (12 M LONG) (ADDITIONAL SUPPORT) | 66 | EA |
| FACE SEALING FIBER REINFORCED SHOTCRETE (ADDITIONAL SUPPORT) | 74 | $m^3$ |
| INVERT FIBER REINFORCED SHOTCRETE (TUNNEL)(ADDITIONAL SUPPORT) | 16 | m |
| INVERT FIBER REINFORCED SHOTCRETE (CROSS PASSAGE)(ADDITIONAL SUPPORT) | 51 | m |
| PROBE HOLES (ADDITIONAL SUPPORT) | 668 | m |
| DRAIN HOLES (ADDITIONAL SUPPORT) | 198 | m |
| CROSS PASSAGE EXCAVATION AND INITIAL SUPPORT - (CATEGORY I) | 75 | m |
| CROSS PASSAGE EXCAVATION AND INITIAL SUPPORT - (CATEGORY II) | 157 | m |
| CROSS PASSAGE EXCAVATION AND INITIAL SUPPORT - (CATEGORY III) | 39 | m |
| BORE NO. 3 BREAKTHROUGHS | LUMP | SUM |
| TUNNEL FINAL LINING (TYPE A) | 715 | m |
| TUNNEL FINAL LINING (TYPE B) | 73 | m |
| TUNNEL FINAL LINING (TYPE C1) | 94 | m |
| TUNNEL FINAL LINING (TYPE C2) | 109 | m |
| SHOTCRETE FINAL LINING | 254 | m |
| STRUCTURAL CONCRETE (CROSS PASSAGES) | 465 | $m^3$ |
| CONCRETE BARRIER (CROSS PASSAGES) | 21 | m |
| TUNNEL ARCHITECTURAL WORK | LUMP | SUM |
| PREPARE AND STAIN CONCRETE (TUNNEL CROWN) | 15 650 | $m^2$ |
| TUNNEL WATERPROOFING | 33 600 | $m^2$ |
| GEODRAIN | 1680 | $m^2$ |
| 250 MM PLASTIC PIPE UNDERDRAIN (TUNNEL) | 1988 | m |
| 150 MM PLASTIC PIPE UNDERDRAIN (TUNNEL) | 1330 | m |
| UNDERDRAIN CLEANOUT COVER (TYPE A) | 20 | EA |
| UNDERDRAIN CLEANOUT COVER (TYPE B) | 19 | EA |
| UNDERDRAIN CLEANOUT COVER (TYPE C) | 1 | EA |
| 4 MINOR CONCRETE (MINOR STRUCTURE) | 2 | $m^3$ |

4 **REVISED PER ADDENDUM No. 4 DATED SEPTEMBER 3, 2009**

ST-1.4

THE CONTRACTOR SHALL VERIFY ALL CONTROLLING FIELD DIMENSIONS BEFORE ORDERING OR FABRICATING ANY MATERIAL

**CALDECOTT IMPROVEMENT PROJECT**
**TUNNEL STRUCTURE**
**TUNNEL QUANTITIES**

RANDY R. ANDERSON RRA
DESIGN OVERSIGHT
JULY 01, 2008
SIGN OFF DATE

| | BY | CHECKED |
|---|---|---|
| DESIGN | J.VAN GREUNEN | M.T.McRAE |
| DETAILS | R.H.STARCK | J.VAN GREUNEN |
| QUANTITIES | R.L.FIPPIN | P.W.DUTTON |

**PREPARED FOR THE STATE OF CALIFORNIA DEPARTMENT OF TRANSPORTATION**

J.VAN GREUNEN
PROJECT ENGINEER

BRIDGE NO. 28-0015K
KILOMETER POST 9.44/0.55

DESIGN GENERAL PLAN SHEET (METRIC) (REV. 10/27/05)

ORIGINAL SCALE IN MILLIMETERS FOR REDUCED PLANS 0 10 20 30 40 50 60 70 80 90 100

CU 04
EA 294911

DISREGARD PRINTS BEARING EARLIER REVISION DATES

REVISION DATES (PRELIMINARY STAGE ONLY): 06/26/06 03/14/07 06/22/07 10/30/07 01/28/08 05/07/08 07/07/08 07/15/08

SHEET 4 OF 162

FILE => e-28-0015k-st001-4.dgn

USERNAME => trmikesi DATE PLOTTED => 01-SEP-2009 TIME PLOTTED => 10:58

| DIST | COUNTY | ROUTE | KILOMETER POST TOTAL PROJECT | SHEET No | TOTAL SHEETS |
|---|---|---|---|---|---|
| 04 | Ala, CC | 24 | 8.2/10.0, 0.0/2.7 | 969 | 1435 |

REGISTERED CIVIL ENGINEER 07-01-08 DATE

1-5-09
PLANS APPROVAL DATE

REGISTERED PROFESSIONAL ENGINEER JOHANNES VAN GREUNEN No. C52885 Exp. 12-31-10 CIVIL STATE OF CALIFORNIA

*The State of California or its officers or agents shall not be responsible for the accuracy or completeness of electronic copies of this plan sheet.*

**PARSONS**
50 FREMONT STREET, SUITE 1500
SAN FRANCISCO, CA 94105

**ILF Consultants**
1440 BROADWAY, SUITE 1010
OAKLAND, CA 94612

**JACOBS ASSOCIATES**
465 CALIFORNIA STREET, SUITE 1000
SAN FRANCISCO, CA 94104

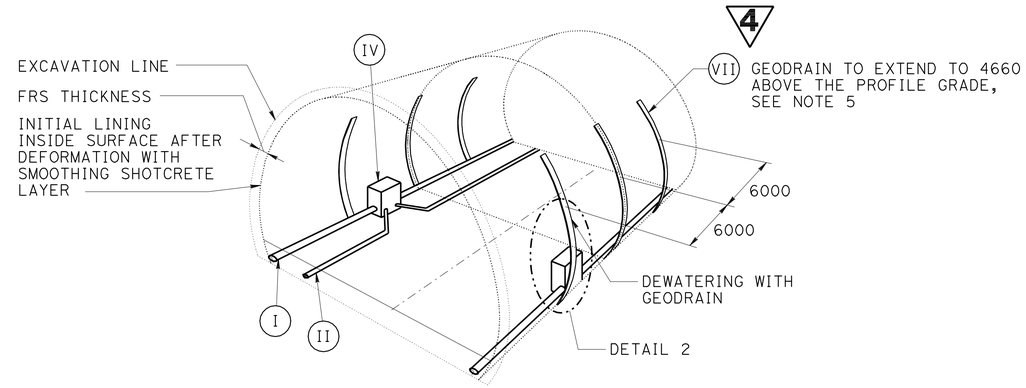


## WATERPROOFING AND DRAINAGE SYSTEM
## STA 108+00 THRU STA 112+50

NO SCALE

NOTES:

1. FOR DETAIL 1, SEE SHEET ST-113.
2. FOR DETAIL 2 AND SECTION A-A, SEE SHEET ST-114.
3. FOR DETAIL 3, SEE SHEET ST-141.
4. GEODRAIN SHALL BE INSTALLED IN REGULAR PATTERN WITHIN LIMITS AS SHOWN.
5. GEODRAIN STRIPS TO BE INSTALLED AS SHOWN AND AS DIRECTED BY THE ENGINEER.

LEGEND:

- I 250 mm PLASTIC PIPE UNDERDRAIN (TUNNEL)
- II 150 mm PLASTIC PIPE UNDERDRAIN (TUNNEL)
- III TUNNEL WATERPROOFING AND SMOOTHING SHOTCRETE - BORE No. 4 TUNNEL AND CROSS PASSAGES.
- IV UNDERDRAIN CLEANOUT
- V REINFORCED CONCRETE PIPE
- VI DRAINAGE INLET
- VII GEODRAIN

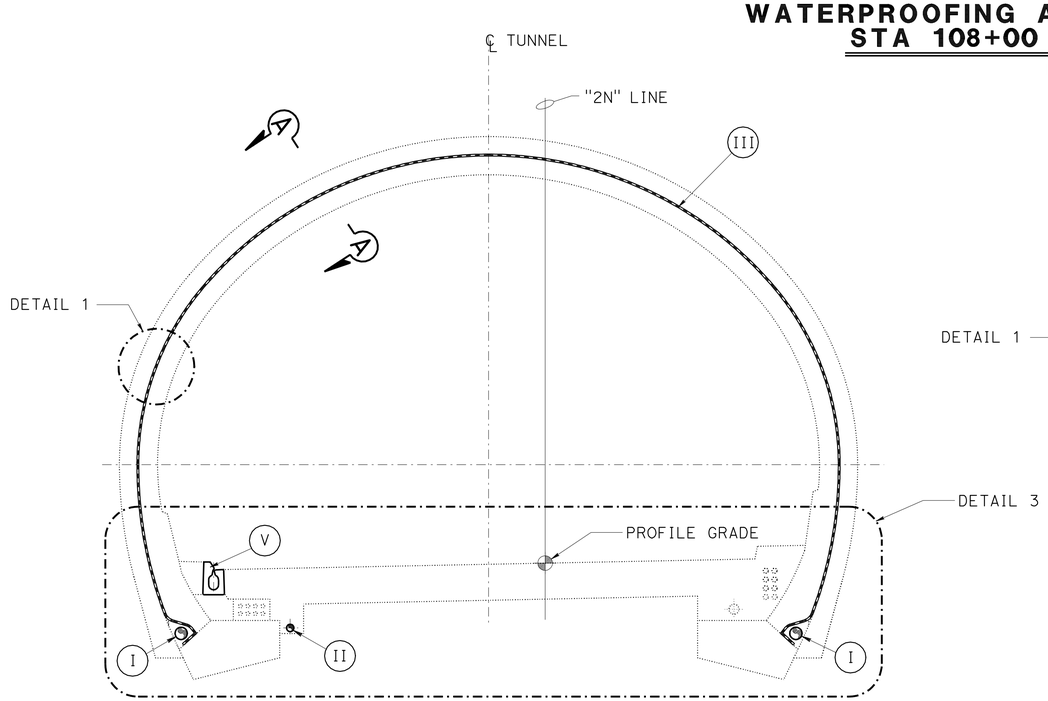


### TYPICAL SECTION WITH FLAT INVERT

NO SCALE

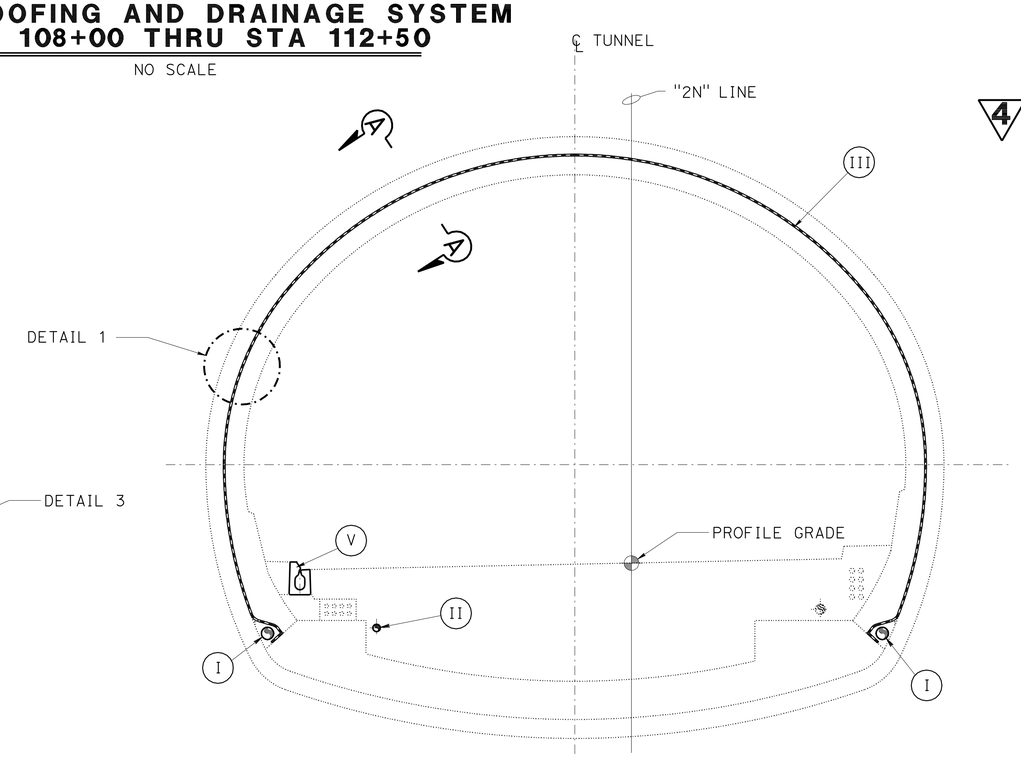


### TYPICAL SECTION WITH INVERT ARCH

NO SCALE

**REVISED PER ADDENDUM No. 4 DATED SEPTEMBER 3, 2009**

THE CONTRACTOR SHALL VERIFY ALL CONTROLLING FIELD DIMENSIONS BEFORE ORDERING OR FABRICATING ANY MATERIAL

ALL DIMENSIONS ARE IN MILLIMETERS UNLESS OTHERWISE SHOWN

**ST-111**

RANDY R. ANDERSON RRA
DESIGN OVERSIGHT
JULY 01, 2008
SIGN OFF DATE

| | BY | CHECKED |
|---|---|---|
| DESIGN | Z. SKOVAJSOVA | T. MARCHER |
| DETAILS | D. PRUITT | G. BRAUN |
| QUANTITIES | D. ZERGA | D. PRUITT |

**PREPARED FOR THE STATE OF CALIFORNIA DEPARTMENT OF TRANSPORTATION**

PETER M. REBULL
PROJECT ENGINEER

BRIDGE NO. 28-0015K
KILOMETER POST 9.44/0.55

**CALDECOTT IMPROVEMENT PROJECT**
**TUNNEL STRUCTURE**
**WATERPROOFING - TYPICAL SECTION NO. 1**

DESIGN DETAIL SHEET (METRIC) (REV. 6/21/04)

ORIGINAL SCALE IN MILLIMETERS FOR REDUCED PLANS 0 10 20 30 40 50 60 70 80 90 100

CU 04
EA 294911

DISREGARD PRINTS BEARING EARLIER REVISION DATES

REVISION DATES (PRELIMINARY STAGE ONLY): 6/26/06 3/16/07 6/22/07 10/18/07 1/28/08 5/07/08 7/01/08 12/03/08

SHEET 107 OF 162

FILE => e-28-0015k-st111.dwg

USERNAME => rmikesi DATE PLOTTED => 01-SEP-2009 TIME PLOTTED => 10:58

| DIST | COUNTY | ROUTE | KILOMETER POST TOTAL PROJECT | SHEET No | TOTAL SHEETS |
|---|---|---|---|---|---|
| 04 | Ala,CC | 24 | 8.2/10.9, 0.0/2.7 | 984 | 1435 |

REGISTERED CIVIL ENGINEER 07-01-08 DATE

1-5-09
PLANS APPROVAL DATE

REGISTERED PROFESSIONAL ENGINEER JOHANNES VAN GREUNEN No. C52885 Exp. 12-31-10 CIVIL STATE OF CALIFORNIA

*The State of California or its officers or agents shall not be responsible for the accuracy or completeness of electronic copies of this plan sheet.*

**PARSONS**
50 FREMONT STREET, SUITE 1500
SAN FRANCISCO, CA 94105

**ILF Consultants**
1440 BROADWAY, SUITE 1010
OAKLAND, CA 94612

**JACOBS ASSOCIATES**
465 CALIFORNIA STREET, SUITE 1000
SAN FRANCISCO, CA 94104

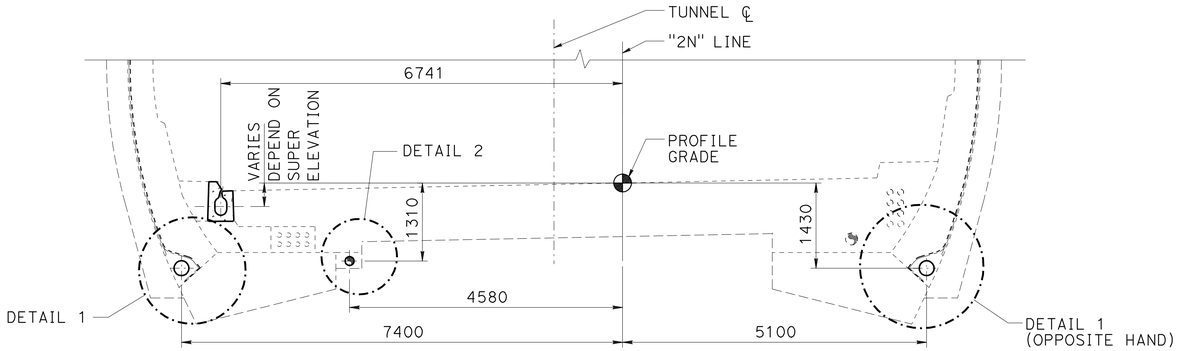


## DETAIL 3 - DRAINAGE LOCATION
1:50

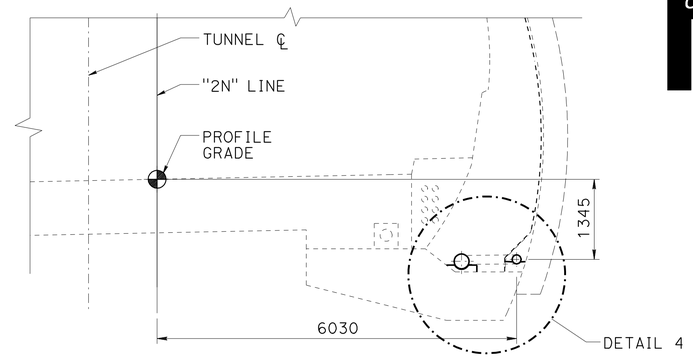


## SECTION A-A
1:50

NOTES:

1. FOR TUNNEL WATERPROOFING CONNECTION DETAIL SEE SHEET ST-114, SECTION A-A.
2. FOR SECTION A-A LOCATION SEE SHEET ST-133. SECTION A-A IS TYPICAL AT EACH CROSS PASSAGE.
3. FOR LOCATION OF DETAIL 3 SEE SHEET ST-111.

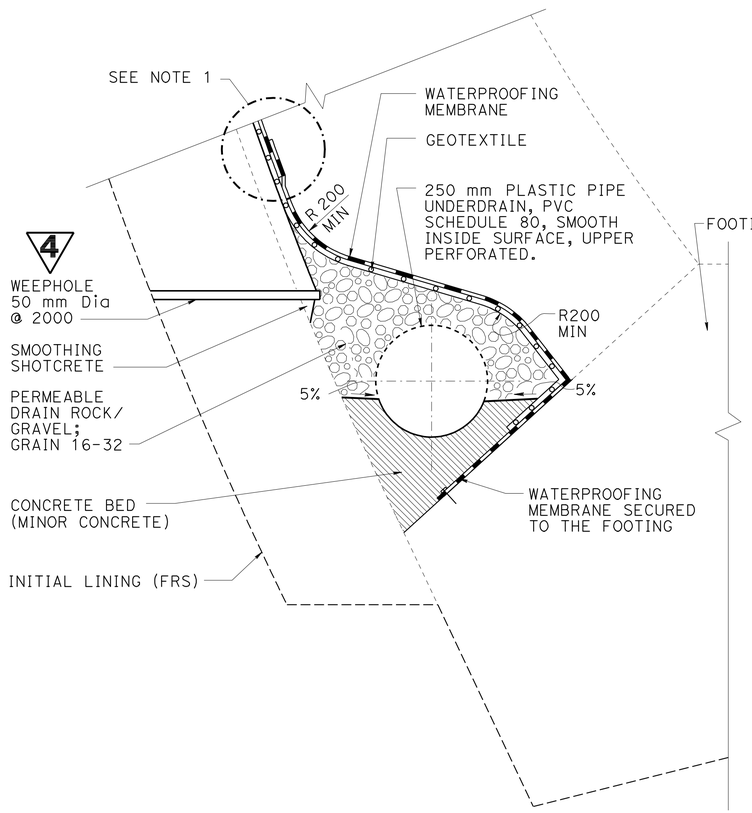


## DETAIL 1
NO SCALE

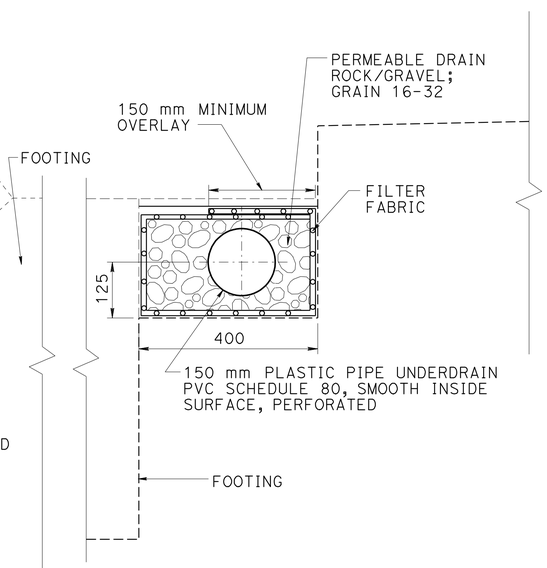


## DETAIL 2
NO SCALE

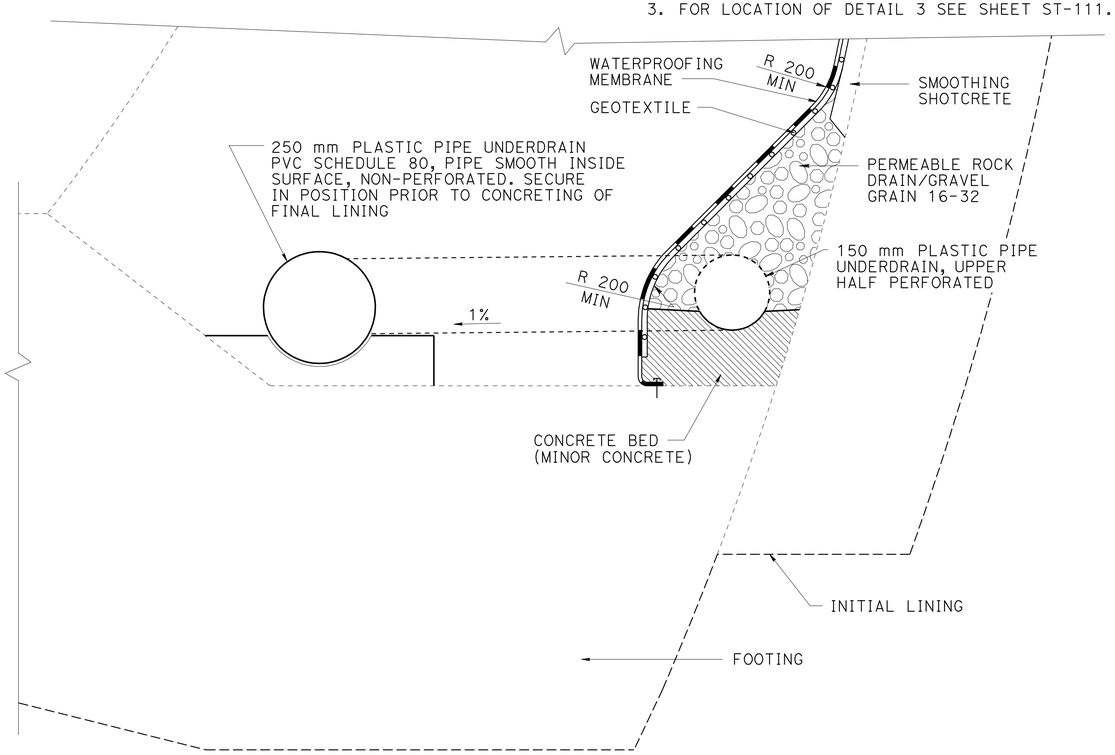


## DETAIL 4 (NICHE AT CROSS PASSAGE)
NO SCALE

ALL DIMENSIONS ARE IN MILLIMETERS UNLESS OTHERWISE SHOWN

**ST-141**

4 **REVISED PER ADDENDUM No. 4 DATED SEPTEMBER 3, 2009**

THE CONTRACTOR SHALL VERIFY ALL CONTROLLING FIELD DIMENSIONS BEFORE ORDERING OR FABRICATING ANY MATERIAL

# CALDECOTT IMPROVEMENT PROJECT
## TUNNEL STRUCTURE
## DRAINAGE - DETAILS NO. 1

RANDY R. ANDERSON RRA
DESIGN OVERSIGHT
JULY 01, 2008
SIGN OFF DATE

| | BY | CHECKED |
|---|---|---|
| DESIGN | Z. SKOVAJSOVA | D. ZERGA |
| DETAILS | D. PRUITT | G. BRAUN |
| QUANTITIES | D. ZERGA | D. PRUITT |

**PREPARED FOR THE STATE OF CALIFORNIA DEPARTMENT OF TRANSPORTATION**

PETER M. REBULL
PROJECT ENGINEER

BRIDGE NO. 28-0015K
KILOMETER POST 9.44/0.55

DESIGN DETAIL SHEET (METRIC) (REV. 6/21/04)

ORIGINAL SCALE IN MILLIMETERS FOR REDUCED PLANS 0 10 20 30 40 50 60 70 80 90 100

CU 04
EA 294911

DISREGARD PRINTS BEARING EARLIER REVISION DATES → 3/16/07 6/22/07 10/30/07 1/28/08 5/07/08 7/01/08 12/03/08

SHEET 122 OF 162

FILE => e-28-0015k-st141.add

USERNAME => tmikesl DATE PLOTTED => 01-SEP-2009 TIME PLOTTED => 10:59

| DIST | COUNTY | ROUTE | KILOMETER POST TOTAL PROJECT | SHEET No | TOTAL SHEETS |
|---|---|---|---|---|---|
| 04 | Ala,CC | 24 | 8.2/10.0, 0.0/2.7 | 1052 | 1435 |

Caltrans Metric

REGISTERED MECHANICAL ENGINEER 07-01-08

1-5-09
PLANS APPROVAL DATE

REGISTERED PROFESSIONAL ENGINEER DILIP S. SHAH No. M18321 EXP. 09-30-09 MECHANICAL STATE OF CALIFORNIA

*The State of California or its officers or agents shall not be responsible for the accuracy or completeness of electronic copies of this plan sheet.*

**PARSONS**
50 FREMONT STREET, SUITE 1500
SAN FRANCISCO, CA 94105

**EARTH TECH**
2101 WEBSTER STREET, SUITE 1000
OAKLAND, CA. 94612-3060

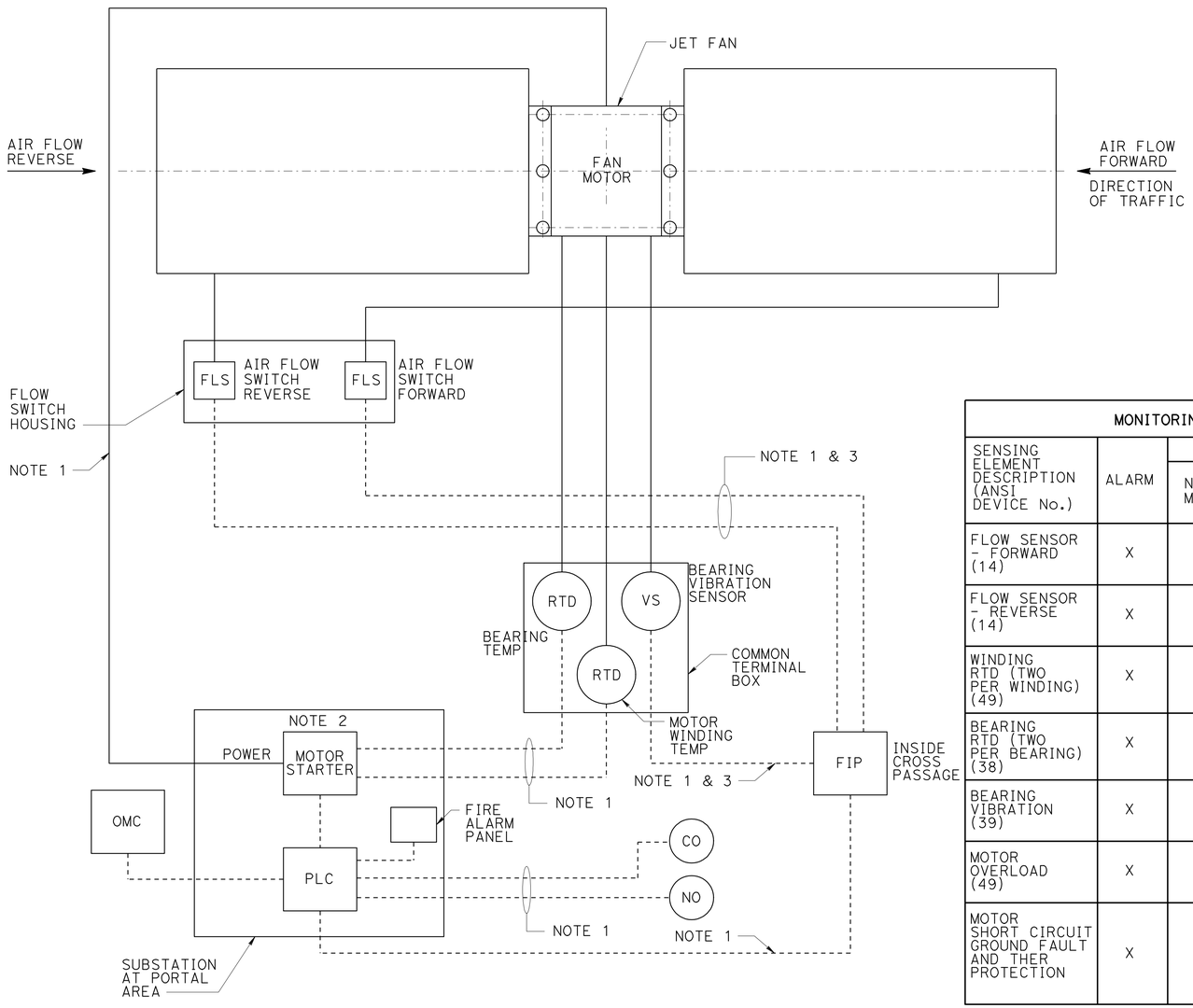


LEGEND:

——— ELECTRIC POWER WIRING

- - - - - CONTROL WIRING

## TYPICAL JET FAN CONTROL DIAGRAM

N. T. S.

NOTES:

1. FOR WIRING DIAGRAMS SEE ELECTRICAL CONTROL SCHEMATIC DWG. ET-221 THRU ET-239.
2. ELECTRICAL CONTROLS INCLUDE TIMER TO PREVENT REVERSING OF ROTATION OF FAN FOR PERIOD OF 45 SECONDS.
3. INPUT FROM VIBRATION SENSORS (VS) AND AIR FLOW SWITCHES FOR FIRST SET OF JET FANS (JF1 & JF2) AND FINAL SET OF JET FANS (JF17, JF18 & JF19) GO DIRECTLY TO PLC'S IN PORTAL NO. 1 AND NO. 2 SUBSTATIONS, RESPECTIVELY.

**MONITORING AND CONTROL DEVICE FUNCTIONS**

| SENSING ELEMENT DESCRIPTION (ANSI DEVICE No.) | ALARM | MOTOR TRIP | | INDICATION | REMARKS |
|---|---|---|---|---|---|
| | | NORMAL MODE | EMERGENCY MODE | | |
| FLOW SENSOR - FORWARD (14) | X | X | ✱ | X | ALARM/INDICATION AT OMC VIA PLC IF MOTOR IS RUNNING & THERE IS NO FLOW |
| FLOW SENSOR - REVERSE (14) | X | X | ✱ | X | INDICATION AT OMC VIA PLC IF MOTOR IS RUNNING AND NO FLOW |
| WINDING RTD (TWO PER WINDING) (49) | X | X | ✱ | X | ALARM & INDICATION AT OMC VIA PLC, AS WELL AS AT MPR RELAY |
| BEARING RTD (TWO PER BEARING) (38) | X | X | ✱ | X | ALARM & INDICATION AT OMC VIA PLC, AS WELL AS AT MPR RELAY |
| BEARING VIBRATION (39) | X | X | ✱ | X | ALARM & INDICATION AT OMC VIA PLC |
| MOTOR OVERLOAD (49) | X | X | ✱ | X | ALARM & INDICATION AT OMC VIA PLC, AS WELL AS AT MPR RELAY |
| MOTOR SHORT CIRCUIT GROUND FAULT AND THER PROTECTION | X | X | ✱ | X | OUTPUTS OF MOTOR PROTECTION RELAY TO PLC |

4

MANUAL OPERATION - JET FANS

FANS CAN BE STARTED MANUALLY FROM MOTOR STARTER BY SELECTING "MANUAL" AND "FORWARD" OR "REVERSE" DIRECTION ON SELECTOR SWITCHES. FANS CAN BE ALSO STARTED MANUALLY FROM OMC EITHER IN FORWARD OR REVERSE DIRECTION. FANS CAN BE STOPPED FROM THE STARTER BY PUTTING SELECTOR SWITCH IN OFF POSITION OR FROM OMC BY PLC STOP COMMAND.

NORMAL

DURING NORMAL OPERATIONS ALL JET FANS ARE OFF. AT MOTOR STARTER FORWARD-REVERSE POSITION SELECTOR SWITCH IS EITHER IN FORWARD OR REVERSE POSITION. MANUAL-OFF-AUTO SWITCH IS IN AUTO POSITION. PLC PROVIDES STATUS OF "MAN-OFF-AUTO" SELECTOR SWITCH TO BE IN AUTO POSITION.

AUTOMATIC OPERATION-JET FANS (FIRE EMERGENCY OPERATIONS)

WHEN CONTACT CLOSURE IS RECEIVED FROM FIRE ALARM CONTROL SYSTEM (LHD, GD, CCTV, EMERGENCY).
JET FANS JF1 TO JF19 ARE STARTED IN STEPS PER ROW IN FORWARD DIRECTION. FOR FAN START SEQUENCE SEE DRAWING MT4-5 FOR EMERGENCY OPERATION MODE.

AIR QUALITY OPERATIONS

WHEN CO SENSOR DETECTS CO CONCENTRATION OF 10 PPM OR HIGHER, ONE FAN IN THE ROW OF FANS CLOSEST TO THE CO SENSOR STARTS IN THE FORWARD DIRECTION. IF CO CONCENTRATION OF 15 PPM OR HIGHER IS DETECTED, BOTH FANS IN THE ROW CLOSEST TO THE SENSOR START IN THE FORWARD DIRECTION. JET FANS JF1 TO JF19 ARE STARTED IN STEPS PER ROW IN FORWARD DIRECTION ACCORDING TO AIR QUALITY OPERATING MODE TABLE AS SHOWN ON DRAWING MT4-6. FAN OPERATION CONTINUES UNTIL CO CONCENTRATION FALLS TO 5 PPM OR LESS. FOR FAN START SEQUENCE SEE DRAWING MT4-6.

MANUAL OPERATIONS - JET FANS (MAINTENANCE OPERATIONS)

MAINTENANCE OPERATIONS FOR FORWARD/REVERSE OPERATIONS CAN BE PERFORMED BY SELECTING MANUAL MODE ON MANUAL-OFF-AUTO SELECTOR SWITCH AND FORWARD OR REVERSE OPERATION ON FORWARD/REVERSE SELECTOR SWITCH ON MOTOR STARTER.

MONITORING

FAN OPERATING STATUS AND AIRFLOW DIRECTION (FORWARD/REVERSE) ARE PROVIDED BY FAN MOUNTED FLOW SWITCHES AND ARE MONITORED AT OMC VIA PLC. FAN OPERATING STATUS AND AIR FLOW DIRECTION ARE MONITORED AT FIP.

MOTOR FAULT ALARM WINDING TEMPERATURE AND FAN/MOTOR BEARING TEMPERATURE ARE MONITORED AT OMC VIA PLC.

4 **REVISED PER ADDENDUM No. 4 DATED SEPTEMBER 3, 2009**

ALL DIMENSIONS ARE IN MILLIMETERS UNLESS NOTED OTHERWISE

**MT4-4**

THE CONTRACTOR SHALL VERIFY ALL CONTROLLING FIELD DIMENSIONS BEFORE ORDERING OR FABRICATING ANY MATERIAL

**CALDECOTT IMPROVEMENT PROJECT**

**TUNNEL MECHANICAL**

**TUNNEL MECH. JET FANS - CTRL. DIAG.**

RANDY R. ANDERSON RRA
DESIGN OVERSIGHT
JULY 01, 2008
SIGN OFF DATE

| | BY | CHECKED |
|---|---|---|
| DESIGN | D. SHAH | N. SHAHCHERAGHI |
| DETAILS | D. SHAH | N. SHAHCHERAGHI |
| QUANTITIES | R. GALLARDO | D. SHAH |

**PREPARED FOR THE STATE OF CALIFORNIA DEPARTMENT OF TRANSPORTATION**

D. SHAH
PROJECT ENGINEER

BRIDGE NO. 28-0015K
KILOMETER POST 9.44/0.55

DESIGN DETAIL SHEET (METRIC) (REV. 6/21/04)

ORIGINAL SCALE IN MILLIMETERS FOR REDUCED PLANS 0 10 20 30 40 50 60 70 80 90 100

CU 04
EA 294911

DISREGARD PRINTS BEARING EARLIER REVISION DATES

REVISION DATES (PRELIMINARY STAGE ONLY) 06/26/06 03/26/07 06/22/07 01/28/08 05/07/08 07/07/08 07/15/08

SHEET 21 OF 62

FILE => j-28-0015k-mt-4-4.dgn

USERNAME => trmikesl DATE PLOTTED => 01-SEP-2009 TIME PLOTTED => 10:59

| DIST | COUNTY | ROUTE | KILOMETER POST TOTAL PROJECT | SHEET No | TOTAL SHEETS |
|---|---|---|---|---|---|
| 04 | Ala,CC | 24 | 8.2/10.9, 0.0/2.7 | 1081 | 1435 |

Caltrans Metric

07-01-08
REGISTERED FIRE PROTECTION ENGINEER

1-5-09
PLANS APPROVAL DATE

REGISTERED PROFESSIONAL ENGINEER
DILIP S. SHAH
No. FP1571
EXP. 06-30-09
FIRE PROTECTION
STATE OF CALIFORNIA

*The State of California or its officers or agents shall not be responsible for the accuracy or completeness of electronic copies of this plan sheet.*

**PARSONS**
50 FREMONT STREET, SUITE 1500
SAN FRANCISCO, CA 94105

**EARTH TECH**
2101 WEBSTER STREET, SUITE 1000
OAKLAND, CA. 94612-3060

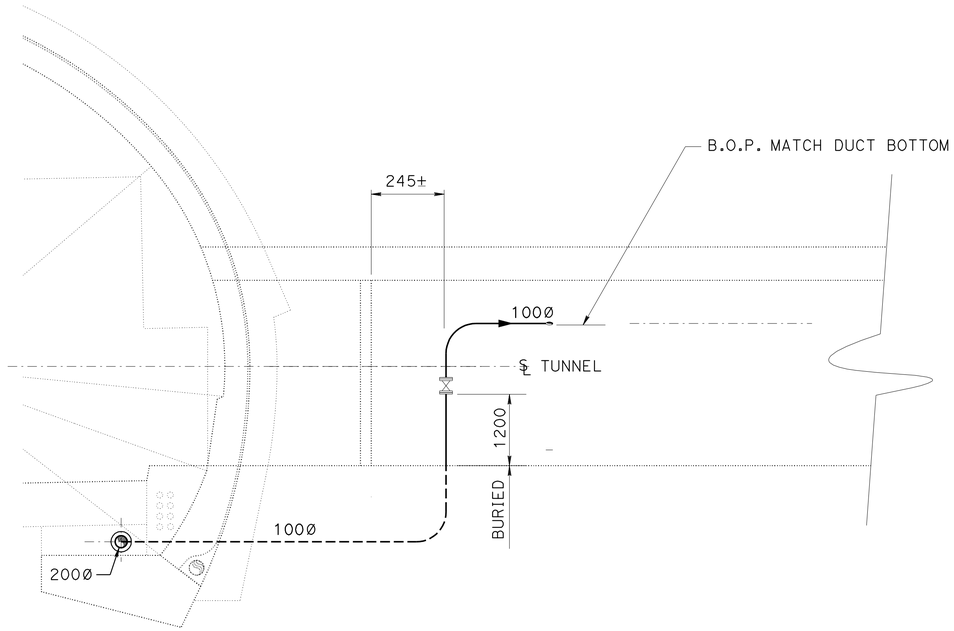


## SECTION A-A
SCALE: 1:50

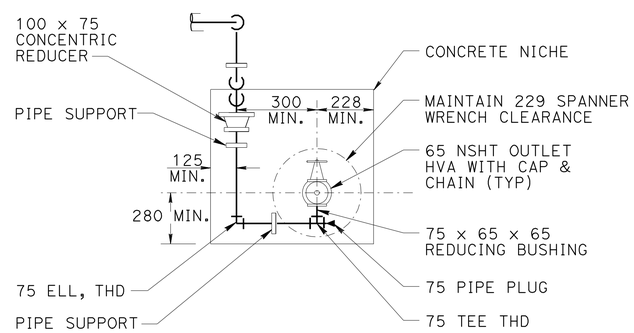


## ELEVATION
SCALE: NTS

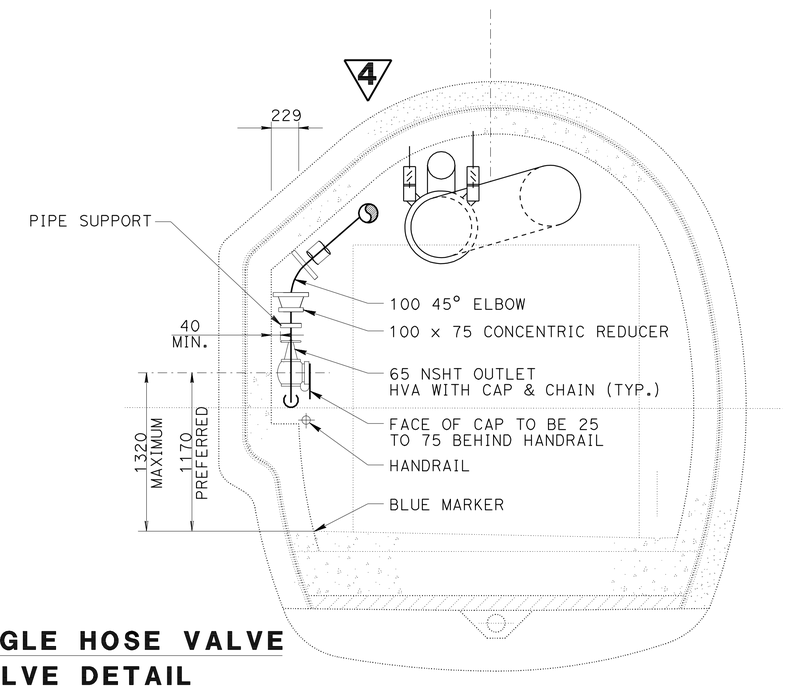


## SECTION B-B
SCALE: NTS

# CROSS PASSAGE COMBINATION ANGLE HOSE VALVE AND PRESSURE REDUCING VALVE DETAIL SERVICE NICHE DETAIL

1

SCALE: NTS

4 **REVISED PER ADDENDUM No. 4 DATED SEPTEMBER 3, 2009**

ALL DIMENSIONS ARE IN MILLIMETERS UNLESS NOTED OTHERWISE

**MT7-25**

THE CONTRACTOR SHALL VERIFY ALL CONTROLLING FIELD DIMENSIONS BEFORE ORDERING OR FABRICATING ANY MATERIAL

**CALDECOTT IMPROVEMENT PROJECT**
**TUNNEL MECHANICAL**
**TUNNEL FIRE PROTECT. X-PASS SECTIONS**

RANDY R. ANDERSON RRA
DESIGN OVERSIGHT
JULY 01, 2008
SIGN OFF DATE

| | BY | CHECKED |
|---|---|---|
| DESIGN | J. KWAN | D. SHAH |
| DETAILS | D. SHAH | N. SHAHCHERAGHI |
| QUANTITIES | R. GALLARDO | D. SHAH |

**PREPARED FOR THE STATE OF CALIFORNIA DEPARTMENT OF TRANSPORTATION**

D. SHAH
PROJECT ENGINEER

BRIDGE NO. 28-0015K
KILOMETER POST 9.44/0.55

DESIGN DETAIL SHEET (METRIC) (REV. 6/21/04)

ORIGINAL SCALE IN MILLIMETERS FOR REDUCED PLANS 0 10 20 30 40 50 60 70 80 90 100

CU 04
EA 294911

DISREGARD PRINTS BEARING EARLIER REVISION DATES

REVISION DATES (PRELIMINARY STAGE ONLY) 06/26/06 03/26/07 06/22/07 01/28/08 05/07/08 07/01/08

SHEET 54 OF 62

FILE => j-28-0015k-mt-7-25.add

USERNAME => tmikest DATE PLOTTED => 01-SEP-2009 TIME PLOTTED => 10:59

| DIST | COUNTY | ROUTE | KILOMETER POST TOTAL PROJECT | SHEET No. | TOTAL SHEETS |
|---|---|---|---|---|---|
| 04 | Ala,CC | 24 | 8.2/10.0, 0.0/2.7 | 1093 | 1435 |

Dev Paul 07-01-08
REGISTERED ELECTRICAL ENGINEER

1-5-09
PLANS APPROVAL DATE

REGISTERED PROFESSIONAL ENGINEER DEV PAUL No. E8856 Exp. 03-31-10 ELECT STATE OF CALIFORNIA

*The State of California or its officers or agents shall not be responsible for the accuracy or completeness of electronic copies of this plan sheet.*

**PARSONS**
50 FREMONT STREET, SUITE 1500
SAN FRANCISCO, CA 94105

**EARTH TECH**
2101 WEBSTER STREET, SUITE 1000
OAKLAND, CA. 94612-3060

*To get to the Caltrans web site, go to: http://www.dot.ca.gov*

Caltrans Metric

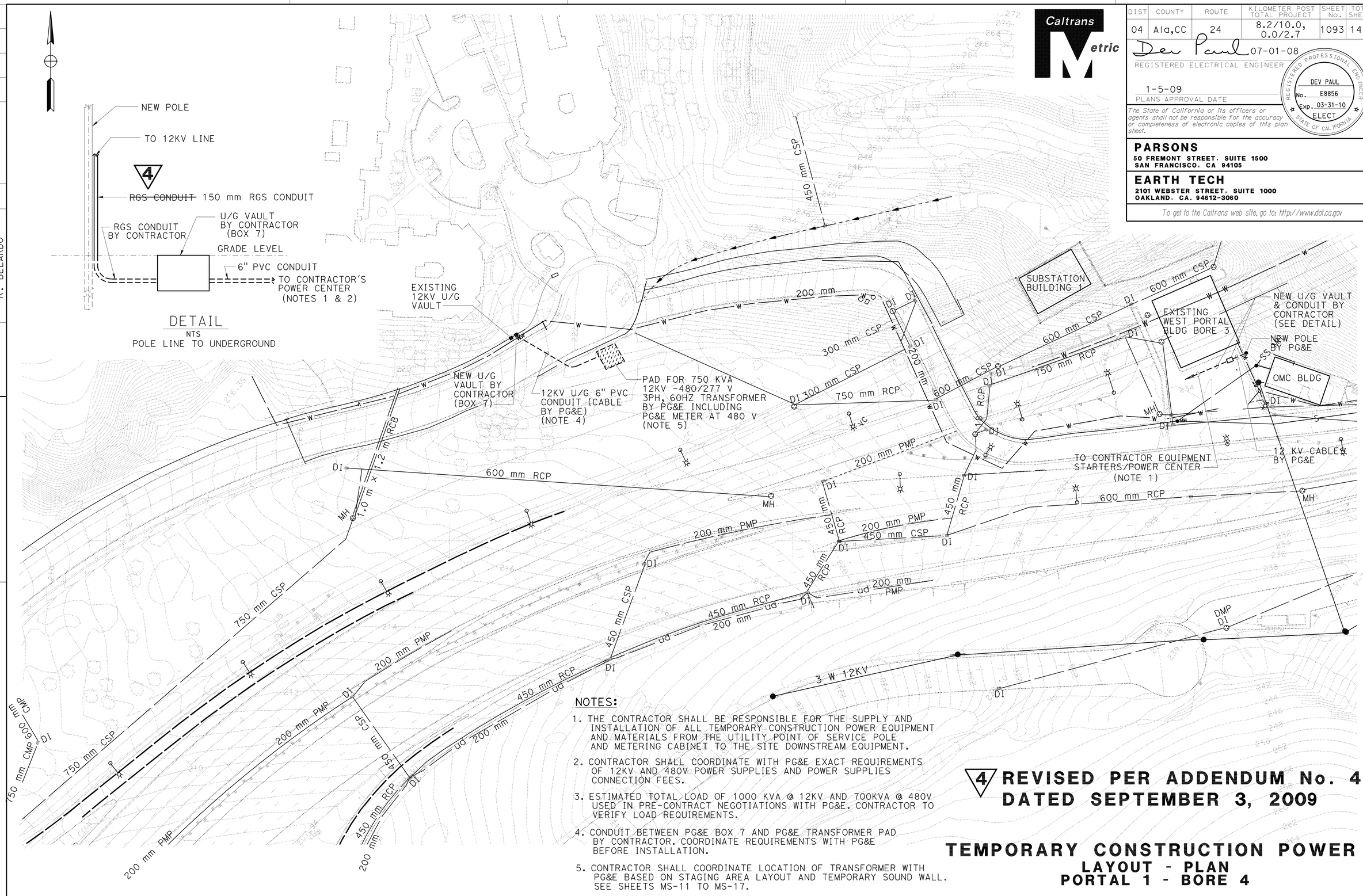


## NOTES:

1. THE CONTRACTOR SHALL BE RESPONSIBLE FOR THE SUPPLY AND INSTALLATION OF ALL TEMPORARY CONSTRUCTION POWER EQUIPMENT AND MATERIALS FROM THE UTILITY POINT OF SERVICE POLE AND METERING CABINET TO THE SITE DOWNSTREAM EQUIPMENT.
2. CONTRACTOR SHALL COORDINATE WITH PG&E EXACT REQUIREMENTS OF 12KV AND 480V POWER SUPPLIES AND POWER SUPPLIES CONNECTION FEES.
3. ESTIMATED TOTAL LOAD OF 1000 KVA @ 12KV AND 700KVA @ 480V USED IN PRE-CONTRACT NEGOTIATIONS WITH PG&E. CONTRACTOR TO VERIFY LOAD REQUIREMENTS.
4. CONDUIT BETWEEN PG&E BOX 7 AND PG&E TRANSFORMER PAD BY CONTRACTOR. COORDINATE REQUIREMENTS WITH PG&E BEFORE INSTALLATION.
5. CONTRACTOR SHALL COORDINATE LOCATION OF TRANSFORMER WITH PG&E BASED ON STAGING AREA LAYOUT AND TEMPORARY SOUND WALL. SEE SHEETS MS-11 TO MS-17.

**4 REVISED PER ADDENDUM No. 4 DATED SEPTEMBER 3, 2009**

# TEMPORARY CONSTRUCTION POWER
## LAYOUT - PLAN
## PORTAL 1 - BORE 4

**ET-5**

THE CONTRACTOR SHALL VERIFY ALL CONTROLLING FIELD DIMENSIONS BEFORE ORDERING OR FABRICATING ANY MATERIAL

ALL DIMENSIONS ARE IN MILLIMETERS UNLESS OTHERWISE SHOWN

| | | | |
|---|---|---|---|
| R. ALFONSO/ L. IFURUNG | 01/08 | | |
| D. PAUL/ R. BELARDO | | | |
| CALCULATED/ DESIGNED BY | DATE | REVISED BY | DATE REVISED |
| CHECKED BY | | | |

CONSULTANT FUNCTIONAL SUPERVISOR
NADER SHAHCHERAGHI

STATE OF CALIFORNIA - DEPARTMENT OF TRANSPORTATION
Caltrans

429491et005.add

RELATIVE BORDER SCALE IS IN MILLIMETERS 0 20 40 60 80

USERNAME => trmikesl
DGN FILE => 429491et005.add

EA 294911

LAST REVISION 00-00-00
DATE PLOTTED => 01-SEP-2009
TIME PLOTTED => 10:59

| DIST | COUNTY | ROUTE | KILOMETER POST TOTAL PROJECT | SHEET No. | TOTAL SHEETS |
|---|---|---|---|---|---|
| 04 | Ala,CC | 24 | 8.2/10.0, 0.0/2.7 | 1094 | 1435 |

Dev Paul 07-01-08
REGISTERED ELECTRICAL ENGINEER

1-5-09
PLANS APPROVAL DATE

REGISTERED PROFESSIONAL ENGINEER DEV PAUL No. E8856 Exp. 03-31-10 ELECT STATE OF CALIFORNIA

*The State of California or its officers or agents shall not be responsible for the accuracy or completeness of electronic copies of this plan sheet.*

**PARSONS**
50 FREMONT STREET, SUITE 1500
SAN FRANCISCO, CA 94105

**EARTH TECH**
2101 WEBSTER STREET, SUITE 1000
OAKLAND, CA. 94612-3060

*To get to the Caltrans web site, go to: http://www.dot.ca.gov*

Caltrans Metric

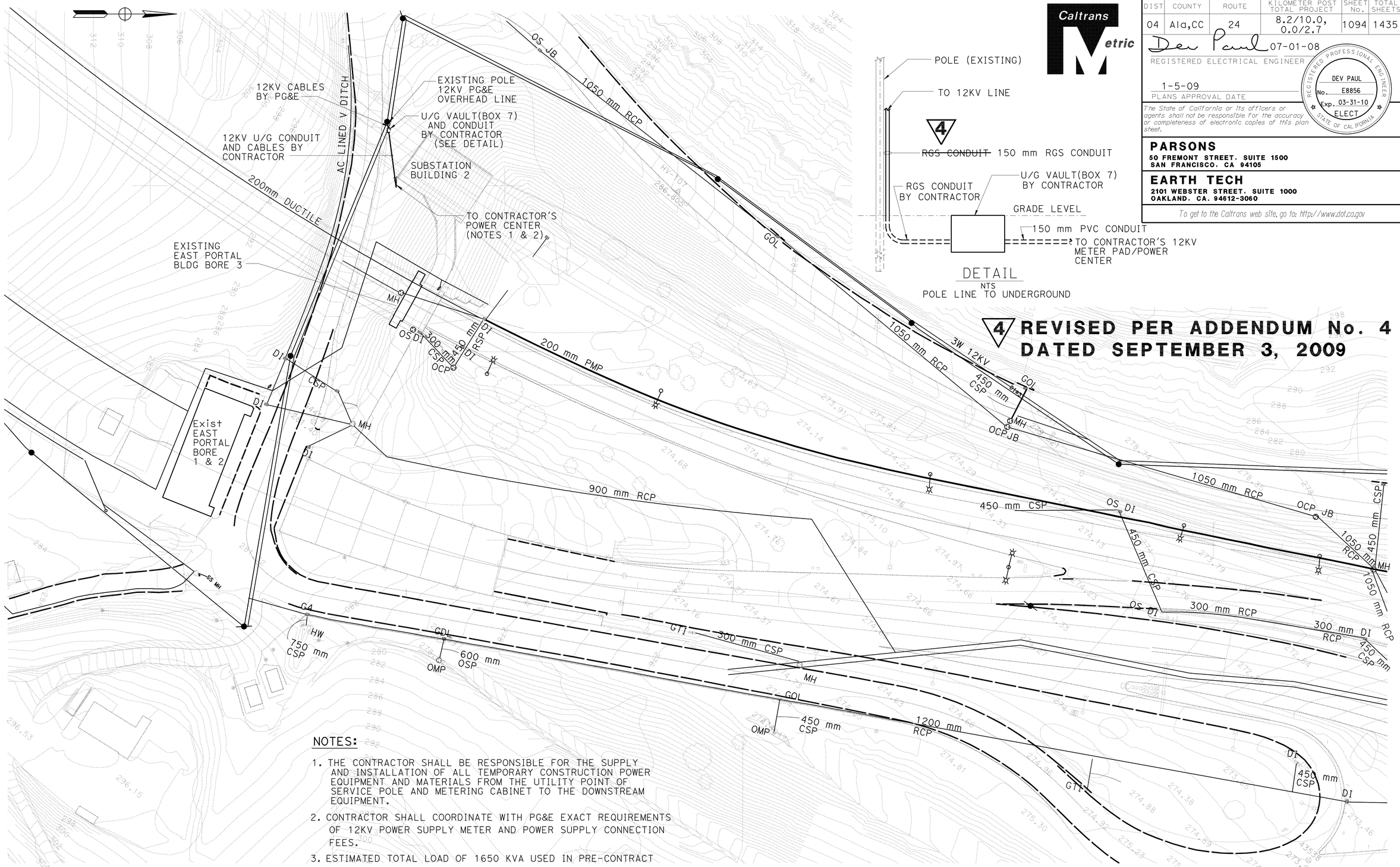





DETAIL
NTS
POLE LINE TO UNDERGROUND

**4 REVISED PER ADDENDUM No. 4 DATED SEPTEMBER 3, 2009**

NOTES:

1. THE CONTRACTOR SHALL BE RESPONSIBLE FOR THE SUPPLY AND INSTALLATION OF ALL TEMPORARY CONSTRUCTION POWER EQUIPMENT AND MATERIALS FROM THE UTILITY POINT OF SERVICE POLE AND METERING CABINET TO THE DOWNSTREAM EQUIPMENT.
2. CONTRACTOR SHALL COORDINATE WITH PG&E EXACT REQUIREMENTS OF 12KV POWER SUPPLY METER AND POWER SUPPLY CONNECTION FEES.
3. ESTIMATED TOTAL LOAD OF 1650 KVA USED IN PRE-CONTRACT NEGOTIATIONS WITH PG&E. CONTRACTOR TO VERIFY LOAD REQUIREMENTS.
4. CONTRACTOR SHALL COORDINATE LOCATION OF POWER CENTER BASED ON STAGING AREA AND WORKING SPACE REQUIREMENTS.

# TEMPORARY CONSTRUCTION POWER
## LAYOUT PLAN
## PORTAL 2 - BORE 4

ET-6

THE CONTRACTOR SHALL VERIFY ALL CONTROLLING FIELD DIMENSIONS BEFORE ORDERING OR FABRICATING ANY MATERIAL

ALL DIMENSIONS ARE IN MILLIMETERS UNLESS OTHERWISE SHOWN

| | DATE | REVISED BY |
|---|---|---|
| | | DATE REVISED |

| | |
|---|---|
| CALCULATED/DESIGNED BY | R. ALFONSO/ L. TFURUNG |
| CHECKED BY | D. PAUL/ R. BELARDO |

CONSULTANT FUNCTIONAL SUPERVISOR
NADER SHAHCHERAGHI

STATE OF CALIFORNIA - DEPARTMENT OF TRANSPORTATION
Caltrans

429491et006.add

RELATIVE BORDER SCALE IS IN MILLIMETERS 0 20 40 60 80

USERNAME => trmikesl
DGN FILE => 429491et006.add

EA 294911

LAST REVISION 00-00-00
DATE PLOTTED => 01-SEP-2009
TIME PLOTTED => 11:00

| DIST | COUNTY | ROUTE | KILOMETER POST TOTAL PROJECT | SHEET No. | TOTAL SHEETS |
|---|---|---|---|---|---|
| 04 | Ala,CC | 24 | 8.2/10.0, 0.0/2.7 | 1099 | 1435 |

Dev Paul 07-01-08
REGISTERED ELECTRICAL ENGINEER

1-5-09
PLANS APPROVAL DATE

REGISTERED PROFESSIONAL ENGINEER DEV PAUL No. E8856 Exp. 03-31-10 ELECT STATE OF CALIFORNIA

*The State of California or its officers or agents shall not be responsible for the accuracy or completeness of electronic copies of this plan sheet.*

**PARSONS**
50 FREMONT STREET, SUITE 1500
SAN FRANCISCO, CA 94105

**EARTH TECH**
2101 WEBSTER STREET, SUITE 1000
OAKLAND, CA. 94612-3060

*To get to the Caltrans web site, go to: http://www.dot.ca.gov*

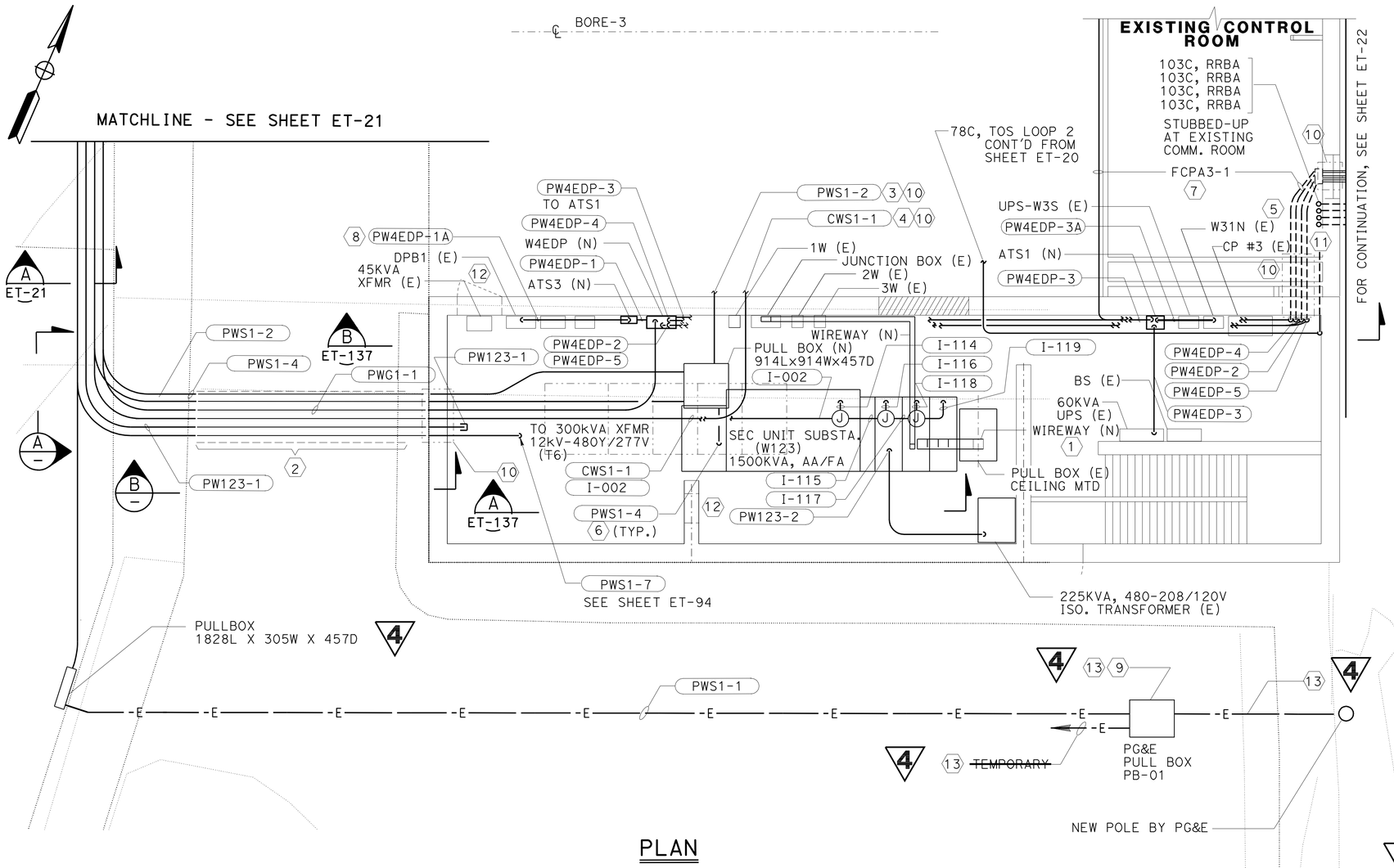


PLAN

## SHEET NOTES:

1. ELECTRICAL CONTRACTOR TO PROVIDE NEW WIREWAY AND EXTEND IT TO EXISTING WIREWAY MATCHING THE SIZE & MATERIAL.
2. CUT AND INSTALL UNDERGROUND DUCT BELOW EXISTING ROADWAY.
3. EXTEND THE 103C CONDUIT TO BORE #3 AUXILIARY COMPARTMENT AIR DUCT & RUN CONDUIT ALONGSIDE EXISTING CABLE TRAY. SEE SHEET ET-20.
4. CONTROL CABLE TO 12KV SWITCHGEAR, S2 AT BORE #4 PORTAL 2 BUILDING TO BE ROUTED VIA BORE #3 AUXILIARY COMPARTMENT AIR DUCT. SEE SHEET ET-20.
5. ROUTE CONDUITS VIA EXISTING CONTROL ROOM TO UNDERGROUND DUCTBANK SEE ET-22.
6. FOR CONDUIT SCHEDULE, SEE SHEET ET-181 & 182.
7. FIRE ALARM CABLE TO NEW OMC BUILDING.
8. CONTRACTOR TO DISCONNECT CABLE FROM PANEL DPB1 AND SPLICE TO THE CABLE FROM ATS3.
9. MEDIUM VOLTAGE VAULT 1750Lx1143Wx1954H
10. CORE DRILL EXISTING CONCRETE WALL FOR PENETRATING NEW CONDUITS.
11. 78C, TOS LOOP2. FOR CONTINUATION SEE SHEET ET-28
12. CORE DRILL EXISTING WALL FOR NEW DOOR.
13. BY TEMPORARY CONSTRUCTION POWER CONTRACTOR SEE SHEET ET-5.

**4 REVISED PER ADDENDUM No. 4 DATED SEPTEMBER 3, 2009**

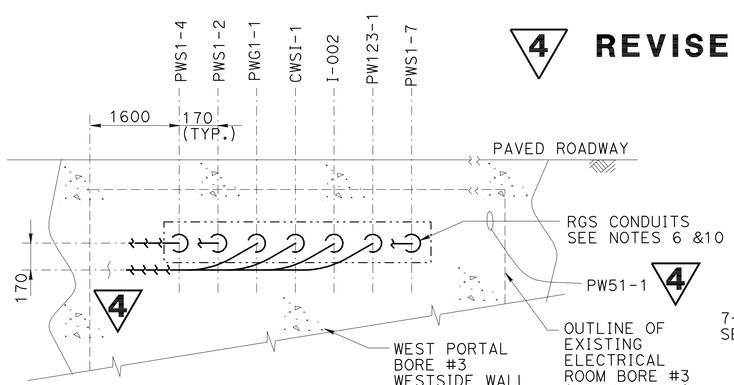


A SECTION
NTS

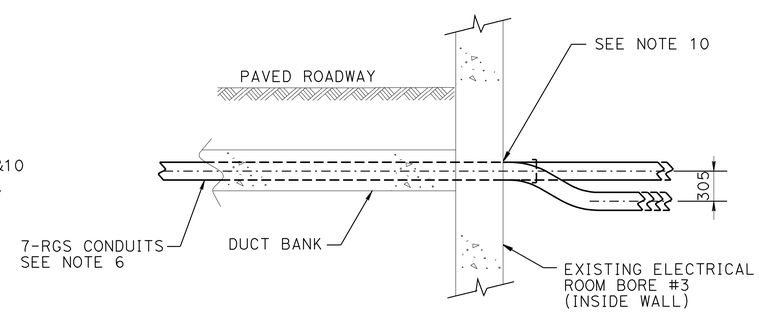


B SECTION
NTS

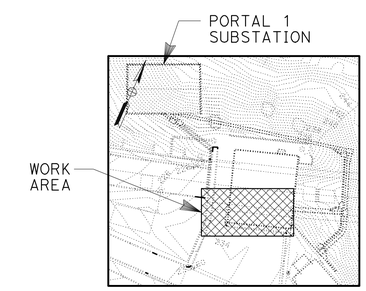


KEY PLAN

# EXISTING SUBSTATION UPGRADE
## (PORTAL 1)-PLAN NO. 1
SCALE 1:50

ET-17

THE CONTRACTOR SHALL VERIFY ALL CONTROLLING FIELD DIMENSIONS BEFORE ORDERING OR FABRICATING ANY MATERIAL

ALL DIMENSIONS ARE IN MILLIMETERS UNLESS OTHERWISE SHOWN

| | DATE | REVISED BY | DATE REVISED |
|---|---|---|---|
| CALCULATED/DESIGNED BY | 01/08 | R. ALFONSO/ L. TFURUNG | |
| CHECKED BY | | D. PAUL/ R. BELARDO | |

CONSULTANT FUNCTIONAL SUPERVISOR
NADER SHAHCHERAGHI

STATE OF CALIFORNIA - DEPARTMENT OF TRANSPORTATION
Caltrans

429491et017.dwg

RELATIVE BORDER SCALE IS IN MILLIMETERS 0 20 40 60 80

USERNAME => trmikesl
DGN FILE => 429491et017.dwg

EA 294911

LAST REVISION 00-00-00
DATE PLOTTED => 01-SEP-2009
TIME PLOTTED => 12:45

| DIST | COUNTY | ROUTE | KILOMETER POST TOTAL PROJECT | SHEET No. | TOTAL SHEETS |
|---|---|---|---|---|---|
| 04 | Ala,CC | 24 | 8.2/10.0, 0.0/2.7 | 1105 | 1435 |

Dev Paul 07-01-08
REGISTERED ELECTRICAL ENGINEER

1-5-09
PLANS APPROVAL DATE

REGISTERED PROFESSIONAL ENGINEER DEV PAUL No. E8856 Exp. 03-31-10 ELECT STATE OF CALIFORNIA

*The State of California or its officers or agents shall not be responsible for the accuracy or completeness of electronic copies of this plan sheet.*

**PARSONS**
50 FREMONT STREET, SUITE 1500
SAN FRANCISCO, CA 94105

**EARTH TECH**
2101 WEBSTER STREET, SUITE 1000
OAKLAND, CA. 94612-3060

*To get to the Caltrans web site, go to: http://www.dot.ca.gov*

Caltrans Metric

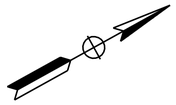

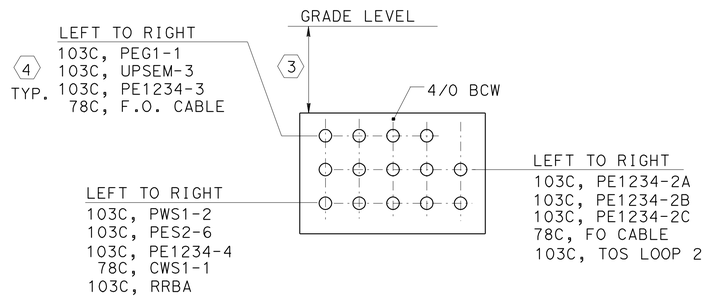


SECTION A
NTS

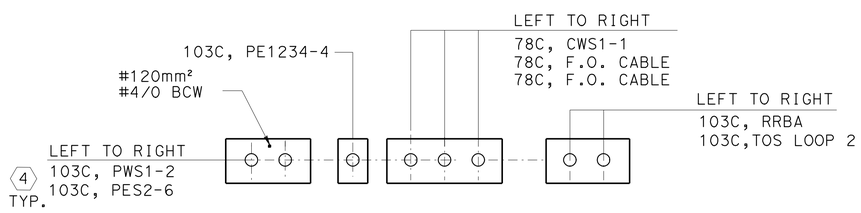


SECTION B
NTS

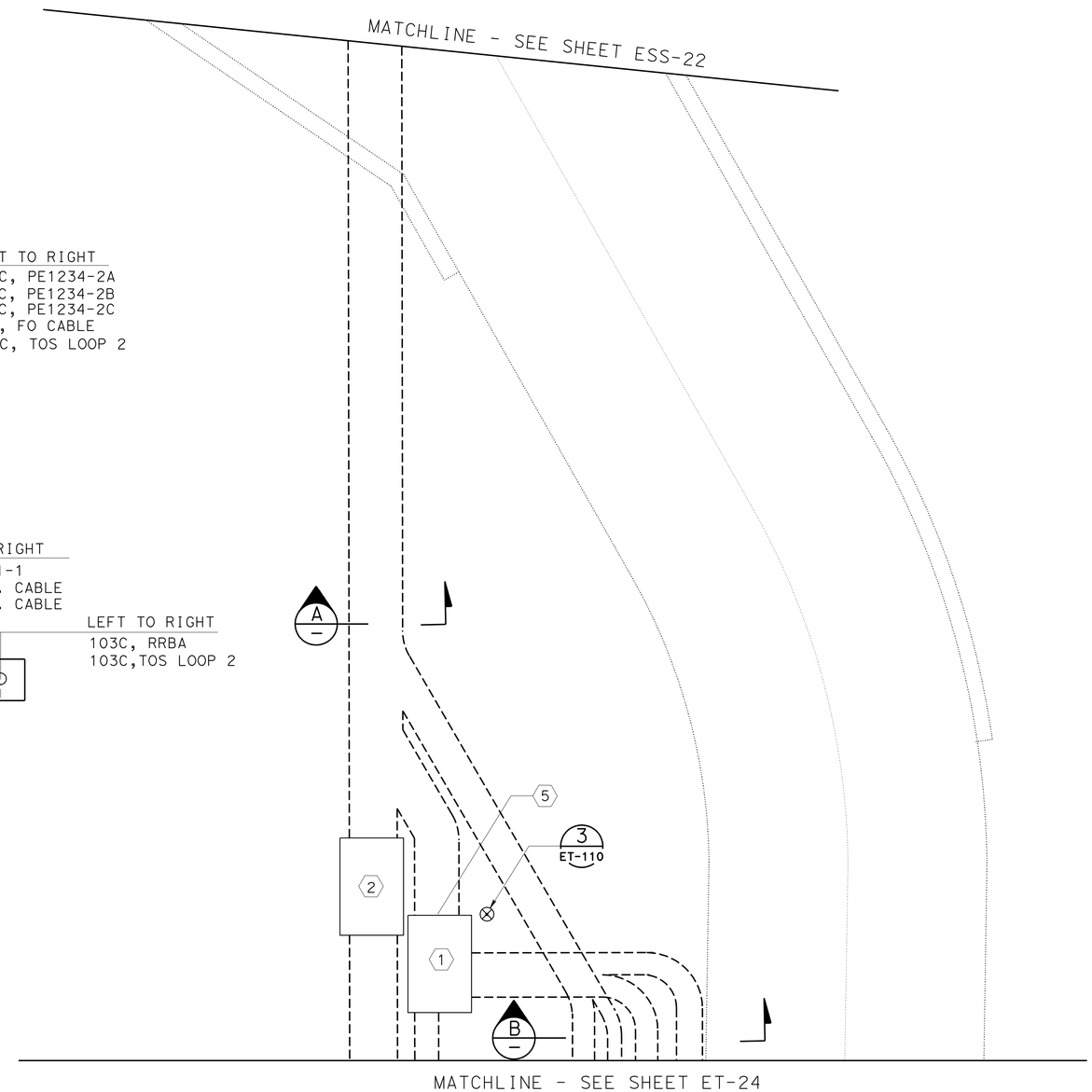


PLAN

## SHEET NOTES:

4

1. MEDIUM VOLTAGE VAULT (1750L×1143W×1954H). VAULT TO BE PROVIDED WITH STEEL COVER. ~~AND SPECIAL CONCRETE FOOTING.~~
2. LV VAULT, LV-5(1750L×1143W×1954H
3. COVER(DEPTH) OF UNDERGROUND DUCT BANK SHALL NOT BE LESS THAN 600mm.
4. FOR CONDUIT SCHEDULE, SEE SHEET ET-183 .
5. SEE SHEET ET-110 FOR VAULT GROUNDING DETAIL.

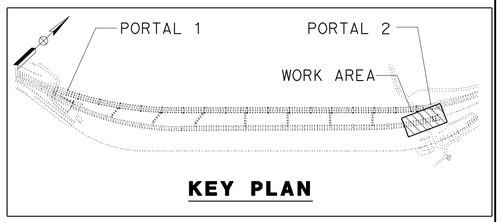


**KEY PLAN**

4 **REVISED PER ADDENDUM No. 4 DATED SEPTEMBER 3, 2009**

# OUTSIDE PORTAL UNDERGROUND DUCTS
## (PORTAL 2) PLAN NO 1
SCALE 1:50

**ET-23**

THE CONTRACTOR SHALL VERIFY ALL CONTROLLING FIELD DIMENSIONS BEFORE ORDERING OR FABRICATING ANY MATERIAL

ALL DIMENSIONS ARE IN MILLIMETERS UNLESS OTHERWISE SHOWN

| DATE | REVISED BY | DATE REVISED |
|---|---|---|
| 01/08 | | |

CALCULATED/DESIGNED BY: R. ALFONSO/L. TFURUNG
CHECKED BY: D. PAUL/R. BELARDO
CONSULTANT FUNCTIONAL SUPERVISOR: NADER SHAHCHERAGHI
STATE OF CALIFORNIA - DEPARTMENT OF TRANSPORTATION
Caltrans

429491et023.add

RELATIVE BORDER SCALE IS IN MILLIMETERS 0 20 40 60 80

USERNAME => trmikesl
DGN FILE => 429491et023.add

LAST REVISION 00-00-00
DATE PLOTTED => 01-SEP-2009
TIME PLOTTED => 11:00

EA 294911

| DIST | COUNTY | ROUTE | KILOMETER POST TOTAL PROJECT | SHEET No. | TOTAL SHEETS |
|---|---|---|---|---|---|
| 04 | Ala,CC | 24 | 8.2/10.0<br>0.0/2.7 | 1106 | 1435 |

Dev Paul 07-01-08
REGISTERED ELECTRICAL ENGINEER

1-5-09
PLANS APPROVAL DATE

REGISTERED PROFESSIONAL ENGINEER DEV PAUL No. E8856 Exp. 03-31-10 ELECT STATE OF CALIFORNIA

*The State of California or its officers or agents shall not be responsible for the accuracy or completeness of electronic copies of this plan sheet.*

**PARSONS**
50 FREMONT STREET, SUITE 1500
SAN FRANCISCO, CA 94105

**EARTH TECH**
2101 WEBSTER STREET, SUITE 1000
OAKLAND, CA. 94612-3060

*To get to the Caltrans web site, go to: http://www.dot.ca.gov*

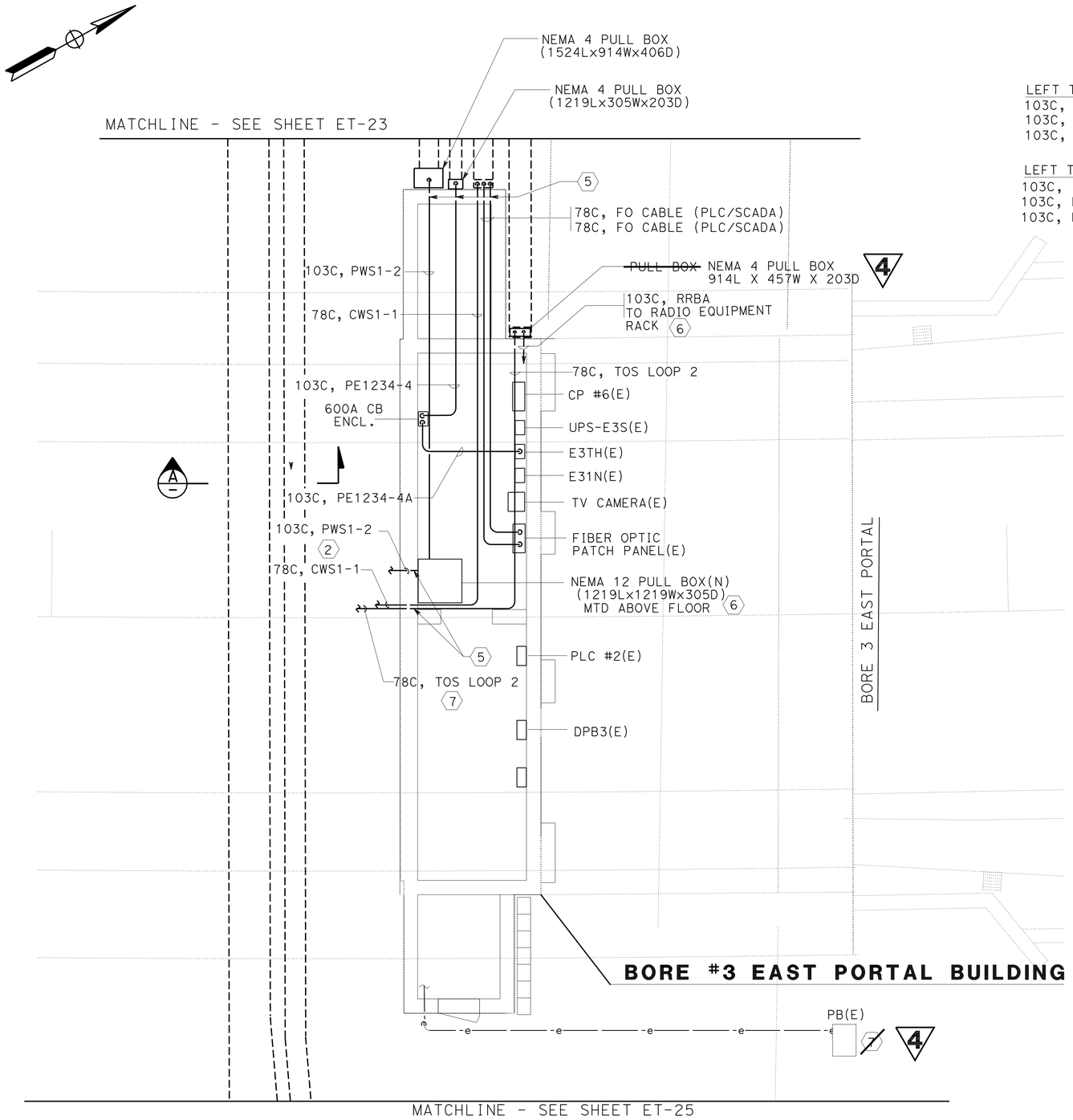


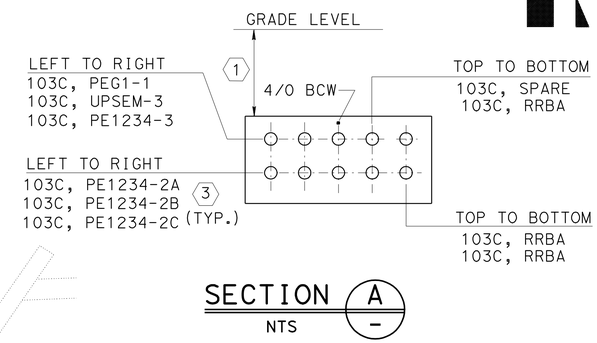


SECTION A
NTS

## SHEET NOTES:

1. COVER(DEPTH) OF UNDERGROUND DUCT BANK SHALL NOT BE LESS THAN 600 mm.
2. PWS1-2 (12KV TIE CABLES) AND CWS1-1 (INTERLOCK CONDUCTORS)TO BE ROUTED THRU BORE 3 AUXILIARY COMPARTMENT AIR DUCT. SEE SHEET ET-20.
3. REFER TO SHEET ET-183 FOR CONDUIT SCHEDULE.
4. PART OF EXISTING SUBSTATION UPGRADE.
5. CORE DRILL EXISTING CONCRETE WALL FOR PENETRATING NEW CONDUITS.
6. EXACT LOCATION AND MOUNTING REQUIREMENTS TO BE DETERMINED BY THE CONTRACTOR.
7. ROUTED THRU BORE 3 AUXILIARY COMPARTMENT AIR DUCT. FOR CONTINUATION, SEE SHEET ET-20.

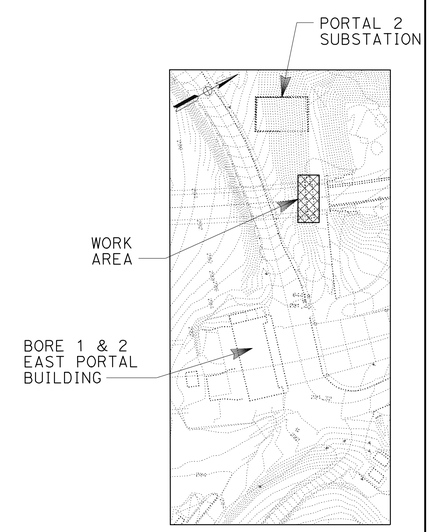


**KEY PLAN**

4 **REVISED PER ADDENDUM No. 4 DATED SEPTEMBER 3, 2009**

PLAN

# OUTSIDE PORTAL UNDERGROUND DUCTS (PORTAL 2) PLAN No. 2

SCALE 1:50

**ET-24**

THE CONTRACTOR SHALL VERIFY ALL CONTROLLING FIELD DIMENSIONS BEFORE ORDERING OR FABRICATING ANY MATERIAL

ALL DIMENSIONS ARE IN MILLIMETERS UNLESS OTHERWISE SHOWN

| | DATE | REVISED BY | DATE REVISED |
|---|---|---|---|
| CALCULATED/DESIGNED BY | 01/08 | R. ALFONSO/ L. TFURUNG | |
| CHECKED BY | | D. PAUL/ R. BELARDO | |

CONSULTANT FUNCTIONAL SUPERVISOR
NADER SHAHCHERAGHI

STATE OF CALIFORNIA - DEPARTMENT OF TRANSPORTATION
Caltrans

429491et024.dgn

LAST REVISION 00-00-00
DATE PLOTTED => 01-SEP-2009
TIME PLOTTED => 11:01

RELATIVE BORDER SCALE IS IN MILLIMETERS 0 20 40 60 80

USERNAME => trmikesl
DGN FILE => 429491et024.dgn

EA 294911

| DIST | COUNTY | ROUTE | KILOMETER POST TOTAL PROJECT | SHEET No. | TOTAL SHEETS |
|---|---|---|---|---|---|
| 04 | Ala,CC | 24 | 8.2/10.0, 0.0/2.7 | 1108 | 1435 |

Dev Paul 07-01-08
REGISTERED ELECTRICAL ENGINEER

1-5-09
PLANS APPROVAL DATE

REGISTERED PROFESSIONAL ENGINEER DEV PAUL No. E8856 Exp. 03-31-10 ELECT STATE OF CALIFORNIA

*The State of California or its officers or agents shall not be responsible for the accuracy or completeness of electronic copies of this plan sheet.*

**PARSONS**
50 FREMONT STREET, SUITE 1500
SAN FRANCISCO, CA 94105

**EARTH TECH**
2101 WEBSTER STREET, SUITE 1000
OAKLAND, CA. 94612-3060

*To get to the Caltrans web site, go to: http://www.dot.ca.gov*

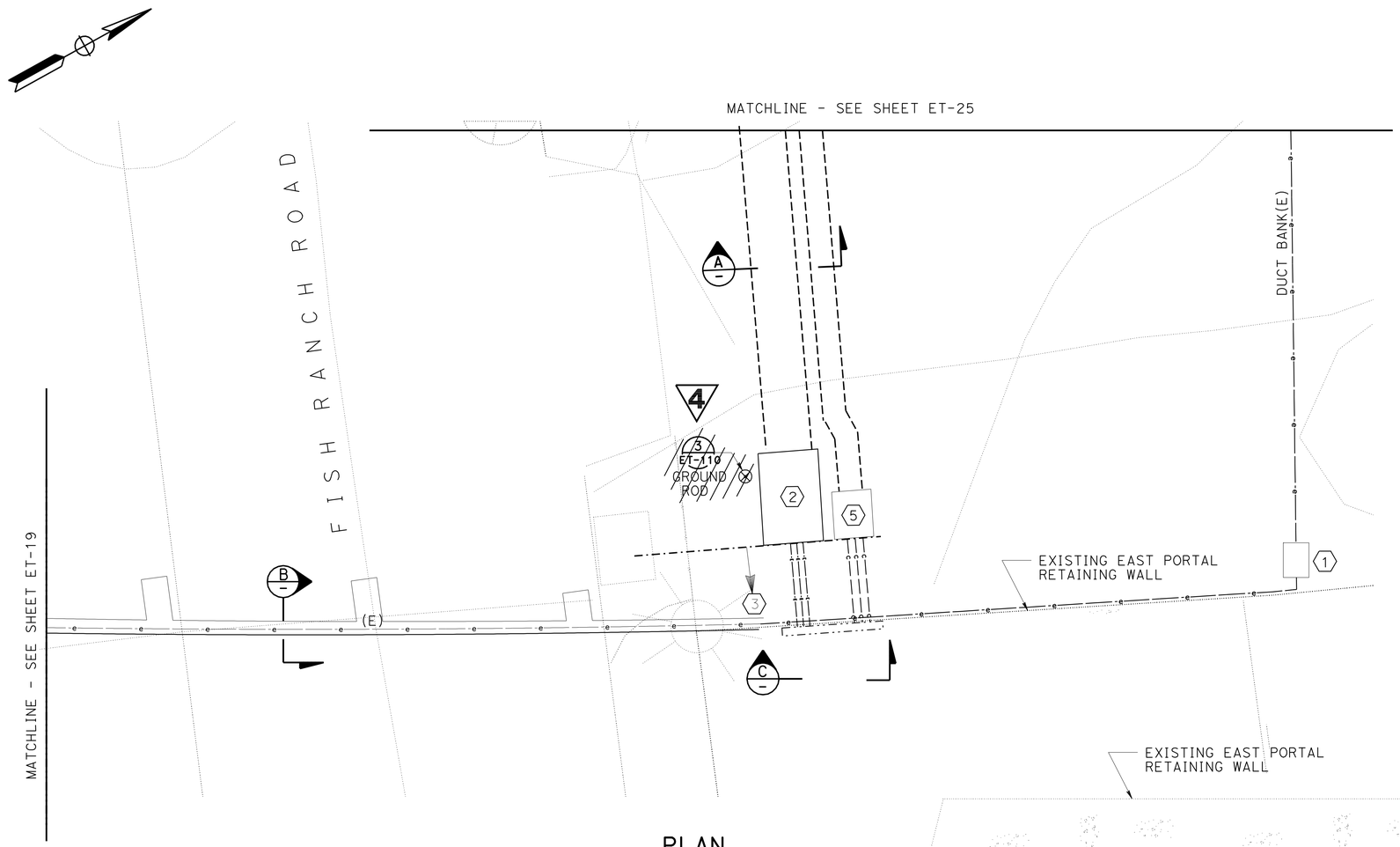


PLAN
1:50

## SHEET NOTES:

1. EXISTING PULL BOX
2. LV VAULT, LV-6 1750Lx1143Wx1954H
3. PART OF EXISTING SUBSTATION UPGRADE.
4. REFER TO SHEET ET-183 FOR CONDUIT SCHEDULE.
5. No. 6 Pull Box
6. CORE DRILL EXISTING CONCRETE RETAINING WALL FOR PENETRATING NEW CONDUITS.

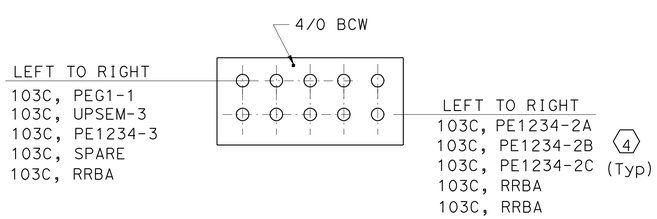


SECTION A
NTS

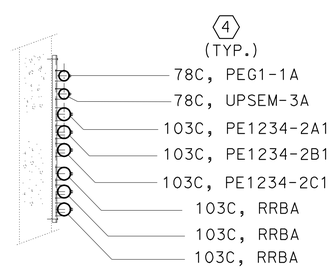


SECTION B
NTS

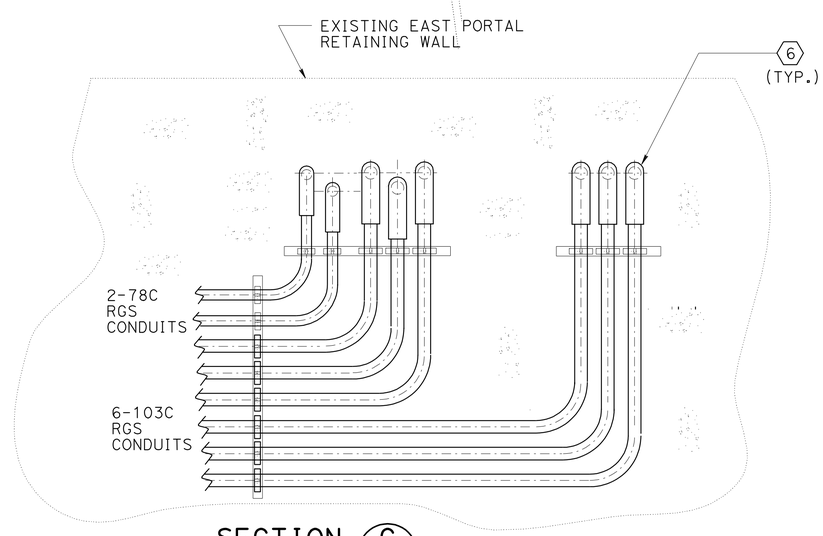


SECTION C
NTS

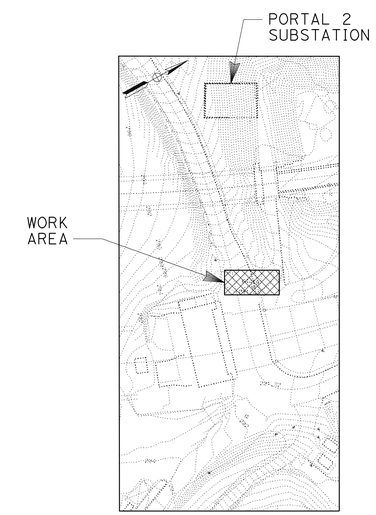


**KEY PLAN**

**4 REVISED PER ADDENDUM No. 4 DATED SEPTEMBER 3, 2009**

# OUTSIDE PORTAL UNDERGROUND DUCTS
## (PORTAL 2) PLAN No. 4

SCALE 1:50

**ET-26**

THE CONTRACTOR SHALL VERIFY ALL CONTROLLING FIELD DIMENSIONS BEFORE ORDERING OR FABRICATING ANY MATERIAL

ALL DIMENSIONS ARE IN MILLIMETERS UNLESS OTHERWISE SHOWN

| | DATE | REVISED BY | DATE REVISED |
|---|---|---|---|
| CALCULATED/DESIGNED BY | 01/08 | R. ALFONSO/ L. TFURUNG | |
| CHECKED BY | | D. PAUL/ R. BELARDO | |

CONSULTANT FUNCTIONAL SUPERVISOR
NADER SHAHCHERAGHI

STATE OF CALIFORNIA - DEPARTMENT OF TRANSPORTATION
Caltrans

RELATIVE BORDER SCALE IS IN MILLIMETERS 0 20 40 60 80

USERNAME => trmikesl
DGN FILE => 429491et026.dgn

EA 294911

LAST REVISION 00-00-00
DATE PLOTTED => 01-SEP-2009
TIME PLOTTED => 12:45

429491et026.dgn

| DIST | COUNTY | ROUTE | KILOMETER POST TOTAL PROJECT | SHEET No. | TOTAL SHEETS |
|---|---|---|---|---|---|
| 04 | Ala,CC | 24 | 8.2/10.0, 0.0/2.7 | 1112 | 1435 |

Dev Paul 07-01-08
REGISTERED ELECTRICAL ENGINEER

1-5-09
PLANS APPROVAL DATE

REGISTERED PROFESSIONAL ENGINEER DEV PAUL No. E8856 Exp. 03-31-10 ELECT STATE OF CALIFORNIA

*The State of California or its officers or agents shall not be responsible for the accuracy or completeness of electronic copies of this plan sheet.*

**PARSONS**
50 FREMONT STREET, SUITE 1500
SAN FRANCISCO, CA 94105

**EARTH TECH**
2101 WEBSTER STREET, SUITE 1000
OAKLAND, CA. 94612-3060

*To get to the Caltrans web site, go to: http://www.dot.ca.gov*

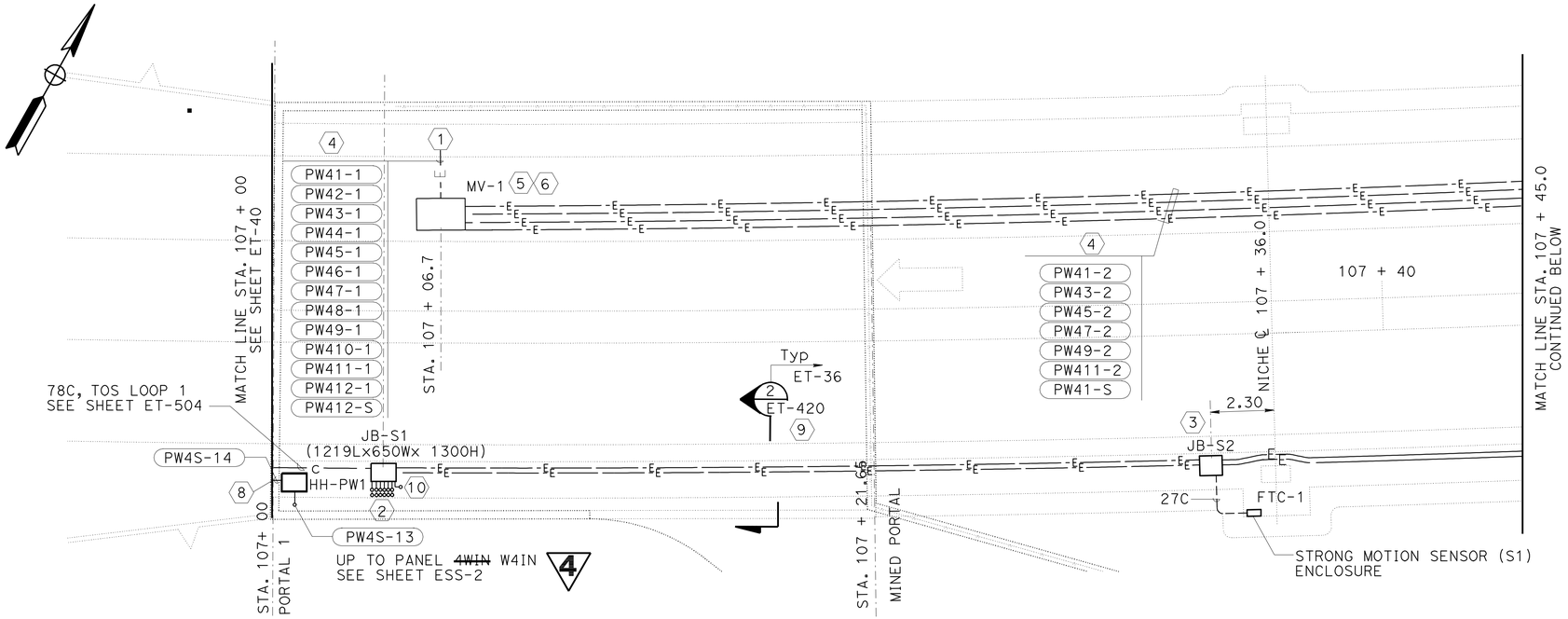


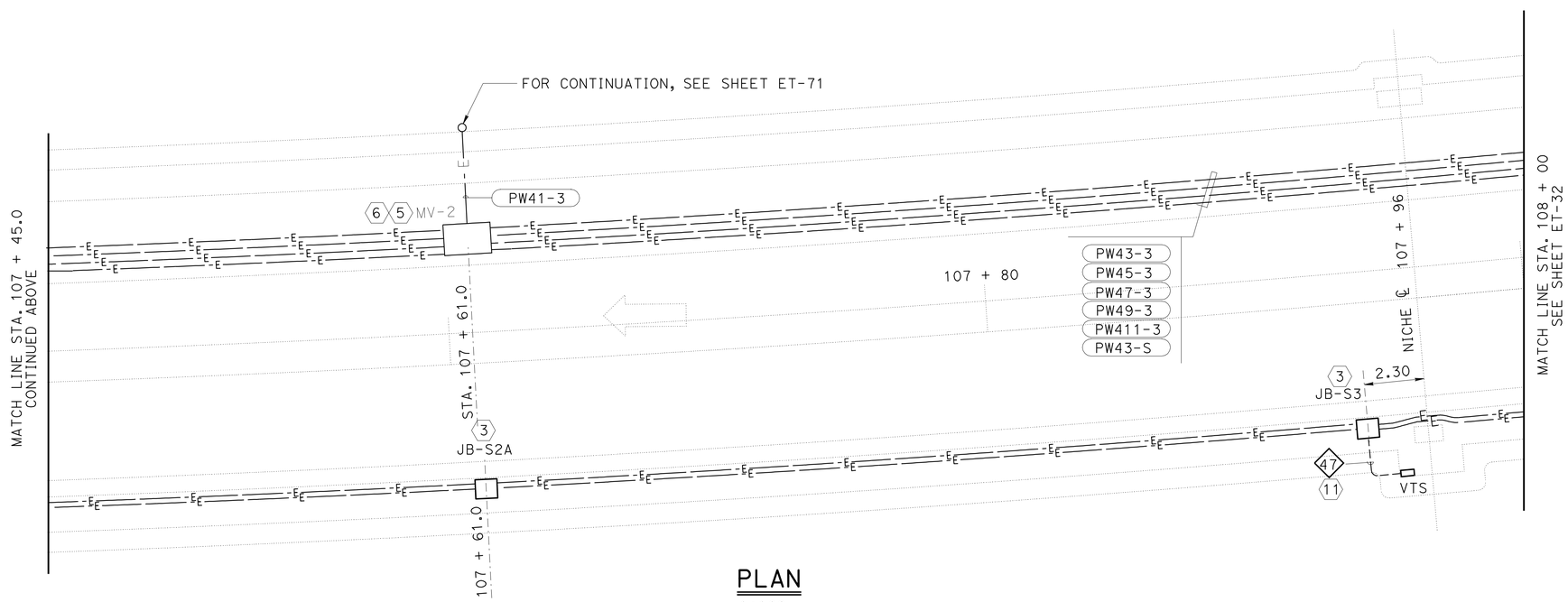


PLAN
1:100

## SHEET NOTES:

1. FOR CONTINUATION OF GROUP OF CONDUITS GOING UP TO SUBSTATION BUILDING 1 SEE SHEET ESS-2.
2. UP TO SYSTEM VAULT SYS-1 FOR CONTINUATION, SEE SHEET ESS-2.
3. JUNCTION BOXES, JB-S2, JB-S2A, JB-S3 900Lx650Wx1300H
4. SEE SHEET ET-18, ET-182 AND ET-185 FOR CONDUIT SCHEDULES
5. MV-1 & MV-2 INDICATES 4.16kV MEDIUM VOLTAGE VAULT.
6. FOR MV MANHOLE GROUNDING DETAILS SEE SHEET ET-143.
7. FOR CABLE SCHEDULE SEE SHEET ET-171 THROUGH ET-179.
8. SEE SHEET ET-511.
9. REFER TO SHEET ET-420 FOR CONDUIT DUCT BANK ASSIGNMENTS.
10. 53C, UP TO TEL SET. SEE SHEET ESS-2 FOR CONTINUATION.
11. REFER TO SHEET ET-418 FOR SYSTEM CABLE SCHEDULE

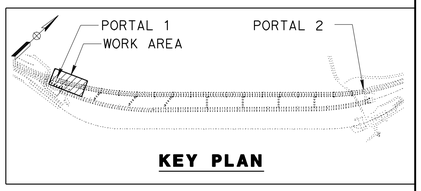


**4 REVISED PER ADDENDUM No. 4 DATED SEPTEMBER 3, 2009**

THE CONTRACTOR SHALL VERIFY ALL CONTROLLING FIELD DIMENSIONS BEFORE ORDERING OR FABRICATING ANY MATERIAL

ALL DIMENSIONS ARE IN MILLIMETERS UNLESS OTHERWISE SHOWN

# TUNNEL UNDERGROUND DUCTS
## PLAN No. 1

SCALE 1:100

**ET-31**

| DATE | REVISED BY | DATE | REVISED BY |
|---|---|---|---|
| 01/08 | R. ALFONSO/ L. TFURUNG | | |

CALCULATED/DESIGNED BY: D. PAUL/ R. BELARDO
CHECKED BY

CONSULTANT FUNCTIONAL SUPERVISOR: NADER SHAHCHERAGHI

STATE OF CALIFORNIA - DEPARTMENT OF TRANSPORTATION
Caltrans

RELATIVE BORDER SCALE IS IN MILLIMETERS 0 20 40 60 80

USERNAME => trmikesl
DGN FILE => 429491et031.add

EA 294911

LAST REVISION 00-00-00
DATE PLOTTED => 01-SEP-2009
TIME PLOTTED => 11:01

429491et031.add

| DIST | COUNTY | ROUTE | KILOMETER POST TOTAL PROJECT | SHEET No. | TOTAL SHEETS |
|---|---|---|---|---|---|
| 04 | Ala,CC | 24 | 8.2/10.0, 0.0/2.7 | 1117 | 1435 |

Dev Paul 07-01-08
REGISTERED ELECTRICAL ENGINEER

1-5-09
PLANS APPROVAL DATE

REGISTERED PROFESSIONAL ENGINEER DEV PAUL No. E8856 Exp. 03-31-10 ELECT STATE OF CALIFORNIA

*The State of California or its officers or agents shall not be responsible for the accuracy or completeness of electronic copies of this plan sheet.*

**PARSONS**
50 FREMONT STREET, SUITE 1500
SAN FRANCISCO, CA 94105

**EARTH TECH**
2101 WEBSTER STREET, SUITE 1000
OAKLAND, CA. 94612-3060

*To get to the Caltrans web site, go to: http://www.dot.ca.gov*

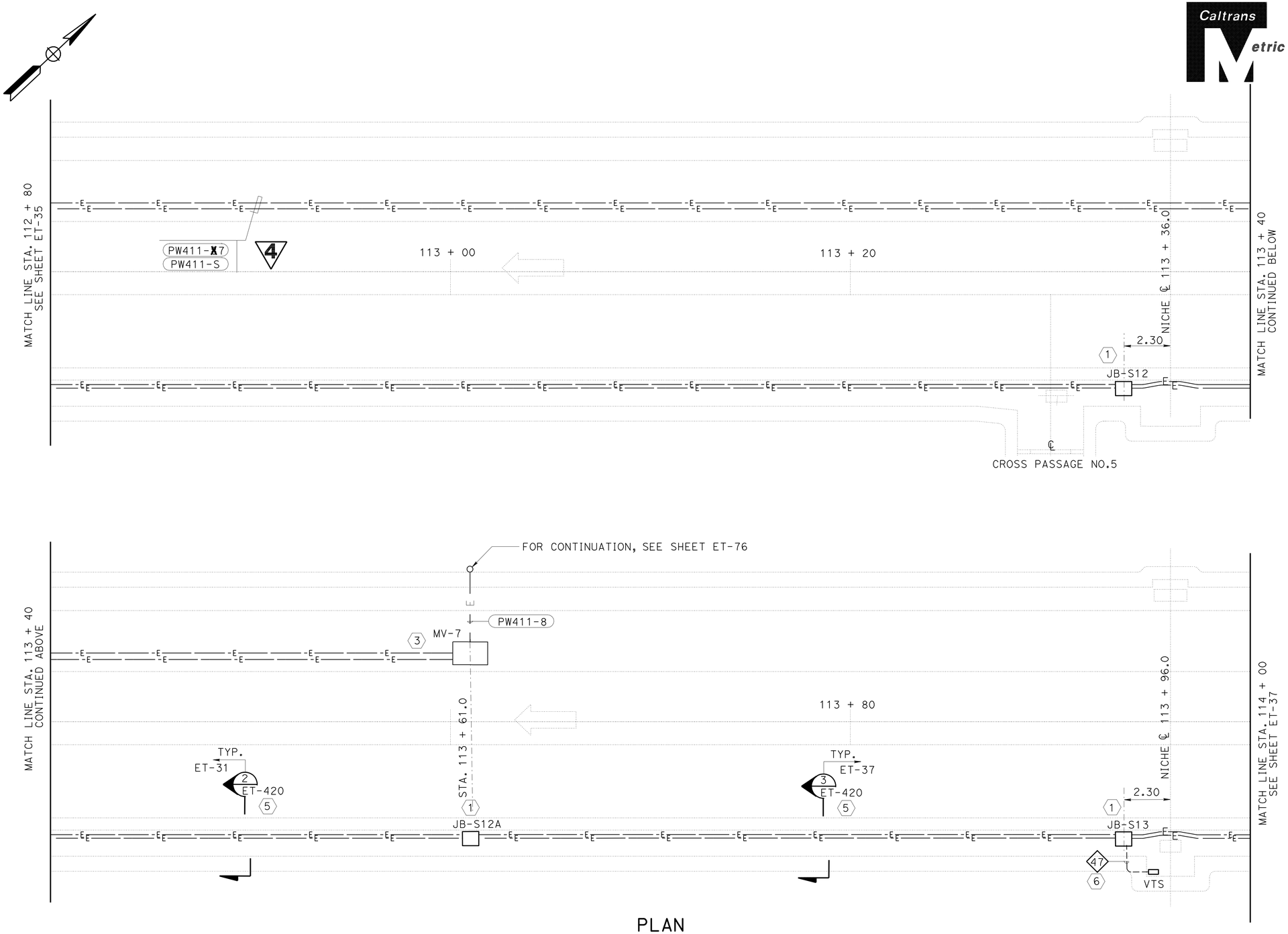


PLAN
1:100

## SHEET NOTES:

1. JUNCTION BOXES, JB-S12, JB-S12A, JB-S13 900L×650W×1300H
2. SEE SHEET ET-181, ET-182 AND ET-185 FOR CONDUIT SCHEDULES.
3. FOR 4.16kV VAULT GROUNDING DETAILS SEE SHEET ET-143.
4. FOR CABLE SCHEDULE SEE SHEET ET-171 THROUGH ET-179.
5. REFER TO SHEET ET-420 FOR CONDUIT DUCT BANK ASSIGNMENTS.
6. REFER TO SHEET ET-418 FOR SYSTEM CABLE SCHEDULE

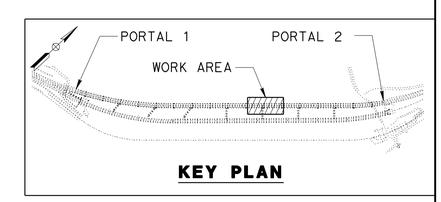


| | | | |
|---|---|---|---|
| | | R. ALFONSO/ L. TFURUNG | DATE 01/08 |
| | | D. PAUL/ R. BELARDO | |
| CALCULATED/ DESIGNED BY | | | |
| CHECKED BY | | | |

CONSULTANT FUNCTIONAL SUPERVISOR
NADER SHAHCHERAGHI

STATE OF CALIFORNIA - DEPARTMENT OF TRANSPORTATION
Caltrans

4 **REVISED PER ADDENDUM No. 4 DATED SEPTEMBER 3, 2009**

THE CONTRACTOR SHALL VERIFY ALL CONTROLLING FIELD DIMENSIONS BEFORE ORDERING OR FABRICATING ANY MATERIAL

ALL DIMENSIONS ARE IN MILLIMETERS UNLESS OTHERWISE SHOWN

# TUNNEL UNDERGROUND DUCTS
## PLAN NO. 6

SCALE 1:100

**ET-36**

RELATIVE BORDER SCALE IS IN MILLIMETERS 0 20 40 60 80

USERNAME => trmikesl
DGN FILE => 429491et036.add

EA 294911

LAST REVISION 00-00-00
DATE PLOTTED => 01-SEP-2009
TIME PLOTTED => 11:01

429491et036.add

| DIST | COUNTY | ROUTE | KILOMETER POST TOTAL PROJECT | SHEET No. | TOTAL SHEETS |
|---|---|---|---|---|---|
| 04 | Ala,CC | 24 | 8.2/10.0, 0.0/2.7 | 1121 | 1435 |

Dev Paul 07-01-08
REGISTERED ELECTRICAL ENGINEER

1-5-09
PLANS APPROVAL DATE

REGISTERED PROFESSIONAL ENGINEER DEV PAUL No. E8856 Exp. 03-31-10 ELECT STATE OF CALIFORNIA

*The State of California or its officers or agents shall not be responsible for the accuracy or completeness of electronic copies of this plan sheet.*

**PARSONS**
50 FREMONT STREET, SUITE 1500
SAN FRANCISCO, CA 94105

**EARTH TECH**
2101 WEBSTER STREET, SUITE 1000
OAKLAND, CA. 94612-3060

*To get to the Caltrans web site, go to: http://www.dot.ca.gov*

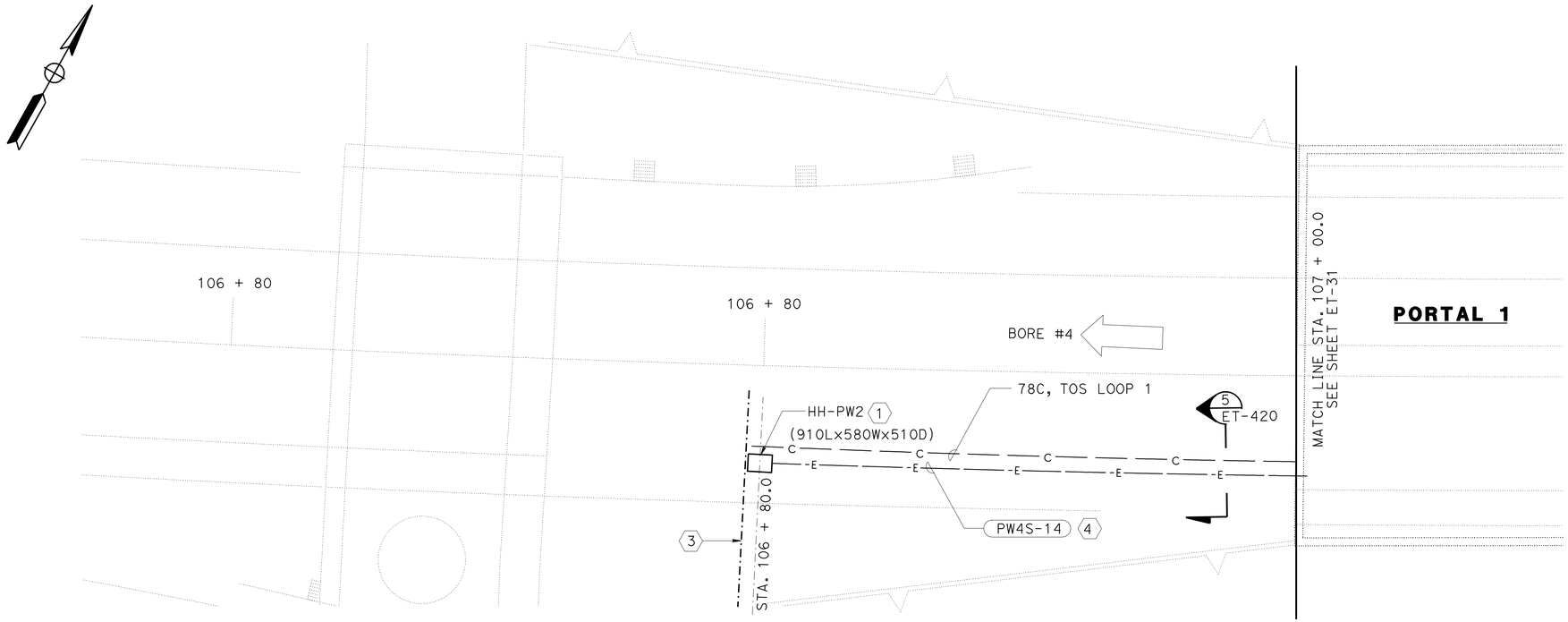


## SHEET NOTES:

1. INTERFACE HANDHOLE (HH-PW2) FOR POWER SUPPLY TO CALTRANS OUTDOOR LIGHTING AND SERVICE PANELS. SEE LIGHTING AND SIGN ILLUMINATION DRAWING E-5.
2. INTERFACE HANDHOLE (HH-PE2) FOR POWER SUPPLY TO CALTRANS OUTDOOR LIGHTING. SEE SIGN AND ILLUMINATION DRAWING E-10
3. INTERFACE POINT TO BORE 4 ROADWAY ELECTRICAL SYSTEM. SEE SHEET E-4 AND E-5.
4. SEE SHEETS ET-181,ET-182, ET-183, ET-184 AND ET-185 FOR CONDUIT SCHEDULES

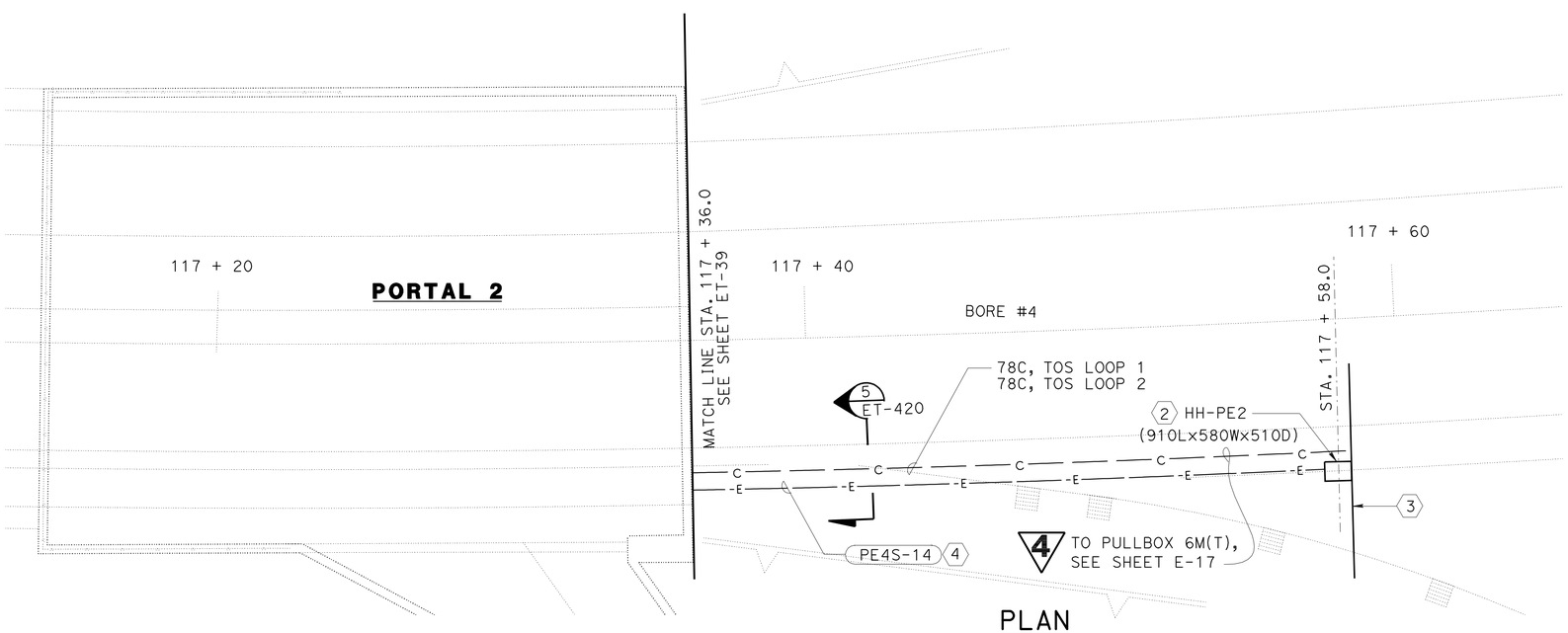


PLAN
1:100

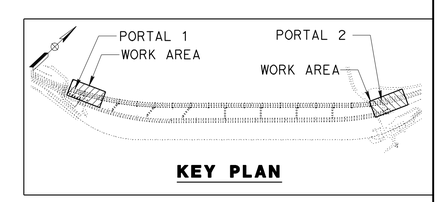


KEY PLAN

# TUNNEL UNDERGROUND DUCTS
## PLAN NO. 10
SCALE 1:100

4 **REVISED PER ADDENDUM No. 4 DATED SEPTEMBER 3, 2009**

THE CONTRACTOR SHALL VERIFY ALL CONTROLLING FIELD DIMENSIONS BEFORE ORDERING OR FABRICATING ANY MATERIAL

ALL DIMENSIONS ARE IN MILLIMETERS UNLESS OTHERWISE SHOWN

**ET-40**

| DATE | REVISED BY | DATE | REVISED BY |
|---|---|---|---|
| 01/08 | R. ALFONSO/ L. TFURUNG | | |

| CALCULATED/ DESIGNED BY | R. ALFONSO/ L. TFURUNG |
|---|---|
| CHECKED BY | D. PAUL/ R. BELARDO |

CONSULTANT FUNCTIONAL SUPERVISOR: NADER SHAHCHERAGHI

STATE OF CALIFORNIA - DEPARTMENT OF TRANSPORTATION
Caltrans

RELATIVE BORDER SCALE IS IN MILLIMETERS 0 20 40 60 80

USERNAME => trmikesl
DGN FILE => 429491et040.dgn

EA 294911

LAST REVISION 00-00-00
DATE PLOTTED => 01-SEP-2009
TIME PLOTTED => 11:01

429491et040.dgn

| DIST | COUNTY | ROUTE | KILOMETER POST TOTAL PROJECT | SHEET No. | TOTAL SHEETS |
|---|---|---|---|---|---|
| 04 | Ala,CC | 24 | 8.2/10.0, 0.0/2.7 | 1129 | 1435 |

Dev Paul 07-01-08
REGISTERED ELECTRICAL ENGINEER

1-5-09
PLANS APPROVAL DATE

REGISTERED PROFESSIONAL ENGINEER DEV PAUL No. E8856 Exp. 03-31-10 ELECT STATE OF CALIFORNIA

*The State of California or its officers or agents shall not be responsible for the accuracy or completeness of electronic copies of this plan sheet.*

**PARSONS**
50 FREMONT STREET, SUITE 1500
SAN FRANCISCO, CA 94105

**EARTH TECH**
2101 WEBSTER STREET, SUITE 1000
OAKLAND, CA. 94612-3060

*To get to the Caltrans web site, go to: http://www.dot.ca.gov*

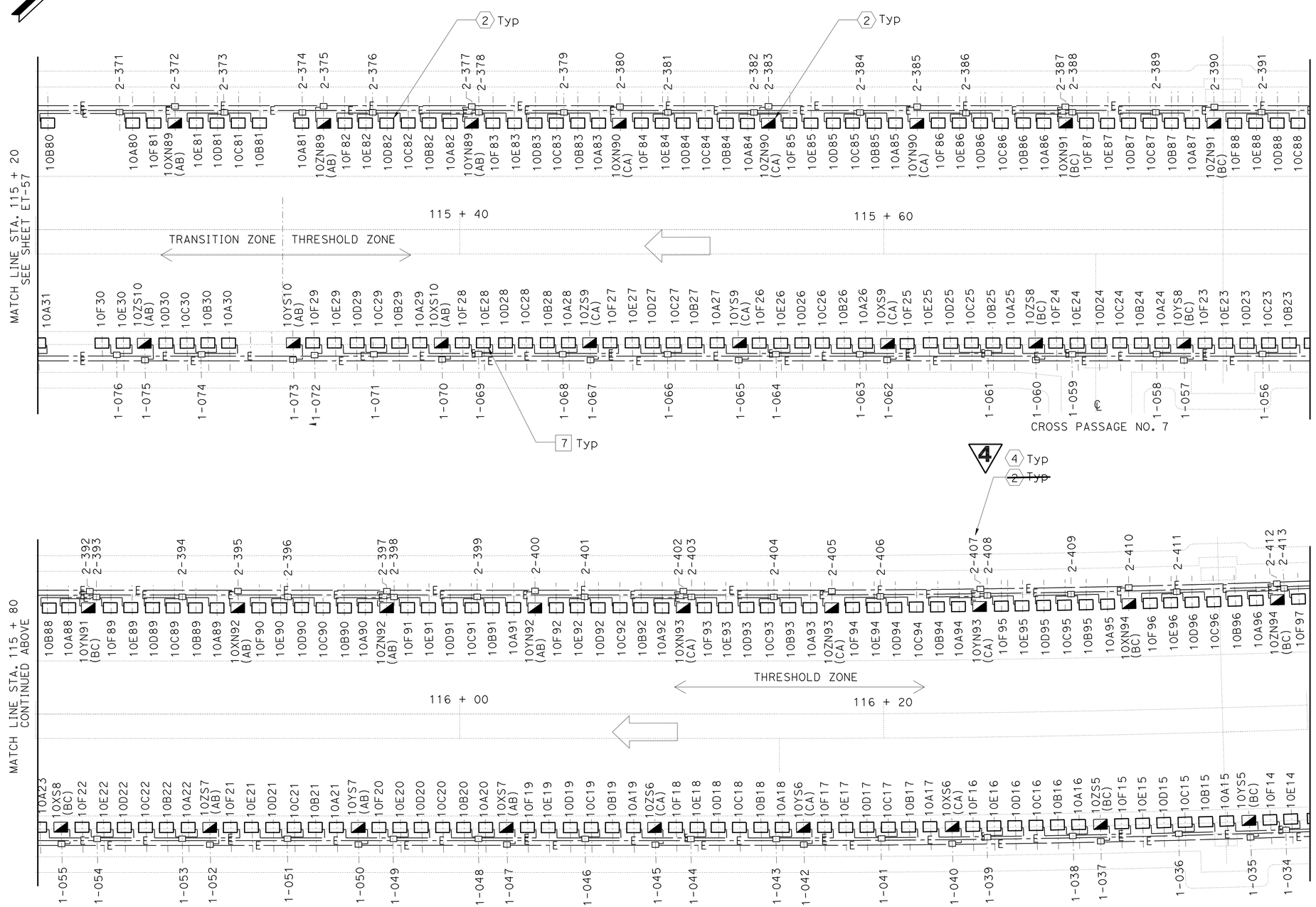


## SHEET NOTES:

1. SEE SHEET ET-116 FOR CONDUIT SCHEDULE.
2. FOR LIGHTING FIXTURE TYPE REFER TO SHEET ET-160.
3. FOR LIGHTING SCHEMATIC DIAGRAMS SEE SHEETS ET-122 AND ET-123.
4. REFER TO SHEET ET-169 AND ET-170 FOR TUNNEL LIGHTING J-BOX PARAMETERS.

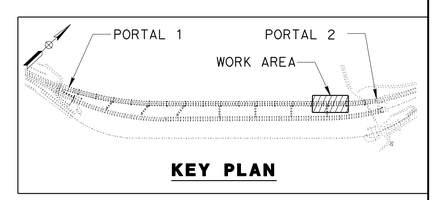


PLAN
1:100

4 REVISED PER ADDENDUM No. 4 DATED SEPTEMBER 3, 2009

THE CONTRACTOR SHALL VERIFY ALL CONTROLLING FIELD DIMENSIONS BEFORE ORDERING OR FABRICATING ANY MATERIAL

ALL DIMENSIONS ARE IN MILLIMETERS UNLESS OTHERWISE SHOWN

# TUNNEL LIGHTING
## PLAN NO. 8
SCALE 1:100

**ET-58**

| | DATE | REVISED BY | DATE REVISED |
|---|---|---|---|
| CALCULATED/DESIGNED BY | 01/08 | R. ALFONSO/ L. TFURUNG | |
| CHECKED BY | | D. PAUL/ R. BELARDO | |

CONSULTANT FUNCTIONAL SUPERVISOR
NADER SHAHCHERAGHI

STATE OF CALIFORNIA - DEPARTMENT OF TRANSPORTATION
Caltrans

429491et058.add

RELATIVE BORDER SCALE IS IN MILLIMETERS 0 20 40 60 80

USERNAME => trmikesl
DGN FILE => 429491et058.add

LAST REVISION 00-00-00
DATE PLOTTED => 01-SEP-2009
TIME PLOTTED => 11:02

EA 294911

| DIST | COUNTY | ROUTE | KILOMETER POST TOTAL PROJECT | SHEET No. | TOTAL SHEETS |
|---|---|---|---|---|---|
| 04 | Ala,CC | 24 | 8.2/10.0, 0.0/2.7 | 1157 | 1435 |

Dev Paul 07-01-08
REGISTERED ELECTRICAL ENGINEER

1-5-09
PLANS APPROVAL DATE

REGISTERED PROFESSIONAL ENGINEER DEV PAUL No. E8856 Exp. 03-31-10 ELECT STATE OF CALIFORNIA

*The State of California or its officers or agents shall not be responsible for the accuracy or completeness of electronic copies of this plan sheet.*

**PARSONS**
50 FREMONT STREET, SUITE 1500
SAN FRANCISCO, CA 94105

**EARTH TECH**
2101 WEBSTER STREET, SUITE 1000
OAKLAND, CA. 94612-3060

*To get to the Caltrans web site, go to: http://www.dot.ca.gov*

Caltrans Metric

4

## NOTES:

1. FOR SYMBOLS, DEVICE IDENTIFICATION AND ABBREVIATIONS, SEE SHEETS ET-3 & ET-4.
2. LOSS OF POWER ON LINE 1 WILL,(AFTER A PRESET TIME DELAY), AUTOMATICALLY TRIP 152-M1 AND THEN AUTOMATICALLY CLOSE BOTH TIE BREAKERS 152-T1 AT SWITCHGEAR S1 AND 152-T2 AT SWITCHGEAR S2. UPON RETURN OF NORMAL VOLTAGE ON LINE 1 TRIPPING OF TIE BREAKER 152-T1 AND 152-T2 WILL BE EITHER THRU SCADA OR BY LOCAL OPERATION FOLLOWED BY CLOSING OF MAIN BREAKER 152-M1 EITHER THRU SCADA OR BY LOCAL-MODE.
3. SAME LOGIC OF UNDER VOLTAGE CONDITION ON LINE 2 APPLIES FOR THE OPERATION OF MAIN BREAKER 152-M2 AND SAME FOR TIE BREAKERS 152-T1 AND 152-T2.
4. CABLE SIZE SHOWN ARE FOR EACH PHASE.

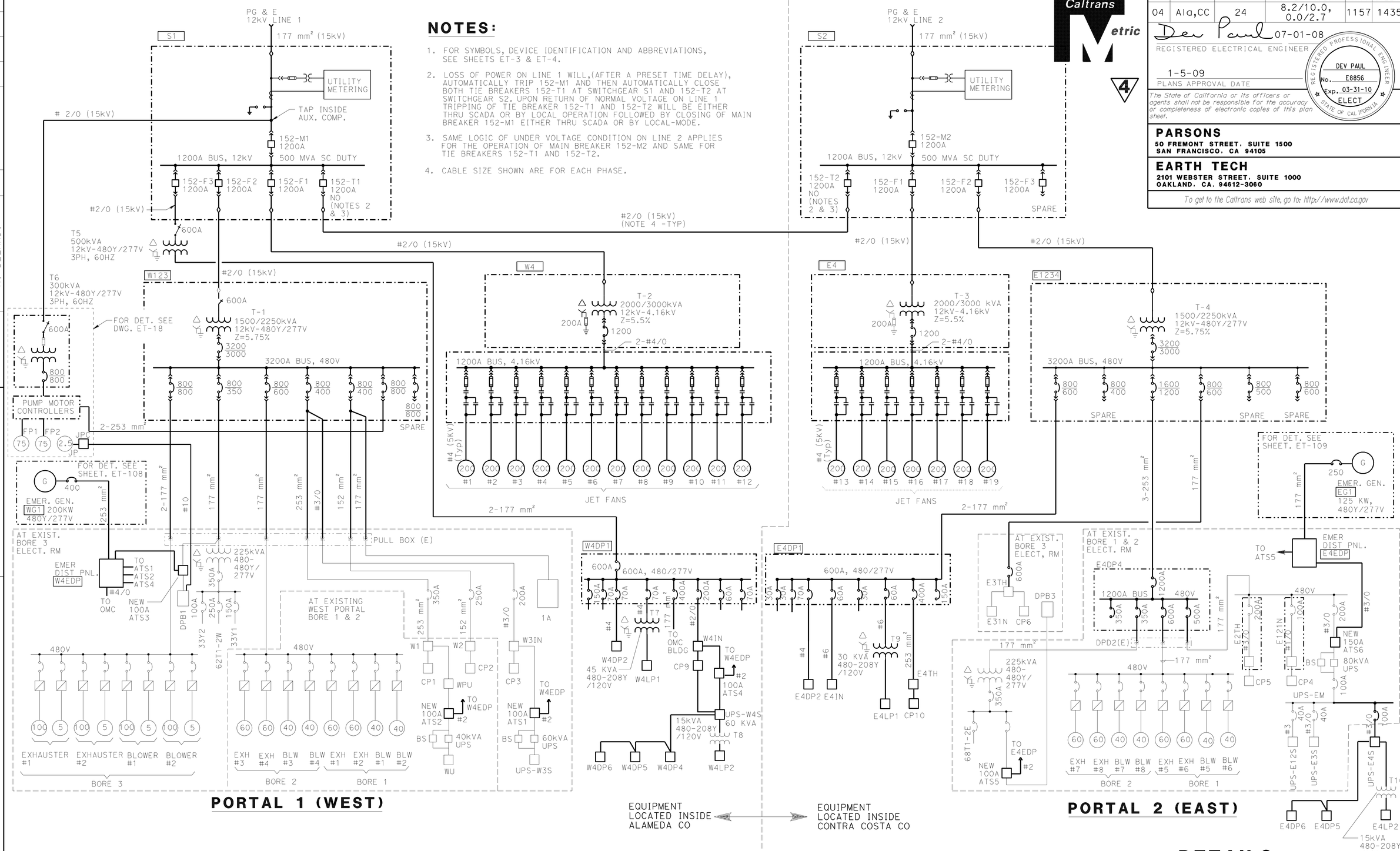


4 **REVISED PER ADDENDUM No. 4 DATED SEPTEMBER 3, 2009**

THE CONTRACTOR SHALL VERIFY ALL CONTROLLING FIELD DIMENSIONS BEFORE ORDERING OR FABRICATING ANY MATERIAL

ALL DIMENSIONS ARE IN MILLIMETERS UNLESS OTHERWISE SHOWN

# DETAILS
## MAIN SINGLE LINE DIAGRAM
NO SCALE

**ET-101**

| DATE | REVISED BY | DATE REVISED |
|---|---|---|
| 01/08 | R. ALFONSO/ L. TFURUNG | |

| CALCULATED/ DESIGNED BY | CHECKED BY |
|---|---|
| D. PAUL/ R. BELARDO | NADER SHAHCHERAGHI |

CONSULTANT FUNCTIONAL SUPERVISOR

STATE OF CALIFORNIA - DEPARTMENT OF TRANSPORTATION

Caltrans

G:\jojo\pse\294911_addendum\7-09\429491et101.dgn

LAST REVISION 00-00-00 DATE PLOTTED => 01-SEP-2009 TIME PLOTTED => 11:02

RELATIVE BORDER SCALE IS IN MILLIMETERS 0 20 40 60 80

USERNAME => trmikesl
DGN FILE => 429491et101.dgn

CU

EA 294911

| DIST | COUNTY | ROUTE | KILOMETER POST TOTAL PROJECT | SHEET No. | TOTAL SHEETS |
|---|---|---|---|---|---|
| 04 | Ala,CC | 24 | 8.2/10.0, 0.0/2.7 | 1158 | 1435 |

Dev Paul 07-01-08
REGISTERED ELECTRICAL ENGINEER

1-5-09
PLANS APPROVAL DATE

REGISTERED PROFESSIONAL ENGINEER DEV PAUL No. E8856 Exp. 03-31-10 ELECT STATE OF CALIFORNIA

*The State of California or its officers or agents shall not be responsible for the accuracy or completeness of electronic copies of this plan sheet.*

**PARSONS**
50 FREMONT STREET, SUITE 1500
SAN FRANCISCO, CA 94105

**EARTH TECH**
2101 WEBSTER STREET, SUITE 1000
OAKLAND, CA. 94612-3060

*To get to the Caltrans web site, go to: http://www.dot.ca.gov*

Caltrans Metric

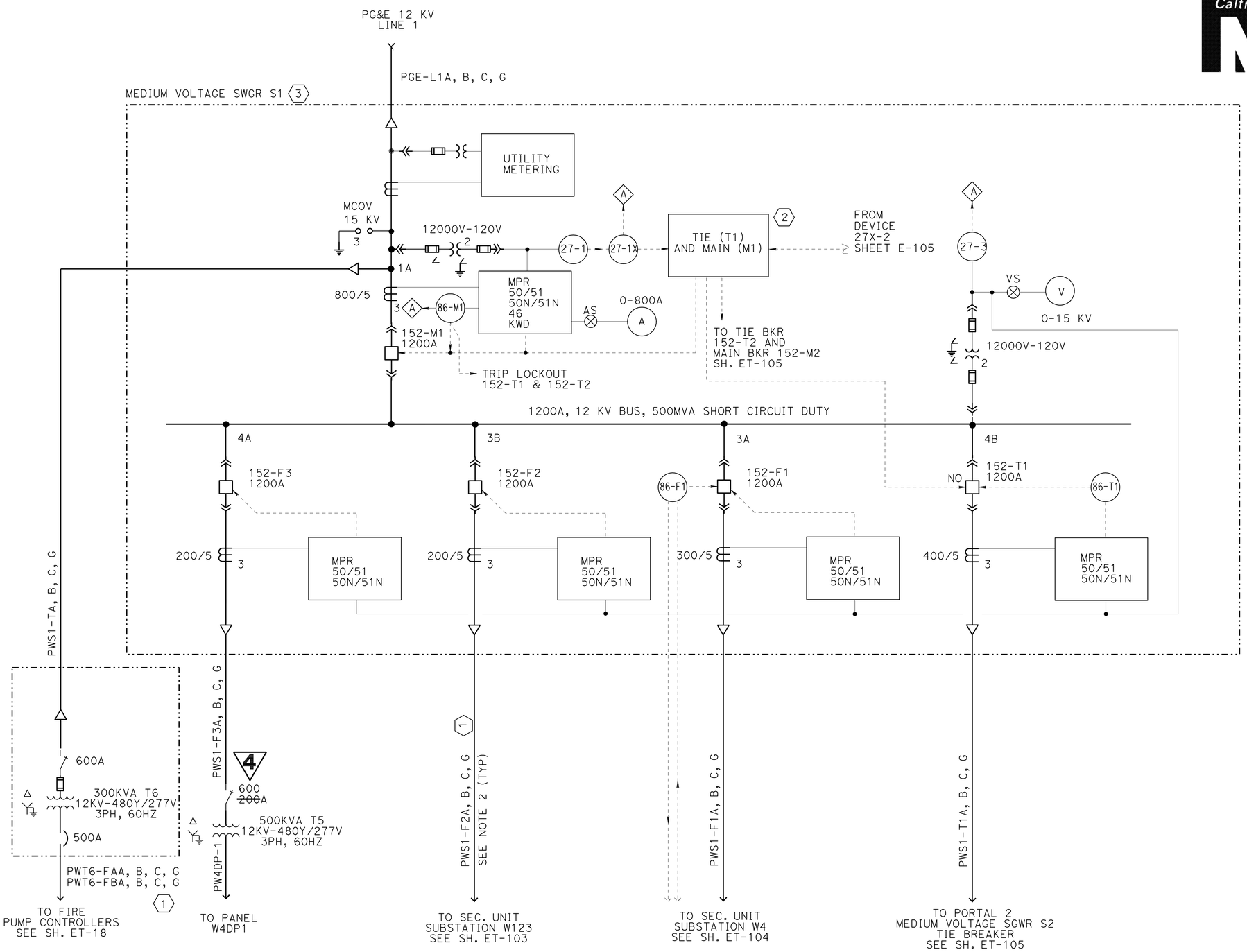


## SHEET NOTES:

1. FOR SYMBOLS, DEVICE IDENTIFICATION AND ABBREVIATIONS, SEE SHEETS ET-3 & ET-4.

(1) CABLE NUMBER, REFER TO CABLE SCHEDULE ET-171 THROUGH ET-179.

(2) SEE NOTES 2 AND 3. SHEET ET-101

(3) REFER TO SHEET ~~ET-131~~ ESS-9 FOR FRONT VIEW.

4

# 12KV SWITCHGEAR S1
## SUBSTATION BUILDING NO. 1
## METER & RELAY SINGLE LINE DIAGRAM

NO SCALE

**ET-102**

4 **REVISED PER ADDENDUM No. 4 DATED SEPTEMBER 3, 2009**

THE CONTRACTOR SHALL VERIFY ALL CONTROLLING FIELD DIMENSIONS BEFORE ORDERING OR FABRICATING ANY MATERIAL

ALL DIMENSIONS ARE IN MILLIMETERS UNLESS OTHERWISE SHOWN

| DATE | REVISED BY | DATE REVISED |
|---|---|---|
| 01/08 | R. ALFONSO/ L. TFURUNG | |

CALCULATED/ DESIGNED BY: D. PAUL/ R. BELARDO
CHECKED BY:

CONSULTANT FUNCTIONAL SUPERVISOR: NADER SHAHCHERAGHI

STATE OF CALIFORNIA - DEPARTMENT OF TRANSPORTATION
Caltrans

429491et102.dgn

LAST REVISION 00-00-00
DATE PLOTTED => 01-SEP-2009
TIME PLOTTED => 11:02

RELATIVE BORDER SCALE IS IN MILLIMETERS 0 20 40 60 80

USERNAME => trmikesl
DGN FILE => 429491et102.dgn

EA 294911

| DIST | COUNTY | ROUTE | KILOMETER POST TOTAL PROJECT | SHEET No. | TOTAL SHEETS |
|---|---|---|---|---|---|
| 04 | Ala,CC | 24 | 8.2/10.0, 0.0/2.7 | 1159 | 1435 |

Dev Paul 07-01-08
REGISTERED ELECTRICAL ENGINEER

1-5-09
PLANS APPROVAL DATE

REGISTERED PROFESSIONAL ENGINEER DEV PAUL No. E8856 Exp. 03-31-10 ELECT STATE OF CALIFORNIA

*The State of California or its officers or agents shall not be responsible for the accuracy or completeness of electronic copies of this plan sheet.*

**PARSONS**
50 FREMONT STREET, SUITE 1500
SAN FRANCISCO, CA 94105

**EARTH TECH**
2101 WEBSTER STREET, SUITE 1000
OAKLAND, CA. 94612-3060

*To get to the Caltrans web site, go to: http://www.dot.ca.gov*

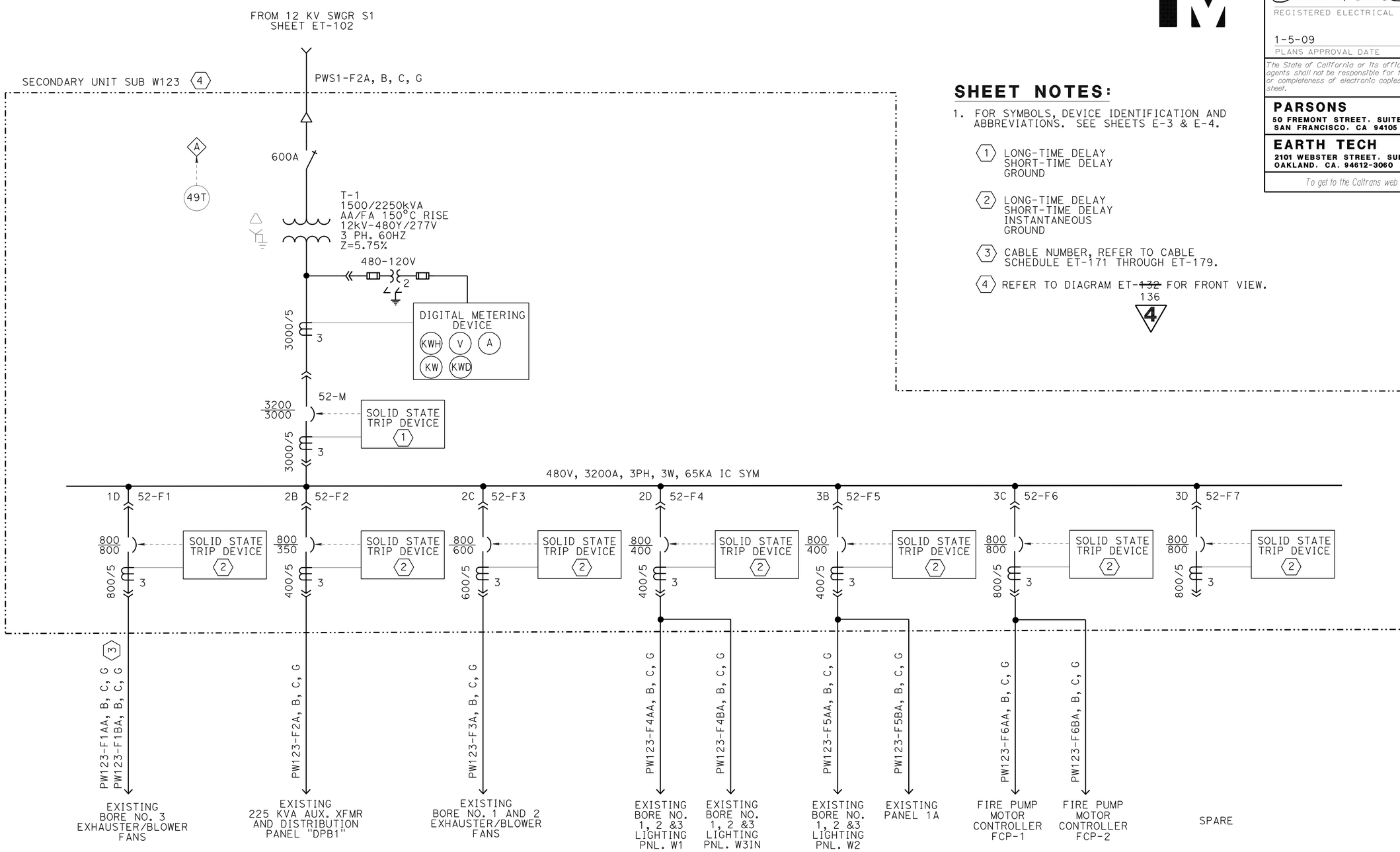


## SHEET NOTES:

1. FOR SYMBOLS, DEVICE IDENTIFICATION AND ABBREVIATIONS. SEE SHEETS E-3 & E-4.

(1) LONG-TIME DELAY
SHORT-TIME DELAY
GROUND

(2) LONG-TIME DELAY
SHORT-TIME DELAY
INSTANTANEOUS
GROUND

(3) CABLE NUMBER, REFER TO CABLE SCHEDULE ET-171 THROUGH ET-179.

(4) REFER TO DIAGRAM ET-~~132~~ 136 FOR FRONT VIEW.

4

# 1500/2250 KVA UNIT SUBSTATION
## SUBSTATION BUILDING NO. 1
## SECONDARY UNIT SUBSTATION W123
## METER & RELAY SINGLE LINE DIAGRAM

NO SCALE

4 **REVISED PER ADDENDUM No. 4 DATED SEPTEMBER 3, 2009**

THE CONTRACTOR SHALL VERIFY ALL CONTROLLING FIELD DIMENSIONS BEFORE ORDERING OR FABRICATING ANY MATERIAL

ALL DIMENSIONS ARE IN MILLIMETERS UNLESS OTHERWISE SHOWN

**ET-103**

| | | |
|---|---|---|
| CALCULATED/DESIGNED BY | R. ALFONSO/L. IFURUNG | DATE 01/08 REVISED BY |
| CHECKED BY | D. PAUL/R. BELARDO | DATE REVISED |

CONSULTANT FUNCTIONAL SUPERVISOR
NADER SHAHCHERAGHI

STATE OF CALIFORNIA - DEPARTMENT OF TRANSPORTATION
Caltrans

429491et103.add

LAST REVISION 00-00-00 | DATE PLOTTED => 01-SEP-2009 | TIME PLOTTED => 11:02

RELATIVE BORDER SCALE IS IN MILLIMETERS 0 20 40 60 80

USERNAME => trmikesl
DGN FILE => 429491et103.add

CU | EA 294911

| DIST | COUNTY | ROUTE | KILOMETER POST TOTAL PROJECT | SHEET No. | TOTAL SHEETS |
|---|---|---|---|---|---|
| 04 | Ala,CC | 24 | 8.2/10.0, 0.0/2.7 | 1160 | 1435 |

Dev Paul 07-01-08
REGISTERED ELECTRICAL ENGINEER

1-5-09
PLANS APPROVAL DATE

REGISTERED PROFESSIONAL ENGINEER DEV PAUL No. E8856 Exp. 03-31-10 ELECT STATE OF CALIFORNIA

*The State of California or its officers or agents shall not be responsible for the accuracy or completeness of electronic copies of this plan sheet.*

**PARSONS**
50 FREMONT STREET, SUITE 1500
SAN FRANCISCO, CA 94105

**EARTH TECH**
2101 WEBSTER STREET, SUITE 1000
OAKLAND, CA. 94612-3060

*To get to the Caltrans web site, go to: http://www.dot.ca.gov*

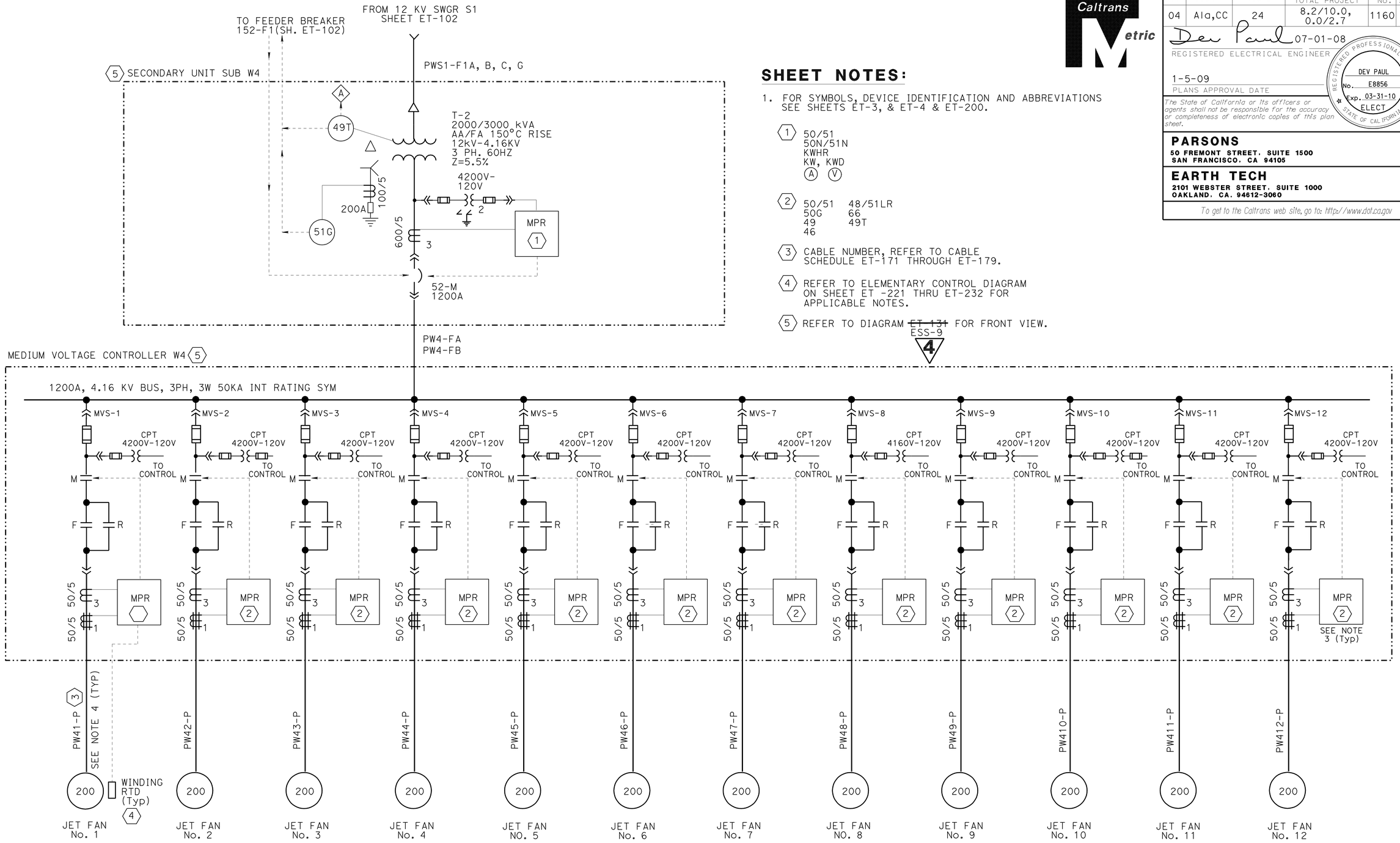


## SHEET NOTES:

1. FOR SYMBOLS, DEVICE IDENTIFICATION AND ABBREVIATIONS SEE SHEETS ET-3, & ET-4 & ET-200.

(1) 50/51
50N/51N
KWHR
KW, KWD
(A) (V)

(2) 50/51 48/51LR
50G 66
49 49T
46

(3) CABLE NUMBER, REFER TO CABLE SCHEDULE ET-171 THROUGH ET-179.

(4) REFER TO ELEMENTARY CONTROL DIAGRAM ON SHEET ET -221 THRU ET-232 FOR APPLICABLE NOTES.

(5) REFER TO DIAGRAM ~~ET 131~~ ESS-9 FOR FRONT VIEW.

4

# 2000/3000 KVA UNIT SUBSTATION
## SUBSTATION BUILDING NO. 1
## SECONDARY UNIT SUBSTATION W4
## METER & RELAY SINGLE LINE DIAGRAM

NO SCALE

4 **REVISED PER ADDENDUM No. 4 DATED SEPTEMBER 3, 2009**

THE CONTRACTOR SHALL VERIFY ALL CONTROLLING FIELD DIMENSIONS BEFORE ORDERING OR FABRICATING ANY MATERIAL

ALL DIMENSIONS ARE IN MILLIMETERS UNLESS OTHERWISE SHOWN

**ET-104**

| DATE | REVISED BY | DATE | REVISED BY |
|---|---|---|---|
| 01/08 | R. ALFONSO/ L. TFURUNG | | |

| CALCULATED/ DESIGNED BY | CHECKED BY |
|---|---|
| R. ALFONSO/ L. TFURUNG | D. PAUL/ R. BELARDO |

CONSULTANT FUNCTIONAL SUPERVISOR
NADER SHAHCHERAGHI

STATE OF CALIFORNIA - DEPARTMENT OF TRANSPORTATION
Caltrans

429491et104.dgn

RELATIVE BORDER SCALE IS IN MILLIMETERS 0 20 40 60 80

USERNAME => trmikesl
DGN FILE => 429491et104.dgn

CU

EA 294911

LAST REVISION 00-00-00
DATE PLOTTED => 01-SEP-2009
TIME PLOTTED => 11:03

| DIST | COUNTY | ROUTE | KILOMETER POST TOTAL PROJECT | SHEET No. | TOTAL SHEETS |
|---|---|---|---|---|---|
| 04 | Ala,CC | 24 | 8.2/10.0, 0.0/2.7 | 1161 | 1435 |

Dev Paul 07-01-08
REGISTERED ELECTRICAL ENGINEER

1-5-09
PLANS APPROVAL DATE

REGISTERED PROFESSIONAL ENGINEER DEV PAUL No. E8856 Exp. 03-31-10 ELECT STATE OF CALIFORNIA

*The State of California or its officers or agents shall not be responsible for the accuracy or completeness of electronic copies of this plan sheet.*

**PARSONS**
50 FREMONT STREET, SUITE 1500
SAN FRANCISCO, CA 94105

**EARTH TECH**
2101 WEBSTER STREET, SUITE 1000
OAKLAND, CA. 94612-3060

*To get to the Caltrans web site, go to: http://www.dot.ca.gov*

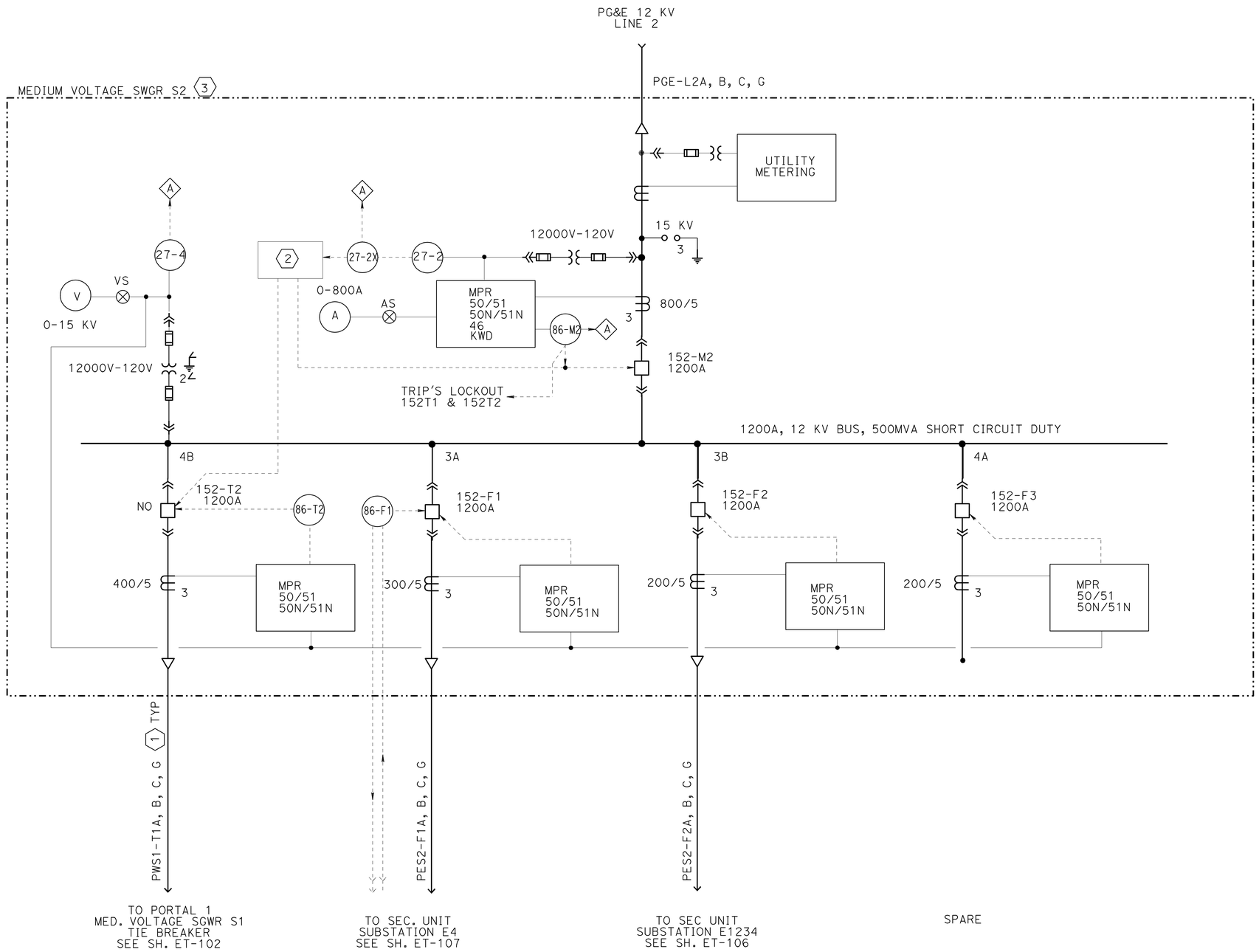


## SHEET NOTES:

1. FOR SYMBOLS, DEVICE IDENTIFICATION AND ABBREVIATIONS SEE SHEETS ET-3 & ET-4.

(1) CABLE NUMBER, REFER TO CABLE SCHEDULE ET-171 THROUGH ET-179.

(2) REMOTE CLOSE & TRIP OF T2 AND M2 TRANSFER SCHEME, SEE SHEET ET-102.

(3) REFER TO SHEET ~~ET-133~~ ESS-29 FOR FRONT VIEW.

4

# 12KV SWITCHGEAR S2
## SUBSTATION BUILDING NO. 2
## METER & RELAY SINGLE LINE DIAGRAM
NO SCALE

**ET-105**

4 **REVISED PER ADDENDUM No. 4 DATED SEPTEMBER 3, 2009**

THE CONTRACTOR SHALL VERIFY ALL CONTROLLING FIELD DIMENSIONS BEFORE ORDERING OR FABRICATING ANY MATERIAL

ALL DIMENSIONS ARE IN MILLIMETERS UNLESS OTHERWISE SHOWN

| DATE | REVISED BY | DATE | REVISED BY |
|---|---|---|---|
| 01/08 | | | |

CALCULATED/DESIGNED BY: R. ALFONSO/L. TFURUNG
CHECKED BY: D. PAUL/R. BELARDO

CONSULTANT FUNCTIONAL SUPERVISOR: NADER SHAHCHERAGHI

STATE OF CALIFORNIA - DEPARTMENT OF TRANSPORTATION
Caltrans

Metric

LAST REVISION 00-00-00 | DATE PLOTTED => 01-SEP-2009 | TIME PLOTTED => 11:03

RELATIVE BORDER SCALE IS IN MILLIMETERS 0 20 40 60 80

USERNAME => trmikesl
DGN FILE => 429491et105.add

CU | EA 294911

429491et105.add

| DIST | COUNTY | ROUTE | KILOMETER POST TOTAL PROJECT | SHEET No. | TOTAL SHEETS |
|---|---|---|---|---|---|
| 04 | Ala,CC | 24 | 8.2/10.0, 0.0/2.7 | 1162 | 1435 |

Dev Paul 07-01-08
REGISTERED ELECTRICAL ENGINEER

1-5-09
PLANS APPROVAL DATE

REGISTERED PROFESSIONAL ENGINEER DEV PAUL No. E8856 Exp. 03-31-10 ELECT STATE OF CALIFORNIA

*The State of California or its officers or agents shall not be responsible for the accuracy or completeness of electronic copies of this plan sheet.*

**PARSONS**
50 FREMONT STREET, SUITE 1500
SAN FRANCISCO, CA 94105

**EARTH TECH**
2101 WEBSTER STREET, SUITE 1000
OAKLAND, CA. 94612-3060

*To get to the Caltrans web site, go to: http://www.dot.ca.gov*

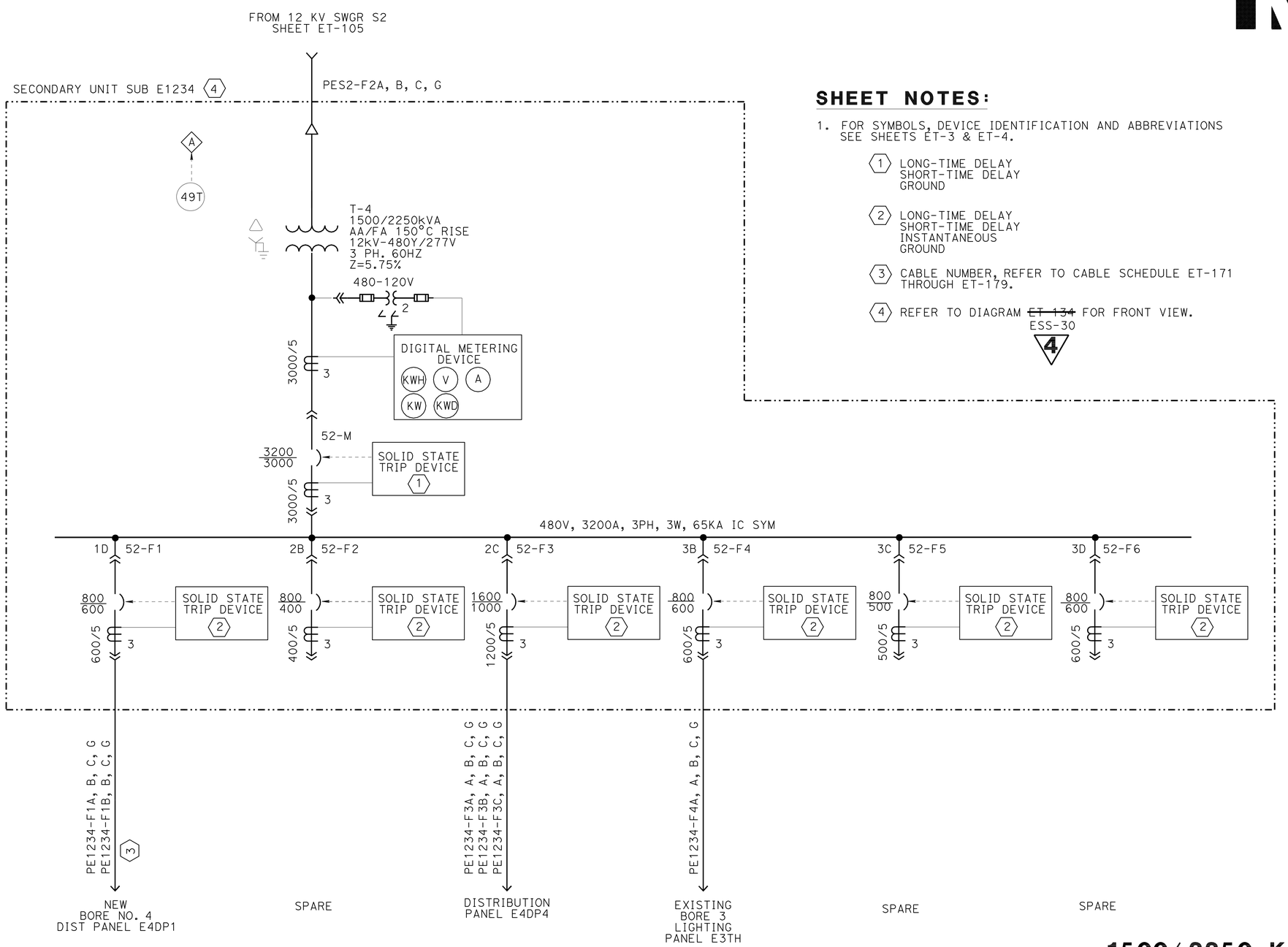


## SHEET NOTES:

1. FOR SYMBOLS, DEVICE IDENTIFICATION AND ABBREVIATIONS SEE SHEETS ET-3 & ET-4.

   (1) LONG-TIME DELAY
   SHORT-TIME DELAY
   GROUND

   (2) LONG-TIME DELAY
   SHORT-TIME DELAY
   INSTANTANEOUS
   GROUND

   (3) CABLE NUMBER, REFER TO CABLE SCHEDULE ET-171 THROUGH ET-179.

   (4) REFER TO DIAGRAM ~~ET-134~~ ESS-30 FOR FRONT VIEW.

4

# 1500/2250 KVA UNIT SUBSTATION
## SUBSTATION BUILDING NO. 2
## SECONDARY UNIT SUBSTATION E1234
## METER & RELAY SINGLE LINE DIAGRAM

NO SCALE

4 **REVISED PER ADDENDUM No. 4 DATED SEPTEMBER 3, 2009**

THE CONTRACTOR SHALL VERIFY ALL CONTROLLING FIELD DIMENSIONS BEFORE ORDERING OR FABRICATING ANY MATERIAL

ALL DIMENSIONS ARE IN MILLIMETERS UNLESS OTHERWISE SHOWN

**ET-106**

| | DATE | REVISED BY |
|---|---|---|
| | 01/08 | DATE REVISED |

| CALCULATED/ DESIGNED BY | R. ALFONSO/ L. IFURUNG |
|---|---|
| CHECKED BY | D. PAUL/ R. BELARDO |

CONSULTANT FUNCTIONAL SUPERVISOR
NADER SHAHCHERAGHI

STATE OF CALIFORNIA - DEPARTMENT OF TRANSPORTATION
Caltrans

429491et106.add

RELATIVE BORDER SCALE IS IN MILLIMETERS 0 20 40 60 80

USERNAME => trmikesl
DGN FILE => 429491et106.add

CU

EA 294911

LAST REVISION 00-00-00
DATE PLOTTED => 01-SEP-2009
TIME PLOTTED => 11:03

| DIST | COUNTY | ROUTE | KILOMETER POST TOTAL PROJECT | SHEET No. | TOTAL SHEETS |
|---|---|---|---|---|---|
| 04 | Ala,CC | 24 | 8.2/10.0, 0.0/2.7 | 1163 | 1435 |

Dev Paul 07-01-08
REGISTERED ELECTRICAL ENGINEER

1-5-09
PLANS APPROVAL DATE

REGISTERED PROFESSIONAL ENGINEER — DEV PAUL No. E8856 Exp. 03-31-10 ELECT — STATE OF CALIFORNIA

*The State of California or its officers or agents shall not be responsible for the accuracy or completeness of electronic copies of this plan sheet.*

**PARSONS**
50 FREMONT STREET, SUITE 1500
SAN FRANCISCO, CA 94105

**EARTH TECH**
2101 WEBSTER STREET, SUITE 1000
OAKLAND, CA. 94612-3060

*To get to the Caltrans web site, go to: http://www.dot.ca.gov*

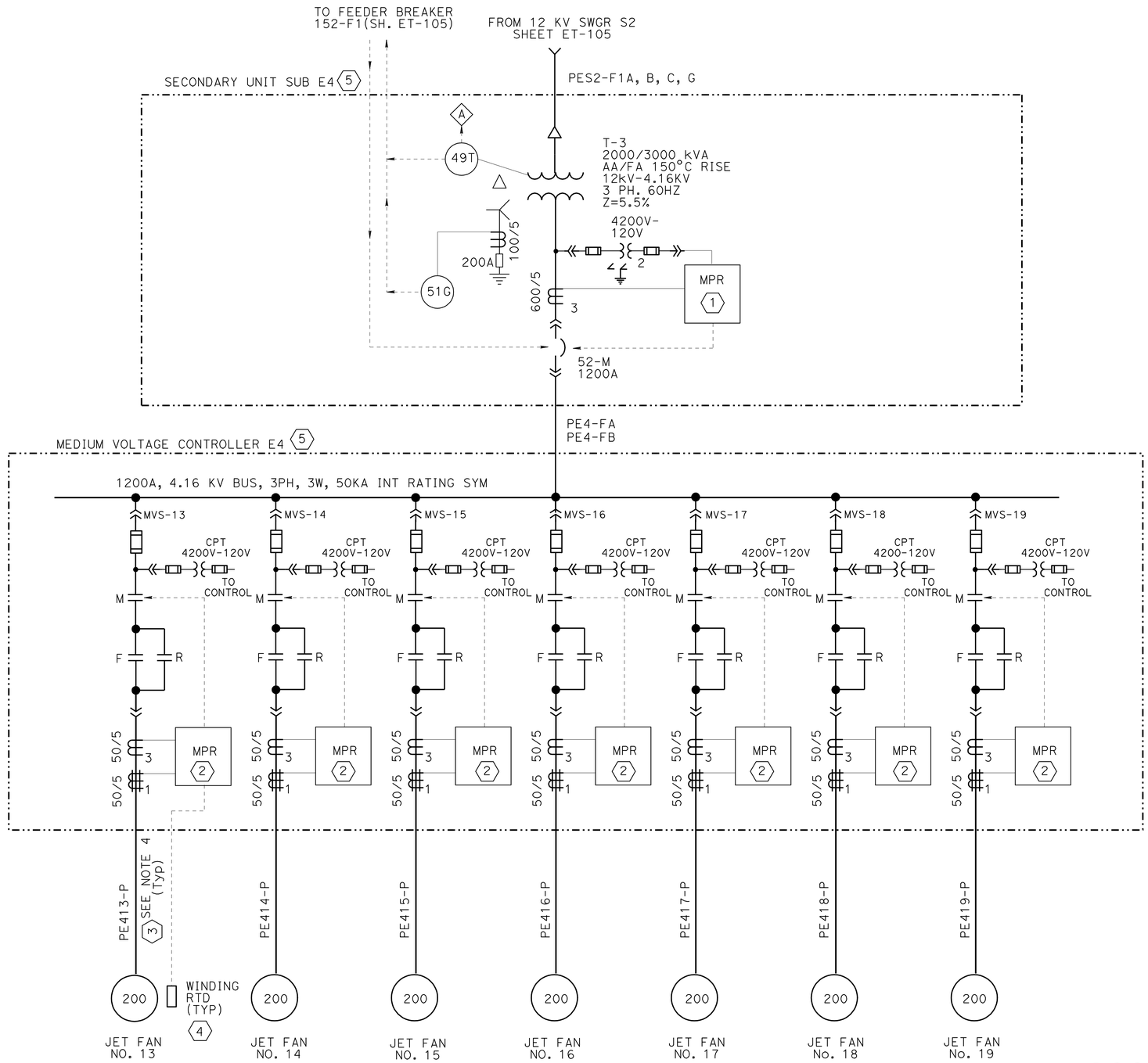


## SHEET NOTES:

1. FOR SYMBOLS, DEVICE IDENTIFICATION AND ABBREVIATIONS SEE SHEETS ET-3, ET-4 & ET-200.

(1) 50/51
50N/51N
KWHR
KW, KWD
(A) (V)

(2) 50/51 48/51LR 38
50G 66
49 49T
46

(3) CABLE NUMBER, REFER TO CABLE SCHEDULE ET-171 THROUGH ET-179.

(4) REFER TO ELEMENTARY CONTROL DIAGRAM ON SHEET ET-233 THRU ET-239 FOR APPLICABLE NOTES.

(5) REFER TO DIAGRAM ~~ET-133~~ ESS-29 FOR FRONT VIEW.

4

# 2000/3000 KVA UNIT SUBSTATION
## SUBSTATION BUILDING NO. 2
## SECONDARY UNIT SUBSTATION E4
## METER & SINGLE LINE DIAGRAM

NO SCALE

**ET-107**

4 **REVISED PER ADDENDUM No. 4 DATED SEPTEMBER 3, 2009**

THE CONTRACTOR SHALL VERIFY ALL CONTROLLING FIELD DIMENSIONS BEFORE ORDERING OR FABRICATING ANY MATERIAL

ALL DIMENSIONS ARE IN MILLIMETERS UNLESS OTHERWISE SHOWN

| DATE | REVISED BY | DATE REVISED |
|---|---|---|
| 01/08 | | |

CALCULATED/DESIGNED BY: R. ALFONSO/L. TFURUNG
CHECKED BY: D. PAUL/R. BELARDO

CONSULTANT FUNCTIONAL SUPERVISOR: NADER SHAHCHERAGHI

STATE OF CALIFORNIA - DEPARTMENT OF TRANSPORTATION
Caltrans

LAST REVISION 00-00-00
DATE PLOTTED => 01-SEP-2009
TIME PLOTTED => 11:03

| DIST | COUNTY | ROUTE | KILOMETER POST TOTAL PROJECT | SHEET No. | TOTAL SHEETS |
|---|---|---|---|---|---|
| 04 | Ala,CC | 24 | 8.2/10.0, 0.0/2.7 | 1164 | 1435 |

Dev Paul 07-01-08
REGISTERED ELECTRICAL ENGINEER

1-5-09
PLANS APPROVAL DATE

REGISTERED PROFESSIONAL ENGINEER DEV PAUL No. E8856 Exp. 03-31-10 ELECT STATE OF CALIFORNIA

*The State of California or its officers or agents shall not be responsible for the accuracy or completeness of electronic copies of this plan*

**PARSONS**
50 FREMONT STREET, SUITE 1500
SAN FRANCISCO, CA 94105

**EARTH TECH**
2101 WEBSTER STREET, SUITE 1000
OAKLAND, CA. 94612-3060

*To get to the Caltrans web site, go to: http://www.dot.ca.gov*

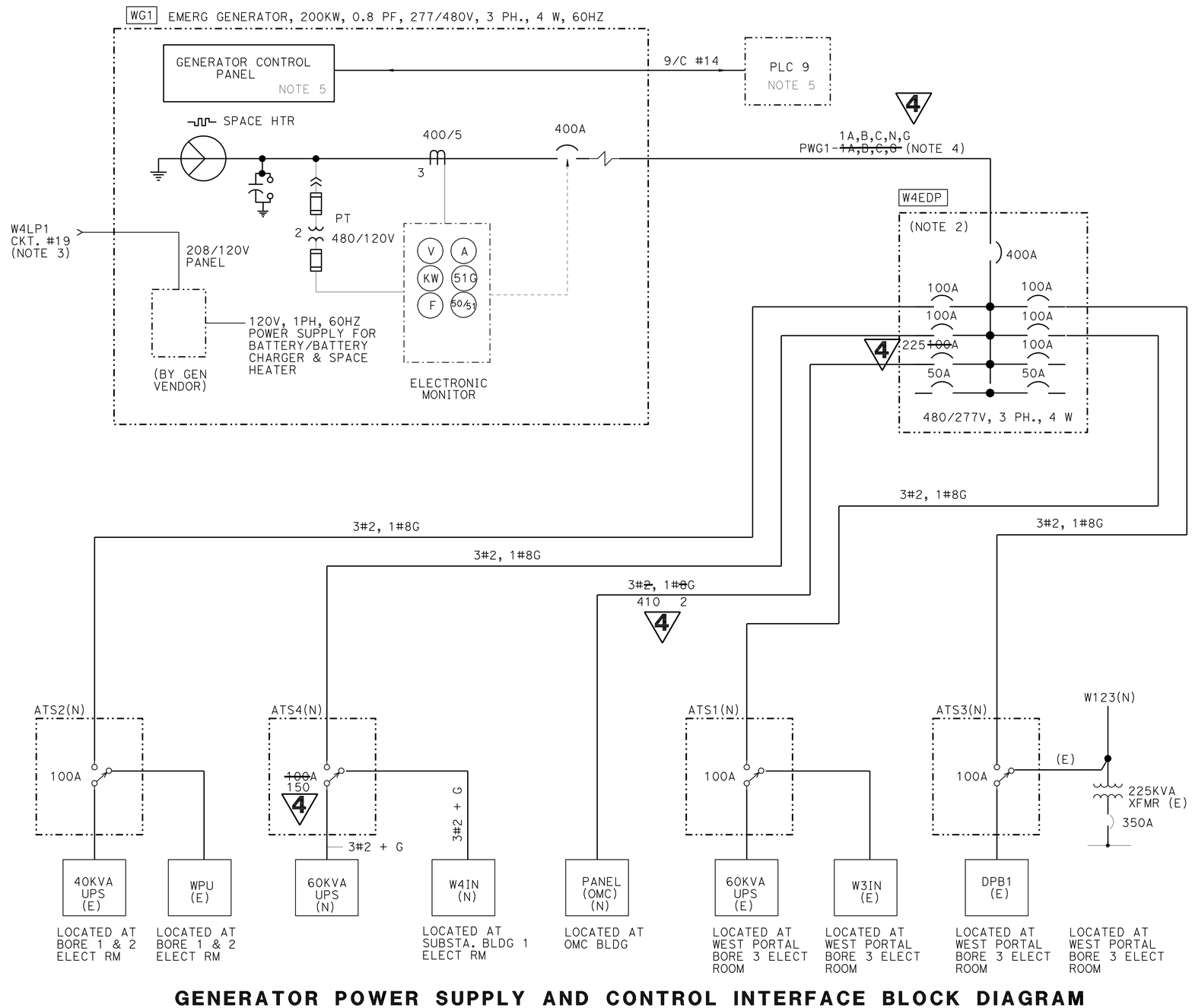


## GENERATOR POWER SUPPLY AND CONTROL INTERFACE BLOCK DIAGRAM

## SHEET NOTES:

1. FOR SYMBOLS, DEVICE IDENTIFICATION AND ABBREVIATIONS, SEE SHEETS ET-4.
2. FOR PANEL SCHEDULE SEE SHEET ET-193.
3. FOR PANEL SCHEDULE SEE SHEET ET-192.
4. CABLE NUMBER, REFER TO CABLE SCHEDULE ET-171 THROUGH ET-179
5. GENERATOR START COMMAND INCLUDES SWITCHGEAR "S1" U/V RELAY "27-1X" SIGNAL VIA PLC OR START COMMAND FROM OMC VIA PLC. IN ADDITION U/V RELAY SIGNAL AND GEN RUN SIGNAL ARE PROVIDED TO OMC VIA PLC.

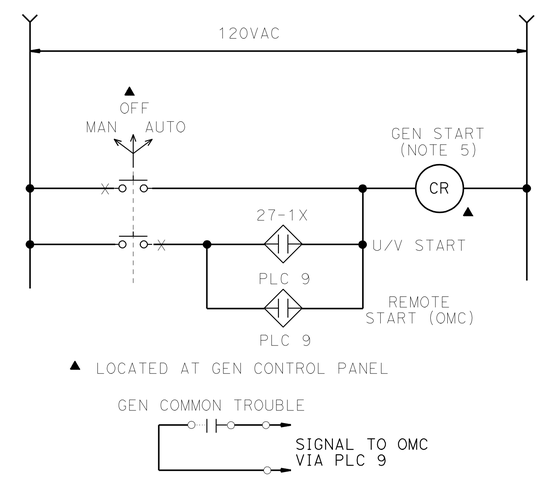


## GEN START SCHEMATIC

4 **REVISED PER ADDENDUM No. 4 DATED SEPTEMBER 3, 2009**

THE CONTRACTOR SHALL VERIFY ALL CONTROLLING FIELD DIMENSIONS BEFORE ORDERING OR FABRICATING ANY MATERIAL

ALL DIMENSIONS ARE IN MILLIMETERS UNLESS OTHERWISE SHOWN

# DETAILS
## PORTAL 1
## EMERGENCY GENERATOR WG1
NO SCALE

**ET-108**

| DATE | REVISED BY | DATE REVISED |
|---|---|---|
| 01/08 | R. ALFONSO/ L. TFURUNG | D. PAUL/ R. BELARDO |

CALCULATED/ DESIGNED BY — CHECKED BY

CONSULTANT FUNCTIONAL SUPERVISOR — NADER SHAHCHERAGHI

STATE OF CALIFORNIA - DEPARTMENT OF TRANSPORTATION

Caltrans

429491et108.add

LAST REVISION 00-00-00 — DATE PLOTTED => 01-SEP-2009 — TIME PLOTTED => 11:04

RELATIVE BORDER SCALE IS IN MILLIMETERS 0 20 40 60 80

USERNAME => trmikesl
DGN FILE => 429491et108.add

CU — EA 294911

| DIST | COUNTY | ROUTE | KILOMETER POST TOTAL PROJECT | SHEET No. | TOTAL SHEETS |
|---|---|---|---|---|---|
| 04 | Ala,CC | 24 | 8.2/10.0, 0.0/2.7 | 1165 | 1435 |

Dev Paul 07-01-08
REGISTERED ELECTRICAL ENGINEER

1-5-09
PLANS APPROVAL DATE

REGISTERED PROFESSIONAL ENGINEER DEV PAUL No. E8856 Exp. 03-31-10 ELECT STATE OF CALIFORNIA

*The State of California or its officers or agents shall not be responsible for the accuracy or completeness of electronic copies of this plan sheet.*

**PARSONS**
50 FREMONT STREET, SUITE 1500
SAN FRANCISCO, CA 94105

**EARTH TECH**
2101 WEBSTER STREET, SUITE 1000
OAKLAND, CA. 94612-3060

*To get to the Caltrans web site, go to: http://www.dot.ca.gov*

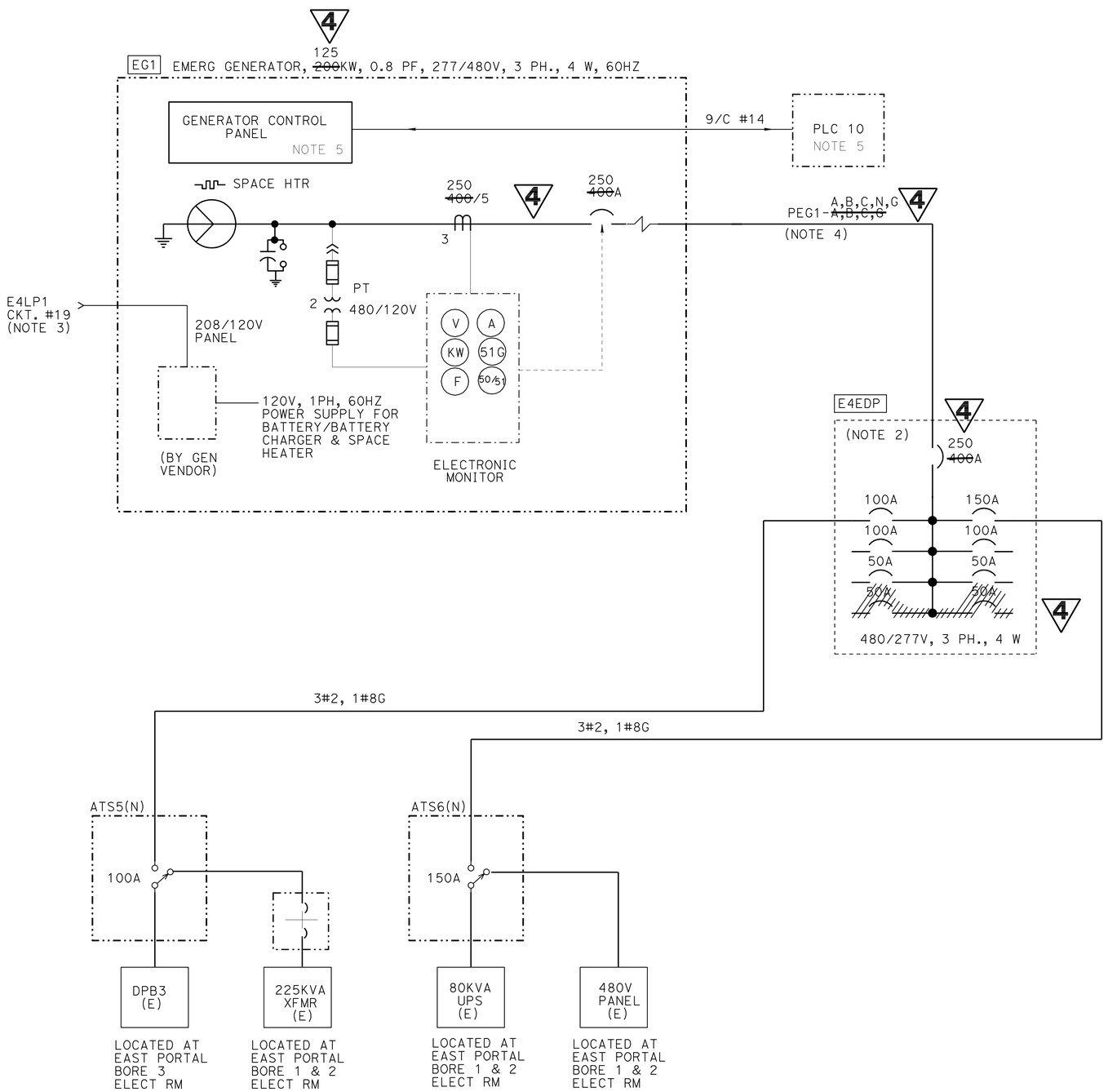


## GENERATOR POWER SUPPLY AND CONTROL INTERFACE BLOCK DIAGRAM

4 **REVISED PER ADDENDUM No. 4 DATED SEPTEMBER 3, 2009**

## SHEET NOTES:

1. FOR SYMBOLS, DEVICE IDENTIFICATION AND ABBREVIATIONS, SEE SHEET ET-4.
2. FOR PANEL SCHEDULE SEE SHEET ET-196
3. FOR PANEL SCHEDULE SEE SHEET ET-195.
4. CABLE NUMBER, REFER TO CABLE SCHEDULE SHEET ET-171 THROUGH ET-179.
5. GENERATOR START COMMAND INCLUDES SWITCHGEAR "S1" U/V RELAY "27-2X" SIGNAL VIA PLC 10 OR START COMMAND FROM OMC VIA PLC 10. IN ADDITION U/V RELAY SIGNAL AND GEN RUN SIGNAL ARE PROVIDED TO OMC VIA PLC 10.

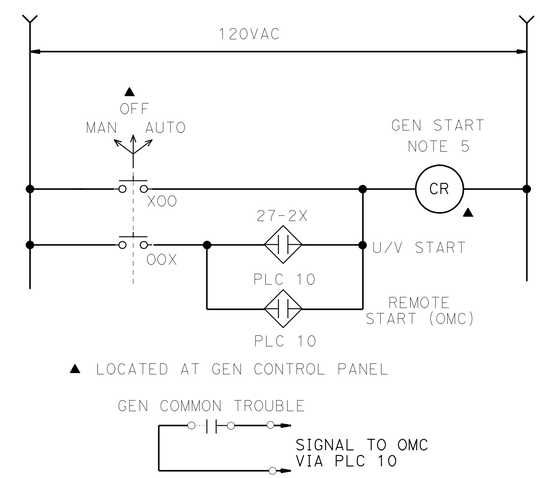


## GEN START SCHEMATIC

# DETAILS
## PORTAL 2
## EMERGENCY GENERATOR EG1
NO SCALE

**ET-109**

THE CONTRACTOR SHALL VERIFY ALL CONTROLLING FIELD DIMENSIONS BEFORE ORDERING OR FABRICATING ANY MATERIAL

ALL DIMENSIONS ARE IN MILLIMETERS UNLESS OTHERWISE SHOWN

| DATE | REVISED BY | DATE REVISED |
|---|---|---|
| 01/08 | R. ALFONSO/ L. TFURUNG | |

CALCULATED/ DESIGNED BY: D. PAUL/ R. BELARDO
CHECKED BY:

CONSULTANT FUNCTIONAL SUPERVISOR: NADER SHAHCHERAGHI

STATE OF CALIFORNIA - DEPARTMENT OF TRANSPORTATION
Caltrans

429491et109.dgn

RELATIVE BORDER SCALE IS IN MILLIMETERS 0 20 40 60 80

USERNAME => trmikesl
DGN FILE => 429491et109.dgn

EA 294911

LAST REVISION 00-00-00
DATE PLOTTED => 01-SEP-2009
TIME PLOTTED => 11:04

| DIST | COUNTY | ROUTE | KILOMETER POST TOTAL PROJECT | SHEET No. | TOTAL SHEETS |
|---|---|---|---|---|---|
| 04 | Ala,CC | 24 | 8.2/10.0, 0.0/2.7 | 1167 | 1435 |

Dev Paul 07-01-08
REGISTERED ELECTRICAL ENGINEER

1-5-09
PLANS APPROVAL DATE

REGISTERED PROFESSIONAL ENGINEER DEV PAUL No. E8856 Exp. 03-31-10 ELECT STATE OF CALIFORNIA

*The State of California or its officers or agents shall not be responsible for the accuracy or completeness of electronic copies of this plan sheet.*

**PARSONS**
50 FREMONT STREET, SUITE 1500
SAN FRANCISCO, CA 94105

**EARTH TECH**
2101 WEBSTER STREET, SUITE 1000
OAKLAND, CA. 94612-3060

*To get to the Caltrans web site, go to: http://www.dot.ca.gov*

Caltrans Metric

4

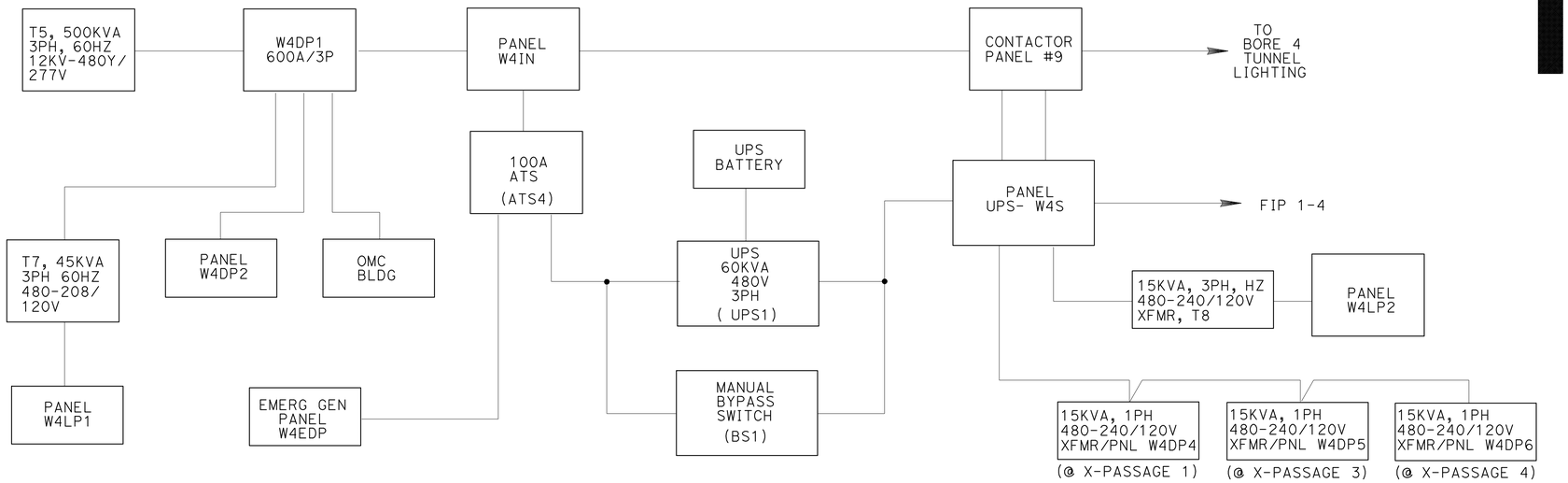


## PORTAL 1 POWER & LIGHTING BLOCK DIAGRAM

(ALL EQUIPMENT LOCATED INSIDE SUBSTATION BUILDING 1 UNLESS NOTED OTHERWISE)

## GENERAL NOTE:

1. ALL EQUIPMENT SHOWN ON THIS DRAWING ARE NEW.

## SHEET NOTES:

(1) FOR PANEL SCHEDULE SEE SHEET ET-191

(2) FOR PANEL SCHEDULE SEE SHEET ET-192

(3) MINI PACK LOAD CENTER FOR TOS. FOR PANEL SCHEDULES, SEE SHEETS ET-197 & ET-198

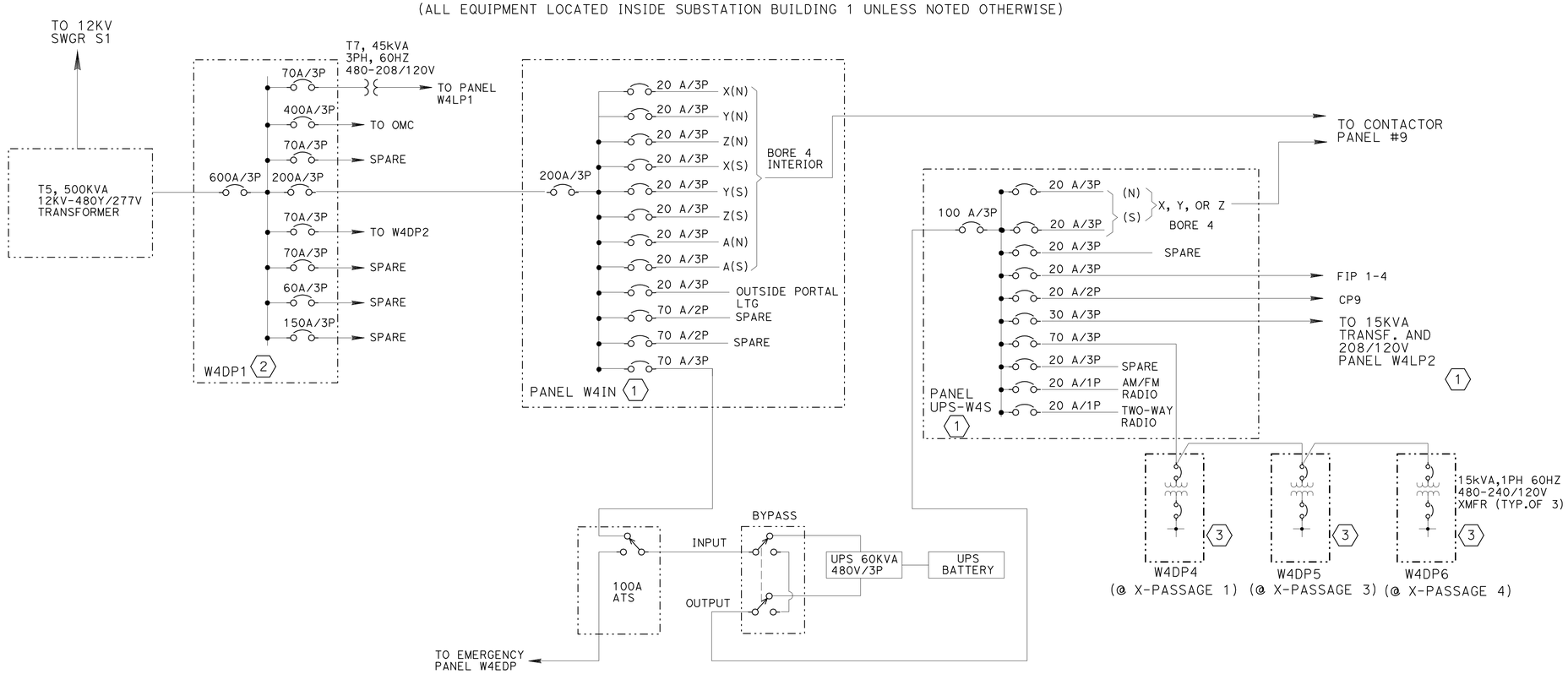


## PORTAL 1 POWER & LIGHTING SINGLE LINE DIAGRAM

4 **REVISED PER ADDENDUM No. 4 DATED SEPTEMBER 3, 2009**

THE CONTRACTOR SHALL VERIFY ALL CONTROLLING FIELD DIMENSIONS BEFORE ORDERING OR FABRICATING ANY MATERIAL

ALL DIMENSIONS ARE IN MILLIMETERS UNLESS OTHERWISE SHOWN

**DETAILS**
**PORTAL 1**
**LIGHTING BLOCK DIAGRAM**
NO SCALE

**ET-111**

| | | | |
|---|---|---|---|
| R. ALFONSO/ L. IFURUNG | DATE 01/08 | REVISED BY | DATE REVISED |
| D. PAUL/ R. BELARDO | | | |
| CALCULATED/ DESIGNED BY | | | |
| CHECKED BY | | | |

CONSULTANT FUNCTIONAL SUPERVISOR
NADER SHAHCHERAGHI

STATE OF CALIFORNIA - DEPARTMENT OF TRANSPORTATION
Caltrans

429491et111.dgn

LAST REVISION 00-00-00 | DATE PLOTTED => 01-SEP-2009 | TIME PLOTTED => 11:04

RELATIVE BORDER SCALE IS IN MILLIMETERS 0 20 40 60 80

USERNAME => trmikesl
DGN FILE => 429491et111.dgn

CU | EA 294911

| DIST | COUNTY | ROUTE | KILOMETER POST TOTAL PROJECT | SHEET No. | TOTAL SHEETS |
|---|---|---|---|---|---|
| 04 | Ala,CC | 24 | 8.2/10.0, 0.0/2.7 | 1168 | 1435 |

Dev Paul 07-01-08
REGISTERED ELECTRICAL ENGINEER

1-5-09
PLANS APPROVAL DATE

REGISTERED PROFESSIONAL ENGINEER DEV PAUL No. E8856 Exp. 03-31-10 ELECT STATE OF CALIFORNIA

*The State of California or its officers or agents shall not be responsible for the accuracy or completeness of electronic copies of this plan sheet.*

**PARSONS**
50 FREMONT STREET, SUITE 1500
SAN FRANCISCO, CA 94105

**EARTH TECH**
2101 WEBSTER STREET, SUITE 1000
OAKLAND, CA. 94612-3060

*To get to the Caltrans web site, go to: http://www.dot.ca.gov*

## SHEET NOTES:

1. SEE PROPOSED I/O POINT LIST SHEET ET-277. ALL WIRE SIZES ARE #14 THW.
2. SEE SHEET ET-303 FOR CONTACTOR PANEL ASSEMBLY.
3. TIE 9X, 9Y, 9Z CIRCUIT SOUTH TO 9XU, 9YU, 9ZU CIRCUIT SOUTH AND TIE 9X, 9Y, 9Z CIRCUIT NORTH TO 9XU, 9YU, 9ZU CIRCUIT NORTH. SEE THIS SHEET.
4. FOR PANEL SCHEDULES, SEE SHEET ET-191 ET-192, ET-193, ET-197 & ET-198.
5. EACH CIRCUIT AND OTHER FEEDER CIRCUITS SHALL CARRY EQUIPMENT GROUNDING CONDUCTOR SIZED PER NEC TABLE 250-122 OR AS INDICATED IN CABLE SCHEDULES.
6. TO LIGHTING PANEL
7. TO TUNNEL LIGHTS

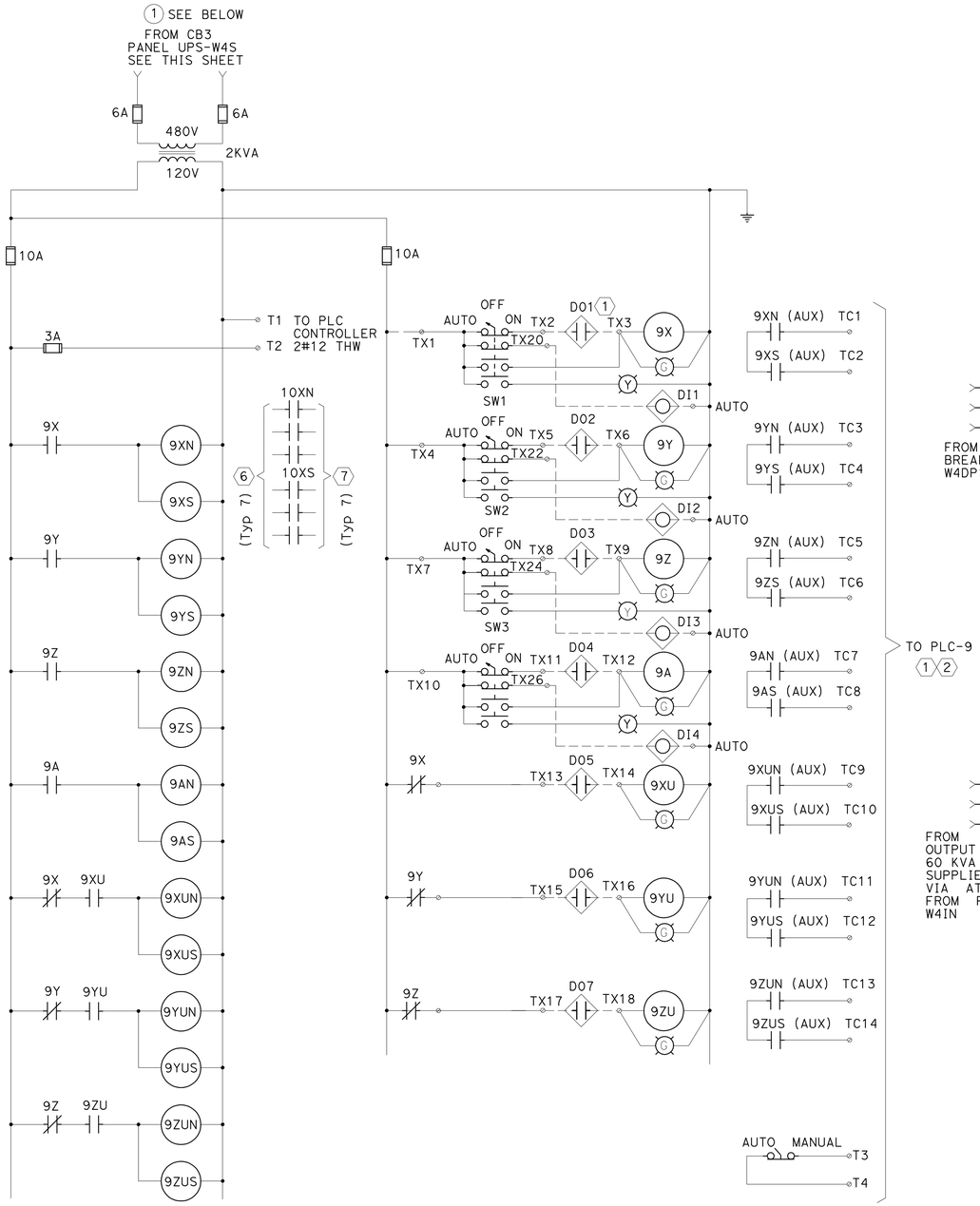


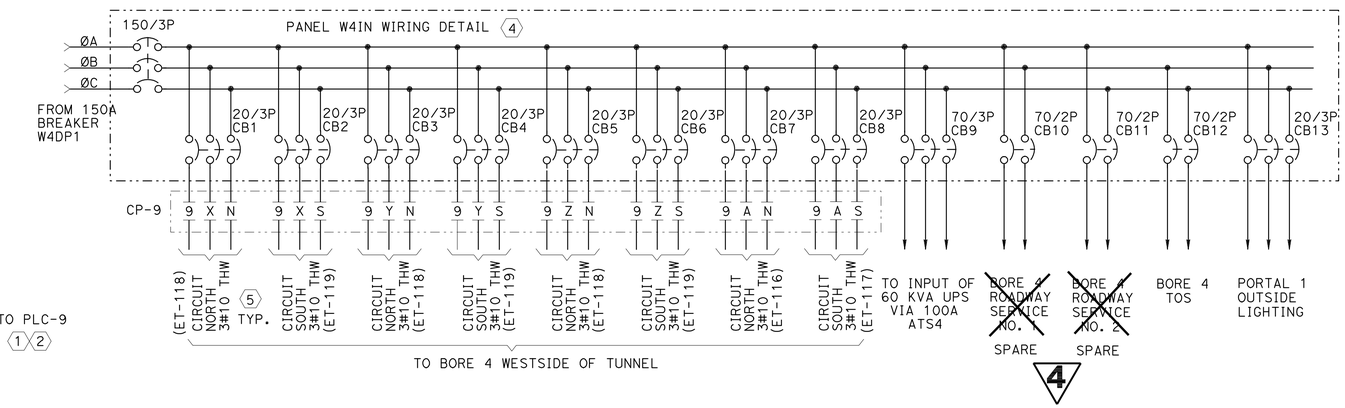


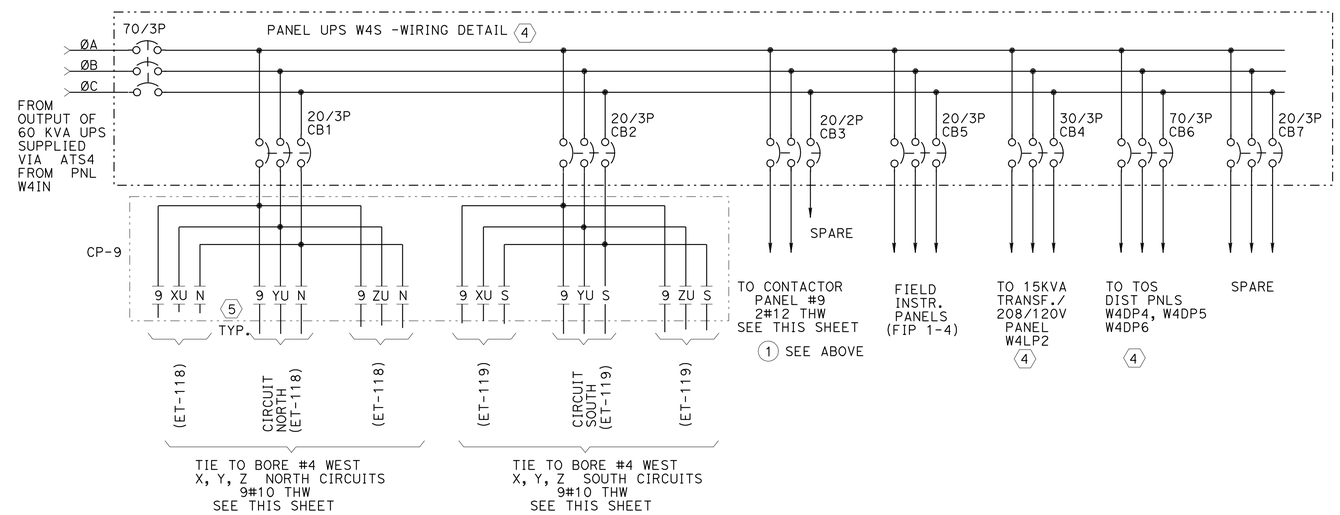


## CONTACTOR PANEL #9 - CONTROL DIAGRAM

(SEE SHEET ET-304 FOR WIRING SCHEMATIC & TERMINALS AND SEE SHEET ET-303 FOR CONTACTOR PANEL ASSEMKBLY)

**4 REVISED PER ADDENDUM No. 4 DATED SEPTEMBER 3, 2009**

THE CONTRACTOR SHALL VERIFY ALL CONTROLLING FIELD DIMENSIONS BEFORE ORDERING OR FABRICATING ANY MATERIAL

ALL DIMENSIONS ARE IN MILLIMETERS UNLESS OTHERWISE SHOWN

# DETAILS
## PORTAL 1 LIGHTING CONTROL DIAGRAM
NO SCALE

**ET-112**

| | | | |
|---|---|---|---|
| R. ALFONSO/ L. TFURUNG | DATE 01/08 | REVISED BY | DATE REVISED |
| CALCULATED/ DESIGNED BY | D. PAUL/ R. BELARDO | | |
| CHECKED BY | | | |

CONSULTANT FUNCTIONAL SUPERVISOR: NADER SHAHCHERAGHI

STATE OF CALIFORNIA - DEPARTMENT OF TRANSPORTATION
Caltrans

429491et112.add

LAST REVISION 00-00-00 | DATE PLOTTED => 01-SEP-2009 | TIME PLOTTED => 11:04

RELATIVE BORDER SCALE IS IN MILLIMETERS 0 20 40 60 80

USERNAME => trmikesl
DGN FILE => 429491et112.add

CU | EA 294911

| DIST | COUNTY | ROUTE | KILOMETER POST TOTAL PROJECT | SHEET No. | TOTAL SHEETS |
|---|---|---|---|---|---|
| 04 | CC,Ala | 24 | 8.2/10.0, 0.0/2.7 | 1169 | 1435 |

Dev Paul 07-01-08
REGISTERED ELECTRICAL ENGINEER

1-5-09
PLANS APPROVAL DATE

REGISTERED PROFESSIONAL ENGINEER DEV PAUL No. E8856 Exp. 03-31-10 ELECT STATE OF CALIFORNIA

*The State of California or its officers or agents shall not be responsible for the accuracy or completeness of electronic copies of this plan sheet.*

**PARSONS**
50 FREMONT STREET, SUITE 1500
SAN FRANCISCO, CA 94105

**EARTH TECH**
2101 WEBSTER STREET, SUITE 1000
OAKLAND, CA. 94612-3060

*To get to the Caltrans web site, go to: http://www.dot.ca.gov*

Caltrans Metric

4

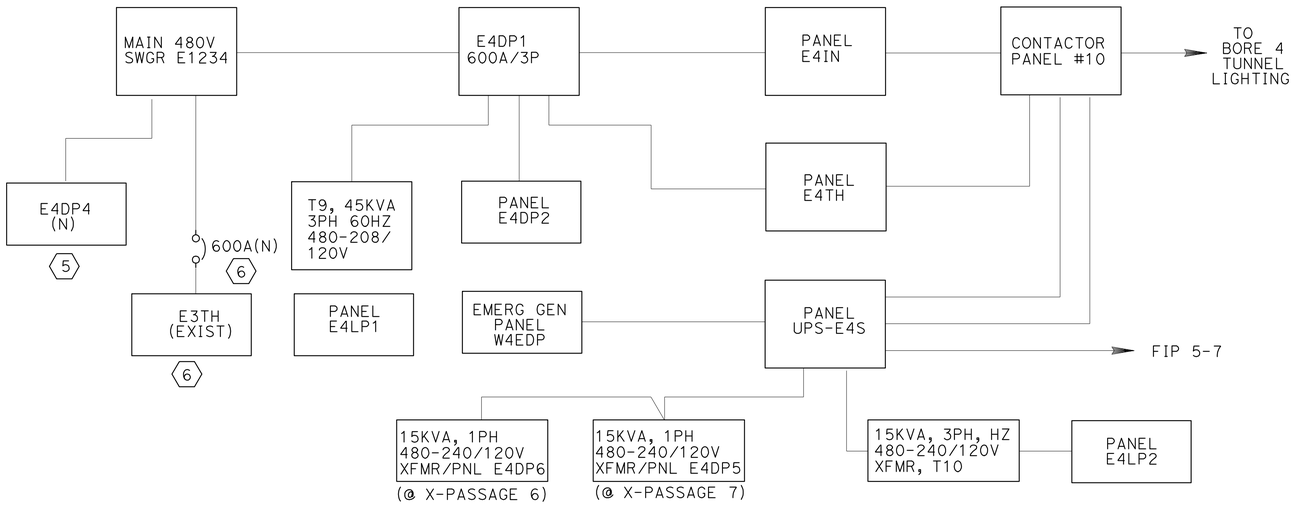


## PORTAL 2 POWER & LIGHTING BLOCK DIAGRAM

(ALL EQUIPMENT LOCATED INSIDE SUBSTATION BUILDING 2 UNLESS NOTED OTHERWISE)

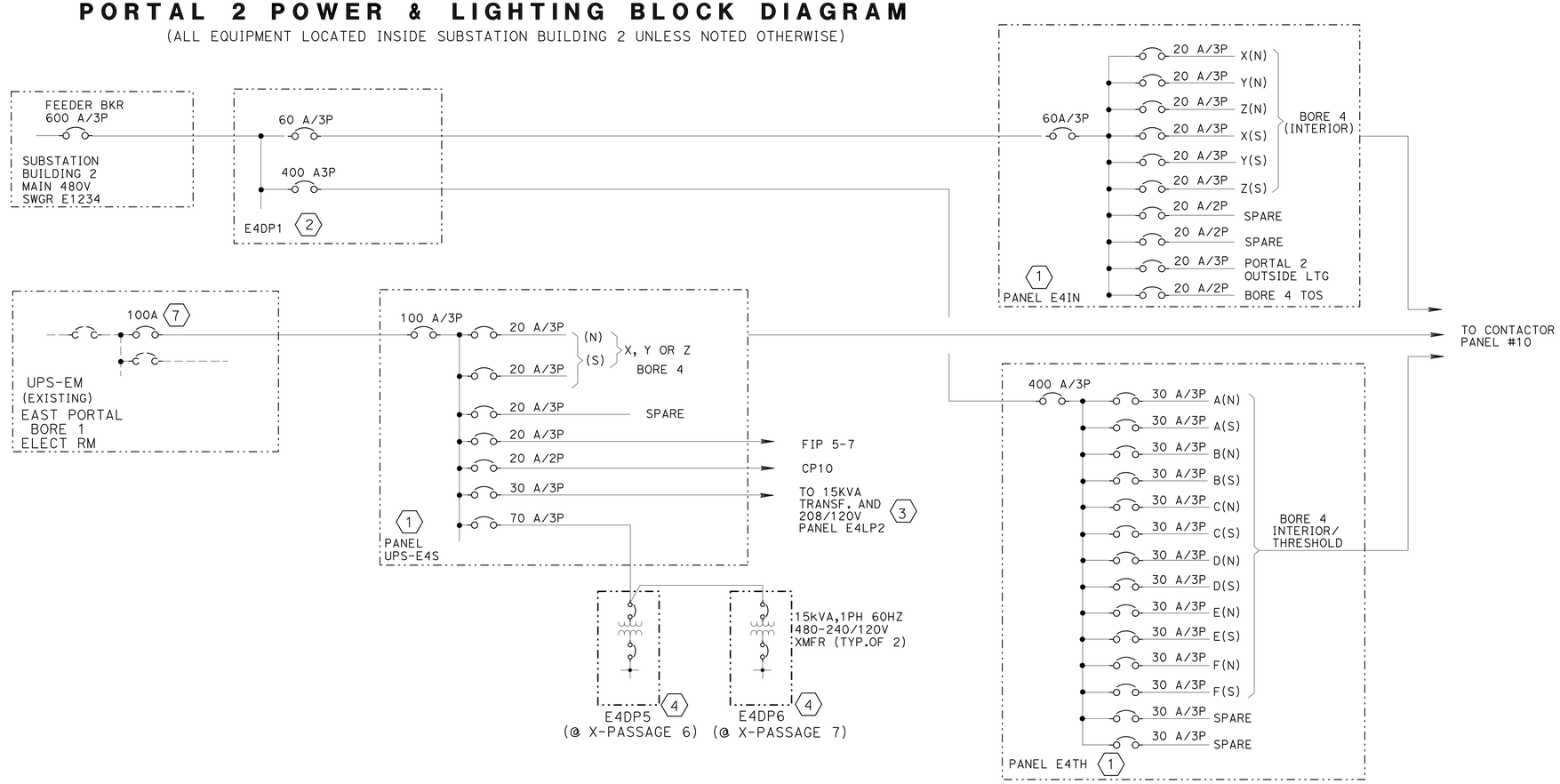


## GENERAL NOTE:

1. ALL EQUIPMENT SHOWN ON THIS DRAWING ARE NEW EXCEPT AS NOTED.

## SHEET NOTES:

1. FOR PANEL SCHEDULE SEE SHEET ET-194
2. FOR PANEL SCHEDULE SEE SHEET ET-195
3. FOR PANEL SCHEDULE SEE SHEET ET-196
4. MINI PACK LOAD CENTER. FOR TOS. FOR PANEL SCHEDULE SEE SHEET ET-199
5. FOR LOCATION, SEE SHEET ET-19.
6. FOR LOCATION, SEE SHEET ET-24.
7. ADD NEW 100A, 3P BREAKER TO EXISTING PANEL TO MATCH EXISTING PANEL RATING.

## PORTAL 2 POWER & LIGHTING SINGLE LINE DIAGRAM

4 **REVISED PER ADDENDUM No. 4 DATED SEPTEMBER 3, 2009**

THE CONTRACTOR SHALL VERIFY ALL CONTROLLING FIELD DIMENSIONS BEFORE ORDERING OR FABRICATING ANY MATERIAL

ALL DIMENSIONS ARE IN MILLIMETERS UNLESS OTHERWISE SHOWN

# TUNNEL LIGHTING
## PORTAL 2
## LIGHTING BLOCK DIAGRAM

NO SCALE

**ET-113**

| DATE | REVISED BY | DATE REVISED |
|---|---|---|
| 01/08 | R. ALFONSO/ L. TFURUNG | |

CALCULATED/ DESIGNED BY: D. PAUL/ R. BELARDO
CHECKED BY:

CONSULTANT FUNCTIONAL SUPERVISOR: NADER SHAHCHERAGHI

STATE OF CALIFORNIA - DEPARTMENT OF TRANSPORTATION
Caltrans

429491et113.dgn

LAST REVISION 00-00-00 | DATE PLOTTED => 01-SEP-2009 | TIME PLOTTED => 11:05

RELATIVE BORDER SCALE IS IN MILLIMETERS 0 20 40 60 80

USERNAME => trmikesl
DGN FILE => 429491et113.dgn

CU

EA 294911

| DIST | COUNTY | ROUTE | KILOMETER POST TOTAL PROJECT | SHEET No. | TOTAL SHEETS |
|---|---|---|---|---|---|
| 04 | Ala,CC | 24 | 8.2/10.0, 0.0/2.7 | 1171 | 1435 |

Dev Paul 07-01-08
REGISTERED ELECTRICAL ENGINEER

1-5-09
PLANS APPROVAL DATE

REGISTERED PROFESSIONAL ENGINEER DEV PAUL No. E8856 Exp. 03-31-10 ELECT STATE OF CALIFORNIA

*The State of California or its officers or agents shall not be responsible for the accuracy or completeness of electronic copies of this plan sheet.*

**PARSONS**
50 FREMONT STREET, SUITE 1500
SAN FRANCISCO, CA 94105

**EARTH TECH**
2101 WEBSTER STREET, SUITE 1000
OAKLAND, CA 94612-3060

*To get to the Caltrans web site, go to: http://www.dot.ca.gov*

Caltrans Metric

4

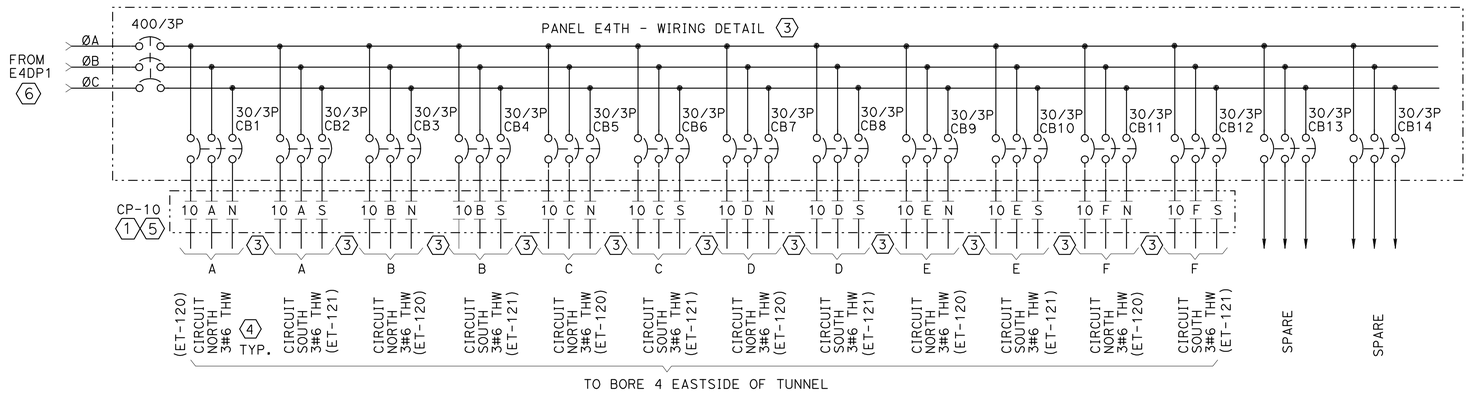


## SHEET NOTES:

1. SEE SHEET ET-305 FOR CONTACTOR PANEL ASSEMBLY.
2. TIE 10X, 10Y, 10Z CIRCUIT SOUTH TO 10XU, 10YU, 10ZU CIRCUIT SOUTH AND TIE 10X, 10Y, 10Z CIRCUIT NORTH TO 10XU, 10YU, 10ZU CIRCUIT NORTH. SEE THIS SHEET.
3. FOR PANEL SCHEDULE, SEE SHEET ET-194.
4. EACH LIGHTING CIRCUIT AND OTHER FEEDER CIRCUITS SHALL CARRY EQUIPMENT GROUNDING CONDUCTOR SIZED PER CODE TABLE 250-122 OR AS INDICATED IN CABLE SCHEDULES.
5. SEE SHEET ET-114 AND ET-306 FOR CONTROL AND WIRING OF CP-10.
6. SEE SHEET ET-195 FOR PANEL SCHEDULE.
7. SEE SHEET ET-101 AND ET-113 FOR UPS-EM SUPPLYING POWER TO UPS-E4S PANEL. FOR LAYOUT OF PANEL UPS-EM, SEE SHEET ET-19.

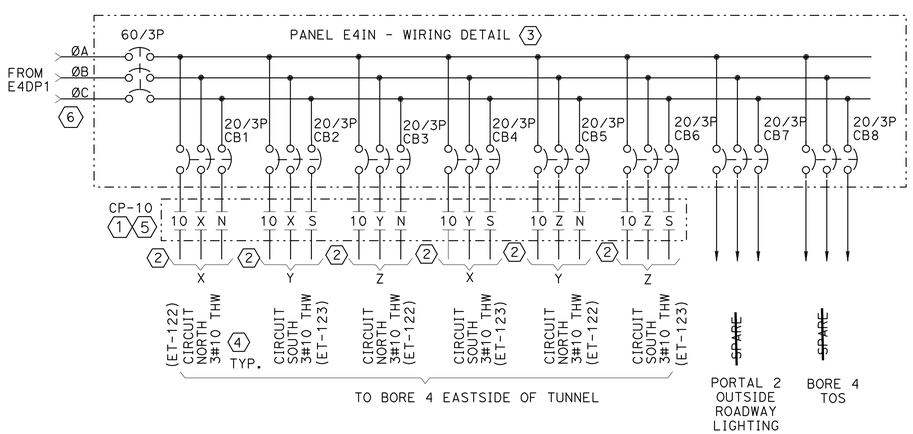


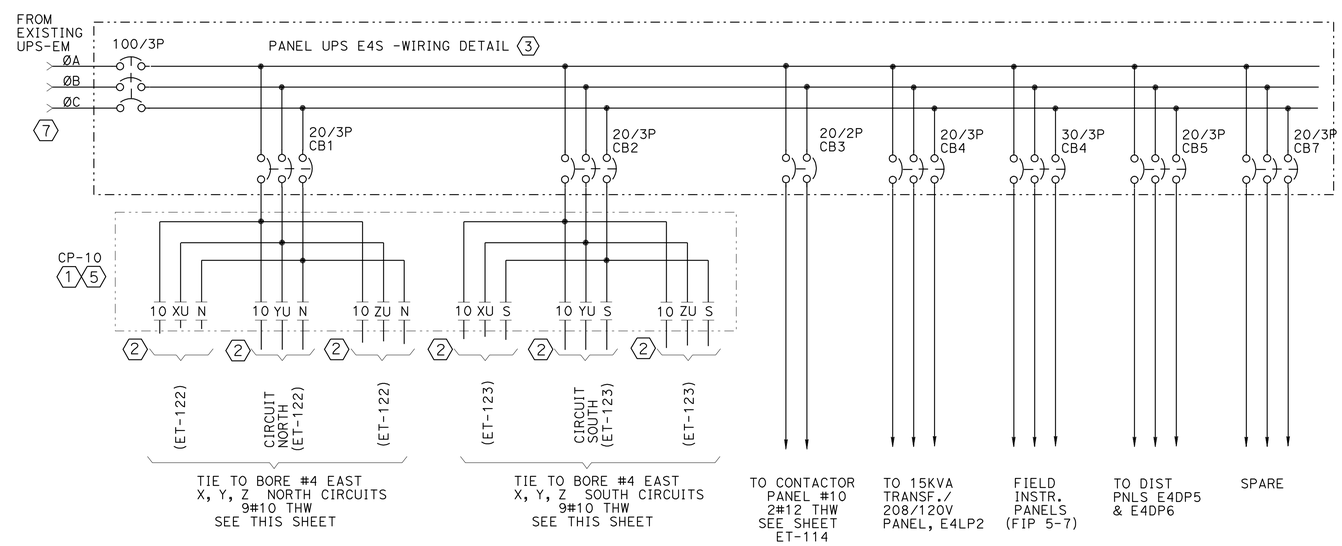


# TUNNEL LIGHTING
## PORTAL 2
## LIGHTING CONTROL DIAGRAM(CP-10) NO.2
NO SCALE

4 **REVISED PER ADDENDUM No. 4 DATED SEPTEMBER 3, 2009**

THE CONTRACTOR SHALL VERIFY ALL CONTROLLING FIELD DIMENSIONS BEFORE ORDERING OR FABRICATING ANY MATERIAL

ALL DIMENSIONS ARE IN MILLIMETERS UNLESS OTHERWISE SHOWN

**ET-115**

| | | |
|---|---|---|
| R. ALFONSO/ L. TFURUNG | DATE 01/08 | REVISED BY |
| D. PAUL/ R. BELARDO | | DATE REVISED |
| CALCULATED/ DESIGNED BY | | |
| CHECKED BY | | |

CONSULTANT FUNCTIONAL SUPERVISOR
NADER SHAHCHERAGHI

STATE OF CALIFORNIA - DEPARTMENT OF TRANSPORTATION
Caltrans

429491et115.dgn

LAST REVISION 00-00-00
DATE PLOTTED => 01-SEP-2009
TIME PLOTTED => 11:05

RELATIVE BORDER SCALE IS IN MILLIMETERS 0 20 40 60 80
USERNAME => trmikesl
DGN FILE => 429491et115.dgn
CU
EA 294911

| DIST | COUNTY | ROUTE | KILOMETER POST TOTAL PROJECT | SHEET No. | TOTAL SHEETS |
|---|---|---|---|---|---|
| 04 | Ala,CC | 24 | 8.2/10.0, 0.0/2.7 | 1192 | 1435 |

Dev Paul 07-01-08
REGISTERED ELECTRICAL ENGINEER

1-5-09
PLANS APPROVAL DATE

REGISTERED PROFESSIONAL ENGINEER DEV PAUL No. E8856 Exp. 03-31-10 ELECT STATE OF CALIFORNIA

*The State of California or its officers or agents shall not be responsible for the accuracy or completeness of electronic copies of this plan sheet.*

**PARSONS**
50 FREMONT STREET, SUITE 1500
SAN FRANCISCO, CA 94105

**EARTH TECH**
2101 WEBSTER STREET, SUITE 1000
OAKLAND, CA. 94612-3060

*To get to the Caltrans web site, go to: http://www.dot.ca.gov*

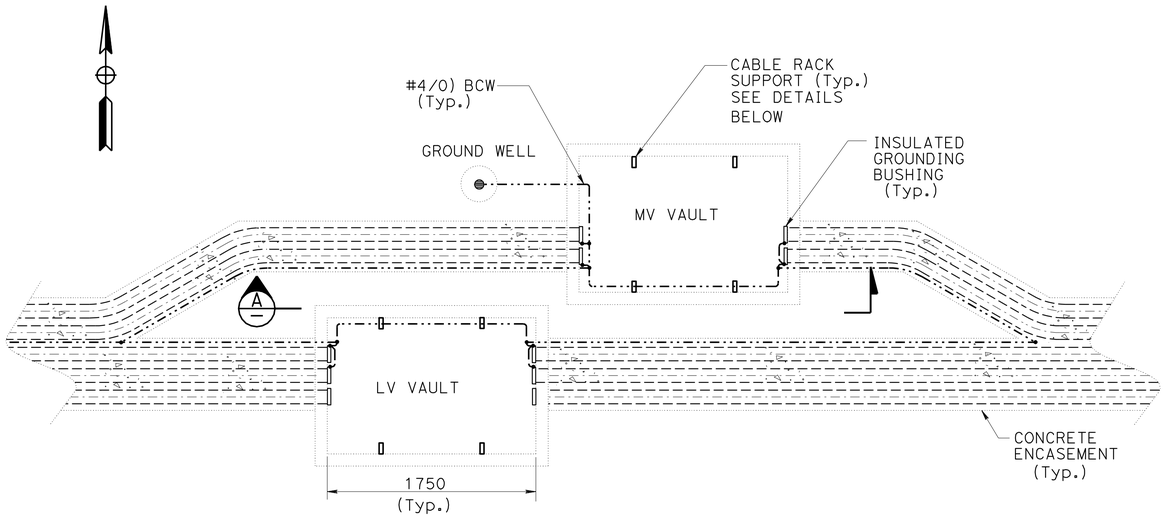


## PLAN - LV & MV VAULTS

(1750Lx1143Wx1954H)
NOTE 1

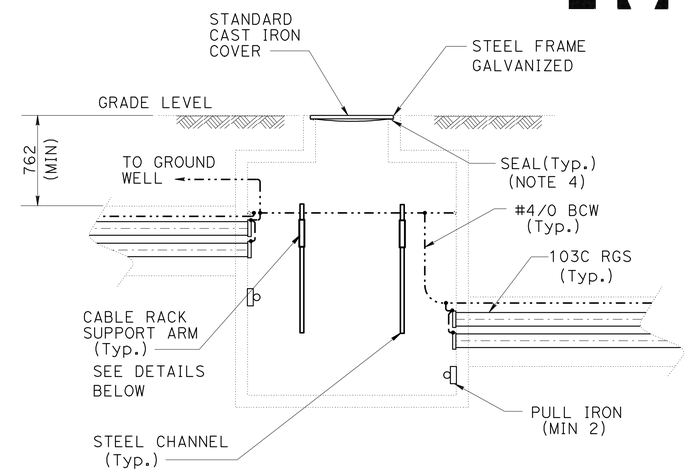


## SECTION A

## SHEET NOTES:

1. SEE SHEET ESS-2 FOR LAYOUT.
2. SEE SHEET ET-31 THRU ET-39 FOR MV VAULT LOCATIONS.
3. CAST-IN-PLACE CABLE RACK SUPPORTS MAY BE USED IN LIEU OF SURFACE MOUNTED SUPPORTS.
4. SEAL TO PREVENT WATER ENTRY BELOW AND ABOVE FIXED STEEL FRAME.

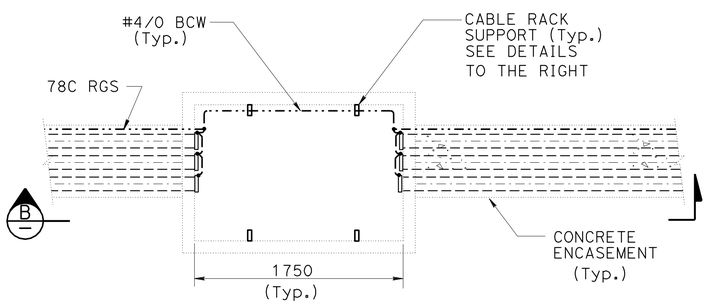


## PLAN - MV VAULT (IN TUNNEL)

(1750Lx1143Wx~~1270H~~ 1050H) 4
NOTE 2

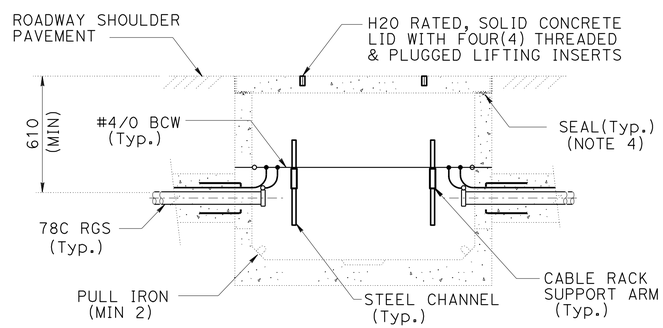


## SECTION B

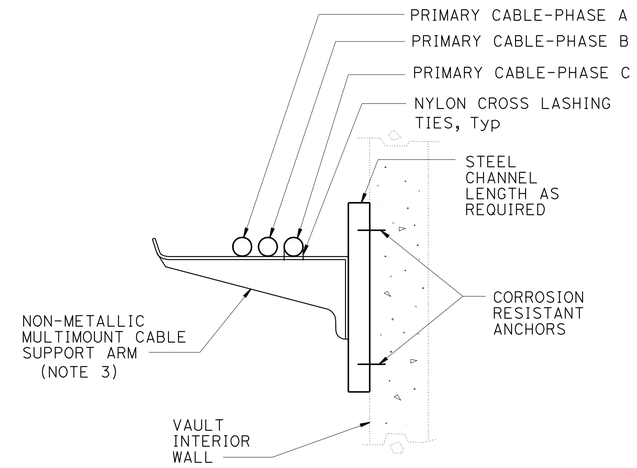


## CABLE SUPPORT RACK DETAIL

NO SCALE

4 **REVISED PER ADDENDUM No. 4 DATED SEPTEMBER 3, 2009**

# DETAILS
## MEDIUM & LOW VOLTAGE VAULTS DETAIL

NO SCALE

**ET-143**

THE CONTRACTOR SHALL VERIFY ALL CONTROLLING FIELD DIMENSIONS BEFORE ORDERING OR FABRICATING ANY MATERIAL

ALL DIMENSIONS ARE IN MILLIMETERS UNLESS OTHERWISE SHOWN

| DATE | REVISED BY | DATE | REVISED BY |
|---|---|---|---|
| 01/08 | R. ALFONSO/ L. TFURUNG | | |

| CALCULATED/ DESIGNED BY | CHECKED BY |
|---|---|
| R. ALFONSO/ L. TFURUNG | D. PAUL/ R. BELARDO |

CONSULTANT FUNCTIONAL SUPERVISOR: NADER SHAHCHERAGHI

STATE OF CALIFORNIA - DEPARTMENT OF TRANSPORTATION
Caltrans

429491et143.dgn

RELATIVE BORDER SCALE IS IN MILLIMETERS 0 20 40 60 80

USERNAME => trmikesl
DGN FILE => 429491et143.dgn

CU

EA 294911

LAST REVISION 00-00-00
DATE PLOTTED => 01-SEP-2009
TIME PLOTTED => 11:05

| DIST | COUNTY | ROUTE | KILOMETER POST TOTAL PROJECT | SHEET No. | TOTAL SHEETS |
|---|---|---|---|---|---|
| 04 | Ala,CC | 24 | 8.2/10.0, 0.0/2.7 | 1196 | 1435 |

Dev Paul 07-01-08
REGISTERED ELECTRICAL ENGINEER

1-5-09
PLANS APPROVAL DATE

REGISTERED PROFESSIONAL ENGINEER DEV PAUL No. E8856 Exp. 03-31-10 ELECT STATE OF CALIFORNIA

*The State of California or its officers or agents shall not be responsible for the accuracy or completeness of electronic copies of this plan sheet.*

**PARSONS**
50 FREMONT STREET, SUITE 1500
SAN FRANCISCO, CA 94105

**EARTH TECH**
2101 WEBSTER STREET, SUITE 1000
OAKLAND, CA. 94612-3060

*To get to the Caltrans web site, go to: http://www.dot.ca.gov*

Caltrans Metric

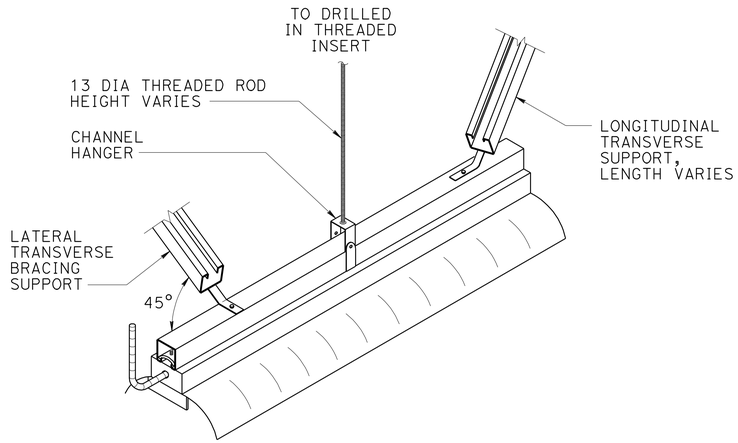


## 1 F2 INDUSTRIAL FLUORESCENT FIXTURE MOUNTING
NOT TO SCALE

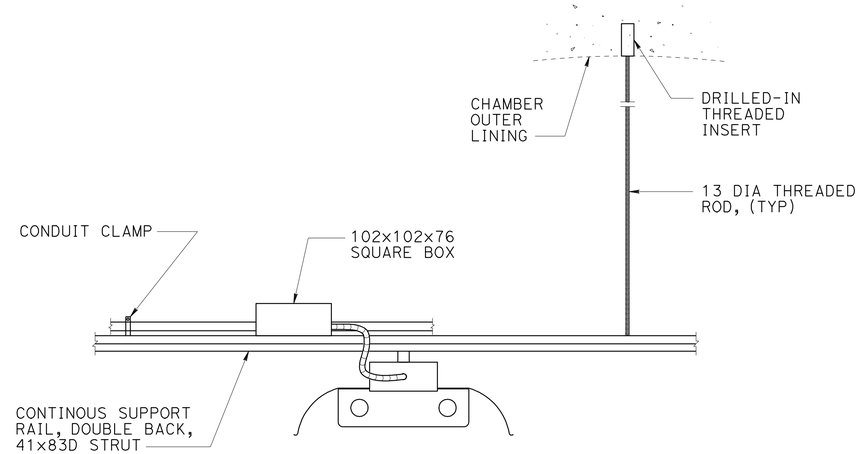


## 2 F2 TYPICAL STRUT SUPPORT LONGITUDINAL BRACE SECTION
NOT TO SCALE

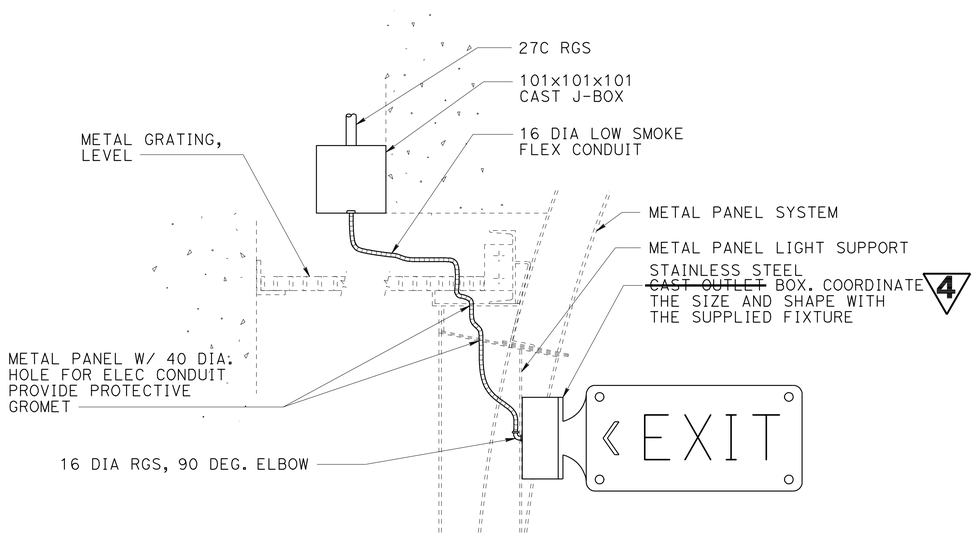


COORDINATE FIXTURE SUPPORT WITH ARCHITECTURAL

## 3 E1 TUNNEL EXIT SIGN MOUNTING
NOT TO SCALE

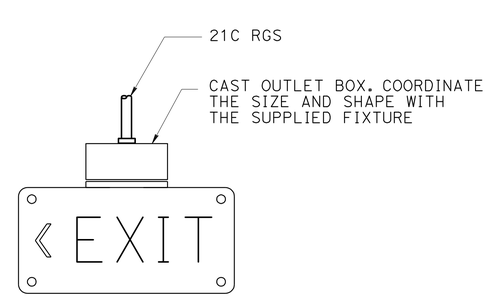


## 4 E2 EXIT SIGN ELECT. ROOM
NOT TO SCALE

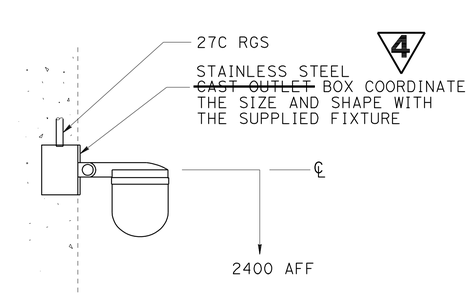


## 5 F3 VESTIBULE FIXTURE MOUNTING
NOT TO SCALE

**4 REVISED PER ADDENDUM No. 4 DATED SEPTEMBER 3, 2009**

# TUNNEL LIGHTING
## MISC. LIGHTING DETAILS NO.3
NO SCALE

**ET-147**

THE CONTRACTOR SHALL VERIFY ALL CONTROLLING FIELD DIMENSIONS BEFORE ORDERING OR FABRICATING ANY MATERIAL

ALL DIMENSIONS ARE IN MILLIMETERS UNLESS OTHERWISE SHOWN

| | DATE | REVISED BY | DATE REVISED |
|---|---|---|---|
| CALCULATED/DESIGNED BY | 01/08 | R. ALFONSO/ L. IFURUNG | |
| CHECKED BY | | D. PAUL/ R. BELARDO | |

CONSULTANT FUNCTIONAL SUPERVISOR: NADER SHAHCHERAGHI

STATE OF CALIFORNIA - DEPARTMENT OF TRANSPORTATION
Caltrans

429491et147.dgn

RELATIVE BORDER SCALE IS IN MILLIMETERS 0 20 40 60 80

USERNAME => trmikesl
DGN FILE => 429491et147.dgn

EA 294911

LAST REVISION 00-00-00
DATE PLOTTED => 01-SEP-2009
TIME PLOTTED => 11:05

| DIST | COUNTY | ROUTE | KILOMETER POST TOTAL PROJECT | SHEET No. | TOTAL SHEETS |
|---|---|---|---|---|---|
| 04 | Ala,CC | 24 | 8.2/10.0, 0.0/2.7 | 1200 | 1435 |

Dev Paul 07-01-08
REGISTERED ELECTRICAL ENGINEER

1-5-09
PLANS APPROVAL DATE

REGISTERED PROFESSIONAL ENGINEER DEV PAUL No. E8856 Exp. 03-31-10 ELECT STATE OF CALIFORNIA

*The State of California or its officers or agents shall not be responsible for the accuracy or completeness of electronic copies of this plan sheet.*

**PARSONS**
50 FREMONT STREET, SUITE 1500
SAN FRANCISCO, CA 94105

**EARTH TECH**
2101 WEBSTER STREET, SUITE 1000
OAKLAND, CA. 94612-3060

*To get to the Caltrans web site, go to: http://www.dot.ca.gov*

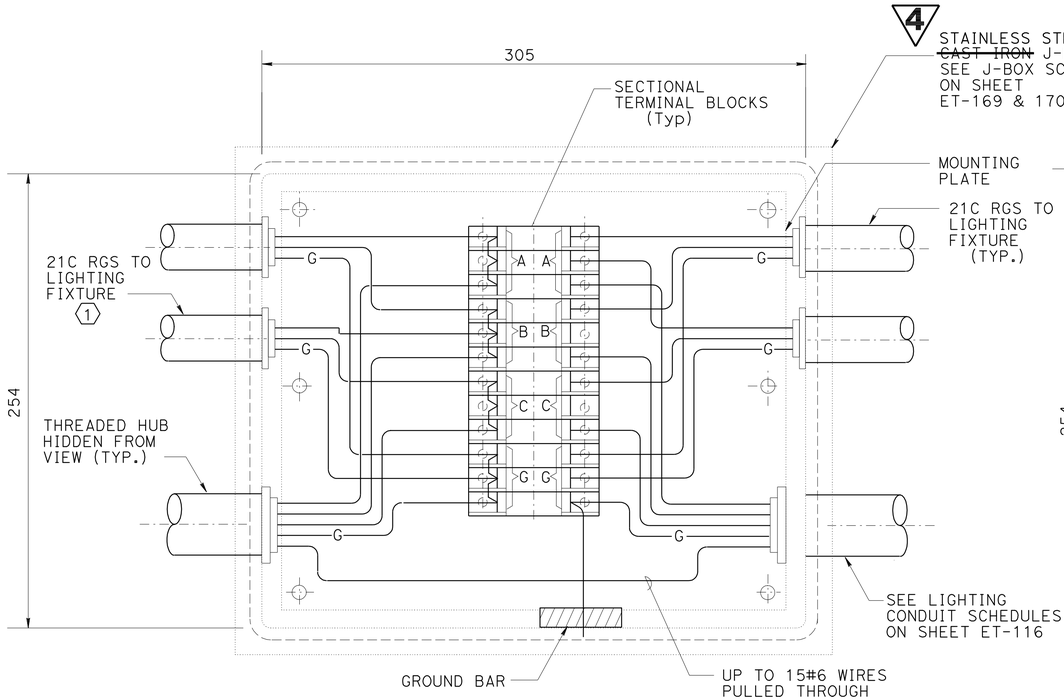


## 1 LIGHTING J-BOX TYPE "LB1"
NOT TO SCALE

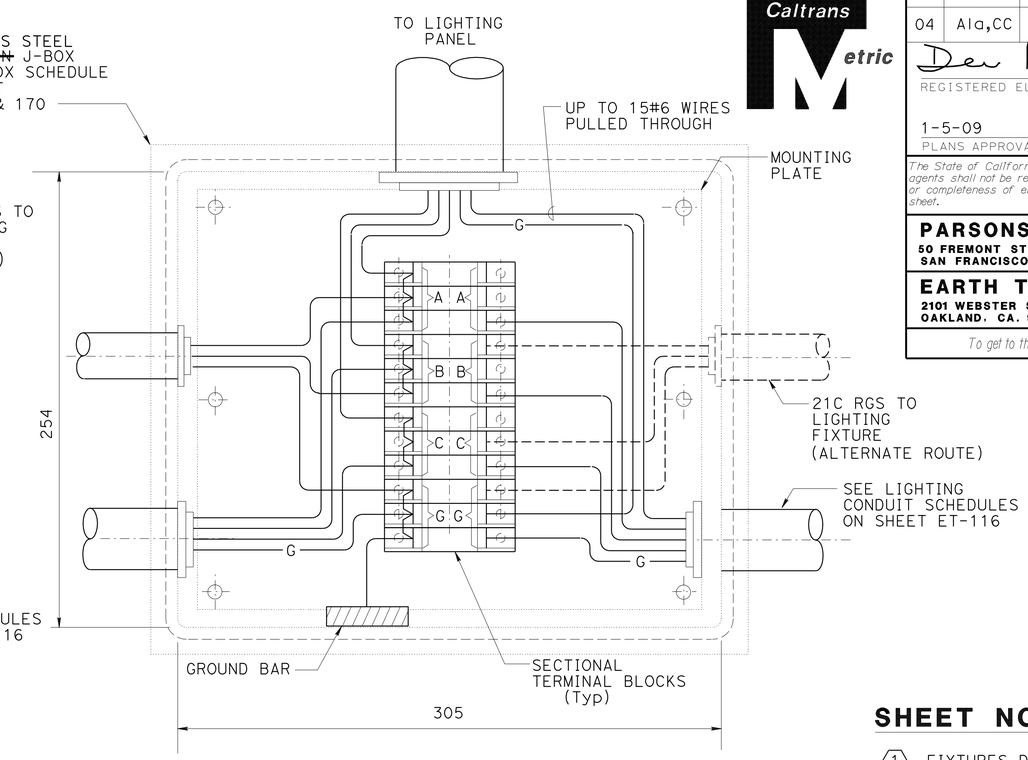


## 3 LIGHTING J-BOX TYPE "LB3"
NOT TO SCALE

## SHEET NOTES:

1. FIXTURES DIRECTLY ADJACENT TO THE J-BOX" SHALL BE WIRED WITH FLEXIBLE CONDUIT AS SHOWN ON SHEET ET-145.
2. REFER TO SHEETS ET-169 AND ET-170 FOR TUNNEL LIGHTING J-BOX PARAMETERS.

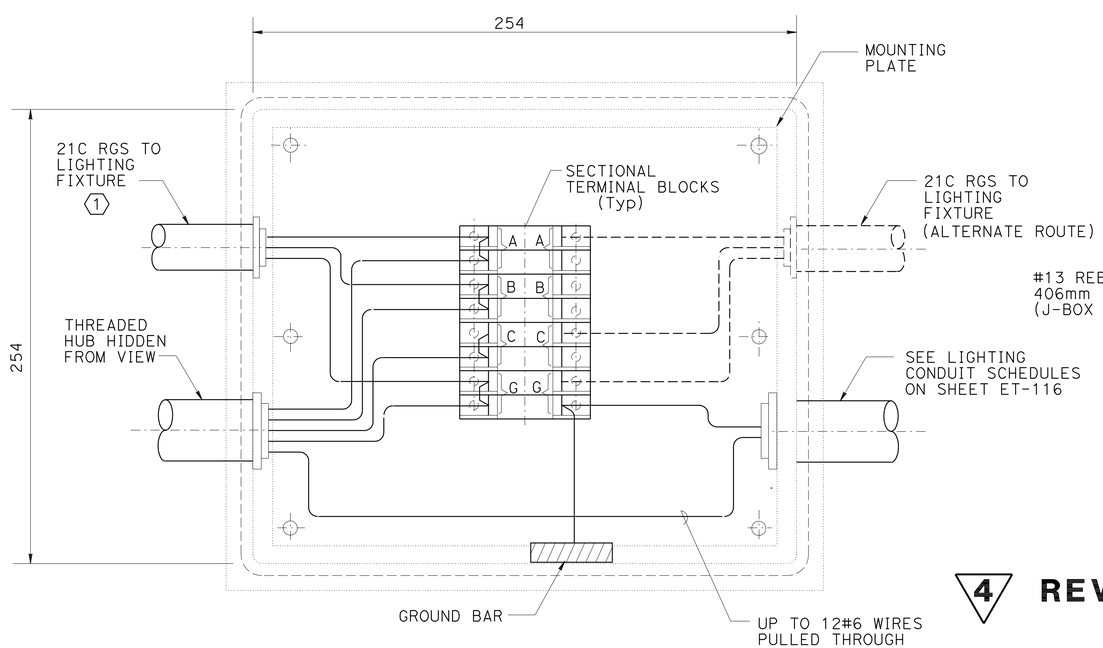


## 2 LIGHTING J-BOX TYPE "LB2"
NOT TO SCALE

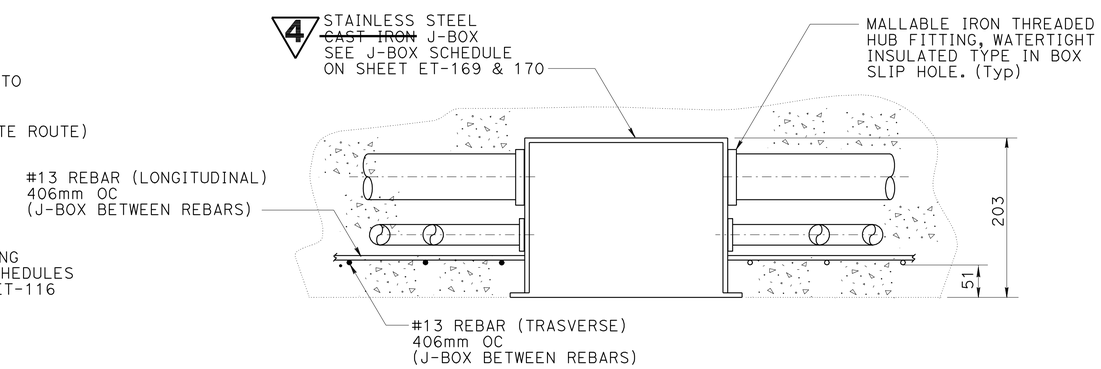


## 4 TYPICAL EMBEDDED LIGHTING J-BOX/REBAR
NOT TO SCALE

**4 REVISED PER ADDENDUM No. 4 DATED SEPTEMBER 3, 2009**

**JUNCTION BOX**
**DETAIL NO. 1**
NO SCALE

**ET-152**

THE CONTRACTOR SHALL VERIFY ALL CONTROLLING FIELD DIMENSIONS BEFORE ORDERING OR FABRICATING ANY MATERIAL

ALL DIMENSIONS ARE IN MILLIMETERS UNLESS OTHERWISE SHOWN

| DATE | REVISED BY | DATE REVISED |
|---|---|---|
| 01/08 | R. ALFONSO/ L. TFURUNG | |
| | D. PAUL/ R. BELARDO | |

CALCULATED/ DESIGNED BY
CHECKED BY

CONSULTANT FUNCTIONAL SUPERVISOR
NADER SHAHCHERAGHI

STATE OF CALIFORNIA - DEPARTMENT OF TRANSPORTATION
Caltrans

429491et152.add

LAST REVISION 00-00-00
DATE PLOTTED => 01-SEP-2009
TIME PLOTTED => 11:06

RELATIVE BORDER SCALE IS IN MILLIMETERS 0 20 40 60 80

USERNAME => trmikesl
DGN FILE => 429491et152.add

EA 294911

| DIST | COUNTY | ROUTE | KILOMETER POST TOTAL PROJECT | SHEET No. | TOTAL SHEETS |
|---|---|---|---|---|---|
| 04 | Ala,CC | 24 | 8.2/10.0, 0.0/2.7 | 1202 | 1435 |

Dev Paul 07-01-08
REGISTERED ELECTRICAL ENGINEER

1-5-09
PLANS APPROVAL DATE

REGISTERED PROFESSIONAL ENGINEER DEV PAUL No. E8856 Exp. 03-31-10 ELECT STATE OF CALIFORNIA

*The State of California or its officers or agents shall not be responsible for the accuracy or completeness of electronic copies of this plan sheet.*

**PARSONS**
50 FREMONT STREET, SUITE 1500
SAN FRANCISCO, CA 94105

**EARTH TECH**
2101 WEBSTER STREET, SUITE 1000
OAKLAND, CA. 94612-3060

*To get to the Caltrans web site, go to: http://www.dot.ca.gov*

Caltrans Metric

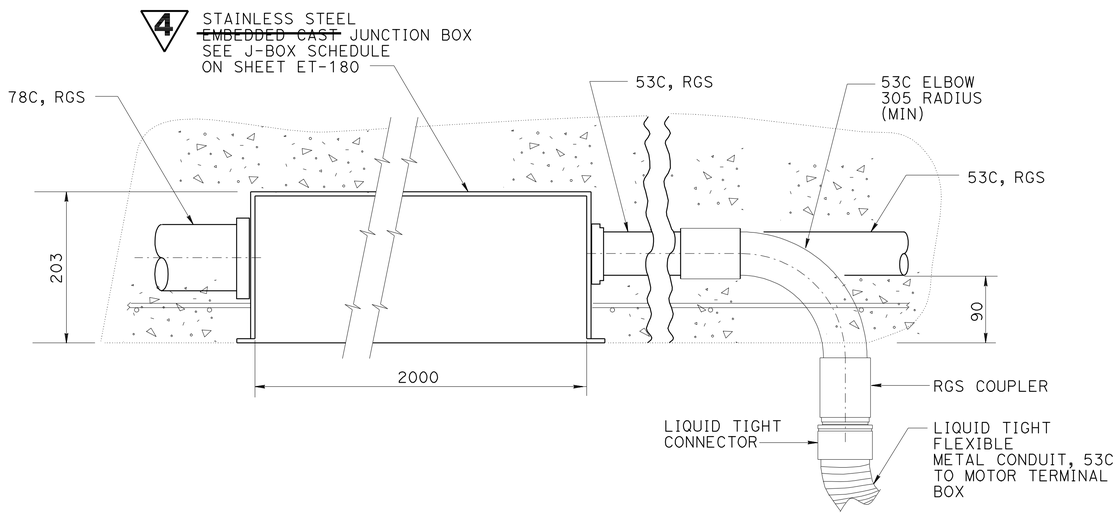


## 1 TYPICAL CEILING EMBEDDED JET FAN JUNCTION BOX

NOT TO SCALE

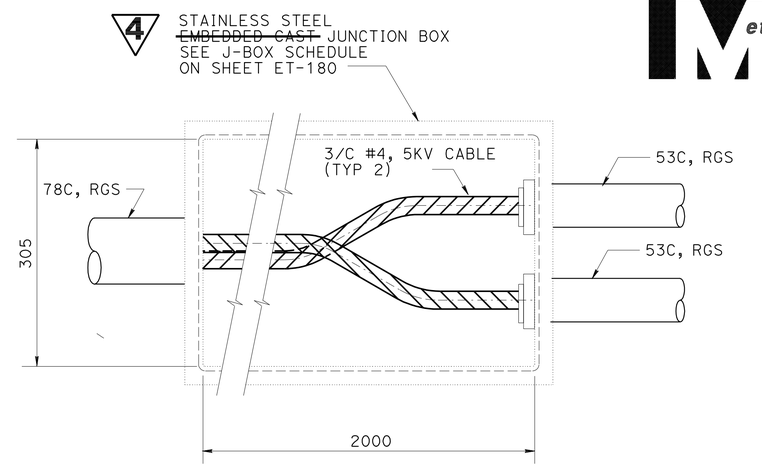


## 3 EMBEDDED JET FAN JUNCTION BOX (TYPE F1)

## SHEET NOTE:

1. SEE SPECIFICATIOS FOR HIGH TEMPERATURE/LOW SMOKE FLEXIBLE CONDUIT FROM CEILING EMBEDMENT TO MOTOR TERMINAL BOX.

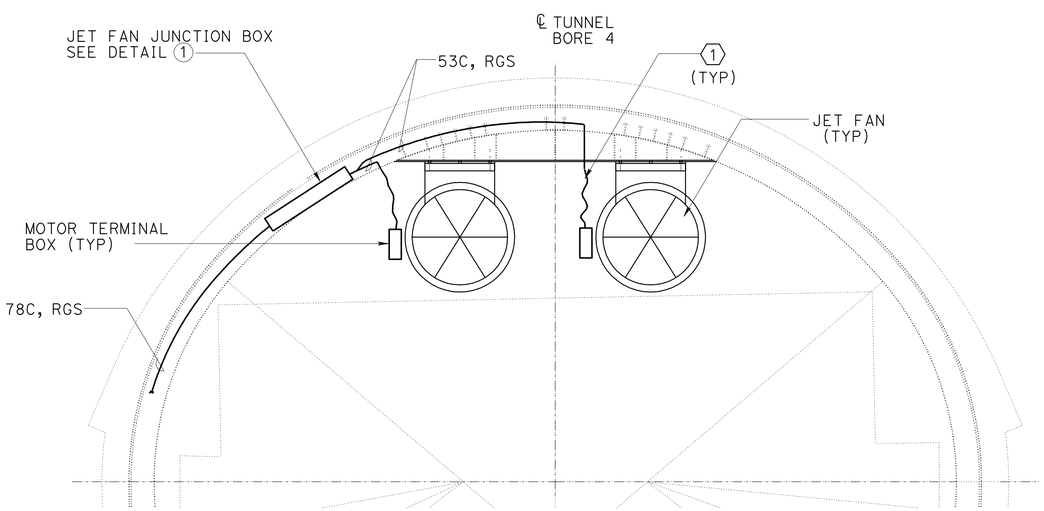


## 2 TYPICAL JET FAN POWER CONNECTION CROSS SECTION

NOT TO SCALE

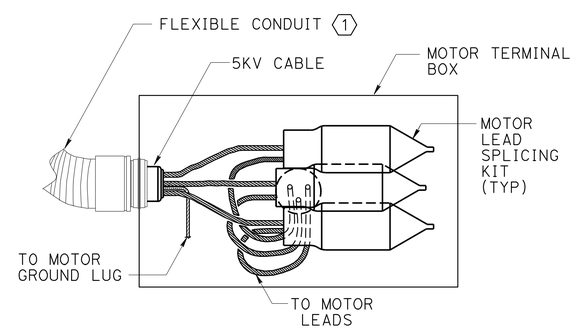


## 4 TYPICAL MOTOR TERMINAL CONNECTION

4 **REVISED PER ADDENDUM No. 4 DATED SEPTEMBER 3, 2009**

THE CONTRACTOR SHALL VERIFY ALL CONTROLLING FIELD DIMENSIONS BEFORE ORDERING OR FABRICATING ANY MATERIAL

ALL DIMENSIONS ARE IN MILLIMETERS UNLESS OTHERWISE SHOWN

**JET FAN JUNCTION BOX DETAIL NO. 3**

NO SCALE

**ET-154**

| REVISED BY | DATE REVISED |
|---|---|
| R. ALFONSO/ L. TFURUNG | DATE 01/08 |
| D. PAUL/ R. BELARDO | |

CALCULATED/ DESIGNED BY
CHECKED BY

CONSULTANT FUNCTIONAL SUPERVISOR
NADER SHAHCHERAGHI

STATE OF CALIFORNIA - DEPARTMENT OF TRANSPORTATION
Caltrans

429491et154.add

LAST REVISION 00-00-00
DATE PLOTTED => 01-SEP-2009
TIME PLOTTED => 11:06

RELATIVE BORDER SCALE IS IN MILLIMETERS 0 20 40 60 80

USERNAME => trmikesl
DGN FILE => 429491et154.add

EA 294911

| DIST | COUNTY | ROUTE | KILOMETER POST TOTAL PROJECT | SHEET No. | TOTAL SHEETS |
|---|---|---|---|---|---|
| 04 | Ala,CC | 24 | 8.2/10.0, 0.0/2.7 | 1203 | 1435 |

Dev Paul 07-01-08
REGISTERED ELECTRICAL ENGINEER

1-5-09
PLANS APPROVAL DATE

REGISTERED PROFESSIONAL ENGINEER DEV PAUL No. E8856 Exp. 03-31-10 ELECT STATE OF CALIFORNIA

*The State of California or its officers or agents shall not be responsible for the accuracy or completeness of electronic copies of this plan sheet.*

**PARSONS**
50 FREMONT STREET, SUITE 1500
SAN FRANCISCO, CA 94105

**EARTH TECH**
2101 WEBSTER STREET, SUITE 1000
OAKLAND, CA. 94612-3060

*To get to the Caltrans web site, go to: http://www.dot.ca.gov*

# TUNNEL LIGHTING FIXTURE SCHEDULE

| DESIGN | DESCRIPTION | QUANTITIES | FIXTURE LAMP TYPE: FLUOR. | FIXTURE LAMP TYPE: HID | MOUNTING: CEILING | MOUNTING: WALL | MOUNTING: RECESSED | MOUNTING: PENDANT/STRUT MTD | VOLTAGE | VOLT AMPERES | REMARKS |
|---|---|---|---|---|---|---|---|---|---|---|---|
| E1 | EXIT SIGN DOUBLE FACE, END MOUNT | 14 | LED | | | X | | | 120 | 6 VA | END MOUNT, GREEN, 2300 ABOVE FINISHED SIDEWALK (IN TUNNEL) SEE DETAIL 3 SHEET ET-147 |
| E2 | EXIT SIGN SINGLE FACE, END MOUNT | 4 | LED | | X | | | | 120 | 6 VA | GREEN COLOR, DIFFUSE LED LAMPS (IN ELECTRICAL ROOM). SEE DETAIL 4 SHEET ET-147 |
| F2/1 | INDUSTRIAL FLUORESCENT 15% UPLIGHT, ELECTRONIC BALLAST | 18 | 2-32W | | | | | X | 120 | 65 VA | STRUT MOUNTED FIXTURE. SEE DETAIL 2 SHEET ET-147 |
| F2 | INDUSTRIAL FLUORESCENT 15% UPLIGHT, ELECTRONIC BALLAST | 12 | 2-32W | | | | | X | 120 | 65 VA | PENDANT MOUNTED FIXTURE. SEE DETAIL 1 SHEET ET-147 |
| F3 | VAPORTIGHT, COMPACT FLUORESCENT IN VESTIBULE | 14 | 1-9W | | | X | | | 120 | 15 VA | OPAL POLYCARBONATE GLOBE. WALL MOUNTED FIXTURE, UL LISTED. FOR WET LOCATION. SEE DETAIL 5 SHEET ET-147 (WHITE LIGHT) |
| H1 | TUNNEL LIGHT | 509 | | 400W HPS | | X | | | 480 | 520 VA | STRUT MOUNTED, LEFT SIDE ELECTRICAL FEEDING, DISTRIBUTION TYPE- COUNTER BEAM, UL WET LABEL. |
| H2 | TUNNEL LIGHT | 294 | | 150W HPS | | X | | | 480 | 210 VA | STRUT MOUNTED, DISTRIBUTION TYPE-- IV. UL WET LABEL. |
| H3 | OUTDOOR LIGHT | 8 | | 150W HPS | | X | | | 120 | 210 VA | WALL MOUNTED TYPE FIXTURE "WALLPACK SERIES" WITH PHOTOCELL |
| | | | | | | | | | | | |
| | | | | | | | | | | | |

PROVIDE LAMPS PER MANUFACTURER'S RECOMMENDATIONS.

4 **REVISED PER ADDENDUM No. 4 DATED SEPTEMBER 3, 2009**

THE CONTRACTOR SHALL VERIFY ALL CONTROLLING FIELD DIMENSIONS BEFORE ORDERING OR FABRICATING ANY MATERIAL

ALL DIMENSIONS ARE IN MILLIMETERS UNLESS OTHERWISE SHOWN

**DETAILS**
**LIGHTING FIXTURE SCHEDULE**
NO SCALE

**ET-160**

| DATE | REVISED BY | DATE REVISED |
|---|---|---|
| 01/08 | | |

CALCULATED/DESIGNED BY: R. ALFONSO/L. TFURUNG
CHECKED BY: D. PAUL/R. BELARDO

CONSULTANT FUNCTIONAL SUPERVISOR: NADER SHAHCHERAGHI

STATE OF CALIFORNIA - DEPARTMENT OF TRANSPORTATION
Caltrans

429491et160.add

LAST REVISION 00-00-00
DATE PLOTTED => 01-SEP-2009
TIME PLOTTED => 11:06

RELATIVE BORDER SCALE IS IN MILLIMETERS 0 20 40 60 80

USERNAME => trmikesl
DGN FILE => 429491et160.add

EA 294911

| CABLE | | | | DESTINATION | | REF. DWG. NO. | ROUTING VIAS | | | | REMARKS |
|---|---|---|---|---|---|---|---|---|---|---|---|
| NO. | SIZE (AWG/KCMIL) | NO. OF COND | CABLE CONFIG | FROM | TO | | | | | | |
| PEG1-A | 177 | 1 | 1/C | EG1 | E4EDP | ET-101<br>ET-109 | PEG1-1 | PEG1-1A | - | - | 600V PHASE WIRE |
| PEG1-B | 177 | 1 | 1/C | | | | PEG1-1 | PEG1-1A | - | - | 600V PHASE WIRE |
| PEG1-C | 177 | 1 | 1/C | | | | PEG1-1 | PEG1-1A | - | - | 600V PHASE WIRE |
| PEG1-N | 177 | 1 | 1/C | | | | PEG1-1 | PEG1-1A | - | - | 600V NEUTRAL WIRE |
| PEG1-G | 2 | 1 | 1/C | | | | PEG1-1 | PEG1-1A | - | - | 600V GROUND WIRE |
| | | | | | | | | | | | |
| | | | | | | | | | | | |
| PWG1-A | 253 | 1 | 1/C | WG1 | E4EDP | ET-101<br>ET-108 | PWG1-1 | - | - | - | 600V PHASE WIRE |
| PWG1-B | 253 | 1 | 1/C | | | | PWG1-1 | - | - | - | 600V PHASE WIRE |
| PWG1-C | 253 | 1 | 1/C | | | | PWG1-1 | - | - | - | 600V PHASE WIRE |
| PWG1-N | 253 | 1 | 1/C | | | | PWG1-1 | - | - | - | 600V NEUTRAL WIRE |
| PWG1-G | 1/0 | 1 | 1/C | | | | PWG1-1 | - | - | - | 600V GROUND WIRE |

THE CONTRACTOR SHALL VERIFY ALL CONTROLLING FIELD DIMENSIONS BEFORE ORDERING OR FABRICATING ANY MATERIAL

ALL DIMENSIONS ARE IN MILLIMETERS UNLESS OTHERWISE SHOWN

Caltrans Metric

| DIST | COUNTY | ROUTE | KILOMETER POST TOTAL PROJECT | SHEET No. | TOTAL SHEETS |
|---|---|---|---|---|---|
| 04 | Ala,CC | 24 | 8.2/10.0<br>0.0/2.7 | 1222 | 1435 |

Dev Paul 07-01-08
REGISTERED ELECTRICAL ENGINEER

1-5-09
PLANS APPROVAL DATE

REGISTERED PROFESSIONAL ENGINEER DEV PAUL No. E8856 Exp. 03-31-10 ELECT STATE OF CALIFORNIA

*The State of California or its officers or agents shall not be responsible for the accuracy or completeness of electronic copies of this plan sheet.*

**PARSONS**
50 FREMONT STREET, SUITE 1500
SAN FRANCISCO, CA 94105

**EARTH TECH**
2101 WEBSTER STREET, SUITE 1000
OAKLAND, CA. 94612-3060

*To get to the Caltrans web site, go to: http://www.dot.ca.gov*

4 **REVISED PER ADDENDUM No. 4 DATED SEPTEMBER 3, 2009**

# DETAILS
## CABLE SCHEDULE NO. 9
NO SCALE

**ET-179**

| DATE | REVISED BY | DATE REVISED |
|---|---|---|
| 01/08 | | |

CALCULATED/DESIGNED BY: A. NOVICIO/L. TFURUNG
CHECKED BY: D. PAUL/R. BELARDO
CONSULTANT FUNCTIONAL SUPERVISOR: NADER SHAHCHERAGHI

STATE OF CALIFORNIA - DEPARTMENT OF TRANSPORTATION
Caltrans

G:\jojo\pse\294911_addendum\8-3-09\429491et179.add

LAST REVISION 00-00-00
DATE PLOTTED => 01-SEP-2009
TIME PLOTTED => 11:06

RELATIVE BORDER SCALE IS IN MILLIMETERS 0 20 40 60 80

USERNAME => trmikesl
DGN FILE => 429491et179.add

EA 294911

| DIST | COUNTY | ROUTE | KILOMETER POST TOTAL PROJECT | SHEET No. | TOTAL SHEETS |
|---|---|---|---|---|---|
| 04 | Ala,CC | 24 | 8.2/10.0, 0.0/2.7 | 1223 | 1435 |

Dev Paul 07-01-08
REGISTERED ELECTRICAL ENGINEER

1-5-09
PLANS APPROVAL DATE

REGISTERED PROFESSIONAL ENGINEER DEV PAUL No. E8856 Exp. 03-31-10 ELECT STATE OF CALIFORNIA

*The State of California or its officers or agents shall not be responsible for the accuracy or completeness of electronic copies of this plan sheet.*

**PARSONS**
50 FREMONT STREET, SUITE 1500
SAN FRANCISCO, CA 94105

**EARTH TECH**
2101 WEBSTER STREET, SUITE 1000
OAKLAND, CA. 94612-3060

*To get to the Caltrans web site, go to: http://www.dot.ca.gov*

## J-BOX TYPE SCHEDULE (1)

| | BOX TYPE | DESCRIPTION | TERMINAL BLOCK (1) | QUANTITIES |
|---|---|---|---|---|
| 4 | A1 | 305(W)x457(L)x203(D) STAINLESS STEEL EMBEDDED ~~CAST~~ BOX | 6 #4 | 9 |
| | B1 | 305(W)x454(L)x127(D) TYPE 12 METAL BOX | 3 #4, 1 #8 | - |
| 4 | C1 | 203(W)x203(L)x102(D) STAINLESS STEEL STRUT MTD ~~CAST~~ BOX | 4 #10, 1 #12 | - |
| | C2 | ↓ | 2#8 | - |
| 4 | D1 | 203(W)x305(L)x203(D) STAINLESS STEEL EMBEDDED ~~CAST~~ BOX | 3#6 | - |
| | D2 | ↓ | 3 #10, 1 #10 | - |
| | D3 | ↓ | - | 10 |
| | D4 | ↓ | 4 #10 | 7 |
| | D5 | ↓ | 3 #4, 3 #6 2 #12 | - |
| | D6 | ↓ | 3 #6, 2 #10 | - |
| 4 | E1 | 203(W)x203(L)x203(D) STAINLESS STEEL EMBEDDED ~~CAST~~ BOX | 2#10 | |
| | E2 | ↓ | - | 2 |
| | E3 | ↓ | - | - |
| | E4 | ↓ | 2 #10, 2 #8 | - |
| | E5 | ↓ | 4#10 | - |
| | | | | |
| 4 | F1 | 305(W)x2000(L)x203(D) STAINLESS STEEL EMBEDDED ~~CAST~~ BOX | - | 10 |
| | G1 | 203(W)x203(L)x102(D) TYPE 12 METAL BOX | - | - |
| | | | | |

## SHEET NOTE:

(1) SEE SHEET ET-153 FOR JUNCTION BOX DETAILS.

4 **REVISED PER ADDENDUM No. 4 DATED SEPTEMBER 3, 2009**

THE CONTRACTOR SHALL VERIFY ALL CONTROLLING FIELD DIMENSIONS BEFORE ORDERING OR FABRICATING ANY MATERIAL

ALL DIMENSIONS ARE IN MILLIMETERS UNLESS OTHERWISE SHOWN

# DETAILS
## POWER JUNCTION BOX TYPE SCHEDULE
NO SCALE

**ET-180**

| DATE | REVISED BY | DATE REVISED |
|---|---|---|
| 01/08 | R. ALFONSO/ L. TFURUNG | |

CALCULATED/DESIGNED BY: R. ALFONSO/ L. TFURUNG
CHECKED BY: D. PAUL/ R. BELARDO
CONSULTANT FUNCTIONAL SUPERVISOR: NADER SHAHCHERAGHI

STATE OF CALIFORNIA - DEPARTMENT OF TRANSPORTATION
Caltrans

429491et180.dgn

LAST REVISION 00-00-00
DATE PLOTTED => 01-SEP-2009
TIME PLOTTED => 11:06

RELATIVE BORDER SCALE IS IN MILLIMETERS 0 20 40 60 80
USERNAME => trmikesl
DGN FILE => 429491et180.dgn

EA 294911

| DIST | COUNTY | ROUTE | KILOMETER POST TOTAL PROJECT | SHEET No. | TOTAL SHEETS |
|---|---|---|---|---|---|
| 04 | Ala,CC | 24 | 8.2/10.0, 0.0/2.7 | 1224 | 1435 |

Dev Paul 07-01-08
REGISTERED ELECTRICAL ENGINEER

1-5-09
PLANS APPROVAL DATE

REGISTERED PROFESSIONAL ENGINEER DEV PAUL No. E8856 Exp. 03-31-10 ELECT STATE OF CALIFORNIA

*The State of California or its officers or agents shall not be responsible for the accuracy or completeness of electronic copies of this plan sheet.*

**PARSONS**
50 FREMONT STREET, SUITE 1500
SAN FRANCISCO, CA 94105

**EARTH TECH**
2101 WEBSTER STREET, SUITE 1000
OAKLAND, CA. 94612-3060

*To get to the Caltrans web site, go to: http://www.dot.ca.gov*

Caltrans Metric

## SHEET NOTES:

(1) CABLES CONTAINED IN CONDUITS ARE INDICATED/IDENTIFIED IN THE "INCLUDED CABLES" COLUMN EITHER BY CABLE NUMBERS OR CABLE SIZES/QUANTITIES. ONLY CABLES WITH ASSIGNED CABLE NUMBERS ARE SHOWN IN CABLE SCHEDULE.

(2) NOT USED

(3) FOR CABLE SCHEDULE SEE ET-171 THROUGH ET-179.

4. 53FX AND 21FX - MEAN 53 mm AND 21 mm DIA HIGH TEMPERATURE LOW SMOKE FLEXIBLE CONDUITS RESPECTIVELY.

## CONDUIT SCHEDULE

| CONDUIT NUMBER | COND. SIZE (mm) | INCLUDED CABLES (1) CABLE NUMBER (OR) PHASE WIRE | NEUT. WIRE | GRND WIRE | FROM | TO | REF. DWG. |
|---|---|---|---|---|---|---|---|
| PWS1-1 | 103 | PGE-L1A,B,C,G (3) TYP | | | PGE LINE 1 PULLBOX PB-01 | 12KV SWGR S1 MTRG COMP | ESS-2 |
| PWS1-2 | 103 | PWS1-T1A,B,C,G | | | 12KV SWGR (S1), 4B | 12KV TIE BKR (S2), 4B | ESS-2 |
| PWS1-3 | 103 | PWS1-F1A,B,C,G | | | 12KV SWGR (S1), 2A | SEC UNIT SUB W4 INC SECT | ESS-3 |
| PWS1-4 | 103 | PWS1-F2A,B,C,G | | | 12KV SWGR (S1), 2B | SEC UNIT SUB W123 INC SECT | ESS-2 |
| PWS1-5 | 103 | EMPTY | | | | | |
| PWS1-6 | 103 | PWS1-F3A,B,C,G | | | 12KV SWGR (S1), 4A | 500KVA TRANSF. T-5 | |
| PWS1-7 | 103 | PWS1-TA,B,C,G | | | 12KV AUX. SECT. | 300KVA TRANSF. T-6 | |
| CWS1-1 | 78 | 12/#10 | - | - | 12KV SWGR (S1), 1A | 12KV SWGR (S2), 1A | |
| CWS1-2 | 53 | | | | 12KV SWGR (S1) PG&E COMP. | SPARE | |
| | | | | | | | |
| PW123 1 | 78 | EMPTY | | | | SPARE | ESS-2 |
| PW123 2 | 78 | PW123-F2A,B,C,G | | | SEC UNIT SUB W123, 2B | EXISTING 225KVA TRANSF. | ET-17 |
| | | | | | | | |
| 4 PW4DP-1 | 103 | PWT5-FAA, B, C, N, G PWT5-FBA, B, C, N, G | | | 500KVA TRANSFORMER T-5 | DISTR. PANEL, W4DP1 | ESS-2 |
| PW4DP-2 | 41 | 3#4 | - | 1#8 | 480V DISTR. PNL W4DP1 | DISTR. PANEL, W4DP2 | ESS-3 |
| PW4DP-3 | 41 | 3#4 | - | 1#8 | 480V DISTR. PNL W4DP1 | 45KVA TRANSFORMER | ESS-3 |
| PW4DP-4 | 41 | 3#4 | - | 1#8 | 480V DISTR. PNL W4DP1 | LTG PANEL, W4IN | ESS-2 |
| PW4DP-5 | 103 | 6#177mm² | - | 2#2 | 480V DISTR. PNL W4DP1 | 480V PWR FOR OMC BLDG | ESS-2 |
| | | | | | | | |
| 4 PWG1-1 | 103 | 3#253mm² | 253 mm² | #1/0 | EMER GEN. WG1 | EMER DISTRI PNL W4EDP | ESS-2 |
| CWG1-1 | 53 | 19#14 | - | | EMER GEN. WG1 | PLC-09 | ESS-2 |
| PW4EDP-1 | 53 | 3#2 | - | 1#8 | EMER DISTRI PNL W4EDP | 100A ATS3 | ET-17 |
| PW4EDP-1A | 78 | | | | 100A ATS3 | DPB1 | |
| PW4EDP-2 | 78 | 3#4/0 | - | 1#4 | EMER DISTRI PNL W4EDP | 100A ATS2/40KVA UPS | |
| PW4EDP-3 | 53 | 3#2 | - | 1#8 | EMER DISTRI PNL W4EDP | 100A ATS1 | |
| PW4EDP-3A | 78 | | - | | 100A ATS1 | W3IN(E) | |
| PW4EDP-4 | 53 | 3#2 | - | 1#8 | EMER DISTRI PNL W4EDP | 100A ATS4/60KVA UPS | ESS-2 |
| PW4EDP-5 | 53 | 3#4/0 | - | 1#2 | EMER DISTRI PNL W4EDP | PWR FOR OMC BLDG | ET-17 |
| | | | | | | | |
| PW4DP3-1 | 41 | 1#2/0 | 1#2/0 | - | 125V DC BATTERY | DC BATTERY/DISC SW | ESS-3 |
| PW4DP3-2 | 41 | 1#2/0 | 1#2/0 | - | DC BATTERY/DISC SW | PANEL NO. W4DP3 | ESS-3 |
| PW4DP3-3 | 41 | 1#2/0 | 1#2/0 | - | BATTERY CHARGER | PANEL NO. W4DP3 | ESS-3 |
| | | | | | | | |
| | | | | | | | |
| PW41-F1 | 53FX | PW41-P | | | PW41-4 | JET FAN #1 MTR TB | ET-124 |
| PW41-F2 | 21FX | 2#12 | - | 1#12 | PW41-5 | JET FAN #1 MTR TB | ET-124 |
| PW41-1 | 53 | PW41-P | | | MV CONTR. (W4), MVS-1 | MV VAULT MV-1 | ESS-2 |
| PW41-2 | 78 | PW41-P, PW42-P | | | MV VAULT MV-1 | MV VAULT MV-2 | ET-31 |
| PW41-3 | 78 | PW41-P, PW42-P | | | MV VAULT MV-2 | J-BOX P1-01 | ET-31 |
| PW41-4 | 53 | PW41-P | | | J-BOX P1-01 | PW41-F1 | ET-124 |
| PW41-5 | | 2#12 | - | 1#12 | J-BOX P2-01 | PW41-F2 | ET-124 |
| PW41-6 | 41 | 24#12 | - | 12#12 | MV CONTR W4 INC SECTION | J-BOX P2-01 | ESS-2 |
| PW41-6A | 41 | 20#12 | - | 10#12 | J-BOX P2-01 | J-BOX P2-02 | ET-124 |
| PW41-6B | 27 | 16#12 | - | 8#12 | J-BOX P2-02 | J-BOX P2-03 | |
| PW41-6C | 27 | 12#12 | - | 6#12 | J-BOX P2-03 | J-BOX P2-04 | |
| PW41-6D | 21 | 8#12 | - | 4#12 | J-BOX P2-04 | J-BOX P2-05 | |
| PW41-6E | 21 | 4#12 | - | 2#12 | J-BOX P2-05 | J-BOX P2-06 | |
| PW41-S | 78 | EMPTY | | | MV VAULT MV-1 | MV VAULT MV-2 | ET-31 |
| | | | | | | | |
| PW42-F1 | 53FX | PW42-P | | | PW42-2 | JET FAN #2 MTR TB | ET-124 |
| PW42-F2 | 21FX | 2#12 | - | 1#12 | PW42-3 | JET FAN #2 MTR TB | ET-124 |
| PW42-1 | 53 | PW42-P (3) TYP | | | MV CONTR. (W4), MVS-2 | MV VAULT M-1 | ESS-2 |
| PW42-2 | 53 | PW42-P | | | J-BOX P1-01 | PW42-F1 | ET-124 |
| PW42-3 | 21 | 2#12 | - | 1#12 | J-BOX P2-01 | PW42-F2 | ET-124 |
| | | | | | | | |

## CONDUIT SCHEDULE

| CONDUIT NUMBER | COND. SIZE (mm) | INCLUDED CABLES (1) CABLE NUMBER (OR) PHASE WIRE | NEUT. WIRE | GRND WIRE | FROM | TO | REF. DWG. |
|---|---|---|---|---|---|---|---|
| PW43-F1 | 53FX | PW43-P | | | PW43-5 | JET FAN #3 MTR TB | ET-124 |
| PW43-F2 | 21FX | 2#12 | - | 1#12 | PW43-6 | JET FAN #3 MTR TB | ET-124 |
| PW43-1 | 53 | PW43-P (3) TYP | | | MV CONTR. (W4), MVS-3 | MV VAULT MV-1 | ESS-2 |
| PW43-2 | 78 | PW43-P, PW44-P | | | MV VAULT MV-1 | MV VAULT MV-2 | ET-31 |
| PW43-3 | 78 | PW43-P, PW44-P | | | MV VAULT MV-2 | MV VAULT MV-3 | ET-31 |
| PW43-4 | 78 | PW43-P, PW44-P | | | MV VAULT MV-3 | J-BOX P1-02 | ET-32 |
| PW43-5 | 53 | PW43-P | | | J-BOX P1-02 | PW43-F1 | ET-124 |
| PW43-6 | 21 | 2#12 | - | 1#12 | J-BOX P2-02 | PW43-F2 | ET-124 |
| PW43-S | 78 | EMPTY | | | MV VAULT MV-2 | MV VAULT MV-3 | ET-31 |
| | | | | | | | |
| PW44-F1 | 53FX | PW44-P | | | PW44-2 | JET FAN #4 MTR TB | ET-124 |
| PW44-F2 | 21FX | 2#12 | - | 1#12 | PW44-3 | JET FAN #4 MTR TB | ET-124 |
| PW44-1 | 53 | PW44-P | | | MV CONT (W4), MVS-4 | MV VAULT MV-1 | ESS-2 |
| PW44-2 | 53 | PW44-P | | | J-BOX P1-02 | PW44-F1 | ET-124 |
| PW44-3 | 21 | 2#12 | - | 1#12 | J-BOX P2-03 | PW44-F2 | ET-124 |
| | | | | | | | |
| PW45-F1 | 53FX | PW45-P | | | PW45-6 | JET FAN #5 MTR TB | ET-124 |
| PW45-F2 | 21FX | 2#12 | - | 1#12 | PW45-7 | JET FAN #5 MTR TB | ET-124 |
| PW45-1 | 53 | PW45-P | | | MV CONTR (W4), MVS-5 | MV VAULT MV-1 | ESS-2 |
| PW45-2 | 78 | PW45-P, PW46-P | | | MV VAULT MV-1 | MV VAULT MV-2 | ET-31 |
| PW45-3 | 78 | PW45-P, PW46-P | | | MV VAULT MV-2 | MV VAULT MV-3 | ET-31 |
| PW45-4 | 78 | PW45-P, PW46-P | | | MV VAULT MV-3 | MV VAULT MV-4 | ET-32 |
| PW45-5 | 78 | PW45-P, PW46-P | | | MV VAULT MV-4 | J-BOX P1-03 | ET-33 |
| PW45-6 | 53 | PW45-P | | | J-BOX P1-03 | PW45-F1 | ET-124 |
| PW45-7 | 21 | 2#12 | - | 1#12 | J-BOX P2-03 | PW45-F2 | ET-124 |
| PW45-S | 78 | EMPTY | | | MV VAULT MV-3 | MV VAULT MV-4 | ET-32 |
| | | | | | | | |
| PW46-F1 | 53FX | PW46-P | | | PW46-2 | JET FAN #6 MTR TB | ET-124 |
| PW46-F2 | 21FX | 2#12 | - | 1#12 | PW46-3 | JET FAN #6 MTR TB | ET-124 |
| PW46-1 | 53 | PW46-P | | | MV CONTR (W4), MVS-6 | MV VAULT MV-1 | ESS-2 |
| PW46-2 | 53 | PW46-P | | | J-BOX P1-03 | PW46-F1 | ET-124 |
| PW46-3 | 21 | 2#12 | - | 1#12 | J-BOX P2-03 | PW46-F2 | ET-124 |
| | | | | | | | |
| PW47-F1 | 53FX | PW47-P | | | PW47-7 | JET FAN #7 MTR TB | ET-124 |
| PW47-F2 | 21FX | 2#12 | - | 1#12 | PW47-8 | JET FAN #7 MTR TB | ET-124 |
| PW47-1 | 53 | PW47-P | | | MV CONTR (W4), MVS-7 | MV VAULT MV-1 | ESS-2 |
| PW47-2 | 78 | PW47-P, PW48-P (3) TYP | | | MV VAULT MV-1 | MV VAULT MV-2 | ET-31 |
| PW47-3 | 78 | PW47-P, PW48-P | | | MV VAULT MV-2 | MV VAULT MV-3 | ET-31 |
| PW47-4 | 78 | PW47-P, PW48-P | | | MV VAULT MV-3 | MV VAULT MV-4 | ET-32 |
| | | | | | | | |

4 **REVISED PER ADDENDUM No. 4 DATED SEPTEMBER 3, 2009**

THE CONTRACTOR SHALL VERIFY ALL CONTROLLING FIELD DIMENSIONS BEFORE ORDERING OR FABRICATING ANY MATERIAL

ALL DIMENSIONS ARE IN MILLIMETERS UNLESS OTHERWISE SHOWN

**PORTAL 1**
**CONDUIT SCHEDULE No. 1**
NO SCALE

**ET-181**

| REVISED BY | DATE | DATE REVISED |
|---|---|---|
| R. ALFONSO/ L. TFURUNG | 01/08 | |

| CALCULATED/ DESIGNED BY | CHECKED BY |
|---|---|
| D. PAUL/ R. BELARDO | |

CONSULTANT FUNCTIONAL SUPERVISOR
NADER SHAHCHERAGHI

STATE OF CALIFORNIA - DEPARTMENT OF TRANSPORTATION
Caltrans

429491et181.add

LAST REVISION 00-00-00 | DATE PLOTTED => 01-SEP-2009 | TIME PLOTTED => 11:07

RELATIVE BORDER SCALE IS IN MILLIMETERS 0 20 40 60 80

USERNAME => trmikesl
DGN FILE => 429491et181.add

EA 294911

| DIST | COUNTY | ROUTE | KILOMETER POST TOTAL PROJECT | SHEET No. | TOTAL SHEETS |
|---|---|---|---|---|---|
| 04 | CC,Ala | 24 | 8.2/10.0, 0.0/2.7 | 1226 | 1435 |

Dev Paul 07-01-08
REGISTERED ELECTRICAL ENGINEER

1-5-09
PLANS APPROVAL DATE

REGISTERED PROFESSIONAL ENGINEER DEV PAUL No. E8856 Exp. 03-31-10 ELECT STATE OF CALIFORNIA

*The State of California or its officers or agents shall not be responsible for the accuracy or completeness of electronic copies of this plan sheet.*

**PARSONS**
50 FREMONT STREET, SUITE 1500
SAN FRANCISCO, CA 94105

**EARTH TECH**
2101 WEBSTER STREET, SUITE 1000
OAKLAND, CA. 94612-3060

*To get to the Caltrans web site, go to: http://www.dot.ca.gov*

## SHEET NOTES:

1. CABLES CONTAINED IN CONDUITS ARE INDICATED/IDENTIFIED IN THE "INCLUDED CABLES" COLUMN EITHER BY CABLE NUMBERS OR CABLE SIZES/QUANTITIES. ONLY CABLES WITH ASSIGNED CABLE NUMBERS ARE SHOWN IN CABLE SCHEDULE.
2. NOT USED.
3. FOR CABLE SCHEDULE SEE ET-171 THROUGH ET-179.

## CONDUIT SCHEDULE

| CONDUIT NUMBER | COND. SIZE (mm) | INCLUDED CABLES (1) CABLE NUMBER (OR) PHASE WIRE | NEUT. WIRE | GRND WIRE | FROM | TO | REF. DWG. |
|---|---|---|---|---|---|---|---|
| PES2-1 | 103 | PGE - L2A, B, C, G (3) TYP | | | PGE LINE 2 PULL BOX PB-02 | 12kV SWGR (S2) UTIL MTRS COMPT | ESS-22 |
| | | | | | | | |
| PES2-3 | 103 | PES2 - F1A, B, C, G | | | 12KV SWGR (S2), 2A | SEC UNIT SUBST. E4 | ESS-23 |
| PES2-4 | 103 | PES2 - F2A, B, C, G | | | 12KV SWGR (S2), 2B | SEC UNIT SUBST. E1234 | ESS-23 |
| PES2-5 | 78 | EMPTY | | | STUB-UP | STUB-OUT | ESS-22 |
| PES2-6 | 103 | EMPTY | | | HV VAULT HV-2 | STUB-UP | ESS-22 |
| PES2-7 | 78 | EMPTY | | | 12kV SWGR (S2), 4B | STUB-UP | ESS-22 |
| | | | | | | | |
| CES2-1 | 78 | 12#10 | | | 12KV SWGR (S2), 1A | 12KV SWGR (S1), 1A | ESS-22 |
| CES2-2 | 53 | EMPTY | | | 12kV SWGR (S2), 1A UTIL MTRG COMPT | STUB-OUT | ESS-22 |
| | | | | | | | |
| PES2-2A | 78 | PE4-FA | | | 4.16KV BKR 52-M (E4) | MV CONTR (E4) INC SECT | ESS-23 |
| PES2-2B | 78 | PE4-FB | | | 4.16KV BKR 52-M (E4) | MV CONTR (E4) INC SECT | ESS-23 |
| | | | | | | | |
| PE1234-1A | 78 | PE1234-F1AA, B, C, G | | | SEC UNIT SUB E1234, SECT 1 | DISTR. PANEL, E4DP1 | ESS-22 |
| PE1234-1B | 78 | PE1234-F1BA, B, C, G | | | SEC UNIT SUB E1234, SECT 1 | DISTR. PANEL, E4DP1 | ESS-22 |
| PE1234-2A | 103 | PE1234-F3AA, B, C, G | | | SEC UNIT SUB E1234, SECT 2 | LV VAULT, LV-6 | ESS-22 |
| PE1234-2A1 | | PE1234-F3AA, B, C, G | | | LV VAULT, LV-6 | E4DP4 (N) | ET-19 |
| PE1234-3 | | EMPTY | | | SEC UNIT SUB E1234, SECT 1 | LV VAULT, LV-6 | ESS-22 |
| PE1234-2B | | PE1234-F3BA, B, C, G | | | SEC UNIT SUB E1234, SECT 2 | LV VAULT, LV-6 | ESS-22 |
| PE1234-4 | | PE1234-FA, B, C, G | | | SEC UNIT SUB E1234, SECT 3 | 600A ENCLOSED CKT BRK | ET-24 |
| PE1234-2C | | PE1234-F3CA, B, C, G | | | SEC UNIT SUB E1234, SECT 2 | LV VAULT, LV-6 | ESS-22 |
| PE1234-2C1 | | PE1234-F3CA, B, C, G | | | LV VAULT, LV-6 | E4DP4 (N) | ET-19 |
| PE1234-4A | | PE1234-F4A1, B1, C1, G1 | | | 600A ENCLOSED CKT BRK | E3TH (E) | ET-24 |
| PE1234-2B1 | | PE1234-F3BA, B, C, G | | | LV VAULT, LV-6 | E4DP4 (N) | ET-19 |
| PE4DP-1 | 41 | 3#4 | | 1#8 | 480V DISTR. PNL E4DP1 | DISTR. PANEL, E4DP2 | ET-23 |
| PE4DP-2 | 27 | 3#6 | | 1#8 | 480V DISTR. PNL E4DP1 | LTG PNL, E4IN | |
| PE4DP-3 | 27 | 3#6 | | 1#8 | 480V DISTR. PNL E4DP1 | 30KVA TRANSFORMER T-10 | |
| PE4DP-4 | 78 | 253mm² | | 1#1/0 | 480V DISTR. PNL E4DP1 | LTG PANEL, E4TH | |
| | | | | | | | |
| 4 PEG1-1 | 103 | PEG1-A, B, C, N, G (3) TYP | | | EMER GEN. EG1 | LV VAULT, LV-6 | ET-22 |
| PEG1-1A | 78 | PEG1-A, B, C, N, G | | | LV VAULT, LV-6 | EMER DISTRI PNL E4EDP | ET-19 |
| CEG1-1 | 53 | 12#14 | | | EMER GEN. EG1 | PLC 10 | ET-22 |
| PE4EDP-1 | 53 | 3#3/0 | | 1#4 | E4EDP | ATS6 | ET-19 |
| PE4EDP-2 | 53 | 3#2 | | 1#8 | E4EDP | ATS5 | ET-19 |
| | | | | | | | |
| PE4S-1 | 27 | 1#10 | 1#10 | 1#10 | E4LP2 | WL-5 THRU 7 EX-12 THRU 14 | ET-127 |
| PE4S-1A | 27 | 1#10 | 1#10 | 1#10 | PB-E1 | P3-07 | |
| PE4S-1B | 27 | 1#10 | 1#10 | 1#10 | P3-07 | P3-06 | |
| PE4S-1C | 27 | 1#10 | 1#10 | 1#10 | P3-06 | P3-05 | |
| | | | | | | | |
| PE4S-3 | 27 | 1#12 | 1#12 | 1#12 | P3-05,06,07/J-BOX | EX-5 THRU 7 | ET-127 |
| PE4S-4 | 27 | 1#12 | 1#12 | 1#12 | P3-05,06,07/J-BOX | WL-5 THRU 7 | ET-127 |
| | | | | | | | |
| PE4S-5 | 27 | 1#10 | 1#10 | 1#10 | P3-07 | J-BOX | ET-127 |
| PE4S-5A | 27 | 1#10 | 1#10 | 1#10 | P3-06 | J-BOX | |
| PE4S-5B | 27 | 1#10 | 1#10 | 1#10 | P3-05 | J-BOX | |
| | | | | | | | |
| PE1234-2A2 | 103 | PE1234-F3AA1, B1, C1, G | | | E4EDP (N) | DPD2 (E) | ET-19 |
| PE1234-2B2 | 103 | PE1234-F3BA1, B1, C1, G | | | E4EDP (N) | DPD2 (E) | ET-19 |
| PE1234-2C2 | 103 | PE1234-F3CA1, B1, C1, G | | | E4EDP (N) | DPD2 (E) | ET-19 |

## CONDUIT SCHEDULE

| CONDUIT NUMBER | COND. SIZE (mm) | INCLUDED CABLES (1) CABLE NUMBER (OR) PHASE WIRE | NEUT. WIRE | GRND WIRE | FROM | TO | REF. DWG. |
|---|---|---|---|---|---|---|---|
| PE4S-7 | 41 | 3#10 3#4 | | 3#10 | UPS-E4S | FIP-5, FIP-6 & FIP-7 DIST. PNL E4DP5 & E4DP6 | ET-127 |
| PE4S-7A | 41 | 3#10 3#4 | | 3#10 | PB-E2 | P4-07 | |
| PE4S-7B | 41 | 3#10 3#4 | | 3#10 | P4-07 | P4-06 | |
| PE4S-7C | 41 | 3#10 3#4 | | 3#10 | P4-06 | P4-05 | |
| | | | | | | | |
| PE4S-8 | 27 | 6#12 | | 1#12 | P4-07 | FIP-7 | ET-127 |
| PE4S-8A | 27 | 6#12 | | 1#12 | P4-06 | FIP-6 | |
| PE4S-9 | | 3#12 | | 1#12 | P4-05 | FIP-5 | |
| PE4S-10 | 53 | 3 #4 3 #6 2#12 | 1#2 1#1/0 1#2 | | E4LP2 | PS-19 | ET-329 |
| PE4S-10A | 53 | 3 #4 3 #6 2#12 | 1#1/0 1#2 1#1/0 | | PS-19 | PS-18 | ET-329 |
| PE4S-10B | 53 | 3 #4 3 #6 2#12 | 1#2 1#1/0 1#2 | | PS-18 | PS-17 | ET-328 |
| PE4S-10C | 53 | 3 #4 3 #6 2#12 | 1#1/0 1#2 1#1/0 | | PS-17 | PS-16 | ET-328 |
| PE4S-10D | 53 | 3 #4 3 #6 2#12 | 1#2 1#1/0 1#2 | | PS-16 | PS-15 | ET-327 |
| PE4S-10E | 53 | 3 #4 3 #6 2#12 | 1#1/0 1#2 1#1/0 | | PS-15 | PS-14 | ET-327 |
| PE4S-10F | 53 | 3 #4 3 #6 2#12 | | | PS-14 | PS-13 | ET-326 |
| PE4S-10G | 53 | 3 #4 3 #6 2#12 | | | PS-13 | PS-12 | ET-326 |
| PE4S-10H | 53 | 3 #4 3 #6 2#12 | | | PS-12 | PS-11 | ET-325 |

**4 REVISED PER ADDENDUM No. 4 DATED SEPTEMBER 3, 2009**

THE CONTRACTOR SHALL VERIFY ALL CONTROLLING FIELD DIMENSIONS BEFORE ORDERING OR FABRICATING ANY MATERIAL

ALL DIMENSIONS ARE IN MILLIMETERS UNLESS OTHERWISE SHOWN

# PORTAL 2
## CONDUIT SCHEDULE No. 1
NO SCALE

ET-183

| REVISED BY | DATE | DATE REVISED |
|---|---|---|
| R. ALFONSO/ L. TFURUNG | 01/08 | |
| D. PAUL/ R. BELARDO | | |

CALCULATED/ DESIGNED BY
CHECKED BY

CONSULTANT FUNCTIONAL SUPERVISOR
NADER SHAHCHERAGHI

STATE OF CALIFORNIA - DEPARTMENT OF TRANSPORTATION
Caltrans

429491et183.dgn

LAST REVISION 00-00-00
DATE PLOTTED => 01-SEP-2009
TIME PLOTTED => 11:07

RELATIVE BORDER SCALE IS IN MILLIMETERS 0 20 40 60 80

USERNAME => trmikesl
DGN FILE => 429491et183.dgn

EA 294911

| DIST | COUNTY | ROUTE | KILOMETER POST TOTAL PROJECT | SHEET No. | TOTAL SHEETS |
|---|---|---|---|---|---|
| 04 | Ala,CC | 24 | 8.2/10.0, 0.0/2.7 | 1229 | 1435 |

Dev Paul 07-01-08
REGISTERED ELECTRICAL ENGINEER

1-5-09
PLANS APPROVAL DATE

REGISTERED PROFESSIONAL ENGINEER DEV PAUL No. E8856 Exp. 03-31-10 ELECT STATE OF CALIFORNIA

*The State of California or its officers or agents shall not be responsible for the accuracy or completeness of electronic copies of this plan sheet.*


**PARSONS**
50 FREMONT STREET, SUITE 1500
SAN FRANCISCO, CA 94105

**EARTH TECH**
2101 WEBSTER STREET, SUITE 1000
OAKLAND, CA. 94612-3060


*To get to the Caltrans web site, go to: http://www.dot.ca.gov*

4

## PANEL NO. W4IN

LOCATION: SUBSTA. BLDG 1 | SECTION: | SERVICE: NORMAL POWER | BUS: 480/277 VOLTS ~~480 VOLTS~~ 3 PH, 4W, 225 AMP | ☒ MAIN C.B. 200 AMP ☐ MAIN LUGS ONLY

FULLY RATED SC RATING 35,000 RMS SYM AMPS | ☐ FEED THRU LUGS ☒ NEUTRAL ☐ SUSE ☐ FLUSH MNT. ☒ TOP FEED | ☐ SUBFEED LUGS ☒ GND. BUS ☐ I.G. BUS ☒ SURFACE MNT. ☐ BOT. FEED

| LOAD TYPE | CIRCUIT DESCRIPTION | CONN KVA | C.B. AMP | C.B. POLE | C.B. CKT | PH | C.B. CKT | C.B. POLE | C.B. AMP | CONN KVA | CIRCUIT DESCRIPTION | LOAD TYPE |
|---|---|---|---|---|---|---|---|---|---|---|---|---|
| L | TUNNEL LTG CKT 9X (N) | 2.21 | 20 | 3 | 1 | A | 2 | 3 | 20 | 2.31 | TUNNEL LTG CKT 9X (S) | L |
| L | TUNNEL LTG CKT 9X (N) | 2.31 | - | - | 3 | B | 4 | - | - | 2.21 | TUNNEL LTG CKT 9X (S) | L |
| L | TUNNEL LTG CKT 9X (N) | 2.21 | - | - | 5 | C | 6 | - | - | 2.21 | TUNNEL LTG CKT 9X (S) | L |
| L | TUNNEL LTG CKT 9Y (N) | 2.21 | 20 | 3 | 7 | A | 8 | 3 | 20 | 2.31 | TUNNEL LTG CKT 9Y (S) | L |
| L | TUNNEL LTG CKT 9Y (N) | 2.31 | - | - | 9 | B | 10 | - | - | 2.21 | TUNNEL LTG CKT 9Y (S) | L |
| L | TUNNEL LTG CKT 9Y (N) | 2.21 | - | - | 11 | C | 12 | - | - | 2.21 | TUNNEL LTG CKT 9Y (S) | L |
| L | TUNNEL LTG CKT 9Z (N) | 2.21 | 20 | 3 | 13 | A | 14 | 3 | 20 | 2.31 | TUNNEL LTG CKT 9Z (S) | L |
| L | TUNNEL LTG CKT 9Z (N) | 2.31 | - | - | 15 | B | 16 | - | - | 2.21 | TUNNEL LTG CKT 9Z (S) | L |
| L | TUNNEL LTG CKT 9Z (N) | 2.21 | - | - | 17 | C | 18 | - | - | 2.21 | TUNNEL LTG CKT 9Z (S) | L |
| L | TUNNEL LTG CKT 9A (N) | 3.12 | 20 | 3 | 19 | A | 20 | 3 | 20 | 2.86 | TUNNEL LTG CKT 9A (S) | L |
| L | TUNNEL LTG CKT 9A (N) | 3.12 | - | - | 21 | B | 22 | - | - | 2.86 | TUNNEL LTG CKT 9A (S) | L |
| L | TUNNEL LTG CKT 9A (N) | 3.12 | - | - | 23 | C | 24 | - | - | 3.12 | TUNNEL LTG CKT 9A (S) | L |
| O | UPS W4S (100A ATS) | 19.64 | 70 | 3 | 25 | A | 26 | 2 | 70 | 0.00 | SPARE | |
| O | - | 19.37 | - | - | 27 | B | 28 | - | - | 0.00 | ↓ | |
| O | - | 17.70 | - | - | 29 | C | 30 | 1 | 20 | 0.00 | SPARE | |
| | | | | | | | | | | 0.00 | ↓ | |
| L | PORTAL 1 OUTSIDE LTG | 0.50 | 20 | 3 | 31 | A | 32 | 1 | 20 | ~~0.20~~ | ~~TOS FLASHING BEACON(DWG E-3)~~ | ~~L~~ |
| L | (SEE DWG E-3 & E-4) | 0.50 | - | - | 33 | B | 34 | 2 | 20 | 0.50 | BORE 4 TOS | O |
| L | VIA LTG CONTACTOR (ESS-4) | 0.50 | - | - | 35 | C | 36 | - | - | 0.50 | BORE 4 TOS | O |
| | SPACE | | - | - | 37 | A | 38 | - | - | | SPACE | |
| | | | - | - | 39 | B | 40 | - | - | | | |
| | | | - | - | 41 | C | 42 | - | - | | | |

TOTAL RECEPTACLE (R) LOAD @ 100% FOR FIRST 10,000 VA & 50% FOR REMAINDER 0.00 KVA
TOTAL LIGHTING (L) LOAD 60.28 KVA — LIGHTING LOAD @ 25% 15.07 KVA
TOTAL MOTOR (M) LOAD: 0.00 KVA — LARGEST MOTOR @ 25% 0.00 KVA
TOTAL OTHER (O) LOAD 57.71 KVA

| TOTAL CONNECTED LOAD: | CONNECTED KVA TOTAL/PHASE | A | B | C | MINIMUM FEEDER CAPACITY | |
|---|---|---|---|---|---|---|
| 117.99 KVA | | 39.88 | 39.91 | 38.20 | 133.06 KVA | 160.24 AMP |

4

## PANEL NO.UPS-W4S

LOCATION: SUBSTA. BLDG 1 | SECTION: | SERVICE: EMERGENCY POWER | BUS: 480/277 VOLTS ~~480 VOLTS~~ 3 PH, 4W, 225 AMP | ☒ MAIN C.B. 100 AMP ☐ MAIN LUGS ONLY

FULLY RATED SC RATING 35,000 RMS SYM AMPS | ☐ FEED THRU LUGS ☒ NEUTRAL ☐ SUSE ☐ FLUSH MNT. ☒ TOP FEED | ☐ SUBFEED LUGS ☒ GND. BUS ☐ I.G. BUS ☒ SURFACE MNT. ☐ BOT. FEED

| LOAD TYPE | CIRCUIT DESCRIPTION | CONN KVA | C.B. AMP | C.B. POLE | C.B. CKT | PH | C.B. CKT | C.B. POLE | C.B. AMP | CONN KVA | CIRCUIT DESCRIPTION | LOAD TYPE |
|---|---|---|---|---|---|---|---|---|---|---|---|---|
| L | TUN LTG CKT 9XU, YU, ZU (N) | 2.21 | 20 | 3 | 1 | A | 2 | 3 | 20 | 2.31 | TUN LTG CKT 9XU, YU, ZU (S) | L |
| L | TUN LTG CKT 9XU, YU, ZU (N) | 2.31 | - | - | 3 | B | 4 | - | - | 2.21 | TUN LTG CKT 9XU, YU, ZU (S) | L |
| L | TUN LTG CKT 9XU, YU, ZU (N) | 2.21 | - | - | 5 | C | 6 | - | - | 2.21 | TUN LTG CKT 9XU, YU, ZU (S) | L |
| O | CONTACTOR PANEL #9 | 1.00 | 20 | 2 | 7 | A | 8 | 3 | 30 | 3.42 | 15KVA, 480- 208Y/120V | O |
| O | - | 1.00 | - | - | 9 | B | 10 | - | - | 3.80 | TRANSFORMER/W4LP2 | O |
| | SPARE | | 20 | - | 11 | C | 12 | - | - | 3.38 | | O |
| O | FIELD INSTR. PNL (FIP 1-4) | 3.00 | 20 | 3 | 13 | A | 14 | 3 | 70 | 7.70 | POWER DISTRIBUTION PANELS | O |
| O | | 3.00 | - | - | 15 | B | 16 | - | - | 6.45 | W4DP4, W4DP5 & W4DP6 | O |
| O | | 3.00 | - | - | 17 | C | 18 | - | - | 6.30 | FOR TOS | O |
| | SPARE | 0.00 | 20 | 1 | 19 | A | 20 | - | - | | | O |
| O | AM/FM RADIO | 0.60 | 20 | 1 | 21 | B | 22 | - | - | | SPACE | O |
| O | TWO-WAY RADIO | 0.60 | 20 | 1 | 23 | C | 24 | - | - | | | O |
| | | | | | | | | | | | | |
| | | | | | | | | | | | | |
| | | | | | | | | | | | | |

TOTAL RECEPTACLE (R) LOAD @ 100% FOR FIRST 10,000 VA & 50% FOR REMAINDER 0.00 KVA
TOTAL LIGHTING (L) LOAD 13.46 KVA — LIGHTING LOAD @ 25% 3.37 KVA
TOTAL MOTOR (M) LOAD: 0.00 KVA — LARGEST MOTOR @ 25% 00.0 KVA
TOTAL OTHER (O) LOAD 42.75 KVA

| TOTAL CONNECTED LOAD: | CONNECTED KVA TOTAL/PHASE | A | B | C | MINIMUM FEEDER CAPACITY | |
|---|---|---|---|---|---|---|
| 56.71 KVA | | 19.64 | 19.37 | 17.70 | 59.58 KVA | 71.75 AMP |

THE CONTRACTOR SHALL VERIFY ALL CONTROLLING FIELD DIMENSIONS BEFORE ORDERING OR FABRICATING ANY MATERIAL

## PANEL NO. W4LP2

LOCATION: SUBSTA. BLDG 1 | SECTION: | SERVICE: EMERGENCY POWER | BUS: 208/120VOLTS 3 PH, 4W, 100 AMP | ☒ MAIN C.B. 60 AMP ☐ MAIN LUGS ONLY

FULLY RATED SC RATING 10,000 RMS SYM AMPS | ☐ FEED THRU LUGS ☒ NEUTRAL ☐ SUSE ☐ FLUSH MNT. ☒ TOP FEED | ☐ SUBFEED LUGS ☒ GND. BUS ☐ I.G. BUS ☒ SURFACE MNT. ☐ BOT. FEED

| LOAD TYPE | CIRCUIT DESCRIPTION | CONN KVA | C.B. AMP | C.B. POLE | C.B. CKT | PH | C.B. CKT | C.B. POLE | C.B. AMP | CONN KVA | CIRCUIT DESCRIPTION | LOAD TYPE |
|---|---|---|---|---|---|---|---|---|---|---|---|---|
| O | TUN 4 CALL BOX CAUTION SIGN | 0.65 | 20 | 3 | 1 | A | 2 | 1 | 20 | 1.20 | TUN 4 CALL BOX CONTROL | O |
| | | 0.65 | | - | 3 | B | 4 | 1 | 20 | 1.20 | TUNNEL 4 EMS #4 | O |
| | | 0.65 | | - | 5 | C | 6 | 1 | 20 | 0.63 | LTG - SUBSTA. BLDG 1 | L |
| | SPARE | | 20 | 1 | 7 | A | 8 | 1 | 20 | | SPARE | |
| O | TOS CABINET KWP-1 | 1.70 | 30 | 1 | 9 | B | 10 | 1 | 20 | | SPARE | |
| O | TOS CABINET KWPG-1 | 0.60 | 20 | 1 | 11 | C | 12 | 1 | 20 | 0.30 | FACP | O |
| | SPARE | | 20 | 1 | 13 | A | 14 | 1 | 20 | | SPARE | |
| | | | 20 | 1 | 15 | B | 16 | 1 | 20 | | SPARE | |
| | | | 20 | 1 | 17 | C | 18 | 1 | 20 | 0.50 | SWGR S1 SPACE HTR | O |
| L | WHITE & EXIT LIGHTS | 0.37 | 20 | 1 | 19 | A | 20 | 3 | 20 | 1.20 | TUNNEL 4 CALL BOX SIGN | O |
| O | CONTACTOR PANEL #9 | 0.75 | 20 | 1 | 21 | B | 22 | - | | 1.20 | | O |
| O | TUN 4 CAUTION SIGN CONTROL | 0.10 | 20 | 1 | 23 | C | 24 | - | | 1.20 | | O |
| | SPACE | | | | | | | | | | SPACE | |
| | | | | | | | | | | | | |
| | | | | | | | | | | | | |

TOTAL RECEPTACLE (R) LOAD @ 100% FOR FIRST 10,000 VA & 50% FOR REMAINDER 0.00 KVA
TOTAL LIGHTING (L) LOAD 1.00 KVA — LIGHTING LOAD @ 25% 0.25 KVA
TOTAL MOTOR (M) LOAD: 0.00 KVA — LARGEST MOTOR @ 25% 0.00 KVA
TOTAL OTHER (O) LOAD 11.90 KVA

| TOTAL CONNECTED LOAD: | CONNECTED KVA TOTAL/PHASE | A | B | C | MINIMUM FEEDER CAPACITY | |
|---|---|---|---|---|---|---|
| 12.90 KVA | | 3.42 | 5.50 | 3.98 | 13.15 KVA | 36.54 AMP |

4 **REVISED PER ADDENDUM No. 4 DATED SEPTEMBER 3, 2009**

ALL DIMENSIONS ARE IN MILLIMETERS UNLESS OTHERWISE SHOWN

# DETAILS
## PORTAL 1
## PANEL SCHEDULE NO. 1
NO SCALE

**ET-191**

| REVISED BY | DATE REVISED | DATE 01/08 | R. ALFONSO/ L. IFURUNG | D. PAUL/ R. BELARDO | CALCULATED/ DESIGNED BY | CHECKED BY | CONSULTANT FUNCTIONAL SUPERVISOR | NADER SHAHCHERAGHI |
|---|---|---|---|---|---|---|---|---|

STATE OF CALIFORNIA - DEPARTMENT OF TRANSPORTATION
Caltrans

429491et191.add

LAST REVISION 00-00-00 | DATE PLOTTED => 01-SEP-2009 | TIME PLOTTED => 12:46

RELATIVE BORDER SCALE IS IN MILLIMETERS 0 20 40 60 80

USERNAME => trmikesl
DGN FILE => 429491et191.add

EA 294911

| DIST | COUNTY | ROUTE | KILOMETER POST TOTAL PROJECT | SHEET No. | TOTAL SHEETS |
|---|---|---|---|---|---|
| 04 | Ala,CC | 24 | 8.2/10.0, 0.0/2.7 | 1230 | 1435 |

Dev Paul 07-01-08
REGISTERED ELECTRICAL ENGINEER

1-5-09
PLANS APPROVAL DATE

REGISTERED PROFESSIONAL ENGINEER — DEV PAUL No. E8856 Exp. 03-31-10 ELECT — STATE OF CALIFORNIA

*The State of California or its officers or agents shall not be responsible for the accuracy or completeness of electronic copies of this plan sheet.*


**PARSONS**
50 FREMONT STREET, SUITE 1500
SAN FRANCISCO, CA 94105

**EARTH TECH**
2101 WEBSTER STREET, SUITE 1000
OAKLAND, CA. 94612-3060


Caltrans Metric

4

## PANEL No. W4DP1

SECTION:
LOCATION: SUBSTA. BLDG 1
SERVICE: NORMAL POWER
BUS: 480/277 ~~480~~ VOLTS, 3 PH, 3W, 600 AMP
☒ MAIN C.B. 600 AMP
☐ MAIN LUGS ONLY
FULLY RATED SC RATING 35,000 RMS SYM AMPS
☐ FEED THRU LUGS ☐ SUBFEED LUGS ☒ NEUTRAL ☒ GND. BUS ☐ S.U.S.E. ☐ I.G. BUS ☐ FLUSH MNT. ☒ SURFACE MNT. ☐ TOP FEED ☐ BOT. FEED

| LOAD TYPE | CIRCUIT DESCRIPTION | CONN KVA | C.B. AMP | C.B. POLE | C.B. CKT | PH | C.B. CKT | C.B. POLE | C.B. AMP | CONN KVA | CIRCUIT DESCRIPTION | LOAD TYPE |
|---|---|---|---|---|---|---|---|---|---|---|---|---|
| | SPARE | 00.0 | 150 | 3 | 1 | A | 2 | 3 | 200 | 39.9 | PANEL W4IN | L |
| | | 00.0 | - | - | 3 | B | 4 | - | - | 39.9 | | |
| | | 00.0 | - | - | 5 | C | 6 | - | - | 38.2 | | |
| O | 45KVA, 3PH, 480-208/120V (PANEL W4LP1) | 6.02 | 70 | 3 | 7 | A | 8 | 3 | 70 | 1.9 | PANEL W4DP2 | O |
| | | 9.13 | - | - | 9 | B | 10 | - | - | 1.9 | | |
| | | 8,15 | - | - | 11 | C | 12 | - | - | 1.9 | | |
| O | NORMAL FEED TO OMC BUILDING | 66.0 | 400 | 3 | 13 | A | 14 | 3 | 70 | 00.0 | SPARE | |
| | | 66.0 | - | - | 15 | B | 16 | - | - | 00.0 | | |
| | | 66.0 | - | - | 17 | C | 18 | - | - | 00.0 | | |
| | SPARE | 00.0 | 60 | 3 | 19 | A | 20 | 3 | 70 | 00.0 | SPARE | |
| | | 00.0 | - | - | 21 | B | 22 | - | - | 00.0 | | |
| | | 00.0 | - | - | 23 | C | 24 | - | - | 00.0 | | |
| | SPACE | | | | 25 | A | 26 | | | | SPACE | |
| | | | | | 27 | B | 28 | | | | | |
| | | | | | 29 | C | 30 | | | | | |
| | | | | | | | | | | | | |
| | | | | | | | | | | | | |

TOTAL RECEPTACLE (R) LOAD @ 100% FOR FIRST 10,000 VA & 50% FOR REMAINDER 0.00 KVA
TOTAL LIGHTING (L) LOAD 117.99 KVA — LIGHTING LOAD @ 25% 29.50 KVA
TOTAL MOTOR (M) LOAD: 00.00 KVA — LARGEST MOTOR @ 25% 0.00 KVA
TOTAL OTHER (O) LOAD 227.00 KVA

| TOTAL CONNECTED LOAD: | CONNECTED KVA TOTAL/PHASE | A | B | C | MINIMUM FEEDER CAPACITY | |
|---|---|---|---|---|---|---|
| 345.00 KVA | | 113.8 | 116.9 | 114.3 | 374.50 KVA | 451.00 AMP |

## PANEL No. W4DP2

SECTION:
LOCATION: SUBSTA. BLDG 1
SERVICE: NORMAL POWER
BUS: 480 VOLTS, 3 PH, 3W, 225 AMP
☐ MAIN C.B.
☒ MAIN LUGS ONLY
FULLY RATED SC RATING 35,000 RMS SYM AMPS
☐ FEED THRU LUGS ☐ SUBFEED LUGS ☒ NEUTRAL ☒ GND. BUS ☐ S.U.S.E. ☐ I.G. BUS ☐ FLUSH MNT. ☐ SURFACE MNT. ☐ TOP FEED ☐ BOT. FEED

| LOAD TYPE | CIRCUIT DESCRIPTION | CONN KVA | C.B. AMP | C.B. POLE | C.B. CKT | PH | C.B. CKT | C.B. POLE | C.B. AMP | CONN KVA | CIRCUIT DESCRIPTION | LOAD TYPE |
|---|---|---|---|---|---|---|---|---|---|---|---|---|
| M | SUBSTATION BLDG #1 VENT SUPPLY FAN SF-1 | 1.7 | 20 | 3 | 1 | A | 2 | 3 | 20 | 0.20 | SUBSTATION BLDG #1 PRES. VENT SUPPLY FAN SF-2 | M |
| | | 1.7 | - | - | 3 | B | 4 | - | - | 0.20 | | |
| | | 1.7 | - | - | 5 | C | 6 | - | - | 0.20 | | |
| | SPARE | 00.0 | 20 | 3 | 7 | A | 8 | 3 | 20 | 00.0 | SPARE | |
| | | 00.0 | - | - | 9 | B | 10 | - | - | 00.0 | | |
| | | 00.0 | - | - | 11 | C | 12 | - | - | 00.0 | | |
| | SPARE | 00.0 | 20 | 3 | 13 | A | 14 | 3 | 20 | 00.0 | SPARE | |
| | | 00.0 | - | - | 15 | B | 16 | - | - | 00.0 | | |
| | | 00.0 | - | - | 17 | C | 18 | - | - | 00.0 | | |
| | SPARE | 00.0 | 20 | 3 | 19 | A | 20 | 3 | 20 | 00.0 | SPARE | |
| | | 00.0 | - | - | 21 | B | 22 | - | - | 00.0 | | |
| | | 00.0 | - | - | 23 | C | 24 | - | - | 00.0 | | |
| | SPACE | | | | 25 | A | 26 | | | | SPACE | |
| | | | | | 27 | B | 28 | | | | | |
| | | | | | 29 | C | 30 | | | | | |
| | | | | | | | | | | | | |
| | | | | | | | | | | | | |

TOTAL RECEPTACLE (R) LOAD @ 100% FOR FIRST 10,000 VA & 50% FOR REMAINDER 0.00 KVA
TOTAL LIGHTING (L) LOAD 0.00 KVA — LIGHTING LOAD @ 25% 0.00 KVA
TOTAL MOTOR (M) LOAD: 5.60 KVA — LARGEST MOTOR @ 25% 1.25 KVA
TOTAL OTHER (O) LOAD 00.00 KVA

| TOTAL CONNECTED LOAD: | CONNECTED KVA TOTAL/PHASE | A | B | C | MINIMUM FEEDER CAPACITY | |
|---|---|---|---|---|---|---|
| 5.70 KVA | | 1.90 | 1.90 | 1.90 | 6.85 KVA | 8.25 AMP |

## PANEL No. W4LP1

SECTION:
LOCATION: SUBSTA. BLDG 1
SERVICE: NORMAL POWER
BUS: 208/120 VOLTS, 3 PH, 4W, 100 AMP
☐ MAIN C.B.
☒ MAIN LUGS ONLY
FULLY RATED SC RATING RMS SYM AMPS
☐ FEED THRU LUGS ☐ SUBFEED LUGS ☒ NEUTRAL ☒ GND. BUS ☐ S.U.S.E. ☐ I.G. BUS ☐ FLUSH MNT. ☒ SURFACE MNT. ☒ TOP FEED ☐ BOT. FEED

| LOAD TYPE | CIRCUIT DESCRIPTION | CONN KVA | C.B. AMP | C.B. POLE | C.B. CKT | PH | C.B. CKT | C.B. POLE | C.B. AMP | CONN KVA | CIRCUIT DESCRIPTION | LOAD TYPE |
|---|---|---|---|---|---|---|---|---|---|---|---|---|
| M | SUBSTA. BLDG 1 EXHAUST FAN | 0.13 | 20 | 2 | 1 | A | 2 | 3 | 120 | 1.20 | EMERGENCY GENERATOR PNL | O |
| | | 0.13 | - | - | 3 | B | 4 | | | 1.20 | | |
| O | UNIT SUB W4 120V AC CONTROL BUS (SPACE HEATERS) | 2.60 | 30 | 1 | 5 | C | 6 | | | 1.20 | | |
| L | SUBSTATION BLDG 1-LIGHTING | 1.20 | 20 | 1 | 7 | A | 8 | 2 | 20 | 0.30 | UNIT SUB W4 XFMR | M |
| R | SUBSTATION BLDG 1-RECEPT | 0.90 | 20 | 1 | 9 | B | 10 | - | - | 0.30 | COOLING FANS | |
| | UNIT SUB W123 SPACE HTR | 0.70 | 20 | 1 | 11 | C | 12 | 1 | 20 | 1.00 | EMERG GEN WG1 SPACE HTR | O |
| L | SUBSTA BLDG-OUTDOOR LTG | 0.84 | 20 | 1 | 13 | A | 14 | 1 | 20 | 0.35 | PLC 9 CAB LTG AND RECEPT | O |
| O | UNIT SUB W123 C. FANS | 0.40 | 20 | 2 | 15 | B | 16 | 1 | 50 | 4.20 | BATTERY CHARGER | O |
| | | 0.40 | - | | 17 | C | 18 | 1 | 20 | 0.25 | MOTORIZED DAMPER | M |
| O | EMERG GEN WG1 DIST PNL | 2.00 | 100 | 3 | 19 | A | 20 | 1 | 20 | | SPARE | |
| | | 2.00 | - | | 21 | B | 22 | 1 | 20 | | SPARE | |
| | | 2.00 | - | | 23 | C | 24 | 1 | 20 | | SPARE | |
| | SPARE | | 20 | 1 | 25 | A | 26 | 1 | 20 | | SPARE | |
| | SPARE | | 20 | 1 | 27 | B | 28 | 1 | 20 | | SPARE | |
| | SPARE | | 20 | 1 | 29 | C | 30 | 1 | 20 | 0.20 | ~~SPARE~~ | L |
| | | | | | | | | | | | TOS FLASH BEACON (E-16) | |
| | | | | | | | | | | | | |
| | | | | | | | | | | | | |

TOTAL RECEPTACLE (R) LOAD @ 100% FOR FIRST 10,000 VA & 50% FOR REMAINDER 0.00 KVA
TOTAL LIGHTING (L) LOAD 2.04 KVA — LIGHTING LOAD @ 25% 0.51 KVA
TOTAL MOTOR (M) LOAD: 1.11 KVA — LARGEST MOTOR @ 25% 0.15 KVA
TOTAL OTHER (O) LOAD 20.15 KVA

| TOTAL CONNECTED LOAD: | CONNECTED KVA TOTAL/PHASE | A | B | C | MINIMUM FEEDER CAPACITY | |
|---|---|---|---|---|---|---|
| 23.30 KVA | | 6.02 | 9.13 | 8.15 | 23.96 KVA | 66.59 AMP |

4 **REVISED PER ADDENDUM No. 4 DATED SEPTEMBER 3, 2009**

# DETAILS
## PORTAL 1
## PANEL SCHEDULE No. 2
NO SCALE

**ET-192**

THE CONTRACTOR SHALL VERIFY ALL CONTROLLING FIELD DIMENSIONS BEFORE ORDERING OR FABRICATING ANY MATERIAL

ALL DIMENSIONS ARE IN MILLIMETERS UNLESS OTHERWISE SHOWN

| DATE | REVISED BY | DATE REVISED |
|---|---|---|
| 01/08 | R. ALFONSO/ L. IFURUNG | D. PAUL/ R. BELARDO |

CALCULATED/DESIGNED BY — CHECKED BY

CONSULTANT FUNCTIONAL SUPERVISOR — NADER SHAHCHERAGHI

STATE OF CALIFORNIA - DEPARTMENT OF TRANSPORTATION — Caltrans

429491et192.dgn

RELATIVE BORDER SCALE IS IN MILLIMETERS 0 20 40 60 80

USERNAME => trmikesl
DGN FILE => 429491et192.dgn

EA 294911

LAST REVISION 00-00-00 — DATE PLOTTED => 01-SEP-2009 TIME PLOTTED => 11:07

| DIST | COUNTY | ROUTE | KILOMETER POST TOTAL PROJECT | SHEET No. | TOTAL SHEETS |
|---|---|---|---|---|---|
| 04 | Ala,CC | 24 | 8.2/10.0, 0.0/2.7 | 1231 | 1435 |

Dev Paul 07-01-08
REGISTERED ELECTRICAL ENGINEER

1-5-09
PLANS APPROVAL DATE

REGISTERED PROFESSIONAL ENGINEER — DEV PAUL No. E8856 Exp. 03-31-10 ELECT — STATE OF CALIFORNIA

*The State of California or its officers or agents shall not be responsible for the accuracy or completeness of electronic copies of this plan sheet.*

**PARSONS**
50 FREMONT STREET, SUITE 1500
SAN FRANCISCO, CA 94105

**EARTH TECH**
2101 WEBSTER STREET, SUITE 1000
OAKLAND, CA. 94612-3060

4

## PANEL No. W4EDP

SECTION:
LOCATION: EX BORE 3 SUB RM
SERVICE: EMERGENCY POWER
BUS: 480/277 ~~480~~ VOLTS 3 PH, 4W, 400 AMP
☒ MAIN C.B. 400 AMP ☐ MAIN LUGS ONLY
FULLY RATED SC RATING 35,000 RMS SYM AMPS
☐ FEED THRU LUGS ☐ SUBFEED LUGS ☒ NEUTRAL ☒ GND. BUS ☐ S.U.S.E. ☐ I.G. BUS ☐ FLUSH MNT. ☒ SURFACE MNT. ☒ TOP FEED ☐ BOT. FEED

| LOAD TYPE | CIRCUIT DESCRIPTION | CONN KVA | C.B. AMP | C.B. POLE | C.B. CKT | PH | C.B. CKT | C.B. POLE | C.B. AMP | CONN KVA | CIRCUIT DESCRIPTION | LOAD TYPE |
|---|---|---|---|---|---|---|---|---|---|---|---|---|
| O | 100A ATS (PNL. WU) | 11.2 | 100 | 3 | 1 | A | 2 | 3 | 100 | 13.7 | 100A ATS(PNL. UPS-W3S) | O |
| | | 11.2 | - | - | 3 | B | 4 | - | - | 13.7 | | |
| | | 9.92 | - | - | 5 | C | 6 | - | - | 13.7 | | |
| O | 100A ATS (PNL. UPS-W4S) | 19.6 | 100 | 3 | 7 | A | 8 | 3 | 100 | 10.0 | 100A ATS(PNL. DPB1) | O |
| | | 19.4 | - | - | 9 | B | 10 | - | - | 10.0 | | |
| | | 17.7 | - | - | 11 | C | 12 | - | - | 10.0 | | |
| O | EMERGENCY FEED TO OMC BLDG. | 29.3 | 150 | 3 | 13 | A | 14 | 3 | 100 | 00.0 | SPARE | |
| | | 29.3 | - | - | 15 | B | 16 | - | - | 00.0 | | |
| | | 29.3 | - | - | 17 | C | 18 | - | - | 00.0 | | |
| O | SPARE | 00.0 | 50 | 3 | 19 | A | 20 | 3 | 50 | 00.0 | SPARE | |
| | | 00.0 | - | - | 21 | B | 22 | - | - | 00.0 | | |
| | | 00.0 | - | - | 23 | C | 24 | - | - | 00.0 | | |
| | SPACE | | | | 25 | A | 26 | | | | SPACE | |
| | | | | | 27 | B | 28 | | | | | |
| | | | | | 29 | C | 30 | | | | | |
| | | | | | | | | | | | | |
| | | | | | | | | | | | | |

TOTAL RECEPTACLE (R) LOAD @ 100% FOR FIRST 10,000 VA & 50% FOR REMAINDER 0.00 KVA
TOTAL LIGHTING (L) LOAD 0.00 KVA — LIGHTING LOAD @ 25% 0.00 KVA
TOTAL MOTOR (M) LOAD: 0.00 KVA — LARGEST MOTOR @ 25% 0.00 KVA
TOTAL OTHER (O) LOAD 248.03 KVA

| TOTAL CONNECTED LOAD: | CONNECTED KVA TOTAL/PHASE | A | B | C | MINIMUM FEEDER CAPACITY | |
|---|---|---|---|---|---|---|
| 248.03 KVA | | 83.84 | 83.57 | 80.62 | 248.03 KVA | 298.69 AMP |

## PANEL No. W4DP3

SECTION:
LOCATION: SUBSTA. BLDG 1
SERVICE: DC POWER
BUS: 125 VOLTS DC
☒ MAIN C.B. 100 AMP ☐ MAIN LUGS ONLY
FULLY RATED SC RATING 10KA RMS SYM AMPS-DC RATED
☐ FEED THRU LUGS ☐ SUBFEED LUGS ☐ NEUTRAL ☒ GND. BUS ☐ S.U.S.E. ☐ I.G. BUS ☐ FLUSH MNT. ☒ SURFACE MNT. ☒ TOP FEED ☐ BOT. FEED

| LOAD TYPE | CIRCUIT DESCRIPTION | CONN KVA | C.B. AMP | C.B. POLE | C.B. CKT | PH | C.B. CKT | C.B. POLE | C.B. AMP | CONN KVA | CIRCUIT DESCRIPTION | LOAD TYPE |
|---|---|---|---|---|---|---|---|---|---|---|---|---|
| O | 12KV SWGR S1 - 125V DC CKT BKR CONTROL POWER | 5.0 | 50 | 2 | 1 | P | 2 | 2 | 20 | 1.0 | UNIT SUB. W4 4.16kV MAIN BKR 52-M CONTROL POWER | O |
| | | | - | - | | N | | - | - | | | |
| O | 12KV FEEDER BREAKER TO 1500/2250 KVA TRANSFORMER CONTROL POWER | | 20 | 2 | 3 | P | 4 | 2 | 20 | | 12KV FEEDER BREAKER TO 2000/3000 KVA TRANSFORMER CONTROL POWER | |
| | | | - | - | | N | | - | - | | | |
| O | AC TEST CABINET | | 20 | 2 | 5 | P | 6 | 2 | 20 | | SPARE | |
| | | | - | - | | N | | - | - | | | |
| | SPARE | | 20 | 2 | 7 | P | 8 | 2 | 20 | | SPARE | |
| | | | - | - | | N | | - | - | | | |
| | SPARE | | 20 | 2 | 9 | P | 10 | 2 | 20 | | SPARE | |
| | | | - | - | | N | | - | - | | | |
| | SPACE | | | | 11 | P | 12 | | | | SPACE | |
| | | | | | | N | | | | | | |
| | | | | | | | | | | | | |
| | | | | | | | | | | | | |

TOTAL RECEPTACLE (R) LOAD @ 100% FOR FIRST 10,000 VA & 50% FOR REMAINDER 0.00 KVA
TOTAL LIGHTING (L) LOAD 0.00 KVA — LIGHTING LOAD @ 25% 0.00 KVA
TOTAL MOTOR (M) LOAD: 0.00 KVA — LARGEST MOTOR @ 25% 0.00 KVA
TOTAL OTHER (O) LOAD 8.00 KVA

| TOTAL CONNECTED LOAD: | CONNECTED KVA TOTAL/PHASE | P | N | MINIMUM FEEDER CAPACITY | |
|---|---|---|---|---|---|
| 12.0 KVA | | 6.0 | 6.0 | 12.0 KVA | 96.0 AMP |

THE CONTRACTOR SHALL VERIFY ALL CONTROLLING FIELD DIMENSIONS BEFORE ORDERING OR FABRICATING ANY MATERIAL

ALL DIMENSIONS ARE IN MILLIMETERS UNLESS OTHERWISE SHOWN

4 **REVISED PER ADDENDUM No. 4 DATED SEPTEMBER 3, 2009**

# DETAILS
## PORTAL 1
## PANEL SCHEDULE No. 3
NO SCALE

**ET-193**

| DATE | REVISED BY | DATE REVISED |
|---|---|---|
| 01/08 | R. ALFONSO/ L. IFURUNG | D. PAUL/ R. BELARDO |

CALCULATED/DESIGNED BY — CHECKED BY

CONSULTANT FUNCTIONAL SUPERVISOR: NADER SHAHCHERAGHI

STATE OF CALIFORNIA - DEPARTMENT OF TRANSPORTATION

Caltrans

429491et193.dgn

LAST REVISION 00-00-00 — DATE PLOTTED => 01-SEP-2009 TIME PLOTTED => 11:08

RELATIVE BORDER SCALE IS IN MILLIMETERS 0 20 40 60 80

USERNAME => trmikesl
DGN FILE => 429491et193.dgn

EA 294911

| DIST | COUNTY | ROUTE | KILOMETER POST TOTAL PROJECT | SHEET No. | TOTAL SHEETS |
|---|---|---|---|---|---|
| 04 | Ala,CC | 24 | 8.2/10.0, 0.0/2.7 | 1232 | 1435 |

Dev Paul 07-01-08
REGISTERED ELECTRICAL ENGINEER

1-5-09
PLANS APPROVAL DATE

REGISTERED PROFESSIONAL ENGINEER DEV PAUL No. E8856 Exp. 03-31-10 ELECT STATE OF CALIFORNIA

*The State of California or its officers or agents shall not be responsible for the accuracy or completeness of electronic copies of this plan sheet.*


**PARSONS**
50 FREMONT STREET, SUITE 1500
SAN FRANCISCO, CA 94105

**EARTH TECH**
2101 WEBSTER STREET, SUITE 1000
OAKLAND, CA. 94612-3060


## PANEL No. E4TH

LOCATION: SUBSTA. BLDG 2 | SECTION: | SERVICE: NORMAL POWER | BUS: 480 VOLTS 3 PH, 3W, 400 AMP | ☒ MAIN C.B. 400AMP ☐ MAIN LUGS ONLY

FULLY RATED SC RATING 35,000 RMS SYM AMPS | ☐ FEED THRU LUGS ☐ SUBFEED LUGS | ☒ NEUTRAL ☒ GND. BUS | ☐ SUSE ☐ I.G. BUS | ☐ FLUSH MNT. ☒ SURFACE MNT. | ☒ TOP FEED ☐ BOT. FEED

| LOAD TYPE | CIRCUIT DESCRIPTION | CONN KVA | C.B. AMP | C.B. POLE | C.B. CKT | PH | C.B. CKT | C.B. POLE | C.B. AMP | CONN KVA | CIRCUIT DESCRIPTION | LOAD TYPE |
|---|---|---|---|---|---|---|---|---|---|---|---|---|
| L | TUNNEL LTG CKT 10A (N) | 7.02 | 30 | 3 | 1 | A | 2 | 3 | 30 | 6.76 | TUNNEL LTG CKT 10A (S) | L |
| L | TUNNEL LTG CKT 10A (N) | 7.02 | - | - | 3 | B | 4 | - | - | 6.76 | TUNNEL LTG CKT 10A (S) | L |
| L | TUNNEL LTG CKT 10A (N) | 6.76 | - | - | 5 | C | 6 | - | - | 6.76 | TUNNEL LTG CKT 10A (S) | L |
| L | TUNNEL LTG CKT 10B (N) | 7.02 | 30 | 3 | 7 | A | 8 | 3 | 30 | 6.76 | TUNNEL LTG CKT 10B (S) | L |
| L | TUNNEL LTG CKT 10B (N) | 7.02 | - | - | 9 | B | 10 | - | - | 6.76 | TUNNEL LTG CKT 10B (S) | L |
| L | TUNNEL LTG CKT 10B (N) | 6.76 | - | - | 11 | C | 12 | - | - | 6.76 | TUNNEL LTG CKT 10B (S) | L |
| L | TUNNEL LTG CKT 10C (N) | 6.76 | 30 | 3 | 13 | A | 14 | 3 | 30 | 6.76 | TUNNEL LTG CKT 10C (S) | L |
| L | TUNNEL LTG CKT 10C (N) | 6.76 | - | - | 15 | B | 16 | - | - | 6.76 | TUNNEL LTG CKT 10C (S) | L |
| L | TUNNEL LTG CKT 10C (N) | 6.76 | - | - | 17 | C | 18 | - | - | 6.76 | TUNNEL LTG CKT 10C (S) | L |
| L | TUNNEL LTG CKT 10D (N) | 6.76 | 30 | 3 | 19 | A | 20 | 3 | 30 | 6.76 | TUNNEL LTG CKT 10D (S) | L |
| L | TUNNEL LTG CKT 10D (N) | 6.76 | - | B | 21 | B | 22 | - | - | 6.76 | TUNNEL LTG CKT 10D (S) | L |
| L | TUNNEL LTG CKT 10D (N) | 6.76 | - | - | 23 | C | 24 | - | - | 6.76 | TUNNEL LTG CKT 10D (S) | L |
| L | TUNNEL LTG CKT 10E (N) | 7.02 | 30 | 3 | 25 | A | 26 | 3 | 30 | 6.76 | TUNNEL LTG CKT 10E (S) | L |
| L | TUNNEL LTG CKT 10E (N) | 6.76 | - | - | 27 | B | 28 | - | - | 6.76 | TUNNEL LTG CKT 10E (S) | L |
| L | TUNNEL LTG CKT 10E (N) | 7.02 | - | - | 29 | C | 30 | - | - | 6.76 | TUNNEL LTG CKT 10E (S) | L |
| L | TUNNEL LTG CKT 10F (N) | 7.02 | 30 | 3 | 31 | A | 32 | 3 | 30 | 6.76 | TUNNEL LTG CKT 10F (S) | L |
| L | TUNNEL LTG CKT 10F (N) | 6.76 | - | - | 33 | B | 34 | - | - | 6.76 | TUNNEL LTG CKT 10F (S) | L |
| L | TUNNEL LTG CKT 10F (N) | 7.02 | - | - | 35 | C | 36 | - | - | 6.76 | TUNNEL LTG CKT 10F (S) | L |
| | SPARE | | 30 | 3 | 37 | A | 38 | 3 | 30 | 0.00 | SPARE | |
| | | | - | - | 39 | B | 40 | - | - | 0.00 | | |
| | | | - | - | 41 | C | 42 | - | - | 0.00 | | |

TOTAL RECEPTACLE (R) LOAD @ 100% FOR FIRST 10,000 VA & 50% FOR REMAINDER 0.00 KVA
TOTAL LIGHTING (L) LOAD 245.44 KVA — LIGHTING LOAD @ 25% 61.36 KVA
TOTAL MOTOR (M) LOAD: 0.00 KVA — LARGEST MOTOR @ 25% 0.00 KVA
TOTAL OTHER (O) LOAD 0.00 KVA

| TOTAL CONNECTED LOAD: | CONNECTED KVA TOTAL/PHASE | A | B | C | MINIMUM FEEDER CAPACITY | |
|---|---|---|---|---|---|---|
| 245.44 KVA | | 82.16 | 81.64 | 81.64 | 306.80 KVA | 369.5 AMP |

## PANEL No. UPS-E4S

LOCATION: SUBSTA. BLDG 2 | SECTION: | SERVICE: EMERGENCY POWER | BUS: 480 VOLTS 3 PH, 3W, 100 AMP | ☒ MAIN C.B. 100 AMP ☐ MAIN LUGS ONLY

FULLY RATED SC RATING 35,000 RMS SYM AMPS | ☐ FEED THRU LUGS ☐ SUBFEED LUGS | ☒ NEUTRAL ☒ GND. BUS | ☐ SUSE ☐ I.G. BUS | ☐ FLUSH MNT. ☒ SURFACE MNT. | ☒ TOP FEED ☐ BOT. FEED

| LOAD TYPE | CIRCUIT DESCRIPTION | CONN KVA | C.B. AMP | C.B. POLE | C.B. CKT | PH | C.B. CKT | C.B. POLE | C.B. AMP | CONN KVA | CIRCUIT DESCRIPTION | LOAD TYPE |
|---|---|---|---|---|---|---|---|---|---|---|---|---|
| L | TUN LTG CKT 10XU, YU, ZU (N) | 1.16 | 20 | 3 | 1 | A | 2 | 3 | 20 | 1.16 | TUN LTG CKT 10XU, YU, ZU (S) | L |
| L | TUN LTG CKT 10XU, YU, ZU (N) | 1.26 | - | - | 3 | B | 4 | - | - | 1.26 | TUN LTG CKT 10XU, YU, ZU (S) | L |
| L | TUN LTG CKT 10XU, YU, ZU (N) | 1.16 | - | - | 5 | C | 6 | - | - | 1.16 | TUN LTG CKT 10XU, YU, ZU (S) | L |
| O | CONTACTOR PANEL #10 | 1.00 | 20 | 2 | 7 | A | 8 | 3 | 30 | 3.42 | 15KVA, 480-208Y/120V | O |
| O | - | 1.00 | - | - | 9 | B | 10 | - | - | 3.10 | TRANSFORMER/E4LP2 | O |
| | SPACE | 0.00 | - | - | 11 | C | 12 | - | - | 2.58 | | O |
| O | FIELD INSTR. PNL (FIP 5-7) | 3.00 | 20 | 3 | 13 | A | 14 | 3 | 70 | 7.65 | POWER DISTRIBUTION | O |
| O | - | 3.00 | - | - | 15 | B | 16 | - | - | 6.30 | PANELS E4DP5 & E4DP6 | O |
| O | - | 3.00 | - | - | 17 | C | 18 | - | - | | FOR TOS | O |
| | SPARE | 0.00 | 20 | 3 | 19 | A | 20 | - | - | | SPACE | |
| | | 0.00 | - | - | 21 | B | 22 | - | - | | | |
| | | 0.00 | - | - | 23 | C | 24 | - | - | | | |
| | | | | | | | | | | | | |
| | | | | | | | | | | | | |
| | | | | | | | | | | | | |

TOTAL RECEPTACLE (R) LOAD @ 100% FOR FIRST 10,000 VA & 50% FOR REMAINDER 0.00 KVA
TOTAL LIGHTING (L) LOAD 7.16 KVA — LIGHTING LOAD @ 25% 1.79 KVA
TOTAL MOTOR (M) LOAD: 0.00 KVA — LARGEST MOTOR @ 25% 0.00 KVA
TOTAL OTHER (O) LOAD 34.05 KVA

| TOTAL CONNECTED LOAD: | CONNECTED KVA TOTAL/PHASE | A | B | C | MINIMUM FEEDER CAPACITY | |
|---|---|---|---|---|---|---|
| 41.21 KVA | | 17.39 | 15.92 | 7.90 | 43.00 KVA | 51.78 AMP |

THE CONTRACTOR SHALL VERIFY ALL CONTROLLING FIELD DIMENSIONS BEFORE ORDERING OR FABRICATING ANY MATERIAL

## PANEL No. E4IN

LOCATION: SUBSTA. BLDG 2 | SECTION: | SERVICE: NORMAL POWER | BUS: 480 VOLTS 3 PH, 3W, 225 AMP | ☒ MAIN C.B. 60 AMP ☐ MAIN LUGS ONLY

FULLY RATED SC RATING 35,000 RMS SYM AMPS | ☐ FEED THRU LUGS ☐ SUBFEED LUGS | ☒ NEUTRAL ☒ GND. BUS | ☐ SUSE ☐ I.G. BUS | ☐ FLUSH MNT. ☒ SURFACE MNT. | ☒ TOP FEED ☐ BOT. FEED

| LOAD TYPE | CIRCUIT DESCRIPTION | CONN KVA | C.B. AMP | C.B. POLE | C.B. CKT | PH | C.B. CKT | C.B. POLE | C.B. AMP | CONN KVA | CIRCUIT DESCRIPTION | LOAD TYPE |
|---|---|---|---|---|---|---|---|---|---|---|---|---|
| L | TUNNEL LTG CKT 10X (N) | 1.16 | 20 | 3 | 1 | A | 2 | 3 | 20 | 1.16 | TUNNEL LTG CKT 10X (S) | L |
| L | TUNNEL LTG CKT 10X (N) | 1.26 | - | - | 3 | B | 4 | - | - | 1.26 | TUNNEL LTG CKT 10X (S) | L |
| L | TUNNEL LTG CKT 10X (N) | 1.16 | - | - | 5 | C | 6 | - | - | 1.16 | TUNNEL LTG CKT 10X (S) | L |
| L | TUNNEL LTG CKT 10Y (N) | 1.16 | 20 | 3 | 7 | A | 8 | 3 | 20 | 1.16 | TUNNEL LTG CKT 10Y (S) | L |
| L | TUNNEL LTG CKT 10Y (N) | 1.26 | - | - | 9 | B | 10 | - | - | 1.26 | TUNNEL LTG CKT 10Y (S) | L |
| L | TUNNEL LTG CKT 10Y (N) | 1.16 | - | - | 11 | C | 12 | - | - | 1.16 | TUNNEL LTG CKT 10Y (S) | L |
| L | TUNNEL LTG CKT 10Z (N) | 1.16 | 20 | 3 | 13 | A | 14 | 3 | 20 | 1.16 | TUNNEL LTG CKT 10Z (S) | L |
| L | TUNNEL LTG CKT 10Z (N) | 1.26 | - | - | 15 | B | 16 | - | - | 1.26 | TUNNEL LTG CKT 10Z (S) | L |
| L | TUNNEL LTG CKT 10Z (N) | 1.16 | - | - | 17 | C | 18 | - | - | 1.16 | TUNNEL LTG CKT 10Z (S) | L |
| L | PORTAL 2 OUTSIDE LTG | 0.50 | 20 | 3 | 19 | A | 20 | 2 | 20 | 0.50 | BORE 4 TOS | O |
| L | (SEE DWG E-5 & E-6) | 0.50 | - | - | 21 | B | 22 | - | - | 0.50 | BORE 4 TOS | O |
| L | VIA LTG CONTACTOR (ESS-24) | 0.50 | - | - | 23 | C | 24 | 1 | 20 | 0.00 | SPARE | |
| | SPARE | | 20 | 3 | 25 | A | 26 | 3 | 20 | | SPARE | |
| | | | - | - | 27 | B | 28 | - | - | | | |
| | | | - | - | 29 | C | 30 | - | - | | | |
| | SPACE | | | | | | | | | | SPACE | |
| | | | | | | | | | | | | |

TOTAL RECEPTACLE (R) LOAD @ 100% FOR FIRST 10,000 VA & 50% FOR REMAINDER 0.00 KVA
TOTAL LIGHTING (L) LOAD 22.98 KVA — LIGHTING LOAD @ 25% 5.75 KVA
TOTAL MOTOR (M) LOAD: 0.00 KVA — LARGEST MOTOR @ 25% 0.00 KVA
TOTAL OTHER (O) LOAD 1.00 KVA

| TOTAL CONNECTED LOAD: | CONNECTED KVA TOTAL/PHASE | A | B | C | MINIMUM FEEDER CAPACITY | |
|---|---|---|---|---|---|---|
| 23.98 KVA | | 7.96 | 8.56 | 7.46 | 29.73 KVA | 35.80 AMP |

4 **REVISED PER ADDENDUM No. 4 DATED SEPTEMBER 3, 2009**

**UPDATED 95% DESIGN 05/07/08**
ALL DIMENSIONS ARE IN MILLIMETERS UNLESS OTHERWISE SHOWN

# DETAILS
## PORTAL 2
## PANEL SCHEDULE No. 4
NO SCALE

**ET-194**

| REVISED BY | DATE | DATE REVISED |
|---|---|---|
| R. ALFONSO/ L. TFURUNG | 01/08 | |

CALCULATED/ DESIGNED BY: D. PAUL/ R. BELARDO
CHECKED BY
PROJECT ENGINEER
CONSULTANT FUNCTIONAL SUPERVISOR: NADER SHAHCHERAGHI
STATE OF CALIFORNIA - DEPARTMENT OF TRANSPORTATION
Caltrans

LAST REVISION 00-00-00 | DATE PLOTTED => 01-SEP-2009 | TIME PLOTTED => 11:08

| DIST | COUNTY | ROUTE | KILOMETER POST TOTAL PROJECT | SHEET No. | TOTAL SHEETS |
|---|---|---|---|---|---|
| 04 | Ala,CC | 24 | 8.2/10.0, 0.0/2.7 | 1233 | 1435 |

Caltrans Metric

Dev Paul 07-01-08
REGISTERED ELECTRICAL ENGINEER

1-5-09
PLANS APPROVAL DATE

REGISTERED PROFESSIONAL ENGINEER — DEV PAUL No. E8856 Exp. 03-31-10 ELECT — STATE OF CALIFORNIA

*The State of California or its officers or agents shall not be responsible for the accuracy or completeness of electronic copies of this plan sheet.*

**PARSONS**
50 FREMONT STREET, SUITE 1500
SAN FRANCISCO, CA 94105

**EARTH TECH**
2101 WEBSTER STREET, SUITE 1000
OAKLAND, CA. 94612-3060

## PANEL No. E4DP1

4

SECTION:
SERVICE: NORMAL POWER
BUS: 480 VOLTS, 3 PH, 3W, 600 AMP
☐ MAIN C.B. ☒ MAIN LUGS ONLY
LOCATION: SUBSTA. BLDG 2
FULLY RATED SC RATING 35,000 RMS SYM AMPS
☐ FEED THRU LUGS ☐ SUBFEED LUGS ~~☒~~ NEUTRAL ☒ GND. BUS ☐ S.U.S.E. ☐ I.G. BUS ☐ FLUSH MNT. ☒ SURFACE MNT. ☒ TOP FEED ☐ BOT. FEED

| LOAD TYPE | CIRCUIT DESCRIPTION | CONN KVA | C.B. AMP | C.B. POLE | C.B. CKT | PH | C.B. CKT | C.B. POLE | C.B. AMP | CONN KVA | CIRCUIT DESCRIPTION | LOAD TYPE |
|---|---|---|---|---|---|---|---|---|---|---|---|---|
| | SPARE | 00.0 | 150 | 3 | 1 | A | 2 | 3 | 400 | 82.2 | PANEL E4TH | L |
| | | 00.0 | - | - | 3 | B | 4 | - | - | 81.6 | | |
| | | 00.0 | - | - | 5 | C | 6 | - | - | 81.6 | | |
| O | 30KVA, 3PH, 480-208/120V (PANEL E4LP1) | 6.02 | 60 | 3 | 7 | A | 8 | 3 | 60 | 7.46 | PANEL E4IN | L |
| | | 8.93 | - | - | 9 | B | 10 | - | - | 8.06 | | |
| | | 7.95 | - | - | 11 | C | 12 | - | - | 7.46 | | |
| | SPARE | 00.0 | 30 | 3 | 13 | A | 14 | 3 | 70 | 2.00 | PANEL E4DP2 | O |
| | | 00.0 | - | - | 15 | B | 16 | - | - | 2.00 | | |
| | | 00.0 | - | - | 17 | C | 18 | - | - | 2.00 | | |
| | SPARE | 00.0 | 30 | 3 | 19 | A | 20 | 3 | 30 | 00.0 | SPARE | |
| | | 00.0 | - | - | 21 | B | 22 | - | - | 00.0 | | |
| | | 00.0 | - | - | 23 | C | 24 | - | - | 00.0 | | |
| | SPACE | | | | 25 | A | 26 | | | | SPACE | |
| | | | | | 27 | B | 28 | | | | | |
| | | | | | 29 | C | 30 | | | | | |
| | | | | | | | | | | | | |
| | | | | | | | | | | | | |

TOTAL RECEPTACLE (R) LOAD @ 100% FOR FIRST 10,000 VA & 50% FOR REMAINDER 0.00 KVA
TOTAL LIGHTING (L) LOAD 268.38 KVA — LIGHTING LOAD @ 25% 67.0 KVA
TOTAL MOTOR (M) LOAD: 00.00 KVA — LARGEST MOTOR @ 25% 00.0 KVA
TOTAL OTHER (O) LOAD 28.90 KVA

| TOTAL CONNECTED LOAD: | CONNECTED KVA TOTAL/PHASE | A | B | C | MINIMUM FEEDER CAPACITY | |
|---|---|---|---|---|---|---|
| 297.29 KVA | | 97.68 | 100.6 | 99.01 | 364.29 KVA | 438.70 AMP |

## PANEL No. E4DP2

4

SECTION:
SERVICE: NORMAL POWER
BUS: 480 VOLTS, 3 PH, 3W, 225 AMP
☐ MAIN C.B. ☒ MAIN LUGS ONLY
LOCATION: SUBSTA. BLDG 2
FULLY RATED SC RATING 35,000 RMS SYM AMPS
☐ FEED THRU LUGS ☐ SUBFEED LUGS ~~☒~~ NEUTRAL ☒ GND. BUS ☐ S.U.S.E. ☐ I.G. BUS ☐ FLUSH MNT. ☒ SURFACE MNT. ☒ TOP FEED ☐ BOT. FEED

| LOAD TYPE | CIRCUIT DESCRIPTION | CONN KVA | C.B. AMP | C.B. POLE | C.B. CKT | PH | C.B. CKT | C.B. POLE | C.B. AMP | CONN KVA | CIRCUIT DESCRIPTION | LOAD TYPE |
|---|---|---|---|---|---|---|---|---|---|---|---|---|
| M | SUBSTATION BLDG 2 VENT SUPPLY FAN SF-3 | 2.5 | 20 | 3 | 1 | A | 2 | 3 | 20 | 0.2 | SUBSTATION BLDG 2 PRES. SUPPLY FAN SF-4 | M |
| | | 2.5 | - | - | 3 | B | 4 | - | - | 0.2 | | |
| | | 2.5 | - | - | 5 | C | 6 | - | - | 0.2 | | |
| | SPARE | 00.0 | 20 | 3 | 7 | A | 8 | 3 | 20 | 00.0 | SPARE | |
| | | 00.0 | - | - | 9 | B | 10 | - | - | 00.0 | | |
| | | 00.0 | - | - | 11 | C | 12 | - | - | 00.0 | | |
| | SPARE | 00.0 | 20 | 3 | 13 | A | 14 | 3 | 20 | 00.0 | SPARE | |
| | | 00.0 | - | - | 15 | B | 16 | - | - | 00.0 | | |
| | | 00.0 | - | - | 17 | C | 18 | - | - | 00.0 | | |
| | SPARE | 00.0 | 20 | 3 | 19 | A | 20 | 3 | 20 | 00.0 | SPARE | |
| | | 00.0 | - | - | 21 | B | 22 | - | - | 00.0 | | |
| | | 00.0 | - | - | 23 | C | 24 | - | - | 00.0 | | |
| | SPACE | | | | 25 | A | 26 | | | | SPACE | |
| | | | | | 27 | B | 28 | | | | | |
| | | | | | 29 | C | 30 | | | | | |
| | | | | | | | | | | | | |
| | | | | | | | | | | | | |

TOTAL RECEPTACLE (R) LOAD @ 100% FOR FIRST 10,000 VA & 50% FOR REMAINDER 0.00 KVA
TOTAL LIGHTING (L) LOAD 0.00 KVA — LIGHTING LOAD @ 25% 0.00 KVA
TOTAL MOTOR (M) LOAD: 8.10 KVA — LARGEST MOTOR @ 25% 1.90 KVA
TOTAL OTHER (O) LOAD 0.00 KVA

| TOTAL CONNECTED LOAD: | CONNECTED KVA TOTAL/PHASE | A | B | C | MINIMUM FEEDER CAPACITY | |
|---|---|---|---|---|---|---|
| 8.10 KVA | | 2.7 | 2.7 | 2.7 | 10.00 KVA | 12.0 AMP |

## PANEL No. E4LP1

SECTION:
SERVICE: NORMAL POWER
BUS: 208/120 VOLTS, 3 PH, 4W, 100 AMP
☐ MAIN C.B. ☒ MAIN LUGS ONLY
LOCATION: SUBSTA. BLDG 2
FULLY RATED SC RATING RMS SYM AMPS
☐ FEED THRU LUGS ☐ SUBFEED LUGS ☒ NEUTRAL ☒ GND. BUS ☐ S.U.S.E. ☐ I.G. BUS ☐ FLUSH MNT. ☒ SURFACE MNT. ☒ TOP FEED ☐ BOT. FEED

| LOAD TYPE | CIRCUIT DESCRIPTION | CONN KVA | C.B. AMP | C.B. POLE | C.B. CKT | PH | C.B. CKT | C.B. POLE | C.B. AMP | CONN KVA | CRRCUIT DESCRIPTION | LOAD TYPE |
|---|---|---|---|---|---|---|---|---|---|---|---|---|
| M | SUBSTA. BLDG 2 EXHAUST FAN | 0.13 | 20 | 2 | 1 | A | 2 | 3 | 120 | 1.20 | EMERGENCY GENERATOR PNL | O |
| | | 0.13 | - | - | 3 | B | 4 | - | | 1.20 | | |
| O | UNIT SUB E4 120V AC CONTROL BUS (SPACE HEATERS) | 2.60 | 30 | 1 | 5 | C | 6 | - | | 1.20 | | O |
| L | SUBSTATION BLDG 2-LIGHTING | 1.20 | 20 | 1 | 7 | A | 8 | 2 | 20 | 0.30 | UNIT SUB E4 XFMR | M |
| R | SUBSTATION BLDG 2-RECEPT | 0.90 | 20 | 1 | 9 | B | 10 | - | - | 0.30 | COOLING FANS | |
| O | UNIT SUB E1234 SP. HTR | 0.70 | 20 | 1 | 11 | C | 12 | 1 | 20 | 1.00 | EMERG GEN EG1 SPACE HTR | O |
| L | SUBSTA BLDG-OUTDOOR LTG | 0.84 | 20 | 1 | 13 | A | 14 | 1 | 20 | 0.35 | PLC 10 CAB LTG AND RECEPT | O |
| O | UNIT SUB E1234 C. FANS | 0.20 | 20 | 2 | 15 | B | 16 | 1 | 50 | 4.20 | BATTERY CHARGER | O |
| | | 0.20 | - | - | 17 | C | 18 | 1 | 20 | 0.25 | MOTORIZED DAMPER | M |
| O | EMERG GEN EG1 DIST PNL | 2.00 | 100 | 3 | 19 | A | 20 | 1 | 20 | 0.10 | TUN AIR VEL. TRANSMITTER 1 | O |
| | | 2.00 | - | | 21 | B | 22 | 1 | 20 | | SPARE | |
| | | 2.00 | - | | 23 | C | 24 | 1 | 20 | | SPARE | |
| | SPARE | | 20 | 1 | 25 | A | 26 | 1 | 20 | | SPARE | |
| | SPARE | | 20 | 1 | 27 | B | 28 | 1 | 20 | | SPARE | |
| | SPARE | | 20 | 1 | 29 | C | 30 | 1 | 20 | | SPARE | |
| | | | | | | | | | | | | |
| | | | | | | | | | | | | |

TOTAL RECEPTACLE (R) LOAD @ 100% FOR FIRST 10,000 VA & 50% FOR REMAINDER 0.00 KVA
TOTAL LIGHTING (L) LOAD 2.04 KVA — LIGHTING LOAD @ 25% 0.51 KVA
TOTAL MOTOR (M) LOAD: 1.11 KVA — LARGEST MOTOR @ 25% 0.15 KVA
TOTAL OTHER (O) LOAD 19.85 KVA

| TOTAL CONNECTED LOAD: | CONNECTED KVA TOTAL/PHASE | A | B | C | MINIMUM FEEDER CAPACITY | |
|---|---|---|---|---|---|---|
| 23.00 KVA | | 6.12 | 8.93 | 7.95 | 23.66 KVA | 65.75 AMP |

**4 REVISED PER ADDENDUM No. 4 DATED SEPTEMBER 3, 2009**

# DETAILS
## PORTAL 2
## PANEL SCHEDULE No. 5
NO SCALE

**ET-195**

THE CONTRACTOR SHALL VERIFY ALL CONTROLLING FIELD DIMENSIONS BEFORE ORDERING OR FABRICATING ANY MATERIAL

ALL DIMENSIONS ARE IN MILLIMETERS UNLESS OTHERWISE SHOWN

| DATE | REVISED BY | DATE REVISED |
|---|---|---|
| 01/08 | R. ALFONSO/ L. IFURUNG | D. PAUL/ R. BELARDO |

CALCULATED/ DESIGNED BY — CHECKED BY

CONSULTANT FUNCTIONAL SUPERVISOR: NADER SHAHCHERAGHI

STATE OF CALIFORNIA - DEPARTMENT OF TRANSPORTATION — Caltrans

429491et195.dgn

LAST REVISION 00-00-00 — DATE PLOTTED => 01-SEP-2009 — TIME PLOTTED => 11:08

RELATIVE BORDER SCALE IS IN MILLIMETERS 0 20 40 60 80

USERNAME => trmikesl
DGN FILE => 429491et195.dgn

EA 294911

4

| DIST | COUNTY | ROUTE | KILOMETER POST TOTAL PROJECT | SHEET No. | TOTAL SHEETS |
|---|---|---|---|---|---|
| 04 | Ala,CC | 24 | 8.2/10.0, 0.0/2.7 | 1234 | 1435 |

Dev Paul 07-01-08
REGISTERED ELECTRICAL ENGINEER

1-5-09
PLANS APPROVAL DATE

REGISTERED PROFESSIONAL ENGINEER DEV PAUL No. E8856 Exp. 03-31-10 ELECT STATE OF CALIFORNIA

*The State of California or its officers or agents shall not be responsible for the accuracy or completeness of electronic copies of this plan sheet.*

**PARSONS**
50 FREMONT STREET, SUITE 1500
SAN FRANCISCO, CA 94105

**EARTH TECH**
2101 WEBSTER STREET, SUITE 1000
OAKLAND, CA. 94612-3060

Caltrans Metric

## PANEL No. E4EDP

LOCATION: EX. E. PORT. BLDG | SECTION: | SERVICE: EMERGENCY POWER | BUS: 480/277 ~~480~~ VOLTS 3 PH, 3W, 400 AMP | ☒ MAIN C.B. 400A ☐ MAIN LUGS ONLY

FULLY RATED SC RATING 35,000 RMS SYM AMPS | ☐ FEED THRU LUGS ☐ SUBFEED LUGS | ☒ NEUTRAL ☒ GND. BUS | ☐ S.U.S.E. ☐ I.G. BUS | ☐ FLUSH MNT. ☒ SURFACE MNT. | ☒ TOP FEED ☐ BOT. FEED

| LOAD TYPE | CIRCUIT DESCRIPTION | CONN KVA | C.B. AMP | C.B. POLE | C.B. CKT | PH | C.B. CKT | C.B. POLE | C.B. AMP | CONN KVA | CIRCUIT DESCRIPTION | LOAD TYPE |
|---|---|---|---|---|---|---|---|---|---|---|---|---|
| O | 100A ATS (PNL. DPB2) | 18.5 | 100 | 3 | 1 | A | 2 | 3 | 150 | 26.1 | 150A ATS(EXIST 80 KVA UPS) | L |
| | | 18.5 | - | - | 3 | B | 4 | - | - | 26.1 | | |
| | | 18.5 | - | - | 5 | C | 6 | - | - | 26.1 | | |
| | SPARE | 00.0 | 100 | 3 | 7 | A | 8 | 3 | 100 | 00.0 | SPARE | |
| | | 00.0 | - | - | 9 | B | 10 | - | - | 00.0 | | |
| | | 00.0 | - | - | 11 | C | 12 | - | - | 00.0 | | |
| | SPARE | 00.0 | 50 | 3 | 13 | A | 14 | 3 | 50 | 00.0 | SPARE | |
| | | 00.0 | - | - | 15 | B | 16 | - | - | 00.0 | | |
| | | 00.0 | - | - | 17 | C | 18 | - | - | 00.0 | | |
| | SPARE | 00.0 | 50 | 3 | 19 | A | 20 | 3 | 50 | 00.0 | SPARE | |
| | | 00.0 | - | - | 21 | B | 22 | - | - | 00.0 | | |
| | | 00.0 | - | - | 23 | C | 24 | - | - | 00.0 | | |
| | SPACE | | | | 25 | A | 26 | | | | SPACE | |
| | | | | | 27 | B | 28 | | | | | |
| | | | | | 29 | C | 30 | | | | | |
| | | | | | | | | | | | | |
| | | | | | | | | | | | | |

TOTAL RECEPTACLE (R) LOAD @ 100% FOR FIRST 10,000 VA & 50% FOR REMAINDER 0.00 KVA
TOTAL LIGHTING (L) LOAD 78.30 KVA — LIGHTING LOAD @ 25% 19.6 KVA
TOTAL MOTOR (M) LOAD: 0.00 KVA — LARGEST MOTOR @ 25% 0.00 KVA
TOTAL OTHER (O) LOAD 55.50 KVA

| TOTAL CONNECTED LOAD: | CONNECTED KVA TOTAL/PHASE | A | B | C | MINIMUM FEEDER CAPACITY | |
|---|---|---|---|---|---|---|
| 133.8 KVA | | 44.6 | 44.6 | 44.6 | 153.4 KVA | 184.7 AMP |

## PANEL No. E4LP2

LOCATION: SUBSTA. BLDG 2 | SECTION: | SERVICE: EMERGENCY POWER | BUS: 208/120 VOLTS 3 PH, 4W, 100 AMP | ☒ MAIN C.B. 60 AMP ☐ MAIN LUGS ONLY

FULLY RATED SC RATING 10,000 RMS SYM AMPS | ☐ FEED THRU LUGS ☐ SUBFEED LUGS | ☒ NEUTRAL ☒ GND. BUS | ☐ S.U.S.E. ☐ I.G. BUS | ☐ FLUSH MNT. ☒ SURFACE MNT. | ☒ TOP FEED ☐ BOT. FEED

| LOAD TYPE | CIRCUIT DESCRIPTION | CONN KVA | C.B. AMP | C.B. POLE | C.B. CKT | PH | C.B. CKT | C.B. POLE | C.B. AMP | CONN KVA | CIRCUIT DESCRIPTION | LOAD TYPE |
|---|---|---|---|---|---|---|---|---|---|---|---|---|
| O | TUN 4 CALL BOX CAUTION SIGN | 0.65 | 20 | 3 | 1 | A | 2 | 1 | 20 | 0.00 | SPARE | O |
| O | | 0.65 | | - | 3 | B | 4 | 1 | 20 | 0.00 | SPARE | O |
| | | 0.65 | | - | 5 | C | 6 | 1 | 20 | 0.63 | LTG - SUBSTA. BLDG 2 | L |
| O | E VMS BORE 3 | 1.80 | 30 | 2 | 7 | A | 8 | 1 | 20 | | SPARE | |
| | SPARE | | 20 | - | 9 | B | 10 | 1 | 20 | 0.50 | SWGR S2 SPACE HTR | O |
| O | E VMS BORE 4 | 1.80 | 30 | 1 | 11 | C | 12 | 1 | 20 | | SPARE | |
| | SPARE | | 20 | 1 | 13 | A | 14 | 1 | 20 | 0.37 | WHITE & EXIT LIGHTS | L |
| O | TRAFFIC GATES & SIGNALS | 2.88 | 30 | 1 | 15 | B | 16 | 1 | 20 | 0.75 | CONTACTOR PANEL #10 | O |
| O | TOS CABINET | 1.70 | 30 | 1 | 17 | C | 18 | 1 | 20 | 0.10 | TUN 4 CAUTION SIGN CONTROL | O |
| | SPACE | - | - | - | 19 | A | 20 | 3 | 20 | 1.20 | TUNNEL 4 CALL BOX SIGN | O |
| | | - | - | - | 21 | B | 22 | - | | 1.20 | | O |
| | | - | - | - | 23 | C | 24 | - | | 1.20 | | O |
| | | | | | | | | | | | | |
| | | | | | | | | | | | | |
| | | | | | | | | | | | | |

TOTAL RECEPTACLE (R) LOAD @ 100% FOR FIRST 10,000 VA & 50% FOR REMAINDER 0.00 KVA
TOTAL LIGHTING (L) LOAD 1.00 KVA — LIGHTING LOAD @ 25% 0.25 KVA
TOTAL MOTOR (M) LOAD: 0.00 KVA — LARGEST MOTOR @ 25% 0.00 KVA
TOTAL OTHER (O) LOAD 15.08 KVA

| TOTAL CONNECTED LOAD: | CONNECTED KVA TOTAL/PHASE | A | B | C | MINIMUM FEEDER CAPACITY | |
|---|---|---|---|---|---|---|
| 16.08 KVA | | 4.02 | 5.98 | 6.08 | 16.33 KVA | 45.33 AMP |

## PANEL No. E4DP3

LOCATION: SUBSTA. BLDG 2 | SECTION: | SERVICE: DC POWER | BUS: 125 VOLTS DC | ☒ MAIN C.B. 100 AMP ☐ MAIN LUGS ONLY

FULLY RATED SC RATING 10KA RMS SYM AMPS-DC RATED | ☐ FEED THRU LUGS ☐ SUBFEED LUGS | ☐ NEUTRAL ☒ GND. BUS | ☐ S.U.S.E. ☐ I.G. BUS | ☐ FLUSH MNT. ☒ SURFACE MNT. | ☒ TOP FEED ☐ BOT. FEED

| LOAD TYPE | CIRCUIT DESCRIPTION | CONN KVA | C.B. AMP | C.B. POLE | C.B. CKT | PH | C.B. CKT | C.B. POLE | C.B. AMP | CONN KVA | CURRENT DESCRIPTION | LOAD TYPE |
|---|---|---|---|---|---|---|---|---|---|---|---|---|
| O | 12kV SWGR S2 - 125V DC CKT BKR CONTROL POWER | 5.0 | 50 | 2 | 1 | P | 2 | 2 | 20 | 1.0 | UNIT SUB. E4 4.16kV MAIN BKR. 52-M CONTROL POWER | O |
| | | | - | - | | N | | - | - | | | |
| O | 12kV FEEDER BKR TO 1500/2250 kVA TRANS. CONTROL POWER | | 20 | 2 | 3 | P | 4 | 2 | 20 | | 12kV FEEDER BKR TO 2000/3000 kVA TRANS. CONTROL POWER | |
| | | | - | - | | N | | - | - | | | |
| O | AC TEST CABINET | | 20 | 2 | 5 | P | 6 | 2 | 20 | | SPARE | |
| | | | - | - | | N | | - | - | | | |
| | SPARE | | 20 | 2 | 7 | P | 8 | 2 | 20 | | SPARE | |
| | | | - | - | | N | | - | - | | | |
| | SPARE | | 20 | 2 | 9 | P | 10 | 2 | 20 | | SPARE | |
| | | | - | - | | N | | - | - | | | |
| | SPACE | | | | | P | | | | | SPACE | |
| | | | | | | N | | | | | | |
| | | | | | | | | | | | | |

TOTAL RECEPTACLE (R) LOAD @ 100% FOR FIRST 10,000 VA & 50% FOR REMAINDER 0.00 KVA
TOTAL LIGHTING (L) LOAD 0.00 KVA — LIGHTING LOAD @ 25% 0.00 KVA
TOTAL MOTOR (M) LOAD: 0.00 KVA — LARGEST MOTOR @ 25% 0.00 KVA
TOTAL OTHER (O) LOAD 8.00 KVA

| TOTAL CONNECTED LOAD: | CONNECTED KVA TOTAL/PHASE | P | N | MINIMUM FEEDER CAPACITY | |
|---|---|---|---|---|---|
| 12.0 KVA | | 6.0 | 6.0 | 12.0 KVA | 96.0 AMP |

4 **REVISED PER ADDENDUM No. 4 DATED SEPTEMBER 3, 2009**

# DETAILS
## PORTAL 2
## PANEL SCHEDULE No. 6
NO SCALE

**ET-196**

THE CONTRACTOR SHALL VERIFY ALL CONTROLLING FIELD DIMENSIONS BEFORE ORDERING OR FABRICATING ANY MATERIAL

ALL DIMENSIONS ARE IN MILLIMETERS UNLESS OTHERWISE SHOWN

| DATE | REVISED BY | DATE REVISED |
|---|---|---|
| 01/08 | R. ALFONSO/ L. IFURUNG | D. PAUL/ R. BELARDO |

CALCULATED/DESIGNED BY — CHECKED BY

CONSULTANT FUNCTIONAL SUPERVISOR: NADER SHAHCHERAGHI

STATE OF CALIFORNIA - DEPARTMENT OF TRANSPORTATION

Caltrans

429491et196.dgn

LAST REVISION 00-00-00 | DATE PLOTTED => 01-SEP-2009 | TIME PLOTTED => 11:08

RELATIVE BORDER SCALE IS IN MILLIMETERS 0 20 40 60 80

USERNAME => trmikesl
DGN FILE => 429491et196.dgn

EA 294911

| DIST | COUNTY | ROUTE | KILOMETER POST TOTAL PROJECT | SHEET No. | TOTAL SHEETS |
|---|---|---|---|---|---|
| 04 | Ala,CC | 24 | 8.2/10.0, 0.0/2.7 | 1235 | 1435 |

Dev Paul 07-01-08
REGISTERED ELECTRICAL ENGINEER

1-5-09
PLANS APPROVAL DATE

REGISTERED PROFESSIONAL ENGINEER DEV PAUL No. E8856 Exp. 03-31-10 ELECT STATE OF CALIFORNIA

*The State of California or its officers or agents shall not be responsible for the accuracy or completeness of electronic copies of this plan sheet.*

**PARSONS**
50 FREMONT STREET, SUITE 1500
SAN FRANCISCO, CA 94105

**EARTH TECH**
2101 WEBSTER STREET, SUITE 1000
OAKLAND, CA. 94612-3060

4

| PANEL No. E4DP4 | SECTION: | BUS: 480 VOLTS 3 PH, 3W, 1200A | ☒ MAIN C.B. 1200A ☐ MAIN LUGS ONLY |
|---|---|---|---|
| LOCATION: EX. E. PORT. BLDG | SERVICE: NORMAL POWER | | |
| FULLY RATED SC RATING 35,000 RMS SYM AMPS | ☐ FEED THRU LUGS ~~☒~~ NEUTRAL ☐ S.U.S.E. ☐ FLUSH MNT. ☒ TOP FEED<br>☐ SUBFEED LUGS ☒ GND. BUS ☐ I.G. BUS ☒ SURFACE MNT. ☐ BOT. FEED | | |

| LOAD TYPE | CIRCUIT DESCRIPTION | CONN KVA | C.B. AMP | C.B. POLE | C.B. CKT | PH | C.B. CKT | C.B. POLE | C.B. AMP | CONN KVA | CIRCUIT DESCRIPTION | LOAD TYPE |
|---|---|---|---|---|---|---|---|---|---|---|---|---|
| M | EXHAUST BLOWERS BORE 1 & 2 | 117.3 | 600 | 3 | 1 | A | 2 | 3 | 350 | 56.3 | 225KVA, 480- 480Y/277V ISOLATION TRANSFORMER | O |
| | | 117.3 | - | - | 3 | B | 4 | - | - | 56.3 | | |
| | | 117.3 | - | - | 5 | C | 6 | - | - | 56.3 | | |
| L | LIGHTING PANELS | 82.0 | 500 | 3 | 7 | A | 8 | 3 | 350 | 00.0 | SPARE | |
| | | 82.0 | - | - | 9 | B | 10 | - | - | 00.0 | | |
| | | 82.0 | - | - | 11 | C | 12 | - | - | 00.0 | | |
| | SPACE | 00.0 | - | - | 13 | A | 14 | - | - | 00.0 | SPARE | |
| | | 00.0 | - | - | 15 | B | 16 | - | - | 00.0 | | |
| | | 00.0 | - | - | 17 | C | 18 | - | - | 00.0 | | |
| | SPACE | 00.0 | - | | 19 | A | 20 | 3 | - | 00.0 | SPACE | |
| | | 00.0 | - | - | 21 | B | 22 | - | - | 00.0 | | |
| | | 00.0 | - | - | 23 | C | 24 | - | - | 00.0 | | |
| | | | | | | | | | | | | |
| | | | | | | | | | | | | |
| | | | | | | | | | | | | |

| | | | |
|---|---|---|---|
| TOTAL RECEPTACLE (R) LOAD @ 100% FOR FIRST 10,000 VA | | & 50% FOR REMAINDER | 0.00 KVA |
| TOTAL LIGHTING (L) LOAD | 246.0 KVA | LIGHTING LOAD @ 25% | 61.5 KVA |
| TOTAL MOTOR (M) LOAD: | 352.0 KVA | LARGEST MOTOR @ 25% | 15.0 KVA |
| TOTAL OTHER (O) LOAD | 169.0 KVA | | |

| TOTAL CONNECTED LOAD: | CONNECTED KVA TOTAL/PHASE | A | B | C | MINIMUM FEEDER CAPACITY | |
|---|---|---|---|---|---|---|
| 767.0 KVA | | 255.6 | 255.6 | 255.6 | 843.5 KVA | 1015.77 AMP |

4

| PANEL No. W4DP4 | SECTION: | BUS: 120/240 VOLTS 1 PH, 3W, 100A | ☒ MAIN C.B. 60 AMP ☐ MAIN LUGS ONLY |
|---|---|---|---|
| LOCATION: CROSS PASSAGE 1 | SERVICE: EMERGENCY POWER | | |
| FULLY RATED SC RATING 10KA RMS SYM AMPS-DC RATED | ☐ FEED THRU LUGS ☒ NEUTRAL ☐ S.U.S.E. ☐ FLUSH MNT. ☒ TOP FEED<br>☐ SUBFEED LUGS ☒ GND. BUS ☐ I.G. BUS ☒ SURFACE MNT. ☐ BOT. FEED | | |

| LOAD TYPE | CIRCUIT DESCRIPTION | CONN KVA | C.B. AMP | C.B. POLE | C.B. CKT | PH | C.B. CKT | C.B. POLE | C.B. AMP | CONN KVA | CIRCUIT DESCRIPTION | LOAD TYPE |
|---|---|---|---|---|---|---|---|---|---|---|---|---|
| O | VMS CABINET(BORE 4) | 1.80 | 30 | 1 | 1 | A | 2 | 1 | 30 | 1.70 | TOS CABINET(CP-1) | O |
| O | VMS CABINET(BORE 3) | 1.80 | 30 | 1 | 3 | B | 4 | 1 | 30 | 1.35 | TOS CABINET(CP-2) | O |
| O | BASE CABINET(CP-1) | 1.20 | 15 | 1 | 5 | A | 6 | 1 | 15 | 1.20 | BASE CABINET(CP-2) | O |
| O | TUN AIR VELOCITY SENSOR | 0.10 | 20 | 1 | 7 | B | 8 | 1 | 20 | | SPARE | O |
| O | SPACE | | | | 9 | A | 10 | | | | SPACE | O |
| O | SPACE | | | | | | | | | | SPACE | O |
| O | SPACE | | | | | | | | | | SPACE | O |

| | | | |
|---|---|---|---|
| TOTAL RECEPTACLE (R) LOAD @ 100% FOR FIRST 10,000 VA | | & 50% FOR REMAINDER | 0.00 KVA |
| TOTAL LIGHTING (L) LOAD | 0.00 KVA | LIGHTING LOAD @ 25% | 0.00 KVA |
| TOTAL MOTOR (M) LOAD: | 0.00 KVA | LARGEST MOTOR @ 25% | 0.00 KVA |
| TOTAL OTHER (O) LOAD | 9.15 KVA | | |

| TOTAL CONNECTED LOAD: | CONNECTED KVA TOTAL/PHASE | A | B | MINIMUM FEEDER CAPACITY | |
|---|---|---|---|---|---|
| 9.15 KVA | | 5.90 | 3.25 | 9.15 KVA | 38.13 AMP |

4 **REVISED PER ADDENDUM No. 4 DATED SEPTEMBER 3, 2009**

THE CONTRACTOR SHALL VERIFY ALL CONTROLLING FIELD DIMENSIONS BEFORE ORDERING OR FABRICATING ANY MATERIAL

ALL DIMENSIONS ARE IN MILLIMETERS UNLESS OTHERWISE SHOWN

# DETAILS
## PORTAL 1 & 2
## PANEL SCHEDULE No. 7
NO SCALE

**ET-197**

| DATE | REVISED BY | DATE REVISED |
|---|---|---|
| 01/08 | R. ALFONSO/ L. IFURUNG | D. PAUL/ R. BELARDO |

CALCULATED/ DESIGNED BY — CHECKED BY

CONSULTANT FUNCTIONAL SUPERVISOR: NADER SHAHCHERAGHI

STATE OF CALIFORNIA - DEPARTMENT OF TRANSPORTATION

Caltrans

429491et197.dgn

LAST REVISION 00-00-00 — DATE PLOTTED => 01-SEP-2009 TIME PLOTTED => 11:09

RELATIVE BORDER SCALE IS IN MILLIMETERS 0 20 40 60 80

USERNAME => trmikesl
DGN FILE => 429491et197.dgn

EA 294911

| DIST | COUNTY | ROUTE | KILOMETER POST TOTAL PROJECT | SHEET No. | TOTAL SHEETS |
|---|---|---|---|---|---|
| 04 | Ala,CC | 24 | 8.2/10.0, 0.0/2.7 | 1236 | 1435 |

Dev Paul 07-01-08
REGISTERED ELECTRICAL ENGINEER

1-5-09
PLANS APPROVAL DATE

REGISTERED PROFESSIONAL ENGINEER DEV PAUL No. E8856 Exp. 03-31-10 ELECT STATE OF CALIFORNIA

*The State of California or its officers or agents shall not be responsible for the accuracy or completeness of electronic copies of this plan sheet.*

**PARSONS**
50 FREMONT STREET, SUITE 1500
SAN FRANCISCO, CA 94105

**EARTH TECH**
2101 WEBSTER STREET, SUITE 1000
OAKLAND, CA. 94612-3060

4

| PANEL No. W4DP5 | SECTION: | BUS: 120/240 VOLTS 1 PH, 3W, 100A | ☒ MAIN C.B. 60 AMP |
|---|---|---|---|
| LOCATION: CROSS PASSAGE 3 | SERVICE: EMERGENCY POWER | | ☐ MAIN LUGS ONLY |
| FULLY RATED SC RATING 10KA RMS SYM AMPS-DC RATED | ☐ FEED THRU LUGS ☐ SUBFEED LUGS | ☒ NEUTRAL ☒ GND. BUS | ☐ S.U.S.E. ☐ I.G. BUS ☐ FLUSH MNT. ☒ SURFACE MNT. ☒ TOP FEED ☐ BOT. FEED |

| LOAD TYPE | CIRCUIT DESCRIPTION | CONN KVA | C.B. AMP | POLE | CKT | PH | C.B. CKT | POLE | AMP | CONN KVA | CIRCUIT DESCRIPTION | LOAD TYPE |
|---|---|---|---|---|---|---|---|---|---|---|---|---|
| O | VMS CABINET(BORE 4) | 1.80 | 30 | 1 | 1 | B | 2 | 1 | 30 | 1.50 | TOS CABINET(CP-3) | O |
| O | VMS CABINET(BORE 3) | 1.80 | 30 | 1 | 3 | C | 4 | 1 | 15 | 1.20 | BASE CABINET(CP-3) | O |
| | SPARE | | 20 | 1 | 5 | B | 6 | 1 | 20 | | SPARE | |
| O | TUN AIR VELOCITY SENSOR | 0.10 | 20 | 1 | 7 | C | 8 | 1 | 20 | | SPARE | |
| | SPARE | | 20 | 1 | 9 | B | 10 | 1 | 20 | | SPARE | |
| | SPACE | | | | | C | | | | | SPACE | |
| | SPACE | | | | | | | | | | SPACE | |

TOTAL RECEPTACLE (R) LOAD @ 100% FOR FIRST 10,000 VA & 50% FOR REMAINDER 0.00 KVA
TOTAL LIGHTING (L) LOAD 0.00 KVA — LIGHTING LOAD @ 25% 0.00 KVA
TOTAL MOTOR (M) LOAD: 0.00 KVA — LARGEST MOTOR @ 25% 0.00 KVA
TOTAL OTHER (O) LOAD 6.30 KVA

| TOTAL CONNECTED LOAD: | CONNECTED KVA TOTAL/PHASE | B | C | MINIMUM FEEDER CAPACITY | |
|---|---|---|---|---|---|
| 6.40 KVA | | 3.30 | 3.10 | 6.30 KVA | 26.30 AMP |

4

| PANEL No. W4DP6 | SECTION: | BUS: 120/240 VOLTS 1 PH, 3W, 100A | ☒ MAIN C.B. 60 AMP |
|---|---|---|---|
| LOCATION: CROSS PASSAGE 4: | SERVICE: EMERGENCY POWER | | ☐ MAIN LUGS ONLY |
| FULLY RATED SC RATING 10KA RMS SYM AMPS-DC RATED | ☐ FEED THRU LUGS ☐ SUBFEED LUGS | ☒ NEUTRAL ☒ GND. BUS | ☐ S.U.S.E. ☐ I.G. BUS ☐ FLUSH MNT. ☒ SURFACE MNT. ☒ TOP FEED ☐ BOT. FEED |

| LOAD TYPE | CIRCUIT DESCRIPTION | CONN KVA | C.B. AMP | POLE | CKT | PH | C.B. CKT | POLE | AMP | CONN KVA | CIRCUIT DESCRIPTION | LOAD TYPE |
|---|---|---|---|---|---|---|---|---|---|---|---|---|
| O | VMS CABINET(BORE 4) | 1.80 | 30 | 1 | 1 | C | 2 | 1 | 30 | 1.50 | TOS CABINET(CP-4) | O |
| O | VMS CABINET(BORE 3) | 1.80 | 30 | 1 | 3 | A | 4 | 1 | 15 | 1.20 | BASE CABINET(CP-4) | O |
| O | SPARE | | 30 | 1 | 5 | C | 6 | 1 | 20 | | SPARE | O |
| O | SPARE | | 20 | 1 | 7 | A | 8 | 1 | 20 | | SPARE | O |
| O | SPARE | | 20 | 1 | 9 | C | 10 | 1 | 20 | | SPARE | O |
| O | SPACE | | | | | | | | | | SPACE | O |
| O | SPACE | | | | | | | | | | SPACE | O |

TOTAL RECEPTACLE (R) LOAD @ 100% FOR FIRST 10,000 VA & 50% FOR REMAINDER 0.00 KVA
TOTAL LIGHTING (L) LOAD 0.00 KVA — LIGHTING LOAD @ 25% 0.00 KVA
TOTAL MOTOR (M) LOAD: 0.00 KVA — LARGEST MOTOR @ 25% 0.00 KVA
TOTAL OTHER (O) LOAD 6.30 KVA

| TOTAL CONNECTED LOAD: | CONNECTED KVA TOTAL/PHASE | C | A | MINIMUM FEEDER CAPACITY | |
|---|---|---|---|---|---|
| 6.30 KVA | | 3.30 | 3.00 | 6.30 KVA | 26.30 AMP |

4 **REVISED PER ADDENDUM No. 4 DATED SEPTEMBER 3, 2009**

THE CONTRACTOR SHALL VERIFY ALL CONTROLLING FIELD DIMENSIONS BEFORE ORDERING OR FABRICATING ANY MATERIAL

ALL DIMENSIONS ARE IN MILLIMETERS UNLESS OTHERWISE SHOWN

# DETAILS
## PORTAL 1
## PANEL SCHEDULE No. 8
NO SCALE

**ET-198**

| DATE | REVISED BY | DATE REVISED |
|---|---|---|
| 01/08 | R. ALFONSO/ L. IFURUNG | D. PAUL/ R. BELARDO |

CALCULATED/ DESIGNED BY — CHECKED BY

CONSULTANT FUNCTIONAL SUPERVISOR: NADER SHAHCHERAGHI

STATE OF CALIFORNIA - DEPARTMENT OF TRANSPORTATION
Caltrans

429491et198.dgn

LAST REVISION 00-00-00 — DATE PLOTTED => 01-SEP-2009 TIME PLOTTED => 11:09

RELATIVE BORDER SCALE IS IN MILLIMETERS 0 20 40 60 80

USERNAME => trmikesl
DGN FILE => 429491et198.dgn

EA 294911

| DIST | COUNTY | ROUTE | KILOMETER POST TOTAL PROJECT | SHEET No. | TOTAL SHEETS |
|---|---|---|---|---|---|
| 04 | Ala,CC | 24 | 8.2/10.0, 0.0/2.7 | 1237 | 1435 |

Dev Paul 07-01-08
REGISTERED ELECTRICAL ENGINEER

1-5-09
PLANS APPROVAL DATE

REGISTERED PROFESSIONAL ENGINEER DEV PAUL No. E8856 Exp. 03-31-10 ELECT STATE OF CALIFORNIA

*The State of California or its officers or agents shall not be responsible for the accuracy or completeness of electronic copies of this plan sheet.*


**PARSONS**
50 FREMONT STREET, SUITE 1500
SAN FRANCISCO, CA 94105

**EARTH TECH**
2101 WEBSTER STREET, SUITE 1000
OAKLAND, CA. 94612-3060


4

| PANEL No. E4DP5 | SECTION: | BUS: 120/240 VOLTS 1 PH, 3W, 100A | ☒ MAIN C.B. 60 AMP |
|---|---|---|---|
| LOCATION: CROSS PASSAGE 6: | SERVICE: EMERGENCY POWER | | ☐ MAIN LUGS ONLY |
| FULLY RATED SC RATING 10KA RMS SYM AMPS-DC RATED | ☐ FEED THRU LUGS ☐ SUBFEED LUGS | ☒ NEUTRAL ☒ GND. BUS | ☐ S.U.S.E. ☐ I.G. BUS ☐ FLUSH MNT. ☒ SURFACE MNT. ☒ TOP FEED ☐ BOT. FEED |

| LOAD TYPE | CIRCUIT DESCRIPTION | CONN KVA | C.B. AMP | POLE | CKT | PH | C.B. CKT | POLE | AMP | CONN KVA | CIRCUIT DESCRIPTION | LOAD TYPE |
|---|---|---|---|---|---|---|---|---|---|---|---|---|
| O | VMS CABINET(BORE 4) | 1.80 | 30 | 1 | 1 | A | 2 | 1 | 30 | 1.50 | TOS CABINET(CP-6) | O |
| O | VMS CABINET(BORE 3) | 1.80 | 30 | 1 | 3 | B | 4 | 1 | 30 | 1.35 | TOS CABINET(CP-5) | O |
| | SPARE | | 20 | 1 | 5 | A | 6 | 1 | 15 | 1.20 | BASE CABINET(CP-6) | O |
| O | TUN AIR VELOCITY SENSOR | 0.10 | 20 | 1 | 7 | B | 8 | 1 | 15 | 1.20 | BASE CABINET (CP-5) | O |
| | SPARE | | 20 | 1 | 9 | A | 10 | 1 | 20 | | SPARE | |
| | SPACE | | | | | | | | | | SPACE | |
| | SPACE | | | | | | | | | | SPACE | |

TOTAL RECEPTACLE (R) LOAD @ 100% FOR FIRST 10,000 VA & 50% FOR REMAINDER 0.00 KVA
TOTAL LIGHTING (L) LOAD 0.00 KVA — LIGHTING LOAD @ 25% 0.00 KVA
TOTAL MOTOR (M) LOAD: 0.00 KVA — LARGEST MOTOR @ 25% 0.00 KVA
TOTAL OTHER (O) LOAD 8.95 KVA

| TOTAL CONNECTED LOAD: | CONNECTED KVA TOTAL/PHASE | A | B | MINIMUM FEEDER CAPACITY | |
|---|---|---|---|---|---|
| 8.95 KVA | | 4.50 | 4.45 | 8.95 KVA | 37.29 AMP |

4

| PANEL No. E4DP6 | SECTION: | BUS: 120/240 VOLTS 1 PH, 3W, 100A | ☒ MAIN C.B. 60 AMP |
|---|---|---|---|
| LOCATION: CROSS PASSAGE 7 | SERVICE: EMERGENCY POWER | | ☐ MAIN LUGS ONLY |
| FULLY RATED SC RATING 10KA RMS SYM AMPS-DC RATED | ☐ FEED THRU LUGS ☐ SUBFEED LUGS | ☒ NEUTRAL ☒ GND. BUS | ☐ S.U.S.E. ☐ I.G. BUS ☐ FLUSH MNT. ☒ SURFACE MNT. ☒ TOP FEED ☐ BOT. FEED |

| LOAD TYPE | CIRCUIT DESCRIPTION | CONN KVA | C.B. AMP | POLE | CKT | PH | C.B. CKT | POLE | AMP | CONN KVA | CIRCUIT DESCRIPTION | LOAD TYPE |
|---|---|---|---|---|---|---|---|---|---|---|---|---|
| O | VMS CABINET(BORE 4) | 1.80 | 30 | 1 | 1 | B | 2 | 1 | 30 | 1.50 | TOS CABINET(CP-7) | O |
| O | VMS CABINET(BORE 3) | 1.80 | 30 | 1 | 3 | C | 4 | 1 | 15 | 1.20 | BASE CABINET(CP-7) | O |
| | SPARE | | 20 | 1 | 5 | B | 6 | 1 | 20 | | SPARE | O |
| | SPARE | | 20 | 1 | 7 | C | 8 | 1 | 20 | | SPARE | O |
| | SPARE | | 20 | 1 | 9 | B | 10 | 1 | 20 | | SPARE | O |
| | SPACE | | | | | | | | | | SPACE | O |
| | SPACE | | | | | | | | | | SPACE | O |

TOTAL RECEPTACLE (R) LOAD @ 100% FOR FIRST 10,000 VA & 50% FOR REMAINDER 0.00 KVA
TOTAL LIGHTING (L) LOAD 0.00 KVA — LIGHTING LOAD @ 25% 0.00 KVA
TOTAL MOTOR (M) LOAD: 0.00 KVA — LARGEST MOTOR @ 25% 0.00 KVA
TOTAL OTHER (O) LOAD 6.30 KVA

| TOTAL CONNECTED LOAD: | CONNECTED KVA TOTAL/PHASE | B | C | MINIMUM FEEDER CAPACITY | |
|---|---|---|---|---|---|
| 6.30 KVA | | 3.30 | 3.00 | 6.30 KVA | 26.25 AMP |

4 **REVISED PER ADDENDUM No. 4 DATED SEPTEMBER 3, 2009**

THE CONTRACTOR SHALL VERIFY ALL CONTROLLING FIELD DIMENSIONS BEFORE ORDERING OR FABRICATING ANY MATERIAL

ALL DIMENSIONS ARE IN MILLIMETERS UNLESS OTHERWISE SHOWN

# DETAILS
## PORTAL 2
## PANEL SCHEDULE No. 9
NO SCALE

**ET-199**

| DATE | REVISED BY | DATE REVISED |
|---|---|---|
| 01/08 | R. ALFONSO/ L. IFURUNG | D. PAUL/ R. BELARDO |

CALCULATED/ DESIGNED BY — CHECKED BY

CONSULTANT FUNCTIONAL SUPERVISOR: NADER SHAHCHERAGHI

STATE OF CALIFORNIA - DEPARTMENT OF TRANSPORTATION

Caltrans

429491et199.dgn

LAST REVISION 00-00-00 — DATE PLOTTED => 01-SEP-2009 TIME PLOTTED => 11:09

RELATIVE BORDER SCALE IS IN MILLIMETERS 0 20 40 60 80

USERNAME => trmikesl
DGN FILE => 429491et199.dgn

EA 294911

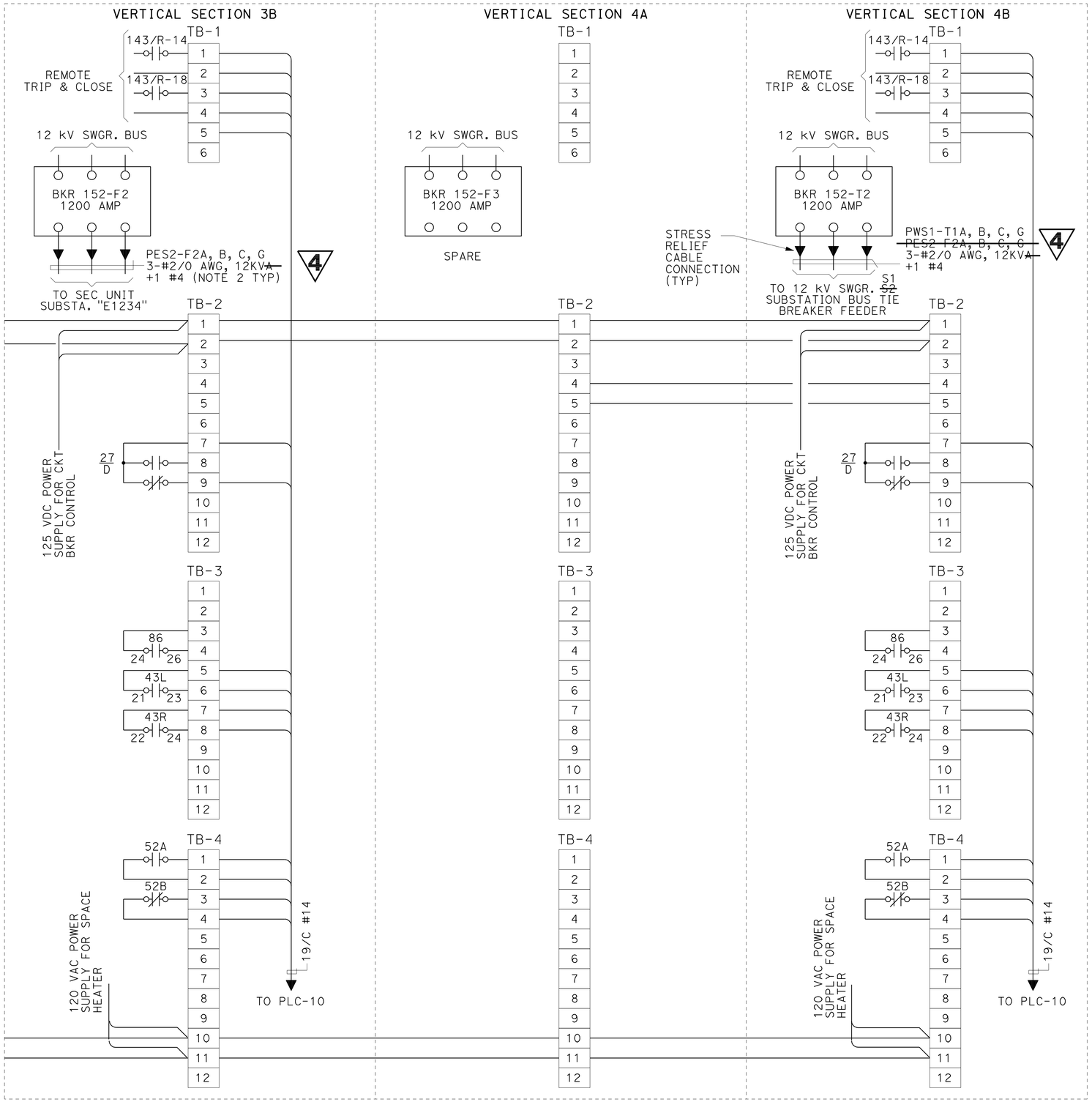


## 12 kV SWITCHGEAR CIRCUIT BREAKERS

THE CONTRACTOR SHALL VERIFY ALL CONTROLLING FIELD DIMENSIONS BEFORE ORDERING OR FABRICATING ANY MATERIAL

ALL DIMENSIONS ARE IN MILLIMETERS UNLESS OTHERWISE SHOWN

| DIST | COUNTY | ROUTE | KILOMETER POST TOTAL PROJECT | SHEET No. | TOTAL SHEETS |
|---|---|---|---|---|---|
| 04 | Ala,CC | 24 | 8.2/10.0, 0.0/2.7 | 1277 | 1435 |

Dev Paul 07-01-08
REGISTERED ELECTRICAL ENGINEER

1-5-09
PLANS APPROVAL DATE

REGISTERED PROFESSIONAL ENGINEER DEV PAUL No. E8856 Exp. 03-31-10 ELECT STATE OF CALIFORNIA

*The State of California or its officers or agents shall not be responsible for the accuracy or completeness of electronic copies of this plan sheet.*

**PARSONS**
50 FREMONT STREET, SUITE 1500
SAN FRANCISCO, CA 94105

**EARTH TECH**
2101 WEBSTER STREET, SUITE 1000
OAKLAND, CA. 94612-3060

*To get to the Caltrans web site, go to: http://www.dot.ca.gov*

NOTES:

1. REFERENCES:
   - FOR 12 kV SWGR S2 METER & RELAY SINGLE LINE DIAGRAM, SEE SHEET ET-105.
   - FOR SUBSTATION GENERAL ARRANGEMENT PLAN, SEE SHEET ESS-21.
2. FOR CABLE SCHEDULE SEE SHEET ET-171 THROUGH ET-179.

4 REVISED PER ADDENDUM No. 4 DATED SEPTEMBER 3, 2009

# DETAILS
## 12 KV SWGR S2 CONNECTION DIAGRAM No. 2
NO SCALE

ET-263

| DATE | REVISED BY | DATE REVISED |
|---|---|---|
| 01/08 | | |

CALCULATED/DESIGNED BY: R. ALFONSO/L. TFURUNG
CHECKED BY: D. PAUL/R. BELARDO
CONSULTANT FUNCTIONAL SUPERVISOR: NADER SHAHCHERAGHI

STATE OF CALIFORNIA - DEPARTMENT OF TRANSPORTATION
Caltrans

429491et263.add

LAST REVISION 00-00-00
DATE PLOTTED => 01-SEP-2009
TIME PLOTTED => 11:09

RELATIVE BORDER SCALE IS IN MILLIMETERS 0 20 40 60 80

USERNAME => trmikesl
DGN FILE => 429491et263.add

EA 294911

| DIST | COUNTY | ROUTE | KILOMETER POST TOTAL PROJECT | SHEET No. | TOTAL SHEETS |
|---|---|---|---|---|---|
| 04 | Ala,CC | 24 | 8.2/10.0, 0.0/2.7 | 1282 | 1435 |

Dev Paul 07-01-08
REGISTERED ELECTRICAL ENGINEER

1-5-09
PLANS APPROVAL DATE

REGISTERED PROFESSIONAL ENGINEER DEV PAUL No. E8856 Exp. 03-31-10 ELECT STATE OF CALIFORNIA

*The State of California or its officers or agents shall not be responsible for the accuracy or completeness of electronic copies of this plan sheet.*

**PARSONS**
50 FREMONT STREET, SUITE 1500
SAN FRANCISCO, CA 94105

**EARTH TECH**
2101 WEBSTER STREET, SUITE 1000
OAKLAND, CA. 94612-3060

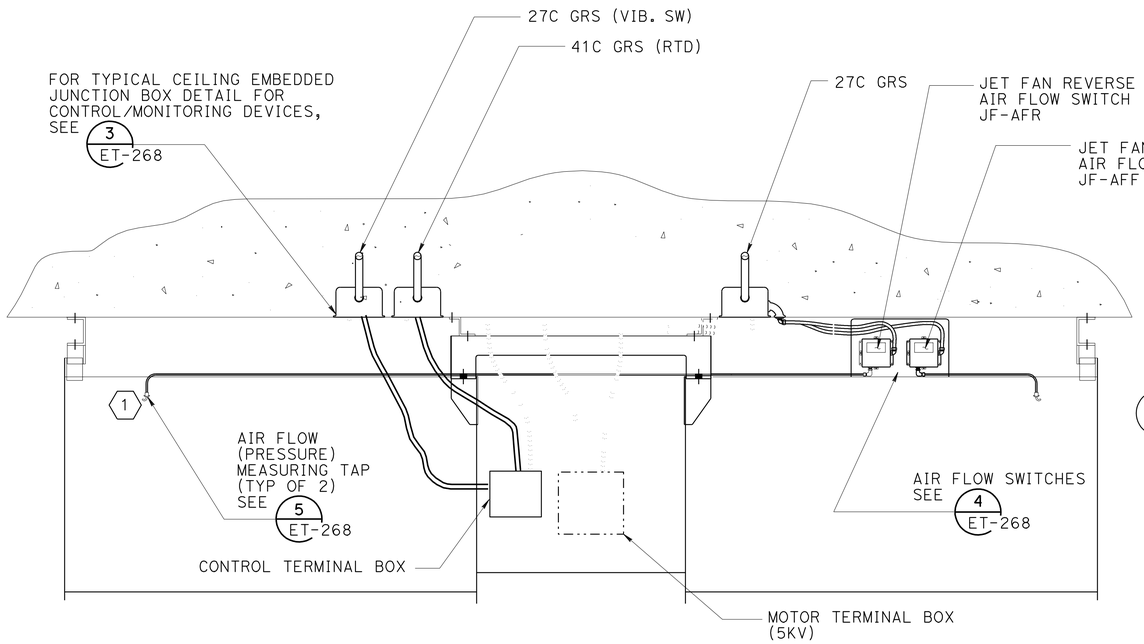


## 1 TYPICAL JET FAN MONITORING CONNECTION DETAIL

NOT TO SCALE

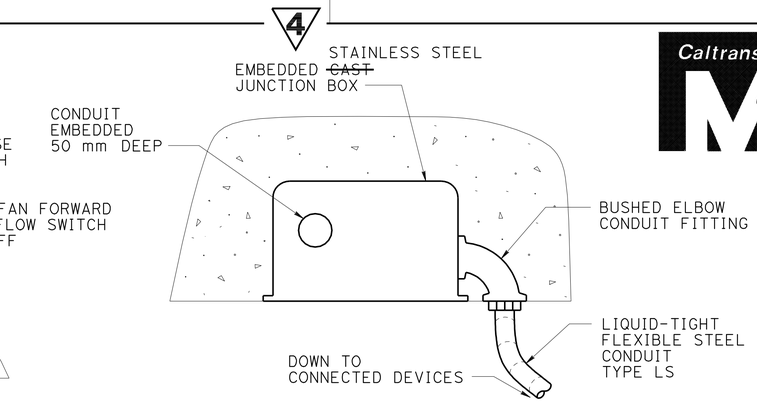


## 3 TYPICAL CEILING EMBEDDED JUNCTION BOX DETAIL FOR CONTROL/MONITORING DEVICES

NOT TO SCALE

## SHEET NOTE:

1. AIR FLOW MEASURING TAP (PITOT TUBE) AND ALL ASSOCIATED TUBING TO BE FACTORY INSTALLED BY FAN VENDOR.

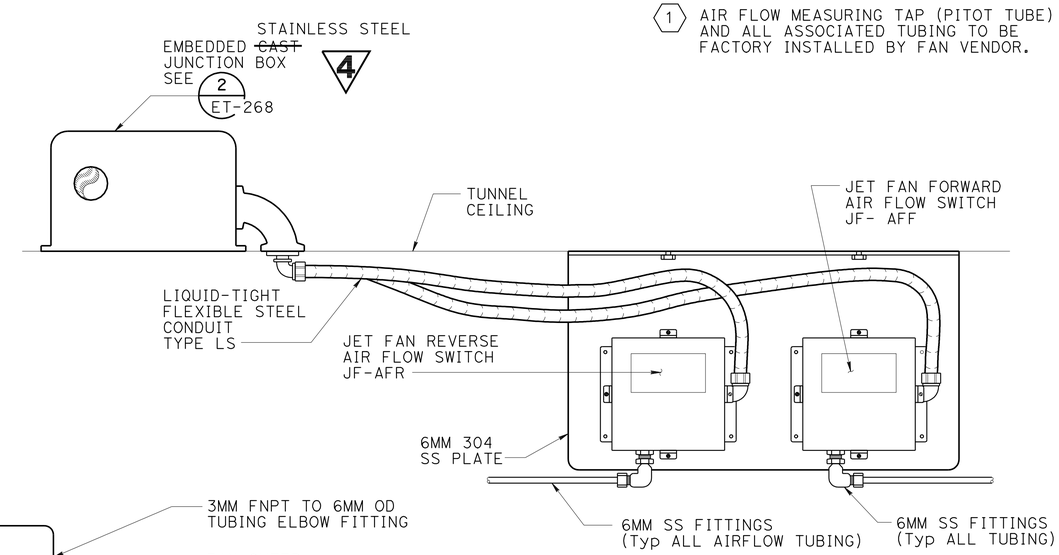


## 4 TYPICAL JET FAN AIR FLOW SWITCH MOUNTING DETAIL

NOT TO SCALE

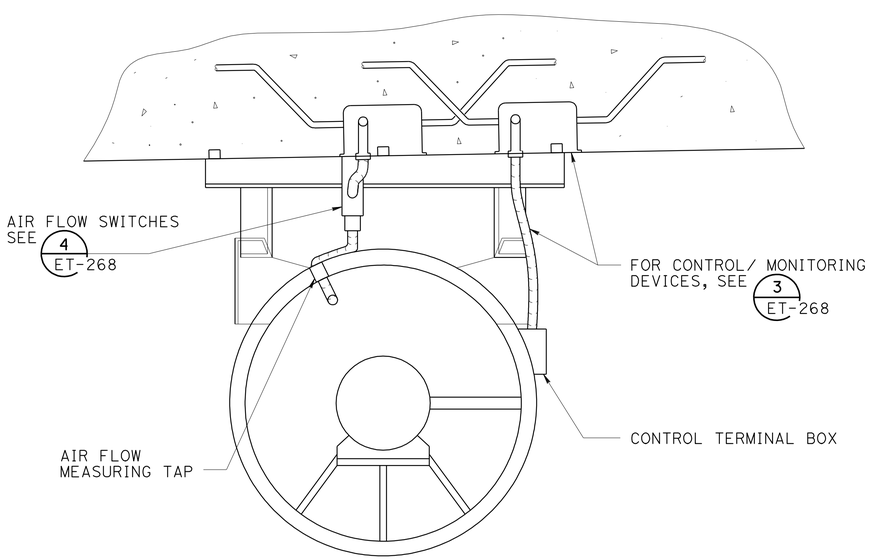


## 2 TYPICAL JET FAN MONITORING CONNECTION CROSS SECTION DETAIL

NOT TO SCALE

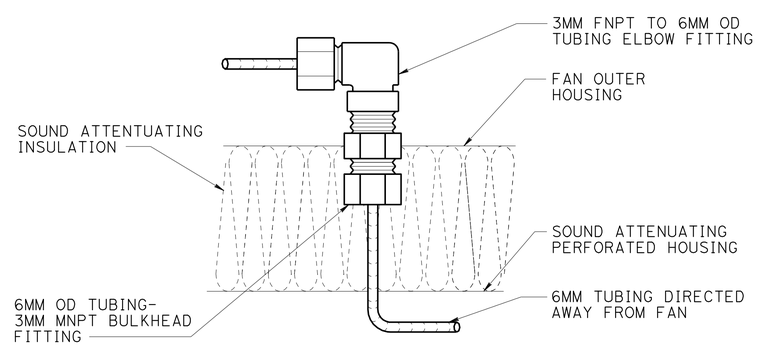


## 5 AIR FLOW MEASURING TAP INSTALLATION DETAIL

NOT TO SCALE

**4 REVISED PER ADDENDUM No. 4 DATED SEPTEMBER 3, 2009**

# DETAILS
## VENTILATION CONTROLS

NO SCALE

**ET-268**

THE CONTRACTOR SHALL VERIFY ALL CONTROLLING FIELD DIMENSIONS BEFORE ORDERING OR FABRICATING ANY MATERIAL

ALL DIMENSIONS ARE IN MILLIMETERS UNLESS OTHERWISE SHOWN

| DATE | REVISED BY | DATE REVISED |
|---|---|---|
| 01/08 | R. ALFONSO/ L. TFURUNG | D. PAUL/ R. BELARDO |

CALCULATED/ DESIGNED BY — CHECKED BY

CONSULTANT FUNCTIONAL SUPERVISOR: NADER SHAHCHERAGHI

STATE OF CALIFORNIA - DEPARTMENT OF TRANSPORTATION

Caltrans

429491et268.add

RELATIVE BORDER SCALE IS IN MILLIMETERS 0 20 40 60 80

USERNAME => trmikesl
DGN FILE => 429491et268.add

EA 294911

LAST REVISION 00-00-00 DATE PLOTTED => 01-SEP-2009 TIME PLOTTED => 11:09

| DIST | COUNTY | ROUTE | KILOMETER POST TOTAL PROJECT | SHEET No. | TOTAL SHEETS |
|---|---|---|---|---|---|
| 04 | Ala,CC | 24 | 8.2/10.0, 0.0/2.7 | 1283 | 1435 |

Dev Paul 07-01-08
REGISTERED ELECTRICAL ENGINEER

1-5-09
PLANS APPROVAL DATE

REGISTERED PROFESSIONAL ENGINEER DEV PAUL No. E8856 Exp. 03-31-10 ELECT STATE OF CALIFORNIA

*The State of California or its officers or agents shall not be responsible for the accuracy or completeness of electronic copies of this plan sheet.*

**PARSONS**
50 FREMONT STREET, SUITE 1500
SAN FRANCISCO, CA 94105

**EARTH TECH**
2101 WEBSTER STREET, SUITE 1000
OAKLAND, CA. 94612-3060

*To get to the Caltrans web site, go to: http://www.dot.ca.gov*

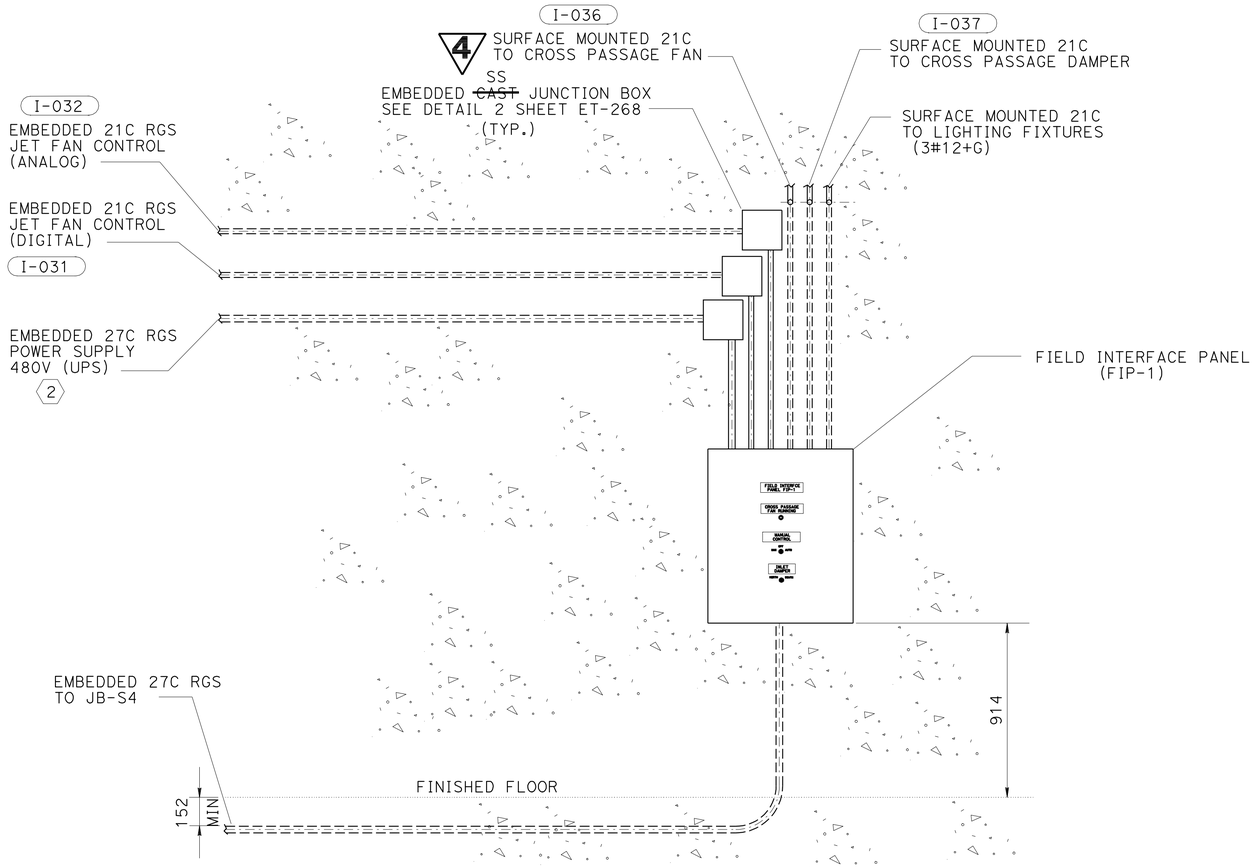


**A ELEVATION** 1
FACING NORTH

## NOTE:

1. ELEVATION SHOWN ON THIS SHEET IS FOR CROSS PASSAGE 1. FOR CROSS PASSAGES 2, 3, 4, 5, 6 AND 7, REFER TO TABLE BELOW.
2. SEE DWG. ET-182 FOR CONDUIT SCHEDULES.

**TABLE - ID NUMBERS**

| LOCATION | FIP | JET FAN CONTROL | | CROSS PASSAGE | | LIGHTING |
|---|---|---|---|---|---|---|
| | | ANALOG | DIGITAL | FAN | DAMPER | |
| CROSS PASSAGE 1 | 1 | I-032 | I-031 | I-036 | I-037 | 3-#12 + G |
| CROSS PASSAGE 2 | 2 | I-042 | I-041 | I-046 | I-047 | 3-#12 + G |
| CROSS PASSAGE 3 | 3 | I-052 | I-051 | I-056 | I-057 | 3-#12 + G |
| CROSS PASSAGE 4 | 4 | I-062 | I-061 | I-066 | I-067 | 3-#12 + G |
| CROSS PASSAGE 5 | 5 | I-072 | I-071 | I-076 | I-077 | 3-#12 + G |
| CROSS PASSAGE 6 | 6 | I-082 | I-081 | I-086 | I-087 | 3-#12 + G |
| CROSS PASSAGE 7 | 7 | I-092 | I-091 | I-096 | I-097 | 3-#12 + G |

**4 REVISED PER ADDENDUM No. 4 DATED SEPTEMBER 3, 2009**

# SCADA
## FIELD INTERFACE PANELS
NO SCALE

**ET-269**

THE CONTRACTOR SHALL VERIFY ALL CONTROLLING FIELD DIMENSIONS BEFORE ORDERING OR FABRICATING ANY MATERIAL

ALL DIMENSIONS ARE IN MILLIMETERS UNLESS OTHERWISE SHOWN

| DATE | REVISED BY | DATE REVISED |
|---|---|---|
| 01/08 | | |

CALCULATED/DESIGNED BY: R. ALFONSO/L. IFURUNG
CHECKED BY: D. PAUL/R. BELARDO
CONSULTANT FUNCTIONAL SUPERVISOR: NADER SHAHCHERAGHI
STATE OF CALIFORNIA - DEPARTMENT OF TRANSPORTATION
Caltrans

RELATIVE BORDER SCALE IS IN MILLIMETERS 0 20 40 60 80

USERNAME => trmikesl
DGN FILE => 429491et269.dgn

EA 294911

LAST REVISION 00-00-00
DATE PLOTTED => 01-SEP-2009
TIME PLOTTED => 11:10

429491et269.dgn

| DIST | COUNTY | ROUTE | KILOMETER POST TOTAL PROJECT | SHEET No. | TOTAL SHEETS |
|---|---|---|---|---|---|
| 04 | Ala,CC | 24 | 8.2/10.0, 0.0/2.7 | 1360 | 1435 |

Dev Paul 07-01-08
REGISTERED ELECTRICAL ENGINEER

1-5-09
PLANS APPROVAL DATE

REGISTERED PROFESSIONAL ENGINEER DEV PAUL No. E8856 Exp. 03-31-10 ELECT STATE OF CALIFORNIA

*The State of California or its officers or agents shall not be responsible for the accuracy or completeness of electronic copies of this plan sheet.*

**PARSONS**
50 FREMONT STREET, SUITE 1500
SAN FRANCISCO, CA 94105

**EARTH TECH**
2101 WEBSTER STREET, SUITE 1000
OAKLAND, CA. 94612-3060

*To get to the Caltrans web site, go to: http://www.dot.ca.gov*

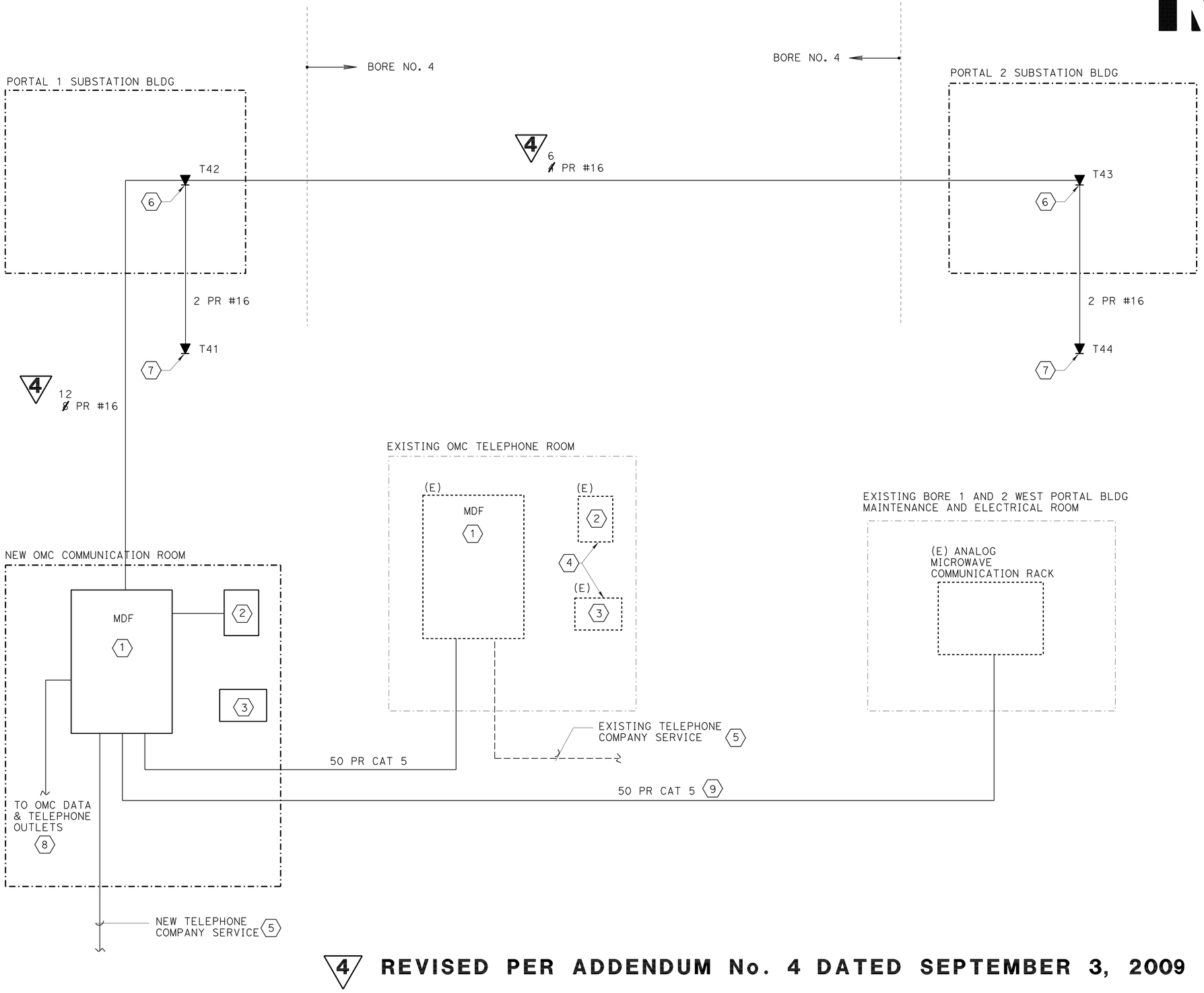


## SHEET NOTES:

1. MAIN DISTRIBUTION FRAME PANEL PROVIDE GROUNDING AS WELL AS ALL OTHER FEATURES OF THIS PANEL TO MEET TELEPHONE COMPANY REQUIREMENTS.
2. MITEL SWITCH PANEL. CONTRACTOR TO CONFIRM EXISTING SWITCH HAS ADEQUATE CAPACITY TO SUPPORT EXISTING AND NEW FACILITIES
3. FIRE WHITE VOTER SHELF
4. RELOCATE EQUIPMENT FROM EXISTING TELEPHONE ROOM TO NEW OMC COMMUNICATION ROOM. COORDINATE INTERRUPTION OF TELEPHONE SYSTEM WITH CALTRANS MAINTENANCE STAFF.
5. TO TELEPHONE COMPANY COORDINATE WITH CALTRANS MAINTENANCE STAFF AND WITH TELEPHONE COMPANY FOR ESTABLISHING THE TELEPHONE COMPANY SERVICE TO THE NEW OMC BUILDING. CONDUIT REQUIRED SHALL MEET TELEPHONE COMPANY REQUIREMENTS.
6. FOR PORTAL SUBSTATIONS TELEPHONE, SEE SHEET ESS-2 FOR PORTAL 1 AND SHEET ESS-22 FOR PORTAL 2.
7. EXACT LOCATION OF FIRE MARSHALL EMER TELEPHONE OUTLET TO BE COORDINATED WITH THE FIRE DEPARTMENT AND CALTRANS BEFORE STARTING INSTALLATION. PROVISION FOR CONDUIT ROUTING IS SHOWN ON SHEET ET-40. ALSO REFER TO SHEET ET-420 FOR CONDUIT DUCT ASSIGNMENT.
8. FOR TELEPHONE LAYOUT INSIDE OMC BUILDING SEE OMC BUILDING DESIGN SHEET EE-02 AND EE-03,
9. SEE SHEET ET-29 FOR CONDUIT ROUTING.

**4 REVISED PER ADDENDUM No. 4 DATED SEPTEMBER 3, 2009**

THE CONTRACTOR SHALL VERIFY ALL CONTROLLING FIELD DIMENSIONS BEFORE ORDERING OR FABRICATING ANY MATERIAL

ALL DIMENSIONS ARE IN MILLIMETERS UNLESS OTHERWISE SHOWN

# TELEPHONE SYSTEM

NO SCALE

**ET-406**

| | | | |
|---|---|---|---|
| | R. ALFONSO/ L. TFURUNG | 01/08 | |
| | D. PAUL/ R. BELARDO | | |
| CALCULATED/ DESIGNED BY | | DATE | REVISED BY |
| CHECKED BY | | | DATE REVISED |

CONSULTANT FUNCTIONAL SUPERVISOR
NADER SHAHCHERAGHI

STATE OF CALIFORNIA - DEPARTMENT OF TRANSPORTATION
Caltrans

429491et406.dgn

LAST REVISION 00-00-00
DATE PLOTTED => 01-SEP-2009
TIME PLOTTED => 11:10

RELATIVE BORDER SCALE IS IN MILLIMETERS 0 20 40 60 80

USERNAME => trmikesl
DGN FILE => 429491et406.dgn

EA 294911

| DIST | COUNTY | ROUTE | KILOMETER POST TOTAL PROJECT | SHEET No. | TOTAL SHEETS |
|---|---|---|---|---|---|
| 04 | Ala,CC | 24 | 8.2/10.0, 0.0/2.7 | 1373 | 1435 |

Dev Paul 07-01-08
REGISTERED ELECTRICAL ENGINEER

1-5-09
PLANS APPROVAL DATE

REGISTERED PROFESSIONAL ENGINEER DEV PAUL No. E8856 Exp. 03-31-10 ELECT STATE OF CALIFORNIA

*The State of California or its officers or agents shall not be responsible for the accuracy or completeness of electronic copies of this plan sheet.*


**PARSONS**
50 FREMONT STREET, SUITE 1500
SAN FRANCISCO, CA 94105

**EARTH TECH**
2101 WEBSTER STREET, SUITE 1000
OAKLAND, CA. 94612-3060


*To get to the Caltrans web site, go to: http://www.dot.ca.gov*

| NO. | WORK DESCRIPTION | NOTES |
|---|---|---|
| A | THE FOLLOWING SEQUENCE RELATES TO NEW BORE 4 WORK THAT IS REQUIRED BEFORE ANY MODIFICATIONS CAN BE PERFORMED ON EXISTING POWER DISTRIBUTION SYSTEM. | |
| 1 | CONSTRUCT SUBSTATION S1 BUILDING | 2 |
| 2 | INSTALL S1 SUBSTATION EQUIPMENT | 2 |
| 3 | ESTABLISH PG&E LINE 1 SERVICE | 2 |
| 4 | COMMISSION 12KV SUBSTATION S1 | 2 |
| 5 | CONSTRUCT SUBSTATION S2 BUILDING | 2 |
| 6 | INSTALL S2 SUBSTATION EQUIPMENT | 2 |
| 7 | ESTABLISH PG&E LINE 2 SERVICE | 2 |
| 8 | COMMISSION 12KV SUBSTATION S2 | 2 |
| 9 | INSTALL 12KV TIE CABLE BETWEEN S1 AND S2 THROUGH BORE 3 FRESH AIR DUCT. | 2 |
| 10 | COMMISSION THE 12KV TIE BETWEEN S1 AND S2. | 2 |
| 11 | INSTALL AND COMMISSION 480V SUBSTATION E1234. | 2 |
| A1 | THE FOLLOWING SEQUENCE RELATES TO REQUIRED MODIFICATIONS OF EXISTING POWER DISTRIBUTION SYSTEM AT PORTAL 2 (EAST). | |
| 12 | INSTALL NEW 480V DISTRIBUTION PANEL E4DP4 IN EXISTING EAST PORTAL SUBSTATION ROOM | 2,3,4 |
| 13 | INSTALL 480V FEEDER CABLE BETWEEN SUBSTATION E1234 AND DISTRIBUTION PANEL E4DP4, AND ENERGIZE E4DP4. | 2,4 |
| 14 | INSTALL NEW 600A CIRCUIT BREAKER FOR EXISTING LOAD E3TH IN EXISTING EAST PORTAL BUILDING FOR BORE 3. | 2 |
| 15 | INSTALL 480V FEEDER CABLE BETWEEN SUBSTATION E1234 AND THE NEW 600A CIRCUIT BREAKER FOR LOAD E3TH. | 2,3,4 |
| 16 | MAKE PROVISIONS FOR TEMPORARY POWER SEE SHEET ET-468. | 2,3 |
| 17 | TRANSFER EXISTING LOAD E3TH FROM EXISTING 480V POWER PANELBOARD DPD2 TO TEMPORARY POWER SWITCH BOARD. BC | 2,3,4,5 |
| 4 18 | TRANSFER, ONE AT A TIME, ALL REMAINING LOADS (350A, 600A AND 500A BKRS) FROM EXISTING 480V POWER PANELBOARD DPD2 TO ~~NEW 480V PANELBOARD E4DP4.~~ TEMPORARY POWER SWITCH BOARD. BC | 2,3,4,5 |
| 19 | DE-ENERGIZE EXISTING 12KV TIE CABLE (AT BOTH ENDS) BETWEEN EXISTING UNIT SUBSTATION IN ELECTRIC ROOM AT WEST PORTAL OF BORE 3 AND EXISTING SUBSTATION IN SUBSTATION ROOM AT EAST PORTAL OF BORES 1 AND 2. | 3,4 |
| 20 | REMOVE & SALVAGE EXISTING 12KV TIE CABLE FROM BORE 3 FRESH AIR DUCT. | 3,4 |
| 21 | REMOVE EXISTING 1120KVA 12KV SUBSTATION AND 480V POWER PANELBOARD DPD2 LOCATED IN EXISTING EAST PORTAL SUBSTATION ROOM. BC | 3,4 |
| 22 | TRANSFER, ON AT A TIME, EACH EXISTING LOAD FED FROM TEMPORARY POWER TO NEW SUBSTATION E1234 AND PANEL E4DP4. 4 BC | 2,3,4,5 |
| A2 | THE FOLLOWING SEQUENCE RELATES TO REQUIRED MODIFICATIONS OF EXISTING POWER DISTRIBUTION SYSTEM AT PORTAL 1 (WEST). | |
| 22 | MAKE PROVISIONS FOR TEMPORARY POWER. SEE SHEET ET-467. | 2,3,6 |
| 23 | TRANSFER EXISTING LOADS FROM 1500KVA UNIT SUBSTATION TO TEMPORARY POWER BC | 3,4,5,6 |
| 24 | DISCONNECT THE EXISTING UNIT SUBSTATION FROM THE EXISTING PG&E SERVICE AND REMOVE THE 12KV FEEDER. | 3,4 |
| 25 | REMOVE EXISTING UNIT SUBSTATION FROM WEST PORTAL BORE 3 ELECTRICAL ROOM THROUGH TEMPORARY OPENING IN CONCRETE BLOCK WALL. BC | 3,4 |
| 26 | PLACE NEW TRANSFORMER T6 AND NEW UNIT SUBSTATION W123 IN WEST PORTAL BORE 3 ELECTRICAL ROOM THROUGH THE TEMPORARY OPENING. 4 BC | 2,4 |
| 27 | INSTALL NEW 12KV FEEDER FROM S1 TO W123. | 2 |
| 28 | INSTALL NEW 12KV FEEDER FROM S1 TO FIRE PUMP TRANSFORMER T6. | 2 |
| 29 | COMMISSION UNIT SUBSTATION W123. | 2 |
| 30 | TRANSFER, ONE AT A TIME, ALL EXISTING LOADS FED FROM TEMPORARY POWER TO NEW SUBSTATION W123. BC | 2,5,6 |

| NO. | WORK DESCRIPTION | NOTES |
|---|---|---|
| B1 | THE FOLLOWING SEQUENCE RELATES TO MODIFICATIONS OF THE EXISTING EMERGENCY POWER DISTRIBUTION SYSTEM AT PORTAL 2 (EAST). THE WORK CAN BE PERFORMED AT ANY TIME BUT MUST BE COMPLETED PRIOR TO THE COMMISSIONING OF BORE 4. | |
| 1 | INSTALL NEW 125KW EMERGENCY GENERATOR EG1 NEAR NEW SUBSTATION BUILDING 2. | 2 |
| 2 | INSTALL NEW EMERGENCY DISTRIBUTION PANEL E4EDP IN EXISTING EAST PORTAL SUBSTATION ROOM. | 2,4 |
| 3 | INSTALL NEW FEEDER BETWEEN EG1 AND E4EDP. | 2 |
| 4 | INSTALL NEW ATS5 AND FEEDER FROM E4EDP IN EXISTING EAST PORTAL SUBSTATION ROOM. ESTABLISH POWER TO (E) DPB3 | 2,5 |
| 5 | INSTALL NEW ATS6 AND FEEDER FROM E4EDP IN EXISTING EAST PORTAL SUBSTATION ROOM. ESTABLISH POWER TO (E) 80kVA UPS & UPS-EM | 2,5 |
| 6 | INSTALL NEW 100A CIRCUIT BREAKER IN EXISTING PANEL UPS-EM LOCATED IN EAST PORTAL SUBSTATION ROOM. | 2 |
| 7 | INSTALL NEW FEEDER FROM NEW 100A CIRCUIT BREAKER IN UPS-EM TO NEW UPS-E4S LOCATED IN NEW SUBSTATION BUILDING 2. THIS UPS FEEDS PANEL E4LP2 THRU A 15KVA TRANSFORMER LOCATED IN SUBSTATION BUILDING 2, AND PANELS E4DP5 AND E4DP6 LOCATED IN BORE 4 CROSS PASSAGES 7 AND 6 RESPECTIVELY. | 2 |
| 8 | THIS COMPLETES THE SEQUENCE OF MODIFICATIONS TO EXISTING POWER DISTRIBUTION AT PORTAL 2 (EAST), | |
| B2 | THE FOLLOWING SEQUENCE RELATES TO MODIFICATIONS OF THE EXISTING EMERGENCY POWER DISTRIBUTION SYSTEM AT PORTAL 1 (WEST). THE WORK CAN BE PERFORMED AT ANY TIME BUT MUST BE COMPLETED PRIOR TO THE COMMISSIONING OF BORE 4. | |
| 9 | INSTALL NEW 200KW EMERGENCY GENERATOR WG1 NEAR NEW SUBSTATION BUILDING 1. | 2 |
| 10 | INSTALL NEW EMERGENCY DISTRIBUTION PANEL W4EDP IN EXISTING WEST PORTAL BORE 3 ELECTRICAL ROOM. ESTABLISH POWER TO (E) 60kVA UPS AND UPS-W3S | 2,4 |
| 11 | INSTALL NEW FEEDER BETWEEN WG1 AND W4EDP. | 2,4 |
| 12 | INSTALL NEW ATS1 AND FEEDER FROM W4EDP IN EXISTING WEST PORTAL BORE 3 ELECTRICAL ROOM. ESTABLISH POWER TO (E) 40kVA UPS AND WU PANEL | 2,5 |
| 13 | INSTALL NEW ATS2 AND FEEDER FROM W4EDP IN EXISTING WEST PORTAL BORE 3 ELECTRICAL ROOM. ESTABLISH POWER TO (E) PNL DPB1 | 2,5 |
| 14 | INSTALL NEW ATS3 AND FEEDER FROM W4EDP IN EXISTING WEST PORTAL BORE 3 ELECTRICAL ROOM. | 2,5 |
| 15 | INSTALL NEW ATS4 IN SUBSTATION S1 BUILDING AND FEEDER FROM W4EDP LOCATED IN WEST PORTAL BORE 3 ELECTRICAL ROOM. | 2 |
| 16 | INSTALL NEW FEEDER FROM ATS4 TO UPS-W4S LOCATED IN NEW SUBSTATION BUILDING 1. THIS UPS FEEDS PANEL W4LP2 THRU A 15KVA TRANSFORMER LOCATED IN SUBSTATION BUILDING 1, AND PANELS W4DP4, W4DP5 AND W4DP6 LOCATED IN BORE 4 CROSS PASSAGES 3, 2 AND 1 RESPECTIVELY. | 2 |
| 17 | INSTALL FEEDER FROM W4EDP TO NEW OMC BUILDING. | 2 |
| 18 | THIS COMPLETES THE SEQUENCE OF MODIFICATIONS TO EXISTING POWER DISTRIBUTION AT PORTAL 1 (WEST), | |
| C | THE FOLLOWING SEQUENCE RELATES TO REMOVAL OF EXISTING GENERATOR AND COMMISSIONING OF FIRE PUNPS THE WORK CAN BE PERFORMED AT ANY TIME BUT MUST BE COMPLETED PRIOR TO THE COMMISSIONING OF BORE 4. | |
| 1 | REMOVE EXISTING ABANDONED EMERGENCY GENERATOR FROM WEST PORTAL GENERATOR ROOM | 3,4 |
| 2 | INSTALL FIRE PUMPS AND FIRE PUMP MOTOR CONTROLLERS IN WEST PORTAL BORE 3 FIRE PROTECTION FIRE PUMP ROOM. | 2 |
| 3 | INSTALL 480V FEEDERS FROM T6 SECONDARY 800A CIRCUIT BREAKER AND UNIT SUBSTATION W123 TO FIRE PUMP MOTOR CONTROLLERS. | 2 |
| 4 | INSTALL JOCKEY PUMP FEEDER FROM EXISTING DISTRIBUTION PANELBOARD DPB1 TO JOCKEY PUMP MOTOR CONTROLLER. | 2 |
| 5 | COMMISSION FIRE PUMP SYSTEM. | 2 |

## SHEET NOTES:

1. THIS DEMOLITION WORK IS PRIMARILY INTENDED TO IDENTIFY MODIFICATIONS TO THE EXISTING BORE 1, 2 AND 3 POWER DISTRIBUTION AS THEY RELATE TO THE CONSTRUCTION OF BORE 4 NEW POWER DISTRIBUTION SYSTEM.
2. REFER TO MAIN SINGLE LINE DIAGRAM, SHEET ET-101.
3. REFER TO EXISTING MAIN SINGLE LINE DIAGRAM, BORE 1, 2 AND 3 DEMOLITION, SHEET ET-461.
4. REFER TO GENERAL PLAN, EXISTING 12 kV U/G PLAN DEMOLITION DRAWING, SHEET ET-462.
5. COORDINATE ALL POWER OUTAGES REQUIRED FOR SWITCHOVERS OF LOADS WITH CALTRANS TUNNEL OPERATIONS STAFF. PROVIDE AT LEAST TWO WEEKS OF ADVANCE NOTICE TO CALTRANS OF ANY EXPECTED OUTAGE.
6. EXISTING 1500KVA SUBSTATION LOCATED IN WEST PORTAL BORE 3 ELECTRICAL ROOM MUST BE REMOVED BEFORE NEW SUBSTATION W123 CAN BE INSTALLED. ALL OR PART OF EXISTING LOADS FED FROM EXISTING SUBSTATION MUST BE FED FROM A TEMPORARY 480 V SOURCE DURING THE PERIOD REQUIRED FOR SUBSTATION REPLACEMENT. SEE SHEET ET-467.
7. CONTRACTOR SHALL PERFORM A STUDY TO DETERMINE THE MINIMUM CAPCITY AND THE SOURCE OF TEMPORARY POWER, TAKING INTO CONSIDERATION CALTRANS TUNNEL OPERATIONS REQUIREMENTS.

BC - BORE CLOSURE OR REDIRECT TRAFFIC

4 **REVISED PER ADDENDUM No. 4 DATED SEPTEMBER 3, 2009**

THE CONTRACTOR SHALL VERIFY ALL CONTROLLING FIELD DIMENSIONS BEFORE ORDERING OR FABRICATING ANY MATERIAL

ALL DIMENSIONS ARE IN MILLIMETERS UNLESS OTHERWISE SHOWN

# EXISTING SUBSTATION UPGRADE
## SEQUENCE OF WORK - DEMOLITION
NO SCALE

**ET-466**

| DATE | REVISED BY | DATE REVISED |
|---|---|---|
| 01/08 | N. MUZIC/ L. TFURUNG | |
| | D. PAUL/ R. BELARDO | |

CALCULATED/ DESIGNED BY
CHECKED BY
SUPERVISOR
CONSULTANT FUNCTIONAL SUPERV NADER SHAHCHERAGHI

STATE OF CALIFORNIA - DEPARTMENT OF TRANSPORTATION
Caltrans

429491et466.add

LAST REVISION 00-00-00 | DATE PLOTTED => 01-SEP-2009 | TIME PLOTTED => 11:10

RELATIVE BORDER SCALE IS IN MILLIMETERS 0 20 40 60 80

USERNAME => trmikesl
DGN FILE => 429491et466.add

EA 294911

| DIST | COUNTY | ROUTE | KILOMETER POST TOTAL PROJECT | SHEET No. | TOTAL SHEETS |
|---|---|---|---|---|---|
| 04 | Ala,CC | 24 | 8.2/10.0, 0.0/2.7 | 1374 | 1435 |

Dev Paul 07-01-08
REGISTERED ELECTRICAL ENGINEER

1-5-09
PLANS APPROVAL DATE

REGISTERED PROFESSIONAL ENGINEER DEV PAUL No. E8856 Exp. 03-31-10 ELECT STATE OF CALIFORNIA

*The State of California or its officers or agents shall not be responsible for the accuracy or completeness of electronic copies of this plan sheet.*

**PARSONS**
50 FREMONT STREET, SUITE 1500
SAN FRANCISCO, CA 94105

**EARTH TECH**
2101 WEBSTER STREET, SUITE 1000
OAKLAND, CA. 94612-3060

*To get to the Caltrans web site, go to: http://www.dot.ca.gov*

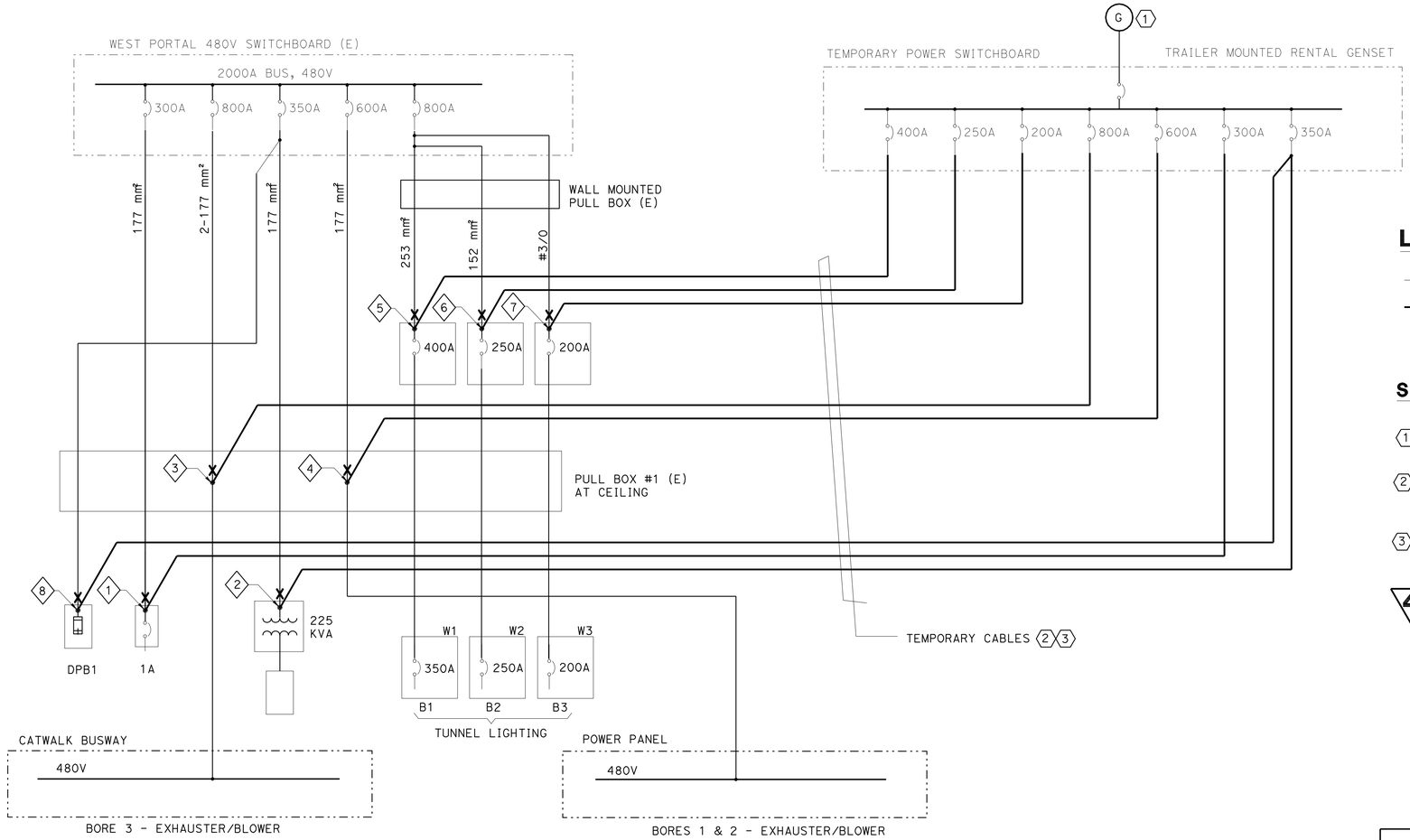


## TIE-IN POINT DIAGRAM

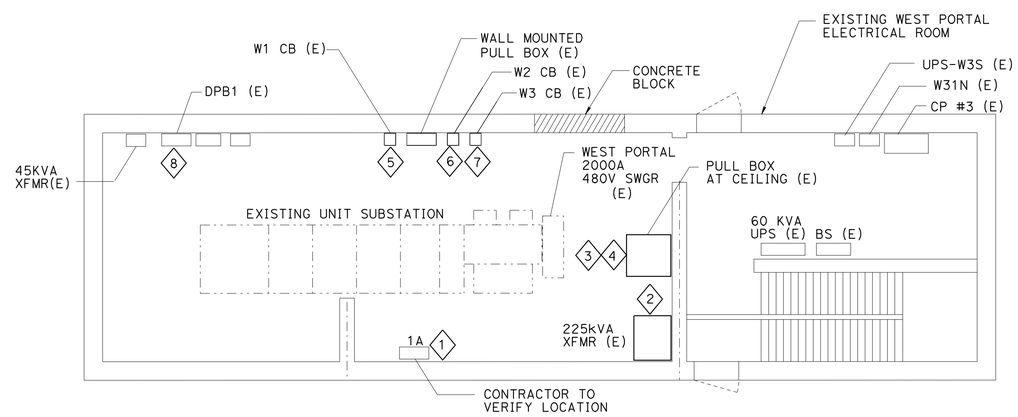


## PLAN - WEST PORTAL BORE 3 ELECTRICAL ROOM

NTS

## LEGEND:

EXISTING (E)

NEW (N)

## SHEET NOTES:

1. CONTRACTOR TO SIZE MOBILE GENSET LARGE ENOUGH FOR ALL TUNNEL SERVICES. UTILITY POWER IS ALSO AN AVAILABLE OPTION IN LIEU OF GENSET.

2. COORDINATE ALL POWER OUTAGES REQUIRED FOR ALL SWITCHOVERS OF LOADS WITH CALTRANS TUNNEL OPERATIONS STAFF. PROVIDE AT LEAST TWO WEEKS OF ADVANCE NOTICE TO CALTRANS OF ANY EXPECTED OUTAGE.

3. DURING THE TRANSFER OF CIRCUITS FROM THE EXISTING SWTCHGEAR TO TEMPORARY POWER, POWER WILL BE OUT ON THE AFFECTED CIRCUIT SUBJECT TO THE FOLLOWING CONDITIONS:

4

   a. MAXIMUM DURATION THAT A CIRCUIT IS DOWN WOULD BE 1 HOUR PER TIE-IN CIRCUIT, FOR CIRCUITS ASSOCIATED WITH BORES 1 AND 2, BORE 3 WEST PORTAL BUILDING AND BORE 3 AUXILIARY LOADS.

   b. THE MAXIMUM DURATION OF OUTAGES ASSOCIATED WITH BORE 3 WOULD BE THE TIME PERIODS FOR TUNNEL CLOSURE INDICATED IN THE LANE CLOSURE CHARTS.

   c. CIRCUIT TRANSFER OUTAGES WOULD BE RESTRICTED TO OFF-PEAK HOURS.

   d. WHEN OUTAGES ARE REQUIRED FOR BORE 1 AND 2, TRAFFIC WOULD BE DIVERTED INTO BORE 3 (WESTBOUND) AND BORE 1 (EASTBOUND).

   e. IT IS IMPORTANT THAT THE NORMAL POWER PHASE ROTATION BE MATCHED ON THE TEMPORARY POWER.

## TIE-IN POINT LIST

| TIE-IN NUMBER | EQUIPMENT | TIE-IN POINT | CONNECTED LOAD |
|---|---|---|---|
| 1 | PANEL 1A | INCOMING LUGS | BATTERY CHARGER, EMS SIGN, PANEL 1 |
| 2 | 225 KVA XFMR | INCOMING LUGS | DUCT LTG, ROADWAY LTG TRANSFORMER TX4 |
| 3 | BORE 3 EXH/BLW | PULL BOX #1 AT CEILING CUT & SPLICE TO TEMPORARY CABLES | BORE 3 WEST EXHAUSTER/BLOWER |
| 4 | BORES 1 & 2 EXH/BLW | PULL BOX #1 AT CEILING CUT & SPLICE TO TEMPORARY CABLES | BORE 1 & 2 WEST EXHAUSTER/BLOWERS |
| 5 | PANEL W1 | INCOMING LUGS 400A CIRCUIT BREAKER | BORE 1 INTERIOR/THRESHOLD LIGHTING |
| 6 | PANEL W2 | INCOMING LUGS 250A CIRCUIT BREAKER | BORE 2 INTERIOR/THRESHOLD LIGHTING |
| 7 | PANEL W3 | INCOMING LUGS 200A CIRCUIT BREAKER | BORE 3 INTERIOR, UPS W3S |
| 8 | PANEL DPB1 | INCOMING LUGS | OFFICE, SERVICE ROAD LTG A/C, APPROACH LIGHTING |

# EXISTING SUBSTATION UPGRADE
## WEST PORTAL BORE 3 ELECT RM
## TEMPORARY POWER TIE-IN POINTS

4 REVISED PER ADDENDUM No. 4 DATED SEPTEMBER 3, 2009

ET-467

THE CONTRACTOR SHALL VERIFY ALL CONTROLLING FIELD DIMENSIONS BEFORE ORDERING OR FABRICATING ANY MATERIAL

ALL DIMENSIONS ARE IN MILLIMETERS UNLESS OTHERWISE SHOWN

| DATE | REVISED BY |
|---|---|
| 01/08 | R. ALFONSO/ L. IFURUNG |

D. PAUL

CONSULTANT FUNCTIONAL SUPERVISOR
NADER SHAHCHERAGHI

STATE OF CALIFORNIA - DEPARTMENT OF TRANSPORTATION
Caltrans

429491et467.dgn

LAST REVISION 00-00-00
DATE PLOTTED => 01-SEP-2009
TIME PLOTTED => 11:10

RELATIVE BORDER SCALE IS IN MILLIMETERS 0 20 40 60 80

USERNAME => trmikesl
DGN FILE => 429491et467.dgn

EA 294911