INDEX OF PLANS

SHEET No.	DESCRIPTION
1	TITLE AND LOCATION MAP
2-15	TYPICAL CROSS SECTIONS
16-20	LAYOUT
21-30	PROFILE AND SUPERELEVATION DIAGRAM
31-44	CONSTRUCTION DETAILS
45-62	DRAINAGE PLANS, PROFILES AND DETAILS
63-67	UTILITY PLANS
68	CONSTRUCTION AREA SIGNS
69	MOTORIST INFORMATION PLAN
70-99	STAGE CONSTRUCTION, DETAILS AND PROFILES
100-123	TRAFFIC HANDLING PLANS AND QUANTITIES
124-129	PAVEMENT DELINEATION, SIGN PLANS AND QUANTITIES
130-132	SIGN DETAILS AND QUANTITIES
133-137	SUMMARY OF QUANTITIES
138-143	IRRIGATION PLANS AND QUANTITIES
144-155	LANDSCAPE DETAILS AND QUANTITIES
156-170	EROSION CONTROL LEGEND, PLANS AND QUANTITIES
171-197	REVISED STANDARD PLANS

THE STANDARD PLANS LIST APPLICABLE TO THIS CONTRACT IS INCLUDED IN THE NOTICE TO BIDDERS AND SPECIAL PROVISIONS BOOK.

STATE OF CALIFORNIA

DEPARTMENT OF TRANSPORTATION

ACHSSTP-P193(012)

Dist	COUNTY	ROUTE	POST MILES TOTAL PROJECT	SHEET No.	TOTAL SHEETS
03	Pla	193	4.4/5.5	1	197

PROJECT PLANS FOR CONSTRUCTION ON STATE HIGHWAY

IN PLACER COUNTY NEAR LINCOLN FROM 0.1 MILE WEST TO 1.0 MILE EAST OF CLARK TUNNEL ROAD

TO BE SUPPLEMENTED BY STANDARD PLANS DATED 2010

LOCATION MAP

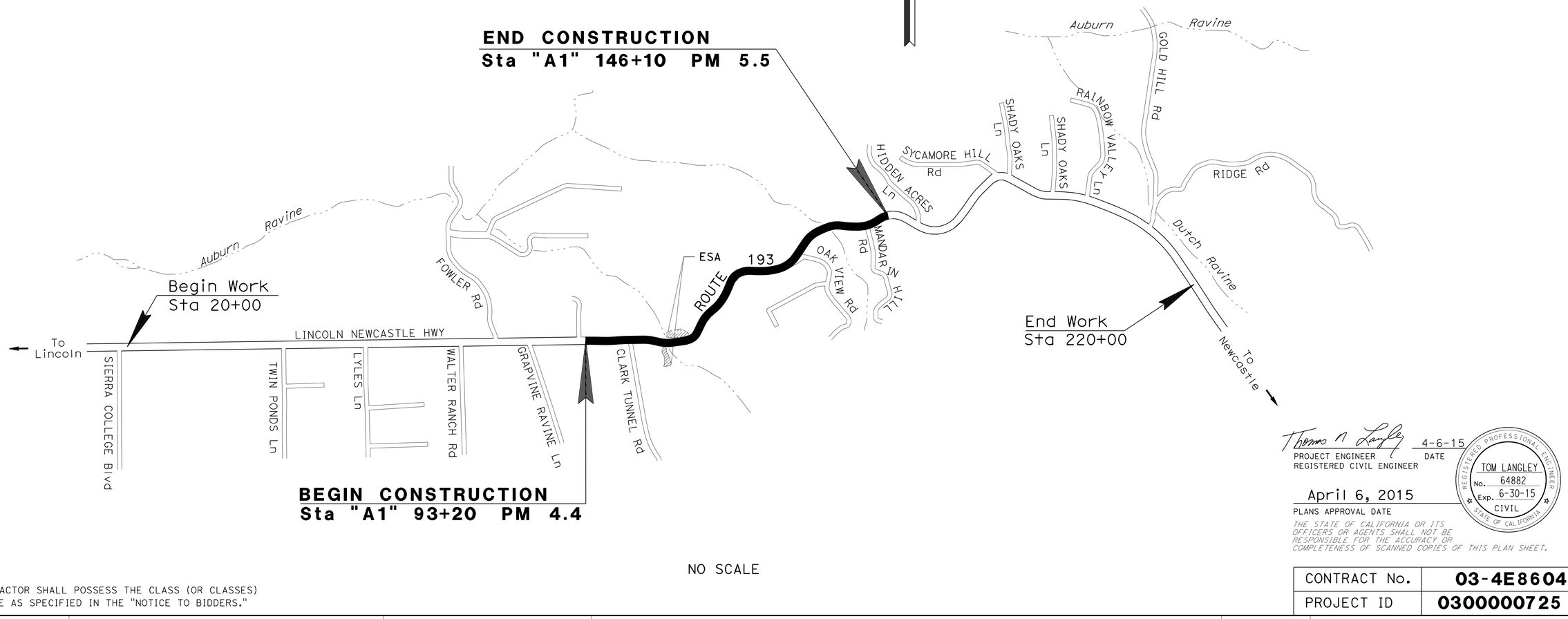

NO SCALE

THE CONTRACTOR SHALL POSSESS THE CLASS (OR CLASSES) OF LICENSE AS SPECIFIED IN THE "NOTICE TO BIDDERS."

PROJECT MANAGER: JOHN HOLDER

DESIGN MANAGER: MASTRI ALVANDI

Thomas Langley 4-6-15
PROJECT ENGINEER DATE
REGISTERED CIVIL ENGINEER

REGISTERED PROFESSIONAL ENGINEER — TOM LANGLEY No. 64882 Exp. 6-30-15 CIVIL — STATE OF CALIFORNIA

April 6, 2015
PLANS APPROVAL DATE

THE STATE OF CALIFORNIA OR ITS OFFICERS OR AGENTS SHALL NOT BE RESPONSIBLE FOR THE ACCURACY OR COMPLETENESS OF SCANNED COPIES OF THIS PLAN SHEET.

CONTRACT No.	03-4E8604
PROJECT ID	0300000725

LAST REVISION 04-06-15

DATE PLOTTED => 15-JUN-2015
TIME PLOTTED => 15:49

Dist	COUNTY	ROUTE	POST MILES TOTAL PROJECT	SHEET No.	TOTAL SHEETS
03	Pla	193	4.4/5.5	2	197

Thomas A Langley 4-6-15
REGISTERED CIVIL ENGINEER DATE

4-6-15
PLANS APPROVAL DATE

REGISTERED PROFESSIONAL ENGINEER
TOM LANGLEY
No. 64882
Exp. 6-30-15
CIVIL
STATE OF CALIFORNIA

THE STATE OF CALIFORNIA OR ITS OFFICERS OR AGENTS SHALL NOT BE RESPONSIBLE FOR THE ACCURACY OR COMPLETENESS OF SCANNED COPIES OF THIS PLAN SHEET.

NOTES:

1. DIMENSIONS OF THE PAVEMENT STRUCTURES (STRUCTURAL SECTIONS) ARE SUBJECT TO TOLERANCES SPECIFIED IN THE STANDARD SPECIFICATIONS.
2. SUPERELEVATIONS ARE SHOWN ON THE SUPERELEVATION DIAGRAM.
3. EXACT LOCATION AND TYPES OF DIKES, CURBS AND GUARD RAILING ARE SHOWN ON THE LAYOUTS AND THE SUMMARY OF QUANTITIES SHEETS.
4. PROFILE GRADE AT TOP OF HOT MIX ASPHALT (TYPE A).
5. FOR DITCH FLOW LINE AND SLOPE, SEE DRAINAGE PLANS.
6. LOCATION AND DETAILS FOR SURFACE STABILIZATION ARE SHOWN ON THE CONSTRUCTION DETAILS AND THE SUMMARY OF QUANTITIES SHEETS.
7. RHMA-O PAVED FROM EP TO EP. SEE CONSTRUCTION DETAILS FOR GUIDANCE ON RHMA-O LIMITS THROUGH INTERSECTIONS AND DRIVEWAYS. RHMA-O PAVED OUT TO 8' PAST ETW AT PULL-OUT LOCATIONS: Sta 119+50 TO Sta 123+50, AND Sta 144+00 TO Sta 145+00.

STRUCTURAL SECTIONS

1. Exist
   0.4' TO 1.0' AC
   0.0' TO 1.0' AB
2. 0.10' RHMA-O
   0.55' HMA (TYPE A)
   0.70' CLASS 2 AB
3. 0.55' HMA (TYPE A)
   0.70' CLASS 2 AB
4. 0.25' HMA (TYPE A)
   0.70' CLASS 2 AB
5. 0.30' HMA (TYPE A)
   0.85' CLASS 2 AB
6. 0.25' HMA (TYPE A)
   0.50' CLASS 2 AB

DESIGN DESIGNATION

ADT (2017)	7,250	D	56%
ADT (2037)	10,200	T	6%
DHV	750	V	55 mph
ESAL	3,652,400	TI_{20}	10.5

PAVEMENT CLIMATE REGION:

INLAND VALLEY

ABBREVIATIONS

SE	SAFETY EDGE
RHMA-O	RUBBERIZED HOT MIX ASPHALT-OPEN GRADED (OPEN GRADED FRICTION COURSE)

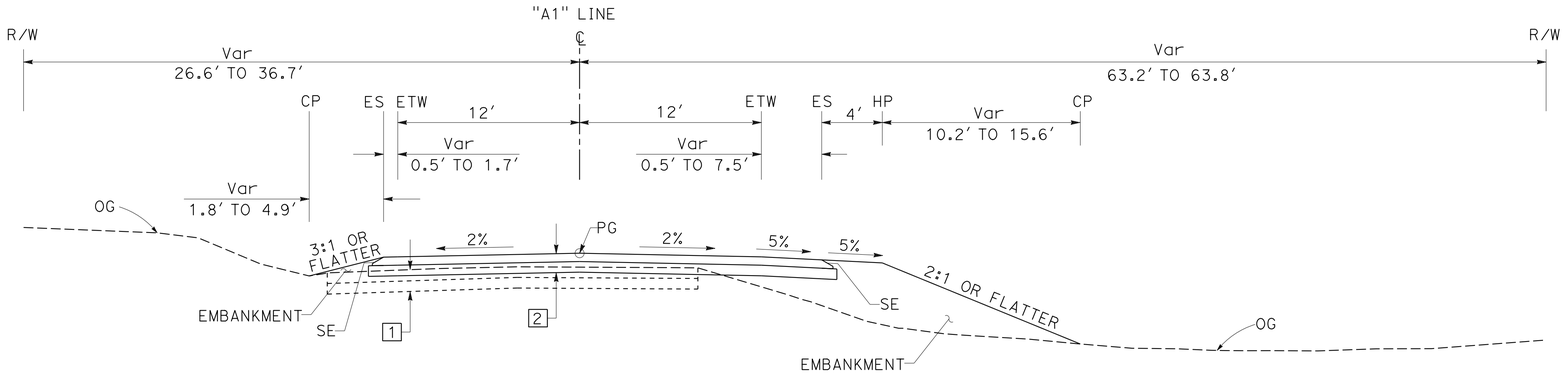

"A1" 94+00 TO "A1" 96+00

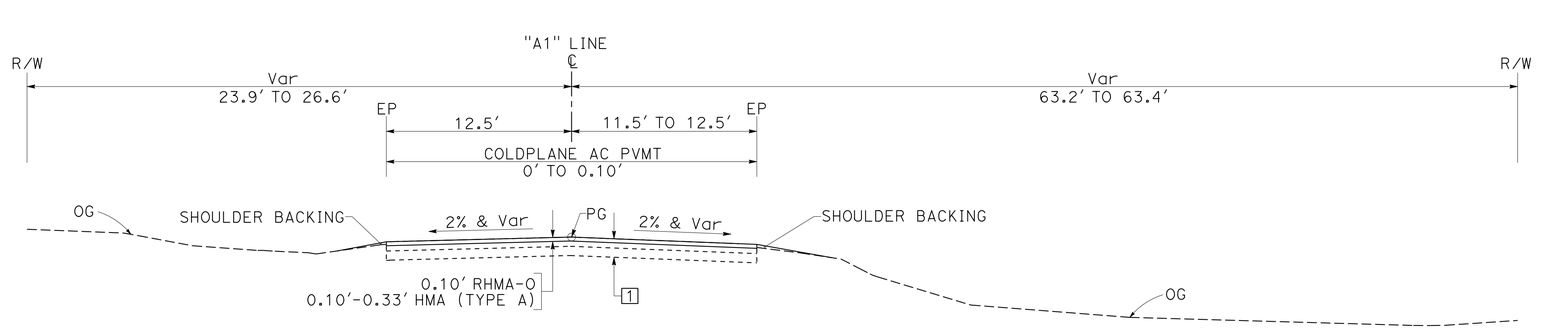

"A1" 93+20 TO "A1" 94+00

ROUTE 193

TYPICAL CROSS SECTIONS

NO SCALE

X-1

STATE OF CALIFORNIA - DEPARTMENT OF TRANSPORTATION
Caltrans®
DESIGN

FUNCTIONAL SUPERVISOR: MASTRI ALVANDI
CALCULATED-DESIGNED BY: JERRY CHANG
CHECKED BY: KAZEEM ALABI
REVISED BY
DATE REVISED

LAST REVISION
DATE PLOTTED => 15-JUN-2015
TIME PLOTTED => 15:49
04-06-15

BORDER LAST REVISED 7/2/2010
USERNAME => s130875
DGN FILE => 0300000725ca001.dgn
RELATIVE BORDER SCALE IS IN INCHES 0 1 2 3
UNIT 0337
PROJECT NUMBER & PHASE 03000007251

Dist	COUNTY	ROUTE	POST MILES TOTAL PROJECT	SHEET No.	TOTAL SHEETS
03	Pla	193	4.4/5.5	3	197

Thomas A Langley 4-6-15
REGISTERED CIVIL ENGINEER DATE

4-6-15
PLANS APPROVAL DATE

REGISTERED PROFESSIONAL ENGINEER
TOM LANGLEY
No. 64882
Exp. 6-30-15
CIVIL
STATE OF CALIFORNIA

THE STATE OF CALIFORNIA OR ITS OFFICERS OR AGENTS SHALL NOT BE RESPONSIBLE FOR THE ACCURACY OR COMPLETENESS OF SCANNED COPIES OF THIS PLAN SHEET.

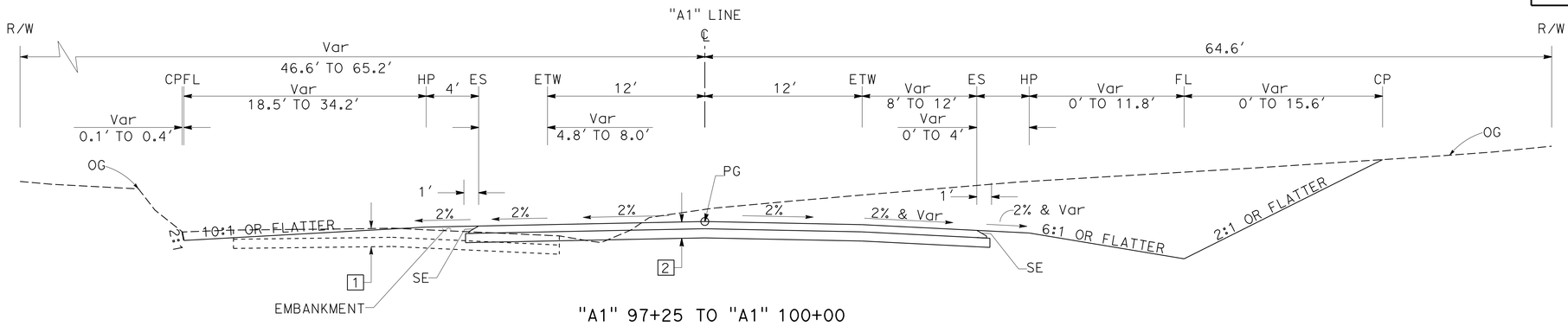

"A1" 97+25 TO "A1" 100+00

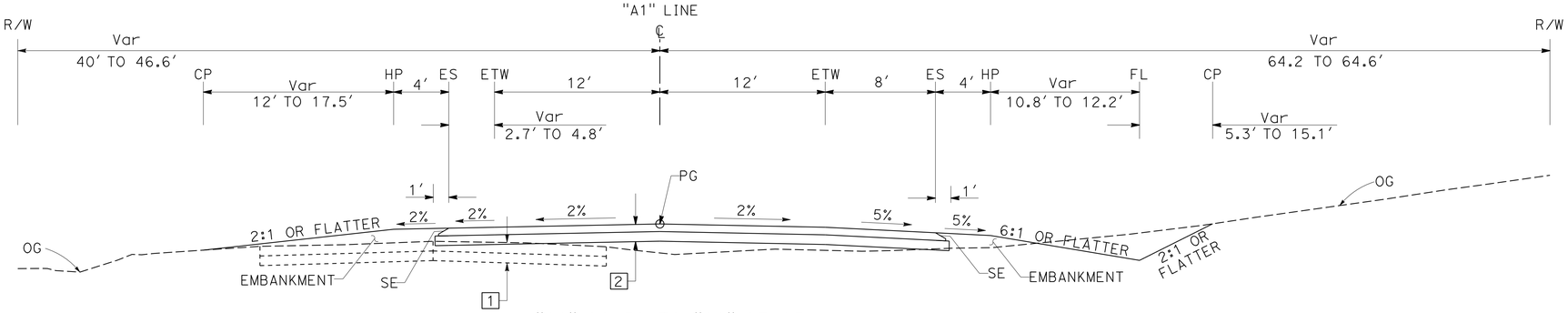

"A1" 96+50 TO "A1" 97+25

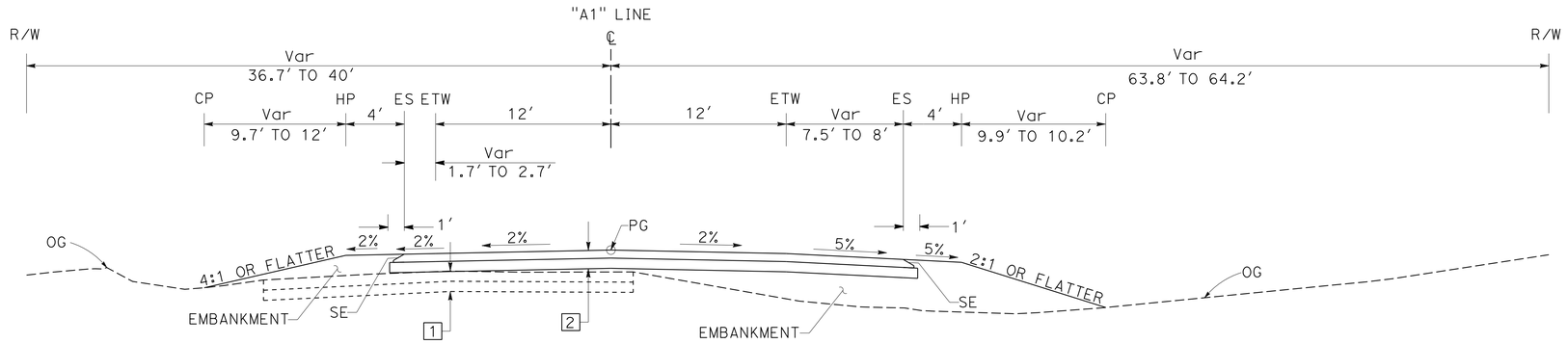

"A1" 96+00 TO "A1" 96+50

ROUTE 193

TYPICAL CROSS SECTIONS

NO SCALE

X-2

REVISED BY	DATE REVISED

CALCULATED-DESIGNED BY: JERRY CHANG
CHECKED BY: KAZEEM ALABI
FUNCTIONAL SUPERVISOR: MASTRI ALVANDI

STATE OF CALIFORNIA - DEPARTMENT OF TRANSPORTATION
Caltrans®
DESIGN

LAST REVISION 04-06-15
DATE PLOTTED => 15-JUN-2015
TIME PLOTTED => 15:49

Dist	COUNTY	ROUTE	POST MILES TOTAL PROJECT	SHEET No.	TOTAL SHEETS
03	Pla	193	4.4/5.5	4	197

Thomas N Langley 4-6-15
REGISTERED CIVIL ENGINEER DATE

4-6-15
PLANS APPROVAL DATE

REGISTERED PROFESSIONAL ENGINEER
TOM LANGLEY
No. 64882
Exp. 6-30-15
CIVIL
STATE OF CALIFORNIA

THE STATE OF CALIFORNIA OR ITS OFFICERS OR AGENTS SHALL NOT BE RESPONSIBLE FOR THE ACCURACY OR COMPLETENESS OF SCANNED COPIES OF THIS PLAN SHEET.

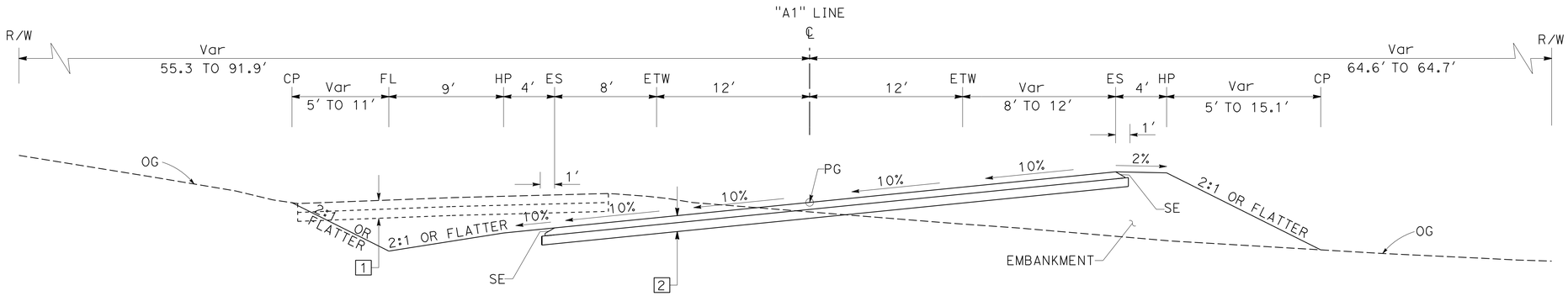

"A1" 105+25 TO "A1" 109+50

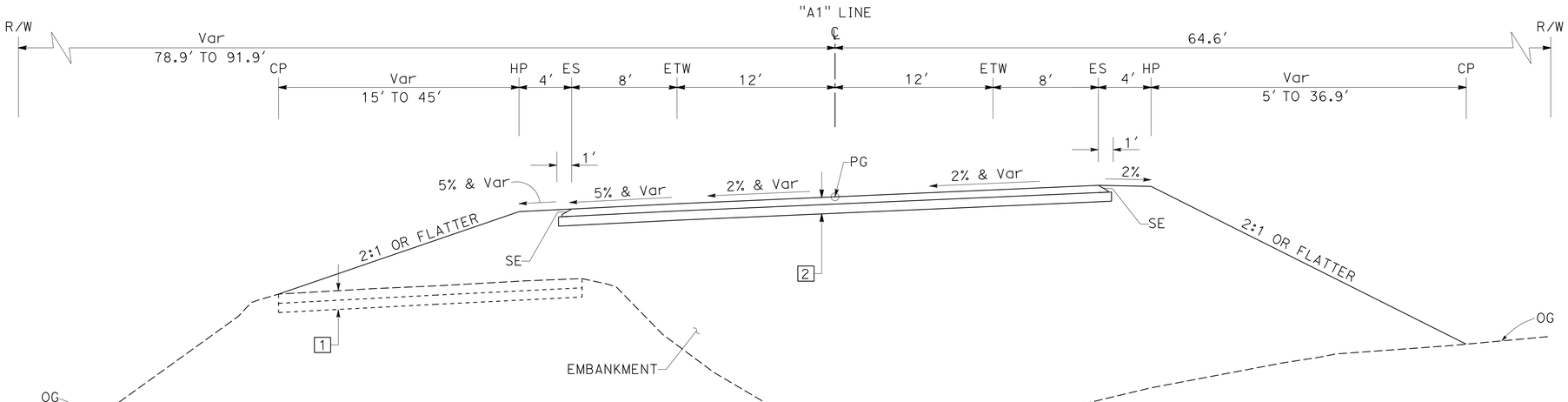

"A1" 101+50 TO "A1" 105+25

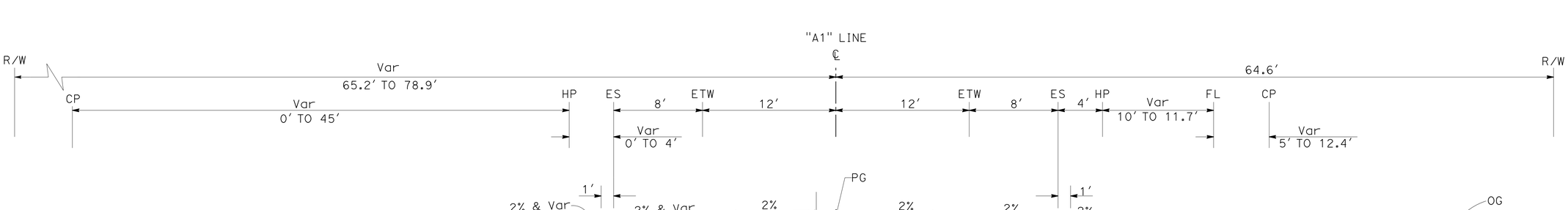

"A1" 100+00 TO "A1" 101+50

ROUTE 193

TYPICAL CROSS SECTIONS

NO SCALE

X-3

STATE OF CALIFORNIA - DEPARTMENT OF TRANSPORTATION
Caltrans®
DESIGN

FUNCTIONAL SUPERVISOR: MASTRI ALVANDI

CALCULATED-DESIGNED BY: JERRY CHANG
CHECKED BY: KAZEEM ALABI

REVISED BY | DATE REVISED

LAST REVISION | DATE PLOTTED => 15-JUN-2015
04-06-15 | TIME PLOTTED => 15:49

BORDER LAST REVISED 7/2/2010

USERNAME => s130875
DGN FILE => 0300000725ca003.dgn

RELATIVE BORDER SCALE IS IN INCHES 0 1 2 3

UNIT 0337

PROJECT NUMBER & PHASE 03000007251

Dist	COUNTY	ROUTE	POST MILES TOTAL PROJECT	SHEET No.	TOTAL SHEETS
03	Pla	193	4.4/5.5	5	197

Thomas A Langley 4-6-15
REGISTERED CIVIL ENGINEER DATE

TOM LANGLEY No. 64882 Exp. 6-30-15 CIVIL — REGISTERED PROFESSIONAL ENGINEER — STATE OF CALIFORNIA

4-6-15
PLANS APPROVAL DATE

THE STATE OF CALIFORNIA OR ITS OFFICERS OR AGENTS SHALL NOT BE RESPONSIBLE FOR THE ACCURACY OR COMPLETENESS OF SCANNED COPIES OF THIS PLAN SHEET.

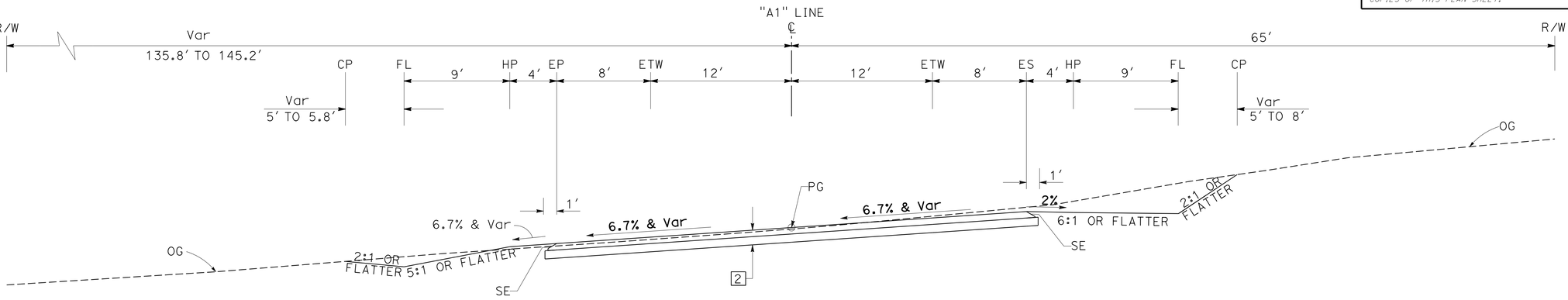

"A1" 113+57.13 TO "A1" 114+03.25

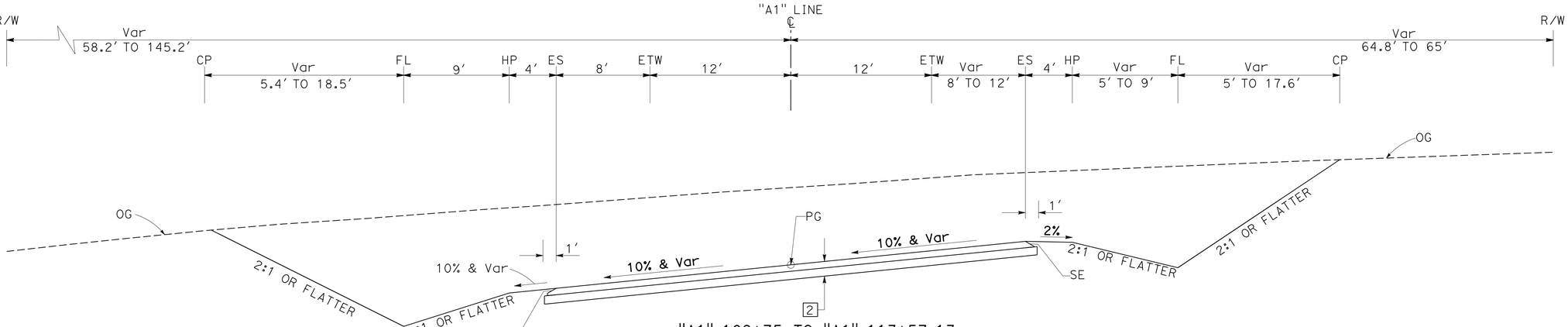

"A1" 109+75 TO "A1" 113+57.13

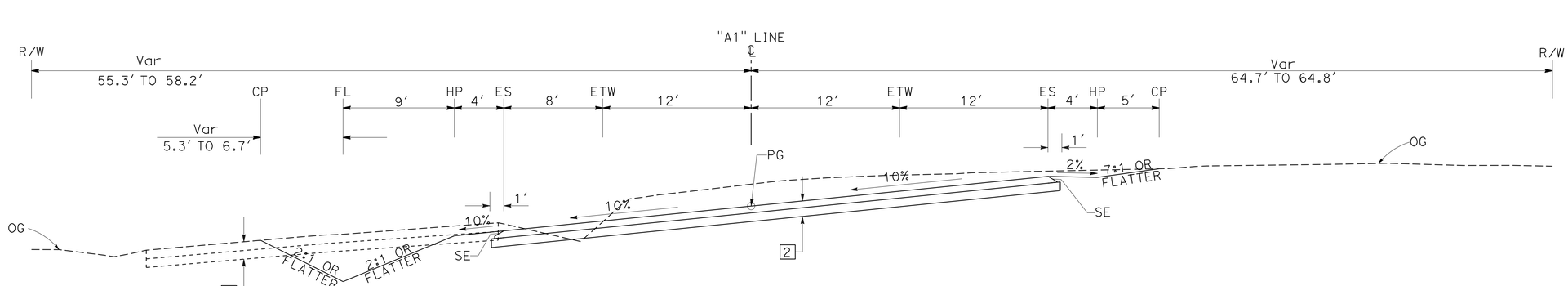

"A1" 109+50 TO "A1" 109+75

ROUTE 193

TYPICAL CROSS SECTIONS

NO SCALE

X-4

REVISED BY	
DATE REVISED	
CALCULATED-DESIGNED BY	JERRY CHANG
CHECKED BY	KAZEEM ALABI
FUNCTIONAL SUPERVISOR	MASTRI ALVANDI

STATE OF CALIFORNIA - DEPARTMENT OF TRANSPORTATION
Caltrans®
DESIGN

LAST REVISION: DATE PLOTTED => 15-JUN-2015
04-06-15 TIME PLOTTED => 15:49

Dist	COUNTY	ROUTE	POST MILES TOTAL PROJECT	SHEET No.	TOTAL SHEETS
03	Pla	193	4.4/5.5	6	197

Thomas A Langley 4-6-15
REGISTERED CIVIL ENGINEER DATE

4-6-15
PLANS APPROVAL DATE

REGISTERED PROFESSIONAL ENGINEER
TOM LANGLEY
No. 64882
Exp. 6-30-15
CIVIL
STATE OF CALIFORNIA

THE STATE OF CALIFORNIA OR ITS OFFICERS OR AGENTS SHALL NOT BE RESPONSIBLE FOR THE ACCURACY OR COMPLETENESS OF SCANNED COPIES OF THIS PLAN SHEET.

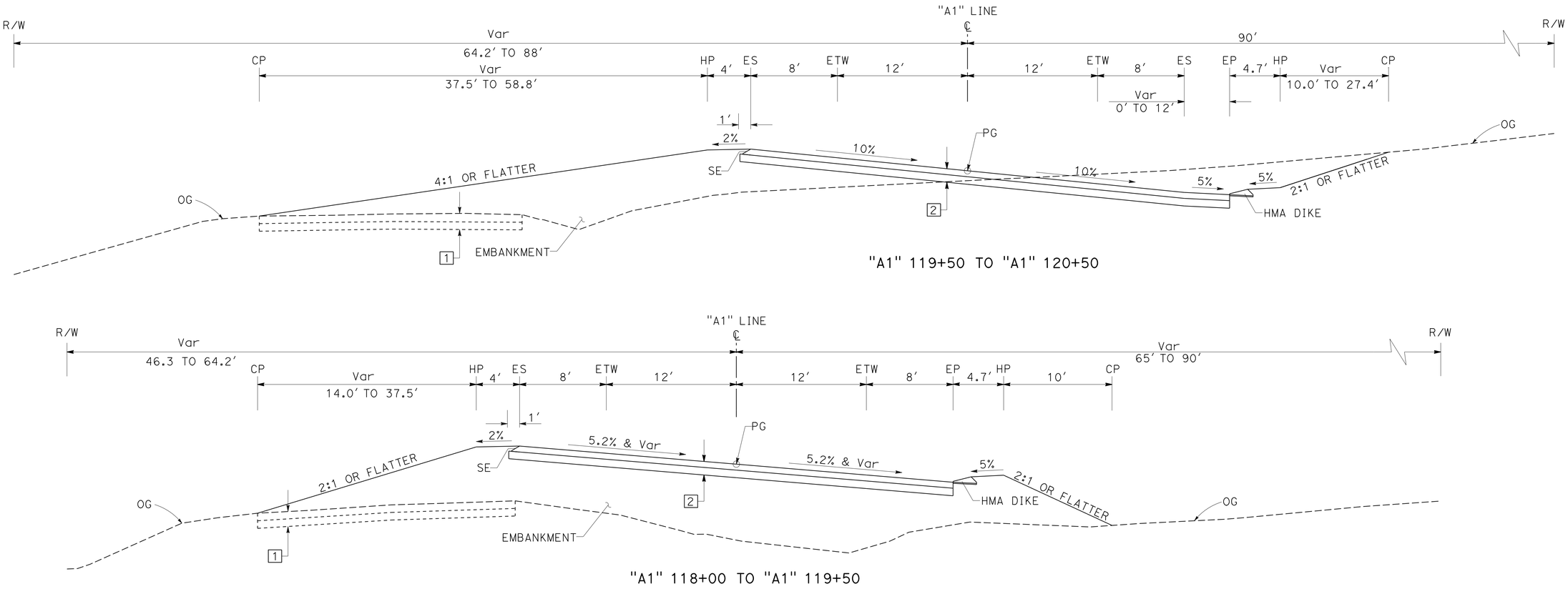

ROUTE 193

TYPICAL CROSS SECTIONS

NO SCALE

X-5

STATE OF CALIFORNIA - DEPARTMENT OF TRANSPORTATION
DESIGN
Caltrans

FUNCTIONAL SUPERVISOR: MASTRI ALVANDI
CALCULATED-DESIGNED BY: JERRY CHANG
CHECKED BY: KAZEEM ALABI
REVISED BY
DATE REVISED

LAST REVISION | DATE PLOTTED => 15-JUN-2015
04-06-15 | TIME PLOTTED => 15:49

BORDER LAST REVISED 7/2/2010

USERNAME => s130875
DGN FILE => 0300000725ca005.dgn

RELATIVE BORDER SCALE IS IN INCHES 0 1 2 3

UNIT 0337

PROJECT NUMBER & PHASE 03000007251

Dist	COUNTY	ROUTE	POST MILES TOTAL PROJECT	SHEET No.	TOTAL SHEETS
03	Pla	193	4.4/5.5	7	197

Thomas A Langley 4-6-15
REGISTERED CIVIL ENGINEER DATE

4-6-15
PLANS APPROVAL DATE

REGISTERED PROFESSIONAL ENGINEER
TOM LANGLEY
No. 64882
Exp. 6-30-15
CIVIL
STATE OF CALIFORNIA

THE STATE OF CALIFORNIA OR ITS OFFICERS OR AGENTS SHALL NOT BE RESPONSIBLE FOR THE ACCURACY OR COMPLETENESS OF SCANNED COPIES OF THIS PLAN SHEET.

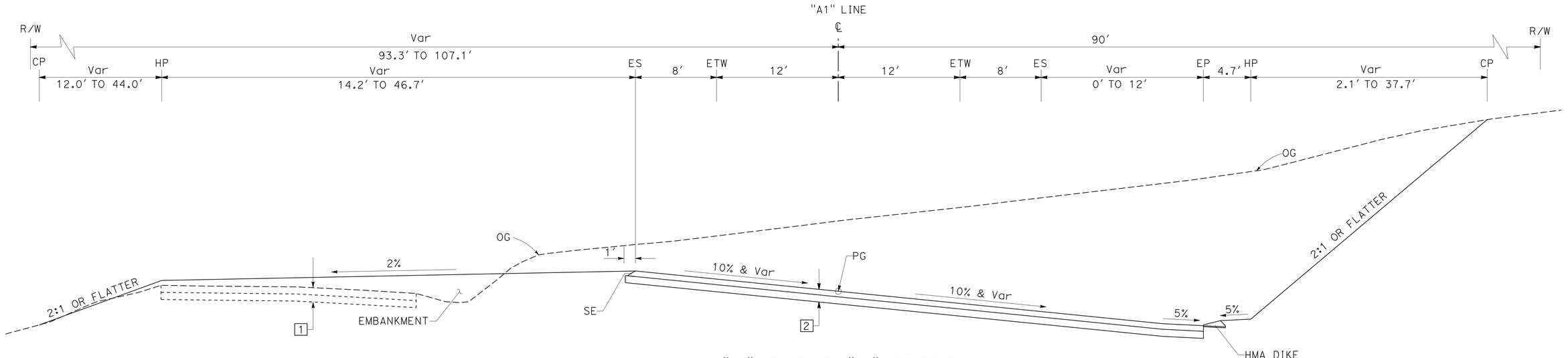

"A1" 121+50 TO "A1" 123+50.71

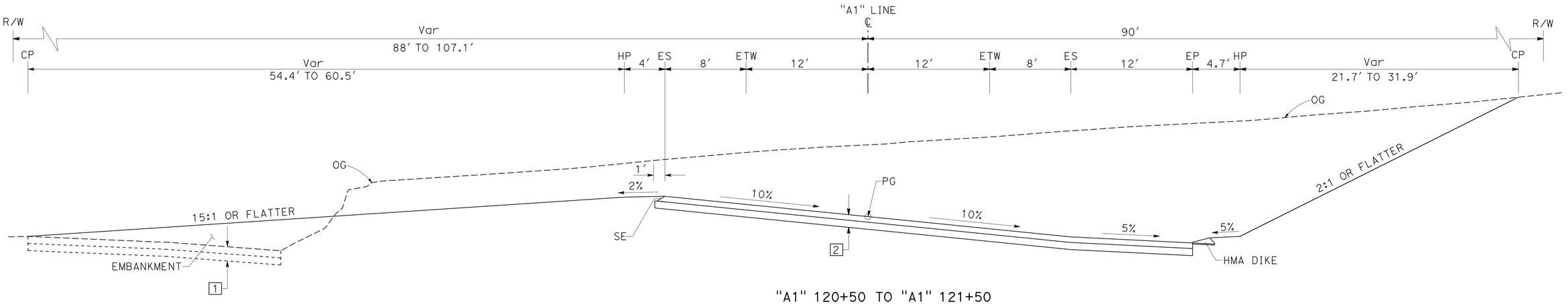

"A1" 120+50 TO "A1" 121+50

ROUTE 193

TYPICAL CROSS SECTIONS

NO SCALE

X-6

REVISED BY | DATE REVISED
JERRY CHANG | KAZEEM ALABI
CALCULATED-DESIGNED BY | CHECKED BY
FUNCTIONAL SUPERVISOR: MASTRI ALVANDI
STATE OF CALIFORNIA - DEPARTMENT OF TRANSPORTATION
Caltrans® DESIGN

LAST REVISION 04-06-15 | DATE PLOTTED => 15-JUN-2015 | TIME PLOTTED => 15:49

BORDER LAST REVISED 7/2/2010 | USERNAME => s130875 | DGN FILE => 0300000725ca006.dgn | RELATIVE BORDER SCALE IS IN INCHES 0 1 2 3 | UNIT 0337 | PROJECT NUMBER & PHASE 03000007251

Dist	COUNTY	ROUTE	POST MILES TOTAL PROJECT	SHEET No.	TOTAL SHEETS
03	Pla	193	4.4/5.5	8	197

Thomas A Langley 4-6-15
REGISTERED CIVIL ENGINEER DATE

4-6-15
PLANS APPROVAL DATE

REGISTERED PROFESSIONAL ENGINEER
TOM LANGLEY
No. 64882
Exp. 6-30-15
CIVIL
STATE OF CALIFORNIA

THE STATE OF CALIFORNIA OR ITS OFFICERS OR AGENTS SHALL NOT BE RESPONSIBLE FOR THE ACCURACY OR COMPLETENESS OF SCANNED COPIES OF THIS PLAN SHEET.

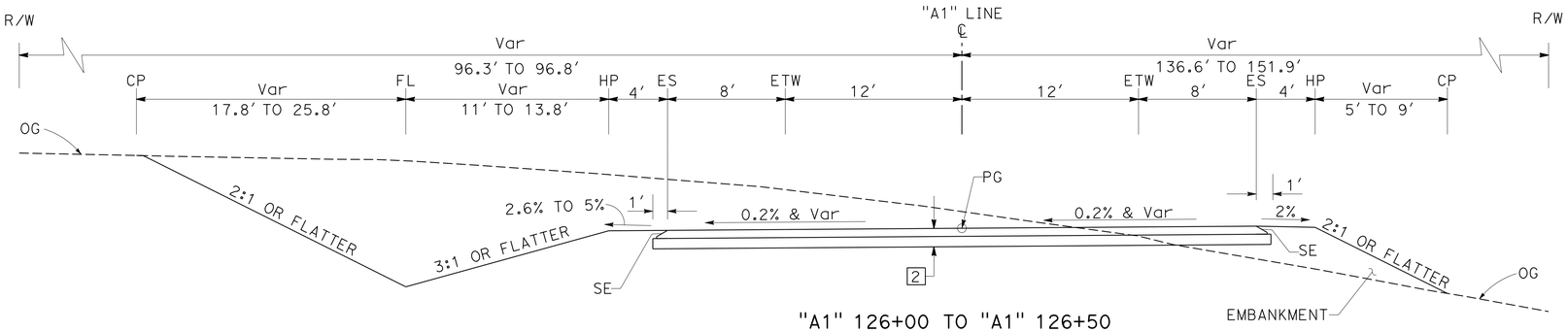

"A1" 126+00 TO "A1" 126+50

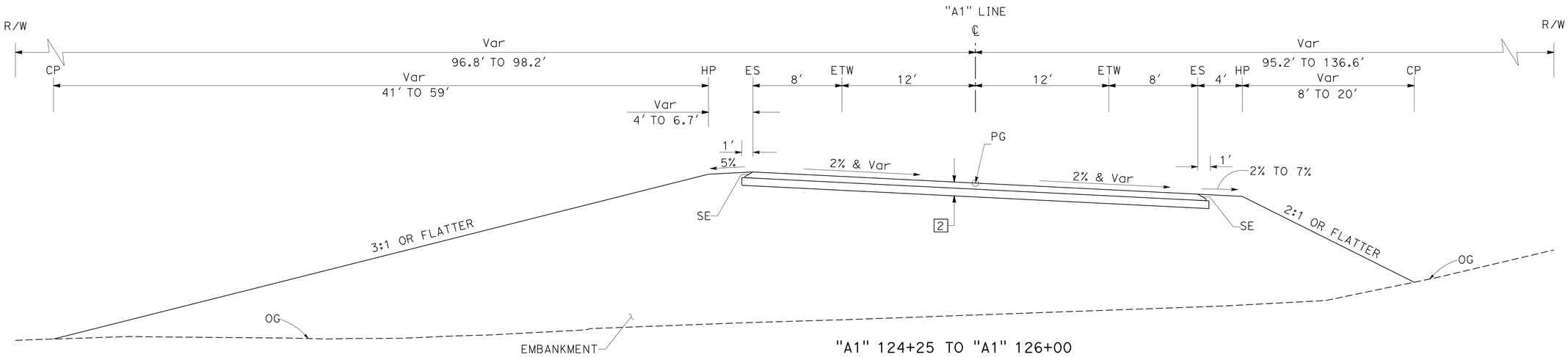

"A1" 124+25 TO "A1" 126+00

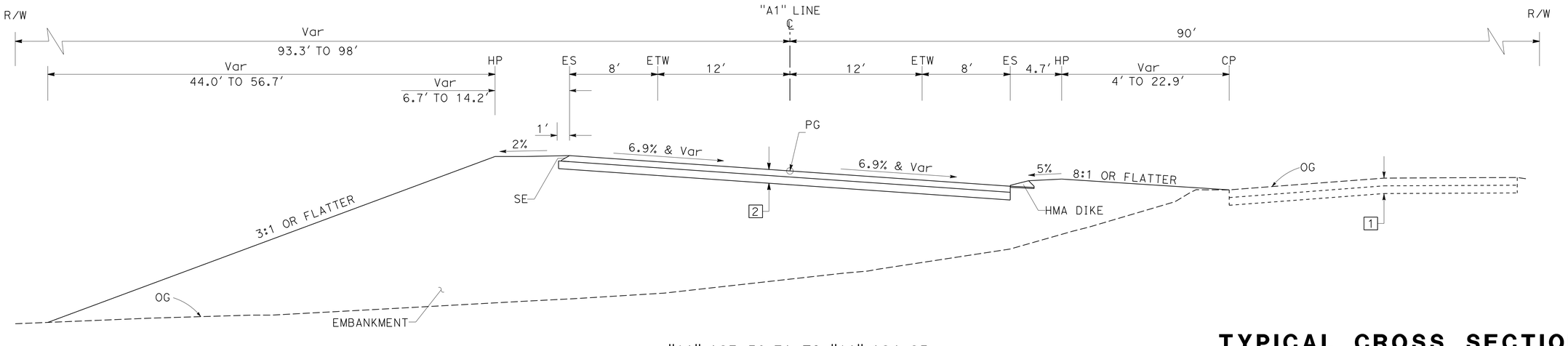

"A1" 123+50.71 TO "A1" 124+25

ROUTE 193

TYPICAL CROSS SECTIONS

NO SCALE

X-7

REVISED BY | DATE REVISED
JERRY CHANG | KAZEEM ALABI
CALCULATED-DESIGNED BY | CHECKED BY
FUNCTIONAL SUPERVISOR: MASTRI ALVANDI
STATE OF CALIFORNIA - DEPARTMENT OF TRANSPORTATION
Caltrans®
DESIGN

LAST REVISION | DATE PLOTTED => 15-JUN-2015
04-06-15 | TIME PLOTTED => 15:49

BORDER LAST REVISED 7/2/2010 | USERNAME => s130875 | DGN FILE => 0300000725ca007.dgn | RELATIVE BORDER SCALE IS IN INCHES 0 1 2 3 | UNIT 0337 | PROJECT NUMBER & PHASE 03000007251

Dist	COUNTY	ROUTE	POST MILES TOTAL PROJECT	SHEET No.	TOTAL SHEETS
03	Pla	193	4.4/5.5	9	197

Thomas A Langley 4-6-15
REGISTERED CIVIL ENGINEER DATE

TOM LANGLEY No. 64882 Exp. 6-30-15 CIVIL — REGISTERED PROFESSIONAL ENGINEER — STATE OF CALIFORNIA

4-6-15
PLANS APPROVAL DATE

THE STATE OF CALIFORNIA OR ITS OFFICERS OR AGENTS SHALL NOT BE RESPONSIBLE FOR THE ACCURACY OR COMPLETENESS OF SCANNED COPIES OF THIS PLAN SHEET.

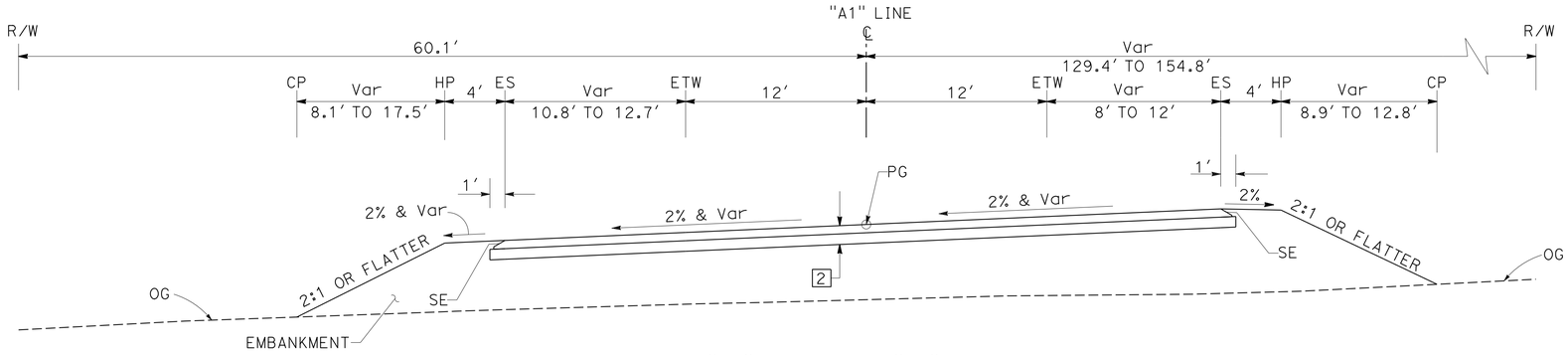

"A1" 130+25 TO "A1" 131+75

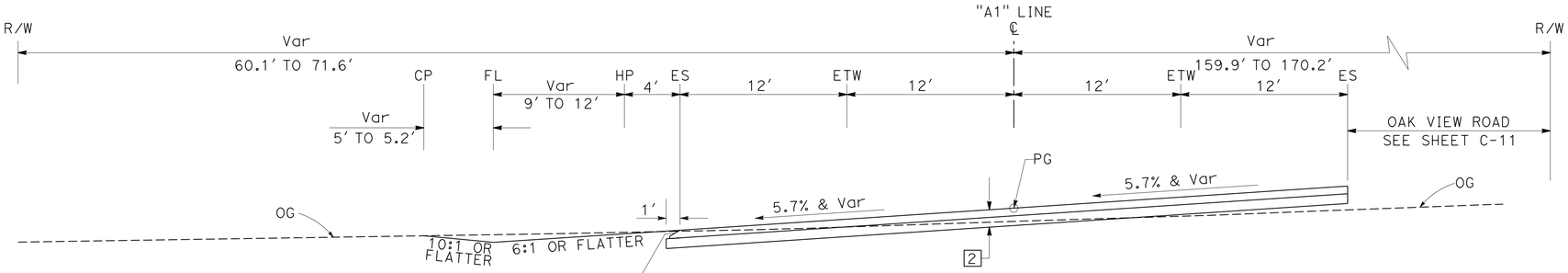

"A1" 129+89.84 TO "A1" 130+25

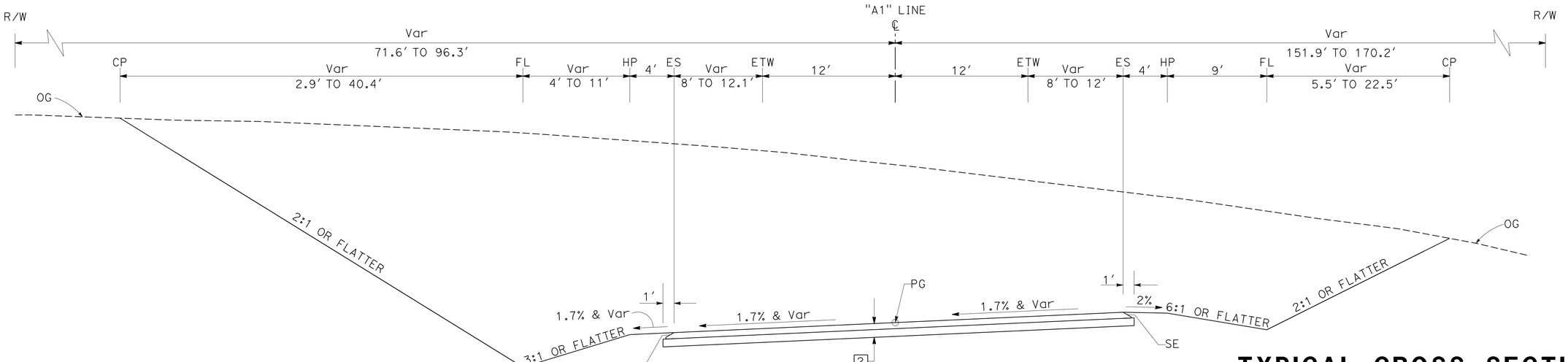

"A1" 126+50 TO "A1" 129+89.84

ROUTE 193

TYPICAL CROSS SECTIONS

NO SCALE

X-8

STATE OF CALIFORNIA - DEPARTMENT OF TRANSPORTATION
DESIGN
FUNCTIONAL SUPERVISOR: MASTRI ALVANDI
CALCULATED-DESIGNED BY: JERRY CHANG
CHECKED BY: KAZEEM ALABI
REVISED BY
DATE REVISED

LAST REVISION | DATE PLOTTED => 15-JUN-2015
04-06-15 | TIME PLOTTED => 15:49

BORDER LAST REVISED 7/2/2010
USERNAME => s130875
DGN FILE => 0300000725ca008.dgn
RELATIVE BORDER SCALE IS IN INCHES 0 1 2 3
UNIT 0337
PROJECT NUMBER & PHASE 03000007251

Dist	COUNTY	ROUTE	POST MILES TOTAL PROJECT	SHEET No.	TOTAL SHEETS
03	Pla	193	4.4/5.5	10	197

Thomas A Langley 4-6-15
REGISTERED CIVIL ENGINEER DATE

4-6-15
PLANS APPROVAL DATE

REGISTERED PROFESSIONAL ENGINEER
TOM LANGLEY
No. 64882
Exp. 6-30-15
CIVIL
STATE OF CALIFORNIA

THE STATE OF CALIFORNIA OR ITS OFFICERS OR AGENTS SHALL NOT BE RESPONSIBLE FOR THE ACCURACY OR COMPLETENESS OF SCANNED COPIES OF THIS PLAN SHEET.

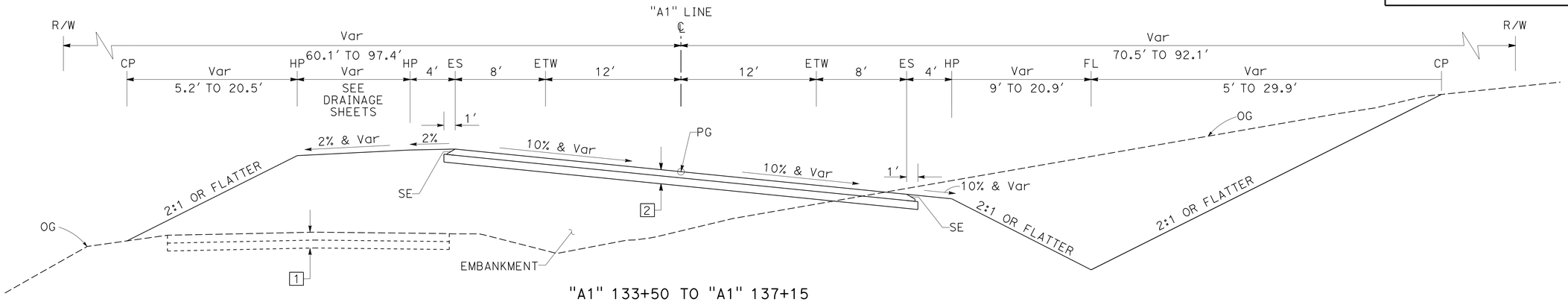

"A1" 133+50 TO "A1" 137+15

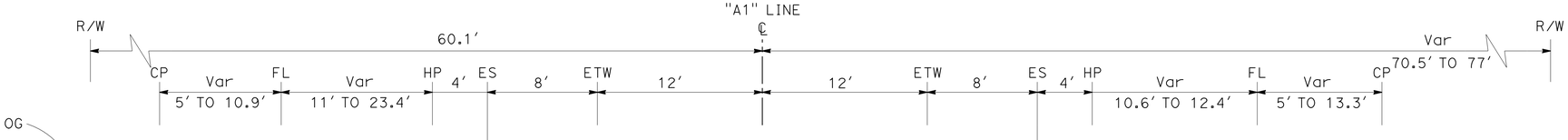

"A1" 132+80 TO "A1" 133+50

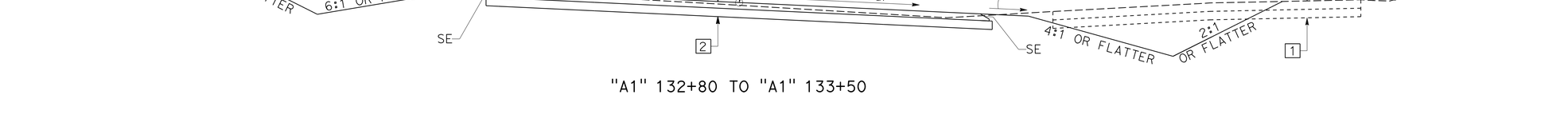

"A1" 131+75 TO "A1" 132+80

ROUTE 193

TYPICAL CROSS SECTIONS

NO SCALE

X-9

STATE OF CALIFORNIA - DEPARTMENT OF TRANSPORTATION
DESIGN
FUNCTIONAL SUPERVISOR: MASTRI ALVANDI
CALCULATED-DESIGNED BY: JERRY CHANG
CHECKED BY: KAZEEM ALABI
REVISED BY
DATE REVISED

LAST REVISION | DATE PLOTTED => 15-JUN-2015
04-06-15 | TIME PLOTTED => 15:49

BORDER LAST REVISED 7/2/2010
USERNAME => s130875
DGN FILE => 0300000725ca009.dgn
RELATIVE BORDER SCALE IS IN INCHES 0 1 2 3
UNIT 0337
PROJECT NUMBER & PHASE 03000007251

Dist	COUNTY	ROUTE	POST MILES TOTAL PROJECT	SHEET No.	TOTAL SHEETS
03	Pla	193	4.4/5.5	11	197

Thomas A Langley 4-6-15
REGISTERED CIVIL ENGINEER DATE

4-6-15
PLANS APPROVAL DATE

REGISTERED PROFESSIONAL ENGINEER
TOM LANGLEY
No. 64882
Exp. 6-30-15
CIVIL
STATE OF CALIFORNIA

THE STATE OF CALIFORNIA OR ITS OFFICERS OR AGENTS SHALL NOT BE RESPONSIBLE FOR THE ACCURACY OR COMPLETENESS OF SCANNED COPIES OF THIS PLAN SHEET.

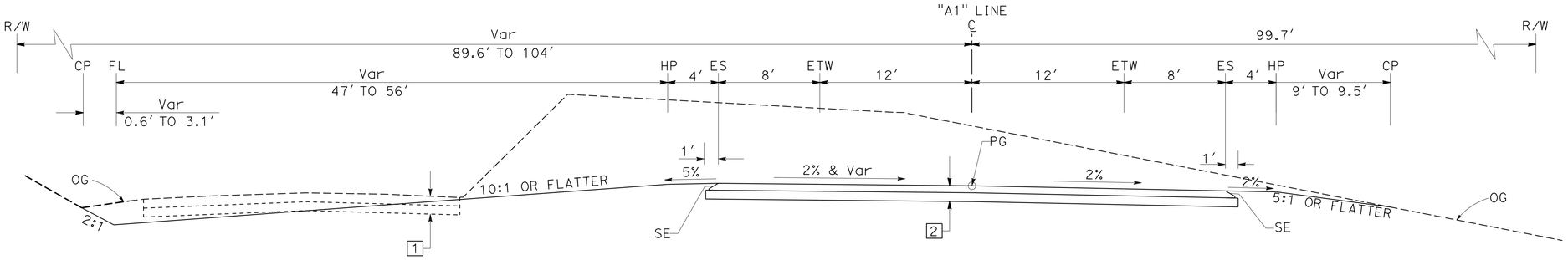

"A1" 139+31.33 TO "A1" 140+00

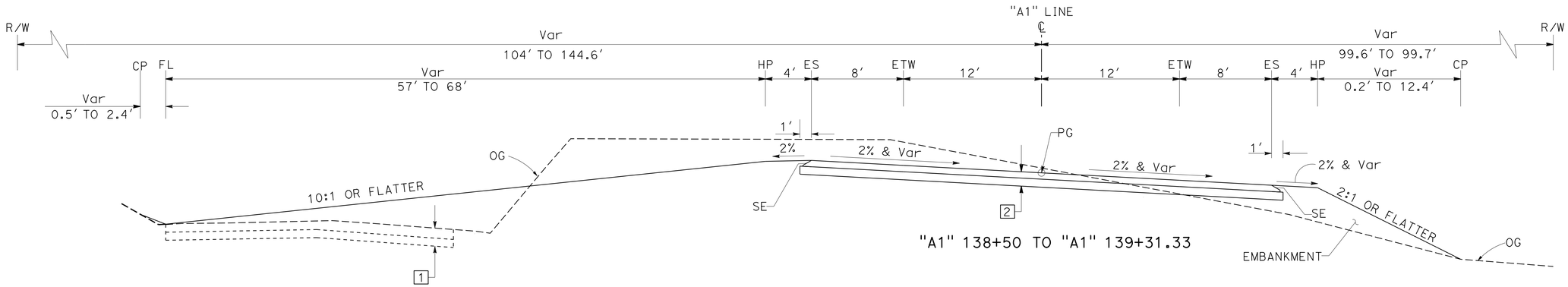

"A1" 138+50 TO "A1" 139+31.33

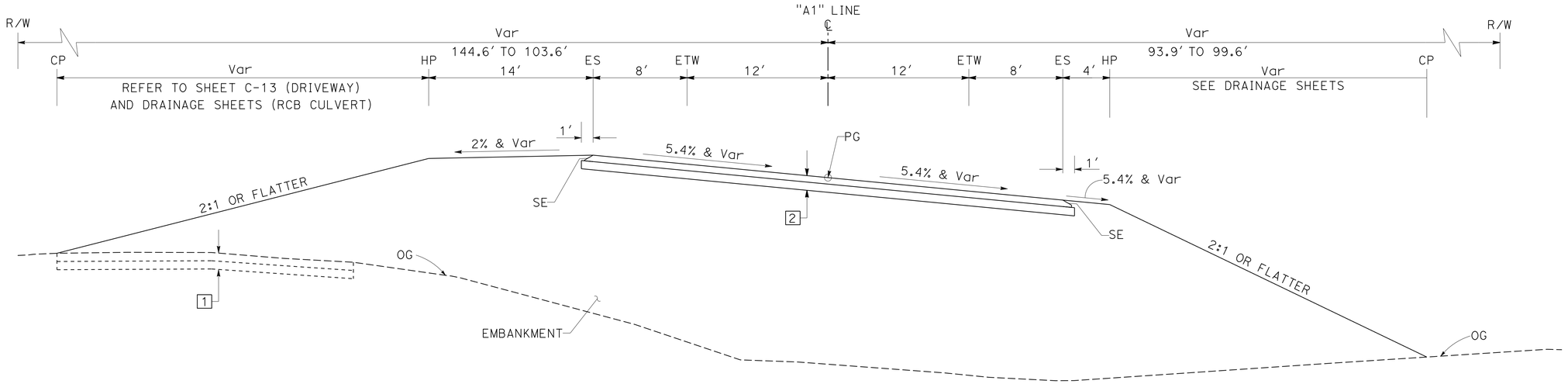

"A1" 137+15 TO "A1" 138+50

ROUTE 193

TYPICAL CROSS SECTIONS

NO SCALE

X-10

REVISED BY | DATE REVISED
JERRY CHANG | KAZEEM ALABI
CALCULATED-DESIGNED BY | CHECKED BY
FUNCTIONAL SUPERVISOR
MASTRI ALVANDI

STATE OF CALIFORNIA - DEPARTMENT OF TRANSPORTATION
Caltrans
DESIGN

LAST REVISION | DATE PLOTTED => 15-JUN-2015
04-06-15 | TIME PLOTTED => 15:49

BORDER LAST REVISED 7/2/2010

USERNAME => s130875
DGN FILE => 0300000725ca010.dgn

RELATIVE BORDER SCALE IS IN INCHES 0 1 2 3

UNIT 0337

PROJECT NUMBER & PHASE 03000007251

Dist	COUNTY	ROUTE	POST MILES TOTAL PROJECT	SHEET No.	TOTAL SHEETS
03	Pla	193	4.4/5.5	12	197

Thomas A Langley 4-6-15
REGISTERED CIVIL ENGINEER DATE

4-6-15
PLANS APPROVAL DATE

REGISTERED PROFESSIONAL ENGINEER
TOM LANGLEY
No. 64882
Exp. 6-30-15
CIVIL
STATE OF CALIFORNIA

THE STATE OF CALIFORNIA OR ITS OFFICERS OR AGENTS SHALL NOT BE RESPONSIBLE FOR THE ACCURACY OR COMPLETENESS OF SCANNED COPIES OF THIS PLAN SHEET.

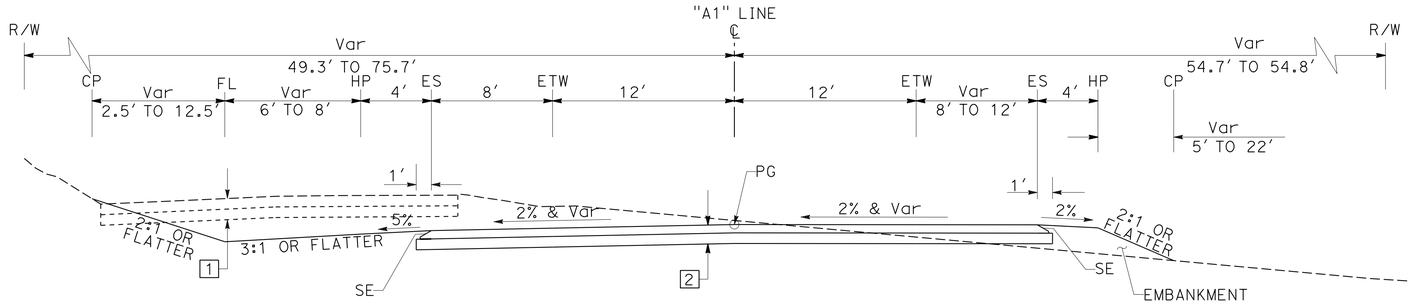

"A1" 140+50 TO "A1" 142+25

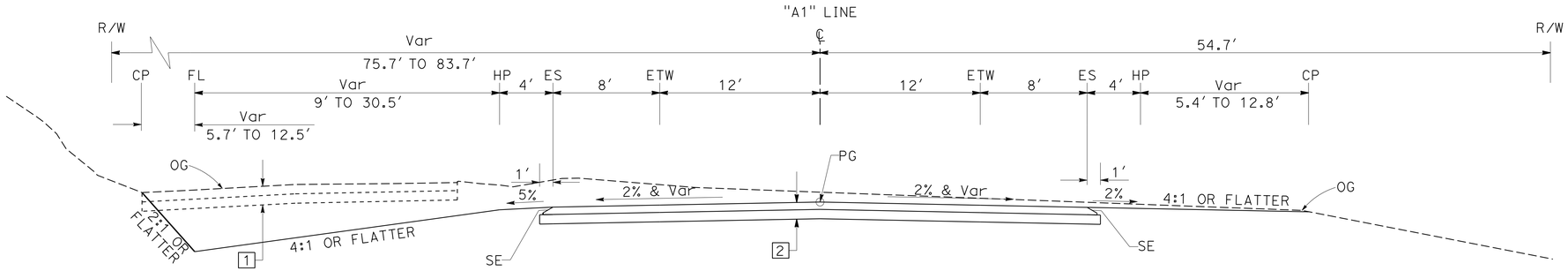

"A1" 140+00 TO "A1" 140+50

ROUTE 193

TYPICAL CROSS SECTIONS

NO SCALE

X-11

STATE OF CALIFORNIA - DEPARTMENT OF TRANSPORTATION
DESIGN
FUNCTIONAL SUPERVISOR: MASTRI ALVANDI
CALCULATED-DESIGNED BY: JERRY CHANG
CHECKED BY: KAZEEM ALABI
REVISED BY
DATE REVISED

LAST REVISION 04-06-15
DATE PLOTTED => 15-JUN-2015
TIME PLOTTED => 15:49

BORDER LAST REVISED 7/2/2010
USERNAME => s130875
DGN FILE => 0300000725ca011.dgn
RELATIVE BORDER SCALE IS IN INCHES 0 1 2 3
UNIT 0337
PROJECT NUMBER & PHASE 03000007251

Dist	COUNTY	ROUTE	POST MILES TOTAL PROJECT	SHEET No.	TOTAL SHEETS
03	Pla	193	4.4/5.5	13	197

Thomas A Langley 4-6-15
REGISTERED CIVIL ENGINEER DATE

4-6-15
PLANS APPROVAL DATE

REGISTERED PROFESSIONAL ENGINEER
TOM LANGLEY
No. 64882
Exp. 6-30-15
CIVIL
STATE OF CALIFORNIA

THE STATE OF CALIFORNIA OR ITS OFFICERS OR AGENTS SHALL NOT BE RESPONSIBLE FOR THE ACCURACY OR COMPLETENESS OF SCANNED COPIES OF THIS PLAN SHEET.

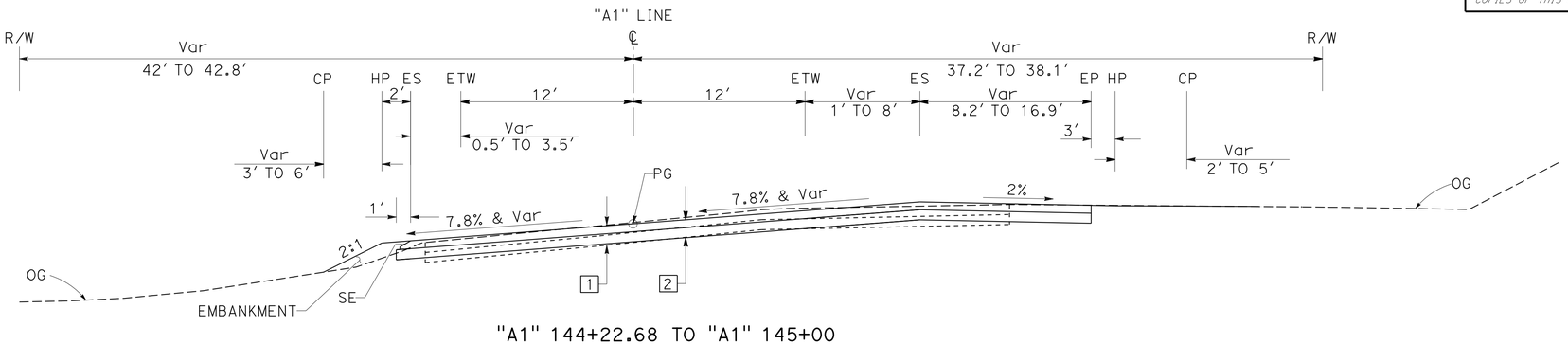

"A1" 144+22.68 TO "A1" 145+00

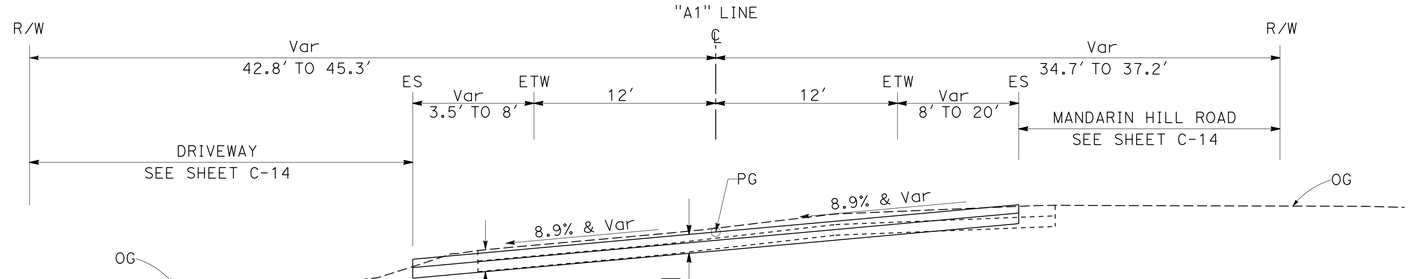

"A1" 143+17.33 TO "A1" 144+22.8

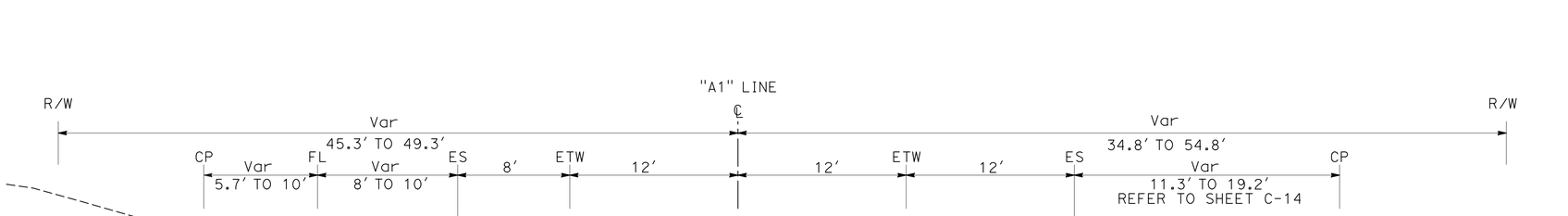

"A1" 142+25 TO "A1" 143+17.33

ROUTE 193

TYPICAL CROSS SECTIONS

NO SCALE

X-12

STATE OF CALIFORNIA - DEPARTMENT OF TRANSPORTATION
DESIGN
Caltrans

FUNCTIONAL SUPERVISOR: MASTRI ALVANDI
CALCULATED-DESIGNED BY: JERRY CHANG
CHECKED BY: KAZEEM ALABI
REVISED BY
DATE REVISED

LAST REVISION | DATE PLOTTED => 15-JUN-2015
04-06-15 | TIME PLOTTED => 15:49

BORDER LAST REVISED 7/2/2010
USERNAME => s130875
DGN FILE => 0300000725ca012.dgn
RELATIVE BORDER SCALE IS IN INCHES 0 1 2 3
UNIT 0337
PROJECT NUMBER & PHASE 03000007251

Dist	COUNTY	ROUTE	POST MILES TOTAL PROJECT	SHEET No.	TOTAL SHEETS
03	Pla	193	4.4/5.5	14	197

Thomas A Langley 4-6-15
REGISTERED CIVIL ENGINEER DATE

4-6-15
PLANS APPROVAL DATE

REGISTERED PROFESSIONAL ENGINEER
TOM LANGLEY
No. 64882
Exp. 6-30-15
CIVIL
STATE OF CALIFORNIA

THE STATE OF CALIFORNIA OR ITS OFFICERS OR AGENTS SHALL NOT BE RESPONSIBLE FOR THE ACCURACY OR COMPLETENESS OF SCANNED COPIES OF THIS PLAN SHEET.

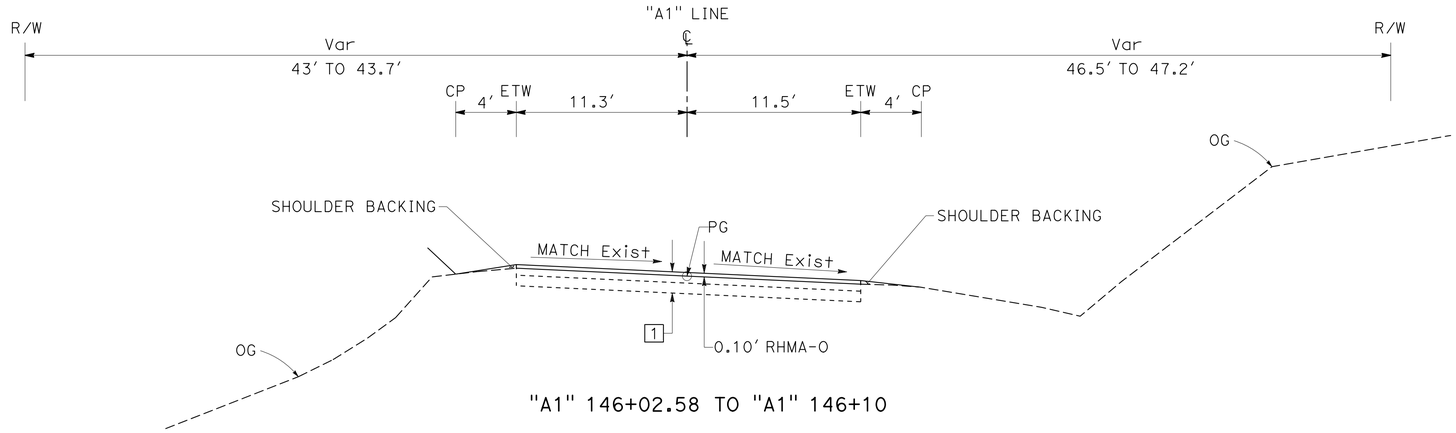

"A1" 146+02.58 TO "A1" 146+10

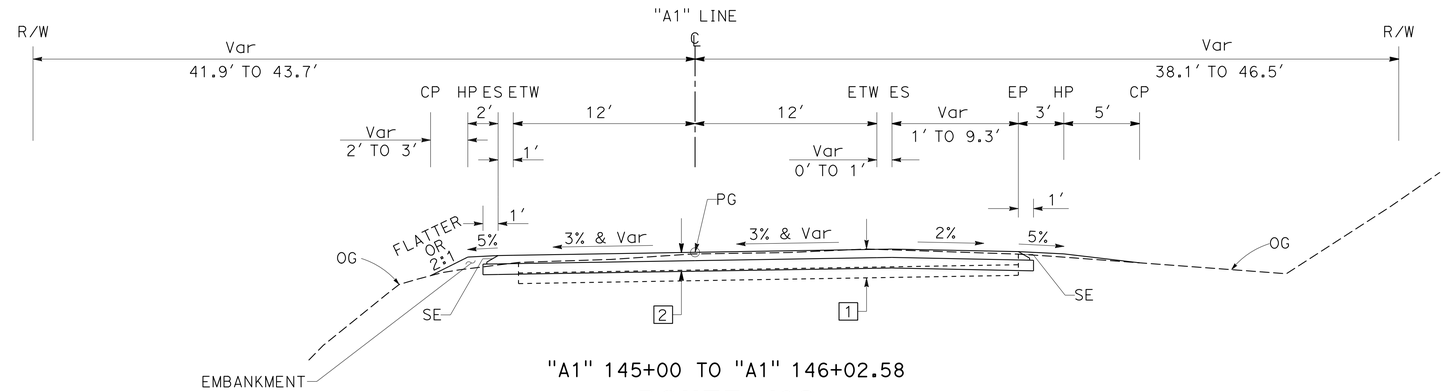

"A1" 145+00 TO "A1" 146+02.58

ROUTE 193

TYPICAL CROSS SECTIONS

NO SCALE

X-13

REVISED BY	DATE REVISED

CALCULATED-DESIGNED BY: JERRY CHANG
CHECKED BY: KAZEEM ALABI
FUNCTIONAL SUPERVISOR: MASTRI ALVANDI

STATE OF CALIFORNIA - DEPARTMENT OF TRANSPORTATION
Caltrans®
DESIGN

LAST REVISION 04-06-15
DATE PLOTTED => 15-JUN-2015
TIME PLOTTED => 15:49

BORDER LAST REVISED 7/2/2010
USERNAME => s130875
DGN FILE => 0300000725ca013.dgn
RELATIVE BORDER SCALE IS IN INCHES 0 1 2 3
UNIT 0337
PROJECT NUMBER & PHASE 03000007251

Dist	COUNTY	ROUTE	POST MILES TOTAL PROJECT	SHEET No.	TOTAL SHEETS
03	Pla	193	4.4/5.5	15	197

Thomas N Langley 4-6-15
REGISTERED CIVIL ENGINEER DATE

4-6-15
PLANS APPROVAL DATE

REGISTERED PROFESSIONAL ENGINEER
TOM LANGLEY
No. 64882
Exp. 6-30-15
CIVIL
STATE OF CALIFORNIA

THE STATE OF CALIFORNIA OR ITS OFFICERS OR AGENTS SHALL NOT BE RESPONSIBLE FOR THE ACCURACY OR COMPLETENESS OF SCANNED COPIES OF THIS PLAN SHEET.

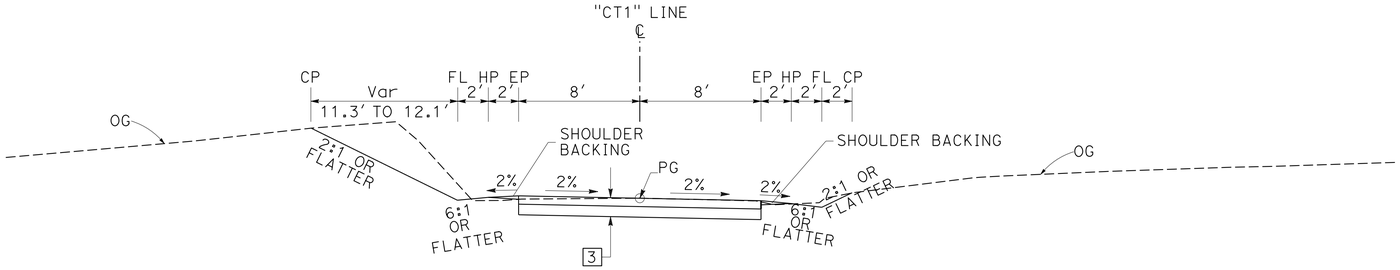

"CT1" 40+13.67
CLARK TUNNEL ROAD

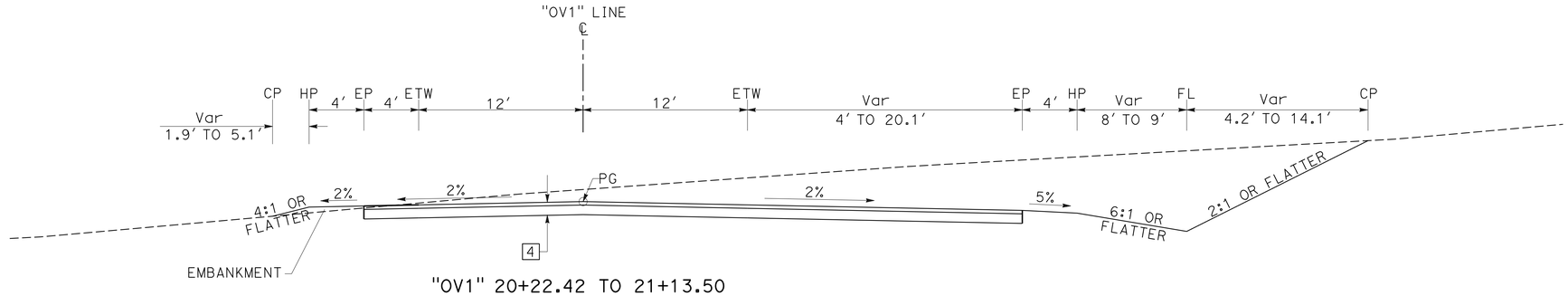

"OV1" 20+22.42 TO 21+13.50
OAK VIEW ROAD

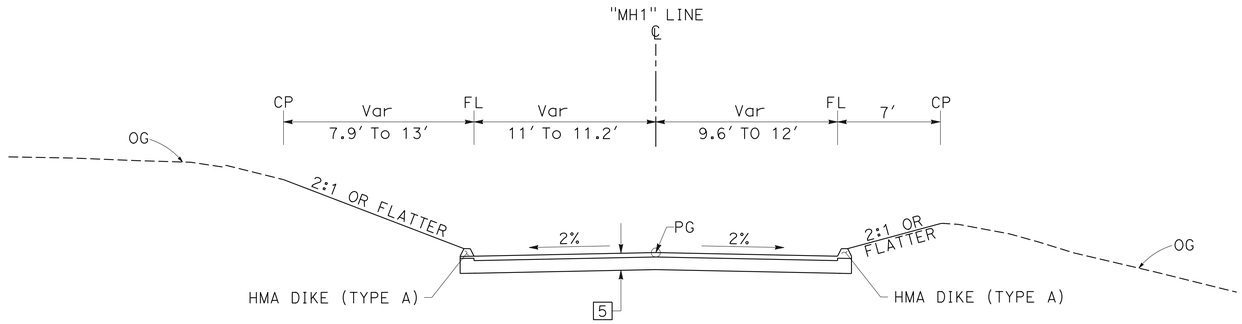

"MH1" 30+50 TO 31+00
MANDARIN HILL ROAD

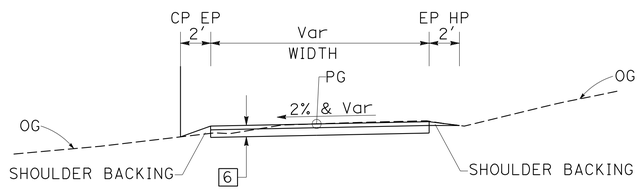

DRIVEWAYS

DRIVEWAYS

LOCATION	SIDE	WIDTH
		LF
Sta "A1" 100+15.68	Lt	12
Sta "A1" 107+95.50	Rt	12
Sta "A1" 111+31.78	Lt	12
Sta "A1" 111+31.78	Rt	12
Sta "A1" 116+00.00	Lt	13
Sta "A1" 131+92.08	Lt	Var
Sta "A1" 137+97.88	Lt	18
Sta "A1" 143+64.78	Lt	12

TYPICAL CROSS SECTIONS
NO SCALE

X-14

STATE OF CALIFORNIA - DEPARTMENT OF TRANSPORTATION
DESIGN
FUNCTIONAL SUPERVISOR: MASTRI ALVANDI
CALCULATED-DESIGNED BY: KAZEEM ALABI
CHECKED BY: JERRY CHANG
REVISED BY
DATE REVISED

LAST REVISION 04-06-15
DATE PLOTTED => 15-JUN-2015
TIME PLOTTED => 15:49

BORDER LAST REVISED 7/2/2010
USERNAME => s130875
DGN FILE => 0300000725ca014.dgn
RELATIVE BORDER SCALE IS IN INCHES 0 1 2 3
UNIT 0337
PROJECT NUMBER & PHASE 03000007251

Dist	COUNTY	ROUTE	POST MILES TOTAL PROJECT	SHEET No.	TOTAL SHEETS
03	Pla	193	4.4/5.5	16	197

REGISTERED CIVIL ENGINEER — DATE 4-6-15

PLANS APPROVAL DATE 4-6-15

REGISTERED PROFESSIONAL ENGINEER — KAZEEM ALABI No. 79697 Exp. 9-30-16 CIVIL — STATE OF CALIFORNIA

THE STATE OF CALIFORNIA OR ITS OFFICERS OR AGENTS SHALL NOT BE RESPONSIBLE FOR THE ACCURACY OR COMPLETENESS OF SCANNED COPIES OF THIS PLAN SHEET.

NOTES:

1. FOR ACCURATE RIGHT OF WAY DATA, CONTACT RIGHT OF WAY ENGINEERING AT THE DISTRICT OFFICE.
2. SEE SHEET Q-4 FOR APPROXIMATE LOCATION OF UNDERDRAIN (INFILTRATION TRENCH). EXACT LOCATIONS TO BE DETERMINED BY THE ENGINEER. SEE SHEET C-6 FOR UNDERDRAIN (INFILTRATION TRENCH) DETAILS.
3. REMOVE CONCRETE IS FOR REMOVAL OF MAILBOX BASE. SEE SHEET Q-4 FOR QUANTITY AND LOCATIONS.

LEGEND:

OBLITERATE SURFACING

REMOVE BASE AND SURFACING (DEPTH = 1.5′) BACKFILL WITH NATIVE MATERIAL

ENVIRONMENTALLY SENSITIVE AREA

ABBREVIATIONS:

FENCE (TYPE BW) = FENCE (TYPE BW, 5 STRAND, METAL POST)
RMA = RESOURCE MONITORING AREA

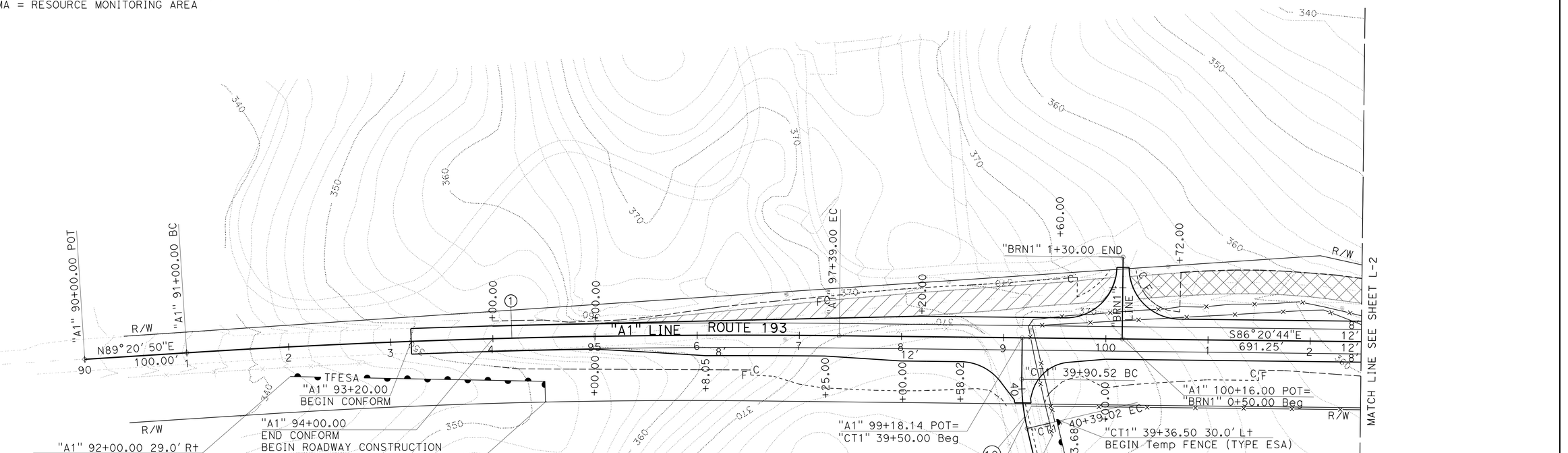

CURVE DATA

No. ⓝ	R	Δ	T	L
①	8500′	04°18′26"	319.65′	639.00′
⑩	200′	13°53′39"	24.37′	48.50′

LAYOUT
SCALE: 1"=50′

L-1

STATE OF CALIFORNIA - DEPARTMENT OF TRANSPORTATION — DESIGN
FUNCTIONAL SUPERVISOR: MASTRI ALVANDI
CALCULATED-DESIGNED BY: KAZEEM ALABI
CHECKED BY: TOM LANGLEY
REVISED BY | DATE REVISED

LAST REVISION | DATE PLOTTED => 15-JUN-2015
04-06-15 | TIME PLOTTED => 15:49

Dist	COUNTY	ROUTE	POST MILES TOTAL PROJECT	SHEET No.	TOTAL SHEETS
03	Pla	193	4.4/5.5	17	197

REGISTERED CIVIL ENGINEER — DATE: 4-6-15

PLANS APPROVAL DATE: 4-6-15

KAZEEM ALABI No. 79697 Exp. 9-30-16 CIVIL — REGISTERED PROFESSIONAL ENGINEER — STATE OF CALIFORNIA

THE STATE OF CALIFORNIA OR ITS OFFICERS OR AGENTS SHALL NOT BE RESPONSIBLE FOR THE ACCURACY OR COMPLETENESS OF SCANNED COPIES OF THIS PLAN SHEET.

NOTE:

FOR ACCURATE RIGHT OF WAY DATA, CONTACT
RIGHT OF WAY ENGINEERING AT THE DISTRICT OFFICE.

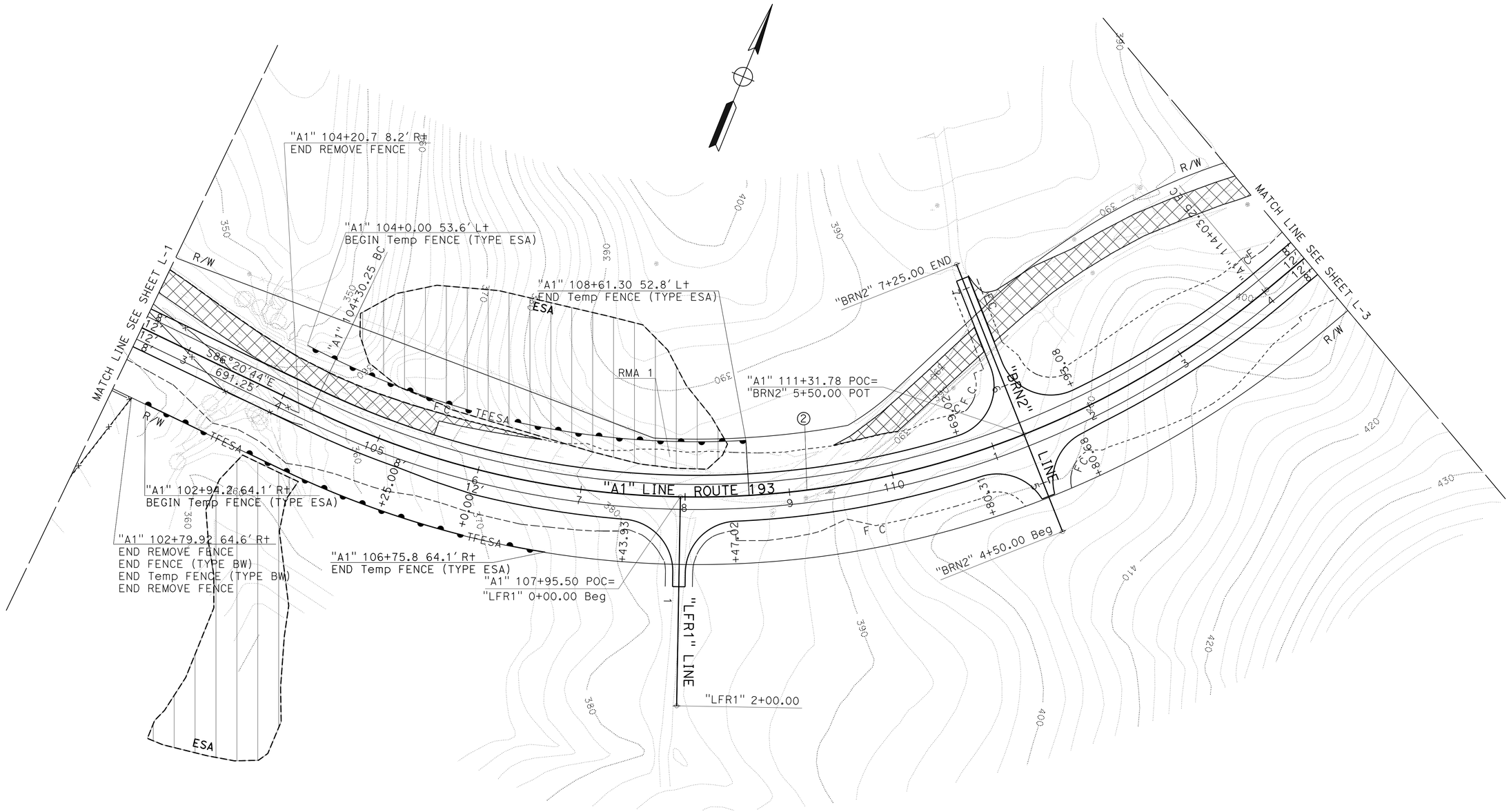

CURVE DATA

No. ⊕	R	Δ	T	L
②	850′	65°35′13"	547.65′	973.00′

LAYOUT

SCALE: 1"=50′

L-2

STATE OF CALIFORNIA - DEPARTMENT OF TRANSPORTATION — DESIGN

FUNCTIONAL SUPERVISOR: MASTRI ALVANDI

CALCULATED-DESIGNED BY: KAZEEM ALABI

CHECKED BY: TOM LANGLEY

REVISED BY / DATE REVISED

LAST REVISION: DATE PLOTTED => 15-JUN-2015
04-06-15 TIME PLOTTED => 15:49

BORDER LAST REVISED 7/2/2010

USERNAME => s130875
DGN FILE => 0300000725ea002.dgn

RELATIVE BORDER SCALE IS IN INCHES 0 1 2 3

UNIT 0337

PROJECT NUMBER & PHASE 03000007251

Dist	COUNTY	ROUTE	POST MILES TOTAL PROJECT	SHEET No.	TOTAL SHEETS
03	Pla	193	4.4/5.5	18	197

KAZEEM ALABI 4-6-15
REGISTERED CIVIL ENGINEER DATE

4-6-15
PLANS APPROVAL DATE

KAZEEM ALABI No. 79697 Exp. 9-30-16 CIVIL — REGISTERED PROFESSIONAL ENGINEER — STATE OF CALIFORNIA

THE STATE OF CALIFORNIA OR ITS OFFICERS OR AGENTS SHALL NOT BE RESPONSIBLE FOR THE ACCURACY OR COMPLETENESS OF SCANNED COPIES OF THIS PLAN SHEET.

NOTE:

FOR ACCURATE RIGHT OF WAY DATA, CONTACT
RIGHT OF WAY ENGINEERING AT THE DISTRICT OFFICE.

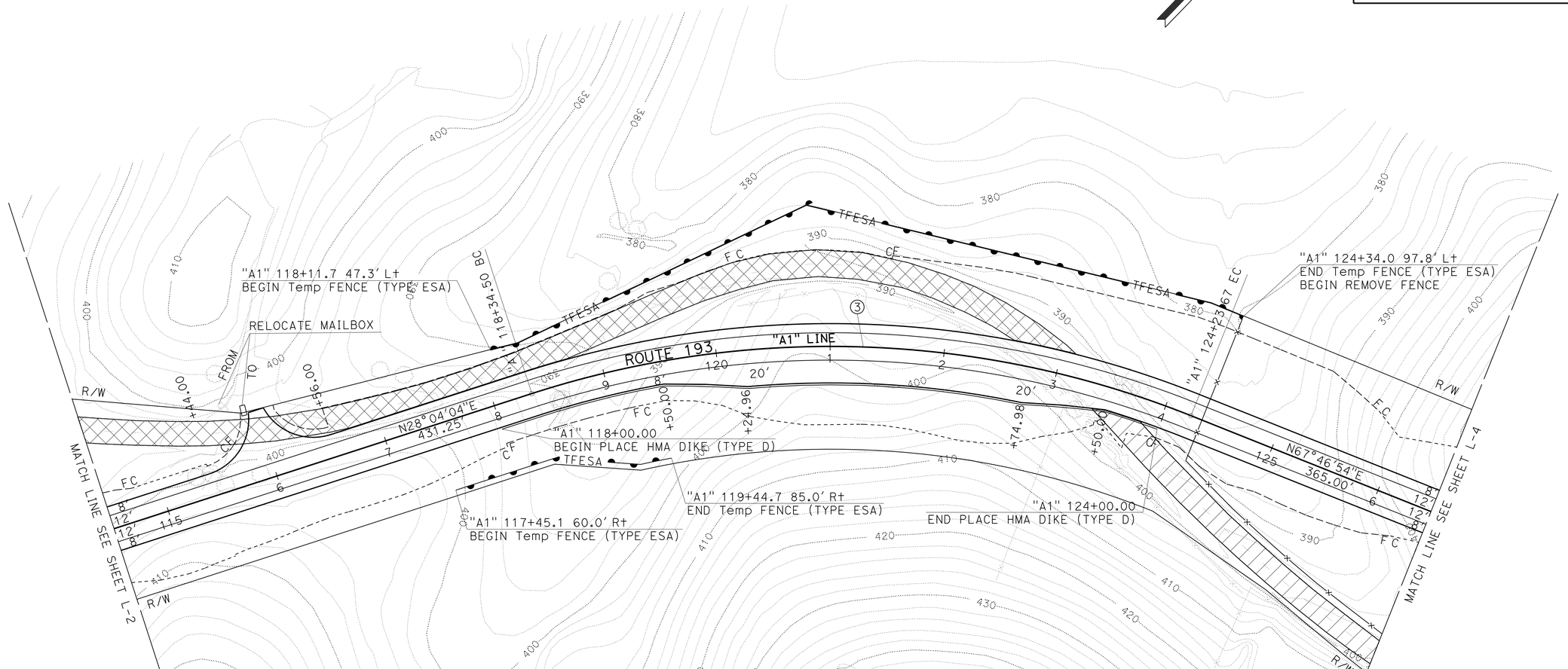

CURVE DATA

No. ⊕	R	Δ	T	L
③	850′	39°42′50"	306.97′	589.17′

LAYOUT

SCALE: 1"=50′ **L-3**

STATE OF CALIFORNIA - DEPARTMENT OF TRANSPORTATION
DESIGN
Caltrans
FUNCTIONAL SUPERVISOR: MASTRI ALVANDI
CALCULATED-DESIGNED BY: KAZEEM ALABI
CHECKED BY: TOM LANGLEY
REVISED BY
DATE REVISED

LAST REVISION | DATE PLOTTED => 15-JUN-2015
04-06-15 | TIME PLOTTED => 15:49

BORDER LAST REVISED 7/2/2010
USERNAME => s130875
DGN FILE => 0300000725ea003.dgn
RELATIVE BORDER SCALE IS IN INCHES 0 1 2 3
UNIT 0337
PROJECT NUMBER & PHASE 03000007251

Dist	COUNTY	ROUTE	POST MILES TOTAL PROJECT	SHEET No.	TOTAL SHEETS
03	Pla	193	4.4/5.5	19	197

REGISTERED CIVIL ENGINEER — DATE: 4-6-15

KAZEEM ALABI No. 79697 Exp. 9-30-16 CIVIL — REGISTERED PROFESSIONAL ENGINEER — STATE OF CALIFORNIA

PLANS APPROVAL DATE: 4-6-15

THE STATE OF CALIFORNIA OR ITS OFFICERS OR AGENTS SHALL NOT BE RESPONSIBLE FOR THE ACCURACY OR COMPLETENESS OF SCANNED COPIES OF THIS PLAN SHEET.

NOTES:

1. FOR ACCURATE RIGHT OF WAY DATA, CONTACT RIGHT OF WAY ENGINEERING AT THE DISTRICT OFFICE.
2. BURIED MAN-MADE OBJECTS, REFER TO GEOTECHNICAL REPORTS IN SUPPLEMENTAL PROJECT INFORMATION.

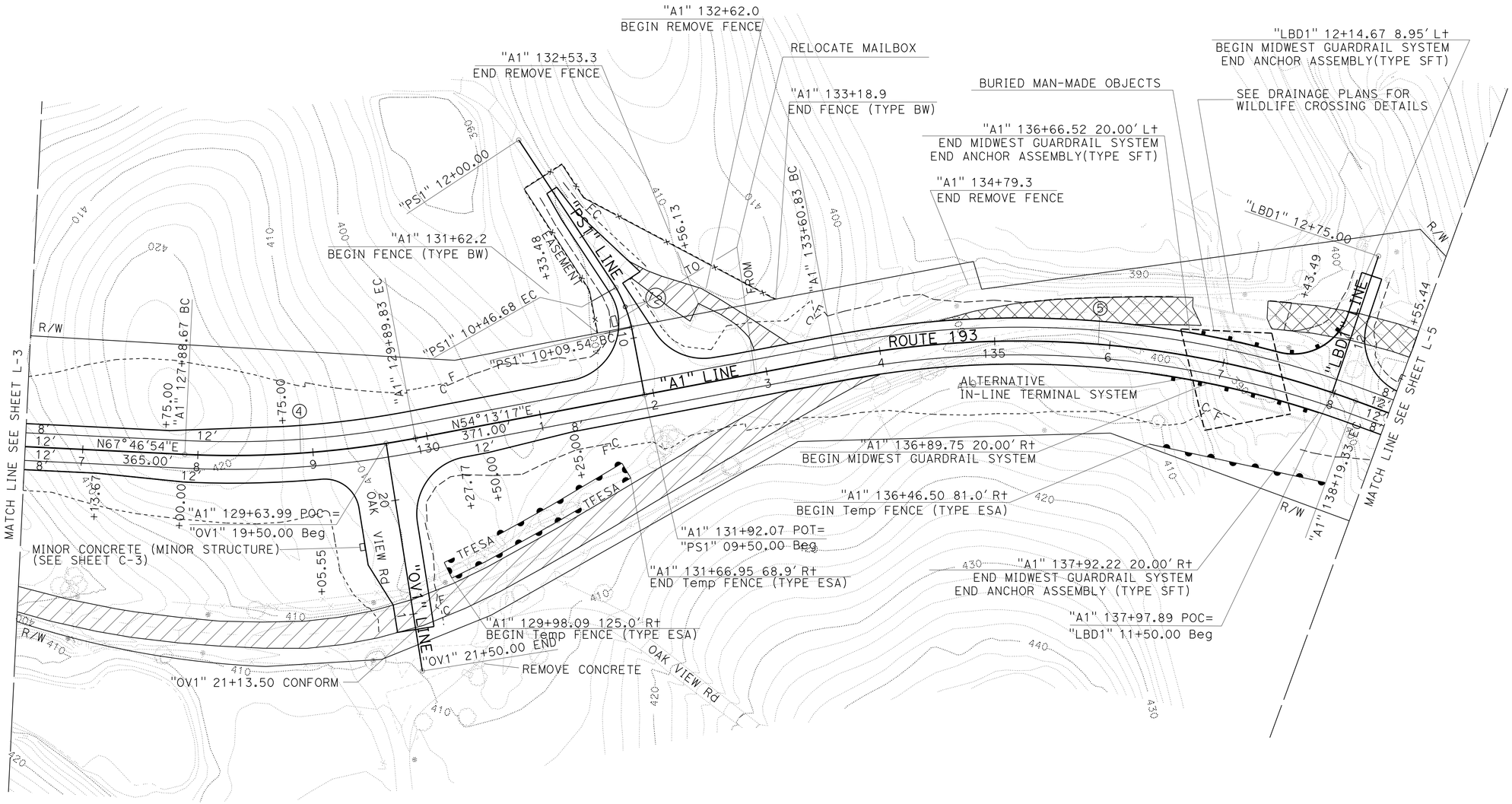

CURVE DATA

No. ⊕	R	Δ	T	L
④	850′	13°33′36"	101.06′	201.17′
⑤	850′	30°54′22"	234.98′	458.50′
⑫	130′	16°22′04"	18.70′	37.14′

LAYOUT

SCALE: 1"=50′ **L-4**

STATE OF CALIFORNIA - DEPARTMENT OF TRANSPORTATION — DESIGN

FUNCTIONAL SUPERVISOR: MASTRI ALVANDI

CALCULATED-DESIGNED BY: KAZEEM ALABI

CHECKED BY: TOM LANGLEY

REVISED BY / DATE REVISED

LAST REVISION: DATE PLOTTED => 16-JUN-2015; TIME PLOTTED => 07:23; 05-11-15

BORDER LAST REVISED 7/2/2010 | USERNAME => s130875 | DGN FILE => 0300000725ea004.dgn | RELATIVE BORDER SCALE IS IN INCHES 0 1 2 3 | UNIT 0337 | PROJECT NUMBER & PHASE 03000007251

Dist	COUNTY	ROUTE	POST MILES TOTAL PROJECT	SHEET No.	TOTAL SHEETS
03	Pla	193	4.4/5.5	20	197

REGISTERED CIVIL ENGINEER — DATE 4-6-15

PLANS APPROVAL DATE 4-6-15

REGISTERED PROFESSIONAL ENGINEER — KAZEEM ALABI — No. 79697 — Exp. 9-30-16 — CIVIL — STATE OF CALIFORNIA

THE STATE OF CALIFORNIA OR ITS OFFICERS OR AGENTS SHALL NOT BE RESPONSIBLE FOR THE ACCURACY OR COMPLETENESS OF SCANNED COPIES OF THIS PLAN SHEET.

NOTE:

FOR ACCURATE RIGHT OF WAY DATA, CONTACT
RIGHT OF WAY ENGINEERING AT THE DISTRICT OFFICE.

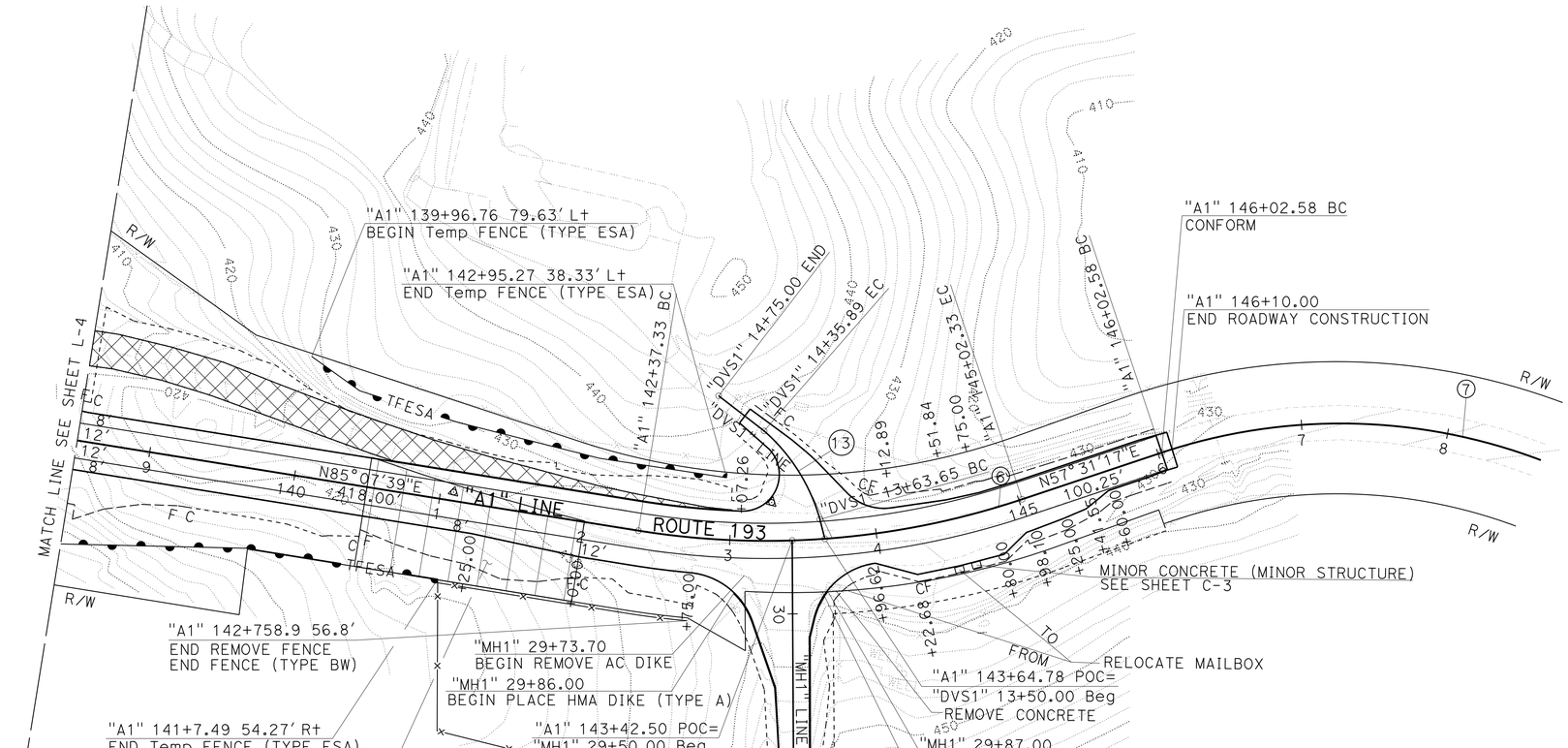

CURVE DATA

No. ⊕	R	Δ	T	L
⑥	550′	27°36′22"	135.12′	265.00′
⑦	385′	61°52′19"	230.75′	415.75′
⑬	125′	033°06′53"	37.16′	72.24′

LAYOUT

SCALE: 1"=50′

L-5

STATE OF CALIFORNIA - DEPARTMENT OF TRANSPORTATION — DESIGN
FUNCTIONAL SUPERVISOR: MASTRI ALVANDI
CALCULATED-DESIGNED BY: KAZEEM ALABI
CHECKED BY: TOM LANGLEY
REVISED BY / DATE REVISED

LAST REVISION => DATE PLOTTED => 16-JUN-2015
05-11-15 TIME PLOTTED => 10:53

BORDER LAST REVISED 7/2/2010 | USERNAME => s130875 | DGN FILE => 0300000725ea005.dgn | RELATIVE BORDER SCALE IS IN INCHES 0 1 2 3 | UNIT 0337 | PROJECT NUMBER & PHASE 03000007251

Dist	COUNTY	ROUTE	POST MILES TOTAL PROJECT	SHEET No.	TOTAL SHEETS
03	Pla	193	4.4/5.5	21	197

REGISTERED CIVIL ENGINEER — 4-6-15 DATE

PLANS APPROVAL DATE — 4-6-15

KAZEEM ALABI No. 79697 Exp. 9-30-16 CIVIL — REGISTERED PROFESSIONAL ENGINEER — STATE OF CALIFORNIA

THE STATE OF CALIFORNIA OR ITS OFFICERS OR AGENTS SHALL NOT BE RESPONSIBLE FOR THE ACCURACY OR COMPLETENESS OF SCANNED COPIES OF THIS PLAN SHEET.

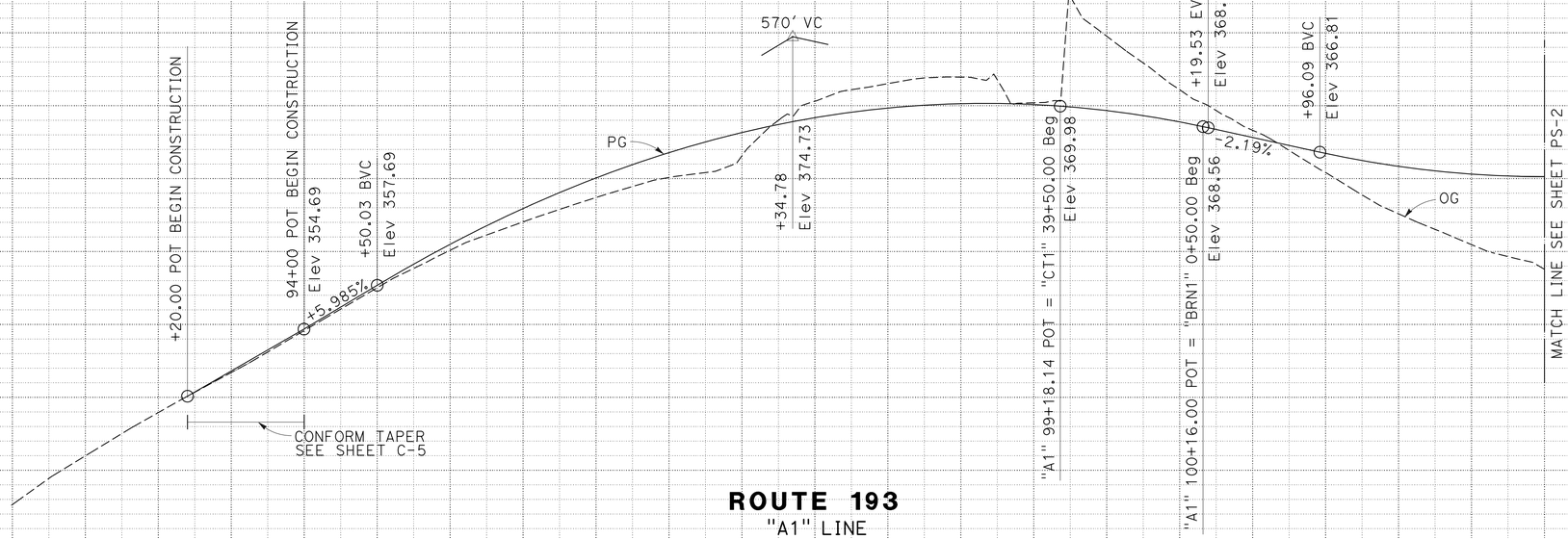

ROUTE 193
"A1" LINE

PROFILE
SCALE: Horiz 1"=50'
Vert 1"=5'

P-1

STATION		2	3	4	95	6	7	8	9	100	1	2	TOTAL
CY	Exc			327		3,245					176		3,748
	Emb			437		96					1,403		1,936

STATE OF CALIFORNIA - DEPARTMENT OF TRANSPORTATION
DESIGN
Caltrans
FUNCTIONAL SUPERVISOR: MASTRI ALVANDI
CALCULATED-DESIGNED BY: KAZEEM ALABI
CHECKED BY: TOM LANGLEY
REVISED BY
DATE REVISED

LAST REVISION DATE PLOTTED => 15-JUN-2015
TIME PLOTTED => 15:49
04-06-15

BORDER LAST REVISED 7/2/2010
USERNAME => s130875
DGN FILE => 0300000725fa001.dgn
RELATIVE BORDER SCALE IS IN INCHES 0 1 2 3
UNIT 0337
PROJECT NUMBER & PHASE 03000007251

Dist	COUNTY	ROUTE	POST MILES TOTAL PROJECT	SHEET No.	TOTAL SHEETS
03	Pla	193	4.4/5.5	22	197

REGISTERED CIVIL ENGINEER — 4-6-15 DATE

KAZEEM ALABI No. 79697 Exp. 9-30-16 CIVIL — REGISTERED PROFESSIONAL ENGINEER — STATE OF CALIFORNIA

4-6-15
PLANS APPROVAL DATE

THE STATE OF CALIFORNIA OR ITS OFFICERS OR AGENTS SHALL NOT BE RESPONSIBLE FOR THE ACCURACY OR COMPLETENESS OF SCANNED COPIES OF THIS PLAN SHEET.

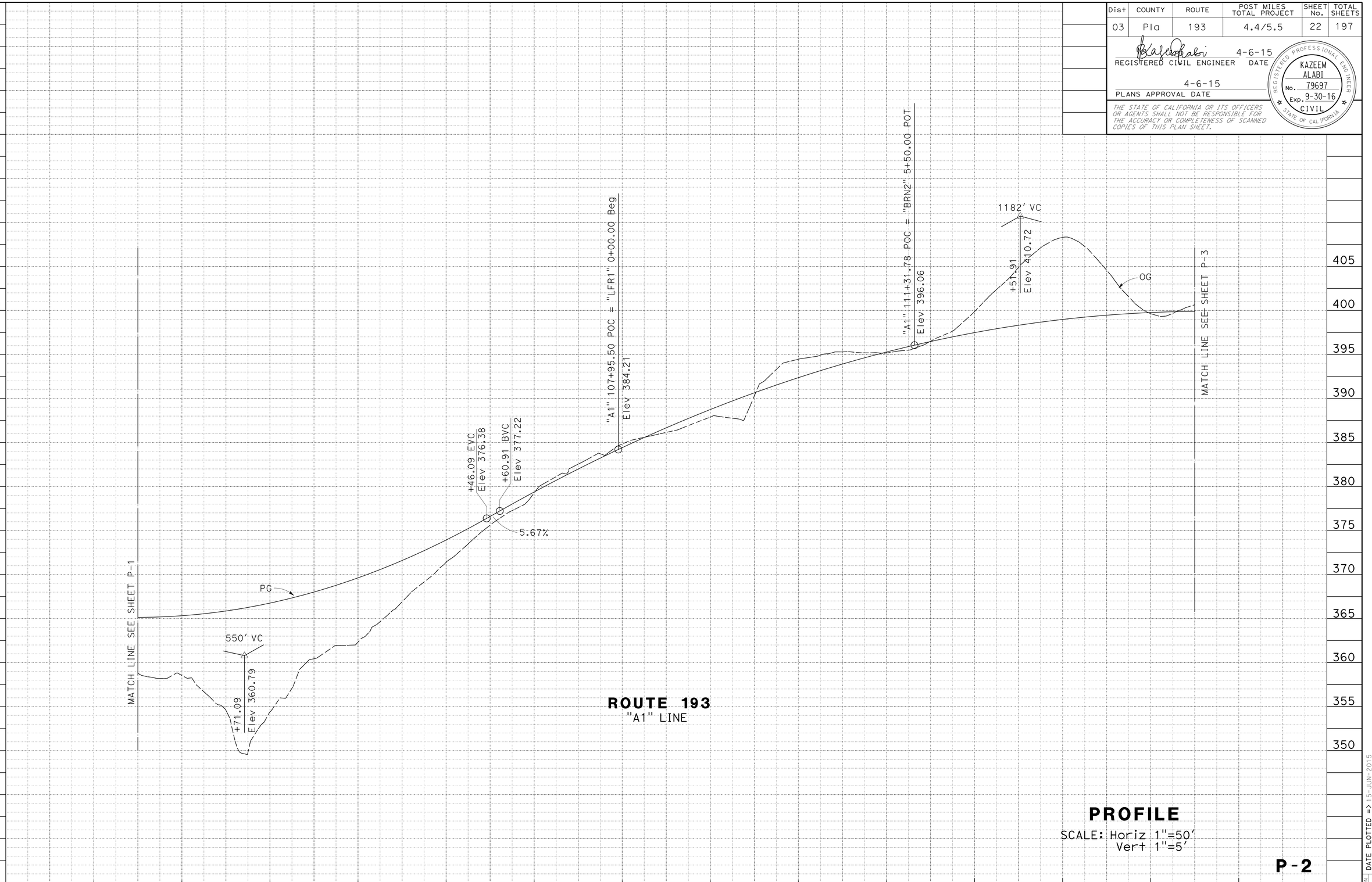

ROUTE 193
"A1" LINE

PROFILE
SCALE: Horiz 1"=50'
Vert 1"=5'

P-2

STATION	3	4	105	6	7	8	9	110	1	2	3	4	115	TOTAL
CY Exc			913					5,742						6,655
CY Emb			6,757					429						7,186

STATE OF CALIFORNIA - DEPARTMENT OF TRANSPORTATION
Caltrans®
DESIGN
CALCULATED-DESIGNED BY: KAZEEM ALABI
CHECKED BY: TOM LANGLEY
FUNCTIONAL SUPERVISOR: MASTRI ALVANDI
REVISED BY
DATE REVISED

LAST REVISION | DATE PLOTTED => 15-JUN-2015 | TIME PLOTTED => 15:49 | 04-06-15

BORDER LAST REVISED 7/2/2010 | USERNAME => s130875 | DGN FILE => 0300000725fa002.dgn | RELATIVE BORDER SCALE IS IN INCHES 0 1 2 3 | UNIT 0337 | PROJECT NUMBER & PHASE 03000007251

Dist	COUNTY	ROUTE	POST MILES TOTAL PROJECT	SHEET No.	TOTAL SHEETS
03	Pla	193	4.4/5.5	23	197

REGISTERED CIVIL ENGINEER — 4-6-15 DATE

KAZEEM ALABI No. 79697 Exp. 9-30-16 CIVIL — REGISTERED PROFESSIONAL ENGINEER — STATE OF CALIFORNIA

4-6-15
PLANS APPROVAL DATE

THE STATE OF CALIFORNIA OR ITS OFFICERS OR AGENTS SHALL NOT BE RESPONSIBLE FOR THE ACCURACY OR COMPLETENESS OF SCANNED COPIES OF THIS PLAN SHEET.

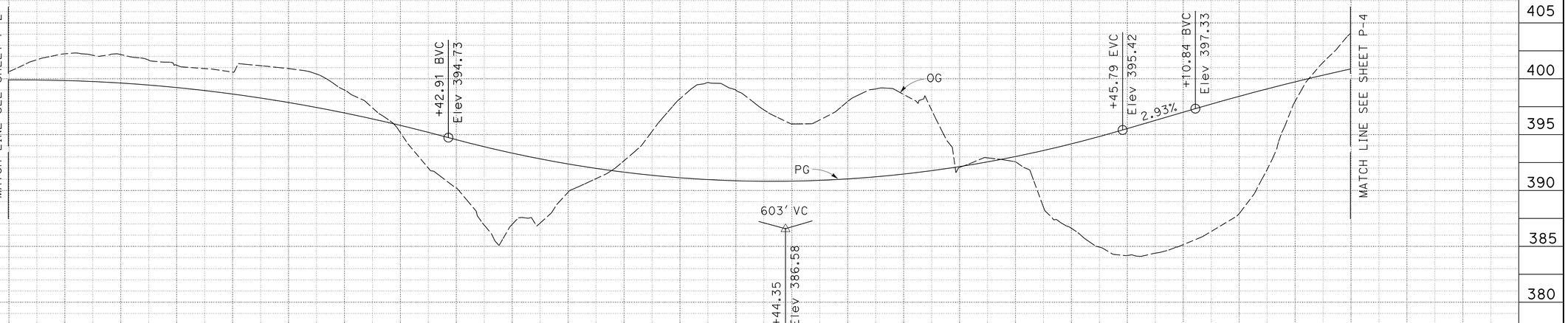

ROUTE 193
"A1" LINE

PROFILE
SCALE: Horiz 1"=50'
Vert 1"=5'

P-3

STATION		115	6	7	8	9	120	1	2	3	4	125	6	TOTAL
CY	Exc	3,751		199		8,725		662						13,337
	Emb	314		1,610		898		7,164						9,986

REVISED BY | DATE REVISED

KAZEEM ALABI — CALCULATED-DESIGNED BY
TOM LANGLEY — CHECKED BY
MASTRI ALVANDI — FUNCTIONAL SUPERVISOR

STATE OF CALIFORNIA - DEPARTMENT OF TRANSPORTATION
DESIGN

LAST REVISION DATE PLOTTED => 15-JUN-2015
04-06-15 TIME PLOTTED => 15:49

BORDER LAST REVISED 7/2/2010 | USERNAME => s130875 | DGN FILE => 0300000725fa003.dgn | RELATIVE BORDER SCALE IS IN INCHES 0 1 2 3 | UNIT 0337 | PROJECT NUMBER & PHASE 03000007251

Dist	COUNTY	ROUTE	POST MILES TOTAL PROJECT	SHEET No.	TOTAL SHEETS
03	Pla	193	4.4/5.5	24	197

Kazeem Alabi 4-6-15
REGISTERED CIVIL ENGINEER DATE

4-6-15
PLANS APPROVAL DATE

REGISTERED PROFESSIONAL ENGINEER
KAZEEM ALABI
No. 79697
Exp. 9-30-16
CIVIL
STATE OF CALIFORNIA

THE STATE OF CALIFORNIA OR ITS OFFICERS OR AGENTS SHALL NOT BE RESPONSIBLE FOR THE ACCURACY OR COMPLETENESS OF SCANNED COPIES OF THIS PLAN SHEET.

NOTE (THIS SHEET ONLY):

SEE DRAINAGE SYSTEM 13.

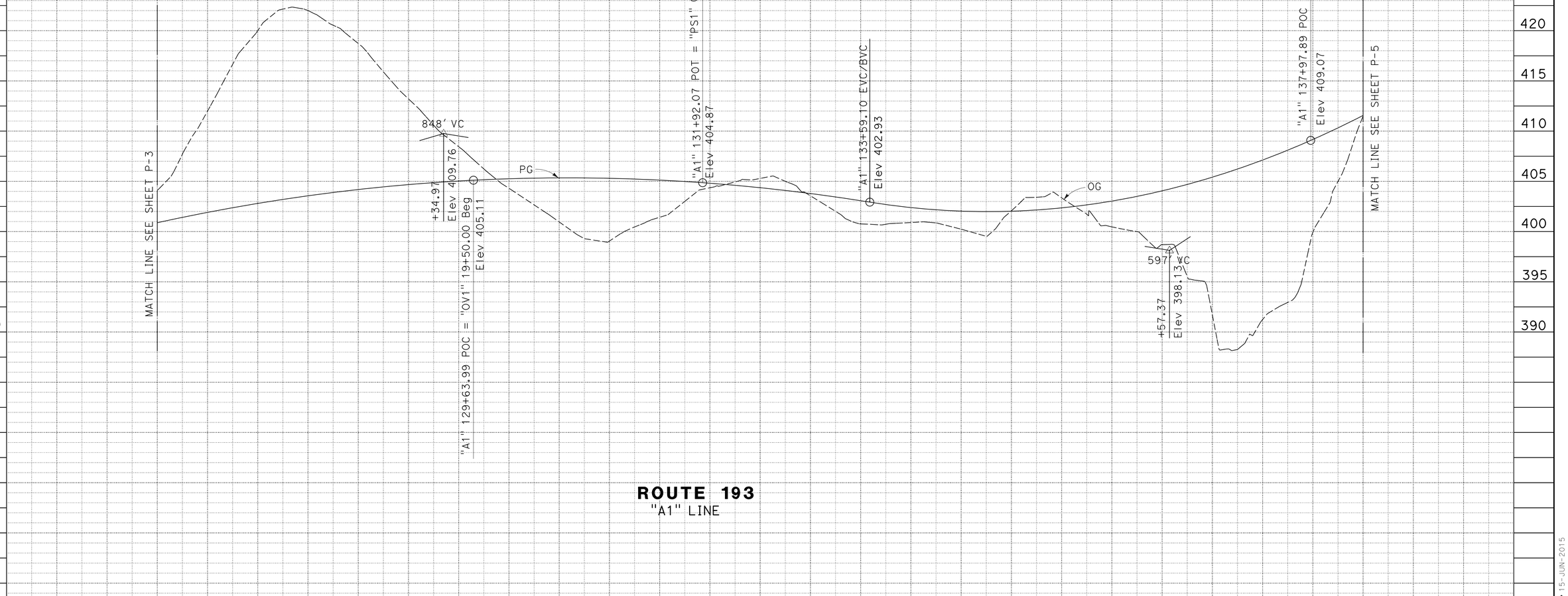

ROUTE 193
"A1" LINE

PROFILE
SCALE: Horiz 1"=50'
Vert 1"=5'

P-4

STATION		7	8	9	130	1	2	3	4	135	6	7	8	TOTAL
CY	Exc	14,643			1,943				1,943		SEE NOTE	41	3,082	18,263
	Emb	1			2,131				2,131					7,624

CALCULATED-DESIGNED BY
CHECKED BY
KAZEEM ALABI
TOM LANGLEY
REVISED BY
DATE REVISED
FUNCTIONAL SUPERVISOR
MASTRI ALVANDI
STATE OF CALIFORNIA - DEPARTMENT OF TRANSPORTATION
Caltrans®
DESIGN

LAST REVISION DATE PLOTTED => 15-JUN-2015
04-06-15 TIME PLOTTED => 15:49

BORDER LAST REVISED 7/2/2010
USERNAME => s130875
DGN FILE => 0300000725fa004.dgn
RELATIVE BORDER SCALE IS IN INCHES 0 1 2 3
UNIT 0337
PROJECT NUMBER & PHASE 03000007251

Dist	COUNTY	ROUTE	POST MILES TOTAL PROJECT	SHEET No.	TOTAL SHEETS
03	Pla	193	4.4/5.5	25	197

REGISTERED CIVIL ENGINEER — 4-6-15 DATE

4-6-15
PLANS APPROVAL DATE

REGISTERED PROFESSIONAL ENGINEER — KAZEEM ALABI No. 79697 Exp. 9-30-16 CIVIL — STATE OF CALIFORNIA

THE STATE OF CALIFORNIA OR ITS OFFICERS OR AGENTS SHALL NOT BE RESPONSIBLE FOR THE ACCURACY OR COMPLETENESS OF SCANNED COPIES OF THIS PLAN SHEET.

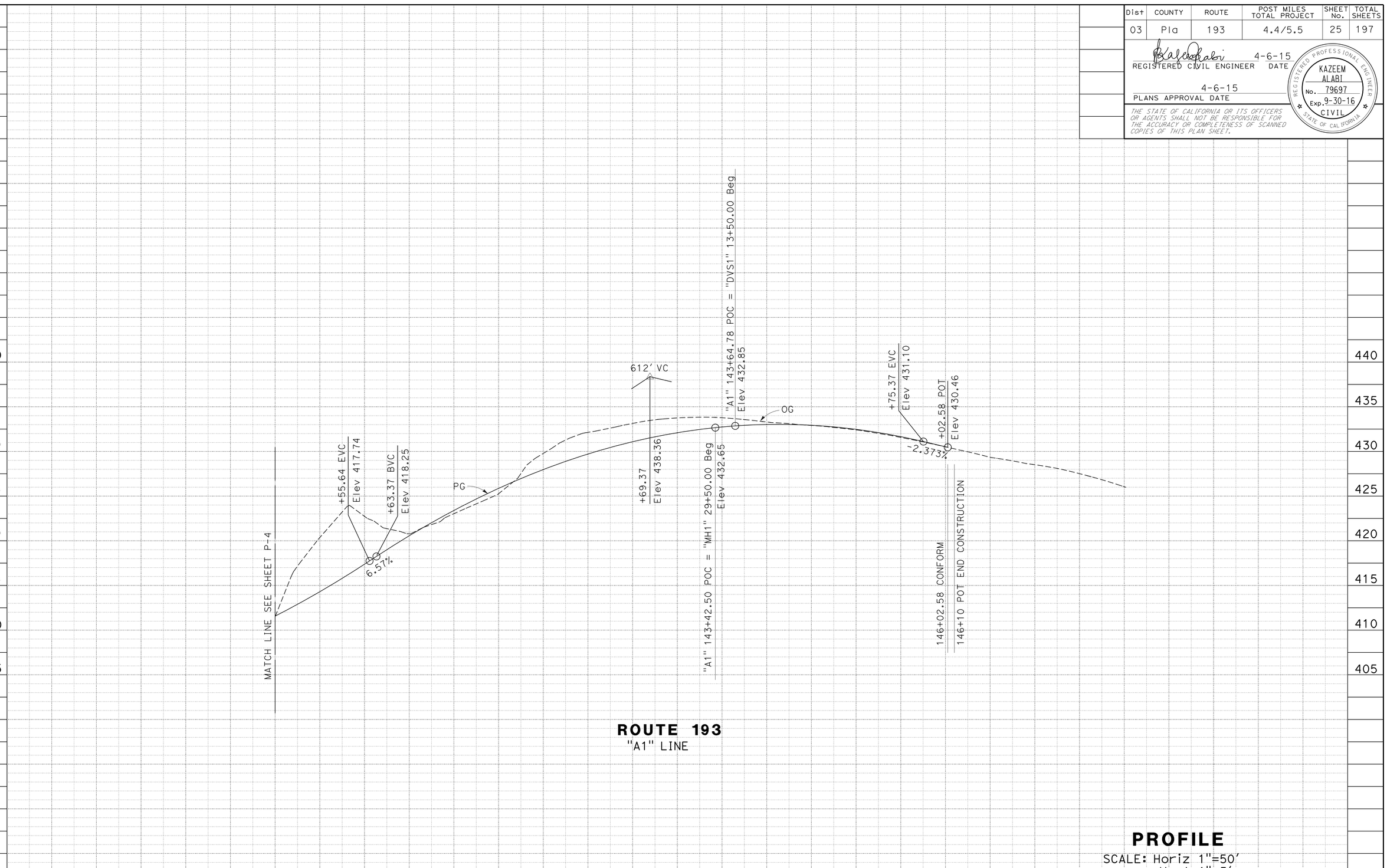

ROUTE 193
"A1" LINE

PROFILE
SCALE: Horiz 1"=50'
Vert 1"=5'

P-5

STATION		9	140	1	2	3	4	145	6	7	8	TOTAL
CY	Exc	2,064		2,514								4,578
	Emb	81		152								233

STATE OF CALIFORNIA - DEPARTMENT OF TRANSPORTATION
DESIGN
Caltrans®

CALCULATED-DESIGNED BY: KAZEEM ALABI
CHECKED BY: TOM LANGLEY
FUNCTIONAL SUPERVISOR: MASTRI ALVANDI

REVISED BY | DATE REVISED

LAST REVISION | DATE PLOTTED => 15-JUN-2015
04-06-15 | TIME PLOTTED => 15:50

BORDER LAST REVISED 7/2/2010

USERNAME => s130875
DGN FILE => 0300000725fa005.dgn

RELATIVE BORDER SCALE IS IN INCHES 0 1 2 3

UNIT 0337

PROJECT NUMBER & PHASE 03000007251

NOTE (THIS SHEET ONLY):

EXCAVATION AND EMBANKMENT QUANTITIES ARE INCLUDED IN THE SUMMARY OF QUANTITY SHEETS.

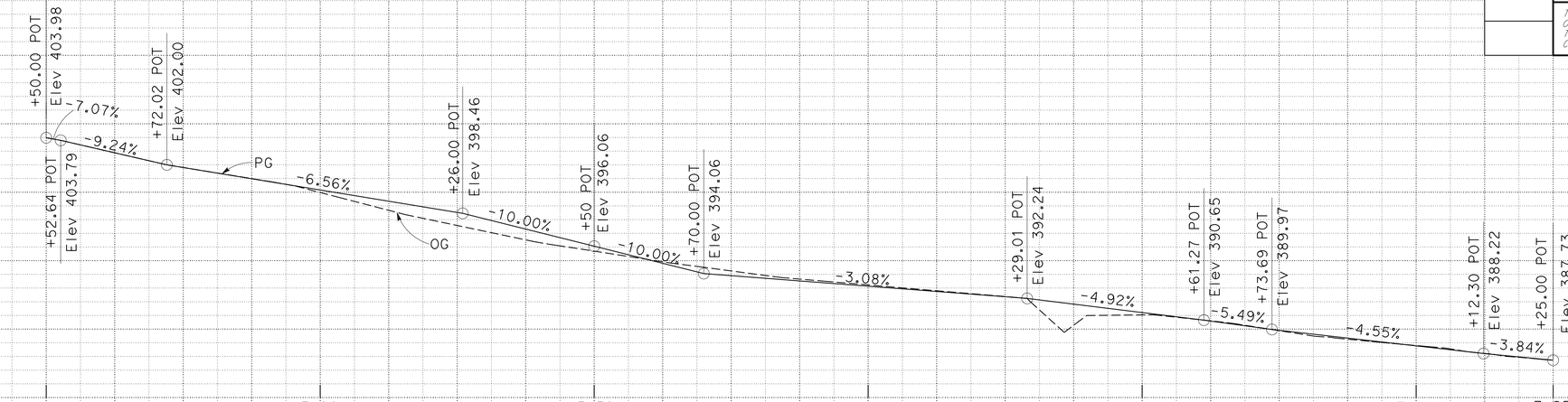

"BRN2" LINE
DRIVEWAY

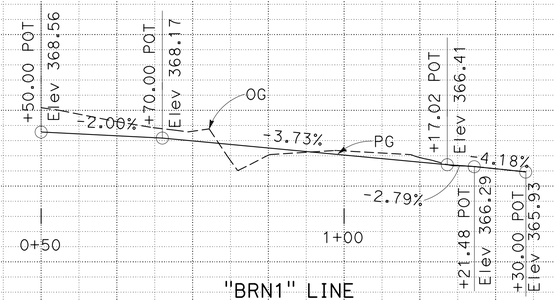

"BRN1" LINE
DRIVEWAY

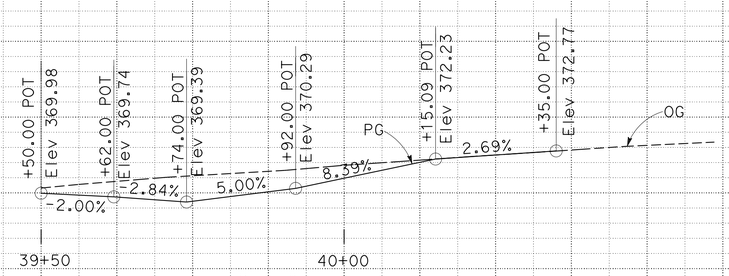

"CT1" LINE
CLARK TUNNEL ROAD

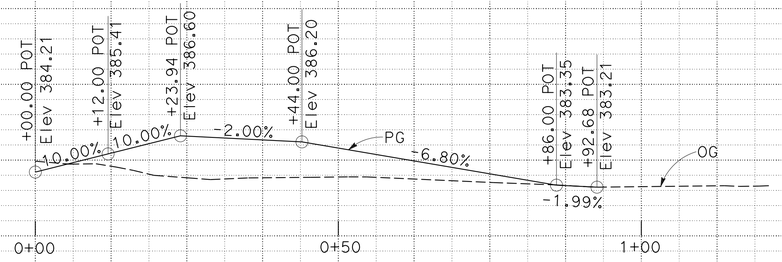

"LFR1" LINE
DRIVEWAY

PROFILE

SCALE: Horiz 1"=12.5'
Vert 1"=5'

P-6

Dist	COUNTY	ROUTE	POST MILES TOTAL PROJECT	SHEET No.	TOTAL SHEETS
03	Pla	193	4.4/5.5	26	197

KAZEEM ALABI 4-6-15
REGISTERED CIVIL ENGINEER DATE

4-6-15
PLANS APPROVAL DATE

REGISTERED PROFESSIONAL ENGINEER
KAZEEM ALABI
No. 79697
Exp. 9-30-16
CIVIL
STATE OF CALIFORNIA

THE STATE OF CALIFORNIA OR ITS OFFICERS OR AGENTS SHALL NOT BE RESPONSIBLE FOR THE ACCURACY OR COMPLETENESS OF SCANNED COPIES OF THIS PLAN SHEET.

REVISED BY | DATE REVISED
KAZEEM ALABI | TOM LANGLEY
CALCULATED-DESIGNED BY | CHECKED BY
FUNCTIONAL SUPERVISOR | MASTRI ALVANDI

STATE OF CALIFORNIA - DEPARTMENT OF TRANSPORTATION
Caltrans®
DESIGN

STATION		TOTAL
CY	Exc	SEE NOTE
	Emb	

LAST REVISION | DATE PLOTTED => 15-JUN-2015
05-11-15 | TIME PLOTTED => 15:58

BORDER LAST REVISED 7/2/2010 | USERNAME => s130875 | DGN FILE => 0300000725fa006.dgn | RELATIVE BORDER SCALE IS IN INCHES 0 1 2 3 | UNIT 0337 | PROJECT NUMBER & PHASE 03000007251

Dist	COUNTY	ROUTE	POST MILES TOTAL PROJECT	SHEET No.	TOTAL SHEETS
03	Pla	193	4.4/5.5	27	197

REGISTERED CIVIL ENGINEER — DATE 4-6-15

KAZEEM ALABI No. 79697 Exp. 9-30-16 CIVIL — REGISTERED PROFESSIONAL ENGINEER — STATE OF CALIFORNIA

PLANS APPROVAL DATE 4-6-15

THE STATE OF CALIFORNIA OR ITS OFFICERS OR AGENTS SHALL NOT BE RESPONSIBLE FOR THE ACCURACY OR COMPLETENESS OF SCANNED COPIES OF THIS PLAN SHEET.

NOTE (THIS SHEET ONLY):

EXCAVATION AND EMBANKMENT QUANTITIES ARE INCLUDED IN THE SUMMARY OF QUANTITY SHEETS.

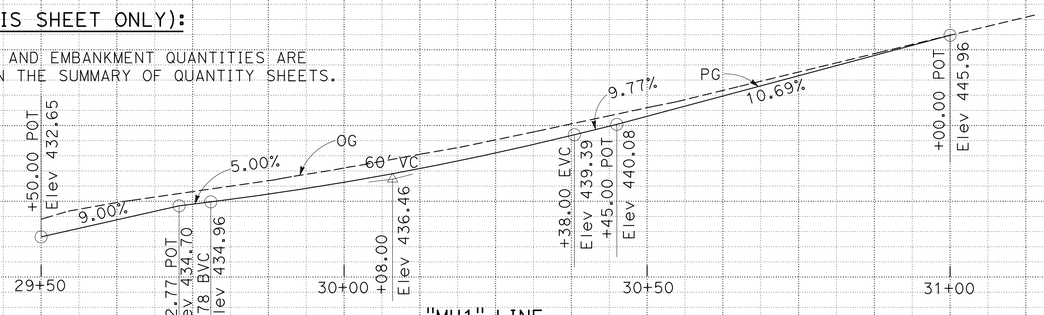

"MH1" LINE
MANDARIN HILL ROAD

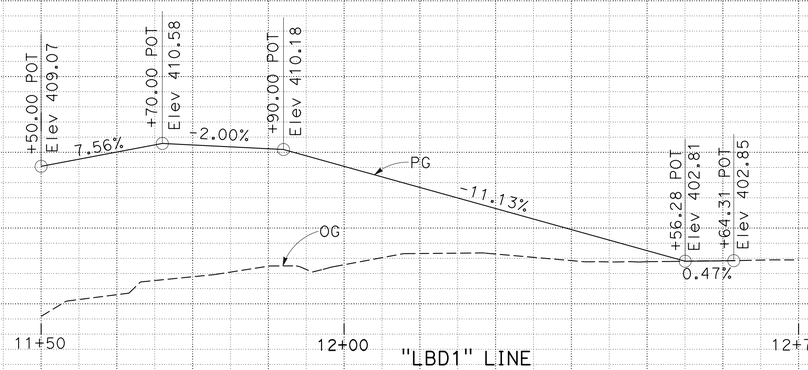

"LBD1" LINE
DRIVEWAY

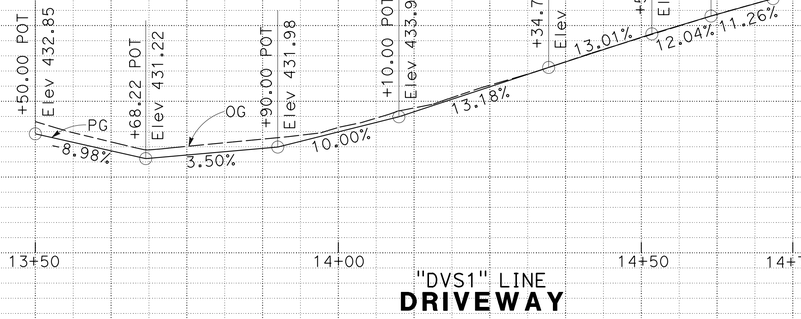

"DVS1" LINE
DRIVEWAY

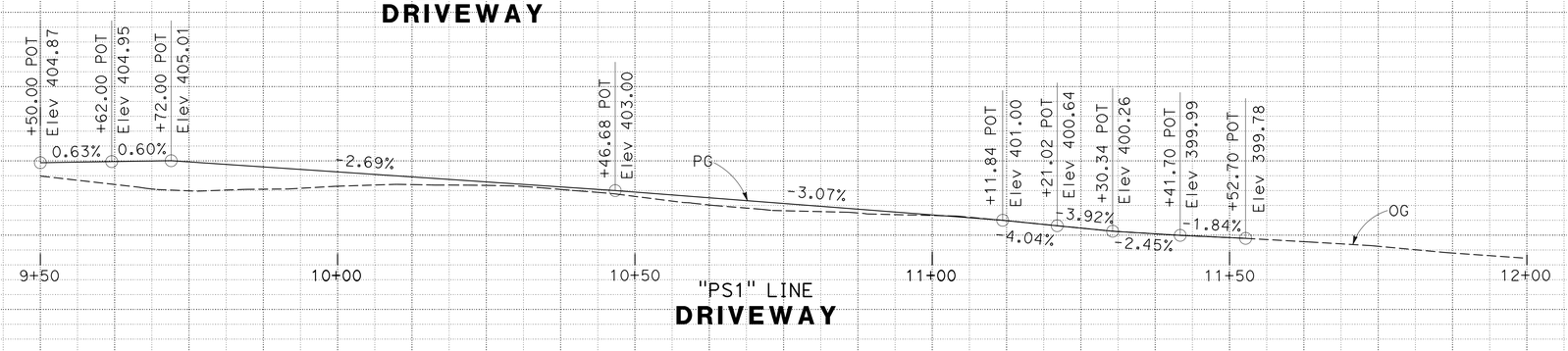

"PS1" LINE
DRIVEWAY

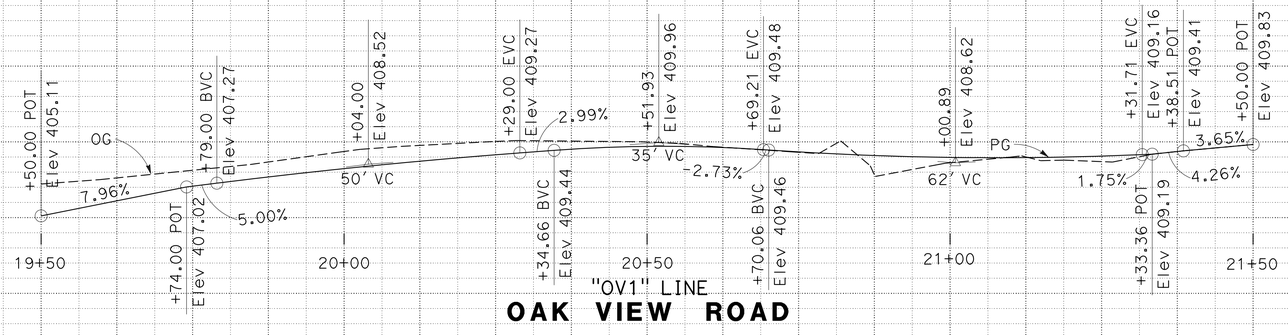

"OV1" LINE
OAK VIEW ROAD

PROFILE

SCALE: Horiz 1"=12.5'
Vert 1"=5'

P-7

STATE OF CALIFORNIA - DEPARTMENT OF TRANSPORTATION
DESIGN
FUNCTIONAL SUPERVISOR: MASTRI ALVANDI
CALCULATED-DESIGNED BY: KAZEEM ALABI
CHECKED BY: TOM LANGLEY
REVISED BY
DATE REVISED

STATION		TOTAL
CY	Exc	SEE NOTE
	Emb	

LAST REVISION DATE PLOTTED => 15-JUN-2015
05-11-15 TIME PLOTTED => 15:50

BORDER LAST REVISED 7/2/2010
USERNAME => s130875
DGN FILE => 0300000725fa007.dgn
RELATIVE BORDER SCALE IS IN INCHES 0 1 2 3
UNIT 0337
PROJECT NUMBER & PHASE 03000007251

Dist	COUNTY	ROUTE	POST MILES TOTAL PROJECT	SHEET No.	TOTAL SHEETS
03	Pla	193	4.4/5.5	28	197

REGISTERED CIVIL ENGINEER — 4-6-15 DATE

4-6-15
PLANS APPROVAL DATE

REGISTERED PROFESSIONAL ENGINEER
KAZEEM ALABI
No. 79697
Exp. 9-30-16
CIVIL
STATE OF CALIFORNIA

THE STATE OF CALIFORNIA OR ITS OFFICERS OR AGENTS SHALL NOT BE RESPONSIBLE FOR THE ACCURACY OR COMPLETENESS OF SCANNED COPIES OF THIS PLAN SHEET.

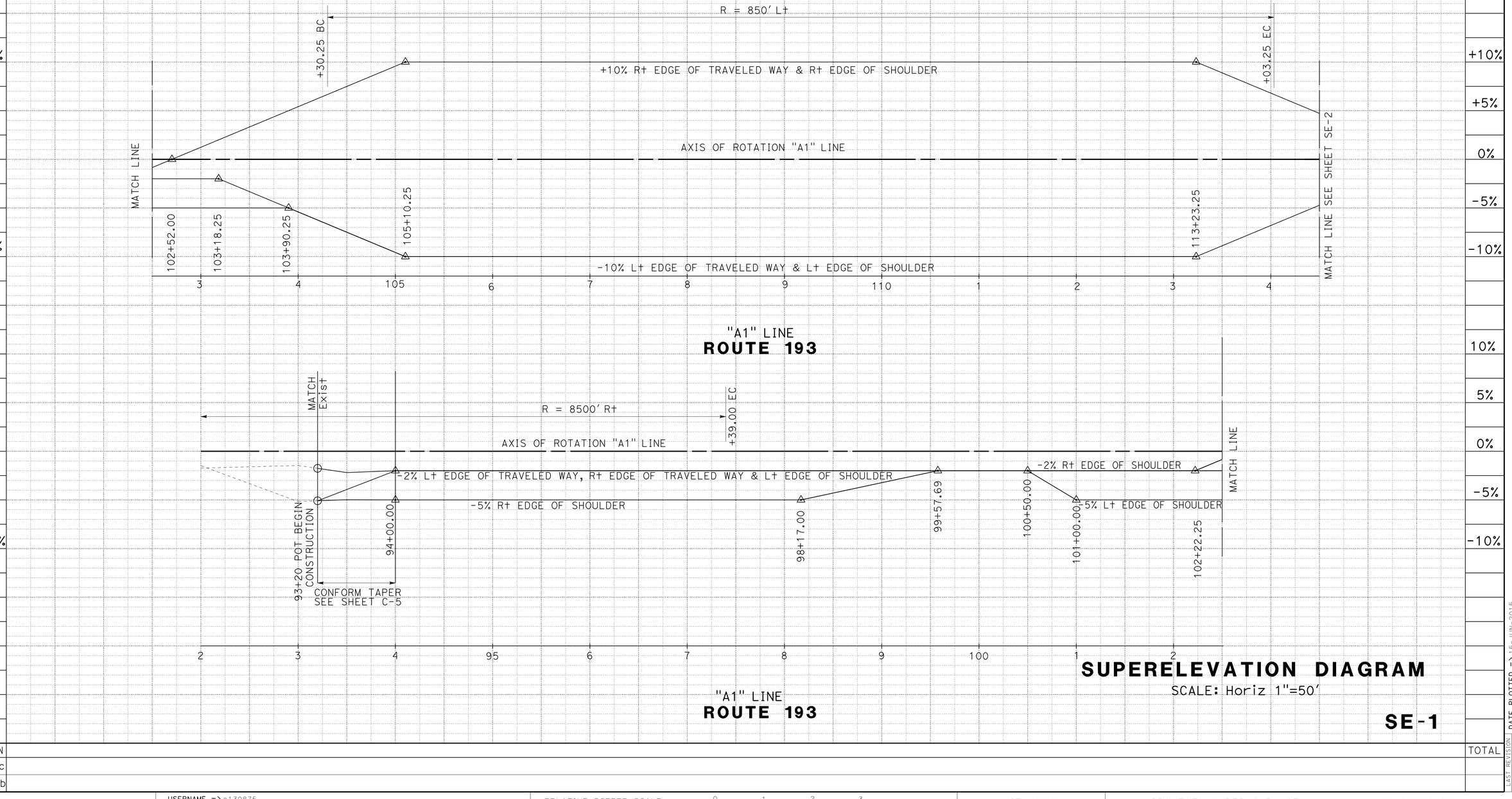

SUPERELEVATION DIAGRAM

SCALE: Horiz 1"=50'

SE-1

KAZEEM ALABI — CALCULATED-DESIGNED BY
TOM LANGLEY — CHECKED BY
MASTRI ALVANDI — FUNCTIONAL SUPERVISOR
REVISED BY — DATE REVISED

STATE OF CALIFORNIA - DEPARTMENT OF TRANSPORTATION
Caltrans®
DESIGN

STATION		TOTAL
CY	Exc	
	Emb	

LAST REVISION: DATE PLOTTED => 15-JUN-2015
04-06-15 TIME PLOTTED => 15:50

BORDER LAST REVISED 7/2/2010

USERNAME => s130875
DGN FILE => 0300000725fc001.dgn

RELATIVE BORDER SCALE IS IN INCHES 0 1 2 3

UNIT 0337

PROJECT NUMBER & PHASE 03000007251

Dist	COUNTY	ROUTE	POST MILES TOTAL PROJECT	SHEET No.	TOTAL SHEETS
03	Pla	193	4.4/5.5	29	197

REGISTERED CIVIL ENGINEER — 4-6-15 DATE

KAZEEM ALABI No. 79697 Exp. 9-30-16 CIVIL — REGISTERED PROFESSIONAL ENGINEER — STATE OF CALIFORNIA

4-6-15
PLANS APPROVAL DATE

THE STATE OF CALIFORNIA OR ITS OFFICERS OR AGENTS SHALL NOT BE RESPONSIBLE FOR THE ACCURACY OR COMPLETENESS OF SCANNED COPIES OF THIS PLAN SHEET.

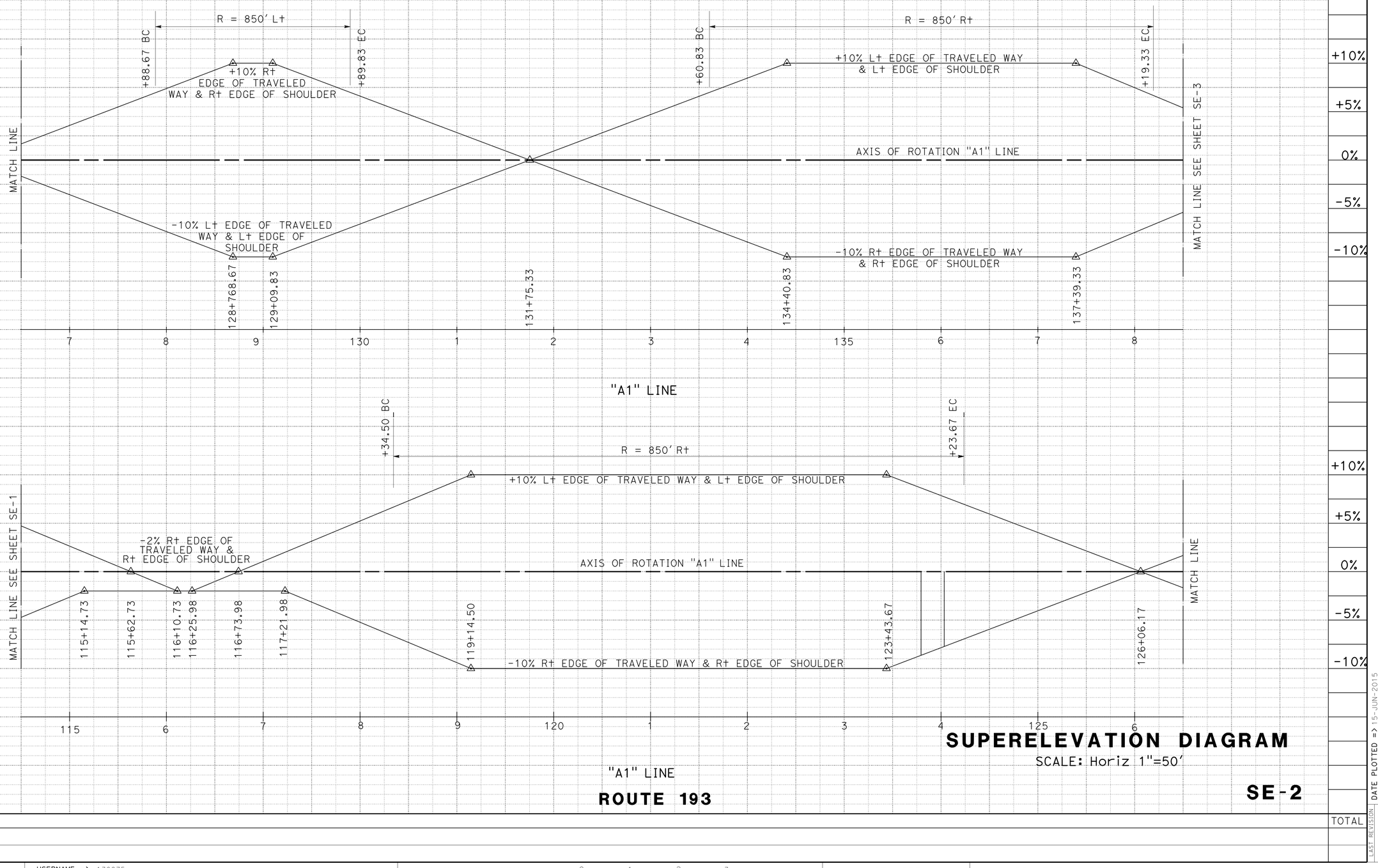

SUPERELEVATION DIAGRAM

SCALE: Horiz 1"=50'

ROUTE 193

SE-2

STATION			TOTAL
CY	Exc		
	Emb		

KAZEEM ALABI — DESIGNED BY
TOM LANGLEY — CALCULATED-DETAILED BY
CHECKED BY
MASTRI ALVANDI — FUNCTIONAL SUPERVISOR
REVISED BY
DATE REVISED

STATE OF CALIFORNIA - DEPARTMENT OF TRANSPORTATION
Caltrans® DESIGN

LAST REVISION DATE PLOTTED => 15-JUN-2015
04-06-15 TIME PLOTTED => 15:50

BORDER LAST REVISED 7/2/2010 | USERNAME => s130875 | DGN FILE => 0300000725fc002.dgn | RELATIVE BORDER SCALE IS IN INCHES 0 1 2 3 | UNIT 0337 | PROJECT NUMBER & PHASE 03000007251

Dist	COUNTY	ROUTE	POST MILES TOTAL PROJECT	SHEET No.	TOTAL SHEETS
03	Pla	193	4.4/5.5	30	197

REGISTERED CIVIL ENGINEER 4-6-15 DATE

PLANS APPROVAL DATE 4-6-15

REGISTERED PROFESSIONAL ENGINEER KAZEEM ALABI No. 79697 Exp. 9-30-16 CIVIL STATE OF CALIFORNIA

THE STATE OF CALIFORNIA OR ITS OFFICERS OR AGENTS SHALL NOT BE RESPONSIBLE FOR THE ACCURACY OR COMPLETENESS OF SCANNED COPIES OF THIS PLAN SHEET.

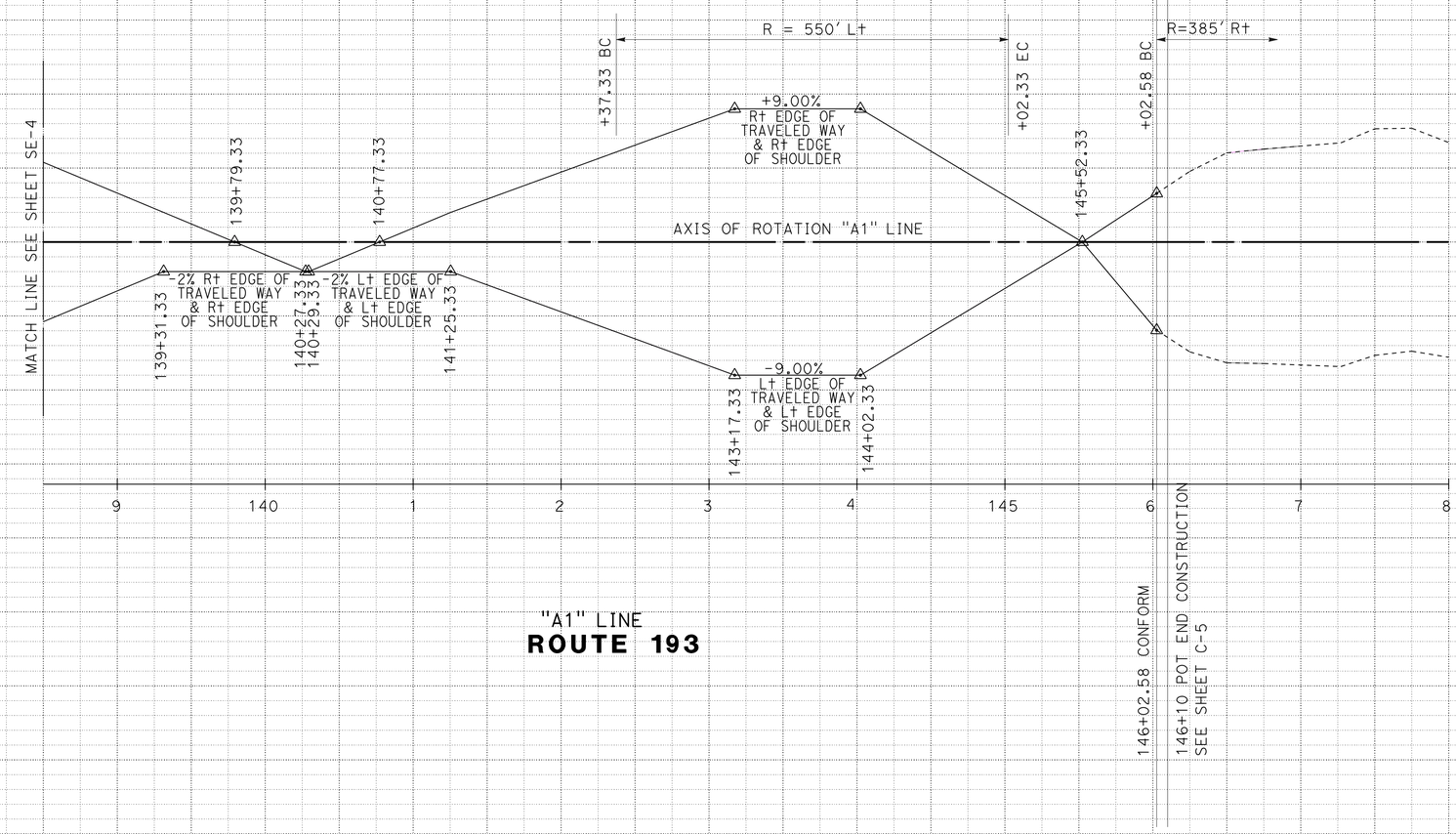

SUPERELEVATION DIAGRAM

SCALE: Horiz 1"=50'

SE-3

STATION		TOTAL
CY	Exc	
	Emb	

STATE OF CALIFORNIA - DEPARTMENT OF TRANSPORTATION

Caltrans

DESIGN

FUNCTIONAL SUPERVISOR: MASTRI ALVANDI

CALCULATED-DESIGNED BY: KAZEEM ALABI

CHECKED BY: TOM LANGLEY

REVISED BY

DATE REVISED

LAST REVISION 02-27-15

DATE PLOTTED => 15-JUN-2015

TIME PLOTTED => 15:50

Dist	COUNTY	ROUTE	POST MILES TOTAL PROJECT	SHEET No.	TOTAL SHEETS
03	Pla	193	4.4/5.5	31	197

REGISTERED CIVIL ENGINEER — 4-6-15 DATE

KAZEEM ALABI No. 79697 Exp. 9-30-16 CIVIL — REGISTERED PROFESSIONAL ENGINEER — STATE OF CALIFORNIA

4-6-15
PLANS APPROVAL DATE

THE STATE OF CALIFORNIA OR ITS OFFICERS OR AGENTS SHALL NOT BE RESPONSIBLE FOR THE ACCURACY OR COMPLETENESS OF SCANNED COPIES OF THIS PLAN SHEET.

LEGEND:

SURFACE STABILIZATION

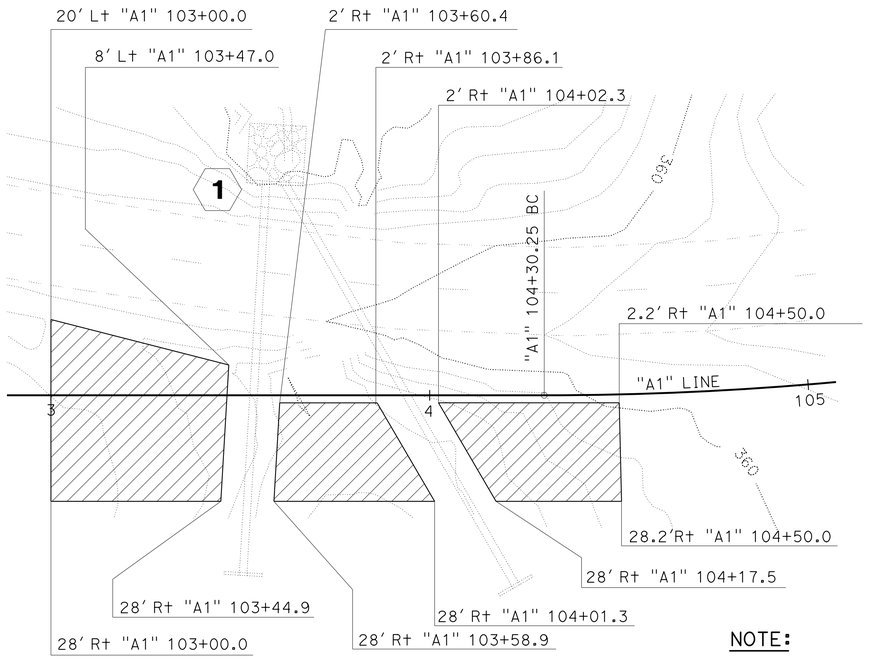

LOCATION 1
"A1" 103+00 to "A1" 104+50

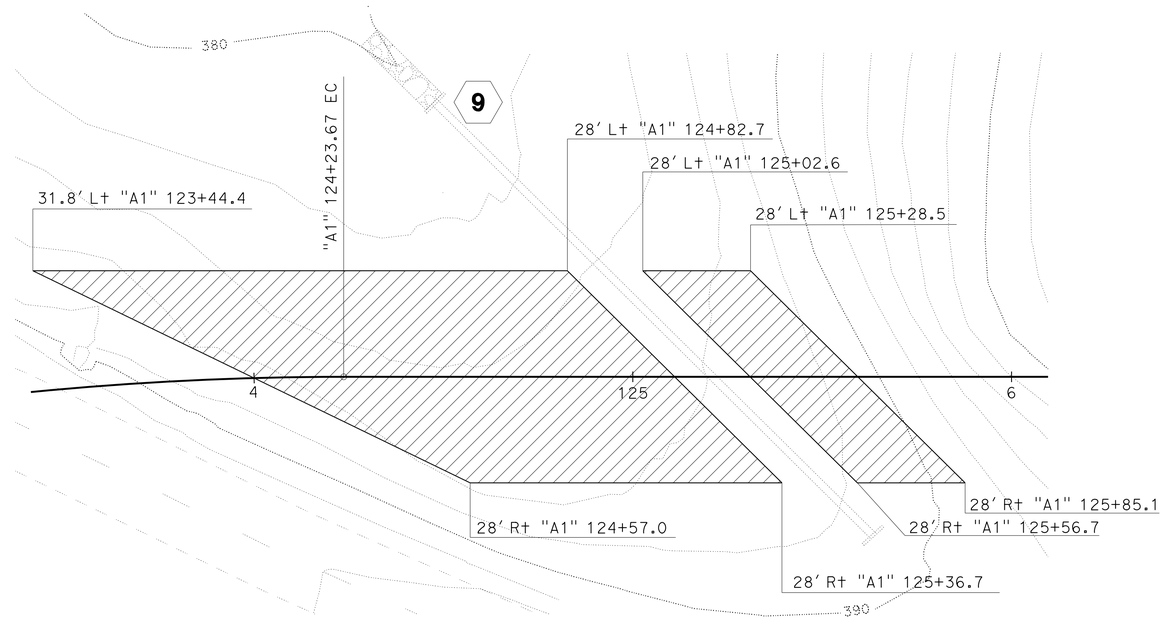

LOCATION 2
"A1" 123+44 to "A1" 125+85

NOTE:

THE LIMITS OF SURFACE STABILIZATION ARE APPROXIMATE. EXACT LIMITS WILL BE DETERMINED BY THE ENGINEER IN THE FIELD.

SURFACE STABILIZATION

CONSTRUCTION DETAILS
NO SCALE

C-1

STATE OF CALIFORNIA - DEPARTMENT OF TRANSPORTATION
DESIGN
Caltrans®

FUNCTIONAL SUPERVISOR: MASTRI ALVANDI
CALCULATED-DESIGNED BY: TOM LANGLEY
CHECKED BY: KAZEEM ALABI
REVISED BY
DATE REVISED

LAST REVISION: DATE PLOTTED => 15-JUN-2015; 04-06-15; TIME PLOTTED => 15:50

BORDER LAST REVISED 7/2/2010
USERNAME => s130875
DGN FILE => 0300000725ga001.dgn
RELATIVE BORDER SCALE IS IN INCHES 0 1 2 3
UNIT 0337
PROJECT NUMBER & PHASE 03000007251

Dist	COUNTY	ROUTE	POST MILES TOTAL PROJECT	SHEET No.	TOTAL SHEETS
03	Pla	193	4.4/5.5	32	197

Kazeem Alabi 4-6-15
REGISTERED CIVIL ENGINEER DATE

4-6-15
PLANS APPROVAL DATE

REGISTERED PROFESSIONAL ENGINEER
KAZEEM ALABI
No. 79697
Exp. 9-30-16
CIVIL
STATE OF CALIFORNIA

THE STATE OF CALIFORNIA OR ITS OFFICERS OR AGENTS SHALL NOT BE RESPONSIBLE FOR THE ACCURACY OR COMPLETENESS OF SCANNED COPIES OF THIS PLAN SHEET.

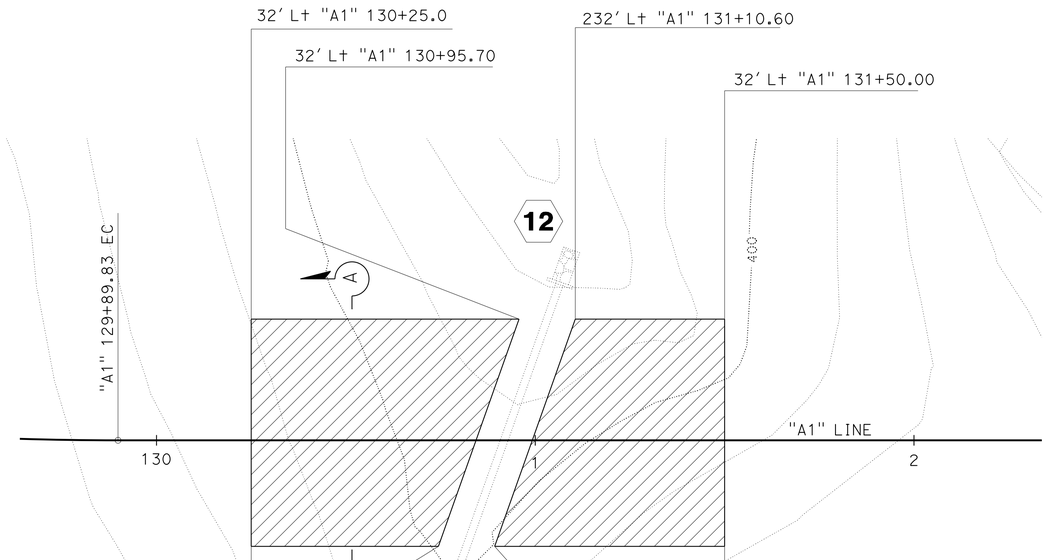

SURFACE STABILIZATION

LOCATION 3
"A1" 130+25 TO "A1" 131+50

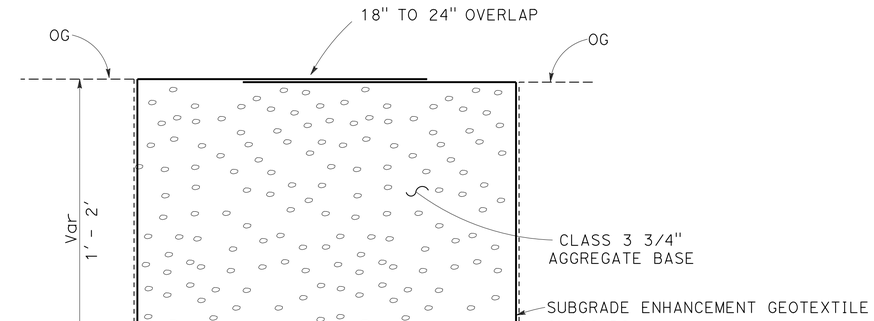

SECTION A-A

NOTE: SEE SHEET Q-3 FOR DEPTH.

SURFACE STABILIZATION

EXCAVATION AND BACKFILL

CONSTRUCTION DETAILS

NO SCALE

C-2

CALCULATED-DESIGNED BY	TOM LANGLEY	REVISED BY
CHECKED BY	KAZEEM ALABI	DATE REVISED
FUNCTIONAL SUPERVISOR	MASTRI ALVANDI	
STATE OF CALIFORNIA - DEPARTMENT OF TRANSPORTATION	DESIGN	

LAST REVISION 04-06-15
DATE PLOTTED => 15-JUN-2015
TIME PLOTTED => 15:50

BORDER LAST REVISED 7/2/2010
USERNAME => s130875
DGN FILE => 0300000725ga002.dgn
RELATIVE BORDER SCALE IS IN INCHES 0 1 2 3
UNIT 0337
PROJECT NUMBER & PHASE 03000007251

Dist	COUNTY	ROUTE	POST MILES TOTAL PROJECT	SHEET No.	TOTAL SHEETS
03	Pla	193	4.4/5.5	33	197

REGISTERED CIVIL ENGINEER — DATE 4-6-15

PLANS APPROVAL DATE 4-6-15

REGISTERED PROFESSIONAL ENGINEER — KAZEEM ALABI — No. 79697 — Exp. 9-30-16 — CIVIL — STATE OF CALIFORNIA

THE STATE OF CALIFORNIA OR ITS OFFICERS OR AGENTS SHALL NOT BE RESPONSIBLE FOR THE ACCURACY OR COMPLETENESS OF SCANNED COPIES OF THIS PLAN SHEET.

NOTE:

ANCHOR BOLTS WILL CONFORM TO ASTM A193, GRADE B8M, TYPE 316 STAINLESS STEEL.

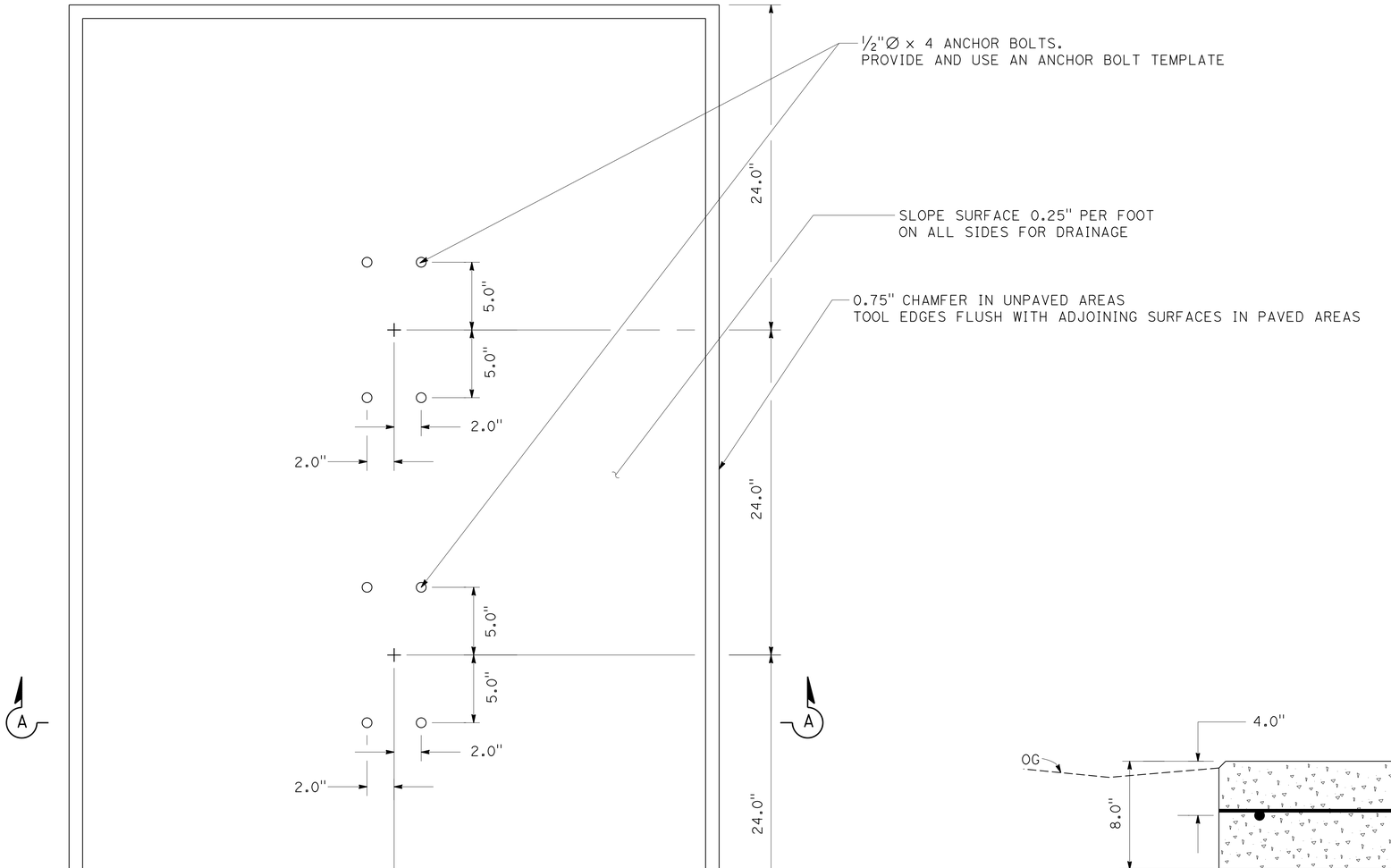

LAYOUT DETAIL

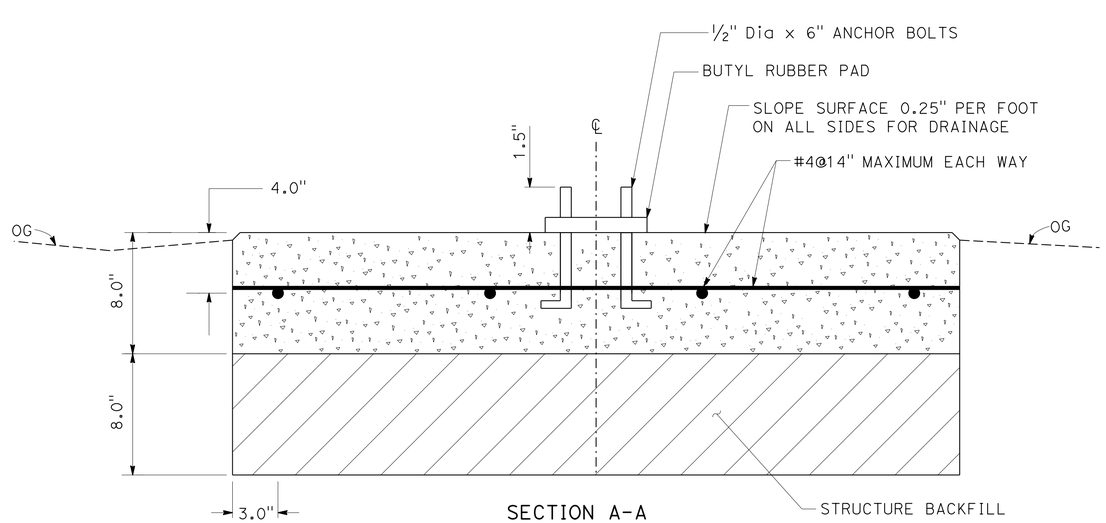

SECTION A-A

MINOR CONCRETE (MINOR STRUCTURE)

MAILBOX BASE

Sta "OV1" 20+35.66 34.5 Rt

Sta "A1" 144+61.20 34.5 Rt

CONSTRUCTION DETAILS

NO SCALE

C-3

STATE OF CALIFORNIA - DEPARTMENT OF TRANSPORTATION — DESIGN

FUNCTIONAL SUPERVISOR: MASTRI ALVANDI

CALCULATED-DESIGNED BY: KIDIANGA TSHIUNZA

CHECKED BY: KAZEEM ALABI

REVISED BY | DATE REVISED

LAST REVISION | DATE PLOTTED => 15-JUN-2015 | 05-11-15 | TIME PLOTTED => 15:50

BORDER LAST REVISED 7/2/2010 | USERNAME => s130875 | DGN FILE => 0300000725ga003.dgn | RELATIVE BORDER SCALE IS IN INCHES 0 1 2 3 | UNIT 0337 | PROJECT NUMBER & PHASE 03000007251

Dist	COUNTY	ROUTE	POST MILES TOTAL PROJECT	SHEET No.	TOTAL SHEETS
03	Pla	193	4.4/5.5	34	197

REGISTERED CIVIL ENGINEER — DATE 4-6-15

PLANS APPROVAL DATE 4-6-15

REGISTERED PROFESSIONAL ENGINEER — KAZEEM ALABI No. 79697 Exp. 9-30-16 CIVIL — STATE OF CALIFORNIA

THE STATE OF CALIFORNIA OR ITS OFFICERS OR AGENTS SHALL NOT BE RESPONSIBLE FOR THE ACCURACY OR COMPLETENESS OF SCANNED COPIES OF THIS PLAN SHEET.

NOTES:

1. ALL RAIL ELEMENTS ARE MIDWEST GUARDRAIL SYSTEM.
2. FOR ADDITIONAL DETAILS NOT SHOWN ON THIS PLAN, REFER TO RSP A77L1 AND RSP A77L2.
3. FOR VEGETATION CONTROL (MINOR CONCRETE), REFER TO RSP A77N5 AND RSP A77N6.
4. CRT POST TO BE WOOD ONLY.

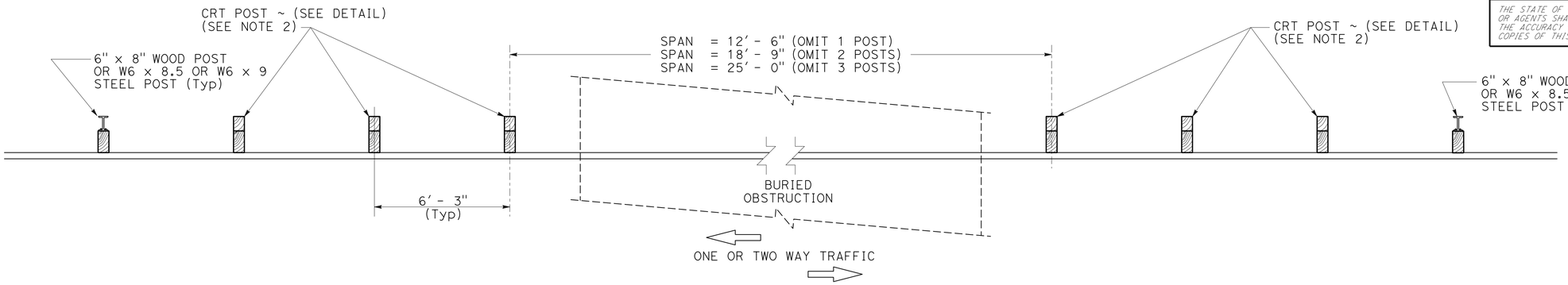

PLAN

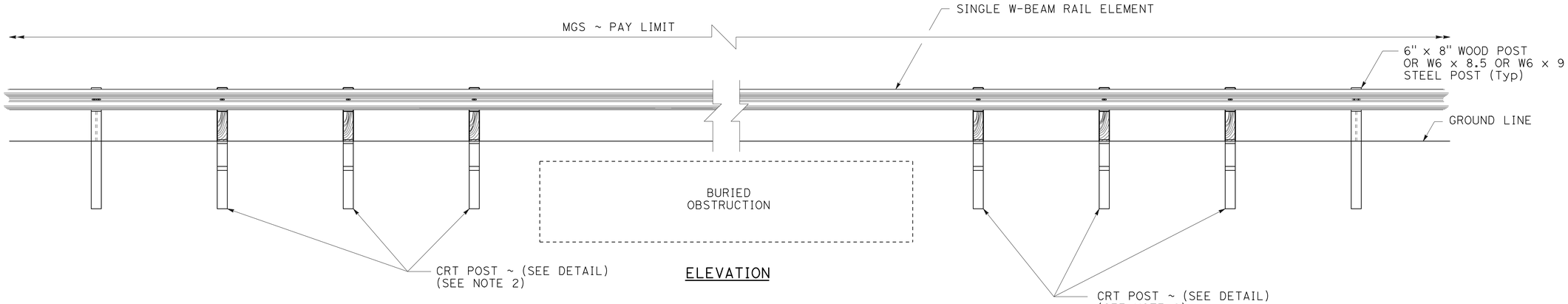

ELEVATION

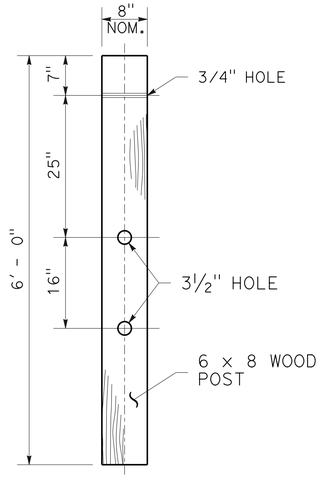

CONTROLLED RELEASING
TERMINAL (CRT) POST DETAIL

CONSTRUCTION DETAILS

NO SCALE

C-4

STATE OF CALIFORNIA - DEPARTMENT OF TRANSPORTATION
Caltrans®
DESIGN

FUNCTIONAL SUPERVISOR: MASTRI ALVANDI

CALCULATED-DESIGNED BY: TOM LANGLEY

CHECKED BY: KAZEEM ALABI

REVISED BY	DATE REVISED

LAST REVISION: DATE PLOTTED => 15-JUN-2015
04-06-15 TIME PLOTTED => 15:50

BORDER LAST REVISED 7/2/2010

USERNAME => s130875
DGN FILE => 0300000725ga004.dgn

RELATIVE BORDER SCALE IS IN INCHES 0 1 2 3

UNIT 0337

PROJECT NUMBER & PHASE 03000007251

Dist	COUNTY	ROUTE	POST MILES TOTAL PROJECT	SHEET No.	TOTAL SHEETS
03	Pla	193	4.4/5.5	35	197

REGISTERED CIVIL ENGINEER — DATE: 4-6-15

PLANS APPROVAL DATE: 4-6-15

KAZEEM ALABI No. 79697 Exp. 9-30-16 CIVIL — REGISTERED PROFESSIONAL ENGINEER — STATE OF CALIFORNIA

THE STATE OF CALIFORNIA OR ITS OFFICERS OR AGENTS SHALL NOT BE RESPONSIBLE FOR THE ACCURACY OR COMPLETENESS OF SCANNED COPIES OF THIS PLAN SHEET.

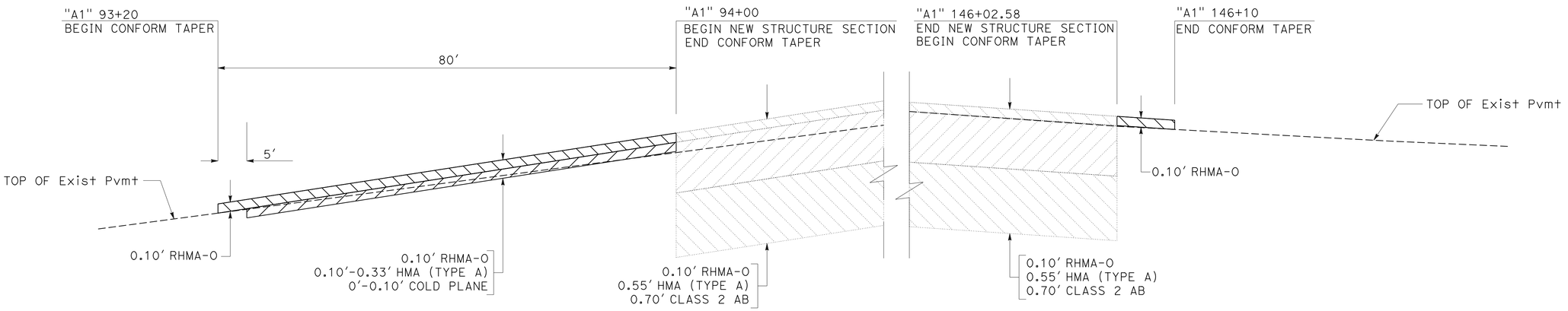

"A1" 93+20 to "A1" 94+00

CONFORM TAPER

"A1" 146+02.58 to "A1" 146+10

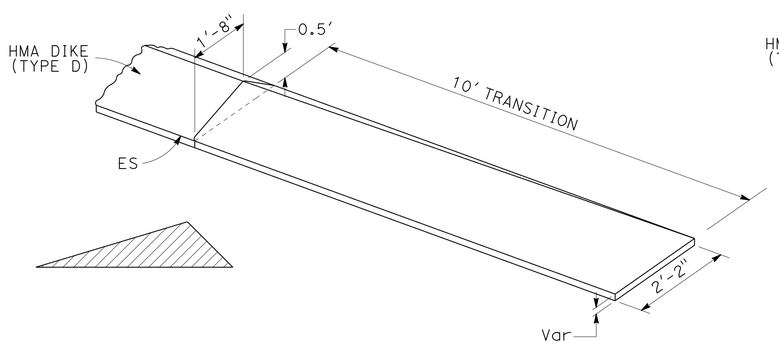

DIKE TRANSITION (TYPE D)

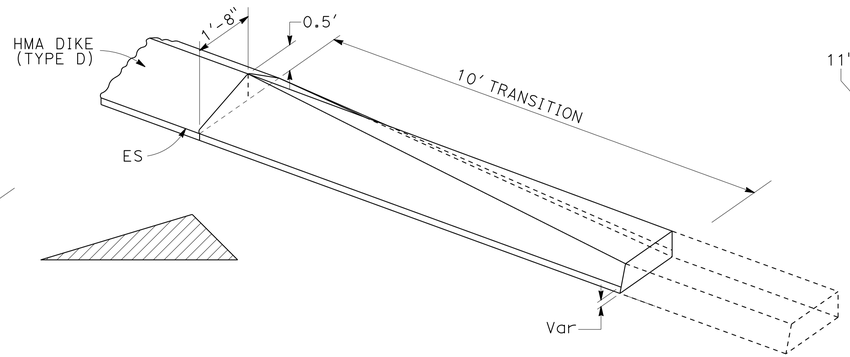

BEGIN OR END DI GO

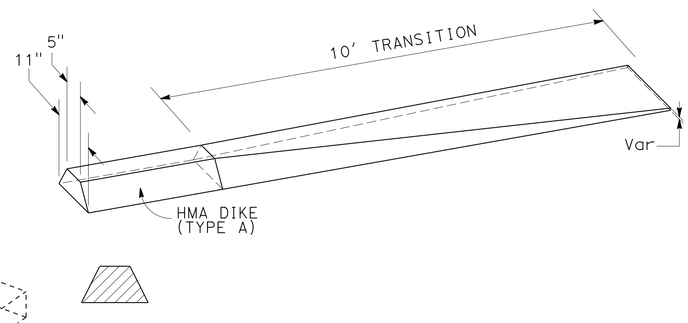

DIKE TRANSITION (TYPE A)

DIKE TRANSITION

CONSTRUCTION DETAILS

NO SCALE

C-5

REVISED BY | DATE REVISED

TOM LANGLEY | KAZEEM ALABI

CALCULATED-DESIGNED BY | CHECKED BY

FUNCTIONAL SUPERVISOR: MASTRI ALVANDI

STATE OF CALIFORNIA - DEPARTMENT OF TRANSPORTATION

Caltrans® DESIGN

LAST REVISION 04-06-15 | DATE PLOTTED => 15-JUN-2015 | TIME PLOTTED => 15:50

BORDER LAST REVISED 7/2/2010 | USERNAME => s130875 | DGN FILE => 0300000725ga005.dgn | RELATIVE BORDER SCALE IS IN INCHES 0 1 2 3 | UNIT 0337 | PROJECT NUMBER & PHASE 03000007251

Dist	COUNTY	ROUTE	POST MILES TOTAL PROJECT	SHEET No.	TOTAL SHEETS
03	Pla	193	4.4/5.5	36	197

REGISTERED CIVIL ENGINEER — DATE 4-6-15

PLANS APPROVAL DATE 4-6-15

KAZEEM ALABI No. 79697 Exp. 9-30-16 CIVIL — REGISTERED PROFESSIONAL ENGINEER — STATE OF CALIFORNIA

THE STATE OF CALIFORNIA OR ITS OFFICERS OR AGENTS SHALL NOT BE RESPONSIBLE FOR THE ACCURACY OR COMPLETENESS OF SCANNED COPIES OF THIS PLAN SHEET.

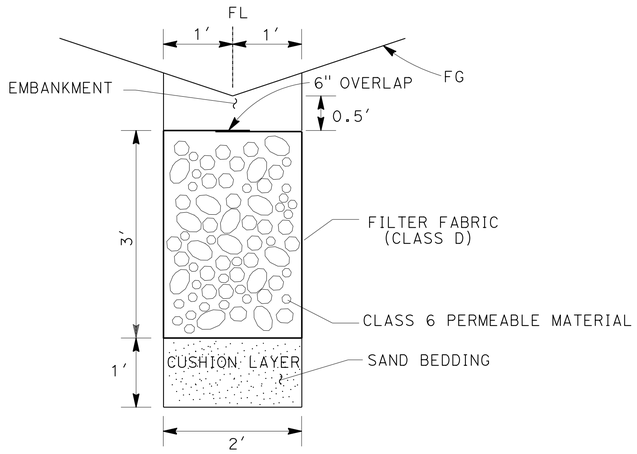

SECTION VIEW

UNDERDRAIN (INFILTRATION TRENCH)

NOTE:

SEE SHEET Q-4 FOR APPROXIMATE LOCATIONS. EXACT LOCATIONS TO BE DETERMINED BY ENGINEER.

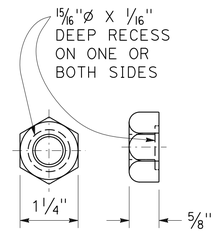

5/8" RECESS NUT

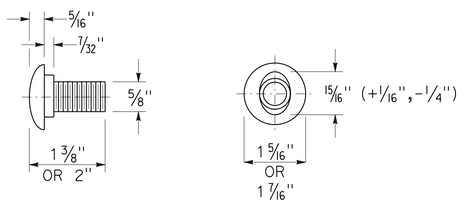

5/8"ø BUTTON HEAD BOLT

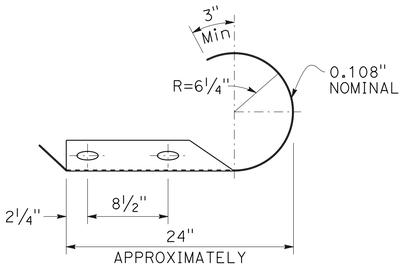

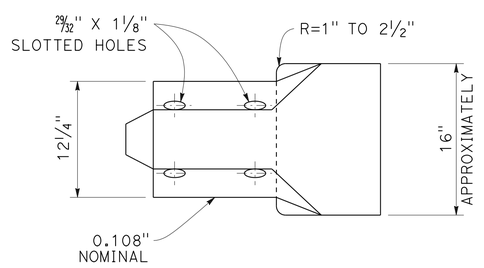

END CAP (3/4 WRAP END SECTION) DETAILS

CONSTRUCTION DETAILS

NO SCALE

C-6

CALCULATED-DESIGNED BY: JERRY CHANG
CHECKED BY: KAZEEM ALABI
FUNCTIONAL SUPERVISOR: MASTRI ALVANDI
REVISED BY
DATE REVISED

STATE OF CALIFORNIA - DEPARTMENT OF TRANSPORTATION
DESIGN

LAST REVISION: DATE PLOTTED => 15-JUN-2015 TIME PLOTTED => 15:50
04-06-15

BORDER LAST REVISED 7/2/2010
USERNAME => s130875
DGN FILE => 0300000725ga006.dgn
RELATIVE BORDER SCALE IS IN INCHES 0 1 2 3
UNIT 0337
PROJECT NUMBER & PHASE 03000007251

Dist	COUNTY	ROUTE	POST MILES TOTAL PROJECT	SHEET No.	TOTAL SHEETS
03	Pla	193	4.4/5.5	37	197

4-6-15
REGISTERED CIVIL ENGINEER DATE

4-6-15
PLANS APPROVAL DATE

REGISTERED PROFESSIONAL ENGINEER
KAZEEM ALABI
No. 79697
Exp. 9-30-16
CIVIL
STATE OF CALIFORNIA

THE STATE OF CALIFORNIA OR ITS OFFICERS OR AGENTS SHALL NOT BE RESPONSIBLE FOR THE ACCURACY OR COMPLETENESS OF SCANNED COPIES OF THIS PLAN SHEET.

NOTE:

FOR ACCURATE RIGHT OF WAY DATA, CONTACT RIGHT OF WAY ENGINEERING AT THE DISTRICT OFFICE.

LEGEND:

LIMITS OF RHMA-O

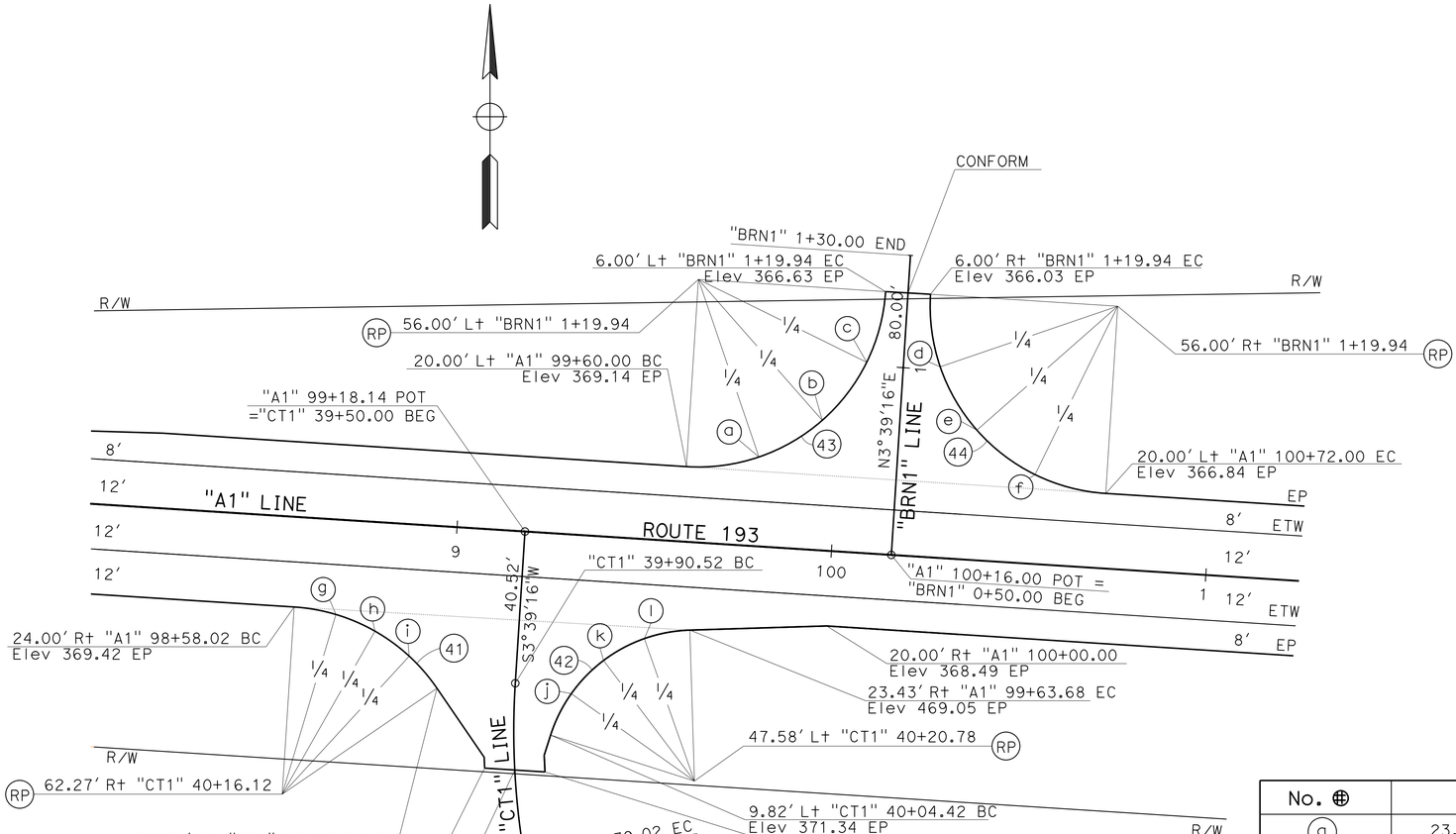

CURVE DATA

No. ⊕	R	Δ	T	L
(10)	200′	13°53′39"	24.37′	48.50′
(41)	50′	51°58′09"	319.65′	45.35′
(42)	40′	70°32′50"	28.47′	49.55′
(43)	50′	89°55′48"	28.47′	49.94′
(44)	50′	90°00′00"	50.00′	78.54′

"A1" 99+18.14
CLARK TUNNEL ROAD

"A1" 100+16.00
DRIVEWAY

POINT DATA

No. ⊕	LOCATION	ELEVATION
(a)	23.80′ L† "A1" 99+79.12	368.74
(b)	34.62′ L† "A1" 99+95.33	368.16
(c)	9.82′ L† "BRN1" 1+00.80	367.51
(d)	9.81′ R† "BRN1" 1+00.87	366.64
(e)	34.64′ L† "A1" 100+36.64	367.05
(f)	23.80′ L† "A1" 100+52.86	367.16
(g)	25.28′ R† "A1" 98+69.26	369.36
(h)	29.05′ R† "A1" 98+79.92	369.30
(i)	28.67′ R† "CT1" 39+85.13	369.30
(j)	15.07′ L† "CT1" 39+92.50	370.20
(k)	32.97′ R† "A1" 99+41.23	369.26
(l)	26.46′ R† "A1" 99+51.72	369.11

CONSTRUCTION DETAILS

SCALE: 1" = 20′

C-7

REVISED BY	DATE REVISED

CALCULATED-DESIGNED BY: JERRY CHANG
CHECKED BY: KAZEEM ALABI
FUNCTIONAL SUPERVISOR: MASTRI ALVANDI

STATE OF CALIFORNIA - DEPARTMENT OF TRANSPORTATION
DESIGN

LAST REVISION | DATE PLOTTED => 15-JUN-2015
04-06-15 | TIME PLOTTED => 15:50

BORDER LAST REVISED 7/2/2010 | USERNAME => s130875 | DGN FILE => 0300000725ga007.dgn | RELATIVE BORDER SCALE IS IN INCHES 0 1 2 3 | UNIT 0337 | PROJECT NUMBER & PHASE 03000007251

Dist	COUNTY	ROUTE	POST MILES TOTAL PROJECT	SHEET No.	TOTAL SHEETS
03	Pla	193	4.4/5.5	38	197

Kazeem Alabi 4-6-15
REGISTERED CIVIL ENGINEER DATE

4-6-15
PLANS APPROVAL DATE

REGISTERED PROFESSIONAL ENGINEER
KAZEEM ALABI
No. 79697
Exp. 9-30-16
CIVIL
STATE OF CALIFORNIA

THE STATE OF CALIFORNIA OR ITS OFFICERS OR AGENTS SHALL NOT BE RESPONSIBLE FOR THE ACCURACY OR COMPLETENESS OF SCANNED COPIES OF THIS PLAN SHEET.

NOTE:

FOR ACCURATE RIGHT OF WAY DATA, CONTACT RIGHT OF WAY ENGINEERING AT THE DISTRICT OFFICE.

LEGEND:

LIMITS OF RHMA-O

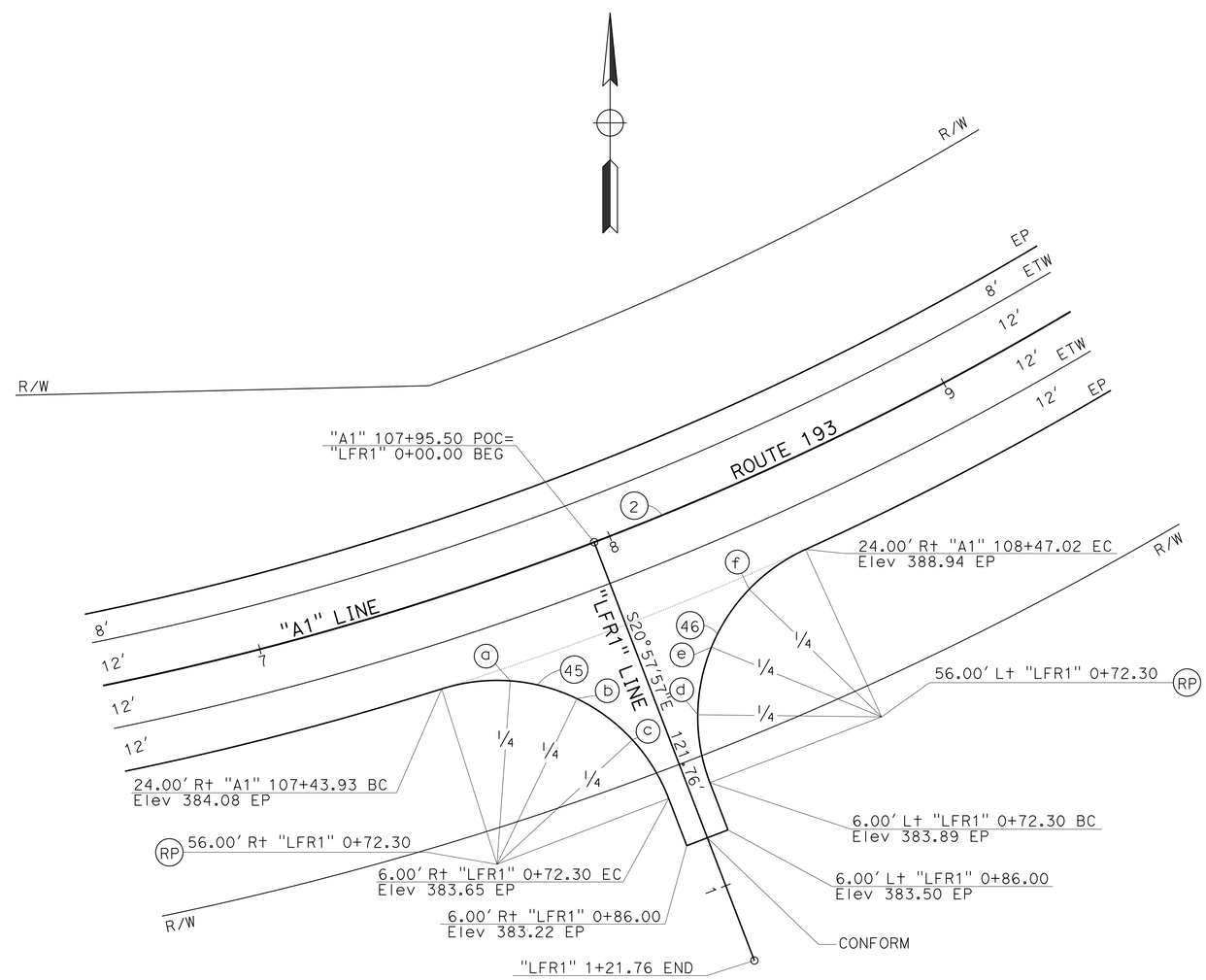

"A1" 107+95.50
DRIVEWAY

POINT DATA

No. ⊕	LOCATION	ELEVATION
a	27.71' Rt "A1" 107+61.80	384.90
b	38.25' Rt "A1" 107+76.75	385.58
c	9.52' Rt "LFR1" 0+53.87	385.31
d	9.52' Lt "LFR1" 0+53.87	385.62
e	38.25' Rt "A1" 108+14.24	386.46
f	27.71' Rt "A1" 108+29.19	387.86

CURVE DATA

No. ⊕	R	Δ	T	L
2	850'	65°35'13"	547.65'	973.00'
45	50'	86°31'31.4"	47.05'	75.51'
46	50'	86°31'31.4"	47.05'	75.51'

CONSTRUCTION DETAILS

SCALE: 1" = 20'

C-8

CALCULATED-DESIGNED BY
CHECKED BY
REVISED BY
DATE REVISED
JERRY CHANG
KAZEEM ALABI
FUNCTIONAL SUPERVISOR
MASTRI ALVANDI
STATE OF CALIFORNIA - DEPARTMENT OF TRANSPORTATION
DESIGN
Caltrans

LAST REVISION | DATE PLOTTED => 15-JUN-2015
04-06-15 | TIME PLOTTED => 15:50

BORDER LAST REVISED 7/2/2010
USERNAME => s130875
DGN FILE => 0300000725ga008.dgn
RELATIVE BORDER SCALE IS IN INCHES 0 1 2 3
UNIT 0337
PROJECT NUMBER & PHASE 03000007251

Dist	COUNTY	ROUTE	POST MILES TOTAL PROJECT	SHEET No.	TOTAL SHEETS
03	Pla	193	4.4/5.5	39	197

Kazeem Alabi 4-6-15
REGISTERED CIVIL ENGINEER DATE

4-6-15
PLANS APPROVAL DATE

REGISTERED PROFESSIONAL ENGINEER
KAZEEM ALABI
No. 79697
Exp. 9-30-16
CIVIL
STATE OF CALIFORNIA

THE STATE OF CALIFORNIA OR ITS OFFICERS OR AGENTS SHALL NOT BE RESPONSIBLE FOR THE ACCURACY OR COMPLETENESS OF SCANNED COPIES OF THIS PLAN SHEET.

NOTE:

FOR ACCURATE RIGHT OF WAY DATA, CONTACT RIGHT OF WAY ENGINEERING AT THE DISTRICT OFFICE.

LEGEND:

LIMITS OF RHMA-O

OBLITERATE SURFACING

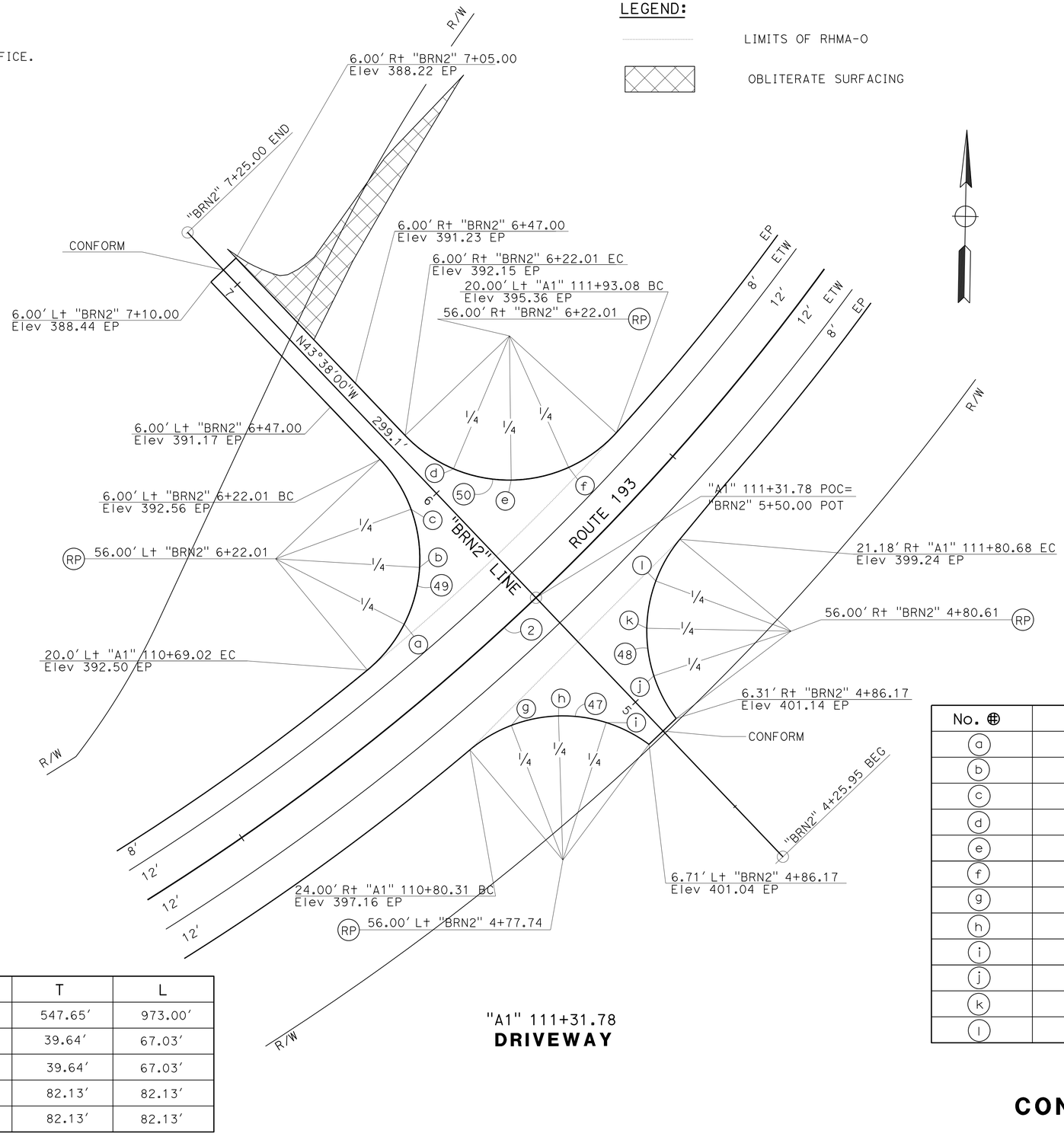

POINT DATA

No. ⊕	LOCATION	ELEVATION
a	23.80′ L† "A1" 110+91.24	392.94
b	35.11′ L† "A1" 111+08.89	392.81
c	10.15′ L† "BRN2" 6+02.09	392.78
d	10.15′ R† "BRN2" 6+02.09	393.31
e	35.12′ L† "A1" 111+54.66	394.65
f	23.91′ L† "A1" 111+72.32	393.82
g	26.94′ R† "A1" 110+96.17	397.31
h	35.36′ R† "A1" 111+10.05	397.86
i	12.23′ L† "BRN2" 5+01.91	399.63
j	10.90′ R† "BRN2" 5+02.20	400.01
k	34.44′ R† "A1" 111+51.50	398.30
l	25.16′ R† "A1" 111+64.89	398.67

CURVE DATA

No. ⊕	R	Δ	T	L
2	850′	65°35′13"	547.65′	973.00′
47	50′	76°48′41"	39.64′	67.03′
48	50′	76°49′49"	39.64′	67.03′
49	50′	94°07′02"	82.13′	82.13′
50	50′	94°07′01"	82.13′	82.13′

CONSTRUCTION DETAILS

SCALE: 1" = 20′

C-9

STATE OF CALIFORNIA - DEPARTMENT OF TRANSPORTATION
DESIGN
FUNCTIONAL SUPERVISOR: MASTRI ALVANDI
CALCULATED-DESIGNED BY: KAZEEM ALABI
CHECKED BY: JERRY CHANG
REVISED BY
DATE REVISED

LAST REVISION | DATE PLOTTED => 15-JUN-2015
05-11-15 | TIME PLOTTED => 15:50

BORDER LAST REVISED 7/2/2010 | USERNAME => s130875 | DGN FILE => 0300000725ga009.dgn | RELATIVE BORDER SCALE IS IN INCHES 0 1 2 3 | UNIT 0337 | PROJECT NUMBER & PHASE 03000007251

Dist	COUNTY	ROUTE	POST MILES TOTAL PROJECT	SHEET No.	TOTAL SHEETS
03	Pla	193	4.4/5.5	40	197

REGISTERED CIVIL ENGINEER — 4-6-15 DATE

PLANS APPROVAL DATE — 4-6-15

REGISTERED PROFESSIONAL ENGINEER — KAZEEM ALABI No. 79697 Exp. 9-30-16 CIVIL — STATE OF CALIFORNIA

THE STATE OF CALIFORNIA OR ITS OFFICERS OR AGENTS SHALL NOT BE RESPONSIBLE FOR THE ACCURACY OR COMPLETENESS OF SCANNED COPIES OF THIS PLAN SHEET.

NOTE:

FOR ACCURATE RIGHT OF WAY DATA, CONTACT
RIGHT OF WAY ENGINEERING AT THE DISTRICT OFFICE.

LEGEND:

LIMITS OF RHMA-O

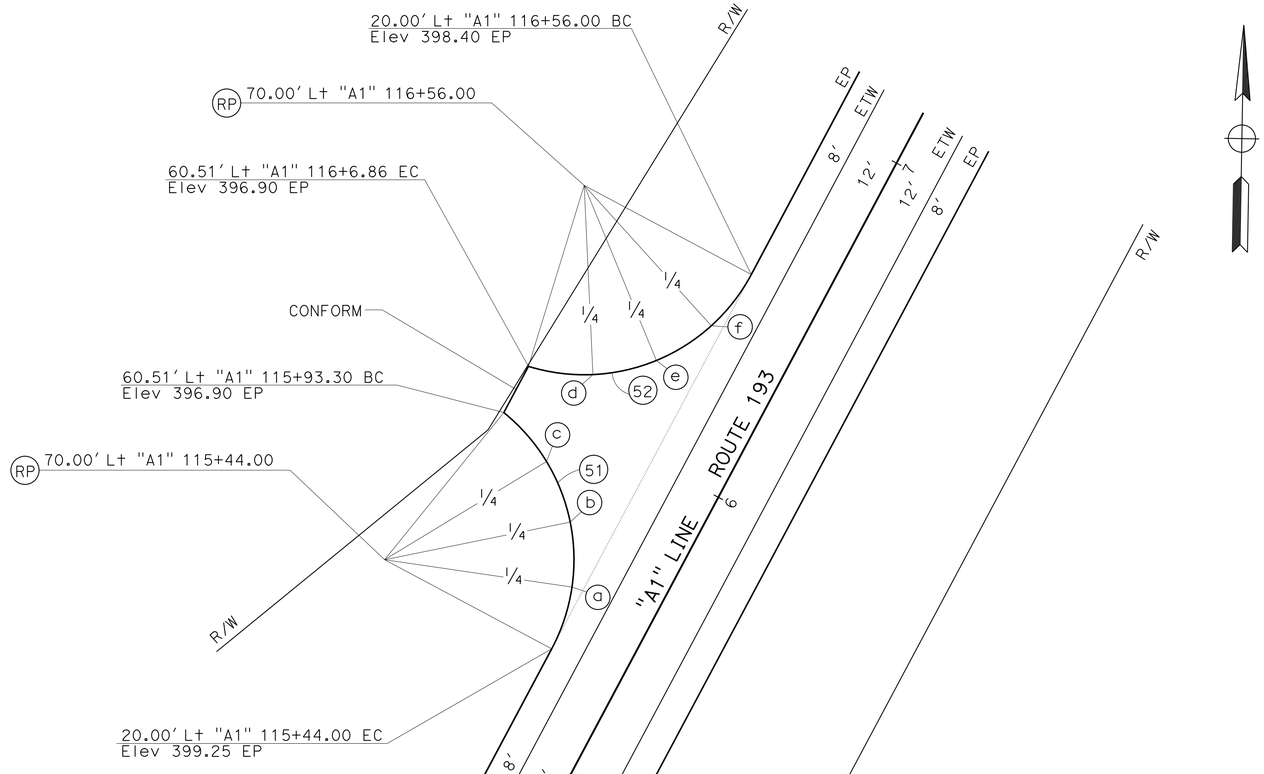

CURVE DATA

No. ⊕	R	Δ	T	L
(51)	50′	79°03′25"	41.26′	69.00′
(52)	50′	79°03′25"	41.26′	69.00′

"A1" 116+00.00
DRIVEWAY

POINT DATA

No. ⊕	LOCATION	ELEVATION
(a)	22.94′ Lt "A1" 115+60.91	398.99
(b)	31.43′ Lt "A1" 115+75.82	398.61
(c)	44.46′ Lt "A1" 115+86.99	397.86
(d)	44.46′ Lt "A1" 116+13.01	397.12
(e)	31.43′ Lt "A1" 116+24.17	397.77
(f)	22.94′ Lt "A1" 116+39.09	398.42

CONSTRUCTION DETAILS

SCALE: 1" = 20′

C-10

REVISED BY | DATE REVISED
JERRY CHANG | KAZEEM ALABI
CALCULATED-DESIGNED BY | CHECKED BY
FUNCTIONAL SUPERVISOR: MASTRI ALVANDI

STATE OF CALIFORNIA - DEPARTMENT OF TRANSPORTATION
Caltrans®
DESIGN

LAST REVISION | DATE PLOTTED => 15-JUN-2015
04-06-15 | TIME PLOTTED => 15:50

BORDER LAST REVISED 7/2/2010 | USERNAME => s130875 | DGN FILE => 0300000725ga010.dgn | RELATIVE BORDER SCALE IS IN INCHES 0 1 2 3 | UNIT 0337 | PROJECT NUMBER & PHASE 03000007251

Dist	COUNTY	ROUTE	POST MILES TOTAL PROJECT	SHEET No.	TOTAL SHEETS
03	Pla	193	4.4/5.5	41	197

REGISTERED CIVIL ENGINEER — 4-6-15 DATE

PLANS APPROVAL DATE — 4-6-15

KAZEEM ALABI No. 79697 Exp. 9-30-16 CIVIL — REGISTERED PROFESSIONAL ENGINEER — STATE OF CALIFORNIA

THE STATE OF CALIFORNIA OR ITS OFFICERS OR AGENTS SHALL NOT BE RESPONSIBLE FOR THE ACCURACY OR COMPLETENESS OF SCANNED COPIES OF THIS PLAN SHEET.

NOTE:

FOR ACCURATE RIGHT OF WAY DATA, CONTACT RIGHT OF WAY ENGINEERING AT THE DISTRICT OFFICE.

LEGEND:

LIMITS OF RHMA-O

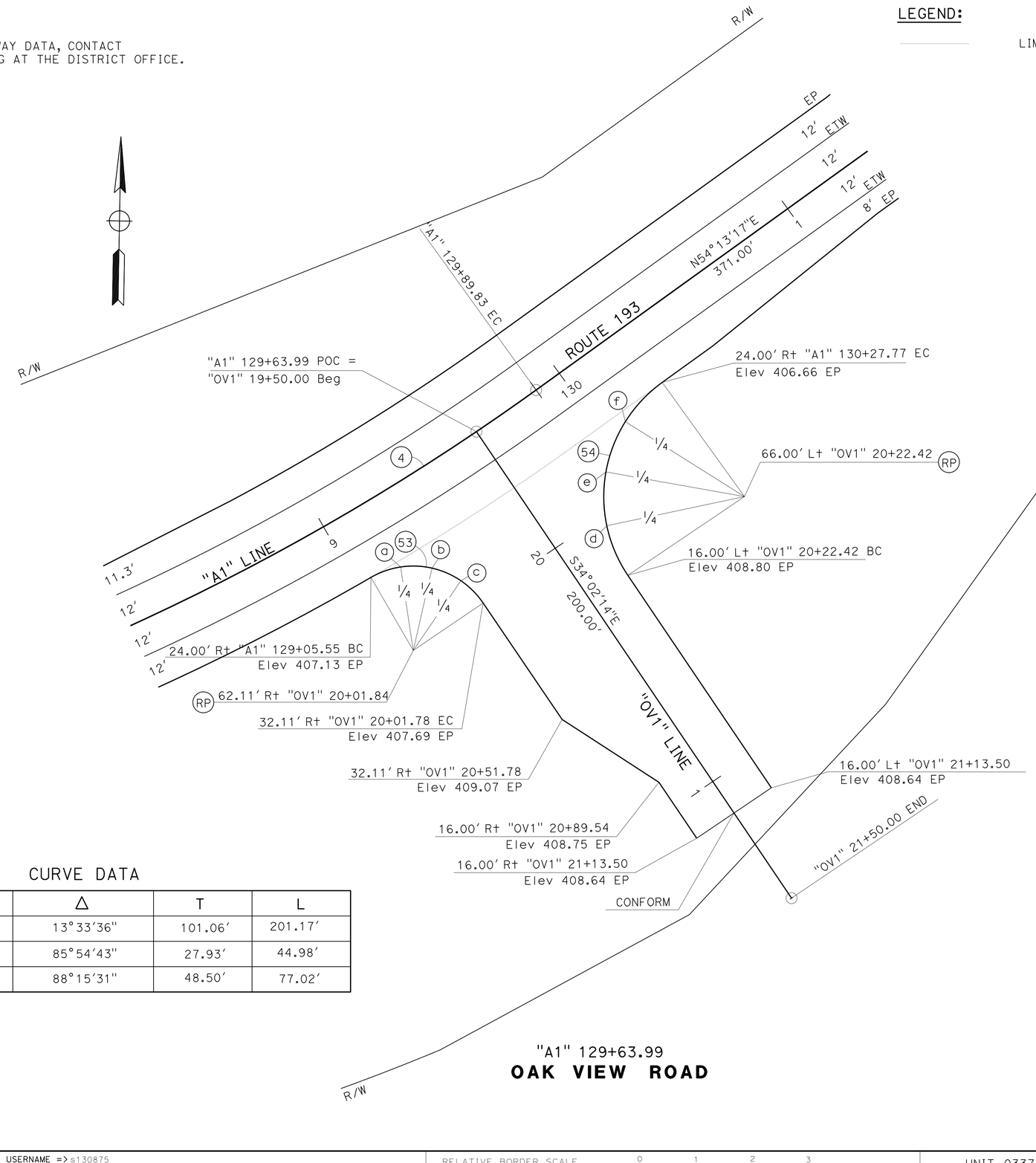

CURVE DATA

No. ⊕	R	△	T	L
(4)	850′	13°33′36"	101.06′	201.17′
(53)	30′	85°54′43"	27.93′	44.98′
(54)	50′	88°15′31"	48.50′	77.02′

POINT DATA

No. ⊕	LOCATION	ELEVATION
(a)	26.15′ Rt "A1" 129+16.21	407.11
(b)	32.28′ Rt "A1" 129+25.25	407.13
(c)	34.22′ Rt "OV1" 19+90.81	407.28
(d)	19.66′ Lt "OV1" 20+03.64	408.02
(e)	38.11′ Rt "A1" 129+92.96	407.26
(f)	27.66′ Rt "A1" 130+08.99	406.79

CONSTRUCTION DETAILS

SCALE: 1" = 20′

C-11

STATE OF CALIFORNIA - DEPARTMENT OF TRANSPORTATION — DESIGN

FUNCTIONAL SUPERVISOR: MASTRI ALVANDI

CALCULATED-DESIGNED BY: JERRY CHANG

CHECKED BY: KAZEEM ALABI

REVISED BY | DATE REVISED

LAST REVISION: DATE PLOTTED => 15-JUN-2015 | 04-06-15 | TIME PLOTTED => 15:50

BORDER LAST REVISED 7/2/2010 | USERNAME => s130875 | DGN FILE => 0300000725ga011.dgn | RELATIVE BORDER SCALE IS IN INCHES 0 1 2 3 | UNIT 0337 | PROJECT NUMBER & PHASE 03000007251

Dist	COUNTY	ROUTE	POST MILES TOTAL PROJECT	SHEET No.	TOTAL SHEETS
03	Pla	193	4.4/5.5	42	197

REGISTERED CIVIL ENGINEER — 4-6-15 DATE

KAZEEM ALABI No. 79697 Exp. 9-30-16 CIVIL — REGISTERED PROFESSIONAL ENGINEER — STATE OF CALIFORNIA

4-6-15
PLANS APPROVAL DATE

THE STATE OF CALIFORNIA OR ITS OFFICERS OR AGENTS SHALL NOT BE RESPONSIBLE FOR THE ACCURACY OR COMPLETENESS OF SCANNED COPIES OF THIS PLAN SHEET.

NOTE:

FOR ACCURATE RIGHT OF WAY DATA, CONTACT
RIGHT OF WAY ENGINEERING AT THE DISTRICT OFFICE.

LEGEND:

REMOVE BASE AND SURFACING
DEPTH = 1.5′
BACKFILL WITH NATIVE MATERIAL

LIMITS OF RHMA-O

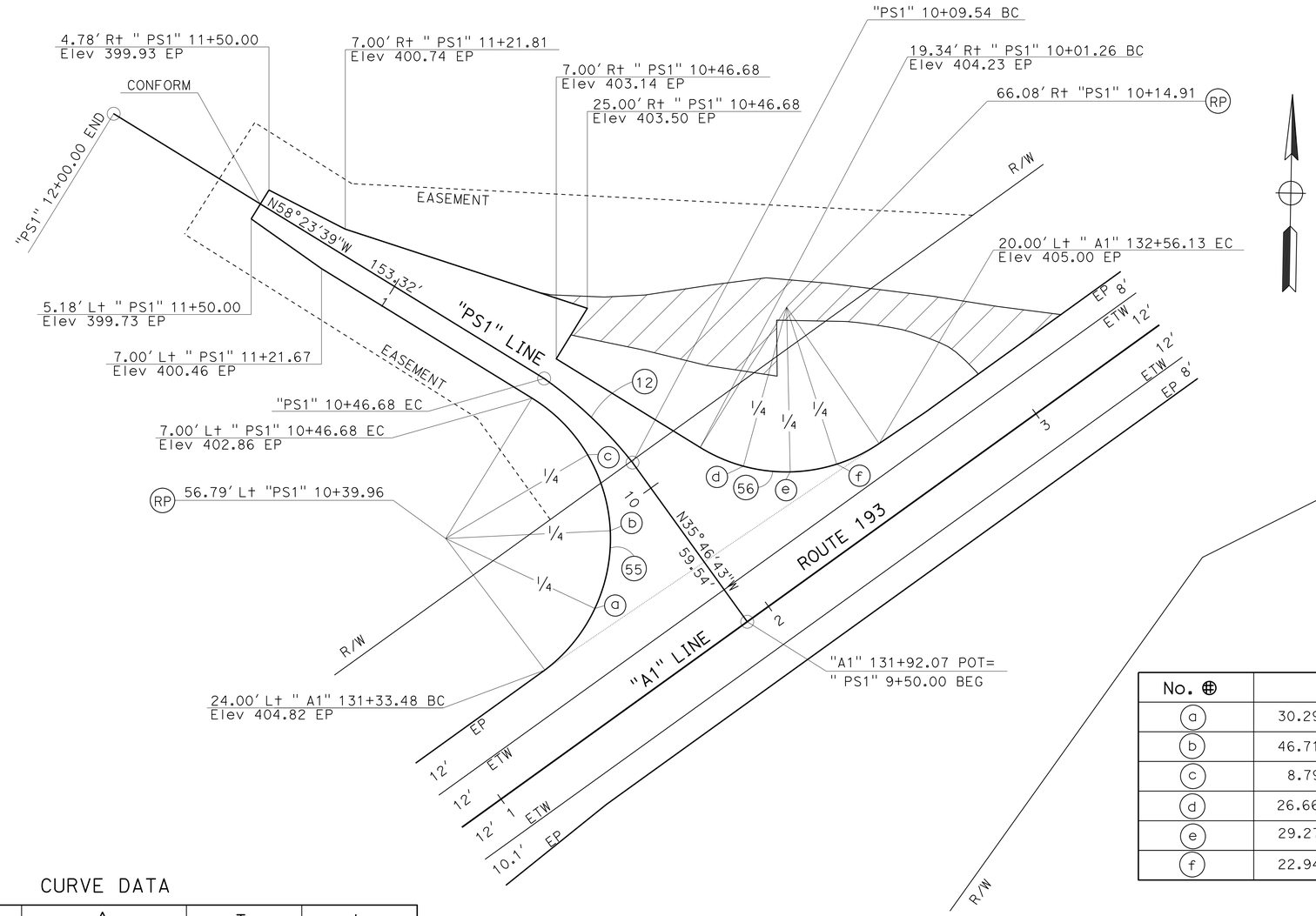

"A1" 131+92.07
DRIVEWAY

CURVE DATA

No. ⊕	R	Δ	T	L
12	130′	16°22′04"	18.7′	37.14′
55	50′	111°23′13"	73.28′	97.20′
56	50′	65°46′04"	32.32′	57.39′

POINT DATA

No. ⊕	LOCATION	ELEVATION
a	30.29′ Lt "A1" 131+56.91	404.56
b	46.71′ Lt "A1" 131+74.51	404.04
c	8.79′ Lt "PS1" 10+20.60	403.49
d	26.66′ Rt "PS1" 9+88.98	404.49
e	29.27′ Lt "A1" 132+29.23	404.82
f	22.94′ Lt "A1" 132+42.04	404.93

CONSTRUCTION DETAILS

SCALE: 1" = 20′

C-12

REVISED BY	DATE REVISED

CALCULATED-DESIGNED BY: JERRY CHANG
CHECKED BY: KAZEEM ALABI
FUNCTIONAL SUPERVISOR: MASTRI ALVANDI

STATE OF CALIFORNIA - DEPARTMENT OF TRANSPORTATION
DESIGN

LAST REVISION: DATE PLOTTED => 15-JUN-2015
04-06-15 TIME PLOTTED => 15:50

BORDER LAST REVISED 7/2/2010 | USERNAME => s130875 | DGN FILE => 0300000725ga012.dgn | RELATIVE BORDER SCALE IS IN INCHES 0 1 2 3 | UNIT 0337 | PROJECT NUMBER & PHASE 03000007251

Dist	COUNTY	ROUTE	POST MILES TOTAL PROJECT	SHEET No.	TOTAL SHEETS
03	Pla	193	4.4/5.5	43	197

REGISTERED CIVIL ENGINEER — DATE: 4-6-15

PLANS APPROVAL DATE: 4-6-15

KAZEEM ALABI No. 79697 Exp. 9-30-16 CIVIL — REGISTERED PROFESSIONAL ENGINEER — STATE OF CALIFORNIA

THE STATE OF CALIFORNIA OR ITS OFFICERS OR AGENTS SHALL NOT BE RESPONSIBLE FOR THE ACCURACY OR COMPLETENESS OF SCANNED COPIES OF THIS PLAN SHEET.

NOTE:

FOR ACCURATE RIGHT OF WAY DATA, CONTACT RIGHT OF WAY ENGINEERING AT THE DISTRICT OFFICE.

LEGEND:

LIMITS OF RHMA-O

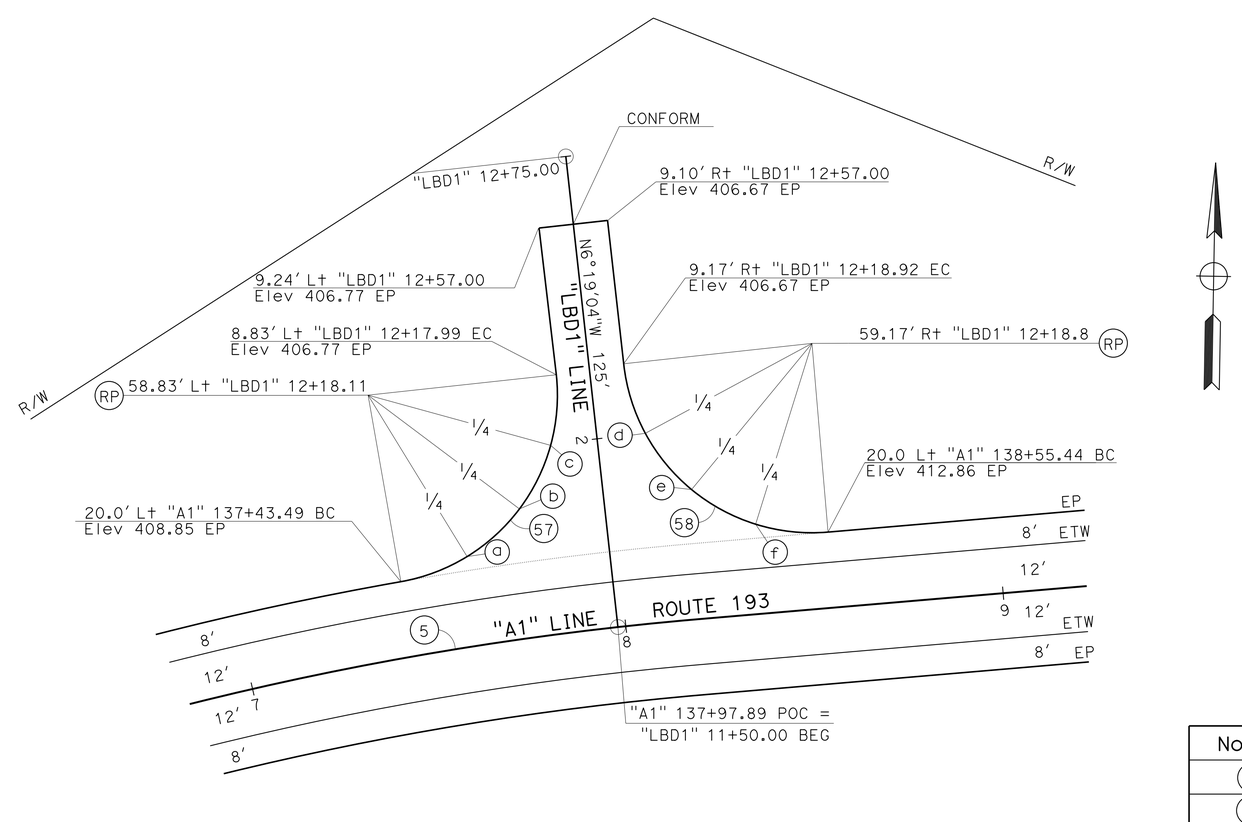

"A1" 137+97.88
DRIVEWAY

POINT DATA

No. ⊕	LOCATION	ELEVATION
a	23.69' L† "A1" 137+61.36	409.30
b	34.31' L† "A1" 137+76.35	409.69
c	12.54' L† "LBD1" 11+99.63	408.87
d	12.65' R† "LBD1" 12+00.04	409.26
e	34.24' L† "A1" 138+20.35	410.91
f	23.63' L† "A1" 138+36.43	411.95

CURVE DATA

No. ⊕	R	Δ	T	L
5	850'	30°54'22"	234.98'	458.50'
57	50'	86°11'27"	46.78'	75.21'
58	50'	88°41'23"	48.87'	77.40'

CONSTRUCTION DETAILS

SCALE: 1" = 20'

C-13

CALCULATED-DESIGNED BY

CHECKED BY

REVISED BY

DATE REVISED

JERRY CHANG

KAZEEM ALABI

FUNCTIONAL SUPERVISOR

MASTRI ALVANDI

STATE OF CALIFORNIA - DEPARTMENT OF TRANSPORTATION

DESIGN

Caltrans

LAST REVISION DATE PLOTTED => 15-JUN-2015
TIME PLOTTED => 15:50
04-06-15

Dist	COUNTY	ROUTE	POST MILES TOTAL PROJECT	SHEET No.	TOTAL SHEETS
03	Pla	193	4.4/5.5	44	197

REGISTERED CIVIL ENGINEER — 4-6-15 DATE

KAZEEM ALABI No. 79697 Exp. 9-30-16 CIVIL — REGISTERED PROFESSIONAL ENGINEER — STATE OF CALIFORNIA

4-6-15
PLANS APPROVAL DATE

THE STATE OF CALIFORNIA OR ITS OFFICERS OR AGENTS SHALL NOT BE RESPONSIBLE FOR THE ACCURACY OR COMPLETENESS OF SCANNED COPIES OF THIS PLAN SHEET.

NOTE:

FOR ACCURATE RIGHT OF WAY DATA, CONTACT RIGHT OF WAY ENGINEERING AT THE DISTRICT OFFICE.

LEGEND:

LIMITS OF RHMA-O

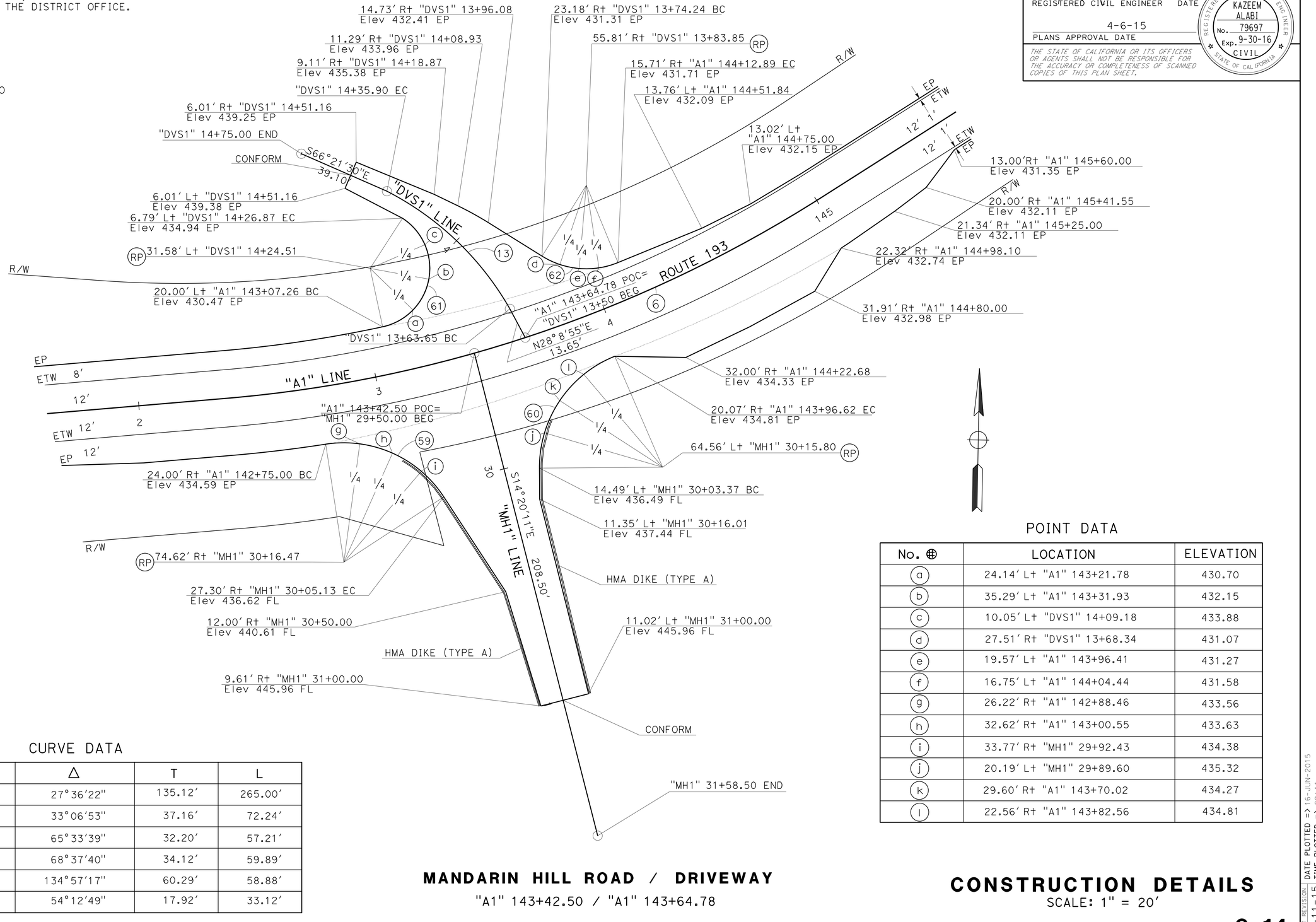

CURVE DATA

No. ⊕	R	Δ	T	L
6	550′	27°36′22"	135.12′	265.00′
13	125′	33°06′53"	37.16′	72.24′
59	50′	65°33′39"	32.20′	57.21′
60	50′	68°37′40"	34.12′	59.89′
61	25′	134°57′17"	60.29′	58.88′
62	35′	54°12′49"	17.92′	33.12′

POINT DATA

No. ⊕	LOCATION	ELEVATION
a	24.14′ L† "A1" 143+21.78	430.70
b	35.29′ L† "A1" 143+31.93	432.15
c	10.05′ L† "DVS1" 14+09.18	433.88
d	27.51′ R† "DVS1" 13+68.34	431.07
e	19.57′ L† "A1" 143+96.41	431.27
f	16.75′ L† "A1" 144+04.44	431.58
g	26.22′ R† "A1" 142+88.46	433.56
h	32.62′ R† "A1" 143+00.55	433.63
i	33.77′ R† "MH1" 29+92.43	434.38
j	20.19′ L† "MH1" 29+89.60	435.32
k	29.60′ R† "A1" 143+70.02	434.27
l	22.56′ R† "A1" 143+82.56	434.81

MANDARIN HILL ROAD / DRIVEWAY

"A1" 143+42.50 / "A1" 143+64.78

CONSTRUCTION DETAILS

SCALE: 1" = 20′

C-14

REVISED BY | DATE REVISED
JERRY CHANG | KAZEEM ALABI
CALCULATED-DESIGNED BY | CHECKED BY
FUNCTIONAL SUPERVISOR: MASTRI ALVANDI

STATE OF CALIFORNIA - DEPARTMENT OF TRANSPORTATION
DESIGN

LAST REVISION | DATE PLOTTED => 16-JUN-2015
05-11-15 | TIME PLOTTED => 09:44

BORDER LAST REVISED 7/2/2010 | USERNAME => s130875 | DGN FILE => 0300000725ga014.dgn | RELATIVE BORDER SCALE IS IN INCHES 0 1 2 3 | UNIT 0337 | PROJECT NUMBER & PHASE 03000007251

Dist	COUNTY	ROUTE	POST MILES TOTAL PROJECT	SHEET No.	TOTAL SHEETS
03	Pla	193	4.4/5.5	45	197

REGISTERED CIVIL ENGINEER — 4-6-15 DATE

PLANS APPROVAL DATE — 4-6-15

CHRIS ROCKEY No. C78030 Exp. 9-30-15 CIVIL — REGISTERED PROFESSIONAL ENGINEER — STATE OF CALIFORNIA

THE STATE OF CALIFORNIA OR ITS OFFICERS OR AGENTS SHALL NOT BE RESPONSIBLE FOR THE ACCURACY OR COMPLETENESS OF SCANNED COPIES OF THIS PLAN SHEET.

NOTES:

1. FOR ACCURATE RIGHT OF WAY DATA, CONTACT RIGHT OF WAY ENGINEERING AT THE DISTRICT OFFICE.

LEGEND:

ROCK SLOPE PROTECTION

DITCH EXCAVATION

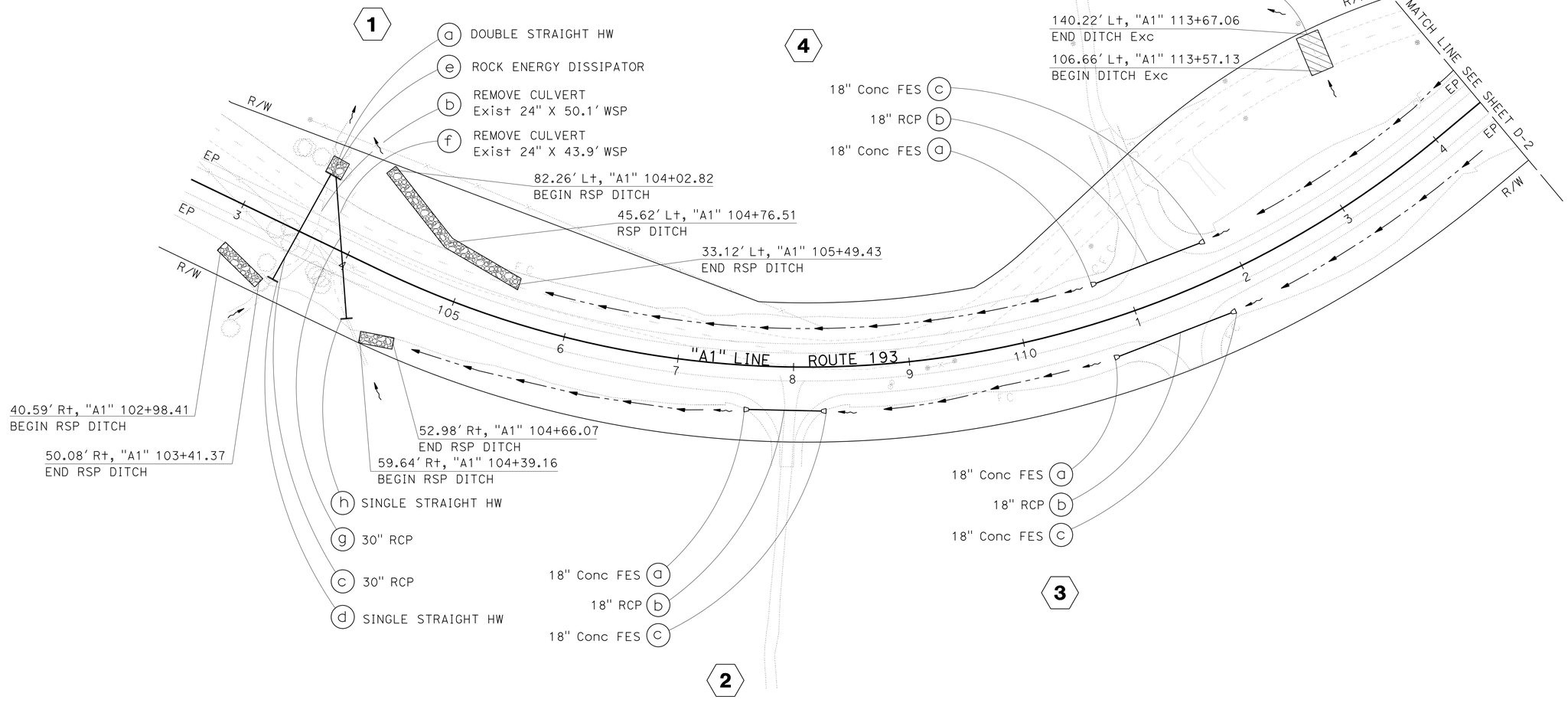

APPROVED FOR DRAINAGE WORK ONLY

DRAINAGE PLAN

SCALE: 1"=50' **D-1**

LAST REVISION DATE PLOTTED => 15-JUN-2015
03-27-14 TIME PLOTTED => 15:50

STATE OF CALIFORNIA - DEPARTMENT OF TRANSPORTATION
DIVISION OF ENGINEERING
Caltrans

CALCULATED-DESIGNED BY: CHRIS ROCKEY
CHECKED BY: DENNIS JAGODA
FUNCTIONAL SUPERVISOR: DENNIS JAGODA
REVISED BY / DATE REVISED

BORDER LAST REVISED 7/2/2010 | USERNAME => s130875 | DGN FILE => 0300000725ia001.dgn | RELATIVE BORDER SCALE IS IN INCHES 0 1 2 3 | UNIT 0359 | PROJECT NUMBER & PHASE 03000007251

Dist	COUNTY	ROUTE	POST MILES TOTAL PROJECT	SHEET No.	TOTAL SHEETS
03	Pla	193	4.4/5.5	46	197

REGISTERED CIVIL ENGINEER — DATE 4-6-15

PLANS APPROVAL DATE 4-6-15

REGISTERED PROFESSIONAL ENGINEER — CHRIS ROCKEY — No. C78030 — Exp. 9-30-15 — CIVIL — STATE OF CALIFORNIA

THE STATE OF CALIFORNIA OR ITS OFFICERS OR AGENTS SHALL NOT BE RESPONSIBLE FOR THE ACCURACY OR COMPLETENESS OF SCANNED COPIES OF THIS PLAN SHEET.

NOTE:

FOR ACCURATE RIGHT OF WAY DATA, CONTACT
RIGHT OF WAY ENGINEERING AT THE DISTRICT OFFICE.

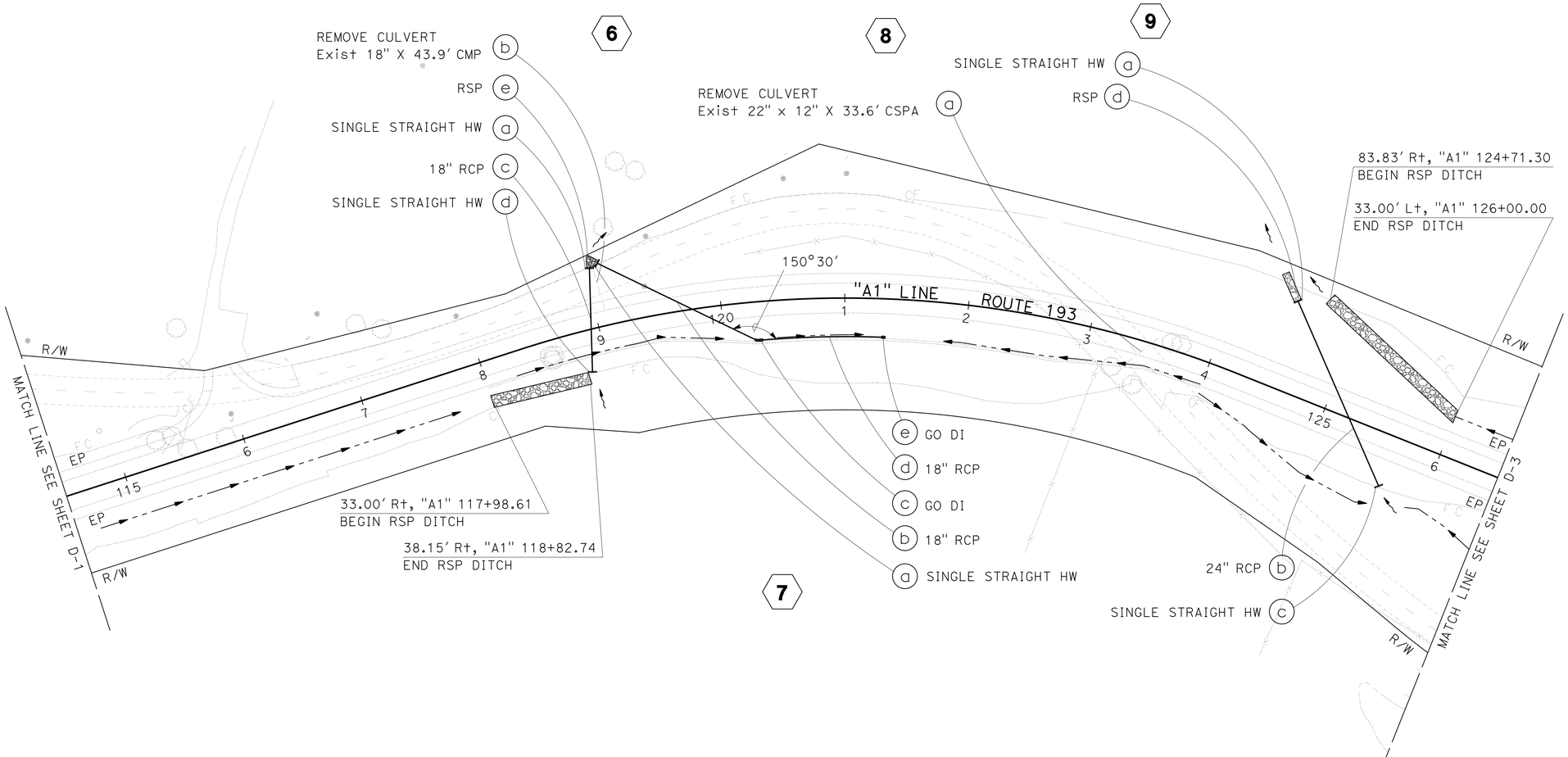

APPROVED FOR DRAINAGE WORK ONLY

DRAINAGE PLAN

SCALE: 1"=50'

D-2

STATE OF CALIFORNIA - DEPARTMENT OF TRANSPORTATION
DIVISION OF ENGINEERING

CALCULATED-DESIGNED BY: CHRIS ROCKEY
CHECKED BY: DENNIS JAGODA
FUNCTIONAL SUPERVISOR: DENNIS JAGODA
REVISED BY
DATE REVISED

LAST REVISION | DATE PLOTTED => 15-JUN-2015
TIME PLOTTED => 15:50
03-27-14

BORDER LAST REVISED 7/2/2010
USERNAME => s130875
DGN FILE => 0300000725ia002.dgn
RELATIVE BORDER SCALE IS IN INCHES 0 1 2 3
UNIT 0359
PROJECT NUMBER & PHASE 03000007251

Dist	COUNTY	ROUTE	POST MILES TOTAL PROJECT	SHEET No.	TOTAL SHEETS
03	Pla	193	4.4/5.5	47	197

REGISTERED CIVIL ENGINEER — DATE 4-6-15

PLANS APPROVAL DATE 4-6-15

REGISTERED PROFESSIONAL ENGINEER — CHRIS ROCKEY No. C78030 Exp. 9-30-15 CIVIL — STATE OF CALIFORNIA

THE STATE OF CALIFORNIA OR ITS OFFICERS OR AGENTS SHALL NOT BE RESPONSIBLE FOR THE ACCURACY OR COMPLETENESS OF SCANNED COPIES OF THIS PLAN SHEET.

NOTE:

FOR ACCURATE RIGHT OF WAY DATA, CONTACT
RIGHT OF WAY ENGINEERING AT THE DISTRICT OFFICE.

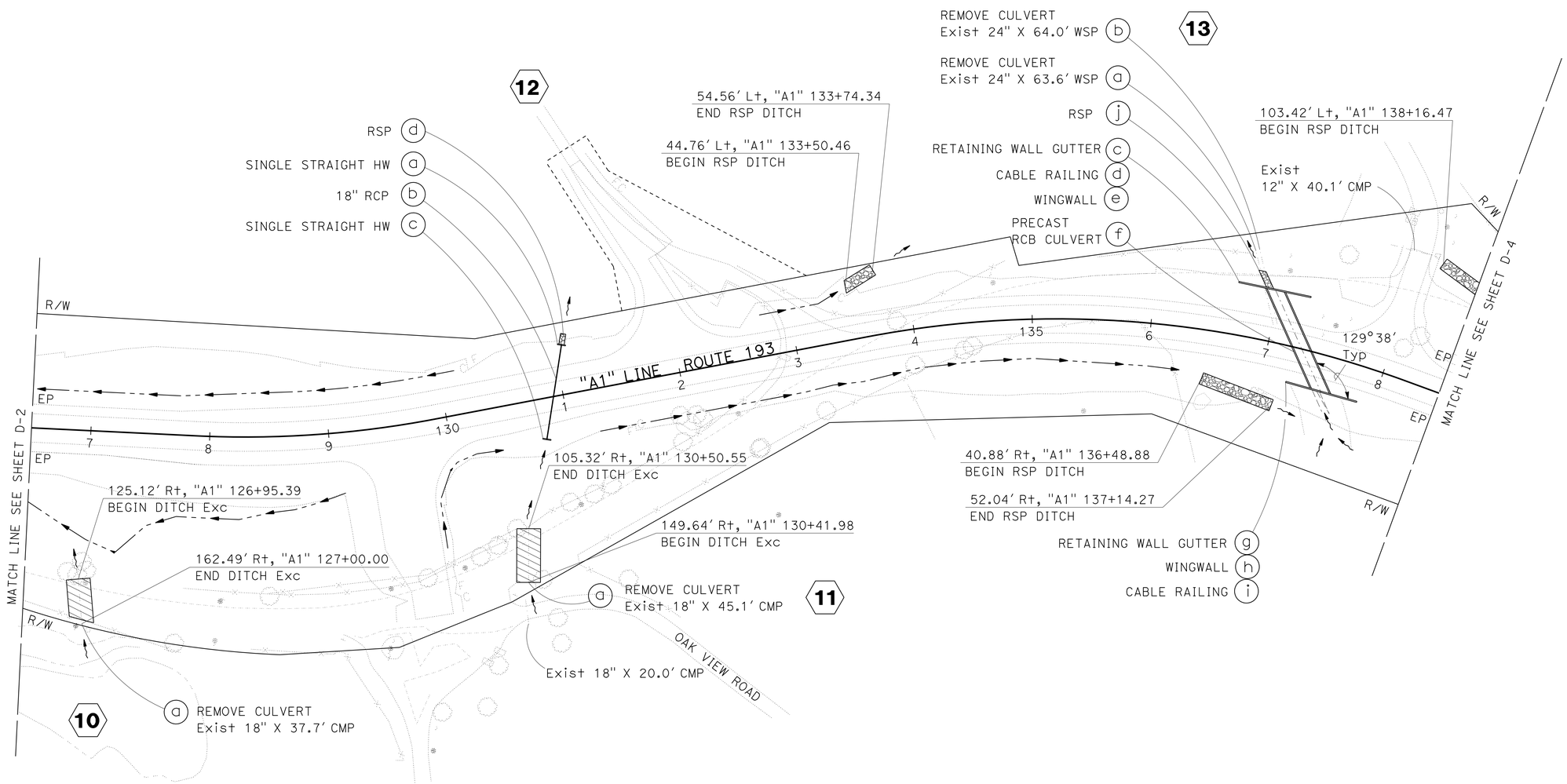

APPROVED FOR DRAINAGE WORK ONLY

DRAINAGE PLAN

SCALE: 1"=50' **D-3**

CALCULATED-DESIGNED BY: CHRIS ROCKEY
CHECKED BY: DENNIS JAGODA
REVISED BY
DATE REVISED
FUNCTIONAL SUPERVISOR: DENNIS JAGODA

STATE OF CALIFORNIA - DEPARTMENT OF TRANSPORTATION
DIVISION OF ENGINEERING
Caltrans

LAST REVISION DATE PLOTTED => 15-JUN-2015
TIME PLOTTED => 15:50
03-27-14

BORDER LAST REVISED 7/2/2010 | USERNAME => s130875 | DGN FILE => 0300000725ia003.dgn | RELATIVE BORDER SCALE IS IN INCHES 0 1 2 3 | UNIT 0359 | PROJECT NUMBER & PHASE 03000007251

Dist	COUNTY	ROUTE	POST MILES TOTAL PROJECT	SHEET No.	TOTAL SHEETS
03	Pla	193	4.4/5.5	48	197

REGISTERED CIVIL ENGINEER — 4-6-15 DATE

CHRIS ROCKEY No. C78030 Exp. 9-30-15 CIVIL — REGISTERED PROFESSIONAL ENGINEER — STATE OF CALIFORNIA

4-6-15
PLANS APPROVAL DATE

THE STATE OF CALIFORNIA OR ITS OFFICERS OR AGENTS SHALL NOT BE RESPONSIBLE FOR THE ACCURACY OR COMPLETENESS OF SCANNED COPIES OF THIS PLAN SHEET.

NOTE:

FOR ACCURATE RIGHT OF WAY DATA, CONTACT
RIGHT OF WAY ENGINEERING AT THE DISTRICT OFFICE.

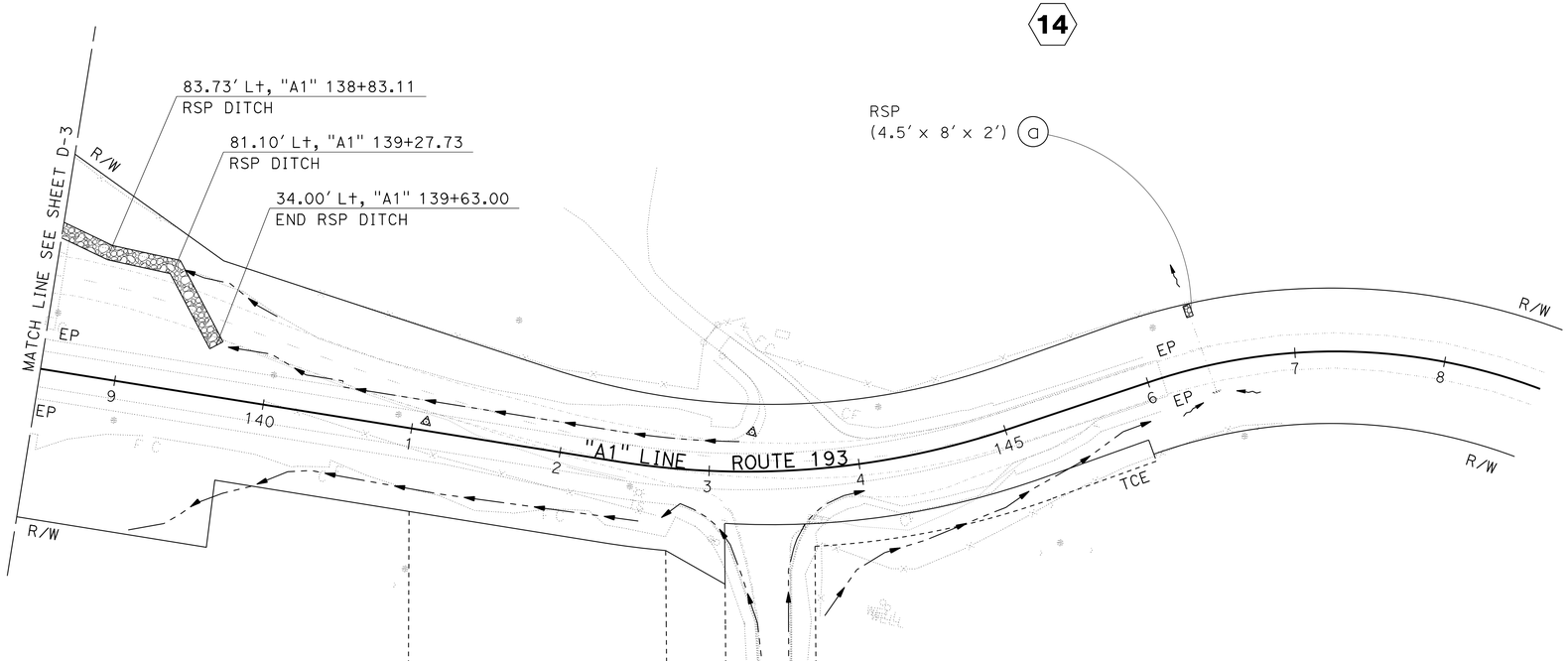

APPROVED FOR DRAINAGE WORK ONLY

DRAINAGE PLAN

SCALE: 1"=50′ **D-4**

STATE OF CALIFORNIA - DEPARTMENT OF TRANSPORTATION
DIVISION OF ENGINEERING
FUNCTIONAL SUPERVISOR: DENNIS JAGODA
CALCULATED-DESIGNED BY: CHRIS ROCKEY
CHECKED BY: DENNIS JAGODA
REVISED BY
DATE REVISED

LAST REVISION | DATE PLOTTED => 15-JUN-2015 | 03-27-14 | TIME PLOTTED => 15:50

BORDER LAST REVISED 7/2/2010 | USERNAME => s130875 | DGN FILE => 03000007251ia004.dgn | RELATIVE BORDER SCALE IS IN INCHES 0 1 2 3 | UNIT 0359 | PROJECT NUMBER & PHASE 03000007251

Dist	COUNTY	ROUTE	POST MILES TOTAL PROJECT	SHEET No.	TOTAL SHEETS
03	Pla	193	4.4/5.5	49	197

REGISTERED CIVIL ENGINEER — 4-6-15 DATE

4-6-15
PLANS APPROVAL DATE

REGISTERED PROFESSIONAL ENGINEER
CHRIS ROCKEY
No. C78030
Exp. 9-30-15
CIVIL
STATE OF CALIFORNIA

THE STATE OF CALIFORNIA OR ITS OFFICERS OR AGENTS SHALL NOT BE RESPONSIBLE FOR THE ACCURACY OR COMPLETENESS OF SCANNED COPIES OF THIS PLAN SHEET.

REVISED BY | DATE REVISED

CHRIS ROCKEY | DENNIS JAGODA

CALCULATED-DESIGNED BY | CHECKED BY

FUNCTIONAL SUPERVISOR: DENNIS JAGODA

STATE OF CALIFORNIA - DEPARTMENT OF TRANSPORTATION
DIVISION OF ENGINEERING
Caltrans®

NOTES:

1. FOR CABLE RAILING SEE STANDARD PLAN B11-47.
2. FOR WINGWALLS SEE STANDARD PLAN D84.
3. FOR 12' X 12' PRECAST RCB CULVERT SEE STANDARD PLAN D83A.
4. SEE DRAINAGE DETAILS FOR 6" PLASTIC PIPE (SCHEDULE 40) (SUPPLY LINE) AND MINOR CONCRETE (MINOR STRUCTURE) WILDLIFE PATH.
5. FOR RETAINING WALL GUTTER SEE STANDARD PLAN B3-6.
6. CONCRETE BACKFILL (PIPE TRENCH) SHALL BE AT A MINIMUM TO THE TOP OF THE CULVERT.

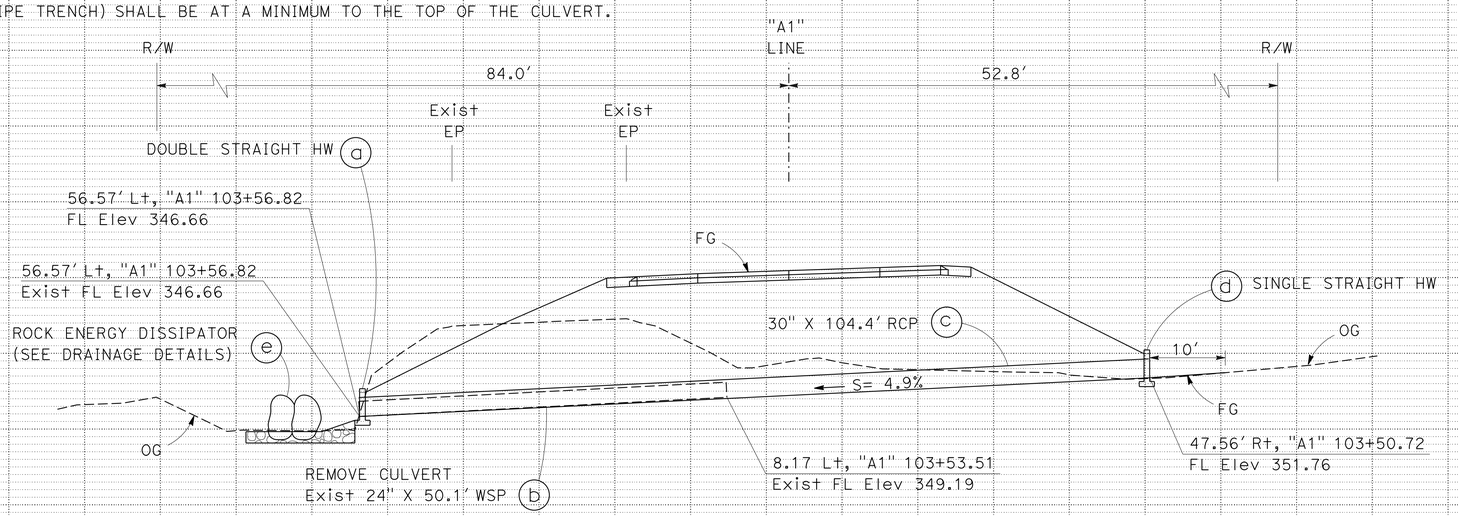

"A1" 103+53.51

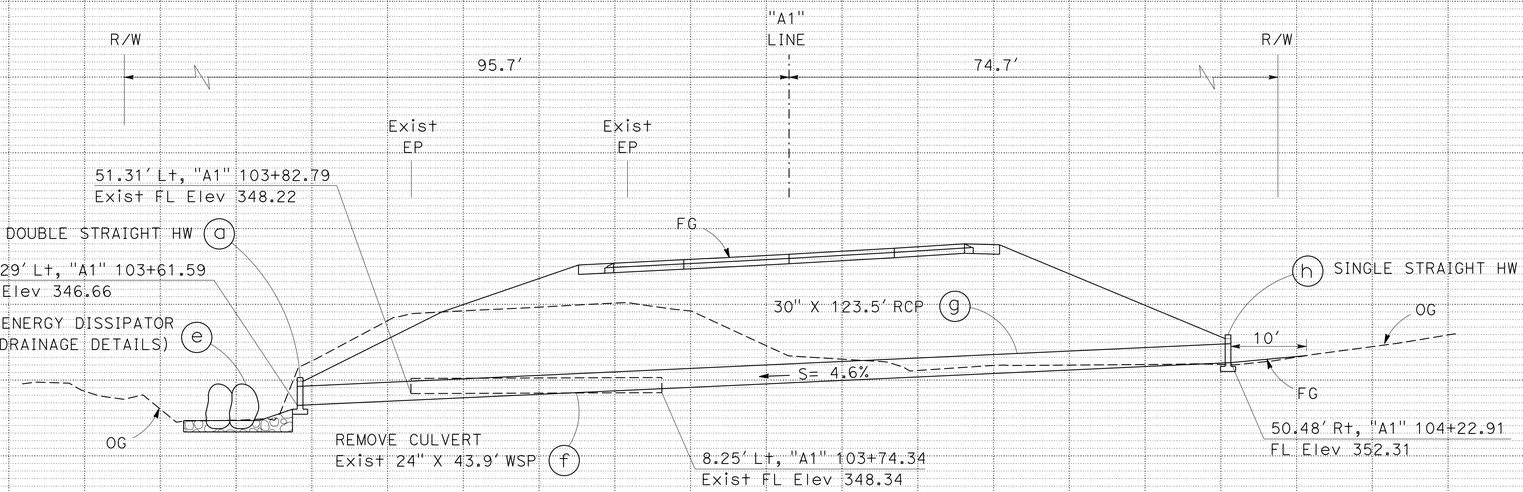

"A1" 103+93.06

DRAINAGE SYSTEM No. (1)

DRAINAGE PROFILES

SCALE: Horiz 1" 10'
Vert 1" 10'

DP-1

LAST REVISION | DATE PLOTTED => 15-JUN-2015
00-00-00 | TIME PLOTTED => 15:50

BORDER LAST REVISED 7/2/2010

USERNAME => s130875
DGN FILE => 03000000725ib001.dgn

RELATIVE BORDER SCALE IS IN INCHES 0 1 2 3

UNIT 0359

PROJECT NUMBER & PHASE 03000007251

Dist	COUNTY	ROUTE	POST MILES TOTAL PROJECT	SHEET No.	TOTAL SHEETS
03	Pla	193	4.4/5.5	50	197

REGISTERED CIVIL ENGINEER — 4-6-15 DATE

CHRIS ROCKEY No. C78030 Exp. 9-30-15 CIVIL — REGISTERED PROFESSIONAL ENGINEER — STATE OF CALIFORNIA

4-6-15
PLANS APPROVAL DATE

THE STATE OF CALIFORNIA OR ITS OFFICERS OR AGENTS SHALL NOT BE RESPONSIBLE FOR THE ACCURACY OR COMPLETENESS OF SCANNED COPIES OF THIS PLAN SHEET.

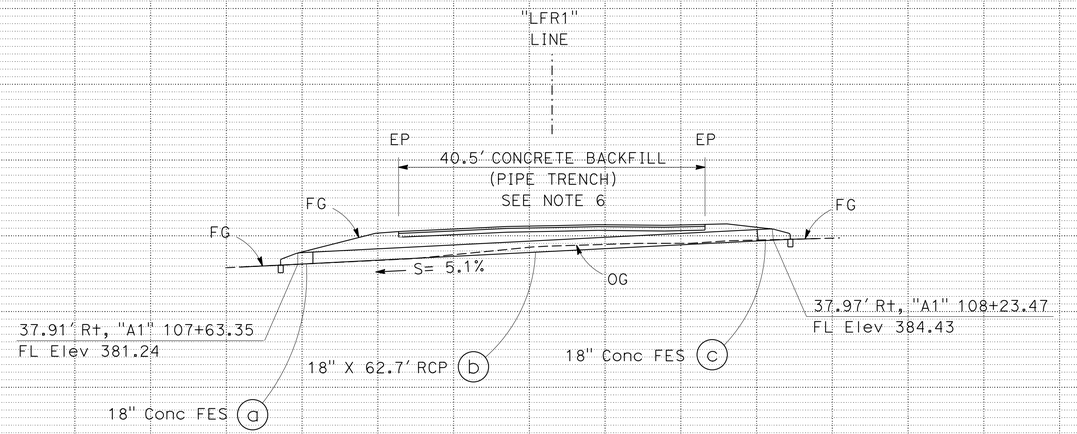

DRAINAGE SYSTEM No. 2

"A1" 107+95.50

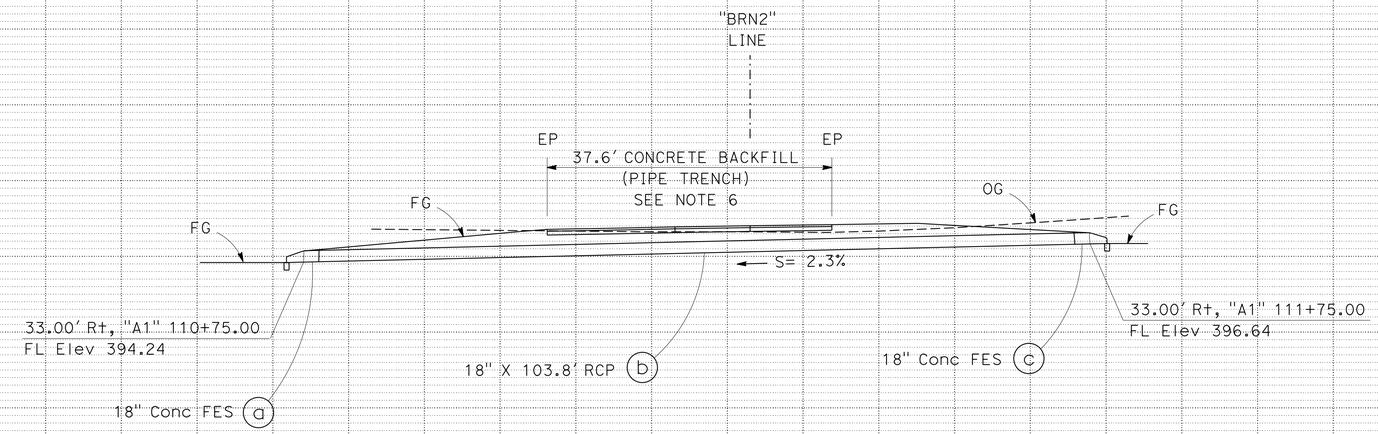

DRAINAGE SYSTEM No. 3

"A1" 111+31.78

DRAINAGE PROFILES

SCALE: Horiz 1" = 10'
Vert 1" = 10'

DP-2

STATE OF CALIFORNIA - DEPARTMENT OF TRANSPORTATION
Caltrans
DIVISION OF ENGINEERING
FUNCTIONAL SUPERVISOR: DENNIS JAGODA
CALCULATED-DESIGNED BY: CHRIS ROCKEY
CHECKED BY: DENNIS JAGODA
REVISED BY
DATE REVISED

LAST REVISION DATE PLOTTED => 15-JUN-2015
TIME PLOTTED => 15:50
00-00-00

BORDER LAST REVISED 7/2/2010
USERNAME => s130875
DGN FILE => 0300000725ib002.dgn
RELATIVE BORDER SCALE IS IN INCHES 0 1 2 3
UNIT 0359
PROJECT NUMBER & PHASE 03000007251

Dist	COUNTY	ROUTE	POST MILES TOTAL PROJECT	SHEET No.	TOTAL SHEETS
03	Pla	193	4.4/5.5	51	197

REGISTERED CIVIL ENGINEER — 4-6-15 DATE

CHRIS ROCKEY No. C78030 Exp. 9-30-15 CIVIL — REGISTERED PROFESSIONAL ENGINEER — STATE OF CALIFORNIA

4-6-15
PLANS APPROVAL DATE

THE STATE OF CALIFORNIA OR ITS OFFICERS OR AGENTS SHALL NOT BE RESPONSIBLE FOR THE ACCURACY OR COMPLETENESS OF SCANNED COPIES OF THIS PLAN SHEET.

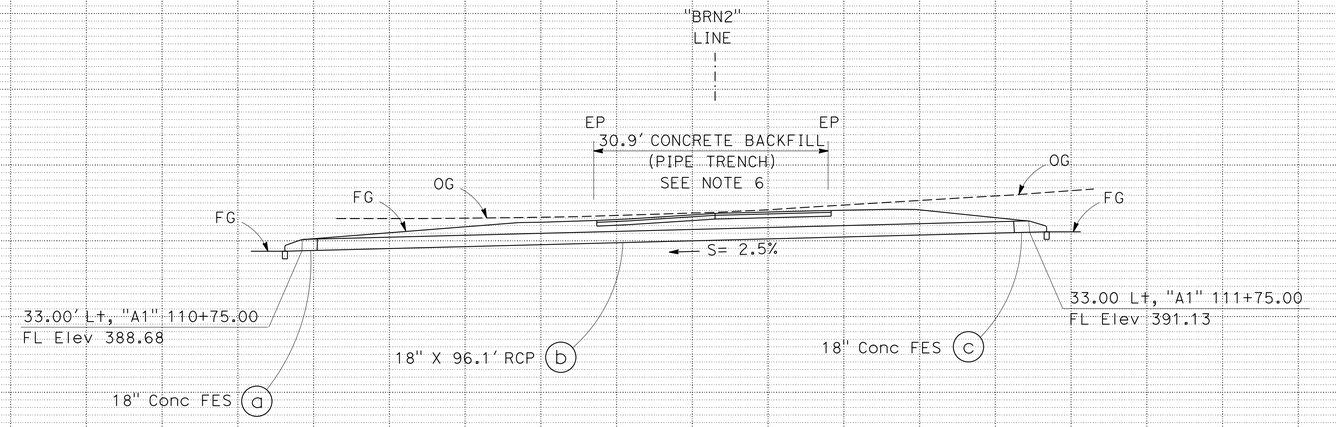

DRAINAGE SYSTEM No. 4

"A1" 111+31.78

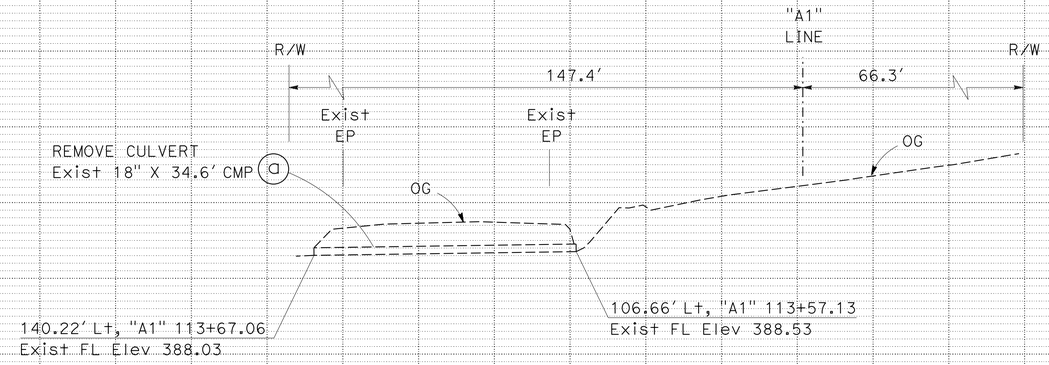

DRAINAGE SYSTEM No. 5

"A1" 113+57.13

DRAINAGE PROFILES

SCALE: Horiz 1" = 10'
Vert 1" = 10'

DP-3

REVISED BY | DATE REVISED
CHRIS ROCKEY | DENNIS JAGODA
CALCULATED-DESIGNED BY | CHECKED BY
FUNCTIONAL SUPERVISOR: DENNIS JAGODA
STATE OF CALIFORNIA - DEPARTMENT OF TRANSPORTATION
Caltrans®
DIVISION OF ENGINEERING

LAST REVISION DATE PLOTTED => 15-JUN-2015
00-00-00 TIME PLOTTED => 15:50

BORDER LAST REVISED 7/2/2010 | USERNAME => s130875 | DGN FILE => 03000007251ib003.dgn | RELATIVE BORDER SCALE IS IN INCHES 0 1 2 3 | UNIT 0359 | PROJECT NUMBER & PHASE 03000007251

Dist	COUNTY	ROUTE	POST MILES TOTAL PROJECT	SHEET No.	TOTAL SHEETS
03	Pla	193	4.4/5.5	52	197

REGISTERED CIVIL ENGINEER — 4-6-15 DATE

4-6-15
PLANS APPROVAL DATE

REGISTERED PROFESSIONAL ENGINEER
CHRIS ROCKEY
No. C78030
Exp. 9-30-15
CIVIL
STATE OF CALIFORNIA

THE STATE OF CALIFORNIA OR ITS OFFICERS OR AGENTS SHALL NOT BE RESPONSIBLE FOR THE ACCURACY OR COMPLETENESS OF SCANNED COPIES OF THIS PLAN SHEET.

REVISED BY | DATE REVISED

CALCULATED-DESIGNED BY: CHRIS ROCKEY
CHECKED BY: DENNIS JAGODA
FUNCTIONAL SUPERVISOR: DENNIS JAGODA

STATE OF CALIFORNIA - DEPARTMENT OF TRANSPORTATION
DIVISION OF ENGINEERING
Caltrans

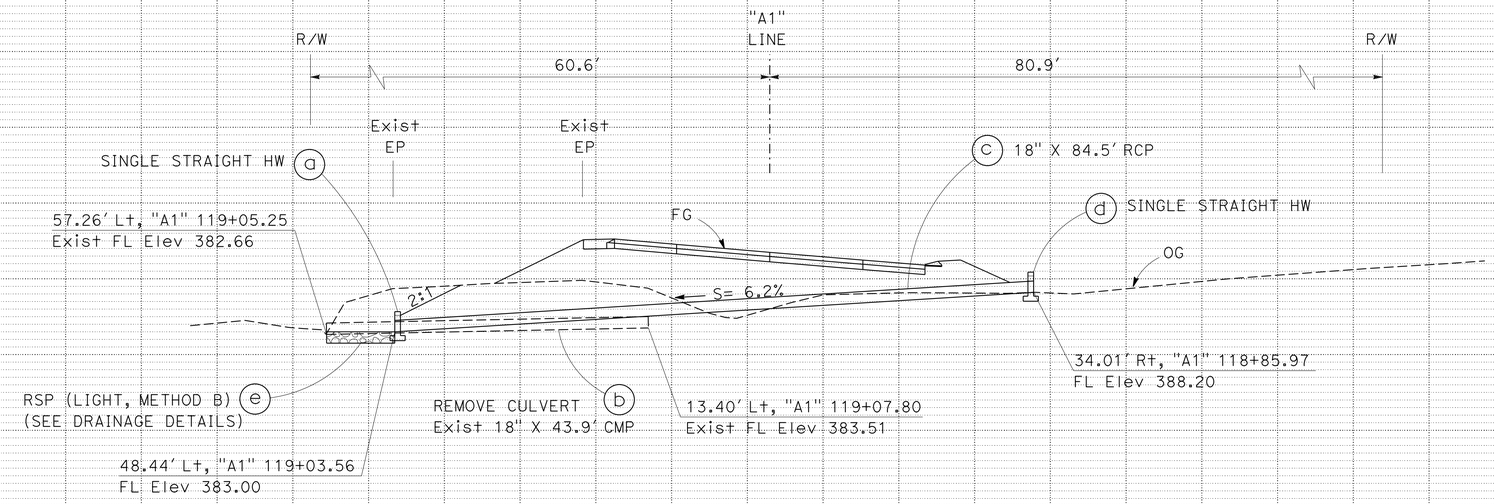

DRAINAGE SYSTEM No. 6

"A1" 118+93.65

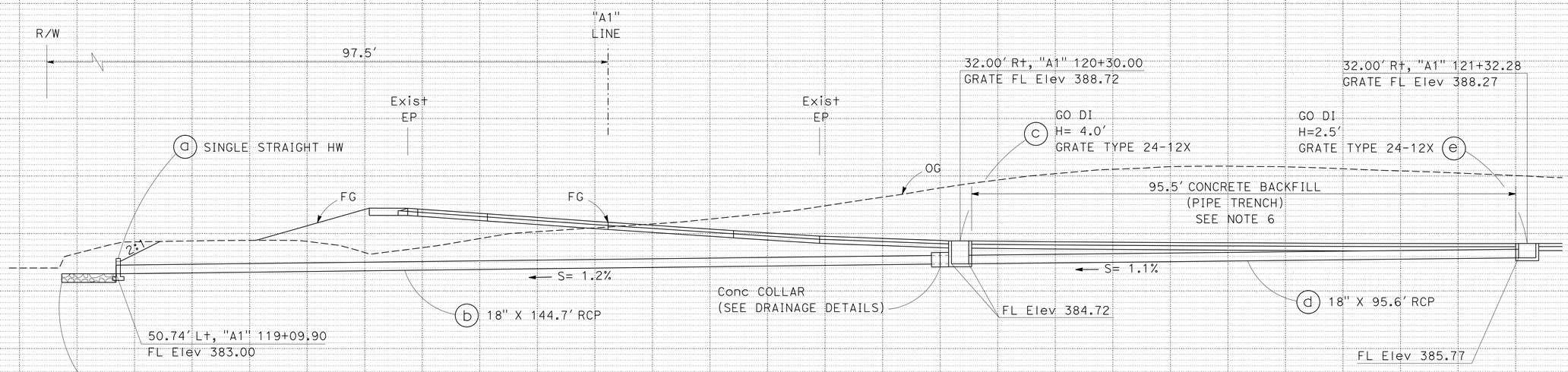

DRAINAGE SYSTEM No. 7

"A1" 119+76.77

DRAINAGE PROFILES

SCALE: Horiz 1" = 10′
Vert 1" = 10′

DP-4

LAST REVISION DATE PLOTTED => 15-JUN-2015
00-00-00 TIME PLOTTED => 15:50

Dist	COUNTY	ROUTE	POST MILES TOTAL PROJECT	SHEET No.	TOTAL SHEETS
03	Pla	193	4.4/5.5	53	197

REGISTERED CIVIL ENGINEER — 4-6-15 DATE

CHRIS ROCKEY No. C78030 Exp. 9-30-15 CIVIL — REGISTERED PROFESSIONAL ENGINEER — STATE OF CALIFORNIA

4-6-15
PLANS APPROVAL DATE

THE STATE OF CALIFORNIA OR ITS OFFICERS OR AGENTS SHALL NOT BE RESPONSIBLE FOR THE ACCURACY OR COMPLETENESS OF SCANNED COPIES OF THIS PLAN SHEET.

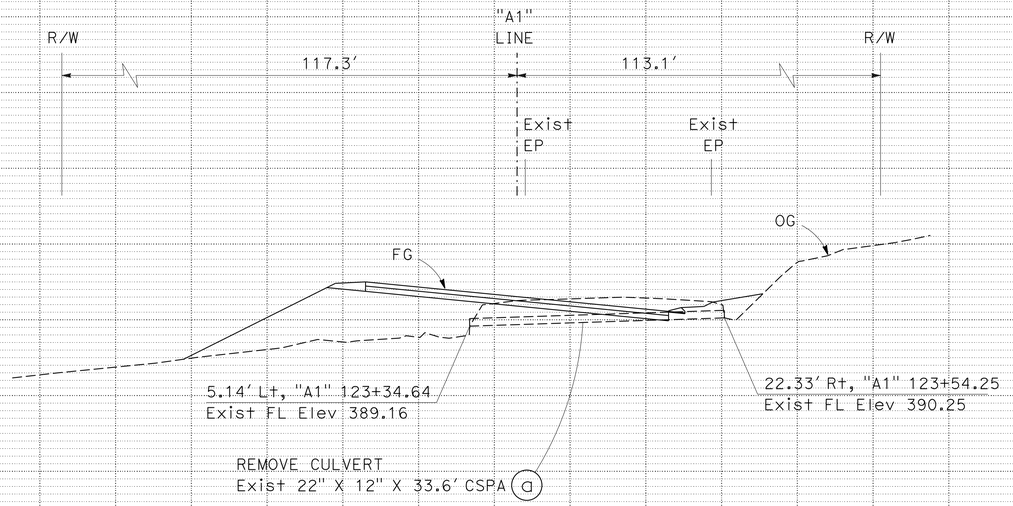

DRAINAGE SYSTEM No. 8

"A1" 123+51.71

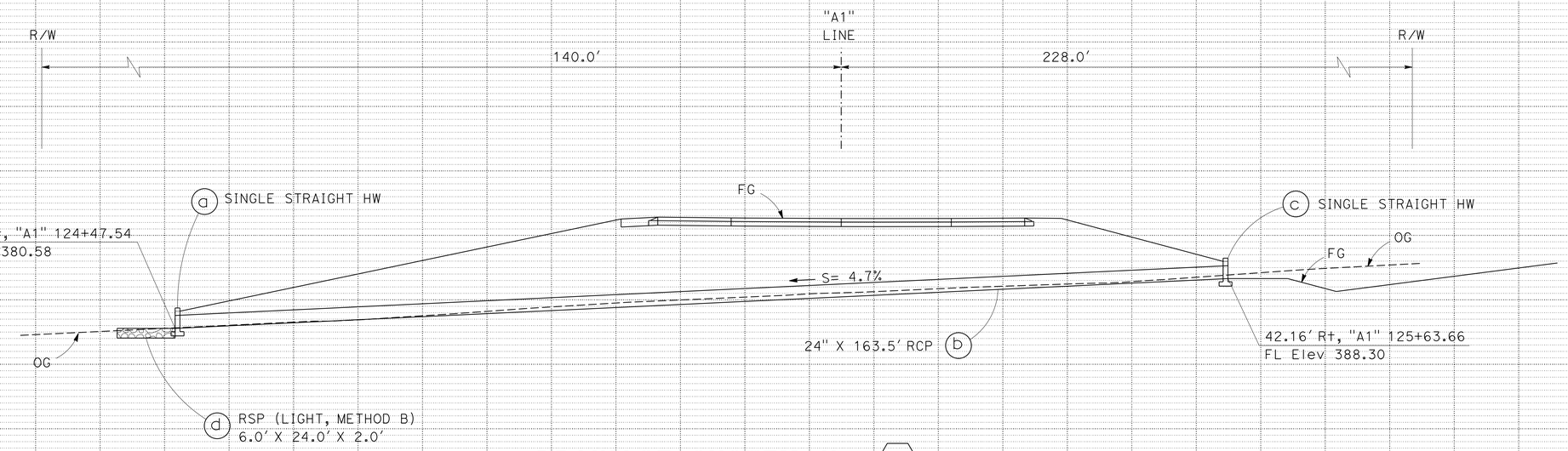

DRAINAGE SYSTEM No. 9

"A1" 125+21.01

DRAINAGE PROFILES

SCALE: Horiz 1" = 10'
Vert 1" = 10'

DP-5

STATE OF CALIFORNIA - DEPARTMENT OF TRANSPORTATION
Caltrans®
DIVISION OF ENGINEERING
FUNCTIONAL SUPERVISOR: DENNIS JAGODA
CALCULATED-DESIGNED BY: CHRIS ROCKEY
CHECKED BY: DENNIS JAGODA
REVISED BY
DATE REVISED

LAST REVISION DATE PLOTTED => 15-JUN-2015
TIME PLOTTED => 15:50
00-00-00

BORDER LAST REVISED 7/2/2010
USERNAME => s130875
DGN FILE => 03000007251ib005.dgn
RELATIVE BORDER SCALE IS IN INCHES 0 1 2 3
UNIT 0359
PROJECT NUMBER & PHASE 03000007251

Dist	COUNTY	ROUTE	POST MILES TOTAL PROJECT	SHEET No.	TOTAL SHEETS
03	Pla	193	4.4/5.5	54	197

REGISTERED CIVIL ENGINEER — 4-6-15 DATE

4-6-15
PLANS APPROVAL DATE

CHRIS ROCKEY No. C78030 Exp. 9-30-15 CIVIL — REGISTERED PROFESSIONAL ENGINEER — STATE OF CALIFORNIA

THE STATE OF CALIFORNIA OR ITS OFFICERS OR AGENTS SHALL NOT BE RESPONSIBLE FOR THE ACCURACY OR COMPLETENESS OF SCANNED COPIES OF THIS PLAN SHEET.

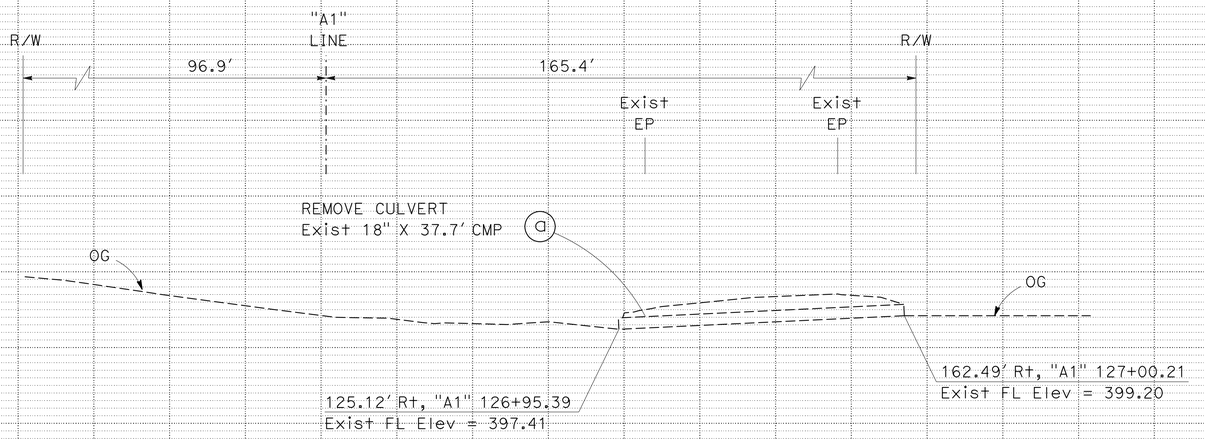

DRAINAGE SYSTEM No. 10

"A1" 126+95.39

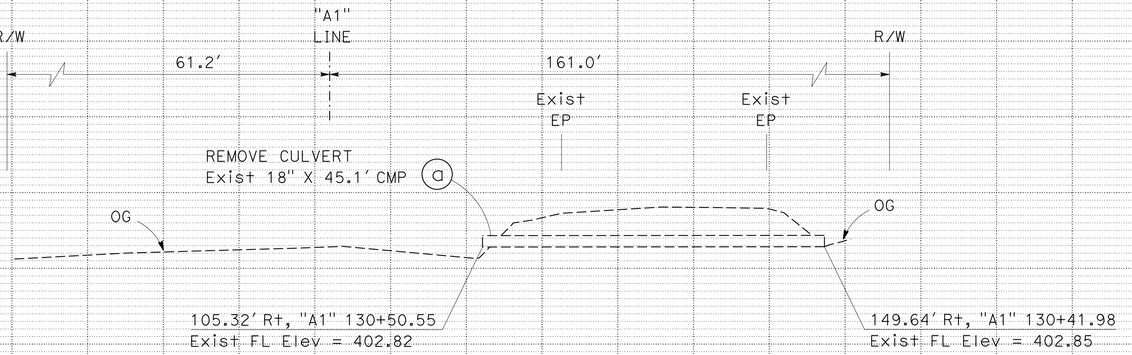

DRAINAGE SYSTEM No. 11

"A1" 130+41.98

DRAINAGE PROFILES

SCALE: Horiz 1" = 10'
Vert 1" = 10'

DP-6

REVISED BY | DATE REVISED

CHRIS ROCKEY — CALCULATED-DESIGNED BY
DENNIS JAGODA — CHECKED BY

FUNCTIONAL SUPERVISOR: DENNIS JAGODA

STATE OF CALIFORNIA - DEPARTMENT OF TRANSPORTATION
DIVISION OF ENGINEERING
Caltrans

LAST REVISION DATE PLOTTED => 15-JUN-2015
00-00-00 TIME PLOTTED => 15:50

BORDER LAST REVISED 7/2/2010 | USERNAME => s130875 | DGN FILE => 03000007251b006.dgn | RELATIVE BORDER SCALE IS IN INCHES 0 1 2 3 | UNIT 0359 | PROJECT NUMBER & PHASE 03000007251

Dist	COUNTY	ROUTE	POST MILES TOTAL PROJECT	SHEET No.	TOTAL SHEETS
03	Pla	193	4.4/5.5	55	197

REGISTERED CIVIL ENGINEER — 4-6-15 DATE

4-6-15
PLANS APPROVAL DATE

REGISTERED PROFESSIONAL ENGINEER — CHRIS ROCKEY No. C78030 Exp. 9-30-15 CIVIL — STATE OF CALIFORNIA

THE STATE OF CALIFORNIA OR ITS OFFICERS OR AGENTS SHALL NOT BE RESPONSIBLE FOR THE ACCURACY OR COMPLETENESS OF SCANNED COPIES OF THIS PLAN SHEET.

NOTE: BURIED MAN-MADE OBJECTS, REFER TO GEOTECHNICAL REPORTS IN SUPPLEMENTAL PROJECT INFORMATION.

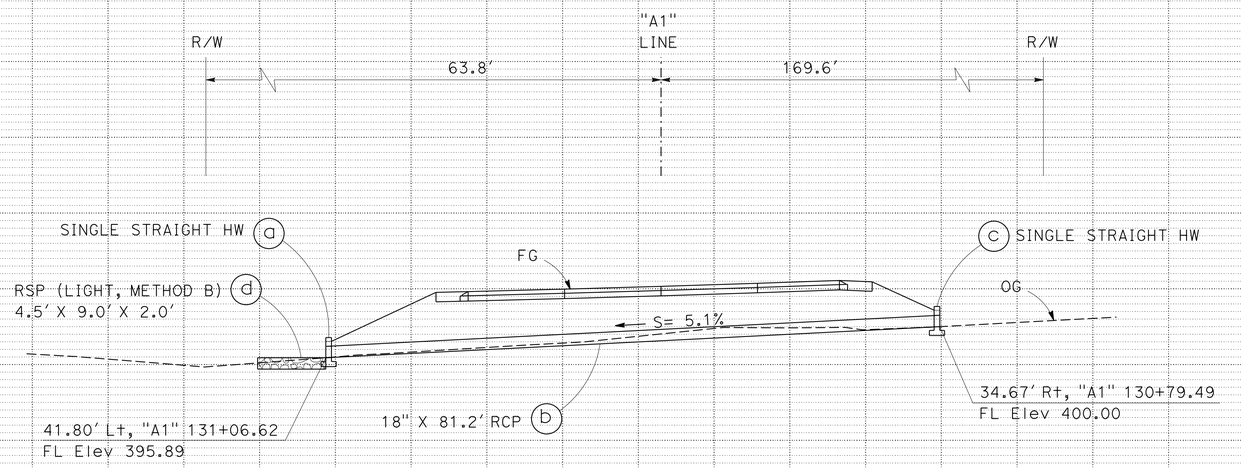

DRAINAGE SYSTEM No. 12

"A1" 130+91.79

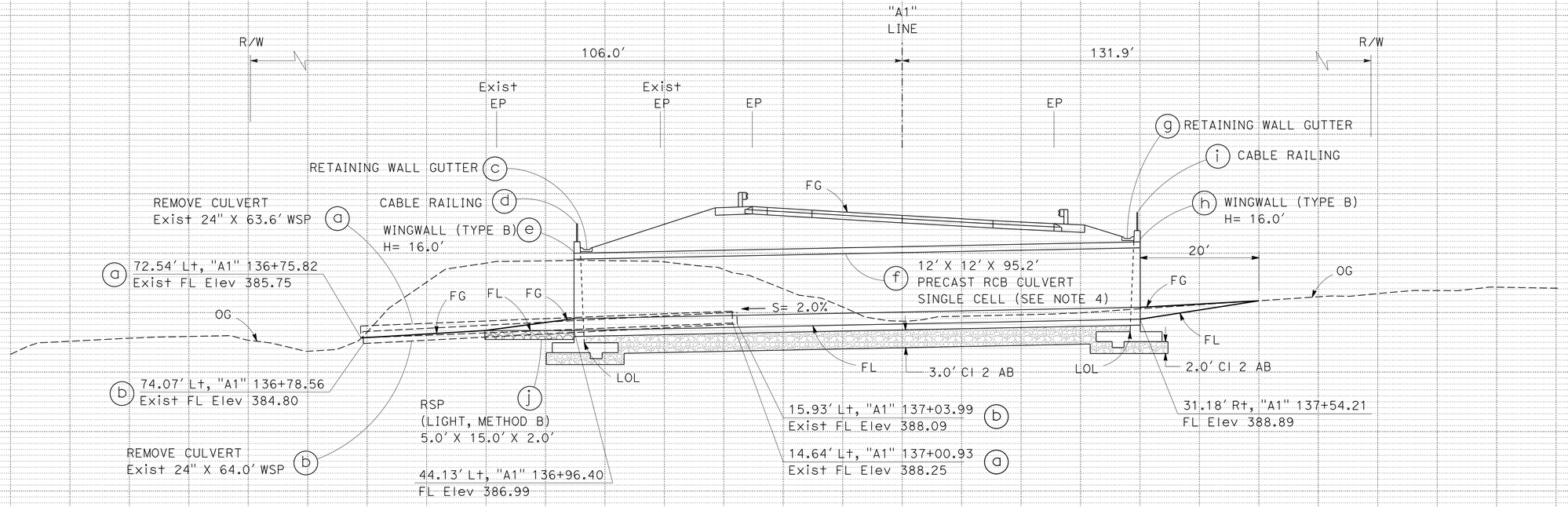

DRAINAGE SYSTEM No. 13

SEE NOTE THIS SHEET

"A1" 137+28.66

DRAINAGE PROFILES

SCALE: Horiz 1" = 10'
Vert 1" = 10'

DP-7

REVISED BY — DATE REVISED
CHRIS ROCKEY — DENNIS JAGODA
CALCULATED-DESIGNED BY — CHECKED BY
FUNCTIONAL SUPERVISOR — DENNIS JAGODA
STATE OF CALIFORNIA - DEPARTMENT OF TRANSPORTATION
DIVISION OF ENGINEERING
Caltrans

LAST REVISION — DATE PLOTTED => 16-JUN-2015 — TIME PLOTTED => 10:07 — 00-00-00

BORDER LAST REVISED 7/2/2010 | USERNAME => s130875 | DGN FILE => 0300000725ib007.dgn | RELATIVE BORDER SCALE IS IN INCHES 0 1 2 3 | UNIT 0359 | PROJECT NUMBER & PHASE 03000007251

Dist	COUNTY	ROUTE	POST MILES TOTAL PROJECT	SHEET No.	TOTAL SHEETS
03	Pla	193	4.4/5.5	56	197

REGISTERED CIVIL ENGINEER — 4-6-15 DATE

CHRIS ROCKEY No. C78030 Exp. 9-30-15 CIVIL — REGISTERED PROFESSIONAL ENGINEER — STATE OF CALIFORNIA

4-6-15
PLANS APPROVAL DATE

THE STATE OF CALIFORNIA OR ITS OFFICERS OR AGENTS SHALL NOT BE RESPONSIBLE FOR THE ACCURACY OR COMPLETENESS OF SCANNED COPIES OF THIS PLAN SHEET.

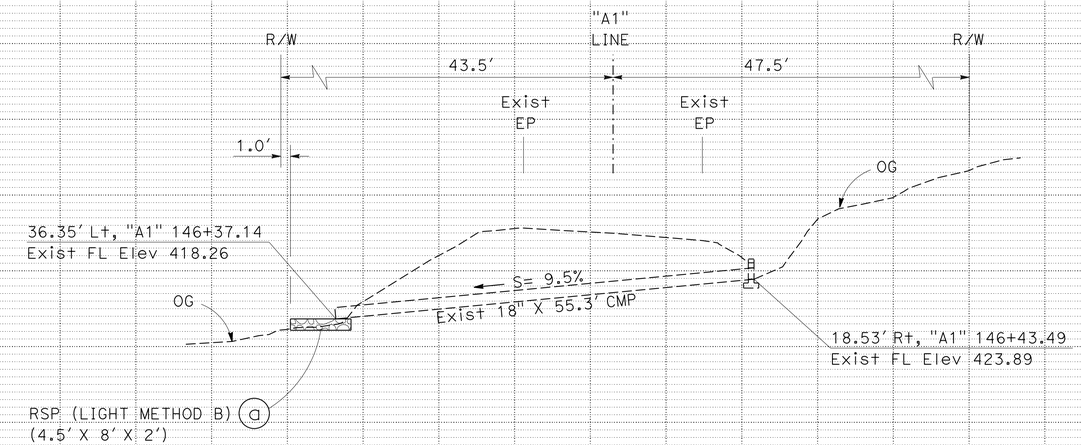

DRAINAGE SYSTEM No. 14

"A1" 146+41.14

DRAINAGE PROFILES

SCALE: Horiz 1" = 10′
Vert 1" = 10′

DP-8

CALCULATED-DESIGNED BY
CHECKED BY
CHRIS ROCKEY
DENNIS JAGODA
REVISED BY
DATE REVISED
FUNCTIONAL SUPERVISOR
DENNIS JAGODA
STATE OF CALIFORNIA - DEPARTMENT OF TRANSPORTATION
DIVISION OF ENGINEERING
Caltrans

LAST REVISION DATE PLOTTED => 15-JUN-2015
00-00-00 TIME PLOTTED => 15:50

BORDER LAST REVISED 7/2/2010
USERNAME => s130875
DGN FILE => 03000007251b008.dgn
RELATIVE BORDER SCALE IS IN INCHES 0 1 2 3
UNIT 0359
PROJECT NUMBER & PHASE 03000007251

Dist	COUNTY	ROUTE	POST MILES TOTAL PROJECT	SHEET No.	TOTAL SHEETS
03	Pla	193	4.4/5.5	57	197

REGISTERED CIVIL ENGINEER — DATE 4-6-15

PLANS APPROVAL DATE 4-6-15

CHRIS ROCKEY No. C78030 Exp. 9-30-15 CIVIL — REGISTERED PROFESSIONAL ENGINEER — STATE OF CALIFORNIA

THE STATE OF CALIFORNIA OR ITS OFFICERS OR AGENTS SHALL NOT BE RESPONSIBLE FOR THE ACCURACY OR COMPLETENESS OF SCANNED COPIES OF THIS PLAN SHEET.

NOTES:

1. FOR CABLE RAILING SEE STANDARD PLAN RSP B11-47
2. FOR WINGWALLS SEE STANDARD PLAN D84
3. FOR 12′ X 12′ PRECAST RCB CULVERT SEE STANDARD PLAN RSP D83A
4. TOP OF MINOR Conc (MINOR STRUCTURE) WALLS AND FACE OF SLOPE APPLY A HEAVY BROOM FINISH.
5. FOR RETAINING WALL GUTTER SEE STANDARD PLAN B3-6.
6. REMOVE THE EXISTING CULVERT THEN FINISH WITH DITCH EXCAVATION.
7. FOR WALL DRAIN WITH PIPE DOME SEE STANDARD PLAN B3-6
8. BOX CULVERT TO BE BUILT IN 3 STAGES, SEE STAGE CONSTRUCTION PLANS.
9. PLASTIC PIPTE IS: 6" PLASTIC PIPE (SCHEDULE 40) (SUPPLY LINE).

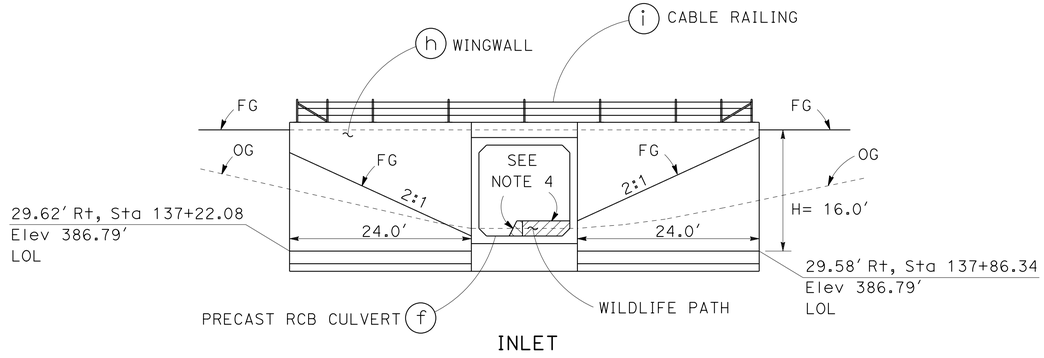

INLET

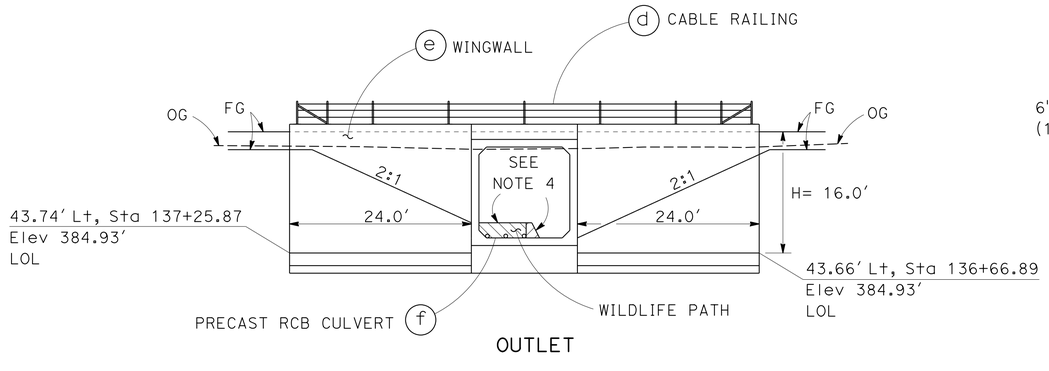

OUTLET

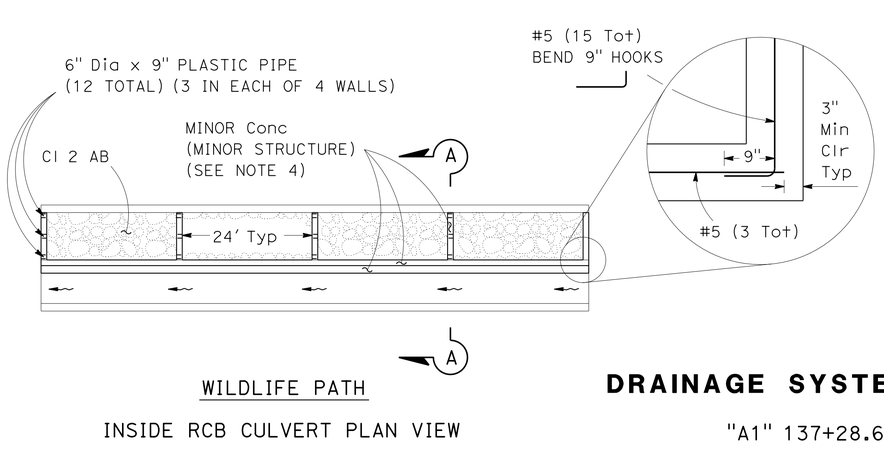

WILDLIFE PATH

INSIDE RCB CULVERT PLAN VIEW

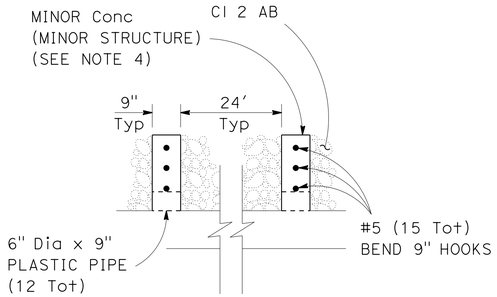

SECTION B-B

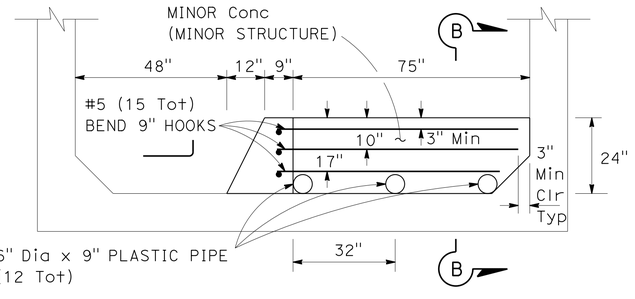

SECTION A-A

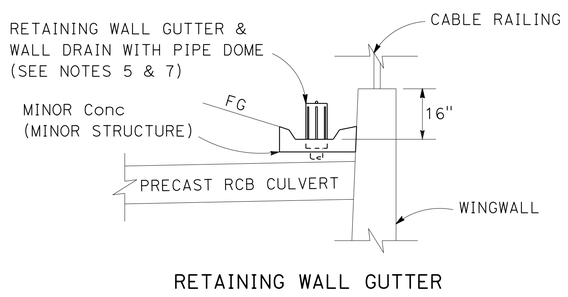

RETAINING WALL GUTTER

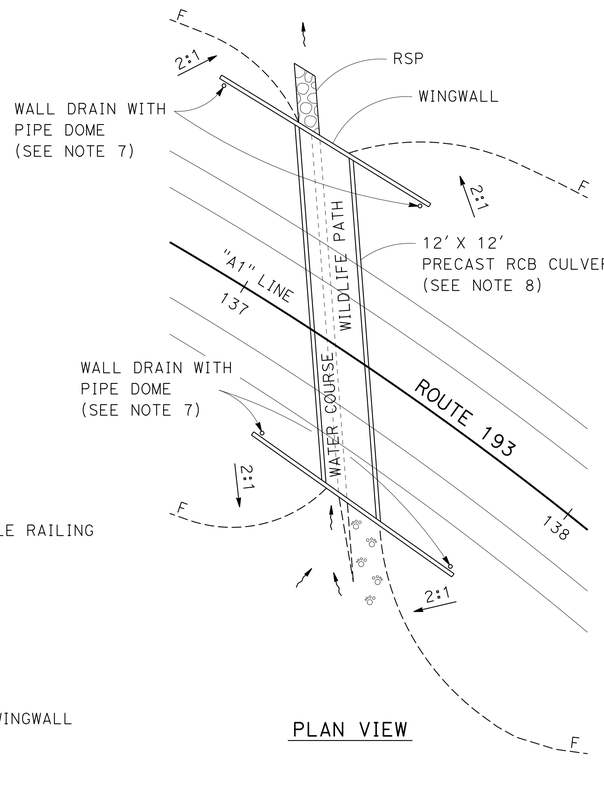

PLAN VIEW

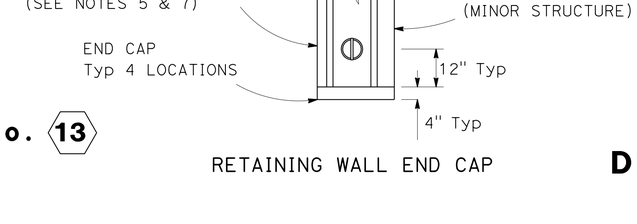

RETAINING WALL END CAP

DRAINAGE SYSTEM No. 13

"A1" 137+28.66

DRAINAGE DETAILS

NO SCALE

DD-1

STATE OF CALIFORNIA - DEPARTMENT OF TRANSPORTATION — DIVISION OF ENGINEERING

FUNCTIONAL SUPERVISOR: DENNIS JAGODA

CALCULATED-DESIGNED BY: CHRIS ROCKEY

CHECKED BY: DENNIS JAGODA

REVISED BY | DATE REVISED

LAST REVISION 03-27-14 | DATE PLOTTED => 15-JUN-2015 | TIME PLOTTED => 15:50

Dist	COUNTY	ROUTE	POST MILES TOTAL PROJECT	SHEET No.	TOTAL SHEETS
03	Pla	193	4.4/5.5	58	197

REGISTERED CIVIL ENGINEER — 4-6-15 DATE

CHRIS ROCKEY No. C78030 Exp. 9-30-15 CIVIL — REGISTERED PROFESSIONAL ENGINEER — STATE OF CALIFORNIA

4-6-15
PLANS APPROVAL DATE

THE STATE OF CALIFORNIA OR ITS OFFICERS OR AGENTS SHALL NOT BE RESPONSIBLE FOR THE ACCURACY OR COMPLETENESS OF SCANNED COPIES OF THIS PLAN SHEET.

NOTES:

1. REMOVE THE EXISTING CULVERT THEN FINISH WITH DITCH EXCAVATION.
2. FOR DITCH EXCAVATION THE STATION AND OFFSET IS TO THE CENTERLINE OF THE CULVERT.

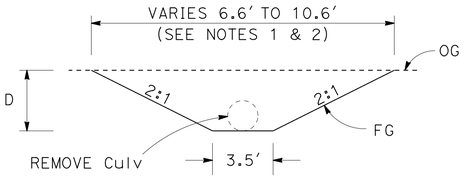

DITCH EXCAVATION

DITCH EXCAVATION

STATION		LOCATION	CULVERT DIAMETER	LENGTH	D	DITCH Exc
		L†/R†	IN	FT	FT	CY
"A1" 113+57.13	"A1" 113+67.06	L†	18	34.6	4.0	58.9
"A1" 126+95.39	"A1" 127+00.00	R†	18	37.7	3.3	42.7
"A1" 130+41.98	"A1" 130+50.55	R†	18	45.1	5.3	95.8
					SUB-TOTAL	197.4 *

* FOR TOTAL SEE DRAINAGE QUANTITIES.

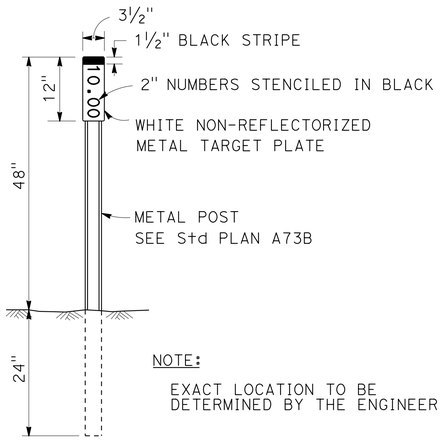

MARKER (CULVERT)

MARKER (CULVERT)

SHEET	#	STATION	LOCATION	QUANTITY	STENCIL
		FT	L†/R†	EA	PM
D-1	1	"A1" 103+50.72	R†	1	4.60
D-1	1	"A1" 103+61.59	L†	1	4.60
D-1	1	"A1" 104+22.91	R†	1	4.61
D-2	6	"A1" 118+85.97	R†	1	4.89
D-2	6	"A1" 119+03.56	L†	1	4.89
D-2	9	"A1" 124+47.54	L†	1	4.99
D-2	9	"A1" 125+63.66	R†	1	5.01
D-3	12	"A1" 130+79.49	R†	1	5.11
D-3	12	"A1" 131+06.62	L†	1	5.12
D-3	13	"A1" 136+96.40	L†	1	5.23
D-3	13	"A1" 137+54.21	R†	1	5.24
D-4	14	"A1" 146+37.14	L†	1	5.41
D-4	14	"A1" 146+43.49	R†	1	5.41
			SUB-TOTAL	13 *	

* FOR TOTAL SEE DRAINAGE QUANTITIES.

RSP DITCH

RSP DITCH

STATION		LOCATION	LENGTH	RSP (FACING, METHOD B)	RSP FABRIC (CLASS 8)
FT		L†/R†	FT	CY	SQYD
"A1" 102+98.41	"A1" 103+41.37	R†	45.2	33.5	76.5
"A1" 104+02.82	"A1" 105+49.43	L†	150.9	111.8	241.0
"A1" 104+39.16	"A1" 104+66.07	R†	29.5	10.9	52.1
"A1" 117+98.61	"A1" 118+82.74	R†	80.8	29.9	131.9
"A1" 124+71.30	"A1" 126+00.00	L†	138.0	51.1	220.9
"A1" 133+50.46	"A1" 133+74.34	L†	27.0	20.0	48.2
"A1" 136+48.88	"A1" 137+14.27	R†	62.8	23.3	103.9
"A1" 138+16.47	"A1" 139+63.00	L†	173.4	64.2	276.0
			SUB-TOTAL	344.7 *	1150.5 *

* FOR TOTAL SEE DRAINAGE QUANTITIES.

DRAINAGE DETAILS

NO SCALE

DD-2

REVISED BY | DATE REVISED
CHRIS ROCKEY | DENNIS JAGODA
CALCULATED-DESIGNED BY | CHECKED BY
FUNCTIONAL SUPERVISOR: DENNIS JAGODA
STATE OF CALIFORNIA - DEPARTMENT OF TRANSPORTATION
DIVISION OF ENGINEERING
Caltrans

LAST REVISION | DATE PLOTTED => 15-JUN-2015
03-27-14 | TIME PLOTTED => 15:50

BORDER LAST REVISED 7/2/2010 | USERNAME => s130875 | DGN FILE => 03000007251ic002.dgn | RELATIVE BORDER SCALE IS IN INCHES 0 1 2 3 | UNIT 0359 | PROJECT NUMBER & PHASE 03000007251

Dist	COUNTY	ROUTE	POST MILES TOTAL PROJECT	SHEET No.	TOTAL SHEETS
03	Pla	193	4.4/5.5	59	197

REGISTERED CIVIL ENGINEER — 4-6-15 DATE

CHRIS ROCKEY No. C78030 Exp. 9-30-15 CIVIL — REGISTERED PROFESSIONAL ENGINEER — STATE OF CALIFORNIA

4-6-15
PLANS APPROVAL DATE

THE STATE OF CALIFORNIA OR ITS OFFICERS OR AGENTS SHALL NOT BE RESPONSIBLE FOR THE ACCURACY OR COMPLETENESS OF SCANNED COPIES OF THIS PLAN SHEET.

NOTES:

1. RSP (4T, METHOD A), SELECT 3 STONES APPROXIMATELY 4 TO 5 FEET IN DIAMETER AND PLACE AS SHOWN.
2. RSP SHOWN FOR PLANTING SEE LANDSCAPE PLANS.

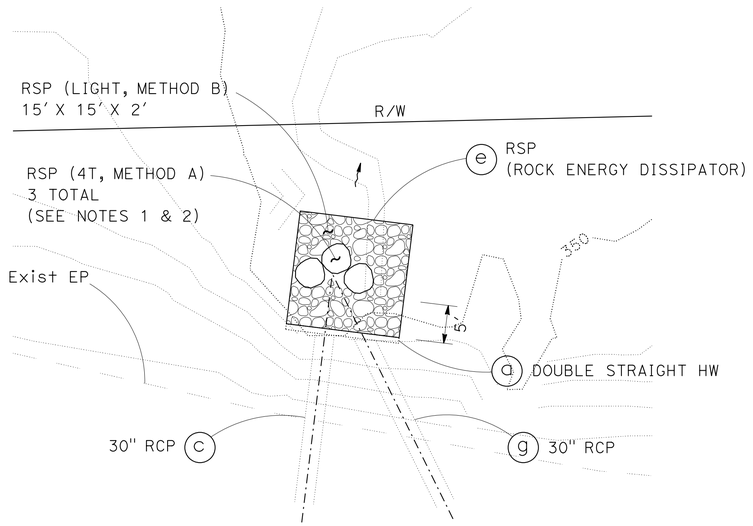

ROCK ENERGY DISSIPATOR

⬡1 "A1" 103+53.51

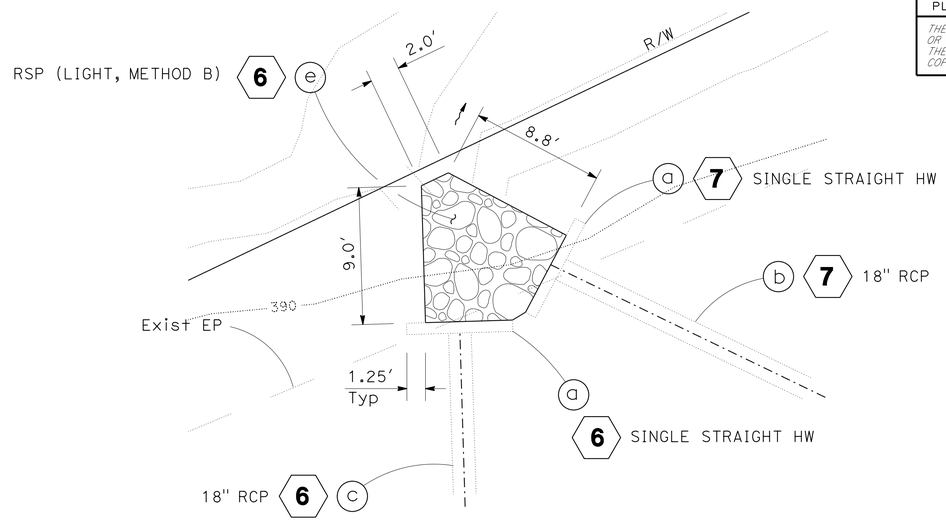

RSP

⬡6 "A1" 118+93.65

⬡7 "A1" 119+76.77

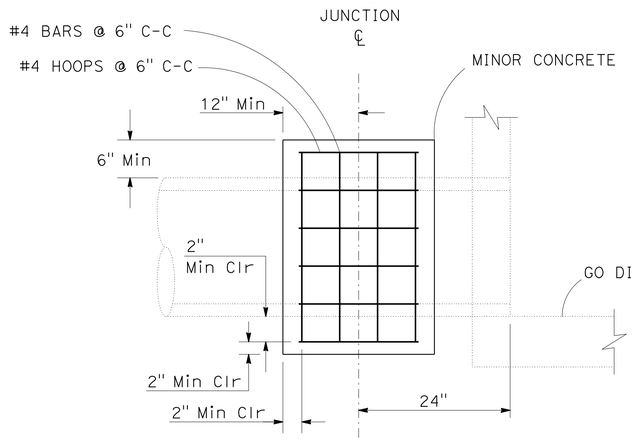

CONCRETE COLLAR SIDE VIEW

⬡7 "A1" 118+93.65

ROCK SLOPE PROTECTION

SYSTEM	STATION	LOCATION	RSP (LIGHT, METHOD B)	RSP (4T, METHOD A)	RSP FABRIC (CLASS 8)
	FT	Lt/Rt	CY	CY	SQYD
1	"A1" 103+53.51	Lt	16.7	10.1	-
6 & 7	"A1" 118+93.65	Lt	4.9	-	16.1
		SUB-TOTAL	21.6 *	10.1 *	16.1 *

* FOR TOTAL SEE DRAINAGE QUANTITIES.

DRAINAGE DETAILS

NO SCALE

DD-3

REVISED BY | DATE REVISED
CHRIS ROCKEY | DENNIS JAGODA
CALCULATED-DESIGNED BY | CHECKED BY
FUNCTIONAL SUPERVISOR: DENNIS JAGODA
STATE OF CALIFORNIA - DEPARTMENT OF TRANSPORTATION
DIVISION OF ENGINEERING
Caltrans

LAST REVISION | DATE PLOTTED => 15-JUN-2015
03-27-14 | TIME PLOTTED => 15:50

BORDER LAST REVISED 7/2/2010 | USERNAME => s130875 | DGN FILE => 0300000725ic003.dgn | RELATIVE BORDER SCALE IS IN INCHES 0 1 2 3 | UNIT 0359 | PROJECT NUMBER & PHASE 03000007251

Dist	COUNTY	ROUTE	POST MILES TOTAL PROJECT	SHEET No.	TOTAL SHEETS
03	Pla	193	4.4/5.5	60	197

REGISTERED CIVIL ENGINEER — 4-6-15 DATE

4-6-15
PLANS APPROVAL DATE

REGISTERED PROFESSIONAL ENGINEER
CHRIS ROCKEY
No. C78030
Exp. 9-30-15
CIVIL
STATE OF CALIFORNIA

THE STATE OF CALIFORNIA OR ITS OFFICERS OR AGENTS SHALL NOT BE RESPONSIBLE FOR THE ACCURACY OR COMPLETENESS OF SCANNED COPIES OF THIS PLAN SHEET.

NOTES:

1. DI MARKERS SHALL BE STAMPED CONCRETE IMPRINT, SEE STANDARD PLAN D71.
2. ALL PIPE JOINTS ARE TYPE STANDARD.
3. FOR MARKER (CULVERT), DITCH EXCAVATION AND RSP SEE DRAINAGE DETAILS.

DRAINAGE QUANTITIES

DRAINAGE SHEET	DRAINAGE SYSTEM No. (#)	DRAINAGE UNIT (⊗)	REMOVE CULVERT	18" REINFORCED CONCRETE PIPE	24" REINFORCED CONCRETE PIPE	30" REINFORCED CONCRETE PIPE	18" CONCRETE FLARED END SECTION	(N) MAXIMUM HEIGHT OF COVER	HEADWALL: MINOR CONCRETE (MINOR STRUCTURE)	HEADWALL: (N) BAR REINFORCING STEEL	ROCK SLOPE PROTECTION (LIGHT, METHOD B)	ROCK SLOPE PROTECTION FABRIC (CLASS 8)	DRAINAGE INLETS: (N) INLET TYPE	DRAINAGE INLETS: (N) FRAME GRATE TYPE	DRAINAGE INLETS: (N) HEIGHT OF INLET "H"	DRAINAGE INLETS: MINOR CONCRETE (MINOR STRUCTURE)	DRAINAGE INLETS: MISCELLANEOUS IRON AND STEEL	DRAINAGE INLETS: (N) STEPS	DRAINAGE INLETS: (1) DRAINAGE INLET MARKER	12' x 12' PRECAST REINFORCED CONCRETE BOX CULVERT	WINGWALL: STRUCTURAL CONCRETE, WINGWALL	WINGWALL: BAR REINFORCING STEEL	CABLE RAILING	6" PLASTIC PIPE (SCHEDULE 40) (SUPPLY LINE)	MINOR CONCRETE (MINOR STRUCTURE)	CONCRETE BACKFILL (PIPE TRENCH)	DESCRIPTION	STATION	DRAINAGE SYSTEM No. (#)	DRAINAGE UNIT (⊗)
			EA	LF	LF	LF	EA	FT	CY	LB	CY	SQYD			FT	CY	LB	EA	EA	LF	CY	LB	LF	LF	CY	CY				
D-1	1	a							2.20	126																	DOUBLE STRAIGHT HW	"A1" 103+61.59	1	a
		b	1					10.9																			REMOVE Culv	"A1" 103+53.51		b
		c				104.4		17.7																			30" RCP			c
		d							1.52	90																	SINGLE STRAIGHT HW	"A1" 103+50.72		d
		e									16.7																RSP (LIGHT, METHOD B)	"A1" 103+56.82		e
		f	1					10.0																			REMOVE Culv	"A1" 103+74.34		f
		g				123.5		18.8																			30" RCP			g
		h							1.52	90																	SINGLE STRAIGHT HW	"A1" 104+22.91		h
D-1	2	a					1																				18" Conc FES		2	a
		b		62.7				2.1																		3.83	18" RCP	"A1" 107+63.35		b
		c					1																				18" Conc FES			c
D-1	3	a					1																				18" Conc FES		3	a
		b		103.8				1.9																		3.56	18" RCP	"A1" 110+75.00		b
		c					1																				18" Conc FES			c
D-1	4	a					1																				18" Conc FES		4	a
		b		96.1				2.0																		2.93	18" RCP	"A1" 110+75.00		b
		c					1																				18" Conc FES			c
D-1	5	a	1					3.1																			REMOVE Culv	"A1" 113+57.13	5	a
D-2	6	a							0.91	50																	SINGLE STRAIGHT HW	"A1" 119+03.56	6	a
		b	1					9.2																			REMOVE Culv	"A1" 119+07.80		b
		c		84.5																							18" RCP			c
		d							0.91	50																	SINGLE STRAIGHT HW	"A1" 118+85.97		d
		e									4.9	16.1															RSP (LIGHT, METHOD B)	"A1" 119+03.56		e
SHEET TOTAL			4	347.1		227.9	6		7.06		21.6	16.1														10.32				

(N) NOT A SEPARATE PAY ITEM, FOR INFORMATION ONLY.

(1) SEE NOTE 1.

CALCULATED-DESIGNED BY: CHRIS ROCKEY
CHECKED BY: DENNIS JAGODA
REVISED BY
DATE REVISED
FUNCTIONAL SUPERVISOR: DENNIS JAGODA

STATE OF CALIFORNIA - DEPARTMENT OF TRANSPORTATION
DIVISION OF ENGINEERING
Caltrans

DRAINAGE QUANTITIES

DQ-1

LAST REVISION: DATE PLOTTED => 15-JUN-2015
03-27-14 TIME PLOTTED => 15:50

BORDER LAST REVISED 7/2/2010 | USERNAME => s130875 | DGN FILE => 03000000725id001.dgn | RELATIVE BORDER SCALE IS IN INCHES 0 1 2 3 | UNIT 0359 | PROJECT NUMBER & PHASE 03000007251

Dist	COUNTY	ROUTE	POST MILES TOTAL PROJECT	SHEET No.	TOTAL SHEETS
03	Pla	193	4.4/5.5	61	197

4-6-15
REGISTERED CIVIL ENGINEER DATE

CHRIS ROCKEY No. C78030 Exp. 9-30-15 CIVIL — REGISTERED PROFESSIONAL ENGINEER — STATE OF CALIFORNIA

4-6-15
PLANS APPROVAL DATE

THE STATE OF CALIFORNIA OR ITS OFFICERS OR AGENTS SHALL NOT BE RESPONSIBLE FOR THE ACCURACY OR COMPLETENESS OF SCANNED COPIES OF THIS PLAN SHEET.

DRAINAGE QUANTITIES

DRAINAGE SHEET	DRAINAGE SYSTEM No. (#)	DRAINAGE UNIT (⊗)	REMOVE CULVERT	18" REINFORCED CONCRETE PIPE	24" REINFORCED CONCRETE PIPE	30" REINFORCED CONCRETE PIPE	18" CONCRETE FLARED END SECTION	(N) MAXIMUM HEIGHT OF COVER	HEADWALL: MINOR CONCRETE (MINOR STRUCTURE)	HEADWALL: (N) BAR REINFORCING STEEL	ROCK SLOPE PROTECTION (LIGHT, METHOD B)	ROCK SLOPE PROTECTION FABRIC (CLASS 8)	DRAINAGE INLETS: (N) INLET TYPE	DRAINAGE INLETS: (N) FRAME GRATE TYPE	DRAINAGE INLETS: (N) HEIGHT OF INLET "H"	DRAINAGE INLETS: MINOR CONCRETE (MINOR STRUCTURE)	DRAINAGE INLETS: MISCELLANEOUS IRON AND STEEL	DRAINAGE INLETS: (N) STEPS	DRAINAGE INLETS: (1) DRAINAGE INLET MARKER	12' x 12' PRECAST REINFORCED CONCRETE BOX CULVERT	WINGWALL: STRUCTURAL CONCRETE, WINGWALL	WINGWALL: BAR REINFORCING STEEL	CABLE RAILING	* 6" PLASTIC PIPE (SCHEDULE 40) (SUPPLY LINE)	* MINOR CONCRETE (MINOR STRUCTURE)	CONCRETE BACKFILL (PIPE TRENCH)	DESCRIPTION	STATION	DRAINAGE SYSTEM No. (#)	DRAINAGE UNIT (⊗)
			EA	LF	LF	LF	EA	FT	CY	LB	CY	SQYD			FT	CY	LB	EA	EA	LF	CY	LB	LF	LF	CY	CY				
D-2	7	a							0.91	50																	SINGLE STRAIGHT HW	"A1" 119+09.90	7	a
		b		144.7				9.4																			18" RCP WITH Conc COLLAR			b
		c											GO	24-12X	4.0	1.49	239	1	1								GO DI	"A1" 120+30.00		c
		d		95.6				2.5																		6.03	18" RCP			d
		e											GO	24-12X	2.5	1.24	239	1	1								GO DI	"A1" 121+32.28		e
D-2	8	a	1					2.2																			REMOVE Culv	"A1" 123+51.71	8	a
D-2	9	a							1.20	75																	SINGLE STRAIGHT HW	"A1" 124+47.54	9	a
		b			163.5			11.7																			24" RCP			b
		c							1.20	75																	SINGLE STRAIGHT HW	"A1" 125+63.66		c
		d									10.7	29.3															RSP (LIGHT, METHOD B)	"A1" 124+47.54		d
D-3	10	a	1					1.8																			REMOVE Culv	"A1" 126+95.39	10	a
D-3	11	a	1					3.7																			REMOVE Culv	"A1" 130+41.98	11	a
D-3	12	a							0.91	50																	SINGLE STRAIGHT HW	"A1" 131+06.62	12	a
		b		81.2				6.4																			18" RCP			b
		c							0.91	50																	SINGLE STRAIGHT HW	"A1" 130+79.49		c
		d									3.0	10.5															RSP (LIGHT, METHOD B)	"A1" 131+06.62		d
D-3	13	a	1					9.9																			REMOVE Culv	"A1" 136+75.82	13	a
		b	1					10.6																			REMOVE Culv	"A1" 136+78.56		b
		c															46								2.07		RETAINING WALL GUTTER			c
		d																				62.0					CABLE RAILING			d
		e																			80.2	8208					WINGWALL (TYPE A STRAIGHT)			e
		f								407										95.2				9.0	10.48		12' x 12' PRECAST RCB Culv	"A1" 137+28.66		f
		g															46								2.07		RETAINING WALL GUTTER			g
		h																			80.2	8208					WINGWALL (TYPE A STRAIGHT)			h
		i																				62.0					CABLE RAILING			i
		j									5.6	17.2															RSP (LIGHT, METHOD B)	"A1" 136+96.40		j
D-4	14	a									3.0	10.5															RSP (LIGHT, METHOD B)	"A1" 146+37.14	14	a
SHEET TOTAL			5	321.5	163.5				5.13		22.3	67.5				2.73	570		2	95.2	160.4	16416	124.0	9.0	14.62	6.03				

(N) NOT A SEPARATE PAY ITEM, FOR INFORMATION ONLY.
* SEE DRAINAGE DETAILS
(1) SEE NOTE 1.

DRAINAGE QUANTITIES

DQ-2

CALCULATED-DESIGNED BY: CHRIS ROCKEY
CHECKED BY: DENNIS JAGODA
REVISED BY
DATE REVISED
FUNCTIONAL SUPERVISOR: DENNIS JAGODA

STATE OF CALIFORNIA - DEPARTMENT OF TRANSPORTATION
DIVISION OF ENGINEERING
Caltrans

LAST REVISION: DATE PLOTTED => 15-JUN-2015
03-27-14 TIME PLOTTED => 15:50

Dist	COUNTY	ROUTE	POST MILES TOTAL PROJECT	SHEET No.	TOTAL SHEETS
03	Pla	193	4.4/5.5	62	197

REGISTERED CIVIL ENGINEER — 4-6-15 DATE

CHRIS ROCKEY No. C78030 Exp. 9-30-15 CIVIL — REGISTERED PROFESSIONAL ENGINEER — STATE OF CALIFORNIA

4-6-15
PLANS APPROVAL DATE

THE STATE OF CALIFORNIA OR ITS OFFICERS OR AGENTS SHALL NOT BE RESPONSIBLE FOR THE ACCURACY OR COMPLETENESS OF SCANNED COPIES OF THIS PLAN SHEET.

DRAINAGE QUANTITIES

	REMOVE CULVERT	18" REINFORCED CONCRETE PIPE	24" REINFORCED CONCRETE PIPE	30" REINFORCED CONCRETE PIPE	18" CONCRETE FLARED END SECTION	(N) MAXIMUM HEIGHT OF COVER	HEADWALL: MINOR CONCRETE (MINOR STRUCTURE)	HEADWALL: (N) BAR REINFORCING STEEL	ROCK SLOPE PROTECTION (LIGHT, METHOD B)	ROCK SLOPE PROTECTION FABRIC (CLASS 8)	DRAINAGE INLETS: (N) INLET TYPE	DRAINAGE INLETS: (N) FRAME GRATE TYPE	DRAINAGE INLETS: (N) HEIGHT OF INLET "H"	DRAINAGE INLETS: MINOR CONCRETE (MINOR STRUCTURE)	DRAINAGE INLETS: MISCELLANEOUS IRON AND STEEL	DRAINAGE INLETS: (N) STEPS	DRAINAGE INLETS: (1) DRAINAGE INLET MARKER	12' x 12' PRECAST REINFORCED CONCRETE BOX CULVERT	WINGWALL: STRUCTURAL CONCRETE, WINGWALL	WINGWALL: BAR REINFORCING STEEL	CABLE RAILING	6" PLASTIC PIPE (SCHEDULE 40) (SUPPLY LINE)	MINOR CONCRETE (MINOR STRUCTURE)	CONCRETE BACKFILL (PIPE TRENCH)	MARKER (CULVERT)	DITCH EXCAVATION	RSP (FACING, METHOD B)	RSP (4T, METHOD A)
	EA	LF	LF	LF	EA	FT	CY	LB	CY	SQYD			FT	CY	LB	EA	EA	LF	CY	LB	LF	LF	CY	CY	EA	CY	CY	CY
SHEET DQ-1	4	347.1		227.9	6		7.06		21.6	16.1														10.32				
SHEET DQ-2	5	321.5	163.5				5.13		22.3	67.5				2.73	570		2	95.2	160.4	16416	124.0	9.0	14.62	6.03				
SHEET DD-2										1150.5															13	197.4	344.7	
SHEET DD-3																												10.1
SUB-TOTAL	9	668.6	163.5	227.9	6		12.19		43.9	1234.1				2.73	570		2	95.2	160.4	16416	124.0	9.0	14.62	16.35				
TOTAL	9	668.6	163.5	227.9	6		*		43.9	1234.1				*	570		2	95.2	160.4	16416	124.0	9.0	*	16.35	13	197.4	344.7	10.1

(N) NOT A SEPARATE PAY ITEM, FOR INFORMATION ONLY.
* SEE THE SUMMARY OF QUANTITIES FOR MINOR CONCRETE (MINOR STRUCTURE) TOTAL.
(1) SEE NOTE 1.

APPROVED FOR DRAINAGE WORK ONLY

DRAINAGE QUANTITIES

DQ-3

CALCULATED-DESIGNED BY: CHRIS ROCKEY
CHECKED BY: DENNIS JAGODA
REVISED BY
DATE REVISED
FUNCTIONAL SUPERVISOR: DENNIS JAGODA
STATE OF CALIFORNIA - DEPARTMENT OF TRANSPORTATION
DIVISION OF ENGINEERING
Caltrans

LAST REVISION | DATE PLOTTED => 15-JUN-2015 | TIME PLOTTED => 15:50
03-27-14

BORDER LAST REVISED 7/2/2010 | USERNAME => s130875 | DGN FILE => 0300000725id003.dgn | RELATIVE BORDER SCALE IS IN INCHES 0 1 2 3 | UNIT 0359 | PROJECT NUMBER & PHASE 03000007251

Dist	COUNTY	ROUTE	POST MILES TOTAL PROJECT	SHEET No.	TOTAL SHEETS
03	Pla	193	4.4/5.5	63	197

Thomas A Langley 4-6-15
REGISTERED CIVIL ENGINEER DATE

4-6-15
PLANS APPROVAL DATE

REGISTERED PROFESSIONAL ENGINEER
TOM LANGLEY
No. 64882
Exp. 6-30-15
CIVIL
STATE OF CALIFORNIA

THE STATE OF CALIFORNIA OR ITS OFFICERS OR AGENTS SHALL NOT BE RESPONSIBLE FOR THE ACCURACY OR COMPLETENESS OF SCANNED COPIES OF THIS PLAN SHEET.

NOTES:

1. FOR ACCURATE RIGHT OF WAY DATA, CONTACT RIGHT OF WAY ENGINEERING AT THE DISTRICT OFFICE.
2. NOT ALL UTILITIES OUTSIDE STATE RIGHT OF WAY ARE SHOWN.
3. UTILITY OWNERSHIP:
   ELECTRICAL - PACIFIC GAS & ELECTRIC (PG&E)
   TELEPHONE - AMERICAN TELEPHONE & TELEGRAPH (AT&T)
   FIBER OPTIC - WAVE BROADBAND
   FIBER OPTIC - AMERICAN TELEPHONE & TELEGRAPH (AT&T)
   IRRIGATION - PRIVATE

LEGEND:

——w——w——	Exist IRRIGATION SUBSURFACE
——e——(oh)——	Exist ELECTRICAL OVERHEAD
——t——(oh)——	Exist TELEPHONE OVERHEAD
----jt——(oh)——	Exist JOINT OVERHEAD
——fo——(oh)——	Exist FIBER OPTIC OVERHEAD
----JT——(OH)——	NEW JOINT OVERHEAD

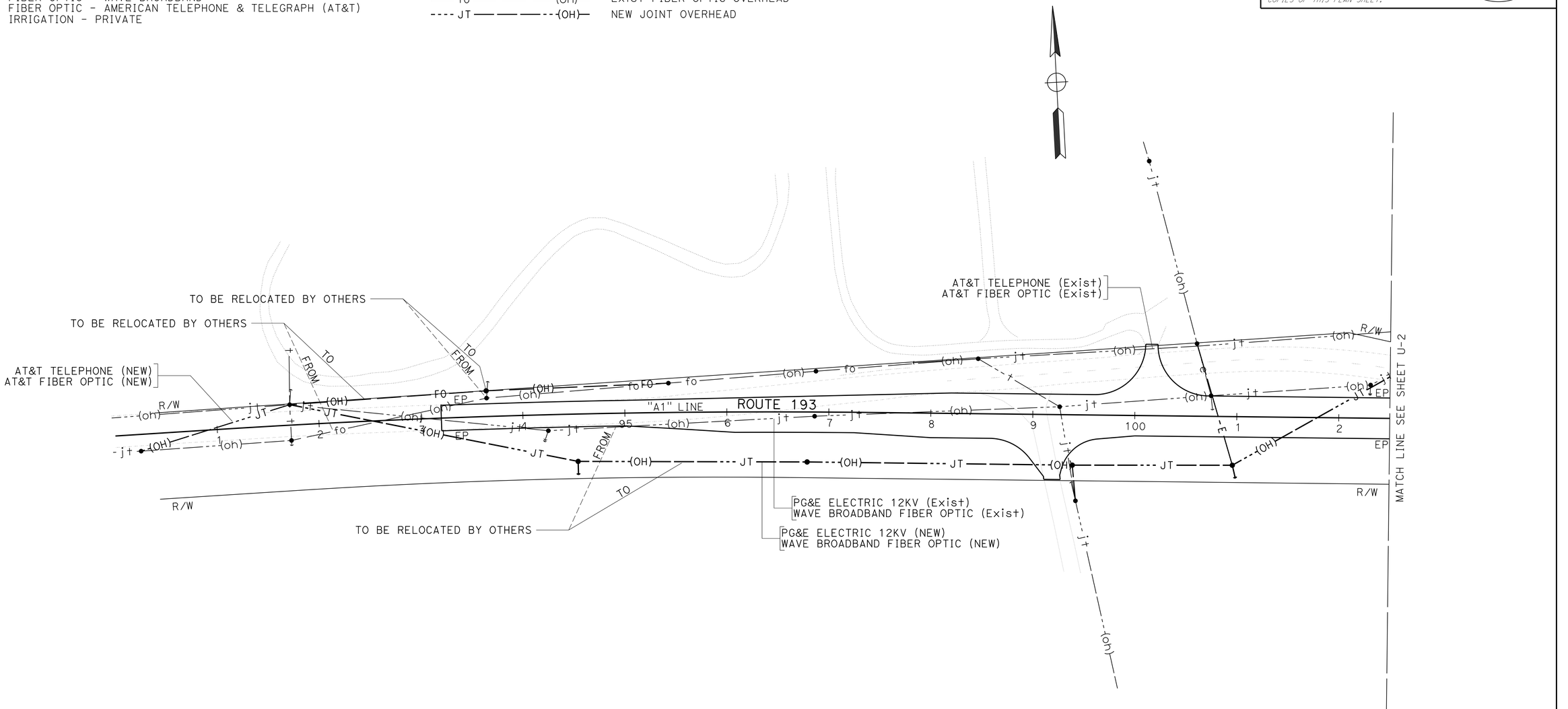

UTILITY PLAN

SCALE: 1"=50'

THIS PLAN FOR UTILITY INFORMATION ONLY

U-1

TOM LANGLEY — CALCULATED-DESIGNED BY
MASTRI ALVANDI — CHECKED BY
REVISED BY — DATE REVISED
FUNCTIONAL SUPERVISOR: MASTRI ALVANDI
STATE OF CALIFORNIA - DEPARTMENT OF TRANSPORTATION
DESIGN

LAST REVISION 04-06-15
DATE PLOTTED => 15-JUN-2015
TIME PLOTTED => 15:50

BORDER LAST REVISED 7/2/2010
USERNAME => s130875
DGN FILE => 0300000725ka001.dgn
RELATIVE BORDER SCALE IS IN INCHES 0 1 2 3
UNIT 0337
PROJECT NUMBER & PHASE 03000007251

Dist	COUNTY	ROUTE	POST MILES TOTAL PROJECT	SHEET No.	TOTAL SHEETS
03	Pla	193	4.4/5.5	64	197

Thomas A Langley 4-6-15
REGISTERED CIVIL ENGINEER DATE

4-6-15
PLANS APPROVAL DATE

REGISTERED PROFESSIONAL ENGINEER
TOM LANGLEY
No. 64882
Exp. 6-30-15
CIVIL
STATE OF CALIFORNIA

THE STATE OF CALIFORNIA OR ITS OFFICERS OR AGENTS SHALL NOT BE RESPONSIBLE FOR THE ACCURACY OR COMPLETENESS OF SCANNED COPIES OF THIS PLAN SHEET.

NOTE:

FOR ACCURATE RIGHT OF WAY DATA, CONTACT
RIGHT OF WAY ENGINEERING AT THE DISTRICT OFFICE.

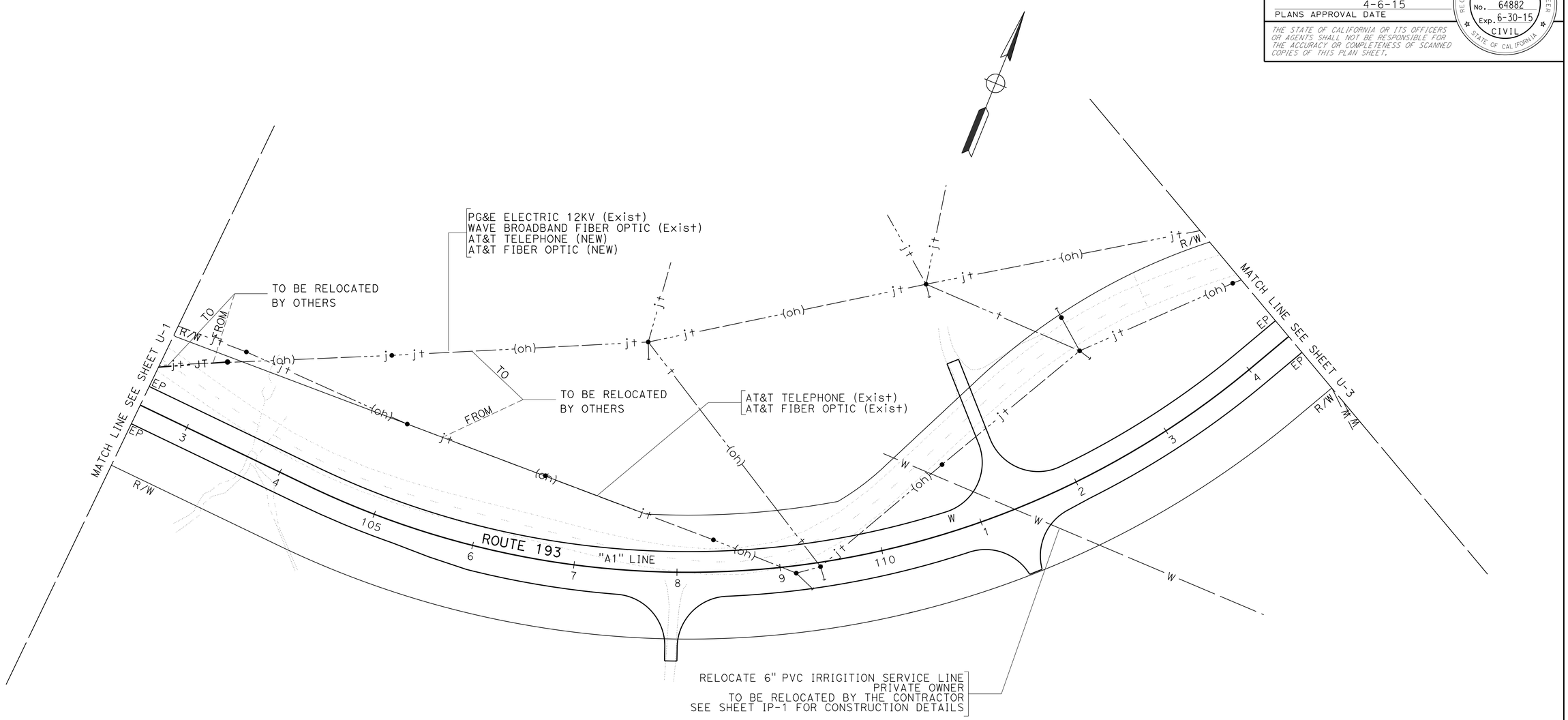

THIS PLAN FOR UTILITY INFORMATION ONLY

UTILITY PLAN

SCALE: 1"=50'

U-2

REVISED BY	DATE REVISED

CALCULATED-DESIGNED BY
TOM LANGLEY

CHECKED BY
MASTRI ALVANDI

FUNCTIONAL SUPERVISOR
MASTRI ALVANDI

STATE OF CALIFORNIA - DEPARTMENT OF TRANSPORTATION
DESIGN

LAST REVISION DATE PLOTTED => 15-JUN-2015
04-06-15 TIME PLOTTED => 15:50

BORDER LAST REVISED 7/2/2010

USERNAME => s130875
DGN FILE => 0300000725ka002.dgn

RELATIVE BORDER SCALE IS IN INCHES 0 1 2 3

UNIT 0337

PROJECT NUMBER & PHASE 03000007251

Dist	COUNTY	ROUTE	POST MILES TOTAL PROJECT	SHEET No.	TOTAL SHEETS
03	Pla	193	4.4/5.5	65	197

Thomas A Langley 4-6-15
REGISTERED CIVIL ENGINEER DATE

4-6-15
PLANS APPROVAL DATE

REGISTERED PROFESSIONAL ENGINEER
TOM LANGLEY
No. 64882
Exp. 6-30-15
CIVIL
STATE OF CALIFORNIA

THE STATE OF CALIFORNIA OR ITS OFFICERS OR AGENTS SHALL NOT BE RESPONSIBLE FOR THE ACCURACY OR COMPLETENESS OF SCANNED COPIES OF THIS PLAN SHEET.

NOTE:

FOR ACCURATE RIGHT OF WAY DATA, CONTACT
RIGHT OF WAY ENGINEERING AT THE DISTRICT OFFICE.

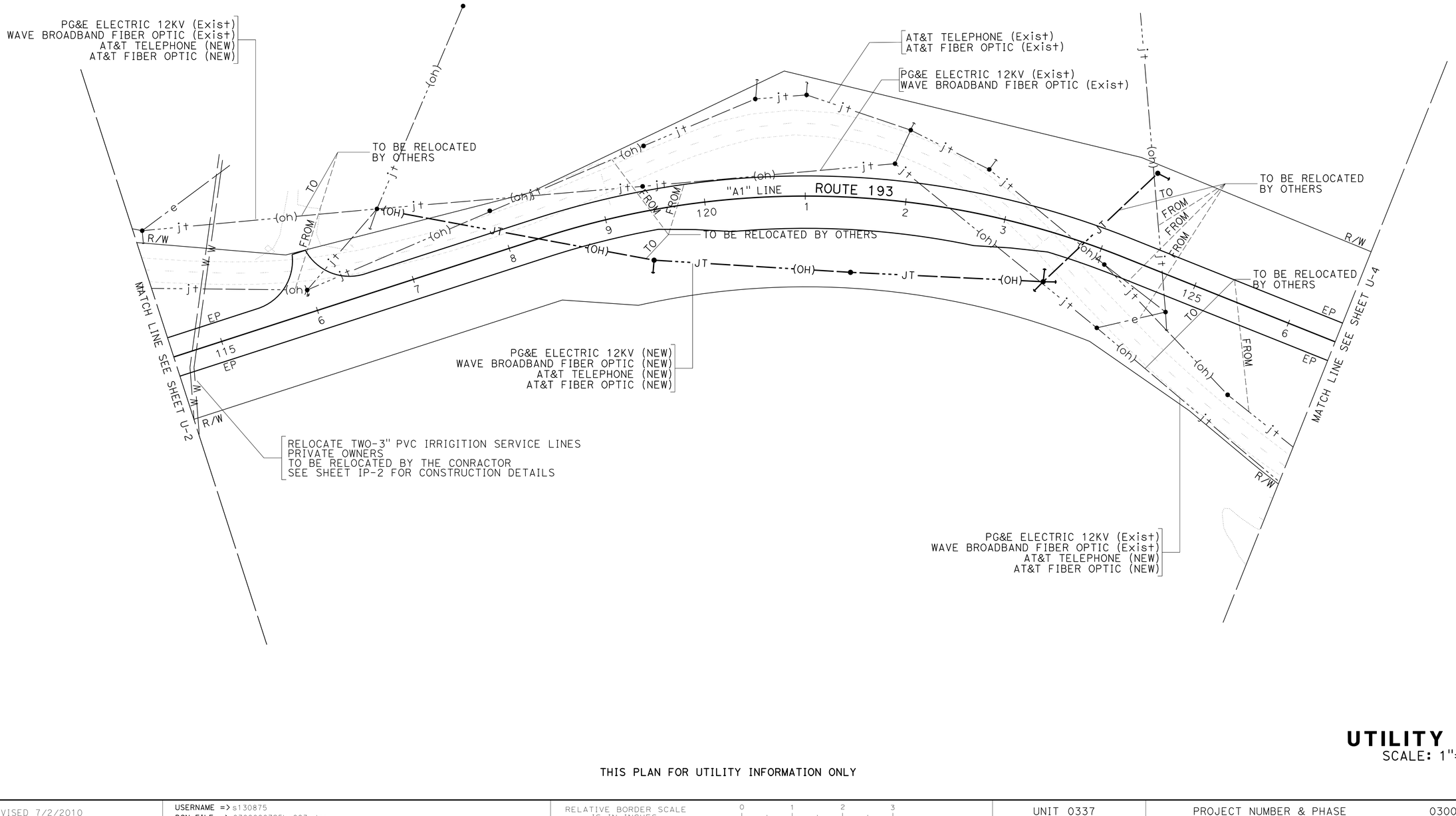

THIS PLAN FOR UTILITY INFORMATION ONLY

UTILITY PLAN

SCALE: 1"=50'

U-3

REVISED BY	DATE REVISED

CALCULATED-DESIGNED BY: TOM LANGLEY
CHECKED BY: MASTRI ALVANDI
FUNCTIONAL SUPERVISOR: MASTRI ALVANDI

STATE OF CALIFORNIA - DEPARTMENT OF TRANSPORTATION
DESIGN

LAST REVISION 04-06-15
DATE PLOTTED => 15-JUN-2015
TIME PLOTTED => 15:50

BORDER LAST REVISED 7/2/2010
USERNAME => s130875
DGN FILE => 0300000725ka003.dgn
RELATIVE BORDER SCALE IS IN INCHES 0 1 2 3
UNIT 0337
PROJECT NUMBER & PHASE 03000007251

Dist	COUNTY	ROUTE	POST MILES TOTAL PROJECT	SHEET No.	TOTAL SHEETS
03	Pla	193	4.4/5.5	66	197

Thomas A Langley 4-6-15
REGISTERED CIVIL ENGINEER DATE

4-6-15
PLANS APPROVAL DATE

REGISTERED PROFESSIONAL ENGINEER
TOM LANGLEY
No. 64882
Exp. 6-30-15
CIVIL
STATE OF CALIFORNIA

THE STATE OF CALIFORNIA OR ITS OFFICERS OR AGENTS SHALL NOT BE RESPONSIBLE FOR THE ACCURACY OR COMPLETENESS OF SCANNED COPIES OF THIS PLAN SHEET.

NOTE:

FOR ACCURATE RIGHT OF WAY DATA, CONTACT
RIGHT OF WAY ENGINEERING AT THE DISTRICT OFFICE.

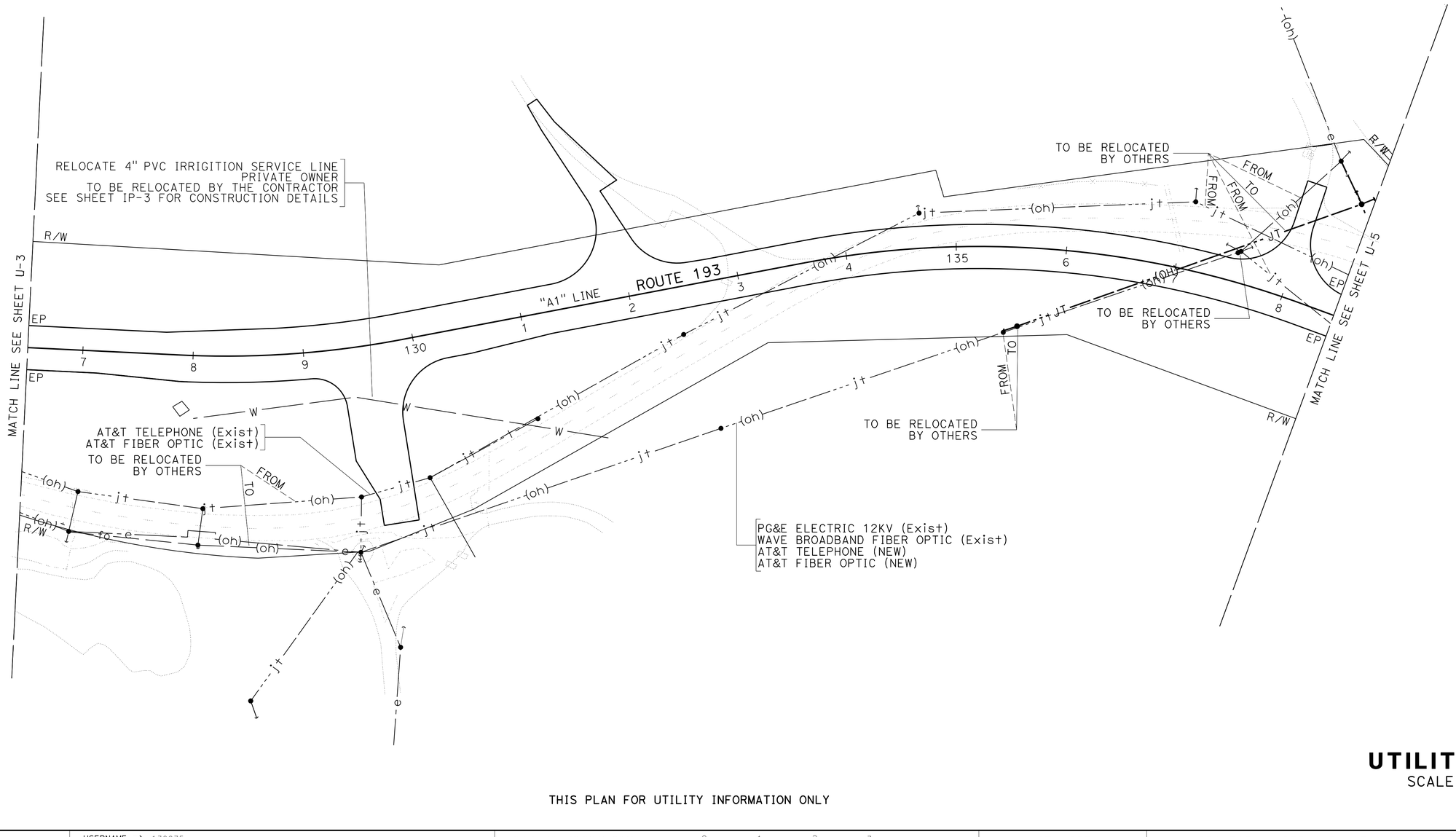

UTILITY PLAN

SCALE: 1"=50'

THIS PLAN FOR UTILITY INFORMATION ONLY

U-4

REVISED BY	DATE REVISED

CALCULATED-DESIGNED BY: TOM LANGLEY
CHECKED BY: MASTRI ALVANDI
FUNCTIONAL SUPERVISOR: MASTRI ALVANDI

STATE OF CALIFORNIA - DEPARTMENT OF TRANSPORTATION
DESIGN

LAST REVISION: DATE PLOTTED => 15-JUN-2015
04-06-15 TIME PLOTTED => 15:50

Dist	COUNTY	ROUTE	POST MILES TOTAL PROJECT	SHEET No.	TOTAL SHEETS
03	Pla	193	4.4/5.5	67	197

REGISTERED CIVIL ENGINEER 4-6-15 DATE

PLANS APPROVAL DATE 4-6-15

REGISTERED PROFESSIONAL ENGINEER TOM LANGLEY No. 64882 Exp. 6-30-15 CIVIL STATE OF CALIFORNIA

THE STATE OF CALIFORNIA OR ITS OFFICERS OR AGENTS SHALL NOT BE RESPONSIBLE FOR THE ACCURACY OR COMPLETENESS OF SCANNED COPIES OF THIS PLAN SHEET.

NOTE:

FOR ACCURATE RIGHT OF WAY DATA, CONTACT RIGHT OF WAY ENGINEERING AT THE DISTRICT OFFICE.

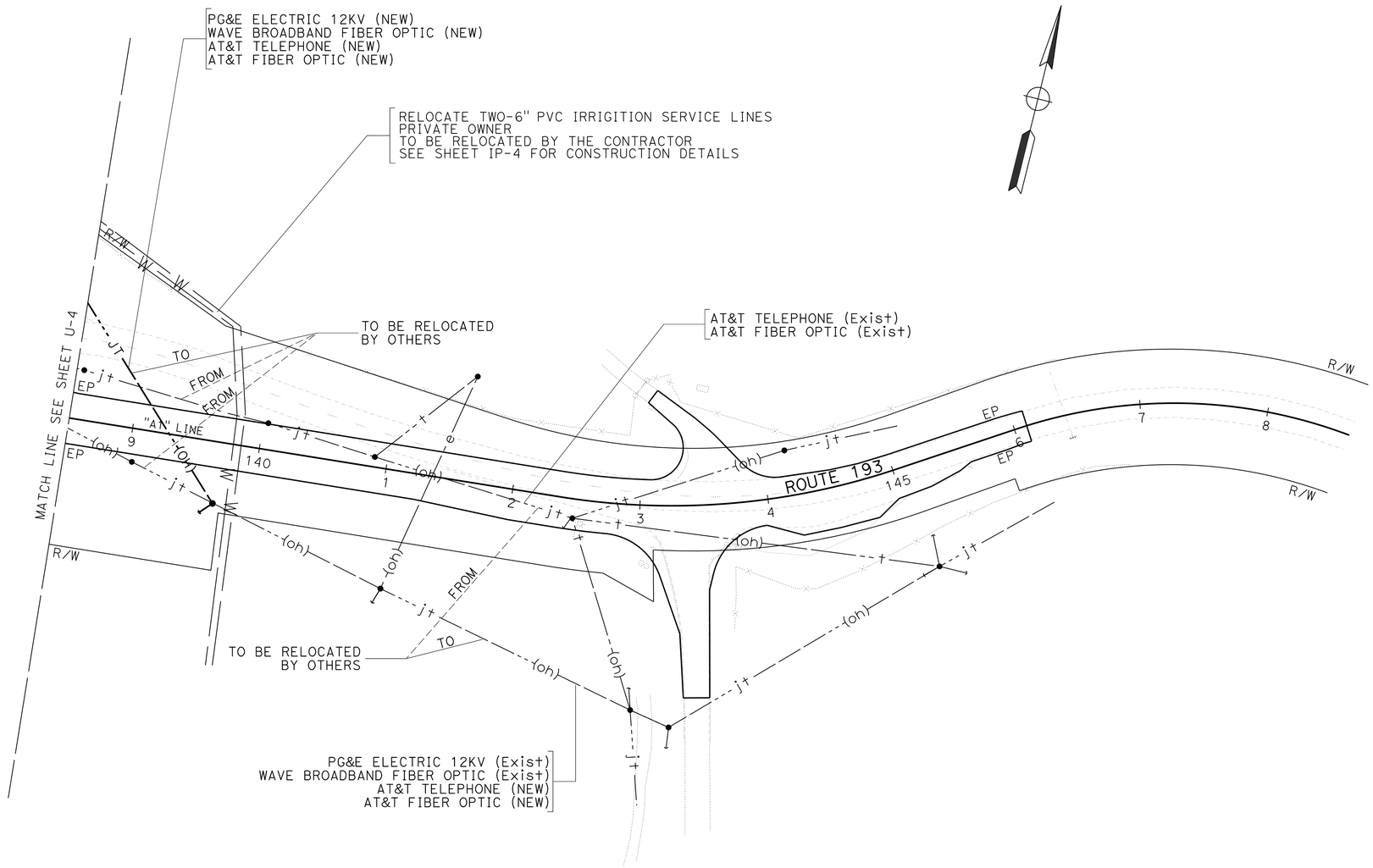

UTILITY PLAN

SCALE: 1"=50'

THIS PLAN FOR UTILITY INFORMATION ONLY

U-5

STATE OF CALIFORNIA - DEPARTMENT OF TRANSPORTATION

Caltrans DESIGN

FUNCTIONAL SUPERVISOR: MASTRI ALVANDI

CALCULATED-DESIGNED BY: TOM LANGLEY

CHECKED BY: MASTRI ALVANDI

REVISED BY

DATE REVISED

LAST REVISION 04-06-15

DATE PLOTTED => 15-JUN-2015

TIME PLOTTED => 15:50

STATIONARY MOUNTED CONSTRUCTION AREA SIGNS

SIGN LETTER	SIGN CODE		PANEL SIZE	SIGN MESSAGE	NUMBER OF POST AND SIZE	NUMBER OF SIGNS
	FEDERAL	CALIFORNIA				
A	W20-1	C23	48" x 48"	ROAD WORK AHEAD	1 - 6" x 6"	5
B		C40(Mod)	48" x 36"	TRAFFIC FINES DOUBLED IN WORK ZONES	1 - 4" x 6"	2
C	G20-2	C14	36" x 18"	END ROAD WORK	1 - 4" x 4"	2

NOTES:

1. EXACT SIGN LOCATION TO BE DETERMINED BY THE ENGINEER.
2. FOR ADDITIONAL CONSTRUCTION AREA SIGNS, SEE TRAFFIC HANDLING PLANS.

LEGEND

(X) CONSTRUCTION AREA SIGN LETTER

SIGN DETAIL

(B) C40(Mod)<CA>

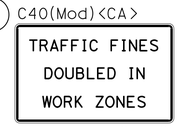

4" D SERIES LETTERS

48"x36"

RETROREFLECTIVE WHITE BACKGROUND WITH BLACK LEGEND AND BORDER.

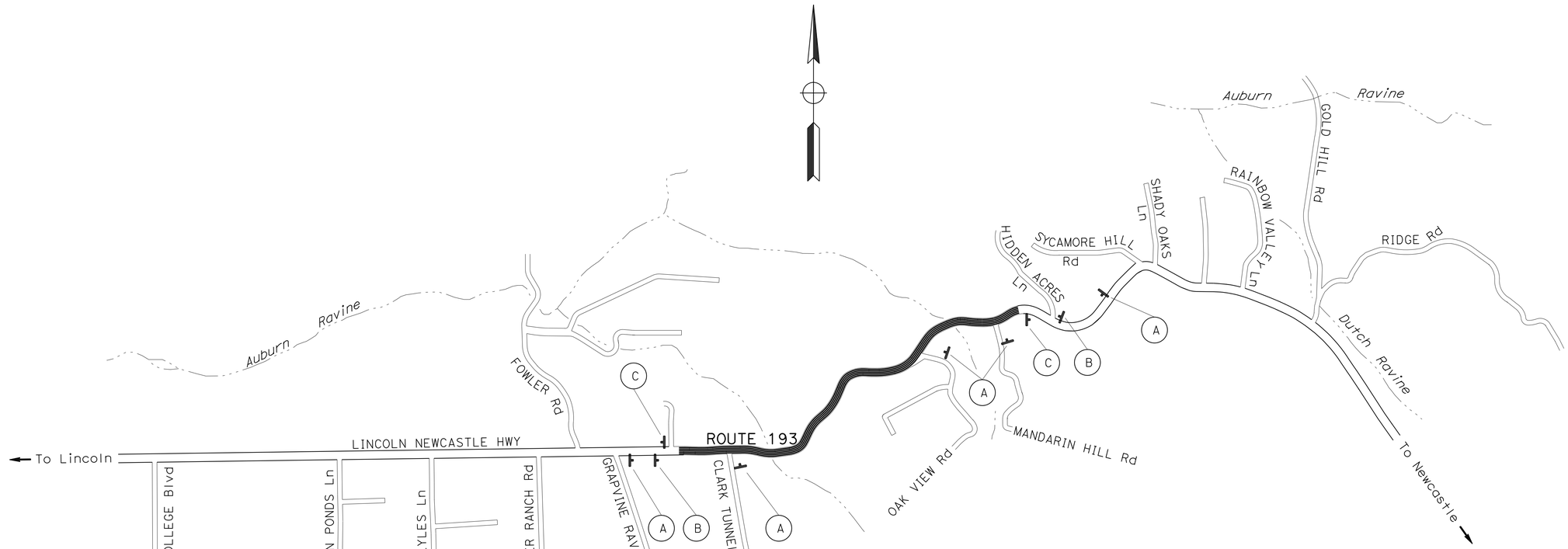

CONSTRUCTION AREA SIGNS

NO SCALE

CS-1

APPROVED FOR CONSTRUCTION AREA SIGN WORK ONLY

Dist	COUNTY	ROUTE	POST MILES TOTAL PROJECT	SHEET No.	TOTAL SHEETS
03	Pla	193	4.4/5.5	68	197

Kris M. Albers 4-6-15
REGISTERED CIVIL ENGINEER DATE

4-6-15
PLANS APPROVAL DATE

REGISTERED PROFESSIONAL ENGINEER
KRIS M. ALBERS
No. 49986
Exp. 6-30-15
CIVIL
STATE OF CALIFORNIA

THE STATE OF CALIFORNIA OR ITS OFFICERS OR AGENTS SHALL NOT BE RESPONSIBLE FOR THE ACCURACY OR COMPLETENESS OF SCANNED COPIES OF THIS PLAN SHEET.

REVISED BY | DATE REVISED

CALCULATED-
DESIGNED BY: CHUCK COOK
CHECKED BY: KRIS ALBERS

FUNCTIONAL SUPERVISOR: NARAYAN SELWAL

STATE OF CALIFORNIA - DEPARTMENT OF TRANSPORTATION
Caltrans®
TRAFFIC

LAST REVISION | DATE PLOTTED => 15-JUN-2015
04-06-15 | TIME PLOTTED => 15:50

BORDER LAST REVISED 7/2/2010 | USERNAME => s130875 | DGN FILE => 03000007251a001.dgn | RELATIVE BORDER SCALE IS IN INCHES 0 1 2 3 | UNIT 0390 | PROJECT NUMBER & PHASE 03000007251

Dist	COUNTY	ROUTE	POST MILES TOTAL PROJECT	SHEET No.	TOTAL SHEETS
03	Pla	193	4.4/5.5	69	197

Kris M. Albers 4-6-15
REGISTERED CIVIL ENGINEER DATE

4-6-15
PLANS APPROVAL DATE

REGISTERED PROFESSIONAL ENGINEER
KRIS M. ALBERS
No. 49986
Exp. 6-30-15
CIVIL
STATE OF CALIFORNIA

THE STATE OF CALIFORNIA OR ITS OFFICERS OR AGENTS SHALL NOT BE RESPONSIBLE FOR THE ACCURACY OR COMPLETENESS OF SCANNED COPIES OF THIS PLAN SHEET.

LEGEND

- * PCMS
- (No.) PCMS NUMBER
- WORK ZONE

PORTABLE CHANGEABLE MESSAGE SIGN LOCATION

PCMS	LOCATION			DESCRIPTION
	COUNTY	ROUTE	PM	
1	Pla	80	14.9	0.5 MILES EAST OF ROUTE 193 INTERCHANGE FWBT
2	Pla	80		ON EB EXIT RAMP TO ROUTE 193
3	Pla	80	4.7	0.5 MILES EAST OF ROUTE 65 INTERCHANGE FWBT
4	Pla	193	2.7	1200' WEST OF THE SIERRA COLLEGE Blvd INTERSECTION FEBT

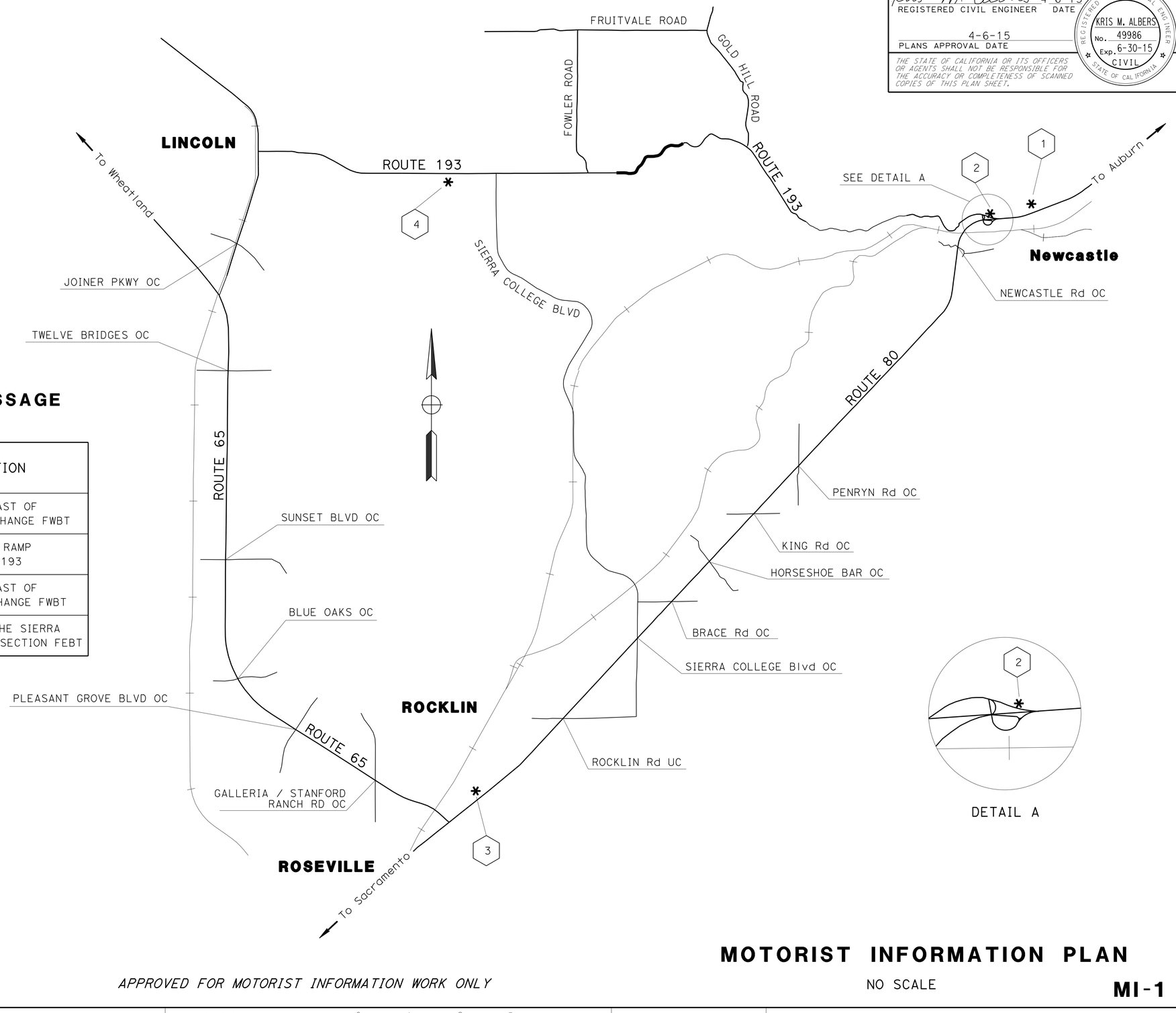

DETAIL A

APPROVED FOR MOTORIST INFORMATION WORK ONLY

MOTORIST INFORMATION PLAN

NO SCALE

MI-1

STATE OF CALIFORNIA - DEPARTMENT OF TRANSPORTATION
Caltrans®
TRAFFIC

FUNCTIONAL SUPERVISOR: NARAYAN SELWAL

CALCULATED-
DESIGNED BY: KRIS ALBERS
CHECKED BY: CHUCK COOK

REVISED BY | DATE REVISED

LAST REVISION | DATE PLOTTED => 15-JUN-2015
04-06-15 | TIME PLOTTED => 15:50

BORDER LAST REVISED 7/2/2010

USERNAME => s130875
DGN FILE => 03000007251b001.dgn

RELATIVE BORDER SCALE IS IN INCHES 0 1 2 3

UNIT 0390

PROJECT NUMBER & PHASE 03100007251

Dist	COUNTY	ROUTE	POST MILES TOTAL PROJECT	SHEET No.	TOTAL SHEETS
03	Pla	193	4.4/5.5	70	197

Thomas A Langley 4-6-15
REGISTERED CIVIL ENGINEER DATE

4-6-15
PLANS APPROVAL DATE

REGISTERED PROFESSIONAL ENGINEER
TOM LANGLEY
No. 64882
Exp. 6-30-15
CIVIL
STATE OF CALIFORNIA

THE STATE OF CALIFORNIA OR ITS OFFICERS OR AGENTS SHALL NOT BE RESPONSIBLE FOR THE ACCURACY OR COMPLETENESS OF SCANNED COPIES OF THIS PLAN SHEET.

NOTES:

GENERAL
1. FOR ACCURATE RIGHT OF WAY DATA, CONTACT RIGHT OF WAY ENGINEERING AT THE DISTRICT OFFICE.
2. STAGE CONSTRUCTION PLANS ACCURATE FOR STAGE CONSTRUCTION WORK ONLY.
3. PROVIDE ACCESS TO PUBLIC AND PRIVATE ROADS, DRIVEWAYS, AND MAILBOXES AT ALL TIMES.

LEGEND:

ROADBED CONSTRUCTION THIS STAGE

ROADBED CONSTRUCTION PREVIOUS STAGE

DIRECTION OF TRAFFIC

TEMPORARY RAILING (TYPE K)

ALTERNATIVE TEMPORARY CRASH CUSHION

ABBREVIATIONS:

ESA - ENVIRONMENTALLY SENSITIVE AREA
LL - LANE LINE

STAGE-1 (WORK TO BE PERFORMED)

1. OVERHEAD PUBLIC UTILITIES RELOCATED (BY OTHERS) THIS STAGE.
2. INSTALL CONSTRUCTION AREA SIGNS.
3. MAINTAIN TRAFFIC ON EXISTING HIGHWAY.
4. INSTALL TEMPORARY FENCE (TYPE ESA).
5. REMOVE AND INSTALL FENCING. (MAINTAIN "STOCK-TIGHTNESS" FOR CATTLE).
6. DEVELOP WATER SUPPLY.
7. INSTALL SHUT-OFF VALVES FOR SIX IRRIGATION LINES.
8. CLEAR AND GRUB CONSTRUCTION AREAS.
9. HARVEST AND STOCKPILE TOPSOIL.
10. INSTALL TEMPORARY RAILING (TYPE K) AND ALTERNATIVE TEMPORARY CRASH CUSHION WHERE SHOWN.
11. ROADWAY EXCAVATION AND EMBANKMENT STATION "A1" 94+00 TO 146+02.58.
12. INSTALL SURFACE STABILIZATION STATION "A1" 103+00 TO 104+50, 122+44 TO 125+85, AND 130+25 TO 131+50.
13. CONSTRUCT IRRIGATION CROSSOVERS (4 LOCATIONS).
14. CONSTRUCT ROADWAY STATION "A1" 124+03 TO 132+50. SEE SHEET SCD-2 FOR DETAILS SPECIFIC TO STATION "A1" 124+03.30 TO 124+75
15. CONSTRUCT TEMPORARY ROADWAY STATION "SC4" 321+49 TO 324+00.
16. CONSTRUCT TEMPORARY ROADWAY STATION "A1" 124+03 TO 124+75.
17. CONSTRUCT TEMPORARY ROADWAY STATION "SC5" 432+50 TO 435+25.
18. CONSTRUCT OAK VIEW ROAD APPROACH AND INTERSECTION STATION "A1" 129+64.
19. CONSTRUCT DRIVEWAY STATION "A1" 131+92.
20. CONSTRUCT DRAINAGE SYSTEM 9 AND 12.
21. BEGIN CONSTRUCT DRAINAGE SYSTEM 13.
22. PLACE TEMPORARY EROSION CONTROL.
23. PLACE FINAL EROSION CONTROL ON COMPLETED SLOPES.
24. PLACE TEMPORARY STRIPING FOR NEXT STAGE.

STAGE-2 (WORK TO BE PERFORMED)

1. INSTALL CONSTRUCTION AREA SIGNS.
2. CONSTRUCT PORTION OF PRECAST RCB CULVERT (DRAINAGE SYSTEM NO. 13) FOR WILDLIFE CROSSING STATION "A1" 137+00.
3. CONSTRUCT DRAINAGE SYSTEM NO. 2, 3, 4 & 8.
4. CONSTRUCT DRAINAGE SYSTEM NO. 1, 6 & 7 (PARTIAL).
5. CONSTRUCT ROADWAY STATION "A1" 97+50 TO 124+03 (BOTH PARTIAL AND FINAL).
6. CONSTRUCT CLARK TUNNEL ROAD INTERSECTION STATION "A1" 99+18.
7. CONSTRUCT DRIVEWAY STATION "A1" 107+96.
8. CONSTRUCT DRIVEWAYS STATION "A1" 111+32 (PARTIAL).
9. MAINTAIN ACCESS FOR DRIVEWAY STATION "A1" 116+00.
10. REMOVE DRAINAGE SYSTEMS NO. 8, 10, & 11.
11. REMOVE BASE AND SURFACING STATION "A1" 123+38 TO 134+00.
12. CONSTRUCT TEMPORARY ROADWAY STATION "SC2" 297+50 TO 300+50.00.
13. CONSTRUCT ROADWAY STATION "A1" 135+75 TO 140+50.
14. INSTALL MIDWEST GUARDRAIL SYSTEM AND END TREATMENT AT STATION "A1" 137+00 (R+).
15. PLACE TEMPORARY EROSION CONTROL.
16. PLACE FINAL EROSION CONTROL ON COMPLETED SLOPES.
17. PLACE TEMPORARY STRIPING FOR NEXT STAGE.

STAGE-3a (WORK TO BE PERFORMED)

1. INSTALL CONSTRUCTION AREA SIGNS.
2. SPLIT EB/WB TRAFFIC AT STATION "A1" 97+00 (Temp SC2 CROSSOVER). EB TRAFFIC ON NEW Rdwy, WB TRAFFIC ON EXISTING Rdwy TO "A1" 125+00 (Temp SC4 CROSSOVER). EB/WB TRAFFIC ON NEW ALIGNMENT FROM 125+00 TO 132+50, TRANSITION TO EXISTING ROADWAY AT SC5 TEMPORARY CROSSOVER.
3. REMOVE TRAFFIC STRIPE AND PAVEMENT MARKINGS.
4. REMOVE STAGE 1 TEMPORARY RAILING (TYPE K) FROM STATION "A1" 100+41 TO 107+80, 108+61 TO 110+16, AND 115+97 TO 120+07.
5. PLACE TEMPORARY RAILING (TYPE K) WITH ALTERNATIVE TEMPORARY CRASH CUSHION AS REQUIRED AT STATION "A1" 101+84 TO 109+60, FROM 102+81 TO 110+11, FROM 115+99 TO 120+00, AND FROM 116+48 TO 120+19.
6. MAINTAIN TRAFFIC ON NEW AND EXISTING ALIGNMENTS.
7. PLACE TEMPORARY LIGHTING FOR TRAFFIC AT BOTH CROSSOVERS.
8. CONSTRUCT ROADWAY FROM STATION "A1" 102+75 TO 109+50 (L+/R+), 116+00 TO 120+00 (L+), AND 122+25 TO 124+03 (L+).
9. CONSTRUCT DRAINAGE SYSTEMS 1 AND 6 (PARTIAL).
10. PLACE FINAL EROSION CONTROL ON COMPLETED SLOPES.
11. PLACE TEMPORARY STRIPING FOR NEXT STAGE.
12. DO NOT WINTERIZE THIS STAGE.

STAGE-3b (WORK TO BE PERFORMED)

1. INSTALL CONSTRUCTION AREA SIGNS.
2. REMOVE TEMPORARY RAILING (TYPE K) FROM STAGE 3a.
3. PLACE TEMPORARY RAILING (TYPE K) FROM STATION "A1" 101+98 TO 111+00 AND FROM "A1" 115+80 TO 120+00.
4. SHIFT EB AND WB TRAFFIC TO NEW ALIGNMENT AT TEMPORARY SC2 CROSSOVER AND SC5 CROSSOVER.
5. PLACE TEMPORARY LIGHTING FOR TRAFFIC CROSSOVER AS NEEDED.
6. MAINTAIN TRAFFIC ON NEW AND EXISTING ALIGNMENTS.
7. COMPLETE DRAINAGE SYSTEMS 1 AND 6. REMOVE DRAINAGE SYSTEMS 5, 10 AND 11.
8. CONSTRUCT ROADWAY FROM STATION "A1" 102+75 TO 107+00 (L+ SHOULDER), 107+00 TO 109+90 (L+ LANE AND L+ SHOULDER), 116+00 TO 120+00 (L+ SHOULDER).
9. COMPLETE DRIVEWAY STATION "A1" 111+31.68.
10. CONSTRUCT DRIVEWAY STATION "A1" 116+00.
11. OBLITERATE PAVEMENT.
12. REMOVE TEMPORARY RAILING (TYPE K) FROM STAGE 3b.
13. PLACE FINAL EROSION CONTROL ON COMPLETED SLOPES.
14. PLACE TEMPORARY STRIPING FOR NEXT STAGE.

THIS PLAN TO BE USED FOR STAGE CONSTRUCTION INFORMATION ONLY

STAGE CONSTRUCTION INDEX SHEET

NO SCALE

SC-1

REVISED BY | DATE REVISED
KULVIR DHALIWAL | TOM LANGLEY
CALCULATED-DESIGNED BY | CHECKED BY
FUNCTIONAL SUPERVISOR | MASTRI ALVANDI
STATE OF CALIFORNIA - DEPARTMENT OF TRANSPORTATION | DESIGN
Caltrans

LAST REVISION | DATE PLOTTED => 15-JUN-2015
04-06-15 | TIME PLOTTED => 15:50

BORDER LAST REVISED 7/2/2010 | USERNAME => s130875 | DGN FILE => 0300000725ma001.dgn | RELATIVE BORDER SCALE IS IN INCHES 0 1 2 3 | UNIT 0337 | PROJECT NUMBER & PHASE 03000007251

Dist	COUNTY	ROUTE	POST MILES TOTAL PROJECT	SHEET No.	TOTAL SHEETS
03	Pla	193	4.4/5.5	71	197

Thomas N Langley 4-6-15
REGISTERED CIVIL ENGINEER DATE

4-6-15
PLANS APPROVAL DATE

REGISTERED PROFESSIONAL ENGINEER
TOM LANGLEY
No. 64882
Exp. 6-30-15
CIVIL
STATE OF CALIFORNIA

THE STATE OF CALIFORNIA OR ITS OFFICERS OR AGENTS SHALL NOT BE RESPONSIBLE FOR THE ACCURACY OR COMPLETENESS OF SCANNED COPIES OF THIS PLAN SHEET.

STAGE-3c (WORK TO BE PERFORMED)

1. INSTALL CONSTRUCTION AREA SIGNS.
2. MAINTAIN TRAFFIC ON NEW AND EXISTING ROADWAY USING ONE-WAY TEMPORARY TRAFFIC CONTROLS.
3. CONSTRUCT ROADWAY Sta "A1" 93+20 TO 97+50.
4. CONSTRUCT DRIVEWAY AT Sta "A1" 100+16 (Lt).
5. PLACE LIGHTING FOR TEMPORARY TRAFFIC CROSSOVER DURING NIGHT AS NEEDED.
6. SHIFT TRAFFIC FROM EXISTING ROADWAY TO NEW ROADWAY.
7. REMOVE EXISTING TRAFFIC STRIPE AND PAVEMENT MARKINGS.
8. REMOVE BASE AND SURFACING.
9. PLACE FINAL EROSION CONTROL ON COMPLETED SLOPES.
10. PLACE TEMPORARY STRIPING FOR NEXT STAGE.

STAGE-4a (WORK TO BE PERFORMED)

1. INSTALL CONSTRUCTION AREA SIGNS.
2. MAINTAIN TRAFFIC ON EXISTING AND NEW HIGHWAY, USING ONE-WAY TEMPORARY TRAFFIC CONTROLS.
3. CONSTRUCT SC6 TEMPORARY CROSSOVER.
4. CONSTRUCT INTERSECTION AT Sta "A1" 143+42 (Rt)
5. CONSTRUCT DRIVEWAY AT Sta "A1" 143+65 (Lt).
6. CONSTRUCT ROADWAY FROM Sta "A1" 140+00 TO 140+50 (Lt), 140+50 TO 146+10 (Lt/Rt).
7. CONSTRUCT DRAINAGE SYSTEM 14.
8. PLACE FINAL EROSION CONTROL ON COMPLETED SLOPES.
9. PLACE TEMPORARY STRIPING FOR NEXT STAGE.

STAGE-4b (WORK TO BE PERFORMED)

1. INSTALL CONSTRUCTION AREA SIGNS.
2. CONSTRUCT 20′ WIDE ROADBED (RIGHT) FROM STATION 132+50 TO 135+75 UNDER ONE WAY TRAFFIC CONTROL (24HRS).
3. PLACE TEMPORARY RAILING (TYPE K) AND ALTERNATIVE TEMPORARY CRASH CUSHION FROM STATION "A1" 133+10 TO 137+31.
4. SHIFT TRAFFIC FROM 132+50 TO 142+00 (WESTBOUND TRAFFIC ON EXISTING ROADWAY AND EASTBOUND TRAFFIC ON NEW ROADWAY).
5. RELOCATE TEMPORARY RAILING (TYPE K) FROM STATION 135+70/138+20 (PLACED DURING STAGE-1) TO STATION 136+71/138+20 AFTER TRAFFIC SHIFT.
6. CONSTRUCT ADDITIONAL PRECAST RCB CULVERT (DRAINAGE SYSTEM 13).
7. CONSTRUCT ROADWAY FROM STATION "A1" 135+20 TO 137+50.
8. CONSTRUCT 20′ WIDE ROADBED (LEFT) FROM STATION 132+50 TO 135+20 UNDER ONE-WAY TRAFFIC CONTROL (24HRS). OVERLAY THE EXISTING PAVED AREA FROM STATION "A1" 132+50 TO 133+25 FROM 0 TO 0.55′.
9. REMOVE STAGE 4b TEMPORARY RAILING (TYPE K).
10. RELOCATE TEMPORARY RAILING (TYPE K) AND ALTERNATIVE TEMPORARY CRASH CUSHION (STAGE 4b ITEM 3) TO STATION "A1" 133+16 TO 137+31 FOR STAGE 4c.
11. SHIFT EB AND WB TRAFFIC TO NEW ROADWAY.
12. PLACE FINAL EROSION CONTROL ON COMPLETED SLOPES.
13. PLACE TEMPORARY STRIPING FOR NEXT STAGE.
14. DO NOT WINTERIZE THIS STAGE.

STAGE-4c (WORK TO BE PERFORMED)

1. INSTALL CONSTRUCTION AREA SIGNS.
2. COMPLETE CONSTRUCTION OF WILDLIFE CROSSING (DRAINAGE SYSTEM 13).
3. CONSTRUCT DRIVEWAY AT Sta "A1" 138+00 (Lt).
4. CONSTRUCT ROADWAY AT Sta "A1" 133+60 TO 137+32 (Lt SHOULDER).
5. OBLITERATE PAVEMENT.
6. CONSTRUCT MIDWEST GUARDRAILING SYSTEM (Lt).
7. REMOVE ALL STAGE 4c TEMPORARY RAILING (TYPE K) AND ALTERNATIVE TEMPORARY CRASH CUSHIONS.
8. PLACE RHMA-O.
9. PLACE PERMANENT ROADWAY DELINEATION.
10. PLACE PERMANENT EROSION CONTROL.
11. FINISH ROADWAY.
12. REMOVE CONSTRUCTION AREA SIGNS.

THIS PLAN TO BE USED FOR STAGE CONSTRUCTION INFORMATION ONLY

STAGE CONSTRUCTION
INDEX SHEET
NO SCALE

SC-2

REVISED BY | DATE REVISED
KULVIR DHALIWAL | TOM LANGLEY
CALCULATED-DESIGNED BY | CHECKED BY
FUNCTIONAL SUPERVISOR: MASTRI ALVANDI
STATE OF CALIFORNIA - DEPARTMENT OF TRANSPORTATION
DESIGN

LAST REVISION 04-06-15 | DATE PLOTTED => 15-JUN-2015 | TIME PLOTTED => 15:50

BORDER LAST REVISED 7/2/2010 | USERNAME => s130875 | DGN FILE => 0300000725ma002.dgn | RELATIVE BORDER SCALE IS IN INCHES 0 1 2 3 | UNIT 0337 | PROJECT NUMBER & PHASE 03000007251

Dist	COUNTY	ROUTE	POST MILES TOTAL PROJECT	SHEET No.	TOTAL SHEETS
03	Pla	193	4.4/5.5	72	197

Thomas A Langley 4-6-15
REGISTERED CIVIL ENGINEER DATE

4-6-15
PLANS APPROVAL DATE

REGISTERED PROFESSIONAL ENGINEER
TOM LANGLEY
No. 64882
Exp. 6-30-15
CIVIL
STATE OF CALIFORNIA

THE STATE OF CALIFORNIA OR ITS OFFICERS OR AGENTS SHALL NOT BE RESPONSIBLE FOR THE ACCURACY OR COMPLETENESS OF SCANNED COPIES OF THIS PLAN SHEET.

NOTE:

FOR ACCURATE RIGHT OF WAY DATA, CONTACT
RIGHT OF WAY ENGINEERING AT THE DISTRICT OFFICE.

STAGE CONSTRUCTION
(STAGE 1)

SCALE: 1"=50'

THIS PLAN TO BE USED FOR STAGE CONSTRUCTION INFORMATION ONLY

SC-3

CALCULATED-DESIGNED BY: KULVIR DHALIWAL
CHECKED BY: TOM LANGLEY
FUNCTIONAL SUPERVISOR: MASTRI ALVANDI
REVISED BY
DATE REVISED

STATE OF CALIFORNIA - DEPARTMENT OF TRANSPORTATION
Caltrans®
DESIGN

LAST REVISION DATE PLOTTED => 15-JUN-2015
04-06-15 TIME PLOTTED => 15:50

BORDER LAST REVISED 7/2/2010
USERNAME => s130875
DGN FILE => 0300000725ma003.dgn
RELATIVE BORDER SCALE IS IN INCHES 0 1 2 3
UNIT 0337
PROJECT NUMBER & PHASE 03000007251

Dist	COUNTY	ROUTE	POST MILES TOTAL PROJECT	SHEET No.	TOTAL SHEETS
03	Pla	193	4.4/5.5	73	197

Thomas A Langley 4-6-15
REGISTERED CIVIL ENGINEER DATE

4-6-15
PLANS APPROVAL DATE

REGISTERED PROFESSIONAL ENGINEER
TOM LANGLEY
No. 64882
Exp. 6-30-15
CIVIL
STATE OF CALIFORNIA

THE STATE OF CALIFORNIA OR ITS OFFICERS OR AGENTS SHALL NOT BE RESPONSIBLE FOR THE ACCURACY OR COMPLETENESS OF SCANNED COPIES OF THIS PLAN SHEET.

NOTE:

FOR ACCURATE RIGHT OF WAY DATA, CONTACT
RIGHT OF WAY ENGINEERING AT THE DISTRICT OFFICE.

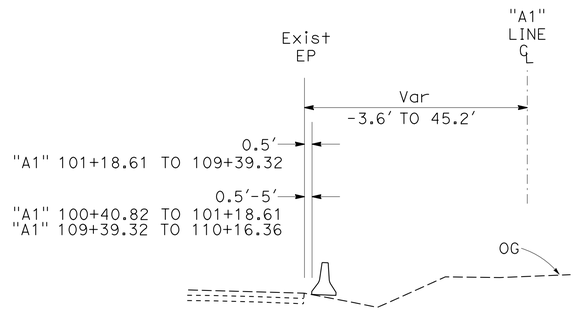

TYPICAL CROSS SECTION
"A1" 110+40.82 TO 110+16.36
NO SCALE

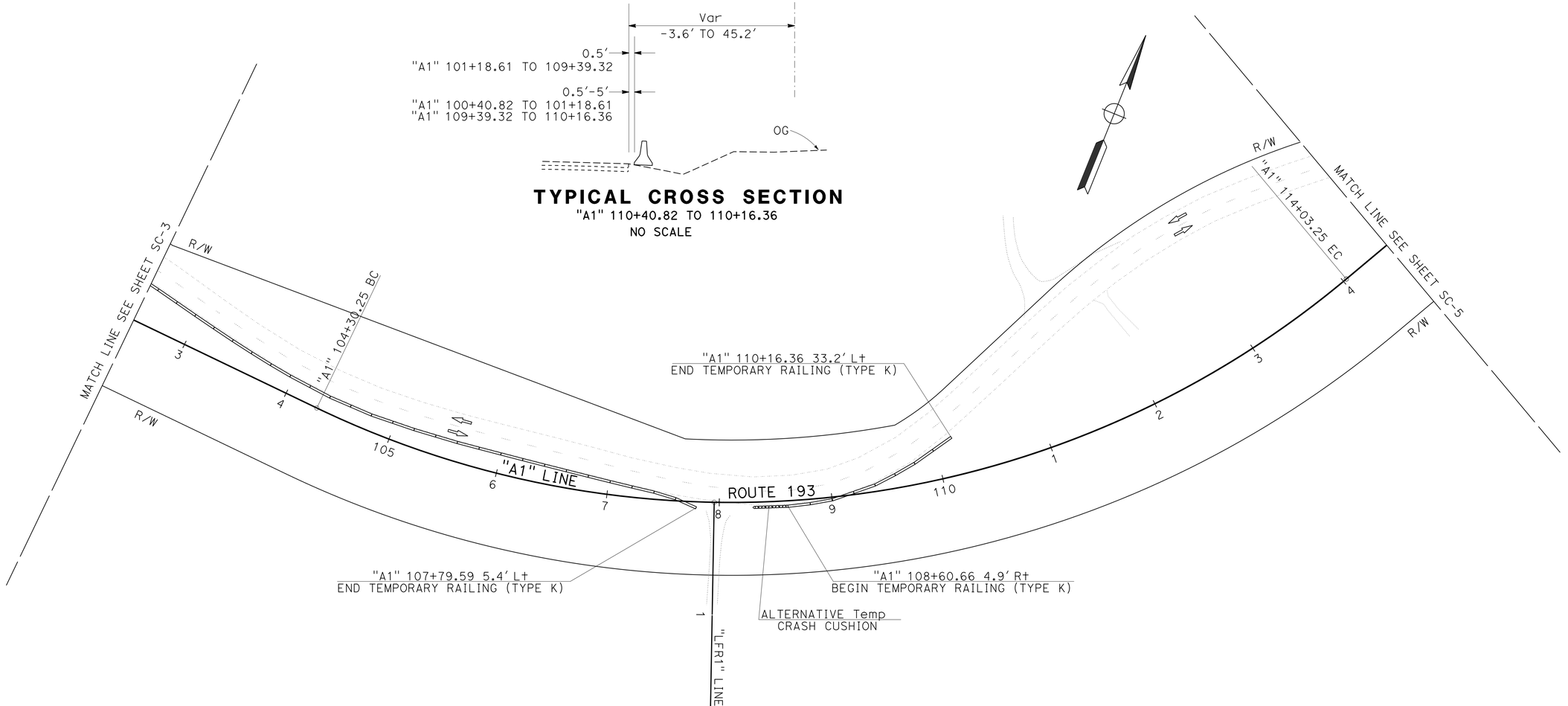

STAGE CONSTRUCTION
(STAGE 1)

SCALE: 1"=50′

THIS PLAN TO BE USED FOR STAGE CONSTRUCTION INFORMATION ONLY

SC-4

CALCULATED-DESIGNED BY
CHECKED BY
REVISED BY
DATE REVISED
KULVIR DHALIWAL
TOM LANGLEY
FUNCTIONAL SUPERVISOR
MASTRI ALVANDI
STATE OF CALIFORNIA - DEPARTMENT OF TRANSPORTATION
DESIGN

LAST REVISION DATE PLOTTED => 15-JUN-2015
04-06-15 TIME PLOTTED => 15:50

BORDER LAST REVISED 7/2/2010
USERNAME => s130875
DGN FILE => 0300000725ma004.dgn
RELATIVE BORDER SCALE IS IN INCHES 0 1 2 3
UNIT 0337
PROJECT NUMBER & PHASE 03000007251

Dist	COUNTY	ROUTE	POST MILES TOTAL PROJECT	SHEET No.	TOTAL SHEETS
03	Pla	193	4.4/5.5	74	197

Thomas A Langley 4-6-15
REGISTERED CIVIL ENGINEER DATE

4-6-15
PLANS APPROVAL DATE

REGISTERED PROFESSIONAL ENGINEER
TOM LANGLEY
No. 64882
Exp. 6-30-15
CIVIL
STATE OF CALIFORNIA

THE STATE OF CALIFORNIA OR ITS OFFICERS OR AGENTS SHALL NOT BE RESPONSIBLE FOR THE ACCURACY OR COMPLETENESS OF SCANNED COPIES OF THIS PLAN SHEET.

NOTES:

1. FOR ACCURATE RIGHT OF WAY DATA, CONTACT RIGHT OF WAY ENGINEERING AT THE DISTRICT OFFICE.
2. CONSTRUCT THE TIE-IN SECTION OF SC4 AS LAST ORDER OF THIS STAGE UNDER ONE WAY TRAFFIC CONTROL.

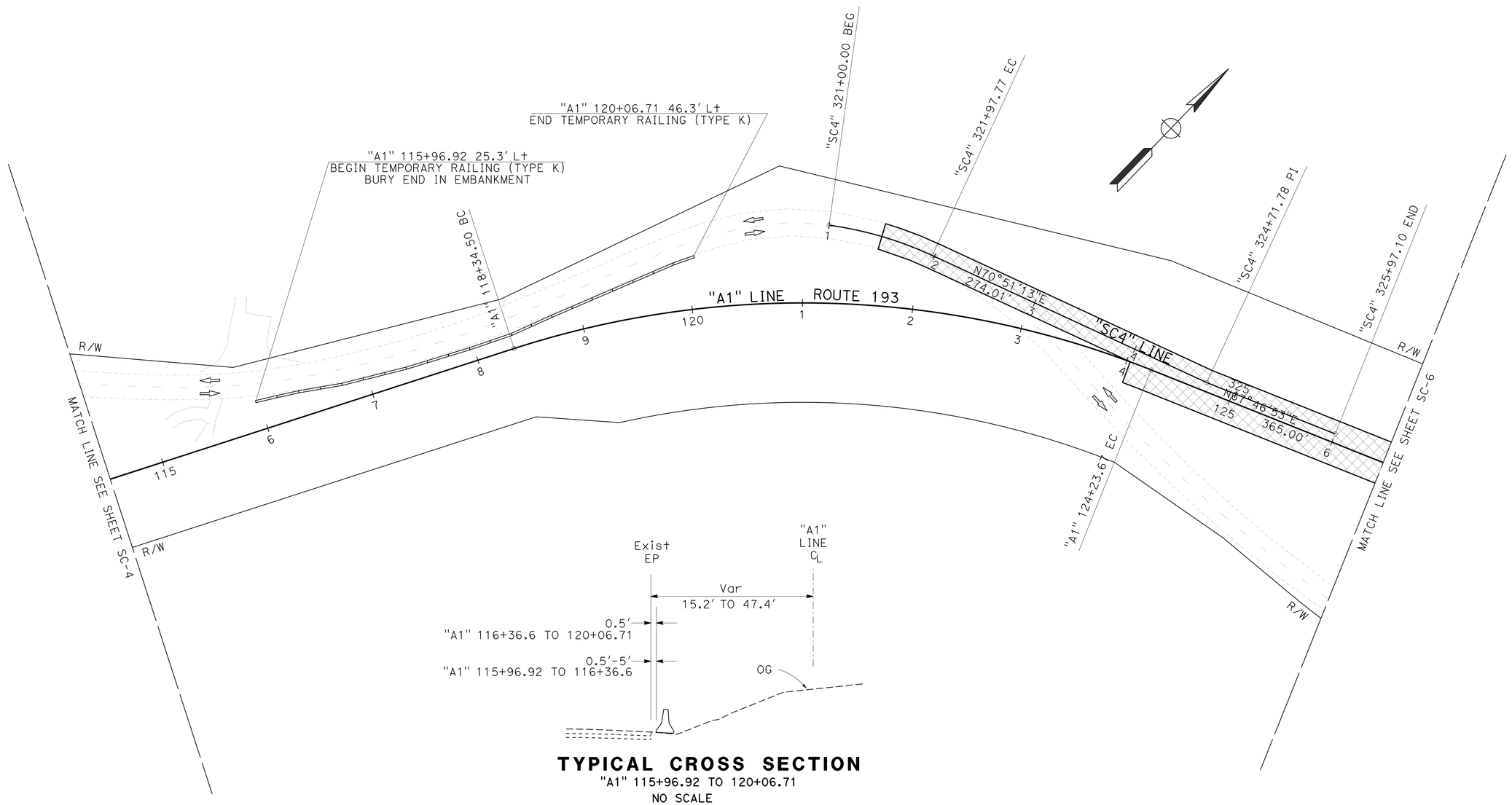

TYPICAL CROSS SECTION
"A1" 115+96.92 TO 120+06.71
NO SCALE

CURVE DATA

No. ⊕	R	Δ	T	L
202	330'	016°58'31"	49.25'	97.77'

THIS PLAN TO BE USED FOR STAGE CONSTRUCTION INFORMATION ONLY

STAGE CONSTRUCTION
(STAGE 1)
SCALE: 1"=50'

SC-5

REVISED BY	DATE REVISED

CALCULATED-DESIGNED BY
KULVIR DHALIWAL
CHECKED BY
TOM LANGLEY
FUNCTIONAL SUPERVISOR
MASTRI ALVANDI

STATE OF CALIFORNIA - DEPARTMENT OF TRANSPORTATION
DESIGN

LAST REVISION
DATE PLOTTED => 15-JUN-2015
TIME PLOTTED => 15:50
04-06-15

Dist	COUNTY	ROUTE	POST MILES TOTAL PROJECT	SHEET No.	TOTAL SHEETS
03	Pla	193	4.4/5.5	75	197

Thomas A Langley 4-6-15
REGISTERED CIVIL ENGINEER DATE

4-6-15
PLANS APPROVAL DATE

REGISTERED PROFESSIONAL ENGINEER
TOM LANGLEY
No. 64882
Exp. 6-30-15
CIVIL
STATE OF CALIFORNIA

THE STATE OF CALIFORNIA OR ITS OFFICERS OR AGENTS SHALL NOT BE RESPONSIBLE FOR THE ACCURACY OR COMPLETENESS OF SCANNED COPIES OF THIS PLAN SHEET.

NOTES:

1. FOR ACCURATE RIGHT OF WAY DATA, CONTACT RIGHT OF WAY ENGINEERING AT THE DISTRICT OFFICE.
2. CONSTRUCT THE TIE-IN SECTION OF SC5 AS LAST ORDER OF THIS STAGE UNDER ONE WAY TRAFFIC CONTROL.
3. CONSTRUCT THE TIE-IN SECTION OF OAK VIEW ROAD AS LAST ORDER OF THIS STAGE.

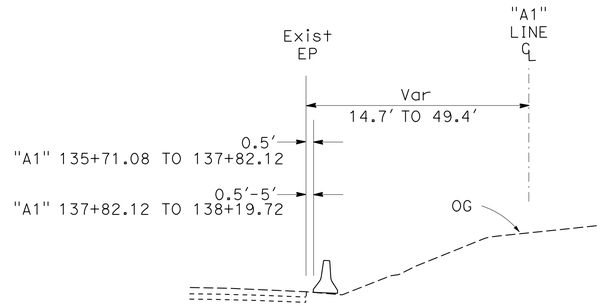

TYPICAL CROSS SECTION

"A1" 135+71.08 TO "A1" 138+19.72

NO SCALE

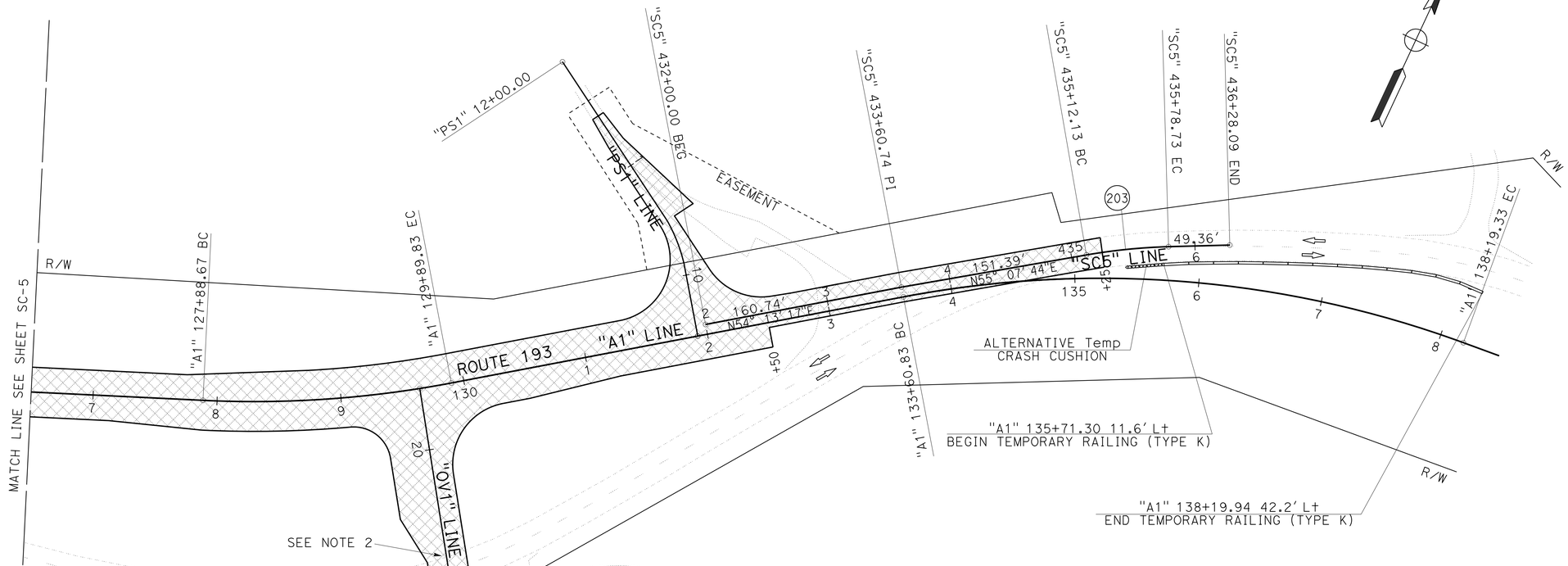

CURVE DATA

No. ⊕	R	Δ	T	L
(203)	463'	08°14'30"	33.36'	66.60'

THIS PLAN TO BE USED FOR STAGE CONSTRUCTION INFORMATION ONLY

STAGE CONSTRUCTION
(STAGE 1)

SCALE: 1"=50'

SC-6

STATE OF CALIFORNIA - DEPARTMENT OF TRANSPORTATION
DESIGN
FUNCTIONAL SUPERVISOR: MASTRI ALVANDI
CALCULATED-DESIGNED BY: KULVIR DHALIWAL
CHECKED BY: TOM LANGLEY
REVISED BY
DATE REVISED

LAST REVISION DATE PLOTTED => 15-JUN-2015
04-06-15 TIME PLOTTED => 15:50

BORDER LAST REVISED 7/2/2010 | USERNAME => s130875 | DGN FILE => 0300000725ma006.dgn | RELATIVE BORDER SCALE IS IN INCHES 0 1 2 3 | UNIT 0337 | PROJECT NUMBER & PHASE 03000007251

Dist	COUNTY	ROUTE	POST MILES TOTAL PROJECT	SHEET No.	TOTAL SHEETS
03	Pla	193	4.4/5.5	76	197

Thomas A Langley 4-6-15
REGISTERED CIVIL ENGINEER DATE

4-6-15
PLANS APPROVAL DATE

REGISTERED PROFESSIONAL ENGINEER
TOM LANGLEY
No. 64882
Exp. 6-30-15
CIVIL
STATE OF CALIFORNIA

THE STATE OF CALIFORNIA OR ITS OFFICERS OR AGENTS SHALL NOT BE RESPONSIBLE FOR THE ACCURACY OR COMPLETENESS OF SCANNED COPIES OF THIS PLAN SHEET.

NOTES:

1. FOR ACCURATE RIGHT OF WAY DATA, CONTACT RIGHT OF WAY ENGINEERING AT THE DISTRICT OFFICE.
2. FOR "SC2" PROFILE, SEE SHEET SCD-10.
3. SEE SHEET SCD-5 FOR DETAIL OF WORK ON "SC2" ALIGNMENT.

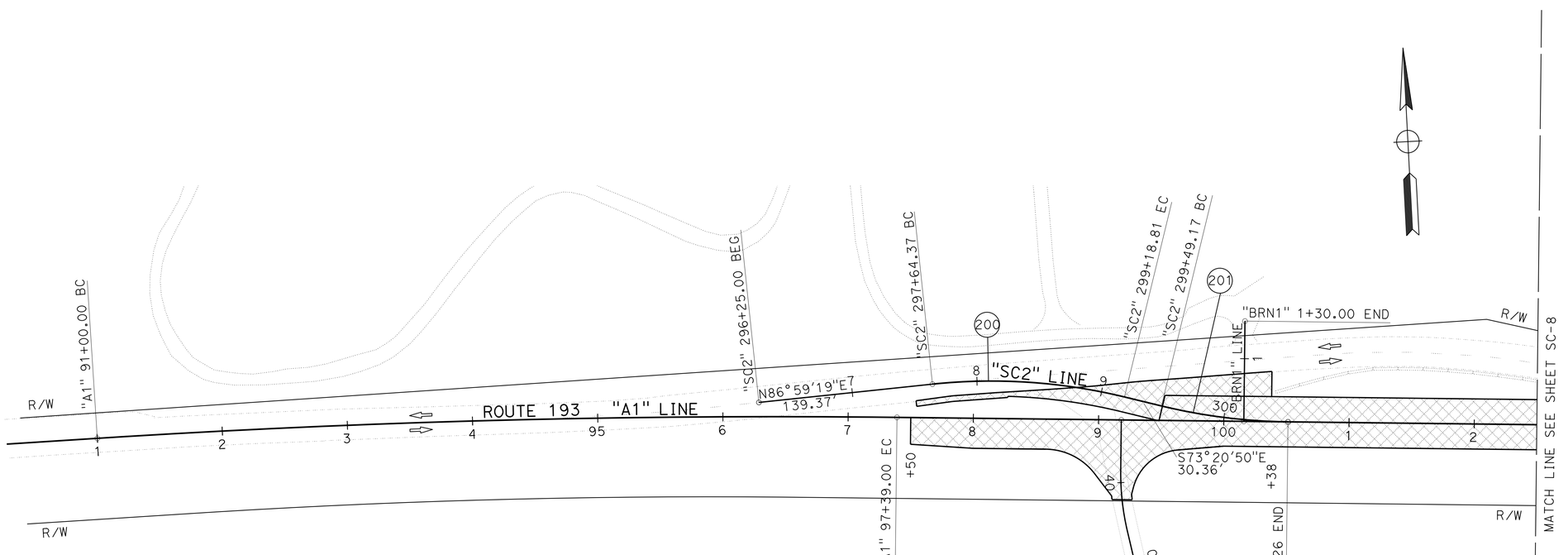

CURVE DATA

No. ⊕	R	Δ	T	L
200	450.00′	19°39′50"	77.99′	154.44′
201	450.00′	12°59′55"	51.27′	102.09′

THIS PLAN TO BE USED FOR STAGE CONSTRUCTION INFORMATION ONLY

STAGE CONSTRUCTION
(STAGE 2)
SCALE: 1"=50′

SC-7

CALCULATED-DESIGNED BY: KULVIR DHALIWAL
CHECKED BY: TOM LANGLEY
FUNCTIONAL SUPERVISOR: MASTRI ALVANDI
STATE OF CALIFORNIA - DEPARTMENT OF TRANSPORTATION
Caltrans® DESIGN

REVISED BY	DATE REVISED

LAST REVISION | DATE PLOTTED => 15-JUN-2015
04-06-15 | TIME PLOTTED => 15:50

BORDER LAST REVISED 7/2/2010 | USERNAME => s130875 | DGN FILE => 0300000725ma007.dgn | RELATIVE BORDER SCALE IS IN INCHES 0 1 2 3 | UNIT 0337 | PROJECT NUMBER & PHASE 03000007251

Dist	COUNTY	ROUTE	POST MILES TOTAL PROJECT	SHEET No.	TOTAL SHEETS
03	Pla	193	4.4/5.5	77	197

Thomas A Langley 4-6-15
REGISTERED CIVIL ENGINEER DATE

4-6-15
PLANS APPROVAL DATE

REGISTERED PROFESSIONAL ENGINEER
TOM LANGLEY
No. 64882
Exp. 6-30-15
CIVIL
STATE OF CALIFORNIA

THE STATE OF CALIFORNIA OR ITS OFFICERS OR AGENTS SHALL NOT BE RESPONSIBLE FOR THE ACCURACY OR COMPLETENESS OF SCANNED COPIES OF THIS PLAN SHEET.

NOTE:

FOR ACCURATE RIGHT OF WAY DATA, CONTACT RIGHT OF WAY ENGINEERING AT THE DISTRICT OFFICE.

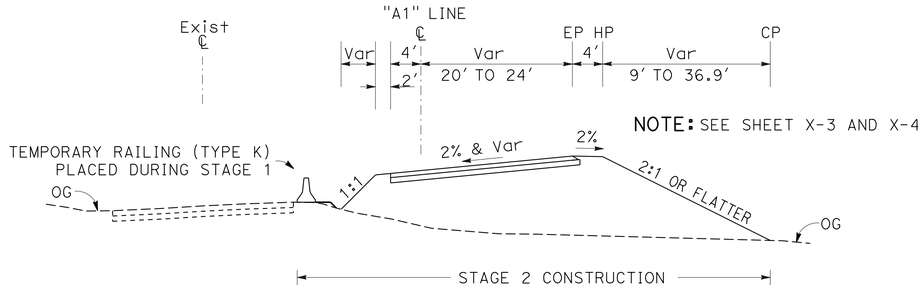

TYPICAL CROSS SECTION

"A1" 102+75 TO "A1" 106+80
"A1" 109+50 TO "A1" 109+90
NO SCALE

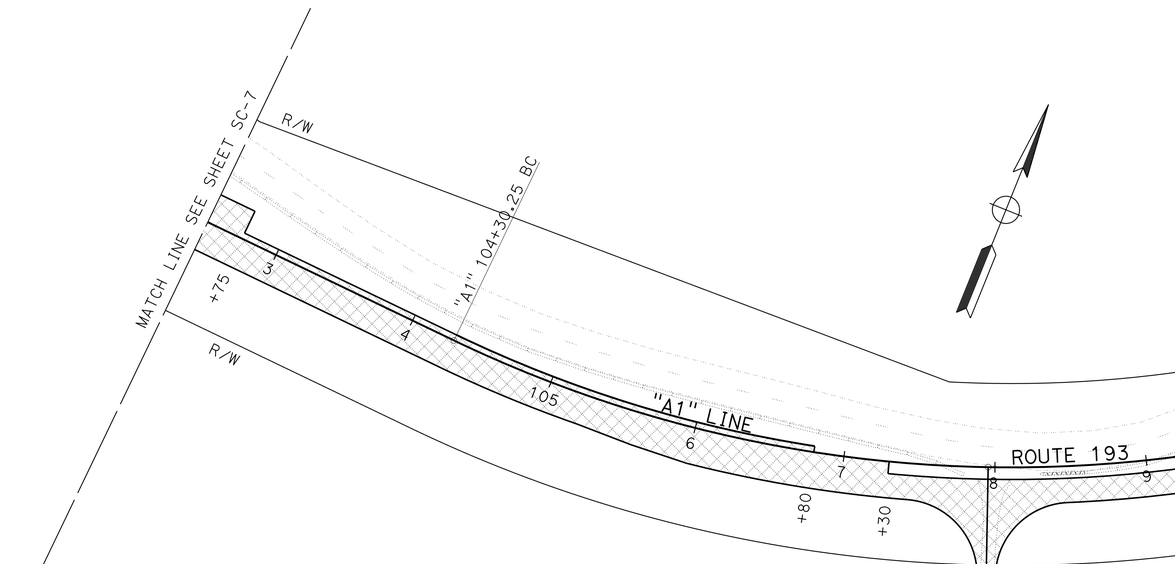

TYPICAL CROSS SECTION

"A1" 106+80 TO "A1" 107+30
NO SCALE

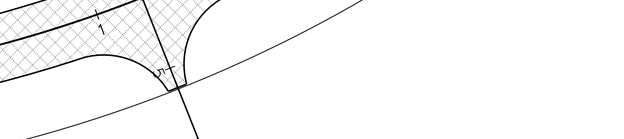

TYPICAL CROSS SECTION

"A1" 107+30 TO "A1" 109+50
NO SCALE

STAGE CONSTRUCTION (STAGE 2)

SCALE: 1"=50′

THIS PLAN TO BE USED FOR STAGE CONSTRUCTION INFORMATION ONLY

SC-8

CALCULATED-DESIGNED BY: KULVIR DHALIWAL
CHECKED BY: TOM LANGLEY
FUNCTIONAL SUPERVISOR: MASTRI ALVANDI
STATE OF CALIFORNIA - DEPARTMENT OF TRANSPORTATION
DESIGN

REVISED BY | DATE REVISED

LAST REVISION | DATE PLOTTED => 15-JUN-2015
04-06-15 | TIME PLOTTED => 15:51

BORDER LAST REVISED 7/2/2010
USERNAME => s130875
DGN FILE => 0300000725ma008.dgn
RELATIVE BORDER SCALE IS IN INCHES 0 1 2 3
UNIT 0337
PROJECT NUMBER & PHASE 03000007251

Dist	COUNTY	ROUTE	POST MILES TOTAL PROJECT	SHEET No.	TOTAL SHEETS
03	Pla	193	4.4/5.5	78	197

Thomas N Langley 4-6-15
REGISTERED CIVIL ENGINEER DATE

4-6-15
PLANS APPROVAL DATE

REGISTERED PROFESSIONAL ENGINEER
TOM LANGLEY
No. 64882
Exp. 6-30-15
CIVIL
STATE OF CALIFORNIA

THE STATE OF CALIFORNIA OR ITS OFFICERS OR AGENTS SHALL NOT BE RESPONSIBLE FOR THE ACCURACY OR COMPLETENESS OF SCANNED COPIES OF THIS PLAN SHEET.

NOTE:

FOR ACCURATE RIGHT OF WAY DATA, CONTACT
RIGHT OF WAY ENGINEERING AT THE DISTRICT OFFICE.

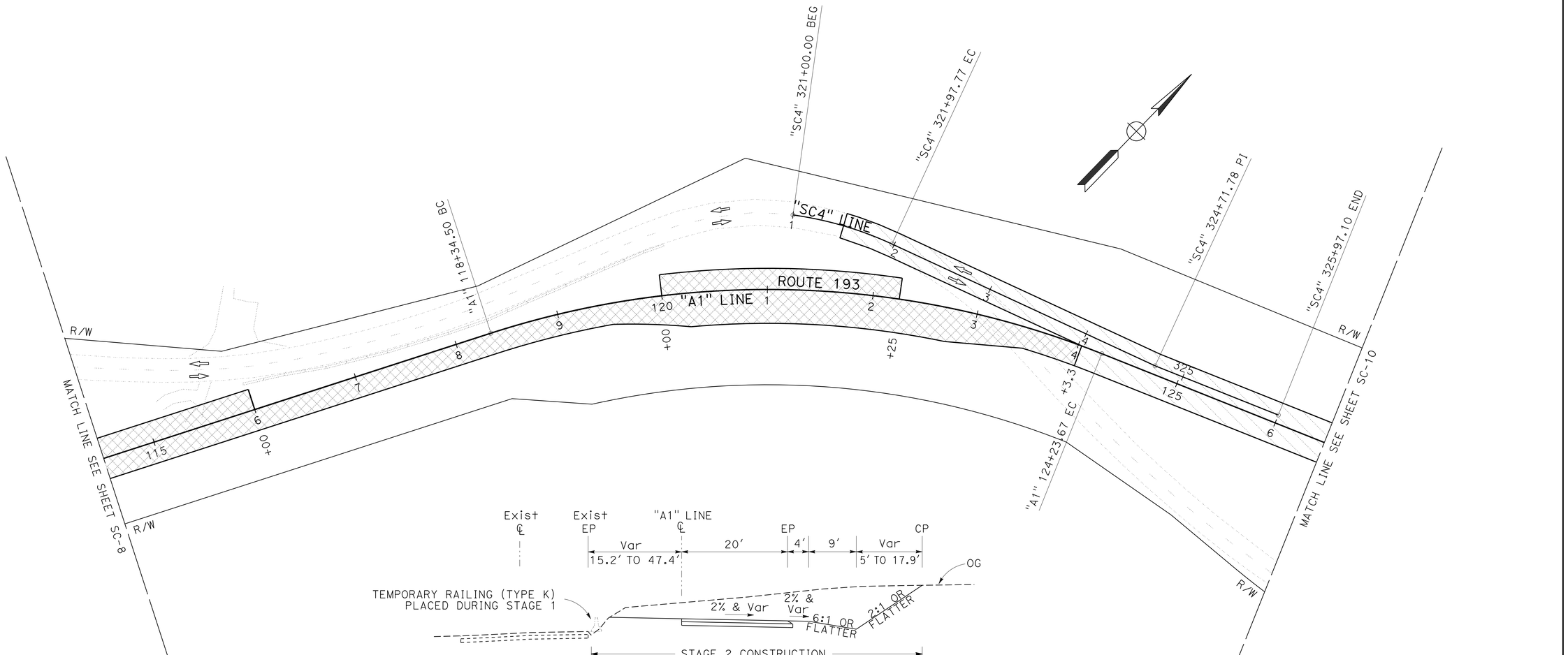

TYPICAL CROSS SECTION

"A1" 116+00 TO "A1" 118+00

NO SCALE

STAGE CONSTRUCTION (STAGE 2)

SCALE: 1"=50'

THIS PLAN TO BE USED FOR STAGE CONSTRUCTION INFORMATION ONLY

SC-9

STATE OF CALIFORNIA - DEPARTMENT OF TRANSPORTATION
DESIGN
FUNCTIONAL SUPERVISOR: MASTRI ALVANDI
CALCULATED-DESIGNED BY: KULVIR DHALIWAL
CHECKED BY: TOM LANGLEY
REVISED BY
DATE REVISED

LAST REVISION 04-06-15
DATE PLOTTED => 15-JUN-2015
TIME PLOTTED => 15:51

BORDER LAST REVISED 7/2/2010
USERNAME => s130875
DGN FILE => 0300000725ma009.dgn
RELATIVE BORDER SCALE IS IN INCHES 0 1 2 3
UNIT 0337
PROJECT NUMBER & PHASE 03000007251

Dist	COUNTY	ROUTE	POST MILES TOTAL PROJECT	SHEET No.	TOTAL SHEETS
03	Pla	193	4.4/5.5	79	197

Thomas N Langley 4-6-15
REGISTERED CIVIL ENGINEER DATE

4-6-15
PLANS APPROVAL DATE

REGISTERED PROFESSIONAL ENGINEER
TOM LANGLEY
No. 64882
Exp. 6-30-15
CIVIL
STATE OF CALIFORNIA

THE STATE OF CALIFORNIA OR ITS OFFICERS OR AGENTS SHALL NOT BE RESPONSIBLE FOR THE ACCURACY OR COMPLETENESS OF SCANNED COPIES OF THIS PLAN SHEET.

NOTE:

FOR ACCURATE RIGHT OF WAY DATA, CONTACT
RIGHT OF WAY ENGINEERING AT THE DISTRICT OFFICE.

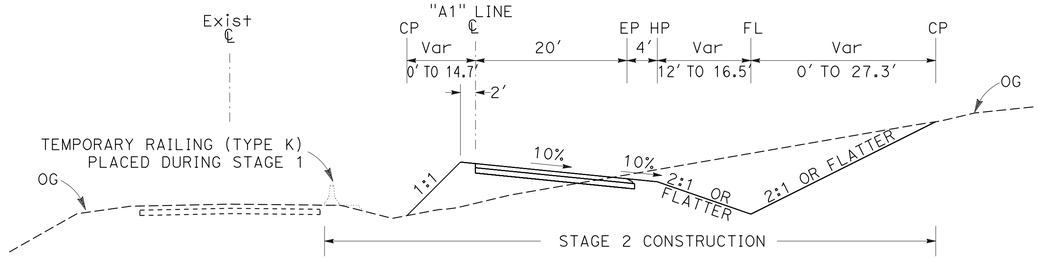

TYPICAL CROSS SECTION

"A1" 135+75 TO "A1" 137+00
NO SCALE

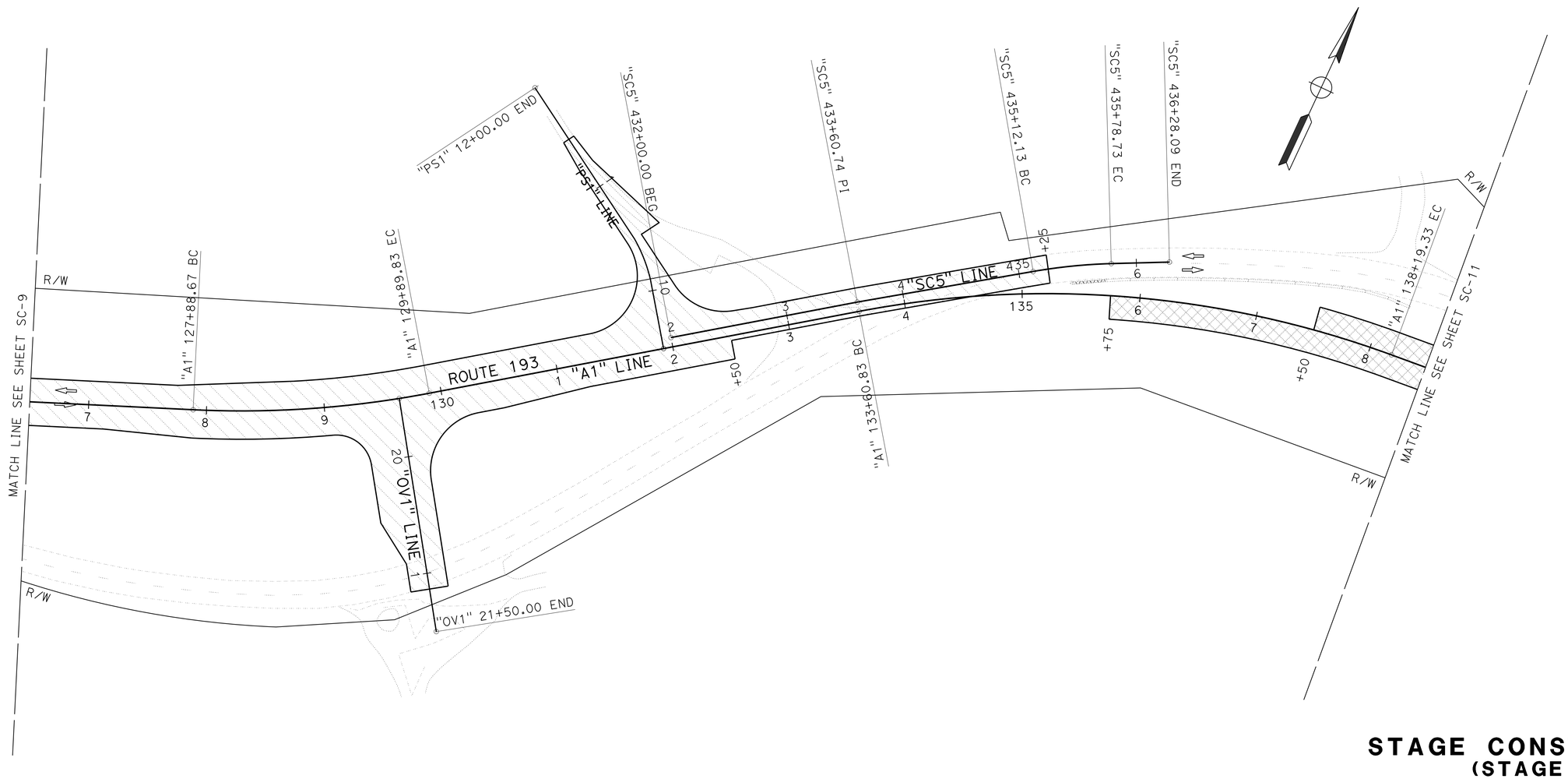

STAGE CONSTRUCTION
(STAGE 2)

SCALE: 1"=50'

THIS PLAN TO BE USED FOR STAGE CONSTRUCTION INFORMATION ONLY

SC-10

STATE OF CALIFORNIA - DEPARTMENT OF TRANSPORTATION
Caltrans®
DESIGN
FUNCTIONAL SUPERVISOR: MASTRI ALVANDI
CALCULATED-DESIGNED BY: KULVIR DHALIWAL
CHECKED BY: TOM LANGLEY
REVISED BY
DATE REVISED

LAST REVISION 04-06-15
DATE PLOTTED => 15-JUN-2015
TIME PLOTTED => 15:51

BORDER LAST REVISED 7/2/2010
USERNAME => s130875
DGN FILE => 0300000725ma010.dgn
RELATIVE BORDER SCALE IS IN INCHES 0 1 2 3
UNIT 0337
PROJECT NUMBER & PHASE 03000007251

Dist	COUNTY	ROUTE	POST MILES TOTAL PROJECT	SHEET No.	TOTAL SHEETS
03	Pla	193	4.4/5.5	80	197

Thomas A Langley 4-6-15
REGISTERED CIVIL ENGINEER DATE

4-6-15
PLANS APPROVAL DATE

REGISTERED PROFESSIONAL ENGINEER
TOM LANGLEY
No. 64882
Exp. 6-30-15
CIVIL
STATE OF CALIFORNIA

THE STATE OF CALIFORNIA OR ITS OFFICERS OR AGENTS SHALL NOT BE RESPONSIBLE FOR THE ACCURACY OR COMPLETENESS OF SCANNED COPIES OF THIS PLAN SHEET.

NOTE:

FOR ACCURATE RIGHT OF WAY DATA, CONTACT
RIGHT OF WAY ENGINEERING AT THE DISTRICT OFFICE.

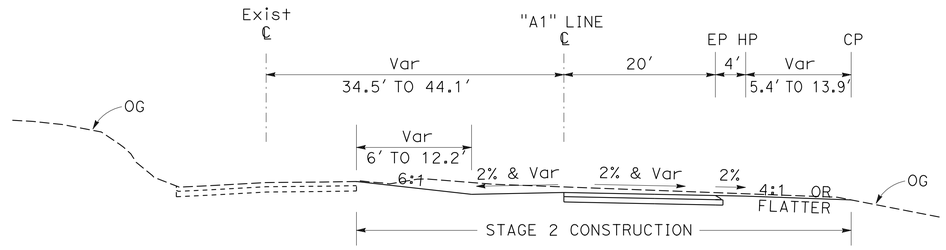

TYPICAL CROSS SECTION

"A1" 140+00 TO "A1" 140+50
NO SCALE

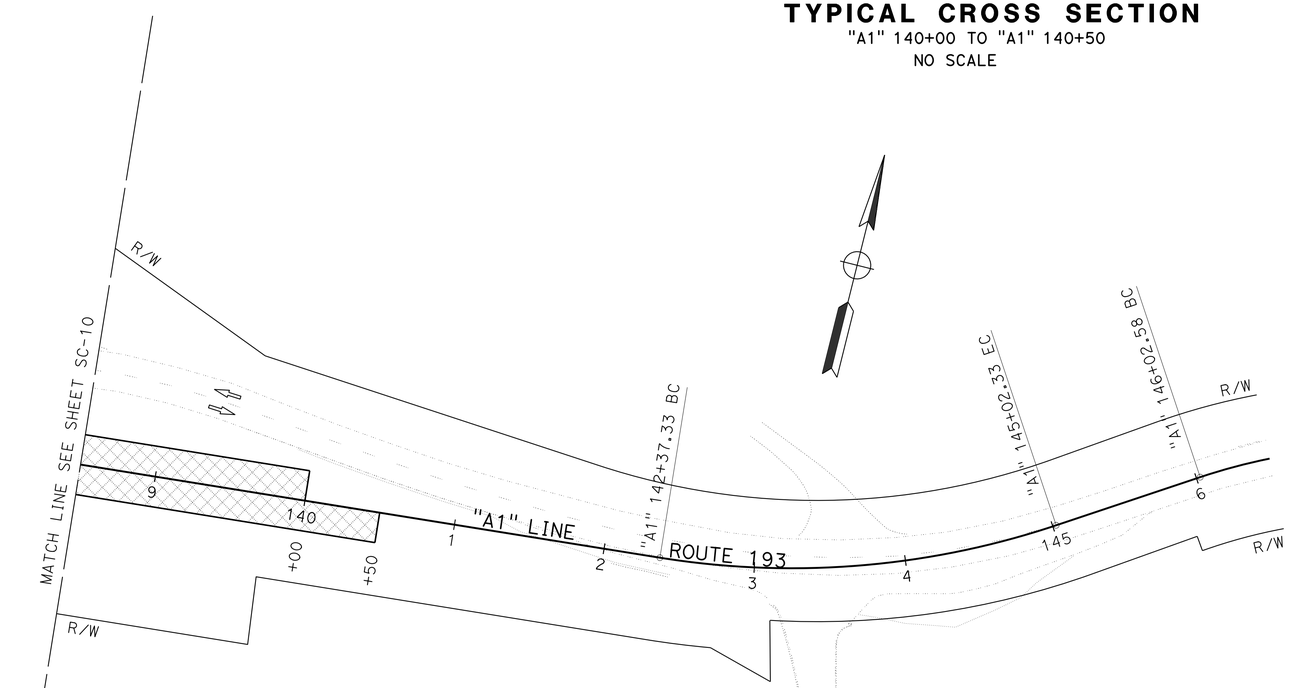

STAGE CONSTRUCTION
(STAGE 2)

SCALE: 1"=50'

THIS PLAN TO BE USED FOR STAGE CONSTRUCTION INFORMATION ONLY

SC-11

STATE OF CALIFORNIA - DEPARTMENT OF TRANSPORTATION
DESIGN
FUNCTIONAL SUPERVISOR: MASTRI ALVANDI
CALCULATED-DESIGNED BY: KULVIR DHALIWAL
CHECKED BY: TOM LANGLEY
REVISED BY
DATE REVISED

LAST REVISION | DATE PLOTTED => 15-JUN-2015
04-06-15 | TIME PLOTTED => 15:51

BORDER LAST REVISED 7/2/2010
USERNAME => s130875
DGN FILE => 0300000725ma011.dgn
RELATIVE BORDER SCALE IS IN INCHES 0 1 2 3
UNIT 0337
PROJECT NUMBER & PHASE 03000007251

Dist	COUNTY	ROUTE	POST MILES TOTAL PROJECT	SHEET No.	TOTAL SHEETS
03	Pla	193	4.4/5.5	81	197

Thomas N Langley 4-6-15
REGISTERED CIVIL ENGINEER DATE

4-6-15
PLANS APPROVAL DATE

REGISTERED PROFESSIONAL ENGINEER
TOM LANGLEY
No. 64882
Exp. 6-30-15
CIVIL
STATE OF CALIFORNIA

THE STATE OF CALIFORNIA OR ITS OFFICERS OR AGENTS SHALL NOT BE RESPONSIBLE FOR THE ACCURACY OR COMPLETENESS OF SCANNED COPIES OF THIS PLAN SHEET.

NOTE:

FOR ACCURATE RIGHT OF WAY DATA, CONTACT
RIGHT OF WAY ENGINEERING AT THE DISTRICT OFFICE.

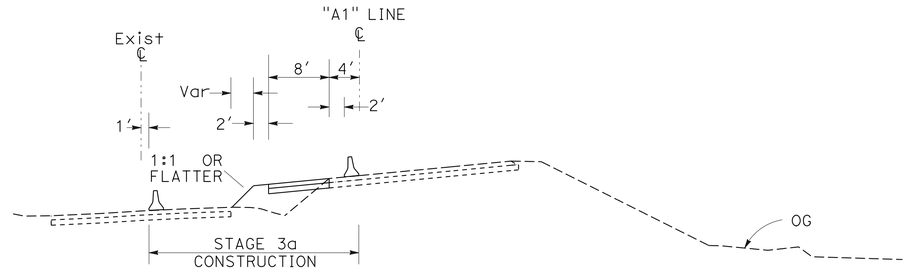

TYPICAL CROSS SECTION

"A1" 102+75 TO "A1" 106+50
NO SCALE

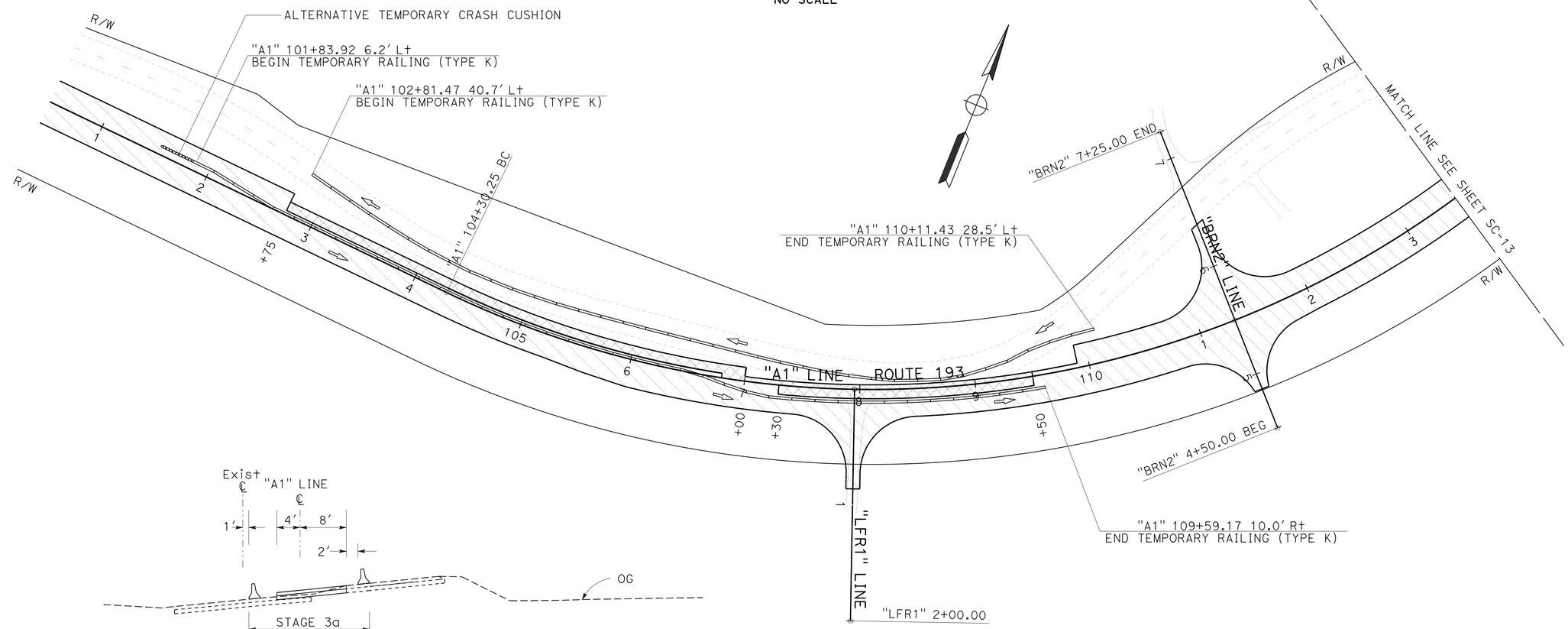

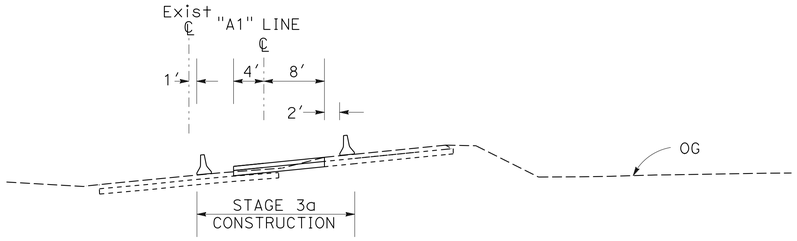

TYPICAL CROSS SECTION

"A1" 107+30 TO "A1" 109+90
NO SCALE

STAGE CONSTRUCTION
(STAGE 3a)

SCALE: 1"=50′

THIS PLAN TO BE USED FOR STAGE CONSTRUCTION INFORMATION ONLY

SC-12

STATE OF CALIFORNIA - DEPARTMENT OF TRANSPORTATION
DESIGN
FUNCTIONAL SUPERVISOR: MASTRI ALVANDI
CALCULATED-DESIGNED BY: KULVIR DHALIWAL
CHECKED BY: TOM LANGLEY
REVISED BY
DATE REVISED
LAST REVISION 04-06-15
DATE PLOTTED => 15-JUN-2015
TIME PLOTTED => 15:51

BORDER LAST REVISED 7/2/2010
USERNAME => s130875
DGN FILE => 0300000725ma012.dgn
RELATIVE BORDER SCALE IS IN INCHES 0 1 2 3
UNIT 0337
PROJECT NUMBER & PHASE 03000007251

Dist	COUNTY	ROUTE	POST MILES TOTAL PROJECT	SHEET No.	TOTAL SHEETS
03	Pla	193	4.4/5.5	82	197

Thomas A Langley 4-6-15
REGISTERED CIVIL ENGINEER DATE

4-6-15
PLANS APPROVAL DATE

REGISTERED PROFESSIONAL ENGINEER
TOM LANGLEY
No. 64882
Exp. 6-30-15
CIVIL
STATE OF CALIFORNIA

THE STATE OF CALIFORNIA OR ITS OFFICERS OR AGENTS SHALL NOT BE RESPONSIBLE FOR THE ACCURACY OR COMPLETENESS OF SCANNED COPIES OF THIS PLAN SHEET.

NOTE:

1. FOR ACCURATE RIGHT OF WAY DATA, CONTACT RIGHT OF WAY ENGINEERING AT THE DISTRICT OFFICE.
2. CONSTRUCT 20′ WIDE ROADBED (LEFT) FROM STATION "A1" 122+25 TO 124+03.3 UNDER ONE-WAY TRAFFIC CONTROL (24HRS). OVERLAY THE EXISTING PAVED AREA FROM STATION "A1" 123+79.37 TO 124+03.3 FROM 0 TO 0.30′ WITH HMA-A.

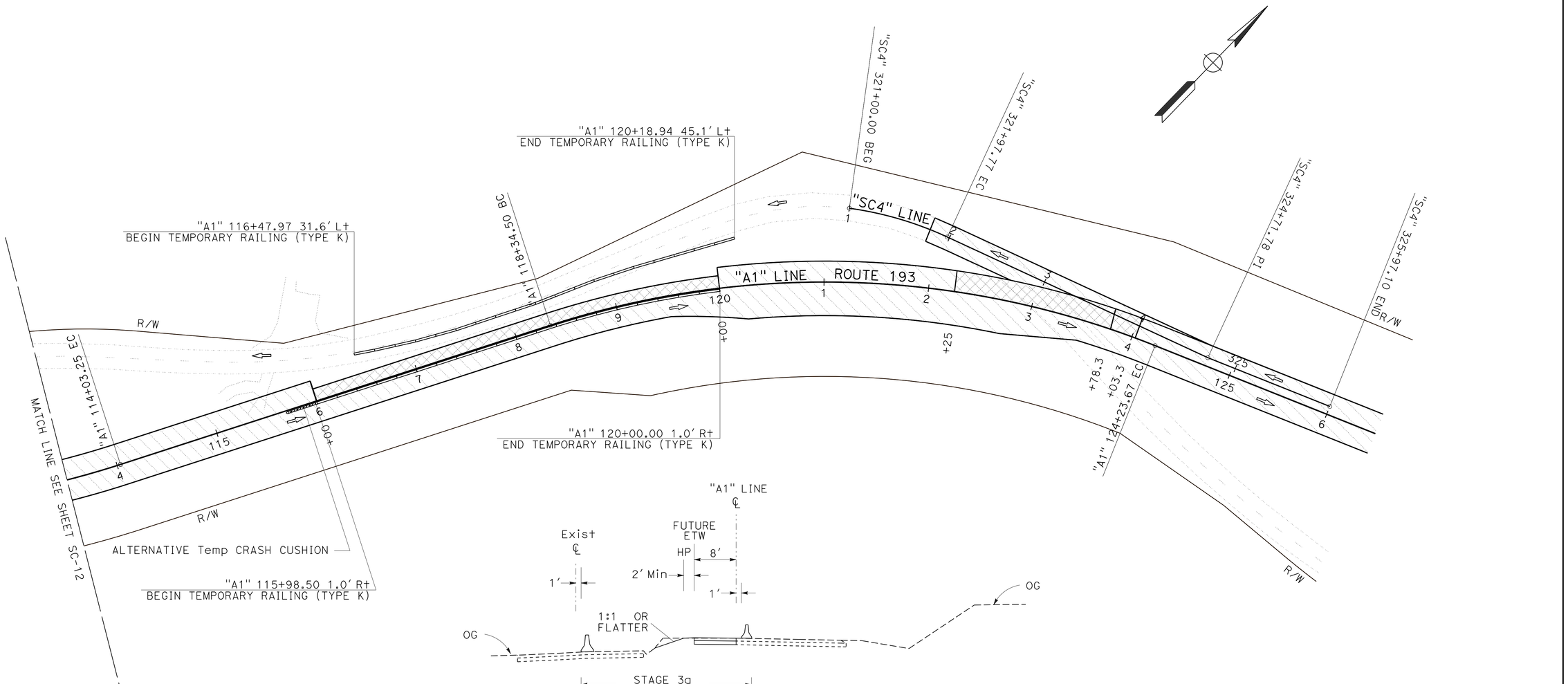

TYPICAL CROSS SECTION

"A1" 116+00 TO "A1" 120+00
NO SCALE

STAGE CONSTRUCTION (STAGE 3a)

SCALE: 1"=50′

THIS PLAN TO BE USED FOR STAGE CONSTRUCTION INFORMATION ONLY

SC-13

LAST REVISION DATE PLOTTED => 15-JUN-2015
04-06-15 TIME PLOTTED => 15:51

STATE OF CALIFORNIA - DEPARTMENT OF TRANSPORTATION
DESIGN
FUNCTIONAL SUPERVISOR: MASTRI ALVANDI
CALCULATED-DESIGNED BY: KULVIR DHALIWAL
CHECKED BY: TOM LANGLEY
REVISED BY
DATE REVISED

BORDER LAST REVISED 7/2/2010
USERNAME => s130875
DGN FILE => 0300000725ma013.dgn
RELATIVE BORDER SCALE IS IN INCHES 0 1 2 3
UNIT 0337
PROJECT NUMBER & PHASE 03000007251

Dist	COUNTY	ROUTE	POST MILES TOTAL PROJECT	SHEET No.	TOTAL SHEETS
03	Pla	193	4.4/5.5	83	197

Thomas A Langley 4-6-15
REGISTERED CIVIL ENGINEER DATE

4-6-15
PLANS APPROVAL DATE

REGISTERED PROFESSIONAL ENGINEER
TOM LANGLEY
No. 64882
Exp. 6-30-15
CIVIL
STATE OF CALIFORNIA

THE STATE OF CALIFORNIA OR ITS OFFICERS OR AGENTS SHALL NOT BE RESPONSIBLE FOR THE ACCURACY OR COMPLETENESS OF SCANNED COPIES OF THIS PLAN SHEET.

NOTE:

FOR ACCURATE RIGHT OF WAY DATA, CONTACT
RIGHT OF WAY ENGINEERING AT THE DISTRICT OFFICE.

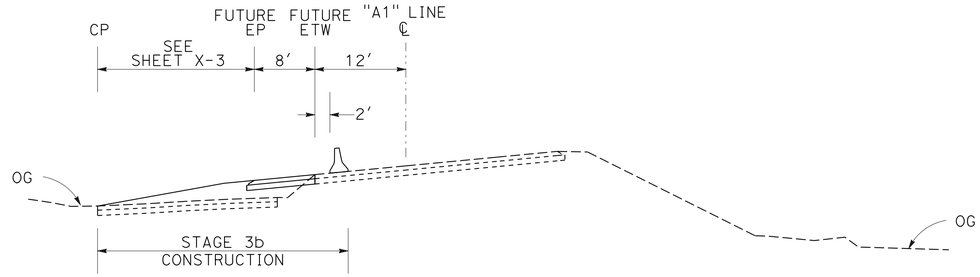

TYPICAL CROSS SECTION

"A1" 102+75 TO "A1" 105+50
NO SCALE

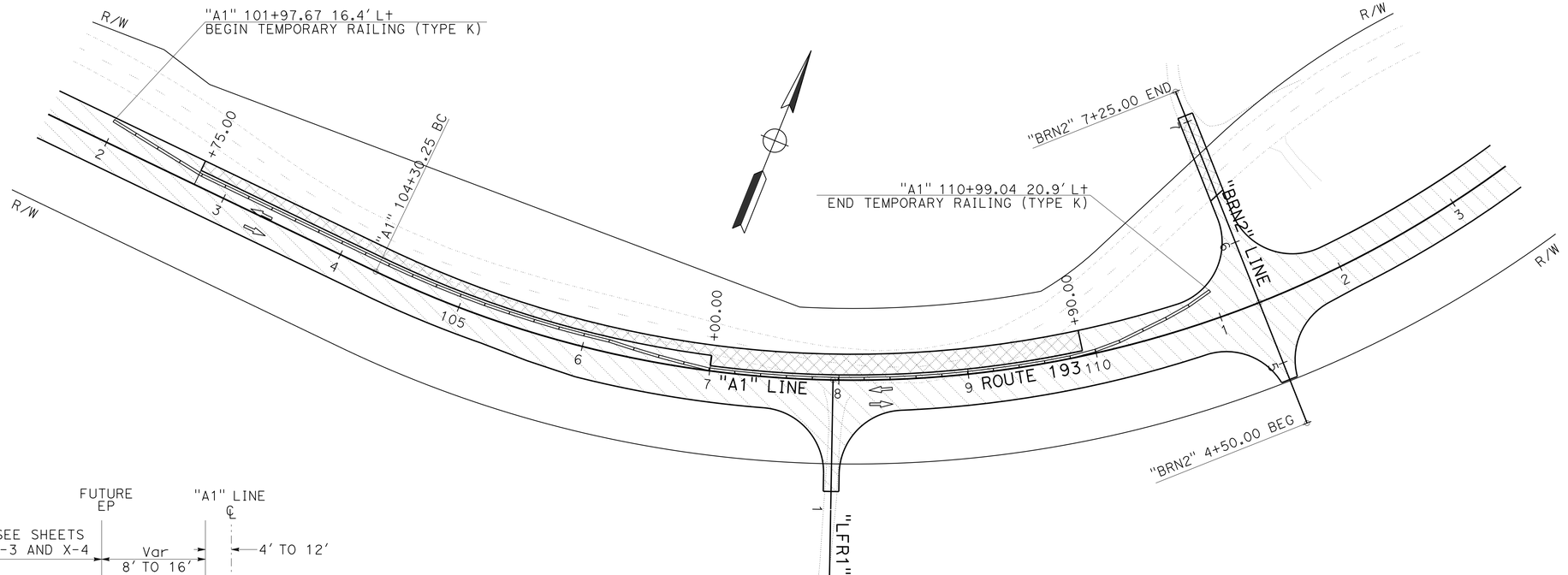

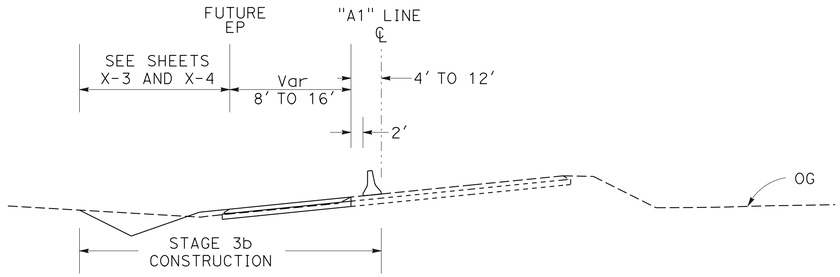

TYPICAL CROSS SECTION

"A1" 105+50 TO "A1" 109+90
NO SCALE

STAGE CONSTRUCTION
(STAGE 3b)

SCALE: 1"=50′

THIS PLAN TO BE USED FOR STAGE CONSTRUCTION INFORMATION ONLY

SC-14

REVISED BY	DATE REVISED

CALCULATED-DESIGNED BY: KULVIR DHALIWAL
CHECKED BY: TOM LANGLEY
FUNCTIONAL SUPERVISOR: MASTRI ALVANDI

STATE OF CALIFORNIA - DEPARTMENT OF TRANSPORTATION
DESIGN

LAST REVISION 04-06-15
DATE PLOTTED => 15-JUN-2015
TIME PLOTTED => 15:51

BORDER LAST REVISED 7/2/2010
USERNAME => s130875
DGN FILE => 0300000725ma014.dgn
RELATIVE BORDER SCALE IS IN INCHES 0 1 2 3
UNIT 0337
PROJECT NUMBER & PHASE 03000007251

Dist	COUNTY	ROUTE	POST MILES TOTAL PROJECT	SHEET No.	TOTAL SHEETS
03	Pla	193	4.4/5.5	84	197

Thomas A Langley 4-6-15
REGISTERED CIVIL ENGINEER DATE

4-6-15
PLANS APPROVAL DATE

REGISTERED PROFESSIONAL ENGINEER
TOM LANGLEY
No. 64882
Exp. 6-30-15
CIVIL
STATE OF CALIFORNIA

THE STATE OF CALIFORNIA OR ITS OFFICERS OR AGENTS SHALL NOT BE RESPONSIBLE FOR THE ACCURACY OR COMPLETENESS OF SCANNED COPIES OF THIS PLAN SHEET.

NOTE:
FOR ACCURATE RIGHT OF WAY DATA, CONTACT
RIGHT OF WAY ENGINEERING AT THE DISTRICT OFFICE.

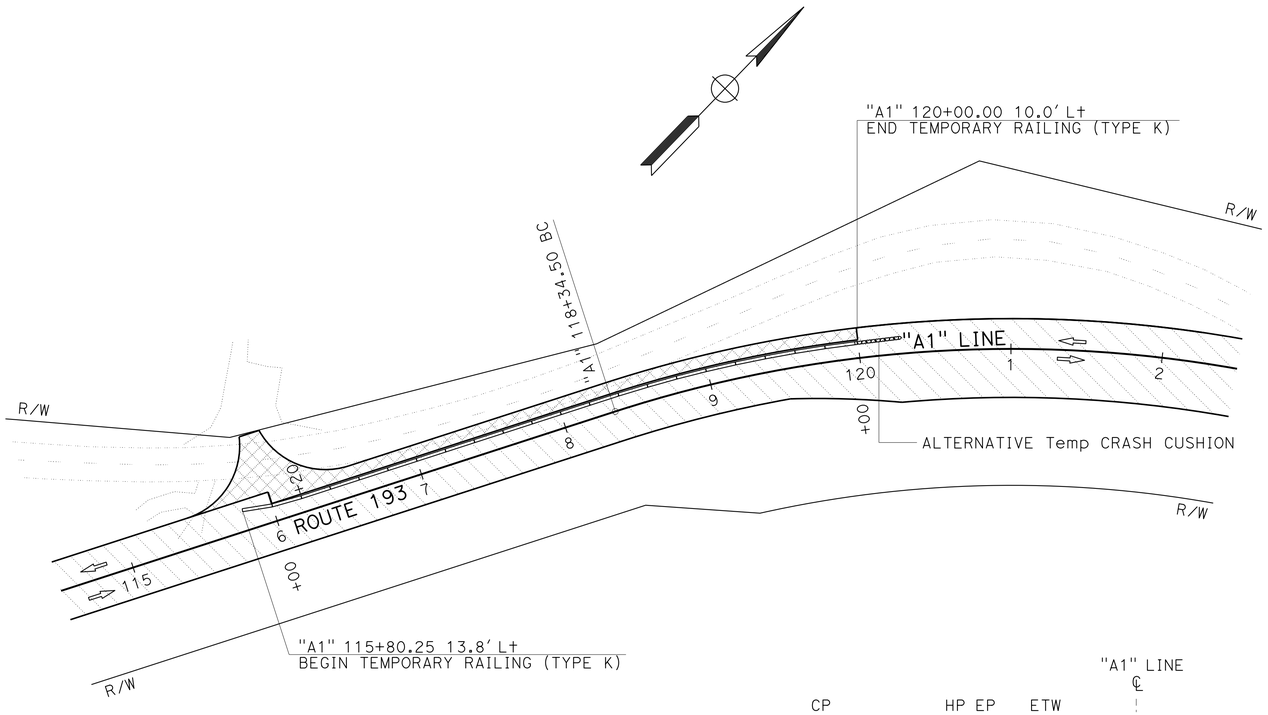

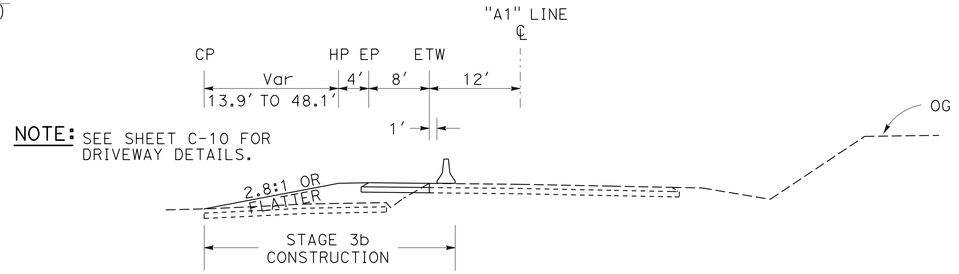

NOTE: SEE SHEET C-10 FOR DRIVEWAY DETAILS.

TYPICAL CROSS SECTION
"A1" 116+00 TO "A1" 120+00
NO SCALE

THIS PLAN TO BE USED FOR STAGE CONSTRUCTION INFORMATION ONLY

STAGE CONSTRUCTION
(STAGE 3b)
SCALE: 1"=50'

SC-15

REVISED BY	
DATE REVISED	
CALCULATED-DESIGNED BY	KULVIR DHALIWAL
CHECKED BY	TOM LANGLEY
FUNCTIONAL SUPERVISOR	MASTRI ALVANDI

STATE OF CALIFORNIA - DEPARTMENT OF TRANSPORTATION
DESIGN
Caltrans

LAST REVISION 04-06-15 | DATE PLOTTED => 15-JUN-2015 | TIME PLOTTED => 15:51

Dist	COUNTY	ROUTE	POST MILES TOTAL PROJECT	SHEET No.	TOTAL SHEETS
03	Pla	193	4.4/5.5	85	197

Thomas A Langley 4-6-15
REGISTERED CIVIL ENGINEER DATE

4-6-15
PLANS APPROVAL DATE

REGISTERED PROFESSIONAL ENGINEER
TOM LANGLEY
No. 64882
Exp. 6-30-15
CIVIL
STATE OF CALIFORNIA

THE STATE OF CALIFORNIA OR ITS OFFICERS OR AGENTS SHALL NOT BE RESPONSIBLE FOR THE ACCURACY OR COMPLETENESS OF SCANNED COPIES OF THIS PLAN SHEET.

NOTES:

1. FOR ACCURATE RIGHT OF WAY DATA, CONTACT RIGHT OF WAY ENGINEERING AT THE DISTRICT OFFICE.
2. CONSTRUCT ROADBED FROM Sta "A1" 93+20 TO 100+45 UNDER ONE WAY TRAFFIC CONTROL (24HRS).

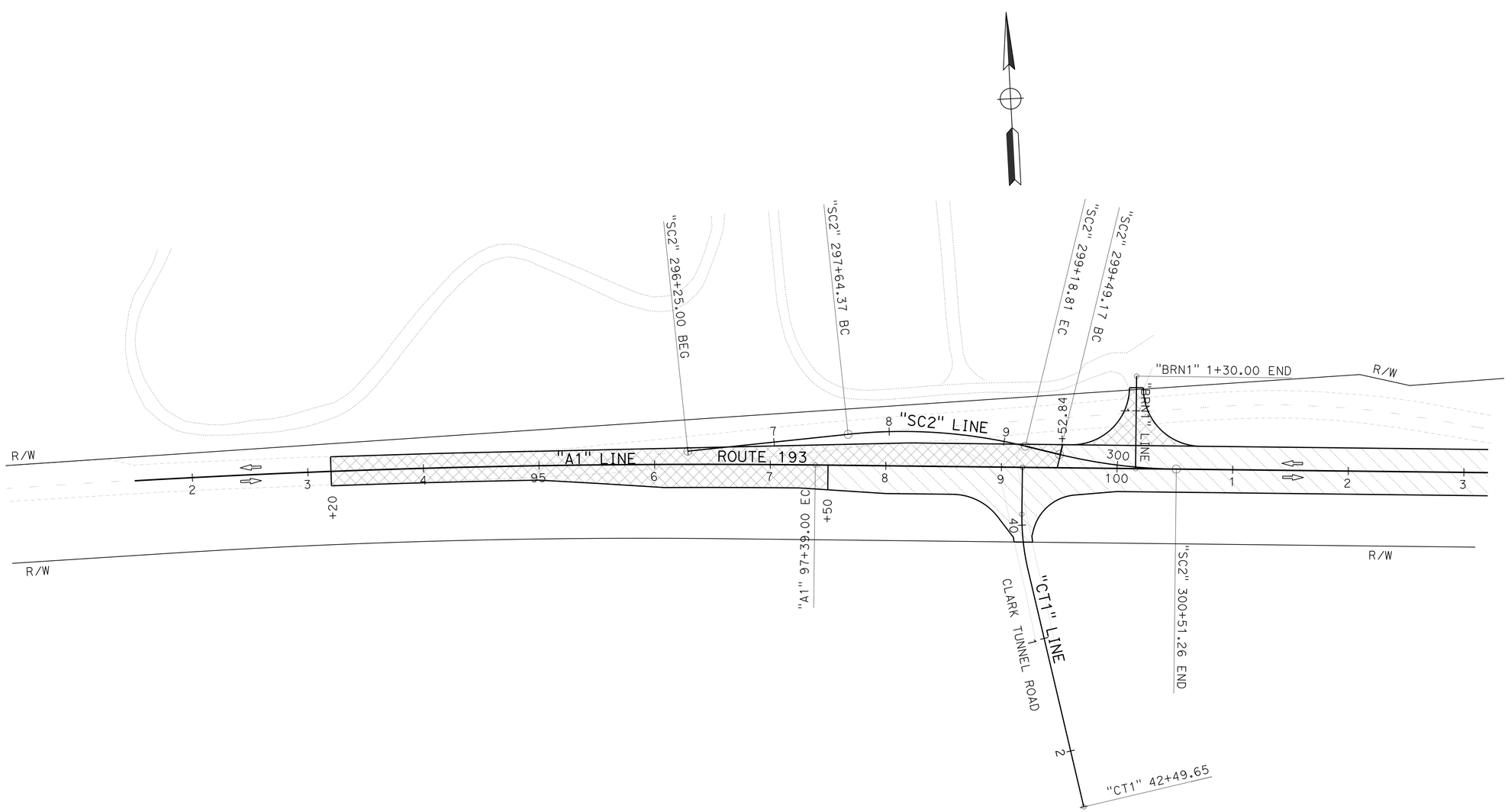

STAGE CONSTRUCTION
(STAGE 3c)

SCALE: 1"=50'

THIS PLAN TO BE USED FOR STAGE CONSTRUCTION INFORMATION ONLY

SC-16

STATE OF CALIFORNIA - DEPARTMENT OF TRANSPORTATION
DESIGN
FUNCTIONAL SUPERVISOR: MASTRI ALVANDI
CALCULATED-DESIGNED BY: KULVIR DHALIWAL
CHECKED BY: TOM LANGLEY
REVISED BY
DATE REVISED

LAST REVISION | DATE PLOTTED => 15-JUN-2015
04-06-15 | TIME PLOTTED => 15:51

BORDER LAST REVISED 7/2/2010
USERNAME => s130875
DGN FILE => 0300000725ma016.dgn
RELATIVE BORDER SCALE IS IN INCHES 0 1 2 3
UNIT 0337
PROJECT NUMBER & PHASE 03000007251

Dist	COUNTY	ROUTE	POST MILES TOTAL PROJECT	SHEET No.	TOTAL SHEETS
03	Pla	193	4.4/5.5	86	197

Thomas A Langley 4-6-15
REGISTERED CIVIL ENGINEER DATE

4-6-15
PLANS APPROVAL DATE

REGISTERED PROFESSIONAL ENGINEER
TOM LANGLEY
No. 64882
Exp. 6-30-15
CIVIL
STATE OF CALIFORNIA

THE STATE OF CALIFORNIA OR ITS OFFICERS OR AGENTS SHALL NOT BE RESPONSIBLE FOR THE ACCURACY OR COMPLETENESS OF SCANNED COPIES OF THIS PLAN SHEET.

NOTES:

1. FOR ACCURATE RIGHT OF WAY DATA, CONTACT RIGHT OF WAY ENGINEERING AT THE DISTRICT OFFICE.

2. THIS STAGE CONSTRUCT UNDER ONE WAY TRAFFIC CONTROL (24HRS) ROADWAY FROM Sta "A1" 140+50 TO 146+02.58 AND TEMPORARY ALIGNMENT SC6.

3. THIS STAGE CONSTRUCT ROADWAY FROM Sta "A1" 140+00 TO 140+50 (LEFT), MANDARIN HILL ROAD (Sta "A1" 143+42.50) AND DRIVEWAY (Sta "A1" 143+64.78).

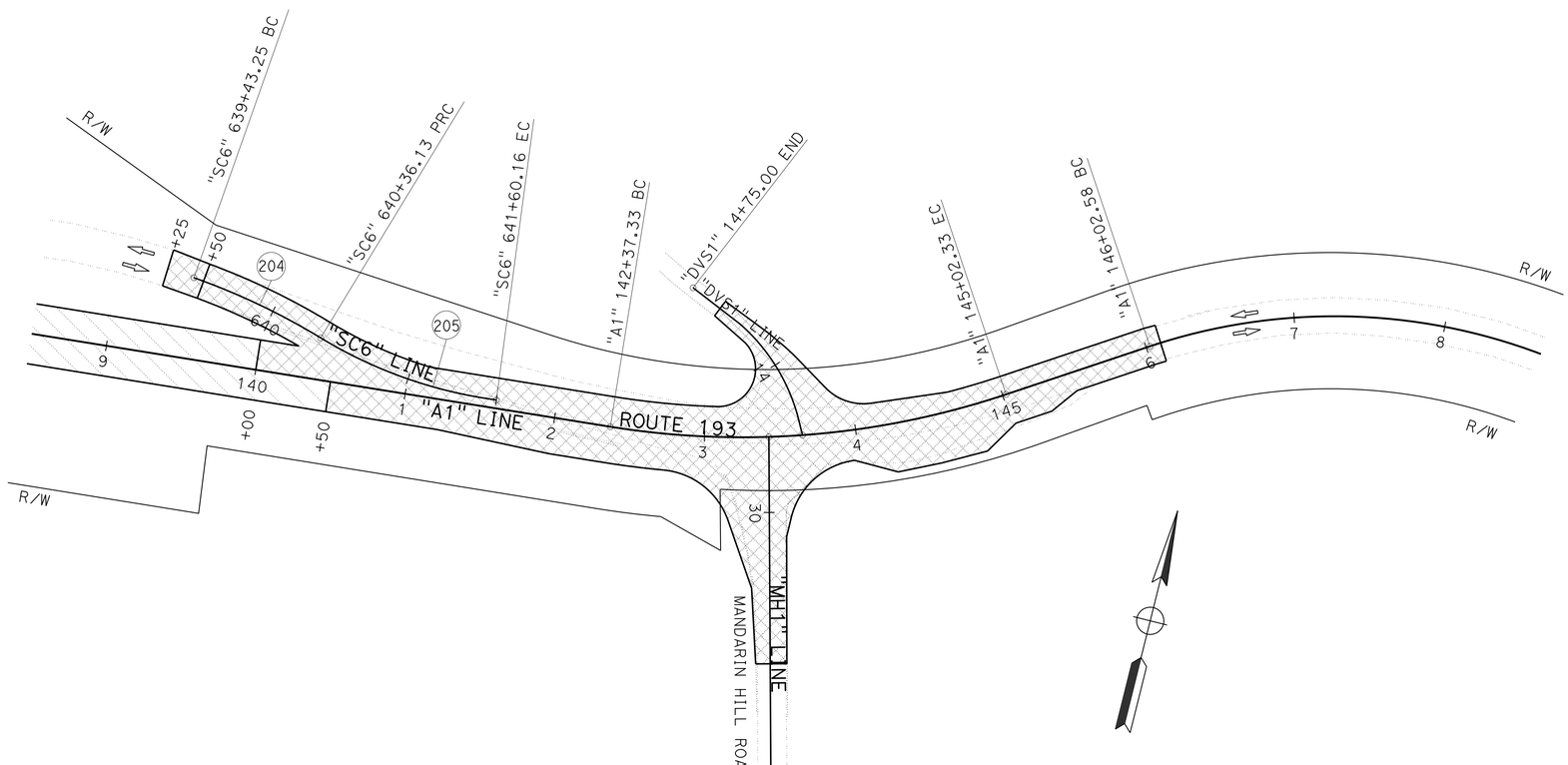

CURVE DATA

No. ⊕	R	△	T	L
(204)	450.00′	011°49′33"	46.61′	92.88′
(205)	300.00′	023°41′17"	62.91′	124.03′

THIS PLAN TO BE USED FOR STAGE CONSTRUCTION INFORMATION ONLY

STAGE CONSTRUCTION
(STAGE 4a)
SCALE: 1"=50′

SC-17

STATE OF CALIFORNIA - DEPARTMENT OF TRANSPORTATION
DESIGN
FUNCTIONAL SUPERVISOR: MASTRI ALVANDI
CALCULATED-DESIGNED BY: KULVIR DHALIWAL
CHECKED BY: TOM LANGLEY
REVISED BY
DATE REVISED

LAST REVISION: DATE PLOTTED => 15-JUN-2015
04-06-15 TIME PLOTTED => 15:51

BORDER LAST REVISED 7/2/2010
USERNAME => s130875
DGN FILE => 0300000725ma017.dgn
RELATIVE BORDER SCALE IS IN INCHES 0 1 2 3
UNIT 0337
PROJECT NUMBER & PHASE 03000007251

Dist	COUNTY	ROUTE	POST MILES TOTAL PROJECT	SHEET No.	TOTAL SHEETS
03	Pla	193	4.4/5.5	87	197

Thomas A Langley 4-6-15
REGISTERED CIVIL ENGINEER DATE

4-6-15
PLANS APPROVAL DATE

REGISTERED PROFESSIONAL ENGINEER
TOM LANGLEY
No. 64882
Exp. 6-30-15
CIVIL
STATE OF CALIFORNIA

THE STATE OF CALIFORNIA OR ITS OFFICERS OR AGENTS SHALL NOT BE RESPONSIBLE FOR THE ACCURACY OR COMPLETENESS OF SCANNED COPIES OF THIS PLAN SHEET.

NOTES:

1. FOR ACCURATE RIGHT OF WAY DATA, CONTACT RIGHT OF WAY ENGINEERING AT THE DISTRICT OFFICE.
2. CONSTRUCT 20′ WIDE ROADBED (RIGHT) FROM STATION "A1" 132+50 TO 135+75 UNDER ONE WAY TRAFFIC CONTROL (24HRS). THEN SHIFT TRAFFIC FROM 132+50 TO 142+00 (WESTBOUND TRAFFIC ON EXISTING ROADWAY AND EASTBOUND TRAFFIC ON NEW ROADWAY.
3. AFTER SHIFTING TRAFFIC, RELOCATE TEMPORARY RAILING (TYPE K) FROM STATION "A1" 135+70/138+20 (PLACED DURING STAGE 1) TO STATION 136+70/138+20 IN ORDER TO FACILITATE CONSTRUCTION OF PRECAST RCB CULVERT AND ROADBED FROM STATION 135+50 TO 137+50.
4. CONSTRUCT 20′ WIDE ROADBED (LEFT) FROM STATION 132+50 TO 135+20 UNDER ONE-WAY TRAFFIC CONTROL (24HRS). OVERLAY THE EXISTING PAVED AREA FROM STATION "A1" 132+50 TO 133+25 FROM 0 TO 0.55′ WITH HMA-A.

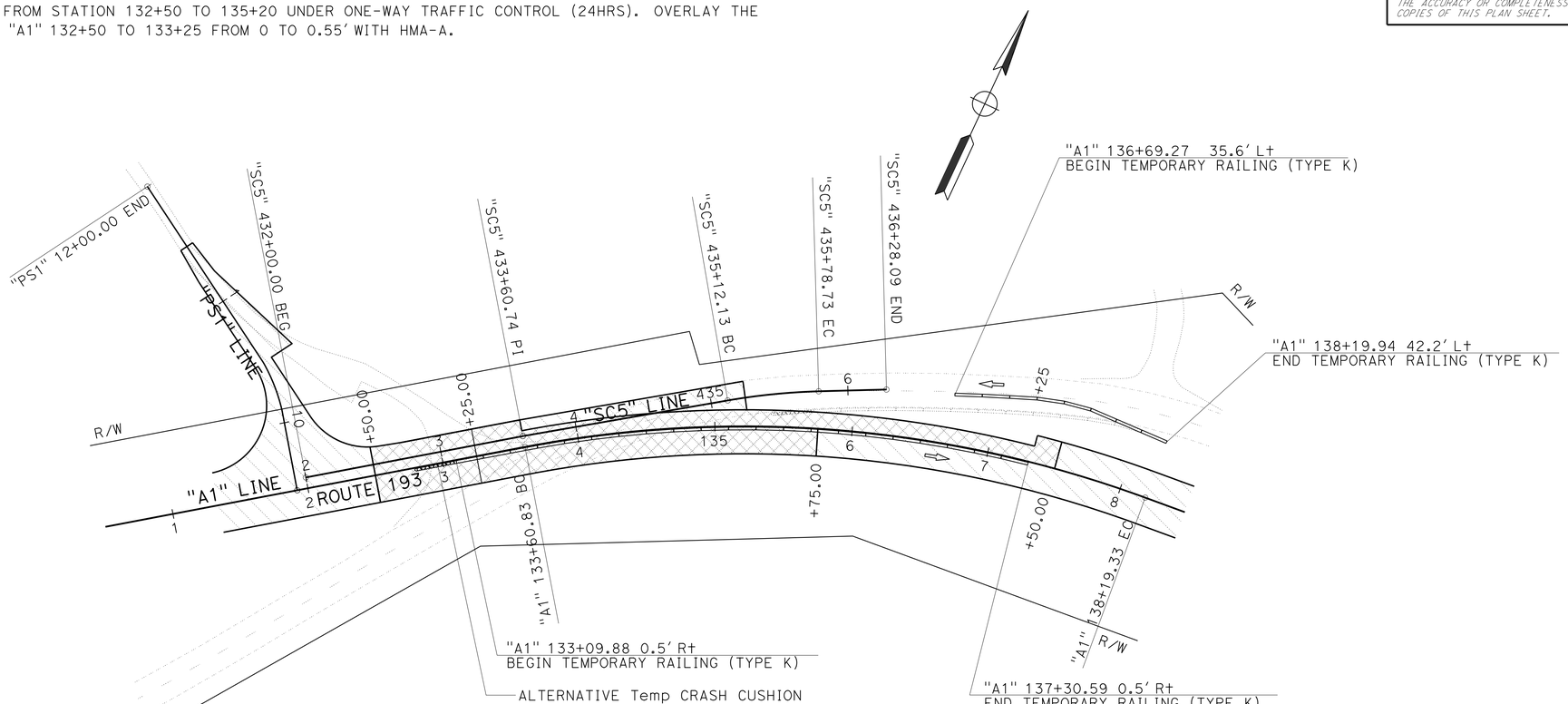

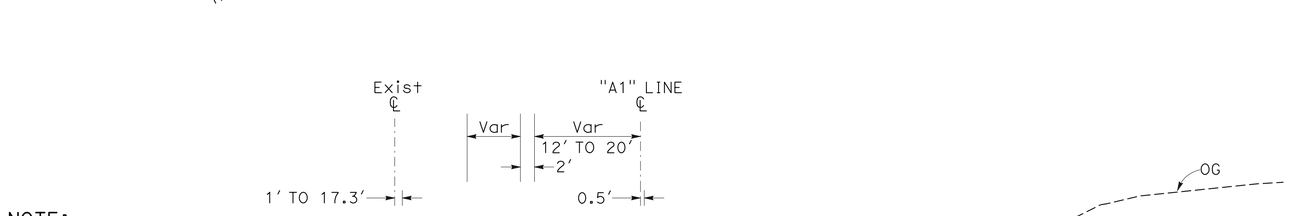

NOTE: SEE DRAINAGE PLANS FOR WILDLIFE CROSSING DETAILS.

TYPICAL CROSS SECTION

"A1" 135+75 TO "A1" 137+50

NO SCALE

THIS PLAN TO BE USED FOR STAGE CONSTRUCTION INFORMATION ONLY

STAGE CONSTRUCTION (STAGE 4b)

SCALE: 1"=50′

SC-18

REVISED BY	DATE REVISED

CALCULATED-DESIGNED BY: KULVIR DHALIWAL
CHECKED BY: TOM LANGLEY
FUNCTIONAL SUPERVISOR: MASTRI ALVANDI

STATE OF CALIFORNIA - DEPARTMENT OF TRANSPORTATION
DESIGN

LAST REVISION | DATE PLOTTED => 15-JUN-2015
04-06-15 | TIME PLOTTED => 15:51

Dist	COUNTY	ROUTE	POST MILES TOTAL PROJECT	SHEET No.	TOTAL SHEETS
03	Pla	193	4.4/5.5	88	197

Thomas N Langley 4-6-15
REGISTERED CIVIL ENGINEER DATE

4-6-15
PLANS APPROVAL DATE

REGISTERED PROFESSIONAL ENGINEER
TOM LANGLEY
No. 64882
Exp. 6-30-15
CIVIL
STATE OF CALIFORNIA

THE STATE OF CALIFORNIA OR ITS OFFICERS OR AGENTS SHALL NOT BE RESPONSIBLE FOR THE ACCURACY OR COMPLETENESS OF SCANNED COPIES OF THIS PLAN SHEET.

NOTE:

FOR ACCURATE RIGHT OF WAY DATA, CONTACT
RIGHT OF WAY ENGINEERING AT THE DISTRICT OFFICE.

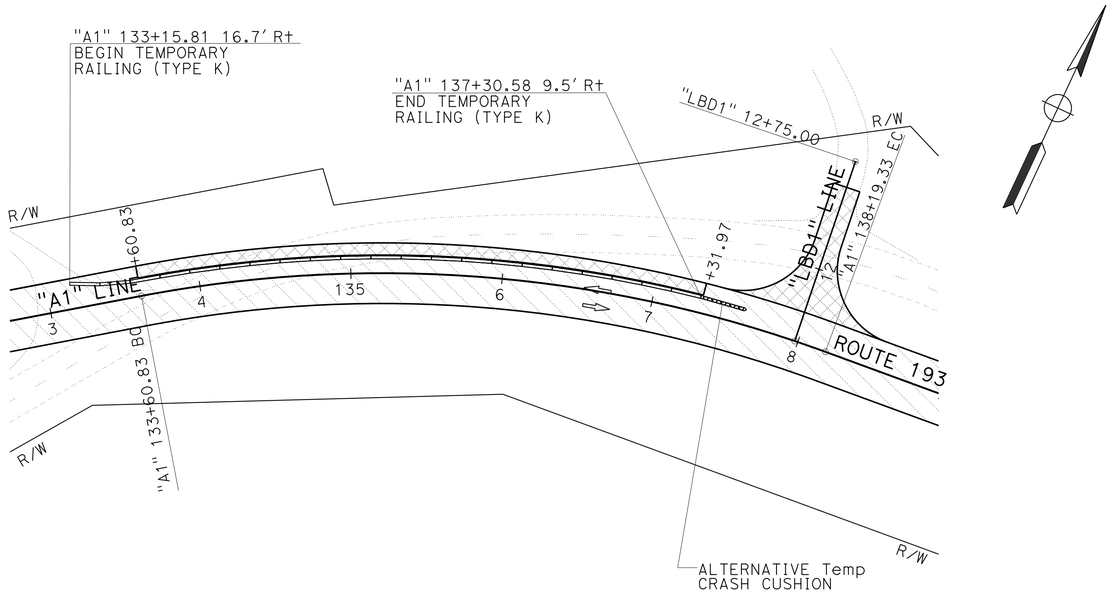

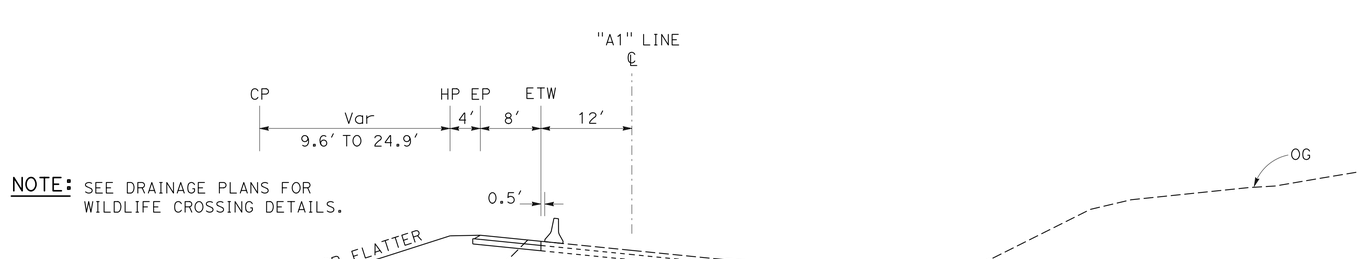

NOTE: SEE DRAINAGE PLANS FOR WILDLIFE CROSSING DETAILS.

TYPICAL CROSS SECTION

"A1" 133+61 TO "A1" 137+32
NO SCALE

STAGE CONSTRUCTION (STAGE 4c)

SCALE: 1"=50'

THIS PLAN TO BE USED FOR STAGE CONSTRUCTION INFORMATION ONLY

SC-19

STATE OF CALIFORNIA - DEPARTMENT OF TRANSPORTATION
DESIGN
FUNCTIONAL SUPERVISOR: MASTRI ALVANDI
CALCULATED-DESIGNED BY: KULVIR DHALIWAL
CHECKED BY: TOM LANGLEY
REVISED BY
DATE REVISED

LAST REVISION | DATE PLOTTED => 15-JUN-2015
04-06-15 | TIME PLOTTED => 15:51

BORDER LAST REVISED 7/2/2010 | USERNAME => s130875 | DGN FILE => 0300000725ma019.dgn | RELATIVE BORDER SCALE IS IN INCHES 0 1 2 3 | UNIT 0337 | PROJECT NUMBER & PHASE 03000007251

Dist	COUNTY	ROUTE	POST MILES TOTAL PROJECT	SHEET No.	TOTAL SHEETS
03	Pla	193	4.4/5.5	89	197

REGISTERED CIVIL ENGINEER 4-6-15 DATE

PLANS APPROVAL DATE 4-6-15

REGISTERED PROFESSIONAL ENGINEER TOM LANGLEY No. 64882 Exp. 6-30-15 CIVIL STATE OF CALIFORNIA

THE STATE OF CALIFORNIA OR ITS OFFICERS OR AGENTS SHALL NOT BE RESPONSIBLE FOR THE ACCURACY OR COMPLETENESS OF SCANNED COPIES OF THIS PLAN SHEET.

ABRAVATIONS:

S/C SAW CUT
SE SAFETY EDGE

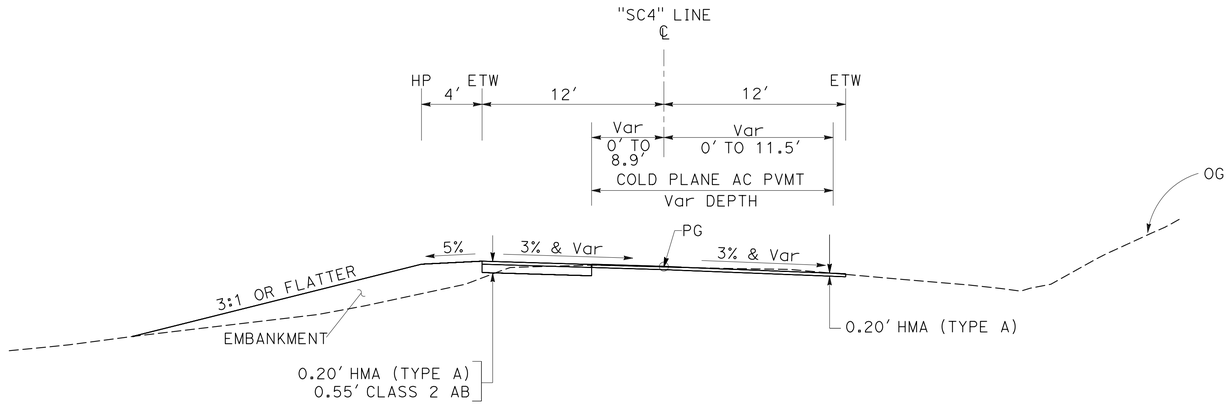

TYPICAL CROSS SECTION

"SC4" 322+50 TO 323+29.60

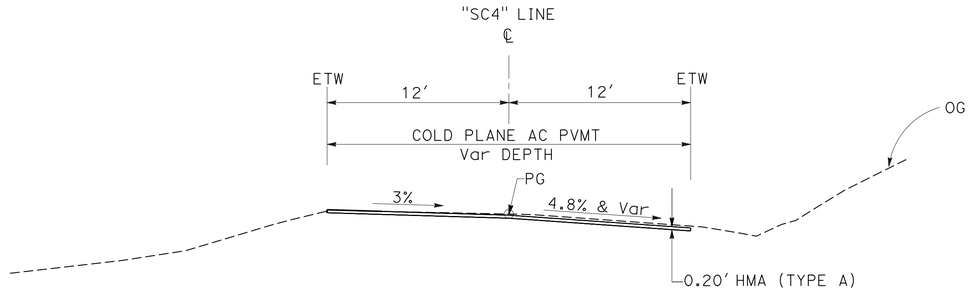

TYPICAL CROSS SECTION

"SC4" 322+00 TO 322+50

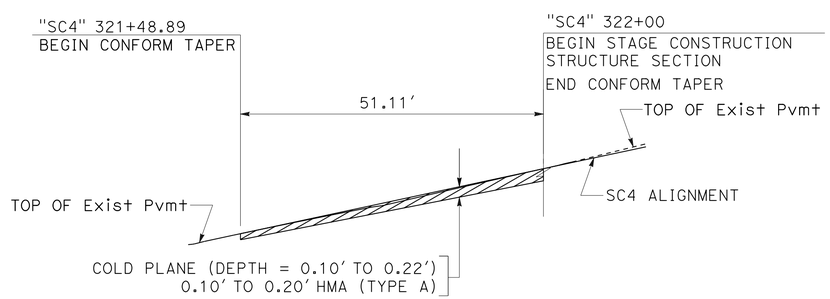

CONFORM TAPER

"SC4" 321+48.89 TO 322+00

VARIABLE COLD PLANE TABLE

STATION	LEFT EDGE OF COLD PLANE		COLD PLANE GRADE BREAK		RIGHT EDGE OF COLD PLANE	
	OFFSET	DEPTH (LF)	OFFSET	DEPTH (LF)	OFFSET	DEPTH (LF)
Sta "SC4" 322+00.00	12.00 Lt	0.15	0	0.19	12.00 Rt	0.22
Sta "SC4" 322+25.00	11.70 Lt	0.19	0	0.28	12.00 Rt	0.32
Sta "SC4" 322+50.00	8.92 Lt	0.13	0	0.20	12.00 Rt	0.06
Sta "SC4" 322+75.00	4.77 Lt	0.16	0	0.18	12.00 Rt	0.16
Sta "SC4" 323+00.00	1.27 Rt	0.20			12.00 Rt	0.32
Sta "SC4" 323+25.00	9.88 Rt	0.20			12.00 Rt	0.25

STAGE CONSTRUCTION DETAILS
(STAGE 1)

NO SCALE

SCD-1

STATE OF CALIFORNIA - DEPARTMENT OF TRANSPORTATION
Caltrans
DESIGN
FUNCTIONAL SUPERVISOR: MASTRI ALVANDI
CALCULATED-DESIGNED BY: KULVIR DHALIWAL
CHECKED BY: TOM LANGLEY
REVISED BY
DATE REVISED

LAST REVISION 04-06-15
DATE PLOTTED => 15-JUN-2015
TIME PLOTTED => 15:51

Dist	COUNTY	ROUTE	POST MILES TOTAL PROJECT	SHEET No.	TOTAL SHEETS
03	Pla	193	4.4/5.5	90	197

Thomas N Langley 4-6-15
REGISTERED CIVIL ENGINEER DATE

4-6-15
PLANS APPROVAL DATE

REGISTERED PROFESSIONAL ENGINEER
TOM LANGLEY
No. 64882
Exp. 6-30-15
CIVIL
STATE OF CALIFORNIA

THE STATE OF CALIFORNIA OR ITS OFFICERS OR AGENTS SHALL NOT BE RESPONSIBLE FOR THE ACCURACY OR COMPLETENESS OF SCANNED COPIES OF THIS PLAN SHEET.

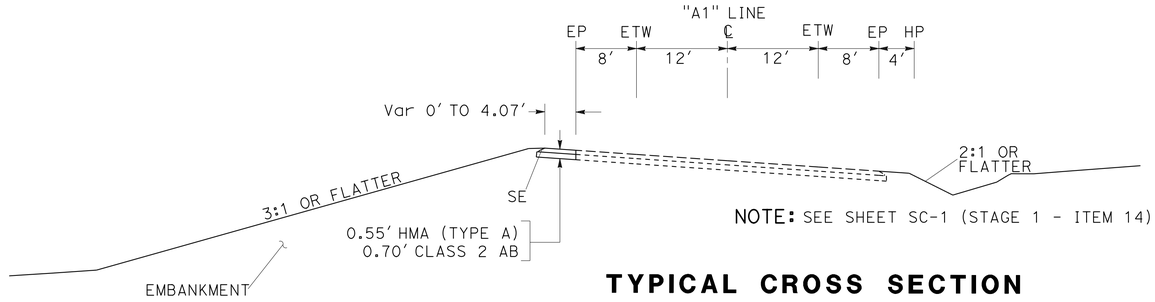

NOTE: SEE SHEET SC-1 (STAGE 1 - ITEM 14)

TYPICAL CROSS SECTION
"A1" 124+03.30 TO 124+75

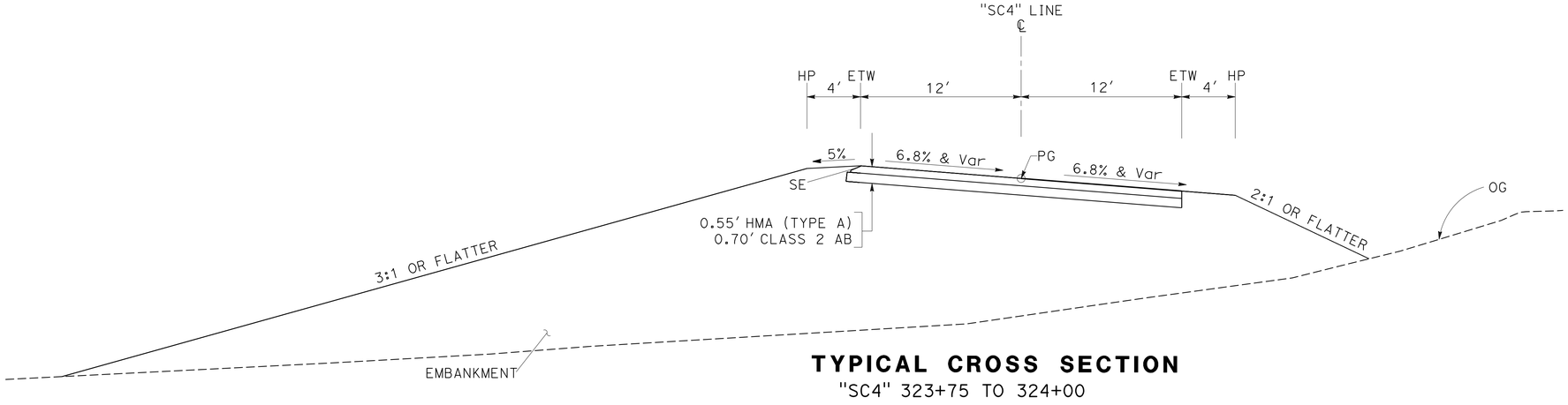

TYPICAL CROSS SECTION
"SC4" 323+75 TO 324+00

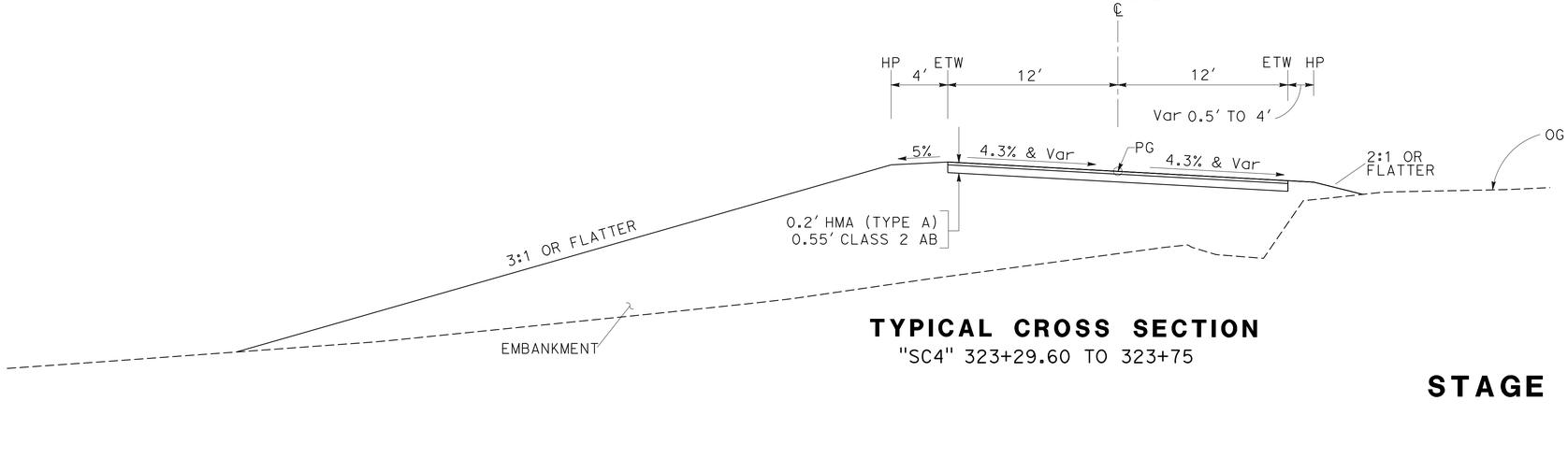

TYPICAL CROSS SECTION
"SC4" 323+29.60 TO 323+75

STAGE CONSTRUCTION DETAILS
(STAGE 1)
NO SCALE

SCD-2

REVISED BY | DATE REVISED
KULVIR DHALIWAL | TOM LANGLEY
CALCULATED-DESIGNED BY | CHECKED BY
FUNCTIONAL SUPERVISOR: MASTRI ALVANDI
STATE OF CALIFORNIA - DEPARTMENT OF TRANSPORTATION
DESIGN

LAST REVISION | DATE PLOTTED => 15-JUN-2015
04-06-15 | TIME PLOTTED => 15:51

BORDER LAST REVISED 7/2/2010 | USERNAME => s130875 | DGN FILE => 0300000725mb002.dgn | RELATIVE BORDER SCALE IS IN INCHES 0 1 2 3 | UNIT 0337 | PROJECT NUMBER & PHASE 03000007251

Dist	COUNTY	ROUTE	POST MILES TOTAL PROJECT	SHEET No.	TOTAL SHEETS
03	Pla	193	4.4/5.5	91	197

Thomas N Langley 4-6-15
REGISTERED CIVIL ENGINEER DATE

4-6-15
PLANS APPROVAL DATE

REGISTERED PROFESSIONAL ENGINEER
TOM LANGLEY
No. 64882
Exp. 6-30-15
CIVIL
STATE OF CALIFORNIA

THE STATE OF CALIFORNIA OR ITS OFFICERS OR AGENTS SHALL NOT BE RESPONSIBLE FOR THE ACCURACY OR COMPLETENESS OF SCANNED COPIES OF THIS PLAN SHEET.

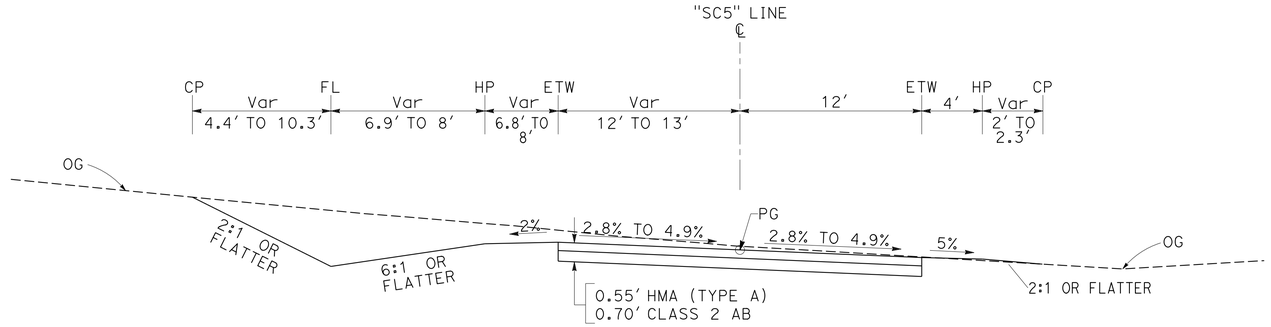

NOTE: SEE SHEET C-12 FOR DRIVEWAY

TYPICAL CROSS SECTION

"SC5" 432+50 TO 433+25

STAGE CONSTRUCTION DETAILS (STAGE 1)

NO SCALE

SCD-3

STATE OF CALIFORNIA - DEPARTMENT OF TRANSPORTATION
DESIGN
FUNCTIONAL SUPERVISOR: MASTRI ALVANDI
CALCULATED-DESIGNED BY: KULVIR DHALIWAL
CHECKED BY: TOM LANGLEY
REVISED BY
DATE REVISED

LAST REVISION DATE PLOTTED => 15-JUN-2015
04-06-15 TIME PLOTTED => 15:51

BORDER LAST REVISED 7/2/2010
USERNAME => s130875
DGN FILE => 0300000725mb003.dgn
RELATIVE BORDER SCALE IS IN INCHES 0 1 2 3
UNIT 0337
PROJECT NUMBER & PHASE 03000007251

Dist	COUNTY	ROUTE	POST MILES TOTAL PROJECT	SHEET No.	TOTAL SHEETS
03	Pla	193	4.4/5.5	92	197

Thomas N Langley 4-6-15
REGISTERED CIVIL ENGINEER DATE

4-6-15
PLANS APPROVAL DATE

REGISTERED PROFESSIONAL ENGINEER
TOM LANGLEY
No. 64882
Exp. 6-30-15
CIVIL
STATE OF CALIFORNIA

THE STATE OF CALIFORNIA OR ITS OFFICERS OR AGENTS SHALL NOT BE RESPONSIBLE FOR THE ACCURACY OR COMPLETENESS OF SCANNED COPIES OF THIS PLAN SHEET.

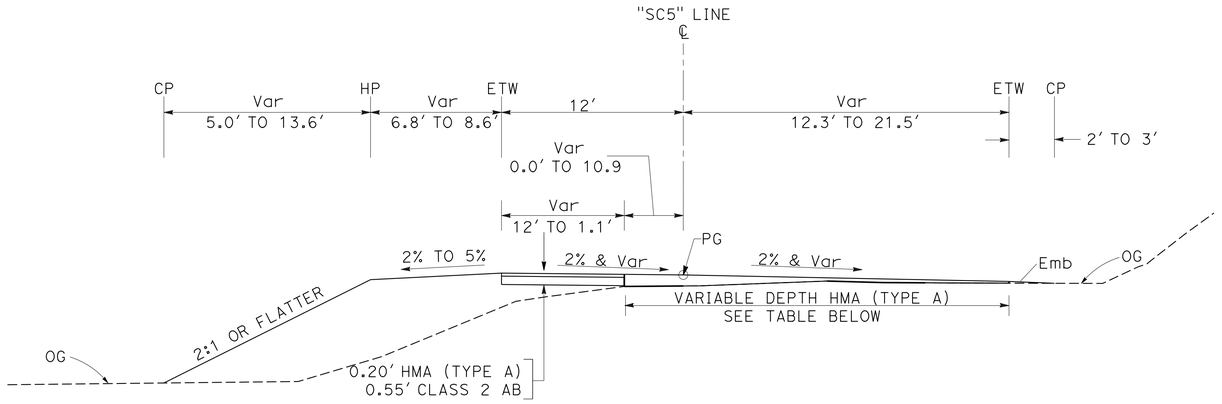

TYPICAL CROSS SECTION

"SC5" 434+00 TO 434+75

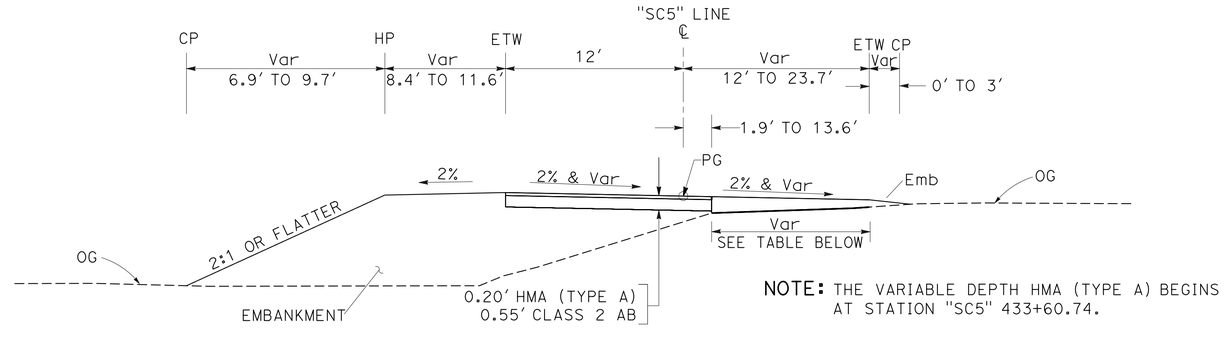

NOTE: THE VARIABLE DEPTH HMA (TYPE A) BEGINS AT STATION "SC5" 433+60.74.

TYPICAL CROSS SECTION

"SC5" 433+25 TO 434+00

VARIABLE DEPTH HMA-A TABLE

STATION	LEFT EDGE OF OVERLAY		OVERLAY GRADE BREAK		RIGHT EDGE OF OVERLAY	
	OFFSET	DEPTH (LF)	OFFSET	DEPTH (LF)	OFFSET	DEPTH (LF)
Sta "SC5" 433+60.74	13.55 Rt	1.07			23.68 Rt	0.20
Sta "SC5" 433+75	9.35 Rt	1.18			19.61 Rt	0.20
Sta "SC5" 434+00	1.87 Rt	1.08			12.27 Rt	0.20
Sta "SC5" 434+25	3.89 Lt	0.80	0	0.73	21.50 Rt	0.12
Sta "SC5" 434+50	8.48 Lt	0.43	0	0.37	16.56 Rt	0.32
Sta "SC5" 434+75	10.87 Lt	0	0	0.12	13.97 Rt	0.33

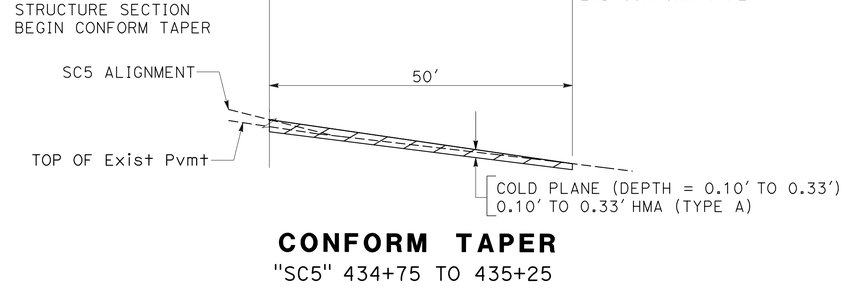

CONFORM TAPER

"SC5" 434+75 TO 435+25

STAGE CONSTRUCTION DETAILS (STAGE 1)

NO SCALE

SCD-4

STATE OF CALIFORNIA - DEPARTMENT OF TRANSPORTATION
DESIGN
FUNCTIONAL SUPERVISOR: MASTRI ALVANDI
CALCULATED-DESIGNED BY: KULVIR DHALIWAL
CHECKED BY: TOM LANGLEY
REVISED BY
DATE REVISED

LAST REVISION | DATE PLOTTED => 15-JUN-2015 | 04-06-15 | TIME PLOTTED => 15:51

BORDER LAST REVISED 7/2/2010 | USERNAME => s130875 | DGN FILE => 0300000725mb004.dgn | RELATIVE BORDER SCALE IS IN INCHES 0 1 2 3 | UNIT 0337 | PROJECT NUMBER & PHASE 03000007251

Dist	COUNTY	ROUTE	POST MILES TOTAL PROJECT	SHEET No.	TOTAL SHEETS
03	Pla	193	4.4/5.5	93	197

Thomas A Langley 4-6-15
REGISTERED CIVIL ENGINEER DATE

4-6-15
PLANS APPROVAL DATE

REGISTERED PROFESSIONAL ENGINEER
TOM LANGLEY
No. 64882
Exp. 6-30-15
CIVIL
STATE OF CALIFORNIA

THE STATE OF CALIFORNIA OR ITS OFFICERS OR AGENTS SHALL NOT BE RESPONSIBLE FOR THE ACCURACY OR COMPLETENESS OF SCANNED COPIES OF THIS PLAN SHEET.

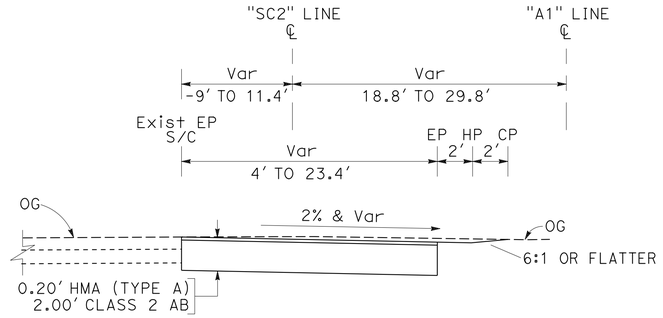

TYPICAL CROSS SECTION
"SC2" 298+25 TO "SC2" 299+18.81

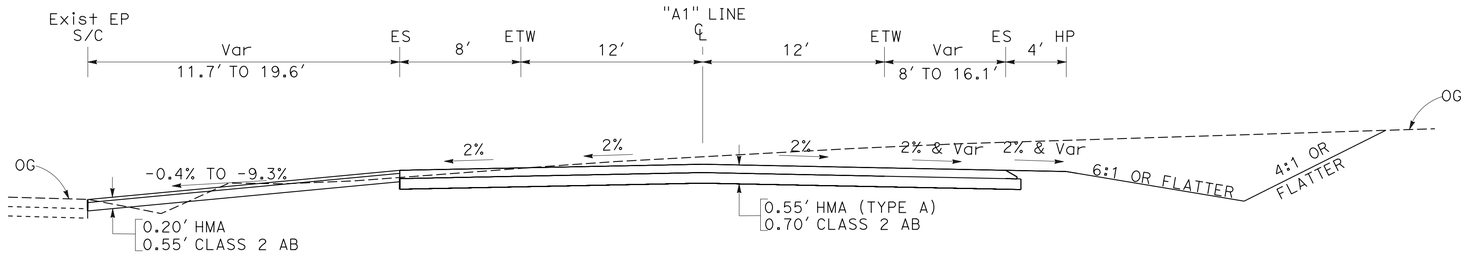

TYPICAL CROSS SECTION
"A1" 99+52.84 TO "A1" 100+38

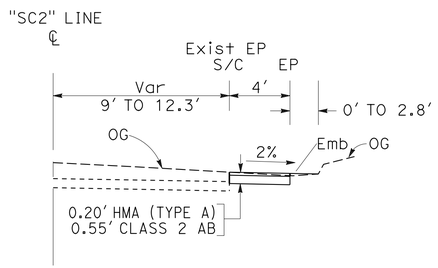

TYPICAL CROSS SECTION
"SC2" Sta 297+50 TO "SC2" 298+25

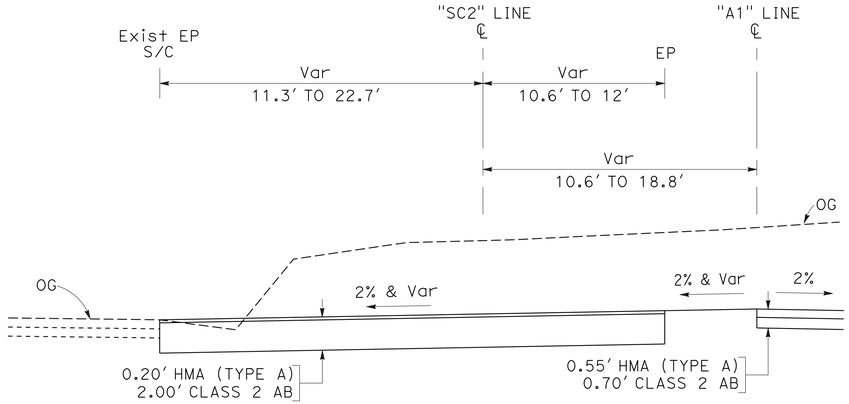

TYPICAL CROSS SECTION
"SC2" 299+18.81 TO "SC2" 299+50

STAGE CONSTRUCTION DETAILS
(STAGE 2)
NO SCALE

SCD-5

STATE OF CALIFORNIA - DEPARTMENT OF TRANSPORTATION
DESIGN
FUNCTIONAL SUPERVISOR: MASTRI ALVANDI
CALCULATED-DESIGNED BY: KULVIR DHALIWAL
CHECKED BY: TOM LANGLEY
REVISED BY
DATE REVISED

LAST REVISION 04-06-15
DATE PLOTTED => 15-JUN-2015
TIME PLOTTED => 15:51

BORDER LAST REVISED 7/2/2010
USERNAME => s130875
DGN FILE => 0300000725mb005.dgn
RELATIVE BORDER SCALE IS IN INCHES 0 1 2 3
UNIT 0337
PROJECT NUMBER & PHASE 03000007251

Dist	COUNTY	ROUTE	POST MILES TOTAL PROJECT	SHEET No.	TOTAL SHEETS
03	Pla	193	4.4/5.5	94	197

Thomas A Langley 4-6-15
REGISTERED CIVIL ENGINEER DATE

4-6-15
PLANS APPROVAL DATE

REGISTERED PROFESSIONAL ENGINEER
TOM LANGLEY
No. 64882
Exp. 6-30-15
CIVIL
STATE OF CALIFORNIA

THE STATE OF CALIFORNIA OR ITS OFFICERS OR AGENTS SHALL NOT BE RESPONSIBLE FOR THE ACCURACY OR COMPLETENESS OF SCANNED COPIES OF THIS PLAN SHEET.

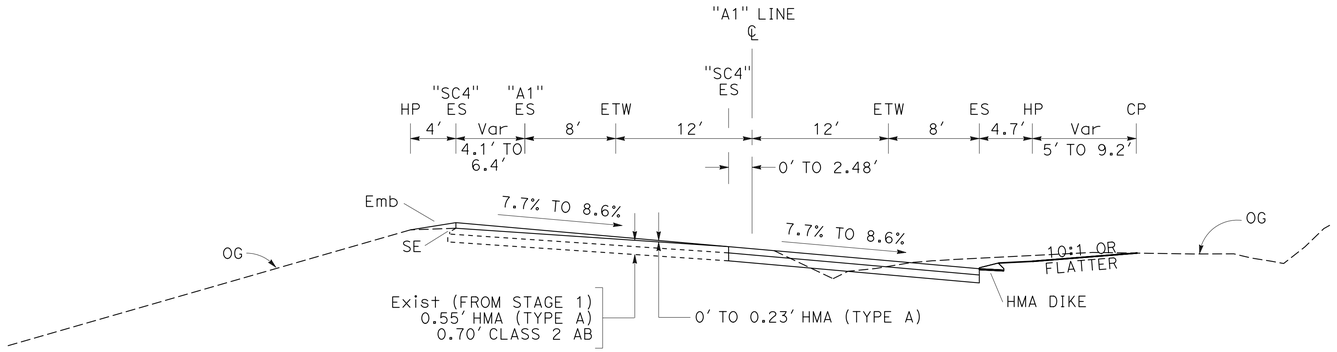

TYPICAL CROSS SECTION

"A1" 123+79.37 TO 124+03.30

STAGE CONSTRUCTION DETAILS (STAGE 3a)

NO SCALE

SCD-6

REVISED BY | DATE REVISED
CALCULATED-DESIGNED BY: KULVIR DHALIWAL
CHECKED BY: TOM LANGLEY
FUNCTIONAL SUPERVISOR: MASTRI ALVANDI
STATE OF CALIFORNIA - DEPARTMENT OF TRANSPORTATION
Caltrans®
DESIGN

LAST REVISION | DATE PLOTTED => 15-JUN-2015
04-06-15 | TIME PLOTTED => 15:51

BORDER LAST REVISED 7/2/2010 | USERNAME => s130875 | DGN FILE => 0300000725mb006.dgn | RELATIVE BORDER SCALE IS IN INCHES 0 1 2 3 | UNIT 0337 | PROJECT NUMBER & PHASE 03000007251

Dist	COUNTY	ROUTE	POST MILES TOTAL PROJECT	SHEET No.	TOTAL SHEETS
03	Pla	193	4.4/5.5	95	197

Thomas A Langley 4-6-15
REGISTERED CIVIL ENGINEER DATE

4-6-15
PLANS APPROVAL DATE

REGISTERED PROFESSIONAL ENGINEER
TOM LANGLEY
No. 64882
Exp. 6-30-15
CIVIL
STATE OF CALIFORNIA

THE STATE OF CALIFORNIA OR ITS OFFICERS OR AGENTS SHALL NOT BE RESPONSIBLE FOR THE ACCURACY OR COMPLETENESS OF SCANNED COPIES OF THIS PLAN SHEET.

NOTES:

1. USE "A1" SUPERELEVATION.
2. "SC6" SUPERELEVATION TO MATCH "A1" SUPERELEVATION.

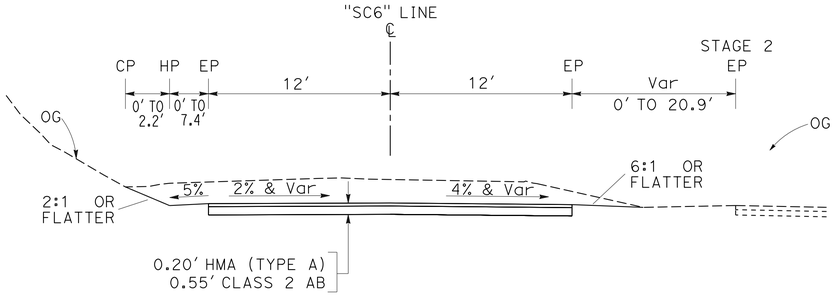

TYPICAL CROSS SECTION
"SC6" 639+50 TO 640+26.39

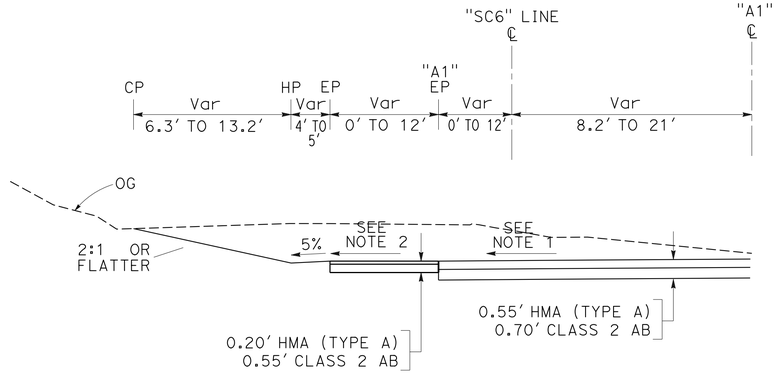

TYPICAL CROSS SECTION
"SC6" 640+58.37 TO 641+12.18

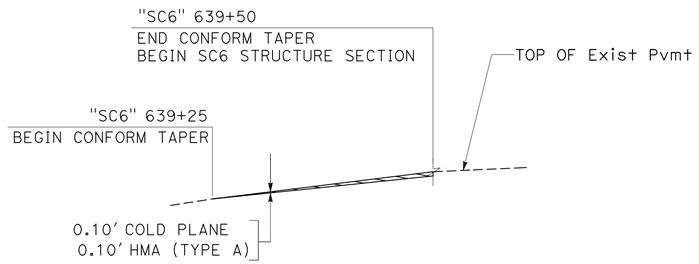

CONFORM TAPER
"SC6" 639+25 TO 639+50

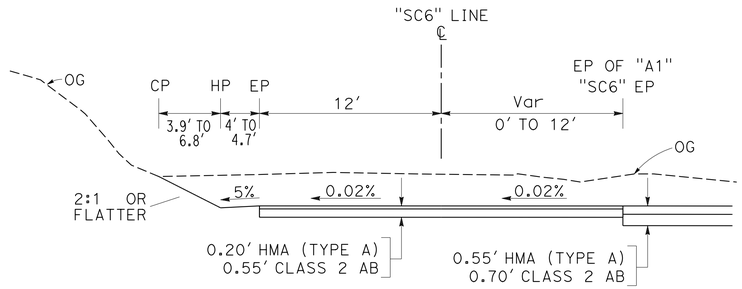

TYPICAL CROSS SECTION
"SC6" 640+26.39 TO 640+58.37

STAGE CONSTRUCTION DETAILS
(STAGE 4a)

NO SCALE

SCD-7

STATE OF CALIFORNIA - DEPARTMENT OF TRANSPORTATION
DESIGN
FUNCTIONAL SUPERVISOR: MASTRI ALVANDI
CALCULATED-DESIGNED BY:
CHECKED BY:
KULVIR DHALIWAL
TOM LANGLEY
REVISED BY
DATE REVISED

LAST REVISION 04-06-15
DATE PLOTTED => 15-JUN-2015
TIME PLOTTED => 15:51

Dist	COUNTY	ROUTE	POST MILES TOTAL PROJECT	SHEET No.	TOTAL SHEETS
03	Pla	193	4.4/5.5	96	197

Thomas N Langley 4-6-15
REGISTERED CIVIL ENGINEER DATE

REGISTERED PROFESSIONAL ENGINEER
TOM LANGLEY
No. 64882
Exp. 6-30-15
CIVIL
STATE OF CALIFORNIA

4-6-15
PLANS APPROVAL DATE

THE STATE OF CALIFORNIA OR ITS OFFICERS OR AGENTS SHALL NOT BE RESPONSIBLE FOR THE ACCURACY OR COMPLETENESS OF SCANNED COPIES OF THIS PLAN SHEET.

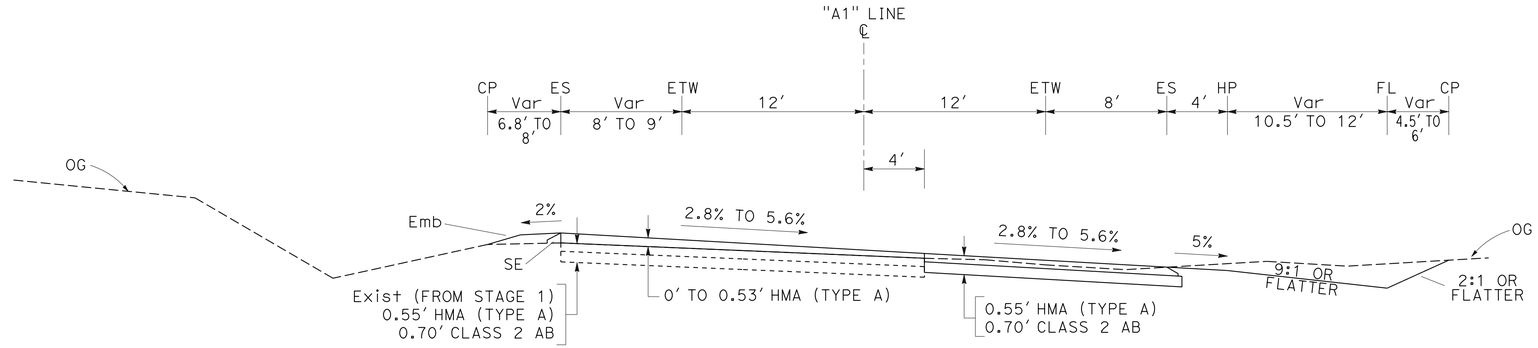

TYPICAL CROSS SECTION

"A1" 132+50 TO 133+25

STAGE CONSTRUCTION DETAILS
(STAGE 4b)

NO SCALE

SCD-8

CALCULATED-DESIGNED BY: KULVIR DHALIWAL
CHECKED BY: TOM LANGLEY
FUNCTIONAL SUPERVISOR: MASTRI ALVANDI
STATE OF CALIFORNIA - DEPARTMENT OF TRANSPORTATION
DESIGN

REVISED BY	DATE REVISED

LAST REVISION 04-06-15
DATE PLOTTED => 15-JUN-2015
TIME PLOTTED => 15:51

BORDER LAST REVISED 7/2/2010
USERNAME => s130875
DGN FILE => 0300000725mb008.dgn
RELATIVE BORDER SCALE IS IN INCHES 0 1 2 3
UNIT 0337
PROJECT NUMBER & PHASE 03000007251

NOTE: BURIED MAN-MADE OBJECTS, REFER TO GEOTECHNICAL REPORTS IN SUPPLEMENTAL PROJECT INFORMATION.

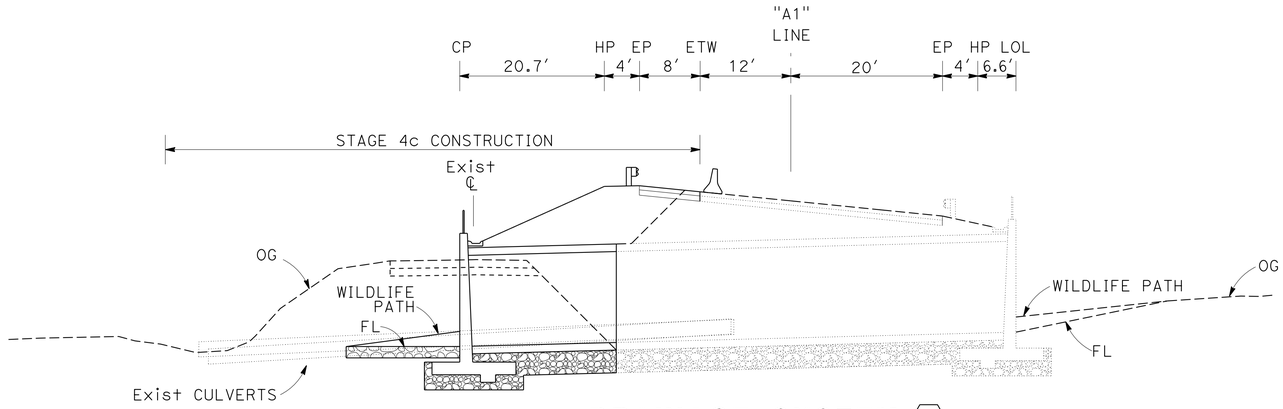

DRAINAGE SYSTEM (13)

STAGE 4c

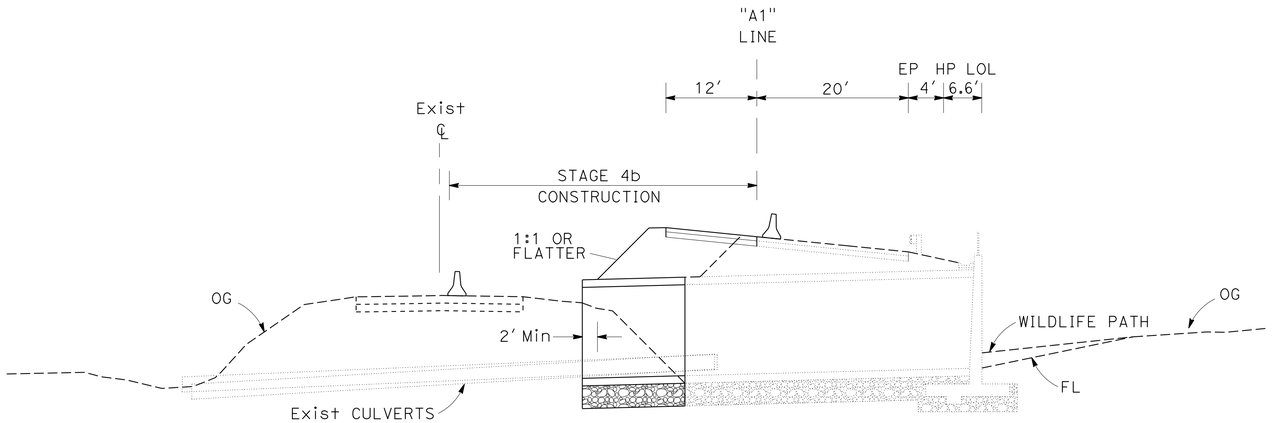

DRAINAGE SYSTEM (13)

STAGE 4b

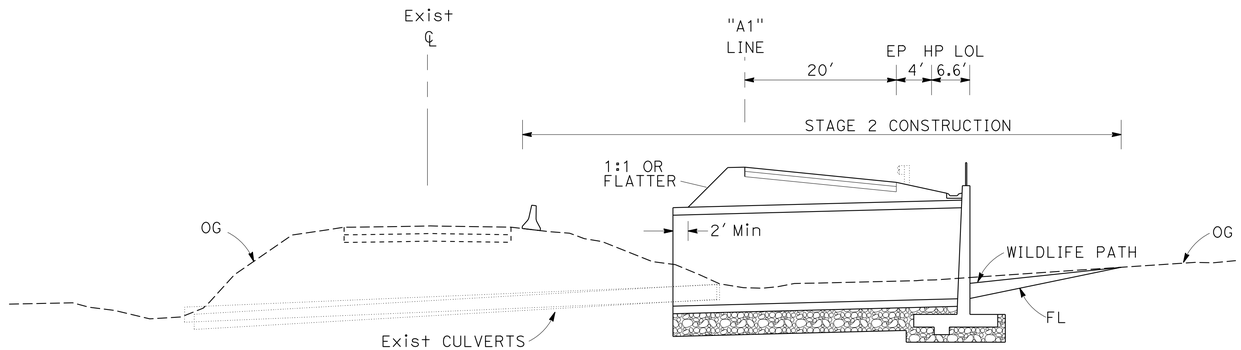

DRAINAGE SYSTEM (13)

STAGE 2

STAGE CONSTRUCTION DETAILS
(DRAINAGE SYSTEM 13)

NO SCALE

SCD-9

Dist	COUNTY	ROUTE	POST MILES TOTAL PROJECT	SHEET No.	TOTAL SHEETS
03	Pla	193	4.4/5.5	97	197

Thomas A Langley 4-6-15
REGISTERED CIVIL ENGINEER DATE

4-6-15
PLANS APPROVAL DATE

REGISTERED PROFESSIONAL ENGINEER
TOM LANGLEY
No. 64882
Exp. 6-30-15
CIVIL
STATE OF CALIFORNIA

THE STATE OF CALIFORNIA OR ITS OFFICERS OR AGENTS SHALL NOT BE RESPONSIBLE FOR THE ACCURACY OR COMPLETENESS OF SCANNED COPIES OF THIS PLAN SHEET.

CALCULATED-DESIGNED BY: KULVIR DHALIWAL
CHECKED BY: TOM LANGLEY
FUNCTIONAL SUPERVISOR: MASTRI ALVANDI
REVISED BY
DATE REVISED

STATE OF CALIFORNIA - DEPARTMENT OF TRANSPORTATION
DESIGN

Caltrans

LAST REVISION DATE PLOTTED => 16-JUN-2015
04-06-15 TIME PLOTTED => 07:23

BORDER LAST REVISED 7/2/2010
USERNAME => s130875
DGN FILE => 0300000725mb009.dgn
RELATIVE BORDER SCALE IS IN INCHES 0 1 2 3
UNIT 0337
PROJECT NUMBER & PHASE 03000007251

Dist	COUNTY	ROUTE	POST MILES TOTAL PROJECT	SHEET No.	TOTAL SHEETS
03	Pla	193	4.4/5.5	98	197

Thomas A Langley 4-6-15
REGISTERED CIVIL ENGINEER DATE

4-6-15
PLANS APPROVAL DATE

REGISTERED PROFESSIONAL ENGINEER
TOM LANGLEY
No. 64882
Exp. 6-30-15
CIVIL
STATE OF CALIFORNIA

THE STATE OF CALIFORNIA OR ITS OFFICERS OR AGENTS SHALL NOT BE RESPONSIBLE FOR THE ACCURACY OR COMPLETENESS OF SCANNED COPIES OF THIS PLAN SHEET.

NOTE (THIS SHEET ONLY):

EXCAVATION AND EMBANKMENT QUANTITIES ARE INCLUDED IN THE SUMMARY OF QUANTITY SHEETS.

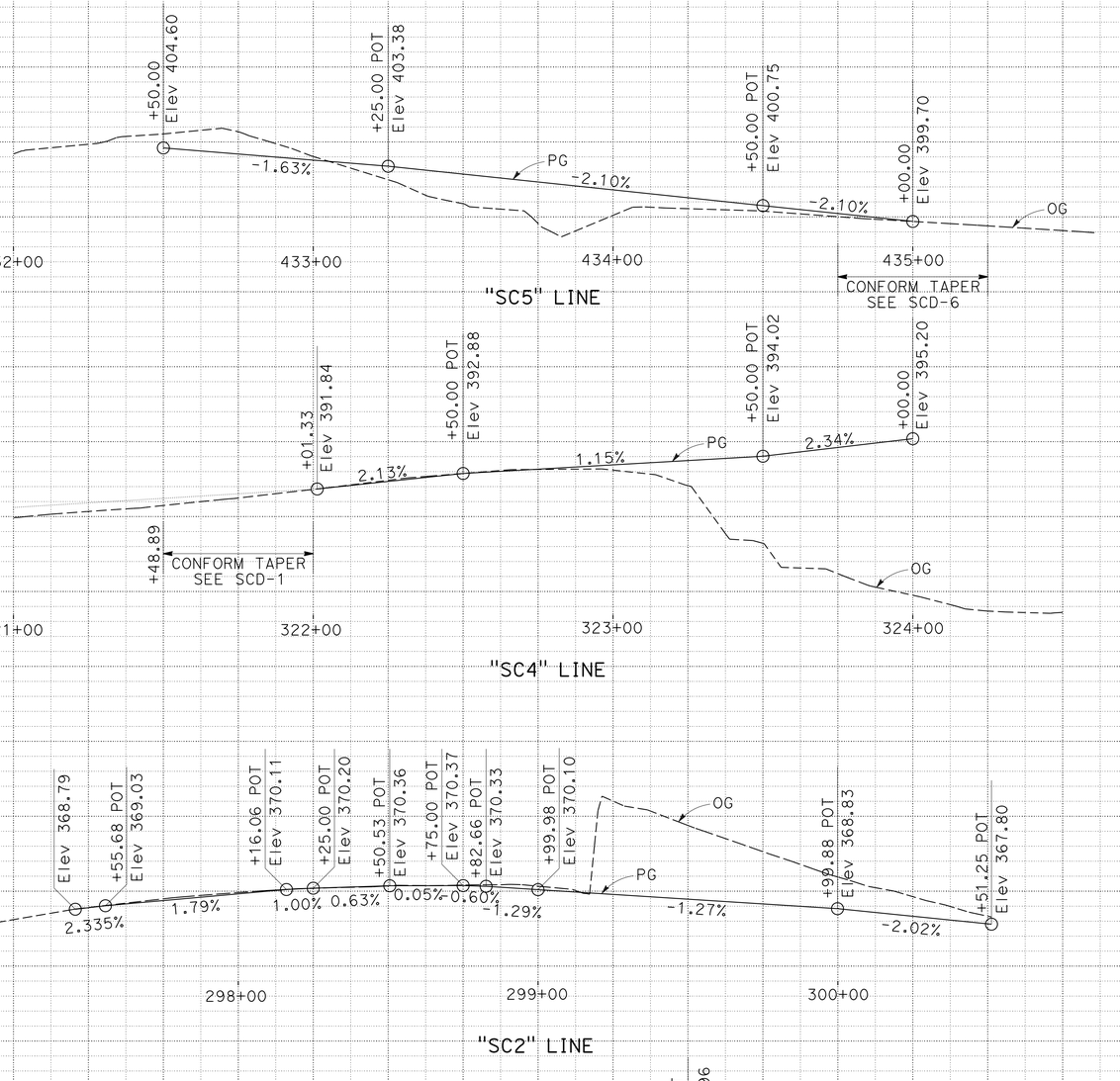

STAGE CONSTRUCTION DETAILS

PROFILE

SCALE: Horiz 1"=25'
Vert 1"=5'

SCD-10

STATION		TOTAL
CY	Exc	
	Emb	SEE NOTE

REVISED BY | DATE REVISED

KULVIR DHALIWAL | TOM LANGLEY

CALCULATED-DESIGNED BY | CHECKED BY

FUNCTIONAL SUPERVISOR: MASTRI ALVANDI

STATE OF CALIFORNIA - DEPARTMENT OF TRANSPORTATION
DESIGN

LAST REVISION: DATE PLOTTED => 15-JUN-2015
04-06-15 TIME PLOTTED => 15:51

BORDER LAST REVISED 7/2/2010 | USERNAME => s130875 | DGN FILE => 0300000725mb010.dgn | RELATIVE BORDER SCALE IS IN INCHES 0 1 2 3 | UNIT 0337 | PROJECT NUMBER & PHASE 03000007251

Dist	COUNTY	ROUTE	POST MILES TOTAL PROJECT	SHEET No.	TOTAL SHEETS
03	Pla	193	4.4/5.5	99	197

Thomas A Langley 4-6-15
REGISTERED CIVIL ENGINEER DATE

REGISTERED PROFESSIONAL ENGINEER
TOM LANGLEY
No. 64882
Exp. 6-30-15
CIVIL
STATE OF CALIFORNIA

4-6-15
PLANS APPROVAL DATE

THE STATE OF CALIFORNIA OR ITS OFFICERS OR AGENTS SHALL NOT BE RESPONSIBLE FOR THE ACCURACY OR COMPLETENESS OF SCANNED COPIES OF THIS PLAN SHEET.

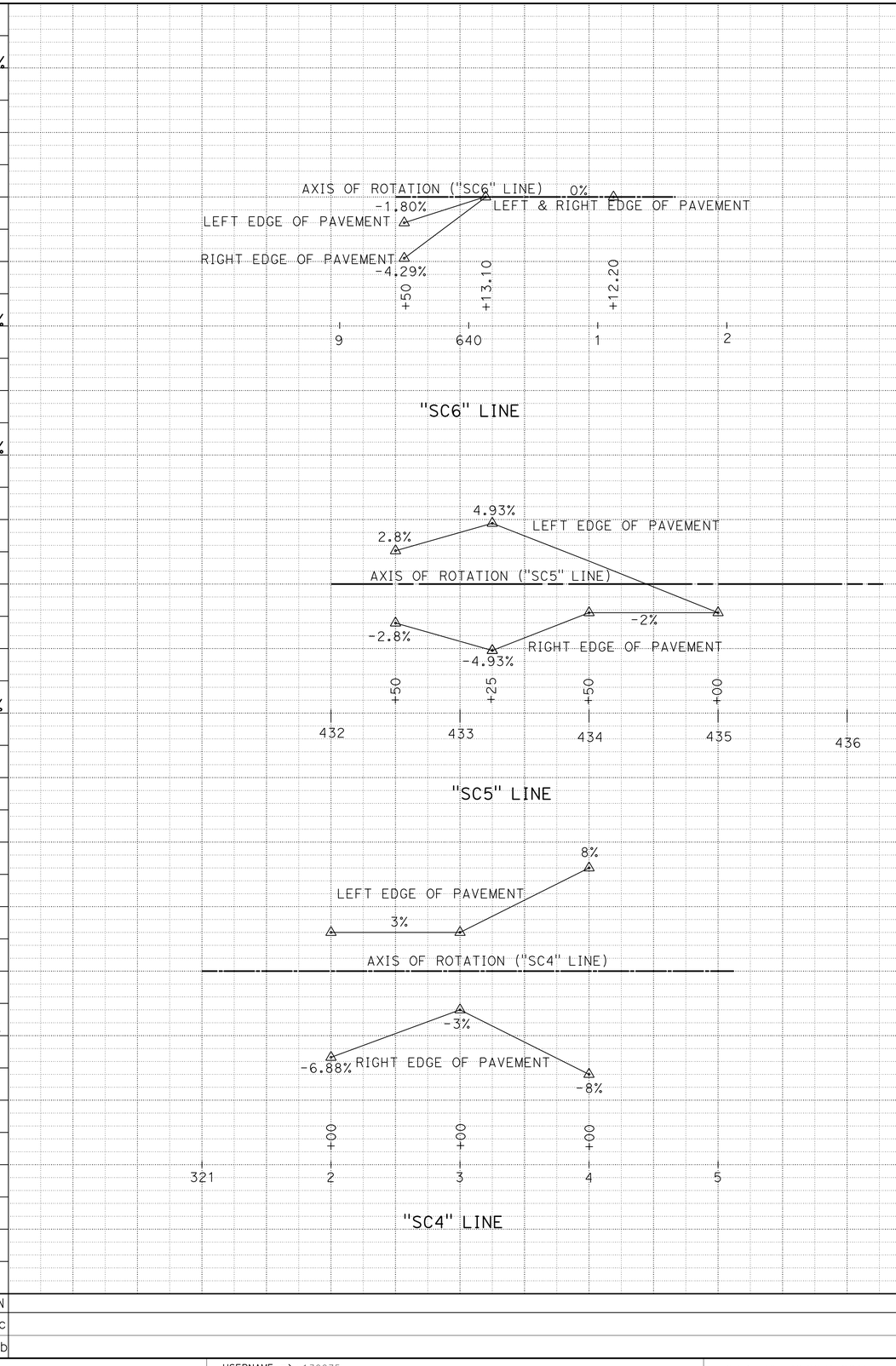

STAGE CONSTRUCTION DETAILS
SUPERELEVATION DIAGRAM

SCALE: Horiz 1" = 50'

ROUTE 193

SCD-11

STATION			TOTAL
CY	Exc		
	Emb		

STATE OF CALIFORNIA - DEPARTMENT OF TRANSPORTATION
Caltrans®
DESIGN
FUNCTIONAL SUPERVISOR: MASTRI ALVANDI
CALCULATED-DESIGNED BY: KULVIR DHALIWAL
CHECKED BY: TOM LANGLEY
REVISED BY
DATE REVISED

LAST REVISION DATE PLOTTED => 15-JUN-2015
04-06-15 TIME PLOTTED => 15:51

BORDER LAST REVISED 7/2/2010
USERNAME => s130875
DGN FILE => 0300000725mb011.dgn
RELATIVE BORDER SCALE IS IN INCHES 0 1 2 3
UNIT 0337
PROJECT NUMBER & PHASE 03000007251

Dist	COUNTY	ROUTE	POST MILES TOTAL PROJECT	SHEET No.	TOTAL SHEETS
03	Pla	193	4.4/5.5	100	197

Kris M. Albers 4-6-15
REGISTERED CIVIL ENGINEER DATE

4-6-15
PLANS APPROVAL DATE

REGISTERED PROFESSIONAL ENGINEER
KRIS M. ALBERS
No. 49986
Exp. 6-30-15
CIVIL
STATE OF CALIFORNIA

THE STATE OF CALIFORNIA OR ITS OFFICERS OR AGENTS SHALL NOT BE RESPONSIBLE FOR THE ACCURACY OR COMPLETENESS OF SCANNED COPIES OF THIS PLAN SHEET.

LEGEND

⊢	LIMIT OF STRIPING PATTERN
⊢⊣	CHANGE IN STRIPING PATTERN
No./P	PAVEMENT DELINEATION DETAIL NUMBER P=PAINT
LL/P	LIMIT LINE, P=TPMP
PAINT	TEMPORARY TRAFFIC STRIPE (PAINT)
TPMP	TEMPORARY PAVEMENT MARKING (PAINT)
S	"STOP" PAVEMENT MARKING (PAINT)
⇨	DIRECTION OF TRAVEL
‡	TYPE III BARRICADE
⊢►	TEMPORARY DELINEATOR (CLASS 1)
⊕	TRAFFIC PLASTIC DRUM
s=	TEMPORARY DELINEATOR OR TRAFFIC PLASTIC DRUM SPACING

(X)	CONSTRUCTION AREA SIGN LETTER
No.	ROADSIDE SIGN / CONSTRUCTION AREA SIGN NUMBER
<CA>	CALIFORNIA SIGN CODE
▲	RESET ROADSIDE SIGN
■	REMOVE ROADSIDE SIGN
*	RELOCATE ROADSIDE SIGN
***	SALVAGE ROADSIDE SIGN (METAL POST)
▲▲	RESET CONSTRUCTION AREA SIGN
■■	REMOVE CONSTRUCTION AREA SIGN
**	RELOCATE CONSTRUCTION AREA SIGN

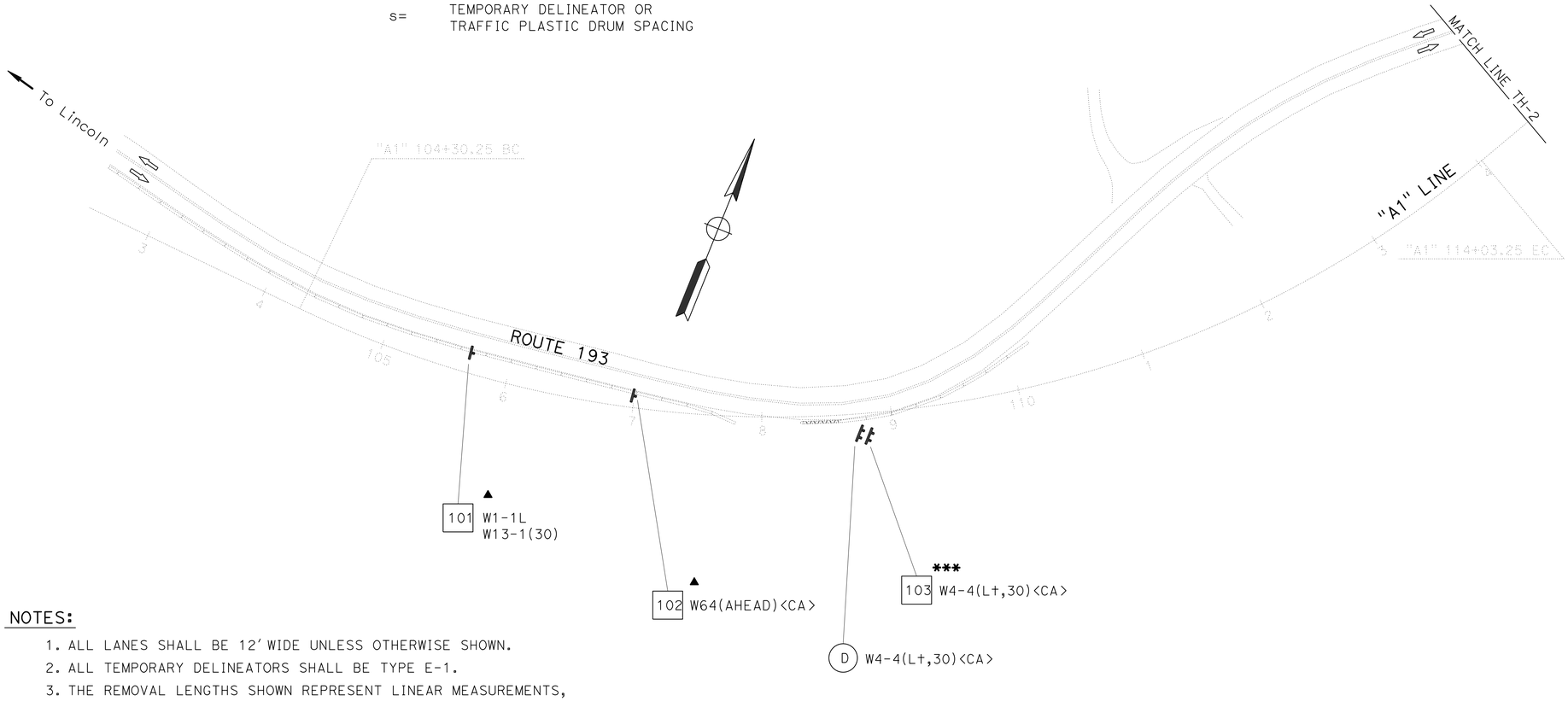

NOTES:

1. ALL LANES SHALL BE 12′ WIDE UNLESS OTHERWISE SHOWN.
2. ALL TEMPORARY DELINEATORS SHALL BE TYPE E-1.
3. THE REMOVAL LENGTHS SHOWN REPRESENT LINEAR MEASUREMENTS, NOT PAY QUANTITIES.
4. ALL TRAFFIC PLASTIC DRUMS SHALL BE INSTALLED ON 50′ CENTERS UNLESS OTHERWISE SHOWN.
5. ALL EXISTING SIGNS NOT SHOWN FOR REMOVAL, RESETTING OR RELOCATION SHALL REMAIN IN PLACE.
6. ALL SIGN CODES SHOWN ARE FEDERAL SIGN CODES UNLESS OTHERWISE DESIGNATED AS CALIFORNIA SIGN CODES.
7. <CA> = CALIFORNIA SIGN CODE.

TRAFFIC HANDLING PLAN

STAGE 1

SCALE: 1"=50′

TH-1

APPROVED FOR TRAFFIC HANDLING WORK ONLY

CHUCK COOK — CALCULATED-DESIGNED BY
KRIS ALBERS — CHECKED BY
NARAYAN SELWAL — FUNCTIONAL SUPERVISOR
STATE OF CALIFORNIA - DEPARTMENT OF TRANSPORTATION
Caltrans®
TRAFFIC

REVISED BY | DATE REVISED

LAST REVISION 03-11-15
DATE PLOTTED => 15-JUN-2015
TIME PLOTTED => 15:51

Dist	COUNTY	ROUTE	POST MILES TOTAL PROJECT	SHEET No.	TOTAL SHEETS
03	Pla	193	4.4/5.5	101	197

Kris M. Albers 4-6-15
REGISTERED CIVIL ENGINEER DATE

4-6-15
PLANS APPROVAL DATE

REGISTERED PROFESSIONAL ENGINEER
KRIS M. ALBERS
No. 49986
Exp. 6-30-15
CIVIL
STATE OF CALIFORNIA

THE STATE OF CALIFORNIA OR ITS OFFICERS OR AGENTS SHALL NOT BE RESPONSIBLE FOR THE ACCURACY OR COMPLETENESS OF SCANNED COPIES OF THIS PLAN SHEET.

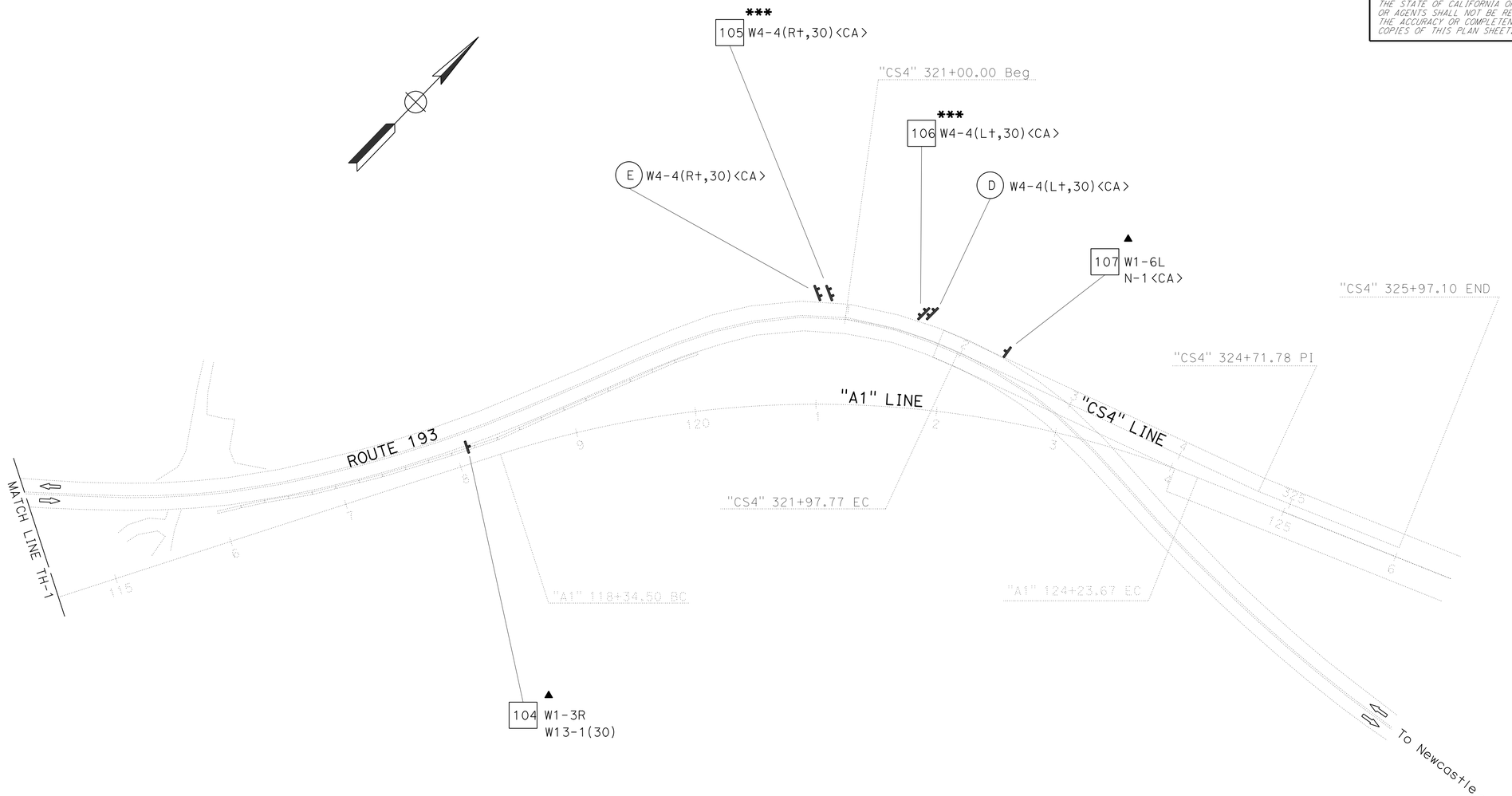

TRAFFIC HANDLING PLAN

STAGE 1

SCALE: 1"=50'

TH-2

APPROVED FOR TRAFFIC HANDLING WORK ONLY

STATE OF CALIFORNIA - DEPARTMENT OF TRANSPORTATION
Caltrans
TRAFFIC

FUNCTIONAL SUPERVISOR: NARAYAN SELWAL
CALCULATED-DESIGNED BY: CHUCK COOK
CHECKED BY: KRIS ALBERS
REVISED BY
DATE REVISED

LAST REVISION 03-11-15
DATE PLOTTED => 15-JUN-2015
TIME PLOTTED => 15:51

Dist	COUNTY	ROUTE	POST MILES TOTAL PROJECT	SHEET No.	TOTAL SHEETS
03	Pla	193	4.4/5.5	102	197

Kris M. Albers 4-6-15
REGISTERED CIVIL ENGINEER DATE

4-6-15
PLANS APPROVAL DATE

REGISTERED PROFESSIONAL ENGINEER
KRIS M. ALBERS
No. 49986
Exp. 6-30-15
CIVIL
STATE OF CALIFORNIA

THE STATE OF CALIFORNIA OR ITS OFFICERS OR AGENTS SHALL NOT BE RESPONSIBLE FOR THE ACCURACY OR COMPLETENESS OF SCANNED COPIES OF THIS PLAN SHEET.

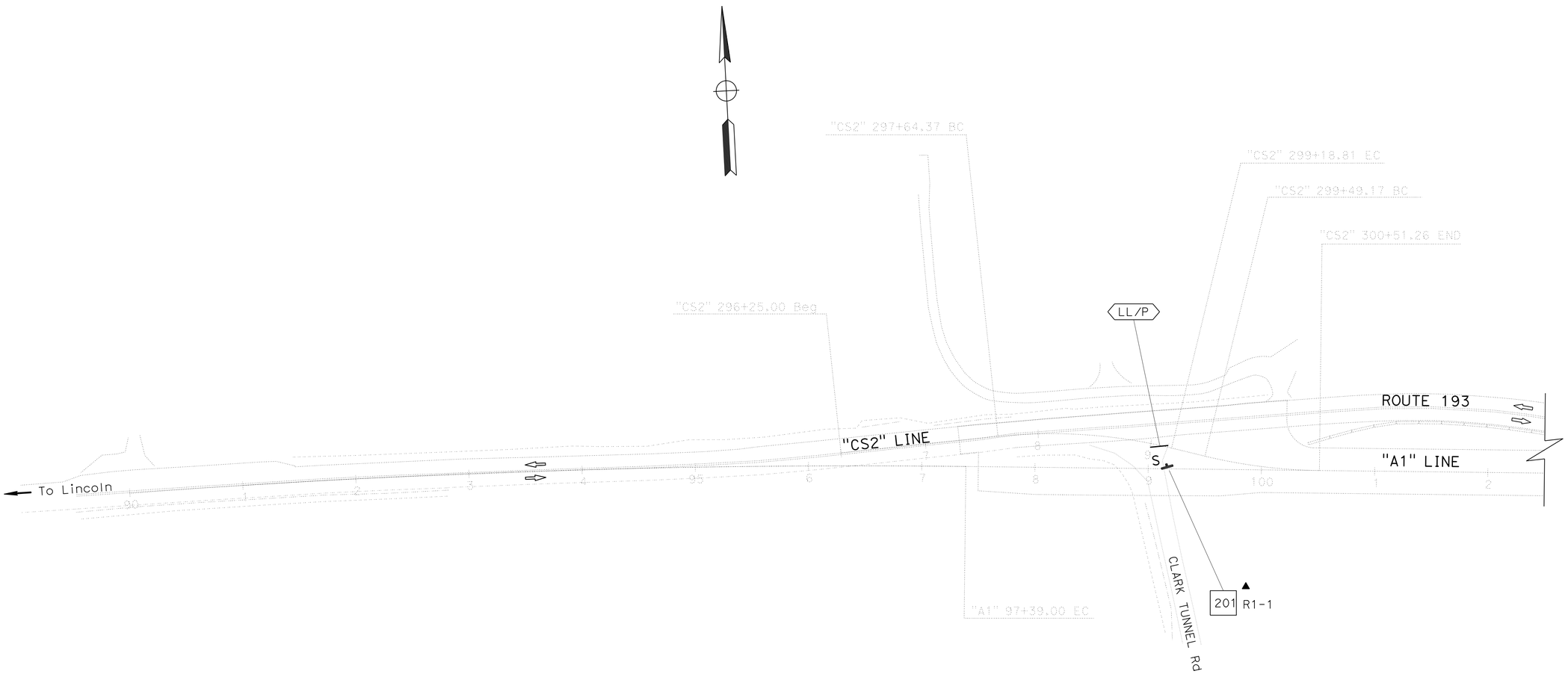

TRAFFIC HANDLING PLAN

STAGE 2

SCALE: 1"=50'

TH-3

APPROVED FOR TRAFFIC HANDLING WORK ONLY

CALCULATED-DESIGNED BY: CHUCK COOK
CHECKED BY: KRIS ALBERS
REVISED BY
DATE REVISED
FUNCTIONAL SUPERVISOR: NARAYAN SELWAL

STATE OF CALIFORNIA - DEPARTMENT OF TRANSPORTATION
Caltrans
TRAFFIC

LAST REVISION: DATE PLOTTED => 15-JUN-2015
03-11-15 TIME PLOTTED => 15:51

BORDER LAST REVISED 7/2/2010
USERNAME => s130875
DGN FILE => 0300000725md003.dgn
RELATIVE BORDER SCALE IS IN INCHES 0 1 2 3
UNIT 0390
PROJECT NUMBER & PHASE 03000007251

Dist	COUNTY	ROUTE	POST MILES TOTAL PROJECT	SHEET No.	TOTAL SHEETS
03	Pla	193	4.4/5.5	103	197

Kris M. Albers 4-6-15
REGISTERED CIVIL ENGINEER DATE

4-6-15
PLANS APPROVAL DATE

REGISTERED PROFESSIONAL ENGINEER
KRIS M. ALBERS
No. 49986
Exp. 6-30-15
CIVIL
STATE OF CALIFORNIA

THE STATE OF CALIFORNIA OR ITS OFFICERS OR AGENTS SHALL NOT BE RESPONSIBLE FOR THE ACCURACY OR COMPLETENESS OF SCANNED COPIES OF THIS PLAN SHEET.

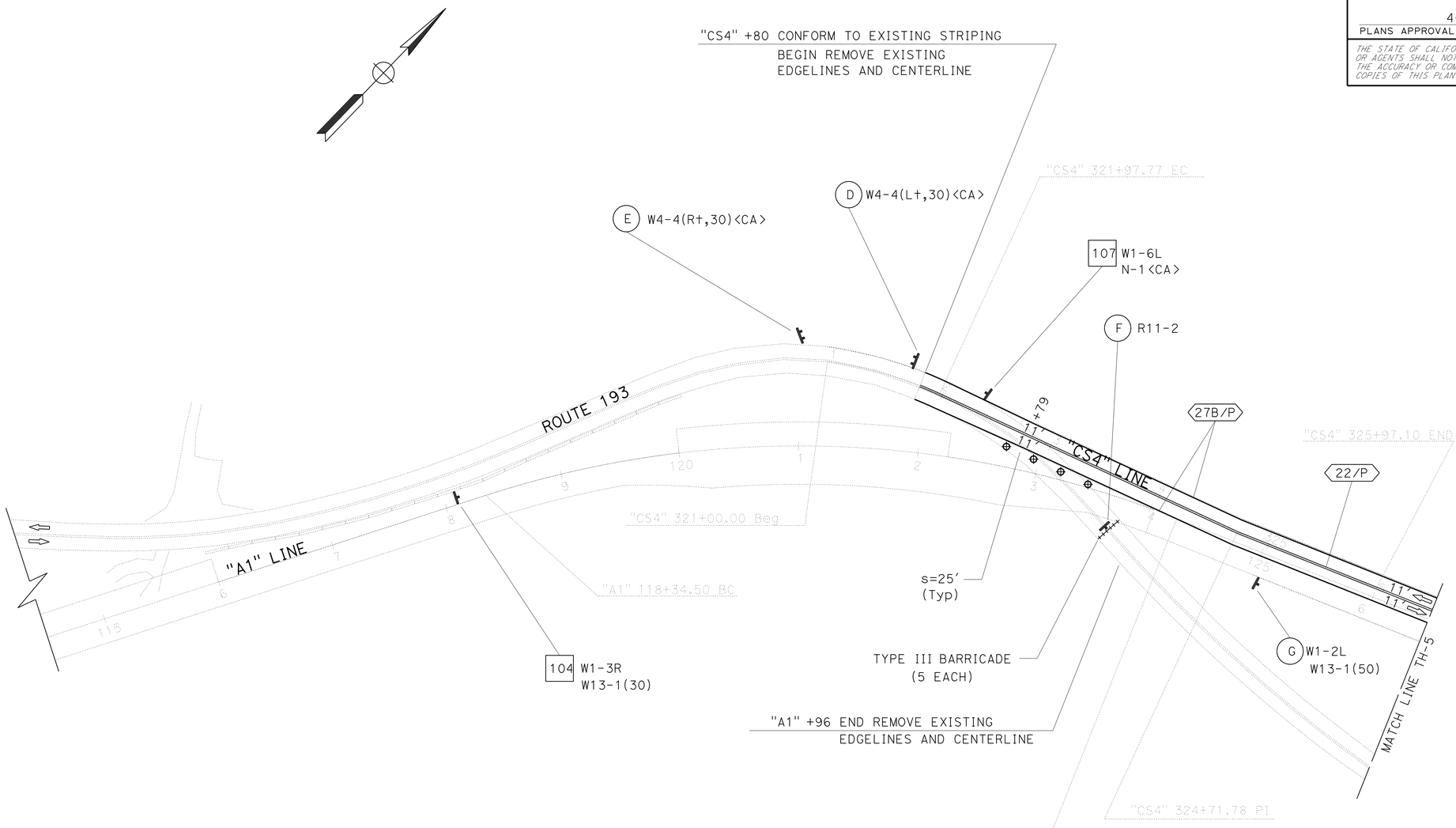

TRAFFIC HANDLING PLAN

STAGE 2

SCALE: 1"=50'

TH-4

APPROVED FOR TRAFFIC HANDLING WORK ONLY

CALCULATED-DESIGNED BY
CHECKED BY

REVISED BY
DATE REVISED

CHUCK COOK
KRIS ALBERS

FUNCTIONAL SUPERVISOR
NARAYAN SELWAL

STATE OF CALIFORNIA - DEPARTMENT OF TRANSPORTATION
TRAFFIC

LAST REVISION | DATE PLOTTED => 15-JUN-2015
03-11-15 | TIME PLOTTED => 15:51

BORDER LAST REVISED 7/2/2010

USERNAME => s130875
DGN FILE => 0300000725md004.dgn

RELATIVE BORDER SCALE IS IN INCHES 0 1 2 3

UNIT 0390

PROJECT NUMBER & PHASE 03000007251

Dist	COUNTY	ROUTE	POST MILES TOTAL PROJECT	SHEET No.	TOTAL SHEETS
03	Pla	193	4.4/5.5	104	197

Kris M. Albers 4-6-15
REGISTERED CIVIL ENGINEER DATE

4-6-15
PLANS APPROVAL DATE

REGISTERED PROFESSIONAL ENGINEER
KRIS M. ALBERS
No. 49986
Exp. 6-30-15
CIVIL
STATE OF CALIFORNIA

THE STATE OF CALIFORNIA OR ITS OFFICERS OR AGENTS SHALL NOT BE RESPONSIBLE FOR THE ACCURACY OR COMPLETENESS OF SCANNED COPIES OF THIS PLAN SHEET.

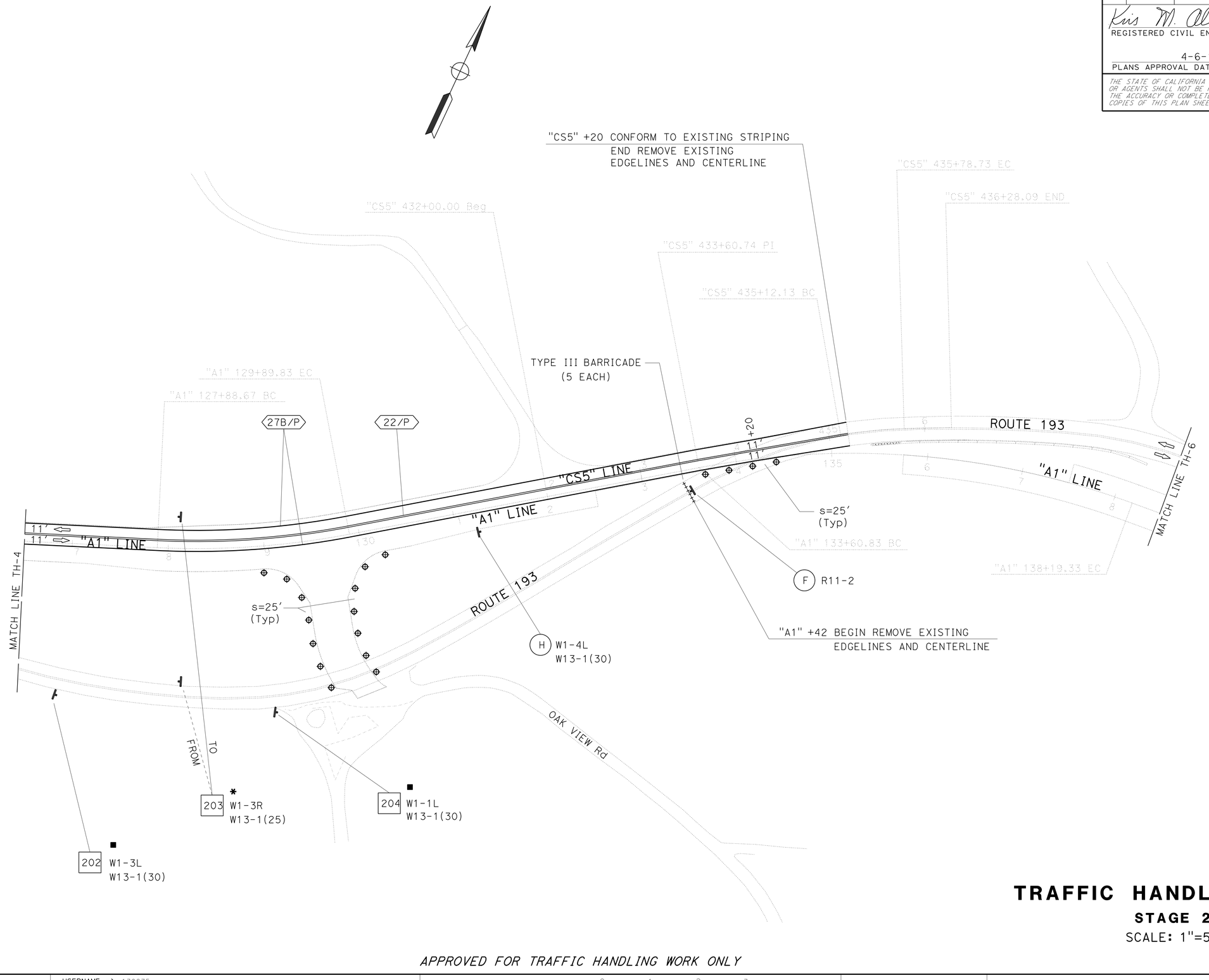

TRAFFIC HANDLING PLAN

STAGE 2

SCALE: 1"=50'

TH-5

APPROVED FOR TRAFFIC HANDLING WORK ONLY

STATE OF CALIFORNIA - DEPARTMENT OF TRANSPORTATION
Caltrans®
TRAFFIC

FUNCTIONAL SUPERVISOR: NARAYAN SELWAL

CALCULATED-DESIGNED BY: CHUCK COOK
CHECKED BY: KRIS ALBERS

REVISED BY
DATE REVISED

LAST REVISION DATE PLOTTED => 15-JUN-2015
03-11-15 TIME PLOTTED => 15:51

BORDER LAST REVISED 7/2/2010

USERNAME => s130875
DGN FILE => 0300000725md005.dgn

RELATIVE BORDER SCALE IS IN INCHES 0 1 2 3

UNIT 0390

PROJECT NUMBER & PHASE 03000007251

Dist	COUNTY	ROUTE	POST MILES TOTAL PROJECT	SHEET No.	TOTAL SHEETS
03	Pla	193	4.4/5.5	105	197

Kris M. Albers 4-6-15
REGISTERED CIVIL ENGINEER DATE

4-6-15
PLANS APPROVAL DATE

REGISTERED PROFESSIONAL ENGINEER
KRIS M. ALBERS
No. 49986
Exp. 6-30-15
CIVIL
STATE OF CALIFORNIA

THE STATE OF CALIFORNIA OR ITS OFFICERS OR AGENTS SHALL NOT BE RESPONSIBLE FOR THE ACCURACY OR COMPLETENESS OF SCANNED COPIES OF THIS PLAN SHEET.

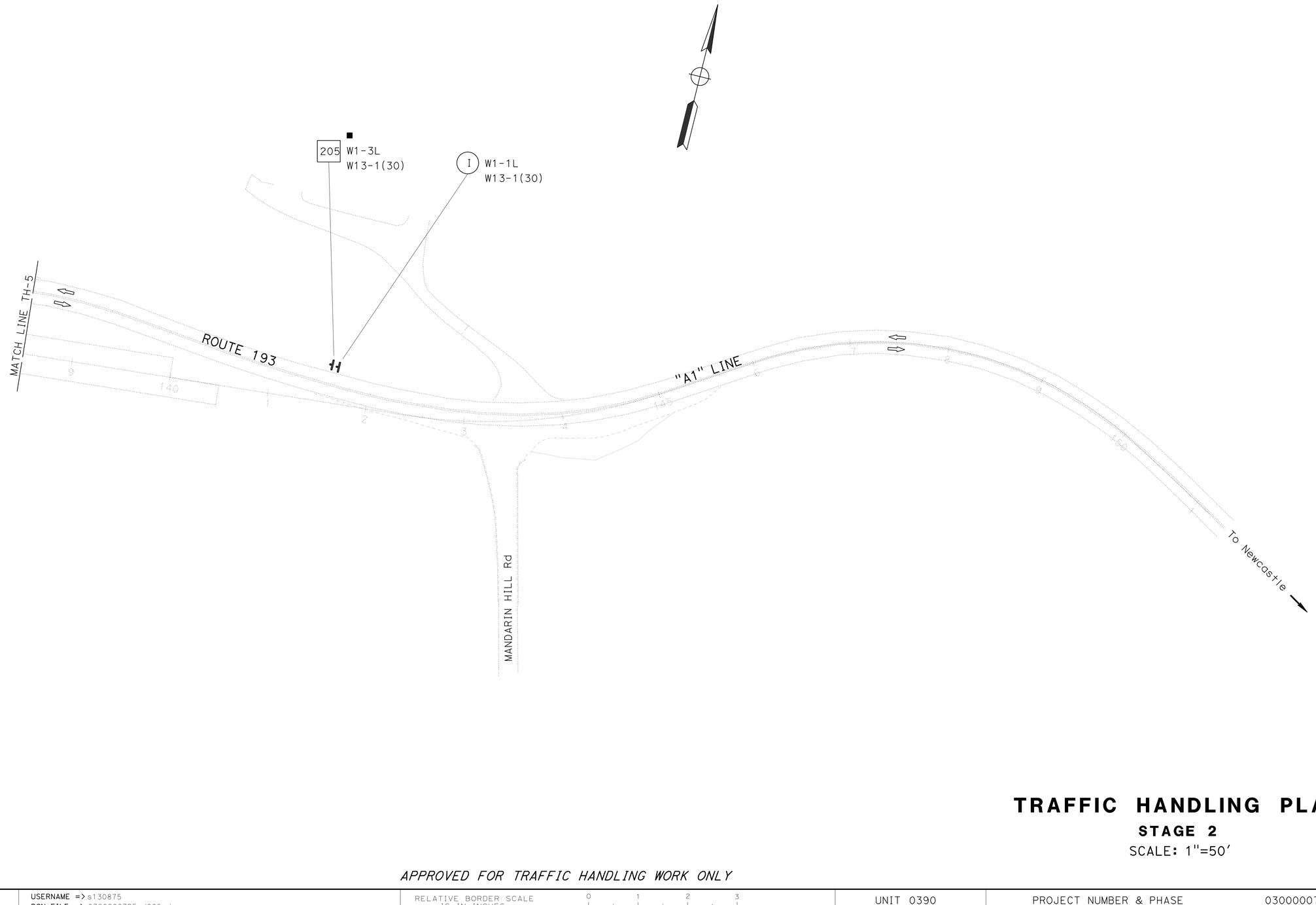

TRAFFIC HANDLING PLAN

STAGE 2

SCALE: 1"=50'

TH-6

APPROVED FOR TRAFFIC HANDLING WORK ONLY

STATE OF CALIFORNIA - DEPARTMENT OF TRANSPORTATION	FUNCTIONAL SUPERVISOR: NARAYAN SELWAL
Caltrans® TRAFFIC	CALCULATED-DESIGNED BY: CHUCK COOK
	CHECKED BY: KRIS ALBERS
	REVISED BY / DATE REVISED

LAST REVISION 03-11-15 | DATE PLOTTED => 15-JUN-2015 | TIME PLOTTED => 15:51

BORDER LAST REVISED 7/2/2010 | USERNAME => s130875 | DGN FILE => 0300000725md006.dgn | RELATIVE BORDER SCALE IS IN INCHES 0 1 2 3 | UNIT 0390 | PROJECT NUMBER & PHASE 03000007251

Dist	COUNTY	ROUTE	POST MILES TOTAL PROJECT	SHEET No.	TOTAL SHEETS
03	Pla	193	4.4/5.5	106	197

Kris M. Albers 4-6-15
REGISTERED CIVIL ENGINEER DATE

4-6-15
PLANS APPROVAL DATE

REGISTERED PROFESSIONAL ENGINEER
KRIS M. ALBERS
No. 49986
Exp. 6-30-15
CIVIL
STATE OF CALIFORNIA

THE STATE OF CALIFORNIA OR ITS OFFICERS OR AGENTS SHALL NOT BE RESPONSIBLE FOR THE ACCURACY OR COMPLETENESS OF SCANNED COPIES OF THIS PLAN SHEET.

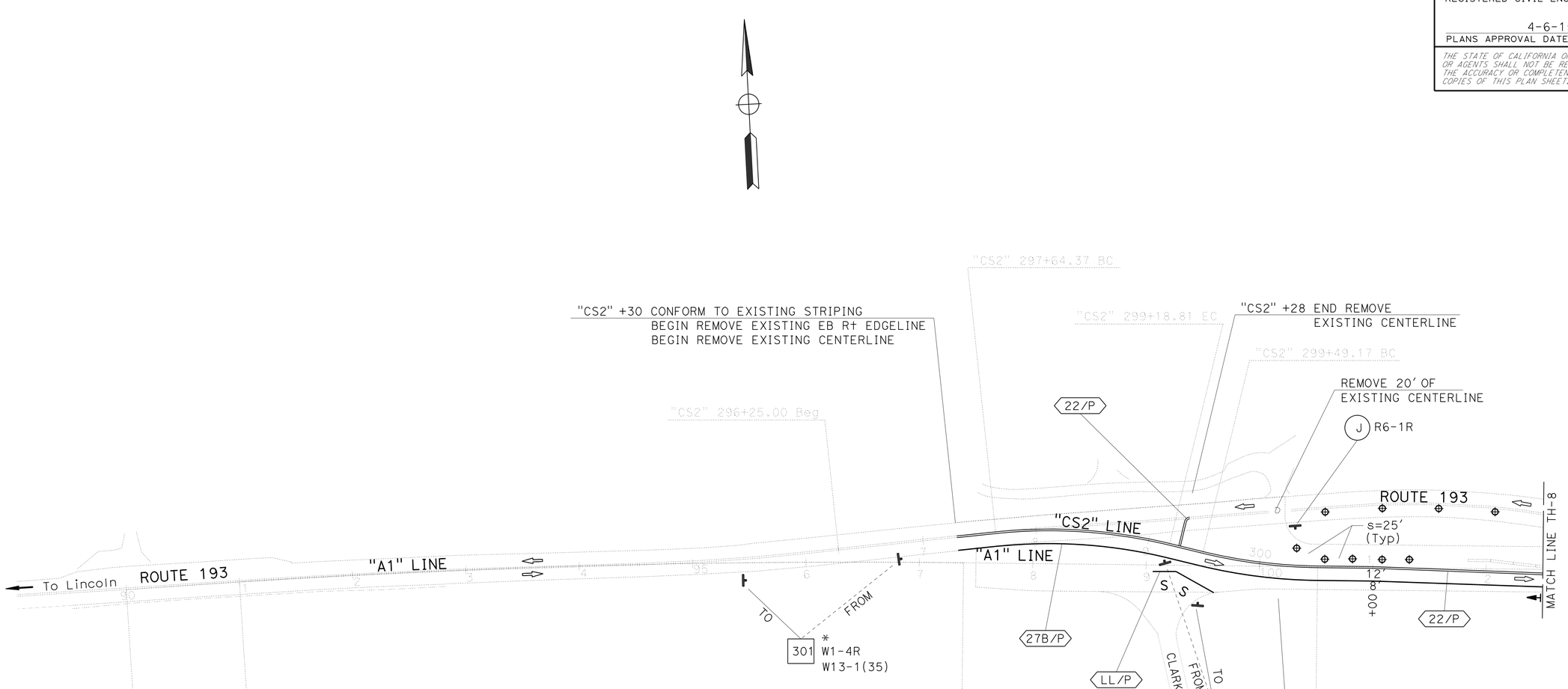

TRAFFIC HANDLING PLAN

STAGE 3a

SCALE: 1"=50'

TH-7

APPROVED FOR TRAFFIC HANDLING WORK ONLY

CALCULATED-DESIGNED BY
CHECKED BY
CHUCK COOK
KRIS ALBERS
REVISED BY
DATE REVISED
FUNCTIONAL SUPERVISOR
NARAYAN SELWAL
STATE OF CALIFORNIA - DEPARTMENT OF TRANSPORTATION
Caltrans
TRAFFIC

LAST REVISION DATE PLOTTED => 15-JUN-2015
04-06-15 TIME PLOTTED => 15:51

BORDER LAST REVISED 7/2/2010
USERNAME => s130875
DGN FILE => 0300000725md007.dgn
RELATIVE BORDER SCALE IS IN INCHES 0 1 2 3
UNIT 0390
PROJECT NUMBER & PHASE 03000007251

Dist	COUNTY	ROUTE	POST MILES TOTAL PROJECT	SHEET No.	TOTAL SHEETS
03	Pla	193	4.4/5.5	107	197

Kris M. Albers 4-6-15
REGISTERED CIVIL ENGINEER DATE

4-6-15
PLANS APPROVAL DATE

REGISTERED PROFESSIONAL ENGINEER
KRIS M. ALBERS
No. 49986
Exp. 6-30-15
CIVIL
STATE OF CALIFORNIA

THE STATE OF CALIFORNIA OR ITS OFFICERS OR AGENTS SHALL NOT BE RESPONSIBLE FOR THE ACCURACY OR COMPLETENESS OF SCANNED COPIES OF THIS PLAN SHEET.

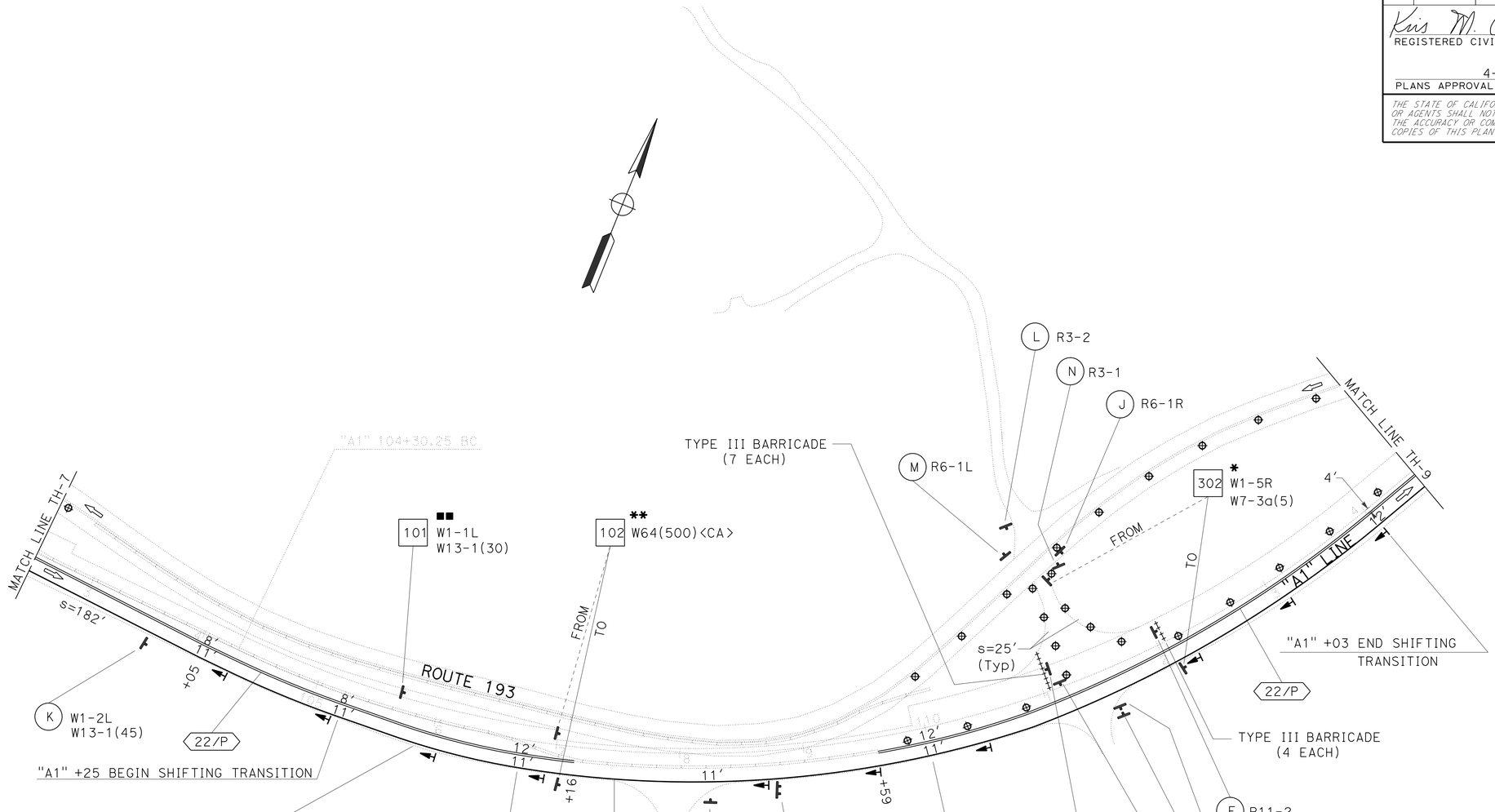

TRAFFIC HANDLING PLAN

STAGE 3a

SCALE: 1"=50'

TH-8

APPROVED FOR TRAFFIC HANDLING WORK ONLY

REVISED BY	DATE REVISED

CALCULATED-DESIGNED BY: CHUCK COOK
CHECKED BY: KRIS ALBERS
FUNCTIONAL SUPERVISOR: NARAYAN SELWAL

STATE OF CALIFORNIA - DEPARTMENT OF TRANSPORTATION
Caltrans®
TRAFFIC

LAST REVISION 03-11-15
DATE PLOTTED => 15-JUN-2015
TIME PLOTTED => 15:51

BORDER LAST REVISED 7/2/2010
USERNAME => s130875
DGN FILE => 0300000725md008.dgn
RELATIVE BORDER SCALE IS IN INCHES 0 1 2 3
UNIT 0390
PROJECT NUMBER & PHASE 03000007251

Dist	COUNTY	ROUTE	POST MILES TOTAL PROJECT	SHEET No.	TOTAL SHEETS
03	Pla	193	4.4/5.5	108	197

Kris M. Albers 4-6-15
REGISTERED CIVIL ENGINEER DATE

4-6-15
PLANS APPROVAL DATE

REGISTERED PROFESSIONAL ENGINEER
KRIS M. ALBERS
No. 49986
Exp. 6-30-15
CIVIL
STATE OF CALIFORNIA

THE STATE OF CALIFORNIA OR ITS OFFICERS OR AGENTS SHALL NOT BE RESPONSIBLE FOR THE ACCURACY OR COMPLETENESS OF SCANNED COPIES OF THIS PLAN SHEET.

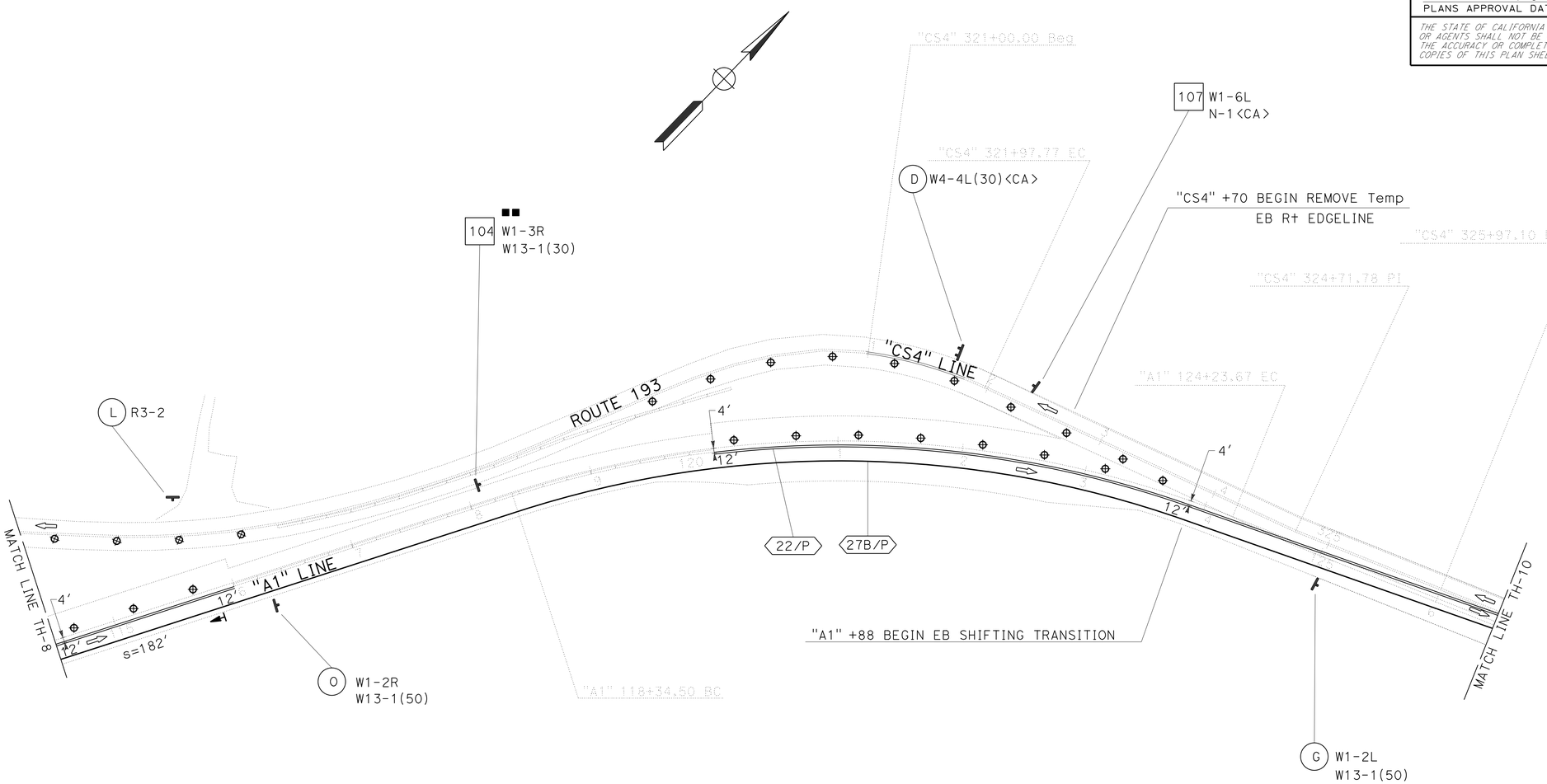

TRAFFIC HANDLING PLAN

STAGE 3a

SCALE: 1"=50'

TH-9

APPROVED FOR TRAFFIC HANDLING WORK ONLY

STATE OF CALIFORNIA - DEPARTMENT OF TRANSPORTATION
TRAFFIC

FUNCTIONAL SUPERVISOR: NARAYAN SELWAL

CALCULATED-DESIGNED BY: CHUCK COOK
CHECKED BY: KRIS ALBERS

REVISED BY | DATE REVISED

LAST REVISION | DATE PLOTTED => 15-JUN-2015
03-11-15 | TIME PLOTTED => 15:51

BORDER LAST REVISED 7/2/2010

USERNAME => s130875
DGN FILE => 0300000725md009.dgn

RELATIVE BORDER SCALE IS IN INCHES 0 1 2 3

UNIT 0390

PROJECT NUMBER & PHASE 03000007251

Dist	COUNTY	ROUTE	POST MILES TOTAL PROJECT	SHEET No.	TOTAL SHEETS
03	Pla	193	4.4/5.5	109	197

Kris M. Albers 4-6-15
REGISTERED CIVIL ENGINEER DATE

4-6-15
PLANS APPROVAL DATE

REGISTERED PROFESSIONAL ENGINEER
KRIS M. ALBERS
No. 49986
Exp. 6-30-15
CIVIL
STATE OF CALIFORNIA

THE STATE OF CALIFORNIA OR ITS OFFICERS OR AGENTS SHALL NOT BE RESPONSIBLE FOR THE ACCURACY OR COMPLETENESS OF SCANNED COPIES OF THIS PLAN SHEET.

TRAFFIC HANDLING PLAN

STAGE 3a

SCALE: 1"=50'

TH-10

APPROVED FOR TRAFFIC HANDLING WORK ONLY

CALCULATED-DESIGNED BY: CHUCK COOK
CHECKED BY: KRIS ALBERS
REVISED BY
DATE REVISED
FUNCTIONAL SUPERVISOR: NARAYAN SELWAL
STATE OF CALIFORNIA - DEPARTMENT OF TRANSPORTATION
Caltrans®
TRAFFIC

LAST REVISION DATE PLOTTED => 15-JUN-2015
03-11-15 TIME PLOTTED => 15:51

BORDER LAST REVISED 7/2/2010
USERNAME => s130875
DGN FILE => 0300000725md010.dgn
RELATIVE BORDER SCALE IS IN INCHES 0 1 2 3
UNIT 0390
PROJECT NUMBER & PHASE 03000007251

Dist	COUNTY	ROUTE	POST MILES TOTAL PROJECT	SHEET No.	TOTAL SHEETS
03	Pla	193	4.4/5.5	110	197

Kris M. Albers 4-6-15
REGISTERED CIVIL ENGINEER DATE

4-6-15
PLANS APPROVAL DATE

REGISTERED PROFESSIONAL ENGINEER
KRIS M. ALBERS
No. 49986
Exp. 6-30-15
CIVIL
STATE OF CALIFORNIA

THE STATE OF CALIFORNIA OR ITS OFFICERS OR AGENTS SHALL NOT BE RESPONSIBLE FOR THE ACCURACY OR COMPLETENESS OF SCANNED COPIES OF THIS PLAN SHEET.

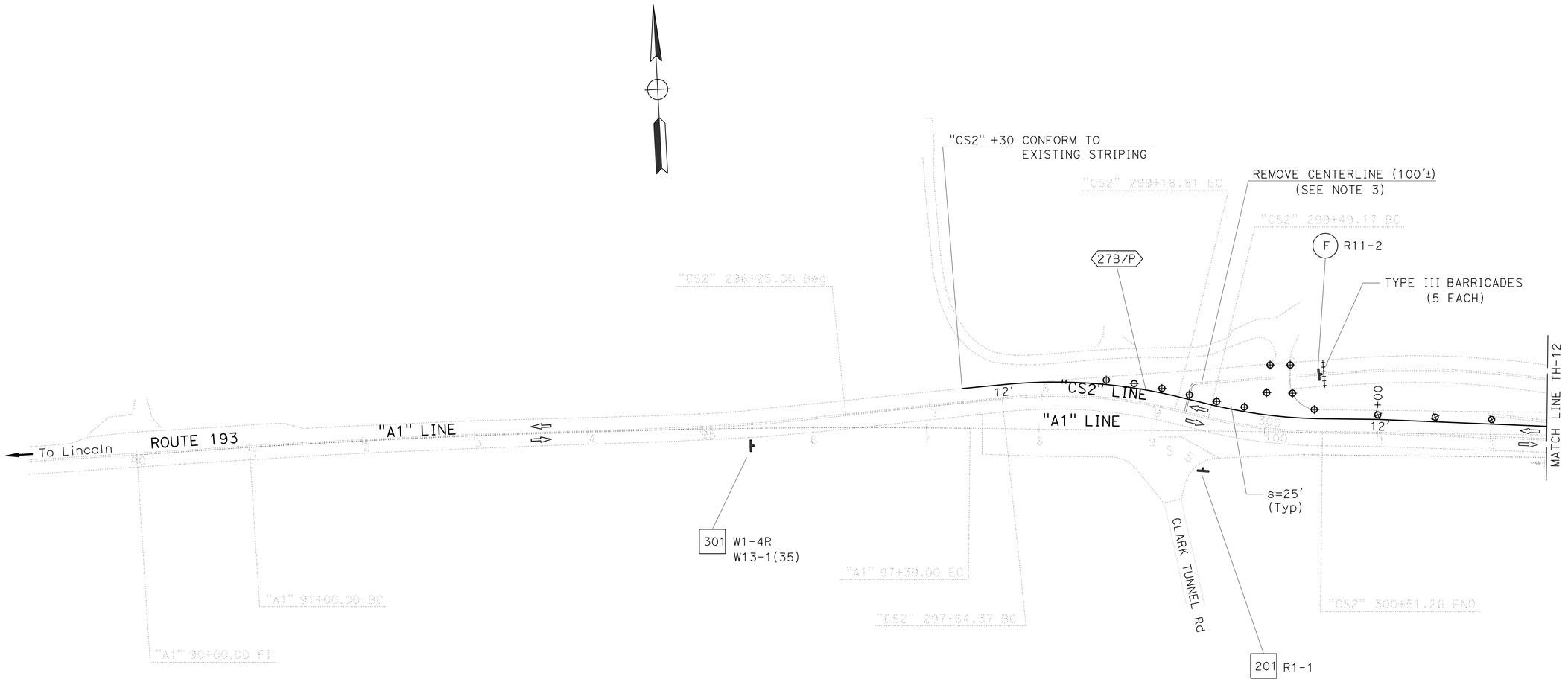

TRAFFIC HANDLING PLAN

STAGE 3b

SCALE: 1"=50'

TH-11

APPROVED FOR TRAFFIC HANDLING WORK ONLY

CALCULATED-DESIGNED BY
CHECKED BY
CHUCK COOK
KRIS ALBERS
REVISED BY
DATE REVISED
FUNCTIONAL SUPERVISOR
NARAYAN SELWAL
STATE OF CALIFORNIA - DEPARTMENT OF TRANSPORTATION
Caltrans
TRAFFIC

LAST REVISION 03-11-15
DATE PLOTTED => 15-JUN-2015
TIME PLOTTED => 15:51

BORDER LAST REVISED 7/2/2010
USERNAME => s130875
DGN FILE => 0300000725md011.dgn
RELATIVE BORDER SCALE IS IN INCHES 0 1 2 3
UNIT 0390
PROJECT NUMBER & PHASE 03000007251

Dist	COUNTY	ROUTE	POST MILES TOTAL PROJECT	SHEET No.	TOTAL SHEETS
03	Pla	193	4.4/5.5	111	197

Kris M. Albers 4-6-15
REGISTERED CIVIL ENGINEER DATE

4-6-15
PLANS APPROVAL DATE

REGISTERED PROFESSIONAL ENGINEER
KRIS M. ALBERS
No. 49986
Exp. 6-30-15
CIVIL
STATE OF CALIFORNIA

THE STATE OF CALIFORNIA OR ITS OFFICERS OR AGENTS SHALL NOT BE RESPONSIBLE FOR THE ACCURACY OR COMPLETENESS OF SCANNED COPIES OF THIS PLAN SHEET.

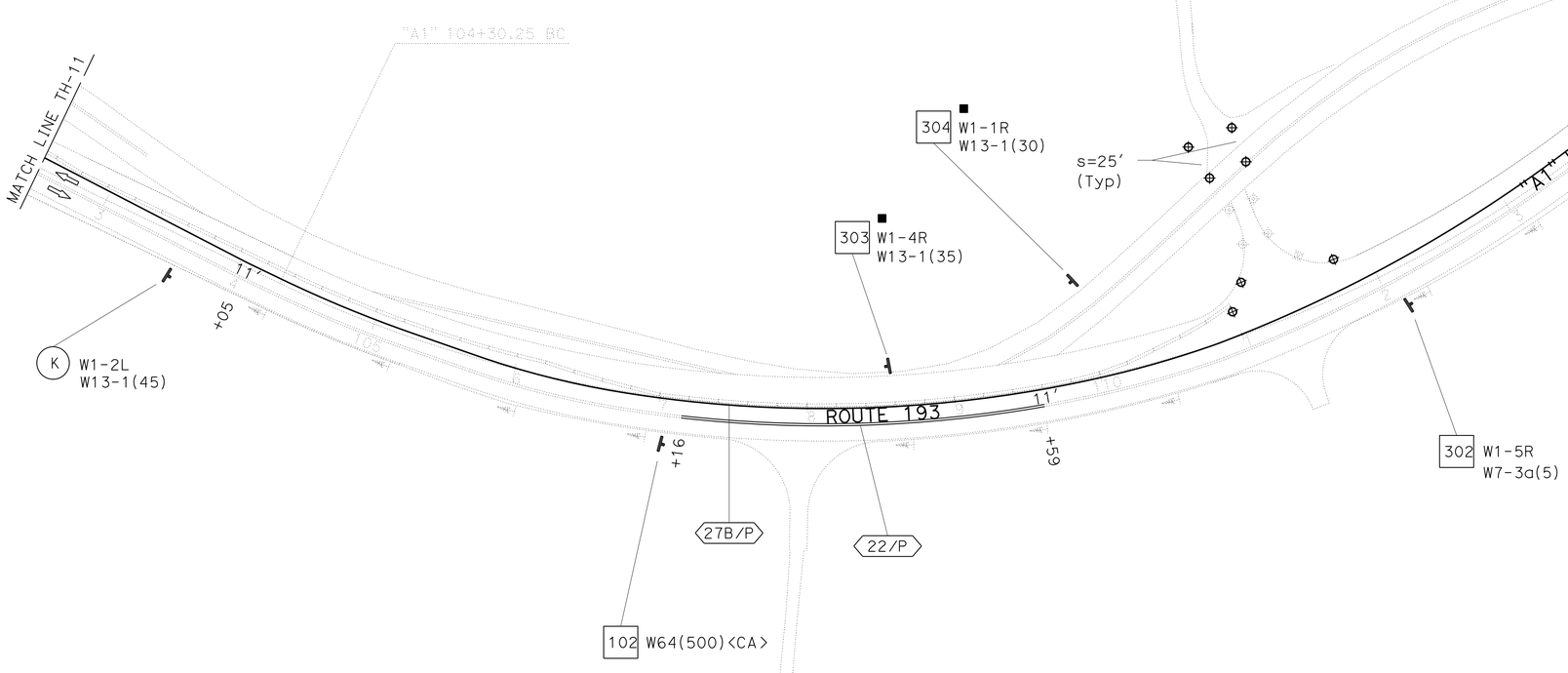

TRAFFIC HANDLING PLAN

STAGE 3b

SCALE: 1"=50'

TH-12

APPROVED FOR TRAFFIC HANDLING WORK ONLY

CALCULATED-DESIGNED BY: CHUCK COOK
CHECKED BY: KRIS ALBERS
REVISED BY
DATE REVISED
FUNCTIONAL SUPERVISOR: NARAYAN SELWAL
STATE OF CALIFORNIA - DEPARTMENT OF TRANSPORTATION
Caltrans
TRAFFIC

LAST REVISION: DATE PLOTTED => 15-JUN-2015; TIME PLOTTED => 15:51; 03-11-15

BORDER LAST REVISED 7/2/2010
USERNAME => s130875
DGN FILE => 0300000725md012.dgn
RELATIVE BORDER SCALE IS IN INCHES 0 1 2 3
UNIT 0390
PROJECT NUMBER & PHASE 03000007251

Dist	COUNTY	ROUTE	POST MILES TOTAL PROJECT	SHEET No.	TOTAL SHEETS
03	Pla	193	4.4/5.5	112	197

Kris M. Albers 4-6-15
REGISTERED CIVIL ENGINEER DATE

4-6-15
PLANS APPROVAL DATE

REGISTERED PROFESSIONAL ENGINEER
KRIS M. ALBERS
No. 49986
Exp. 6-30-15
CIVIL
STATE OF CALIFORNIA

THE STATE OF CALIFORNIA OR ITS OFFICERS OR AGENTS SHALL NOT BE RESPONSIBLE FOR THE ACCURACY OR COMPLETENESS OF SCANNED COPIES OF THIS PLAN SHEET.

"CS4" +00 BEGIN REMOVE Temp CENTERLINE
BEGIN REMOVE Temp EB AND WB R+ EDGELINES

"CS4" 321+00.00 Beg

"CS4" 321+97.77 EC

"CS4" 325+97.10 END

"CS4" 324+71.78 PI

F R11-2

107 ■■ W1-6L
N-1<CA>

27B/P

s=87'
(Typ)

P W1-2R
W13-1(45)

305 * W64(400)<CA>

FROM

TO

"CS4" LINE

"A1" LINE

ROUTE 193

MATCH LINE TH-12

MATCH LINE TH-14

11'

12'

00+

00+

22/P

TYPE III BARRICADES
(5 EACH)

"A1" 118+34.50 BC

O W1-2R
W13-1(50)

G W1-2L
W13-1(50)

"CS4" +70 END REMOVE Temp
EB R+ EDGELINE

"A1" 124+23.67 EC

TRAFFIC HANDLING PLAN

STAGE 3b

SCALE: 1"=50'

TH-13

APPROVED FOR TRAFFIC HANDLING WORK ONLY

STATE OF CALIFORNIA - DEPARTMENT OF TRANSPORTATION
Caltrans
TRAFFIC

FUNCTIONAL SUPERVISOR: NARAYAN SELWAL

CALCULATED-DESIGNED BY: CHUCK COOK
CHECKED BY: KRIS ALBERS

REVISED BY | DATE REVISED

LAST REVISION | DATE PLOTTED => 15-JUN-2015
03-11-15 | TIME PLOTTED => 15:51

BORDER LAST REVISED 7/2/2010

USERNAME => s130875
DGN FILE => 0300000725md013.dgn

RELATIVE BORDER SCALE IS IN INCHES 0 1 2 3

UNIT 0390

PROJECT NUMBER & PHASE 03000007251

Dist	COUNTY	ROUTE	POST MILES TOTAL PROJECT	SHEET No.	TOTAL SHEETS
03	Pla	193	4.4/5.5	113	197

Kris M. Albers 4-6-15
REGISTERED CIVIL ENGINEER DATE

4-6-15
PLANS APPROVAL DATE

REGISTERED PROFESSIONAL ENGINEER
KRIS M. ALBERS
No. 49986
Exp. 6-30-15
CIVIL
STATE OF CALIFORNIA

THE STATE OF CALIFORNIA OR ITS OFFICERS OR AGENTS SHALL NOT BE RESPONSIBLE FOR THE ACCURACY OR COMPLETENESS OF SCANNED COPIES OF THIS PLAN SHEET.

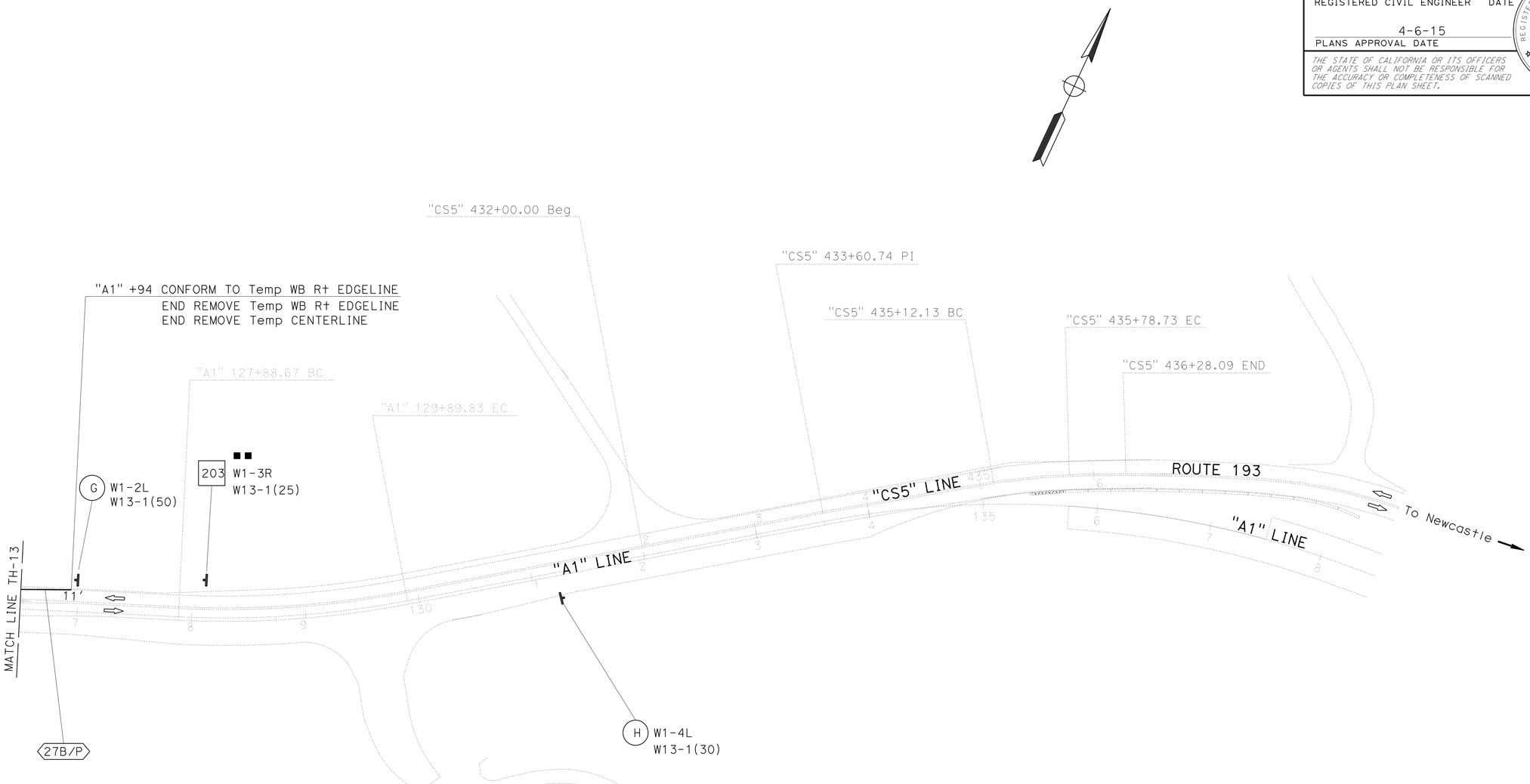

TRAFFIC HANDLING PLAN

STAGE 3b

SCALE: 1"=50'

TH-14

APPROVED FOR TRAFFIC HANDLING WORK ONLY

STATE OF CALIFORNIA - DEPARTMENT OF TRANSPORTATION
Caltrans®
TRAFFIC

FUNCTIONAL SUPERVISOR: NARAYAN SELWAL
CALCULATED-DESIGNED BY: CHUCK COOK
CHECKED BY: KRIS ALBERS
REVISED BY
DATE REVISED

LAST REVISION | DATE PLOTTED => 15-JUN-2015
03-11-15 | TIME PLOTTED => 15:51

BORDER LAST REVISED 7/2/2010 | USERNAME => s130875 | DGN FILE => 0300000725md014.dgn | RELATIVE BORDER SCALE IS IN INCHES 0 1 2 3 | UNIT 0390 | PROJECT NUMBER & PHASE 03000007251

Dist	COUNTY	ROUTE	POST MILES TOTAL PROJECT	SHEET No.	TOTAL SHEETS
03	Pla	193	4.4/5.5	114	197

Kris M. Albers 4-6-15
REGISTERED CIVIL ENGINEER DATE

4-6-15
PLANS APPROVAL DATE

REGISTERED PROFESSIONAL ENGINEER
KRIS M. ALBERS
No. 49986
Exp. 6-30-15
CIVIL
STATE OF CALIFORNIA

THE STATE OF CALIFORNIA OR ITS OFFICERS OR AGENTS SHALL NOT BE RESPONSIBLE FOR THE ACCURACY OR COMPLETENESS OF SCANNED COPIES OF THIS PLAN SHEET.

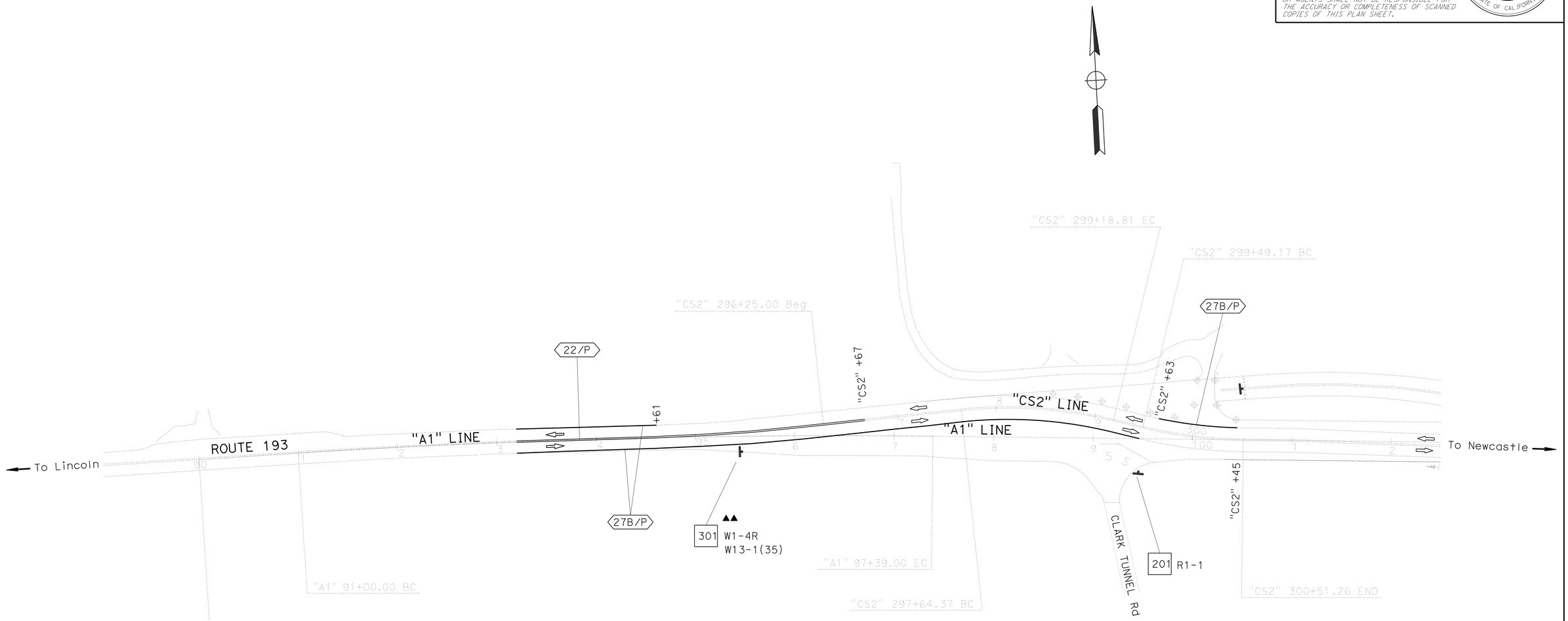

TRAFFIC HANDLING PLAN

STAGE 3c

SCALE: 1"=50'

TH-15

APPROVED FOR TRAFFIC HANDLING WORK ONLY

CALCULATED-DESIGNED BY: CHUCK COOK
CHECKED BY: KRIS ALBERS
REVISED BY
DATE REVISED
FUNCTIONAL SUPERVISOR: NARAYAN SELWAL
STATE OF CALIFORNIA - DEPARTMENT OF TRANSPORTATION
Caltrans
TRAFFIC

LAST REVISION DATE PLOTTED => 15-JUN-2015
03-11-15 TIME PLOTTED => 15:51

BORDER LAST REVISED 7/2/2010
USERNAME => s130875
DGN FILE => 0300000725md015.dgn
RELATIVE BORDER SCALE IS IN INCHES 0 1 2 3
UNIT 0390
PROJECT NUMBER & PHASE 03000007251

Dist	COUNTY	ROUTE	POST MILES TOTAL PROJECT	SHEET No.	TOTAL SHEETS
03	Pla	193	4.4/5.5	115	197

Kris M. Albers 4-6-15
REGISTERED CIVIL ENGINEER DATE

4-6-15
PLANS APPROVAL DATE

REGISTERED PROFESSIONAL ENGINEER
KRIS M. ALBERS
No. 49986
Exp. 6-30-15
CIVIL
STATE OF CALIFORNIA

THE STATE OF CALIFORNIA OR ITS OFFICERS OR AGENTS SHALL NOT BE RESPONSIBLE FOR THE ACCURACY OR COMPLETENESS OF SCANNED COPIES OF THIS PLAN SHEET.

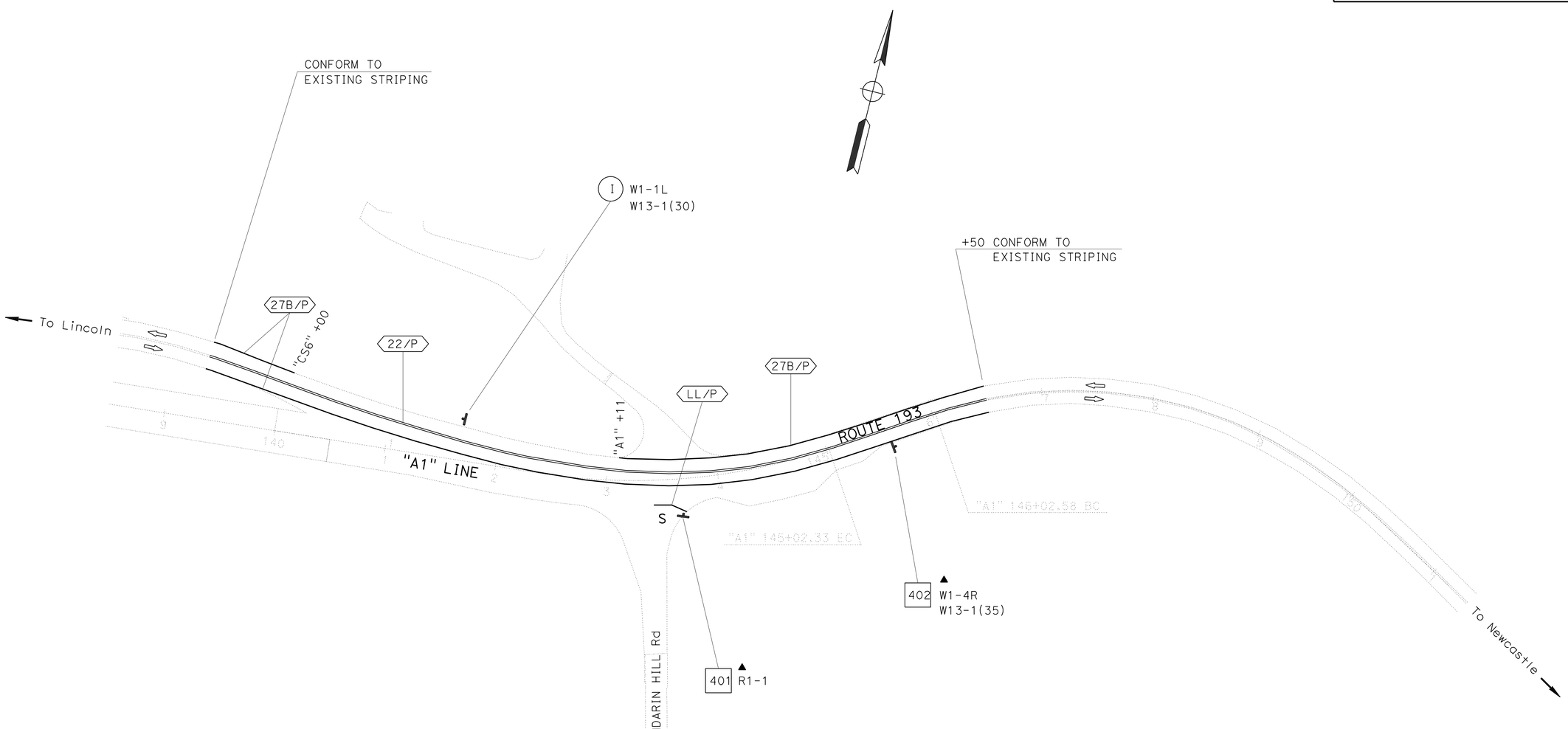

TRAFFIC HANDLING PLAN

STAGE 4a

SCALE: 1"=50'

TH-16

APPROVED FOR TRAFFIC HANDLING WORK ONLY

CALCULATED-
DESIGNED BY

CHECKED BY

REVISED BY

DATE REVISED

CHUCK COOK

KRIS ALBERS

FUNCTIONAL SUPERVISOR

NARAYAN SELWAL

STATE OF CALIFORNIA - DEPARTMENT OF TRANSPORTATION

TRAFFIC

Caltrans

LAST REVISION | DATE PLOTTED => 15-JUN-2015
03-11-15 | TIME PLOTTED => 15:51

BORDER LAST REVISED 7/2/2010

USERNAME => s130875
DGN FILE => 0300000725md016.dgn

RELATIVE BORDER SCALE IS IN INCHES 0 1 2 3

UNIT 0390

PROJECT NUMBER & PHASE 03000007251

Dist	COUNTY	ROUTE	POST MILES TOTAL PROJECT	SHEET No.	TOTAL SHEETS
03	Pla	193	4.4/5.5	116	197

Kris M. Albers 4-6-15
REGISTERED CIVIL ENGINEER DATE

4-6-15
PLANS APPROVAL DATE

REGISTERED PROFESSIONAL ENGINEER
KRIS M. ALBERS
No. 49986
Exp. 6-30-15
CIVIL
STATE OF CALIFORNIA

THE STATE OF CALIFORNIA OR ITS OFFICERS OR AGENTS SHALL NOT BE RESPONSIBLE FOR THE ACCURACY OR COMPLETENESS OF SCANNED COPIES OF THIS PLAN SHEET.

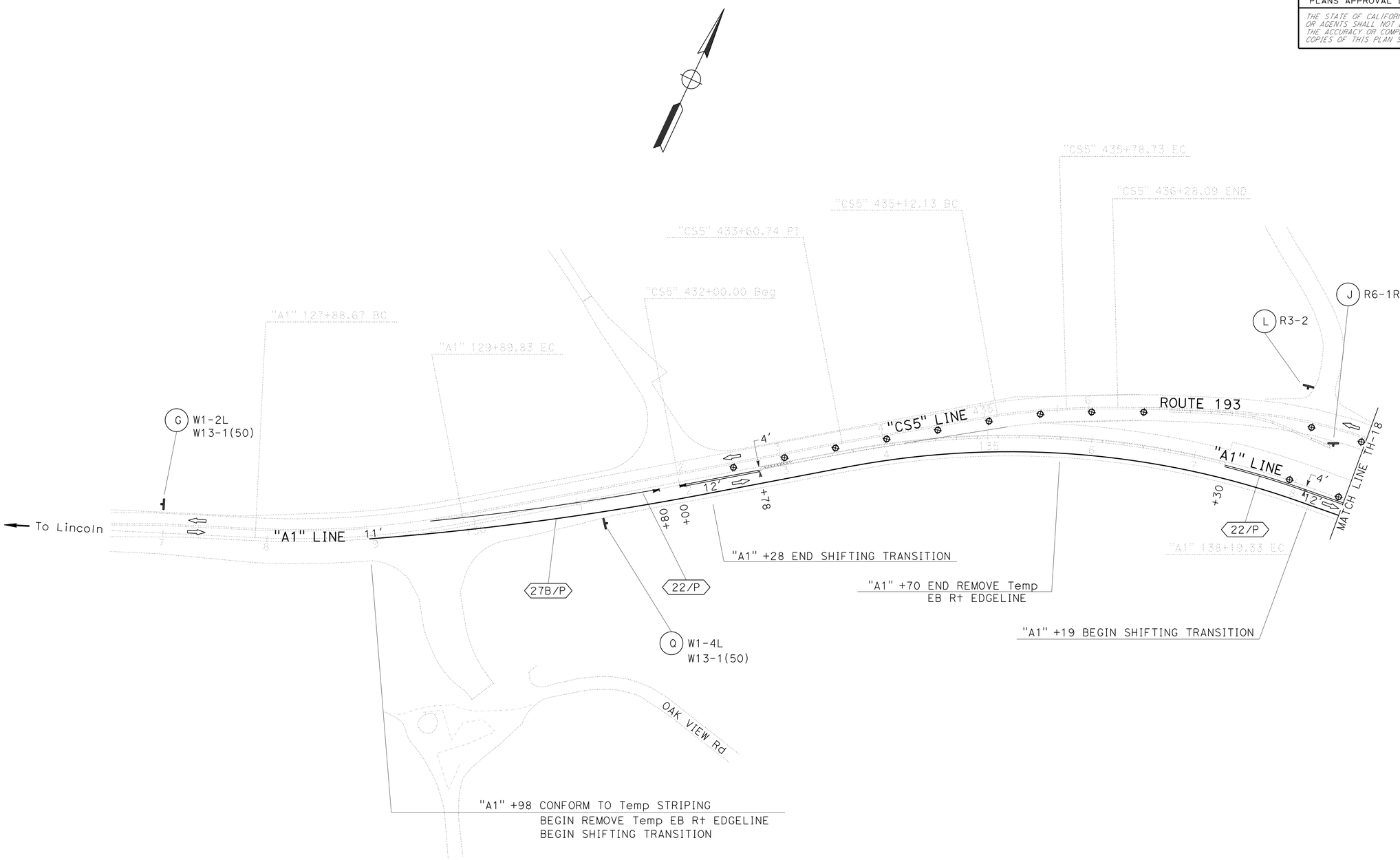

TRAFFIC HANDLING PLAN

STAGE 4b

SCALE: 1"=50'

TH-17

APPROVED FOR TRAFFIC HANDLING WORK ONLY

CALCULATED-DESIGNED BY
CHUCK COOK
CHECKED BY
KRIS ALBERS
FUNCTIONAL SUPERVISOR
NARAYAN SELWAL
REVISED BY
DATE REVISED

STATE OF CALIFORNIA - DEPARTMENT OF TRANSPORTATION
TRAFFIC
Caltrans

LAST REVISION DATE PLOTTED => 15-JUN-2015
04-06-15 TIME PLOTTED => 15:51

BORDER LAST REVISED 7/2/2010
USERNAME => s130875
DGN FILE => 0300000725md017.dgn
RELATIVE BORDER SCALE IS IN INCHES 0 1 2 3
UNIT 0390
PROJECT NUMBER & PHASE 03000007251

Dist	COUNTY	ROUTE	POST MILES TOTAL PROJECT	SHEET No.	TOTAL SHEETS
03	Pla	193	4.4/5.5	117	197

Kris M. Albers 4-6-15
REGISTERED CIVIL ENGINEER DATE

4-6-15
PLANS APPROVAL DATE

REGISTERED PROFESSIONAL ENGINEER
KRIS M. ALBERS
No. 49986
Exp. 6-30-15
CIVIL
STATE OF CALIFORNIA

THE STATE OF CALIFORNIA OR ITS OFFICERS OR AGENTS SHALL NOT BE RESPONSIBLE FOR THE ACCURACY OR COMPLETENESS OF SCANNED COPIES OF THIS PLAN SHEET.

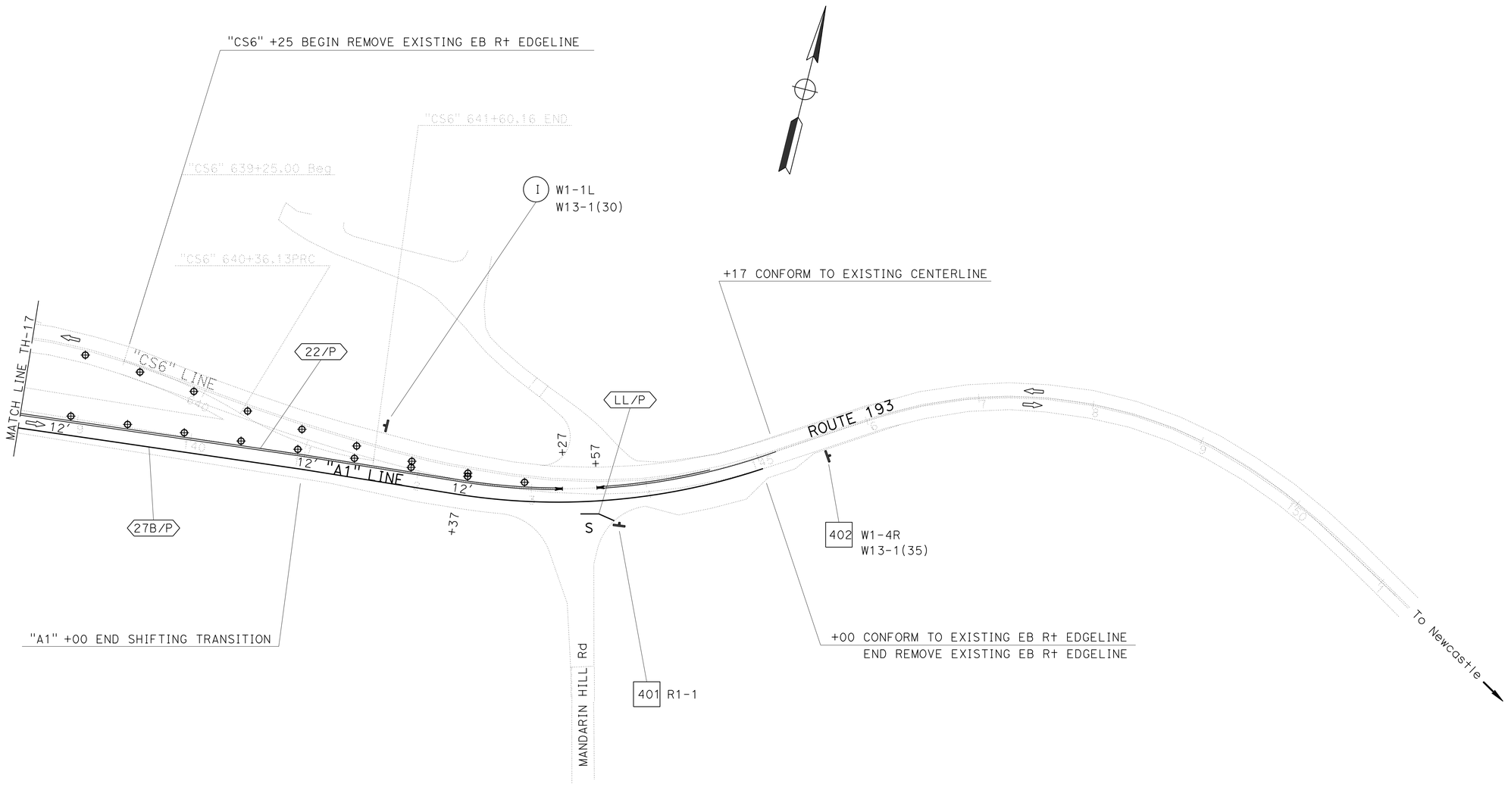

TRAFFIC HANDLING PLAN

STAGE 4b

SCALE: 1"=50'

TH-18

APPROVED FOR TRAFFIC HANDLING WORK ONLY

STATE OF CALIFORNIA - DEPARTMENT OF TRANSPORTATION
TRAFFIC

CALCULATED-DESIGNED BY	CHECKED BY	FUNCTIONAL SUPERVISOR	REVISED BY	DATE REVISED
CHUCK COOK	KRIS ALBERS	NARAYAN SELWAL		

LAST REVISION 04-06-15 | DATE PLOTTED => 15-JUN-2015 | TIME PLOTTED => 15:51

BORDER LAST REVISED 7/2/2010 | USERNAME => s130875 | DGN FILE => 0300000725md018.dgn | RELATIVE BORDER SCALE IS IN INCHES 0 1 2 3 | UNIT 0390 | PROJECT NUMBER & PHASE 03000007251

Dist	COUNTY	ROUTE	POST MILES TOTAL PROJECT	SHEET No.	TOTAL SHEETS
03	Pla	193	4.4/5.5	118	197

Kris M. Albers 4-6-15
REGISTERED CIVIL ENGINEER DATE

4-6-15
PLANS APPROVAL DATE

REGISTERED PROFESSIONAL ENGINEER
KRIS M. ALBERS
No. 49986
Exp. 6-30-15
CIVIL
STATE OF CALIFORNIA

THE STATE OF CALIFORNIA OR ITS OFFICERS OR AGENTS SHALL NOT BE RESPONSIBLE FOR THE ACCURACY OR COMPLETENESS OF SCANNED COPIES OF THIS PLAN SHEET.

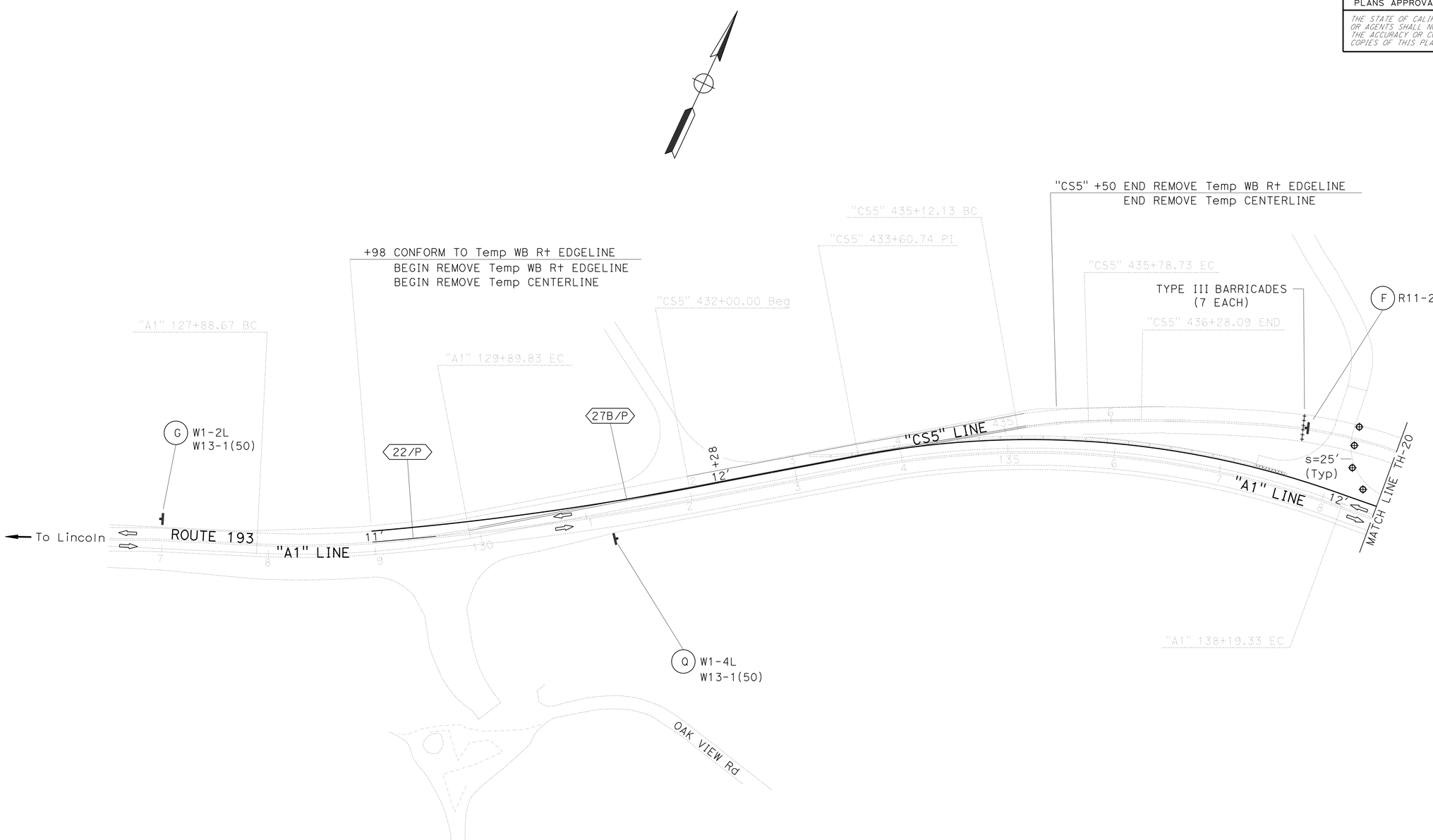

TRAFFIC HANDLING PLAN

STAGE 4c

SCALE: 1"=50'

TH-19

APPROVED FOR TRAFFIC HANDLING WORK ONLY

CALCULATED-
DESIGNED BY

CHECKED BY

REVISED BY

DATE REVISED

CHUCK COOK

KRIS ALBERS

FUNCTIONAL SUPERVISOR

NARAYAN SELWAL

STATE OF CALIFORNIA - DEPARTMENT OF TRANSPORTATION

TRAFFIC

Caltrans

LAST REVISION | DATE PLOTTED => 15-JUN-2015
03-11-15 | TIME PLOTTED => 15:51

BORDER LAST REVISED 7/2/2010

USERNAME => s130875
DGN FILE => 0300000725md019.dgn

RELATIVE BORDER SCALE IS IN INCHES 0 1 2 3

UNIT 0390

PROJECT NUMBER & PHASE 03000007251

Dist	COUNTY	ROUTE	POST MILES TOTAL PROJECT	SHEET No.	TOTAL SHEETS
03	Pla	193	4.4/5.5	119	197

Kris M. Albers 4-6-15
REGISTERED CIVIL ENGINEER DATE

4-6-15
PLANS APPROVAL DATE

REGISTERED PROFESSIONAL ENGINEER
KRIS M. ALBERS
No. 49986
Exp. 6-30-15
CIVIL
STATE OF CALIFORNIA

THE STATE OF CALIFORNIA OR ITS OFFICERS OR AGENTS SHALL NOT BE RESPONSIBLE FOR THE ACCURACY OR COMPLETENESS OF SCANNED COPIES OF THIS PLAN SHEET.

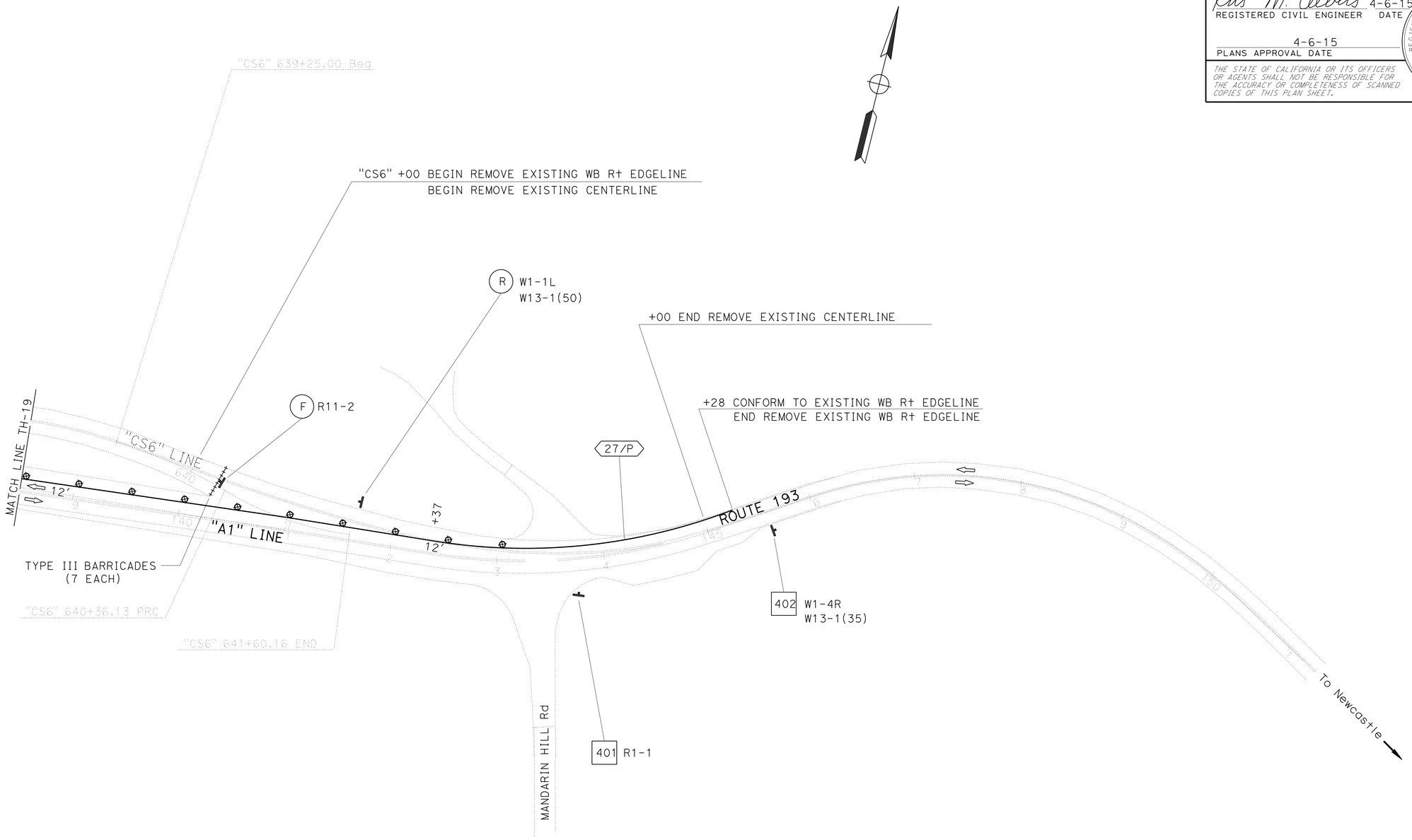

TRAFFIC HANDLING PLAN

STAGE 4c

SCALE: 1"=50'

TH-20

APPROVED FOR TRAFFIC HANDLING WORK ONLY

STATE OF CALIFORNIA - DEPARTMENT OF TRANSPORTATION
Caltrans
TRAFFIC

FUNCTIONAL SUPERVISOR: NARAYAN SELWAL
CALCULATED-DESIGNED BY: CHUCK COOK
CHECKED BY: KRIS ALBERS
REVISED BY
DATE REVISED

LAST REVISION | DATE PLOTTED => 15-JUN-2015
03-11-15 | TIME PLOTTED => 15:51

BORDER LAST REVISED 7/2/2010 | USERNAME => s130875 | DGN FILE => 0300000725md020.dgn | RELATIVE BORDER SCALE IS IN INCHES 0 1 2 3 | UNIT 0390 | PROJECT NUMBER & PHASE 03000007251

Dist	COUNTY	ROUTE	POST MILES TOTAL PROJECT	SHEET No.	TOTAL SHEETS
03	Pla	193	4.4/5.5	120	197

Kris M. Albers 4-6-15
REGISTERED CIVIL ENGINEER DATE

4-6-15
PLANS APPROVAL DATE

REGISTERED PROFESSIONAL ENGINEER
KRIS M. ALBERS
No. 49986
Exp. 6-30-15
CIVIL
STATE OF CALIFORNIA

THE STATE OF CALIFORNIA OR ITS OFFICERS OR AGENTS SHALL NOT BE RESPONSIBLE FOR THE ACCURACY OR COMPLETENESS OF SCANNED COPIES OF THIS PLAN SHEET.

TEMPORARY TRAFFIC STRIPE (PAINT)

DETAIL NUMBER	STAGE 2	STAGE 3a	STAGE 3b	STAGE 3c	STAGE 4a	STAGE 4b	STAGE 4c
	LF	LF	LF	LF	LF	LF	LF
22	1,337	2,373	643	347	625	1,167	60
27B	2,674	2,988	2,964	852	1,039	1,602	1,630
SUBTOTAL	4,011	5,361	3,607	1,199	1,664	2,769	1,690
TOTAL	20,301						

REMOVE THERMOPLASTIC TRAFFIC STRIPE

DETAIL NUMBER	STAGE 2	STAGE 3a	STAGE 3b	STAGE 4b	STAGE 4c
	LF	LF	LF	LF	LF
NO PASSING CENTERLINE	788	436	140		1,000
R† EDGELINE	788	288		575	528
SUBTOTAL	1,576	724	140	575	1,528
TOTAL	4,543				

REMOVE PAINTED TRAFFIC STRIPE

DETAIL NUMBER	STAGE 3a	STAGE 3b	STAGE 4b	STAGE 4c
	LF	LF	LF	LF
NO PASSING CENTERLINE		1,037		1,304
R† EDGELINE	445	561	672	652
SUBTOTAL	445	1,598	672	1,956
TOTAL	4,671			

BARRICADE - TRAFFIC PLASTIC DRUM - DELINEATOR

STAGE	TYPE III BARRICADE		TRAFFIC PLASTIC DRUM		TEMPORARY DELINEATOR (CLASS I)
	FURNISH	INSTALL	FURNISH	INSTALL	TYPE E
	EA		EA		EA
2	10	10	22	22	
3a	1	11	37	59	12
3b		10		33	
4b				30	
4c	3	14		14	
TOTAL	14	———	59	———	12

TEMPORARY PAVEMENT MARKING (PAINT)

STAGE	STOP	LIMIT LINE
	SQFT	SQFT
2	22	16
3a	44	60
4a	22	31
4b	22	31
SUBTOTAL	110	138
TOTAL	248	

TEMPORARY PAVEMENT MARKER

STAGE	DETAIL NUMBER	TYPE D
		EA
2	22	114
3a	22	200
3b	22	56
3c	22	32
4a	22	54
4b	22	100
4c	22	3
TOTAL		559

TRAFFIC HANDLING QUANTITIES

THQ-1

REVISED BY	DATE REVISED
CHUCK COOK	KRIS ALBERS
CALCULATED-DESIGNED BY	CHECKED BY
FUNCTIONAL SUPERVISOR	NARAYAN SELWAL

STATE OF CALIFORNIA - DEPARTMENT OF TRANSPORTATION
TRAFFIC
Caltrans

LAST REVISION 03-11-15
DATE PLOTTED => 15-JUN-2015
TIME PLOTTED => 15:51

Dist	COUNTY	ROUTE	POST MILES TOTAL PROJECT	SHEET No.	TOTAL SHEETS
03	Pla	193	4.4/5.5	121	197

Kris M. Albers 4-6-15
REGISTERED CIVIL ENGINEER DATE

4-6-15
PLANS APPROVAL DATE

REGISTERED PROFESSIONAL ENGINEER
KRIS M. ALBERS
No. 49986
Exp. 6-30-15
CIVIL
STATE OF CALIFORNIA

THE STATE OF CALIFORNIA OR ITS OFFICERS OR AGENTS SHALL NOT BE RESPONSIBLE FOR THE ACCURACY OR COMPLETENESS OF SCANNED COPIES OF THIS PLAN SHEET.

ROADSIDE SIGN - ADDITIONAL STATIONARY MOUNTED CONSTRUCTION AREA SIGN

SIGN NUMBER No.	SIGN CODE	STAGE 1		STAGE 2				STAGE 3a				STAGE 3b				STAGE 3c		STAGE 4a		STAGE 4b	STAGE 4c	FINAL
		RSS		RSS			CAS	RSS	CAS			RSS		CAS		CAS		RSS	CAS	CAS	CAS	CAS
		RESET ROADSIDE SIGN (EACH)	SALVAGE ROADSIDE SIGN (METAL POST) (EACH)	RESET ROADSIDE SIGN (EACH)	RELOCATE ROADSIDE SIGN (EACH)	REMOVE ROADSIDE SIGN (EACH)	SIGN TO REMAIN	RELOCATE ROADSIDE SIGN (EACH)	SIGN TO REMAIN	RELOCATE SIGN	REMOVE SIGN	RELOCATE ROADSIDE SIGN (EACH)	REMOVE SIGN ROADSIDE SIGN (EACH)	SIGN TO REMAIN	REMOVE SIGN	SIGN TO REMAIN	RESET SIGN	RESET ROADSIDE SIGN (EACH)	SIGN TO REMAIN	SIGN TO REMAIN	SIGN TO REMAIN	REMOVE SIGN
101	W1-1L W13-1(30)	1					X				X											
102	W64(AHEAD)<CA>	1					X			X				X		X			X	X	X	X
103	W4-4(L+,30)<CA>		1																			
104	W1-3R W13-1(30)	1					X				X											
105	W4-4(R+,30)<CA>		1																			
106	W4-4(L+,30)<CA>		1																			
107	W1-6L N-1<CA>	1					X		X						X							
201	R1-1			1						X				X		X			X	X	X	X
202	W1-3L W13-1(30)					1																
203	W1-3R W13-1(25)				1				X						X							
204	W1-1L W13-1(30)					1																
205	W1-3L W13-1(30)					1																
SHEET TOTAL		4	3	1	1	3	—	0	—			0	0	—		—		0	—	—	—	—

NOTES:

1. RSS = ROADSIDE SIGN
2. CAS = CONSTRUCTION ARE SIGN
3. FOR ADDITIONAL ROADSIDE SIGN QUANTITIES, SEE SHEET THQ-3 AND SQ-1.

TRAFFIC HANDLING QUANTITIES

THQ-2

CALCULATED-DESIGNED BY: CHUCK COOK
CHECKED BY: KRIS ALBERS
REVISED BY
DATE REVISED
FUNCTIONAL SUPERVISOR: NARAYAN SELWAL

STATE OF CALIFORNIA - DEPARTMENT OF TRANSPORTATION
TRAFFIC
Caltrans

LAST REVISION 03-11-15
DATE PLOTTED => 15-JUN-2015
TIME PLOTTED => 15:51

BORDER LAST REVISED 7/2/2010
USERNAME => s130875
DGN FILE => 0300000725mf002.dgn
RELATIVE BORDER SCALE IS IN INCHES 0 1 2 3
UNIT 0390
PROJECT NUMBER & PHASE 03000007251

Dist	COUNTY	ROUTE	POST MILES TOTAL PROJECT	SHEET No.	TOTAL SHEETS
03	Pla	193	4.4/5.5	122	197

Kris M. Albers 4-6-15
REGISTERED CIVIL ENGINEER DATE

4-6-15
PLANS APPROVAL DATE

REGISTERED PROFESSIONAL ENGINEER
KRIS M. ALBERS
No. 49986
Exp. 6-30-15
CIVIL
STATE OF CALIFORNIA

THE STATE OF CALIFORNIA OR ITS OFFICERS OR AGENTS SHALL NOT BE RESPONSIBLE FOR THE ACCURACY OR COMPLETENESS OF SCANNED COPIES OF THIS PLAN SHEET.

ROADSIDE SIGN - ADDITIONAL STATIONARY MOUNTED CONSTRUCTION AREA SIGN (CONTINUED)

SIGN NUMBER No.	SIGN CODE	STAGE 1		STAGE 2				STAGE 3a				STAGE 3b				STAGE 3c		STAGE 4a		STAGE 4b	STAGE 4c	FINAL
		RSS		RSS			CAS	RSS	CAS			RSS		CAS		CAS		RSS	CAS	CAS	CAS	CAS
		RESET ROADSIDE SIGN (EACH)	SALVAGE ROADSIDE SIGN (METAL POST) (EACH)	RESET ROADSIDE SIGN (EACH)	RELOCATE ROADSIDE SIGN (EACH)	REMOVE ROADSIDE SIGN (EACH)	SIGN TO REMAIN	RELOCATE ROADSIDE SIGN (EACH)	SIGN TO REMAIN	RELOCATE SIGN	REMOVE SIGN	RELOCATE ROADSIDE SIGN (EACH)	REMOVE SIGN ROADSIDE SIGN (EACH)	SIGN TO REMAIN	REMOVE SIGN	SIGN TO REMAIN	RESET SIGN	RESET ROADSIDE SIGN (EACH)	SIGN TO REMAIN	SIGN TO REMAIN	SIGN TO REMAIN	REMOVE SIGN
301	W1-4R W13-1(35)							1						X			X		X	X	X	X
302	W1-5R W7-3a(5)							1						X		X			X	X	X	X
303	W1-4R W13-1(35)												1									
304	W1-4R W13-1(35)												1									
305	W64(400)<CA>											1				X			X	X	X	X
401	R1-1																	1		X	X	X
402	W1-4R W13-1(35)																	1		X	X	X
SHEET TOTAL		0	0	0	0	0		2				1	2					2				
SHEET TOTAL FROM THQ-2		4	3	1	1	3		0				0	0					0				
SUBTOTAL		4	3	1	1	3		2				1	2					2				

TRAFFIC HANDLING ROADSIDE SIGN QUANTITIES

STAGE	RESET ROADSIDE SIGN (EA)	RELOCATE ROADSIDE SIGN (EA)	REMOVE ROADSIDE SIGN (EA)	SALVAGE ROADSIDE SIGN (METAL POST) (EA)
1	4			3
2	1	1	3	
3a		2		
3b		1	2	
4a	2			
SHEET TOTAL	7	4	5	3

NOTE:

FOR ADDITIONAL ROADSIDE SIGN QUANTITIES, SEE SHEET THQ-2 AND SQ-1.

TRAFFIC HANDLING QUANTITIES

THQ-3

REVISED BY | DATE REVISED
CHUCK COOK | KRIS ALBERS
CALCULATED-DESIGNED BY | CHECKED BY
FUNCTIONAL SUPERVISOR: NARAYAN SELWAL
STATE OF CALIFORNIA - DEPARTMENT OF TRANSPORTATION
Caltrans®
TRAFFIC

LAST REVISION DATE PLOTTED => 15-JUN-2015
04-06-15 TIME PLOTTED => 15:51

BORDER LAST REVISED 7/2/2010 | USERNAME => s130875 | DGN FILE => 0300000725mf003.dgn | RELATIVE BORDER SCALE IS IN INCHES 0 1 2 3 | UNIT 0390 | PROJECT NUMBER & PHASE 03000007251

Dist	COUNTY	ROUTE	POST MILES TOTAL PROJECT	SHEET No.	TOTAL SHEETS
03	Pla	193	4.4/5.5	123	197

Kris M. Albers 4-6-15
REGISTERED CIVIL ENGINEER DATE

4-6-15
PLANS APPROVAL DATE

REGISTERED PROFESSIONAL ENGINEER
KRIS M. ALBERS
No. 49986
Exp. 6-30-15
CIVIL
STATE OF CALIFORNIA

THE STATE OF CALIFORNIA OR ITS OFFICERS OR AGENTS SHALL NOT BE RESPONSIBLE FOR THE ACCURACY OR COMPLETENESS OF SCANNED COPIES OF THIS PLAN SHEET.

ADDITIONAL STATIONARY MOUNTED CONSTRUCTION AREA SIGNS

SIGN LETTER	SIGN CODE	PANEL SIZE	SIGN MESSAGE	NUMBER OF POST AND SIZE	NUMBER OF SIGNS
D	W4-4(L+,30)<CA>	72" x 72"	COMBINATION TURN ADVISORY SPEED	2 - 6" x 8"	2
E	W4-4(R+,30)<CA>	72" x 72"	COMBINATION TURN ADVISORY SPEED	2 - 6" x 8"	1
F	R11-2	48" x 30"	ROAD CLOSED	MOUNTED ON BARRICADE	2
G	W1-2L W13-1(50)	36" x 36" 30" x 30"	(CURVE SYMBOL) 50 MPH	1 - 6" x 6"	2
H	W1-4L W13-1(30)	36" x 36" 30" x 30"	(REVERSE CURVE SYMBOL) 30 MPH	1 - 6" x 6"	1
I	W1-1L W13-1(30)	36" x 36" 30" x 30"	(TURN SYMBOL) 30 MPH	1 - 6" x 6"	1
J	R6-1R	54" x 18"	ONE WAY (ARROW)	1 - 4" x 4"	3
K	W1-2L W13-1(45)	36" x 36" 30" x 30"	(CURVE SYMBOL) 45 MPH	1 - 6" x 6"	1
L	R3-2	30" x 30"	NO LEFT TURN	1 - 4" x 6"	5
M	R6-1L	54" x 18"	ONE WAY (ARROW)	1 -4" x 4"	2
N	R3-1	30" x 30"	NO RIGHT TURN	1 - 4" x 6"	2
O	W1-2R W13-1(50)	36" x 36" 30" x 30"	(CURVE SYMBOL) 50 MPH	1 - 6" x 6"	1
P	W1-2R W13-1(45)	36" x 36" 30" x 30"	(CURVE SYMBOL) 45 MPH	1 - 6" x 6"	1
Q	W1-4L W13-1(50)	36" x 36" 30" x 30"	(REVERSE CURVE SYMBOL) 50 MPH	1 - 6" x 6"	1
R	W1-1L W13-1(50)	36" x 36" 30" x 30"	(TURN SYMBOL) 50 MPH	1 - 6" x 6"	1

NOTES:

1. EXACT SIGN LOCATION TO BE DETERMINED BY THE ENGINEER.
2. ALL SIGN CODES SHOWN ARE FEDERAL SIGN CODES UNLESS OTHERWISE DESIGNATED AS A CALIFORNIA SIGN CODE.
3. <CA> = CALIFORNIA SIGN CODE.
4. FOR ADDITIONAL CONSTRUCTION AREA SIGNS, SEE CONSTRUCTION AREA SIGN PLANS.

TRAFFIC HANDLING QUANTITIES

THQ-4

CALCULATED-DESIGNED BY: CHUCK COOK
CHECKED BY: KRIS ALBERS
REVISED BY
DATE REVISED
FUNCTIONAL SUPERVISOR: NARAYAN SELWAL
STATE OF CALIFORNIA - DEPARTMENT OF TRANSPORTATION
Caltrans
TRAFFIC

LAST REVISION 03-11-15
DATE PLOTTED => 15-JUN-2015
TIME PLOTTED => 15:51

BORDER LAST REVISED 7/2/2010
USERNAME => s130875
DGN FILE => 0300000725mf004.dgn
RELATIVE BORDER SCALE IS IN INCHES 0 1 2 3
UNIT 0390
PROJECT NUMBER & PHASE 03000007251

Dist	COUNTY	ROUTE	POST MILES TOTAL PROJECT	SHEET No.	TOTAL SHEETS
03	Pla	193	4.4/5.5	124	197

Kris M. Albers 4-6-15
REGISTERED CIVIL ENGINEER DATE

4-6-15
PLANS APPROVAL DATE

REGISTERED PROFESSIONAL ENGINEER
KRIS M. ALBERS
No. 49986
Exp. 6-30-15
CIVIL
STATE OF CALIFORNIA

THE STATE OF CALIFORNIA OR ITS OFFICERS OR AGENTS SHALL NOT BE RESPONSIBLE FOR THE ACCURACY OR COMPLETENESS OF SCANNED COPIES OF THIS PLAN SHEET.

LEGEND

⟷	CHANGE IN STRIPING PATTERN
No.	PAVEMENT DELINEATION DETAIL NUMBER
LL	LIMIT LINE
⊢►	DELINEATOR (CLASS 1)
s=	DELINEATOR SPACING
OL-1	OBJECT MARKER (TYPE L-1)
HP	HIGHWAY POST MARKER
S	"STOP" PAVEMENT MARKING

LEGEND

Sht-No.	ROADSIDE SIGN NUMBER
<CA>	CALIFORNIA SIGN CODE
*	RELOCATE ROADSIDE SIGN
SNS	STREET NAME SIGN

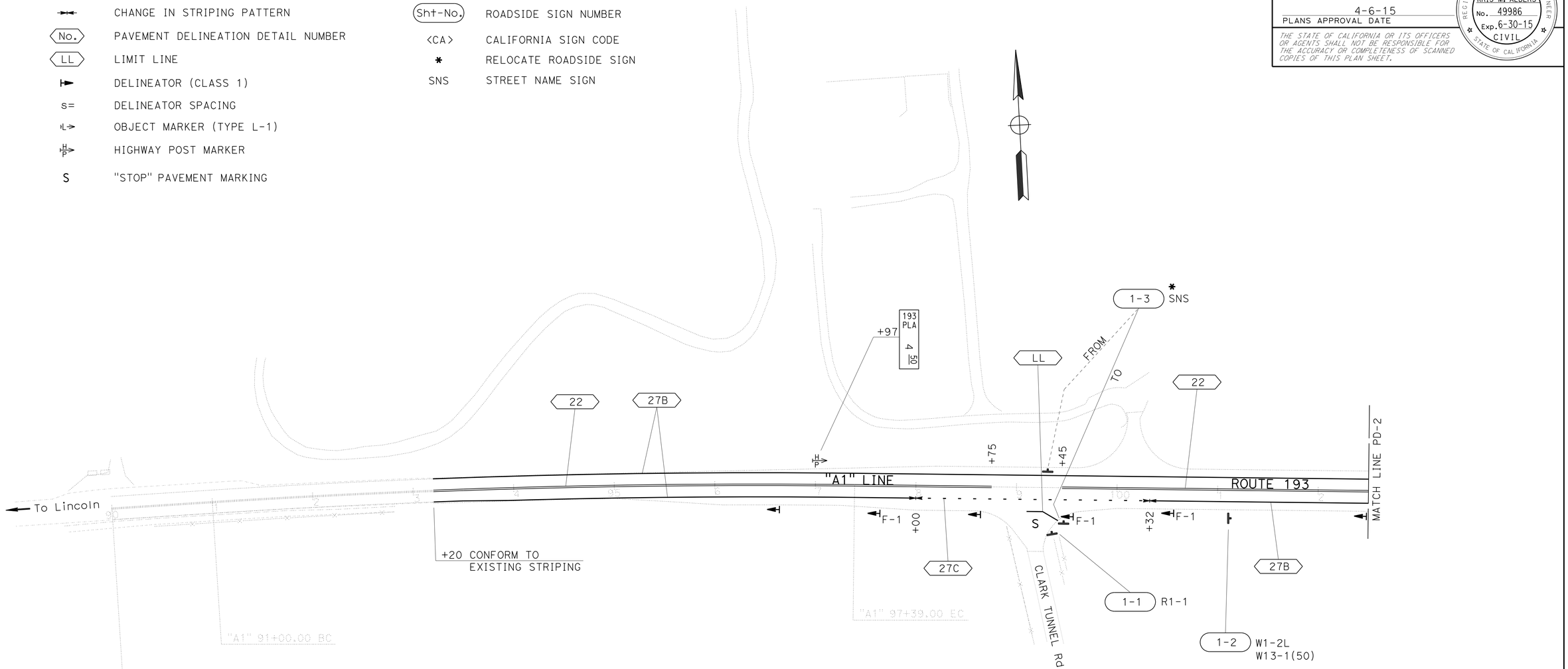

NOTES:

1. ALL LANES SHALL BE 12′ WIDE UNLESS OTHERWISE SHOWN.
2. ALL EXISTING SIGNS NOT SHOWN FOR RELOCATION SHALL REMAIN IN PLACE.
3. ALL DELINEATORS SHALL BE TYPE E UNLESS OTHERWISE SHOWN.
4. ALL SIGN CODES SHOWN ARE FEDERAL SIGN CODES UNLESS OTHERWISE DESIGNATED AS CALIFORNIA SIGN CODES.
5. <CA> = CALIFORNIA SIGN CODE

PAVEMENT DELINEATION AND SIGN PLAN

SCALE: 1"=50′

PD-1

APPROVED FOR PAVEMENT DELINEATION AND SIGN WORK ONLY

REVISED BY | DATE REVISED
CALCULATED-DESIGNED BY: CHUCK COOK
CHECKED BY: KRIS ALBERS
FUNCTIONAL SUPERVISOR: NARAYAN SELWAL
STATE OF CALIFORNIA - DEPARTMENT OF TRANSPORTATION
Caltrans®
TRAFFIC

LAST REVISION | DATE PLOTTED => 15-JUN-2015
03-11-15 | TIME PLOTTED => 15:51

BORDER LAST REVISED 7/2/2010 | USERNAME => s130875 | DGN FILE => 0300000725na001.dgn | RELATIVE BORDER SCALE IS IN INCHES 0 1 2 3 | UNIT 0390 | PROJECT NUMBER & PHASE 03000007251

Dist	COUNTY	ROUTE	POST MILES TOTAL PROJECT	SHEET No.	TOTAL SHEETS
03	Pla	193	4.4/5.5	125	197

Kris M. Albers 4-6-15
REGISTERED CIVIL ENGINEER DATE

4-6-15
PLANS APPROVAL DATE

REGISTERED PROFESSIONAL ENGINEER
KRIS M. ALBERS
No. 49986
Exp. 6-30-15
CIVIL
STATE OF CALIFORNIA

THE STATE OF CALIFORNIA OR ITS OFFICERS OR AGENTS SHALL NOT BE RESPONSIBLE FOR THE ACCURACY OR COMPLETENESS OF SCANNED COPIES OF THIS PLAN SHEET.

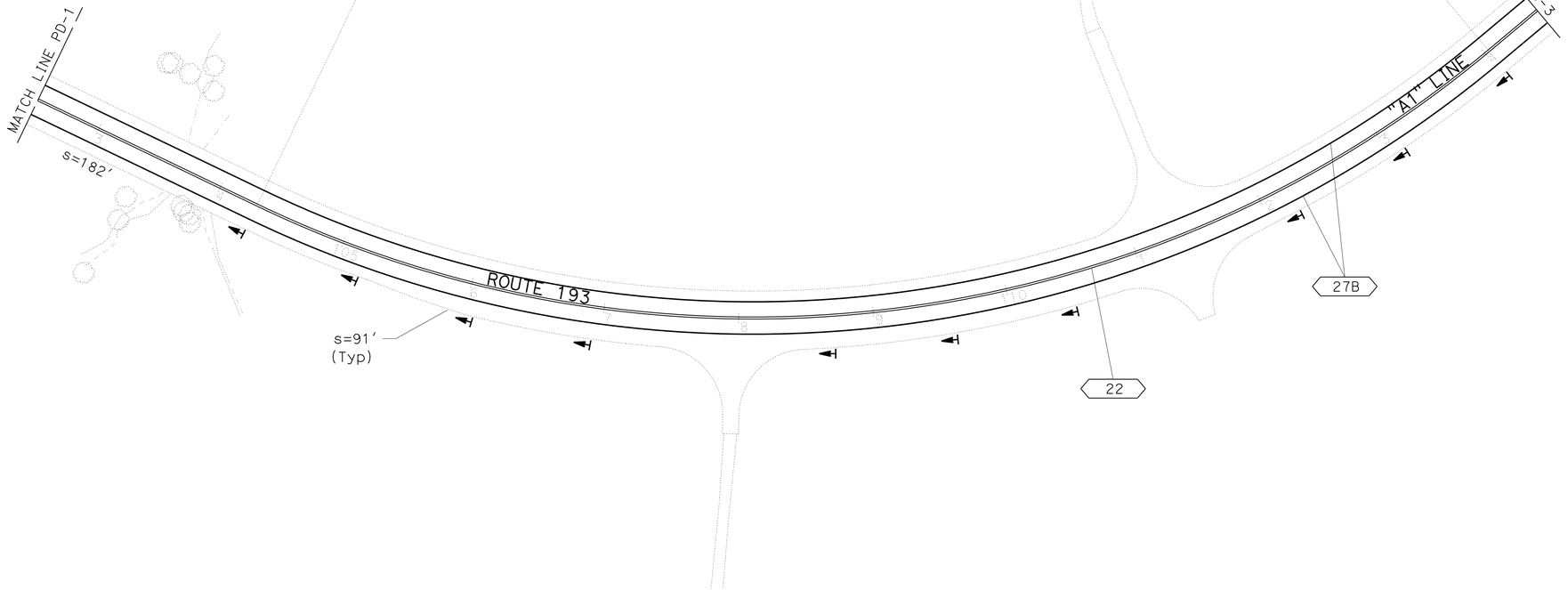

PAVEMENT DELINEATION AND SIGN PLAN

SCALE: 1"=50'

PD-2

APPROVED FOR PAVEMENT DELINEATION AND SIGN WORK ONLY

STATE OF CALIFORNIA - DEPARTMENT OF TRANSPORTATION
Caltrans®
TRAFFIC

FUNCTIONAL SUPERVISOR: NARAYAN SELWAL
CALCULATED-DESIGNED BY:
CHECKED BY: KRIS ALBERS
CHUCK COOK
REVISED BY
DATE REVISED

LAST REVISION: DATE PLOTTED => 15-JUN-2015
03-11-15 TIME PLOTTED => 15:51

BORDER LAST REVISED 7/2/2010
USERNAME => s130875
DGN FILE => 0300000725na002.dgn
RELATIVE BORDER SCALE IS IN INCHES 0 1 2 3
UNIT 0390
PROJECT NUMBER & PHASE 03000007251

Dist	COUNTY	ROUTE	POST MILES TOTAL PROJECT	SHEET No.	TOTAL SHEETS
03	Pla	193	4.4/5.5	126	197

Kris M. Albers 4-6-15
REGISTERED CIVIL ENGINEER DATE

4-6-15
PLANS APPROVAL DATE

REGISTERED PROFESSIONAL ENGINEER
KRIS M. ALBERS
No. 49986
Exp. 6-30-15
CIVIL
STATE OF CALIFORNIA

THE STATE OF CALIFORNIA OR ITS OFFICERS OR AGENTS SHALL NOT BE RESPONSIBLE FOR THE ACCURACY OR COMPLETENESS OF SCANNED COPIES OF THIS PLAN SHEET.

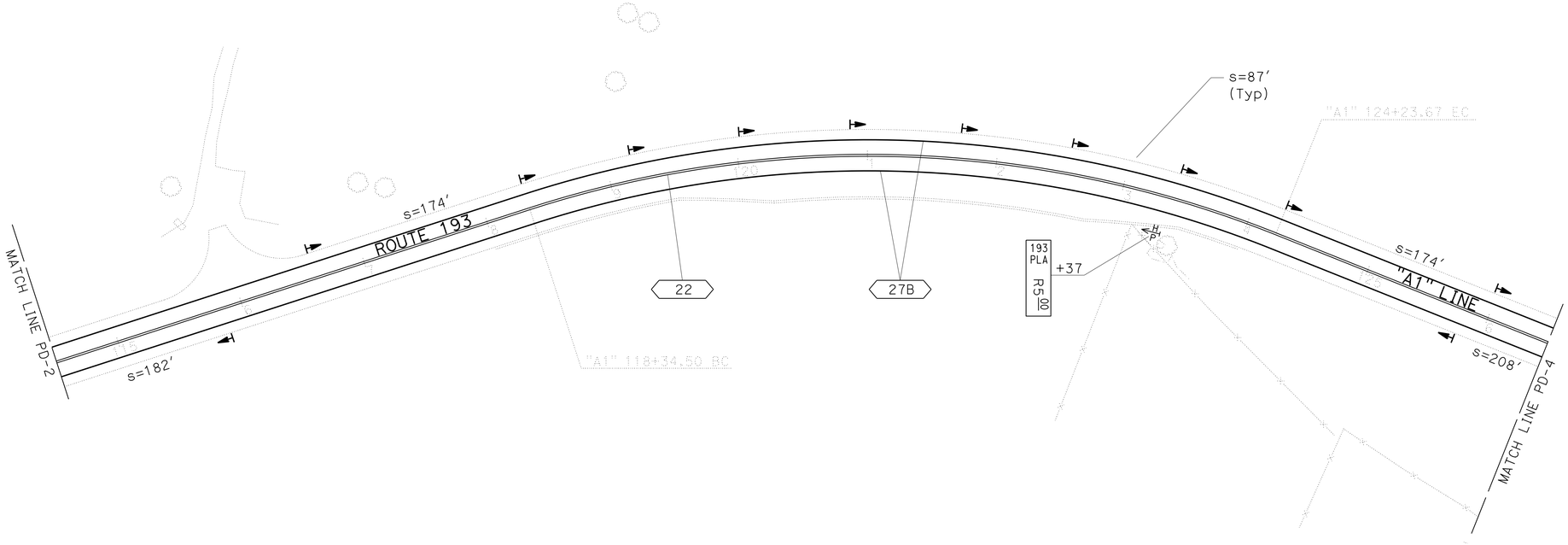

PAVEMENT DELINEATION AND SIGN PLAN

SCALE: 1"=50'

PD-3

APPROVED FOR PAVEMENT DELINEATION AND SIGN WORK ONLY

CHUCK COOK — CALCULATED-DESIGNED BY
KRIS ALBERS — CHECKED BY
REVISED BY — DATE REVISED
NARAYAN SELWAL — FUNCTIONAL SUPERVISOR
STATE OF CALIFORNIA - DEPARTMENT OF TRANSPORTATION
Caltrans®
TRAFFIC

LAST REVISION 03-11-15
DATE PLOTTED => 15-JUN-2015
TIME PLOTTED => 15:51

BORDER LAST REVISED 7/2/2010
USERNAME => s130875
DGN FILE => 0300000725na003.dgn
RELATIVE BORDER SCALE IS IN INCHES 0 1 2 3
UNIT 0390
PROJECT NUMBER & PHASE 03000007251

Dist	COUNTY	ROUTE	POST MILES TOTAL PROJECT	SHEET No.	TOTAL SHEETS
03	Pla	193	4.4/5.5	127	197

Kris M. Albers 4-6-15
REGISTERED CIVIL ENGINEER DATE

4-6-15
PLANS APPROVAL DATE

REGISTERED PROFESSIONAL ENGINEER
KRIS M. ALBERS
No. 49986
Exp. 6-30-15
CIVIL
STATE OF CALIFORNIA

THE STATE OF CALIFORNIA OR ITS OFFICERS OR AGENTS SHALL NOT BE RESPONSIBLE FOR THE ACCURACY OR COMPLETENESS OF SCANNED COPIES OF THIS PLAN SHEET.

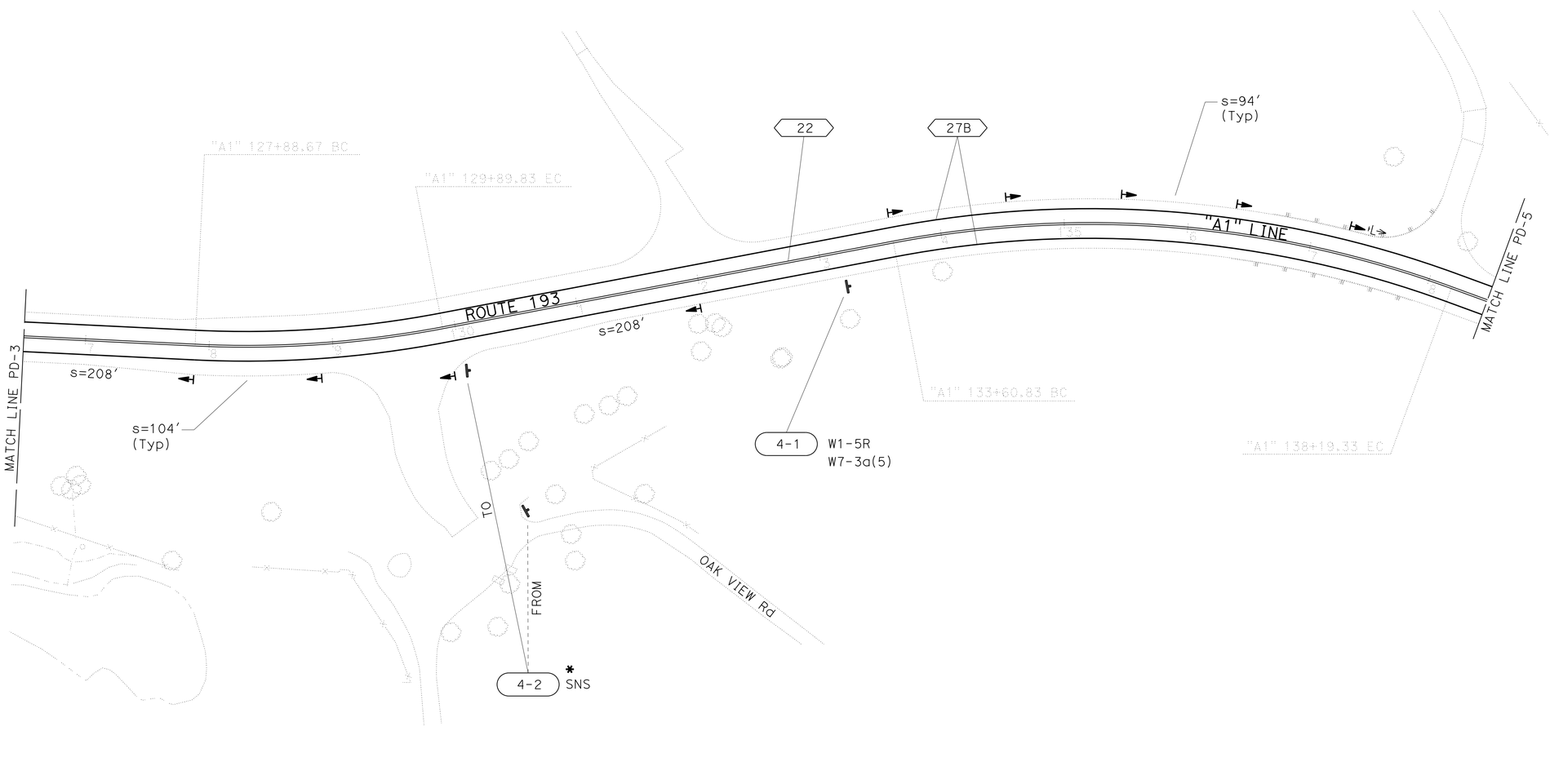

PAVEMENT DELINEATION AND SIGN PLAN

SCALE: 1"=50'

PD-4

APPROVED FOR PAVEMENT DELINEATION AND SIGN WORK ONLY

CALCULATED-DESIGNED BY	CHUCK COOK
CHECKED BY	KRIS ALBERS
FUNCTIONAL SUPERVISOR	NARAYAN SELWAL
STATE OF CALIFORNIA - DEPARTMENT OF TRANSPORTATION	TRAFFIC

REVISED BY	DATE REVISED

LAST REVISION | DATE PLOTTED => 15-JUN-2015
03-11-15 | TIME PLOTTED => 15:51

Dist	COUNTY	ROUTE	POST MILES TOTAL PROJECT	SHEET No.	TOTAL SHEETS
03	Pla	193	4.4/5.5	128	197

Kris M. Albers 4-6-15
REGISTERED CIVIL ENGINEER DATE

4-6-15
PLANS APPROVAL DATE

REGISTERED PROFESSIONAL ENGINEER
KRIS M. ALBERS
No. 49986
Exp. 6-30-15
CIVIL
STATE OF CALIFORNIA

THE STATE OF CALIFORNIA OR ITS OFFICERS OR AGENTS SHALL NOT BE RESPONSIBLE FOR THE ACCURACY OR COMPLETENESS OF SCANNED COPIES OF THIS PLAN SHEET.

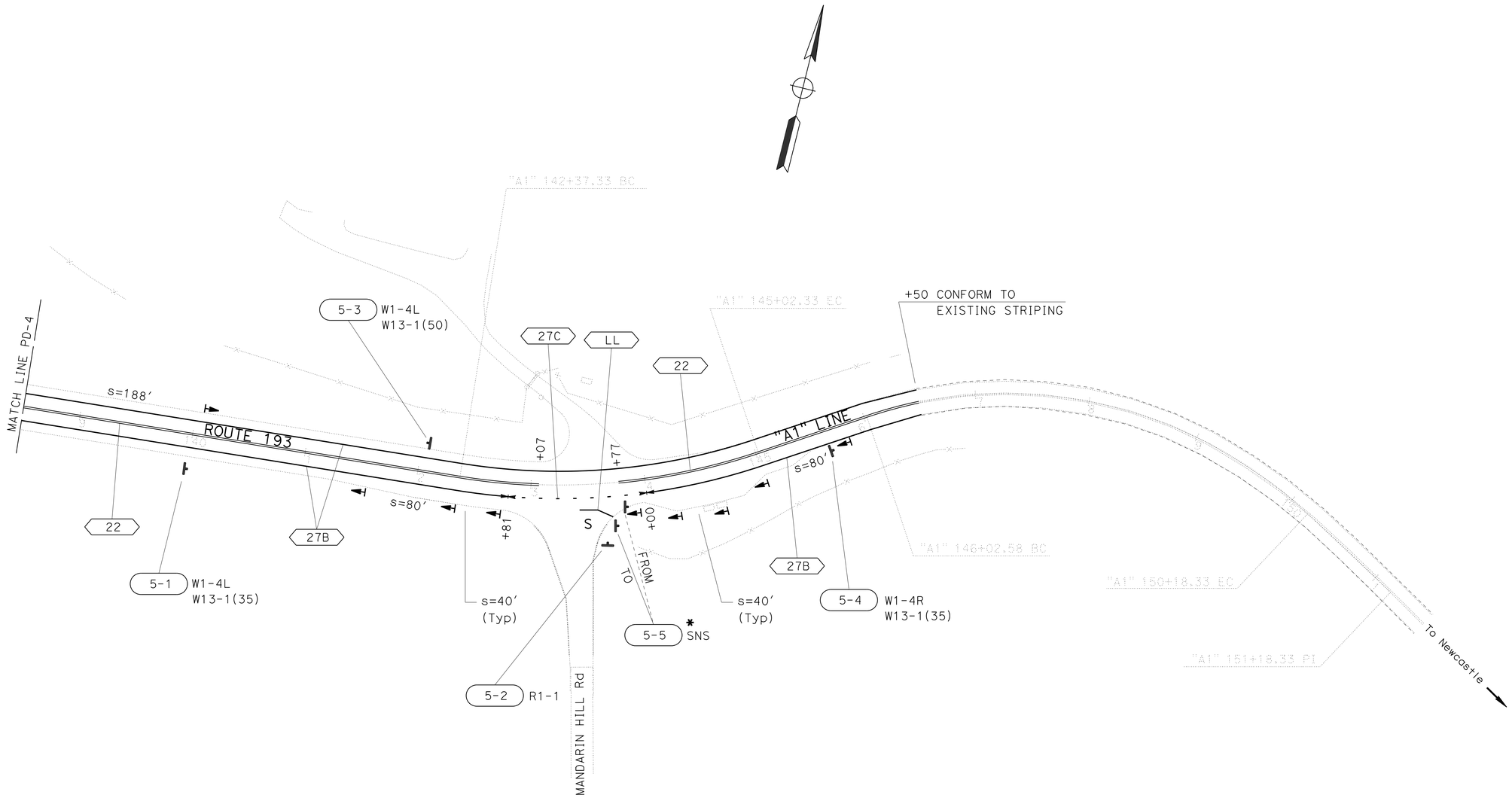

PAVEMENT DELINEATION AND SIGN PLAN

SCALE: 1"=50'

PD-5

APPROVED FOR PAVEMENT DELINEATION AND SIGN WORK ONLY

CALCULATED-DESIGNED BY
CHECKED BY

CHUCK COOK
KRIS ALBERS

REVISED BY
DATE REVISED

FUNCTIONAL SUPERVISOR
NARAYAN SELWAL

STATE OF CALIFORNIA - DEPARTMENT OF TRANSPORTATION
TRAFFIC

LAST REVISION | DATE PLOTTED => 15-JUN-2015
03-11-15 | TIME PLOTTED => 15:51

Dist	COUNTY	ROUTE	POST MILES TOTAL PROJECT	SHEET No.	TOTAL SHEETS
03	Pla	193	4.4/5.5	129	197

Kris M. Albers 4-6-15
REGISTERED CIVIL ENGINEER DATE

4-6-15
PLANS APPROVAL DATE

REGISTERED PROFESSIONAL ENGINEER
KRIS M. ALBERS
No. 49986
Exp. 6-30-15
CIVIL
STATE OF CALIFORNIA

THE STATE OF CALIFORNIA OR ITS OFFICERS OR AGENTS SHALL NOT BE RESPONSIBLE FOR THE ACCURACY OR COMPLETENESS OF SCANNED COPIES OF THIS PLAN SHEET.

4" THERMOPLASTIC TRAFFIC STRIPE (EWNV)

DETAIL NUMBER	LF
22	10,380
27B	10,309
TOTAL	20,689

4" THERMOPLASTIC TRAFFIC STRIPE (EWNV) (BROKEN 12-3)

DETAIL NUMBER	LF
27C	351
TOTAL	351

PAVEMENT MARKER

DETAIL NUMBER	RETROREFLECTIVE
	TYPE D
	EA
22	436
TOTAL	436

LEGEND

EWNV = ENHANCED WET NIGHT VISIBILITY

THERMOPLASTIC PAVEMENT MARKING (EWNV)

DESCRIPTION	SQFT
"STOP"	44
LIMIT LINE	64
TOTAL	108

DELINEATOR - HIGHWAY POST MARKER - OBJECT MARKER

SHEET NUMBER	DELINEATOR (CLASS 1)		HIGHWAY POST MARKER	OBJECT MARKER (TYPE L-1)
	TYPE E	TYPE F		
	EA	EA	EA	EA
PD-1	3	3	1	
PD-2	10			
PD-3	12		1	
PD-4	9			1
PD-5	9			
SUBTOTAL	43	3	2	1
TOTAL	46		2	1

PAVEMENT DELINEATION QUANTITIES

PDQ-1

CALCULATED-DESIGNED BY: CHUCK COOK
CHECKED BY: KRIS ALBERS
REVISED BY / DATE REVISED:
FUNCTIONAL SUPERVISOR: NARAYAN SELWAL
STATE OF CALIFORNIA - DEPARTMENT OF TRANSPORTATION
TRAFFIC
Caltrans

LAST REVISION 04-06-15
DATE PLOTTED => 15-JUN-2015
TIME PLOTTED => 15:51

BORDER LAST REVISED 7/2/2010
USERNAME => s130875
DGN FILE => 0300000725nc001.dgn
RELATIVE BORDER SCALE IS IN INCHES 0 1 2 3
UNIT 0390
PROJECT NUMBER & PHASE 03000007251

Dist	COUNTY	ROUTE	POST MILES TOTAL PROJECT	SHEET No.	TOTAL SHEETS
03	Pla	193	4.4/5.5	130	197

Kris M. Albers 4-6-15
REGISTERED CIVIL ENGINEER DATE

4-6-15
PLANS APPROVAL DATE

REGISTERED PROFESSIONAL ENGINEER
KRIS M. ALBERS
No. 49986
Exp. 6-30-15
CIVIL
STATE OF CALIFORNIA

THE STATE OF CALIFORNIA OR ITS OFFICERS OR AGENTS SHALL NOT BE RESPONSIBLE FOR THE ACCURACY OR COMPLETENESS OF SCANNED COPIES OF THIS PLAN SHEET.

NOTES:

1. THE SIGN POST SHALL HAVE 7/16" DIAMETER PERFORATIONS 1" ON CENTER ON ALL FOUR SIDES FOR THE FULL LENGTH.
2. USE TWO DRIVE RIVETS TO FASTEN ASSEMBLED SIGN AND SIGN POST INTO ANCHOR SLEEVE. INSTALL DRIVE RIVETS INTO THE SIDES FACING TRAFFIC.
3. ALL METAL SIGN POSTS AND ANCHOR SLEEVES SHALL BE GALVANIZED.
4. ALL ANCHOR SLEEVES SHALL BE EMBEDDED IN PCC.
5. BALANCED SINGLE POST INSTALLATIONS OF SINGLE SHEET ALUMINUM PANEL SIGNS REQUIRE BACK BRACES WHEN 2'-10" OR MORE IN LENGTH.
6. WOOD BLOCK SPACERS ARE NOT REQUIRED FOR SIGNS MOUNTED ON METAL POSTS.
7. ATTACH RECTANGULAR SIGN PANEL TO SIGN POST WITH BOLTS AT TOP AND BOTTOM. CENTER MAY BE ATTACHED WITH EITHER BOLT OR 3/8" DRIVE RIVET.
8. ATTACH DIAMOND SIGN PANEL TO SIGN POST WITH BOLT AT CENTER. TOP AND BOTTOM MAY BE ATTACHED WITH EITHER BOLTS OR 3/8" DRIVE RIVETS.
9. FOR DETAILS NOT SHOWN, SEE STANDARD PLANS RS1 AND RS2.

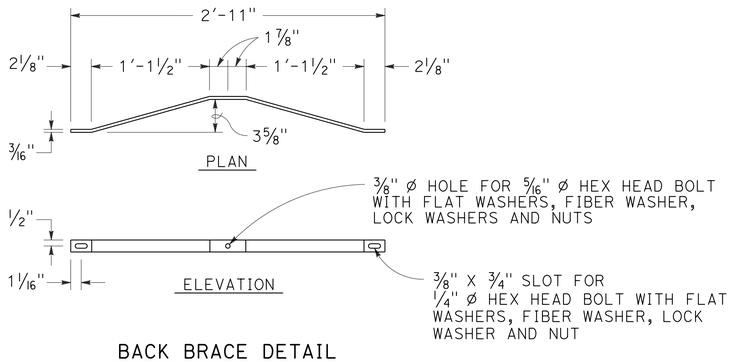

BACK BRACE DETAIL
SEE NOTE 5

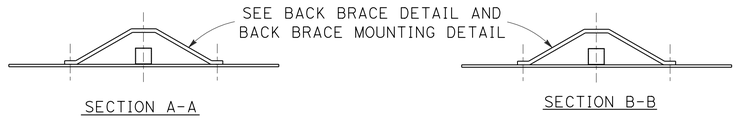

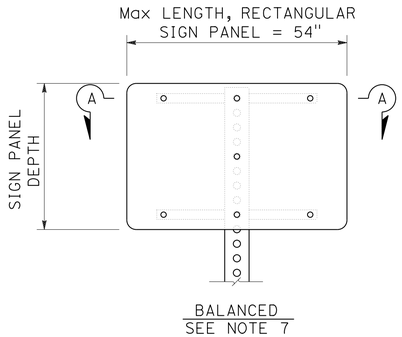

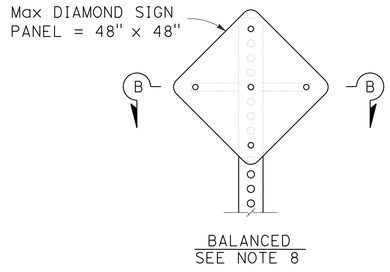

SINGLE POST INSTALLATION

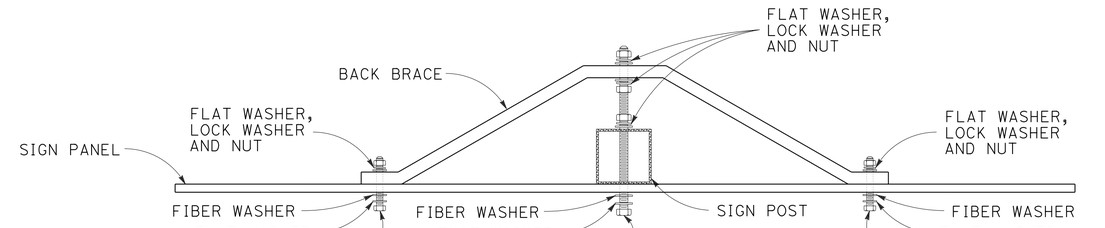

BACK BRACE MOUNTING DETAIL
SEE NOTES 6, 7 AND 8

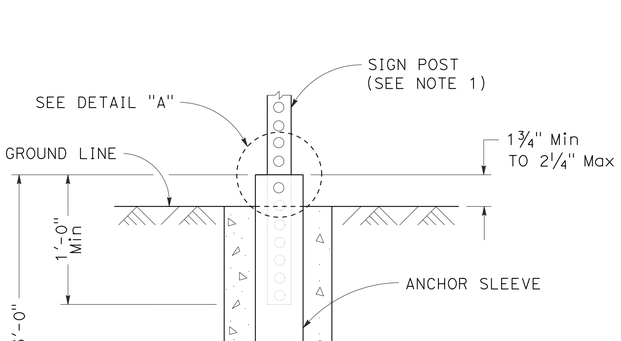

ANCHOR SLEEVE DETAIL

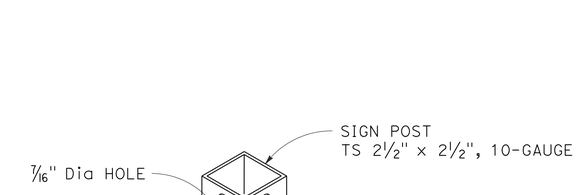

DETAIL "A"

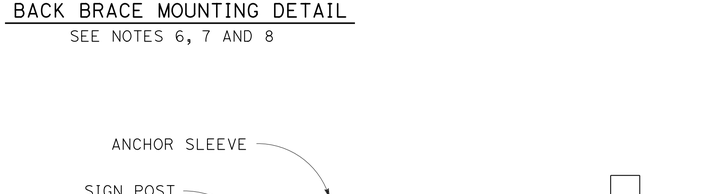

FASTENER DETAIL

SIGN DETAILS

NO SCALE

APPROVED FOR SIGN WORK ONLY

SD-1

STATE OF CALIFORNIA - DEPARTMENT OF TRANSPORTATION
TRAFFIC
FUNCTIONAL SUPERVISOR: NARAYAN SELWAL
CALCULATED-DESIGNED BY
CHECKED BY: KRIS ALBERS
CHUCK COOK
REVISED BY
DATE REVISED

LAST REVISION 03-11-15
DATE PLOTTED => 15-JUN-2015
TIME PLOTTED => 15:51

BORDER LAST REVISED 7/2/2010
USERNAME => s130875
DGN FILE => 0300000725ob001.dgn
RELATIVE BORDER SCALE IS IN INCHES 0 1 2 3
UNIT 0390
PROJECT NUMBER & PHASE 03000007251

Dist	COUNTY	ROUTE	POST MILES TOTAL PROJECT	SHEET No.	TOTAL SHEETS
03	Pla	193	4.4/5.5	131	197

Kris M. Albers 4-6-15
REGISTERED CIVIL ENGINEER DATE

4-6-15
PLANS APPROVAL DATE

REGISTERED PROFESSIONAL ENGINEER
KRIS M. ALBERS
No. 49986
Exp. 6-30-15
CIVIL
STATE OF CALIFORNIA

THE STATE OF CALIFORNIA OR ITS OFFICERS OR AGENTS SHALL NOT BE RESPONSIBLE FOR THE ACCURACY OR COMPLETENESS OF SCANNED COPIES OF THIS PLAN SHEET.

ROADSIDE SIGN QUANTITIES

SIGN NUMBER (SHT-No.)	SIGN CODE	PANEL SIZE INCHES	"C" DIM IN FEET	POST SIZE AND LENGTH METAL POST 2½"X2½"	ROADSIDE SIGN ONE POST EA	RESET ROADSIDE SIGN EA	RELOCATE ROADSIDE SIGN EA	REMOVE ROADSIDE SIGN EA	SALVAGE ROADSIDE SIGN (METAL POST) EA
1-1	R1-1	30	5	10′	1				
1-2	W1-2L W13-1(50)	36 x 36 30 x 30	4	14′	1				
1-3	SNS						1		
4-1	W1-5R W7-3a(5)	36 x 36 24 x 18	4	12′	1				
4-2	SNS						1		
5-1	W1-4L W13-1(35)	36 x 36 30 x 30	4	14′	1				
5-2	R1-1	30	5	10′	1				
5-3	W1-4L W13-1(50)	36 x 36 30 x 30	4	14′	1				
5-4	W1-4R W13-1(35)	36 x 36 30 x 30	4	14′	1				
5-5	SNS						1		
SHEET TOTAL					7	0	3	0	0
SHEET TOTAL FROM THQ-3					0	7	4	5	3
TOTAL					7	7	7	5	3

NOTES:

1. EXACT LOCATION AND POSITION OF ROADSIDE SIGNS TO BE DETERMINED BY THE ENGINEER.
2. POST LENGTHS GIVEN ARE APPROXIMATE.
3. "C" DIM = VERTICAL CLEARANCE EP TO BOTTOM OF SIGN PANEL.
4. ALL SIGN CODES SHOWN ARE FEDERAL SIGN CODES.
5. SNS = STREET NAME SIGN
6. FOR ADDITIONAL ROADSIDE SIGNS, SEE SHEETS THQ-2 AND THQ-3.

SIGN QUANTITIES

SQ-1

REVISED BY | DATE REVISED
CHUCK COOK | KRIS ALBERS
CALCULATED-DESIGNED BY | CHECKED BY
FUNCTIONAL SUPERVISOR: NARAYAN SELWAL
STATE OF CALIFORNIA - DEPARTMENT OF TRANSPORTATION
Caltrans® TRAFFIC

LAST REVISION 03-11-15 | DATE PLOTTED => 15-JUN-2015 | TIME PLOTTED => 15:52

BORDER LAST REVISED 7/2/2010 | USERNAME => s130875 | DGN FILE => 0300000725od001.dgn | RELATIVE BORDER SCALE IS IN INCHES 0 1 2 3 | UNIT 0390 | PROJECT NUMBER & PHASE 03000007251

Dist	COUNTY	ROUTE	POST MILES TOTAL PROJECT	SHEET No.	TOTAL SHEETS
03	Pla	193	4.4/5.5	132	197

Kris M. Albers 4-6-15
REGISTERED CIVIL ENGINEER DATE

4-6-15
PLANS APPROVAL DATE

REGISTERED PROFESSIONAL ENGINEER
KRIS M. ALBERS
No. 49986
Exp. 6-30-15
CIVIL
STATE OF CALIFORNIA

THE STATE OF CALIFORNIA OR ITS OFFICERS OR AGENTS SHALL NOT BE RESPONSIBLE FOR THE ACCURACY OR COMPLETENESS OF SCANNED COPIES OF THIS PLAN SHEET.

ROADSIDE SIGN PANEL QUANTITIES

SIGN CODE	SIGN MESSAGE/DESCRIPTION	PANEL SIZE L x D	PANEL AREA	NUMBER OF PANELS	BACKGROUND		LEGEND		PROTECTIVE OVERLAY	RETROREFLECTIVE SHEETING (TYPE XI)	FURNISH SINGLE SHEET ALUMINUM SIGN FOR RETROREFLECTIVE SHEETING (TYPE XI)
					SHEETING COLOR	RETROREFLECTIVE ASTM TYPE	SHEETING COLOR	RETROREFLECTIVE ASTM TYPE	PREMIUM		UNFRAMED
		INCHES	SQFT							SQFT	0.063" SQFT
R1-1	STOP	30	5.18	2	RED	XI	WHITE	XI	X	10.36	10.36
W1-2L	CURVE SYMBOL	36 x 36	9.00	1	FY	XI	BLACK		X	9.00	9.00
W1-4L	REVERSE CURVE SYMBOL	36 x 36	9.00	2	FY	XI	BLACK		X	18.00	18.00
W1-4R	REVERSE CURVE SYMBOL	36 x 36	9.00	1	FY	XI	BLACK		X	9.00	9.00
W1-5R	WINDING ROAD	36 x 36	9.00	1	FY	XI	BLACK		X	9.00	9.00
W7-3a(5)	NEXT 5 MILES	24 x 18	3.00	1	FY	XI	BLACK		X	3.00	3.00
W13-1(35)	35 MPH	30 x 30	6.25	2	FY	XI	BLACK		X	12.50	12.50
W13-1(50)	50 MPH	30 x 30	6.25	2	FY	XI	BLACK		X	12.50	12.50
TOTAL										83.36	83.36

NOTES:

1. ALL SIGN CODES SHOWN ARE FEDERAL SIGN CODES UNLESS OTHERWISE DESIGNATED AS A CALIFORNIA SIGN CODE.
2. <CA> = CALIFORNIA SIGN CODE.
3. FY = FLOURESCENT YELLOW.

L = LENGTH OF PANEL
D = DEPTH OF PANEL

SIGN QUANTITIES

SQ-2

CALCULATED-DESIGNED BY: CHUCK COOK
CHECKED BY: KRIS ALBERS
REVISED BY
DATE REVISED
FUNCTIONAL SUPERVISOR: NARAYAN SELWAL
STATE OF CALIFORNIA - DEPARTMENT OF TRANSPORTATION
Caltrans®
TRAFFIC

LAST REVISION 03-11-15
DATE PLOTTED => 15-JUN-2015
TIME PLOTTED => 15:52

BORDER LAST REVISED 7/2/2010
USERNAME => s130875
DGN FILE => 0300000725od002.dgn
RELATIVE BORDER SCALE IS IN INCHES 0 1 2 3
UNIT 0390
PROJECT NUMBER & PHASE 03000007251

Dist	COUNTY	ROUTE	POST MILES TOTAL PROJECT	SHEET No.	TOTAL SHEETS
03	Pla	193	4.4/5.5	133	197

Thomas A Langley 4-6-15
REGISTERED CIVIL ENGINEER DATE

TOM LANGLEY No. 64882 Exp. 6-30-15 CIVIL — REGISTERED PROFESSIONAL ENGINEER — STATE OF CALIFORNIA

4-6-15
PLANS APPROVAL DATE

THE STATE OF CALIFORNIA OR ITS OFFICERS OR AGENTS SHALL NOT BE RESPONSIBLE FOR THE ACCURACY OR COMPLETENESS OF SCANNED COPIES OF THIS PLAN SHEET.

ROADWAY QUANTITIES

LOCATION	COLD PLANE AC PAVEMENT	ROADWAY EXCAVATION	(N) EMBANKMENT	CLASS 2 AB	HMA (TYPE A)	SHOULDER BACKING	TACK COAT	RUBBERIZED HOT MIX ASPHALT-OPEN GRADED (OPEN GRADED FRICTION COURSE)	OBLITERATE SURFACING	REMOVE BASE AND SURFACING
	SQYD	CY	CY	CY	TON	TON	TON	TON	SQYD	CY
STAGE 1										
Sta "SC4" 321+48.89 TO Sta "SC4" 323+31.17	376				51					
Sta "SC4" 322+00.00 TO Sta "SC4" 323+75.00		28	1451	42	31					
Sta "SC4" 323+75.00 TO Sta "SC4" 324+00.00				16	25					
Sta "A1" 124+03.30 TO Sta "A1" 124+75.00 (Temp)				4	6					
Sta "A1" 124+03.30 TO Sta "A1" 132+50.00		15422	8201	950	1501					
Sta "SC5" 432+50.00 TO Sta "SC5" 433+25.00		210	359	47	74					
Sta "SC5" 433+25.00 TO Sta "SC5" 434+75.00				43	90					
Sta "SC5" 434+75.00 TO Sta "SC5" 435+25.00	138				19					
OAK VIEW ROAD (Sta "A1" 129+63.99) "OV1"		918	49	177	127					
DRIVEWAY (Sta "A1" 131+92.07) "PS1"		159	172	87	88	14				128
STAGE 2										
Sta "A1" 97+50.00 TO Sta "A1" 124+03.30		20129	8035	2189	3475					
CLARK TUNNEL ROAD (Sta "A1" 99+18.14) "CT1"		633		41	64	8				
DRIVEWAY (Sta "A1" 107+95.50) "LFR1"		3	228	32	32	8				
DRIVEWAYS (Sta "A1" 111+31.68) (COMPLETE IN STAGE 3b)		301	67	67	67	14	12.5			
Sta "SC2" 297+50.00 TO Sta "SC2" 298+75.00 (Temp)				6	4					
Sta "SC2" 298+75.00 TO Sta "SC2" 299+50.00 (Temp)		300	300	139	28					
Sta "SC2" 299+50.00 TO Sta "SC2" 300+51.26 (Temp)				33	24					
Sta "A1" 135+75.00 TO Sta "A1" 140+50.00		2777	1934	375	593					
Sta "A1" 123+38.00 TO Sta "A1" 134+00.00										1367
STAGE 3a										
Sta "A1" 102+75.00 TO Sta "A1" 109+50.00		161	352	161	255					
Sta "A1" 116+00.00 TO Sta "A1" 120+00.00		241	374	125	197					
Sta "A1" 122+25.00 TO Sta "A1" 124+03.00		148		81	128					
Sta "SC5" 323+75.00 TO Sta "A1" 324+00.00					8					
STAGE 3b									4638	
Sta "A1" 102+75.00 TO Sta "A1" 109+75.00		906	680	206	325					
Sta "A1" 116+00.00 TO Sta "A1" 120+00.00		92	720	84	132					
DRIVEWAY (Sta "A1" 116+00.00)		27	39	29	29	5				
STAGE 3c										
Sta "A1" 93+20.00 TO Sta "A1" 94+00.00	222				30	20				
Sta "A1" 94+00.00 TO Sta "A1" 99+50.00		2566	471	380	600					431
DRIVEWAY (Sta "A1" 100+00.50) "BRN1"		94	13	66	66	5				
SHEET TOTAL	736	45115	23445	5380	8069	74	12.5	0	4638	1926

(N) NOT A SEPARATE PAY ITEM. FOR INFORMATION ONLY.

SUMMARY OF QUANTITIES

Q-1

REVISED BY | DATE REVISED
THIEN THACH | MELANIE COLLINS
CALCULATED-DESIGNED BY | CHECKED BY
FUNCTIONAL SUPERVISOR: MASTRI ALVANDI
STATE OF CALIFORNIA - DEPARTMENT OF TRANSPORTATION
DESIGN

LAST REVISION 04-06-15 | DATE PLOTTED => 15-JUN-2015 | TIME PLOTTED => 15:52

BORDER LAST REVISED 7/2/2010 | USERNAME => s130875 | DGN FILE => 0300000725pa001.dgn | RELATIVE BORDER SCALE IS IN INCHES 0 1 2 3 | UNIT 0337 | PROJECT NUMBER & PHASE 03000007251

Dist	COUNTY	ROUTE	POST MILES TOTAL PROJECT	SHEET No.	TOTAL SHEETS
03	Pla	193	4.4/5.5	134	197

Thomas N Langley 4-6-15
REGISTERED CIVIL ENGINEER DATE

4-6-15
PLANS APPROVAL DATE

REGISTERED PROFESSIONAL ENGINEER
TOM LANGLEY
No. 64882
Exp. 6-30-15
CIVIL
STATE OF CALIFORNIA

THE STATE OF CALIFORNIA OR ITS OFFICERS OR AGENTS SHALL NOT BE RESPONSIBLE FOR THE ACCURACY OR COMPLETENESS OF SCANNED COPIES OF THIS PLAN SHEET.

ROADWAY QUANTITIES

LOCATION	COLD PLANE AC PAVEMENT	ROADWAY EXCAVATION	(N) EMBANKMENT	CLASS 2 AB	HMA (TYPE A)	SHOULDER BACKING	TACK COAT	RUBBERIZED HOT MIX ASPHALT-OPEN GRADED (OPEN GRADED FRICTION COURSE)	OBLITERATE SURFACING	REMOVE BASE AND SURFACING
	SQYD	CY	CY	CY	TON	TON	TON	TON	SQYD	CY
STAGE 4a										
Sta "A1" 140+00.00 TO Sta "A1" 146+02.00		2423	150	598	945					
Sta "A1" 146+02.00 TO Sta "A1" 146+10.00						1				
Sta "SC6" 639+25.00 TO Sta "SC6" 639+50.00	67	196			5					
Sta "SC6" 639+50.00 TO Sta "SC6" 641+12.00				54	40					
MANDARIN HILL ROAD (Sta "A1" 143+42.50)		728	2	151	107					
DRIVEWAY (Sta "A1" 143+64.78) "DVS1"		87	1	46	46	8				
STAGE 4b										
Sta "A1" 132+50.00 TO Sta "A1" 137+50.00		2100	570							
Sta "A1" 132+50.00 TO Sta "A1" 133+25.00					34					
Sta "A1" 133+25.00 TO Sta "A1" 137+50.00				312	492					
STAGE 4c									1729	
Sta "A1" 93+20.00 TO Sta "A1" 146+10.00								1280		
Sta "A1" 133+60.83 TO Sta "A1" 137+30.58			930	78	124					
Sta "A1" 139+00.00 TO Sta "A1" 141+00.00										
DRIVEWAY (STA 'A1' 137+97.88) "LBD1"		28	727	47	48	7				
SAFETY EDGE				211	153					
HMA DIKE					42					
TOPSOIL		4138								
FROM SHEET Q-1	736	45115	23445	5380	8069	74	12.5	0	4638	1926
TOTAL	803	54815	25825	6877	10105	90	12.5	1280	6367	1926

(N) NOT A SEPARATE PAY ITEM. FOR INFORMATION ONLY.

CALCULATED-DESIGNED BY: THIEN THACH
CHECKED BY: MELANIE COLLINS
REVISED BY / DATE REVISED
FUNCTIONAL SUPERVISOR: MASTRI ALVANDI

STATE OF CALIFORNIA - DEPARTMENT OF TRANSPORTATION
DESIGN

SUMMARY OF QUANTITIES

Q-2

LAST REVISION DATE PLOTTED => 15-JUN-2015
04-06-15 TIME PLOTTED => 15:52

Dist	COUNTY	ROUTE	POST MILES TOTAL PROJECT	SHEET No.	TOTAL SHEETS
03	Pla	193	4.4/5.5	135	197

Thomas A Langley 4-6-15
REGISTERED CIVIL ENGINEER DATE

4-6-15
PLANS APPROVAL DATE

REGISTERED PROFESSIONAL ENGINEER
TOM LANGLEY
No. 64882
Exp. 6-30-15
CIVIL
STATE OF CALIFORNIA

THE STATE OF CALIFORNIA OR ITS OFFICERS OR AGENTS SHALL NOT BE RESPONSIBLE FOR THE ACCURACY OR COMPLETENESS OF SCANNED COPIES OF THIS PLAN SHEET.

TEMPORARY WATER POLLUTION CONTROL QUANTITIES

LOCATION	TEMPORARY FIBER ROLL	MOVE IN / MOVE OUT (TEMPORARY EROSION CONTROL)	TEMPORARY HYDRAULIC MULCH (BONDED FIBER MATRIX)	TEMPORARY COVER	TEMPORARY DRAINAGE INLET PROTECTION	TEMPORARY EROSION CONTROL BLANKET	TEMPORARY SILT FENCE	TEMPORARY CONSTRUCTION ENTRANCE	TEMPORARY CHECK DAM	TEMPORARY GRAVEL BAG BERM	TEMPORARY SOIL BINDER	RAIN EVENT ACTION PLAN	STORM WATER SAMPLING AND ANALYSIS DAY	STORM WATER ANNUAL REPORT
	LF	EA	SQYD	SQYD	EA	SQYD	LF	EA	LF	LF	SQYD	EA	EA	EA
Sta "A1" 93+20 TO Sta "A1" 146+10	20440	12	8131	8131	2	171	10348	12	4684	128	4066	48	83	4
TOTAL	20440	12	8131	8131	2	171	10348	12	4684	128	4066	48	83	4

WATER QUALITY MONITORING

LOCATION	WATER QUALITY SAMPLING AND ANALYSIS DAY	WATER QUALITY MONITORING REPORT
	EA	EA
Sta "A1" 93+20 TO Sta "A1" 146+10	30	30
TOTAL	30	30

TREATED WOOD WASTE

LOCATION	LB
Sta "A1" 93+20 TO Sta "A1" 146+10	2400
TOTAL	2400

SURFACE STABILIZATION

STATION "A1" LINE	DEPTH	(N) SUBGRADE ENHANCEMENT GEOTEXTILE, CLASS B2	(N) CLASS 3 3/4" AGGREGATE BASE (CY)	(N) ROADWAY EXCAVATION	SURFACE STABILIZATION
	LF	SQYD	CY	CY	CY
103+00.0 TO 103+47.0 (loc 1)	1	450	72	72	72
103+58.9 TO 104+01.3 (Loc 1)	1	211	33	33	33
104+02.3 TO 104+50.0 (Loc 1)	1	249	39	39	39
123+44.4 TO 125+36.7 (Loc 2)	2	1486	464	464	464
125+02.6 TO 125+85.1 (Loc 2)	2	402	118	118	118
130+25.0 TO 130+95.7 (Loc 3)	2	855	267	267	267
130+89.3 TO 131+50.0 (Loc 3)	2	717	223	223	223
TOTAL		4370	1216	1216	1216

(N) NOT A SEPARATE PAY ITEM. FOR INFORMATION ONLY.

MIDWEST GUARDRAIL SYSTEM

SHEET NUMBER	LOCATION	SIDE	MIDWEST GUARDRAIL SYSTEM	ALTERNATIVE IN-LINE TERMINAL SYSTEM	END ANCHOR ASSEMBLY (TYPE SFT)	END CAP (3/4 WRAP AND SECTION)	VEGETATION CONTROL (MINOR CONCRETE)	COMMENTS
			LF	EA	EA	EA	SQYD	
L-4	Sta "A1" 136+89.75 TO Sta "A1" 137+92.22	RT	100	1	1	1	42.8	16A LAYOUT
L-4	Sta "A1" 136+66.52 To Sta "LBD1" 12+14.67	LT	150		2	2	58.3	16A LAYOUT (MODIFIED)
	TOTAL		250	1	3	3	101.1	

SUMMARY OF QUANTITIES

Q-3

STATE OF CALIFORNIA - DEPARTMENT OF TRANSPORTATION
DESIGN
FUNCTIONAL SUPERVISOR: MASTRI ALVANDI
CALCULATED-DESIGNED BY: THIEN THACH
CHECKED BY: MELANIE COLLINS
REVISED BY
DATE REVISED

LAST REVISION DATE PLOTTED => 15-JUN-2015
TIME PLOTTED => 15:52
04-06-15

BORDER LAST REVISED 7/2/2010
USERNAME => s130875
DGN FILE => 0300000725pa003.dgn
RELATIVE BORDER SCALE IS IN INCHES 0 1 2 3
UNIT 0337
PROJECT NUMBER & PHASE 03000007251

Dist	COUNTY	ROUTE	POST MILES TOTAL PROJECT	SHEET No.	TOTAL SHEETS
03	Pla	193	4.4/5.5	136	197

Thomas A Langley 4-6-15
REGISTERED CIVIL ENGINEER DATE

4-6-15
PLANS APPROVAL DATE

THE STATE OF CALIFORNIA OR ITS OFFICERS OR AGENTS SHALL NOT BE RESPONSIBLE FOR THE ACCURACY OR COMPLETENESS OF SCANNED COPIES OF THIS PLAN SHEET.

REGISTERED PROFESSIONAL ENGINEER
TOM LANGLEY
No. 64882
Exp. 6-30-15
CIVIL
STATE OF CALIFORNIA

TEMPORARY RAILING (TYPE K)

STAGE	SHEET No.	LOCATION	LENGTH LF
1	SC-3,4	Sta "A1" 100+40.8 TO Sta "A1" 107+79.6	740
1	SC-4	Sta "A1" 108+60.7 TO Sta "A1" 110+16.4	160
1	SC-5	Sta "A1" 115+96.9 TO Sta "A1" 120+06.7	420
1	SC-6	Sta "A1" 135+71.3 TO Sta "A1" 138+19.9	260
3a	SC-12	Sta "A1" 101+83.9 TO Sta "A1" 109+59.2	780
3a	SC-12	Sta "A1" 102+81.5 TO Sta "A1" 110+11.4	720
3a	SC-13	Sta "A1" 116+48.0 TO Sta "A1" 120+18.9	380
3a	SC-13	Sta "A1" 115+98.5 TO Sta "A1" 120+20.0	400
3b	SC-14	Sta "A1" 101+97.7 TO Sta "A1" 110+99.0	900
3b	SC-15	Sta "A1" 115+80.2 TO Sta "A1" 120+00.0	420
4b	SC-18	Sta "A1" 133+09.9 TO Sta "A1" 137+30.6	420
4b	SC-18	Sta "A1" 136+69.3 TO Sta "A1" 138+19.9	160
4c	SC-19	Sta "A1" 133+15.8 TO Sta "A1" 137+30.6	420
		TOTAL	6180

ALTERNATIVE TEMPORARY CRASH CUSHION

STAGE	SHEET No.	LOCATION	EA
1	SC-4	Sta "A1" 108+60.7	1
1	SC-6	Sta "A1" 135+71.3	1
3a	SC-12	Sta "A1" 101+83.9	1
3a	SC-13	Sta "A1" 115+98.5	1
3b	SC-15	Sta "A1" 120+00.0	1
4b	SC-18	Sta "A1" 133+09.9	1
4c	SC-19	Sta "A1" 137+30.6	1
		TOTAL	7

RELOCATE MAILBOX

STATION	SIDE	RELOCATE MAILBOX EA
Sta "A1" 115+73.0	Lt	1
Sta "A1" 132+90.5	Rt	2
Sta "A1" 143+72.3	Rt	5
TOTAL		8

UNDERDRAIN (INFILTRATION TRENCH)

STATION	SIDE	(N) FILTER FABRIC CLASS D SQYD	(N) CLASS 6 PERMEABLE MATERIAL CY	(N) SAND BEDDING CY	MODIFIED INFILTRATION TRENCH LF
Sta "A1" 96+75 TO Sta "A1" 98+50	Rt	158	39	13	176
Sta "A1" 97+25 TO Sta "A1" 98+50	Lt	113	28	9	126
Sta "A1" 100+10 TO Sta "A1" 101+40	Rt	117	29	10	150
Sta "A1" 105+75 TO Sta "A1" 107+00	Lt	108	26	9	120
Sta "A1" 108+50 TO Sta "A1" 110+50	Lt	172	43	14	192
Sta "A1" 112+00 TO Sta "A1" 114+00	Lt	172	43	14	192
Sta "A1" 112+00 TO Sta "A1" 117+75	Rt	520	130	43	583
TOTAL		1360	338	112	1539

(N) NOT A SEPARATE PAY ITEM. FOR INFORMATION ONLY.

REMOVE CONCRETE

LOCATION	REMOVE CONCRETE CY	COMMENTS
Sta "A1" 130+05.0 197.7' Rt	1.2	MAILBOX BASE
Sta "A1" 143+68.2 29.9' Rt	1.2	MAILBOX BASE
TOTAL	2.4	

MINOR CONCRETE (MINOR STRUCTURE)

LOCATION	MINOR CONCRETE (MINOR STRUCTURE) CY	COMMENTS
Sta "OV1" 20+35.66 34.5 Rt	0.6	MAILBOX BASE
Sta "A1" 144+61.20 34.5 Rt	0.6	MAILBOX BASE
Misc DRAINAGE QUANTITIES	29.6	
TOTAL	30.8	

SUMMARY OF QUANTITIES

Q-4

STATE OF CALIFORNIA - DEPARTMENT OF TRANSPORTATION
DESIGN
FUNCTIONAL SUPERVISOR: MASTRI ALVANDI
CALCULATED-DESIGNED BY: THIEN THACH
CHECKED BY: MELANIE COLLINS
REVISED BY
DATE REVISED

LAST REVISION DATE PLOTTED => 15-JUN-2015
04-06-15 TIME PLOTTED => 15:52

BORDER LAST REVISED 7/2/2010
USERNAME => s130875
DGN FILE => 0300000725pa004.dgn
RELATIVE BORDER SCALE IS IN INCHES 0 1 2 3
UNIT 0337
PROJECT NUMBER & PHASE 03000007251

Dist	COUNTY	ROUTE	POST MILES TOTAL PROJECT	SHEET No.	TOTAL SHEETS
03	Pla	193	4.4/5.5	137	197

Thomas A Langley 4-6-15
REGISTERED CIVIL ENGINEER DATE

4-6-15
PLANS APPROVAL DATE

REGISTERED PROFESSIONAL ENGINEER
TOM LANGLEY
No. 64882
Exp. 6-30-15
CIVIL
STATE OF CALIFORNIA

THE STATE OF CALIFORNIA OR ITS OFFICERS OR AGENTS SHALL NOT BE RESPONSIBLE FOR THE ACCURACY OR COMPLETENESS OF SCANNED COPIES OF THIS PLAN SHEET.

FENCE

LOCATION	SIDE	REMOVE FENCE	FENCE (TYPE BW, 5 STRAND, METAL POST)	TEMPORARY FENCE (TYPE BW, 5 STRAND, METAL POST)	COMMENTS
		LF	LF	LF	
"A1" 99+27.9 TO "A1" 102+79.9	R†	341	341		REMOVE FENCE TO ACCESS TCE, REPLACE AFTER CONSTRUCTION
"A1" 99+48.4 TO "A1" 104+20.7	R†	1225			
"CT1" 41+96.4 TO "A1" 102+79.9	R†	416		416	"STOCK TIGHT" TCE, REMOVE AFTER CONSTRUCTION
"A1" 131+62.2 TO "A1" 133+18.9	L†		415		"STOCK TIGHT" TCE
"A1" 124+34.0 TO "A1" 132+53.3	L†	1977			
"A1" 132+62.0 TO "A1" 134+79.3	L†	247			
"A1" 141+07.5 TO "A1" 142+75.9	R†	172	172		REMOVE FENCE TO ACCESS TCE, REPLACE AFTER CONSTRUCTION
"A1" 141+07.5 TO "MH1" 31+22.1	R†	280		280	INSTALL FENCE FOR TCE (2 SIDES), REMOVE AFTER CONSTRUCTION
TOTAL		4658	928	696	

TEMPORARY FENCE (TYPE ESA)

LOCATION	SIDE	TEMPORARY FENCE (TYPE ESA)
		LF
Sta "A1" 92+00.0 TO Sta "A1" 94+50.0	R†	270
Sta "CT1" 39+36.5 TO Sta "CT1" 41+96.4	R†	160
Sta "A1" 102+94.2 TO Sta "A1" 106+75.8	R†	410
Sta "A1" 104+00.0 TO Sta "A1" 108+61.3	L†	448
Sta "A1" 117+45.1 TO Sta "A1" 119+44.7	R†	194
Sta "A1" 118+11.7 TO Sta "A1" 124+34.0	L†	700
Sta "A1" 129+98.1 TO Sta "A1" 131+67.0	R†	385
Sta "A1" 136+46.5 TO Sta "A1" 141+07.5	R†	446
Sta "A1" 139+96.8 TO Sta "A1" 142+95.3	L†	298
TOTAL		3311

SAFETY EDGE

STATION "A1" LINE	SIDE	(N) LENGTH	CLASS 2 AB	HMA (TYPE A)
		LF	CY	TON
94+00.00 TO 99+57.00	L†	557.0	14.4	10.5
100+75.00 TO 110+67.68	L†	992.7	25.7	18.6
111+96.08 TO 115+41.00	L†	344.9	8.9	6.5
116+59.00 TO 131+30.48	L†	1471.5	38.1	27.6
132+59.13 TO 136+63.52	L†	404.4	10.5	7.6
138+58.44 TO 143+04.26	L†	445.8	11.6	8.4
144+15.88 TO 146+02.58	L†	186.7	4.8	3.5
94+00.00 TO 98+55.02	R†	455.0	11.8	8.5
99+66.68 TO 107+40.93	R†	774.3	20.1	14.5
108+50.02 TO 110+77.31	R†	227.3	5.9	4.3
111+84.85 TO 118+00.00	R†	615.2	15.9	11.5
124+00.00 TO 128+94.70	R†	494.7	12.8	9.3
130+28.43 TO 136+36.75	R†	608.3	15.8	11.4
137+95.22 TO 142+72.00	R†	476.8	12.4	8.9
145+05.33 TO 146+02.58	R†	97.3	2.5	1.8
SUBTOTAL			211.3*	152.9*

* FOR TOTAL SEE SHEET Q-2

HMA DIKE

LOCATION	SIDE	REMOVE ASPHALT CONCRETE DIKE	PLACE HMA DIKE (TYPE A)	PLACE HMA DIKE (TYPE D)	HMA (TYPE A)
		LF	LF	LF	TON
Sta "MH1" 29+73.70 TO Sta "MH1" 31+00.00	R†	132			
Sta "MH1" 29+86.00 TO Sta "MH1" 31+00.00	R†		121		3.6
Sta "MH1" 29+85.37 TO Sta "MH1" 31+00.00	L†	122			3.5
Sta "MH1" 29+87.00 TO Sta "MH1" 31+00.00	L†		118		3.5
Sta "A1" 118+00.00 TO Sta "A1" 124+00.00	R†			583	34.4
SUBTOTAL		254	239	583	41.5*
TOTAL		254	239	583	

* FOR TOTAL SEE SHEET Q-2

SUMMARY OF QUANTITIES

Q-5

REVISED BY | DATE REVISED
THIEN THACH | MELANIE COLLINS
CALCULATED-DESIGNED BY | CHECKED BY
FUNCTIONAL SUPERVISOR: MASTRI ALVANDI
STATE OF CALIFORNIA - DEPARTMENT OF TRANSPORTATION
DESIGN

LAST REVISION 04-06-15 | DATE PLOTTED => 15-JUN-2015 | TIME PLOTTED => 15:52

BORDER LAST REVISED 7/2/2010 | USERNAME => s130875 | DGN FILE => 0300000725pa005.dgn | RELATIVE BORDER SCALE IS IN INCHES 0 1 2 3 | UNIT 0337 | PROJECT NUMBER & PHASE 03000007251

Dist	COUNTY	ROUTE	POST MILES TOTAL PROJECT	SHEET No.	TOTAL SHEETS
03	Pla	193	4.4/5.5	138	197

LICENSED LANDSCAPE ARCHITECT

4-6-15
PLANS APPROVAL DATE

LICENSED LANDSCAPE ARCHITECT — JEFFREY L. PIETRZAK No. 4457 — Signature 12-31-15 Renewal Date — 3-12-15 Date — STATE OF CALIFORNIA

THE STATE OF CALIFORNIA OR ITS OFFICERS OR AGENTS SHALL NOT BE RESPONSIBLE FOR THE ACCURACY OR COMPLETENESS OF SCANNED COPIES OF THIS PLAN SHEET.

NOTE:

FOR ACCURATE RIGHT OF WAY DATA, CONTACT
RIGHT OF WAY ENGINEERING AT THE DISTRICT OFFICE.

IRRIGATION NOTES:

1. PLASTIC PIPE (SUPPLY LINE), (MAIN) SHALL BE PVC (PR 315)
2. LOCATE MAINLINE 3 LF FROM RIGHT OF WAY WHERE APPLICABLE CENTER OF PLANTING AREAS WHENEVER POSSIBLE.

IRRIGATION LEGEND

△1 IRRIGATION CONDUIT NUMBER

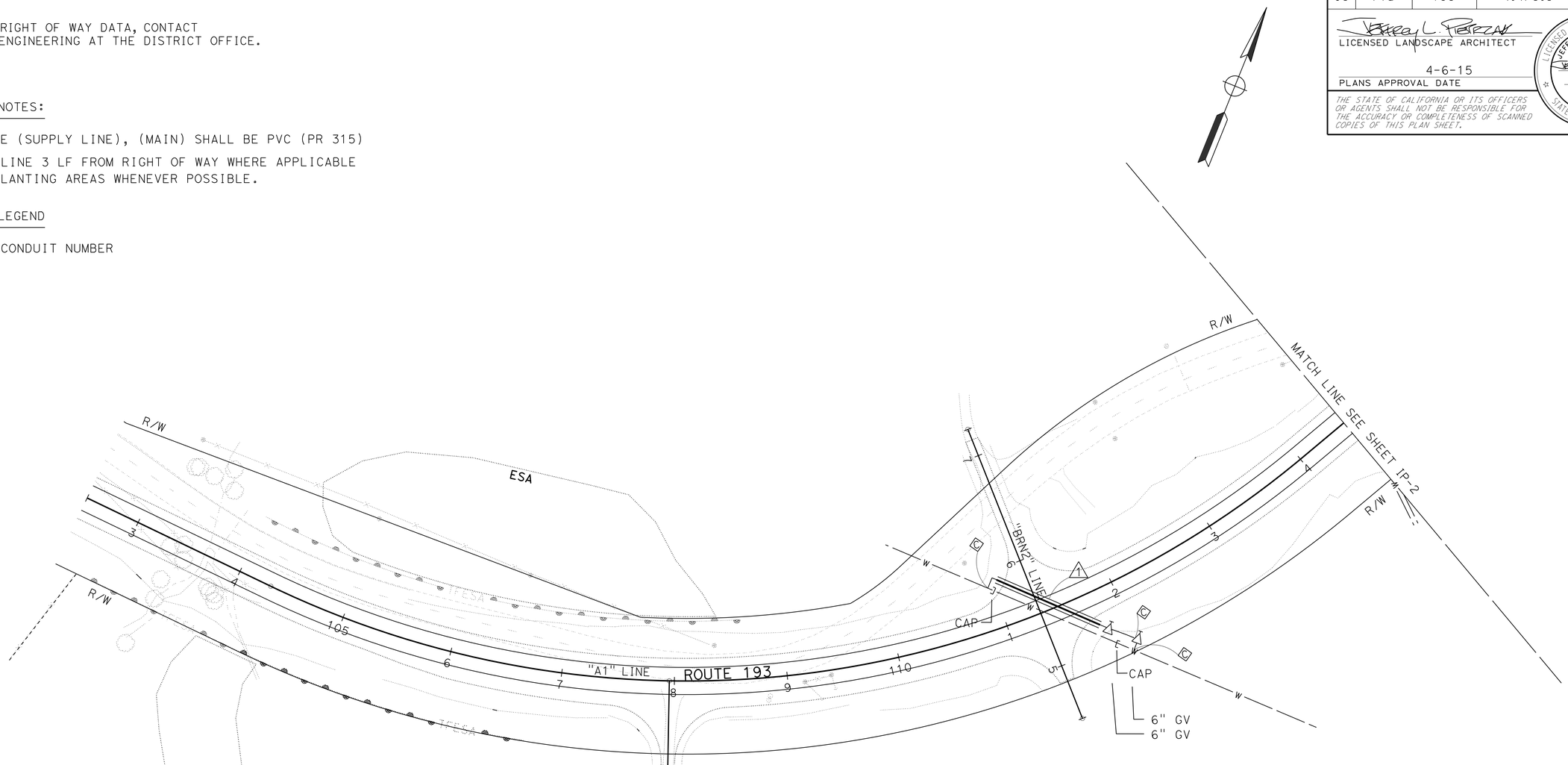

NOTE:

FOR ACCURATE RIGHT OF WAY DATA, CONTACT
RIGHT OF WAY ENGINEERING AT THE DISTRICT OFFICE.

APPROVED FOR IRRIGATION WORK ONLY

IRRIGATION PLAN

SCALE: 1"=50' **IP-1**

STATE OF CALIFORNIA - DEPARTMENT OF TRANSPORTATION
Caltrans
LANDSCAPE ARCHITECTURE

SENIOR LANDSCAPE ARCHITECT: T. CHRIS JOHNSON

CALCULATED-DESIGNED BY: JENNIFER WHITE
CHECKED BY: JEFF PIETRZAK

REVISED BY | DATE REVISED

LAST REVISION | DATE PLOTTED => 15-JUN-2015
03-12-15 | TIME PLOTTED => 15:52

BORDER LAST REVISED 7/2/2010

USERNAME => s130875
DGN FILE => 0300000725sp001.dgn

RELATIVE BORDER SCALE IS IN INCHES 0 1 2 3

UNIT 0381

PROJECT NUMBER & PHASE 03000007251

Dist	COUNTY	ROUTE	POST MILES TOTAL PROJECT	SHEET No.	TOTAL SHEETS
03	Pla	193	4.4/5.5	139	197

LICENSED LANDSCAPE ARCHITECT

4-6-15
PLANS APPROVAL DATE

THE STATE OF CALIFORNIA OR ITS OFFICERS OR AGENTS SHALL NOT BE RESPONSIBLE FOR THE ACCURACY OR COMPLETENESS OF SCANNED COPIES OF THIS PLAN SHEET.

LICENSED LANDSCAPE ARCHITECT
JEFFREY L. PIETRZAK
No. 4457
Signature
12-31-15
Renewal Date
3-12-15
Date
STATE OF CALIFORNIA

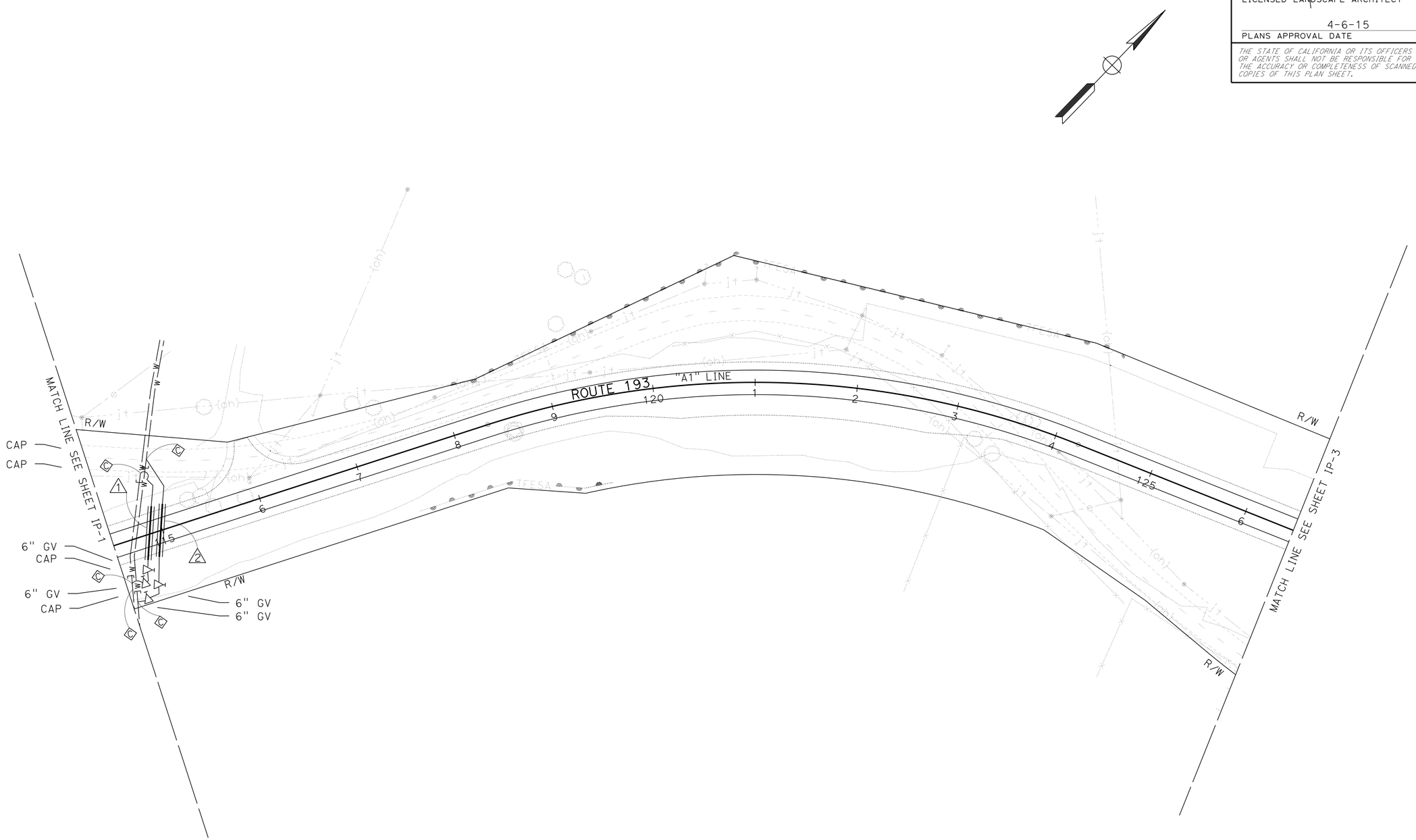

NOTE:

FOR ACCURATE RIGHT OF WAY DATA, CONTACT RIGHT OF WAY ENGINEERING AT THE DISTRICT OFFICE.

APPROVED FOR IRRIGATION WORK ONLY

IRRIGATION PLAN

SCALE 1"=50' **IP-2**

CALCULATED-DESIGNED BY	REVISED BY
CHECKED BY	DATE REVISED
JENNIFER WHITE	
JEFF PIETRZAK	
SENIOR LANDSCAPE ARCHITECT	
T. CHRIS JOHNSON	

STATE OF CALIFORNIA - DEPARTMENT OF TRANSPORTATION
LANDSCAPE ARCHITECTURE
Caltrans

LAST REVISION 03-12-15
DATE PLOTTED => 15-JUN-2015
TIME PLOTTED => 15:52

BORDER LAST REVISED 7/2/2010
USERNAME => s130875
DGN FILE => 0300000725sp002.dgn
RELATIVE BORDER SCALE IS IN INCHES 0 1 2 3
UNIT 0381
PROJECT NUMBER & PHASE 03000007251

Dist	COUNTY	ROUTE	POST MILES TOTAL PROJECT	SHEET No.	TOTAL SHEETS
03	Pla	193	4.4/5.5	140	197

LICENSED LANDSCAPE ARCHITECT

4-6-15
PLANS APPROVAL DATE

THE STATE OF CALIFORNIA OR ITS OFFICERS OR AGENTS SHALL NOT BE RESPONSIBLE FOR THE ACCURACY OR COMPLETENESS OF SCANNED COPIES OF THIS PLAN SHEET.

LICENSED LANDSCAPE ARCHITECT
JEFFREY L. PIETRZAK
No. 4457
Signature
12-31-15
Renewal Date
3-12-15
Date
STATE OF CALIFORNIA

NOTE:

FOR ACCURATE RIGHT OF WAY DATA, CONTACT RIGHT OF WAY ENGINEERING AT THE DISTRICT OFFICE.

APPROVED FOR IRRIGATION WORK ONLY

IRRIGATION PLAN

SCALE: 1"=50' **IP-3**

STATE OF CALIFORNIA - DEPARTMENT OF TRANSPORTATION
LANDSCAPE ARCHITECTURE
Caltrans

SENIOR LANDSCAPE ARCHITECT: T. CHRIS JOHNSON
CALCULATED-DESIGNED BY: JENNIFER WHITE
CHECKED BY: JEFF PIETRZAK
REVISED BY
DATE REVISED

LAST REVISION
DATE PLOTTED => 15-JUN-2015
TIME PLOTTED => 15:52
03-12-15

BORDER LAST REVISED 7/2/2010
USERNAME => s130875
DGN FILE => 0300000725sp003.dgn
RELATIVE BORDER SCALE IS IN INCHES 0 1 2 3
UNIT 0381
PROJECT NUMBER & PHASE 03000007251

Dist	COUNTY	ROUTE	POST MILES TOTAL PROJECT	SHEET No.	TOTAL SHEETS
03	Pla	193	4.4/5.5	141	197

LICENSED LANDSCAPE ARCHITECT

4-6-15
PLANS APPROVAL DATE

LICENSED LANDSCAPE ARCHITECT
JEFFREY L. PIETRZAK
No. 4457
Signature
12-31-15
Renewal Date
3-12-15
Date
STATE OF CALIFORNIA

THE STATE OF CALIFORNIA OR ITS OFFICERS OR AGENTS SHALL NOT BE RESPONSIBLE FOR THE ACCURACY OR COMPLETENESS OF SCANNED COPIES OF THIS PLAN SHEET.

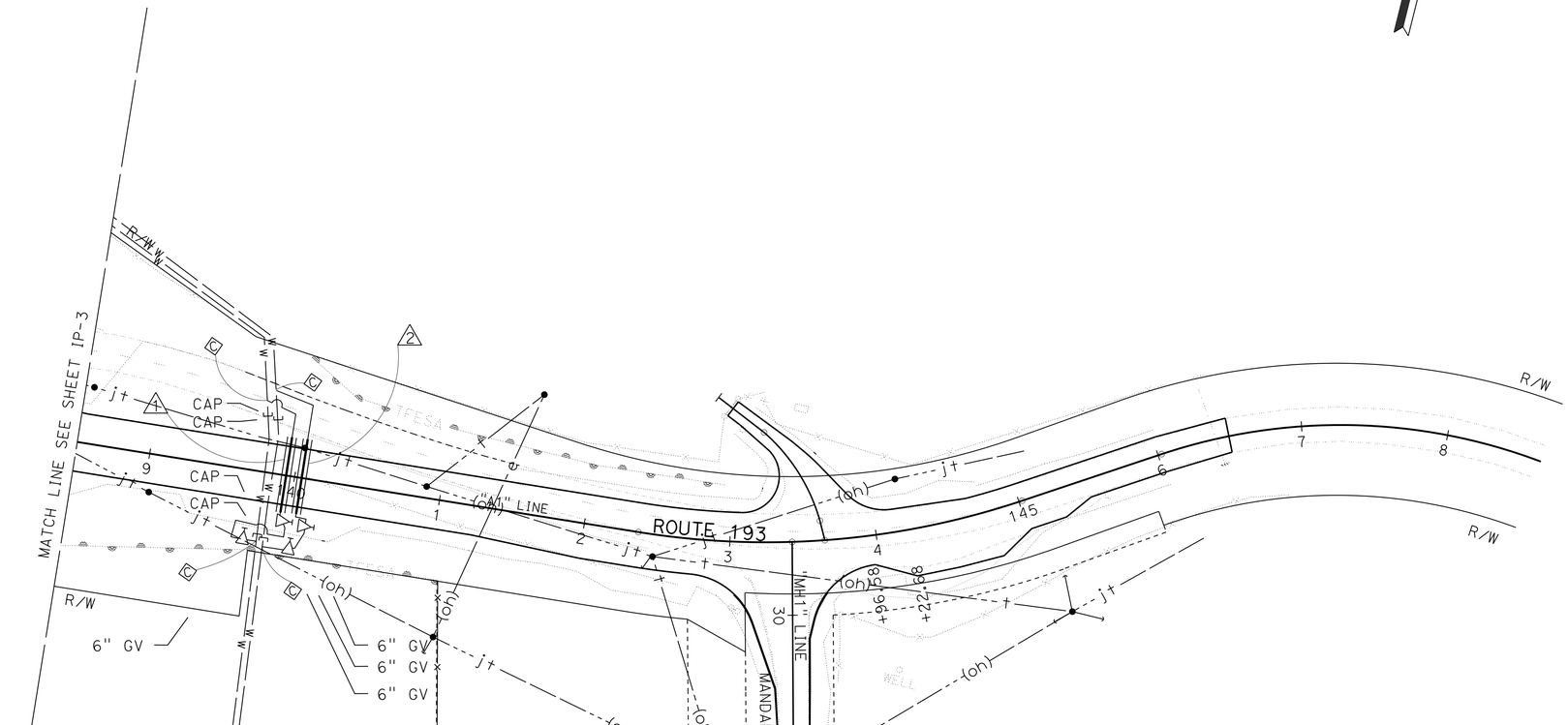

NOTE:

FOR ACCURATE RIGHT OF WAY DATA, CONTACT RIGHT OF WAY ENGINEERING AT THE DISTRICT OFFICE.

APPROVED FOR IRRIGATION WORK ONLY

IRRIGATION PLAN

SCALE: 1"=50'

IP-4

STATE OF CALIFORNIA - DEPARTMENT OF TRANSPORTATION
LANDSCAPE ARCHITECTURE

SENIOR LANDSCAPE ARCHITECT: T. CHRIS JOHNSON

CALCULATED-DESIGNED BY: JENNIFER WHITE
CHECKED BY: JEFF PIETRZAK

REVISED BY	DATE REVISED

LAST REVISION
DATE PLOTTED => 15-JUN-2015
TIME PLOTTED => 15:52
03-12-15

BORDER LAST REVISED 7/2/2010

USERNAME => s130875
DGN FILE => 0300000725sp004.dgn

RELATIVE BORDER SCALE IS IN INCHES 0 1 2 3

UNIT 0381

PROJECT NUMBER & PHASE 03000007251

Dist	COUNTY	ROUTE	POST MILES TOTAL PROJECT	SHEET No.	TOTAL SHEETS
03	Pla	193	4.4/5.5	142	197

LICENSED LANDSCAPE ARCHITECT

4-6-15
PLANS APPROVAL DATE

LICENSED LANDSCAPE ARCHITECT
JEFFREY L. PIETRZAK
No. 4457
Signature
12-31-15
Renewal Date
3-12-15
Date
STATE OF CALIFORNIA

THE STATE OF CALIFORNIA OR ITS OFFICERS OR AGENTS SHALL NOT BE RESPONSIBLE FOR THE ACCURACY OR COMPLETENESS OF SCANNED COPIES OF THIS PLAN SHEET.

IRRIGATION CONDUIT

SHEET No.	IRRIGATION CONDUIT No.	LOCATION		SIDE		EXTENSION CONNECTION TYPE		(N) WATER SUPPLY LINE	(N) SPRINKLER CONTROL CONDUIT	ABS COMPOSITE PIPE			CORRUGATED STEEL PIPE			CORRUGATED HIGH DENSITY POLYETHYLENE PIPE			WELDED STEEL PIPE			(N) SCHEDULE 40 PVC PIPE		
										CONDUIT SIZE (INCH)													
		LINE	STATION	L†	R†	CB	OL	SIZE (INCH)	SIZE (INCH)	8"	10"	12"	8"	10"	12"	8"	10"	12"	6"	8"	10"	6"	8"	10"
										LENGTH (LF)													
IP-1	1	A1	111+50	--	--	--	--	6"	--	--	--	--	--	--	--	--	85	--	--	--	--	--	--	--
IP-2	1	A1	114+90	--	--	--	--	6"	--	--	--	--	--	--	--	--	45	--	--	--	--	--	--	--
IP-2	2	A1	114+90	--	--	--	--	6"	--	--	--	--	--	--	--	--	45	--	--	--	--	--	--	--
IP-3	1	A1	130+31	--	--	--	--	4"	--	--	--	--	--	--	--	45	--	--	--	--	--	--	--	--
IP-4	1	A1	140+00	--	--	--	--	6"	--	--	--	--	--	--	--	--	45	--	--	--	--	--	--	--
IP-4	2	A1	140+00	--	--	--	--	6"	--	--	--	--	--	--	--	--	45	--	--	--	--	--	--	--
									SUBTOTAL															
									TOTAL							45	265							

(N) - NOT A SEPARATE PAY ITEM, FOR INFORMATION ONLY

X - DENOTES REQUIREMENT

ABBREVIATIONS:

CB - COUPLING BAND
OL - OVERLAP

IRRIGATION QUANTITIES

NO SCALE **IQ-1**

JENNIFER WHITE — CALCULATED-DESIGNED BY
JEFF PIETRZAK — CHECKED BY
REVISED BY
DATE REVISED
SENIOR LANDSCAPE ARCHITECT
T. CHRIS JOHNSON
STATE OF CALIFORNIA - DEPARTMENT OF TRANSPORTATION
LANDSCAPE ARCHITECTURE

LAST REVISION => 03-12-15
DATE PLOTTED => 15-JUN-2015
TIME PLOTTED => 15:52

BORDER LAST REVISED 7/2/2010
USERNAME => s130875
DGN FILE => 0300000725sr001.dgn
RELATIVE BORDER SCALE IS IN INCHES 0 1 2 3
UNIT 0381
PROJECT NUMBER & PHASE 03000007251

Dist	COUNTY	ROUTE	POST MILES TOTAL PROJECT	SHEET No.	TOTAL SHEETS
03	Pla	193	4.4/5.5	143	197

LICENSED LANDSCAPE ARCHITECT

4-6-15
PLANS APPROVAL DATE

THE STATE OF CALIFORNIA OR ITS OFFICERS OR AGENTS SHALL NOT BE RESPONSIBLE FOR THE ACCURACY OR COMPLETENESS OF SCANNED COPIES OF THIS PLAN SHEET.

LICENSED LANDSCAPE ARCHITECT
JEFFREY L. PIETRZAK
No. 4457
Signature
12-31-15
Renewal Date
3-12-15
Date
STATE OF CALIFORNIA

IRRIGATION QUANTITIES

	CONTROLLER LETTER	VALVE NUMBER	SHEET NUMBER	IRRIGATION CONTROLLER: 12 STATION	16 STATION	24 STATION	TWO WIRE	CEC: (N) SINGLE	(N) DOUBLE	COPPER PIPE (SUPPLY LINE): 2"	3"	WM: 2"	BPA: 2"	(N) ENCLOSURE	(N) BLANKET	PRV: 2"	RCV: 1"	1½"	2"	DVA: 1"	1½"	2"	FS: 1½"	2"	GV: 4"	6"	3"	BV: 1"	1½"	2"	WSA: 1"	1½"	2"	CCA: 1"	1½"	PLASTIC PIPE (SCHEDULE 40) (SUPPLY LINE): ¾"	1"	1½"	PLASTIC PIPE (CLASS 315) (SUPPLY LINE): 4"	6"	DRIP IRRIGATION TUBING: ¾"	CV: ¾"	1"	1½"	2"	SPRINKLER ASSEMBLY: TREE WELL	RISER GEAR DRIVEN	POP-UP GEAR DRIVEN	RISER	POP-UP
				EA	EA	EA	EA	EA	EA	LF	LF	EA	EA	EA	EA	EA	EA	EA	EA	EA	EA	EA	EA	EA	EA	EA	EA	EA	EA	EA	EA	EA	EA	EA	LF	LF	LF	LF	LF	LF	EA	EA	EA	EA	EA	EA	EA	EA	EA	EA
SUBTOTALS PER VALVE ON LATERAL SUPPLY SIDE OF CONTROL VALVE	A	1																																	XX,XXX	XX,XXX	XX,XXX	XX,XXX	XX,XXX	XX,XXX	XXX	XXX	XXX	XXX	X,XXX	X,XXX	X,XXX	X,XXX	X,XXX
		2																																																	
		3																																																		
		4																																																		
		5																																																		
		6																																																		
		7																																																		
		8																																																		
		9																																																		
		10																																																		
		11																																																		
		12																																																		
		13																																																		
		14																																																		
		15																																																		
		16																																																		
		17																																																		
		18																																																		
		19																																																		
		20																																																		
		21																																																		
		22																																																		
		23																																																		
		24																																																		
		25																																																		
		26																																																		
		27																																																		
		28																																																		
		29																																																		
		30																																																		
		31																																																		
		32																																																		
SUBTOTALS PER SHEET ON MAIN SUPPLY SIDE OF CONTROL VALVE		IP-1		XX	XX	XX	XX	XX	XX	XXX	XXX	XXX	XXX	XX	XX	XXX	XXX	XXX	XXX	XXX	XXX	XXX	XXX	XXX	XXX	2	XXX	XXX	XXX	XXX	XXX	XXX	XXX	XXX	XXX	XX,XXX	XX,XXX	XX,XXX	XX,XXX	145	--	--	--	--	--	--	--	--	--	--
		IP-2		--	--	--	--	--	--	--	--	--	--	--	--	--	--	--	--	--	--	--	--	--	--	4	--	--	--	--	--	--	--	--	--	--	--	--	250	--	--	--	--	--	--	--	--	--	--
		IP-3		--	--	--	--	--	--	--	--	--	--	--	--	--	--	--	--	--	--	--	--	--	1	--	--	--	--	--	--	--	--	--	--	--	--	760	--	--	--	--	--	--	--	--	--	--
		IP-4		--	--	--	--	--	--	--	--	--	--	--	--	--	--	--	--	--	--	--	--	--	--	4	--	--	--	--	--	--	--	--	--	--	--	--	230	--	--	--	--	--	--	--	--	--	--
		IP-5																																																		
		IP-6																																																		
		IP-7																																																		
		IP-8																																																		
		IP-9																																																		
		IP-10																																																		
		IP-11																																																		
		IP-12																																																		
TOTAL				XX	XX	XX	XX	XX	XX	XXX	XXX	XXX	XXX	XX	XX	XXX	XXX	XXX	XXX	XXX			XXX		1	10	XXX	XXX			XXX	XXX	XXX	XXX	XX,XXX	XX,XXX	XX,XXX	XX,XXX	760	625	XX,XXX	XXX				X,XXX	X,XXX	X,XXX	X,XXX	X,XXX

IRRIGATION QUANTITIES

NO SCALE **IQ-2**

STATE OF CALIFORNIA - DEPARTMENT OF TRANSPORTATION
Caltrans
LANDSCAPE ARCHITECTURE

SENIOR LANDSCAPE ARCHITECT: T. CHRIS JOHNSON
CHECKED BY: JEFF PIETRZAK
CALCULATED-DESIGNED BY: JENNIFER WHITE
DATE REVISED
REVISED BY

LAST REVISION
DATE PLOTTED => 15-JUN-2015
TIME PLOTTED => 15:52
03-12-15

BORDER LAST REVISED 7/2/2010
USERNAME => s130875
DGN FILE => 0300000725sr002.dgn
RELATIVE BORDER SCALE IS IN INCHES 0 1 2 3
UNIT 0381
PROJECT NUMBER & PHASE 03000007251

Dist	COUNTY	ROUTE	POST MILES TOTAL PROJECT	SHEET No.	TOTAL SHEETS
03	Pla	193	4.4/5.5	144	197

LICENSED LANDSCAPE ARCHITECT

4-6-15
PLANS APPROVAL DATE

THE STATE OF CALIFORNIA OR ITS OFFICERS OR AGENTS SHALL NOT BE RESPONSIBLE FOR THE ACCURACY OR COMPLETENESS OF SCANNED COPIES OF THIS PLAN SHEET.

LICENSED LANDSCAPE ARCHITECT
JEFFREY L. PIETRZAK
No. 4457
Signature
12-31-15
Renewal Date
3-12-15
Date
STATE OF CALIFORNIA

LEGEND:

TOPSOIL HARVEST (3" DEPTH) — X/X —SHEET —LOCATION

TOPSOIL PLACEMENT (UNIFORM THICKNESS) — X/X —SHEET —LOCATION

TOPSOIL STOCKPILE — X/X —SHEET —LOCATION

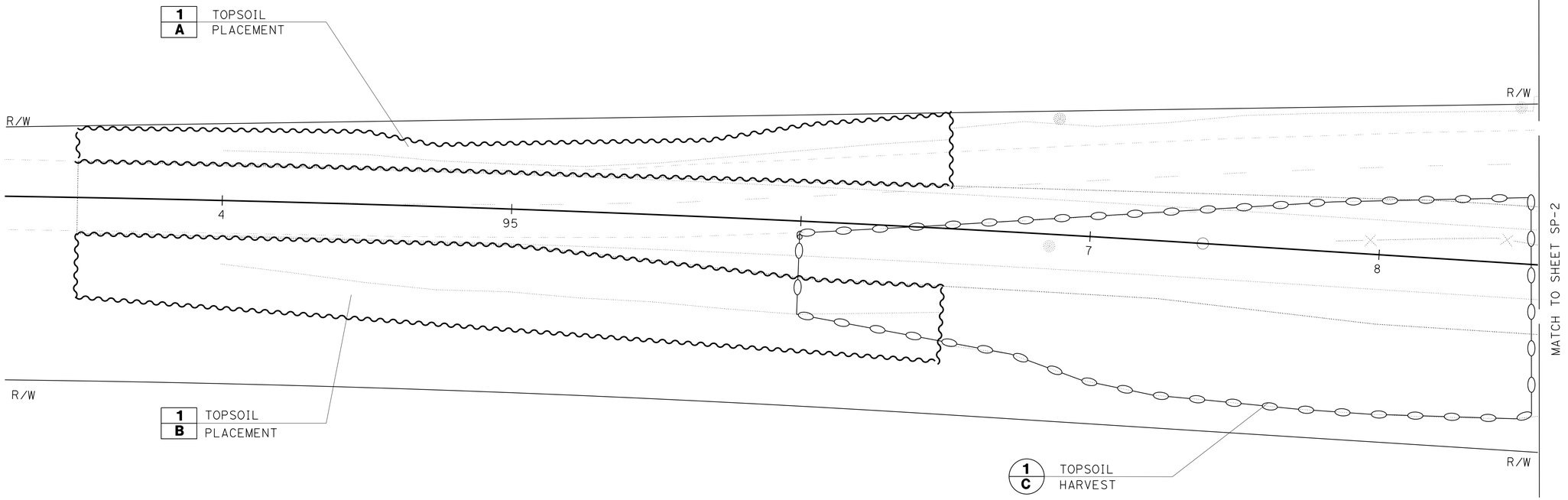

NOTE:

FOR ACCURATE RIGHT OF WAY DATA, CONTACT RIGHT OF WAY ENGINEERING AT THE DISTRICT OFFICE.

LANDSCAPE DETAILS

LD-1

SCALE 1"=20'

STATE OF CALIFORNIA - DEPARTMENT OF TRANSPORTATION
LANDSCAPE ARCHITECTURE
Caltrans

SENIOR LANDSCAPE ARCHITECT: T. CHRIS JOHNSON

CALCULATED-DESIGNED BY: JENNIFER WHITE
CHECKED BY: JEFF PIETRZAK

REVISED BY | DATE REVISED

LAST REVISION 03-12-15
DATE PLOTTED => 15-JUN-2015
TIME PLOTTED => 15:52

BORDER LAST REVISED 7/2/2010

USERNAME => s130875
DGN FILE => 0300000725sy001.dgn

RELATIVE BORDER SCALE IS IN INCHES 0 1 2 3

UNIT 0381

PROJECT NUMBER & PHASE 03000007251

Dist	COUNTY	ROUTE	POST MILES TOTAL PROJECT	SHEET No.	TOTAL SHEETS
03	Pla	193	4.4/5.5	145	197

LICENSED LANDSCAPE ARCHITECT

4-6-15
PLANS APPROVAL DATE

THE STATE OF CALIFORNIA OR ITS OFFICERS OR AGENTS SHALL NOT BE RESPONSIBLE FOR THE ACCURACY OR COMPLETENESS OF SCANNED COPIES OF THIS PLAN SHEET.

LICENSED LANDSCAPE ARCHITECT
JEFFREY L. PIETRZAK
No. 4457
Signature
12-31-15
Renewal Date
3-12-15
Date
STATE OF CALIFORNIA

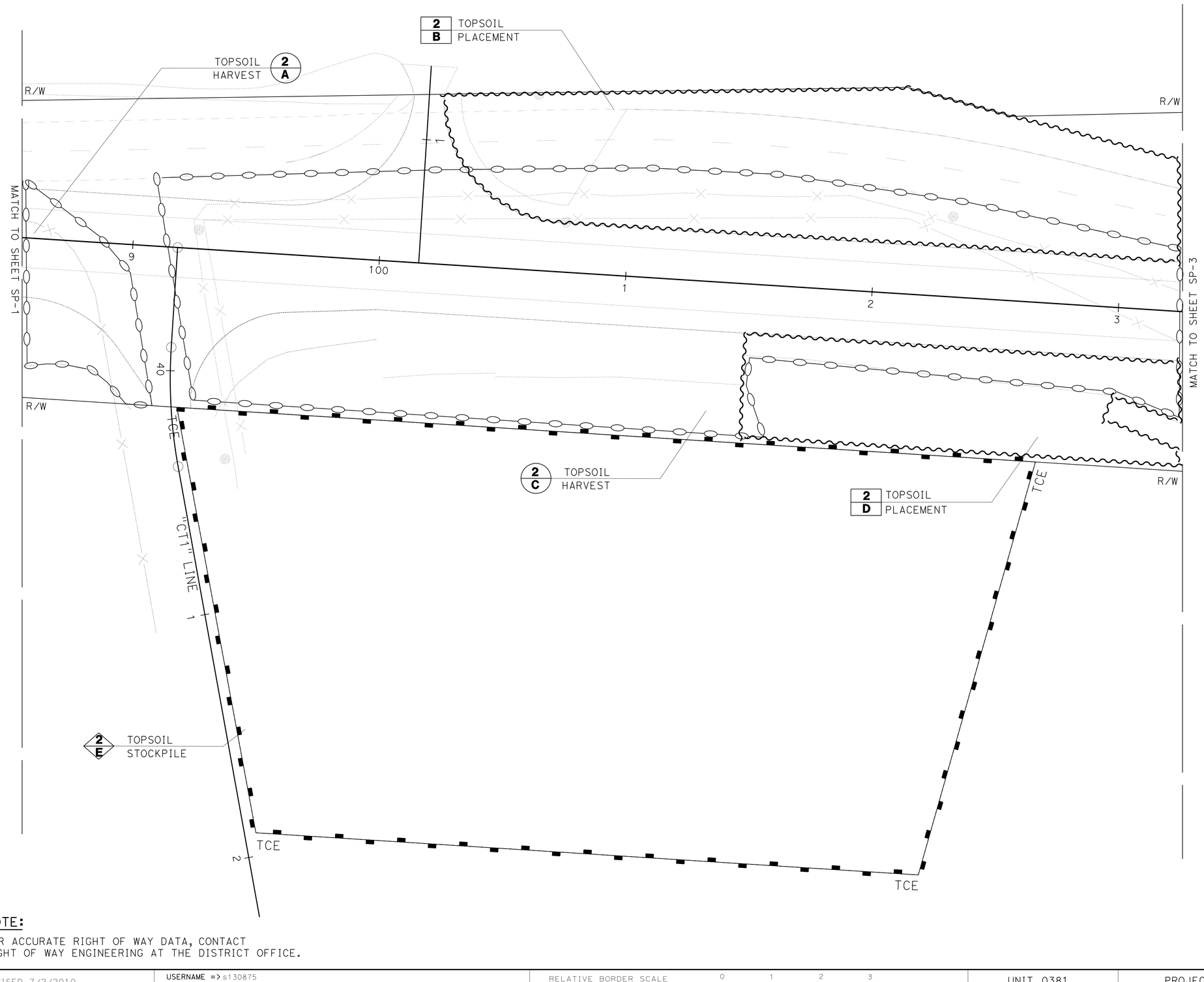

NOTE:
FOR ACCURATE RIGHT OF WAY DATA, CONTACT RIGHT OF WAY ENGINEERING AT THE DISTRICT OFFICE.

LANDSCAPE DETAILS
LD-2

SCALE 1"=20'

STATE OF CALIFORNIA - DEPARTMENT OF TRANSPORTATION
LANDSCAPE ARCHITECTURE
Caltrans

SENIOR LANDSCAPE ARCHITECT
T. CHRIS JOHNSON

CALCULATED-DESIGNED BY
CHECKED BY
JENNIFER WHITE
JEFF PIETRZAK

REVISED BY
DATE REVISED

LAST REVISION
DATE PLOTTED => 15-JUN-2015
TIME PLOTTED => 15:52
03-12-15

BORDER LAST REVISED 7/2/2010

USERNAME => s130875
DGN FILE => 0300000725sy002.dgn

RELATIVE BORDER SCALE IS IN INCHES 0 1 2 3

UNIT 0381

PROJECT NUMBER & PHASE 03000007251

Dist	COUNTY	ROUTE	POST MILES TOTAL PROJECT	SHEET No.	TOTAL SHEETS
03	Pla	193	4.4/5.5	146	197

LICENSED LANDSCAPE ARCHITECT

4-6-15
PLANS APPROVAL DATE

LICENSED LANDSCAPE ARCHITECT
JEFFREY L. PIETRZAK
No. 4457
Signature
12-31-15
Renewal Date
3-12-15
Date
STATE OF CALIFORNIA

THE STATE OF CALIFORNIA OR ITS OFFICERS OR AGENTS SHALL NOT BE RESPONSIBLE FOR THE ACCURACY OR COMPLETENESS OF SCANNED COPIES OF THIS PLAN SHEET.

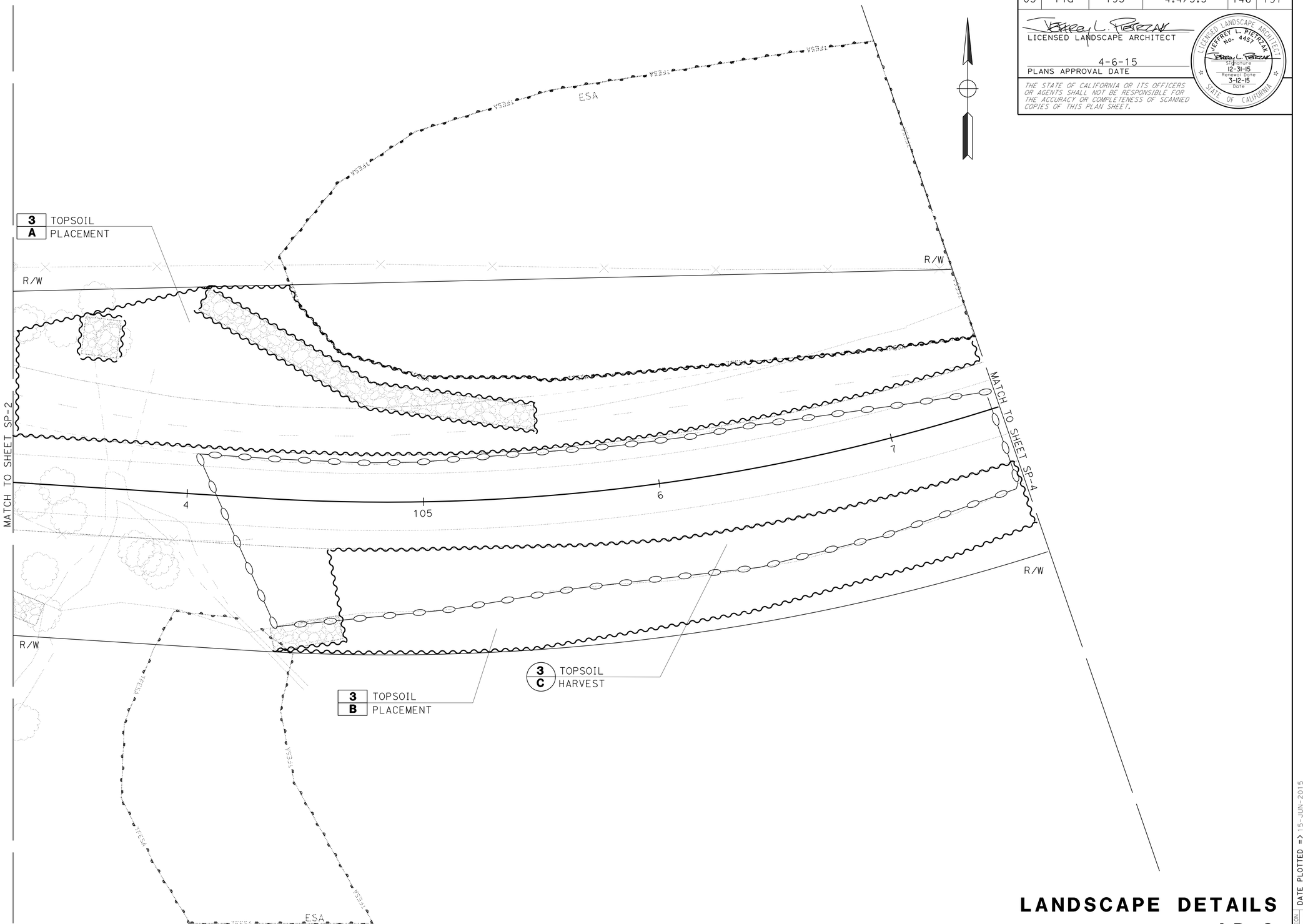

NOTE:

FOR ACCURATE RIGHT OF WAY DATA, CONTACT RIGHT OF WAY ENGINEERING AT THE DISTRICT OFFICE.

LANDSCAPE DETAILS
LD-3

SCALE 1"=20'

REVISED BY | DATE REVISED

JENNIFER WHITE | JEFF PIETRZAK

CALCULATED-DESIGNED BY | CHECKED BY

SENIOR LANDSCAPE ARCHITECT | T. CHRIS JOHNSON

STATE OF CALIFORNIA - DEPARTMENT OF TRANSPORTATION
Caltrans
LANDSCAPE ARCHITECTURE

LAST REVISION | DATE PLOTTED => 15-JUN-2015
03-12-15 | TIME PLOTTED => 15:52

BORDER LAST REVISED 7/2/2010 | USERNAME => s130875 | DGN FILE => 0300000725sy003.dgn | RELATIVE BORDER SCALE IS IN INCHES 0 1 2 3 | UNIT 0381 | PROJECT NUMBER & PHASE 03000007251

Dist	COUNTY	ROUTE	POST MILES TOTAL PROJECT	SHEET No.	TOTAL SHEETS
03	Pla	193	4.4/5.5	147	197

LICENSED LANDSCAPE ARCHITECT

4-6-15
PLANS APPROVAL DATE

LICENSED LANDSCAPE ARCHITECT
JEFFREY L. PIETRZAK
No. 4457
Signature
12-31-15
Renewal Date
3-12-15
Date
STATE OF CALIFORNIA

THE STATE OF CALIFORNIA OR ITS OFFICERS OR AGENTS SHALL NOT BE RESPONSIBLE FOR THE ACCURACY OR COMPLETENESS OF SCANNED COPIES OF THIS PLAN SHEET.

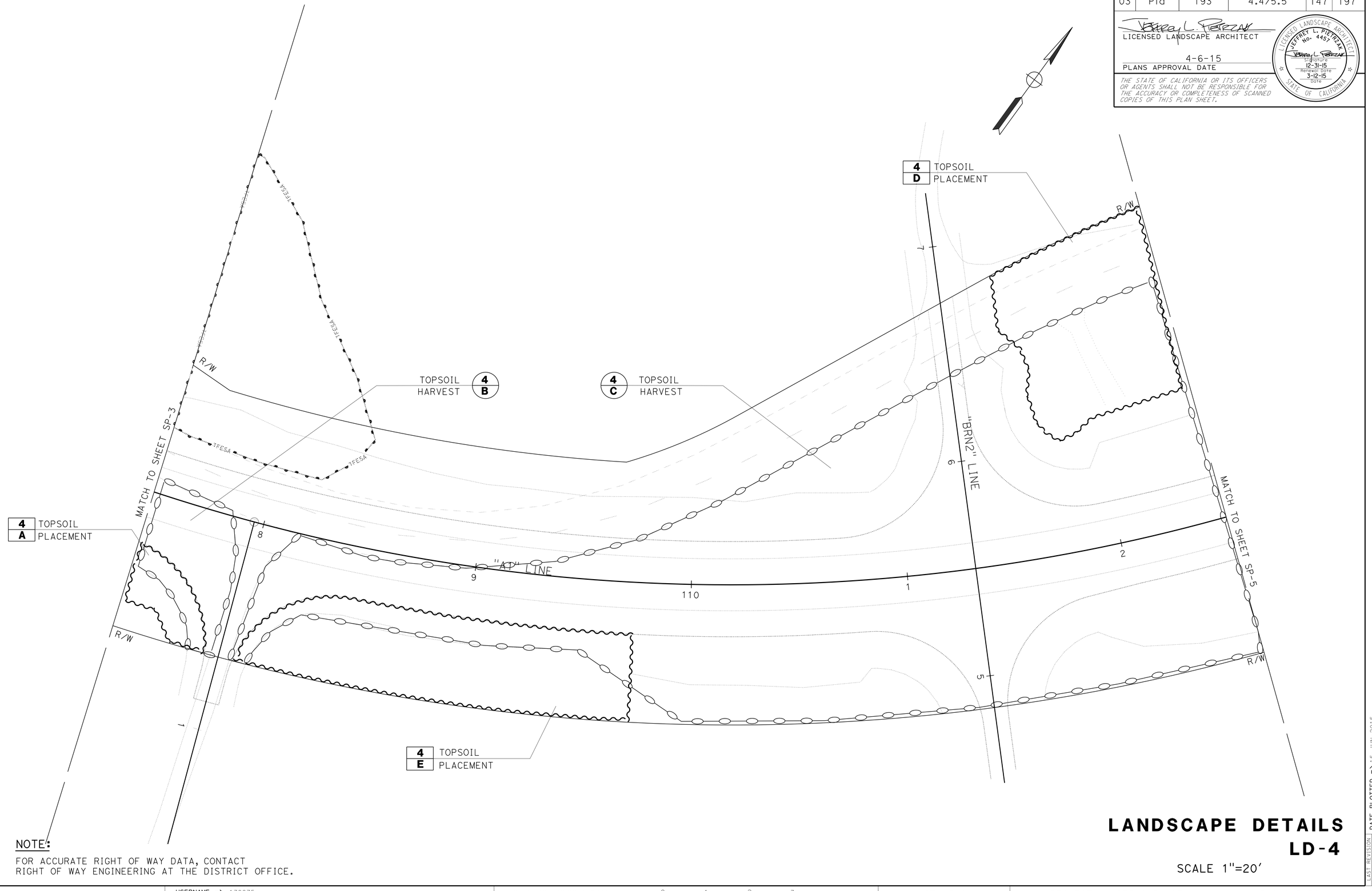

NOTE:
FOR ACCURATE RIGHT OF WAY DATA, CONTACT RIGHT OF WAY ENGINEERING AT THE DISTRICT OFFICE.

LANDSCAPE DETAILS
LD-4

SCALE 1"=20'

STATE OF CALIFORNIA - DEPARTMENT OF TRANSPORTATION
Caltrans
LANDSCAPE ARCHITECTURE

SENIOR LANDSCAPE ARCHITECT: T. CHRIS JOHNSON

CALCULATED-DESIGNED BY: JENNIFER WHITE
CHECKED BY: JEFF PIETRZAK

REVISED BY	DATE REVISED

LAST REVISION
DATE PLOTTED => 15-JUN-2015
TIME PLOTTED => 15:52
03-12-15

BORDER LAST REVISED 7/2/2010

USERNAME => s130875
DGN FILE => 0300000725sy004.dgn

RELATIVE BORDER SCALE IS IN INCHES 0 1 2 3

UNIT 0381

PROJECT NUMBER & PHASE 03000007251

Dist	COUNTY	ROUTE	POST MILES TOTAL PROJECT	SHEET No.	TOTAL SHEETS
03	Pla	193	4.4/5.5	148	197

LICENSED LANDSCAPE ARCHITECT

4-6-15
PLANS APPROVAL DATE

THE STATE OF CALIFORNIA OR ITS OFFICERS OR AGENTS SHALL NOT BE RESPONSIBLE FOR THE ACCURACY OR COMPLETENESS OF SCANNED COPIES OF THIS PLAN SHEET.

LICENSED LANDSCAPE ARCHITECT
JEFFREY L. PIETRZAK
No. 4457
Signature
12-31-15
Renewal Date
3-12-15
Date
STATE OF CALIFORNIA

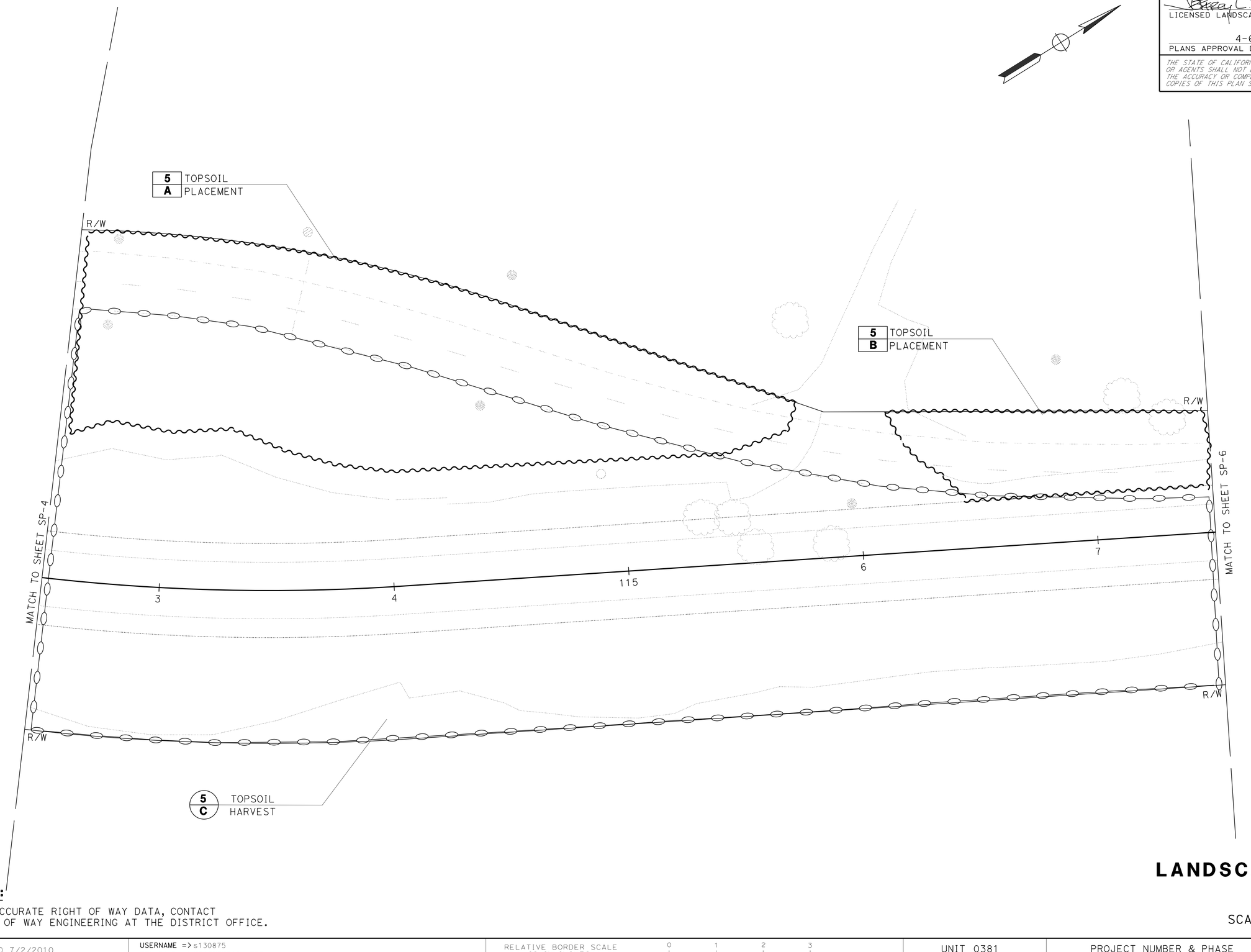

NOTE:

FOR ACCURATE RIGHT OF WAY DATA, CONTACT RIGHT OF WAY ENGINEERING AT THE DISTRICT OFFICE.

LANDSCAPE DETAILS
LD-5

SCALE 1"=20'

STATE OF CALIFORNIA - DEPARTMENT OF TRANSPORTATION
LANDSCAPE ARCHITECTURE

SENIOR LANDSCAPE ARCHITECT: T. CHRIS JOHNSON

CALCULATED-DESIGNED BY: JENNIFER WHITE
CHECKED BY: JEFF PIETRZAK

REVISED BY
DATE REVISED

LAST REVISION
DATE PLOTTED => 15-JUN-2015
TIME PLOTTED => 15:52
03-12-15

BORDER LAST REVISED 7/2/2010

USERNAME => s130875
DGN FILE => 0300000725sy005.dgn

RELATIVE BORDER SCALE IS IN INCHES 0 1 2 3

UNIT 0381

PROJECT NUMBER & PHASE 03000007251

Dist	COUNTY	ROUTE	POST MILES TOTAL PROJECT	SHEET No.	TOTAL SHEETS
03	Pla	193	4.4/5.5	149	197

LICENSED LANDSCAPE ARCHITECT

4-6-15
PLANS APPROVAL DATE

THE STATE OF CALIFORNIA OR ITS OFFICERS OR AGENTS SHALL NOT BE RESPONSIBLE FOR THE ACCURACY OR COMPLETENESS OF SCANNED COPIES OF THIS PLAN SHEET.

LICENSED LANDSCAPE ARCHITECT
JEFFREY L. PIETRZAK
No. 4457
Signature
12-31-15
Renewal Date
3-12-15
Date
STATE OF CALIFORNIA

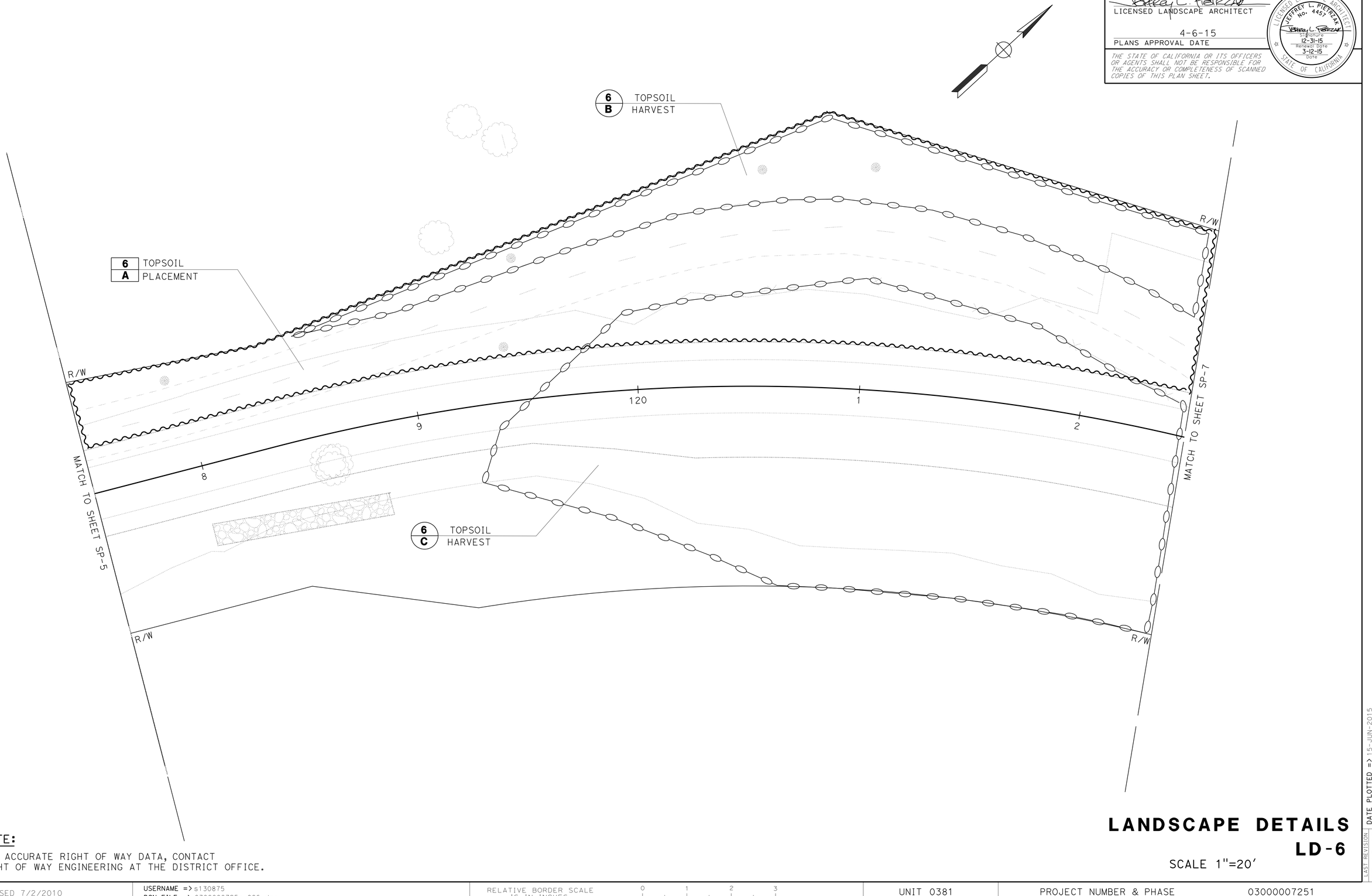

NOTE:
FOR ACCURATE RIGHT OF WAY DATA, CONTACT RIGHT OF WAY ENGINEERING AT THE DISTRICT OFFICE.

LANDSCAPE DETAILS
LD-6
SCALE 1"=20'

REVISED BY
DATE REVISED
JENNIFER WHITE
JEFF PIETRZAK
CALCULATED-DESIGNED BY
CHECKED BY
SENIOR LANDSCAPE ARCHITECT
T. CHRIS JOHNSON
STATE OF CALIFORNIA - DEPARTMENT OF TRANSPORTATION
Caltrans
LANDSCAPE ARCHITECTURE

LAST REVISION 03-12-15
DATE PLOTTED => 15-JUN-2015
TIME PLOTTED => 15:52

BORDER LAST REVISED 7/2/2010
USERNAME => s130875
DGN FILE => 0300000725sy006.dgn
RELATIVE BORDER SCALE IS IN INCHES 0 1 2 3
UNIT 0381
PROJECT NUMBER & PHASE 03000007251

Dist	COUNTY	ROUTE	POST MILES TOTAL PROJECT	SHEET No.	TOTAL SHEETS
03	Pla	193	4.4/5.5	150	197

LICENSED LANDSCAPE ARCHITECT

4-6-15
PLANS APPROVAL DATE

THE STATE OF CALIFORNIA OR ITS OFFICERS OR AGENTS SHALL NOT BE RESPONSIBLE FOR THE ACCURACY OR COMPLETENESS OF SCANNED COPIES OF THIS PLAN SHEET.

LICENSED LANDSCAPE ARCHITECT
JEFFREY L. PIETRZAK
No. 4457
Signature
12-31-15
Renewal Date
3-12-15
Date
STATE OF CALIFORNIA

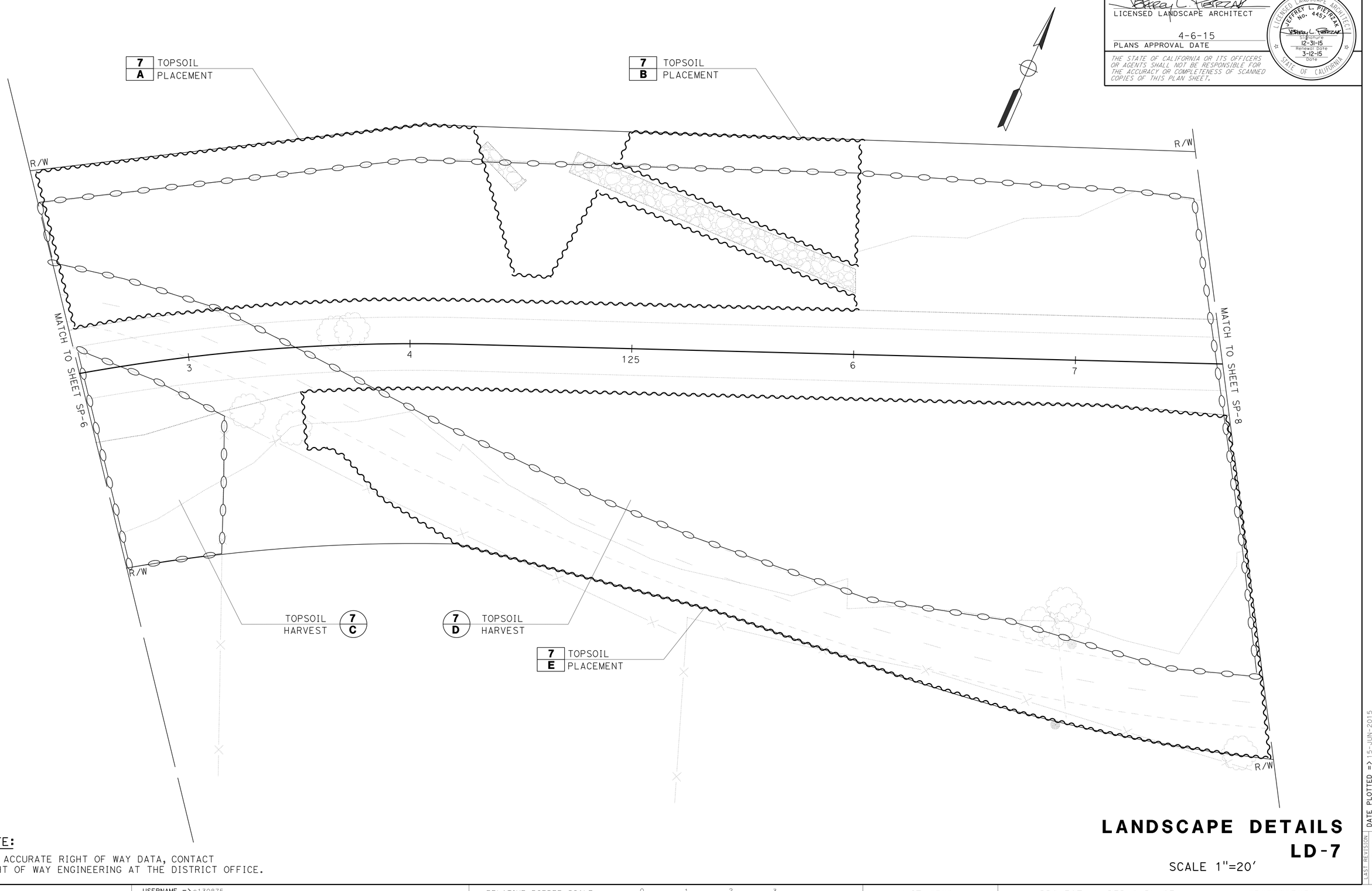

NOTE:

FOR ACCURATE RIGHT OF WAY DATA, CONTACT RIGHT OF WAY ENGINEERING AT THE DISTRICT OFFICE.

LANDSCAPE DETAILS
LD-7

SCALE 1"=20'

REVISED BY | DATE REVISED

JENNIFER WHITE | JEFF PIETRZAK

CALCULATED-DESIGNED BY | CHECKED BY

SENIOR LANDSCAPE ARCHITECT
T. CHRIS JOHNSON

STATE OF CALIFORNIA - DEPARTMENT OF TRANSPORTATION
LANDSCAPE ARCHITECTURE

LAST REVISION
DATE PLOTTED => 15-JUN-2015
TIME PLOTTED => 15:52
03-12-15

BORDER LAST REVISED 7/2/2010

USERNAME => s130875
DGN FILE => 0300000725sy007.dgn

RELATIVE BORDER SCALE IS IN INCHES 0 1 2 3

UNIT 0381

PROJECT NUMBER & PHASE 03000007251

Dist	COUNTY	ROUTE	POST MILES TOTAL PROJECT	SHEET No.	TOTAL SHEETS
03	Pla	193	4.4/5.5	151	197

LICENSED LANDSCAPE ARCHITECT

4-6-15
PLANS APPROVAL DATE

THE STATE OF CALIFORNIA OR ITS OFFICERS OR AGENTS SHALL NOT BE RESPONSIBLE FOR THE ACCURACY OR COMPLETENESS OF SCANNED COPIES OF THIS PLAN SHEET.

LICENSED LANDSCAPE ARCHITECT
JEFFREY L. PIETRZAK
No. 4457
Signature
12-31-15
Renewal Date
3-12-15
Date
STATE OF CALIFORNIA

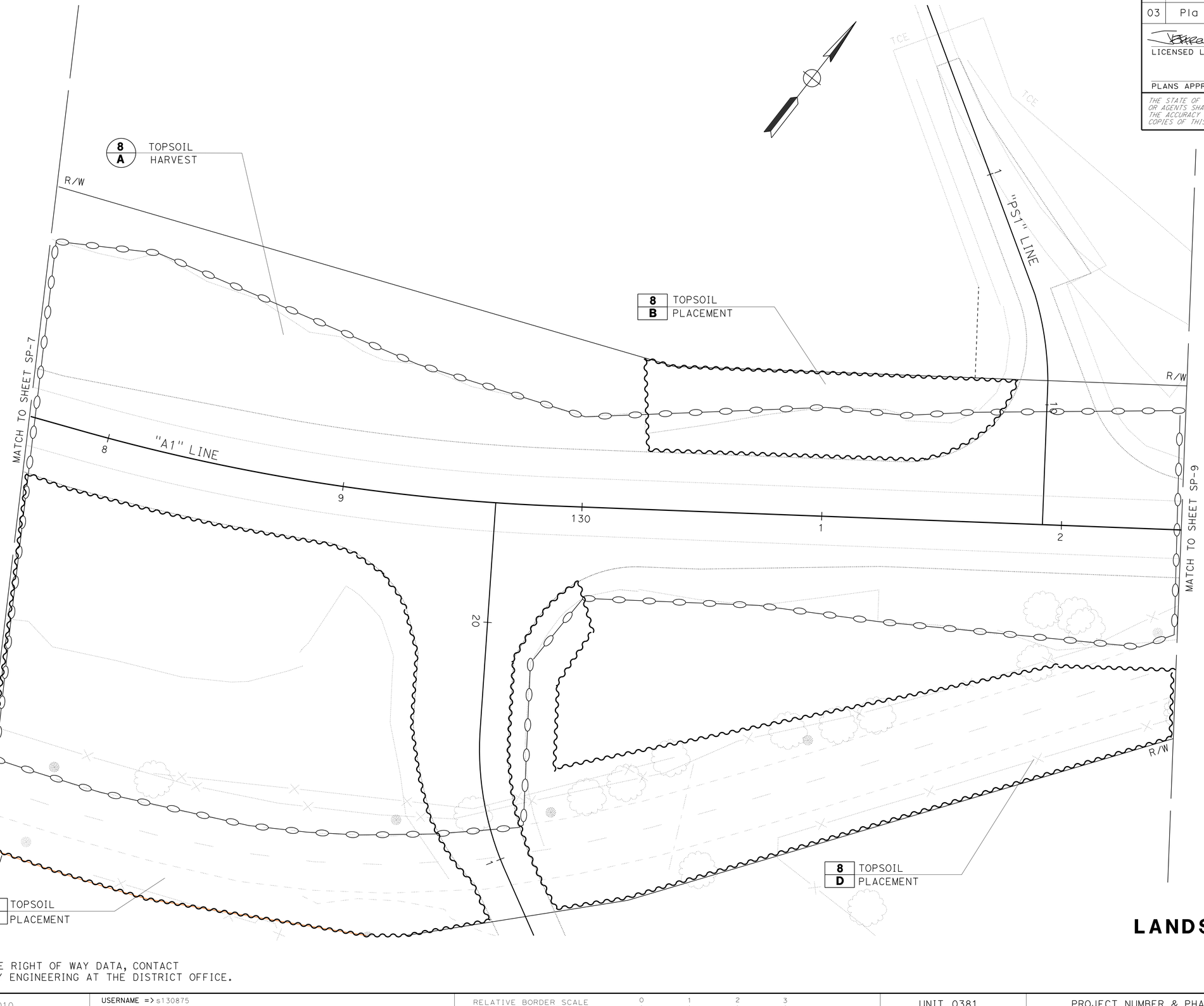

NOTE:

FOR ACCURATE RIGHT OF WAY DATA, CONTACT RIGHT OF WAY ENGINEERING AT THE DISTRICT OFFICE.

LANDSCAPE DETAILS
LD-8

SCALE 1"=20'

STATE OF CALIFORNIA - DEPARTMENT OF TRANSPORTATION
LANDSCAPE ARCHITECTURE

SENIOR LANDSCAPE ARCHITECT: T. CHRIS JOHNSON

CALCULATED-DESIGNED BY: JENNIFER WHITE
CHECKED BY: JEFF PIETRZAK

REVISED BY	DATE REVISED

LAST REVISION
DATE PLOTTED => 15-JUN-2015
TIME PLOTTED => 15:52
03-12-15

BORDER LAST REVISED 7/2/2010

USERNAME => s130875
DGN FILE => 0300000725sy008.dgn

RELATIVE BORDER SCALE IS IN INCHES 0 1 2 3

UNIT 0381

PROJECT NUMBER & PHASE 03000007251

Dist	COUNTY	ROUTE	POST MILES TOTAL PROJECT	SHEET No.	TOTAL SHEETS
03	Pla	193	4.4/5.5	152	197

LICENSED LANDSCAPE ARCHITECT

4-6-15
PLANS APPROVAL DATE

THE STATE OF CALIFORNIA OR ITS OFFICERS OR AGENTS SHALL NOT BE RESPONSIBLE FOR THE ACCURACY OR COMPLETENESS OF SCANNED COPIES OF THIS PLAN SHEET.

LICENSED LANDSCAPE ARCHITECT
JEFFREY L. PIETRZAK
No. 4457
Signature
12-31-15
Renewal Date
3-12-15
Date
STATE OF CALIFORNIA

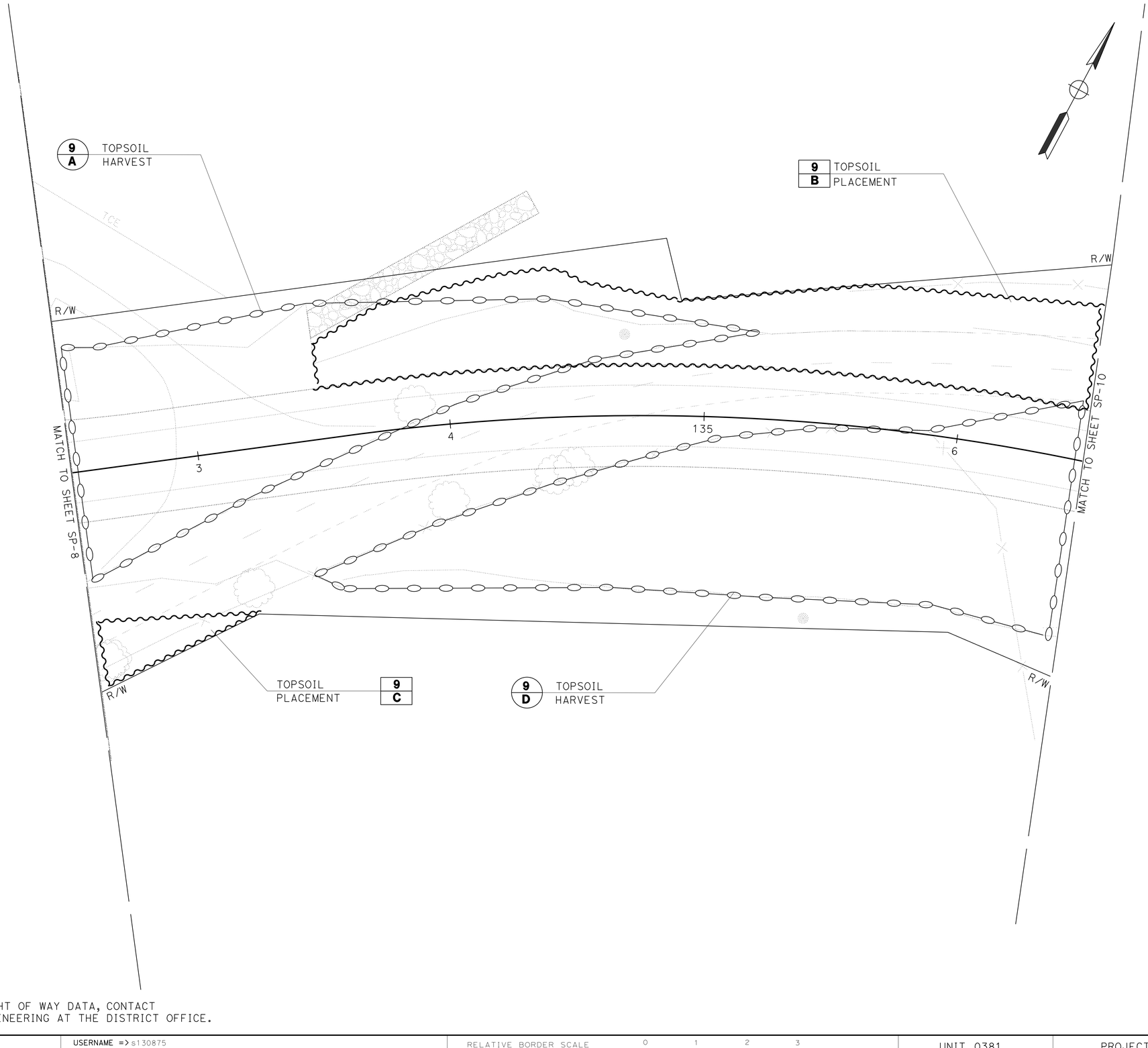

NOTE:
FOR ACCURATE RIGHT OF WAY DATA, CONTACT RIGHT OF WAY ENGINEERING AT THE DISTRICT OFFICE.

LANDSCAPE DETAILS
LD-9

SCALE 1"=20'

STATE OF CALIFORNIA - DEPARTMENT OF TRANSPORTATION
LANDSCAPE ARCHITECTURE
Caltrans

SENIOR LANDSCAPE ARCHITECT: T. CHRIS JOHNSON
CALCULATED-DESIGNED BY: JENNIFER WHITE
CHECKED BY: JEFF PIETRZAK
REVISED BY
DATE REVISED

LAST REVISION
DATE PLOTTED => 15-JUN-2015
TIME PLOTTED => 15:52
03-12-15

BORDER LAST REVISED 7/2/2010
USERNAME => s130875
DGN FILE => 0300000725sy009.dgn
RELATIVE BORDER SCALE IS IN INCHES 0 1 2 3
UNIT 0381
PROJECT NUMBER & PHASE 03000007251

Dist	COUNTY	ROUTE	POST MILES TOTAL PROJECT	SHEET No.	TOTAL SHEETS
03	Pla	193	4.4/5.5	153	197

Jeffrey L. Pietrzak
LICENSED LANDSCAPE ARCHITECT

4-6-15
PLANS APPROVAL DATE

THE STATE OF CALIFORNIA OR ITS OFFICERS OR AGENTS SHALL NOT BE RESPONSIBLE FOR THE ACCURACY OR COMPLETENESS OF SCANNED COPIES OF THIS PLAN SHEET.

LICENSED LANDSCAPE ARCHITECT
JEFFREY L. PIETRZAK
No. 4457
Signature
12-31-15
Renewal Date
3-12-15
Date
STATE OF CALIFORNIA

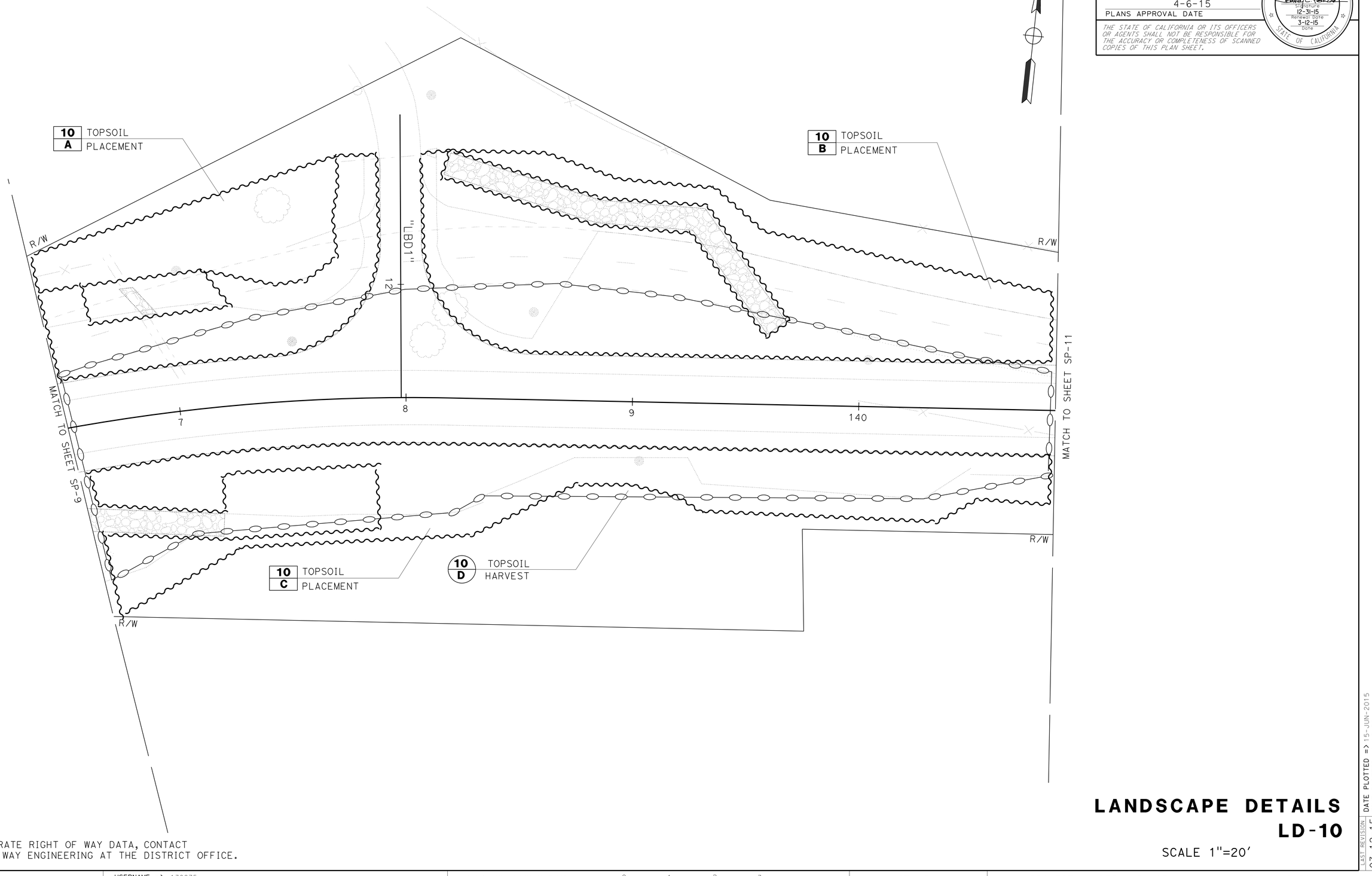

NOTE:
FOR ACCURATE RIGHT OF WAY DATA, CONTACT RIGHT OF WAY ENGINEERING AT THE DISTRICT OFFICE.

LANDSCAPE DETAILS
LD-10

SCALE 1"=20'

STATE OF CALIFORNIA - DEPARTMENT OF TRANSPORTATION
LANDSCAPE ARCHITECTURE
SENIOR LANDSCAPE ARCHITECT: T. CHRIS JOHNSON
CALCULATED-DESIGNED BY: JENNIFER WHITE
CHECKED BY: JEFF PIETRZAK
REVISED BY
DATE REVISED

LAST REVISION
DATE PLOTTED => 15-JUN-2015
TIME PLOTTED => 15:52
03-12-15

BORDER LAST REVISED 7/2/2010
USERNAME => s130875
DGN FILE => 0300000725sy010.dgn
RELATIVE BORDER SCALE IS IN INCHES 0 1 2 3
UNIT 0381
PROJECT NUMBER & PHASE 03000007251

Dist	COUNTY	ROUTE	POST MILES TOTAL PROJECT	SHEET No.	TOTAL SHEETS
03	Pla	193	4.4/5.5	154	197

Jeffrey L. Pietrzak
LICENSED LANDSCAPE ARCHITECT

4-6-15
PLANS APPROVAL DATE

LICENSED LANDSCAPE ARCHITECT
JEFFREY L. PIETRZAK
No. 4457
Signature
12-31-15
Renewal Date
3-12-15
Date
STATE OF CALIFORNIA

THE STATE OF CALIFORNIA OR ITS OFFICERS OR AGENTS SHALL NOT BE RESPONSIBLE FOR THE ACCURACY OR COMPLETENESS OF SCANNED COPIES OF THIS PLAN SHEET.

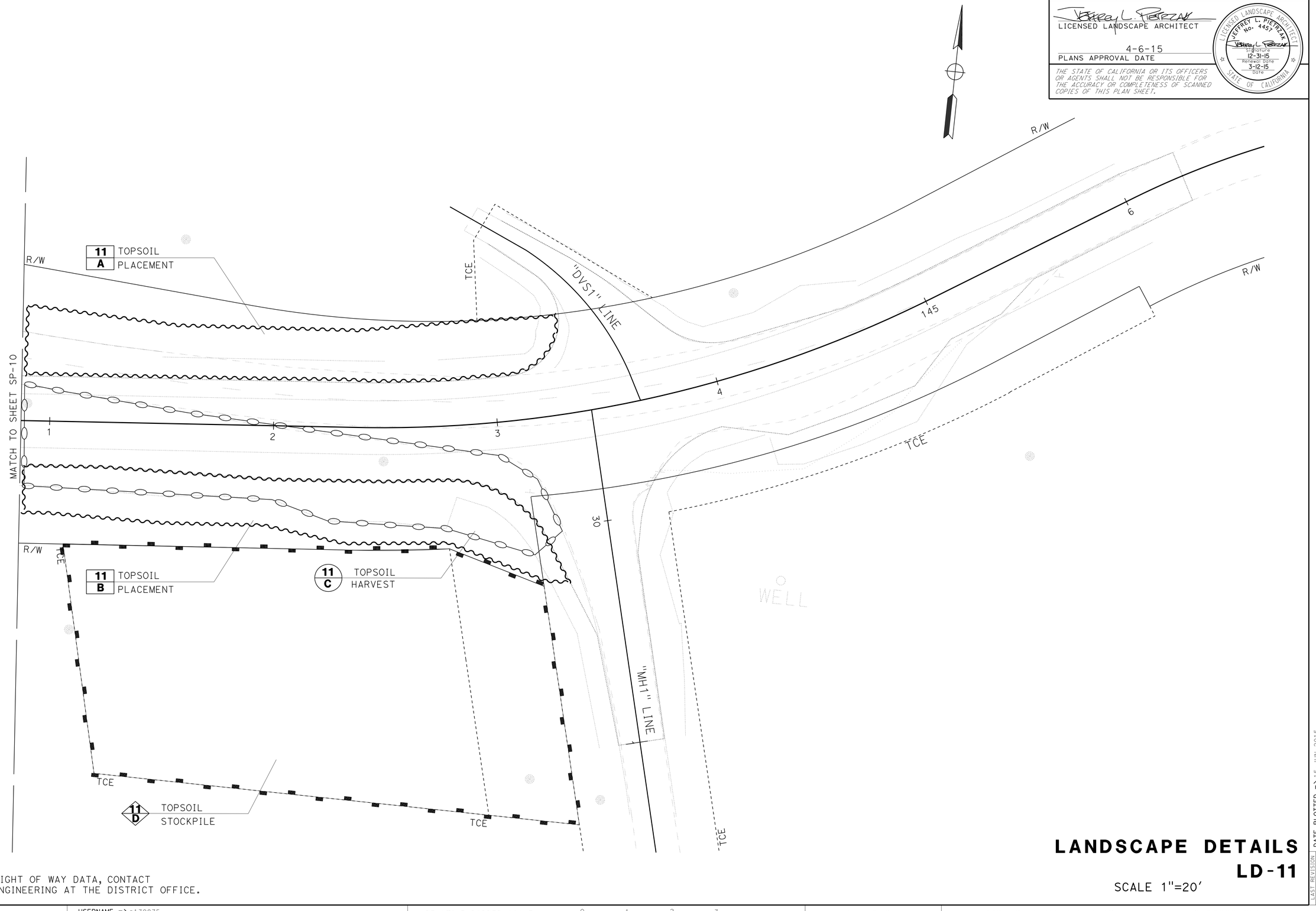

NOTE:

FOR ACCURATE RIGHT OF WAY DATA, CONTACT RIGHT OF WAY ENGINEERING AT THE DISTRICT OFFICE.

LANDSCAPE DETAILS
LD-11

SCALE 1"=20'

STATE OF CALIFORNIA - DEPARTMENT OF TRANSPORTATION
LANDSCAPE ARCHITECTURE
Caltrans

SENIOR LANDSCAPE ARCHITECT: T. CHRIS JOHNSON
CALCULATED-DESIGNED BY: JENNIFER WHITE
CHECKED BY: JEFF PIETRZAK
REVISED BY
DATE REVISED

LAST REVISION: DATE PLOTTED => 15-JUN-2015
03-12-15 TIME PLOTTED => 15:52

BORDER LAST REVISED 7/2/2010
USERNAME => s130875
DGN FILE => 0300000725sy011.dgn
RELATIVE BORDER SCALE IS IN INCHES 0 1 2 3
UNIT 0381
PROJECT NUMBER & PHASE 03000007251

Dist	COUNTY	ROUTE	POST MILES TOTAL PROJECT	SHEET No.	TOTAL SHEETS
03	Pla	193	4.4/5.5	155	197

LICENSED LANDSCAPE ARCHITECT

4-6-15
PLANS APPROVAL DATE

LICENSED LANDSCAPE ARCHITECT
JEFFREY L. PIETRZAK
No. 4457
Signature
12-31-15
Renewal Date
3-12-15
Date
STATE OF CALIFORNIA

THE STATE OF CALIFORNIA OR ITS OFFICERS OR AGENTS SHALL NOT BE RESPONSIBLE FOR THE ACCURACY OR COMPLETENESS OF SCANNED COPIES OF THIS PLAN SHEET.

TOPSOIL HARVEST, TOPSOIL PLACEMENT, and STOCKPILE

SP SHEET	LOCATION	(1) TOPSOIL HARVEST	(N) TOPSOIL PLACEMENT	(N) STOCKPILE
		SQFT	SQFT	SQFT
1	A	--	4349	--
1	B	--	7811	--
1	C	14764	--	--
2	A	2818	--	--
2	B	--	15661	--
2	C	35528	--	--
2	D	--	7052	--
2	E	--	--	52472
3	A	--	13319	--
3	B	--	11018	--
3	C	19366	--	--
4	A	--	949	--
4	B	2207	--	--
4	C	44734	--	--
4	D	--	5922	--
4	E	--	6735	--
5	A	--	20227	--
5	B	--	4311	--
5	C	62999	--	--
6	A	--	31934	--
6	B	9601	--	--
6	C	34013	--	--
7	A	--	19159	--
7	B	--	4030	--
7	C	4243	--	--
7	D	75175	--	--
7	E	--	44551	--
8	A	68219	--	--
8	B	--	4961	--
8	C	--	28194	--
8	D	--	15038	--
9	A	12713	--	--
9	B	--	10189	--
9	C	--	803	--
9	D	15401	--	--
10	A	--	9264	--
10	B	--	15348	--
10	C	--	11655	--
10	D	36206	--	--
11	A	--	5683	--
11	B	--	5907	--
11	C	8931	--	--
11	D	--	--	23547
SHEET TOTAL		446,918	304,070	76,019

(1) STOCKPILE TOPSOIL PLACEMENT IS ACCOUNTTED FOR AS ROADWAY EXCAVATION. SEE SUMMARY OF QUANTITIES.
(N) NOT A SEPARATE PAY ITEM. FOR INFORMATION ONLY.

LANDSCAPE QUANITIES
LQ-1

NO SCALE

REVISED BY | DATE REVISED
JENNIFER WHITE | JEFF PIETRZAK
CALCULATED-DESIGNED BY | CHECKED BY
SENIOR LANDSCAPE ARCHITECT
T. CHRIS JOHNSON
STATE OF CALIFORNIA - DEPARTMENT OF TRANSPORTATION
LANDSCAPE ARCHITECTURE
Caltrans

LAST REVISION 03-12-15 | DATE PLOTTED => 15-JUN-2015 | TIME PLOTTED => 15:52

BORDER LAST REVISED 7/2/2010 | USERNAME => s130875 | DGN FILE => 0300000725sz001.dgn | RELATIVE BORDER SCALE IS IN INCHES 0 1 2 3 | UNIT 0381 | PROJECT NUMBER & PHASE 03000007251

Dist	COUNTY	ROUTE	POST MILES TOTAL PROJECT	SHEET No.	TOTAL SHEETS
03	Pla	193	4.4/5.5	156	197

LICENSED LANDSCAPE ARCHITECT

4-6-15
PLANS APPROVAL DATE

LICENSED LANDSCAPE ARCHITECT
JEFFREY L. PIETRZAK
No. 4457
Signature
12-31-15
Renewal Date
3-12-15
Date
STATE OF CALIFORNIA

THE STATE OF CALIFORNIA OR ITS OFFICERS OR AGENTS SHALL NOT BE RESPONSIBLE FOR THE ACCURACY OR COMPLETENESS OF SCANNED COPIES OF THIS PLAN SHEET.

SEED MIX

SEED	BOTANICAL NAME (COMMON NAME)	PERCENT GERMINATION (MINIMUM)	POUNDS PURE LIVE SEED PER ACRE (SLOPE MEASUREMENT)
(MIX 1)	ACHILLEA MILLEFOLIUM LANULOSA (WESTERN YARROW)	77	.32
	BROMUS CARINATUS (CALIFORNIA BROME)	72	11.12
	ERIOGONUM FASCICULATUM FOLIOLOSUM (CALIFORNIA BUCKWHEAT)	9	.97
	ERIOPHYLLUM CONFERTIFLORUM (GOLDEN YARROW)	45	.16
	ESCHSCHOLZIA CALIFORNICA (CALIFORNIA POPPY)	72	1.45
	LASTHENIA CALIFORNICA (CALIFORNIA GOLDFIELDS)	45	.13
	LOTUS SCOPARIUS (DEER LOTUS)	63	2.76
	NASSELLA PULCHRA (PURPLE NEEDLEGRASS)	72	11.12
	VULPIA MICROSTACHYS (SMALL FESCUE)	72	1.58
			29.61

SEED MIX

SEED	BOTANICAL NAME (COMMON NAME)	PERCENT GERMINATION (MINIMUM)	POUNDS PURE LIVE SEED PER ACRE (SLOPE MEASUREMENT)
(MIX 2)	ARTEMISIA DOUGLASIANA (MUGWORT)	45	3.82
	BACCHARIS PILULARIS (CHAPARRAL BROOM)	36	.45
	CAREX PRAEGRACILIS (CLUSTERED FIELD SEDGE)	45	1.97
	CAREX BARBARAE (SANTA BARBARA SEDGE)	45	2.38
	ELOCHARIS PALUSTRIS (COMMON SPIKE RUSH)	63	4.22
	ELYMUS TRITICOIDES (BEARDLESS WILDRYE)	72	17.93
	JUNCUS BALTICUS (BALTIC RUSH)	54	.87
			31.64

EROSION CONTROL LEGEND

NO SCALE

ECL-1

CALCULATED-DESIGNED BY
JENNIFER WHITE
CHECKED BY
JEFF PIETRZAK
REVISED BY
DATE REVISED
SENIOR LANDSCAPE ARCHITECT
T. CHRIS JOHNSON
STATE OF CALIFORNIA - DEPARTMENT OF TRANSPORTATION
LANDSCAPE ARCHITECTURE
Caltrans

LAST REVISION 03-12-15
DATE PLOTTED => 15-JUN-2015
TIME PLOTTED => 15:52

BORDER LAST REVISED 7/2/2010
USERNAME => s130875
DGN FILE => 0300000725tc001.dgn
RELATIVE BORDER SCALE IS IN INCHES 0 1 2 3
UNIT 0381
PROJECT NUMBER & PHASE 03000007251

Dist	COUNTY	ROUTE	POST MILES TOTAL PROJECT	SHEET No.	TOTAL SHEETS
03	Pla	193	4.4/5.5	157	197

LICENSED LANDSCAPE ARCHITECT

4-6-15

PLANS APPROVAL DATE

THE STATE OF CALIFORNIA OR ITS OFFICERS OR AGENTS SHALL NOT BE RESPONSIBLE FOR THE ACCURACY OR COMPLETENESS OF SCANNED COPIES OF THIS PLAN SHEET.

LICENSED LANDSCAPE ARCHITECT — JEFFREY L. PIETRZAK No. 4457 — Signature 12-31-15 Renewal Date — 3-12-15 Date — STATE OF CALIFORNIA

EROSION CONTROL TYPE 1 (FLAT AREAS)

SEQUENCE	ITEM	MATERIAL		APPLICATION RATE
		DESCRIPTION	TYPE	
STEP 1	BONDED FIBER MATRIX	SEED	MIX 1	61.94 LB/ACRE
		FERTILIZER	ORGANIC	1,800 LB/ACRE
		FIBER	WOOD	--
		TACKIFIER	MANUFACTURER RECOMMENDATION	4,500 LB/ACRE

EROSION CONTROL TYPE 2 (CUT SLOPES)

SEQUENCE	ITEM	MATERIAL			APPLICATION RATE
		DESCRIPTION	TYPE	LENGTH	
STEP 1	ROLLED EROSION CONTROL PRODUCT (NETTING)	NETTING	TYPE A	--	--
		FASTENERS	STEEL PIN	12"	MANUFACTURER RECOMMENDATION
STEP 2	BONDED FIBER MATRIX	SEED	MIX 1	--	29.61 LB/ACRE
		FERTILIZER	ORGANIC	--	1,800 LB/ACRE
		FIBER	WOOD	--	--
		TACKIFIER	MANUFACTURER RECOMMENDATION	--	4,500 LB/ACRE

EROSION CONTROL TYPE 3 (FILL SLOPES)

SEQUENCE	ITEM	MATERIAL			APPLICATION RATE
		DESCRIPTION	TYPE	LENGTH	
STEP 1	COMPOST	COMPOST	COARSE	--	4"
STEP 2	INCORPORATE MATERIALS	COMPOST	--	--	18"
STEP 3	ROLLED EROSION CONTROL PRODUCT (NETTING)	NETTING	TYPE A	--	--
		FASTENERS	STEEL PIN	12"	MANUFACTURER RECOMMENDATION
STEP 4	BONDED FIBER MATRIX	SEED	MIX 1	--	29.61 LB/ACRE
		FERTILIZER	ORGANIC	--	1,800 LB/ACRE
		FIBER	WOOD	--	--
		TACKIFIER	MANUFACTURER RECOMMENDATION	--	4,500 LB/ACRE

EROSION CONTROL TYPE 4 (WETLAND REHABILITATION)

SEQUENCE	ITEM	MATERIAL			APPLICATION RATE
		DESCRIPTION	TYPE	LENGTH	
STEP 1	COMPOST	COMPOST	COARSE	--	4"
STEP 2	INCORPORATE MATERIALS	COMPOST	--	--	18"
STEP 3	ROLLED EROSION CONTROL PRODUCT (NETTING)	NETTING	TYPE A	--	--
		FASTENERS	STEEL PIN	12"	MANUFACTURER RECOMMENDATION
STEP 4	BONDED FIBER MATRIX	SEED	MIX 2	--	31.64 LB/ACRE
		FERTILIZER	ORGANIC	--	1,800 LB/ACRE
		FIBER	WOOD	--	--
		TACKIFIER	MANUFACTURER RECOMMENDATION	--	4,500 LB/ACRE

EROSION CONTROL TYPE 5 (DITCH FLOWLINE- DRY)

SEQUENCE	ITEM	MATERIAL			APPLICATION RATE
		DESCRIPTION	TYPE	LENGTH	
STEP 1	COMPOST	COMPOST	COARSE	--	4"
STEP 2	INCORPORATE MATERIALS	COMPOST	--	--	18"
STEP 3	ROLLED EROSION CONTROL PRODUCT (TURF REINFORCEMENT MAT)	TURF REINFORCEMENT MAT	TYPE A	--	--
		FASTENERS	STEEL PIN	12"	MANUFACTURER RECOMMENDATION
STEP 4	COMPOST	COMPOST	FINE	--	4"
STEP 5	BONDED FIBER MATRIX	SEED	MIX 1	--	29.61 LB/ACRE
		FERTILIZER	ORGANIC	--	1,800 LB/ACRE
		FIBER	WOOD	--	--
		TACKIFIER	MANUFACTURER RECOMMENDATION	--	4,500 LB/ACRE

EROSION CONTROL TYPE 6 (DITCH FLOWLINE- WET)

SEQUENCE	ITEM	MATERIAL			APPLICATION RATE
		DESCRIPTION	TYPE	LENGTH	
STEP 1	COMPOST	COMPOST	COARSE	--	4"
STEP 2	INCORPORATE MATERIALS	COMPOST	--	--	18"
STEP 3	ROLLED EROSION CONTROL PRODUCT (TURF REINFORCEMENT MAT)	TURF REINFORCEMENT MAT	TYPE A	--	--
		FASTENERS	STEEL PIN	12"	MANUFACTURER RECOMMENDATION
STEP 4	COMPOST	COMPOST	FINE	--	4"
STEP 5	BONDED FIBER MATRIX	SEED	MIX 2	--	31.64 LB/ACRE
		FERTILIZER	ORGANIC	--	1,800 LB/ACRE
		FIBER	WOOD	--	--
		TACKIFIER	PER MANUFACTURER	--	2,500 LB/ACRE

FIBER ROLLS

SEQUENCE	ITEM	MATERIAL		REMARKS
		DESCRIPTION	TYPE	
IN EC TYPE 1,3, and 4 AREAS, FIBER ROLL MUST BE INSTALLED AFTER RECP AND BEFORE BFM.	FIBER ROLLS	FIBER ROLL	TYPE B 8" TO 10"	TYPE 1 FIBER ROLL INSTALLATION

EROSION CONTROL LEGEND

NO SCALE

ECL-2

LAST REVISION 03-12-15 | DATE PLOTTED => 15-JUN-2015 | TIME PLOTTED => 15:52

CALCULATED-DESIGNED BY | CHECKED BY

REVISED BY | DATE REVISED

JENNIFER WHITE | JEFF PIETRZAK

SENIOR LANDSCAPE ARCHITECT: T. CHRIS JOHNSON

STATE OF CALIFORNIA - DEPARTMENT OF TRANSPORTATION

LANDSCAPE ARCHITECTURE

Caltrans

BORDER LAST REVISED 7/2/2010 | USERNAME => s130875 | DGN FILE => 0300000725tc002.dgn | RELATIVE BORDER SCALE IS IN INCHES 0 1 2 3 | UNIT 0381 | PROJECT NUMBER & PHASE 03000007251

Dist	COUNTY	ROUTE	POST MILES TOTAL PROJECT	SHEET No.	TOTAL SHEETS
03	Pla	193	4.4/5.5	158	197

LICENSED LANDSCAPE ARCHITECT

4-6-15
PLANS APPROVAL DATE

LICENSED LANDSCAPE ARCHITECT
JEFFREY L. PIETRZAK
No. 4457
Signature
12-31-15
Renewal Date
3-12-15
Date
STATE OF CALIFORNIA

THE STATE OF CALIFORNIA OR ITS OFFICERS OR AGENTS SHALL NOT BE RESPONSIBLE FOR THE ACCURACY OR COMPLETENESS OF SCANNED COPIES OF THIS PLAN SHEET.

EROSION CONTROL (TYPE 1)

FLAT AREAS (3:1 AND FLATTER)

- BONDED FIBER MATRIX- SEED MIX (1)
- FIBER ROLL (AS REQUIRED)

EROSION CONTROL (TYPE 2)

CUT SLOPE

- RECP (NETTING) (TYPE A)
- BONDED FIBER MATRIX- SEED MIX (1)

EROSION CONTROL (TYPE 3)

FILL SLOPE

- COMPOST TYPE (1) COARSE
- INCORPORATE MATERIALS
- RECP (NETTING) (TYPE A)
- FIBER ROLL (AS REQUIRED)
- BONDED FIBER MATRIX- SEED MIX (1)

EROSION CONTROL (TYPE 4)

WETLAND REHABILITATION

- COMPOST TYPE (1) COARSE
- INCORPORATE MATERIALS
- RECP (NETTING) (TYPE A)
- FIBER ROLL (AS REQUIRED)
- BONDED FIBER MATRIX- SEED MIX (2)

EROSION CONTROL (TYPE 5)

DITCH FLOWLINE DRY

- COMPOST TYPE (1) COARSE
- INCORPORATE MATERIALS
- RECP (TRM)
- COMPOST TYPE (2) FINE
- BONDED FIBER MATRIX- SEED MIX (1)

EROSION CONTROL (TYPE 6)

DITCH FLOWLINE WET

- COMPOST TYPE (1) COARSE
- INCORPORATE MATERIALS
- RECP (TRM)
- COMPOST TYPE (2) FINE
- BONDED FIBER MATRIX- SEED MIX (2)

-FIBER ROLL

X/X -SHEET -LOCATION

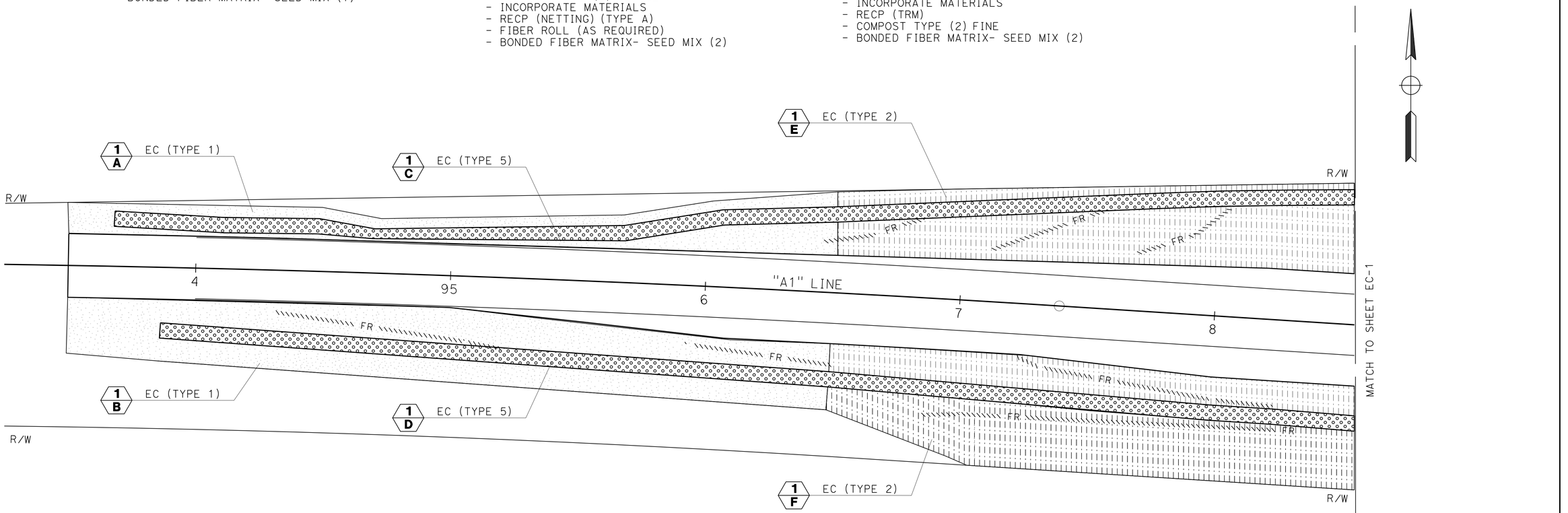

NOTE:

FOR ACCURATE RIGHT OF WAY DATA, CONTACT RIGHT OF WAY ENGINEERING AT THE DISTRICT OFFICE.

APPROVED FOR EROSION CONTROL WORK ONLY

EROSION CONTROL PLAN

SCALE 1"=20'

EC-1

REVISED BY | DATE REVISED

CALCULATED- | JENNIFER WHITE
DESIGNED BY | JEFF PIETRZAK
CHECKED BY

SENIOR LANDSCAPE ARCHITECT | T. CHRIS JOHNSON

STATE OF CALIFORNIA - DEPARTMENT OF TRANSPORTATION
Caltrans
LANDSCAPE ARCHITECTURE

LAST REVISION | DATE PLOTTED => 15-JUN-2015
03-12-15 | TIME PLOTTED => 15:52

BORDER LAST REVISED 7/2/2010 | USERNAME => s130875 | DGN FILE => 0300000725te001.dgn | RELATIVE BORDER SCALE IS IN INCHES 0 1 2 3 | UNIT 0381 | PROJECT NUMBER & PHASE 03000007251

Dist	COUNTY	ROUTE	POST MILES TOTAL PROJECT	SHEET No.	TOTAL SHEETS
03	Pla	193	4.4/5.5	159	197

LICENSED LANDSCAPE ARCHITECT

4-6-15
PLANS APPROVAL DATE

THE STATE OF CALIFORNIA OR ITS OFFICERS OR AGENTS SHALL NOT BE RESPONSIBLE FOR THE ACCURACY OR COMPLETENESS OF SCANNED COPIES OF THIS PLAN SHEET.

LICENSED LANDSCAPE ARCHITECT
JEFFREY L. PIETRZAK
No. 4457
Signature
12-31-15
Renewal Date
3-12-15
Date
STATE OF CALIFORNIA

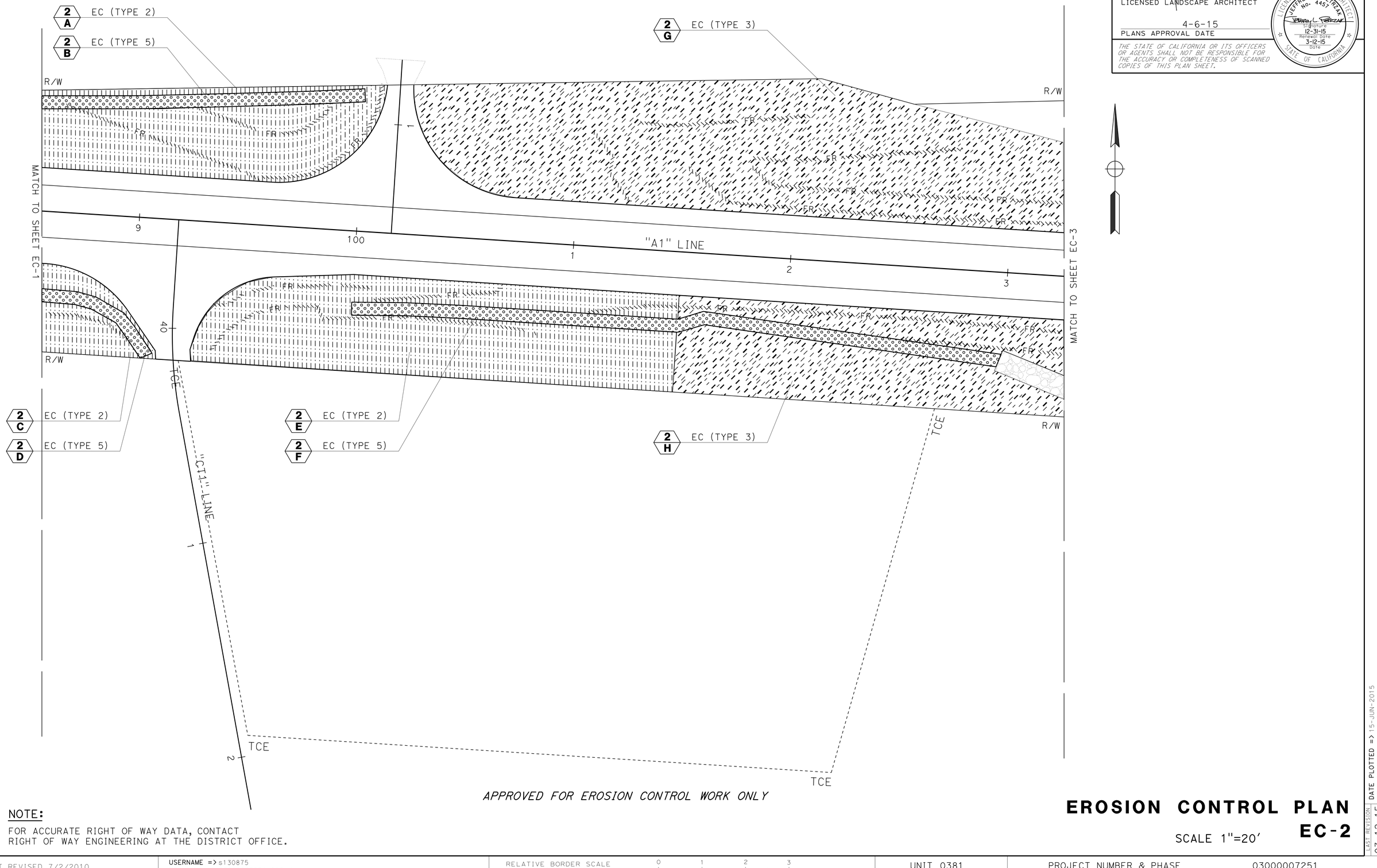

APPROVED FOR EROSION CONTROL WORK ONLY

NOTE:
FOR ACCURATE RIGHT OF WAY DATA, CONTACT RIGHT OF WAY ENGINEERING AT THE DISTRICT OFFICE.

EROSION CONTROL PLAN EC-2

SCALE 1"=20'

REVISED BY | DATE REVISED
JENNIFER WHITE | JEFF PIETRZAK
CALCULATED-DESIGNED BY | CHECKED BY
SENIOR LANDSCAPE ARCHITECT
T. CHRIS JOHNSON

STATE OF CALIFORNIA - DEPARTMENT OF TRANSPORTATION
Caltrans
LANDSCAPE ARCHITECTURE

LAST REVISION 03-12-15
DATE PLOTTED => 15-JUN-2015
TIME PLOTTED => 15:52

BORDER LAST REVISED 7/2/2010
USERNAME => s130875
DGN FILE => 0300000725te002.dgn
RELATIVE BORDER SCALE IS IN INCHES 0 1 2 3
UNIT 0381
PROJECT NUMBER & PHASE 03000007251

Dist	COUNTY	ROUTE	POST MILES TOTAL PROJECT	SHEET No.	TOTAL SHEETS
03	Pla	193	4.4/5.5	160	197

LICENSED LANDSCAPE ARCHITECT

4-6-15
PLANS APPROVAL DATE

LICENSED LANDSCAPE ARCHITECT
JEFFREY L. PIETRZAK
No. 4457
Signature
12-31-15
Renewal Date
3-12-15
Date
STATE OF CALIFORNIA

THE STATE OF CALIFORNIA OR ITS OFFICERS OR AGENTS SHALL NOT BE RESPONSIBLE FOR THE ACCURACY OR COMPLETENESS OF SCANNED COPIES OF THIS PLAN SHEET.

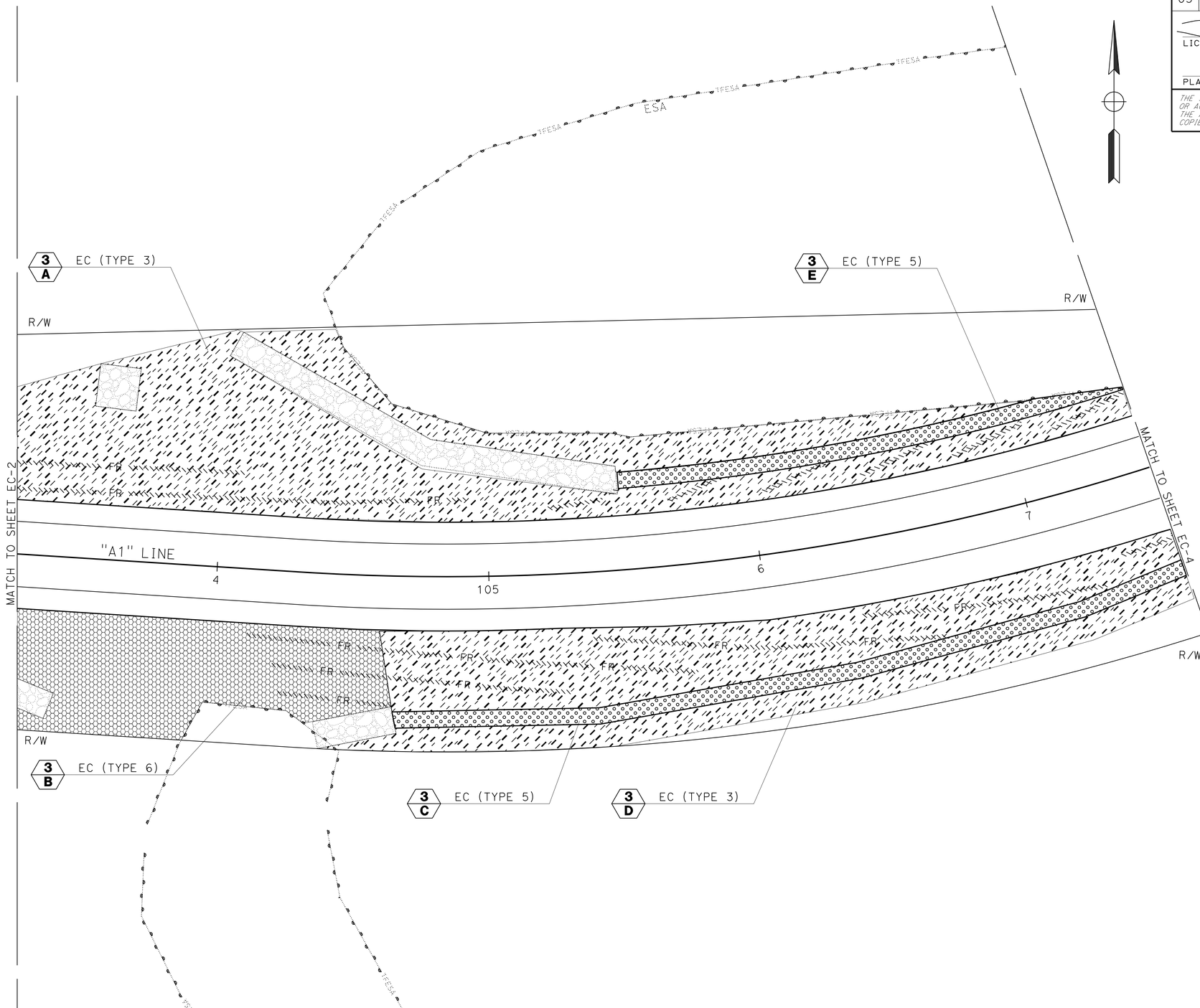

NOTE:
FOR ACCURATE RIGHT OF WAY DATA, CONTACT RIGHT OF WAY ENGINEERING AT THE DISTRICT OFFICE.

APPROVED FOR EROSION CONTROL WORK ONLY

EROSION CONTROL PLAN EC-3

SCALE 1"=20'

STATE OF CALIFORNIA - DEPARTMENT OF TRANSPORTATION
LANDSCAPE ARCHITECTURE
SENIOR LANDSCAPE ARCHITECT
T. CHRIS JOHNSON
CALCULATED-DESIGNED BY
JENNIFER WHITE
CHECKED BY
JEFF PIETRZAK
REVISED BY
DATE REVISED

LAST REVISION | DATE PLOTTED => 15-JUN-2015
03-12-15 | TIME PLOTTED => 15:52

BORDER LAST REVISED 7/2/2010 | USERNAME => s130875 | DGN FILE => 0300000725te003.dgn | RELATIVE BORDER SCALE IS IN INCHES 0 1 2 3 | UNIT 0381 | PROJECT NUMBER & PHASE 03000007251

Dist	COUNTY	ROUTE	POST MILES TOTAL PROJECT	SHEET No.	TOTAL SHEETS
03	Pla	193	4.4/5.5	161	197

LICENSED LANDSCAPE ARCHITECT

4-6-15
PLANS APPROVAL DATE

LICENSED LANDSCAPE ARCHITECT
JEFFREY L. PIETRZAK
No. 4457
Signature
12-31-15
Renewal Date
3-12-15
Date
STATE OF CALIFORNIA

THE STATE OF CALIFORNIA OR ITS OFFICERS OR AGENTS SHALL NOT BE RESPONSIBLE FOR THE ACCURACY OR COMPLETENESS OF SCANNED COPIES OF THIS PLAN SHEET.

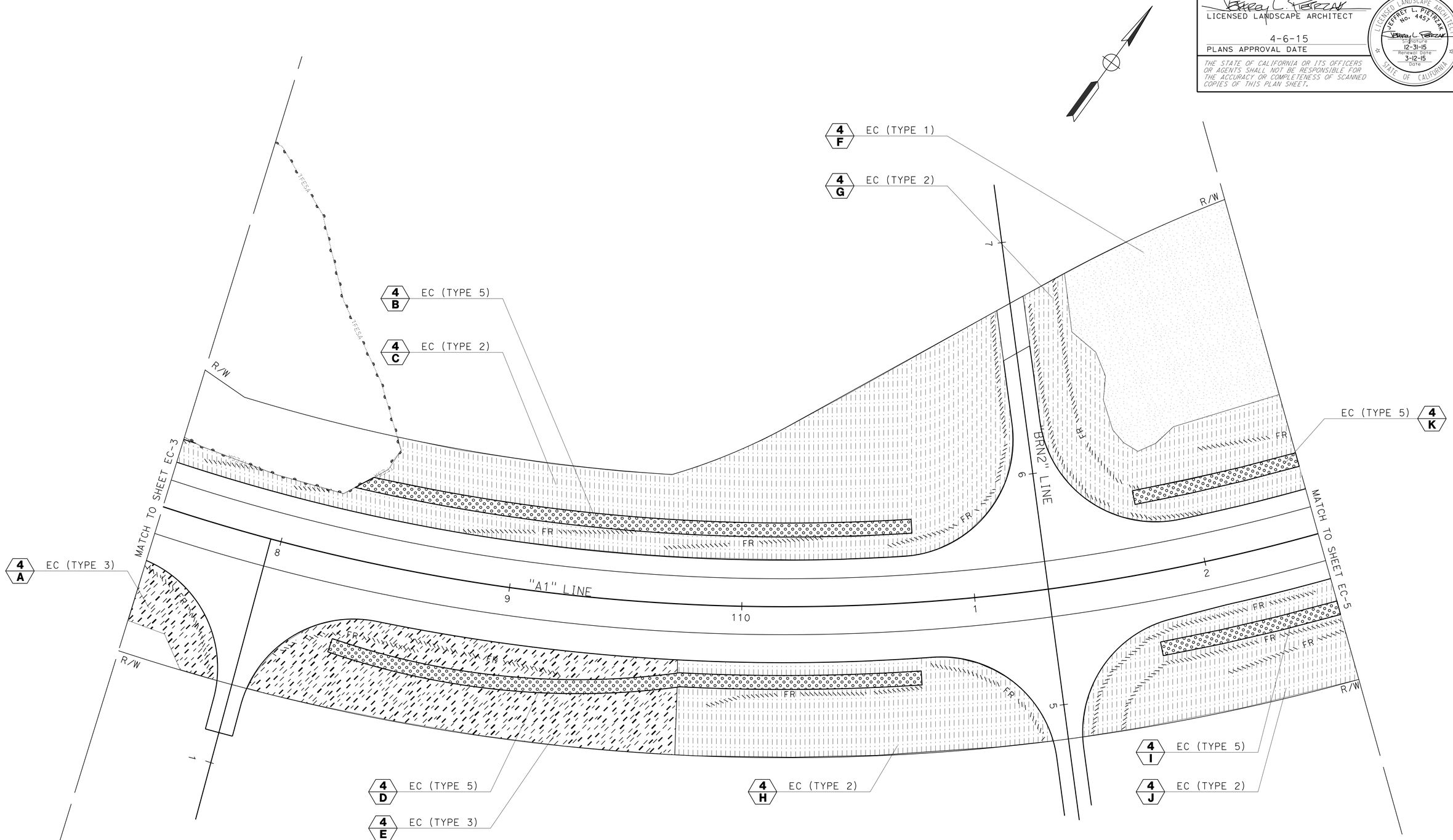

NOTE:
FOR ACCURATE RIGHT OF WAY DATA, CONTACT RIGHT OF WAY ENGINEERING AT THE DISTRICT OFFICE.

APPROVED FOR EROSION CONTROL WORK ONLY

EROSION CONTROL PLAN

SCALE 1"=20'

EC-4

STATE OF CALIFORNIA - DEPARTMENT OF TRANSPORTATION
LANDSCAPE ARCHITECTURE
Caltrans

SENIOR LANDSCAPE ARCHITECT: T. CHRIS JOHNSON
CALCULATED-DESIGNED BY: JENNIFER WHITE
CHECKED BY: JEFF PIETRZAK
REVISED BY
DATE REVISED

LAST REVISION | DATE PLOTTED => 15-JUN-2015 | 03-12-15 | TIME PLOTTED => 15:52

BORDER LAST REVISED 7/2/2010 | USERNAME => s130875 | DGN FILE => 0300000725te004.dgn | RELATIVE BORDER SCALE IS IN INCHES 0 1 2 3 | UNIT 0381 | PROJECT NUMBER & PHASE 03000007251

Dist	COUNTY	ROUTE	POST MILES TOTAL PROJECT	SHEET No.	TOTAL SHEETS
03	Pla	193	4.4/5.5	162	197

LICENSED LANDSCAPE ARCHITECT

4-6-15
PLANS APPROVAL DATE

THE STATE OF CALIFORNIA OR ITS OFFICERS OR AGENTS SHALL NOT BE RESPONSIBLE FOR THE ACCURACY OR COMPLETENESS OF SCANNED COPIES OF THIS PLAN SHEET.

LICENSED LANDSCAPE ARCHITECT
JEFFREY L. PIETRZAK
No. 4457
Signature
12-31-15
Renewal Date
3-12-15
Date
STATE OF CALIFORNIA

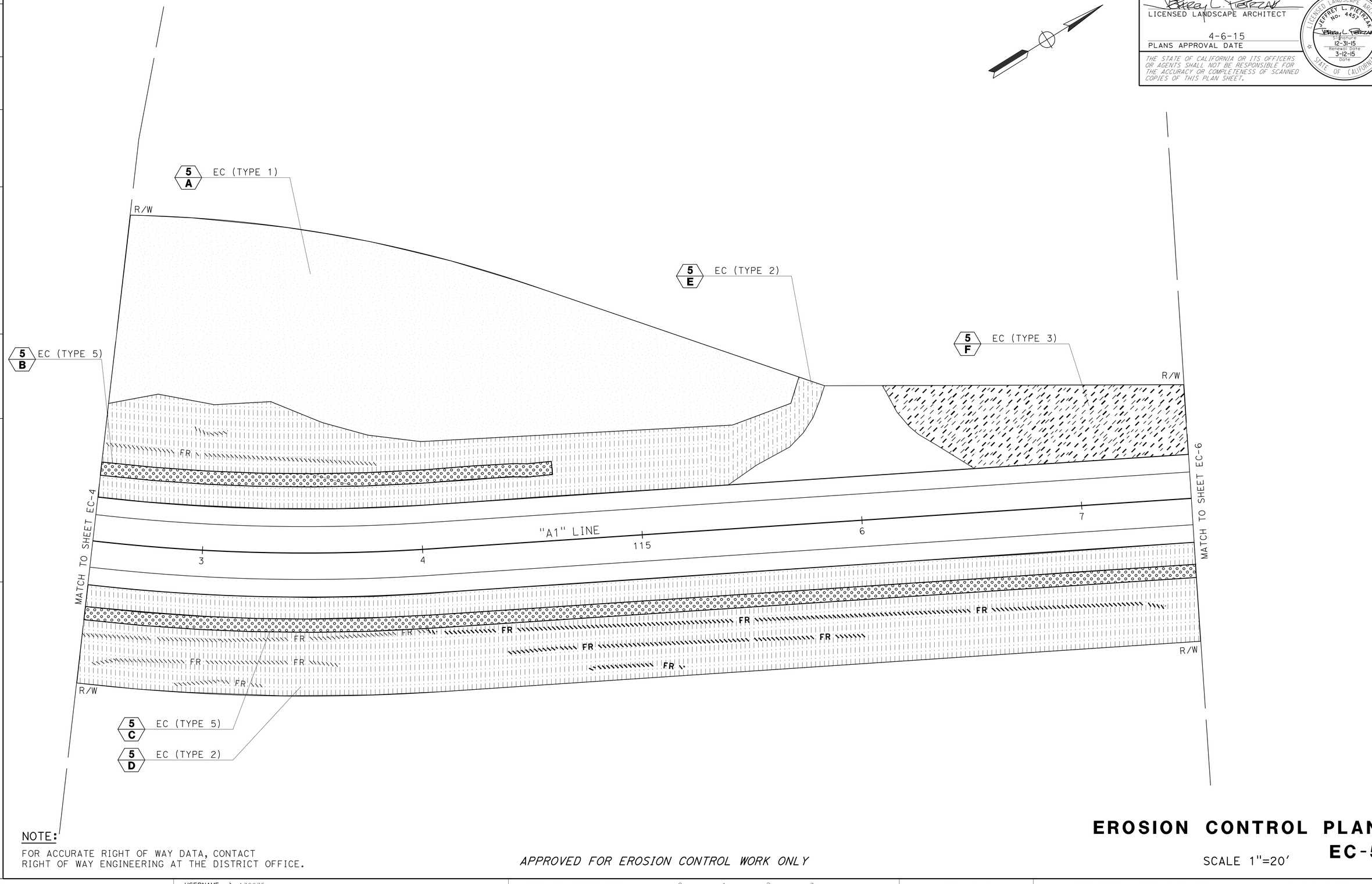

NOTE:
FOR ACCURATE RIGHT OF WAY DATA, CONTACT RIGHT OF WAY ENGINEERING AT THE DISTRICT OFFICE.

APPROVED FOR EROSION CONTROL WORK ONLY

EROSION CONTROL PLAN
EC-5

SCALE 1"=20'

STATE OF CALIFORNIA - DEPARTMENT OF TRANSPORTATION
Caltrans
LANDSCAPE ARCHITECTURE

SENIOR LANDSCAPE ARCHITECT: T. CHRIS JOHNSON

CALCULATED-DESIGNED BY: JENNIFER WHITE
CHECKED BY: JEFF PIETRZAK

REVISED BY	DATE REVISED

LAST REVISION | DATE PLOTTED => 15-JUN-2015
03-12-15 | TIME PLOTTED => 15:52

BORDER LAST REVISED 7/2/2010 | USERNAME => s130875 | DGN FILE => 0300000725te005.dgn | RELATIVE BORDER SCALE IS IN INCHES 0 1 2 3 | UNIT 0381 | PROJECT NUMBER & PHASE 03000007251

Dist	COUNTY	ROUTE	POST MILES TOTAL PROJECT	SHEET No.	TOTAL SHEETS
03	Pla	193	4.4/5.5	163	197

LICENSED LANDSCAPE ARCHITECT

4-6-15
PLANS APPROVAL DATE

THE STATE OF CALIFORNIA OR ITS OFFICERS OR AGENTS SHALL NOT BE RESPONSIBLE FOR THE ACCURACY OR COMPLETENESS OF SCANNED COPIES OF THIS PLAN SHEET.

LICENSED LANDSCAPE ARCHITECT
JEFFREY L. PIETRZAK
No. 4457
Signature
12-31-15
Renewal Date
3-12-15
Date
STATE OF CALIFORNIA

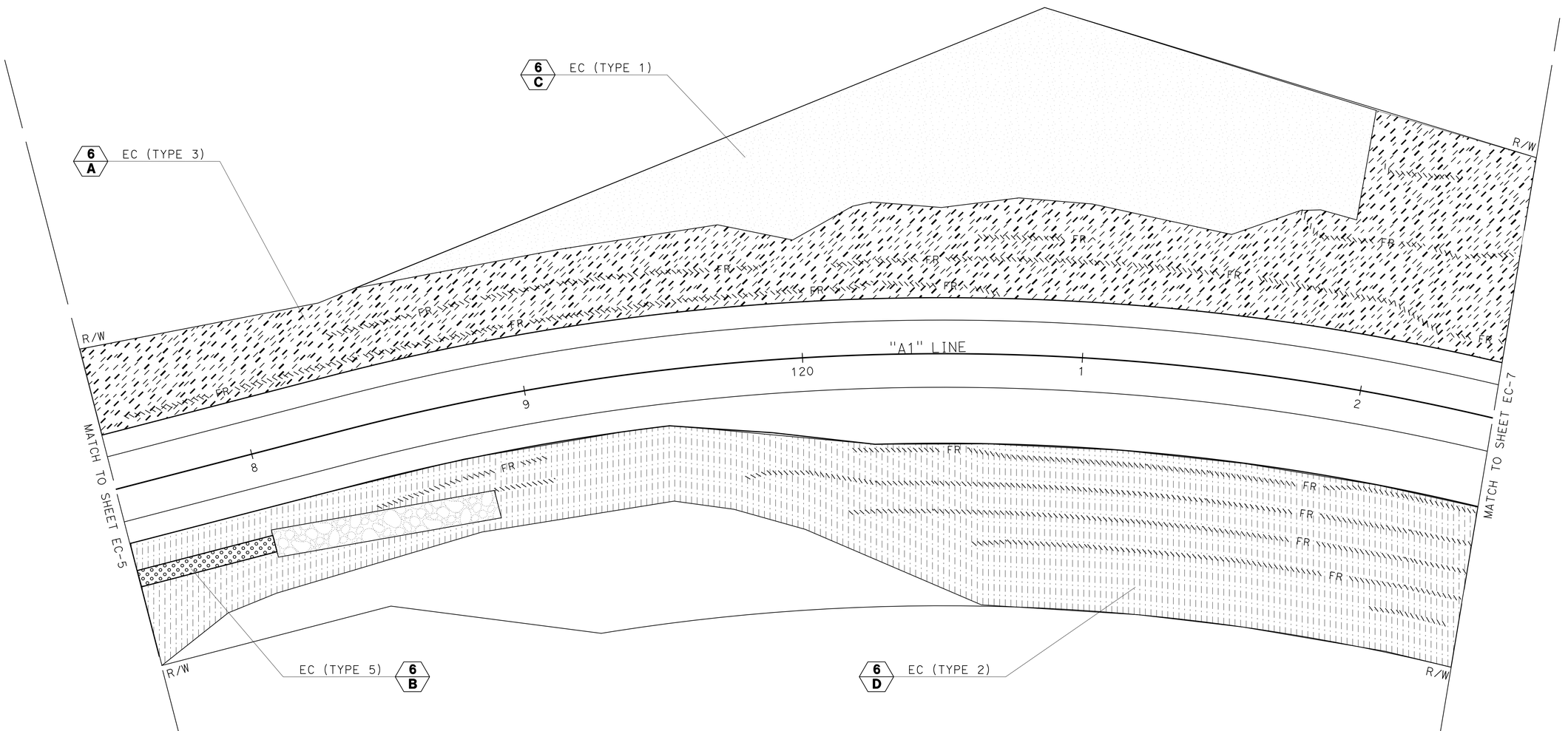

NOTE:
FOR ACCURATE RIGHT OF WAY DATA, CONTACT RIGHT OF WAY ENGINEERING AT THE DISTRICT OFFICE.

APPROVED FOR EROSION CONTROL WORK ONLY

EROSION CONTROL PLAN EC-6

SCALE 1"=20'

REVISED BY | DATE REVISED
JENNIFER WHITE | JEFF PIETRZAK
CALCULATED-DESIGNED BY | CHECKED BY
SENIOR LANDSCAPE ARCHITECT
T. CHRIS JOHNSON
STATE OF CALIFORNIA - DEPARTMENT OF TRANSPORTATION
LANDSCAPE ARCHITECTURE
Caltrans

LAST REVISION | DATE PLOTTED => 15-JUN-2015
03-12-15 | TIME PLOTTED => 15:52

BORDER LAST REVISED 7/2/2010 | USERNAME => s130875 | DGN FILE => 0300000725te006.dgn | RELATIVE BORDER SCALE IS IN INCHES 0 1 2 3 | UNIT 0381 | PROJECT NUMBER & PHASE 03000007251

Dist	COUNTY	ROUTE	POST MILES TOTAL PROJECT	SHEET No.	TOTAL SHEETS
03	Pla	193	4.4/5.5	164	197

LICENSED LANDSCAPE ARCHITECT

4-6-15
PLANS APPROVAL DATE

LICENSED LANDSCAPE ARCHITECT
JEFFREY L. PIETRZAK
No. 4457
Signature
12-31-15
Renewal Date
3-12-15
Date
STATE OF CALIFORNIA

THE STATE OF CALIFORNIA OR ITS OFFICERS OR AGENTS SHALL NOT BE RESPONSIBLE FOR THE ACCURACY OR COMPLETENESS OF SCANNED COPIES OF THIS PLAN SHEET.

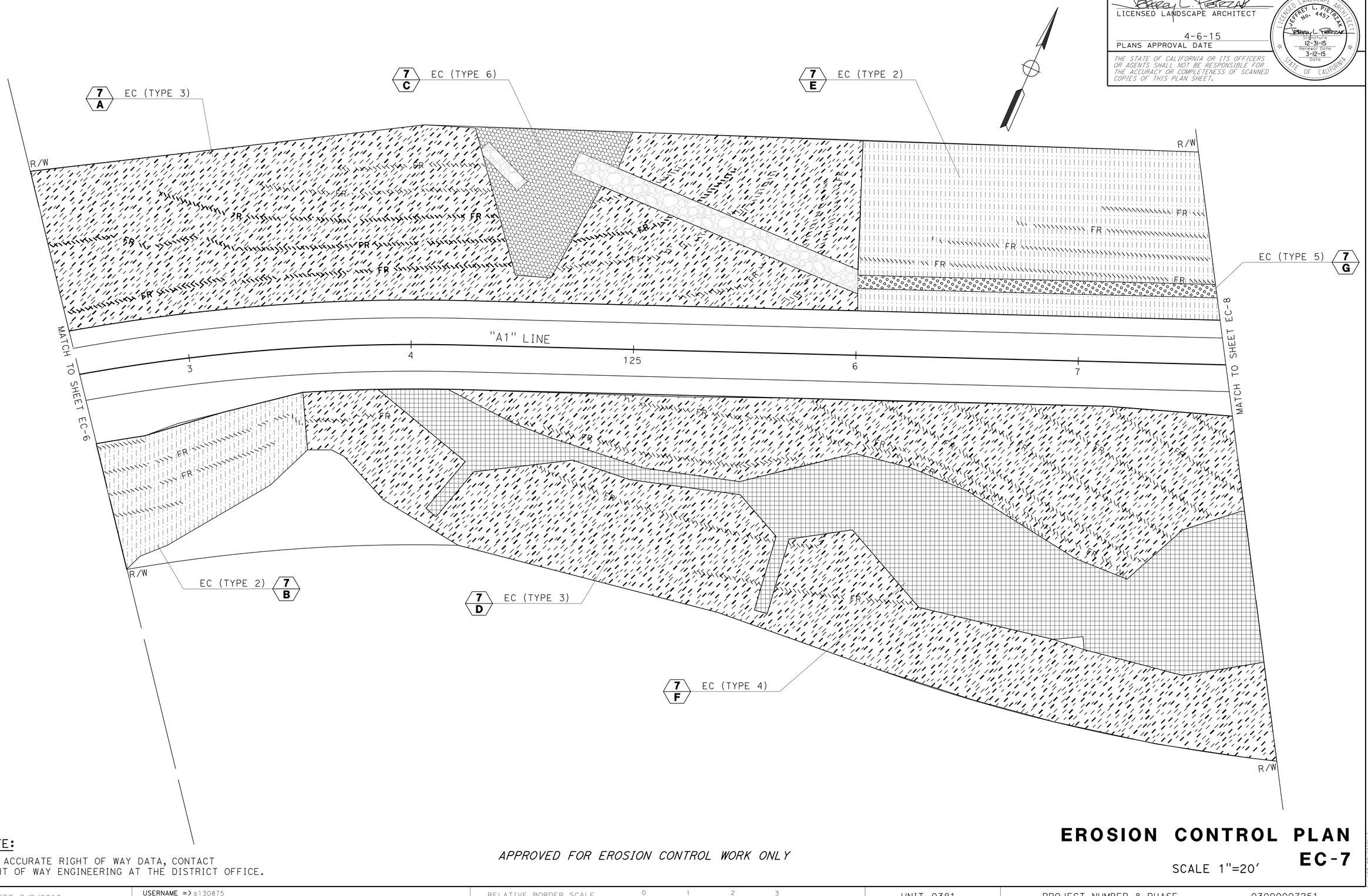

NOTE:
FOR ACCURATE RIGHT OF WAY DATA, CONTACT RIGHT OF WAY ENGINEERING AT THE DISTRICT OFFICE.

APPROVED FOR EROSION CONTROL WORK ONLY

EROSION CONTROL PLAN
EC-7

SCALE 1"=20'

STATE OF CALIFORNIA - DEPARTMENT OF TRANSPORTATION
LANDSCAPE ARCHITECTURE
Caltrans

SENIOR LANDSCAPE ARCHITECT: T. CHRIS JOHNSON
CALCULATED-DESIGNED BY: JENNIFER WHITE
CHECKED BY: JEFF PIETRZAK
REVISED BY
DATE REVISED

LAST REVISION: 03-12-15
DATE PLOTTED => 15-JUN-2015
TIME PLOTTED => 15:52

BORDER LAST REVISED 7/2/2010
USERNAME => s130875
DGN FILE => 0300000725te007.dgn
RELATIVE BORDER SCALE IS IN INCHES 0 1 2 3
UNIT 0381
PROJECT NUMBER & PHASE 03000007251

Dist	COUNTY	ROUTE	POST MILES TOTAL PROJECT	SHEET No.	TOTAL SHEETS
03	Pla	193	4.4/5.5	165	197

LICENSED LANDSCAPE ARCHITECT

4-6-15
PLANS APPROVAL DATE

THE STATE OF CALIFORNIA OR ITS OFFICERS OR AGENTS SHALL NOT BE RESPONSIBLE FOR THE ACCURACY OR COMPLETENESS OF SCANNED COPIES OF THIS PLAN SHEET.

LICENSED LANDSCAPE ARCHITECT
JEFFREY L. PIETRZAK
No. 4457
Signature
12-31-15
Renewal Date
3-12-15
Date
STATE OF CALIFORNIA

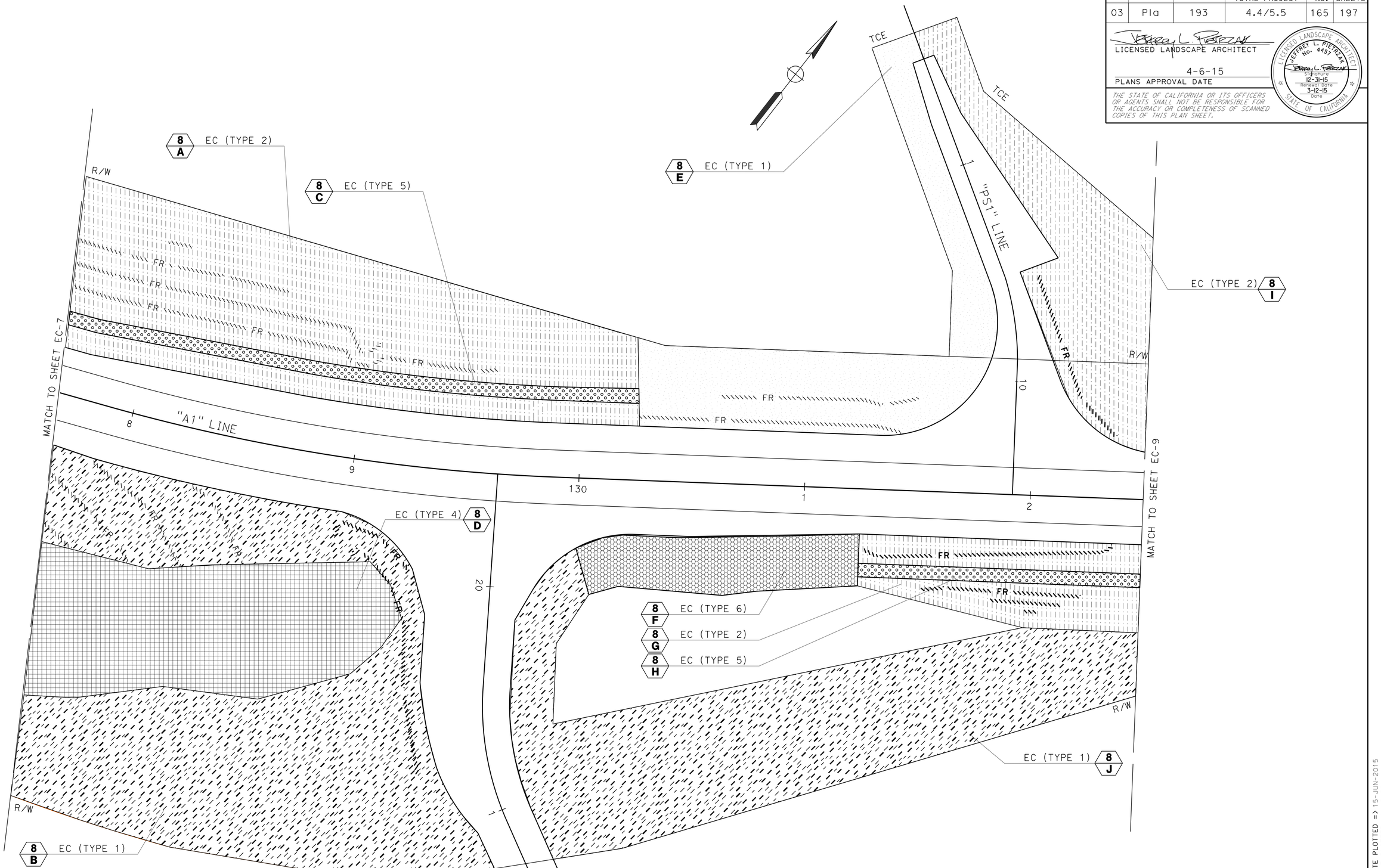

NOTE:

FOR ACCURATE RIGHT OF WAY DATA, CONTACT RIGHT OF WAY ENGINEERING AT THE DISTRICT OFFICE.

APPROVED FOR EROSION CONTROL WORK ONLY

EROSION CONTROL PLAN EC-8

SCALE 1"=20'

STATE OF CALIFORNIA - DEPARTMENT OF TRANSPORTATION
LANDSCAPE ARCHITECTURE
Caltrans

SENIOR LANDSCAPE ARCHITECT: T. CHRIS JOHNSON

CALCULATED-DESIGNED BY: JENNIFER WHITE
CHECKED BY: JEFF PIETRZAK

REVISED BY	DATE REVISED

LAST REVISION: 03-12-15
DATE PLOTTED => 15-JUN-2015
TIME PLOTTED => 15:52

BORDER LAST REVISED 7/2/2010

USERNAME => s130875
DGN FILE => 0300000725te008.dgn

RELATIVE BORDER SCALE IS IN INCHES 0 1 2 3

UNIT 0381

PROJECT NUMBER & PHASE 03000007251

Dist	COUNTY	ROUTE	POST MILES TOTAL PROJECT	SHEET No.	TOTAL SHEETS
03	Pla	193	4.4/5.5	166	197

LICENSED LANDSCAPE ARCHITECT

4-6-15
PLANS APPROVAL DATE

THE STATE OF CALIFORNIA OR ITS OFFICERS OR AGENTS SHALL NOT BE RESPONSIBLE FOR THE ACCURACY OR COMPLETENESS OF SCANNED COPIES OF THIS PLAN SHEET.

LICENSED LANDSCAPE ARCHITECT
JEFFREY L. PIETRZAK
No. 4457
Signature
12-31-15
Renewal Date
3-12-15
Date
STATE OF CALIFORNIA

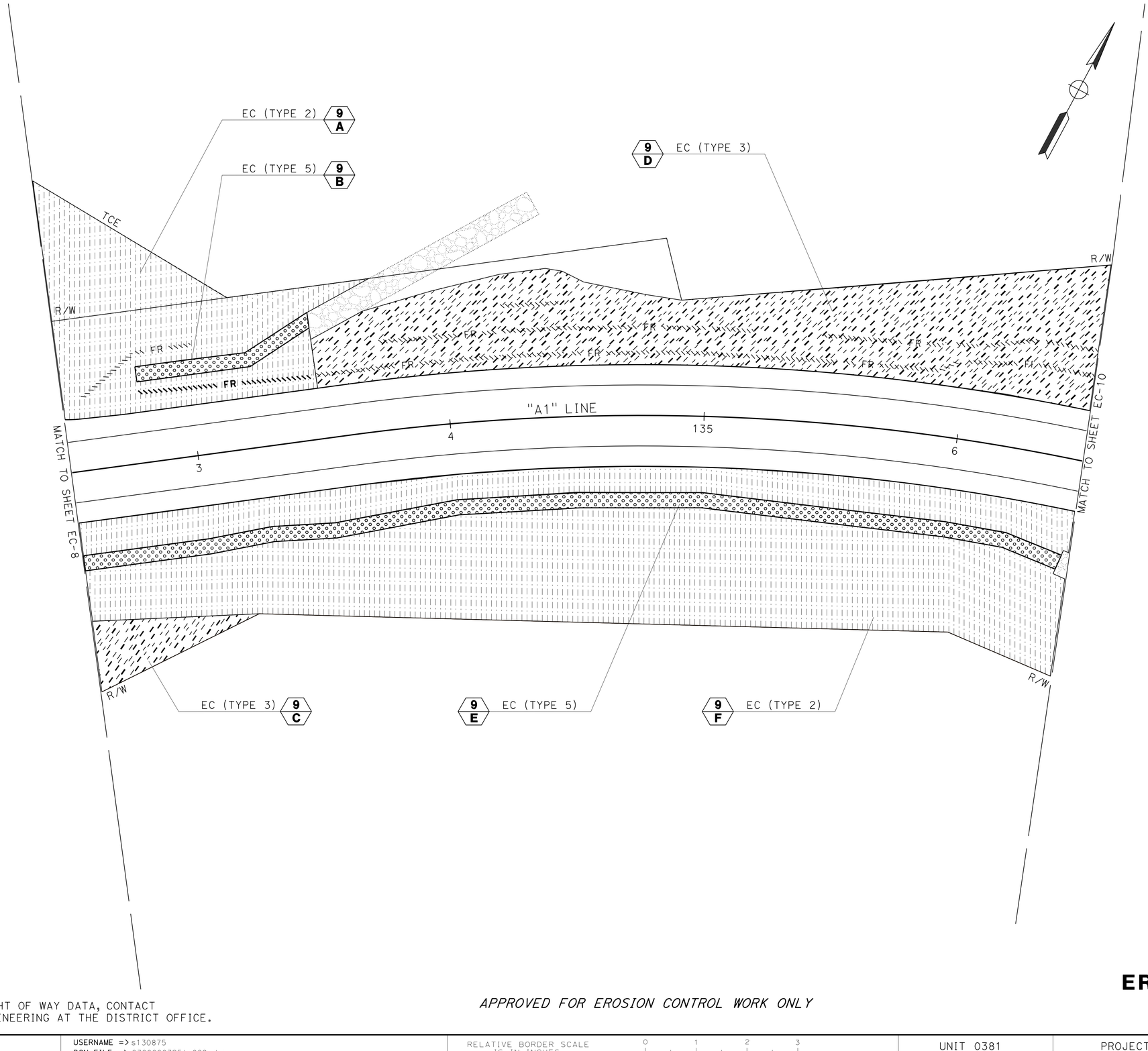

NOTE:

FOR ACCURATE RIGHT OF WAY DATA, CONTACT RIGHT OF WAY ENGINEERING AT THE DISTRICT OFFICE.

APPROVED FOR EROSION CONTROL WORK ONLY

EROSION CONTROL PLAN

SCALE 1"=20'

EC-9

STATE OF CALIFORNIA - DEPARTMENT OF TRANSPORTATION
LANDSCAPE ARCHITECTURE
Caltrans

SENIOR LANDSCAPE ARCHITECT: T. CHRIS JOHNSON
CALCULATED-DESIGNED BY: JENNIFER WHITE
CHECKED BY: JEFF PIETRZAK
REVISED BY
DATE REVISED

LAST REVISION 03-12-15
DATE PLOTTED => 15-JUN-2015
TIME PLOTTED => 15:52

BORDER LAST REVISED 7/2/2010
USERNAME => s130875
DGN FILE => 0300000725te009.dgn
RELATIVE BORDER SCALE IS IN INCHES 0 1 2 3
UNIT 0381
PROJECT NUMBER & PHASE 03000007251

Dist	COUNTY	ROUTE	POST MILES TOTAL PROJECT	SHEET No.	TOTAL SHEETS
03	Pla	193	4.4/5.5	167	197

LICENSED LANDSCAPE ARCHITECT

4-6-15
PLANS APPROVAL DATE

LICENSED LANDSCAPE ARCHITECT
JEFFREY L. PIETRZAK
No. 4457
Signature
12-31-15
Renewal Date
3-12-15
Date
STATE OF CALIFORNIA

THE STATE OF CALIFORNIA OR ITS OFFICERS OR AGENTS SHALL NOT BE RESPONSIBLE FOR THE ACCURACY OR COMPLETENESS OF SCANNED COPIES OF THIS PLAN SHEET.

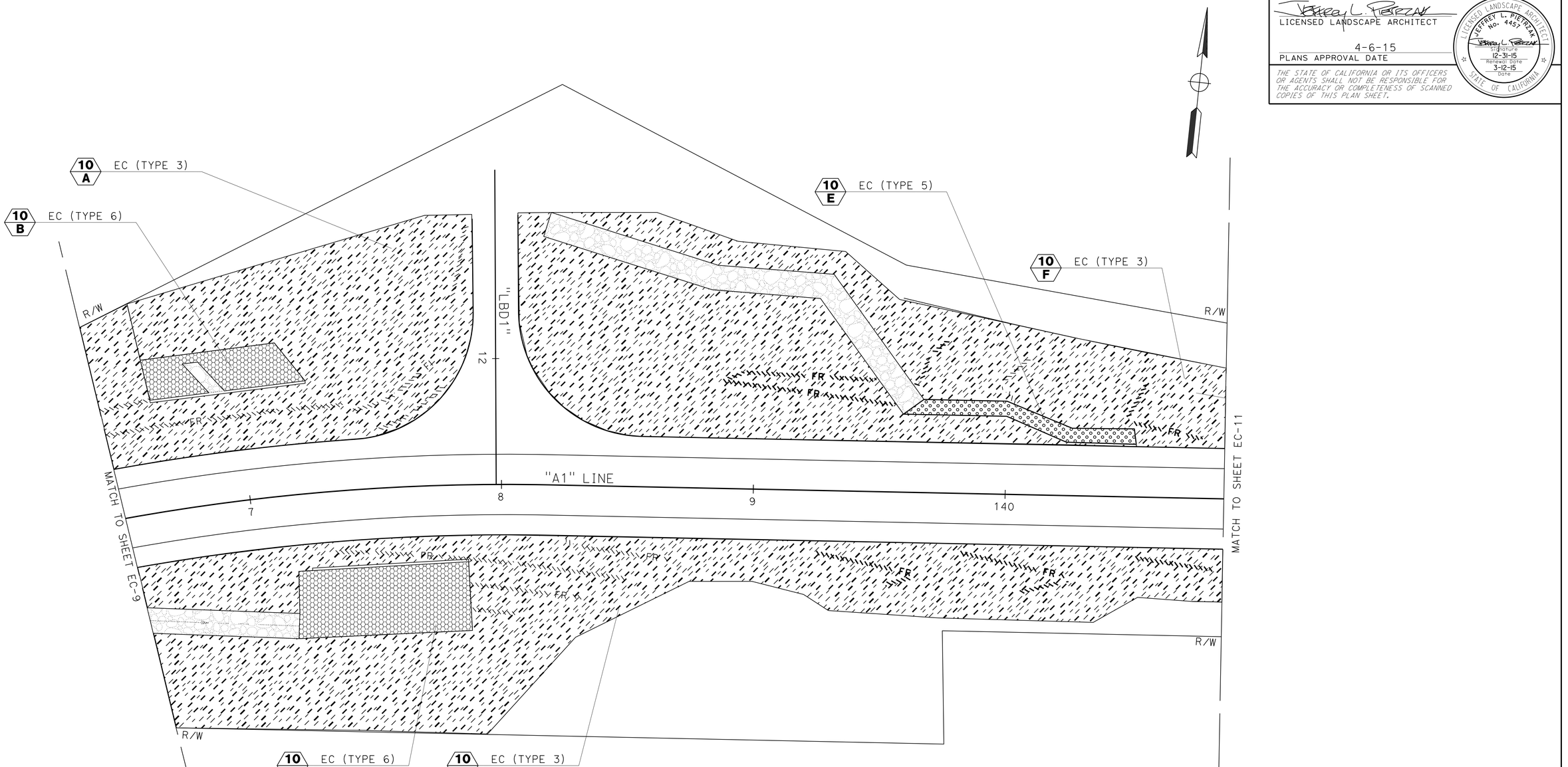

NOTE:

FOR ACCURATE RIGHT OF WAY DATA, CONTACT RIGHT OF WAY ENGINEERING AT THE DISTRICT OFFICE.

APPROVED FOR EROSION CONTROL WORK ONLY

EROSION CONTROL PLAN
EC-10

SCALE 1"=20'

STATE OF CALIFORNIA - DEPARTMENT OF TRANSPORTATION
LANDSCAPE ARCHITECTURE
Caltrans

SENIOR LANDSCAPE ARCHITECT
T. CHRIS JOHNSON

CALCULATED-DESIGNED BY
CHECKED BY

JENNIFER WHITE
JEFF PIETRZAK

REVISED BY
DATE REVISED

LAST REVISION
DATE PLOTTED => 15-JUN-2015
TIME PLOTTED => 15:52
03-12-15

BORDER LAST REVISED 7/2/2010

USERNAME => s130875
DGN FILE => 0300000725te010.dgn

RELATIVE BORDER SCALE IS IN INCHES
0 1 2 3

UNIT 0381

PROJECT NUMBER & PHASE 03000007251

Dist	COUNTY	ROUTE	POST MILES TOTAL PROJECT	SHEET No.	TOTAL SHEETS
03	Pla	193	4.4/5.5	168	197

LICENSED LANDSCAPE ARCHITECT

4-6-15
PLANS APPROVAL DATE

THE STATE OF CALIFORNIA OR ITS OFFICERS OR AGENTS SHALL NOT BE RESPONSIBLE FOR THE ACCURACY OR COMPLETENESS OF SCANNED COPIES OF THIS PLAN SHEET.

LICENSED LANDSCAPE ARCHITECT
JEFFREY L. PIETRZAK
No. 4457
Signature
12-31-15
Renewal Date
3-12-15
Date
STATE OF CALIFORNIA

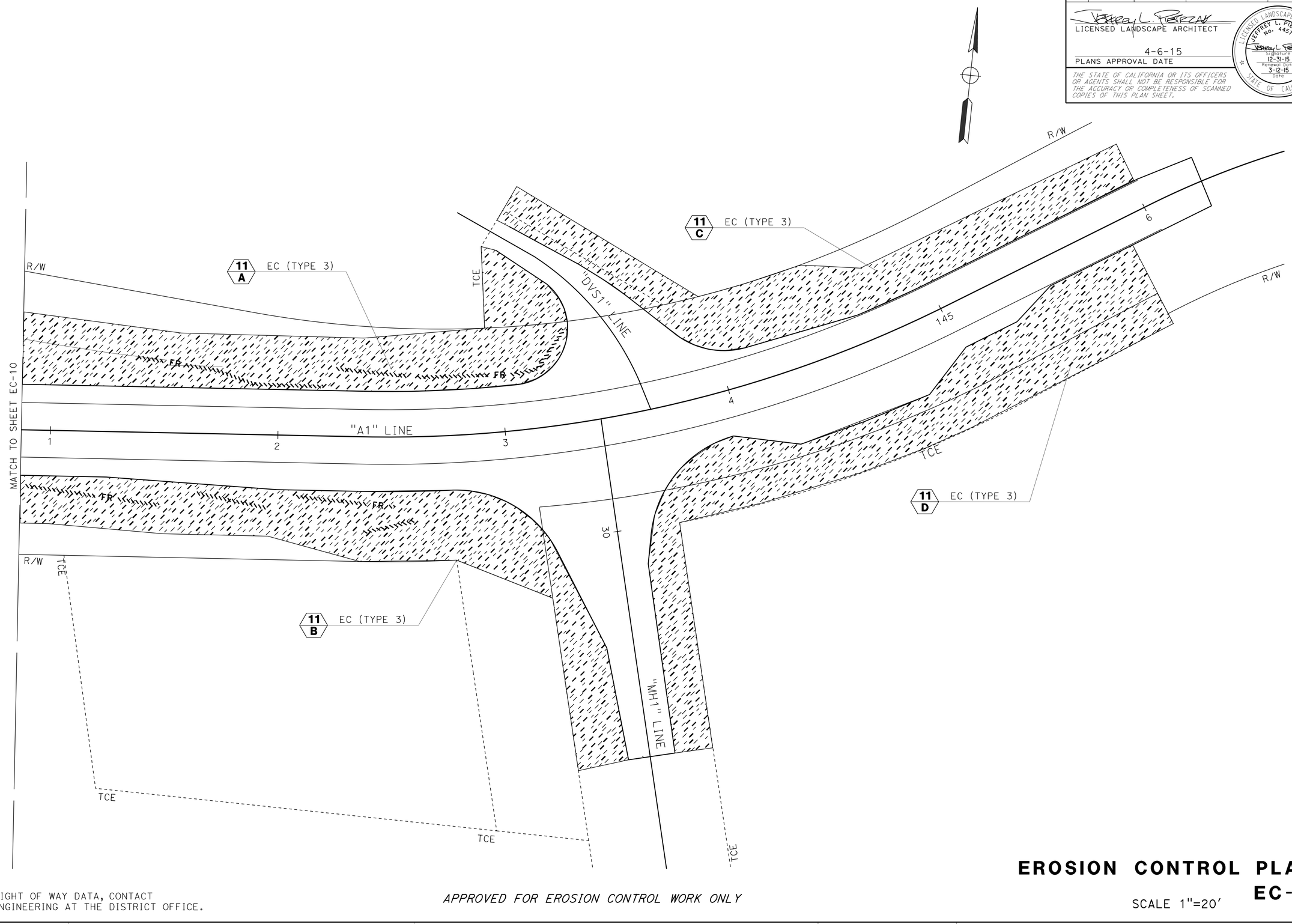

NOTE:
FOR ACCURATE RIGHT OF WAY DATA, CONTACT RIGHT OF WAY ENGINEERING AT THE DISTRICT OFFICE.

APPROVED FOR EROSION CONTROL WORK ONLY

EROSION CONTROL PLAN
EC-11

SCALE 1"=20'

STATE OF CALIFORNIA - DEPARTMENT OF TRANSPORTATION
LANDSCAPE ARCHITECTURE
Caltrans®

SENIOR LANDSCAPE ARCHITECT
T. CHRIS JOHNSON

CALCULATED-DESIGNED BY
JENNIFER WHITE

CHECKED BY
JEFF PIETRZAK

REVISED BY

DATE REVISED

LAST REVISION 03-12-15
DATE PLOTTED => 15-JUN-2015
TIME PLOTTED => 15:52

BORDER LAST REVISED 7/2/2010

USERNAME => s130875
DGN FILE => 0300000725te011.dgn

RELATIVE BORDER SCALE IS IN INCHES 0 1 2 3

UNIT 0381

PROJECT NUMBER & PHASE 03000007251

Dist	COUNTY	ROUTE	POST MILES TOTAL PROJECT	SHEET No.	TOTAL SHEETS
03	Pla	193	4.4/5.5	169	197

LICENSED LANDSCAPE ARCHITECT

4-6-15

PLANS APPROVAL DATE

THE STATE OF CALIFORNIA OR ITS OFFICERS OR AGENTS SHALL NOT BE RESPONSIBLE FOR THE ACCURACY OR COMPLETENESS OF SCANNED COPIES OF THIS PLAN SHEET.

LICENSED LANDSCAPE ARCHITECT
JEFFREY L. PIETRZAK
No. 4457
Signature
12-31-15
Renewal Date
3-12-15
Date
STATE OF CALIFORNIA

EROSION CONTROL QUANTITIES TABLE 1

EC SHEET	LOCATION	(N) EROSION CONTROL TYPE	COMPOST (TYPE 1) COARSE	INCORPORATE MATERIALS	ROLLED EROSION CONTROL PRODUCT (TRM)	COMPOST (TYPE 2) FINE	BONDED FIBER MATRIX (SEED MIX 1)	BONDED FIBER MATRIX (SEED MIX 2)	ROLLED EROSION CONTROL PRODUCT (NETTING)
			SQFT	SQFT	SQFT	SQFT	SQFT	SQFT	SQFT
1	A	1	--	--	--	--	2497	--	--
1	B	1	--	--	--	--	1203	--	--
1	C	5	2862	2862	2862	2862	2862	--	--
1	D	5	2891	2891	2891	2891	2891	--	--
1	E	2	--	--	--	--	4944	--	4944
1	F	2	--	--	--	--	7255	--	7255
2	A	2	--	--	--	--	5256	--	5256
2	B	5	456	456	456	456	456	--	--
2	C	2	--	--	--	--	1217	--	1217
2	D	5	358	358	358	358	358	--	--
2	E	2	--	--	--	--	8653	--	8653
2	F	5	1845	1845	1845	1845	1845	--	--
2	G	3	17996	17996	--	--	17996	--	17996
2	H	3	7608	7608	--	--	7608	--	7608
3	A	3	14096	14096	--	--	14096	--	14096
3	B	6	5100	5100	5100	5100	--	5100	--
3	C	5	1835	1835	1835	1835	1835	--	--
3	D	3	3154	3154	--	--	3154	--	3154
3	E	5	1081	1081	1081	1081	1081	--	--
4	A	3	1025	1025	--	--	1025	--	1025
4	B	5	1452	1452	1452	1452	1452	--	--
4	C	2	--	--	--	--	13463	--	13463
4	D	5	1574	1574	1574	1574	1574	--	--
4	E	3	6091	6091	--	--	6091	--	6091
4	F	1	--	--	--	--	6315	--	--
4	G	2	--	--	--	--	4972	--	4972
4	H	2	--	--	--	--	5484	--	5484
4	I	5	479	479	479	479	479	--	--
4	J	2	--	--	--	--	4335	--	4335
4	K	5	443	443	443	443	443	--	--
5	A	1	--	--	--	--	21056	--	--
5	B	5	1261	1261	1261	1261	1261	--	--
5	C	5	3109	3109	3109	3109	3109	--	--
5	D	2	--	--	--	--	22282	--	22282
5	E	2	--	--	--	--	10920	--	10920
5	F	3	4834	4834	--	--	4834	--	4834
SUBTOTAL 1			79,550	79,550	24,746	24,746	194,302	5100	143,585

(N) NON PAY ITEM, INFORMATION ONLY

EROSION CONTROL QUANTITIES TABLE 1 CONT.

EC SHEET	LOCATION	(N) EROSION CONTROL TYPE	COMPOST (TYPE 1) COARSE	INCORPORATE MATERIALS	ROLLED EROSION CONTROL PRODUCT (TRM)	COMPOST (TYPE 2) FINE	BONDED FIBER MATRIX (SEED MIX 1)	BONDED FIBER MATRIX (SEED MIX 2)	ROLLED EROSION CONTROL PRODUCT (NETTING)
			SQFT	SQFT	SQFT	SQFT	SQFT	SQFT	SQFT
6	A	3	20742	20742	--	--	20742	--	20742
6	B	5	308	308	308	308	308	--	--
6	C	1	--	--	--	--	14556	--	--
6	D	2	--	--	--	--	19405	--	19405
7	A	3	24049	24049	--	--	24049	--	24049
7	B	2	--	--	--	--	4131	--	4131
7	C	6	2799	2799	2799	2799	--	2799	--
7	D	3	18447	18447	--	--	18447	--	18447
7	E	2	--	--	--	--	9564	--	9564
7	F	4	13495	13495	--	--	--	13495	13495
7	G	5	994	994	994	994	994	--	--
8	A	2	--	--	--	--	14536	--	14536
8	B	3	20194	20194	--	--	20194	--	20194
8	C	5	1579	1579	1579	1579	1579	--	--
8	D	4	9093	9093	--	--	--	9093	9093
8	E	1	--	--	--	--	7657	--	--
8	F	6	2984	2984	2984	2984	--	2984	--
8	G	2	--	--	--	--	1939	--	1939
8	H	5	769	769	769	769	769	--	--
8	I	2	--	--	--	--	6622	--	6622
8	J	3	15715	15715	--	--	15715	--	15715
9	A	2	--	--	--	--	5792	--	5792
9	B	5	431	431	431	431	431	--	--
9	C	3	940	940	--	--	940	--	940
9	D	3	12420	12420	--	--	12420	--	12420
9	E	5	2381	2381	2381	2381	2381	--	--
9	F	2	--	--	--	--	21467	--	21467
10	A	3	10010	10010	--	--	10010	--	10010
10	B	6	892	892	892	892	--	892	--
10	C	6	1886	1886	1886	1886	--	1886	--
10	D	3	17870	17870	--	--	17870	--	17870
10	E	5	543	543	543	543	543	--	--
10	F	3	17119	17119	--	--	17119	--	17119
11	A	3	7761	7761	--	--	7761	--	7761
11	B	3	8741	8741	--	--	8741	--	8741
11	C	3	6589	6589	--	--	6589	--	6589
11	D	3	9499	9499	--	--	9499	--	9499
SUBTOTAL 2			228,250	228,250	15,566	15,566	302,770	31,149	296,140
SUBTOTAL 1			79,550	79,550	24,746	24,746	194,302	5,100	143,585
TOTAL			307,800	307,800	40,312	40,312	497,072	36,249	439,725

(N) NON PAY ITEM, INFORMATION ONLY

EROSION CONTROL QUANTITIES

NO SCALE **ECQ-1**

LAST REVISION 03-12-15 | DATE PLOTTED => 15-JUN-2015 | TIME PLOTTED => 15:52

CALCULATED-DESIGNED BY
CHECKED BY
JENNIFER WHITE
JEFF PIETRZAK
REVISED BY
DATE REVISED
SENIOR LANDSCAPE ARCHITECT
T. CHRIS JOHNSON
STATE OF CALIFORNIA - DEPARTMENT OF TRANSPORTATION
LANDSCAPE ARCHITECTURE
Caltrans

BORDER LAST REVISED 7/2/2010 | USERNAME => s130875 | DGN FILE => 0300000725tg001.dgn | RELATIVE BORDER SCALE IS IN INCHES 0 1 2 3 | UNIT 0381 | PROJECT NUMBER & PHASE 03000007251

Dist	COUNTY	ROUTE	POST MILES TOTAL PROJECT	SHEET No.	TOTAL SHEETS
03	Pla	193	4.4/5.5	170	197

LICENSED LANDSCAPE ARCHITECT

4-6-15
PLANS APPROVAL DATE

LICENSED LANDSCAPE ARCHITECT
JEFFREY L. PIETRZAK
No. 4457
Signature
12-31-15
Renewal Date
3-12-15
Date
STATE OF CALIFORNIA

THE STATE OF CALIFORNIA OR ITS OFFICERS OR AGENTS SHALL NOT BE RESPONSIBLE FOR THE ACCURACY OR COMPLETENESS OF SCANNED COPIES OF THIS PLAN SHEET.

FIBER ROLL QUANTITIES

SHEET	LOCATION	QUANTITY LF
EC-1	"A1" R+	88
EC-1	"A1" R+	58
EC-1	"A1" R+	145
EC-1	"A1" R+	102
EC-1	"A1" L+	38
EC-1	"A1" L+	46
EC-1	"A1" L+	43
EC-2	"A1" R+	39
EC-2	"A1" R+	74
EC-2	"A1" R+	159
EC-2	"A1" R+	61
EC-2	"A1" R+	218
EC-2	"A1" R+	75
EC-2	"A1" L+	174
EC-2	"A1" L+	68
EC-2	"A1" L+	79
EC-2	"A1" L+	38
EC-2	"A1" L+	178
EC-2	"A1" L+	147
EC-2	"A1" L+	97
EC-3	"A1" R+	24
EC-3	"A1" R+	18
EC-3	"A1" R+	167
EC-3	"A1" R+	111
EC-3	"A1" R+	42
EC-3	"A1" R+	22
EC-3	"A1" R+	128
EC-3	"A1" R+	90
EC-3	"A1" R+	18
EC-3	"A1" L+	83
EC-3	"A1" L+	165
EC-3	"A1" L+	27
EC-3	"A1" L+	21
EC-3	"A1" L+	26
EC-3	"A1" L+	28
EC-3	"A1" L+	28
EC-3	"A1" L+	32
EC-4	"A1" R+	56
EC-4	"A1" R+	65
EC-4	"A1" R+	66
EC-4	"A1" R+	92
EC-4	"A1" R+	61
EC-4	"A1" R+	123
EC-4	"A1" R+	113
EC-4	"A1" R+	49
EC-4	"A1" L+	24
EC-4	"A1" L+	15
EC-4	"A1" L+	65
EC-4	"A1" L+	67
EC-4	"A1" L+	128
EC-4	"A1" L+	142
EC-4	"A1" L+	103
EC-4	"A1" L+	37
EC-5	"A1" R+	40
SUBTOTAL 1		4203

SHEET	LOCATION	QUANTITY LF
EC-5	"A1" R+	112
EC-5	"A1" R+	491
EC-5	"A1" R+	44
EC-5	"A1" R+	162
EC-5	"A1" L+	15
EC-5	"A1" L+	124
EC-6	"A1" R+	22
EC-6	"A1" R+	63
EC-6	"A1" R+	29
EC-6	"A1" R+	146
EC-6	"A1" R+	222
EC-6	"A1" R+	261
EC-6	"A1" R+	224
EC-6	"A1" L+	29
EC-6	"A1" L+	90
EC-6	"A1" L+	41
EC-6	"A1" L+	243
EC-6	"A1" L+	157
EC-6	"A1" L+	263
EC-7	"A1" R+	21
EC-7	"A1" R+	133
EC-7	"A1" R+	78
EC-7	"A1" R+	33
EC-7	"A1" R+	96
EC-7	"A1" R+	133
EC-7	"A1" R+	137
EC-7	"A1" R+	204
EC-7	"A1" R+	164
EC-7	"A1" R+	140
EC-7	"A1" R+	115
EC-7	"A1" R+	95
EC-7	"A1" R+	68
EC-7	"A1" R+	22
EC-7	"A1" L+	66
EC-7	"A1" L+	104
EC-7	"A1" L+	180
EC-7	"A1" L+	275
EC-7	"A1" L+	302
EC-7	"A1" L+	83
EC-7	"A1" L+	54
EC-7	"A1" L+	46
EC-7	"A1" L+	86
EC-7	"A1" L+	126
EC-7	"A1" L+	159
EC-8	"A1" R+	16
EC-8	"A1" R+	52
EC-8	"A1" R+	61
EC-8	"A1" R+	41
EC-8	"A1" R+	111
EC-8	"A1" R+	44
EC-8	"A1" R+	5
EC-8	"A1" R+	33
EC-8	"A1" R+	70
EC-8	"A1" R+	112
SUBTOTAL 2		6203

SHEET	LOCATION	QUANTITY LF
EC-8	"A1" L+	10
EC-8	"A1" L+	95
EC-8	"A1" L+	146
EC-8	"A1" L+	194
EC-8	"A1" L+	116
EC-8	"A1" L+	88
EC-8	"A1" L+	80
EC-9	"A1" L+	49
EC-9	"A1" L+	373
EC-9	"A1" L+	274
EC-9	"A1" L+	22
EC-10	"A1" R+	17
EC-10	"A1" R+	44
EC-10	"A1" R+	115
EC-10	"A1" R+	43
EC-10	"A1" R+	51
EC-10	"A1" R+	64
EC-10	"A1" R+	32
EC-10	"A1" R+	20
EC-10	"A1" R+	96
EC-10	"A1" L+	36
EC-10	"A1" L+	31
EC-10	"A1" L+	28
EC-10	"A1" L+	59
EC-10	"A1" L+	68
EC-10	"A1" L+	23
EC-10	"A1" L+	25
EC-10	"A1" L+	47
EC-11	"A1" R+	59
EC-11	"A1" R+	34
EC-11	"A1" R+	43
EC-11	"A1" R+	22
EC-11	"A1" L+	85
EC-11	"A1" L+	111
SUBTOTAL 3		2600
SUBTOTAL 2		6203
SUBTOTAL 1		4203
TOTAL		13,006

MOVE IN- MOVE OUT (EROSION CONTROL)

SEASON	QUANTITY
1	3
2	3
3	3
TOTAL	9

EROSION CONTROL QUANTITIES

NO SCALE

ECQ-2

LAST REVISION: 03-12-15
DATE PLOTTED => 15-JUN-2015
TIME PLOTTED => 15:52

REVISED BY | DATE REVISED
JENNIFER WHITE | JEFF PIETRZAK
CALCULATED-DESIGNED BY | CHECKED BY
SENIOR LANDSCAPE ARCHITECT: T. CHRIS JOHNSON
STATE OF CALIFORNIA - DEPARTMENT OF TRANSPORTATION
Caltrans
LANDSCAPE ARCHITECTURE

M

Maint	MAINTENANCE
Max	MAXIMUM
MB	METAL BEAM
MBB	METAL BEAM BARRIER
MBGR	METAL BEAM GUARD RAILING
Med	MEDIAN
MGS	MIDWEST GUARDRAIL SYSTEM
MH	MANHOLE
Min	MINIMUM
Misc	MISCELLANEOUS
Misc I & S	MISCELLANEOUS IRON AND STEEL
Mkr	MARKER
Mod	MODIFIED, MODIFY
Mon	MONUMENT
MP	METAL PLATE
MPGR	METAL PLATE GUARD RAILING
MR	MOVEMENT RATING
MSE	MECHANICALLY STABILIZED EMBANKMENT
Mt	MOUNTAIN, MOUNT
Mtl	MATERIAL
MVP	MAINTENANCE VEHICLE PULLOUT

N

N	NORTH
NB	NORTHBOUND
No.	NUMBER (MUST HAVE PERIOD)
Nos.	NUMBERS (MUST HAVE PERIOD)
NPS	NOMINAL PIPE SIZE
NS	NEAR SIDE
NSP	NEW STANDARD PLAN
NTS	NOT TO SCALE

O

Oblr	OBLITERATE
OC	OVERCROSSING
OD	OUTSIDE DIAMETER
OF	OUTSIDE FACE
OG	ORIGINAL GROUND
OGAC	OPEN GRADED ASPHALT CONCRETE
OGFC	OPEN GRADED FRICTION COURSE
OH	OVERHEAD
OHWM	ORDINARY HIGH WATER MARK
O-O	OUT TO OUT
Opp	OPPOSITE
OSD	OVERSIDE DRAIN

P

P	PAGE
PAP	PERFORATED ALUMINUM PIPE
PB	PULL BOX
PC	POINT OF CURVATURE, PRECAST
PCC	POINT OF COMPOUND CURVE, PORTLAND CEMENT CONCRETE
PCMS	PORTABLE CHANGEABLE MESSAGE SIGN
PCP	PERFORATED CONCRETE PIPE, PRESTRESSED CONCRETE PIPE
PCVC	POINT OF COMPOUND VERTICAL CURVE
PEC	PERMIT TO ENTER AND CONSTRUCT
Ped	PEDESTRIAN
Ped OC	PEDESTRIAN OVERCROSSING
Ped UC	PEDESTRIAN UNDERCROSSING
Perm Mtl	PERMEABLE MATERIAL

P continued

PG	PROFILE GRADE
PI	POINT OF INTERSECTION
PJP	PARTIAL JOINT PENETRATION
Pkwy	PARKWAY
℄,PL	PLATE
P/L	PROPERTY LINE
PM	POST MILE, TIME FROM NOON TO MIDNIGHT
PN	PAVING NOTCH
POC	POINT OF HORIZONTAL CURVE
POT	POINT OF TANGENT
POVC	POINT OF VERTICAL CURVE
PP	PIPE PILE, PLASTIC PIPE, POWER POLE
PPL	PREFORMED PERMEABLE LINER
PPP	PERFORATED PLASTIC PIPE
PRC	POINT OF REVERSE CURVE
PRF	PAVEMENT REINFORCING FABRIC
PRVC	POINT OF REVERSE VERTICAL CURVE
PS&E	PLANS, SPECIFICATIONS AND ESTIMATES
PS, P/S	PRESTRESSED
PSP	PERFORATED STEEL PIPE
PT	POINT OF TANGENCY
PVC	POLYVINYL CHLORIDE
Pvmt	PAVEMENT

Q

Qty	QUANTITY

R

R	RADIUS
R & D	REMOVE AND DISPOSE
R & S	REMOVE AND SALVAGE
R/C	RATE OF CHANGE
RCA	REINFORCED CONCRETE ARCH
RCB	REINFORCED CONCRETE BOX
RCP	REINFORCED CONCRETE PIPE
RCPA	REINFORCED CONCRETE PIPE ARCH
Rd	ROAD
Reinf	REINFORCED, REINFORCEMENT, REINFORCING
Rel	RELOCATE
Repl	REPLACEMENT
Ret	RETAINING
Rev	REVISED, REVISION
Rdwy	ROADWAY
RHMA	RUBBERIZED HOT MIX ASPHALT
Riv	RIVER
RM	ROAD-MIXED
RP	RADIUS POINT, REFERENCE POINT
RR	RAILROAD
RSP	ROCK SLOPE PROTECTION, REVISED STANDARD PLAN
Rt	RIGHT
Rte	ROUTE
RW	REDWOOD, RETAINING WALL
R/W	RIGHT OF WAY
Rwy	RAILWAY

S

S	SOUTH, SUPPLEMENT
SAE	STRUCTURE APPROACH EMBANKMENT
Salv	SALVAGE
SAPP	STRUCTURAL ALUMINUM PLATE PIPE
SB	SOUTHBOUND
SC	SAND CUSHION
SCSP	SLOTTED CORRUGATED STEEL PIPE
SD	STORM DRAIN
Sec	SECOND, SECTION
Sep	SEPARATION
SG	SUBGRADE
Shld	SHOULDER
Sht	SHEET
Sim	SIMILAR
℄	STATION LINE
SM	SELECTED MATERIAL
Spec	SPECIAL, SPECIFICATIONS
SPP	SLOTTED PLASTIC PIPE
SS	SLOPE STAKE
SSBM	STRAP AND SADDLE BRACKET METHOD
SSD	STRUCTURAL SECTION DRAIN
SSPA	STRUCTURAL STEEL PLATE ARCH
SSPP	STRUCTURAL STEEL PLATE PIPE
SSPPA	STRUCTURAL STEEL PLATE PIPE ARCH
SSRP	STEEL SPIRAL RIB PIPE
St	STREET
Sta	STATION
STBB	SINGLE THRIE BEAM BARRIER
Std	STANDARD
Str	STRUCTURE
Surf	SURFACING
SW	SIDEWALK, SOUND WALL
Swr	SEWER
Sym	SYMMETRICAL
S4S	SURFACE 4 SIDES

T

T	SEMI-TANGENT
Tan	TANGENT
TBB	THRIE BEAM BARRIER
Tbr	TIMBER
TC	TOP OF CURB
TCB	TRAFFIC CONTROL BOX
TCE	TEMPORARY CONSTRUCTION EASEMENT
Tel	TELEPHONE
Temp	TEMPORARY
TG	TOP OF GRADE
Tot	TOTAL
TP	TELEPHONE POLE
TPB	TREATED PERMEABLE BASE
TPM	TREATED PERMEABLE MATERIAL
Trans	TRANSITION

T continued

TS	TRANSVERSE, TRAFFIC SIGNAL, TUBULAR STEEL
Typ	TYPICAL

U

UC	UNDERCROSSING
UD	UNDERDRAIN
UG	UNDERGROUND
UON	UNLESS OTHERWISE NOTED
UP	UNDERPASS

V

V	VALVE, DESIGN SPEED
Var	VARIABLE, VARIES
VC	VERTICAL CURVE
VCP	VITRIFIED CLAY PIPE
Vert	VERTICAL
Via	VIADUCT
Vol	VOLUME

W

W	WEST, WIDTH
WB	WESTBOUND
WH	WEEP HOLE
WM	WIRE MESH
WS	WATER SURFACE
WSP	WELDED STEEL PIPE
Wt	WEIGHT
WV	WATER VALVE
WW	WINGWALL
WWLOL	WINGWALL LAYOUT LINE

X

X Sec	CROSS SECTION
Xing	CROSSING

Y

Yr	YEAR
Yrs	YEARS

Dist	COUNTY	ROUTE	POST MILES TOTAL PROJECT	SHEET No.	TOTAL SHEETS
03	Pla	193	4.4/5.5	171	197

Grace M. Tsushima
REGISTERED CIVIL ENGINEER

July 19, 2013
PLANS APPROVAL DATE

REGISTERED PROFESSIONAL ENGINEER — Grace M. Tsushima — No. C49814 — Exp. 9-30-14 — CIVIL — STATE OF CALIFORNIA

THE STATE OF CALIFORNIA OR ITS OFFICERS OR AGENTS SHALL NOT BE RESPONSIBLE FOR THE ACCURACY OR COMPLETENESS OF SCANNED COPIES OF THIS PLAN SHEET.

TO ACCOMPANY PLANS DATED 4-6-15

UNIT OF MEASUREMENT SYMBOLS:

Some of the symbols used in the project plan quantity tables and in the Bid Item List are:

TABLE A

SYMBOL USED	DEFINITIONS
ACRE	ACRE
CF	CUBIC FOOT
CY	CUBIC YARD
EA	EACH
GAL	GALLON
LB	POUND
LF	LINEAR FOOT
SQFT	SQUARE FOOT
SQYD	SQUARE YARD
STA	100 FEET
TAB	TABLET
TON	2,000 POUNDS

Some of the symbols used in the plans other than in the project plan quantity tables are:

TABLE B

SYMBOL USED	DEFINITIONS
ksi	KIPS PER SQUARE INCH
ksf	KIPS PER SQUARE FOOT
psi	POUNDS PER SQUARE INCH
psf	POUNDS PER SQUARE FOOT
lb/ft^3, pcf	POUNDS PER CUBIC FOOT
tsf	TONS PER SQUARE FOOT
mph, MPH *	MILES PER HOUR
ø	NOMINAL DIAMETER
oz	OUNCE
lb	POUND
kip	1,000 POUNDS
cal	CALORIE
ft	FOOT OR FEET
gal	GALLON

* For use on a sign panel only

STATE OF CALIFORNIA
DEPARTMENT OF TRANSPORTATION

ABBREVIATIONS (SHEET 2 OF 2)

NO SCALE

RSP A10B DATED JULY 19, 2013 SUPERSEDES STANDARD PLAN A10B DATED MAY 20, 2011 - PAGE 2 OF THE STANDARD PLANS BOOK DATED 2010.

REVISED STANDARD PLAN RSP A10B

2010 REVISED STANDARD PLAN RSP A10B

6-7-13

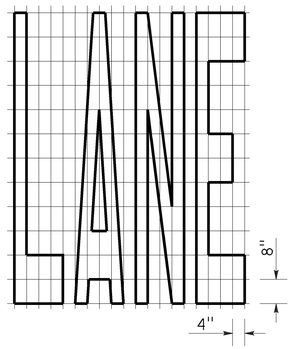

A=24 ft²

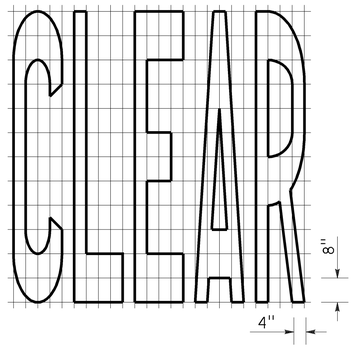

A=27 ft²

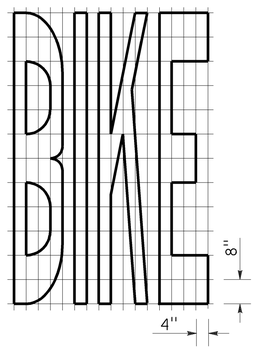

A=21 ft²

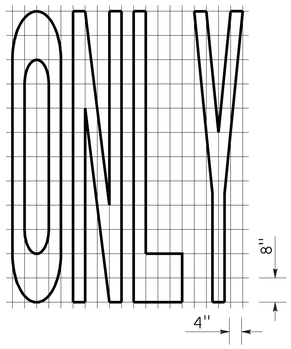

A=22 ft²

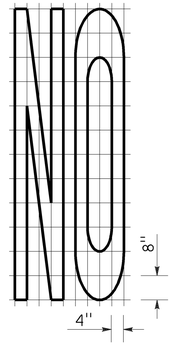

A=14 ft²

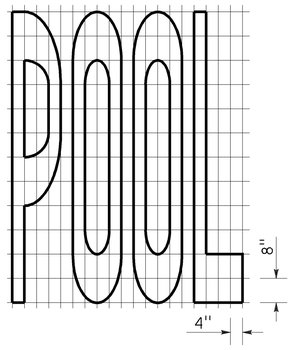

A=23 ft²

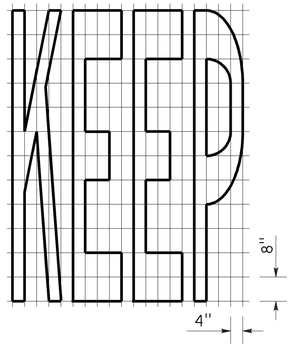

A=24 ft²

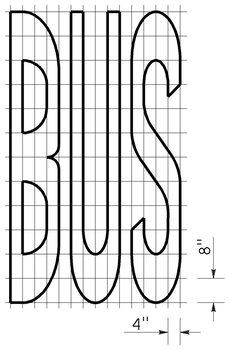

A=20 ft²

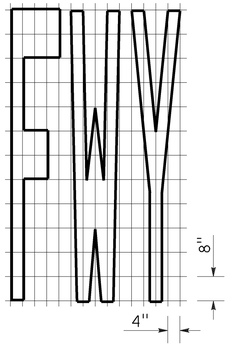

A=16 ft²

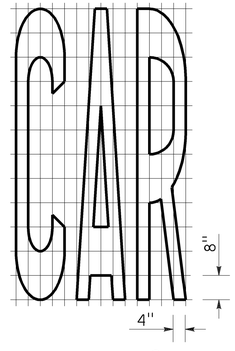

A=17 ft²

Dist	COUNTY	ROUTE	POST MILES TOTAL PROJECT	SHEET No.	TOTAL SHEETS
03	Pla	193	4.4/5.5	172	197

Roberta L. McLaughlin
REGISTERED CIVIL ENGINEER

July 20, 2012
PLANS APPROVAL DATE

REGISTERED PROFESSIONAL ENGINEER
Roberta L. McLaughlin
No. C40375
Exp. 3-31-13
CIVIL
STATE OF CALIFORNIA

THE STATE OF CALIFORNIA OR ITS OFFICERS OR AGENTS SHALL NOT BE RESPONSIBLE FOR THE ACCURACY OR COMPLETENESS OF SCANNED COPIES OF THIS PLAN SHEET.

TO ACCOMPANY PLANS DATED 4-6-15

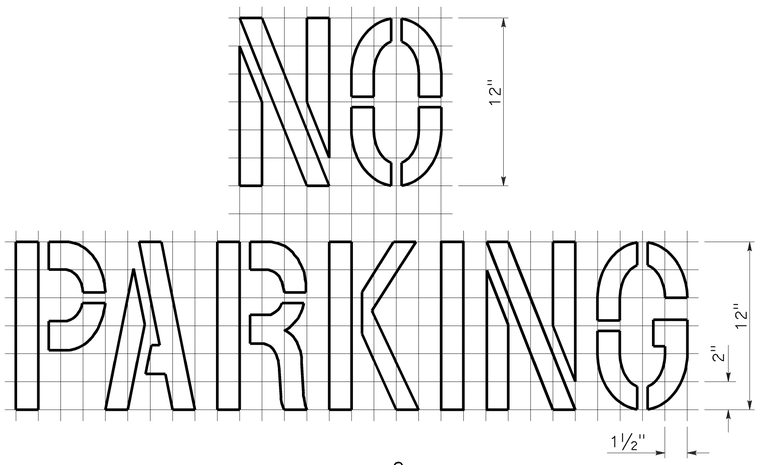

A=2 ft²
See Notes 6 and 7

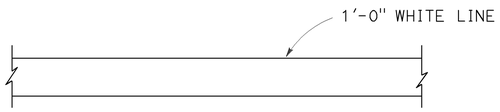

LIMIT LINE (STOP LINE)

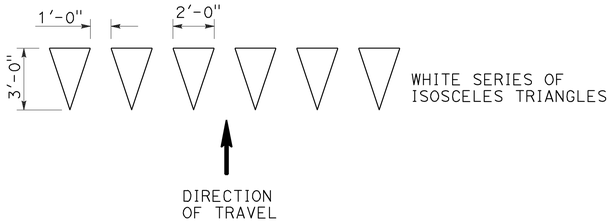

YIELD LINE

WORD MARKINGS			
ITEM	ft²	ITEM	ft²
LANE	24	NO	14
POOL	23	BIKE	21
CAR	17	BUS	20
CLEAR	27	ONLY	22
KEEP	24	FWY	16

NOTES:

1. If a message consists of more than one word, it should read "UP", i.e., the first word should be nearest the driver.
2. The space between words should be at least four times the height of the characters for low speed roads, but not more than ten times the height of the characters. The space may be reduced appropriately where there is limited space because of local conditions.
3. Minor variations in dimensions may be accepted by the Engineer.
4. Portions of a letter, number or symbol may be separated by connecting segments not to exceed 2" in width.
5. The words "NO PARKING" pavement marking is to be used for parking facilities. For typical locations of markings, see Standard Plans A90A and A90B.
6. The words "NO PARKING", shall be painted in white letters no less than 1'-0" high on a contrasting background and located so that it is visible to traffic enforcement officials.

STATE OF CALIFORNIA
DEPARTMENT OF TRANSPORTATION

PAVEMENT MARKINGS WORDS, LIMIT AND YIELD LINES

NO SCALE

RSP A24E DATED JULY 20, 2012 SUPERSEDES STANDARD PLAN A24E
DATED MAY 20, 2011 - PAGE 17 OF THE STANDARD PLANS BOOK DATED 2010.

REVISED STANDARD PLAN RSP A24E

2010 REVISED STANDARD PLAN RSP A24E

6-12-12

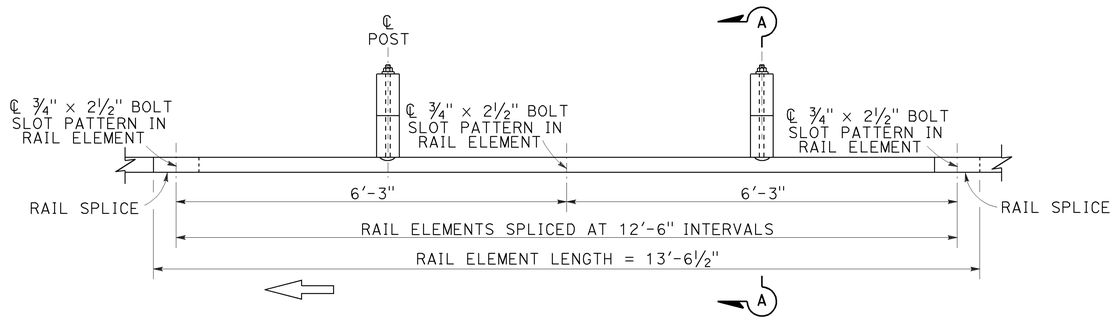

PLAN

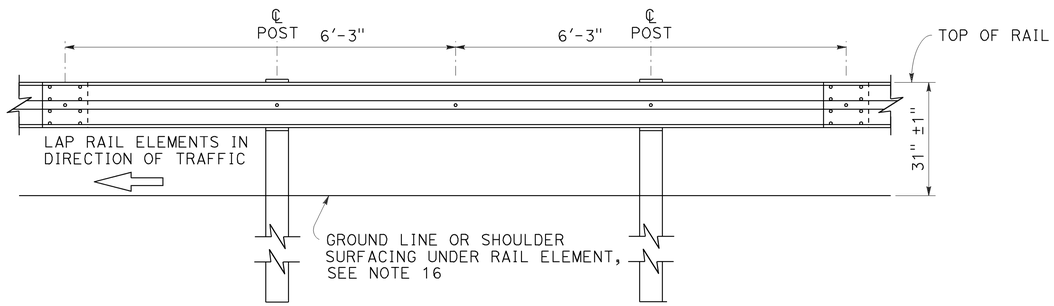

ELEVATION

MIDWEST GUARDRAIL SYSTEM WITH WOOD POST AND BLOCKS

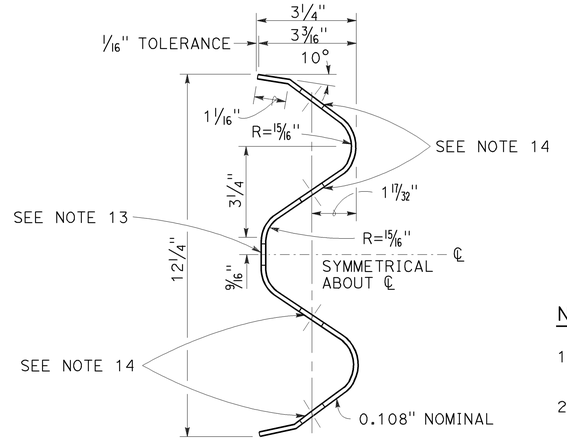

SECTION THRU RAIL ELEMENT

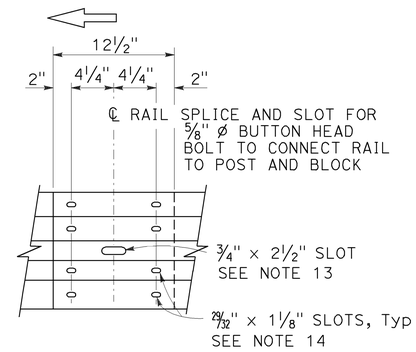

ELEVATION

RAIL ELEMENT SPLICE DETAIL

a) Connect the over lapped end of the rail elements with ⅝" ø x 1⅜" button head oval shoulder splice bolts inserted into the 29/32" x 1⅛" slots and bolted together with ⅝" ø recessed hex nuts. Recess of hex nut points toward rail element. A total of 8 bolts and nuts are to be used at each rail splice connection.

b) The ends of the rail elements are to be overlapped in the direction of traffic (see details).

c) Where end cap is to be attached to the end of a rail element, a total of 4 of the above described splice bolts and nuts are to be used.

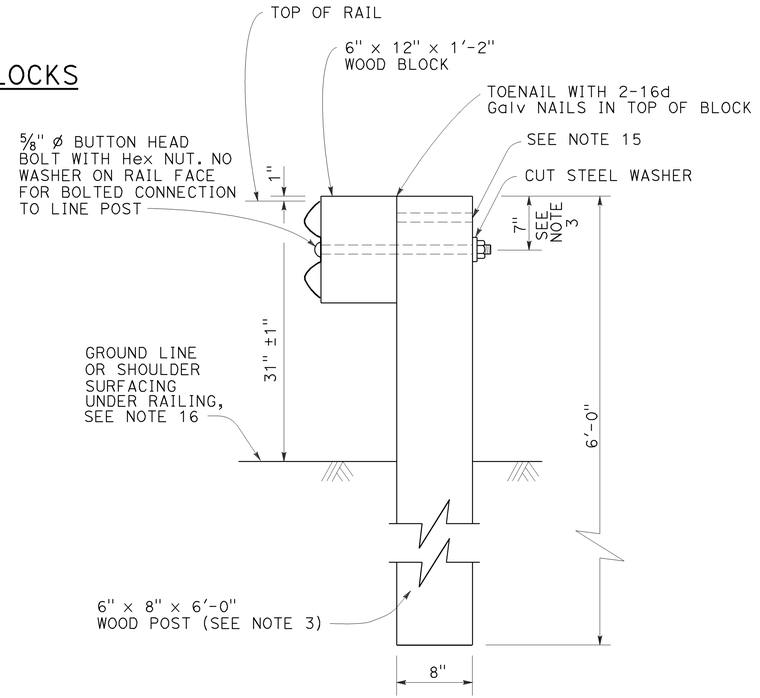

SECTION A-A

TYPICAL WOOD LINE POST INSTALLATION

See Note 4

NOTES:

1. For details of steel post installations, see Revised Standard Plan RSP A77L2.
2. For details of standard hardware used to construct MGS, see Revised Standard Plan RSP A77M1.
3. For details of wood posts and wood blocks used to construct MGS, see Revised Standard Plan RSP A77N1.
4. For additional installation details, see Revised Standard Plan RSP A77N3.
5. MGS post spacing to be 6'-3" center to center, except as otherwise noted.
6. For MGS typical layouts, see the A77P, A77Q and A77R Series of Standard Plans.
7. If railing is connected to terminal system end treatment, use 31" height terminal system end treatment.
8. For MGS end anchor details, see Revised Standard Plans RSP A77S1 and RSP A77T2.
9. For details of MGS transition to bridge railing, see Revised Standard Plan RSP A77U4.
10. For additional details of MSG connection to bridge railing, see Revised Standard Plans RSP A77U1, RSP A77U2 and RSP A77V1.
11. For MGS connection details to abutments and walls, see Revised Standard Plan RSP A77U3.
12. For typical MGS delineation and dike positioning details, see Revised Standard Plan RSP A77N4.
13. Slotted hole for bolted connection of rail element to block and post. See "Section Thru Rail Element".
14. Slotted holes for splice bolts to overlap ends of rail element. See "Section Thru Rail Element".
15. Additional hole in uppermost portion of line post is for potential future adjustments of railing height. See Revised Standard Plan RSP A77N1.
16. Install posts in soil.

Dist	COUNTY	ROUTE	POST MILES TOTAL PROJECT	SHEET No.	TOTAL SHEETS
03	Pla	193	4.4/5.5	173	197

Randell D. Hiatt
REGISTERED CIVIL ENGINEER

July 19, 2013
PLANS APPROVAL DATE

REGISTERED PROFESSIONAL ENGINEER — Randell D. Hiatt — No. C50200 — Exp. 6-30-15 — CIVIL — STATE OF CALIFORNIA

THE STATE OF CALIFORNIA OR ITS OFFICERS OR AGENTS SHALL NOT BE RESPONSIBLE FOR THE ACCURACY OR COMPLETENESS OF SCANNED COPIES OF THIS PLAN SHEET.

TO ACCOMPANY PLANS DATED 4-6-15

STATE OF CALIFORNIA
DEPARTMENT OF TRANSPORTATION

MIDWEST GUARDRAIL SYSTEM STANDARD RAILING SECTION (WOOD POST WITH WOOD BLOCK)

NO SCALE

RSP A77L1 DATED JULY 19, 2013 SUPPLEMENTS STANDARD PLANS BOOK DATED 2010.

REVISED STANDARD PLAN RSP A77L1

2010 REVISED STANDARD PLAN RSP A77L1

7-3-13

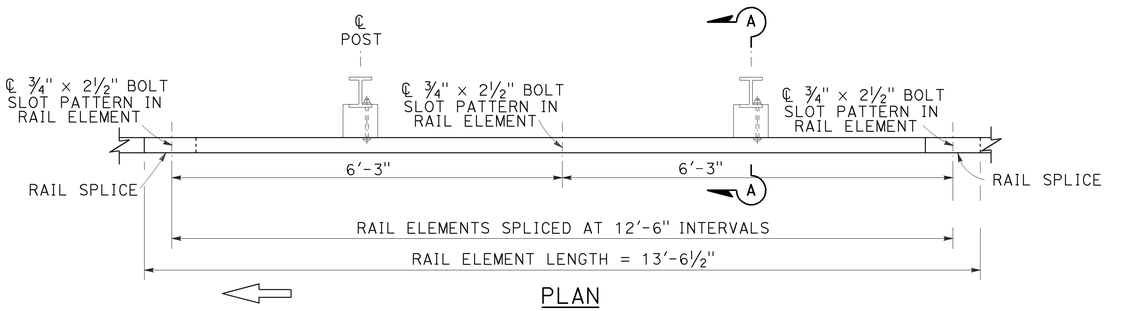

PLAN

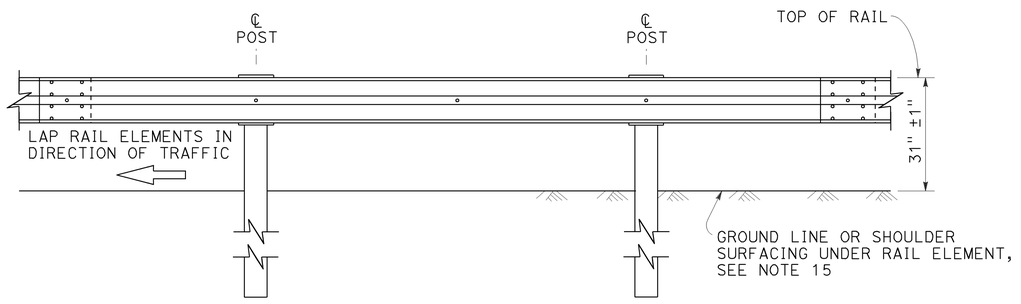

ELEVATION

MIDWEST GUARDRAIL SYSTEM WITH STEEL POSTS AND NOTCHED WOOD OR NOTCHED RECYCLED PLASTIC BLOCKS

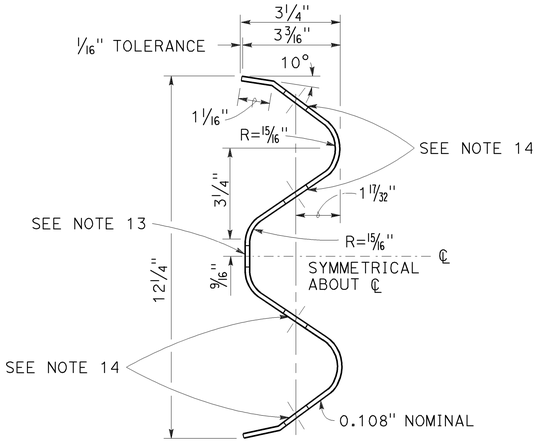

SECTION THRU RAIL ELEMENT

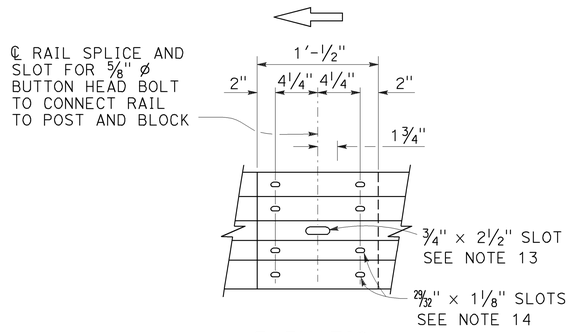

ELEVATION

RAIL ELEMENT SPLICE DETAIL

a) Connect the over lapped end of the rail elements with ⅝" ø x 1⅜" button head oval shoulder splice bolts inserted into the 29/32" x 1⅛" slots and bolted together with ⅝" ø recessed hex nuts. Recess of hex nut points toward rail element. A total of 8 bolts and nuts are to be used at each rail splice connection.

b) The ends of the rail elements are to be overlapped in the direction of traffic (see details).

c) Where end cap is to be attached to the end of a rail element, a total of 4 of the above described splice bolts and nuts are to be used.

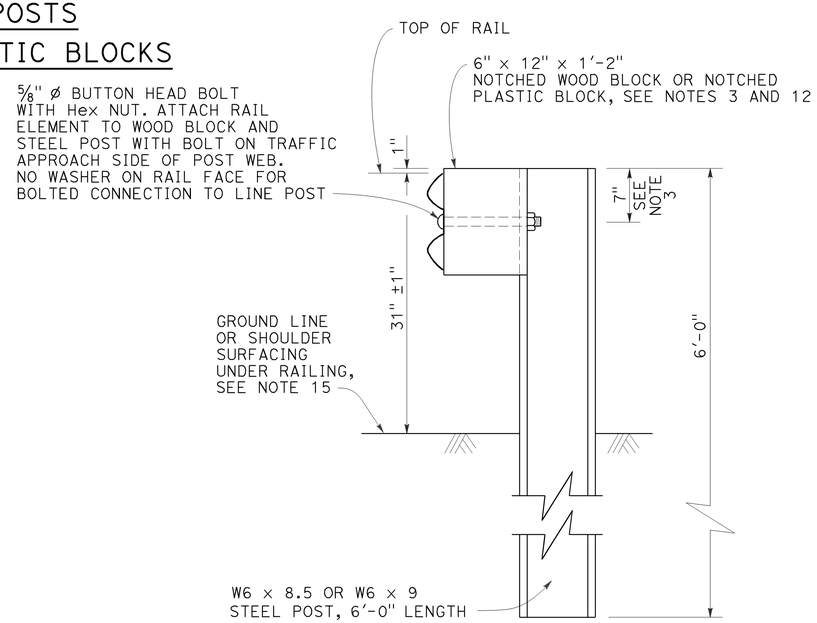

SECTION A-A

TYPICAL STEEL LINE POST INSTALLATION

See Note 4

Dist	COUNTY	ROUTE	POST MILES TOTAL PROJECT	SHEET No.	TOTAL SHEETS
03	Pla	193	4.4/5.5	174	197

Randell D. Hiatt
REGISTERED CIVIL ENGINEER

July 19, 2013
PLANS APPROVAL DATE

REGISTERED PROFESSIONAL ENGINEER — Randell D. Hiatt — No. C50200 — Exp. 6-30-15 — CIVIL — STATE OF CALIFORNIA

THE STATE OF CALIFORNIA OR ITS OFFICERS OR AGENTS SHALL NOT BE RESPONSIBLE FOR THE ACCURACY OR COMPLETENESS OF SCANNED COPIES OF THIS PLAN SHEET.

TO ACCOMPANY PLANS DATED 4-6-15

NOTES:

1. For details of wood post installations, see Revised Standard Plan RSP A77L1.
2. For details of standard hardware used to construct MGS, see Revised Standard Plan RSP A77M1.
3. For details of steel posts and notched wood blocks used to construct MGS, see Revised Standard Plan RSP A77N2.
4. For additional installation details, see Revised Standard Plan RSP A77N3.
5. MGS post spacing to be 6'-3" center to center, except as otherwise noted.
6. For MGS typical layouts, see the A77P, A77Q and A77R Series of Standard Plans.
7. If railing is connected to terminal system end treatment, use 31" height terminal system end treatment.
8. For MGS end anchor details, see Revised Standard Plans RSP A77S1 and RSP A77T2.
9. For details of MGS transition to bridge railing, see Revised Standard Plan RSP A77U4.
10. For additional details of MGS connection to bridge railings, see Revised Standard Plans RSP A77U1, RSP A77U2 and RSP A77V1.
11. For dike positioning and MGS delineation details, see Revised Standard Plan RSP A77N4.
12. Notched face of block faces steel post.
13. Slotted hole for bolted connection of rail element to block and post. See "Section Thru Rail Element".
14. Slotted holes for splice bolts to overlap ends of rail element. See "Section Thru Rail Element".
15. Install posts in soil.

STATE OF CALIFORNIA
DEPARTMENT OF TRANSPORTATION

MIDWEST GUARDRAIL SYSTEM STANDARD RAILING SECTION (STEEL POST WITH NOTCHED WOOD OR NOTCHED RECYCLED PLASTIC BLOCK)

NO SCALE

RSP A77L2 DATED JULY 19, 2013 SUPPLEMENTS THE STANDARD PLANS BOOK DATED 2010.

REVISED STANDARD PLAN RSP A77L2

2010 REVISED STANDARD PLAN RSP A77L2

7-3-13

Dist	COUNTY	ROUTE	POST MILES TOTAL PROJECT	SHEET No.	TOTAL SHEETS
03	Pla	193	4.4/5.5	175	197

Randell D. Hiatt
REGISTERED CIVIL ENGINEER

July 19, 2013
PLANS APPROVAL DATE

REGISTERED PROFESSIONAL ENGINEER
Randell D. Hiatt
No. C50200
Exp. 6-30-15
CIVIL
STATE OF CALIFORNIA

THE STATE OF CALIFORNIA OR ITS OFFICERS OR AGENTS SHALL NOT BE RESPONSIBLE FOR THE ACCURACY OR COMPLETENESS OF SCANNED COPIES OF THIS PLAN SHEET.

TO ACCOMPANY PLANS DATED 4-6-15

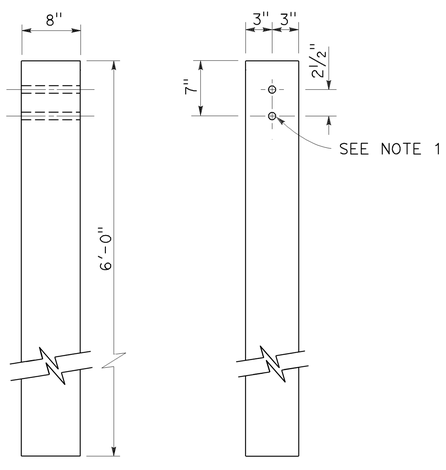

SIDE FRONT

6" x 8" WOOD POST
See Note 3

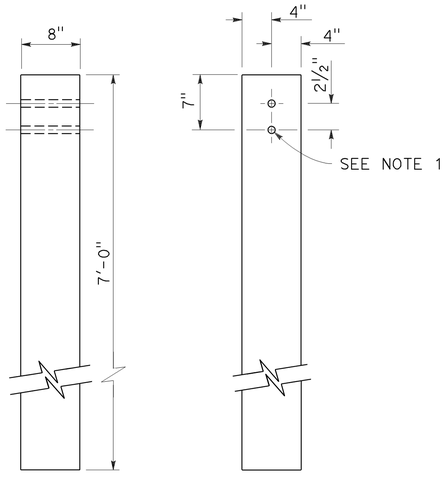

SIDE FRONT

8" x 8" WOOD POST
See Note 4

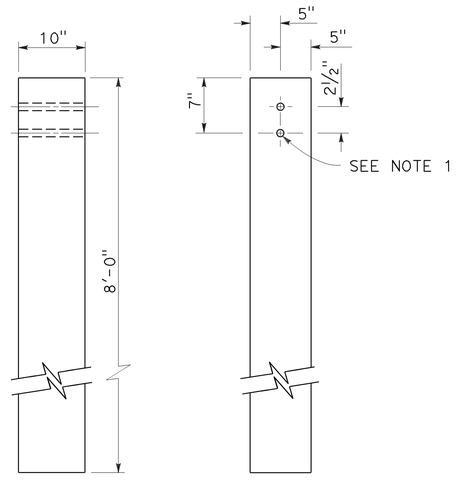

SIDE FRONT

10" x 10" WOOD POST
See Note 5

NOTES:

1. All holes in wood posts and blocks shall be ¾" Dia ± 1/16".
2. Dimensions shown for wood post are nominal.
3. This post and block combination used for standard line post sections of MGS.
4. This post and 8" x 12" block combination used for line post sections of MGS on narrow roadways.
5. This post and 8" x 12" block combination is typically used where strengthened line post sections of MGS are warranted to shield fixed objects.
6. See Revised Standard Plan RSP A77L3 for use of 6" x 8" and 8" x 8" wood blocks.

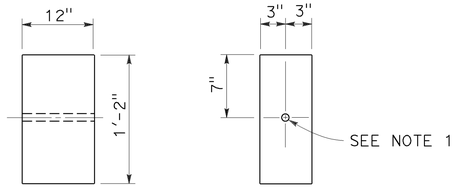

SIDE FRONT

6" x 12" WOOD BLOCK
See Note 3

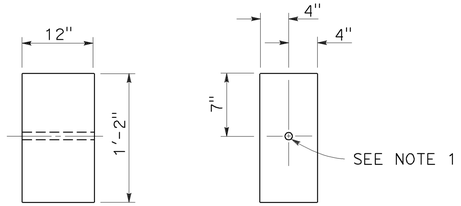

SIDE FRONT

8" x 12" WOOD BLOCK

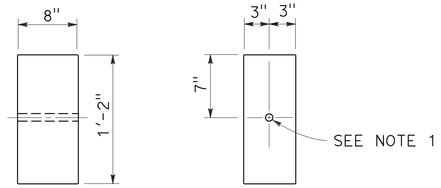

SIDE FRONT

6" x 8" WOOD BLOCK
Only for use with metal beam guard rail see Note 6

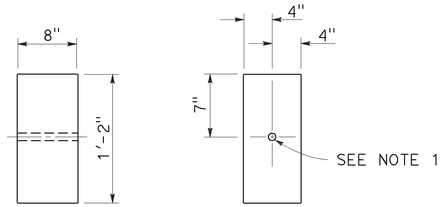

SIDE FRONT

8" x 8" WOOD BLOCK
Only for use with metal beam guard rail see Note 6

STATE OF CALIFORNIA
DEPARTMENT OF TRANSPORTATION

MIDWEST GUARDRAIL SYSTEM WOOD POST AND WOOD BLOCK DETAILS

NO SCALE

RSP A77N1 DATED JULY 19, 2013 SUPPLEMENTS THE STANDARD PLANS BOOK DATED 2010.

REVISED STANDARD PLAN RSP A77N1

2010 REVISED STANDARD PLAN RSP A77N1

7-3-13

Dist	COUNTY	ROUTE	POST MILES TOTAL PROJECT	SHEET No.	TOTAL SHEETS
03	Pla	193	4.4/5.5	176	197

Randell D. Hiatt
REGISTERED CIVIL ENGINEER

November 15, 2013
PLANS APPROVAL DATE

REGISTERED PROFESSIONAL ENGINEER
Randell D. Hiatt
No. C50200
Exp. 6-30-15
CIVIL
STATE OF CALIFORNIA

THE STATE OF CALIFORNIA OR ITS OFFICERS OR AGENTS SHALL NOT BE RESPONSIBLE FOR THE ACCURACY OR COMPLETENESS OF SCANNED COPIES OF THIS PLAN SHEET.

TO ACCOMPANY PLANS DATED 4-6-15

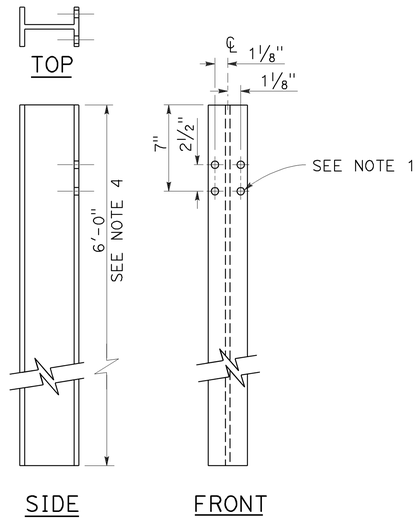

W6 x 9 OR W6 x 8.5
STEEL POST
See Note 4

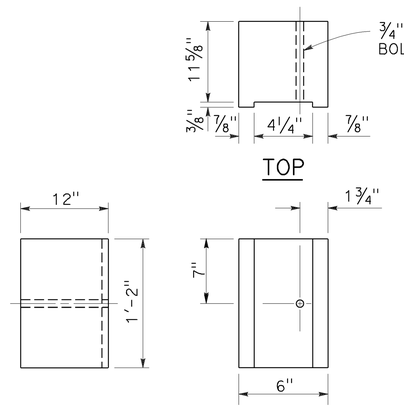

6" x 12"
NOTCHED WOOD BLOCK
See Notes 2 and 3

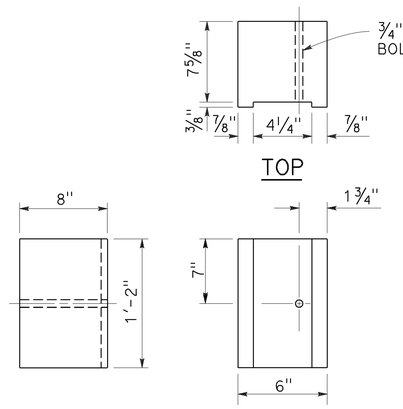

6" x 8"
NOTCHED WOOD BLOCK
Only for use with metal beam guard railing. See Note 5

NOTES:

1. All holes in steel post shall be 13/16" Dia maximum.
2. Dimensions shown for wood block are nominal.
3. Notched face of block faces steel post.
4. 6'-0" length posts to be used for typical roadway installation. See Revised Standard Plan RSP A77N3.
5. See Revised Standard Plan RSP A77L3 for use of 6" x 8" and 8" x 8" notched wood blocks.
6. This post and 8" x 12" block combination to be used for line post sections of MGS on narrow roadways and where strengthened line post sections of MGS are warranted to shield fixed objects.

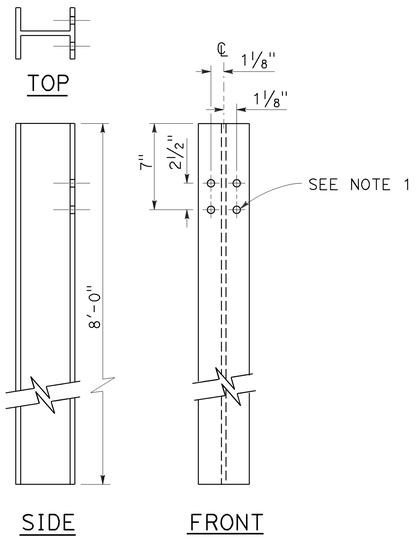

W6 x 15
STEEL POST
See Note 6

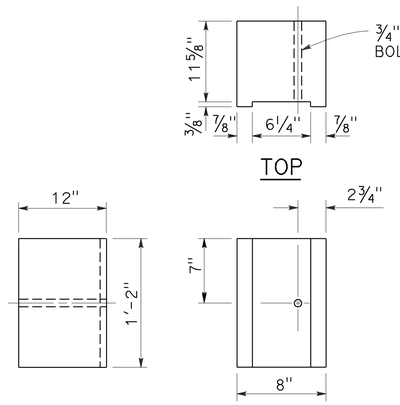

8" x 12"
NOTCHED WOOD BLOCK
See Notes 2 and 3

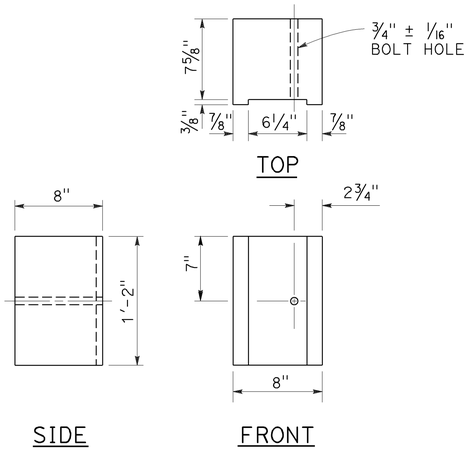

8" x 8"
NOTCHED WOOD BLOCK
Only for use with metal beam guard railing. See Note 5

STATE OF CALIFORNIA
DEPARTMENT OF TRANSPORTATION

MIDWEST GUARDRAIL SYSTEM STEEL POST AND NOTCHED WOOD BLOCK DETAILS

NO SCALE

RSP A77N2 DATED NOVEMBER 15, 2013 SUPERSEDES RSP A77N2
DATED JULY 19, 2013 THAT SUPPLEMENTS THE STANDARD PLANS BOOK DATED 2010.

REVISED STANDARD PLAN RSP A77N2

2010 REVISED STANDARD PLAN RSP A77N2

10-29-13

Dist	COUNTY	ROUTE	POST MILES TOTAL PROJECT	SHEET No.	TOTAL SHEETS
03	Pla	193	4.4/5.5	177	197

Randell D. Hiatt
REGISTERED CIVIL ENGINEER

November 15, 2013
PLANS APPROVAL DATE

REGISTERED PROFESSIONAL ENGINEER
Randell D. Hiatt
No. C50200
Exp. 6-30-15
CIVIL
STATE OF CALIFORNIA

THE STATE OF CALIFORNIA OR ITS OFFICERS OR AGENTS SHALL NOT BE RESPONSIBLE FOR THE ACCURACY OR COMPLETENESS OF SCANNED COPIES OF THIS PLAN SHEET.

TO ACCOMPANY PLANS DATED 4-6-15

2010 REVISED STANDARD PLAN RSP A77N3

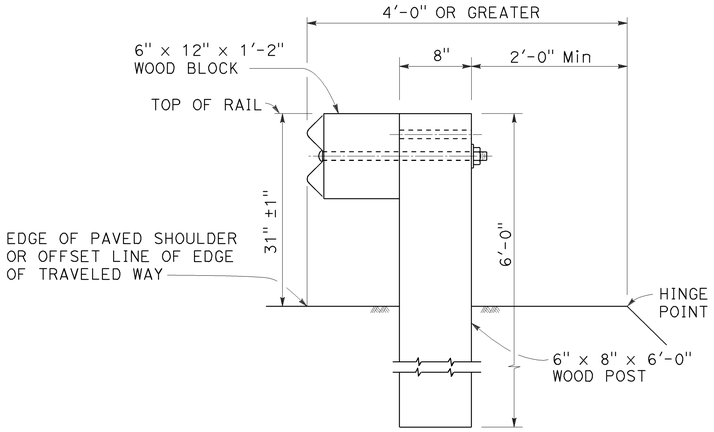

DETAIL A

TYPICAL ROADWAY INSTALLATION

See Note 1

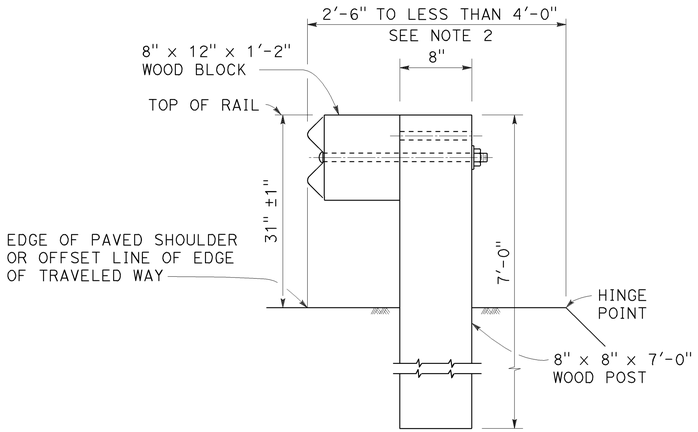

DETAIL B

NARROW ROADWAY INSTALLATION

See Note 1

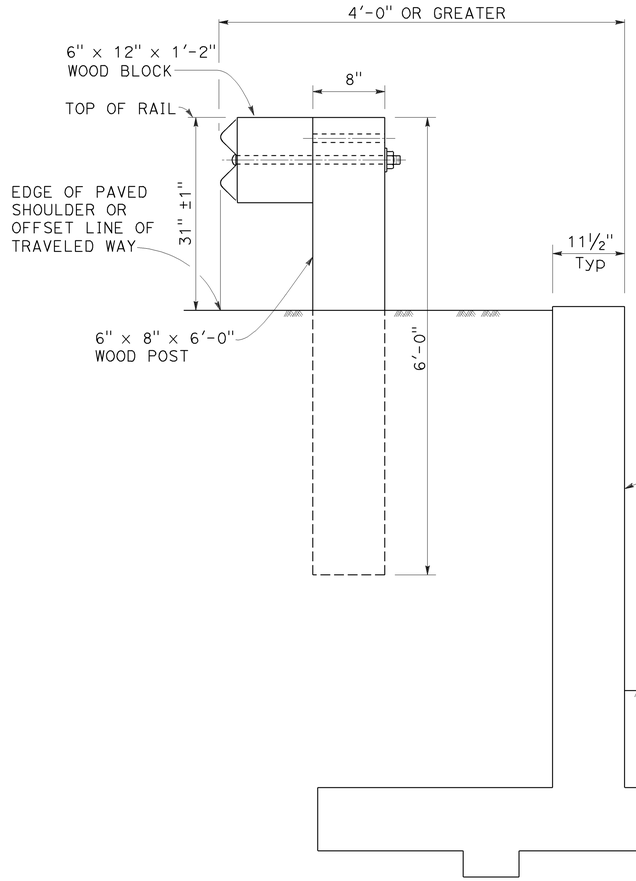

DETAIL C

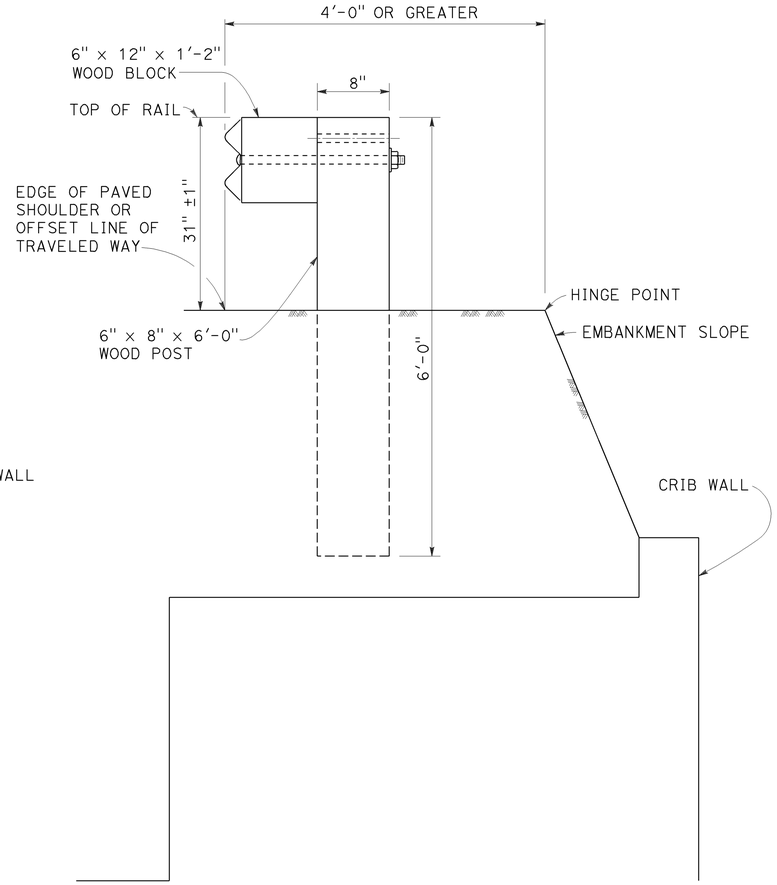

DETAIL D

POST EMBEDMENT

INSTALLATION AT EARTH RETAINING WALLS

NOTES:

1. These installation details also applicable to steel line post installations. For Detail A, C, and D, where steel line post installations are constructed, W6 x 8.5 or W6 x 9 steel post, 6'-0" in length, with 6" x 12" x 1'-2" notched wood blocks or notched recycled plastic blocks are to be used in place of the size of wood post and wood block shown. For Detail B, where steel line post installations are constructed, W6 x 15 steel post, 8'-0" in length, with 8" x 12" x 1'-2" notched wood blocks or notched recycled plastic blocks are to be used in place of the size of wood post and wood block shown. For additional installation details, see Revised Standard Plan RSP A77L1 and RSP A77L2.
2. Where the distance between the face of the rail and the hinge point is less than 2'-6", see the Project Plans for special details.
3. For dike positioning with MGS installations, see Revised Standard Plan RSP A77N4.

STATE OF CALIFORNIA
DEPARTMENT OF TRANSPORTATION

MIDWEST GUARDRAIL SYSTEM TYPICAL LINE POST EMBEDMENT AND HINGE POINT OFFSET DETAILS

NO SCALE

RSP A77N3 DATED NOVEMBER 15, 2013 SUPERSEDES RSP A77N3 DATED JULY 19, 2013 THAT SUPPLEMENTS THE STANDARD PLANS BOOK DATED 2010.

REVISED STANDARD PLAN RSP A77N3

10-29-13

Dist	COUNTY	ROUTE	POST MILES TOTAL PROJECT	SHEET No.	TOTAL SHEETS
03	Pla	193	4.4/5.5	178	197

Randell D. Hiatt
REGISTERED CIVIL ENGINEER

July 19, 2013
PLANS APPROVAL DATE

Randell D. Hiatt
No. C50200
Exp. 6-30-15
CIVIL
REGISTERED PROFESSIONAL ENGINEER
STATE OF CALIFORNIA

THE STATE OF CALIFORNIA OR ITS OFFICERS OR AGENTS SHALL NOT BE RESPONSIBLE FOR THE ACCURACY OR COMPLETENESS OF SCANNED COPIES OF THIS PLAN SHEET.

TO ACCOMPANY PLANS DATED 4-6-15

NOTES:

1. When necessary to place dike more than 7" in front of face of MGS, only Type C dike may be used. For dike details, see Revised Standard Plan RSP A87B.
2. For standard railing post embedment, see Revised Standard Plan RSP A77N3.
3. MGS delineation to be used where shown on the Project Plans.
4. When dike or curb is placed under MGS, the maximum height of the dike or curb shall be 6". Mountable dike should not be used. For dike and curb details, see Revised Standard Plans RSP A87A and RSP A87B.
5. For details of typical distance between the face of rail and hinge point, see Revised Standard Plan RSP A77N3.
6. For steel line posts, use 1/4 - 20 self-tapping screws in 0.22" diameter holes or 1/4" bolts in 9/32" diameter holes.

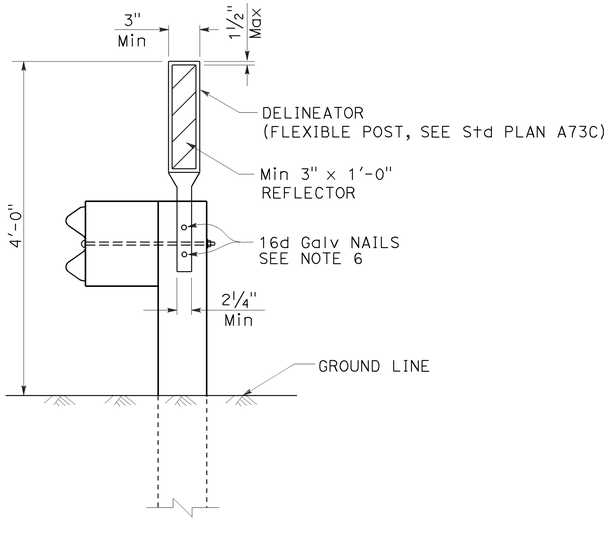

MGS DELINEATION

See Note 3

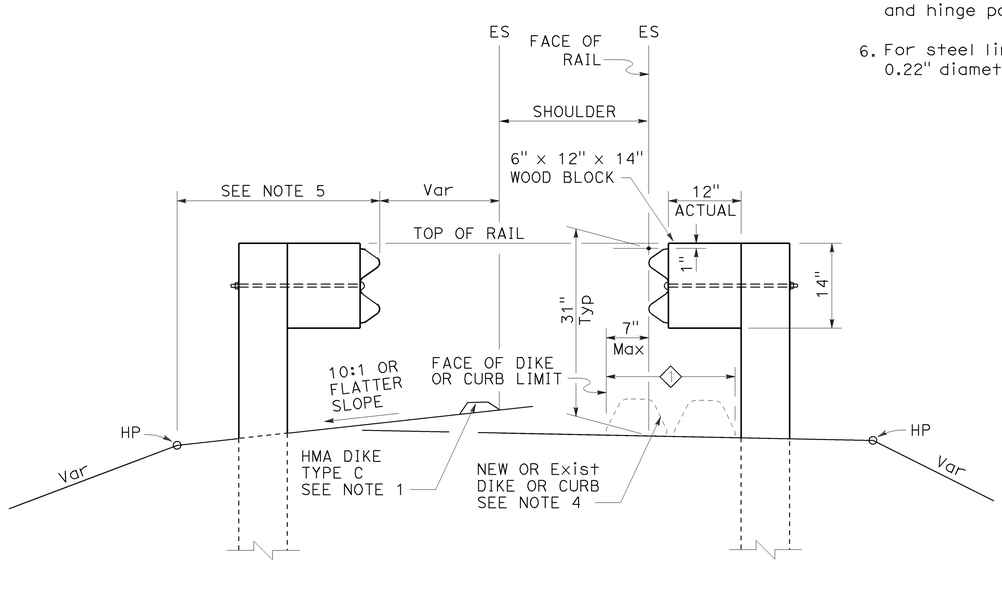

DIKE POSITIONING

See Note 1

1 PERMISSIBLE DIKE OR CURB PLACEMENT AREA

STATE OF CALIFORNIA
DEPARTMENT OF TRANSPORTATION

MIDWEST GUARDRAIL SYSTEM TYPICAL RAILING DELINEATION AND DIKE POSITIONING DETAILS

NO SCALE

RSP A77N4 DATED JULY 19, 2013 SUPPLEMENTS THE STANDARD PLANS BOOK DATED 2010.

REVISED STANDARD PLAN RSP A77N4

2010 REVISED STANDARD PLAN RSP A77N4

7-10-13

Dist	COUNTY	ROUTE	POST MILES TOTAL PROJECT	SHEET No.	TOTAL SHEETS
03	Pla	193	4.4/5.5	179	197

Randell D. Hiatt
REGISTERED CIVIL ENGINEER

July 19, 2013
PLANS APPROVAL DATE

REGISTERED PROFESSIONAL ENGINEER
Randell D. Hiatt
No. C50200
Exp. 6-30-15
CIVIL
STATE OF CALIFORNIA

THE STATE OF CALIFORNIA OR ITS OFFICERS OR AGENTS SHALL NOT BE RESPONSIBLE FOR THE ACCURACY OR COMPLETENESS OF SCANNED COPIES OF THIS PLAN SHEET.

TO ACCOMPANY PLANS DATED 4-6-15

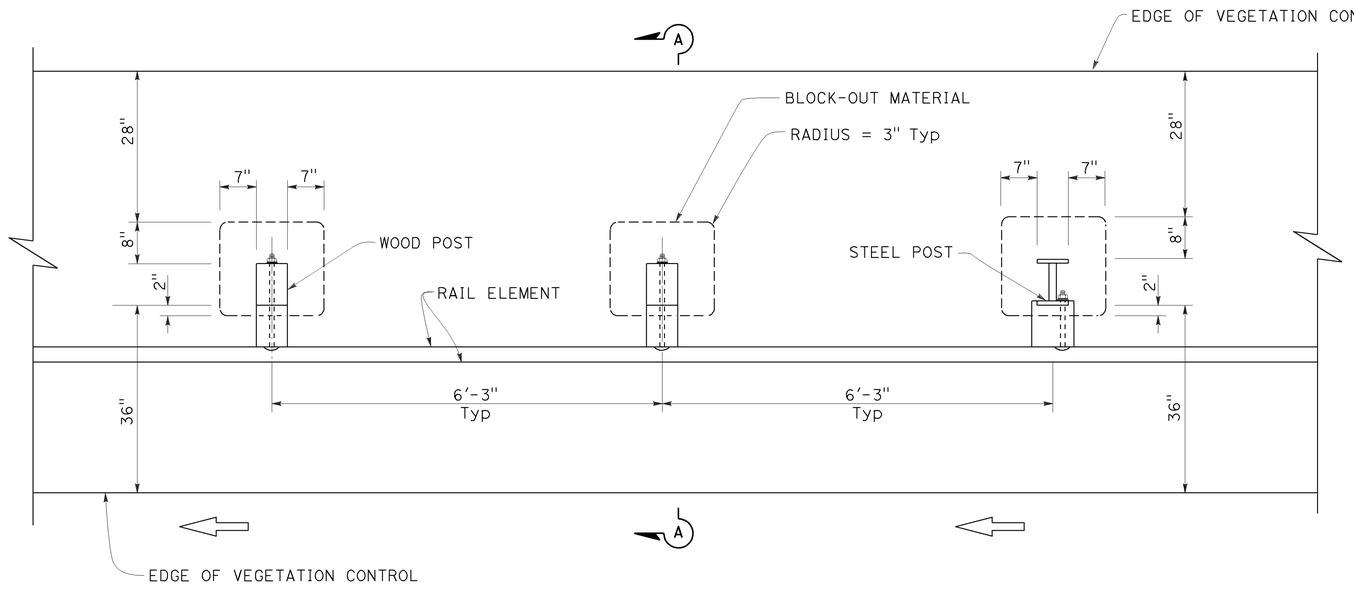

PLAN

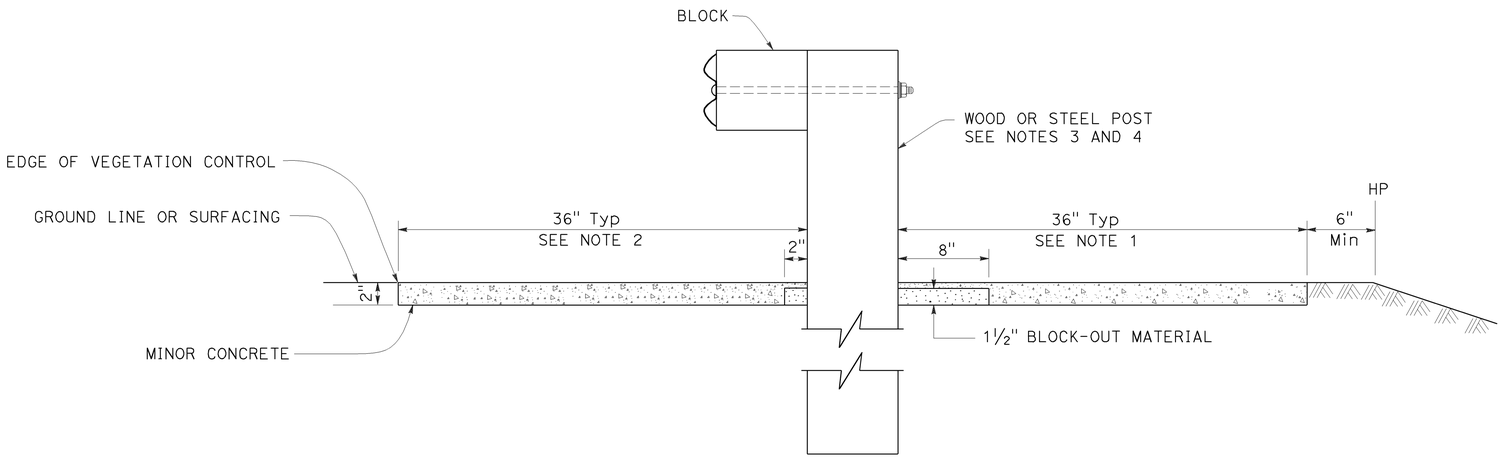

SECTION A-A

NOTES:

1. Where the distance between back of post and hinge point is less than 42", construct vegetation control to 6" from hinge point while maintaining the 8" block-out at back of post. If the 8" block-out at back of post can not be maintained, construct vegetation control flush with the back edge of post.
2. Where dike is constructed under railing, construct vegetation control to back edge of dike. Where paved shoulder is constructed within 36" in front of the post, construct vegetation control to the edge of paved shoulder.
3. For wood post sizes, see Revised Standard Plan RSP A77N1.
4. For steel post sizes, see Revised Standard Plan RSP A77N2.
5. For details not shown, see Revised Standard Plans RSP A77L1 and RSP A77L2.

STATE OF CALIFORNIA
DEPARTMENT OF TRANSPORTATION

MIDWEST GUARDRAIL SYSTEM
TYPICAL VEGETATION CONTROL
STANDARD RAILING SECTION

NO SCALE

RSP A77N5 DATED JULY 19, 2013 SUPPLEMENTS THE STANDARD PLANS BOOK DATED 2010.

REVISED STANDARD PLAN RSP A77N5

2010 REVISED STANDARD PLAN RSP A77N5

7-3-13

Dist	COUNTY	ROUTE	POST MILES TOTAL PROJECT	SHEET No.	TOTAL SHEETS
03	Pla	193	4.4/5.5	180	197

Randell D. Hiatt
REGISTERED CIVIL ENGINEER

July 19, 2013
PLANS APPROVAL DATE

REGISTERED PROFESSIONAL ENGINEER
Randell D. Hiatt
No. C50200
Exp. 6-30-15
CIVIL
STATE OF CALIFORNIA

THE STATE OF CALIFORNIA OR ITS OFFICERS OR AGENTS SHALL NOT BE RESPONSIBLE FOR THE ACCURACY OR COMPLETENESS OF SCANNED COPIES OF THIS PLAN SHEET.

TO ACCOMPANY PLANS DATED 4-6-15

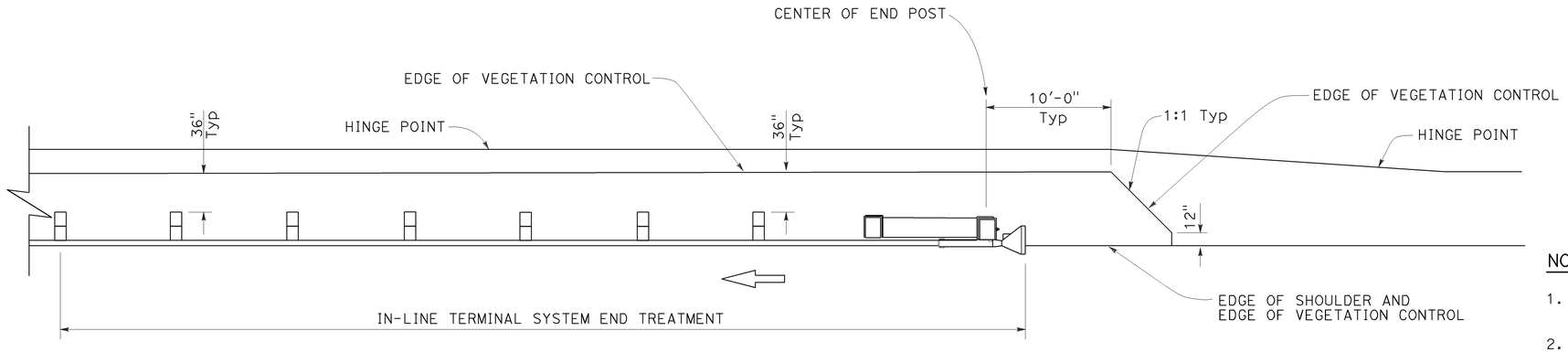

PLAN

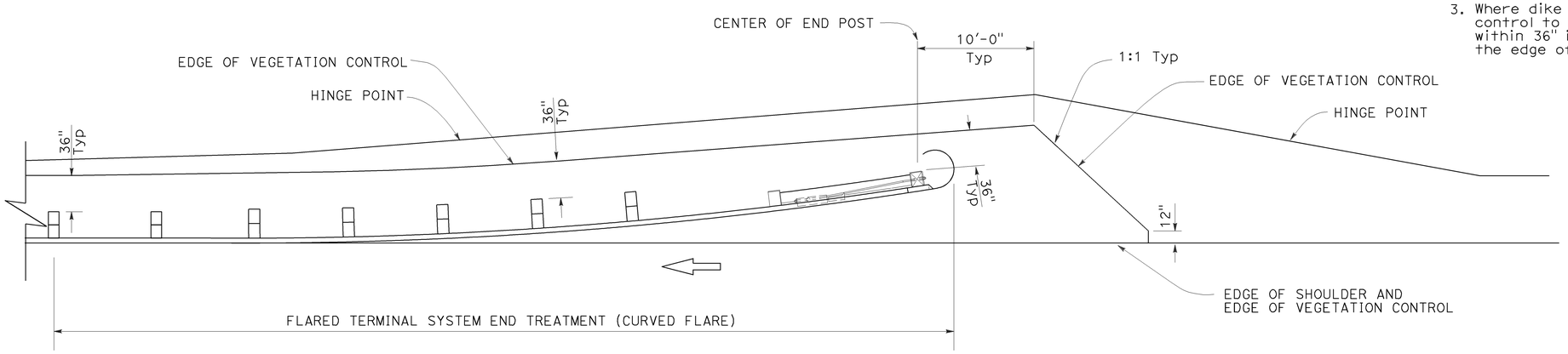

PLAN

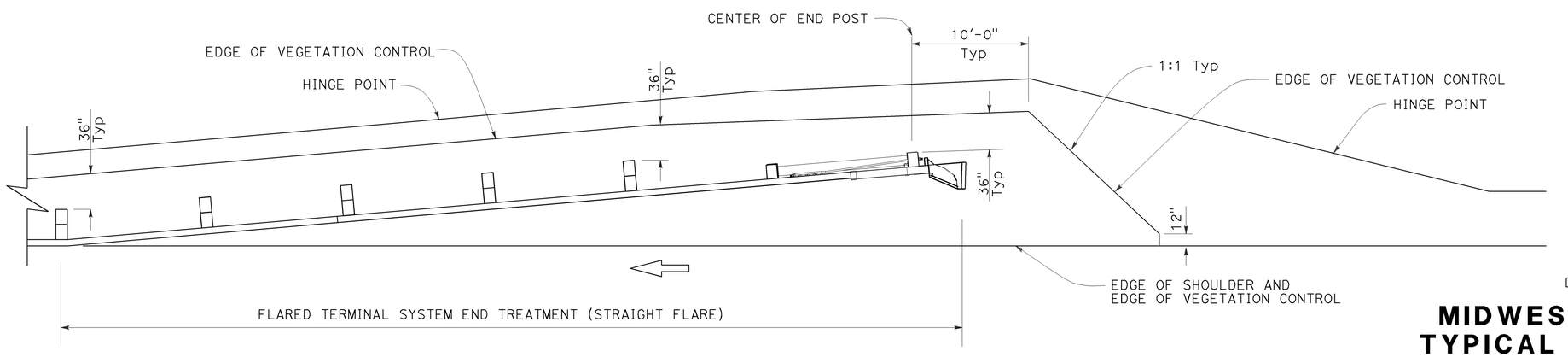

PLAN

NOTES:

1. See Revised Standard Plan RSP A77N5 for additional vegetation control details.
2. Where the distance between back of post and hinge point is less than 42", construct vegetation control to 6" from hinge point while maintaining the 8" block-out at back of post. If the 8" block-out at back of post can not be maintained, construct vegetation control flush with the back edge of post.
3. Where dike is constructed under railing, construct vegetation control to back edge of dike. Where paved shoulder is constructed within 36" in front of the post, construct vegetation control to the edge of paved shoulder.

STATE OF CALIFORNIA
DEPARTMENT OF TRANSPORTATION

MIDWEST GUARDRAIL SYSTEM TYPICAL VEGETATION CONTROL FOR TERMINAL SYSTEM END TREATMENTS

NO SCALE

RSP A77N6 DATED JULY 19, 2013 SUPPLEMENTS THE STANDARD PLANS BOOK DATED 2010.

REVISED STANDARD PLAN RSP A77N6

2010 REVISED STANDARD PLAN RSP A77N6

6-12-13

Dist	COUNTY	ROUTE	POST MILES TOTAL PROJECT	SHEET No.	TOTAL SHEETS
03	Pla	193	4.4/5.5	181	197

Randell D. Hiatt
REGISTERED CIVIL ENGINEER

November 15, 2013
PLANS APPROVAL DATE

REGISTERED PROFESSIONAL ENGINEER
Randell D. Hiatt
No. C50200
Exp. 6-30-15
CIVIL
STATE OF CALIFORNIA

THE STATE OF CALIFORNIA OR ITS OFFICERS OR AGENTS SHALL NOT BE RESPONSIBLE FOR THE ACCURACY OR COMPLETENESS OF SCANNED COPIES OF THIS PLAN SHEET.

TO ACCOMPANY PLANS DATED 4-6-15

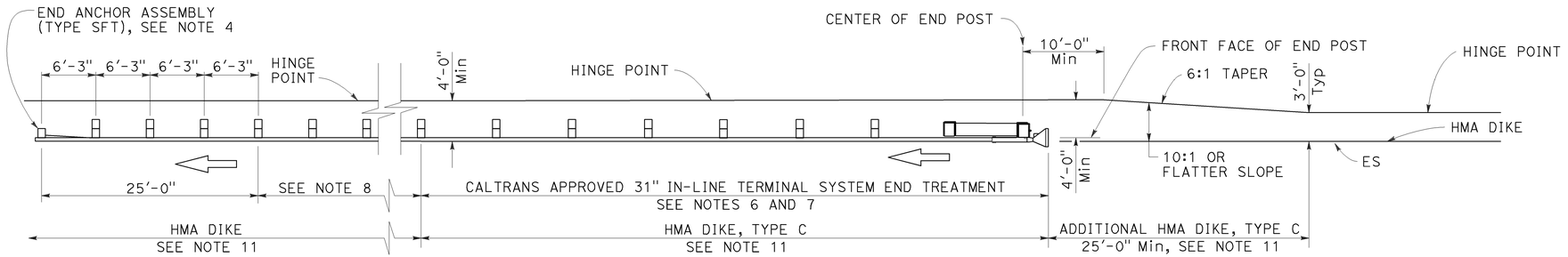

TYPE 11A LAYOUT

(Embankment MGS installation with 31" in-line end treatment at traffic approach end of railing) see Note 5

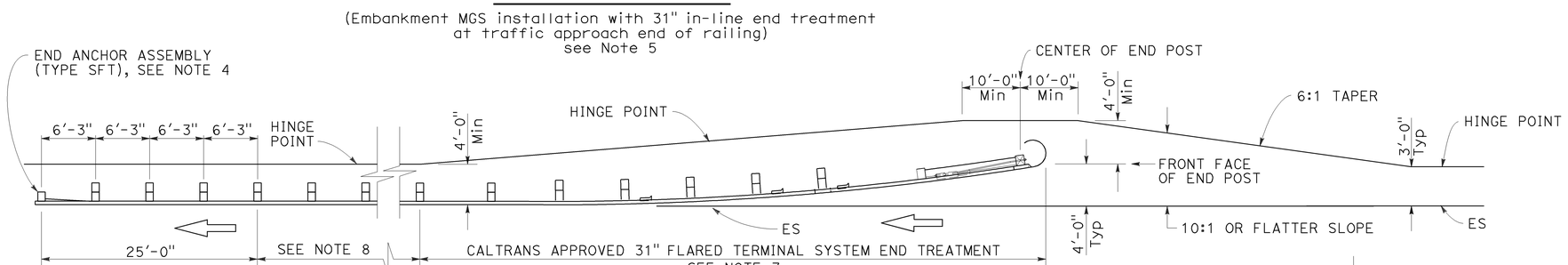

TYPE 11B LAYOUT

(Embankment MGS installation with 31" flared end treatment at traffic approach end of railing) see Note 5

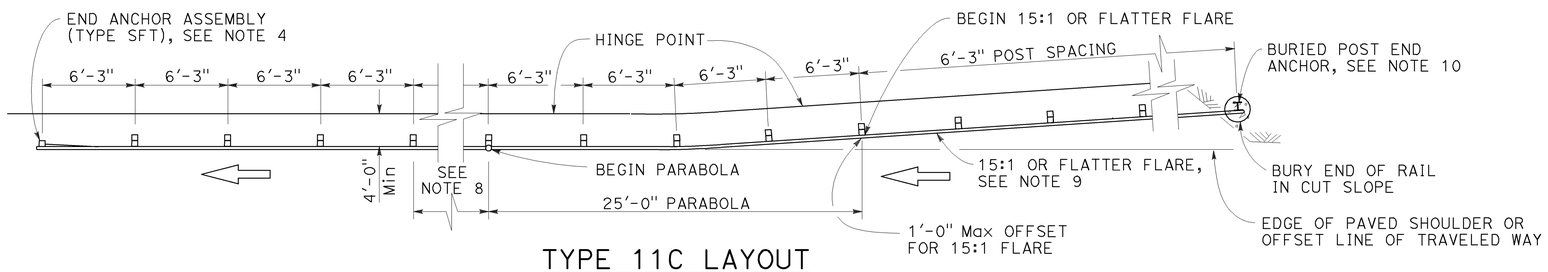

TYPE 11C LAYOUT

(Embankment MGS installation with buried end anchor treatment at traffic approach end of railing) see Notes 5 and 11

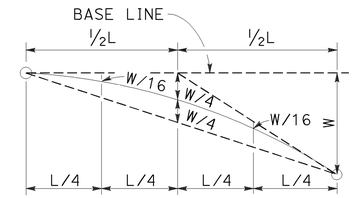

TYPICAL PARABOLIC LAYOUT

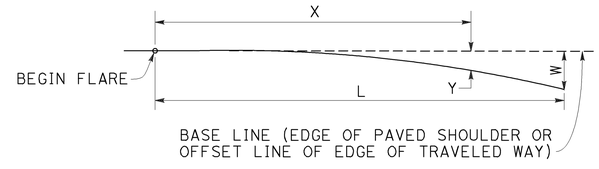

$$Y = \frac{WX^2}{L^2}$$

Y = OFFSET FROM BASE LINE
W = MAXIMUM OFFSET
X = DISTANCE ALONG BASE LINE
L = LENGTH OF FLARE

PARABOLIC FLARE OFFSETS

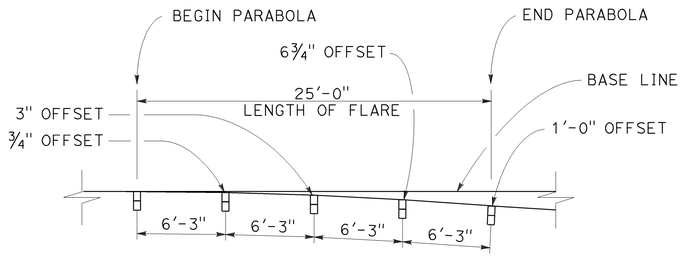

TYPICAL FLARE OFFSETS FOR 1 FOOT Max END OFFSET

NOTES:

1. Line post, blocks and hardware to be used are shown on Revised Standard Plans RSP A77L1, RSP A77L2, RSP A77M1, RSP A77N1 and RSP A77N2.
2. MGS post spacing to be 6'-3" center to center, except as otherwise noted.
3. Except as noted, line posts are 6" x 8" x 6'-0" wood with 6" x 12" x 1'-2" wood blocks. W6 x 8.5 or W6 x 9 steel posts, 6'-0" in length, with 6" x 12" x 1'-2" notched wood blocks or recycled plastic blocks may be used for 6" x 8" x 6'-0" wood post with 6" x 12" x 1'-2" wood blocks where applicable and when specified.
4. For End Anchor Assembly (Type SFT) details, see Revised Standard Plan RSP A77S1.
5. Layout Types 11A, 11B or 11C are typically used where MGS is recommended to shield embankment slopes and a crashworthy end treatment is required for only one direction of traffic.
6. 31" in-line terminal system end treatments are used where site conditions will not accommodate a flared end treatment.
7. The type of 31" terminal system end treatment to be used will be shown on the Project Plans.
8. Dependent on site conditions (embankment height and side slope), construction of additional MGS (length equal to multiples of 12'-6" with 6'-3" post spacing) may be advisable.
9. The 15:1 or flatter flare used with buried end anchors is based on the edge of the paved shoulder or offset line of edge of the traveled way. The length of MGS within the 15:1 or flatter flare is based on site conditions and should be a length equal to multiples of 12'-6".
10. For details of the buried post end anchor used with Type 11C Layout, see Revised Standard Plan RSP A77T2.
11. Where placement of dike is required with MGS installations, see Revised Standard Plan RSP A77N4 for dike positioning details.

STATE OF CALIFORNIA
DEPARTMENT OF TRANSPORTATION

MIDWEST GUARDRAIL SYSTEM TYPICAL LAYOUTS FOR EMBANKMENTS

NO SCALE

RSP A77P1 DATED NOVEMBER 15, 2013 SUPERSEDES RSP A77P1 DATED JULY 19, 2013 THAT SUPPLEMENTS THE STANDARD PLANS BOOK DATED 2010.

REVISED STANDARD PLAN RSP A77P1

2010 REVISED STANDARD PLAN RSP A77P1

10-4-13

Dist	COUNTY	ROUTE	POST MILES TOTAL PROJECT	SHEET No.	TOTAL SHEETS
03	Pla	193	4.4/5.5	182	197

Randell D. Hiatt
REGISTERED CIVIL ENGINEER

November 15, 2013
PLANS APPROVAL DATE

REGISTERED PROFESSIONAL ENGINEER — Randell D. Hiatt — No. C50200 — Exp. 6-30-15 — CIVIL — STATE OF CALIFORNIA

THE STATE OF CALIFORNIA OR ITS OFFICERS OR AGENTS SHALL NOT BE RESPONSIBLE FOR THE ACCURACY OR COMPLETENESS OF SCANNED COPIES OF THIS PLAN SHEET.

TO ACCOMPANY PLANS DATED 4-6-15

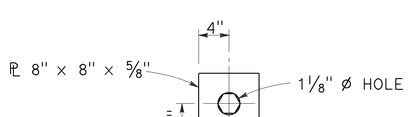

DETAIL "A"
CABLE CONNECTION
END PLATE

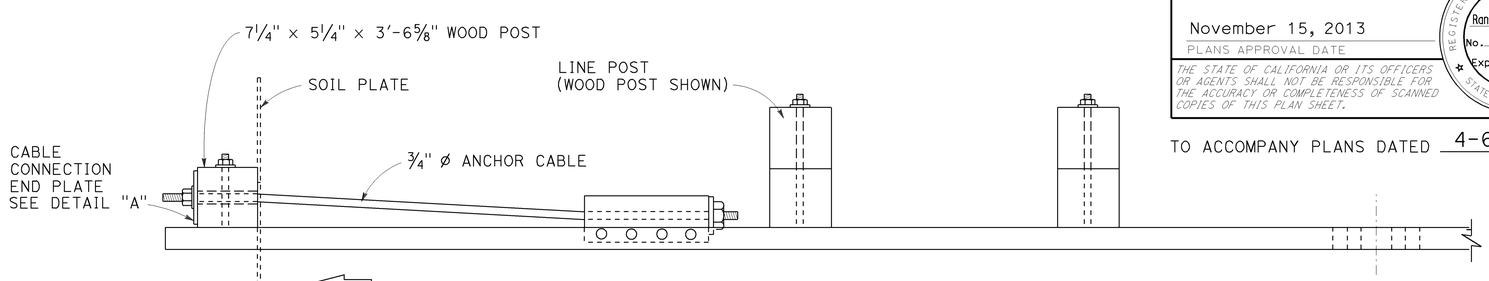

PLAN

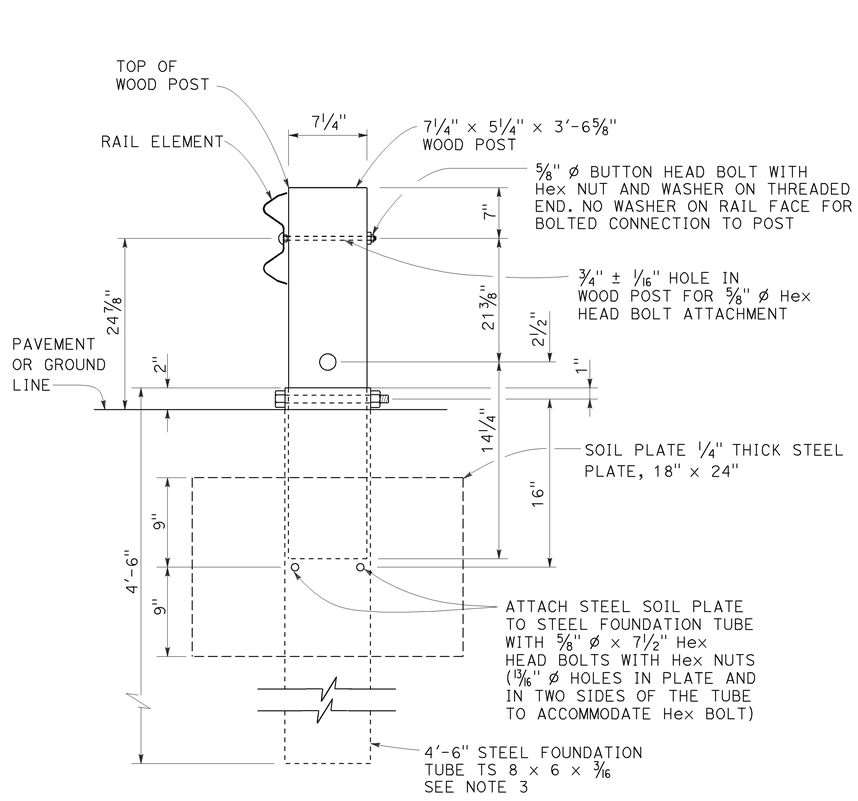

SECTION A-A

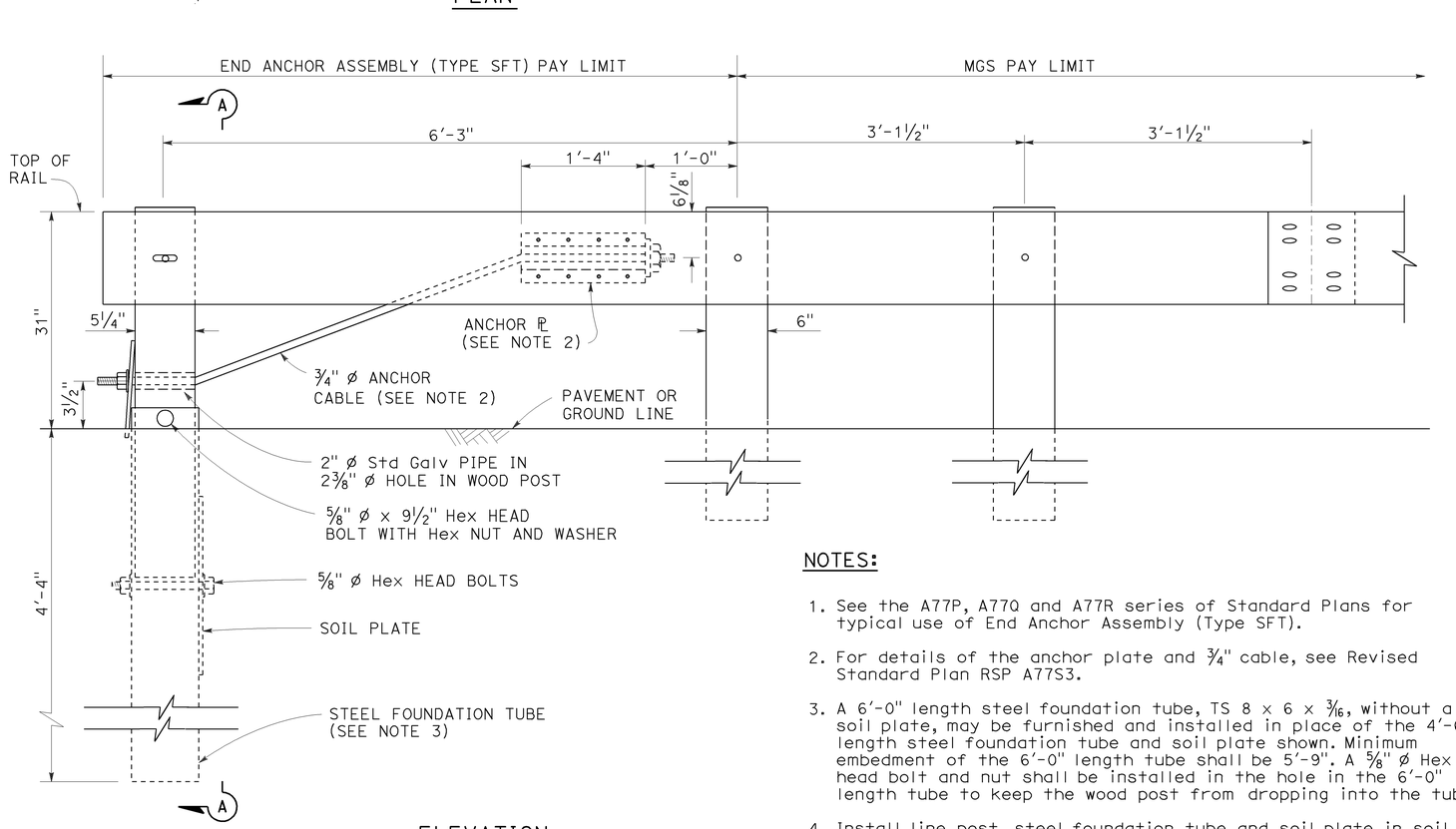

ELEVATION

END ANCHOR
ASSEMBLY (TYPE SFT)
See Note 1

NOTES:

1. See the A77P, A77Q and A77R series of Standard Plans for typical use of End Anchor Assembly (Type SFT).
2. For details of the anchor plate and 3/4" cable, see Revised Standard Plan RSP A77S3.
3. A 6'-0" length steel foundation tube, TS 8 x 6 x 3/16, without a soil plate, may be furnished and installed in place of the 4'-6" length steel foundation tube and soil plate shown. Minimum embedment of the 6'-0" length tube shall be 5'-9". A 5/8" ø Hex head bolt and nut shall be installed in the hole in the 6'-0" length tube to keep the wood post from dropping into the tube.
4. Install line post, steel foundation tube and soil plate in soil.

STATE OF CALIFORNIA
DEPARTMENT OF TRANSPORTATION

MIDWEST GUARDRAIL SYSTEM
END ANCHOR ASSEMBLY
(TYPE SFT)

NO SCALE

RSP A77S1 DATED NOVEMBER 15, 2013 SUPERSEDES RSP A77S1
DATED JULY 19, 2013 THAT SUPPLEMENTS THE STANDARD PLANS BOOK DATED 2010.

REVISED STANDARD PLAN RSP A77S1

2010 REVISED STANDARD PLAN RSP A77S1

10-4-13

Dist	COUNTY	ROUTE	POST MILES TOTAL PROJECT	SHEET No.	TOTAL SHEETS
03	Pla	193	4.4/5.5	183	197

Randell D. Hiatt
REGISTERED CIVIL ENGINEER

November 15, 2013
PLANS APPROVAL DATE

REGISTERED PROFESSIONAL ENGINEER — Randell D. Hiatt — No. C50200 — Exp. 6-30-15 — CIVIL — STATE OF CALIFORNIA

THE STATE OF CALIFORNIA OR ITS OFFICERS OR AGENTS SHALL NOT BE RESPONSIBLE FOR THE ACCURACY OR COMPLETENESS OF SCANNED COPIES OF THIS PLAN SHEET.

TO ACCOMPANY PLANS DATED 4-6-15

NOTE:

See Revised Standard Plans RSP A77S1, RSP A77S2 and RSP A77T1 for typical use of anchor cable and anchor plate.

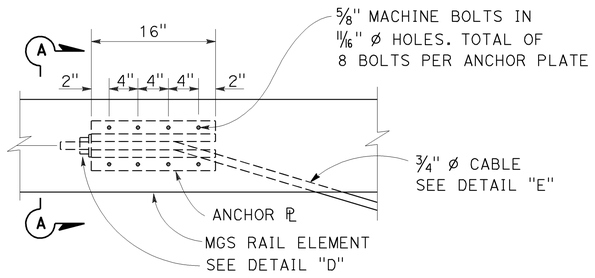

ANCHOR PLATE DETAIL

(MGS shown, TBB similar)

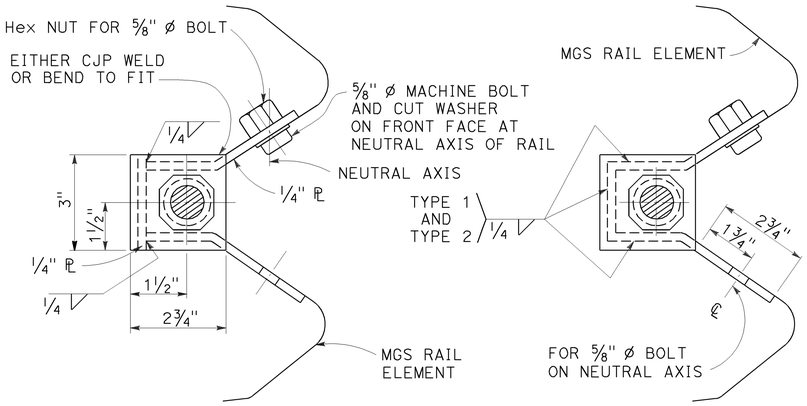

NOTE:

Dimensioning applies to both types.

SECTION A-A
(ALTERNATIVE TYPE 1)

SECTION A-A
(ALTERNATIVE TYPE 2)

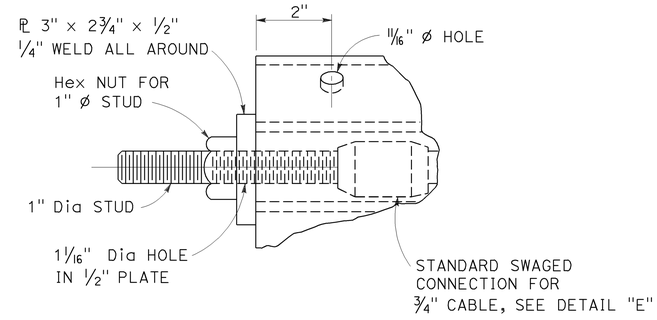

DETAIL "D"

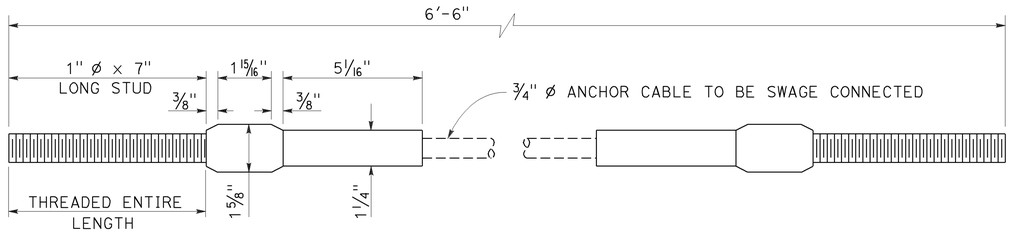

ANCHOR CABLE WITH SWAGED FITTING AND STUD
DETAIL "E"

STATE OF CALIFORNIA
DEPARTMENT OF TRANSPORTATION

METAL RAILING ANCHOR CABLE AND ANCHOR PLATE DETAILS

NO SCALE

RSP A77S3 DATED NOVEMBER 15, 2013 SUPERSEDES RSP A77S3
DATED JULY 19, 2013 THAT SUPPLEMENTS THE STANDARD PLANS BOOK DATED 2010.

REVISED STANDARD PLAN RSP A77S3

2010 REVISED STANDARD PLAN RSP A77S3

10-4-13

Dist	COUNTY	ROUTE	POST MILES TOTAL PROJECT	SHEET No.	TOTAL SHEETS
03	Pla	193	4.4/5.5	184	197

REGISTERED CIVIL ENGINEER

July 19, 2013
PLANS APPROVAL DATE

REGISTERED PROFESSIONAL ENGINEER
Michael Janzen
No. 44788
Exp. 03-31-14
CIVIL
STATE OF CALIFORNIA

THE STATE OF CALIFORNIA OR ITS OFFICERS OR AGENTS SHALL NOT BE RESPONSIBLE FOR THE ACCURACY OR COMPLETENESS OF SCANNED COPIES OF THIS PLAN SHEET.

TO ACCOMPANY PLANS DATED 4-6-15

2010 REVISED STANDARD PLAN RSP A87B

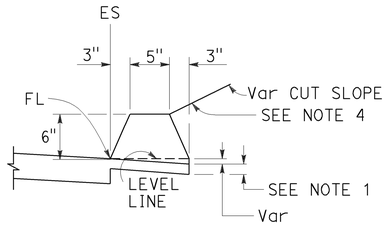

TYPE A
See Note 3

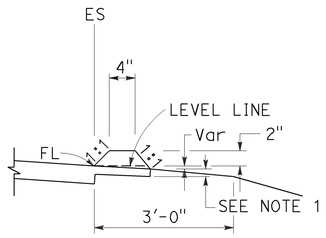

TYPE C

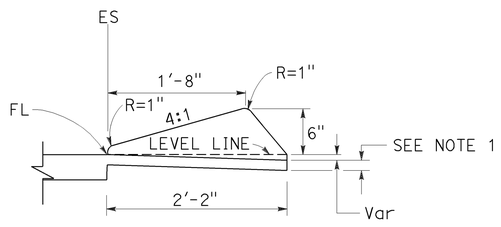

TYPE D

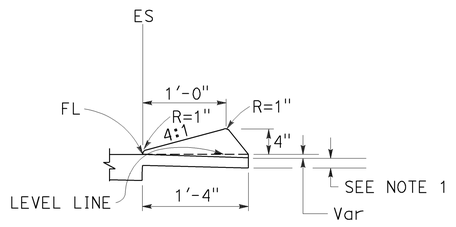

TYPE E

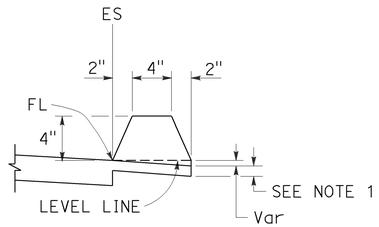

TYPE F
See Note 5

DIKES

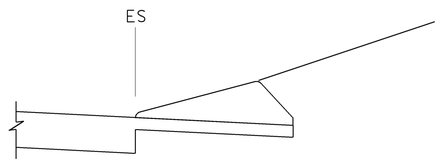

CASE C-1
Cut Slope

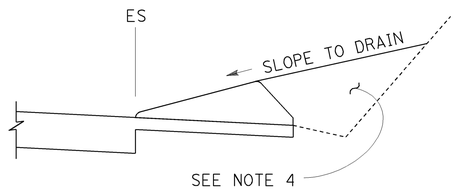

CASE C-2
Cut Slope

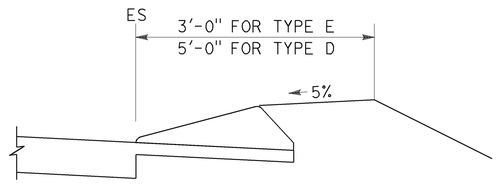

CASE F

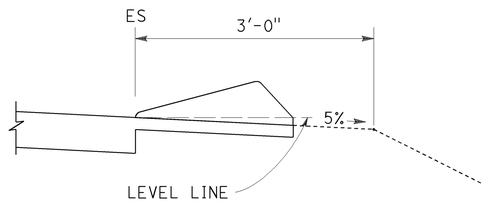

CASE R
See Note 2

TYPE D AND E BACKFILL DETAILS

NOTES:

1. For HMA shoulders only, extend top layer of HMA placed on the shoulder under dike with no joint at the ES. For projects with OGFC shoulders, do not extend OGFC under dike. See project plans for modified dike detail.
2. Case R applies to retrofit only projects where restrictive conditions do not provide enough width for Case F backfill.
3. Type A dike only to be used where restrictive slope conditions do not provide enough width to use Type D or Type E dike.
4. Fill and compact with excavated material to top of dike.
5. Use Type F dike, where dike is required with guard railing installations. See Revised Standard Plan RSP A77N4 for dike positioning details.

DIKE QUANTITIES

TYPE	CUBIC YARDS PER LINEAR FOOT
A	0.0135
C	0.0038
D	0.0293
E	0.0130
F	0.0066

Quantities based on 5% cross slope.

STATE OF CALIFORNIA
DEPARTMENT OF TRANSPORTATION

HOT MIX ASPHALT DIKES

NO SCALE

RSP A87B DATED JULY 19, 2013 SUPERSEDES STANDARD PLAN A87B
DATED MAY 20, 2011 - PAGE 120 OF THE STANDARD PLANS BOOK DATED 2010.

REVISED STANDARD PLAN RSP A87B

6-27-13

DIST	COUNTY	ROUTE	POST MILES TOTAL PROJECT	SHEET No.	TOTAL SHEETS
03	Pla	193	4.4/5.5	185	197

REGISTERED CIVIL ENGINEER

November 15, 2013
PLANS APPROVAL DATE

REGISTERED PROFESSIONAL ENGINEER — Cornelis M. Hakim — No. C55610 — Exp. 12-31-14 — CIVIL — STATE OF CALIFORNIA

THE STATE OF CALIFORNIA OR ITS OFFICERS OR AGENTS SHALL NOT BE RESPONSIBLE FOR THE ACCURACY OR COMPLETENESS OF SCANNED COPIES OF THIS PLAN SHEET.

TO ACCOMPANY PLANS DATED 4-6-15

ABBREVIATIONS:

SE SAFETY EDGE

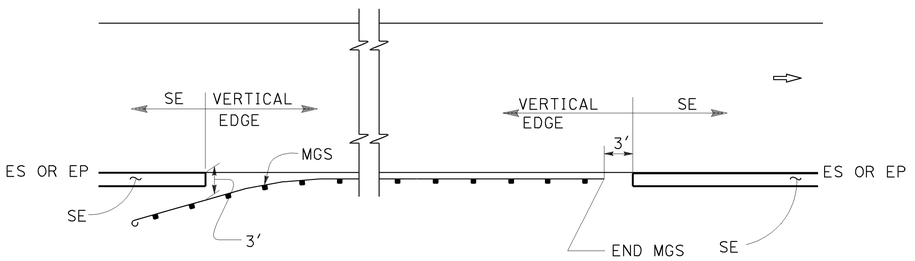

MGS

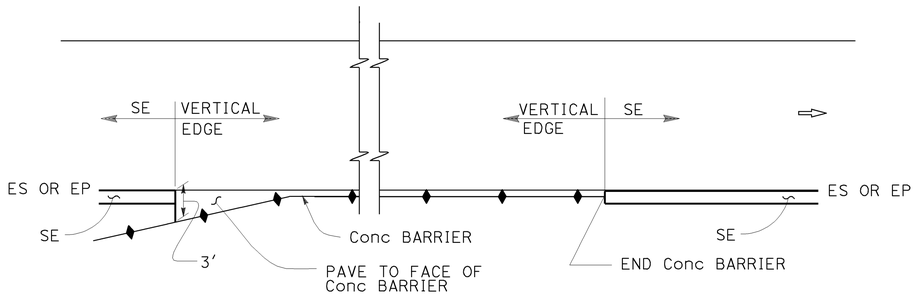

CONCRETE BARRIER

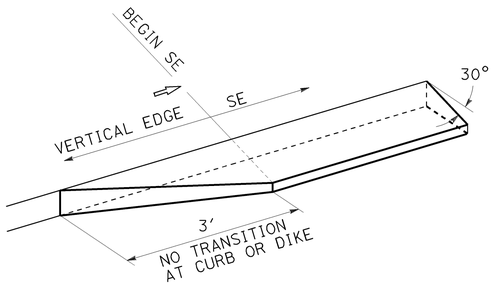

TRANSITION DETAIL FOR CONCRETE ONLY

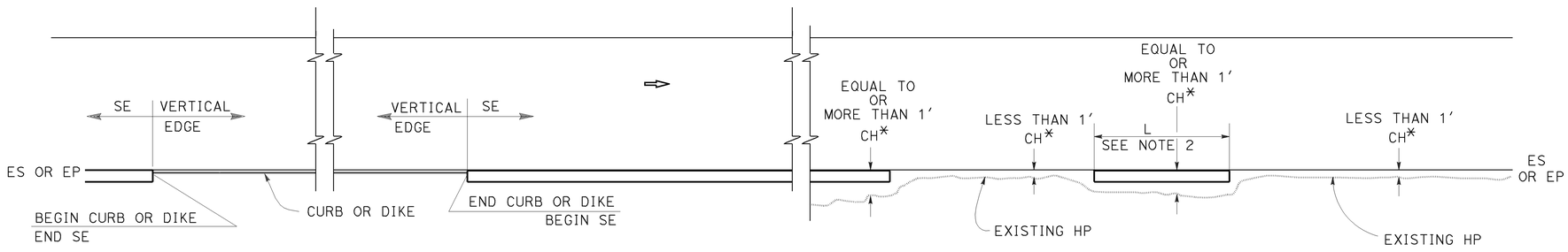

CURB OR DIKE

NARROW SIDE SLOPE

* CH = Distance from ES or EP to existing HP.

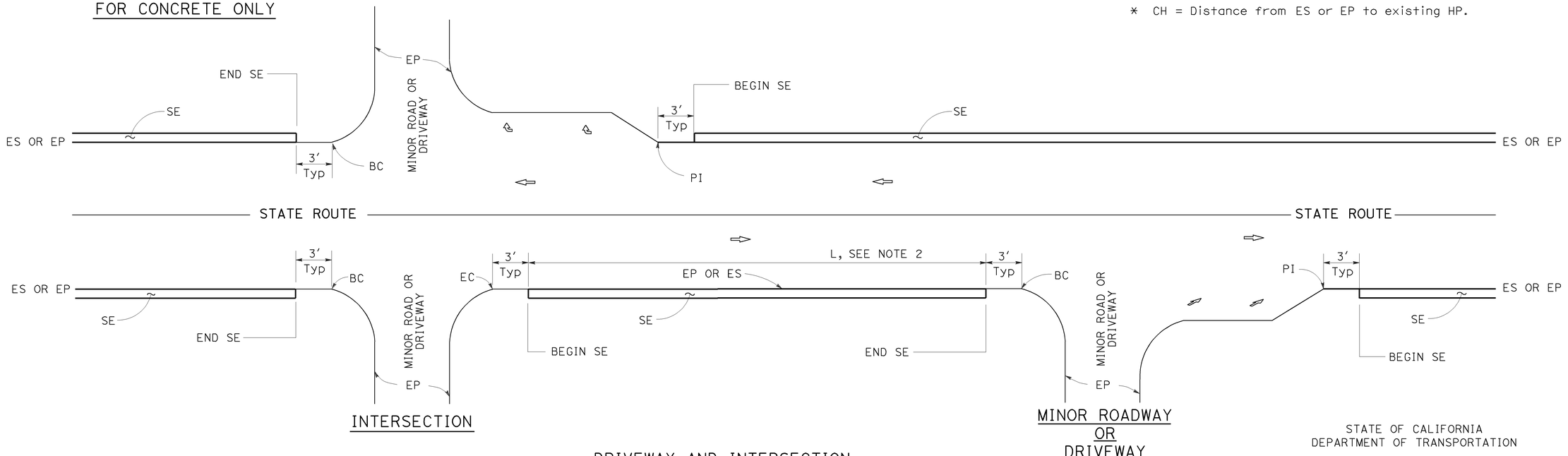

INTERSECTION

DRIVEWAY AND INTERSECTION

MINOR ROADWAY OR DRIVEWAY

NOTES:

1. For details not shown, see Revised Standard Plans RSP P75 and RSP P76.
2. Safety edge is optional when L is less than 30′.

STATE OF CALIFORNIA
DEPARTMENT OF TRANSPORTATION

PAVEMENT EDGE TREATMENTS

NO SCALE

RSP P74 DATED NOVEMBER 15, 2013 SUPERSEDES RSP P74 DATED JANUARY 20, 2012 THAT SUPPLEMENTS THE STANDARD PLANS BOOK DATED 2010.

REVISED STANDARD PLAN RSP P74

2010 REVISED STANDARD PLAN RSP P74

10-11-13

DIST	COUNTY	ROUTE	POST MILES TOTAL PROJECT	SHEET No.	TOTAL SHEETS
03	Pla	193	4.4/5.5	186	197

REGISTERED CIVIL ENGINEER

November 15, 2013
PLANS APPROVAL DATE

Cornelis M. Hakim
No. C55610
Exp. 12-31-14
CIVIL
REGISTERED PROFESSIONAL ENGINEER
STATE OF CALIFORNIA

THE STATE OF CALIFORNIA OR ITS OFFICERS OR AGENTS SHALL NOT BE RESPONSIBLE FOR THE ACCURACY OR COMPLETENESS OF SCANNED COPIES OF THIS PLAN SHEET.

TO ACCOMPANY PLANS DATED 4-6-15

LEGEND:

- HMA PAVEMENT
- HMA OR CONCRETE PAVEMENT
- CONCRETE PAVEMENT

ABBREVIATIONS:

SE	SAFETY EDGE
TT	TOTAL THICKNESS OF SE
HW	HINGE WIDTH, DISTANCE FROM ES OR EP TO HP

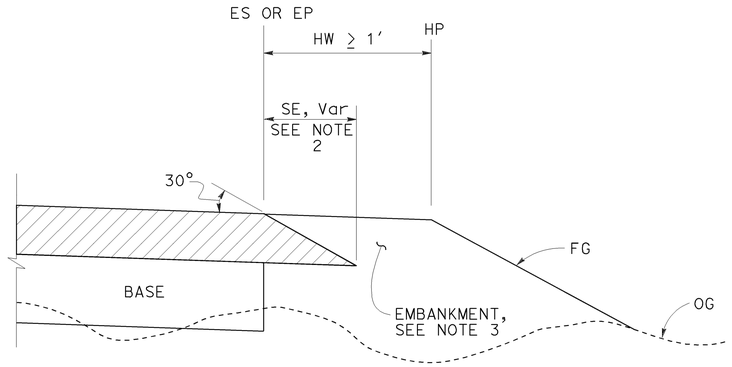

CASE K
Safety Edge - Fill Section, HW ≥ 1′

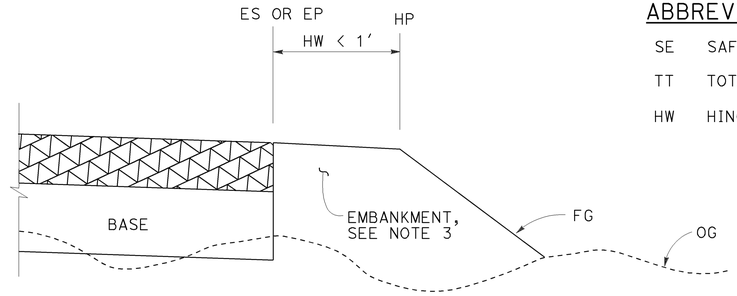

CASE L
Vertical Edge - Fill Section, HW < 1′

FILL SECTION

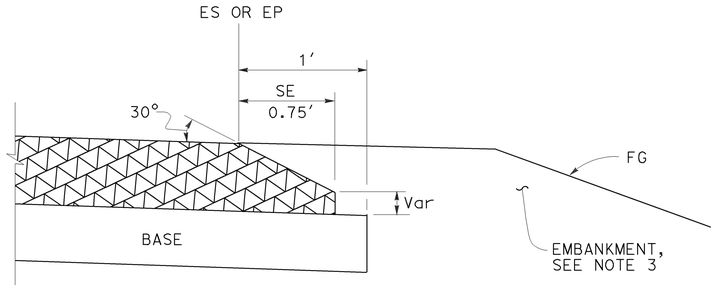

DETAIL "B"
For HMA pavement thickness
more than 0.43′ or concrete pavement

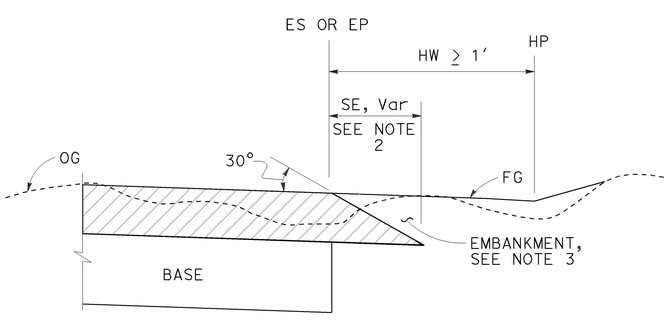

CASE M
Safety Edge - Cut Section, HW ≥ 1′

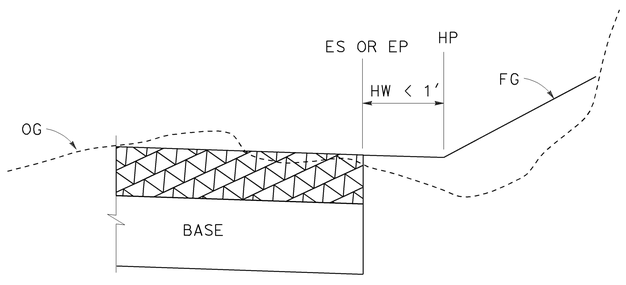

CASE N
Vertical Edge - Cut Section, HW < 1′

CUT SECTION

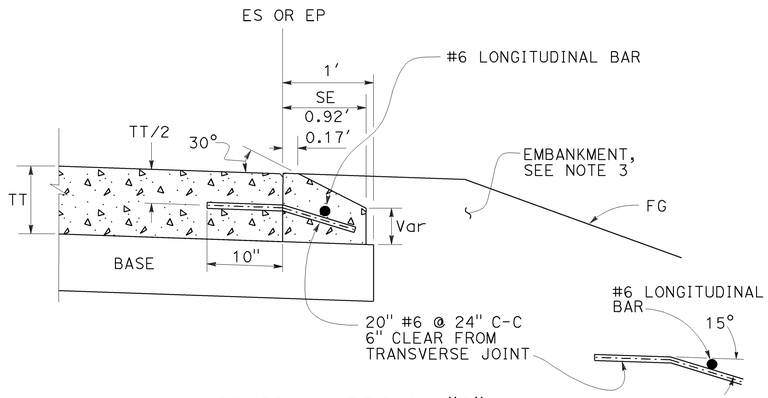

OPTIONAL DETAIL "B"
For concrete pavement
See Note 4

NOTES:

1. For limits of safety edge and vertical edge treatments, see Revised Standard Plan RSP P74
2. Details shown for HMA pavement thickness less than 0.43′. See Detail "B" for HMA pavement thickness more than 0.43′ or concrete pavement.
3. For locations and limits of embankment see project plans.
4. Safety edge transverse joint must match pavement transverse joint. End of #6 longitudinal bar must be 2" ±½" clear from transverse joint.
5. Safety edge is not needed in the area of MGS, barrier, right turn lane and acceleration lane. See Revised Standard Plan RSP P74.

STATE OF CALIFORNIA
DEPARTMENT OF TRANSPORTATION

PAVEMENT EDGE TREATMENTS- NEW CONSTRUCTION

NO SCALE

RSP P76 DATED NOVEMBER 15, 2013 SUPERSEDES RSP P76 DATED JANUARY 20, 2012 THAT SUPPLEMENTS THE STANDARD PLANS BOOK DATED 2010.

REVISED STANDARD PLAN RSP P76

2010 REVISED STANDARD PLAN RSP P76

10-4-13

Dist	COUNTY	ROUTE	POST MILES TOTAL PROJECT	SHEET No.	TOTAL SHEETS
03	Pla	193	4.4/5.5	187	197

Raymond Don Tsztoo
REGISTERED CIVIL ENGINEER

April 19, 2013
PLANS APPROVAL DATE

Raymond Don Tsztoo No. C37332 Exp. 6-30-14 CIVIL — REGISTERED PROFESSIONAL ENGINEER — STATE OF CALIFORNIA

THE STATE OF CALIFORNIA OR ITS OFFICERS OR AGENTS SHALL NOT BE RESPONSIBLE FOR THE ACCURACY OR COMPLETENESS OF SCANNED COPIES OF THIS PLAN SHEET.

TO ACCOMPANY PLANS DATED 4-6-15

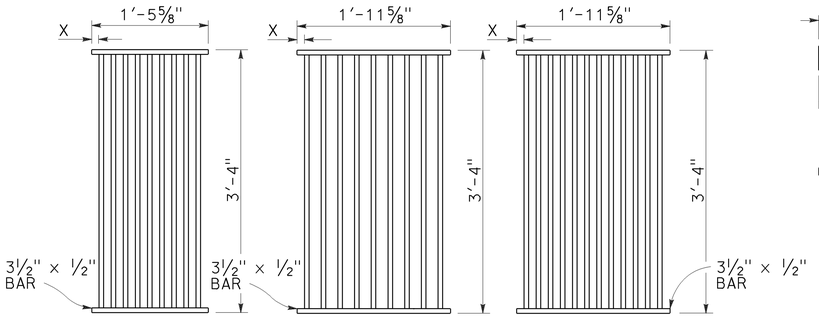

TYPE 18-9

1⅜" Clear spacing. Use within the roadbed on highways where bicycles and pedestrians are excluded.

TYPE 24-9

2" Clear spacing. Use in locations off the roadbed on all types of highways.

TYPE 24-12

1⅜" Clear spacing. Use within the roadbed on highways where bicycles and pedestrians are excluded.

RECTANGULAR GRATE DETAILS

(See table below)

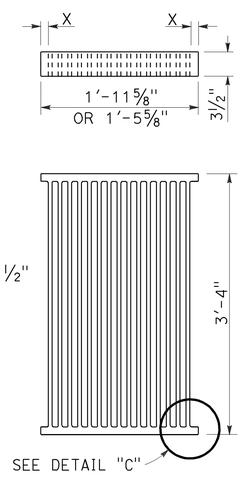

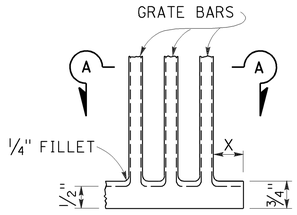

DETAIL "C"

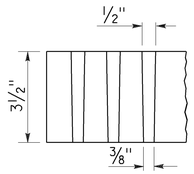

SECTION A-A

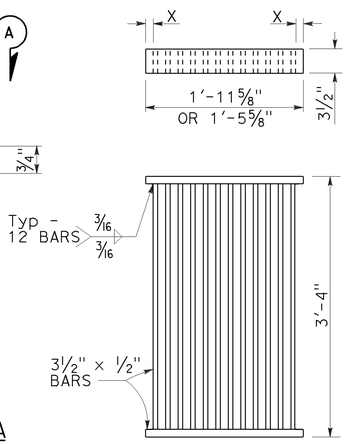

ALTERNATIVE CAST DUCTILE IRON GRATE OR CAST CARBON STEEL GRATE

ALTERNATIVE WELDED GRATE

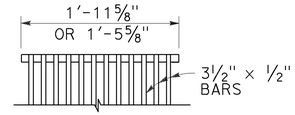

CAST END BLOCK

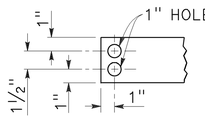

END OF BAR

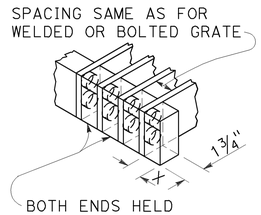

ALTERNATIVE CAST DUCTILE IRON OR CAST CARBON STEEL END BLOCK GRATE

NOTES:

1. Grate type numbers refer to approximate width of grate in inches and number of bars, respectively.
2. Contractor has the option of using cast ductile iron, cast carbon steel, welded, bolted, or cast end block grate.
3. Rounded top of bars optional on all grates.
4. Pipe inlets with a grate shall be placed so that bars parallel direction of principle surface flow.
5. Complete joint penetration butt welds may be substituted for the fillet welds on all anchors.
6. Standard square, hexagon, round or equivalent headed anchors may be substituted for the right angle hooks on the anchors shown on this plan.
7. Grate and frame weights are based on welded grates (weights of face angles, steps, protection bars, etc. are not included).
8. Connect chain to grate and frame only at locations shown on the plans. When chain is required, do not use cast ductile iron grates.

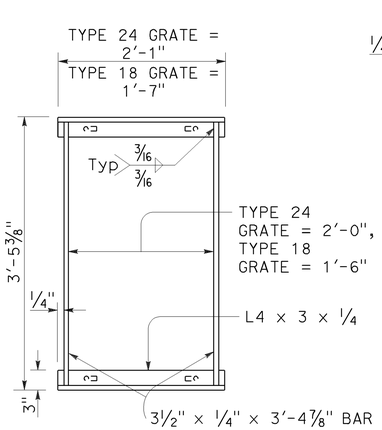

TYPICAL FRAME

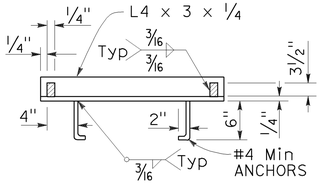

CROSS SECTION

(Thru frame)

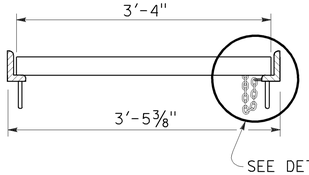

LONGITUDINAL SECTION

(Thru frame and grate)

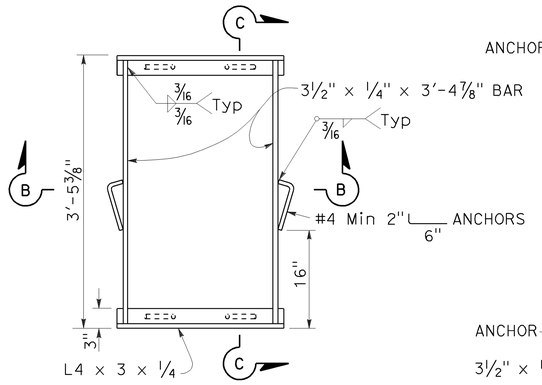

TYPICAL FRAME

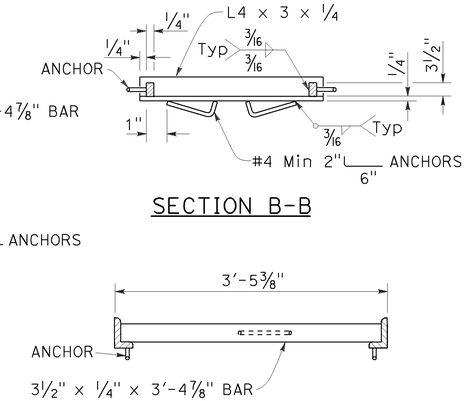

SECTION B-B

SECTION C-C

ALTERNATIVE ANCHOR FOR RECTANGULAR FRAME

(For details not shown, See Rectangular Frame Details)

RECTANGULAR FRAME DETAILS

(For all rectangular grates)

GRATE BAR SPACING TABLE

TYPE	No. OF BARS	CLEAR BAR SPACING	X
18-9	9	1⅜"	1 1⁄16"
24-9	9	2"	1 9⁄16"
24-12	12	1⅜"	1¼"

INLET TYPE	COVER TYPE	WEIGHT LB
OS	PLATE	174
OL-7	PLATE	170
OL-10	PLATE	170
OL-14	PLATE	170
OL-21	PLATE	170
OCP	PLATE	112
OCPI	PLATE	112
OCPI	REDWOOD	42
OMP	PLATE	177
OMPI	PLATE	177

INLET TYPE	GRATE TYPE	No. OF GRATES	WEIGHT LB
GDO	24-12	2	634
GOL-7	24-12	1	326
GOL-10	24-12	1	326
GO,G1,G2,G3,G4 (TYPE 24)	24-9	1	263
	24-12	1	326
G4 (TYPE 18),G5,G6	18-9	1	249
GT1	18-9	2	498
GT2	18-9	2	498
GT3	24-12	2	652
GT4	24-12	2	652
TRASH RACK			22
GRATE CHAIN			3

BASIS FOR Misc IRON & STEEL FINAL PAY WEIGHTS FOR DRAINAGE INLETS

(See Note 7)

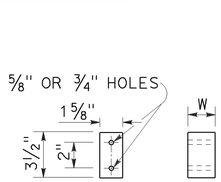

BOLTED END BLOCK

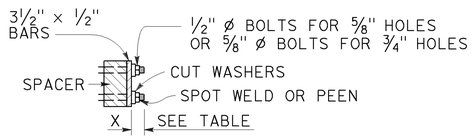

BOLTING DETAIL

ALTERNATIVE BOLTED GRATE

BAR SPACER

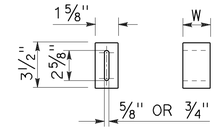

ALTERNATIVE SPACER

W = 1⅜" or 2"

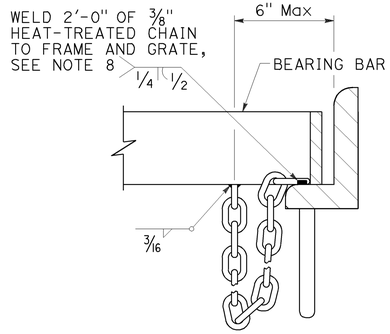

DETAIL "D"

(Steel grates only)

STATE OF CALIFORNIA
DEPARTMENT OF TRANSPORTATION

GRATE DETAILS No. 1

NO SCALE

RSP D77A DATED APRIL 19, 2013 SUPERSEDES RSP D77A DATED JULY 20, 2012 AND STANDARD PLAN D77A DATED MAY 20, 2011 - PAGE 164 OF THE STANDARD PLANS BOOK DATED 2010.

REVISED STANDARD PLAN RSP D77A

2010 REVISED STANDARD PLAN RSP D77A

4-4-13

Dist	COUNTY	ROUTE	POST MILES TOTAL PROJECT	SHEET No.	TOTAL SHEETS
03	Pla	193	4.4/5.5	188	197

Raymond Don Tsztoo
REGISTERED CIVIL ENGINEER

April 19, 2013
PLANS APPROVAL DATE

REGISTERED PROFESSIONAL ENGINEER — Raymond Don Tsztoo — No. C37332 — Exp. 6-30-14 — CIVIL — STATE OF CALIFORNIA

THE STATE OF CALIFORNIA OR ITS OFFICERS OR AGENTS SHALL NOT BE RESPONSIBLE FOR THE ACCURACY OR COMPLETENESS OF SCANNED COPIES OF THIS PLAN SHEET.

TO ACCOMPANY PLANS DATED 4-6-15

2010 REVISED STANDARD PLAN RSP D77B

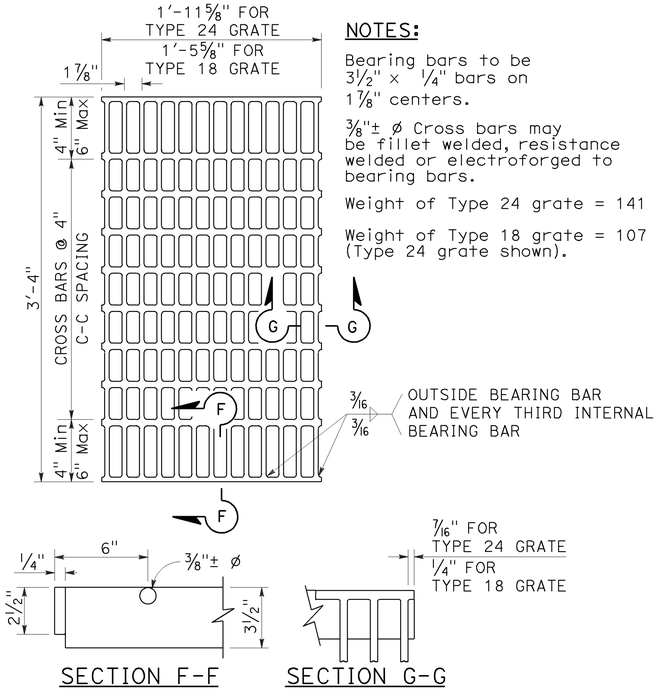

SECTION F-F SECTION G-G

NOTES:

Bearing bars to be 3½" × ¼" bars on 1⅞" centers.

⅜"± ø Cross bars may be fillet welded, resistance welded or electroforged to bearing bars.

Weight of Type 24 grate = 141 LBS.

Weight of Type 18 grate = 107 LBS. (Type 24 grate shown).

TYPE 18-10 AND 24-13 GRATE

(Welded Steel)

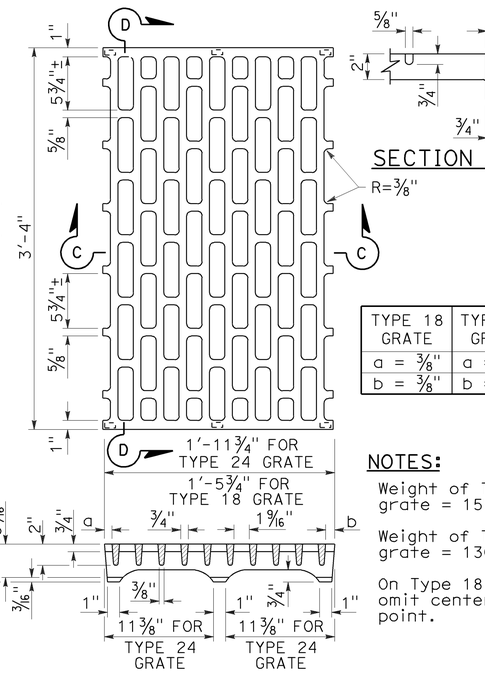

SECTION C-C

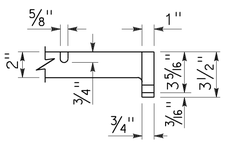

SECTION D-D

R=⅜"

TYPE 18 GRATE	TYPE 24 GRATE
a = ⅜"	a = ⅞"
b = ⅜"	b = ¾"

NOTES:

Weight of Type 24 grate = 155 LBS.

Weight of Type 18 grate = 130 LBS.

On Type 18 grate omit center bearing point.

TYPE 18-8C AND 24-10C GRATE

(Cast ductile iron)

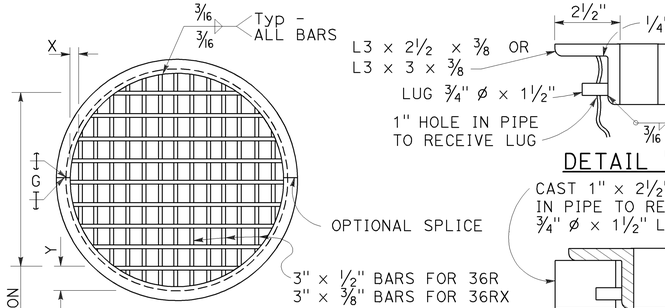

DETAIL "A"

DETAIL "B"

TYPE 36R AND 36RX GRATE DETAILS

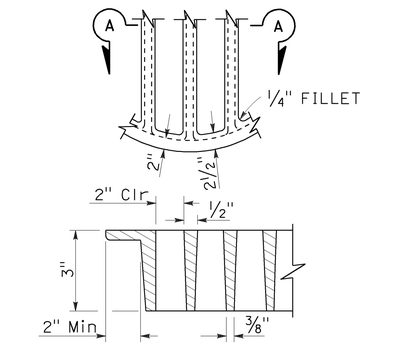

SECTION A-A

ALTERNATIVE CAST DUCTILE IRON GRATE OR CAST CARBON STEEL GRATE TYPE 36R AND 36RX

BASIS FOR Misc IRON AND STEEL FINAL PAY WEIGHTS FOR DRAINAGE INLETS

INLET TYPE	GRATE TYPE	No. OF GRATES	WEIGHT LB
GDO (SEE NOTE 4)	24-10C	2	391
	24-10S	2	456
	24-12X	2	473
	24-13	2	374
G0,G0L,G1,G2, G3,G4 (TYPE 24)	24-10C	1	202
	24-10S	1	229
	24-12X	1	239
	24-13	1	188
G4 (TYPE 18) G5,G6	18-8S	1	187
	18-9X	1	187
	18-10	1	149
GT1,GT2	18-8S	2	374
	18-9X	2	374
	18-10	2	298
GT3,GT4	24-10C	2	404
	24-10S	2	458
	24-12X	2	478
	24-13	2	376
ODI	36RX (Mod)	1	196
GMP,GCP,GCPI	36RX	1	215
ODI	36R (Mod)	1	220
GMP,GCP,GCPI	36R	1	236
TRASH RACK			22
GRATE CHAIN			3

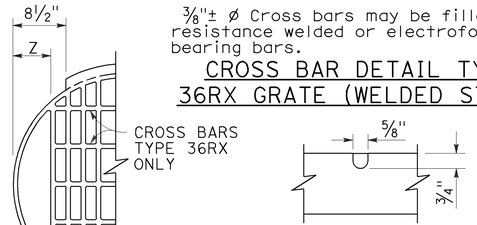

⅜"± ø Cross bars may be fillet welded, resistance welded or electroforged to bearing bars.

CROSS BAR DETAIL TYPE 36RX GRATE (WELDED STEEL)

CROSS BAR DETAIL ALTERNATIVE CAST DUCTILE IRON GRATE OR CAST CARBON STEEL GRATE TYPE 36RX

MODIFIED TYPE 36R AND 36RX GRATE FOR ODI INLET

NOTES:

1. When alternative grates are allowed - Final pay based on alternative with the lesser weight.
2. Use frame shown on Standard Plan D74A, D74B or RSP D77A as appropriate.
3. When Type 24-10S, 24-12X or 24-13 grates are used with GDO Inlets, a ¼" × 3½" × 3'-4⅞" steel bar shall be welded across the center of inlet frame to separate the individual grates.
4. See Revised Standard Plan RSP D77A for connecting chain to welded grate and frame. When chain is required, do not use cast ductile iron grate.

GRATE BAR SPACING TABLE

TYPE	No. OF BARS	CLEAR BAR SPACING	X	Y		Z
				4" SPACING	6" SPACING	
36R	13	2"	2⅛"	-	-	-
36RX (STEEL)	15	2"	9/16"	3¾"	5¾"	-
36RX (CAST)	13	2"	2⅛"	3¾"	5¾"	-
36R Mod	12	2"	2⅛"	-	-	5"
36RX Mod (STEEL)	13	2"	9/16"	3¾"	5¾"	5 11/16"
36RX Mod (CAST)	12	2"	2⅛"	3¾"	5¾"	5"

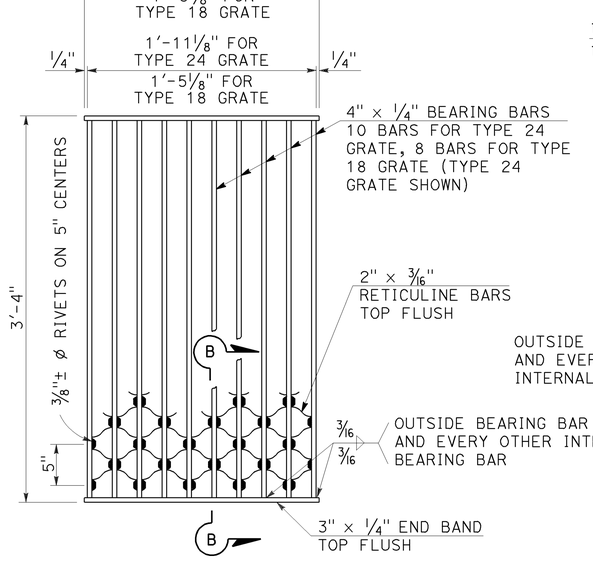

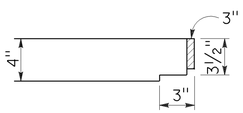

SECTION B-B

NOTES:

Weight of Type 24 grate = 182 LBS.
Weight of Type 18 grate = 145 LBS.

TYPE 18-8S AND 24-10S GRATE

(Welded Steel) Reticuline type

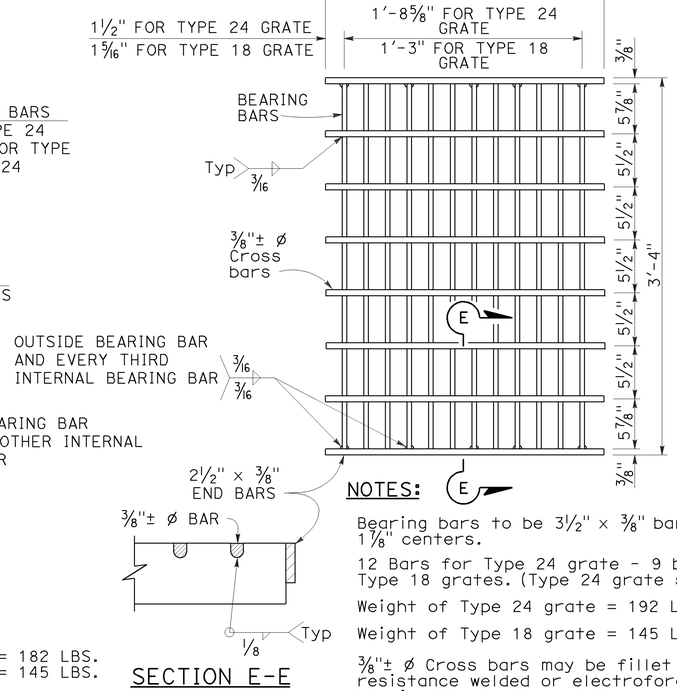

SECTION E-E

NOTES:

Bearing bars to be 3½" × ⅜" bars on 1⅛" centers.

12 Bars for Type 24 grate - 9 bars for Type 18 grates. (Type 24 grate shown).

Weight of Type 24 grate = 192 LBS.

Weight of Type 18 grate = 145 LBS.

⅜"± ø Cross bars may be fillet welded, resistance welded or electroforged to bearing bars.

TYPE 18-9X AND 24-12X GRATE

(Welded Steel)

STATE OF CALIFORNIA
DEPARTMENT OF TRANSPORTATION

GRATE DETAILS No. 2

NO SCALE

RSP D77B DATED APRIL 19, 2013 SUPERSEDES RSP D77B DATED JULY 20, 2012 AND STANDARD PLAN D77B DATED MAY 20, 2011 - PAGE 165 OF THE STANDARD PLANS BOOK DATED 2010.

REVISED STANDARD PLAN RSP D77B

4-4-13

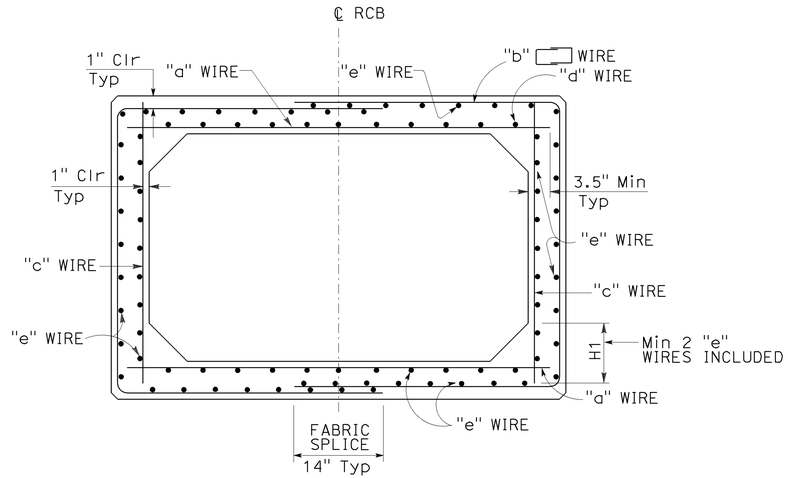

TYPICAL SECTION - SPANS 4'-0" THRU 12'-0"

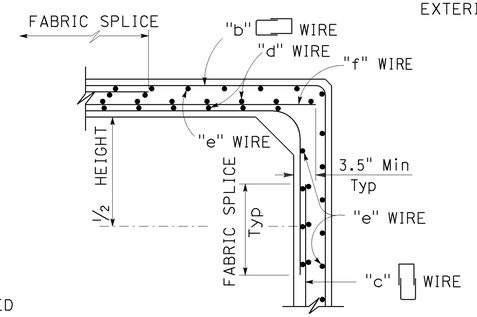

ALTERNATIVE DETAILING OPTION

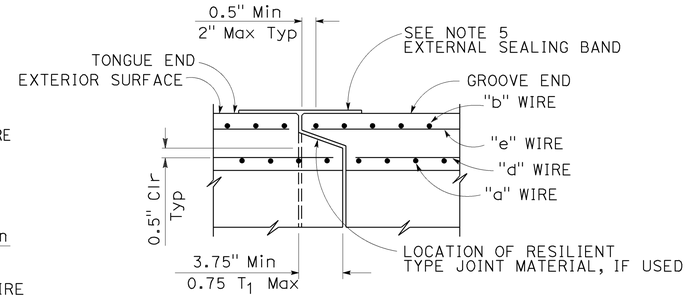

END JOINT DETAIL

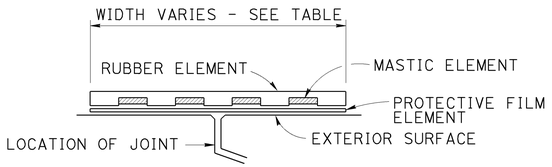

EXTERNAL SEALING BAND SCHEMATIC

Dist	COUNTY	ROUTE	POST MILES TOTAL PROJECT	SHEET No.	TOTAL SHEETS
03	Pla	193	4.4/5.5	189	197

REGISTERED CIVIL ENGINEER

July 18, 2014
PLANS APPROVAL DATE

REGISTERED PROFESSIONAL ENGINEER — Carl M. Duan — No. C59976 — Exp. 6-30-16 — CIVIL — STATE OF CALIFORNIA

THE STATE OF CALIFORNIA OR ITS OFFICERS OR AGENTS SHALL NOT BE RESPONSIBLE FOR THE ACCURACY OR COMPLETENESS OF SCANNED COPIES OF THIS PLAN SHEET.

TO ACCOMPANY PLANS DATED 4-6-15

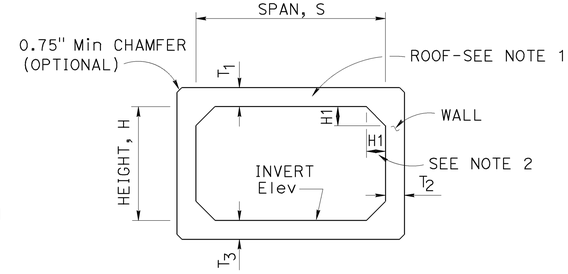

SCHEMATIC

TABLE	
SPAN	EXTERNAL SEALING BAND WIDTH
4'-6'	9"
7'-8'	11"
10'-12'	13"

SPAN, S			4'						5'								6'								7'							
HEIGHT, H			2'		3'		4'		2'		3'		4'		5'		3'		4'		5'		6'		3'		4'		5'		6'		7'	
MAXIMUM EARTH COVER			10'	20'	10'	20'	10'	20'	10'	20'	10'	20'	10'	20'	10'	20'	10'	20'	10'	20'	10'	20'	10'	20'	10'	20'	10'	20'	10'	20'	10'	20'	10'	20'
CONCRETE (INCH)	ROOF	T_1	5.5"	5.5"	5.5"	5.5"	5.5"	5.5"	6"	6"	6"	6"	6"	6"	6"	6"	7"	7"	7"	7"	7"	7"	7"	7"	8"	8"	8"	8"	8"	8"	8"	8"	8"	8"
	SIDE WALL	T_2	5.5"	5.5"	5.5"	5.5"	5.5"	5.5"	6"	6"	6"	6"	6"	6"	6"	6"	7"	7"	7"	7"	7"	7"	7"	7"	8"	8"	8"	8"	8"	8"	8"	8"	8"	8"
	INVERT	T_3	5.5"	5.5"	5.5"	5.5"	5.5"	5.5"	6"	6"	6"	6"	6"	6"	6"	6"	7"	7"	7"	7"	7"	7"	7"	7"	8"	8"	8"	8"	8"	8"	8"	8"	8"	8"
MINIMUM WELDED WIRE FABRIC ($inch^2/ft$)		"a"	.33	.47	.34	.49	.34	.50	.40	.62	.41	.62	.42	.64	.43	.64	.44	.67	.45	.70	.46	.71	.47	.72	.47	.72	.48	.75	.50	.78	.50	.79	.51	.80
		"b"	.23	.28	.23	.25	.21	.23	.26	.36	.24	.36	.24	.33	.24	.30	.28	.44	.27	.40	.27	.37	.27	.38	.33	.52	.31	.48	.30	.45	.30	.43	.30	.48
		"c"	.11	.11	.11	.12	.18	.24	.11	.11	.11	.11	.13	.23	.24	.34	.11	.11	.11	.12	.19	.27	.27	.42	.11	.11	.11	.11	.13	.20	.26	.31	.30	.50
		"d"	.16	.11	.16	.11	.16	.11	.17	.11	.18	.11	.18	.11	.18	.11	.17	.11	.18	.11	.18	.11	.18	.11	.17	.11	.17	.11	.18	.11	.18	.11	.18	.11
		"e"	.11	.11	.11	.11	.11	.11	.11	.11	.11	.11	.11	.11	.11	.11	.11	.11	.11	.11	.11	.11	.11	.11	.11	.11	.11	.11	.11	.11	.11	.11	.11	.11
		"f"	.22	.36	.23	.37	.22	.26	.29	.51	.30	.51	.29	.41	.26	.30	.33	.56	.34	.58	.27	.44	.21	.30	.36	.61	.37	.64	.37	.57	.25	.48	.21	.30
* QUANTITY	Conc	CY/LF	.31		.34		.38		.37		.41		.44		.48		.51		.56		.60		.64		.63		.68		.73		.78		.83	
	Reinf	LB/LF	35	41	39	45	45	51	49	58	49	62	54	69	62	78	60	79	64	83	72	93	80	107	72	98	76	102	81	110	92	120	101	143
** SOIL PRESSURE (ksf)			2.3	4.4	2.4	4.5	2.4	4.5	3.1	4.4	3.1	4.5	3.1	4.5	3.2	4.5	2.7	4.5	2.8	4.5	2.8	4.6	2.8	4.6	2.5	4.5	2.5	4.6	2.5	4.6	2.5	4.6	2.6	4.6

SPAN, S			8'										10'												12'											
HEIGHT, H			4'		5'		6'		7'		8'		5'		6'		7'		8'		9'		10'		6'		7'		8'		9'		10'		11'		12'	
MAXIMUM EARTH COVER			10'	20'	10'	20'	10'	20'	10'	20'	10'	20'	10'	20'	10'	20'	10'	20'	10'	20'	10'	20'	10'	20'	10'	20'	10'	20'	10'	20'	10'	20'	10'	20'	10'	20'
CONCRETE (INCH)	ROOF	T_1	8.5"	8.5"	8.5"	8.5"	8.5"	8.5"	8.5"	8.5"	8.5"	8.5"	10"	10"	10"	10"	10"	10"	10"	10"	10"	10"	10"	10"	12"	12"	12"	12"	12"	12"	12"	12"	12"	12"	12"	12"	12"	12"
	SIDE WALL	T_2	8.5"	8.5"	8.5"	8.5"	8.5"	8.5"	8.5"	8.5"	8.5"	8.5"	10"	10"	10"	10"	10"	10"	10"	10"	10"	10"	10"	10"	12"	12"	12"	12"	12"	12"	12"	12"	12"	12"	12"	12"	12"	12"
	INVERT	T_3	8.5"	8.5"	8.5"	8.5"	8.5"	8.5"	8.5"	8.5"	8.5"	8.5"	10"	10"	10"	10"	10"	10"	10"	10"	10"	10"	10"	10"	12"	12"	12"	12"	12"	12"	12"	12"	12"	12"	12"	12"	12"	12"
MINIMUM WELDED WIRE FABRIC ($inch^2/ft$)		"a"	.55	.87	.56	.90	.57	.92	.58	.93	.58	.94	.66	1.07	.67	1.10	.69	1.13	.70	1.14	.70	1.16	.77	1.16	.73	1.21	1.21	1.24	.77	1.27	1.24	1.29	1.27	1.31	.78	1.32	1.29	1.32
		"b"	.37	.59	.35	.55	.33	.52	.33	.52	.36	.57	.45	.74	.43	.70	.41	.67	.40	.64	.43	.67	.48	.67	.51	.85	.85	.81	.49	.77	.81	.74	.77	.77	.53	.79	.74	.79
		"c"	.11	.11	.11	.11	.20	.31	.31	.42	.38	.62	.11	.11	.11	.11	.22	.31	.36	.42	.40	.62	.54	.86	.11	.11	.11	.11	.23	.30	.37	.42	.42	.60	.54	.82	.42	1.06
		"d"	.19	.11	.19	.11	.20	.11	.20	.11	.20	.11	.20	.11	.20	.11	.21	.11	.21	.11	.21	.11	.21	.11	.20	.11	.20	.11	.21	.11	.22	.11	.22	.11	.22	.11	.22	.11
		"e"	.11	.11	.11	.11	.11	.11	.11	.11	.11	.11	.11	.11	.11	.11	.11	.11	.11	.11	.11	.11	.11	.11	.11	.11	.11	.11	.11	.11	.11	.11	.11	.11	.11	.11	.11	.11
		"f"	.44	.76	.45	.79	.37	.61	.27	.52	.20	.31	.55	.96	.56	.99	.47	.81	.34	.73	.31	.53	.16	.30	.62	1.10	1.10	1.13	.64	.97	1.13	.87	.97	.71	.40	.50	.87	.26
* QUANTITY	Conc	CY/LF	.78		.83		.88		.94		.99		1.10		1.17		1.23		1.29		1.35		1.41		1.56		1.63		1.70		1.78		1.85		1.93		2.00	
	Reinf	LB/LF	93	129	97	133	105	148	117	161	131	189	133	191	138	196	148	212	191	225	176	253	201	282	174	255	179	261	191	279	207	293	223	323	249	357	281	393
** SOIL PRESSURE (ksf)			2.5	4.6	2.5	4.6	2.5	4.6	2.5	4.6	2.5	4.6	3.8	4.6	3.8	4.7	3.8	4.7	4.6	4.7	3.9	4.7	3.9	4.8	3.6	4.7	3.7	4.7	3.7	4.8	3.7	4.8	3.7	4.8	3.8	4.9	3.8	4.9

* See Note 3 ** See Note 6

NOTES:

1. The inside and outside surfaces of the RCB roof shall be marked "TOP".
2. H1 minimum shall equal the wall thickness. H1 maximum shall be 8" for spans through 8' and 14" for spans over 8'.
3. Quantities are approximate and for design purposes only.
4. For design and details not shown see Revised Standard Plan RSP D83B.
5. For external sealing band applications see Standard Plan A62G.
6. Soil pressures shown are factored per AASHTO LRFD and include soil weight of fill over box, self weight of box and live load where applicable.

STATE OF CALIFORNIA
DEPARTMENT OF TRANSPORTATION

PRECAST REINFORCED CONCRETE BOX CULVERT

NO SCALE

RSP D83A DATED JULY 18, 2014 SUPERSEDES STANDARD PLAN D83A DATED MAY 20, 2011 - PAGE 175 OF THE STANDARD PLANS BOOK DATED 2010.

REVISED STANDARD PLAN RSP D83A

2010 REVISED STANDARD PLAN RSP D83A

4-3-14

Dist	COUNTY	ROUTE	POST MILES TOTAL PROJECT	SHEET No.	TOTAL SHEETS
03	Pla	193	4.4/5.5	190	197

REGISTERED CIVIL ENGINEER

July 18, 2014
PLANS APPROVAL DATE

REGISTERED PROFESSIONAL ENGINEER — Carl M. Duan — No. C59976 — Exp. 6-30-16 — CIVIL — STATE OF CALIFORNIA

THE STATE OF CALIFORNIA OR ITS OFFICERS OR AGENTS SHALL NOT BE RESPONSIBLE FOR THE ACCURACY OR COMPLETENESS OF SCANNED COPIES OF THIS PLAN SHEET.

TO ACCOMPANY PLANS DATED 4-6-15

DESIGN NOTES:

Specifications:

AASHTO LRFD Bridge Design Specifications, 4th Edition with California Amendments.

Earth load:

Earth pressures for two conditions:
140 pcf Vert, 42 pcf Horiz
140 pcf Vert, 140 pcf Horiz

Unit stresses:

f'c = 5.0 ksi
fy = 65.0 ksi for weld wire fabric
n = 7

Shear:

Based on

$V_c = \{2.14\sqrt{f'_c}+4600\ \frac{A_s}{b d_e}\ \frac{V_u d_e}{M_u}\} b.d_e \leq 4.0\sqrt{f'_c} b.d_e$ (Pounds)

V_c shall not be less than $3.00\sqrt{f'_c} b.d_e$ for frame members and $2.5\sqrt{f'_c} b.d_e$ for simply supported members.

Exclusion:

Axial loading on the members has not been considered.

GENERAL NOTES:

Designation:

Standard single or multiple precast box culverts are shown on the plans as span times height with maximum cover over roof thus: 8' x 5' RCB with 10'-0" or double 10' x 5' RCB with 20'-0", followed by alternatives.

Alternatives:

Single cell:

Standard dimensions of AASHTO Material Specification 'M259' or 'M273'.

Multiple cell:

Constructed by placing single cells adjacent to each other. Inlet and outlet ends of culvert will be rounded unless square ends are designated. Parapet will be shown unless designated in plans. Such designation may be different for inlet and outlet ends.

Limitations:

Where the overfill is less than 12", Precast RCB culverts are not to be used. Precast RCB culverts are not to be used in siphon or pressurized installations unless appropriate "watertight" jointing is provided.

Special reinforcement coverage:

Precast RCB culvert standard plans are not to be used in a corrosive environment or where there is a severe abrasive flow condition or freeze-thaw locations.

Special design:

Required for culvert with different conditions, loads or design bearing pressures greater than those given on these plans. Required for culverts where end details need higher skew angles, higher parapets or barrier sections.

CONSTRUCTION NOTES:

Cutoff walls:

4'-0" Cutoff walls are to be provided at inlet and/or outlet unless channel is lined and unless otherwise shown. These walls are to be extended if scour conditions warrant. See Standard Plans D84, D85 and D86A.

Wingwalls:

Wingwalls shall be cast-in-place and shall conform to standard plan details for box culvert wingwalls. See Standard Plans D84, D85 and D86A.

Earthwork:

See Standard Plan A62G.

Construction loads:

Strutting may be required near temporary ends. For construction loads on culverts, See Standard Plan D88.

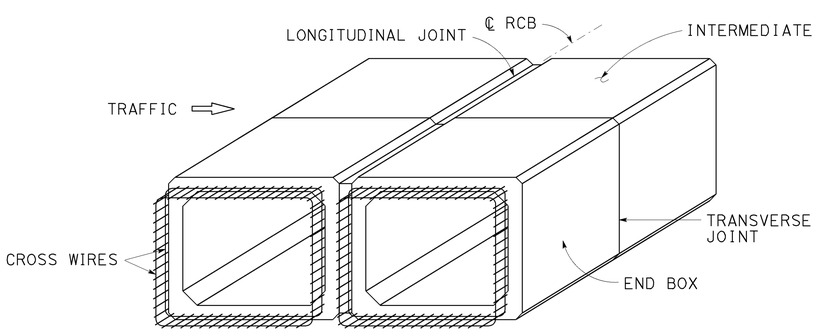

PRECAST RCB TERMINOLOGY

NOTE: Inner and outer reinforcement to be exposed as required to tie to cast-in-place construction. A minimum of two cross wires shall be exposed on all sides.

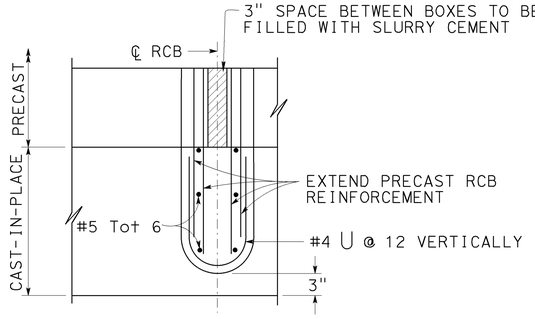

PARTIAL PLAN INTERIOR WALL MULTICELL CULVERT

PARAPET "P" BARS			
SKEW ANGLE / SPAN	0° TO 15°	16° TO 30°	31° TO 45°
4'-0"	#5	#5	#5
5'-0"	#5	#5	#6
6'-0"	#6	#6	#6
7'-0"	#7	#7	#7
8'-0"	#7	#7	#8
10'-0"	#8	#8	#9
12'-0"	#9	#9	#10

BARRIER PARAPET REINFORCEMENT

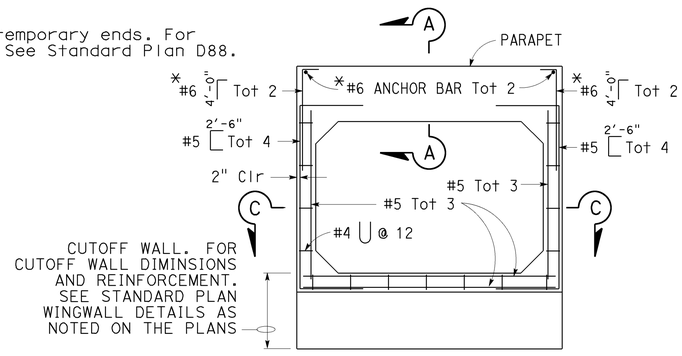

CAST-IN-PLACE END ELEVATION

* Reinforcing required for barrier parapet application only.

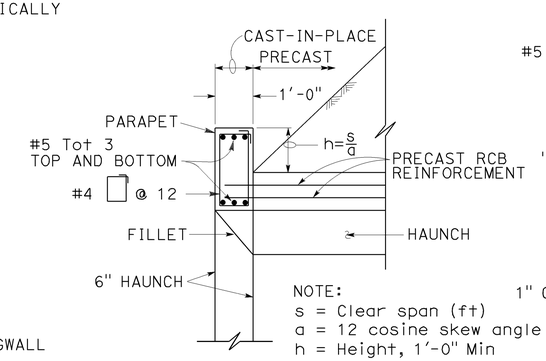

SECTION A-A
(Standard Height Parapet)

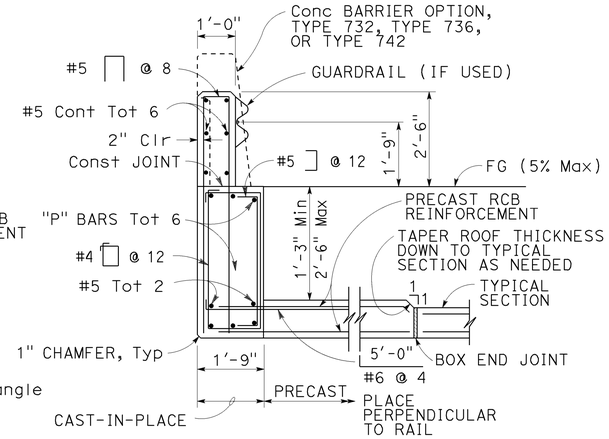

SECTION A-A
(Barrier Parapet)

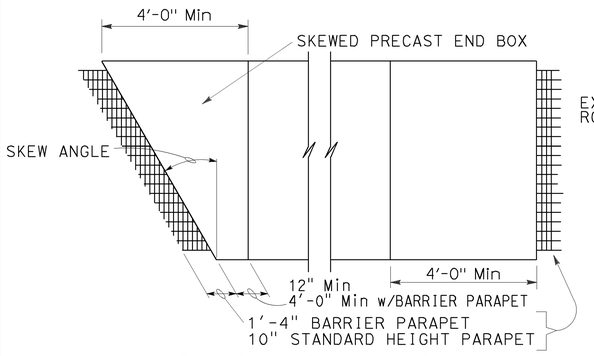

PARTIAL PLAN VIEW

For illustrative purposes only.
For correct skew direction see plans.

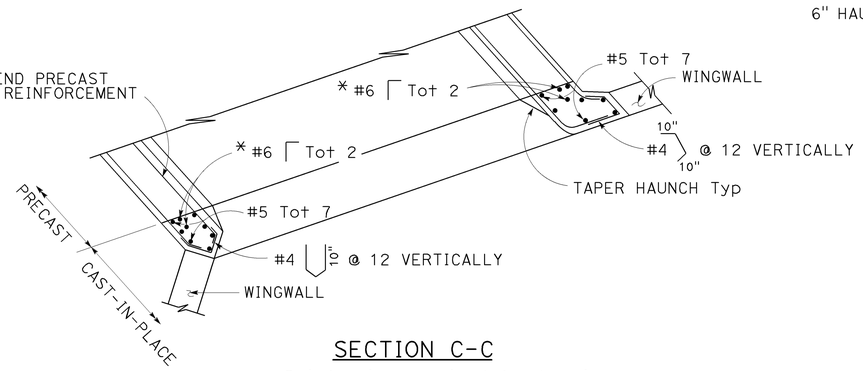

SECTION C-C

* Reinforcing required for barrier parapet application only.

TYPICAL CULVERT END DETAILS

For wall and invert reinforcement not shown, See "End Elevation" detail.

STATE OF CALIFORNIA
DEPARTMENT OF TRANSPORTATION

PRECAST REINFORCED CONCRETE BOX CULVERT MISCELLANEOUS DETAILS

NO SCALE

RSP D83B DATED JULY 18, 2014 SUPERSEDES STANDARD PLAN D83B DATED MAY 20, 2011 - PAGE 176 OF THE STANDARD PLANS BOOK DATED 2010.

REVISED STANDARD PLAN RSP D83B

2010 REVISED STANDARD PLAN RSP D83B

4-3-14

Dist	COUNTY	ROUTE	POST MILES TOTAL PROJECT	SHEET No.	TOTAL SHEETS
03	Pla	193	4.4/5.5	191	197

Gregory A. Balzer
LICENSED LANDSCAPE ARCHITECT

July 19, 2013
PLANS APPROVAL DATE

LICENSED LANDSCAPE ARCHITECT Gregory A. Balzer 2015 — 03 Renewal Date 2-28-15 — Renewal Date 7-19-13 Date — STATE OF CALIFORNIA

THE STATE OF CALIFORNIA OR ITS OFFICERS OR AGENTS SHALL NOT BE RESPONSIBLE FOR THE ACCURACY OR COMPLETENESS OF SCANNED COPIES OF THIS PLAN SHEET.

TO ACCOMPANY PLANS DATED 4-6-15

A

AB	AGGREGATE BASE
ABS	ACRYLONITRILE-BUTADIENE-STYRENE
AC	ASPHALT CONCRETE
ACC	ARMOR-CLAD CONDUCTORS
Adj	ADJACENT/ADJUSTABLE
AIC	AUXILIARY IRRIGATION CONTROLLER
Alt	ALTERNATIVE
AMEND	AMENDMENT
ARV	AIR RELEASE VALVE
AUTO	AUTOMATIC
AUX	AUXILIARY
AVB	ATMOSPHERIC VACUUM BREAKER

B

B&B	BALLED AND BURLAPPED
B/B	BRASS/BRONZE
B/B/PL	BRASS/BRONZE/PLASTIC
B/PL	BRASS/PLASTIC
BFM	BONDED FIBER MATRIX
Bit Ctd	BITUMINOUS COATED
BP	BOOSTER PUMP
BPA	BACKFLOW PREVENTER ASSEMBLY
BPE	BACKFLOW PREVENTER ENCLOSURE
BV	BALL VALVE

C

C	CONDUIT
CAP	CORRUGATED ALUMINUM PIPE
CARV	COMBINATION AIR RELEASE VALVE
CB	COUPLING BAND
CCA	CAM COUPLER ASSEMBLY
CEC	CONTROLLER ENCLOSURE CABINET
CHDPE	CORRUGATED HIGH DENSITY POLYETHYLENE
CL	CHAIN LINK
CNC	CONTROL AND NEUTRAL CONDUCTORS
Conc	CONCRETE
CP	COPPER PIPE
CS	COMPOST SOCK
CSP	CORRUGATED STEEL PIPE
CST	CENTER STRIP
CV	CHECK VALVE

D

Dia	DIAMETER
DIP	DUCTILE IRON PIPE
DIT	DRIP IRRIGATION TUBING
DG	DECOMPOSED GRANITE
DN	DIAMETER NOMINAL
DVA	DRIP VALVE ASSEMBLY

E

EC	EROSION CONTROL
ECTC	EROSION CONTROL TECHNOLOGY COUNCIL
Elect	ELECTRIC/ELECTRICAL
Elev	ELEVATION
ELL	ELBOW
ENCL	ENCLOSURE
EP	EDGE OF PAVEMENT
ES	EDGE OF SHOULDER
EST	END STRIP
ESTB	ESTABLISHMENT
ETW	EDGE OF TRAVELED WAY

F

F	FULL CIRCLE
F/P	FULL/PART CIRCLE
FCV	FLOW CONTROL VALVE
FERT	FERTILIZER
FG	FINISHED GRADE
FH	FLEXIBLE HOSE
FIPT	FEMALE IRON PIPE THREAD
FIS	FERTILIZER INJECTOR SYSTEM
FL	FLOW LINE
FR	FIBER ROLL
FS	FLOW SENSOR
FSC	FLOW SENSOR CABLE
FV	FLUSH VALVE

G

Galv	GALVANIZED
GARV	GARDEN VALVE
GARVA	GARDEN VALVE ASSEMBLY
GM	GRAVEL MULCH
GPH	GALLONS PER HOUR
GPM	GALLONS PER MINUTE
GSP	GALVANIZED STEEL PIPE
GV	GATE VALVE

H

H	HALF CIRCLE
HDPE	HIGH DENSITY POLYETHYLENE
HP	HORSEPOWER/HINGE POINT
HPL	HIGH PRESSURE LINE
Hwy	HIGHWAY

I

IC	IRRIGATION CONTROLLER
ICC	IRRIGATION CONTROLLER(S) IN CONTROLLER ENCLOSURE CABINET
ID	INSIDE DIAMETER
IFS	IRRIGATION FILTRATION SYSTEM
IPS	IRON PIPE SIZE
IPT	IRON PIPE THREAD
Irr	IRRIGATION

L

L	LENGTH

M

Max	MAXIMUM
MBGR	METAL BEAM GUARD RAILING
MCV	MANUAL CONTROL VALVE
MIC	MASTER IRRIGATION CONTROLLER
Min	MINIMUM
MIPT	MALE IRON PIPE THREAD
Misc	MISCELLANEOUS
Mtl	MATERIAL
MVP	MAINTENANCE VEHICLE PULLOUT

N

NCN	NO COMMON NAME
NL	NOZZLE LINE
No.	NUMBER
NPT	NATIONAL PIPE THREAD

O

O/C	ON CENTER
OD	OUTSIDE DIAMETER
OL	OVERLAP

P

P	PART CIRCLE
PB	PULL BOX
PCC	PORTLAND CEMENT CONCRETE
PE	POLYETHYLENE
Pkt	PACKET
PL	PLASTIC
PLS	PURE LIVE SEED
PLT	PLANT/PLANTING
PLT ESTB	PLANT ESTABLISHMENT
PM	POST MILE
PR	PRESSURE RATED
PRLV	PRESSURE RELIEF VALVE
PRV	PRESSURE REGULATING VALVE
PVC	POLYVINYL CHLORIDE
Pvmt	PAVEMENT

Q

Q	QUARTER CIRCLE
QCV	QUICK COUPLING VALVE

NOTE:
For additional abbreviations, see Standard Plans A10A and A10B.

R

R	RADIUS
RCP	REINFORCED CONCRETE PIPE
RCV	REMOTE CONTROL VALVE
RCVM	REMOTE CONTROL VALVE (MASTER)
RCVMF	REMOTE CONTROL VALVE (MASTER) W/FLOW SENSOR
RCVP	REMOTE CONTROL VALVE W/PRESSURE REGULATOR
RCW	RECYCLED WATER
RECP	ROLLED EROSION CONTROL PRODUCT
REQ	REQUIRED
RICS	REMOTE IRRIGATION CONTROL SYSTEM
R/W	RIGHT OF WAY

S

S	SLIP
SCH	SCHEDULE
SF	STATE-FURNISHED
Shld	SHOULDER
Sq	SQUARE
SST	SIDE STRIP
Sta	STATION
Std	STANDARD
SW	SIDEWALK/SOUND WALL

T

T	THIRD CIRCLE/THREAD
TLS	TRUCK LOADING STANDPIPE
TQ	THREE QUARTER CIRCLE
TRM	TURF REINFORCEMENT MAT
TT	TWO-THIRDS CIRCLE
TWSA	TREE WELL SPRINKLER ASSEMBLY
Typ	TYPICAL

U

UG	UNDERGROUND

W

W	WIDTH
W/	WITH
WM	WATER METER
WS	WYE STRAINER
WSA	WYE STRAINER ASSEMBLY
WSP	WELDED STEEL PIPE
WWM	WELDED WIRE MESH

STATE OF CALIFORNIA
DEPARTMENT OF TRANSPORTATION

LANDSCAPE AND EROSION CONTROL ABBREVIATIONS

NO SCALE

RSP H1 DATED JULY 19, 2013 SUPERSEDES STANDARD PLAN H1
DATED MAY 20, 2011 - PAGE 218 OF THE STANDARD PLANS BOOK DATED 2010.

REVISED STANDARD PLAN RSP H1

2010 REVISED STANDARD PLAN RSP H1

6-28-13

Dist	COUNTY	ROUTE	POST MILES TOTAL PROJECT	SHEET No.	TOTAL SHEETS
03	Pla	193	4.4/5.5	192	197

Gregory A. Balzer
LICENSED LANDSCAPE ARCHITECT

November 15, 2013
PLANS APPROVAL DATE

LICENSED LANDSCAPE ARCHITECT
Gregory A. Balzer 2576
Signature
2-28-15
Renewal Date
11-15-13
Date
STATE OF CALIFORNIA

THE STATE OF CALIFORNIA OR ITS OFFICERS OR AGENTS SHALL NOT BE RESPONSIBLE FOR THE ACCURACY OR COMPLETENESS OF SCANNED COPIES OF THIS PLAN SHEET.

TO ACCOMPANY PLANS DATED 4-6-15

EXISTING	NEW	ITEM DESCRIPTION
		WATER METER (WM)
		BACKFLOW PREVENTER ASSEMBLY (BPA)
		BACKFLOW PREVENTER ENCLOSURE (BPE)
		BOOSTER PUMP (BP)
		TRUCK LOADING STANDPIPE (TLS)
FS	FS	FLOW SENSOR (FS)
X		MASTER IRRIGATION CONTROLLER (MIC)
		AUXILIARY IRRIGATION CONTROLLER (AIC)
		IRRIGATION CONTROLLER (IC) IRRIGATION CONTROLLER (IC) (BATTERY) IRRIGATION CONTROLLER (IC) (SOLAR) IRRIGATION CONTROLLER (IC) (TWO WIRE) IRRIGATION CONTROLLER(S) IN CONTROLLER ENCLOSURE CABINET (ICC)
acc	ACC	ARMOR-CLAD CONDUCTORS (ACC)
cnc	CNC	CONTROL AND NEUTRAL CONDUCTORS (CNC)
		IRRIGATION CONDUIT
		EXTEND IRRIGATION CONDUIT
dip	DIP	DUCTILE IRON PIPE (SUPPLY LINE) (MAIN) (DIP)
		GALVANIZED STEEL PIPE (SUPPLY LINE) (MAIN) (GSP)
		GALVANIZED STEEL PIPE (SUPPLY LINE) (LATERAL) (GSP)
		PLASTIC PIPE (SUPPLY LINE) (MAIN)
		PLASTIC PIPE (SUPPLY LINE) (LATERAL)
cp	CP	COPPER PIPE (SUPPLY LINE)
dit	DIT	DRIP IRRIGATION TUBING
		REMOTE CONTROL VALVE (RCV) REMOTE CONTROL VALVE (MASTER) (RCVM) REMOTE CONTROL VALVE (MASTER) W/FLOW METER (RCVMF)
P	P	REMOTE CONTROL VALVE W/PRESSURE REGULATOR (RCVP)
		EXISTING MANUAL CONTROL VALVE (MCV)
		DRIP VALVE ASSEMBLY (DVA)
		WYE STRAINER ASSEMBLY (WSA)

EXISTING	NEW	ITEM DESCRIPTION
		GATE VALVE (GV)
		BALL VALVE (BV)
		QUICK COUPLING VALVE (QCV)
		CAM COUPLER ASSEMBLY (CCA)
		GARDEN VALVE ASSEMBLY (GARVA)
		PRESSURE REGULATING VALVE (PRV)
		PRESSURE RELIEF VALVE (PRLV)
		FLOW CONTROL VALVE (FCV)
		COMBINATION AIR RELEASE VALVE (CARV)
		CHECK VALVE (CV)
		FLUSH VALVE (FV)
		EXISTING NOZZLE LINE W/TURNING UNION
		EXISTING IRRIGATION SYSTEM
		EXISTING IRRIGATION SYSTEM TO BE REMOVED
		CHAIN LINK GATE
		QUICK COUPLING VALVE W/SPRINKLER PROTECTOR
3	3	SPRINKLER W/SPRINKLER PROTECTOR
	C	CONNECT TO EXISTING SYSTEM
		CAP
		CAP EXISTING
	\\\FR\\\	FIBER ROLL
	\\\CS\\\	COMPOST SOCK

RCV SIZE
IRRIGATION CONTROLLER
CONTROLLER STATION
VALVE IN PARALLEL (IF APPLICABLE)
GPM
QUANTITY OF SPRINKLERS (WHEN SHOWN)

* 2½"-A-2b-40-60

VALVE CODE

* VALVE CODES FOR EXISTING VALVES ARE SHOWN IN A DASHED ENCLOSURE.

STATE OF CALIFORNIA
DEPARTMENT OF TRANSPORTATION

LANDSCAPE AND EROSION CONTROL SYMBOLS

NO SCALE

RSP H2 DATED NOVEMBER 15, 2013 SUPERSEDES RSP H2 DATED JULY 19, 2013 AND STANDARD PLAN H2 DATED MAY 20, 2011 - PAGE 219 OF THE STANDARD PLANS BOOK DATED 2010.

REVISED STANDARD PLAN RSP H2

2010 REVISED STANDARD PLAN RSP H2

10-9-13

Dist	COUNTY	ROUTE	POST MILES TOTAL PROJECT	SHEET No.	TOTAL SHEETS
03	Pla	193	4.4/5.5	193	197

Gregory A Balzer
LICENSED LANDSCAPE ARCHITECT

July 19, 2013
PLANS APPROVAL DATE

LICENSED LANDSCAPE ARCHITECT
Gregory A. Balzer 2576
Signature
2-28-15
Renewal Date
7-19-13
Date
STATE OF CALIFORNIA

THE STATE OF CALIFORNIA OR ITS OFFICERS OR AGENTS SHALL NOT BE RESPONSIBLE FOR THE ACCURACY OR COMPLETENESS OF SCANNED COPIES OF THIS PLAN SHEET.

TO ACCOMPANY PLANS DATED 4-6-15

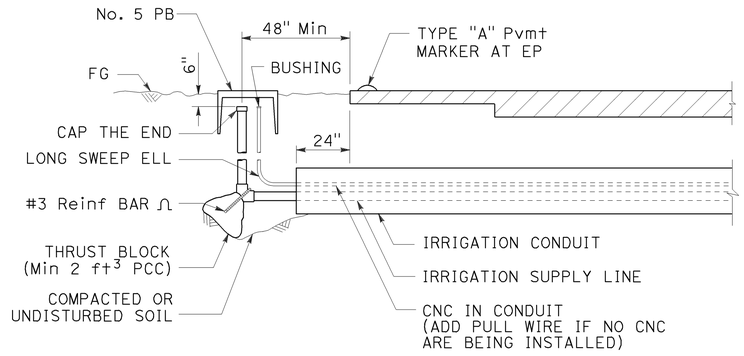

SECTION

IRRIGATION CONDUIT

UNDER TRAVELED WAY

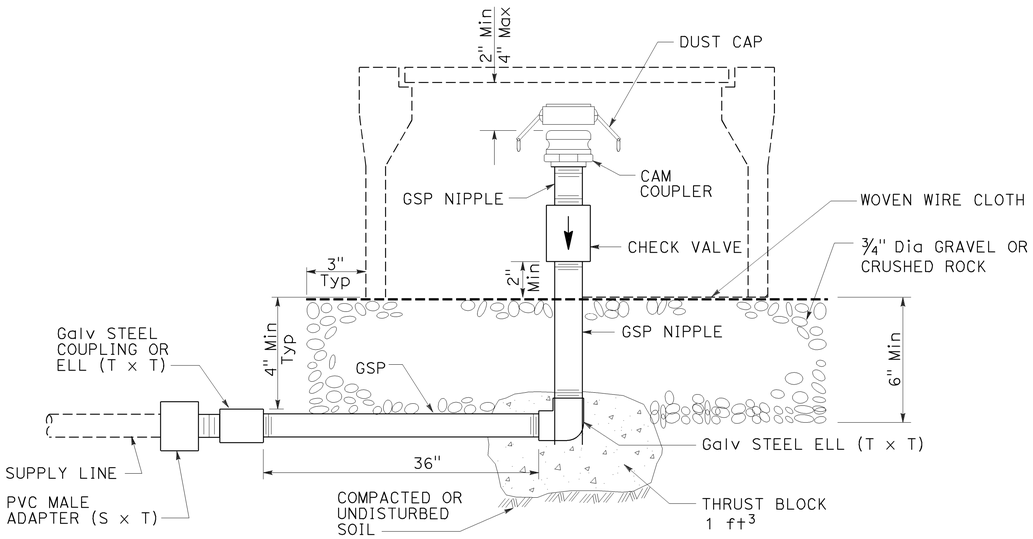

ELEVATION

CAM COUPLER ASSEMBLY

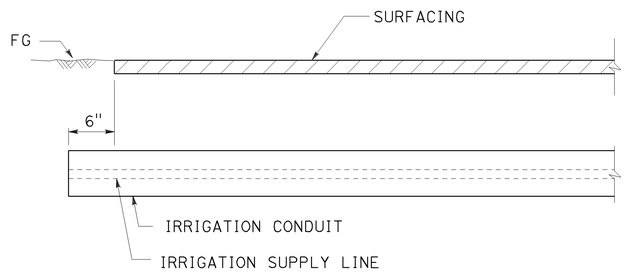

SECTION

IRRIGATION CONDUIT

UNDER SIDEWALKS, DRIVEWAYS AND PATHS

STATE OF CALIFORNIA
DEPARTMENT OF TRANSPORTATION

LANDSCAPE DETAILS

NO SCALE

RSP H9 DATED JULY 19, 2013 SUPERSEDES STANDARD PLAN H9
DATED MAY 20, 2011 - PAGE 226 OF THE STANDARD PLANS BOOK DATED 2010.

REVISED STANDARD PLAN RSP H9

2010 REVISED STANDARD PLAN RSP H9

6-28-13

Dist	COUNTY	ROUTE	POST MILES TOTAL PROJECT	SHEET No.	TOTAL SHEETS
03	Pla	193	4.4/5.5	194	197

REGISTERED CIVIL ENGINEER

July 19, 2013
PLANS APPROVAL DATE

Gurinderpal Bhullar
No. C48815
Exp. 9-30-14
CIVIL
REGISTERED PROFESSIONAL ENGINEER
STATE OF CALIFORNIA

THE STATE OF CALIFORNIA OR ITS OFFICERS OR AGENTS SHALL NOT BE RESPONSIBLE FOR THE ACCURACY OR COMPLETENESS OF SCANNED COPIES OF THIS PLAN SHEET.

TO ACCOMPANY PLANS DATED 4-6-15

TABLE 1

TAPER LENGTH CRITERIA AND CHANNELIZING DEVICE SPACING

SPEED (S)	MINIMUM TAPER LENGTH * FOR WIDTH OF OFFSET 12 FEET (W)				MAXIMUM CHANNELIZING DEVICE SPACING		
					X	Y	Z **
	TANGENT 2L	MERGING L	SHIFTING L/2	SHOULDER L/3	TAPER	TANGENT	CONFLICT
mph	ft	ft	ft	ft	ft	ft	ft
20	160	80	40	27	20	40	10
25	250	125	63	42	25	50	12
30	360	180	90	60	30	60	15
35	490	245	123	82	35	70	17
40	640	320	160	107	40	80	20
45	1080	540	270	180	45	90	22
50	1200	600	300	200	50	100	25
55	1320	660	330	220	55	110	27
60	1440	720	360	240	60	120	30
65	1560	780	390	260	65	130	32
70	1680	840	420	280	70	140	35

* - For other offsets, use the following merging taper length formula for L:
For speed of 40 mph or less, $L = WS^2/60$
For speed of 45 mph or more, $L = WS$

Where: L = Taper length in feet
W = Width of offset in feet
S = Posted speed limit, off-peak 85th-percentile speed prior to work starting, or the anticipated operating speed in mph

** - Use for taper and tangent sections where there are no pavement markings or where there is a conflict between existing pavement markings and channelizers (CA).

TABLE 2

LONGITUDINAL BUFFER SPACE AND FLAGGER STATION SPACING

SPEED *	Min D **	DOWNGRADE Min D ***		
		-3%	-6%	-9%
mph	ft	ft	ft	ft
20	115	116	120	126
25	155	158	165	173
30	200	205	215	227
35	250	257	271	287
40	305	315	333	354
45	360	378	400	427
50	425	446	474	507
55	495	520	553	593
60	570	598	638	686
65	645	682	728	785
70	730	771	825	891

* - Speed is posted speed limit, off-peak 85th-percentile speed prior to work starting, or the anticipated operating speed in mph

** - Longitudinal buffer space or flagger station spacing

*** - Use on sustained downgrade steeper than -3 percent and longer than 1 mile.

TABLE 3

ADVANCE WARNING SIGN SPACING

ROAD TYPE	DISTANCE BETWEEN SIGNS *		
	A	B	C
	ft	ft	ft
URBAN - 25 mph OR LESS	100	100	100
URBAN - MORE THAN 25 mph TO 40 mph	250	250	250
URBAN - MORE THAN 40 mph	350	350	350
RURAL	500	500	500
EXPRESSWAY / FREEWAY	1000	1500	2640

* - The distances are approximate, are intended for guidance purposes only, and should be applied with engineering judgment. These distances should be adjusted by the Engineer for field conditions, if necessary, by increasing or decreasing the recommmended distances.

2010 REVISED STANDARD PLAN RSP T9

STATE OF CALIFORNIA
DEPARTMENT OF TRANSPORTATION

TRAFFIC CONTROL SYSTEM TABLES FOR LANE AND RAMP CLOSURES

NO SCALE

RSP T9 DATED JULY 19, 2013 SUPERSEDES RSP T9 DATED APRIL 19, 2013 THAT SUPPLEMENTS THE STANDARD PLANS BOOK DATED 2010.

REVISED STANDARD PLAN RSP T9

4-30-13

Dist	COUNTY	ROUTE	POST MILES TOTAL PROJECT	SHEET No.	TOTAL SHEETS
03	Pla	193	4.4/5.5	195	197

Devinder Singh
REGISTERED CIVIL ENGINEER

October 17, 2014
PLANS APPROVAL DATE

REGISTERED PROFESSIONAL ENGINEER — Devinder Singh — No. C50470 — Exp. 6-30-15 — CIVIL — STATE OF CALIFORNIA

THE STATE OF CALIFORNIA OR ITS OFFICERS OR AGENTS SHALL NOT BE RESPONSIBLE FOR THE ACCURACY OR COMPLETENESS OF SCANNED COPIES OF THIS PLAN SHEET.

TO ACCOMPANY PLANS DATED 4-6-15

NOTES:

See Revised Standard Plan RSP T9 for tables.

Use cone spacing X for taper segment, Y for tangent segment or Z for conflict situations, as approriate, per Table 1, unless X, Y, or Z cone spacing is shown on this sheet.

Unless otherwise specified in the special provisions, all temporary warning signs shall have black legend on fluorescent orange background.

California codes are designated by (CA). Otherwise, Federal (MUTCD) codes are shown.

TYPICAL LANE CLOSURE WITH REVERSIBLE CONTROL

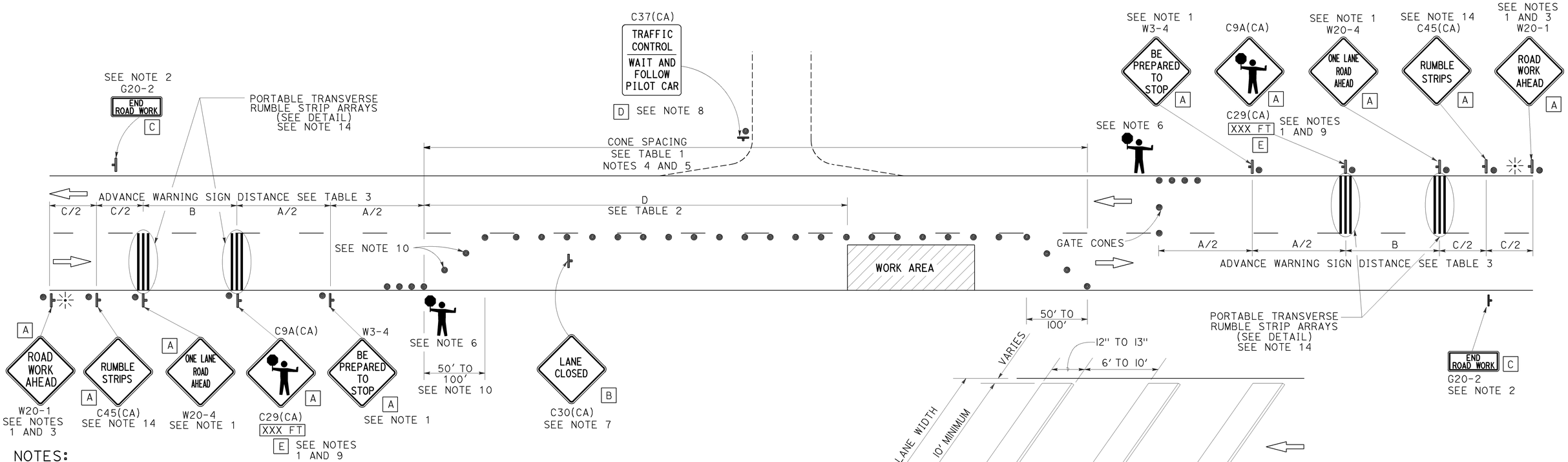

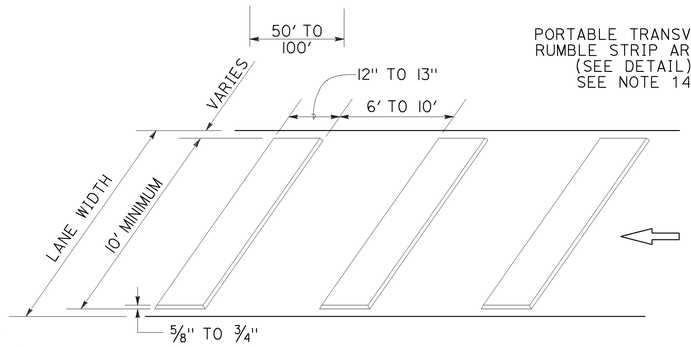

PORTABLE TRANSVERSE RUMBLE STRIP ARRAY DETAIL

NOTES:

1. Each advance warning sign in each direction of travel shall be equipped with at least two flags for daytime closure. Each flag shall be at least 16" x 16" in size and shall be orange or fluorescent red-orange in color. Flashing beacons shall be placed at the locations indicated for lane closure during hours of darkness.
2. A G20-2 "END ROAD WORK" sign, as appropriate, shall be placed at the end of the lane control unless the end of work area is obvious, or ends within a larger project's limits.
3. If the W20-1 sign would follow within 2000' of a stationary W20-1 or G20-1 "ROAD WORK NEXT _____ MILES", use a W20-4 sign for the first advance warning sign.
4. All cones used for lane closures during the hours of darkness shall be fitted with retroreflective bands (or sleeves) as specified in the specifications.
5. Portable delineators, placed at one-half the spacing indicated for traffic cones, may be used instead of cones for daytime closures only.
6. Additional advance flaggers may be required. Flagger should stand in a conspicuous place, be visible to approaching traffic as well as approaching vehicles after the first vehicle has stopped. During the hours of darkness, the flagging-station and flagger shall be illuminated and clearly visible to approaching traffic. The illumination footprint of the lighting on the ground shall be at least 20' in diameter. Place a minimum of four cones at 50' intervals in advance of flagger station as shown.
7. Place C30(CA) "LANE CLOSED" sign at 500' to 1000' intervals throughout extended work areas. They are optional if the work area is visible from the flagger station.
8. When a pilot car is used, place a C37(CA) "TRAFFIC CONTROL-WAIT AND FOLLOW PILOT CAR" sign with black legend on white background at all intersections, driveways and alleys without a flagger within traffic control area. Signs shall be clean and visible at all times. Where traffic can not be effectively self-regulated, at least one flagger shall be used at each intersection within traffic control area.
9. An optional C29(CA) sign may be placed below the C9A(CA) sign.
10. Either traffic cones or barricades shall be placed on the taper. Barricades shall be Type I, II, or III.
11. The color of the portable transverse rumble strips shall be black or orange. Use 2 arrays, each array shall consist of 3 rumble strips.
12. Portable transverse rumble strips shall not be placed on sharp horizontal or vertical curves nor shall they be placed through pedestrian crossings.
13. If the portable transverse rumble strips become out of alignment (skewed) by more than 6 inches, measured from one end to the other, they shall be readjusted to bring the placement back to the original location.
14. Portable transverse rumble strips are not required if any one of the following conditions is satisfied:
    A. Work duration occupies a location for four hours or less
    B. Posted speed limit is below 45 MPH
    C. Work is of emergency nature
    D. Work zone is in snow or icy weather conditions

LEGEND

- TRAFFIC CONE
- TEMPORARY TRAFFIC CONTROL SIGN
- PORTABLE FLASHING BEACON
- FLAGGER

SIGN PANEL SIZE (Min)

A	48" x 48"
B	30" x 30"
C	36" x 18"
D	36" x 42"
E	20" x 7"

STATE OF CALIFORNIA
DEPARTMENT OF TRANSPORTATION

TRAFFIC CONTROL SYSTEM FOR LANE CLOSURE ON TWO LANE CONVENTIONAL HIGHWAYS

NO SCALE

RSP T13 DATED OCTOBER 17, 2014 SUPERSEDES RSP T13 DATED JULY 18, 2014 AND RSP T13 DATED APRIL 19, 2013 AND STANDARD PLAN T13 DATED MAY 20, 2011 - PAGE 241 OF THE STANDARD PLANS BOOK DATED 2010.

REVISED STANDARD PLAN RSP T13

2010 REVISED STANDARD PLAN RSP T13

9-26-14

Dist	COUNTY	ROUTE	POST MILES TOTAL PROJECT	SHEET No.	TOTAL SHEETS
03	Pla	193	4.4/5.5	196	197

REGISTERED CIVIL ENGINEER

April 19, 2013
PLANS APPROVAL DATE

REGISTERED PROFESSIONAL ENGINEER
Gurinderpal Bhullar
No. C48815
Exp. 9-30-14
CIVIL
STATE OF CALIFORNIA

THE STATE OF CALIFORNIA OR ITS OFFICERS OR AGENTS SHALL NOT BE RESPONSIBLE FOR THE ACCURACY OR COMPLETENESS OF SCANNED COPIES OF THIS PLAN SHEET.

TO ACCOMPANY PLANS DATED 4-6-15

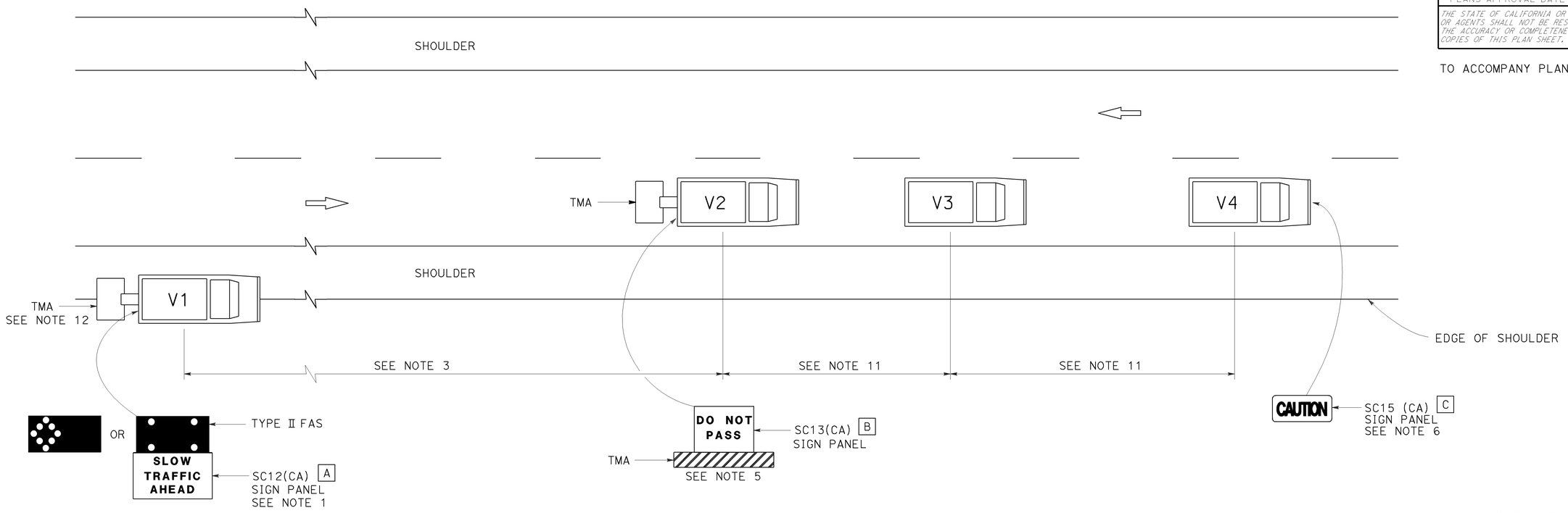

NOTES:

1. Either a changeable message sign or a SC12(CA) "SLOW TRAFFIC AHEAD" sign shall be mounted on the rear of sign vehicle V1. The changeable message sign shall be sequenced to show the "CAUTION" message first, follow by the "SLOW TRAFFIC AHEAD" message. A Type II flashing arrow sign may be used with the SC12(CA) sign panel.
2. Sign vehicle V1 should be positioned where highly visible when shoulders are not available.
3. If traffic queues develop, sign vehicle V1 should be positioned upstream from the end of queue.
4. Vehicle-mounted sign panels shall have Type III or above retroreflective sheeting, black on white, or black on fluorescent orange, with 6" minimum series D letters per Caltrans sign specifications.
5. Shadow vehicle shall be equipped with a truck-mounted attenuator. The sign panel shown shall be mounted on the rear of shadow vehicle V2. The message "LANE CLOSED" may be used in place of the "DO NOT PASS" message.
6. The sign panel shown shall be mounted on the front of sign vehicle V4, facing opposing traffic.
7. All vehicles shall be equipped with flashing or rotating amber lights.
8. Sign vehicle V4 will not be required when the work and vehicles V2 and V3 are 2′ or more from the centerline of the highway during the work or application operations.
9. All vehicles used for lane closures shall be equipped with two-way radios and the vehicle operators shall maintain communication during the work or application operation.
10. This plan shall not be used where workers would be on foot in the work area. Use a stationary type lane closure (Revised Standard Plan T13) for this condition.
11. Minimize spacing between vehicles V2 and V3 and vehicles V3 and V4 to deter road users from driving in between them.
12. If sign vehicle V1 encroaches into the traffic lane due to insufficient shoulder width, sign vehicle V1 shall be equipped with a truck-mounted attenuator. Sign vehicle V1 shall stay as close to the edge of shoulder as practicable.

LEGEND

V1	SIGN VEHICLE
V2	SHADOW VEHICLE
V3	WORK/APPLICATION VEHICLE
V4	SIGN VEHICLE
TMA	TRUCK-MOUNTED ATTENUATOR
	FLASHING ARROW SIGN (FAS) IN FLASHING CAUTION MODE
	FLASHING ARROW SIGN (FAS) IN ALTERNATING DIAMOND CAUTION

SIGN PANEL SIZE (Min)

A	72" x 42"
B	54" x 42"
C	54" x 24"

STATE OF CALIFORNIA
DEPARTMENT OF TRANSPORTATION

TRAFFIC CONTROL SYSTEM FOR MOVING LANE CLOSURE ON TWO LANE HIGHWAYS

NO SCALE

RSP T17 DATED APRIL 19, 2013 SUPERSEDES STANDARD PLAN T17
DATED MAY 20, 2011 - PAGE 245 OF THE STANDARD PLANS BOOK DATED 2010.

REVISED STANDARD PLAN RSP T17

2010 REVISED STANDARD PLAN RSP T17

12-18-12

Dist	COUNTY	ROUTE	POST MILES TOTAL PROJECT	SHEET No.	TOTAL SHEETS
03	Pla	193	4.4/5.5	197	197

REGISTERED CIVIL ENGINEER

October 21, 2011
PLANS APPROVAL DATE

REGISTERED PROFESSIONAL ENGINEER — Tillat Satter — No. C42892 — Exp. 3-31-12 — CIVIL — STATE OF CALIFORNIA

THE STATE OF CALIFORNIA OR ITS OFFICERS OR AGENTS SHALL NOT BE RESPONSIBLE FOR THE ACCURACY OR COMPLETENESS OF SCANNED COPIES OF THIS PLAN SHEET.

TO ACCOMPANY PLANS DATED 4-6-15

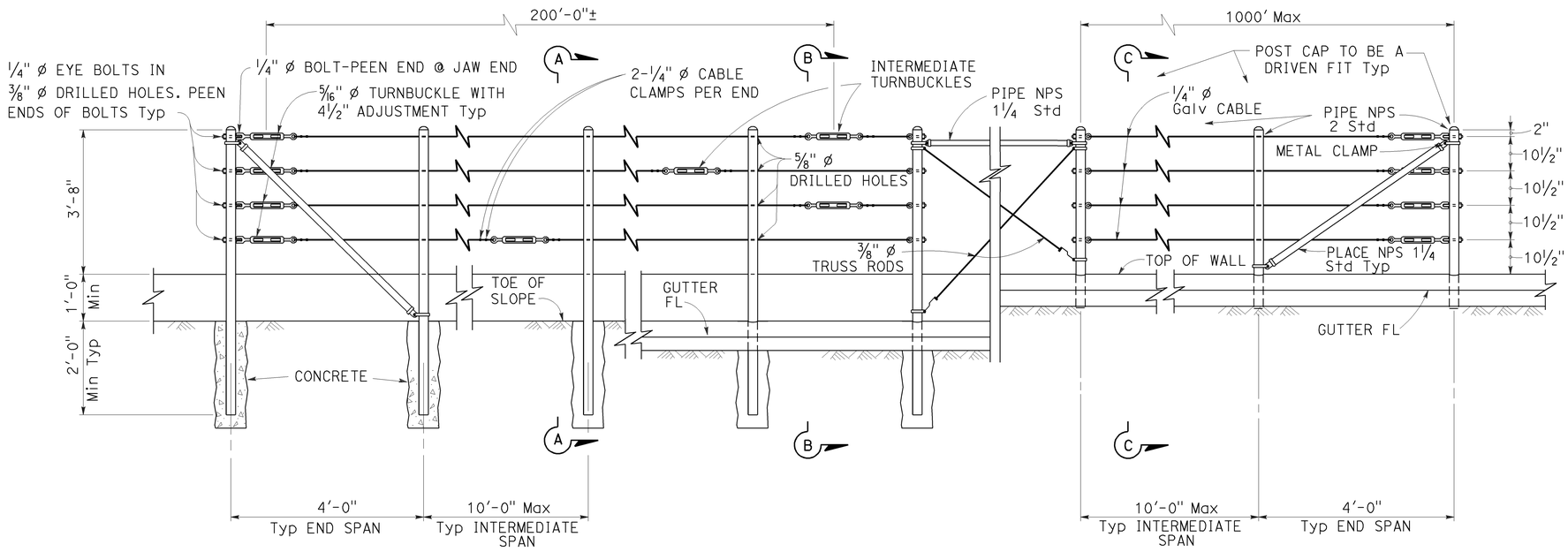

EXISTING WALL (WITHOUT GUTTER) — Existing

RETAINING WALL (WITH GUTTER) — Existing

RETAINING WALL (WITH GUTTER) — New construction

ELEVATION

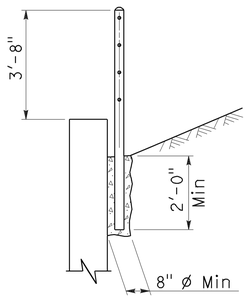

SECTION A-A — Existing

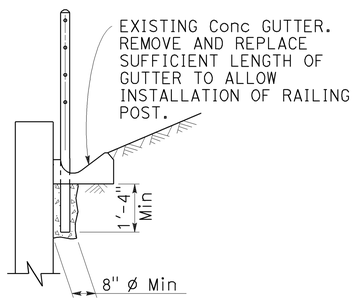

SECTION B-B — Existing

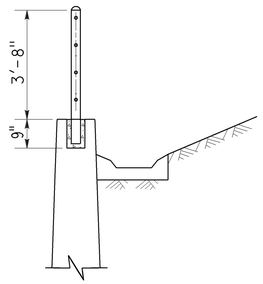

SECTION C-C — New construction

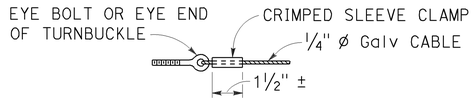

ALTERNATIVE CABLE CONNECTION

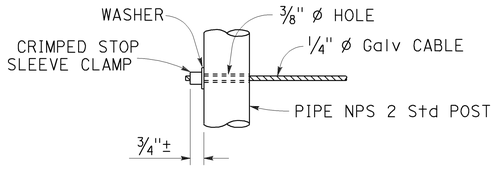

ALTERNATIVE DEAD END ANCHORAGE

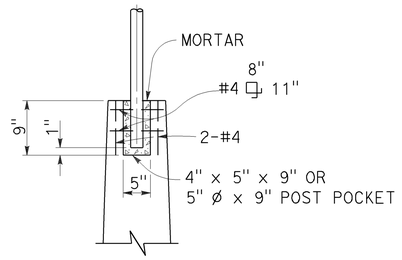

POST POCKET

NOTES:

1. Maximum distance between turnbuckles shall be 200'-0"±.
2. Intermediate turnbuckles to be placed in adjacent spans.
3. Cable shall not be spliced between intermediate turnbuckles and end posts.
4. Posts to be vertical.
5. Alignment of holes in posts may vary to conform to slope of top of retaining wall.
6. The Contractor shall verify all dependent dimensions in the field before ordering or fabricating any material.
7. Line posts shall be braced horizontally and trussed diagonally in both directions at intervals not to exceed 1000'.
8. Post pockets to be centered in top of wall.
9. Typical end spans, braced in both directions, shall be constructed at changes in line where the angle of deflection is 15° or more.
10. Provide thimbles at all cable loops.

STATE OF CALIFORNIA
DEPARTMENT OF TRANSPORTATION

CABLE RAILING

NO SCALE

RSP B11-47 DATED OCTOBER 21, 2011 SUPERSEDES STANDARD PLAN B11-47 DATED MAY 20, 2011 - PAGE 293 OF THE STANDARD PLANS BOOK DATED 2010.

REVISED STANDARD PLAN RSP B11-47

2010 REVISED STANDARD PLAN RSP B11-47

9-14-11