DIST	COUNTY	ROUTE	POST MILES TOTAL PROJECT	SHEET No.	TOTAL SHEETS
03	Sac	160	L6.98	15	27

REGISTERED CIVIL ENGINEER 1-7-13 DATE

January 7, 2013
PLANS APPROVAL DATE

REGISTERED PROFESSIONAL ENGINEER THOMAS J. BOLLA No. C 43811 Exp. 6-30-13 CIVIL STATE OF CALIFORNIA

The State of California or its officers or agents shall not be responsible for the accuracy or completeness of electronic copies of this plan sheet.

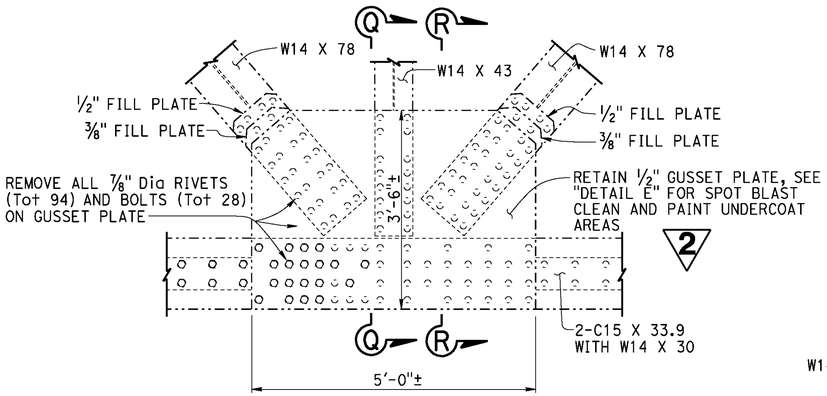

EXISTING

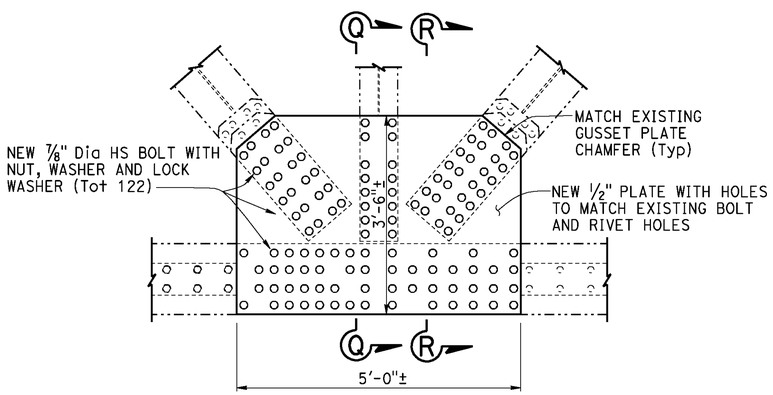

RECONSTRUCTION

2 (NOTE: Paint New Structural Steel)

GUSSET PLATE DETAIL

3/4" = 1'-0"

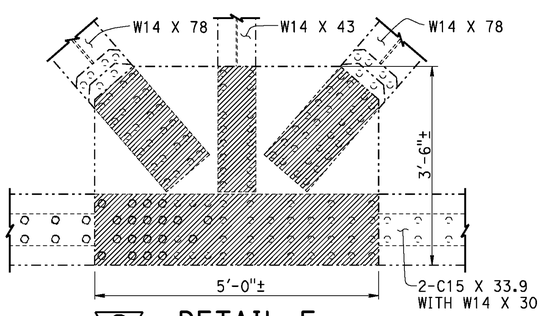

2 DETAIL E

3/4" = 1'-0"

Indicates spot blast clean and paint undercoat near side and far side.

NOTE:
THE CONTRACTOR SHALL VERIFY ALL CONTROLLING FIELD DIMENSIONS BEFORE ORDERING OR FABRICATING ANY MATERIAL.

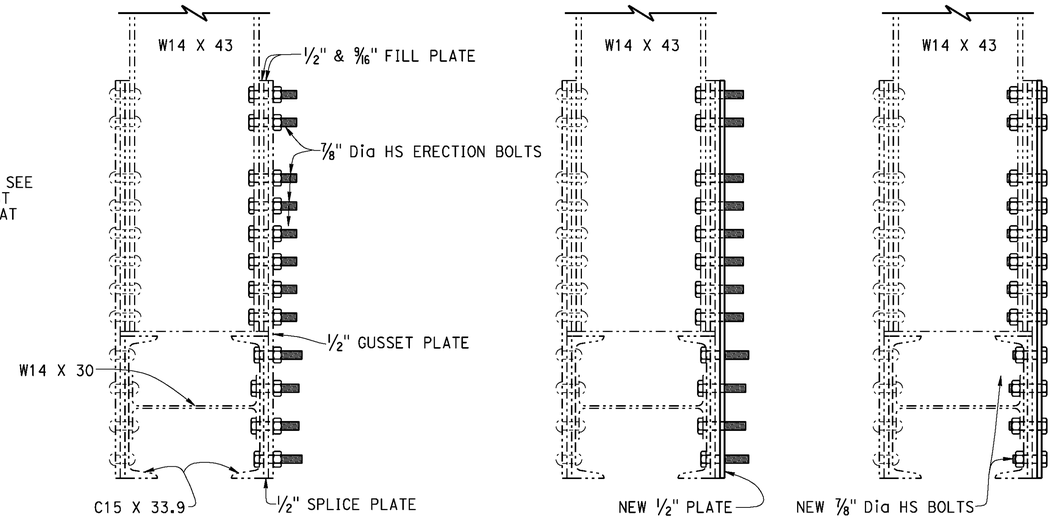

STAGE 1 STAGE 2 STAGE 3

SECTION Q-Q

1 1/2" = 1'-0"

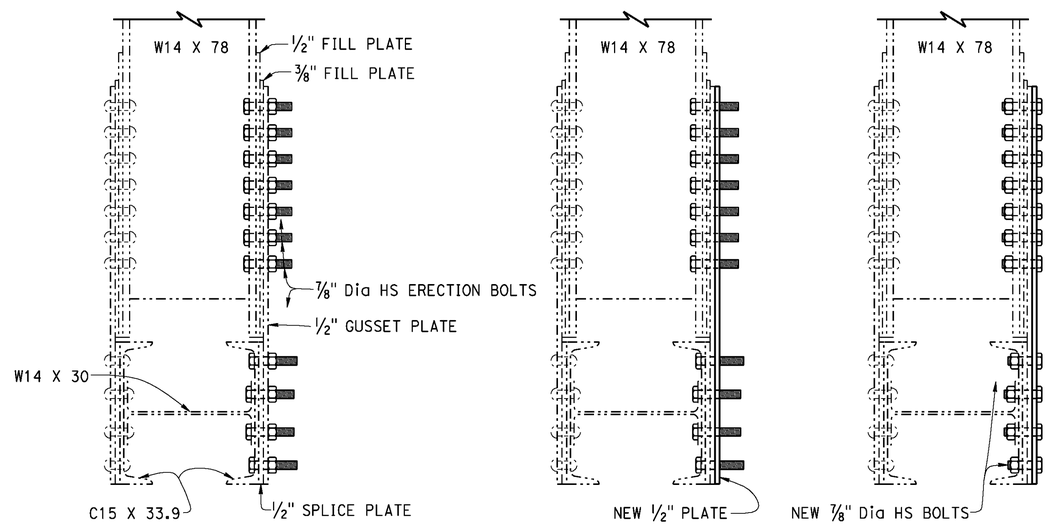

STAGE 1 STAGE 2 STAGE 3

SECTION R-R

1 1/2" = 1'-0"

NOTES: (APPLY TO THIS SHEET ONLY)

STAGE 1: Remove existing rivets and bolts, replace each with 7/8" diameter HS Erection Bolt Assemblies (Tot 122). Complete removal and replacement of one existing rivet or bolt at a time before proceeding to the next existing rivet or bolt.

STAGE 2: Provide positive means to hold HS Erection Bolts in place when all nuts are removed for placement of new 1/2" plate. Reinstall nuts immediately after plate placement.

STAGE 3: Remove HS Erection Bolt Assemblies, replace each with 7/8" diameter HS Bolts (Tot 122). Complete removal and replacement of one HS Erection Bolt Assembly at a time before proceeding to the next HS Erection Bolt Assembly.

2 **REVISED PER ADDENDUM No. 2 DATED MARCH 21, 2013**

	BY	CHECKED
DESIGN	T. Bolla	Khanh Truong
DETAILS	Dale Kubochi	Khanh Truong
QUANTITIES	T. Bolla	Khanh Truong

STATE OF CALIFORNIA DEPARTMENT OF TRANSPORTATION

DIVISION OF MAINTENANCE STRUCTURE MAINTENANCE DESIGN

BRIDGE NO. 24-0121
POST MILE L6.98

THREE MILE SLOUGH
GUSSET PLATE DETAILS

STRUCTURES MAINTENANCE DETAIL SHEET (ENGLISH) (REV. 09-01-10)

ORIGINAL SCALE IN INCHES FOR REDUCED PLANS 0 1 2 3

UNIT: 3488
PROJECT NUMBER & PHASE: 0312000023 1 CONTRACT NO.: 03-3M7201

DISREGARD PRINTS BEARING EARLIER REVISION DATES

REVISION DATES 8-13-12 8-31-12 10-25-12 11-8-12

SHEET 8 OF 9

FILE => 03-3m7201-g-det-02-addendum.dgn

USERNAME => s124428 DATE PLOTTED => 20-MAR-2013 TIME PLOTTED => 08:25

DIST.	COUNTY	ROUTE	POST MILES TOTAL PROJECT	SHEET NO.	TOTAL SHEETS
03	Sac	160	L6.98	17	27

Brian T. Sutliff 03-21-13
REGISTERED CIVIL ENGINEER DATE

REGISTERED PROFESSIONAL ENGINEER Brian T. Sutliff No. 3862 Exp. 3-31-14 STRUCTURAL STATE OF CALIFORNIA

January 7, 2013
PLANS APPROVAL DATE

The State of California or its officers or agents shall not be responsible for the accuracy or completeness of electronic copies of this plan sheet.

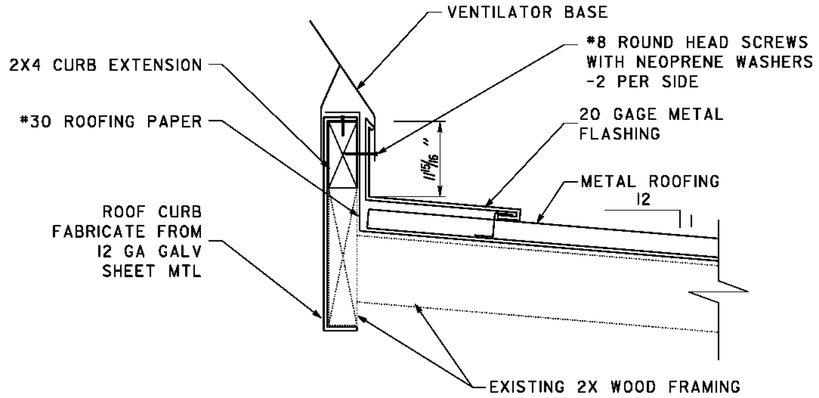

1 VENTILATOR BASE
SCALE 3" = 1'-0"

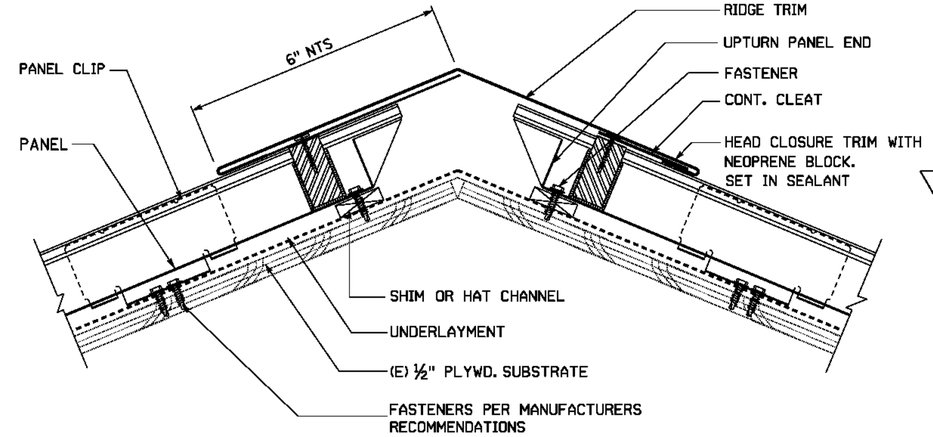

2 HIP DETAIL
SCALE 3" = 1'-0"

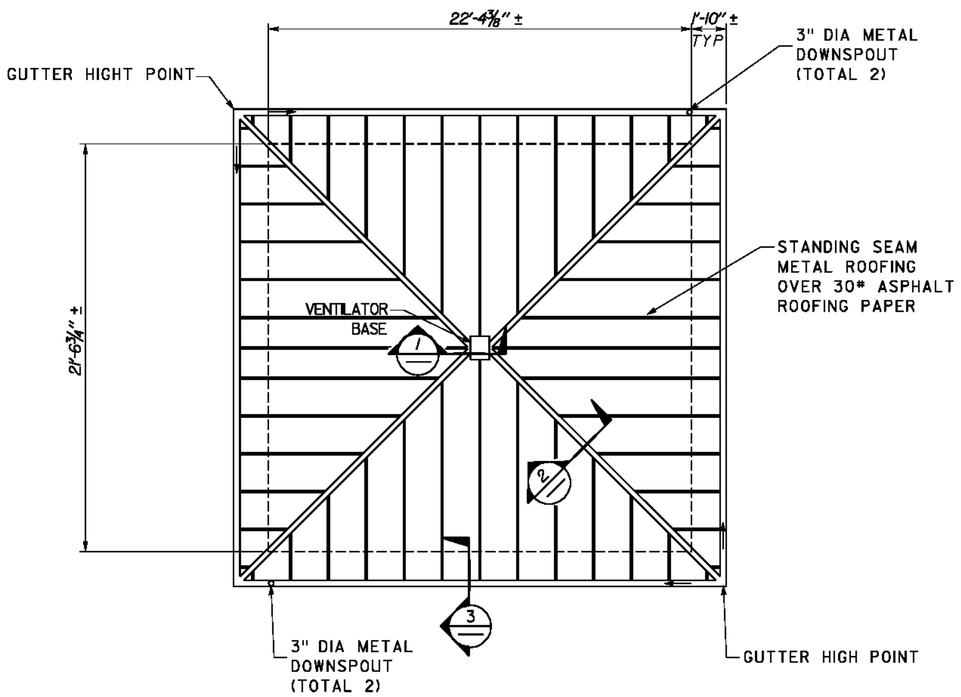

NOTE:
(E) SPEAKER SUPPORT ASSEMBLY AND ROOF JACKS SHALL BE REMOVED AND REINSTALLED

NOTE:
ATTACH METAL ROOFING PER ROOFING MANUFACTURER'S REQUIREMENTS

A ROOF PLAN
SCALE 1/4" = 1' - 0"

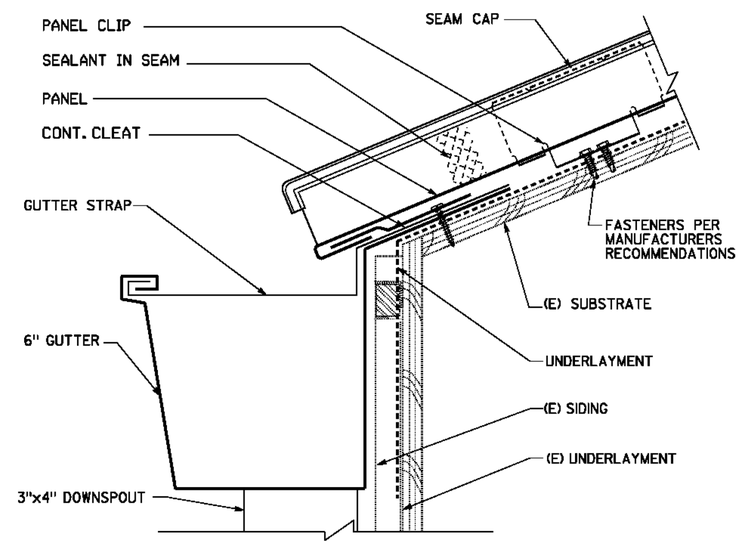

3 EAVE DETAIL
SCALE 3" = 1'-0"

REMARKS

ALL PREFINISHED ITEMS ARE TO BE COLORS SELECTED FROM MANUFACTURERS STANDARD COLOR PALETTE. COLORS ARE TO BE SELECTED AFTER CONTRACT IS AWARDED FROM SUBMITTALS.

ALL ROOFING, GUTTERS AND DOWNSPOUTS TO MATCH EXISTING STYLE.

ALL ROOFING, SOFFIT, GUTTERS AND DOWNSPOUTS TO MATCH EXISTING COLORS UNLESS AUTHORIZED.

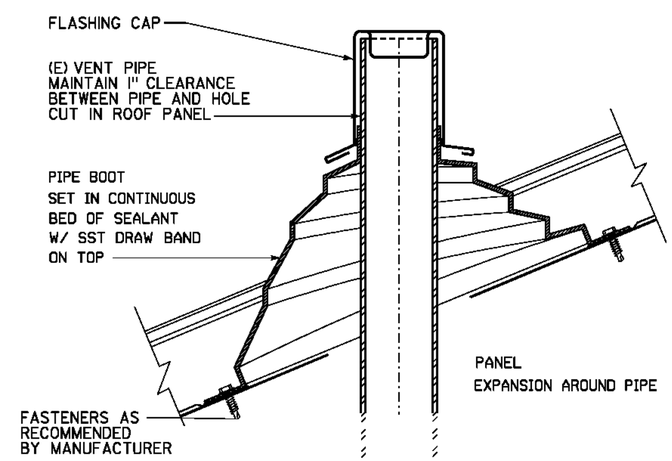

4 PIPE BOOT DETAIL
SCALE 3" = 1'-0"

2 REVISED PER ADDENDUM No. 2 DATED MARCH 21, 2013

	BY	CHECKED
DESIGN	Brian Sutliff	Sean R. Samuel
DETAILS	Brian Sutliff	Sean R. Samuel
QUANTITIES	Brian Sutliff	Sean R. Samuel

STATE OF CALIFORNIA DEPARTMENT OF TRANSPORTATION

DIVISION OF ENGINEERING SERVICES ARCHITECTURAL AND STRUCTURAL DESIGN

BRIDGE NO. 24-0121
POST MILE L6.98

THREE MILE SLOUGH
CONTROL HOUSE
ROOF PLAN AND DETAILS

SHEET ST1-1

TAEMWW Imperial Rev. 7/10

ORIGINAL SCALE IN INCHES FOR REDUCED PLANS 0 1 2 3

UNIT 3488
PROJECT NUMBER & PHASE 0312000023I
EA xxxxxx

DISREGARD PRINTS BEARING EARLIER REVISION DATES → 06-30-12 01-08-13 03-19-13

REVISION DATES (PRELIMINARY STAGE ONLY) SHEET OF

D:\User\Projects\Dist03\3 Mile Slough Bridge Inspection\Expedite\Temp\st01_01.dgn

20-MAR-2013 13:28