Dist	COUNTY	ROUTE	POST MILES TOTAL PROJECT	SHEET No.	TOTAL SHEETS
03	But, Col, ED, Nev, Pla, etc.	5,28,32, 50,51,etc.	Var	6	42

Jaskaran Singh Boparai 11-23-15
REGISTERED ELECTRICAL ENGINEER DATE

11-23-15
PLANS APPROVAL DATE

REGISTERED PROFESSIONAL ENGINEER JASKARAN S. BOPARAI No. E15056 Exp. 12-31-15 ELECTRICAL STATE OF CALIFORNIA

THE STATE OF CALIFORNIA OR ITS OFFICERS OR AGENTS SHALL NOT BE RESPONSIBLE FOR THE ACCURACY OR COMPLETENESS OF SCANNED COPIES OF THIS PLAN SHEET.

1

LEGEND:

1 RS Exist CCTV CAMERA AND BRACKET ON Exist TYPE 15 LIGHTING STANDARD POLE. INSTALL NEW CCTV CAMERA, BRACKET AND CCTV CABLE PER DETAIL P ON SHEET E-14.

2 RS Exist CCTV CAMERA AND BRACKET ON Exist TYPE 15 LIGHTING STANDARD POLE. INSTALL NEW CCTV CAMERA, BRACKET AND CCTV CABLE PER DETAIL Q ON SHEET E-14.

3 RS Exist CCTV CAMERA CONTROL UNIT, ETHERNET SWITCH, AND MULTIPLE AC OUTLET STRIP.

4 INSTALL ETHERNET SECURITY ROUTER, DSL MODEM, REMOTE ETHERNET POWER CONTROLLER SWITCH, DETAIL D ON E-9

5 RS Exist CCTV CAMERA ON Exist CCTV POLE AND INSTALL NEW CCTV CAMERA. SEE DETAIL A. ON SHEET E-7.

6 RS Exist CCTV CAMERA ON Exist ROADSIDE WEATHER INFORMATION SYSTEM (RWIS) TOWER AND INSTALL NEW CCTV CAMERA. SEE DETAIL E ON SHEET E-8.

7 RS Exist JUNCTION BOX AND INSTALL A COVER PLATE, SEE DETAIL M ON SHEET E-7.

8 RS Exist CCTV CAMERA ON Exist SIGN STRUCTURE AND INSTALL NEW CCTV CAMERA. SEE DETAIL O ON SHEET E-13.

9 RS Exist CCTV CAMERA ON Exist SIGNAL POLE AND INSTALL NEW CCTV CAMERA. SEE DETAIL B ON SHEET E-7.

10 RS Exist CCTV CAMERA AND BRACKET ON Exist TYPE 31 LIGHTING POLE (A2335) AND INSTALL NEW CCTV CAMERA AND BRACKET PER DETAIL B ON REVISED STANDARD PLAN RSP ES-7R. SEE DETAIL Z ON SHEET E-12.

11 RS Exist CCTV CAMERA ON Exist RWIS TOWER AND INSTALL NEW CCTV CAMERA. SEE DETAIL F ON SHEET E-8.

12 RS Exist BOLTS (TWO) ON Exist PULL BOX AND REPLACE WITH TWO SECURITY STUD BOLTS.

13 INSTALL TYPE CCTV 15′ OVERHEAD SIGN MOUNTED POLE PER Std PLAN ES-16A WITH NO CCTV MOUNTING ADAPTER AND NO JUNCTION BOX. NEW CCTV WILL BE MOUNTED ON 2′-6" MOUNTING BRACKET PER DETAIL R3 SHEET E-14.

14 RS Exist CCTV CAMERA AND BRACKET ON Exist EMS SIGN. INSTALL NEW CCTV CAMERA AND BRACKET PER DETAIL X ON SHEET E-11.

15 RS Exist CCTV CAMERA ON Exist CCTV SIGN MOUNTED POLE AND INSTALL NEW CCTV CAMERA, SEE DETAIL C ON SHEET E-7.

16 SEE DETAIL D ON SHEET E-9 FOR CCTV EQUIPMENT INSTALLATION INSIDE THE CABINET.

17 RC Exist CCTV CABLE AND INSTALL NEW 1 CIC.

18 RC Exist CCTV CABLE AND INSTALL NEW 1 CIC AND ANTENNA CABLE.

19 INSTALL 1 CIC.

20 INSTALL COMMUNICATION EQUIPMENT. SEE DETAIL N ON SHEET E-14.

21 INSTALL OMNI ANTENNA ON Exist RWIS TOWER. CONTRACTOR TO PROVIDE APPROPRIATE STAND OFFS AND BRACKETS.

22 INSTALL 4G (LTE) WIRELESS MODEM ASSEMBLY, 8-PORT ETHERNET SWITCH AND ETHERNET EXTENDER SWITCH COMBINATION UNIT ON DIN RAIL AS SHOWN IN DETAILS I AND H ON SHEET E-9.

23 REMOVE BLANK PLATE.

24 INSTALL 4G (LTE) ANTENNA AND RUN ANTENNA CABLE PER MANUFACTURER RECOMMENDATION, SEE DETAIL K ON SHEET E-10.

25 INSTALL STANDARD HALF SHELF AS SHOWN.

26 INSTALL RJ-11 MODULAR JACKS AS SHOWN.

27 REMOVE EXISTING TERMINAL BLOCK TBO. INSTALL 12 POSITION TERMINAL BLOCKS ON DIN RAIL. LABEL TERMINAL BLOCKS AS SHOWN ON A PERMANENT LABEL.

28 INSTALL REMOTE ETHERNET POWER CONTROLLER SWITCH.

29 INSTALL MULTIPLE AC OUTLET STRIP.

30 INSTALL DATA SURGE SUPPRESSOR AS SHOWN.

31 CONNECT SOLID #10 GROUND WIRE TO EQUIPMENT GROUND.

32 USE 2 PAIR, 22 AWG, STRANDED AND TINNED COPPER WIRES WITH PVC JACKET TYPE INSULATION AS SPECIFIED IN THE SPECIAL PROVISIONS.

33 INSTALL ETHERNET SECURITY ROUTER.

34 NOT USED.

35 INSTALL DSL MODEM.

36 INSTALL UNIVERSAL JUNCTION BOX, SEE DETAIL L ON SHEET E-10.

37 Exist 2"C, 2#12, 1#12G, ADD 1 CIC.

38 Exist 3"C, 9#14 2#10 (METER ON), 1#10, 2 DLC, 23 DLC, ADD 1 CIC

39 Exist 2"C, 2#12, 1#12G, 2 DLC, ADD 1 CIC

40 2"C, 1 CIC, CB

41 FOR DETAILS, SEE SHEET ES-16C FOR POLE TYPE HM CCTV 60.

42 Exist 2-3"C, 12#14, 1#8, 2#6 (120 V RM CONTROLLER), 2#10 (120 V METER ON), 26 DLC, 1#6G, ADD 1 CIC.

43 INSTALL COMMUNICATION EQUIPMENT. SEE DETAIL D ON SHEET E-9.

44 Eixst 3"C,16 DLC, ADD 1 CIC

45 2"C, 1 CIC

46 4′x8′ PAD, SEE L-1 FOR MVP EXACT LOCATION.

47 FOR DETAILS, SEE SHEET RSP ES-16B FOR POLE TYPE CCTV 45.

51 POWDER COAT UNIVERSAL JUNCTION BOX.

52 150′ Exist CONDUIT: REMOVE AND RE-INSTALL SIGNAL CONDUCTORS AND INSTALL NEW CCTV CABLE.

53 INSTALL 12 POSITION TERMINAL BLOCKS ON DIN RAIL. LABEL TERMINAL BLOCKS AS SHOWN ON A PERMANENT LABEL.

54 CCTV CAMERA COLOR: WHITE

55 CCTV CAMERA COLOR: GREEN

56 CCTV CAMERA COLOR: BROWN

57 INSTALL 1 ETHERNET EXTENDER SWITCH COMBINATION UNIT, 1 RJ-11 MODULAR JACK, 1 DATA SURGE SUPPRESSOR, 1 8-PORT ETHERNET SWITCH, 1 4G (LTE) WIRELESS MODEM ASSEMBLY, AND CONNECT CABLE 1 AS SHOWN PER DETAIL H SHEET E-9.

58 INSTALL 2 ETHERNET EXTENDER SWITCH COMBINATION UNIT, 2 RJ-11 MODULAR JACK, 2 DATA SURGE SUPPRESSOR, 1 8-PORT ETHERNET SWITCH, 1 4G (LTE) WIRELESS MODEM ASSEMBLY, AND CONNECT CABLE 1 AND 2 AS SHOWN PER DETAIL H SHEET E-9.

59 INSTALL 3 ETHERNET EXTENDER SWITCH COMBINATION UNIT, 3 RJ-11 MODULAR JACK, 3 DATA SURGE SUPPRESSOR, 1 8-PORT ETHERNET SWITCH, 1 4G (LTE) WIRELESS MODEM ASSEMBLY, AND CONNECT CABLE 1, 2 AND 3 AS SHOWN PER DETAIL H SHEET E-9.

60 INSTALL UNIVERSAL JUNCTION BOX PER DETAIL G ON SHEET E-8 AND DETAIL Y ON SHEET E-13.

ABBREVIATIONS:

DIR	DIRECTION
CIC	CAMERA INTERCONNECT CABLE
PG&E	PACIFIC GAS AND ELECTRIC
LTE	LONG TERM EVOLUTION
WSEM	WIRELESS SERIAL ETHERNET MODEM
dbc	Exist DIRECT BURIED CABLE
Cat 6	CATEGORY 6
ITS	INTELLIGENT TRANSPORTATION SYSTEM
CBC	CAMERA BREAKOUT CABLE
DSL	DIGITAL SUBSCRIBER LINE

CLOSED CIRCUIT TELEVISION SYSTEM

1 REPLACED PER ADDENDUM No. 1 DATED FEBRUARY 25, 2016

E-1

STATE OF CALIFORNIA - DEPARTMENT OF TRANSPORTATION
Caltrans
ELECTRICAL DESIGN
FUNCTIONAL SUPERVISOR: MARY ANN HUDSPETH
CALCULATED-DESIGNED BY: YOUNG TON
CHECKED BY: JASKARAN S. BOPARAI
REVISED BY
DATE REVISED

LAST REVISION 10-30-15
DATE PLOTTED => 24-FEB-2016
TIME PLOTTED => 13:42

Dist	COUNTY	ROUTE	POST MILES TOTAL PROJECT	SHEET No.	TOTAL SHEETS
03	But, Col, ED, Nev, Pla, etc.	5,28,32, 50,51,etc.	Var	8	42

Jaskaran Singh Boparai 11-23-15
REGISTERED ELECTRICAL ENGINEER DATE

11-23-15
PLANS APPROVAL DATE

REGISTERED PROFESSIONAL ENGINEER
JASKARAN S. BOPARAI
No. E15056
Exp. 12-31-15
ELECTRICAL
STATE OF CALIFORNIA

THE STATE OF CALIFORNIA OR ITS OFFICERS OR AGENTS SHALL NOT BE RESPONSIBLE FOR THE ACCURACY OR COMPLETENESS OF SCANNED COPIES OF THIS PLAN SHEET.

1

CLOSED CIRCUIT TELEVISION LOCATIONS

LOCATION No.	Co	ROUTE	POST MILES	DIR	LOCATION	CCTV POLE LATITUDE	CCTV POLE LONGITUDE	CABINET LATITUDE	CABINET LONGITUDE	SERVICE ENCLOSURE LATITUDE	SERVICE ENCLOSURE LONGITUDE	Ctid No.	Exist PULL BOX (EA)	LEGEND
43	Pla	80	69.40	WB	KINGVALE UC	39.31582	-120.43942	39.31590	-120.43918	39.31592	-120.43922	03190800069166	1	3,4,12,13,54,57,5
44	Pla	89	0.40	NB	Rte 28 (FANNNY BRIDGE)	39.16780	-120.14536	39.16769	-120.14549	39.16765	-120.14552	03190280000010	2	3,9,12,52,58,56
45	Pla	89	10.50	SB	RAMPART Dr (RWIS)	39.16529	-120.17755	39.16529	-120.17755	39.16594	-120.17746	03190890010443	0	3,4,6,12,56
46	Pla	89	12.3		ALPINE MEADOWS Rd	39.187207	-120.19489	39.18716	-120.19489	39.18697	-120.19488	03190890012340	2	3,4,5,12,54,57
47	Pla	89	13.72	NB	SQUAW VALLEY Rd	39.20456	-120.19930	39.20494	-120.19915	39.20482	-120.19899	03190890013720	3	3,9,12,52,57,56
48	Pla	89	21.52	SB	W RIVER St (SOUTH OF TRUCKEE)	39.31498	-120.20404	39.31473	-120.20366	39.31475	-120.20371	03190890021500	3	3,9,12,54,57
49	Pla	267	3.76	NB	NORTHSTAR Dr	39.28704	-120.10380	39.28711	-120.10375	39.28695	-120.10419	03192670003790	2	3,9,12,54,57
50	Pla	267	6.67	SB	NEAR BROCKWAY SUMMIT (RWIS)	39.26086	-120.07185	39.26085	-120.07187	39.26084	-120.07183	03170267006700	1	3,4,11,12,56
51	Pla	267	9.9	NB	Rte 28 (KINGS BEACH)	39.23789	-120.03161	39.23814	-120.03163	39.23816	-120.03163	03190280009340	2	3,9,12,52,58,56
52	Sac	5	1.5		LOST SLOUGH BRIDGE (COLINE-TWIN CITIES)	38.27608	-120.45557	38.27613	-121.45577	38.27615	-121.45575	03240050002130	1	3,4,5,12,54,57
53	Sac	5	10.8	NB	ELK GROVE Blvd OC	38.41342	-121.48430	38.41303	-121.48418	38.41248	-121.48398	03240050010826	0	10,54,58
54	Sac	5	12.83	NB	LAGUNA Blvd (NB)	38.43560	-121.48903	38.43564	-121.48904	38.43604	-121.48916	03240050012100	1	3,4,12,54,58,5
55	Sac	5	12.90	SB	LAGUNA Blvd (SB)	38.43860	-121.49025	38.43859	-121.49025	38.43859	-121.4908	03240050013578	2	3,4,12,54,58,5
56	Sac	5	16.15	SB	POCKET Rd	38.48116	-121.51090	38.48058	-121.50915	38.48134	-121.50921	03240050016150	5	3,5,12,54,59,4
57	Sac	5	17.33	Med	FLORIN Rd	38.49536	-121.51646	38.49468	-121.51547	38.49279	-121.51488	03240050017190	3	3,5,12,54,59,4
58	Sac	5	18.23	SB	GLORIA Dr	38.51000	-121.52241	38.50994	-121.52240	38.50804	-121.52377	03240050018230	1	3,4,5,12,54,57
59	Sac	5	18.81	NB	43rd Ave	38.51647	-121.52175	38.51752	-121.52142	38.51695	-121.52138	03240050018810	4	3,5,12,54,57,4
60	Sac	5	19.27	SB	SEAMAS Ave	38.52546	-121.52167	38.52618	-121.52167	38.52615	-121.52171	03240050019267	1	3,5,12,54,58,4
61	Sac	5	19.86	SB	25th Ave	38.53391	-121.51750	38.53379	-121.51666	38.53375	-121.51663	03240050019857	3	3,5,12,54,58,4
62	Sac	5	20.73	Med	SUTTERVILLE Rd	38.54089	-121.51072	38.54110	-121.50992	38.54108	-121.50995	03240050020730	5	3,5,12,54,57,4
63	Sac	5	21.37	Med	6th AVE	38.55154	-121.51114	38.55160	-121.51080	38.55263	-121.51127	03240050021370	1	3,4,5,12,54,57
64	Sac	5	21.65	Med	VALLEJO WAY	38.56012	-121.51439	38.55934	-121.51371	38.56207	-121.51417	03240050022000	4	3,5,12,54,57,4
65	Sac	5	22.4	NB	BROADWAY (TO SB 50 CONNECTOR)	38.56664	-121.51229	38.56690	-121.51243	38.5676	-121.51303	03240050022400	1	3,4,5,12,54,57
66	Sac	5	22.70	NB	Rte 50	38.56892	-121.50999	38.56870	-121.50904	38.5676	-121.51303	03240050022700	2	3,5,12,54,58,4
67	Sac	5	22.80	SB	P St	38.57796	-121.50760	38.57690	-121.50717	38.57683	-121.50718	03240050021651	6	3,5,12,54,58,4
68	Sac	5	24.60		RICHARDS Blvd	38.59512	-121.50212	38.59539	-121.50207	38.59539	-121.50207	03240050018691		58,54,SEE SHEET E-5
69	Sac	5	26.00	SB	W EL CAMINO Ave	38.61499	-121.51238	38.61541	-121.51353	38.61149	-121.51098	03240050025970	4	3,4,5,12,54,59
70	Sac	5	28.55	SB	DEL PASO Rd	38.64958	-121.52936	38.64962	-121.52939	38.65593	-121.53547	03240050028920	3	3,4,5,12,54,59
71	Sac	50	L0.52	WB	4th St	38.56845	-121.50899	38.56870	-121.50904	38.56835	-121.50791	0324050L000520	2	3,5,7,12,54,58,4,8
72	Sac	50	L0.89	Med	9th St	38.56581	-121.50093	38.56524	-121.50111	38.56541	-121.50113	0324050L000886	3	3,5,7,12,54,58,4
73	Sac	50	R0.90	WB	39th St	38.56100	-121.45876	38.56081	-121.45806	38.56005	-121.45868	0324050R000850	4	3,5,12,54,57,4,8
74	Sac	50	L1.76	Med	20th St	38.56201	-121.48644	38.56142	-121.48672	38.56142	-121.48664	0324050L001932	3	3,5,12,54,58,4
75	Sac	50	R1.80	Med	51st St	38.55675	-121.44451	38.55635	-121.44457	38.55629	-121.44420	0324050R002457	3	3,5,12,54,57,4
76	Sac	50	L2.39	EB	28th St	38.55884	-121.47603	38.55858	-121.47596	38.55856	-121.47598	0324050L002385	2	3,4,5,7,12,54,57,8
77	Sac	50	R3.00	EB	65th Ave	38.55049	-121.42362	38.55015	-121.42343	38.55011	-121.42422	0324050R002874	3	3,4,5,12,54,58
78	Sac	50	R3.70	Med	HOWE Ave	38.55391	-121.40916	38.55411	-121.40901	38.55401	-121.40974	0324050R003730	3	3,4,5,12,54,59
79	Sac	50	R5.3	Med	WATT Ave	38.55920	-121.37998	38.55915	-121.37925	38.55931	-121.37930	0324050R005200	2	3,5,12,54,59,4
80	Sac	50	R6.37	WB	E OF MAYHEW OH	38.56114	-121.36056	38.56108	-121.36028	38.56152	-121.35797	0324050R006371	2	3,4,5,12,54,57
81	Sac	50	R7.75	EB	BRADSHAW Rd	38.56555	-121.33651	38.56481	-121.33708	38.56347	-121.33855	0324050R007745	4	3,5,12,54,59,4
82	Sac	50	R9.36	EB	MATHER FIELD Rd	38.57816	-121.30790	38.57779	-121.30847	38.57872	-121.30641	0324050R009360	2	3,5,12,54,59,4
83	Sac	50	R10.92	WB	ZINFANDEL Dr	38.59107	-121.28756	38.59109	-121.28788	38.59099	-121.28769	0324050R010920	2	3,4,5,12,54,59
84	Sac	50	12.80	WB	SUNRISE Blvd	38.60974	-121.27029	38.60917	-121.27113	38.60927	-121.27123	03240500012600	4	3,5,12,54,59,4

CLOSED CIRCUIT TELEVISION SYSTEM

1 **REPLACED PER ADDENDUM No. 1 DATED FEBRUARY 25, 2016**

E-3

STATE OF CALIFORNIA - DEPARTMENT OF TRANSPORTATION
Caltrans
ELECTRICAL DESIGN
FUNCTIONAL SUPERVISOR: MARY ANN HUDSPETH
CALCULATED-DESIGNED BY: YOUNG TON
CHECKED BY: JASKARAN S. BOPARAI
REVISED BY
DATE REVISED

LAST REVISION 09-10-15 | DATE PLOTTED => 24-FEB-2016 | TIME PLOTTED => 13:42

Dist	COUNTY	ROUTE	POST MILES TOTAL PROJECT	SHEET No.	TOTAL SHEETS
03	But, Col, ED, Nev, Pla, etc.	5,28,32, 50,51,etc.	Var	10	42

Rostam Gharaee-Kermani 11-23-15
REGISTERED ELECTRICAL ENGINEER DATE

11-23-15
PLANS APPROVAL DATE

REGISTERED PROFESSIONAL ENGINEER ROSTAM GHARAEE-KERMANI No. E16906 Exp. 06-30-17 ELECTRICAL STATE OF CALIFORNIA

THE STATE OF CALIFORNIA OR ITS OFFICERS OR AGENTS SHALL NOT BE RESPONSIBLE FOR THE ACCURACY OR COMPLETENESS OF SCANNED COPIES OF THIS PLAN SHEET.

1

NOTE:

FOR ACCURATE RIGHT OF WAY DATA, CONTACT
RIGHT OF WAY ENGINEERING AT THE DISTRICT OFFICE.

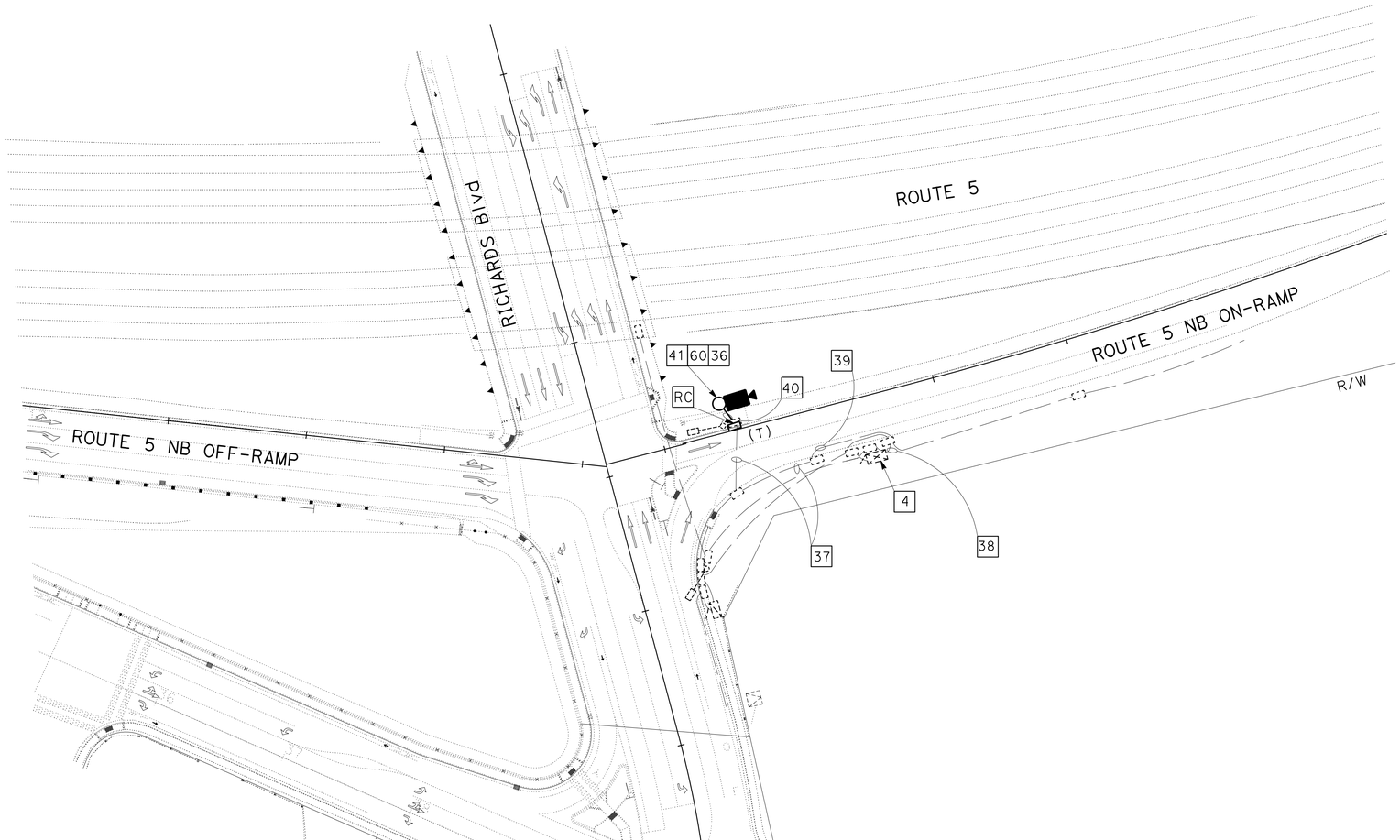

(LOCATION 68)

1 REPLACED PER ADDENDUM No. 1 DATED FEBRUARY 25, 2016

CLOSED CIRCUIT TELEVISION SYSTEM

APPROVED FOR ELECTRICAL WORK ONLY

SCALE: 1" = 50'

E-5

STATE OF CALIFORNIA - DEPARTMENT OF TRANSPORTATION
Caltrans
ELECTRICAL DESIGN

FUNCTIONAL SUPERVISOR: MARY ANN HUDSPETH
CALCULATED-DESIGNED BY: ROSTAM GHARAEE-KERMANI
CHECKED BY: MARY ANN HUDSPETH
REVISED BY
DATE REVISED

LAST REVISION 11-19-15
DATE PLOTTED => 24-FEB-2016
TIME PLOTTED => 13:42

Dist	COUNTY	ROUTE	POST MILES TOTAL PROJECT	SHEET No.	TOTAL SHEETS
03	But, Col, ED, Nev, Pla, etc.	5,28,32, 50,51,etc.	Var	11	42

Rostam Gharaee-Kermani 11-23-15
REGISTERED ELECTRICAL ENGINEER DATE

11-23-15
PLANS APPROVAL DATE

REGISTERED PROFESSIONAL ENGINEER ROSTAM GHARAEE-KERMANI No. E16906 Exp. 06-30-17 ELECTRICAL STATE OF CALIFORNIA

THE STATE OF CALIFORNIA OR ITS OFFICERS OR AGENTS SHALL NOT BE RESPONSIBLE FOR THE ACCURACY OR COMPLETENESS OF SCANNED COPIES OF THIS PLAN SHEET.

NOTE:

FOR ACCURATE RIGHT OF WAY DATA, CONTACT RIGHT OF WAY ENGINEERING AT THE DISTRICT OFFICE.

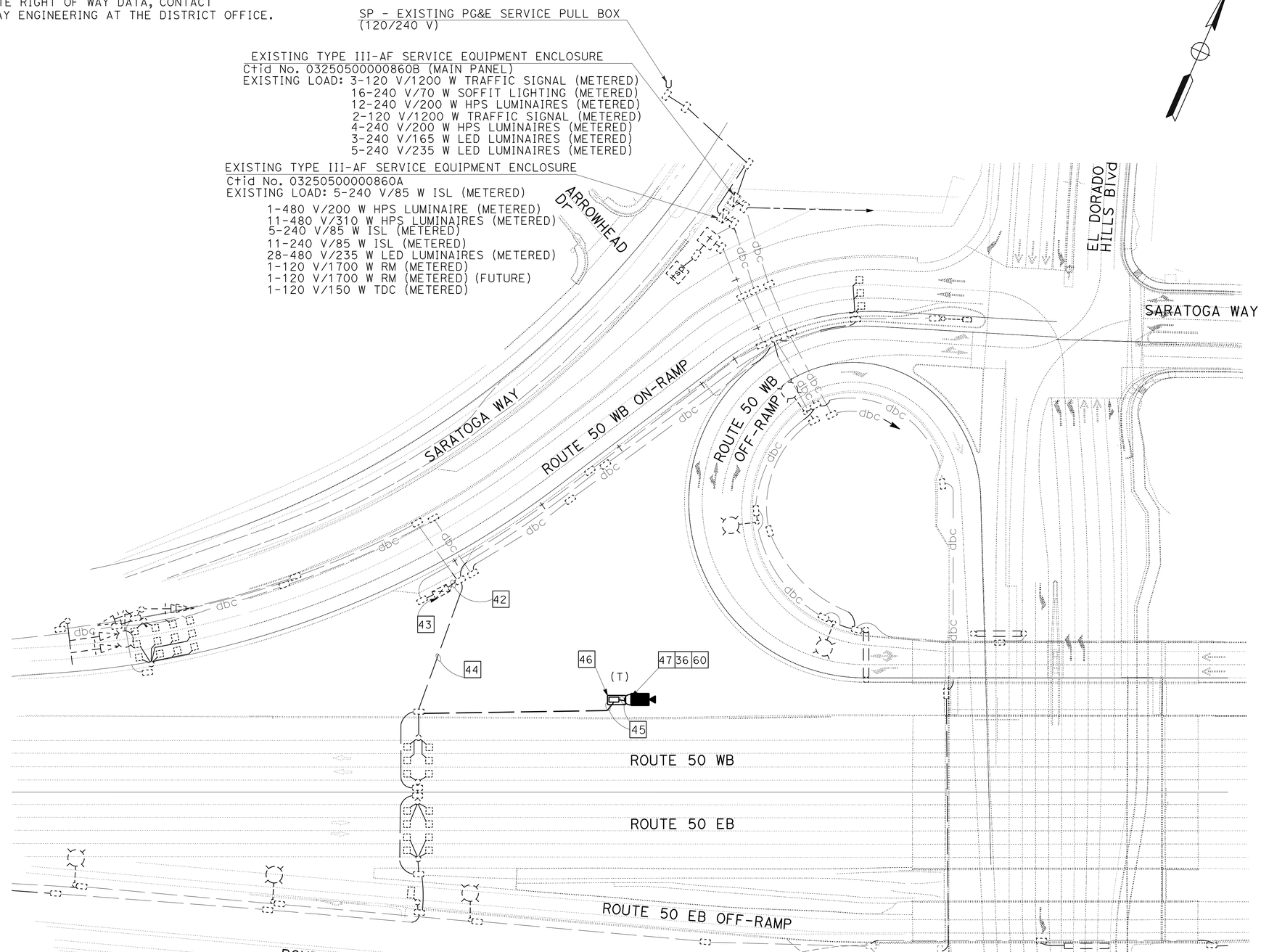

1 REPLACED PER ADDENDUM No. 1 DATED FEBRUARY 25, 2016

APPROVED FOR ELECTRICAL WORK ONLY

CLOSED CIRCUIT TELEVISION SYSTEM

(LOCATION 86)

SCALE: 1" = 50'

E-6

STATE OF CALIFORNIA - DEPARTMENT OF TRANSPORTATION
Caltrans® ELECTRICAL DESIGN

FUNCTIONAL SUPERVISOR: MARY ANN HUDSPETH
CALCULATED-DESIGNED BY: ROSTAM GHARAEE-KERMANI
CHECKED BY: MARY ANN HUDSPETH
REVISED BY
DATE REVISED

LAST REVISION 11-19-15
DATE PLOTTED => 24-FEB-2016
TIME PLOTTED => 13:42

Dist	COUNTY	ROUTE	POST MILES TOTAL PROJECT	SHEET No.	TOTAL SHEETS
03	But, Col, ED, Nev, Pla, etc.	5,28,32, 50,51,etc.	Var	19	42

Jaskaran Singh Boparai 11-23-15
REGISTERED ELECTRICAL ENGINEER DATE

11-23-15
PLANS APPROVAL DATE

REGISTERED PROFESSIONAL ENGINEER JASKARAN S. BOPARAI No. E15056 Exp. 12-31-15 ELECTRICAL STATE OF CALIFORNIA

THE STATE OF CALIFORNIA OR ITS OFFICERS OR AGENTS SHALL NOT BE RESPONSIBLE FOR THE ACCURACY OR COMPLETENESS OF SCANNED COPIES OF THIS PLAN SHEET.

1

NOTE (THIS SHEET ONLY):

FOR DETAILS NOT SHOWN, SEE STANDARD PLANS: SHEETS ES-16A, RSP ES-16B, RSP ES-16C, ES-16D AND SHEET SES-1.

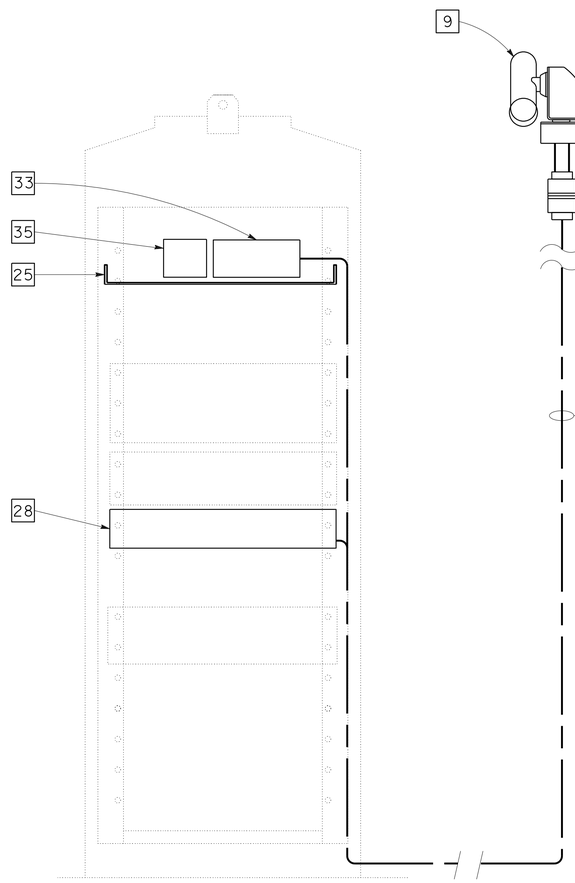

ITS EQUIPMENT ON Exist TRAFFIC SIGNAL CABINET

(FRONT VIEW)
332 CONTROLLER CABINET

DETAIL N

CAMERA MOUNTING BRACKET

DETAIL R3

CONTRACTOR TO PROVIDE APPROPRIATE STANDOFFS AND BRACKET

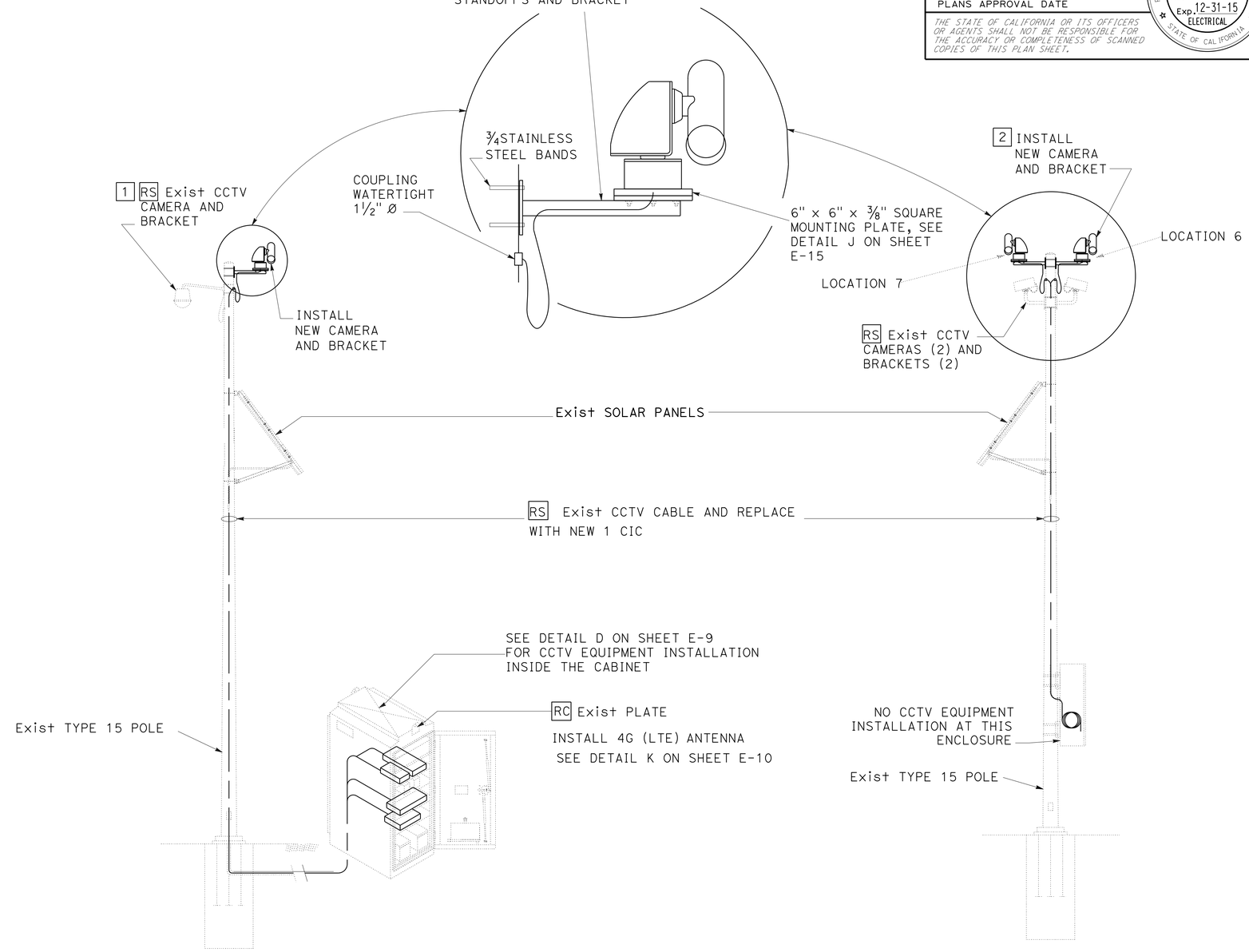

CAMERA ON Exist CCTV POLE

DETAIL P

CAMERA ON Exist CCTV POLE

DETAIL Q

1 **REPLACED PER ADDENDUM No. 1 DATED FEBRUARY 25, 2016**

APPROVED FOR ELECTRICAL WORK ONLY

CLOSED CIRCUIT TELEVISION SYSTEM

NO SCALE

E-14

STATE OF CALIFORNIA - DEPARTMENT OF TRANSPORTATION
Caltrans
ELECTRICAL DESIGN

FUNCTIONAL SUPERVISOR: MARY ANN HUDSPETH
CALCULATED-DESIGNED BY: JASKARAN S. BOPARAI
CHECKED BY: YOUNG TON
REVISED BY
DATE REVISED

LAST REVISION DATE PLOTTED => 24-FEB-2016
09-30-15 TIME PLOTTED => 13:42

Dist	COUNTY	ROUTE	POST MILES TOTAL PROJECT	SHEET No.	TOTAL SHEETS
03	But, Col, ED, Nev, Pla, etc.	5,28,32, 50,51,etc.	Var	22	42

Jaskaran Singh Boparai 11-23-15
REGISTERED ELECTRICAL ENGINEER DATE

11-23-15
PLANS APPROVAL DATE

REGISTERED PROFESSIONAL ENGINEER JASKARAN S. BOPARAI No. E15056 Exp. 12-31-15 ELECTRICAL STATE OF CALIFORNIA

THE STATE OF CALIFORNIA OR ITS OFFICERS OR AGENTS SHALL NOT BE RESPONSIBLE FOR THE ACCURACY OR COMPLETENESS OF SCANNED COPIES OF THIS PLAN SHEET.

1

NOTE:
ITEMS SHOWN IN THIS TABLE ARE NOT A SEPARATE PAY ITEM, FOR INFORMATION ONLY.

CLOSED CIRCUIT TELEVISION SYSTEM

LOCATION	RC Exist CIC CABLE (FT)	INSTALL CIC CABLE (FT)	JUNCTION BOX (NEW) (EA)	No. 5 (T) PULL BOX (EA)	CCTV CAMERA (EA)	2" TYPE 3 CONDUIT	CCTV 45 POLE	CCTV 60 POLE
1	150	160	0	0	1	0	0	0
2	100	110	1	0	1	0	0	0
3	145	150	1	0	1	0	0	0
4	280	300	0	0	1	0	0	0
5	280	300	1	0	1	0	0	0
6	90	100	0	0	1	0	0	0
7	92	100	0	0	1	0	0	0
8	482	500	1	0	1	0	0	0
9	181	200	0	1	1	0	0	0
10	300	300	0	0	1	0	0	0
11	270	330	0	0	1	0	0	0
12	125	125	0	0	1	0	0	0
13	125	125	0	0	1	0	0	0
14	135	150	0	0	1	0	0	0
15	100	100	0	0	1	0	0	0
16	375	400	1	4	1	0	0	0
17	77	100	1	0	1	0	0	0
18	128	200	1	0	1	0	0	0
19	94	100	0	0	1	0	0	0
20	130	130	0	0	1	0	0	0
21	144	150	1	0	1	0	0	0
22	140	150	0	0	1	0	0	0
23	50	50	0	0	1	0	0	0
24	640	650	1	0	1	0	0	0
25	640	650	1	3	1	0	0	0
26	200	210	1	0	1	0	0	0
27	535	550	1	0	1	0	0	0
28	140	150	1	0	1	0	0	0
29	140	150	1	0	1	0	0	0
30	140	150	1	0	1	0	0	0
31	480	500	1	0	1	0	0	0
32	125	125	1	0	1	0	0	0
33	125	125	1	0	1	0	0	0
34	325	350	1	0	1	0	0	0
35	120	150	1	0	1	0	0	0
36	280	300	1	0	1	0	0	0
37	340	350	1	0	1	0	0	0
38	238	250	1	0	1	0	0	0
39	1102	1100	1	5	1	0	0	0
40	420	450	1	1	1	0	0	0
41	129	150	1	0	1	0	0	0
42	134	150	1	0	1	0	0	0

CLOSED CIRCUIT TELEVISION SYSTEM

LOCATION	RC Exist CIC CABLE (FT)	INSTALL CIC CABLE (FT)	JUNCTION BOX (NEW) (EA)	No. 5 (T) PULL BOX (EA)	CCTV CAMERA (EA)	2" TYPE 3 CONDUIT	CCTV 45 POLE	CCTV 60 POLE
43	160	250	1	0	1	0	0	0
44	205	200	0	0	1	0	0	0
45	56	100	0	0	1	0	0	0
46	280	300	1	0	1	0	0	0
47	205	200	0	0	1	0	0	0
48	280	300	0	0	1	0	0	0
49	75	100	0	0	1	0	0	0
50	90	100	0	0	1	0	0	0
51	325	350	0	0	1	0	0	0
52	90	100	1	0	1	0	0	0
53	20	25	0	0	1	0	0	0
54	90	100	1	0	1	0	0	0
55	140	150	0	0	1	0	0	0
56	720	800	1	2	1	0	0	0
57	435	650	1	1	1	0	0	0
58	95	100	1	0	1	0	0	0
59	360	450	1	1	1	0	0	0
60	188	350	0	0	1	0	0	0
61	340	600	1	0	1	0	0	0
62	406	500	1	0	1	0	0	0
63	165	200	1	0	1	0	0	0
64	486	550	1	0	1	0	0	0
65	280	300	0	0	1	0	0	0
66	360	400	1	0	1	0	0	0
67	590	600	1	0	1	0	0	0
68	0	400	1	1	1	20	0	1
69	503	550	1	0	1	0	0	0
70	90	100	1	0	1	0	0	0
71	342	550	1	0	1	0	0	0
72	378	400	1	0	1	0	0	0
73	343	400	1	0	1	0	0	0
74	380	400	1	0	1	0	0	0
75	389	400	1	0	1	0	0	0
76	269	300	1	0	1	0	0	0
77	181	300	1	0	1	0	0	0
78	302	300	1	0	1	0	0	0
79	430	450	1	0	1	0	0	0
80	187	300	1	0	1	0	0	0
81	543	550	1	0	1	0	0	0
82	506	650	1	0	1	0	0	0
83	271	300	1	0	1	0	0	0
84	489	500	1	2	1	0	0	0

1 REPLACED PER ADDENDUM No. 1 DATED FEBRUARY 25, 2016

ELECTRICAL QUANTITIES

E-17

STATE OF CALIFORNIA - DEPARTMENT OF TRANSPORTATION
Caltrans® ELECTRICAL DESIGN
FUNCTIONAL SUPERVISOR: MARY ANN HUDSPETH
CALCULATED-DESIGNED BY: YOUNG TON
CHECKED BY: JASKARAN S. BOPARAI
REVISED BY
DATE REVISED

LAST REVISION 10-30-15 | DATE PLOTTED => 24-FEB-2016 | TIME PLOTTED => 13:42

Dist	COUNTY	ROUTE	POST MILES TOTAL PROJECT	SHEET No.	TOTAL SHEETS
03	But, Col, Ed, Nev, Plq, etc.	5,28,32, 50,51,etc.	Var	42A	42

REGISTERED CIVIL ENGINEER

October 30, 2015
PLANS APPROVAL DATE

REGISTERED PROFESSIONAL ENGINEER Stanley P. Johnson No. C57793 Exp. 3-31-16 CIVIL STATE OF CALIFORNIA

THE STATE OF CALIFORNIA OR ITS OFFICERS OR AGENTS SHALL NOT BE RESPONSIBLE FOR THE ACCURACY OR COMPLETENESS OF SCANNED COPIES OF THIS PLAN SHEET.

TO ACCOMPANY PLANS DATED 11-23-15

1

2010 REVISED STANDARD PLAN RSP ES-16A

POLE EXTENSION TYPE	POLE DATA				HANDHOLE SIZE
	HEIGHT "h"	Min OD		THICKNESS	
		BASE	TOP		
CCTV 5	5′	4 9/16"	3 3/4"	0.1793"	3" x 5"
CCTV 10	10′	5 1/4"			
CCTV 15	15′	5 15/16"			

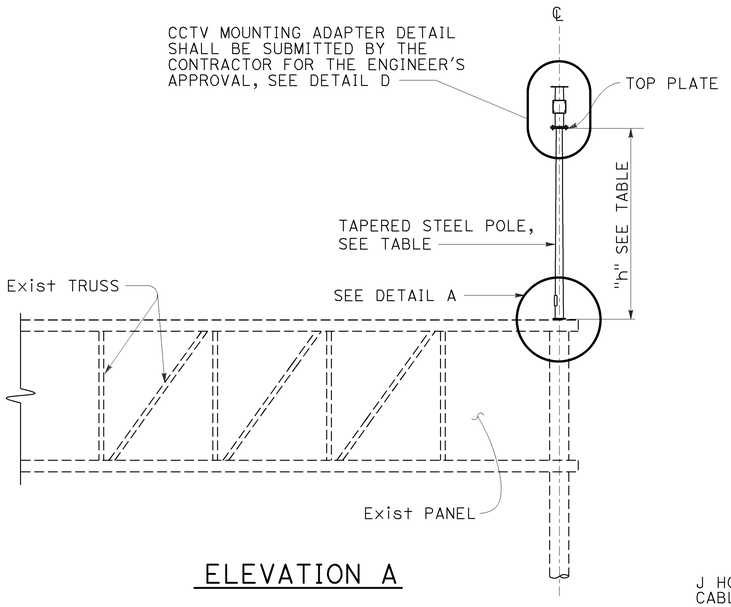

ELEVATION A

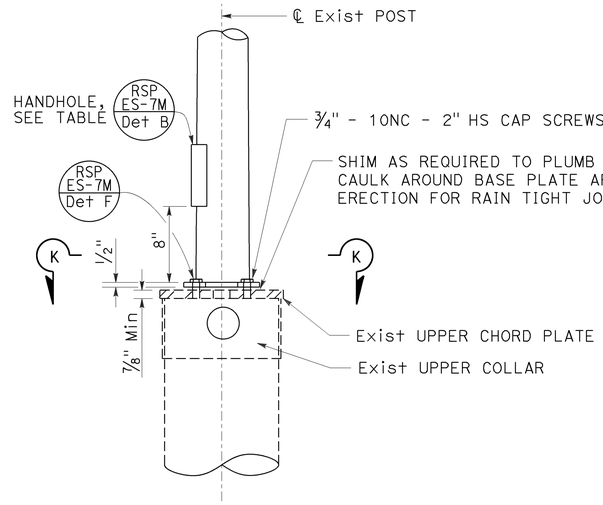

DETAIL A

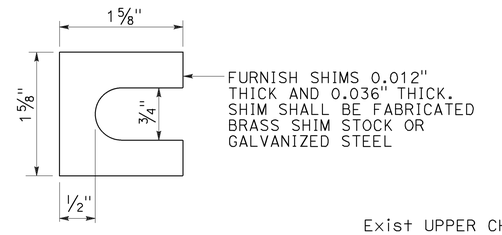

SHIM

DETAIL B

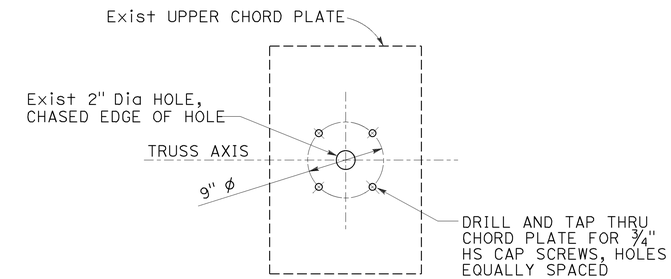

UPPER CHORD PLATE

DETAIL C

See Note 3

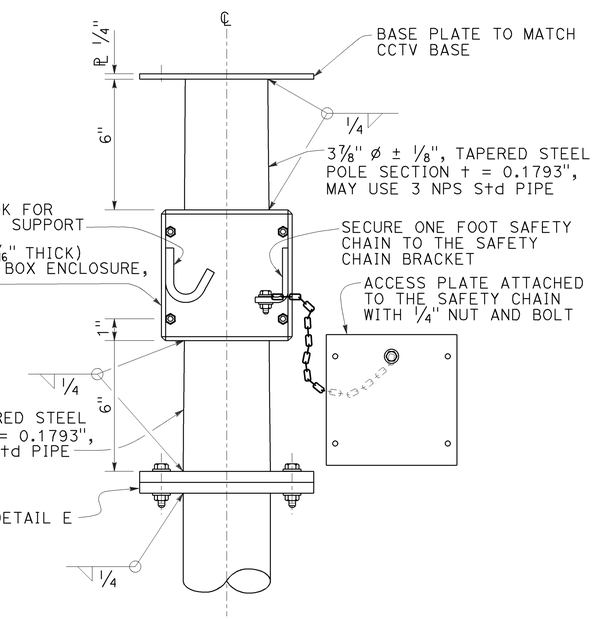

CLOSED CIRCUIT TELEVISION MOUNTING ADAPTER

DETAIL D

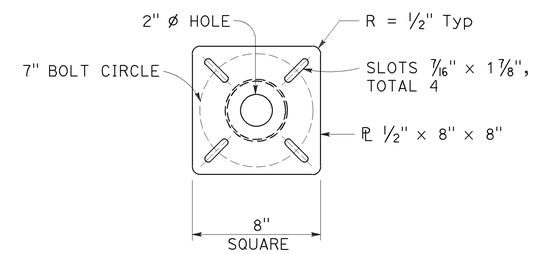

TOP PLATE

DETAIL E

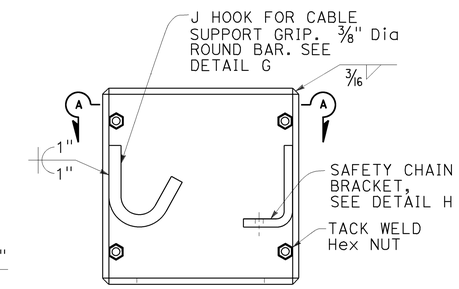

BOX ENCLOSURE

DETAIL F

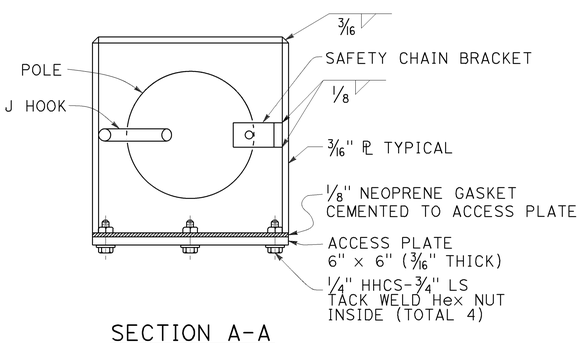

SECTION A-A

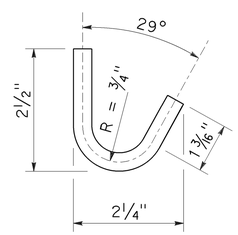

J HOOK

DETAIL G

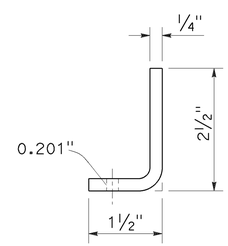

SAFETY CHAIN BRACKET

DETAIL H

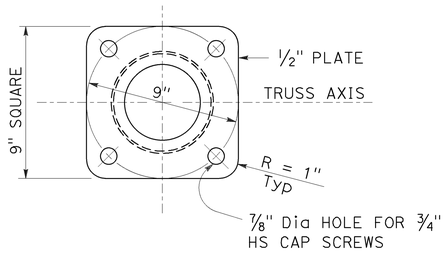

SECTION K-K

NOTES:

1. Verify controlling field dimensions before ordering or fabricating any material.
2. Bolt hole locations may vary at the discretion of the Engineer.
3. See Std Plan S13.
4. Wind Loadings (3-second gust) : 100 mph.
5. Unit Stresses (Structural Steel):
   a. fy = 55,000 psi (tapered steel tube)
   b. fy = 50,000 psi (unless otherwise noted)

STATE OF CALIFORNIA
DEPARTMENT OF TRANSPORTATION

ELECTRICAL SYSTEMS (CLOSED CIRCUIT TELEVISION, 5' TO 15' OVERHEAD SIGN MOUNTED POLE)

NO SCALE

RSP ES-16A DATED OCTOBER 30, 2015 SUPERSEDES STANDARD PLAN ES-16A DATED MAY 20, 2011 - PAGE 500 OF THE STANDARD PLANS BOOK DATED 2010.

1 ADDED PER ADDENDUM No. 1 DATED FEBRUARY 25, 2016

REVISED STANDARD PLAN RSP ES-16A

8-24-15

Dist	COUNTY	ROUTE	POST MILES TOTAL PROJECT	SHEET No.	TOTAL SHEETS
03	But, Col, Ed, Nev, Plq, etc.	5,28,32, 50,51,etc.	Var	42B	42

REGISTERED CIVIL ENGINEER

October 30, 2015
PLANS APPROVAL DATE

REGISTERED PROFESSIONAL ENGINEER Stanley P. Johnson No. C57793 Exp. 3-31-16 CIVIL STATE OF CALIFORNIA

THE STATE OF CALIFORNIA OR ITS OFFICERS OR AGENTS SHALL NOT BE RESPONSIBLE FOR THE ACCURACY OR COMPLETENESS OF SCANNED COPIES OF THIS PLAN SHEET.

TO ACCOMPANY PLANS DATED 11-23-15

1

POLE TYPE	POLE DATA				BASE PLATE DATA				CIDH	
	HEIGHT "h"	Min OD BASE	Min OD TOP	THICKNESS	"C"	THICKNESS	ANCHOR BOLT SIZE	BC = BOLT CIRCLE	Dia	"d"
CCTV 25	25′	7⅜"	3¾"	0.1793"	1′-1"	1"	1½" ø x 36"	11½"	2′-6"	7′-0"
CCTV 30	30′	8"			1′-1½"			1′-0"		7′-6"
CCTV 35	35′	8⅝"			1′-2"			1′-1"		8′-0"
CCTV 40	40′	9⅜"			1′-3"			1′-1½"		8′-6"
CCTV 45	45′	10"						1′-2"		

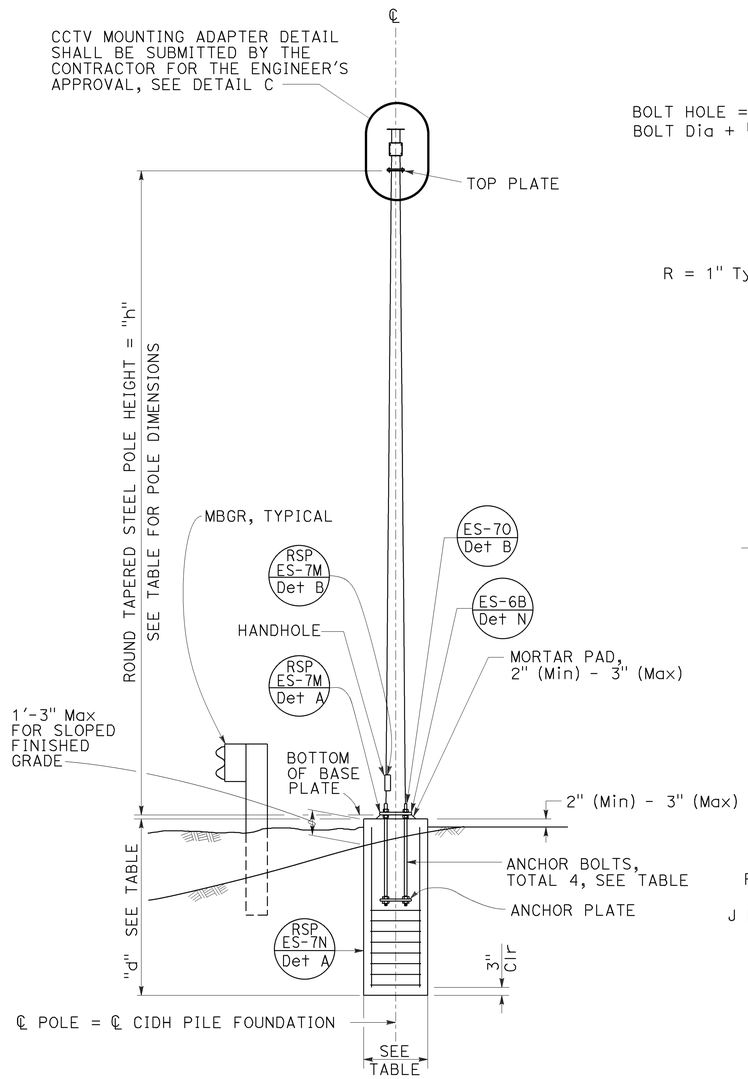

ELEVATION A

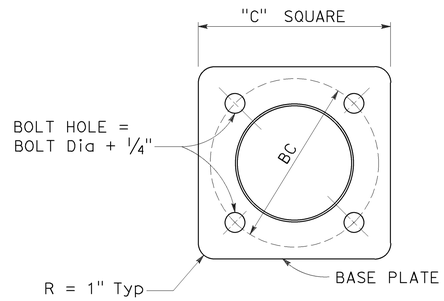

BASE PLATE

DETAIL A

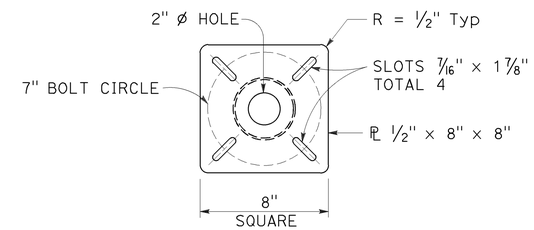

TOP PLATE

DETAIL B

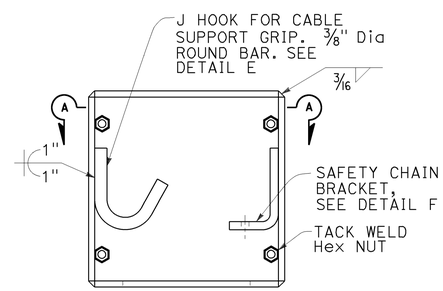

BOX ENCLOSURE

DETAIL D

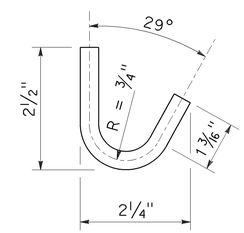

J HOOK

DETAIL E

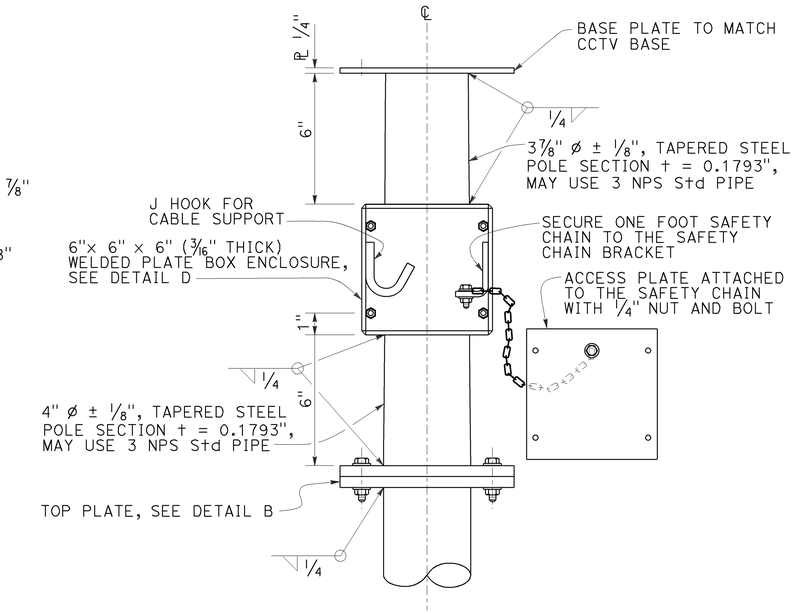

CLOSED CIRCUIT TELEVISION MOUNTING ADAPTER

DETAIL C

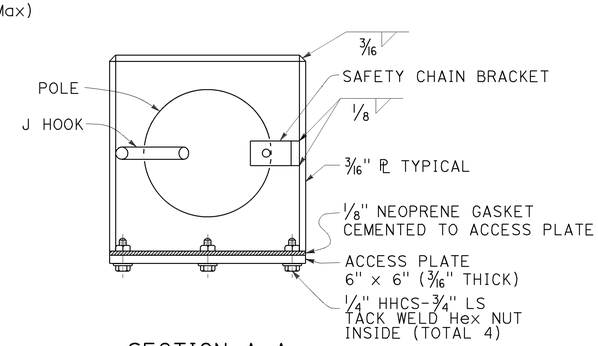

SECTION A-A

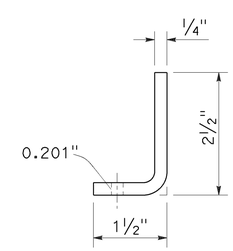

SAFETY CHAIN BRACKET

DETAIL F

NOTES:

1. Verify controlling field dimensions before ordering or fabricating any material.
2. During pole installation, the post shall be raked as necessary with the use of leveling nuts to provide a plumb pole axis.
3. Wind Loadings (3-second gust): 100 mph
4. Unit Stresses (Structural Steel):
   a. fy = 55,000 psi (tapered steel tube and anchor bolts)
   b. fy = 50,000 psi (unless otherwise noted)
5. Unit Stresses (Reinforced Concrete):
   a. f′c = 3,625 psi
   b. fy = 60,000 psi

STATE OF CALIFORNIA
DEPARTMENT OF TRANSPORTATION

ELECTRICAL SYSTEMS (CLOSED CIRCUIT TELEVISION, 25' TO 45' POLE)

NO SCALE

RSP ES-16B DATED OCTOBER 30, 2015 SUPERSEDES STANDARD PLAN ES-16B DATED MAY 20, 2011 - PAGE 501 OF THE STANDARD PLANS BOOK DATED 2010.

1 ADDED PER ADDENDUM No. 1 DATED FEBRUARY 25, 2016

REVISED STANDARD PLAN RSP ES-16B

2010 REVISED STANDARD PLAN RSP ES-16B

9-1-15

POLE TYPE	POLE DATA				BASE PLATE DATA					CIDH PILE DATA		
	HEIGHT "h"	Min OD		Min THICKNESS	Dia	THICKNESS	ANCHOR BOLT SIZE		BC = BOLT CIRCLE	"D"	"L"	PILE Reinf
		BASE	TOP				TOTAL	"d"				
HM CCTV 50	50′	18"	9¾"	0.3125" *	28"	3"	12	1½"	23"	3′-6"	12′	13 - #7
HM CCTV 60	60′											
HM CCTV 70	70′	20"	10¼"		30"				25"	4′-0"	13′	15 - #7
HM CCTV 80	80′	22"	10 1/16"	0.375" *	33"			1¾"	27"			
HM CCTV 90	90′	24"	11 1/16"		35"				29"		14′	

* LOWER POLE SEGMENT THICKNESS, SEE POLE DETAILS

Dist	COUNTY	ROUTE	POST MILES TOTAL PROJECT	SHEET No.	TOTAL SHEETS
03	But, Col, Ed, Nev, Plq, etc.	5,28,32, 50,51,etc.	Var	42C	42

REGISTERED CIVIL ENGINEER

October 30, 2015
PLANS APPROVAL DATE

REGISTERED PROFESSIONAL ENGINEER Stanley P. Johnson No. C57793 Exp. 3-31-16 CIVIL STATE OF CALIFORNIA

THE STATE OF CALIFORNIA OR ITS OFFICERS OR AGENTS SHALL NOT BE RESPONSIBLE FOR THE ACCURACY OR COMPLETENESS OF SCANNED COPIES OF THIS PLAN SHEET.

TO ACCOMPANY PLANS DATED 11-23-15

2010 REVISED STANDARD PLAN RSP ES-16C

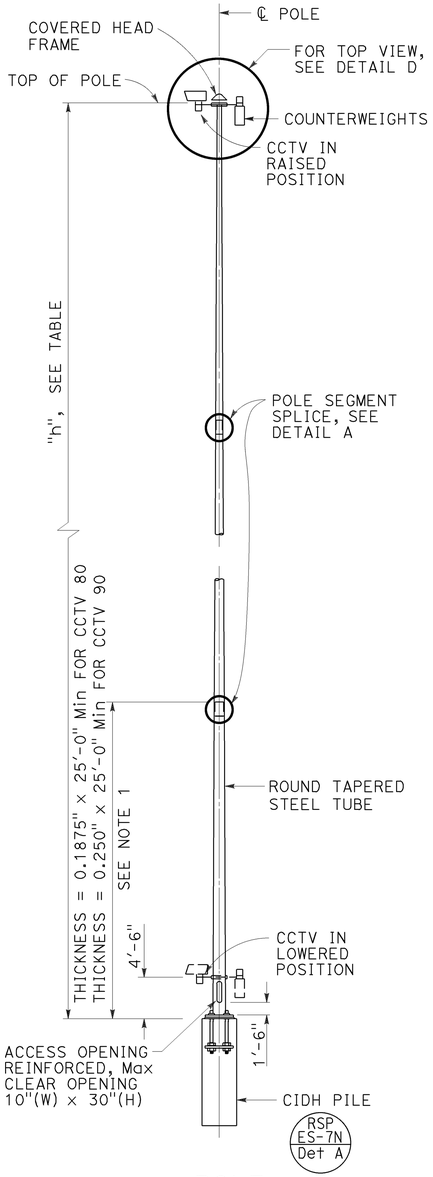

POLE
ELEVATION A

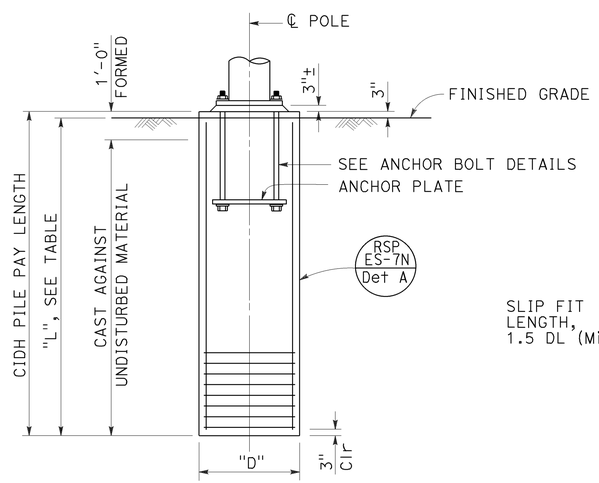

TYPICAL LOCATION
ELEVATION B

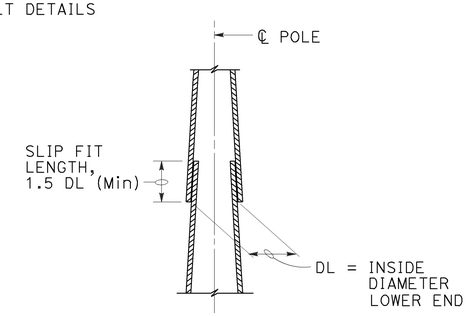

POLE SEGMENT SPLICE
DETAIL A

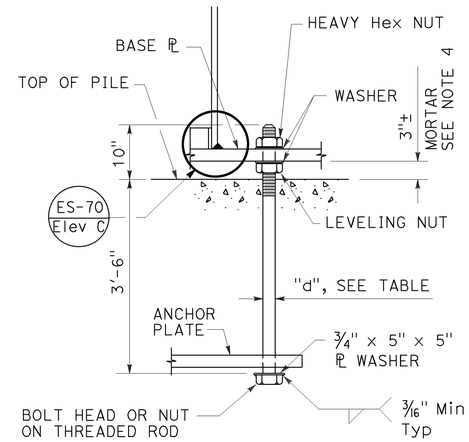

ANCHOR BOLT
DETAIL B

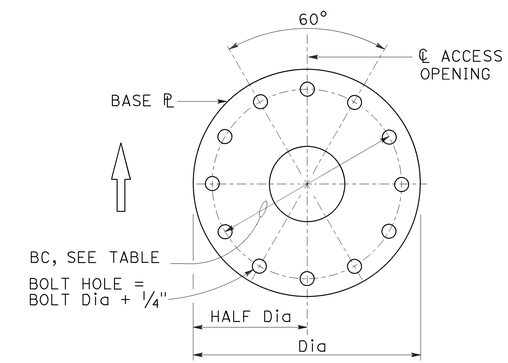

BASE PLATE
DETAIL C

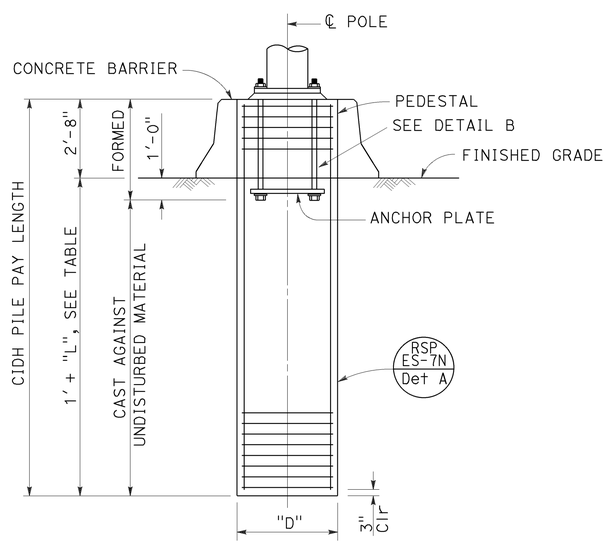

MEDIAN LOCATION
ELEVATION C

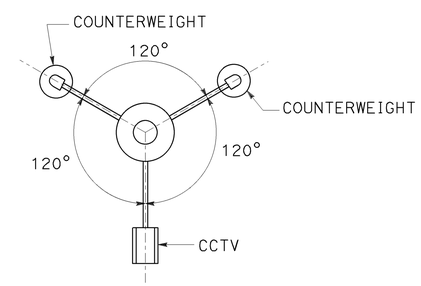

TOP VIEW
DETAIL D

NOTES:

1. Pole details shall suit the lowering device and this foundation plan. Pole details shall be submitted to the Engineer for approval.
2. For closed circuit television details, see Electrical Plans.
3. Foundation design is based on a maximum wind velocity of 80 mph.
4. For central void and drain holes in mortar, see Standard Plan ES-6B detail N.
5. Wind Loadings (fastest mile): 80 mph
6. Unit Stress (Structural Steel):
   fy = 55,000 psi (tapered steel tube)
   fy = 50,000 psi (unless otherwise noted)
7. Access opening shall be located on the downstream side of traffic unless otherwise determined by the Engineer.

STATE OF CALIFORNIA
DEPARTMENT OF TRANSPORTATION

ELECTRICAL SYSTEMS (CLOSED CIRCUIT TELEVISION, 50' TO 90' HIGH MAST POLE)

NO SCALE

RSP ES-16C DATED OCTOBER 30, 2015 SUPERSEDES STANDARD PLAN ES-16C DATED MAY 20, 2011 - PAGE 502 OF THE STANDARD PLANS BOOK DATED 2010.

1 ADDED PER ADDENDUM No. 1 DATED FEBRUARY 25, 2016

REVISED STANDARD PLAN RSP ES-16C

8-24-15

Dist	COUNTY	ROUTE	POST MILES TOTAL PROJECT	SHEET No.	TOTAL SHEETS
03	But, Col, Ed, Nev, Plq, etc.	5,28,32, 50,51,etc.	Var	42D	42

REGISTERED CIVIL ENGINEER

October 30, 2015
PLANS APPROVAL DATE

REGISTERED PROFESSIONAL ENGINEER Stanley P. Johnson No. C57793 Exp. 3-31-16 CIVIL STATE OF CALIFORNIA

THE STATE OF CALIFORNIA OR ITS OFFICERS OR AGENTS SHALL NOT BE RESPONSIBLE FOR THE ACCURACY OR COMPLETENESS OF SCANNED COPIES OF THIS PLAN SHEET.

TO ACCOMPANY PLANS DATED 11-23-15

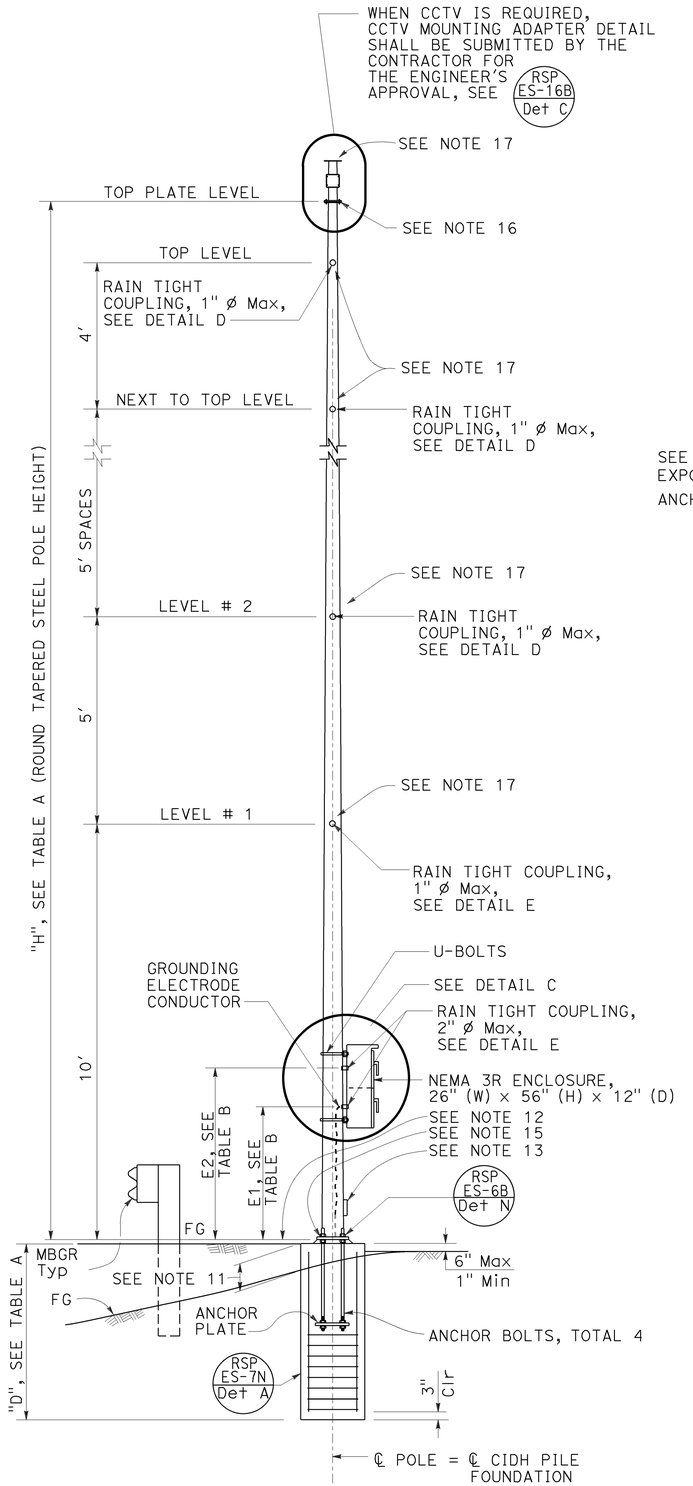

ELEVATION A

TABLE A										
POLE TYPE	POLE DATA				BASE PLATE DATA				"D" 2'-6" ø CIDH Pile	
	HEIGHT "H"	Min OD		THICKNESS	"C"	THICKNESS	ANCHOR BOLTS SIZE	BC = BOLT CIRCLE	LEVEL GROUND	UP TO 2:1
		BASE	TOP							
VDS 30	30'	8"	3⅞"	0.1793"	1'-1½"	1½"	1½" ø x 3'-0"	1'-1½"	11'-0"	13'-0"
VDS 35	35'	8⅝"			1'-2"			1'-2"	11'-0"	
VDS 40	40'	9⅜"			1'-3"			1'-3"	12'-0"	14'-0"

TABLE B		
POLE TYPE	COUPLING	
	E1(Max)	E2(Max)
VDS 30	3'-6"	4'-9"
VDS 35		
VDS 40		

TABLE C		
SPREAD FOOTING		
GROUND	FOOTING SIZE (LENGTH x WIDTH x DEPTH)	REINFORCEMENT TOP & BOTTOM
LEVEL	8'-6" x 8'-6" x 2'-0"	12 - #5 EW
UP TO 2:1	10'-0" x 10'-0" x 2'-0"	15 - #5 EW

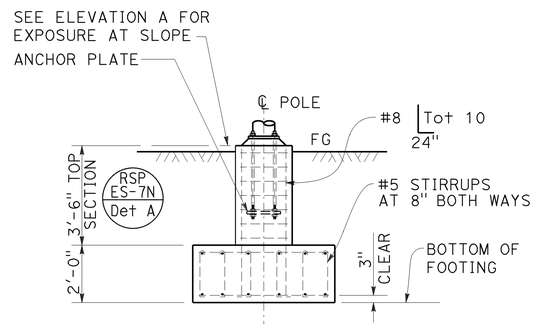

ALTERNATIVE FOOTING
ELEVATION B

TABLE D - LIMITATION ON ATTACHMENTS *		
LOCATION	MAXIMUM TOTAL EPA PER LEVEL (SQUARE FEET)	MAXIMUM TOTAL WEIGHT (lb)
LEVEL #1	14	200
LEVEL #2		
LEVEL #3	10 ***	
LEVEL #4 (VDS 35 AND VDS 40 ONLY)	2.5	50
LEVEL #5 (VDS 40 ONLY)		
NEXT TO TOP LEVEL		
TOP LEVEL		
ON TOP PLATE LEVEL **		

* MAXIMUM HORIZONTAL EXTENT BEYOND POLE FACE IS 4 FEET.
** MAXIMUM EXTENT ABOVE TOP PLATE IS 3 FEET.
*** 14 IF LEVEL #1 IS ZERO.

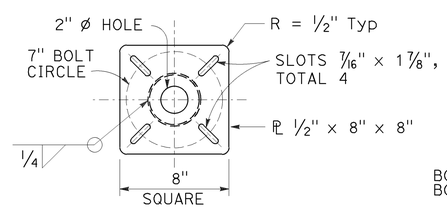

TOP PLATE
DETAIL A

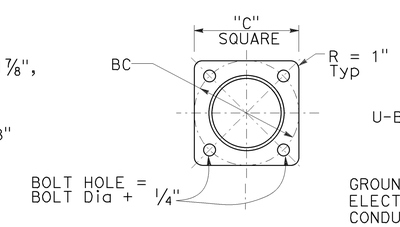

BASE PLATE
DETAIL B

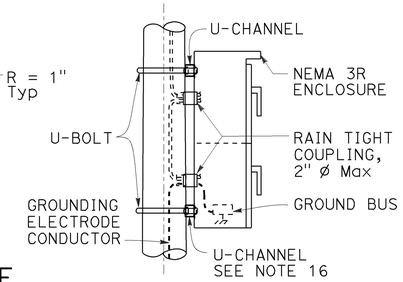

DETAIL C

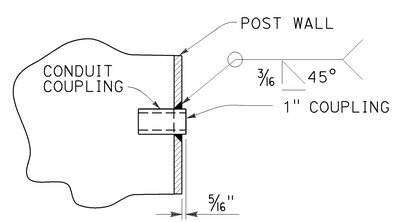

1" COUPLING
DETAIL D

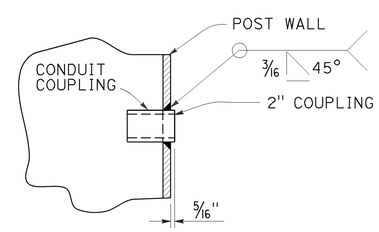

2" COUPLING
DETAIL E

NOTES:

1. All steel shall be galvanized after fabrication.
2. The foundation shall be treated as level ground condition if the slope inclination is flatter than 4 : 1 (Horizontal : Vertical)
3. For devices mounted and mounting heights, see TABLE B.
4. Design Specification: AASHTO Standard Specification for structural support for highway signs, luminaires and traffic signal dated 2001.
5. Wind Loadings: 100 mph (3-second gust)
6. Unit Stresses (Structural Steel):
   a. fy = 55,000 psi (tapered steel tube)
   b. fy = 50,000 psi (unless otherwise noted)
7. Anchor bolts: fy = 55,000 psi
8. Unit Stresses (Reinforced Concrete):
   a. f'c = 3,600 psi
   b. fy = 60,000 psi
9. Verify all controlling field dimensions before ordering of fabricating any material.
10. When no barriers are used, the NEMA 3R enclosure shall be located on the downstream side and perpendicular to the roadway.
11. 1'-3" (Max) for sloped finished grade.
12. Bottom of base plate.
13. Handhole. RSP ES-7M Det B / RSP ES-7M Det A
14. Top plate. Install a blank flange on the top plate when closed circuit television is not used.
165. ES-7O Elev B
16. U-channel with bracket.
17. Use the manufacturer's Effective Projected Area (EPA) for attachments. Assign attachments to nearest level and sum each level, see Table D for limitations.

STATE OF CALIFORNIA
DEPARTMENT OF TRANSPORTATION

ELECTRICAL SYSTEMS (CLOSED CIRCUIT TELEVISION WITH VEHICLE DETECTION SYSTEM, 30' TO 40' POLE)

NO SCALE

RSP ES-16D DATED OCTOBER 30, 2015 SUPERSEDES RSP ES-16D DATED JULY 19, 2013 AND STANDARD PLAN ES-16D DATED MAY 20, 2011 - PAGE 503 OF THE STANDARD PLANS BOOK DATED 2010.

1 ADDED PER ADDENDUM No. 1 DATED FEBRUARY 25, 2016

REVISED STANDARD PLAN RSP ES-16D

2010 REVISED STANDARD PLAN RSP ES-16D

8-24-15