Dist	COUNTY	ROUTE	POST MILES TOTAL PROJECT	SHEET No.	TOTAL SHEETS
03	ED,Pla	50, 80, 193	Var	1	64

ACSTP-000C(404)

STATE OF CALIFORNIA
DEPARTMENT OF TRANSPORTATION

PROJECT PLANS FOR CONSTRUCTION ON
STATE HIGHWAY

IN EL DORADO AND PLACER COUNTIES AT VARIOUS LOCATIONS

TO BE SUPPLEMENTED BY STANDARD PLANS DATED 2010

INDEX OF PLANS

SHEET No.	DESCRIPTION
1	TITLE AND LOCATION MAP
2-7	CONSTRUCTION DETAILS
8-9	CONSTRUCTION AREA SIGNS
10-12	STAGE CONSTRUCTION PLANS
13-23	TRAFFIC HANDLING PLANS, DETAILS AND QUANTITIES
24	PAVEMENT DELINEATION QUANTITIES
25	SUMMARY OF QUANTITIES
26-28	ELECTRICAL PLANS
29-34	SPECIAL ELECTRICAL STRUCTURES
35-48	REVISED STANDARD PLANS

STRUCTURE PLANS

49-64	ROUTE 50, 80, 193 BRIDGES

THE STANDARD PLANS LIST APPLICABLE TO THIS CONTRACT IS INCLUDED IN THE NOTICE TO BIDDERS AND SPECIAL PROVISIONS BOOK.

LOCATION MAP

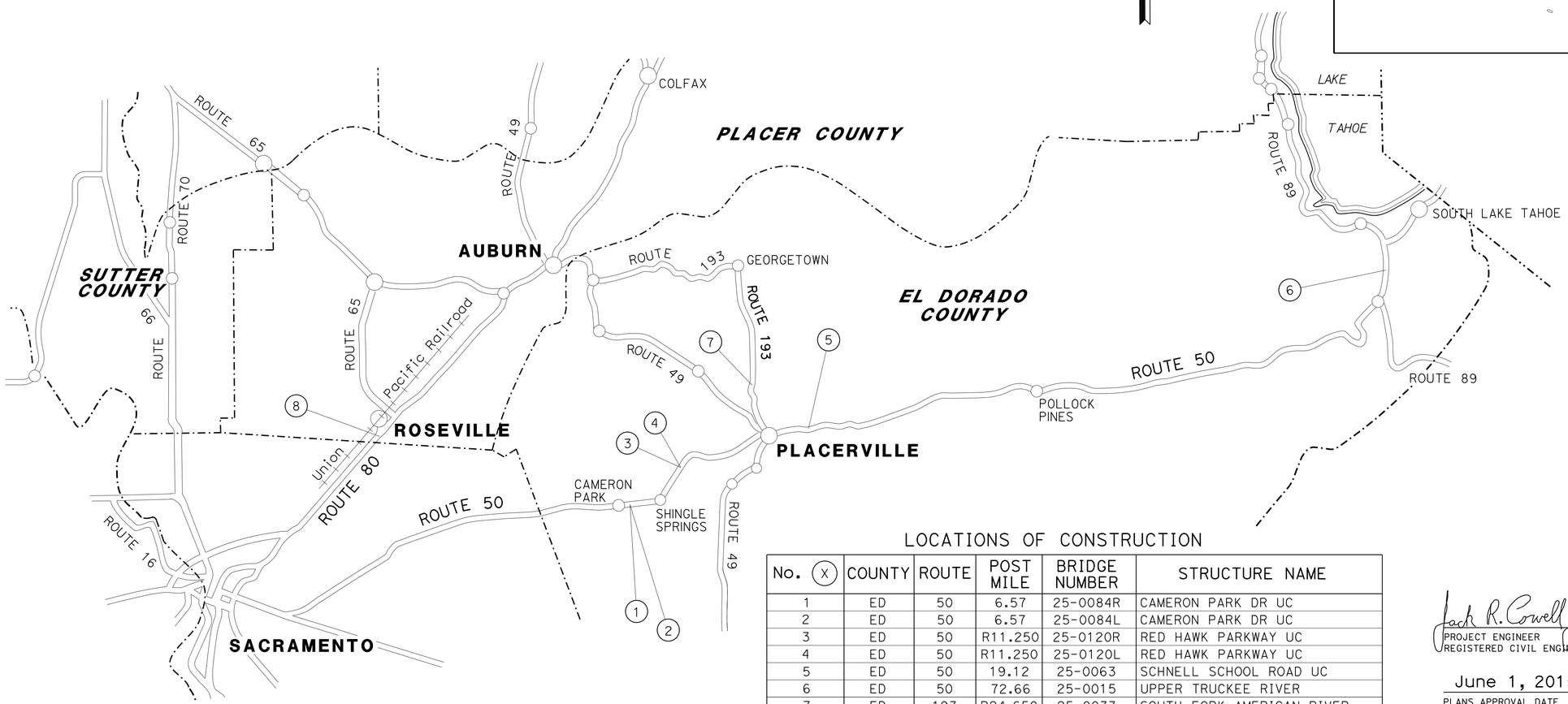

LOCATIONS OF CONSTRUCTION

No. (X)	COUNTY	ROUTE	POST MILE	BRIDGE NUMBER	STRUCTURE NAME
1	ED	50	6.57	25-0084R	CAMERON PARK DR UC
2	ED	50	6.57	25-0084L	CAMERON PARK DR UC
3	ED	50	R11.250	25-0120R	RED HAWK PARKWAY UC
4	ED	50	R11.250	25-0120L	RED HAWK PARKWAY UC
5	ED	50	19.12	25-0063	SCHNELL SCHOOL ROAD UC
6	ED	50	72.66	25-0015	UPPER TRUCKEE RIVER
7	ED	193	R24.650	25-0033	SOUTH FORK AMERICAN RIVER
8	Pla	80	3.50	19-0177	ROSEVILLE PARKWAY OH

Jack R. Cowell Jr. 6-1-15
PROJECT ENGINEER REGISTERED CIVIL ENGINEER DATE

REGISTERED PROFESSIONAL ENGINEER
JACK COWELL
No. C65521
Exp. 9-30-15
CIVIL
STATE OF CALIFORNIA

June 1, 2015
PLANS APPROVAL DATE

THE STATE OF CALIFORNIA OR ITS OFFICERS OR AGENTS SHALL NOT BE RESPONSIBLE FOR THE ACCURACY OR COMPLETENESS OF SCANNED COPIES OF THIS PLAN SHEET.

THE CONTRACTOR SHALL POSSESS THE CLASS (OR CLASSES) OF LICENSE AS SPECIFIED IN THE "NOTICE TO BIDDERS."

NO SCALE

CONTRACT No.	03-0G0304
PROJECT ID	0314000027

PROJECT MANAGER: WAYNE LEWIS
DESIGN MANAGER: PATRICK BISHOP

LAST REVISION 00-00-00 DATE PLOTTED => 27-JUL-2015 TIME PLOTTED => 08:30

Dist	COUNTY	ROUTE	POST MILES TOTAL PROJECT	SHEET No.	TOTAL SHEETS
03	ED,Pla	50, 80, 193	Var	2	64

Jack R. Cowell Jr. 6-1-15
REGISTERED CIVIL ENGINEER DATE

6-1-15
PLANS APPROVAL DATE

REGISTERED PROFESSIONAL ENGINEER
JACK COWELL
No. 65521
Exp. 9-30-15
CIVIL
STATE OF CALIFORNIA

THE STATE OF CALIFORNIA OR ITS OFFICERS OR AGENTS SHALL NOT BE RESPONSIBLE FOR THE ACCURACY OR COMPLETENESS OF SCANNED COPIES OF THIS PLAN SHEET.

NOTE:

1. SEE STRUCTURE PLANS FOR EXACT SPECIFICATIONS FOR EACH BRIDGE.

LEGEND

1" POLYESTER OVERLAY

HMA-A 0.25′
COLD PLANE AC Pvmt

ABBREVIATIONS

HMA-A HOT MIX ASPHALT (TYPE A)

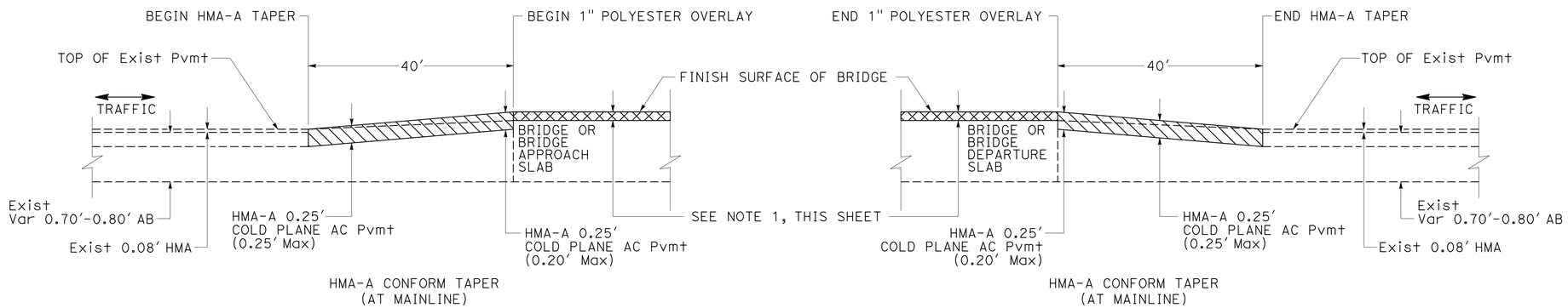

ROADWAY CONFORM TAPER

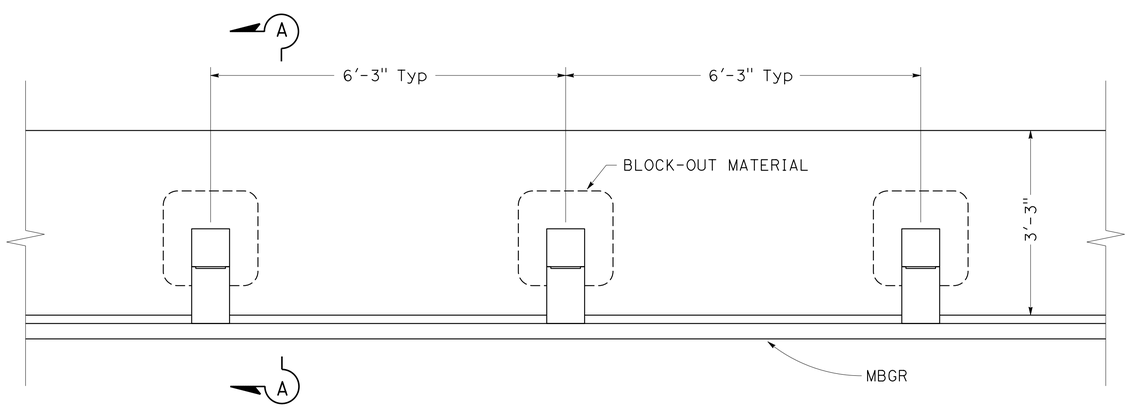

PLAN VIEW

VEGETATION CONTROL (MINOR CONCRETE) UNDER MBGR

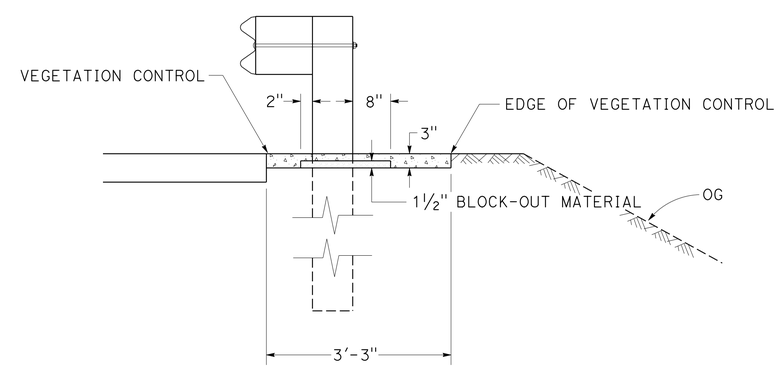

SEC A-A

GUARD RAILING VEGETATION CONTROL (MINOR CONCRETE) AT EP

CONSTRUCTION DETAILS

NO SCALE

C-1

STATE OF CALIFORNIA - DEPARTMENT OF TRANSPORTATION
MAINTENANCE DESIGN
Caltrans

FUNCTIONAL SUPERVISOR: PATRICK BISHOP
CALCULATED-DESIGNED BY: JACK COWELL
CHECKED BY: ROBERT FLOYD
REVISED BY
DATE REVISED

LAST REVISION 00-00-00
DATE PLOTTED => 27-JUL-2015
TIME PLOTTED => 15:16

Dist	COUNTY	ROUTE	POST MILES TOTAL PROJECT	SHEET No.	TOTAL SHEETS
03	ED,Pla	50, 80, 193	Var	3	64

Jack R. Cowell Jr. 6-1-15
REGISTERED CIVIL ENGINEER DATE

6-1-15
PLANS APPROVAL DATE

REGISTERED PROFESSIONAL ENGINEER
JACK COWELL
No. 65521
Exp. 9-30-15
CIVIL
STATE OF CALIFORNIA

THE STATE OF CALIFORNIA OR ITS OFFICERS OR AGENTS SHALL NOT BE RESPONSIBLE FOR THE ACCURACY OR COMPLETENESS OF SCANNED COPIES OF THIS PLAN SHEET.

NOTE:

1. SEE STRUCTURE PLANS FOR EXACT SPECIFICATIONS FOR EACH BRIDGE.

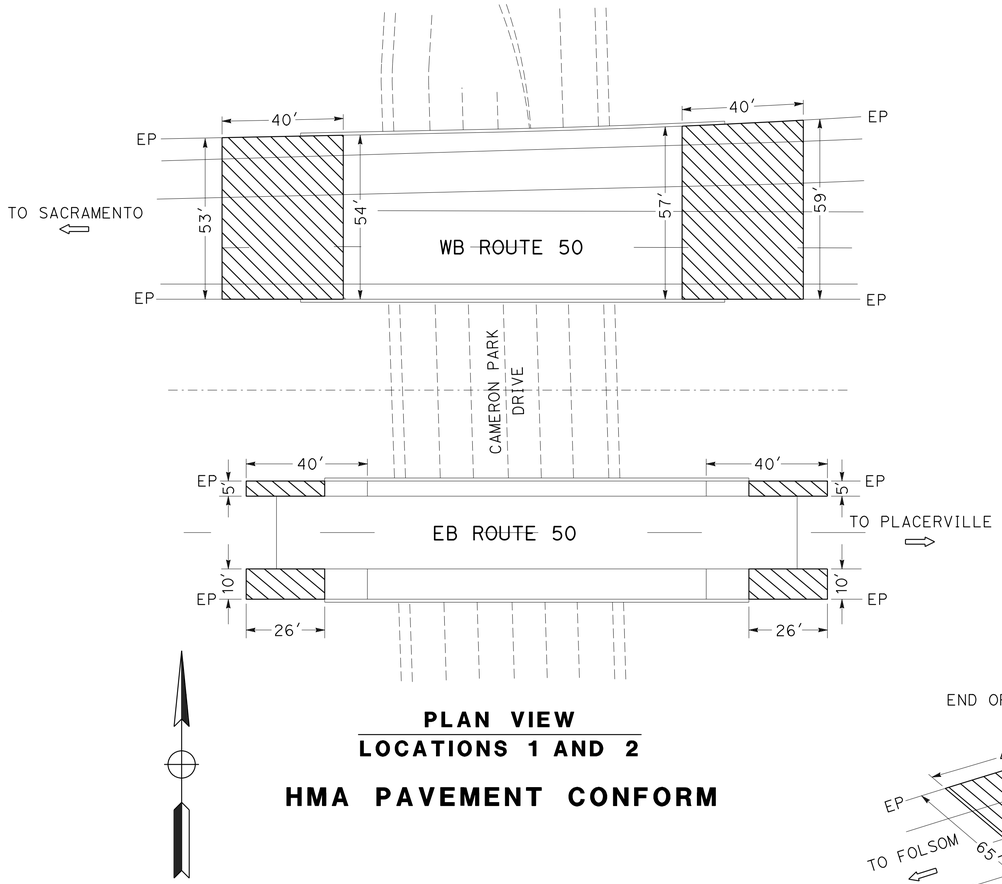

PLAN VIEW
LOCATIONS 1 AND 2

HMA PAVEMENT CONFORM

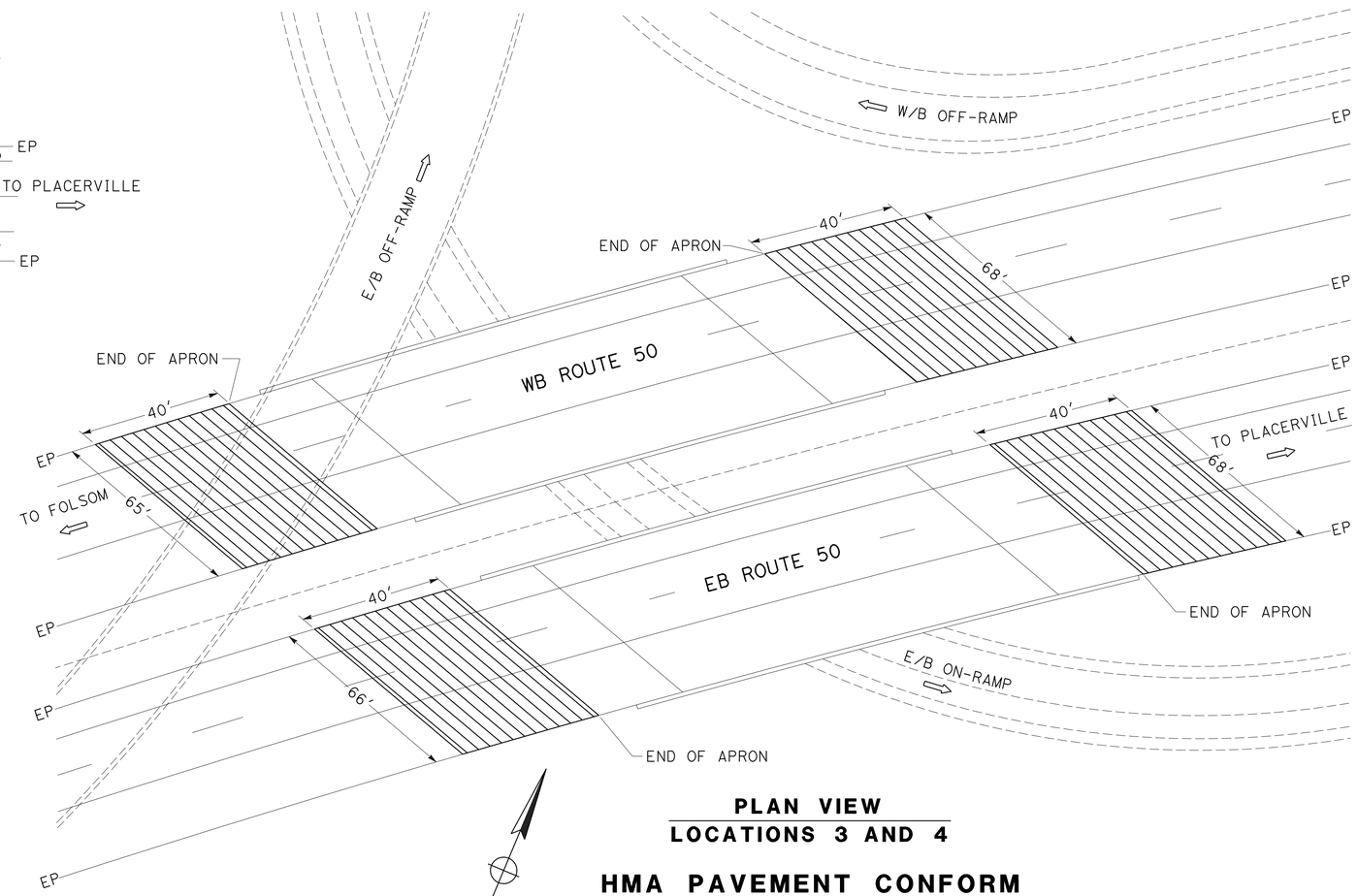

PLAN VIEW
LOCATIONS 3 AND 4

HMA PAVEMENT CONFORM

CONSTRUCTION DETAILS

NO SCALE

C-2

STATE OF CALIFORNIA - DEPARTMENT OF TRANSPORTATION
MAINTENANCE DESIGN
Caltrans®

FUNCTIONAL SUPERVISOR: PATRICK BISHOP
CALCULATED-DESIGNED BY: JACK COWELL
CHECKED BY: ROBERT FLOYD
REVISED BY
DATE REVISED

LAST REVISION 00-00-00
DATE PLOTTED => 27-JUL-2015
TIME PLOTTED => 15:16

Dist	COUNTY	ROUTE	POST MILES TOTAL PROJECT	SHEET No.	TOTAL SHEETS
03	ED,Pla	50, 80, 193	Var	4	64

REGISTERED CIVIL ENGINEER 6-1-15 DATE

6-1-15
PLANS APPROVAL DATE

REGISTERED PROFESSIONAL ENGINEER JACK COWELL No. 65521 Exp. 9-30-15 CIVIL STATE OF CALIFORNIA

THE STATE OF CALIFORNIA OR ITS OFFICERS OR AGENTS SHALL NOT BE RESPONSIBLE FOR THE ACCURACY OR COMPLETENESS OF SCANNED COPIES OF THIS PLAN SHEET.

ORDER OF WORK:

1. SEE STRUCTURE PLANS FOR EXACT SPECIFICATIONS FOR EACH BRIDGE.
2. TRANSITION CONCRETE BARRIER SHALL BE PAID FOR AS PART OF CONCRETE BARRIER (TYPE 60A MODIFIED) QUANTITY.
3. FOR SCHNELL SCHOOL ROAD UC ORDER OF WORK SEE NOTE ON CONSTRUCTION DETAIL C-4.

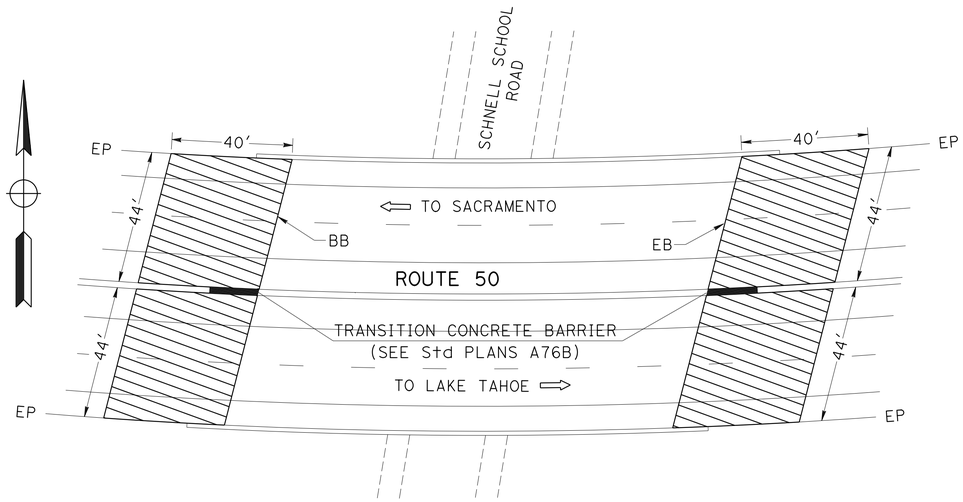

PLAN VIEW

LOCATION 5 (SCHNELL SCHOOL ROAD UC)

HMA PAVEMENT CONFORM

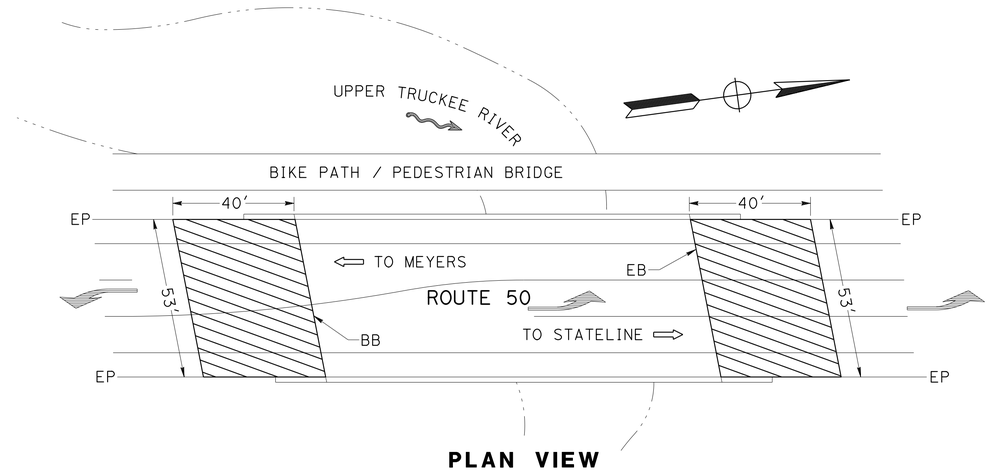

PLAN VIEW

LOCATION 6 (UPPER TRUCKEE RIVER)

HMA PAVEMENT CONFORM

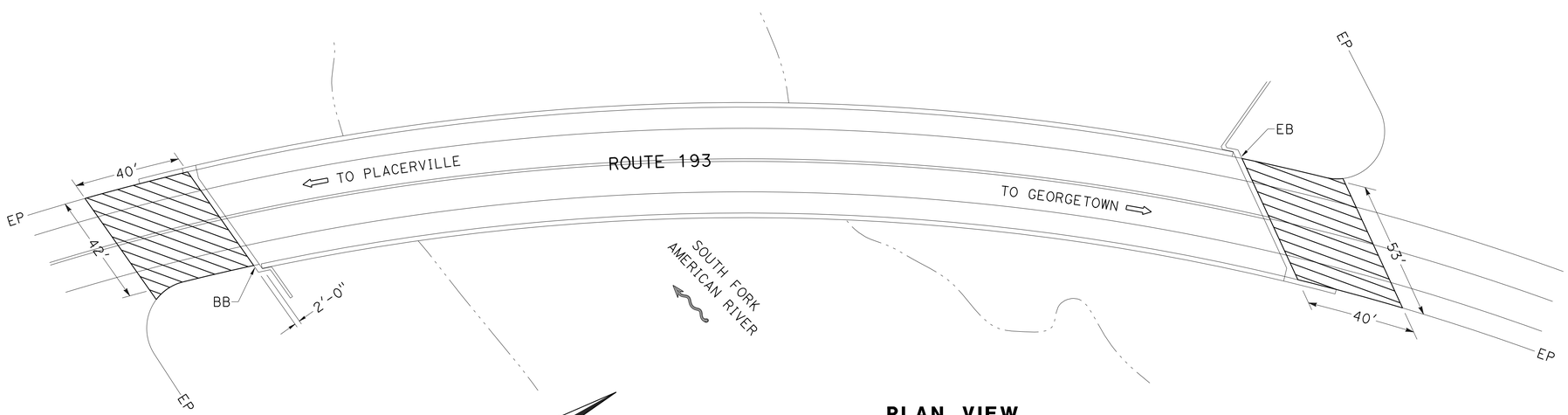

PLAN VIEW

LOCATION 7 (SOUTH FORK AMERICAN RIVER)

HMA PAVEMENT CONFORM

CONSTRUCTION DETAILS

NO SCALE

C-3

STATE OF CALIFORNIA - DEPARTMENT OF TRANSPORTATION
MAINTENANCE DESIGN
Caltrans

FUNCTIONAL SUPERVISOR: PATRICK BISHOP
CALCULATED-DESIGNED BY: JACK COWELL
CHECKED BY: ROBERT FLOYD
REVISED BY
DATE REVISED

LAST REVISION 00-00-00
DATE PLOTTED => 27-JUL-2015
TIME PLOTTED => 15:16

Dist	COUNTY	ROUTE	POST MILES TOTAL PROJECT	SHEET No.	TOTAL SHEETS
03	ED,Pla	50, 80, 193	Var	5	64

REGISTERED CIVIL ENGINEER 6-1-15 DATE

6-1-15
PLANS APPROVAL DATE

REGISTERED PROFESSIONAL ENGINEER
JACK COWELL
No. 65521
Exp. 9-30-15
CIVIL
STATE OF CALIFORNIA

THE STATE OF CALIFORNIA OR ITS OFFICERS OR AGENTS SHALL NOT BE RESPONSIBLE FOR THE ACCURACY OR COMPLETENESS OF SCANNED COPIES OF THIS PLAN SHEET.

NOTES:

1. DRAINAGE INLET TO BE FIELD VERIFIED BY CONTRACTOR IN ORDER TO ENSURE SELECTION OF CORRECT SIZE OF STEEL PLATE.
2. ORDER OF WORK TO BE AS FOLLOWS: A) TOP OF DRAINAGE INLET TO BE JACK-HAMMERED TO 0.67′ BELOW EXISTING SURFACE IN ORDER TO PROVIDE Min HMA LAYER PRIOR TO STAGE 1.
   B) TEMPORARY STEEL PLATE PLACEMENT TO BE DONE PRIOR TO STAGE 1.
   C) REMOVAL OF TEMPORARY HMA-A, TEMPORARY STEEL PLATE AND ADJUST INLET TO BE DONE DURING STAGE 3.
   D) CONFORM TAPERS TO BE DONE LAST.

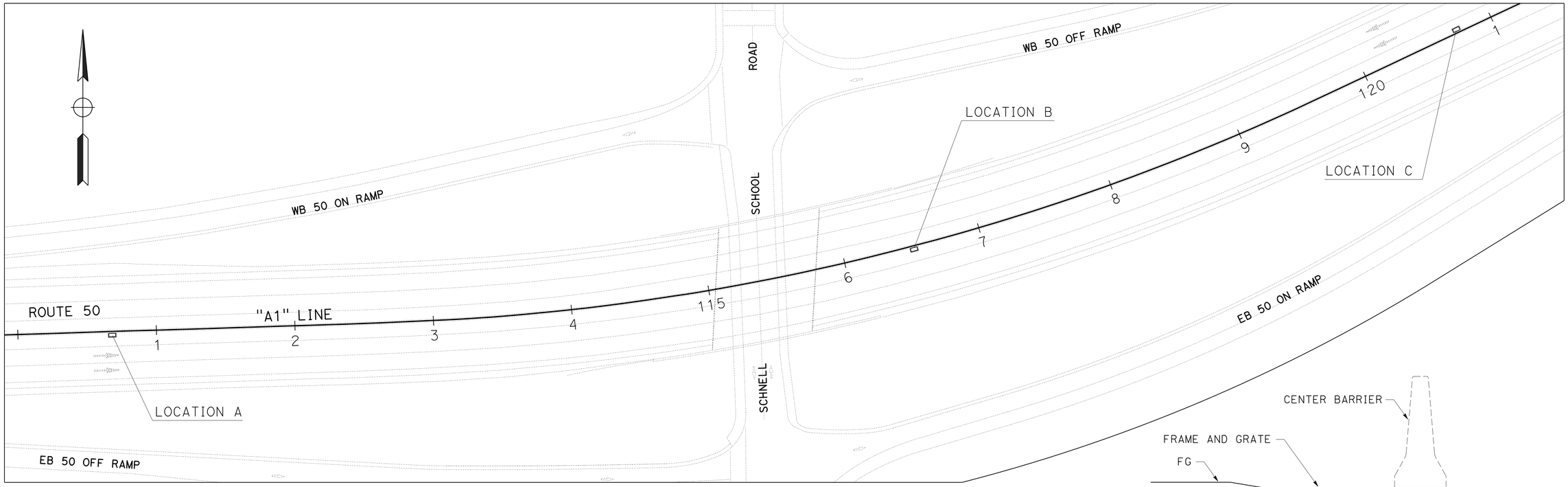

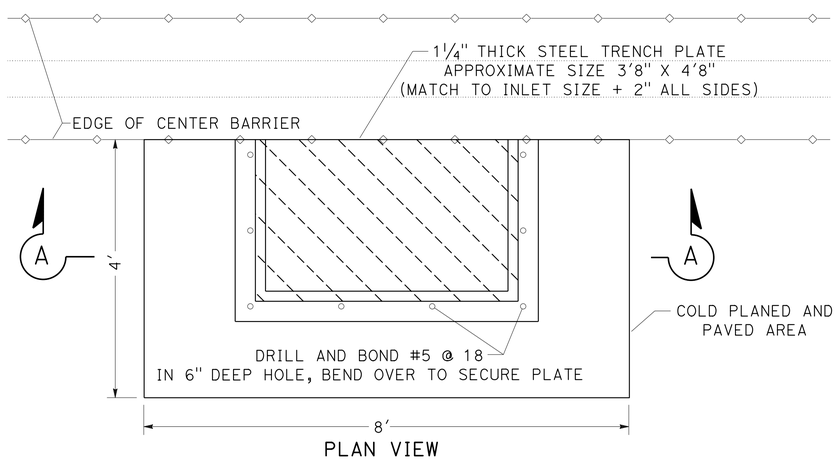

TEMPORARY STEEL PLATE PLACEMENT LOCATIONS A, B, AND C

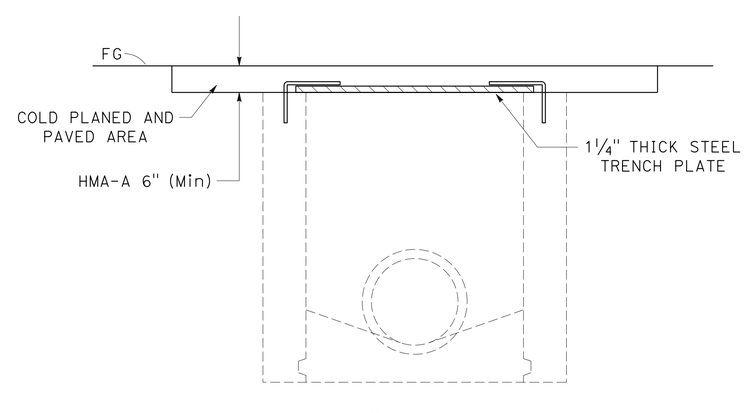

TEMPORARY STEEL PLATE PLACEMENT (PROFILE VIEW) LOCATIONS A, B, AND C

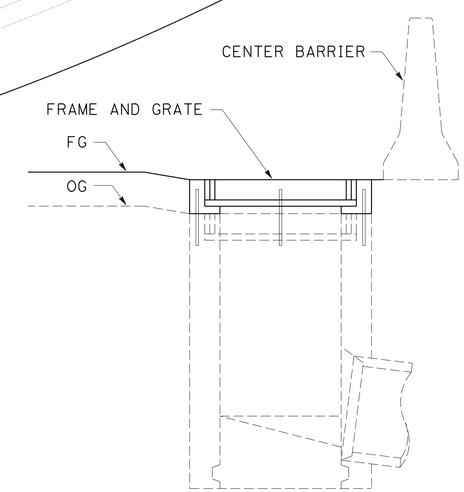

ADJUST INLET (SEE NOTE 2C) LOCATIONS A, B, AND C

CONSTRUCTION DETAILS

NO SCALE

C-4

STATE OF CALIFORNIA - DEPARTMENT OF TRANSPORTATION
MAINTENANCE DESIGN
Caltrans

FUNCTIONAL SUPERVISOR: PATRICK BISHOP
CALCULATED-DESIGNED BY: JACK COWELL
CHECKED BY: ROBERT FLOYD
REVISED BY
DATE REVISED

LAST REVISION 00-00-00
DATE PLOTTED => 27-JUL-2015
TIME PLOTTED => 15:16

Dist	COUNTY	ROUTE	POST MILES TOTAL PROJECT	SHEET No.	TOTAL SHEETS
03	ED,Pla	50, 80, 193	Var	6	64

REGISTERED CIVIL ENGINEER 6-1-15 DATE

6-1-15
PLANS APPROVAL DATE

REGISTERED PROFESSIONAL ENGINEER JACK COWELL No. 65521 Exp. 9-30-15 CIVIL STATE OF CALIFORNIA

THE STATE OF CALIFORNIA OR ITS OFFICERS OR AGENTS SHALL NOT BE RESPONSIBLE FOR THE ACCURACY OR COMPLETENESS OF SCANNED COPIES OF THIS PLAN SHEET.

NOTES:

1. EXISTING UTILITY FACILITIES ARE NOT INCLUDED ON THESE PLANS.
2. CLEARING AND GRUBBING TO BE DIRECTED BY ENGINEER IN THE FIELD AT LOCATIONS SHOWN IN ORDER TO PROVIDE CLEARANCE FOR WORK ZONE AND FOR TEMPORARY POLES.
3. FOR ACCURATE RIGHT OF WAY DATA CONTACT RIGHT OF WAY ENGINEERING AT THE DISTRICT OFFICE.

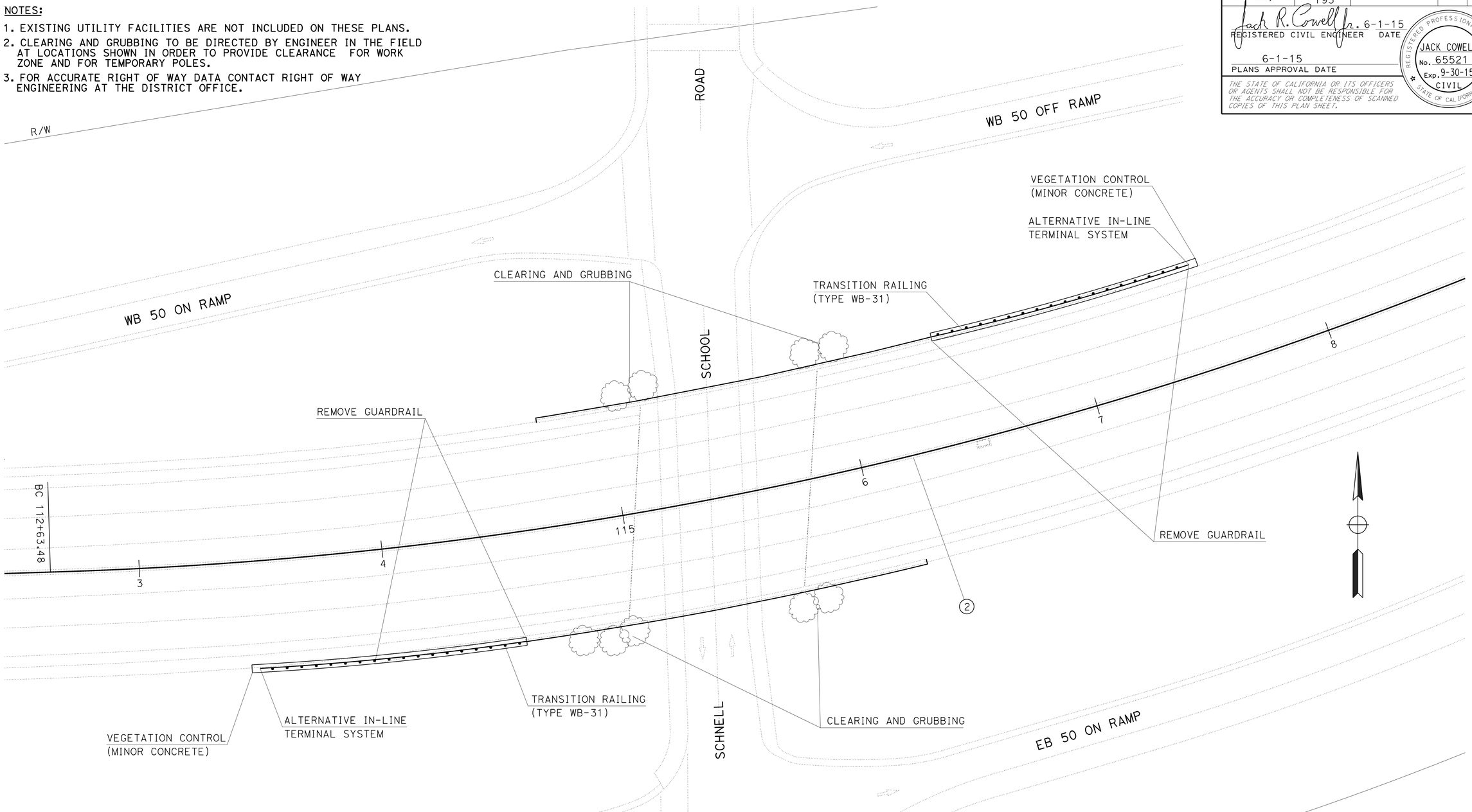

CONSTRUCTION DETAILS

LOCATION 5 SCHNELL SCHOOL Rd UC

SCALE: 1" = 20'

C-5

STATE OF CALIFORNIA - DEPARTMENT OF TRANSPORTATION
Caltrans
MAINTENANCE DESIGN

FUNCTIONAL SUPERVISOR: PATRICK BISHOP
CALCULATED-DESIGNED BY: JACK COWELL
CHECKED BY: ROBERT FLOYD
REVISED BY
DATE REVISED

LAST REVISION 00-00-00
DATE PLOTTED => 27-JUL-2015
TIME PLOTTED => 15:16

Dist	COUNTY	ROUTE	POST MILES TOTAL PROJECT	SHEET No.	TOTAL SHEETS
03	ED,Pla	50, 80, 193	Var	7	64

Jack R. Cowell Jr. 6-1-15
REGISTERED CIVIL ENGINEER DATE

6-1-15
PLANS APPROVAL DATE

REGISTERED PROFESSIONAL ENGINEER
JACK COWELL
No. 65521
Exp. 9-30-15
CIVIL
STATE OF CALIFORNIA

THE STATE OF CALIFORNIA OR ITS OFFICERS OR AGENTS SHALL NOT BE RESPONSIBLE FOR THE ACCURACY OR COMPLETENESS OF SCANNED COPIES OF THIS PLAN SHEET.

NOTES:

1. GRIND EXISTING SURFACES TO ACCOMODATE A MINIMUM TAPER THICKNESS OF 0.10′ WHEN EITHER:
   A. HMA MATERIAL SUCH AS RUBBERIZED, POLYMER MODIFIED OR OPEN GRADED IS UNSUITABLE FOR RAKING TO A MAXIMUM 0.02′ THICKNESS AT THE CONFORM.
   B. TEMPORARY TAPER WILL BE IN PLACE FOR MORE THAN 14 DAYS.
2. PERMANENT SURFACE MAY BE EXISTING OR NEW PAVEMENT.
3. ROADWAY SURFACE IS THE TOP OF EXISTING SURFACE OR THE TOP OF THE PLANED SURFACE.
4. FOR TEMPORARY TAPERS ON BRIDGE DECKS AND APPROACH SLABS, CONSTRUCT TEMPORARY TAPERS WITH POLYESTER CONCRETE.
5. IF AUTHORIZED, YOU MAY USE ALTERNATIVE MATERIALS OR METHODS TO PRODUCE THE REQUIRED TAPER.

LEGEND:

HMA MATERIAL (TEMPORARY TAPER) (SEE NOTE 4)

IF NECESSARY, COLD PLANE ASPHALT CONCRETE PAVEMENT AND PLACE HMA MATERIAL (SEE NOTE 1)

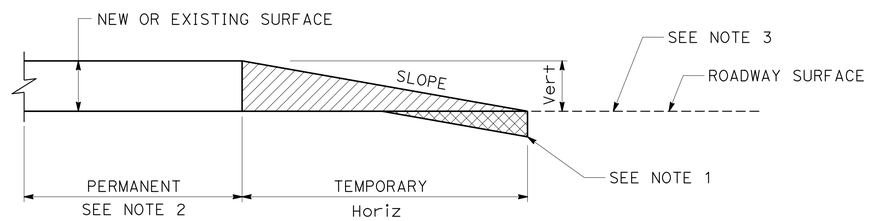

Vert	SLOPE RATIO Horiz/Vert
0-0.10′	70:1
GREATER THAN 0.10′	160:1

TYPICAL PAVING CONFORM FOR TEMPORARY CONSTRUCTION TAPERS

CONSTRUCTION DETAILS

NO SCALE

C-6

STATE OF CALIFORNIA - DEPARTMENT OF TRANSPORTATION
MAINTENANCE DESIGN
Caltrans

FUNCTIONAL SUPERVISOR: PATRICK BISHOP
CALCULATED-DESIGNED BY: JACK COWELL
CHECKED BY: ROBERT FLOYD
REVISED BY
DATE REVISED

LAST REVISION 00-00-00
DATE PLOTTED => 27-JUL-2015
TIME PLOTTED => 15:16

Dist	COUNTY	ROUTE	POST MILES TOTAL PROJECT	SHEET No.	TOTAL SHEETS
03	ED, Pla	50, 80, 193	Var	8	64

Kris M. Albers 6-1-15
REGISTERED CIVIL ENGINEER DATE

6-1-15
PLANS APPROVAL DATE

REGISTERED PROFESSIONAL ENGINEER
KRIS M. ALBERS
No. 49986
Exp. 6-30-17
CIVIL
STATE OF CALIFORNIA

THE STATE OF CALIFORNIA OR ITS OFFICERS OR AGENTS SHALL NOT BE RESPONSIBLE FOR THE ACCURACY OR COMPLETENESS OF SCANNED COPIES OF THIS PLAN SHEET.

STATIONARY MOUNTED CONSTRUCTION AREA SIGNS

LOCATION NUMBER	COUNTY AND ROUTE	SIGN LOCATION DESCRIPTION	FACING TRAFFIC NB	SB	EB	WB	SIGN CODE	PANEL SIZE	SIGN MESSAGE	NUMBER OF POST AND SIZE	NUMBER OF SIGNS
1	ED-50	1500'± BEFORE BEGINNING OF BRIDGE			2		W20-1	48" x 48"	ROAD WORK AHEAD	1 - 6" x 6"	2
		400'± AFTER END OF BRIDGE			1		G20-2	36" x 18"	END ROAD WORK	1 - 4" x 4"	1
		EB EXIT RAMP TO CAMERON PARK DRIVE			1		G20-2	36" x 18"	END ROAD WORK	1 - 4" x 4"	1
2	ED-50	1500'± AFTER END OF BRIDGE				2	W20-1	48" x 48"	ROAD WORK AHEAD	1 - 6" x 6"	2
		350'± BEFORE BEGINNING OF BRIDGE				1	G20-2	36" x 18"	END ROAD WORK	1 - 4" x 4"	1
		SB ENTRANCE RAMP FROM CAMERON PARK DRIVE				1	W20-1	48" x 48"	ROAD WORK AHEAD	1 - 6" x 6"	1
3	ED-50	1800'± BEFORE BEGINNING OF BRIDGE			2		W20-1	48" x 48"	ROAD WORK AHEAD	1 - 6" x 6"	2
		400'± AFTER END OF BRIDGE			1		G20-2	36" x 18"	END ROAD WORK	1 - 4" x 4"	1
		EB EXIT RAMP TO RED HAWK PARKWAY			1		G20-2	36" x 18"	END ROAD WORK	1 - 4" x 4"	1
4	ED-50	1500'± AFTER END OF BRIDGE				2	W20-1	48" x 48"	ROAD WORK AHEAD	1 - 6" x 6"	2
		1000'± BEFORE BEGINNING OF BRIDGE				1	G20-2	36" x 18"	END ROAD WORK	1 - 4" x 4"	1
		WB EXIT RAMP TO RED HAWK PARKWAY				1	G20-2	36" x 18"	END ROAD WORK	1 - 4" x 4"	1
5	ED-50	2200'± BEFORE BEGINNING OF BRIDGE			1		W20-1	60" x 60"	ROAD WORK AHEAD	2 - 4" x 6"	1
		1980'± BEFORE BEGINNING OF BRIDGE			1		C40(Mod)<CA>	48" x 36"	TRAFFIC FINES DOUBLED IN WORK ZONES	1 - 4" x 6"	1
		1800'± AFTER END OF BRIDGE			1		G20-2	36" x 18"	END ROAD WORK	1 - 4" x 4"	1
		2500'± AFTER END OF BRIDGE				1	W20-1	60" x 60"	ROAD WORK AHEAD	2 - 4" x 6"	1
		2400'± AFTER END OF BRIDGE				1	C40(Mod)<CA>	48" x 36"	TRAFFIC FINES DOUBLED IN WORK ZONES	1 - 4" x 6"	1
		1200'± BEFORE BEGINNING OF BRIDGE				1	G20-2	36" x 18"	END ROAD WORK	1 - 4" x 4"	1
		SCHNELL SCHOOL ROAD	1	1			W20-1	48" x 48"	ROAD WORK AHEAD	1 - 6" x 6"	2
		SCHNELL SCHOOL ROAD	1	1			G20-2	36" x 18"	END ROAD WORK	1 - 4" x 4"	2
6	ED-50	700'± BEFORE BEGINNING OF BRIDGE	1				W20-1	48" x 48"	ROAD WORK AHEAD	1 - 6" x 6"	1
		550'± BEFORE BEGINNING OF BRIDGE		1			G20-2	36" x 18"	END ROAD WORK	1 - 4" x 4"	1
		350'± AFTER END OF BRIDGE	1				G20-2	36" x 18"	END ROAD WORK	1 - 4" x 4"	1
		700'± AFTER END OF BRIDGE		1			W20-1	48" x 48"	ROAD WORK AHEAD	1 - 6" x 6"	1
		ELKS CLUB DRIVE				1	W20-1	48" x 48"	ROAD WORK AHEAD	1 - 6" x 6"	1
		ELKS CLUB DRIVE			1		G20-2	36" x 18"	END ROAD WORK	1 - 4" x 4"	1
		SAWMILL ROAD			1		W20-1	48" x 48"	ROAD WORK AHEAD	1 - 6" x 6"	1
		SAWMILL ROAD				1	G20-2	36" x 18"	END ROAD WORK	1 - 4" x 4"	1
7	ED-193	700'± BEFORE BEGINNING OF BRIDGE	1				W20-1	48" x 48"	ROAD WORK AHEAD	1 - 6" x 6"	1
		250'± BEFORE BEGINNING OF BRIDGE		1			G20-2	36" x 18"	END ROAD WORK	1 - 4" x 4"	1
		450'± AFTER END OF BRIDGE	1				G20-2	36" x 18"	END ROAD WORK	1 - 4" x 4"	1
		600'± AFTER END OF BRIDGE		1			W20-1	48" x 48"	ROAD WORK AHEAD	1 - 6" x 6"	1
		CHILI BAR LANE			1		W20-1	48" x 48"	ROAD WORK AHEAD	1 - 6" x 6"	1

NOTES:

1. EXACT SIGN LOCATION TO BE DETERMINED BY THE ENGINEER.
2. ALL SIGN CODES SHOWN ARE FEDERAL SIGN CODES UNLESS OTHERWISE DESIGNATED AS A CALIFORNIA SIGN CODE.
3. <CA> = CALIFORNIA SIGN CODE.
4. FOR ADDITIONAL STATIONARY MOUNTED CONSTRUCTION AREA SIGNS AT LOCATION 5, SEE TRAFFIC HANDLING PLANS.

CONSTRUCTION AREA SIGNS

CS-1

APPROVED FOR CONSTRUCTION AREA SIGN WORK ONLY

REVISED BY | DATE REVISED
JACK KEMMERLY | KRIS ALBERS
CALCULATED-DESIGNED BY | CHECKED BY
FUNCTIONAL SUPERVISOR
NARAYAN SELWAL

STATE OF CALIFORNIA - DEPARTMENT OF TRANSPORTATION
Caltrans
TRAFFIC

LAST REVISION 4-7-15
DATE PLOTTED => 23-JUL-2015
TIME PLOTTED => 14:58

Dist	COUNTY	ROUTE	POST MILES TOTAL PROJECT	SHEET No.	TOTAL SHEETS
03	ED, Pla	50, 80, 193	Var	9	64

Kris M. Albers 6-1-15
REGISTERED CIVIL ENGINEER DATE

6-1-15
PLANS APPROVAL DATE

REGISTERED PROFESSIONAL ENGINEER
KRIS M. ALBERS
No. 49986
Exp. 6-30-17
CIVIL
STATE OF CALIFORNIA

THE STATE OF CALIFORNIA OR ITS OFFICERS OR AGENTS SHALL NOT BE RESPONSIBLE FOR THE ACCURACY OR COMPLETENESS OF SCANNED COPIES OF THIS PLAN SHEET.

STATIONARY MOUNTED CONSTRUCTION AREA SIGNS (CONTINUED)

LOCATION NUMBER	COUNTY AND ROUTE	SIGN LOCATION					SIGN CODE	PANEL SIZE	SIGN MESSAGE	NUMBER OF POST AND SIZE	NUMBER OF SIGNS
		DESCRIPTION	FACING TRAFFIC								
			NB	SB	EB	WB					
8	Pla-80	ON ROSEVILLE PARKWAY 1200'± BEFORE BEGINNING OF BRIDGE			2		W20-1	48" x 48"	ROAD WORK AHEAD	1 - 6" x 6"	2
		ON ROSEVILLE PARKWAY 400'± BEFORE BEGINNING OF BRIDGE				1	G20-2	36" x 18"	END ROAD WORK	1 - 4" x 4"	1
		ON ROSEVILLE PARKWAY 800'± AFTER END OF BRIDGE			1		G20-2	36" x 18"	END ROAD WORK	1 - 4" x 4"	1
		ON ROSEVILLE PARKWAY 1200'± AFTER END OF BRIDGE				2	W20-1	48" x 48"	ROAD WORK AHEAD	1 - 6" x 6"	2
		ON TAYLOR ROAD 250'± SOUTH OF THE LIMIT LINE AT INTERSECTION WITH ROSEVILLE PARKWAY	1				W20-1	48" x 48"	ROAD WORK AHEAD	1 - 6" x 6"	1
		ON TAYLOR ROAD 125'± SOUTH OF THE LIMIT LINE AT INTERSECTION WITH ROSEVILLE PARKWAY		1			G20-2	36" x 18"	END ROAD WORK	1 - 4" x 4"	1
		ON TAYLOR ROAD 125'± NORTH OF THE LIMIT LINE AT INTERSECTION WITH ROSEVILLE PARKWAY	1				G20-2	36" x 18"	END ROAD WORK	1 - 4" x 4"	1
		ON TAYLOR ROAD 150'± NORTH OF THE LIMIT LINE AT INTERSECTION WITH ROSEVILLE PARKWAY		1			W20-1	48" x 48"	ROAD WORK AHEAD	1 - 6" x 6"	1

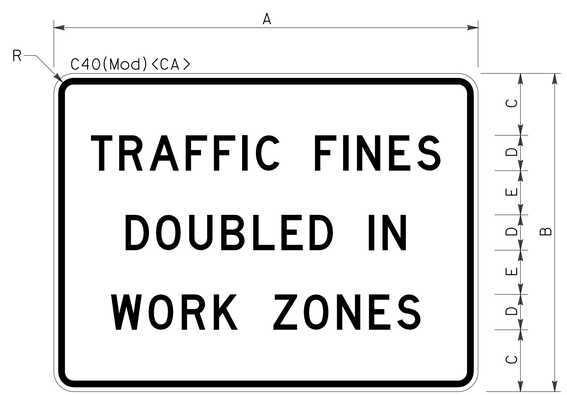

A	B	C	D	E	R
48"	36"	7"	4"D	5"	2¼"

¾" BORDER WITH ½" INDENT

RETROREFLECTIVE WHITE BACKGROUND WITH BLACK LEGEND AND BORDER.

SIGN DETAIL
LOCATION 5

CONSTRUCTION AREA SIGNS

APPROVED FOR CONSTRUCTION AREA SIGN WORK ONLY

CS-2

STATE OF CALIFORNIA - DEPARTMENT OF TRANSPORTATION
Caltrans
TRAFFIC

FUNCTIONAL SUPERVISOR: NARAYAN SELWAL
CALCULATED-DESIGNED BY: JACK KEMMERLY
CHECKED BY: KRIS ALBERS
REVISED BY
DATE REVISED

LAST REVISION 4-7-15
DATE PLOTTED => 23-JUL-2015
TIME PLOTTED => 14:58

Dist	COUNTY	ROUTE	POST MILES TOTAL PROJECT	SHEET No.	TOTAL SHEETS
03	ED,Pla	50, 80, 193	Var	10	64

Jack R. Cowell Jr. 6-1-15
REGISTERED CIVIL ENGINEER DATE

6-1-15
PLANS APPROVAL DATE

REGISTERED PROFESSIONAL ENGINEER
JACK COWELL
No. 65521
Exp. 9-30-15
CIVIL
STATE OF CALIFORNIA

THE STATE OF CALIFORNIA OR ITS OFFICERS OR AGENTS SHALL NOT BE RESPONSIBLE FOR THE ACCURACY OR COMPLETENESS OF SCANNED COPIES OF THIS PLAN SHEET.

NOTES:

1. TEMPORARY RAILING (TYPE K) NOT TO BE ATTACHED ONTO BRIDGE DECK.
2. GUARDRAIL WORK FOR THIS STAGE (SEE CONSTRUCTION DETAILS AND QUANTITY SHEET).
3. TEMPORARY TRAFFIC SCREEN TO BE INSTALLED ON TEMPORARY RAILING (TYPE K).
4. OFFSET CALL OUT FOR TEMPORARY RAILING (TYPE K) IS OUTSIDE EDGE OF TEMPORARY RAILING (TYPE K) IN RELATIONSHIP TO ALIGNMENT "A1" LINE (SEE DETAIL BELOW).
5. FOR STAGE CONSTRUCTION TYPICAL CROSS-SECTIONS SEE DECK ON DECK DETAILS NO. 1.
6. NO STAGING OF MATERIALS AND EQUIPMENT ON SHOULDER AREAS AROUND EXISTING ELECTRICAL FACILITIES (PULL BOXES, LUMINAIRES, ETC.).
7. FOR ACCURATE RIGHT OF WAY DATA, CONTACT RIGHT OF WAY ENGINEERING AT THE DISTRICT 3 OFFICE.
8. FOR TRAFFIC STRIPING THIS STAGE SEE TRAFFIC HANDLING PLANS.

CURVE DATA

No. ⊕	R	Δ	T	L
1	1198′	05°26′51″	56.99′	113.90′
2	1697′	24°10′46″	363.60′	716.37′

TEMPORARY ITEMS

ITEM	QUANTITY
TEMPORARY RAILING (TYPE K)	4300 LF
ALTERNATIVE TEMPORARY CRASH CUSHION	4 EA
TEMPORARY CRASH CUSHION MODULE	28 EA
TEMPORARY TRAFFIC SCREEN	4200 LF

LEGEND

CONSTRUCTION AREA

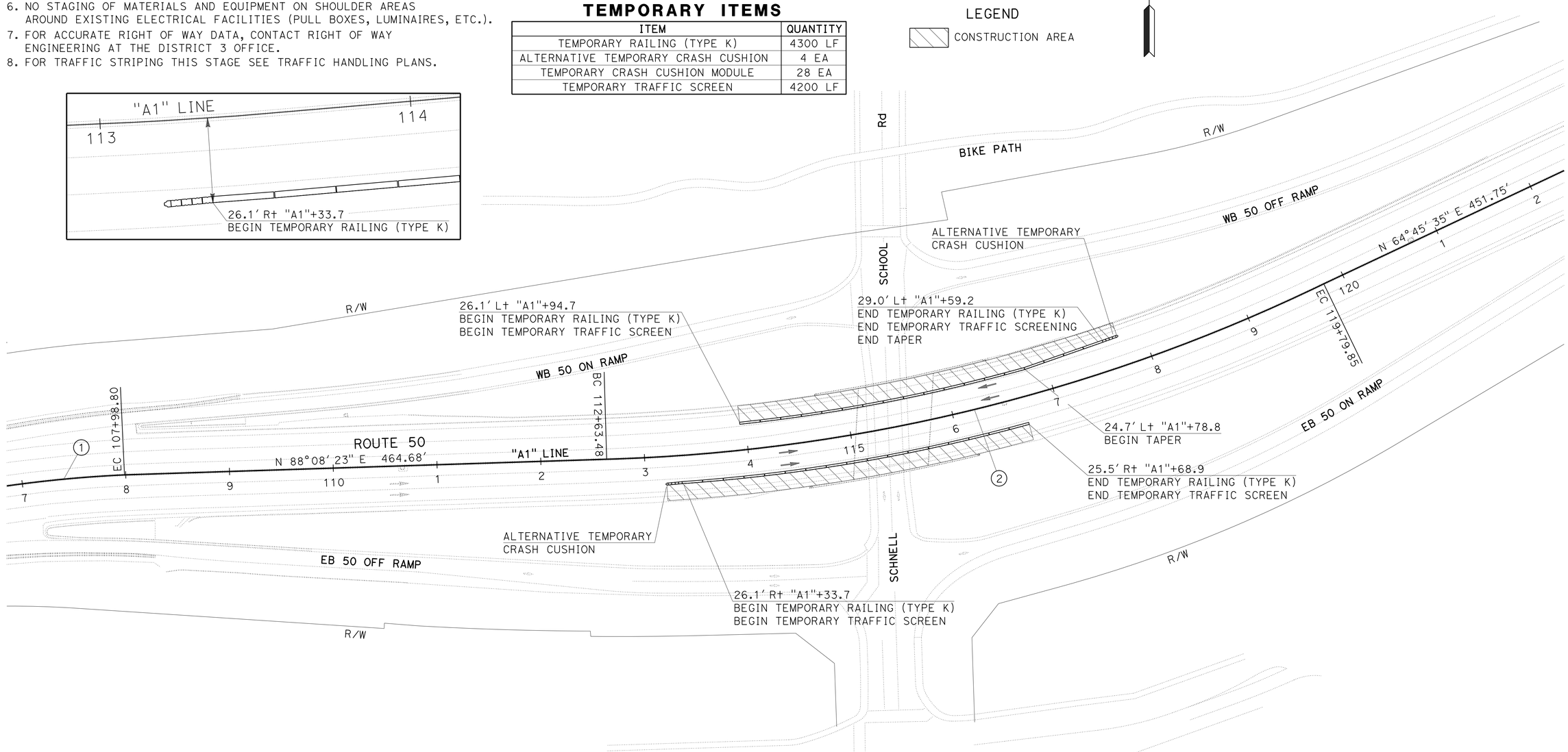

APPROVED FOR STAGE CONSTRUCTION WORK ONLY

STAGE CONSTRUCTION
LOCATION 5 - STAGE I
(ROUTE 50 AT SCHNELL SCHOOL ROAD UC)

SCALE: 1" = 50′

SC-1

STATE OF CALIFORNIA - DEPARTMENT OF TRANSPORTATION
MAINTENANCE DESIGN
Caltrans

FUNCTIONAL SUPERVISOR: PATRICK BISHOP
CALCULATED-DESIGNED BY: JACK COWELL
CHECKED BY: ROBERT FLOYD
REVISED BY / DATE REVISED

LAST REVISION 00-00-00 | DATE PLOTTED => 27-JUL-2015 | TIME PLOTTED => 15:01

Dist	COUNTY	ROUTE	POST MILES TOTAL PROJECT	SHEET No.	TOTAL SHEETS
03	ED,Pla	50, 80, 193	Var	11	64

Jack R. Cowell Jr. 6-1-15
REGISTERED CIVIL ENGINEER DATE

6-1-15
PLANS APPROVAL DATE

REGISTERED PROFESSIONAL ENGINEER
JACK COWELL
No. 65521
Exp. 9-30-15
CIVIL
STATE OF CALIFORNIA

THE STATE OF CALIFORNIA OR ITS OFFICERS OR AGENTS SHALL NOT BE RESPONSIBLE FOR THE ACCURACY OR COMPLETENESS OF SCANNED COPIES OF THIS PLAN SHEET.

NOTE:

1. FOR TRAFFIC STRIPING THIS STAGE SEE TRAFFIC HANDLING PLANS.

CURVE DATA

No. ⊕	R	Δ	T	L
1	1198′	05°26′51″	56.99′	113.90′
2	1697′	24°10′46″	363.60′	716.37′

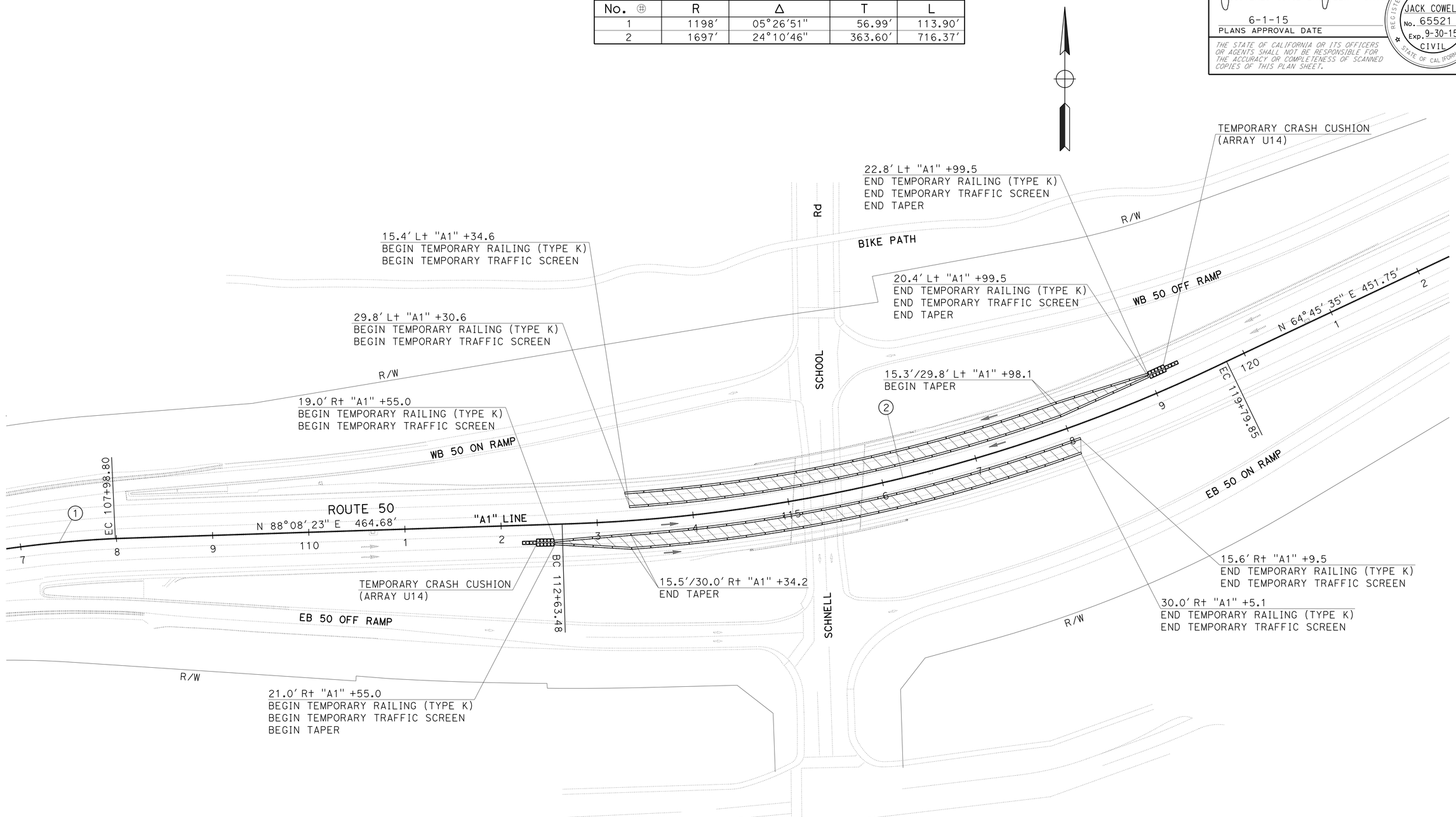

APPROVED FOR STAGE CONSTRUCTION WORK ONLY

STAGE CONSTRUCTION
LOCATION 5 - STAGE 2
(ROUTE 50 AT SCHNELL SCHOOL ROAD UC)

SCALE: 1" = 50′

SC-2

STATE OF CALIFORNIA - DEPARTMENT OF TRANSPORTATION
Caltrans
MAINTENANCE DESIGN

FUNCTIONAL SUPERVISOR: PATRICK BISHOP
CALCULATED-DESIGNED BY: JACK COWELL
CHECKED BY: ROBERT FLOYD
REVISED BY
DATE REVISED

LAST REVISION 00-00-00
DATE PLOTTED => 27-JUL-2015
TIME PLOTTED => 15:01

Dist	COUNTY	ROUTE	POST MILES TOTAL PROJECT	SHEET No.	TOTAL SHEETS
03	ED,Pla	50, 80, 193	Var	12	64

Jack R. Cowell Jr. 6-1-15
REGISTERED CIVIL ENGINEER DATE

6-1-15
PLANS APPROVAL DATE

REGISTERED PROFESSIONAL ENGINEER
JACK COWELL
No. 65521
Exp. 9-30-15
CIVIL
STATE OF CALIFORNIA

THE STATE OF CALIFORNIA OR ITS OFFICERS OR AGENTS SHALL NOT BE RESPONSIBLE FOR THE ACCURACY OR COMPLETENESS OF SCANNED COPIES OF THIS PLAN SHEET.

NOTE:

1. FOR TRAFFIC STRIPING THIS STAGE SEE TRAFFIC HANDLING PLANS.

CURVE DATA

No. ⊕	R	Δ	T	L
1	1198′	05°26′51″	56.99′	113.90′
2	1697′	24°10′46″	363.60′	716.37′

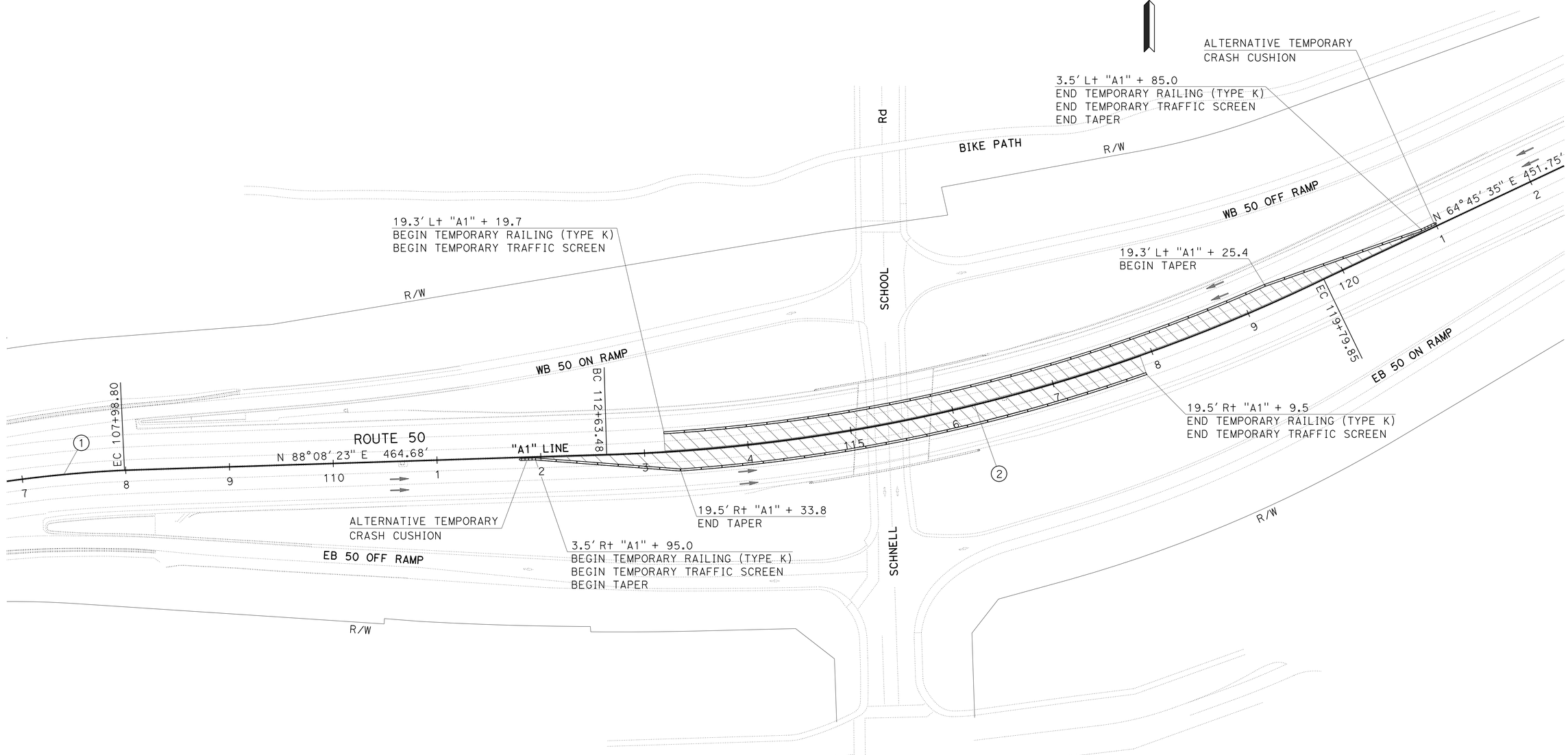

APPROVED FOR STAGE CONSTRUCTION WORK ONLY

STAGE CONSTRUCTION
LOCATION 5 - STAGE 3
(ROUTE 50 AT SCHNELL SCHOOL ROAD UC)

SCALE: 1" = 50′

SC-3

STATE OF CALIFORNIA - DEPARTMENT OF TRANSPORTATION
MAINTENANCE DESIGN
Caltrans

FUNCTIONAL SUPERVISOR: PATRICK BISHOP
CALCULATED-DESIGNED BY: JACK COWELL
CHECKED BY: ROBERT FLOYD
REVISED BY
DATE REVISED

LAST REVISION 00-00-00
DATE PLOTTED => 27-JUL-2015
TIME PLOTTED => 15:01

Dist	COUNTY	ROUTE	POST MILES TOTAL PROJECT	SHEET No.	TOTAL SHEETS
03	ED, Pla	50, 80, 193	Var	13	64

Kris M. Albers 6-1-15
REGISTERED CIVIL ENGINEER DATE

6-1-15
PLANS APPROVAL DATE

REGISTERED PROFESSIONAL ENGINEER
KRIS M. ALBERS
No. 49986
Exp. 6-30-17
CIVIL
STATE OF CALIFORNIA

THE STATE OF CALIFORNIA OR ITS OFFICERS OR AGENTS SHALL NOT BE RESPONSIBLE FOR THE ACCURACY OR COMPLETENESS OF SCANNED COPIES OF THIS PLAN SHEET.

LEGEND

- CHANGE IN STRIPING PATTERN
- LIMIT OF STRIPING PATTERN
- No. / T — PAVEMENT DELINEATION DETAIL NUMBER T=TAPE
- TAPE — TEMPORARY TRAFFIC STRIPE (TAPE)
- No. — CONSTRUCTION AREA SIGN LETTER
- TRAFFIC PLASTIC DRUM

NOTES:

1. ALL LANES SHALL BE 12′ WIDE UNLESS OTHERWISE SHOWN.
2. ALL TRAFFIC PLASTIC DRUMS SHALL BE INSTALLED ON 50′ CENTERS UNLESS OTHERWISE SHOWN.
3. EXACT SIGN LOCATIONS TO BE DETERMINED BY THE ENGINEER.
4. ALL SIGN CODES SHOWN ARE FEDERAL SIGN CODES UNLESS OTHERWISE DESIGNATED AS CALIFORNIA SIGN CODES.
5. <CA> = CALIFORNIA SIGN CODE
6. FOR ADDITIONAL STATIONARY MOUNTED CONSTRUCTION AREA SIGNS, SEE CONSTRUCTION AREA SIGN PLAN.

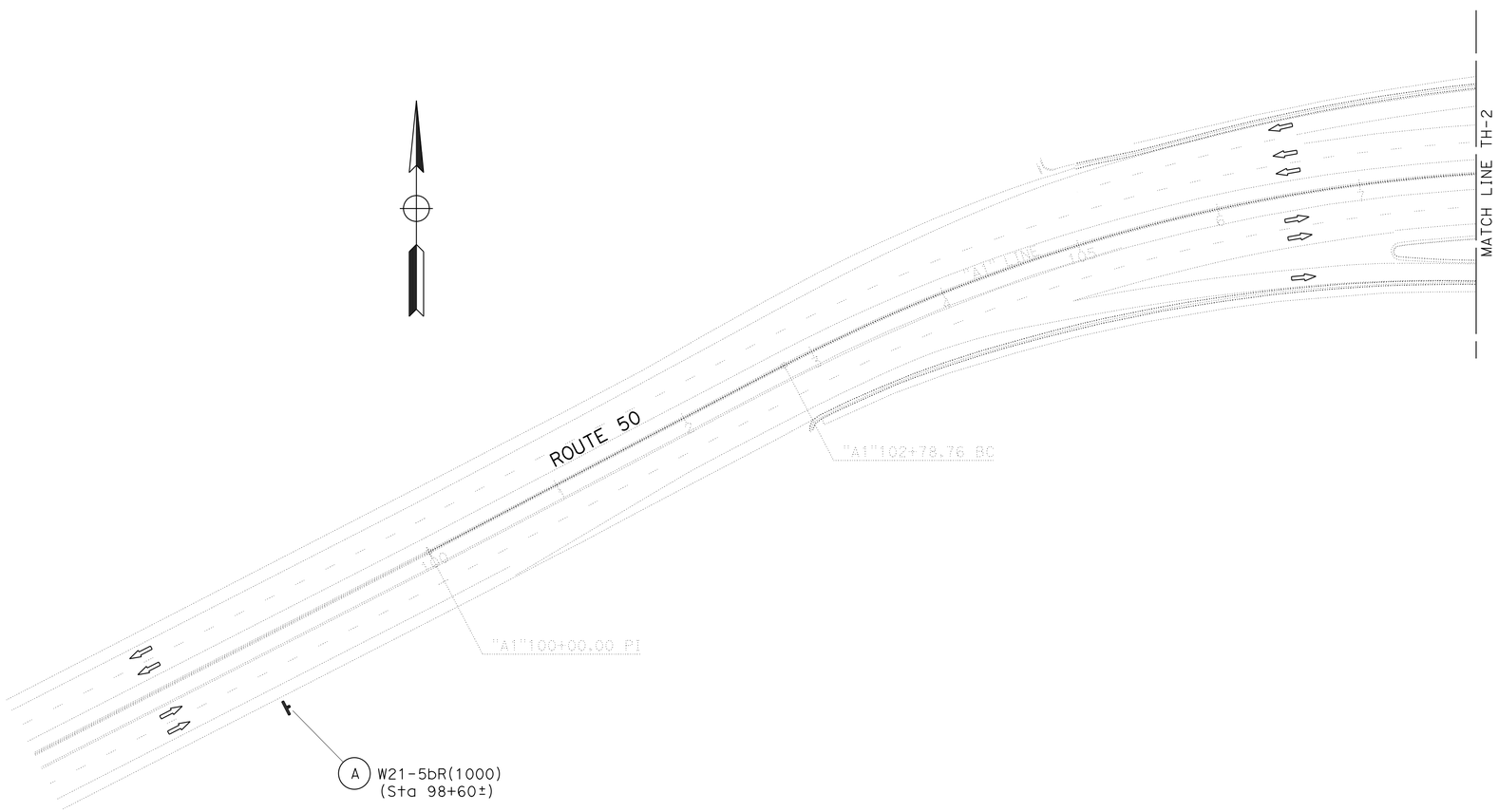

TRAFFIC HANDLING PLAN

LOCATION 5 - STAGE 1

SCALE: 1"=50′

TH-1

APPROVED FOR TRAFFIC HANDLING WORK ONLY

STATE OF CALIFORNIA - DEPARTMENT OF TRANSPORTATION
Caltrans®
TRAFFIC

FUNCTIONAL SUPERVISOR: NARAYAN SELWAL
CALCULATED-DESIGNED BY: JACK KEMMERLY
CHECKED BY: KRIS ALBERS
REVISED BY
DATE REVISED

LAST REVISION 1-29-15
DATE PLOTTED => 23-JUL-2015
TIME PLOTTED => 14:58

Dist	COUNTY	ROUTE	POST MILES TOTAL PROJECT	SHEET No.	TOTAL SHEETS
03	ED, Pla	50, 80, 193	Var	14	64

Kris M. Albers 6-1-15
REGISTERED CIVIL ENGINEER DATE

6-1-15
PLANS APPROVAL DATE

REGISTERED PROFESSIONAL ENGINEER
KRIS M. ALBERS
No. 49986
Exp. 6-30-17
CIVIL
STATE OF CALIFORNIA

THE STATE OF CALIFORNIA OR ITS OFFICERS OR AGENTS SHALL NOT BE RESPONSIBLE FOR THE ACCURACY OR COMPLETENESS OF SCANNED COPIES OF THIS PLAN SHEET.

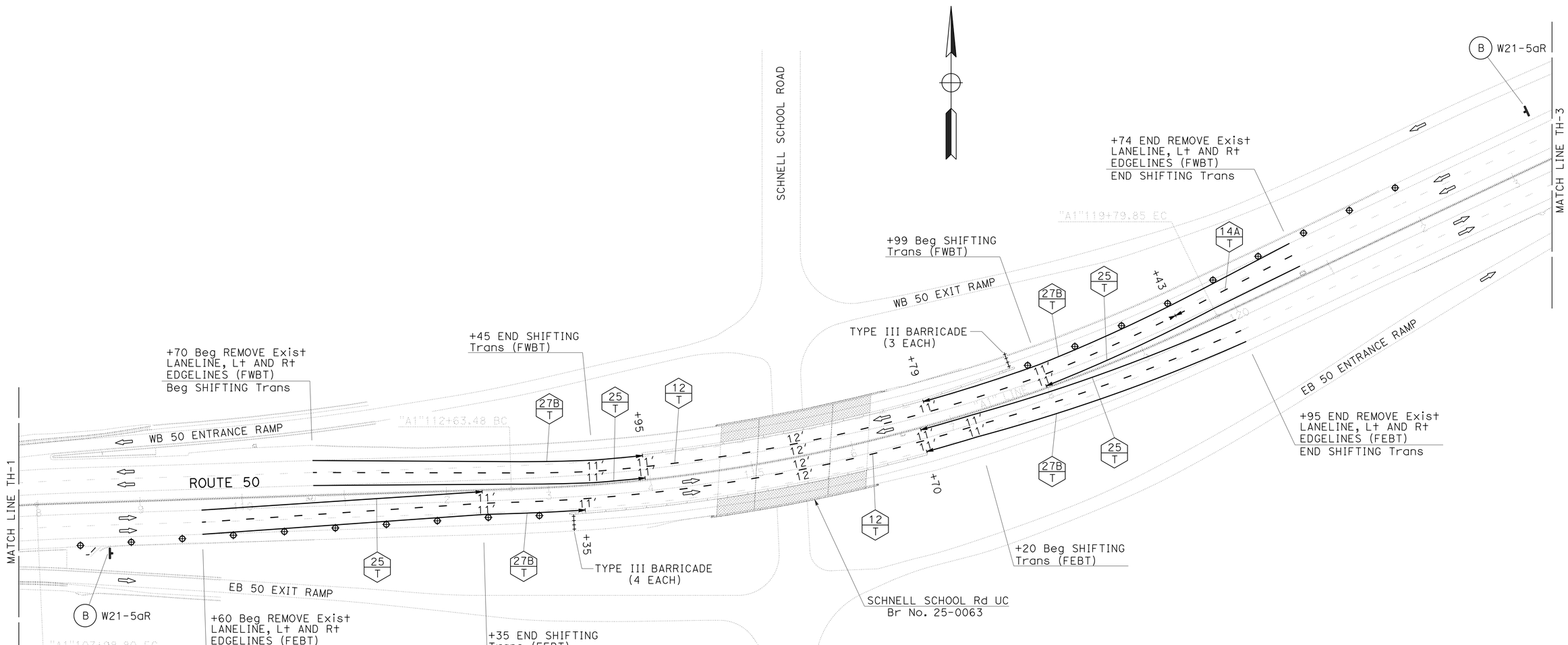

TRAFFIC HANDLING PLAN

LOCATION 5 - STAGE 1

SCALE: 1"=50'

TH-2

APPROVED FOR TRAFFIC HANDLING WORK ONLY

STATE OF CALIFORNIA - DEPARTMENT OF TRANSPORTATION
Caltrans
TRAFFIC

FUNCTIONAL SUPERVISOR: NARAYAN SELWAL
CALCULATED-DESIGNED BY: JACK KEMMERLY
CHECKED BY: KRIS ALBERS
REVISED BY
DATE REVISED

LAST REVISION 1-23-15
DATE PLOTTED => 23-JUL-2015
TIME PLOTTED => 14:58

Dist	COUNTY	ROUTE	POST MILES TOTAL PROJECT	SHEET No.	TOTAL SHEETS
03	ED, Pla	50, 80, 193	Var	15	64

Kris M. Albers 6-1-15
REGISTERED CIVIL ENGINEER DATE

6-1-15
PLANS APPROVAL DATE

REGISTERED PROFESSIONAL ENGINEER
KRIS M. ALBERS
No. 49986
Exp. 6-30-17
CIVIL
STATE OF CALIFORNIA

THE STATE OF CALIFORNIA OR ITS OFFICERS OR AGENTS SHALL NOT BE RESPONSIBLE FOR THE ACCURACY OR COMPLETENESS OF SCANNED COPIES OF THIS PLAN SHEET.

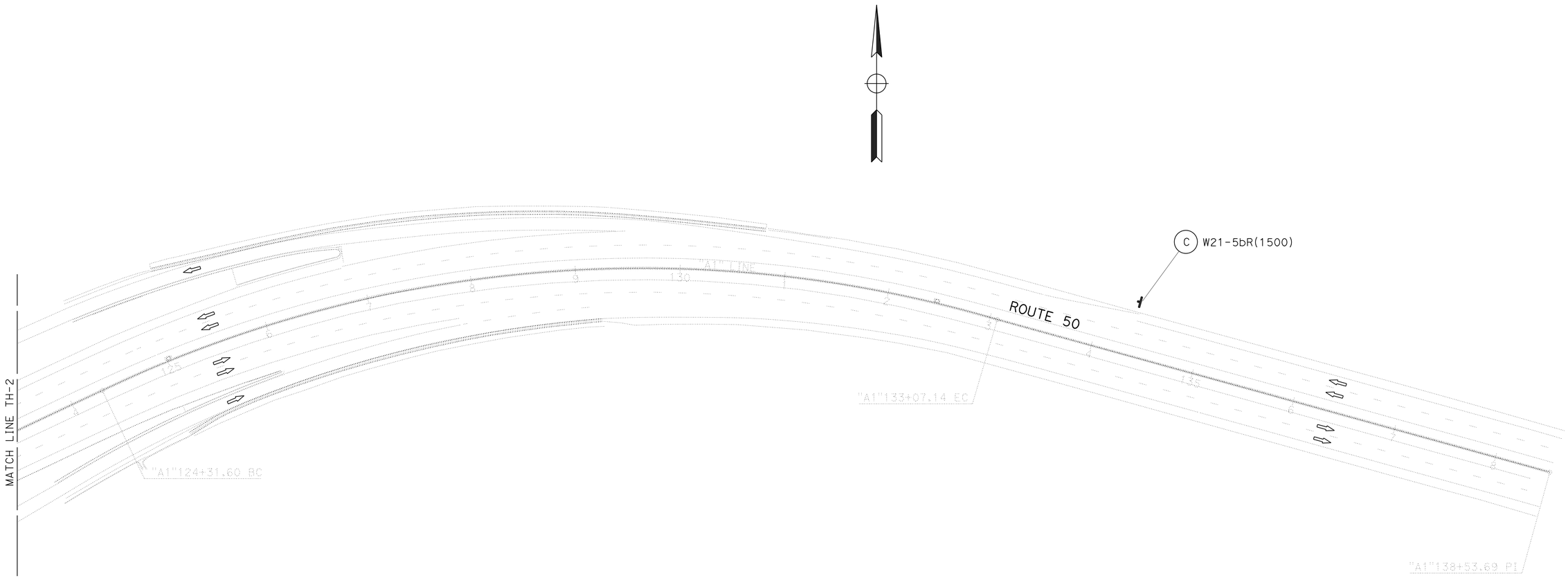

TRAFFIC HANDLING PLAN

LOCATION 5 - STAGE 1

SCALE: 1"=50'

TH-3

APPROVED FOR TRAFFIC HANDLING WORK ONLY

STATE OF CALIFORNIA - DEPARTMENT OF TRANSPORTATION
Caltrans
TRAFFIC

FUNCTIONAL SUPERVISOR: NARAYAN SELWAL
CALCULATED-DESIGNED BY: JACK KEMMERLY
CHECKED BY: KRIS ALBERS
REVISED BY
DATE REVISED

LAST REVISION 1-23-15
DATE PLOTTED => 23-JUL-2015
TIME PLOTTED => 14:58

Dist	COUNTY	ROUTE	POST MILES TOTAL PROJECT	SHEET No.	TOTAL SHEETS
03	ED, Pla	50, 80, 193	Var	16	64

Kris M. Albers 6-1-15
REGISTERED CIVIL ENGINEER DATE

6-1-15
PLANS APPROVAL DATE

REGISTERED PROFESSIONAL ENGINEER
KRIS M. ALBERS
No. 49986
Exp. 6-30-17
CIVIL
STATE OF CALIFORNIA

THE STATE OF CALIFORNIA OR ITS OFFICERS OR AGENTS SHALL NOT BE RESPONSIBLE FOR THE ACCURACY OR COMPLETENESS OF SCANNED COPIES OF THIS PLAN SHEET.

NOTE:

1. FOR PANEL FABRICATION INFORMATION, SEE SHEET THD-1.

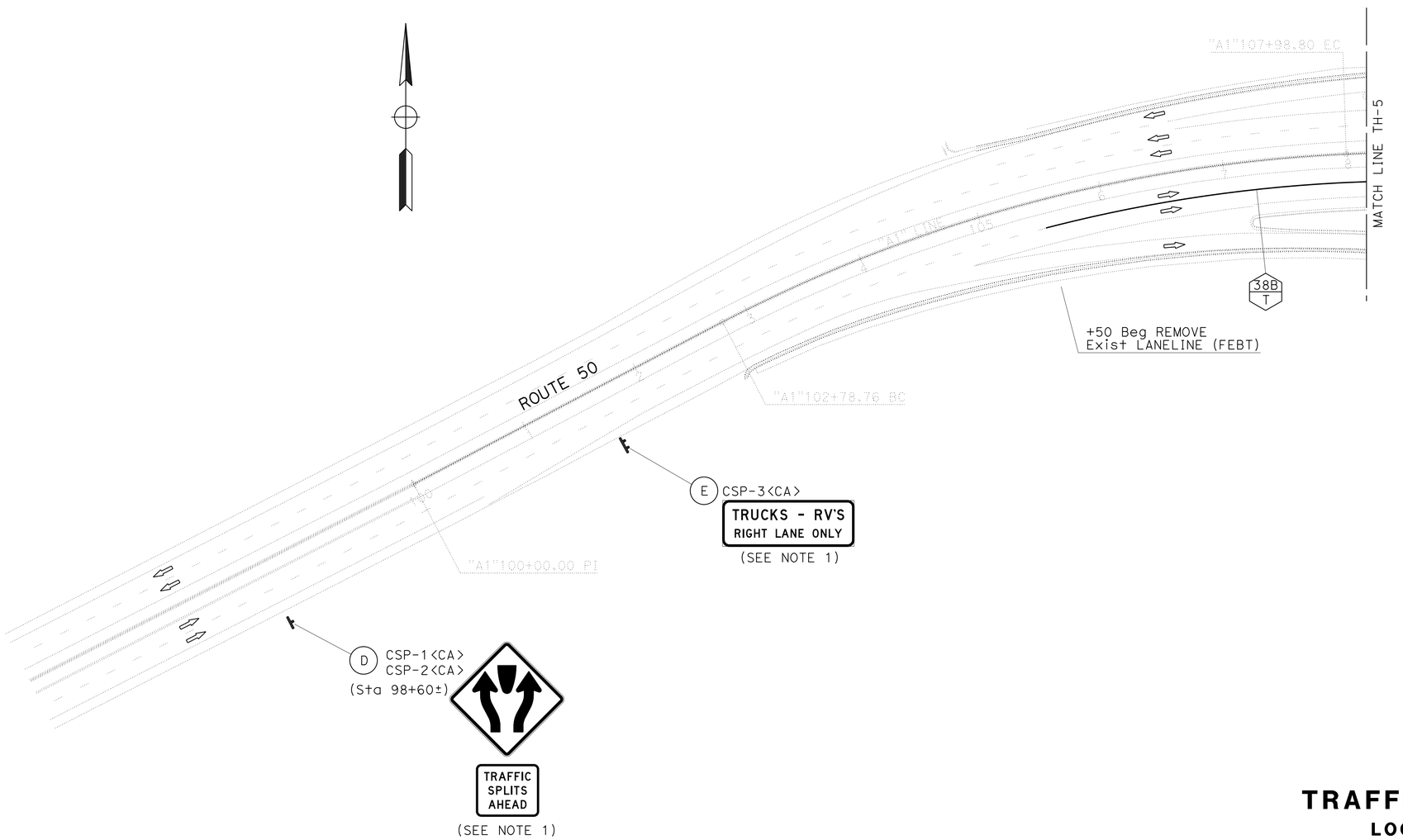

APPROVED FOR TRAFFIC HANDLING WORK ONLY

TRAFFIC HANDLING PLAN

LOCATION 5 - STAGE 2

SCALE: 1"=50'

TH-4

STATE OF CALIFORNIA - DEPARTMENT OF TRANSPORTATION
Caltrans
TRAFFIC

FUNCTIONAL SUPERVISOR: NARAYAN SELWAL
CALCULATED-DESIGNED BY: JACK KEMMERLY
CHECKED BY: KRIS ALBERS
REVISED BY
DATE REVISED

LAST REVISION 1-23-15
DATE PLOTTED => 23-JUL-2015
TIME PLOTTED => 14:58

Dist	COUNTY	ROUTE	POST MILES TOTAL PROJECT	SHEET No.	TOTAL SHEETS
03	ED, Pla	50, 80, 193	Var	17	64

Kris M. Albers 6-1-15
REGISTERED CIVIL ENGINEER DATE

6-1-15
PLANS APPROVAL DATE

REGISTERED PROFESSIONAL ENGINEER
KRIS M. ALBERS
No. 49986
Exp. 6-30-17
CIVIL
STATE OF CALIFORNIA

THE STATE OF CALIFORNIA OR ITS OFFICERS OR AGENTS SHALL NOT BE RESPONSIBLE FOR THE ACCURACY OR COMPLETENESS OF SCANNED COPIES OF THIS PLAN SHEET.

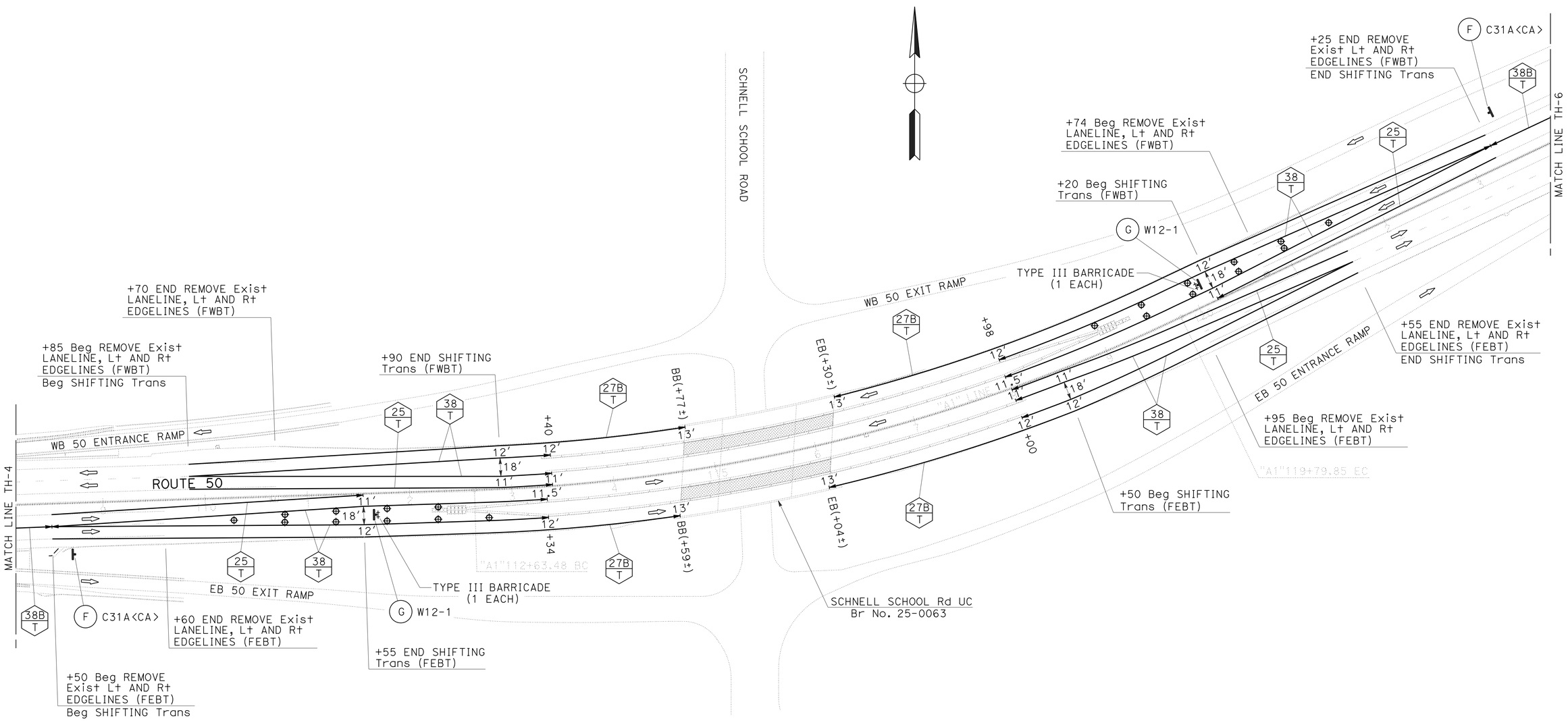

TRAFFIC HANDLING PLAN

LOCATION 5 - STAGE 2

SCALE: 1"=50'

TH-5

APPROVED FOR TRAFFIC HANDLING WORK ONLY

STATE OF CALIFORNIA - DEPARTMENT OF TRANSPORTATION
Caltrans
TRAFFIC

FUNCTIONAL SUPERVISOR: NARAYAN SELWAL
CALCULATED-DESIGNED BY: JACK KEMMERLY
CHECKED BY: KRIS ALBERS
REVISED BY
DATE REVISED

LAST REVISION 1-23-15
DATE PLOTTED => 23-JUL-2015
TIME PLOTTED => 14:58

Dist	COUNTY	ROUTE	POST MILES TOTAL PROJECT	SHEET No.	TOTAL SHEETS
03	ED, Pla	50, 80, 193	Var	18	64

Kris M. Albers 6-1-15
REGISTERED CIVIL ENGINEER DATE

6-1-15
PLANS APPROVAL DATE

REGISTERED PROFESSIONAL ENGINEER
KRIS M. ALBERS
No. 49986
Exp. 6-30-17
CIVIL
STATE OF CALIFORNIA

THE STATE OF CALIFORNIA OR ITS OFFICERS OR AGENTS SHALL NOT BE RESPONSIBLE FOR THE ACCURACY OR COMPLETENESS OF SCANNED COPIES OF THIS PLAN SHEET.

NOTE:

1. FOR PANEL FABRICATION INFORMATION, SEE SHEET THD-1.

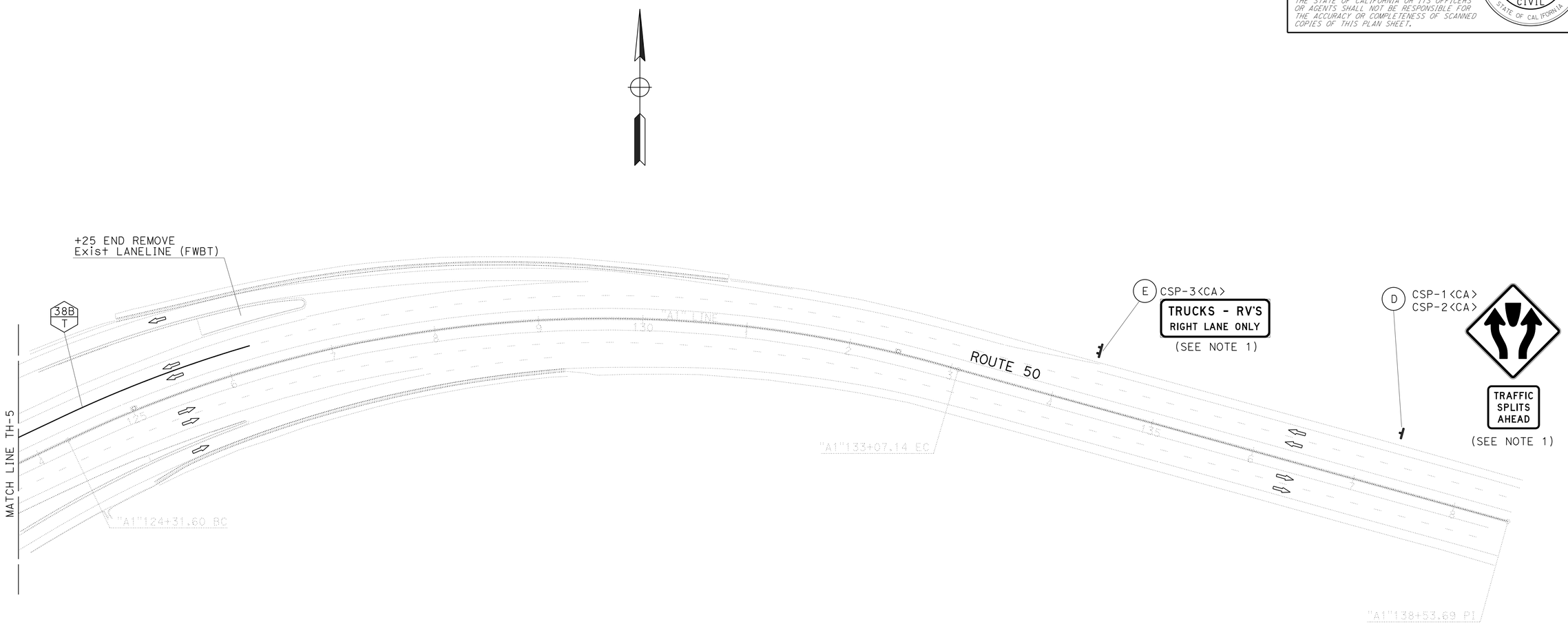

TRAFFIC HANDLING PLAN

LOCATION 5 - STAGE 2

SCALE: 1"=50'

TH-6

APPROVED FOR TRAFFIC HANDLING WORK ONLY

STATE OF CALIFORNIA - DEPARTMENT OF TRANSPORTATION
Caltrans
TRAFFIC

FUNCTIONAL SUPERVISOR: NARAYAN SELWAL
CALCULATED-DESIGNED BY: JACK KEMMERLY
CHECKED BY: KRIS ALBERS
REVISED BY
DATE REVISED

LAST REVISION 1-23-15
DATE PLOTTED => 23-JUL-2015
TIME PLOTTED => 14:58

Dist	COUNTY	ROUTE	POST MILES TOTAL PROJECT	SHEET No.	TOTAL SHEETS
03	ED, Pla	50, 80, 193	Var	19	64

Kris M. Albers 6-1-15
REGISTERED CIVIL ENGINEER DATE

6-1-15
PLANS APPROVAL DATE

REGISTERED PROFESSIONAL ENGINEER
KRIS M. ALBERS
No. 49986
Exp. 6-30-17
CIVIL
STATE OF CALIFORNIA

THE STATE OF CALIFORNIA OR ITS OFFICERS OR AGENTS SHALL NOT BE RESPONSIBLE FOR THE ACCURACY OR COMPLETENESS OF SCANNED COPIES OF THIS PLAN SHEET.

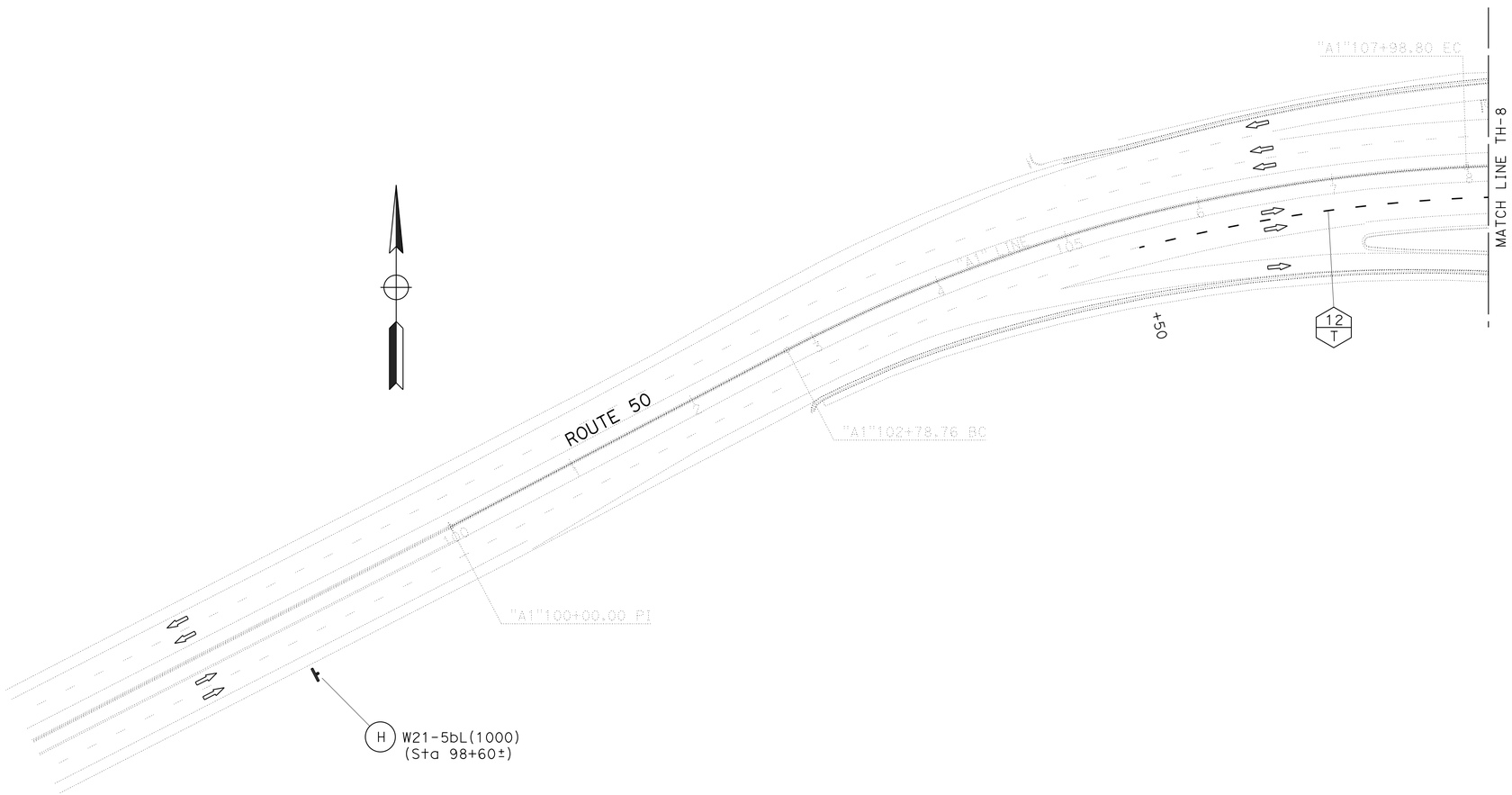

TRAFFIC HANDLING PLAN

LOCATION 5 - STAGE 3

SCALE: 1"=50'

TH-7

APPROVED FOR TRAFFIC HANDLING WORK ONLY

STATE OF CALIFORNIA - DEPARTMENT OF TRANSPORTATION
Caltrans
TRAFFIC

FUNCTIONAL SUPERVISOR: NARAYAN SELWAL
CALCULATED-DESIGNED BY: JACK KEMMERLY
CHECKED BY: KRIS ALBERS
REVISED BY
DATE REVISED

LAST REVISION 1-23-15
DATE PLOTTED => 23-JUL-2015
TIME PLOTTED => 14:58

Dist	COUNTY	ROUTE	POST MILES TOTAL PROJECT	SHEET No.	TOTAL SHEETS
03	ED, Pla	50, 80, 193	Var	20	64

Kris M. Albers 6-1-15
REGISTERED CIVIL ENGINEER DATE

6-1-15
PLANS APPROVAL DATE

REGISTERED PROFESSIONAL ENGINEER
KRIS M. ALBERS
No. 49986
Exp. 6-30-17
CIVIL
STATE OF CALIFORNIA

THE STATE OF CALIFORNIA OR ITS OFFICERS OR AGENTS SHALL NOT BE RESPONSIBLE FOR THE ACCURACY OR COMPLETENESS OF SCANNED COPIES OF THIS PLAN SHEET.

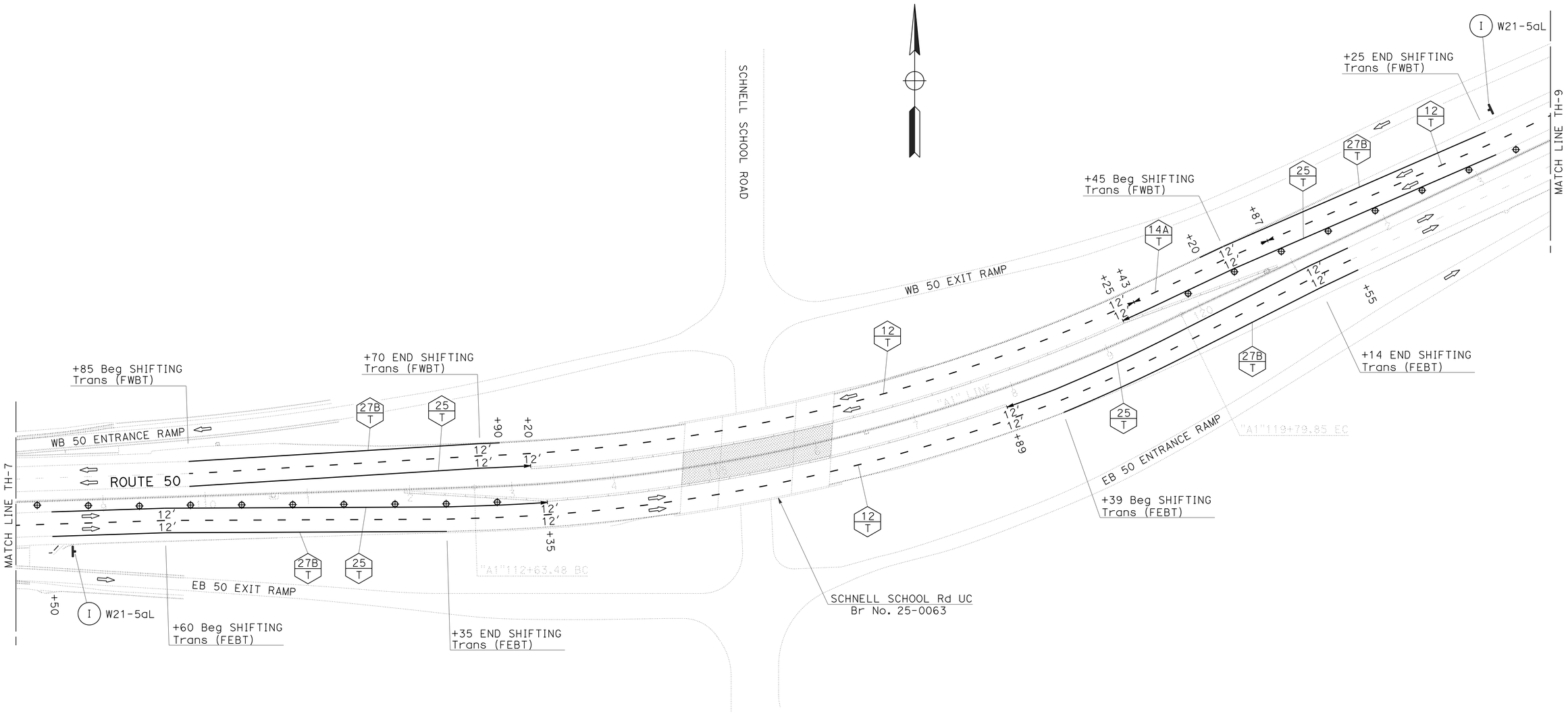

TRAFFIC HANDLING PLAN

LOCATION 5 - STAGE 3

SCALE: 1"=50'

TH-8

APPROVED FOR TRAFFIC HANDLING WORK ONLY

STATE OF CALIFORNIA - DEPARTMENT OF TRANSPORTATION
Caltrans
TRAFFIC

FUNCTIONAL SUPERVISOR: NARAYAN SELWAL
CALCULATED-DESIGNED BY: JACK KEMMERLY
CHECKED BY: KRIS ALBERS
REVISED BY
DATE REVISED

LAST REVISION 1-23-15
DATE PLOTTED => 23-JUL-2015
TIME PLOTTED => 14:58

Dist	COUNTY	ROUTE	POST MILES TOTAL PROJECT	SHEET No.	TOTAL SHEETS
03	ED, Pla	50, 80, 193	Var	21	64

Kris M. Albers 6-1-15
REGISTERED CIVIL ENGINEER DATE

6-1-15
PLANS APPROVAL DATE

REGISTERED PROFESSIONAL ENGINEER
KRIS M. ALBERS
No. 49986
Exp. 6-30-17
CIVIL
STATE OF CALIFORNIA

THE STATE OF CALIFORNIA OR ITS OFFICERS OR AGENTS SHALL NOT BE RESPONSIBLE FOR THE ACCURACY OR COMPLETENESS OF SCANNED COPIES OF THIS PLAN SHEET.

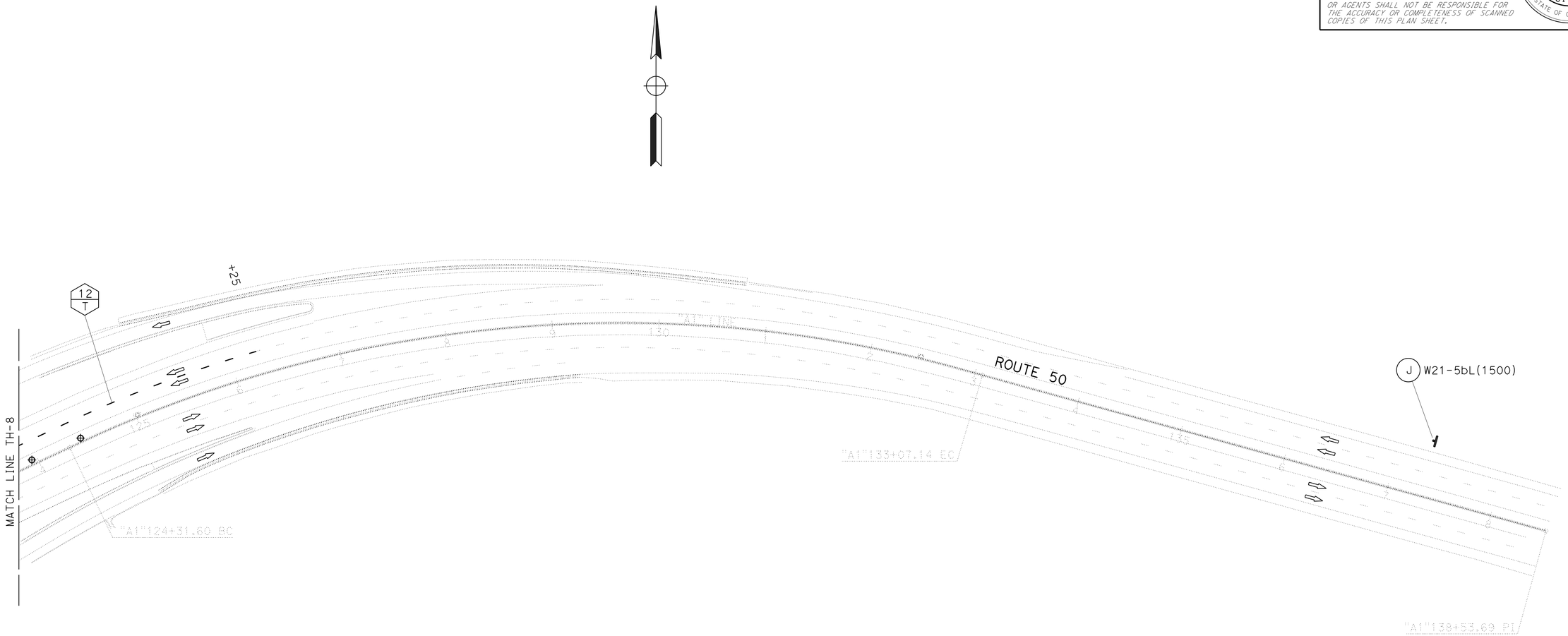

TRAFFIC HANDLING PLAN

LOCATION 5 - STAGE 3

SCALE: 1"=50'

TH-9

APPROVED FOR TRAFFIC HANDLING WORK ONLY

STATE OF CALIFORNIA - DEPARTMENT OF TRANSPORTATION
Caltrans
TRAFFIC

FUNCTIONAL SUPERVISOR: NARAYAN SELWAL
CALCULATED-DESIGNED BY: JACK KEMMERLY
CHECKED BY: KRIS ALBERS
REVISED BY
DATE REVISED

LAST REVISION 1-23-15
DATE PLOTTED => 23-JUL-2015
TIME PLOTTED => 14:58

Dist	COUNTY	ROUTE	POST MILES TOTAL PROJECT	SHEET No.	TOTAL SHEETS
03	ED, Pla	50, 80, 193	Var	22	64

Kris M. Albers 6-1-15
REGISTERED CIVIL ENGINEER DATE

6-1-15
PLANS APPROVAL DATE

REGISTERED PROFESSIONAL ENGINEER
KRIS M. ALBERS
No. 49986
Exp. 6-30-17
CIVIL
STATE OF CALIFORNIA

THE STATE OF CALIFORNIA OR ITS OFFICERS OR AGENTS SHALL NOT BE RESPONSIBLE FOR THE ACCURACY OR COMPLETENESS OF SCANNED COPIES OF THIS PLAN SHEET.

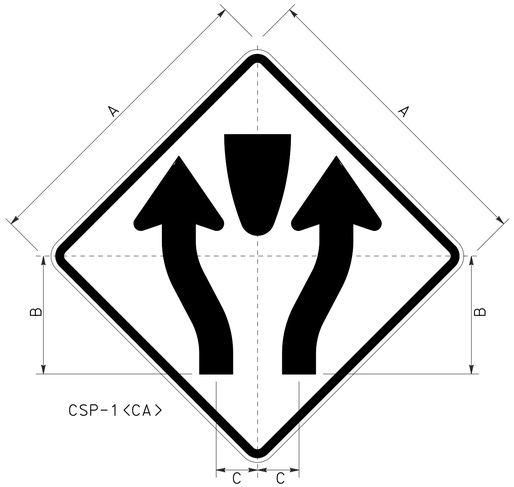

CSP-1 <CA>

A	B	C
48"	18.69"	6.56"

FOR LEGEND INFORMATION NOT SHOWN, SEE STANDARD HIGHWAY SIGNS W6-1.

1¼" BORDER WITH ¾" INDENT

ORANGE BACKGROUND WITH BLACK LEGEND AND BORDERS.

CONSTRUCTION AREA SIGN LETTER D

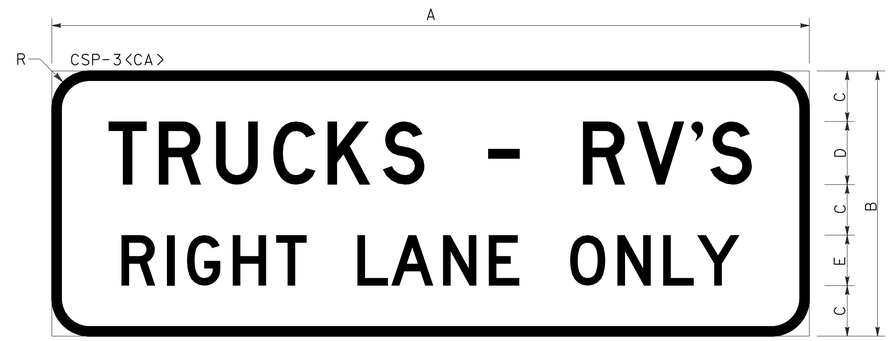

A	B	C	D	E	R
120"	42"	8"	10"D	8"D	6"

1½" BORDER

ORANGE BACKGROUND WITH BLACK LEGEND AND BORDERS.

CONSTRUCTION AREA SIGN LETTER E

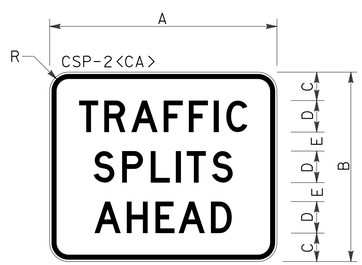

A	B	C	D	E	R
36"	30"	4.5"	5"D	3"	3"

⅝" BORDER WITH ⅜" INDENT

ORANGE BACKGROUND WITH BLACK LEGEND AND BORDERS.

CONSTRUCTION AREA SIGN LETTER D

SIGN DETAILS

TRAFFIC HANDLING DETAILS
LOCATION 5

THD-1

STATE OF CALIFORNIA - DEPARTMENT OF TRANSPORTATION
Caltrans
TRAFFIC

FUNCTIONAL SUPERVISOR: NARAYAN SELWAL
CALCULATED-DESIGNED BY: JACK KEMMERLY
CHECKED BY: KRIS ALBERS
REVISED BY
DATE REVISED

LAST REVISION 4-7-15
DATE PLOTTED => 23-JUL-2015
TIME PLOTTED => 14:58

Dist	COUNTY	ROUTE	POST MILES TOTAL PROJECT	SHEET No.	TOTAL SHEETS
03	ED, Pla	50, 80, 193	Var	23	64

Kris M. Albers 6-1-15
REGISTERED CIVIL ENGINEER DATE

6-1-15
PLANS APPROVAL DATE

REGISTERED PROFESSIONAL ENGINEER
KRIS M. ALBERS
No. 49986
Exp. 6-30-17
CIVIL
STATE OF CALIFORNIA

THE STATE OF CALIFORNIA OR ITS OFFICERS OR AGENTS SHALL NOT BE RESPONSIBLE FOR THE ACCURACY OR COMPLETENESS OF SCANNED COPIES OF THIS PLAN SHEET.

STATIONARY MOUNTED CONSTRUCTION AREA SIGNS

SIGN LETTER	SIGN CODE	PANEL SIZE	SIGN MESSAGE	NUMBER OF POST AND SIZE	NUMBER OF SIGNS	REMARKS
A	W21-5bR(1000)	48" x 48"	RIGHT SHOULDER CLOSED 1000 FT	1 - 6" x 6"	1	
B	W21-5aR	48" x 48"	RIGHT SHOULDER CLOSED	1 - 6" x 6"	2	
C	W21-5bR(1500)	48" x 48"	RIGHT SHOULDER CLOSED 1500 FT	1 - 6" x 6"	1	
D	CSP-1<CA> CSP-2<CA>	48" x 48" 36" x 30"	DIVIDED HIGHWAY (Symbol) TRAFFIC SPLITS AHEAD	1 - 6" x 6"	2	SEE NOTES 5 AND 6
E	CSP-3<CA>	120" x 42"	TRUCKS - RV'S RIGHT LANE ONLY	2 - 6" x 6"	2	SEE NOTE 5
F	C31A<CA>	48" x 48"	NO SHOULDER	1 - 6" x 6"	2	
G	W12-1	48" x 48"	DOUBLE ARROW (Symbol)	MOUNTED ON BARRICADE	2	
H	W21-5bL(1000)	48" x 48"	LEFT SHOULDER CLOSED 1000 FT	1 - 6" x 6"	1	
I	W21-5aL	48" x 48"	LEFT SHOULDER CLOSED	1 - 6" x 6"	2	
J	W21-5bL(1500)	48" x 48"	LEFT SHOULDER CLOSED 1500 FT	1 - 6" x 6"	1	

NOTES:

1. EXACT SIGN LOCATION TO BE DETERMINED BY THE ENGINEER.
2. ALL SIGN CODES SHOWN ARE FEDERAL SIGN CODES UNLESS OTHERWISE DESIGNATED AS A CALIFORNIA SIGN CODE.
3. <CA> = CALIFORNIA SIGN CODE.
4. ALL "W" SERIES SIGNS SHALL BE RETROREFLECTIVE ORANGE BACKGROUND WITH BLACK LEGEND AND BORDER.
5. FOR ADDITIONAL PANEL INFORMATION, SEE TRAFFIC HANDLING DETAILS.
6. THE HEIGHT TO THE BOTTOM OF THE CSP-2<CA> ABOVE THE EDGE OF TRAVELED WAY SHALL BE 4'-6".
7. FOR ADDITIONAL STATIONARY MOUNTED CONSTRUCTION AREA SIGNS, SEE CONSTRUCTION AREA SIGN PLANS.

BARRICADES - DRUMS

STAGE	TYPE III BARRICADE		TRAFFIC PLASTIC DRUM	
	FURNISH	INSTALL	FURNISH	INSTALL
	EACH		EACH	
1	7	7	19	19
2	0	2	1	20
3	0	0	0	20
TOTAL	7	———	20	———

REMOVE THERMOPLASTIC TRAFFIC STRIPE (WATER BLASTING)

STAGE	DESCRIPTION			STAGE TOTAL
	LEFT EDGELINE	LANELINE	RIGHT EDGELINE	
	LF	LF	LF	LF
1	2,039	510	2,039	4,588
2	606	302	606	1,514
TOTAL				6,102

TEMPORARY PAVEMENT MARKER

STAGE	DETAIL NUMBER	RETROREFLECTIVE			STAGE TOTAL
		TYPE C	TYPE G	TYPE H	
		EACH	EACH	EACH	EACH
1	12, 14A, 25	3	40	25	68
2	25, 38, 38B		193	28	221
3	12, 14A, 25	4	66	33	103
TOTAL					392

TEMPORARY TRAFFIC STRIPE (TAPE)

STAGE	DETAIL NUMBER						STAGE TOTAL
	12	14A	25	27B	38	38B	
	LF	LF	LF	LF	LF	LF	LF
1	1,908	131	1,200	1,420			4,659
2			1,320	2,347	3,442	600	7,709
3	3,101	144	1,586	1,311			6,142
TOTAL							18,510

TRAFFIC HANDLING QUANTITIES

LOCATION 5

THQ-1

STATE OF CALIFORNIA - DEPARTMENT OF TRANSPORTATION
Caltrans
TRAFFIC

FUNCTIONAL SUPERVISOR: NARAYAN SELWAL
CALCULATED-DESIGNED BY: JACK KEMMERLY
CHECKED BY: KRIS ALBERS
REVISED BY
DATE REVISED

LAST REVISION 5-1-15
DATE PLOTTED => 23-JUL-2015
TIME PLOTTED => 14:58

Dist	COUNTY	ROUTE	POST MILES TOTAL PROJECT	SHEET No.	TOTAL SHEETS
03	ED, Pla	50, 80, 193	Var	24	64

Kris M. Albers 6-1-15
REGISTERED CIVIL ENGINEER DATE

6-1-15
PLANS APPROVAL DATE

REGISTERED PROFESSIONAL ENGINEER
KRIS M. ALBERS
No. 49986
Exp. 6-30-17
CIVIL
STATE OF CALIFORNIA

THE STATE OF CALIFORNIA OR ITS OFFICERS OR AGENTS SHALL NOT BE RESPONSIBLE FOR THE ACCURACY OR COMPLETENESS OF SCANNED COPIES OF THIS PLAN SHEET.

PAVEMENT DELINEATION QUANTITIES

LOCATION / ROUTE		4" PERMANENT TAPE TRAFFIC STRIPE		4" PERMANENT TAPE TRAFFIC STRIPE (BROKEN 17-7)	4" PERMANENT TAPE TRAFFIC STRIPE (BROKEN 36-12)	6" PERMANENT TAPE TRAFFIC STRIPE	8" PERMANENT TAPE TRAFFIC STRIPE	4" TWO-COMPONENT PAINT TRAFFIC STRIPE			4" TWO-COMPONENT PAINT TRAFFIC STRIPE (BROKEN 36-12)		8" TWO-COMPONENT PAINT TRAFFIC STRIPE	TWO-COMPONENT PAINT PAVEMENT MARKING	PAVEMENT MARKER (NON-REFLECTIVE)	PAVEMENT MARKER (RETROREFLECTIVE)		PAVEMENT MARKER (RETROREFLECTIVE -RECESSED)		
		DETAIL 25	DETAIL 27B	DETAIL 9	DETAIL 12	DETAIL 39	DETAIL 36A	DETAIL 21	DETAIL 25	DETAIL 27B	DETAIL 12	DETAIL 14A	DETAIL 38A	TYPE VIII ARROW	TYPE A	TYPE G	TYPE H	TYPE C	TYPE G	TYPE H
		LF	LF	LF	LF	LF	LF	LF	LF	LF	LF	LF	LF	SQFT	EA	EA	EA	EA	EA	EA
1	ED-50	172	172		172											4	4			
2	ED-50	192	304	40	192		152									11	4			
3	ED-50	272	272		272											6	6			
4	ED-50	271	271		271											6	6			
5	ED-50								2,645	2,645	3,101	144						4	61	55
6	ED-50							215		430			130	42						
7	ED-193							480		960										
8	Pla-80					704									118		29			
SUBTOTAL		907	1,019					695	2,645	4,035	3,101	144				27	49	4	61	55
TOTAL		1,926		40	907	704	152	7,375			3,245		130	42	118	76		120		

NOTES:

1. NEW RECESSES FOR THE RETROREFLECTIVE PAVEMENT MARKERS AT LOCATION 5 WILL BE REQUIRED ON THE PCC BRIDGE DECK ONLY.

   THE RECESSED RETROREFLECTIVE PAVEMENT MARKERS SHALL BE INSTALLED WITHIN THE EXISTING RECESSES ON AC SURFACES.

2. THE PAVEMENT MARKERS (NON-REFLECTIVE) SHALL BE USED FOR DETAIL 13 AT LOCATION 8.

3. THE LEFT EDGELINE USED AT LOCATION 8 SHALL BE DETAIL 25A(Mod) AS SHOWN ON THIS SHEET.

PAVEMENT DELINEATION REMOVAL QUANTITIES

LOCATION / ROUTE		REMOVE THERMOPLASTIC TRAFFIC STRIPE						REMOVE YELLOW THERMOPLASTIC TRAFFIC STRIPE (HAZARDOUS WASTE)	REMOVE THERMOPLASTIC PAVEMENT MARKING
		DETAIL 12	DETAIL 21	DETAIL 25	DETAIL 27B	DETAIL 38A	DETAIL 39	DETAIL 21	TYPE VIII ARROW
		LF	LF	LF	LF	LF	LF	LF	SQFT
3	ED-50	68		272	272				
4	ED-50	68		271	271				
5	ED-50	811		2,645	2,645				
6	ED-50		430		430	260			42
7	ED-193				960			960	
8	Pla-80						1,056		
SUBTOTAL		947	430	3,188	4,578	260	1,056		
TOTAL		10,459						960	42

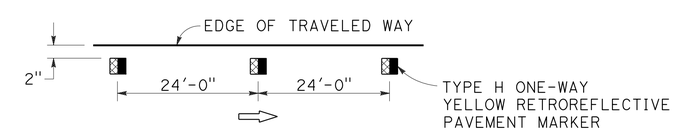

DETAIL 25A(Mod)
LOCATION 8
(NO SCALE)

PAVEMENT DELINEATION QUANTITIES

PDQ-1

STATE OF CALIFORNIA - DEPARTMENT OF TRANSPORTATION
Caltrans
TRAFFIC

FUNCTIONAL SUPERVISOR: NARAYAN SELWAL
CALCULATED-DESIGNED BY: JACK KEMMERLY
CHECKED BY: KRIS ALBERS
REVISED BY
DATE REVISED

LAST REVISION 4-7-15
DATE PLOTTED => 23-JUL-2015
TIME PLOTTED => 14:58

Dist	COUNTY	ROUTE	POST MILES TOTAL PROJECT	SHEET No.	TOTAL SHEETS
03	ED,Pla	50, 80, 193	Var	25	64

Jack R. Cowell Jr. 6-1-15
REGISTERED CIVIL ENGINEER DATE

6-1-15
PLANS APPROVAL DATE

REGISTERED PROFESSIONAL ENGINEER JACK COWELL No. 65521 Exp. 9-30-15 CIVIL STATE OF CALIFORNIA

THE STATE OF CALIFORNIA OR ITS OFFICERS OR AGENTS SHALL NOT BE RESPONSIBLE FOR THE ACCURACY OR COMPLETENESS OF SCANNED COPIES OF THIS PLAN SHEET.

GUARDRAIL

DIRECTION	STATION	DESCRIPTION	REMOVE GUARDRAIL	TRANSITION RAILING (TYPE WB-31)	ALTERNATIVE IN-LINE TERMINAL SYSTEM	REMOVE MBGR BRIDGE CONNECTION (N)	REMOVE CABLE ANCHOR ASSEMBLY (N)	VEGETATION CONTROL (MINOR CONCRETE)
			LF	EA	EA	EA	EA	SQYD
EB	113+37 TO 114+53 R†	BRIDGE No. 25-0063 SCHNELL SCHOOL ROAD UC (APPROACH)	42	1	1	1	1	40
WB	115+39 TO 116+56 L†	BRIDGE No. 25-0063 SCHNELL SCHOOL ROAD UC (APPROACH)	110	1	1	1		40
		SUBTOTAL	152	2	2	2	1	
		TOTAL	152	2	2			80

(N) - NOT A SEPARATE PAY ITEM, FOR INFORMATION ONLY.

TEMPORARY DRAINAGE INLET PROTECTION

	TEMPORARY DRAINAGE INLET PROTECTION
	EA
TOTAL	20

TEMPORARY STEEL PLATE PLACEMENT

DIRECTION	STATION	LOCATION	TEMPORARY STEEL PLATE PLACEMENT	REMOVE ASPHALT CONCRETE SURFACING (N)	REMOVE CONCRETE (N)	MISCELLANEOUS IRON AND STEEL (N)	MINOR HOT MIX ASPHALT (N)
			EA	SQFT	CY	LB	TON
EB	110+68 R†	LOCATION A	1	32	.25	1050	2
EB	116+52 R†	LOCATION B	1	32	.25	1050	2
WB	120+73 R†	LOCATION C	1	32	.25	1050	2
		SUB-TOTAL	3	96	.75	3150	6
		TOTAL	3				

(N) - NOT A SEPARATE PAY ITEM, FOR INFORMATION ONLY.

TAPER AND HMA QUANTITIES

No. (X)	COUNTY	ROUTE	POST MILE	BRIDGE NUMBER	STRUCTURE NAME	COLD PLANE ASPHALT CONCRETE PAVEMENT	HOT MIX ASPHALT (TYPE A)	TACK COAT	MINOR HOT MIX ASPHALT*	ROADWAY EXCAVATION*
						SQYD	TON	TON	TON	CY
1	ED	50	6.57	25-0084R	CAMERON PARK Dr UC	53	8.9	0.14		
2	ED	50	6.57	25-0084L	CAMERON PARK Dr UC	498	82.9	0.20		
3	ED	50	R11.250	25-0120R	RED HAWK PARKWAY UC	400	66.6	0.24		
4	ED	50	R11.250	25-0120L	RED HAWK PARKWAY UC	400	66.6	0.24		
5	ED	50	19.12	25-0063	SCHNELL SCHOOL ROAD UC	591	130.2	0.31		
6	ED	50	72.66	25-0015	UPPER TRUCKEE RIVER	627	78.4	0.14		
7	ED	193	R24.650	25-0033	S FORK AMERICAN RIVER	391	57.0	0.18	4.0	8.0
					TOTAL	2,960	490.6	1.45	4.0	8.0

*SEE RECONSTRUCTION DRAWING ON JOINT SEAL DETAILS NO. 1 PLANS.

ADJUST INLET

DIRECTION	STATION	LOCATION	ADJUST INLET	REMOVE ASPHALT CONCRETE SURFACING (N)	FRAME AND GRATE (N)	MINOR HOT MIX ASPHALT (N)
			EA	SQFT	EA	TON
EB	110+68 R†	LOCATION A	1	16	24-12X	1
EB	116+52 R†	LOCATION B	1	16	24-12X	1
WB	120+73 R†	LOCATION C	1	16	24-12X	1
		TOTAL	3	48		3

TREATED WOOD WASTE

	TREATED WOOD WASTE
	LB
TOTAL	1,500

(N) - NOT A SEPARATE PAY ITEM, FOR INFORMATION ONLY.

SUMMARY OF QUANTITIES

Q-1

REVISED BY	DATE REVISED
JACK COWELL	ROBERT FLOYD
CALCULATED-DESIGNED BY	CHECKED BY
FUNCTIONAL SUPERVISOR	PATRICK BISHOP

STATE OF CALIFORNIA - DEPARTMENT OF TRANSPORTATION
Caltrans
MAINTENANCE DESIGN

LAST REVISION 00-00-00 | DATE PLOTTED => 23-JUL-2015 | TIME PLOTTED => 14:58

Dist	COUNTY	ROUTE	POST MILES TOTAL PROJECT	SHEET No.	TOTAL SHEETS
03	ED, Pla	50,80, 193	Var	26	64

R. P. Gill 6-1-15
REGISTERED ELECTRICAL ENGINEER DATE

6-1-15
PLANS APPROVAL DATE

REGISTERED PROFESSIONAL ENGINEER
RUPINDER PAL GILL
No. 16642
Exp. 06-30-16
ELECTRICAL
STATE OF CALIFORNIA

THE STATE OF CALIFORNIA OR ITS OFFICERS OR AGENTS SHALL NOT BE RESPONSIBLE FOR THE ACCURACY OR COMPLETENESS OF SCANNED COPIES OF THIS PLAN SHEET.

NOTE:

1. FOR ACCURATE RIGHT OF WAY DATA, CONTACT RIGHT OF WAY ENGINEERING AT THE DISTRICT OFFICE.
2. INSTALL ELECTRICAL EQUIPMENT AND TEMPORARY WOOD POLES AT MINIMUM 30′ FROM ETW AND AS DIRECTED BY THE ENGINEER.
3. TEMPORARY WOOD POLES WITH LUMINAIRE SHALL BE INSTALLED AT MINIMUM 15′ FROM ETW AND AS DIRECTED BY THE ENGINEER.
4. PROVIDE 25′ MINIMUM VERTICAL CLEARANCE FOR OVERHEAD CONDUCTOR.
5. THE LOCATIONS OF WORK ARE FLEXIBLE AND MAY BE ADJUSTED TO MITIGATE ANY CONFLICTS WITH EXISTING UTILITY FACILITIES. EXISTING UTILITY FACILITIES ARE NOT INCLUDED ON THESE PLANS.

LEGEND (THIS SHEET):

[1] MESSENGER CABLE, 2#4, 1#4G

SYMBOL:

310 WATT HPS LUMINAIRE ON WOOD POLE (SEE SES SHEETS)

ABBREVIATION:

PG&E PACIFIC GAS AND ELECTRIC

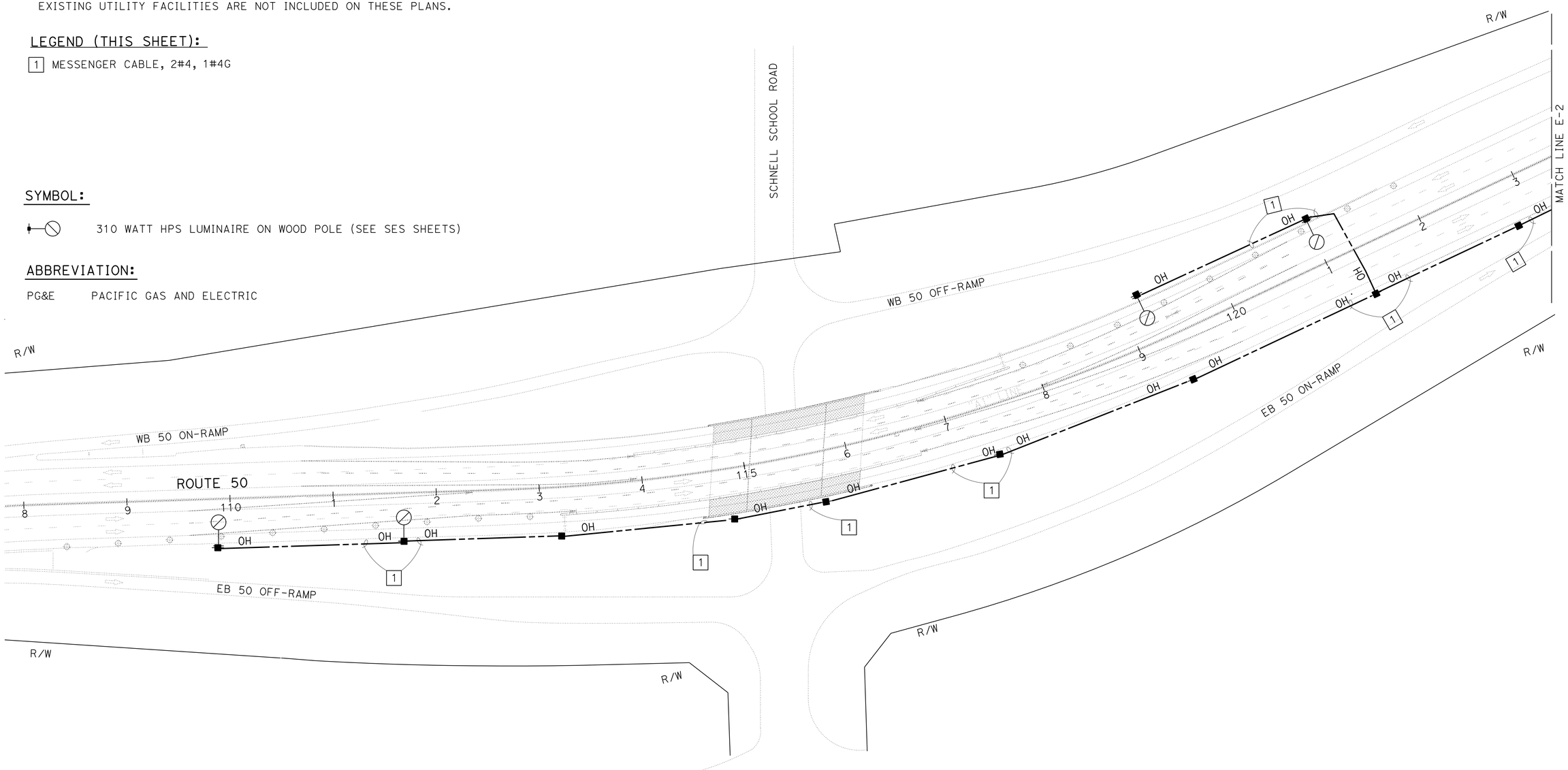

LOCATION 5 - STAGE 2

LIGHTING (TEMPORARY)

APPROVED FOR ELECTRICAL WORK ONLY

SCALE: 1" = 50′

E-1

STATE OF CALIFORNIA - DEPARTMENT OF TRANSPORTATION
Caltrans®
ELECTRICAL DESIGN

FUNCTIONAL SUPERVISOR: STEVE BLOCK

CALCULATED-DESIGNED BY: ALI HASSANI
CHECKED BY: RUPINDER PAL GILL

REVISED BY | DATE REVISED

LAST REVISION 00-00-00
DATE PLOTTED => 23-JUL-2015
TIME PLOTTED => 14:58

Dist	COUNTY	ROUTE	POST MILES TOTAL PROJECT	SHEET No.	TOTAL SHEETS
03	ED,Pla	50,80, 193	Var	27	64

R. P. Gill 6-1-15
REGISTERED ELECTRICAL ENGINEER DATE

6-1-15
PLANS APPROVAL DATE

REGISTERED PROFESSIONAL ENGINEER
RUPINDER PAL GILL
No. 16642
Exp. 06-30-16
ELECTRICAL
STATE OF CALIFORNIA

THE STATE OF CALIFORNIA OR ITS OFFICERS OR AGENTS SHALL NOT BE RESPONSIBLE FOR THE ACCURACY OR COMPLETENESS OF SCANNED COPIES OF THIS PLAN SHEET.

NOTE:

FOR ACCURATE RIGHT OF WAY DATA, CONTACT RIGHT OF WAY ENGINEERING AT THE DISTRICT OFFICE.

LEGENDS (THIS SHEET):

1 MESSENGER CABLE, 2#4, 1#4G.

2 FOR INSTALLATION, SEE DETAIL "A" THIS SHEET.

3 COORDINATE AND INSTALL TEMPORARY SERVICE PER PG&E REQUIREMENTS. SERVICE POINT NOT CONFIRMED BY PG&E. CONDUIT RUN MAY CHANGE.

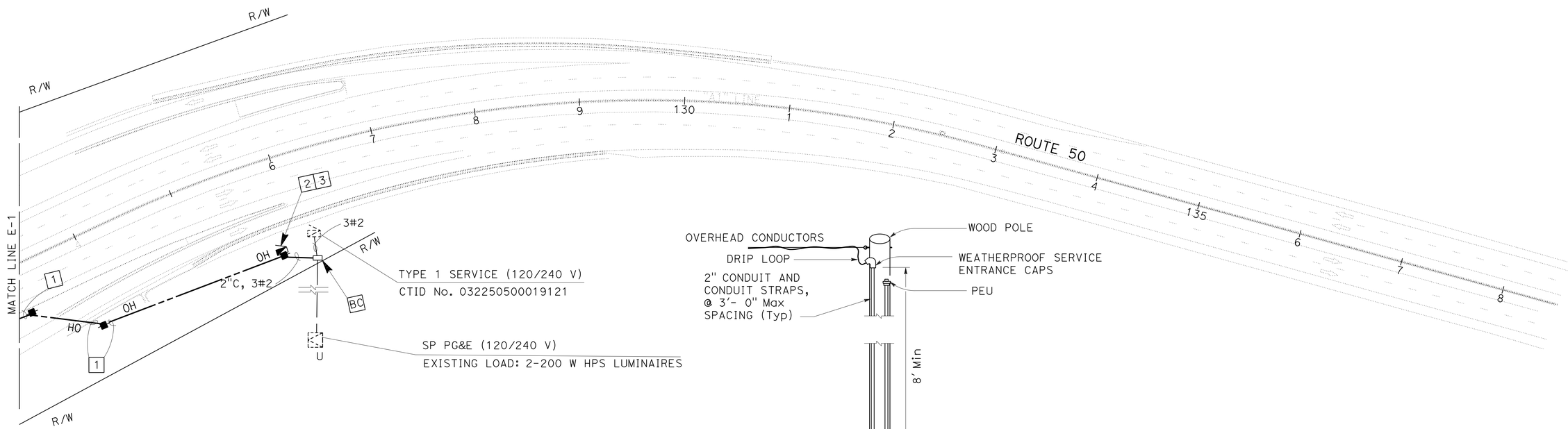

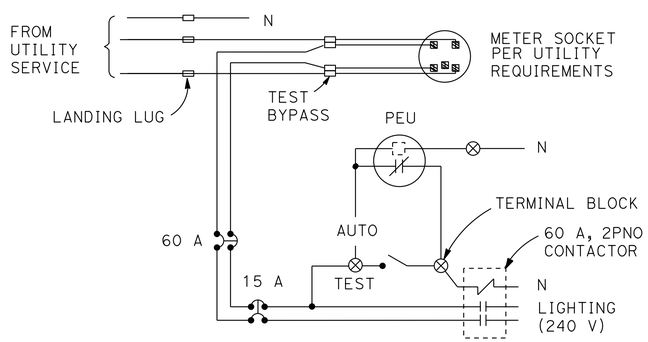

SERVICE WIRING DIAGRAM

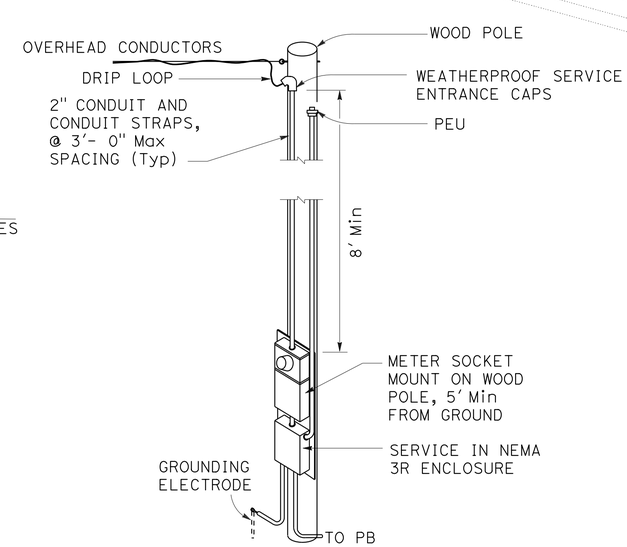

TEMPORARY SERVICE
DETAIL "A"

LIGHTING (TEMPORARY)

LOCATION 5 - STAGE 2

SCALE: 1" = 50'

APPROVED FOR ELECTRICAL WORK ONLY

E-2

STATE OF CALIFORNIA - DEPARTMENT OF TRANSPORTATION
Caltrans
ELECTRICAL DESIGN

FUNCTIONAL SUPERVISOR: STEVE BLOCK
CALCULATED-DESIGNED BY: ALI HASSANI
CHECKED BY: RUPINDER PAL GILL
REVISED BY
DATE REVISED

LAST REVISION 1-23-15
DATE PLOTTED => 23-JUL-2015
TIME PLOTTED => 14:58

Dist	COUNTY	ROUTE	POST MILES TOTAL PROJECT	SHEET No.	TOTAL SHEETS
03	ED,Pla	50,80, 193	Var	28	64

R. P. Gill 6-1-15
REGISTERED ELECTRICAL ENGINEER DATE

6-1-15
PLANS APPROVAL DATE

REGISTERED PROFESSIONAL ENGINEER
RUPINDER PAL GILL
No. 16642
Exp. 06-30-16
ELECTRICAL
STATE OF CALIFORNIA

THE STATE OF CALIFORNIA OR ITS OFFICERS OR AGENTS SHALL NOT BE RESPONSIBLE FOR THE ACCURACY OR COMPLETENESS OF SCANNED COPIES OF THIS PLAN SHEET.

NOTE:
ITEMS SHOWN IN TABLE ARE NOT A SEPARATE PAY ITEMS, FOR INFORMATION ONLY.

LIGHTING (TEMPORARY)

SHEET No.	WOOD POLE	2" CONDUIT	PB	SERVICE PER UTILITY REQUIREMENTS	CONDUCTOR #2	CONDUCTOR #4	MESSENGER CABLE	310 WATT HPS LUMINAIRE WITH MAST ARM
	EA	FT	EA	EA	FT	FT	FT	EA
E-1	11					5100	1600	4
E-2	3	200	1	1	300	800	250	

ELECTRICAL QUANTITIES

E-3

STATE OF CALIFORNIA - DEPARTMENT OF TRANSPORTATION
Caltrans ELECTRICAL DESIGN

FUNCTIONAL SUPERVISOR: STEVE BLOCK
CALCULATED-DESIGNED BY: ALI HASSANI
CHECKED BY: RUPINDER PAL GILL
REVISED BY
DATE REVISED

LAST REVISION 00-00-00
DATE PLOTTED => 23-JUL-2015
TIME PLOTTED => 14:58

DIST	COUNTY	ROUTE	POST MILES TOTAL PROJECT	SHEET No.	TOTAL SHEETS
03	ED,Pla	50, 80, 193	Var	29	64

REGISTERED CIVIL ENGINEER — DATE 6-1-15

PLANS APPROVAL DATE 6-1-15

REGISTERED PROFESSIONAL ENGINEER — JACK COWELL No. 65521 Exp. 9-30-15 CIVIL — STATE OF CALIFORNIA

The State of California or its officers or agents shall not be responsible for the accuracy or completeness of electronic copies of this plan sheet.

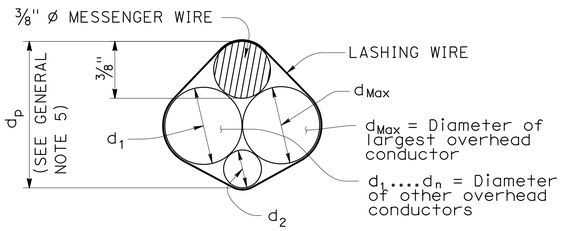

$d_p = 3/8" + d_{Max} + 0.30 * (d_1 + d_2 + \ldots d_n)$

PROJECTED DEPTH OF OVERHEAD BUNDLE, (d_p)

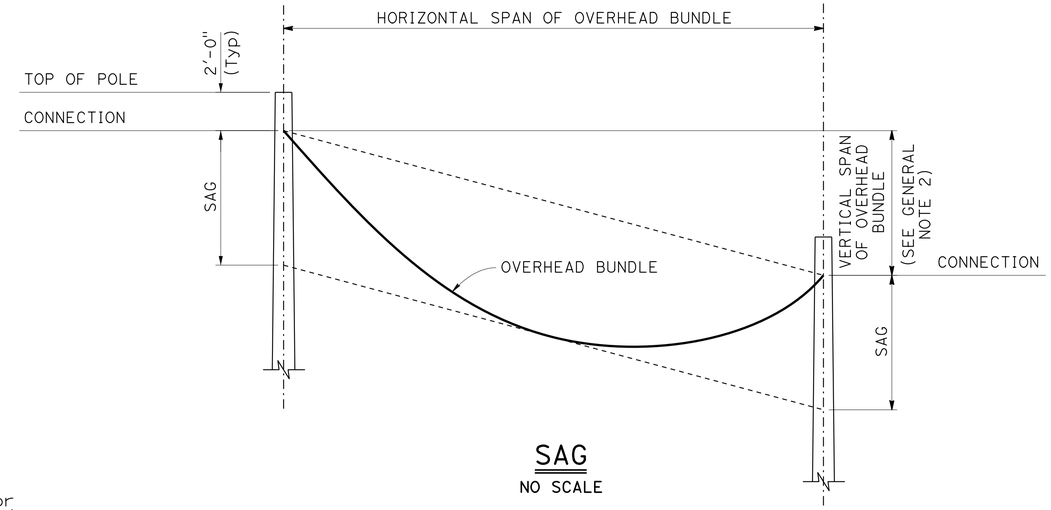

SAG

NO SCALE

Design: AASHTO Standard Specifications for Structural Supports for Highway Signs, Luminaires and Traffic Signals, Fifth Edition (LTS-5).

GROUP LOAD COMBINATIONS:

I Dead Load
II Dead Load + Wind Load
III Dead Load + 0.5 (Wind Load) + Ice Load
IV Fatigue: Not used

LOADING:

Wind Loading: 100 mph (3-second gust)
Wind Recurrence Interval: 10 years
Combined height, exposure, and elevated terrain factor = 1.05
(Exposure C, structure is not located on or over the top half of a ridge, hill, or escarpment)

Ice Loading: 3.0 psf on surfaces, 0.60 in radial thickness of ice at a unit weight of 60 pcf on overhead bundles

BASIC DESIGN VALUES:

Timber Poles: Fb = 1850 psi
Fv = 110 psi
Fcp = 230 psi
Fc = 950 psi
E = 1500 x 10^3 psi

DESIGN WIRE BREAKING STRENGTHS:

ASTM A475, Utilities Grade, 7 strand modified by termination efficiency factor of 0.8

FOUNDATION DESIGN NOTES:

1. Pole embedment depth design is based on Broms' approximate procedure as described in Article 13.6 of AASHTO LTS-5.

2. Embedment depth is calculated based on following soil parameters,
Cohesive Soil:
Shear strength of soil c = 1500 psf.
Cohesionless Soil:
ø = 30 deg, γ = 120 pcf.
Soil assumed to be unsaturated.

3. An overload factor of 2.0 and an undercapacity factor of 0.7 were used for safety factor of 2.86.

4. Allowable vertical bearing pressure at the end bearing of poles is 3000 psf at 6 feet or more embedment.

5. Guy wire anchor minimum allowable tension capacity, "Qa" = 8,900 lbs.

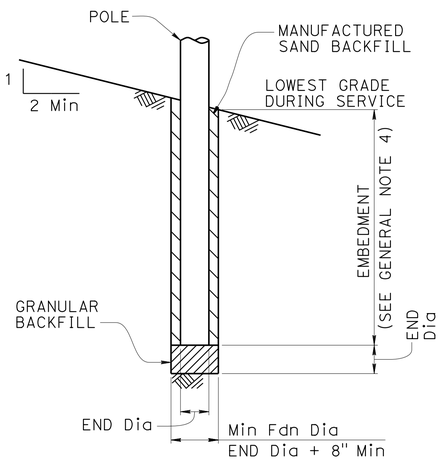

POLE FOUNDATION

GENERAL NOTES:

1. The messenger wire and any combination of overhead conductors must not exceed either a self weight of 3.0 lb/ft or the maximum d in the pole selection tables.

2. The maximum vertical span is 10% of the horizontal span.

3. For poles with adjacent unbalanced horizontal spans, the shortest horizontal span must be at least 50% of the largest horizontal span.

4. Add 2'-0" for slopes above 1V:4H.

5. For a pole supporting multiple spans, calculate d_p for each span and use the largest value.

6. Do not exceed the attachments shown.

DIAMETERS AND SELF WEIGHT OF OVERHEAD CONDUCTORS

CONDUCTOR OR CABLE TYPE	DIAMETER d (in)	WEIGHT w (plf)
3 CONDUCTOR SIGNAL CABLE (3CSC)	0.400	0.0980
5 CONDUCTOR SIGNAL CABLE (5CSC)	0.500	0.1560
9 CONDUCTOR SIGNAL CABLE (9CSC)	0.650	0.2760
12 CONDUCTOR SIGNAL CABLE (12CSC)	0.800	0.3970
28 CONDUCTOR SIGNAL CABLE (28CSC)	0.900	0.6490
1-#14	0.166	0.0235
1-#12	0.185	0.0330
1-#10	0.210	0.0476
1-#8	0.271	0.0774
1-#6	0.310	0.1130
1-#4	0.359	0.1690
1-#3	0.388	0.2080
1-#2	0.420	0.2560
1-#1	0.498	0.3340
6-CONDUCTOR SIGNAL INTERCONNECT CABLE (SIC)	0.350	0.0860
12-CONDUCTOR SIGNAL INTERCONNECT CABLE (SIC)	0.500	0.1440
DETECTOR LEAD-IN CABLE (DLC)	0.310	0.0440
12 to 48-STRAND FIBER OPTIC CABLE (48FOC)	0.424	0.0600
72-STRAND FIBER OPTIC CABLE (72FOC)	0.484	0.0770
96-STRAND FIBER OPTIC CABLE (96FOC)	0.535	0.1050
144-STRAND FIBER OPTIC CABLE (144FOC)	0.670	0.1890
3/8" ø MESSENGER WIRE	0.375	0.2730

NO SCALE

STANDARD DRAWING
FILE NO. xs18-010
APPROVAL DATE July 2014

STATE OF CALIFORNIA DEPARTMENT OF TRANSPORTATION

DIVISION OF ENGINEERING SERVICES

BRIDGE NO. N/A
POST MILE Var

TEMPORARY WOOD POLES
GENERAL NOTES

SES-1

DS OSD 2147A (ENGLISH STANDARD DRAWING "XS" BORDER REV. (02-02-11)

ORIGINAL SCALE IN INCHES FOR REDUCED PLANS 0 1 2 3

UNIT: 03-0484
PROJECT NUMBER & PHASE: 03140000271
CONTRACT NO.: 03-0G0304

DISREGARD PRINTS BEARING EARLIER REVISION DATES 6-19-14

REVISION DATES | SHEET X | OF X

FILE => 0314000027uh001.dgn

USERNAME => s119538 DATE PLOTTED => 23-JUL-2015 TIME PLOTTED => 14:58

DIST	COUNTY	ROUTE	POST MILES TOTAL PROJECT	SHEET No.	TOTAL SHEETS
03	ED,Pla	50, 80, 193	Var	30	64

REGISTERED CIVIL ENGINEER — DATE 6-1-15

PLANS APPROVAL DATE 6-1-15

REGISTERED PROFESSIONAL ENGINEER — JACK COWELL No. 65521 Exp. 9-30-15 CIVIL — STATE OF CALIFORNIA

The State of California or its officers or agents shall not be responsible for the accuracy or completeness of electronic copies of this plan sheet.

LEGEND

- Wood Pole No Attachments
- A — Wood Pole with Attachments
- —OH— Overhead Bundle

POLE SELECTION TABLE

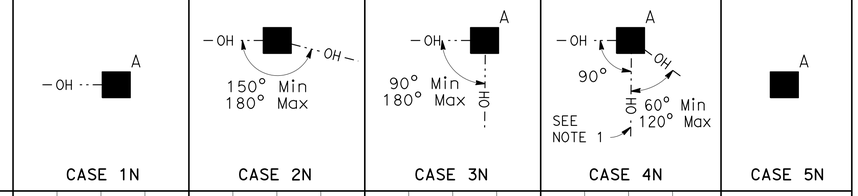

		CASE 1N				CASE 2N				CASE 3N				CASE 4N				CASE 5N
	MAXIMUM d_p	1"	1.5"	2.0"	2.5"	1"	1.5"	2.0"	2.5"	1.0"	1.5"	2.0"	2.5"	1"	1.5"	2.0"	2.5"	N/A
OVERHEAD BUNDLE HORIZONTAL SPAN (Max) 50′	MINIMUM POLE CLASS	H-1	H-2	H-2	H-2	4	3	2	1	H-2	H-2	H-3	H-3	H-4	H-4	H-4	H-5	CLASS 1 E = 10′
	POLE EMBEDMENT (E)	11′				10′				11′				12′				
100′	MINIMUM POLE CLASS	H-2	H-3	H-4	H-5	1	H-1	H-2	H-3	H-4	H-5	H-5	H-6	H-5	H-5	H-6		
	POLE EMBEDMENT (E)	12′				11′				12′				12′				
150′	MINIMUM POLE CLASS	H-4	H-5	H-6		H-1	H-2	H-3	H-5	H-6				H-6				
	POLE EMBEDMENT (E)	12′				12′				12′				12′				
200′	MINIMUM POLE CLASS	H-5	H-6			H-2	H-3	H-5										
	POLE EMBEDMENT (E)	12′				12′												

1. CCTV camera assembly or vehicle detection system
2. Overhead bundle consisting of a 3/8" ø messenger wire, overhead conductors, and lashing wire
3. Luminaire with mast arm
4. Pedestrian push button assembly or accessible push button assembly
5. Signal face with 3 indications or single sheet sign panel (10 SQFT Max)
6. Riser with weather head as required
7. Pull box as required
8. Grounding as required
9. Single flashing beacon or single sheet sign panel (4 SQFT Max)
10. Single sheet sign panel (4′ x 4′ Max) or signal face with 3 indications
11. Flashing beacon control assembly
12. NEMA 3R enclosure, 26"(W) x 56"(H) x 12"(D) Max dimensions. Max weight including batteries, 450 lbs
13. 25′ SQFT Max total photovoltaic panels mounted as shown as required
14. 2-12" flashing beacons

NOTES:

1. In addition to other restrictions on maximum horizontal span, this horizontal span must not exceed 100′.
2. Cases 1N, 3N and 4N may substitute the attachments shown in Case 5N if the photovoltaic panel is not included.
3. For Case 1N without an overhead bundle (item 2) use minimum pole class H-1 with E=11′.

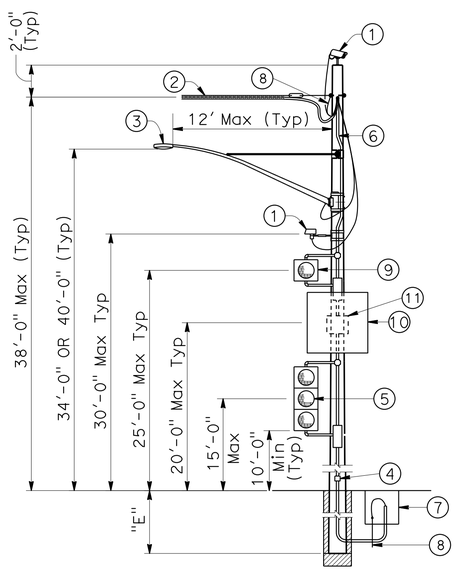

CASE 1N
POLE AT DEAD END WITH ATTACHMENTS
SEE NOTE 2

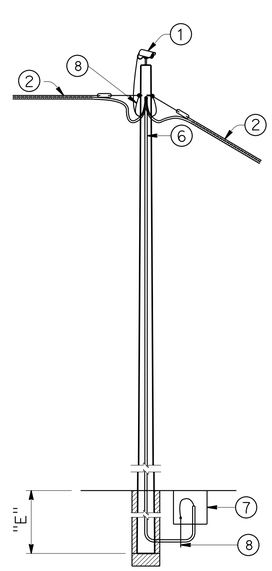

CASE 2N
POLE AT TANGENT WITHOUT ATTACHMENTS

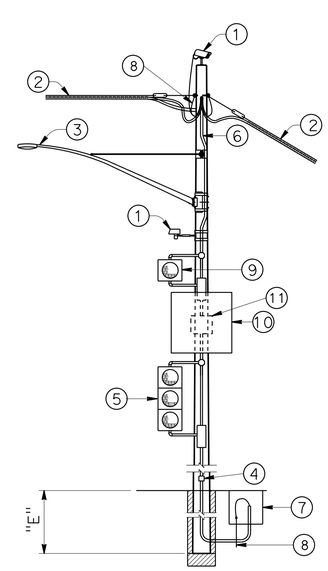

CASE 3N
POLE AT TANGENT OR CORNER WITH ATTACHMENTS
SEE NOTE 2

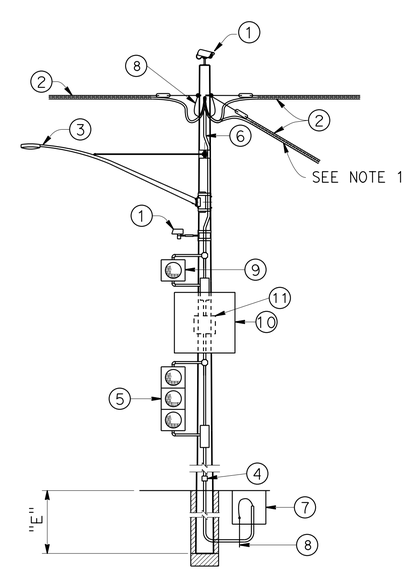

CASE 4N
POLE AT JUNCTION WITH ATTACHMENTS
SEE NOTE 2

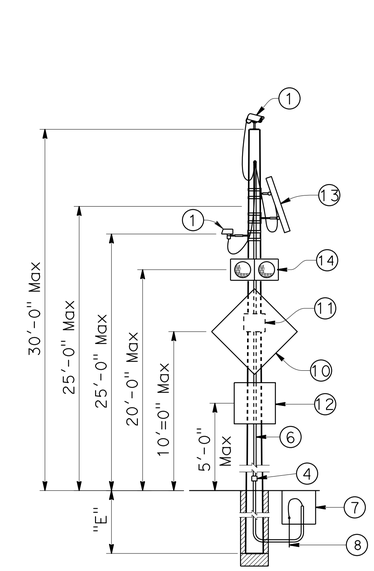

CASE 5N
POLE WITHOUT OVERHEAD BUNDLE WITH ATTACHMENTS

NO SCALE

STANDARD DRAWING

FILE NO. xs18-020 — APPROVAL DATE July 2014

STATE OF CALIFORNIA DEPARTMENT OF TRANSPORTATION

DIVISION OF ENGINEERING SERVICES

BRIDGE NO. N/A — POST MILE Var

TEMPORARY WOOD POLES
NON-GUYED - NO SIGNALS ON SPANS

SES-2

DS OSD 2147A (ENGLISH STANDARD DRAWING "XS" BORDER REV. (02-02-11)

ORIGINAL SCALE IN INCHES FOR REDUCED PLANS 0 1 2 3

UNIT: 03-0484
PROJECT NUMBER & PHASE: 03140000271 CONTRACT NO.: 03-0G0304

DISREGARD PRINTS BEARING EARLIER REVISION DATES — REVISION DATES 6-19-14 — SHEET X OF X

FILE => 0314000027uh002.dgn

USERNAME => s119538 DATE PLOTTED => 23-JUL-2015 TIME PLOTTED => 14:58

DIST	COUNTY	ROUTE	POST MILES TOTAL PROJECT	SHEET No.	TOTAL SHEETS
03	ED,Pla	50, 80, 193	Var	31	64

REGISTERED CIVIL ENGINEER 6-1-15 DATE

6-1-15
PLANS APPROVAL DATE

REGISTERED PROFESSIONAL ENGINEER JACK COWELL No. 65521 Exp. 9-30-15 CIVIL STATE OF CALIFORNIA

The State of California or its officers or agents shall not be responsible for the accuracy or completeness of electronic copies of this plan sheet.

LEGEND

- A — Wood Pole with Attachments
- —OH··— Overhead Bundle
- ——→ Guy Anchor

POLE SELECTION TABLE

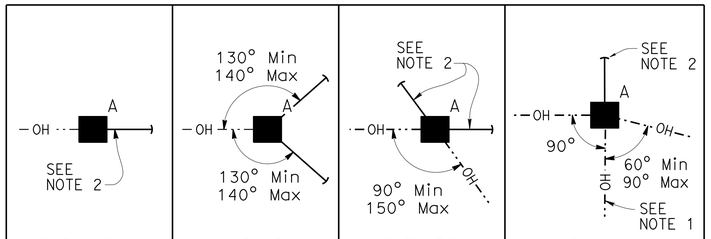

		MAXIMUM d_p	1"	1.5"	2.0"	2.5"	1"	1.5"	2.0"	2.5"	1"	1.5"	2.0"	2.5"	1"	1.5"	2.0"	2.5"
OVERHEAD BUNDLE HORIZONTAL SPAN (Max)	50′	MINIMUM POLE CLASS	H-1	H-1	H-2	H-2	1	1	1	1	1	1	1	H-1	H-2	H-2	H-3	H-3
		POLE EMBEDMENT (E)	10′				9′				9′				11′			
	100′	MINIMUM POLE CLASS	H-2	H-2	H-3	H-4	1	H-1	H-1	H-1	1	H-1	H-2	H-2	H-3	H-3	H-4	H-4
		POLE EMBEDMENT (E)	11′				9′				9′				12′			
	150′	MINIMUM POLE CLASS	H-3	H-3	H-4	H-5	H-1	H-1	H-2	H-2	H-2	H-3	H-3	H-3	H-4	H-5	H-5	H-6
		POLE EMBEDMENT (E)	11′				9′				9′				12′			
	200′	MINIMUM POLE CLASS	H-4	H-4	H-5	H-6	H-1	H-2	H-3	H-3	H-3	H-3	H-4	H-4	H-5	H-6		
		POLE EMBEDMENT (E)	11′				9′				9′				12′			

1. CCTV camera assembly or vehicle detection system
2. Overhead bundle consisting of a ⅜" ø messenger wire, overhead conductors, and lashing wire
3. Luminaire with mast arm
4. Pedestrian push button assembly or accessible push button assembly
5. Signal face with 3 indications or single sheet sign panel (10 SQFT Max)
6. Riser with weather head as required
7. Pull box as required
8. Grounding as required
9. Single flashing beacon or single sheet sign panel (4 SQFT Max)
10. Single sheet sign panel (4′ x 4′ Max) or signal face with 3 indications
11. Flashing beacon control assembly
12. ½" ø guy wire with white guy marker and strain insulator (for anchorage see "TEMPORARY WOOD POLES-DETAILS No. 2" sheet)

NOTES:

1. In addition to other restrictions on maximum horizontal span, this horizontal span must not exceed 100′.
2. Guy wire in line with opposing span ± 5°.

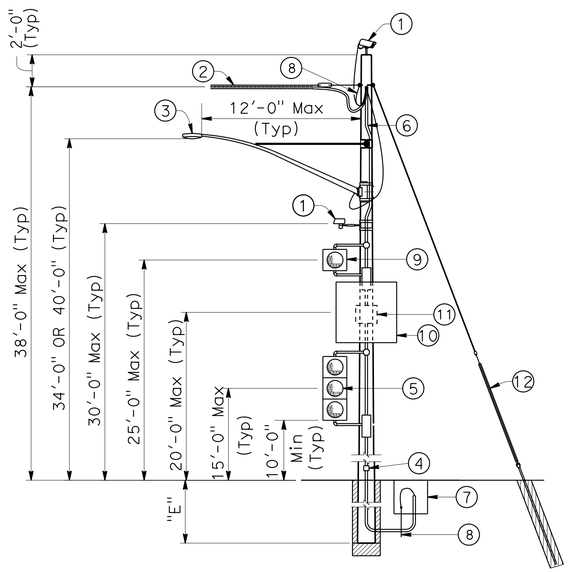

CASE 1G
POLE AT DEAD END
WITH ATTACHMENTS

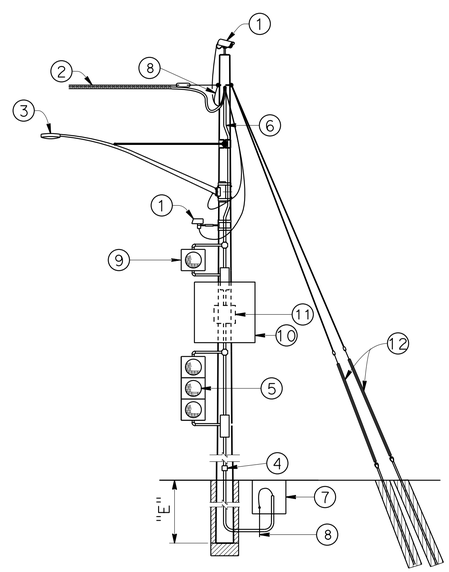

CASE 2G
POLE AT DEAD END
WITH ATTACHMENTS

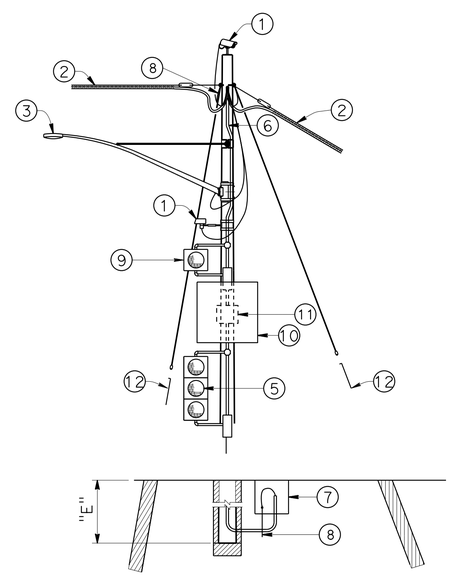

CASE 3G
POLE AT CORNER
WITH ATTACHMENTS

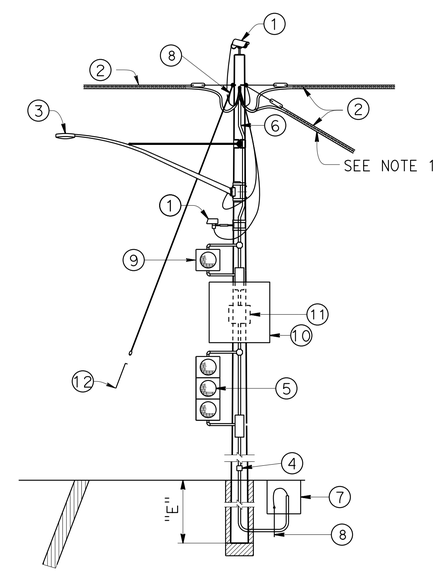

CASE 4G
POLE AT JUNCTION
WITH ATTACHMENTS

NO SCALE

STANDARD DRAWING

FILE NO. xs18-030

APPROVAL DATE July 2014

STATE OF CALIFORNIA
DEPARTMENT OF TRANSPORTATION

DIVISION OF ENGINEERING SERVICES

BRIDGE NO. N/A

POST MILE Var

TEMPORARY WOOD POLES
GUYED - NO SIGNALS ON SPANS

SES-3

DS OSD 2147A (ENGLISH STANDARD DRAWING "XS" BORDER REV. (02-02-11)

ORIGINAL SCALE IN INCHES FOR REDUCED PLANS 0 1 2 3

UNIT: 03-0484
PROJECT NUMBER & PHASE: 03140000271
CONTRACT NO.: 03-0G0304

DISREGARD PRINTS BEARING EARLIER REVISION DATES

REVISION DATES 6-27-14

SHEET X OF X

FILE => 0314000027uh003.dgn

USERNAME => s119538 DATE PLOTTED => 23-JUL-2015 TIME PLOTTED => 14:58

DIST	COUNTY	ROUTE	POST MILES TOTAL PROJECT	SHEET No.	TOTAL SHEETS
03	ED,Pla	50, 80, 193	Var	32	64

REGISTERED CIVIL ENGINEER — DATE 6-1-15

PLANS APPROVAL DATE 6-1-15

REGISTERED PROFESSIONAL ENGINEER — JACK COWELL No. 65521 Exp. 9-30-15 CIVIL — STATE OF CALIFORNIA

The State of California or its officers or agents shall not be responsible for the accuracy or completeness of electronic copies of this plan sheet.

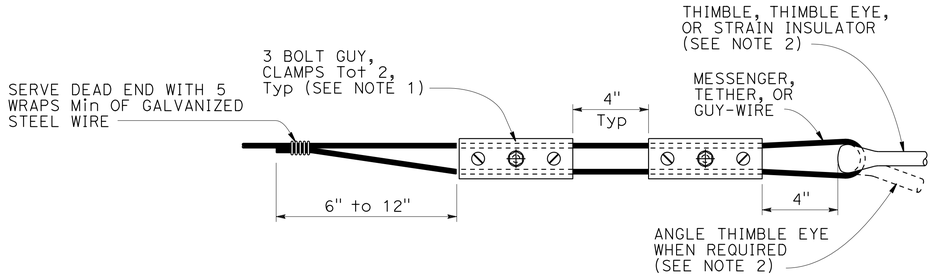

ALTERNATIVE TERMINATION OF MESSENGER WIRES USING GUY CLAMPS

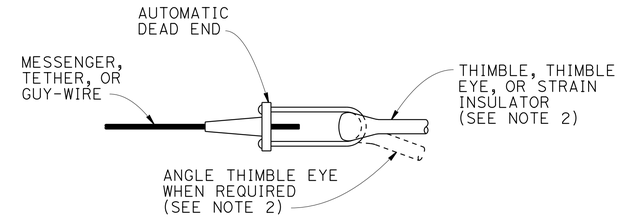

TERMINATION OF WIRES USING AUTOMATIC DEAD END

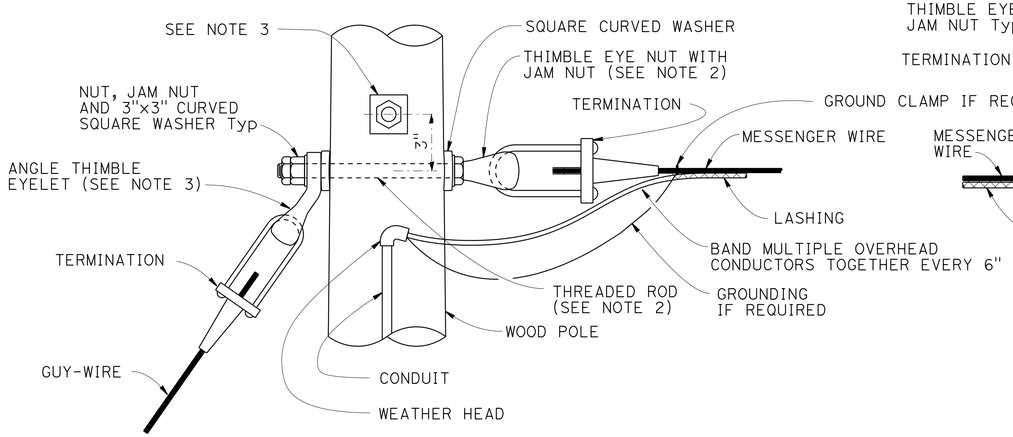

POLE AT DEAD END WITH GUY-WIRE CONNECTION

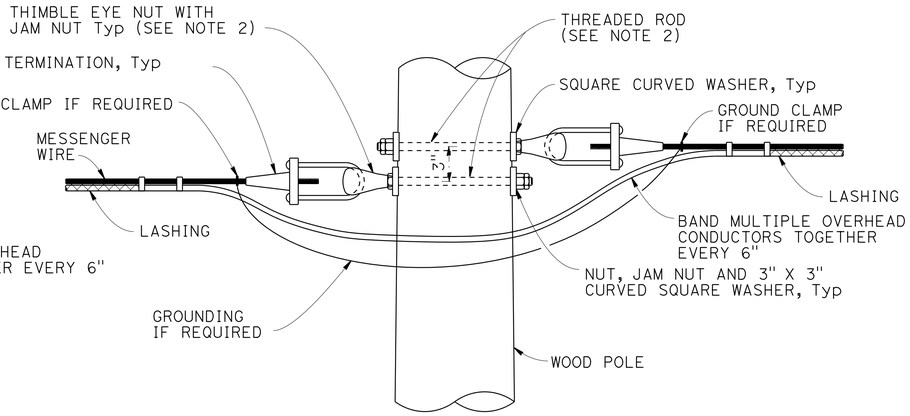

POLE AT TANGENT OR CORNER CONNECTION

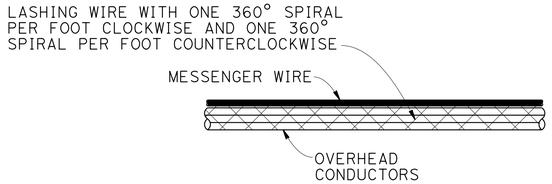

DOUBLE LASHING DETAIL

USE IF d_p IS GREATER THAN 1½"

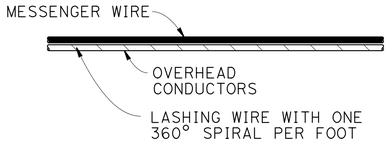

TYPICAL LASHING DETAIL

USE IF d_p IS 1½" OR LESS

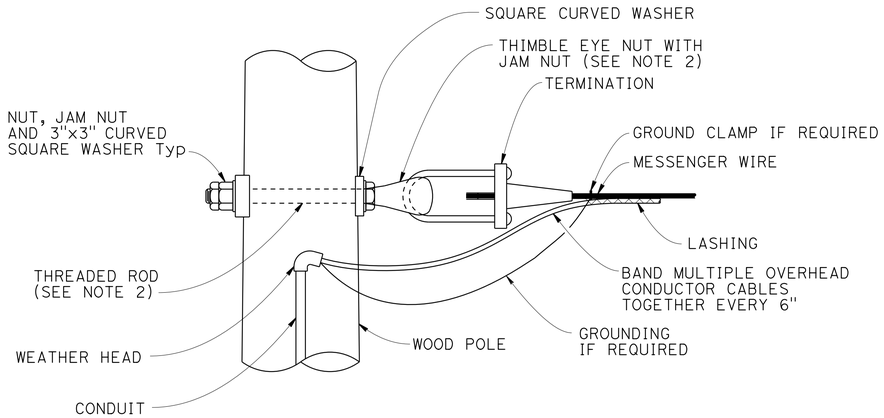

POLE AT DEAD END CONNECTION

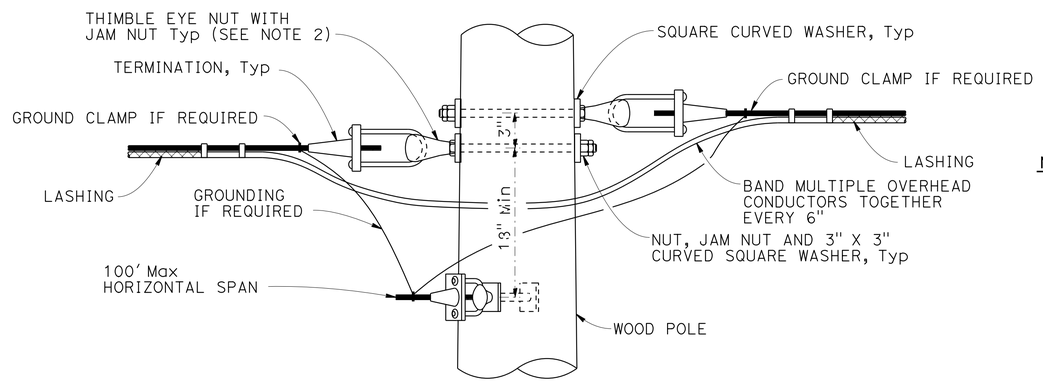

POLE AT JUNCTION CONNECTION

NOTES:

1. For guy wires use 3 clamps.
2. Use ⅝" ø except ¾" ø at guyed wires
3. Install additional angle thimble eyelet at poles with two guy wires.

NO SCALE

STANDARD DRAWING

FILE NO. **xs18-080-1** — APPROVAL DATE July 2014

STATE OF **CALIFORNIA** DEPARTMENT OF TRANSPORTATION

DIVISION OF ENGINEERING SERVICES

BRIDGE NO. N/A — POST MILE Var

TEMPORARY WOOD POLES DETAILS No. 1

SES-4

DS OSD 2147A (ENGLISH STANDARD DRAWING "XS" BORDER REV. (02-02-11)

ORIGINAL SCALE IN INCHES FOR REDUCED PLANS 0 1 2 3

UNIT: 03-0484
PROJECT NUMBER & PHASE: 03140000271 — CONTRACT NO.: 03-0G0304

DISREGARD PRINTS BEARING EARLIER REVISION DATES → 6-27-14

REVISION DATES — SHEET X OF X

FILE => 0314000027uh004.dgn

USERNAME => s119538 DATE PLOTTED => 23-JUL-2015 TIME PLOTTED => 14:59

DIST	COUNTY	ROUTE	POST MILES TOTAL PROJECT	SHEET No.	TOTAL SHEETS
03	ED,Pla	50, 80, 193	Var	33	64

Jack R. Cowell Jr. 6-1-15
REGISTERED CIVIL ENGINEER DATE

6-1-15
PLANS APPROVAL DATE

REGISTERED PROFESSIONAL ENGINEER
JACK COWELL
No. 65521
Exp. 9-30-15
CIVIL
STATE OF CALIFORNIA

The State of California or its officers or agents shall not be responsible for the accuracy or completeness of electronic copies of this plan sheet.

NOTE:

1. For minimum allowable tension capacity of anchors see "Temporary Wood Poles - General Notes" sheet.

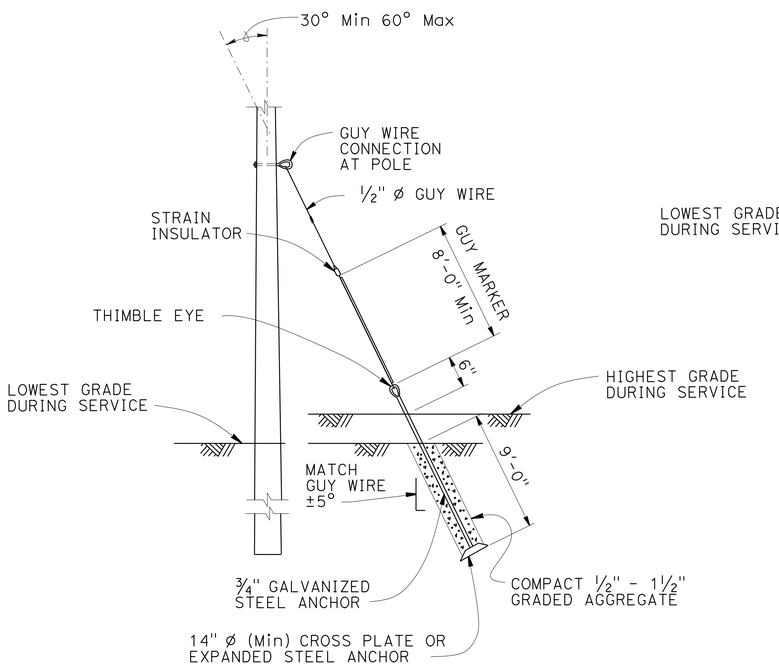

NOTE:

Helical anchor detail may be used in place of expanded steel anchors.

EXPANDED STEEL ANCHOR DETAIL

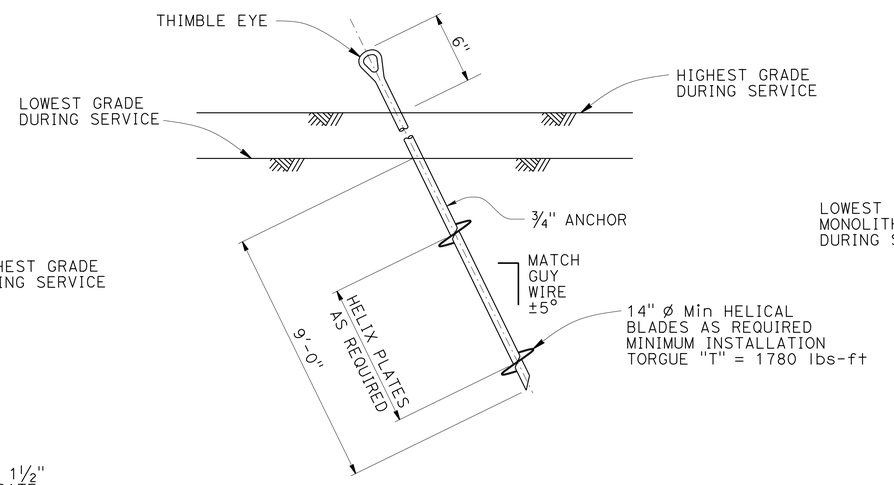

HELICAL ANCHOR DETAIL

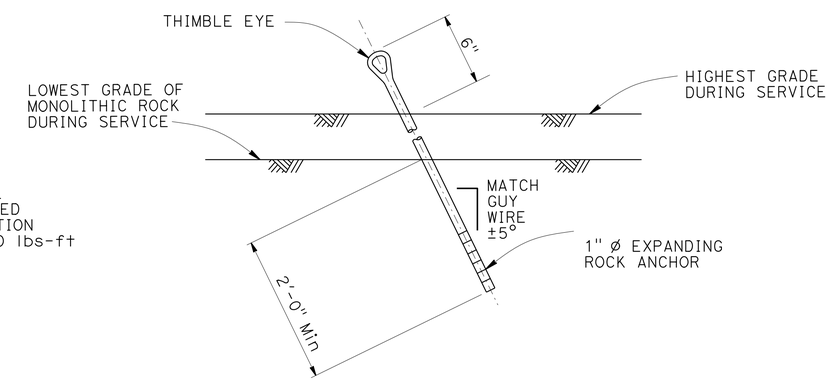

EXPANDING ROCK ANCHOR DETAIL

NO SCALE

STANDARD DRAWING		STATE OF CALIFORNIA DEPARTMENT OF TRANSPORTATION	DIVISION OF ENGINEERING SERVICES	BRIDGE NO. N/A	TEMPORARY WOOD POLES DETAILS No. 2	SES-5
FILE NO. xs18-080-2	APPROVAL DATE July 2014			POST MILE Var		

DS OSD 2147A (ENGLISH STANDARD DRAWING "XS" BORDER REV. (02-02-11))

ORIGINAL SCALE IN INCHES FOR REDUCED PLANS 0 1 2 3

UNIT: 03-0484
PROJECT NUMBER & PHASE: 03140000271 CONTRACT NO.: 03-0G0304

DISREGARD PRINTS BEARING EARLIER REVISION DATES → 6-27-14

REVISION DATES | SHEET X | OF X

FILE => 0314000027uh005.dgn

USERNAME => s119538 DATE PLOTTED => 23-JUL-2015 TIME PLOTTED => 14:59

DIST	COUNTY	ROUTE	POST MILES TOTAL PROJECT	SHEET No.	TOTAL SHEETS
03	ED,Pla	50, 80, 193	Var	34	64

Jack R. Cowell Jr. 6-1-15
REGISTERED CIVIL ENGINEER DATE

6-1-15
PLANS APPROVAL DATE

REGISTERED PROFESSIONAL ENGINEER JACK COWELL No. 65521 Exp. 9-30-15 CIVIL STATE OF CALIFORNIA

The State of California or its officers or agents shall not be responsible for the accuracy or completeness of electronic copies of this plan sheet.

NOTES:

1. Luminaire mast arms must be in compliance with Standard Plan ES-6D with noted modifications.
2. Verify pole dimensions at tie-rod attachment height. Fabricate 8" flat bar with "L" Dimension to maintain an open gap between flanges in finished installation.
3. Not all screw heads and bolt heads are shown for clarity.
4. Mast arm not shown for clarity.

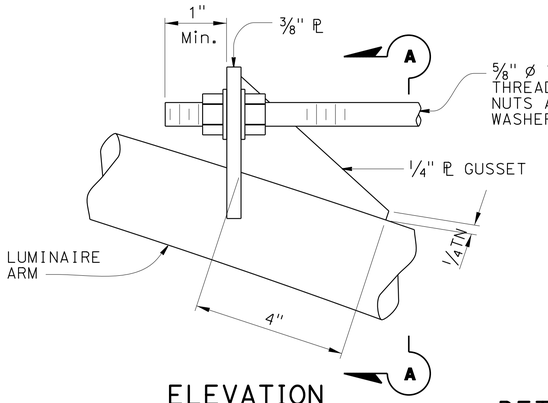

ELEVATION

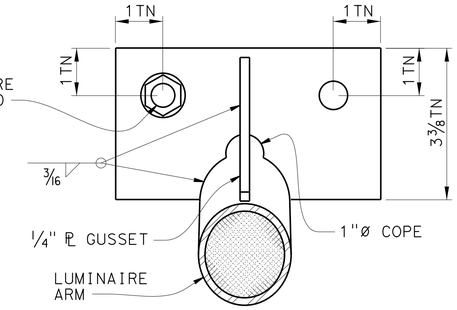

SECTION A-A

DETAIL A
TIE-ROD AT LUMINAIRE ARM
NO SCALE

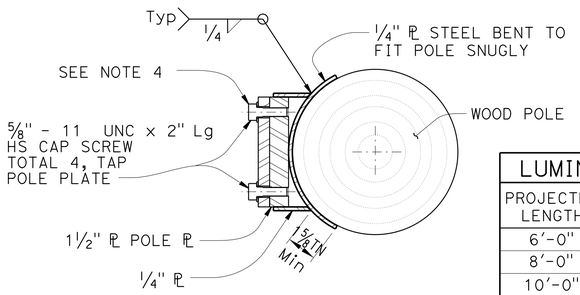

SECTION E-E

LUMINAIRE MAST ARM DATA			
PROJECTED LENGTH	N RISE	Min OD AT POLE	NOMINAL THICKNESS
6'-0"	2'-0"±	3 1/4"	0.1196"
8'-0"	2'-6"±	3 1/2"	
10'-0"	3'-3"±	3 7/8"	
12'-0"	4'-3"±		

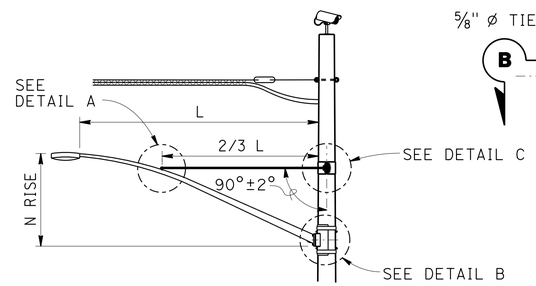

LUMINAIRE MAST ARM

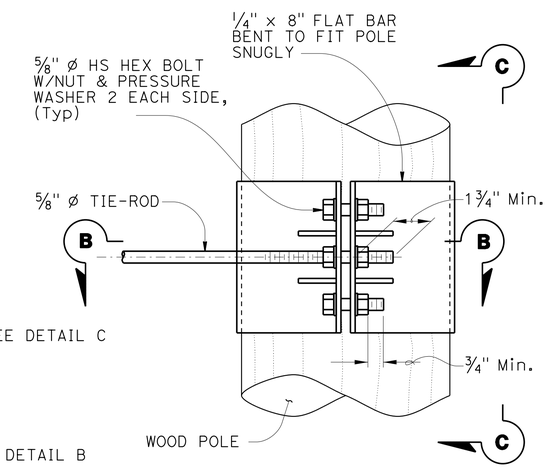

ELEVATION

NOTE:
Not all screw and bolt heads shown for clarity.

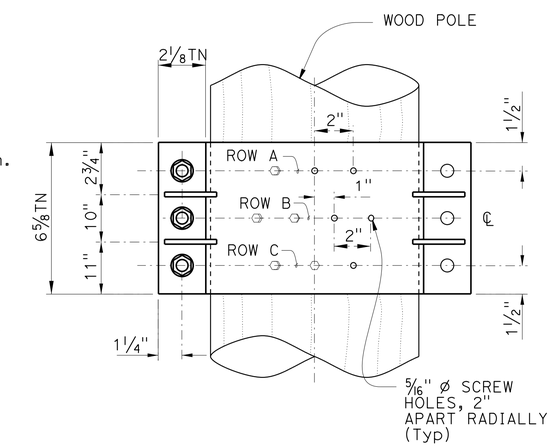

VIEW C-C

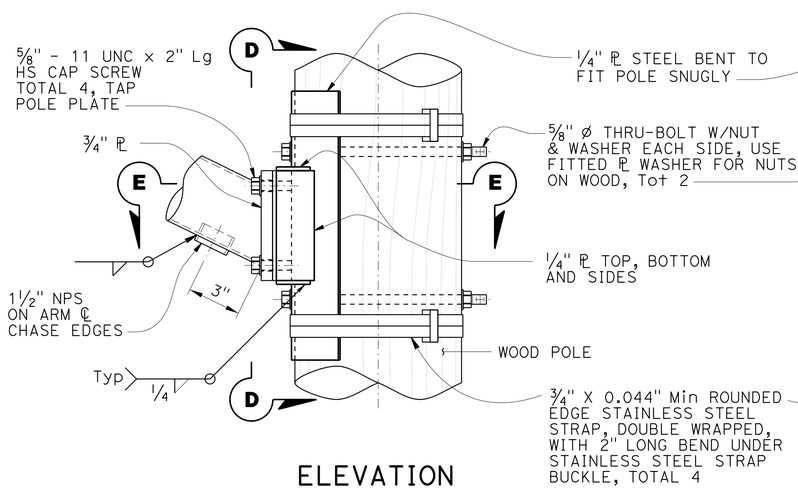

ELEVATION

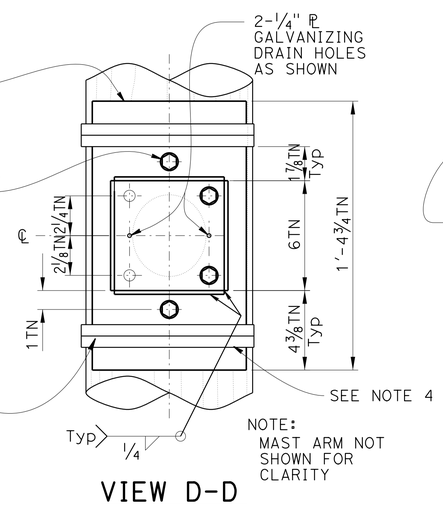

VIEW D-D

DETAIL B
ARM CONNECTION DETAILS
NO SCALE

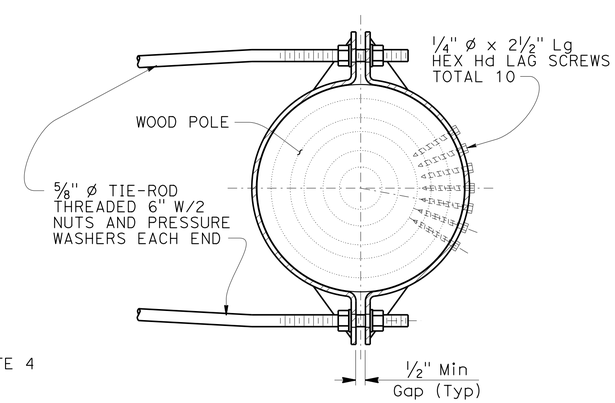

SECTION B-B

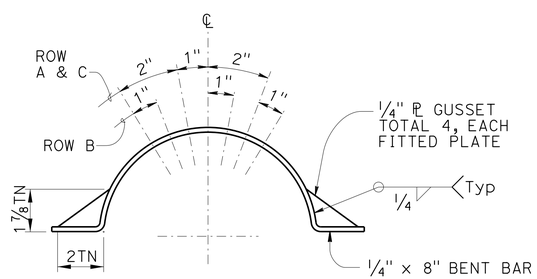

LAG SCREW AND
GUSSET PLATE LAYOUT

DETAIL C
TIE-ROD AT POLE
NO SCALE

STANDARD DRAWING					
FILE NO. xs18-080-3	APPROVAL DATE July 2014	STATE OF CALIFORNIA DEPARTMENT OF TRANSPORTATION	DIVISION OF ENGINEERING SERVICES	BRIDGE NO. N/A / POST MILE Var	TEMPORARY WOOD POLES DETAILS No. 3 — SES-6

DS OSD 2147A (ENGLISH STANDARD DRAWING "XS" BORDER REV. (02-02-11))

ORIGINAL SCALE IN INCHES FOR REDUCED PLANS 0 1 2 3

UNIT: 03-0484
PROJECT NUMBER & PHASE: 03140000271
CONTRACT NO.: 03-0G0304

DISREGARD PRINTS BEARING EARLIER REVISION DATES

REVISION DATES				SHEET	OF
6-27-14				X	X

FILE => 0314000027uh006.dgn

USERNAME => s119538 DATE PLOTTED => 23-JUL-2015 TIME PLOTTED => 14:53

M

Maint	MAINTENANCE
Max	MAXIMUM
MB	METAL BEAM
MBB	METAL BEAM BARRIER
MBGR	METAL BEAM GUARD RAILING
Med	MEDIAN
MGS	MIDWEST GUARDRAIL SYSTEM
MH	MANHOLE
Min	MINIMUM
Misc	MISCELLANEOUS
Misc I & S	MISCELLANEOUS IRON AND STEEL
Mkr	MARKER
Mod	MODIFIED,
	MODIFY
Mon	MONUMENT
MP	METAL PLATE
MPGR	METAL PLATE GUARD RAILING
MR	MOVEMENT RATING
MSE	MECHANICALLY STABILIZED EMBANKMENT
Mt	MOUNTAIN, MOUNT
Mtl	MATERIAL
MVP	MAINTENANCE VEHICLE PULLOUT

N

N	NORTH
NB	NORTHBOUND
No.	NUMBER (MUST HAVE PERIOD)
Nos.	NUMBERS (MUST HAVE PERIOD)
NPS	NOMINAL PIPE SIZE
NS	NEAR SIDE
NSP	NEW STANDARD PLAN
NTS	NOT TO SCALE

O

Oblr	OBLITERATE
OC	OVERCROSSING
OD	OUTSIDE DIAMETER
OF	OUTSIDE FACE
OG	ORIGINAL GROUND
OGAC	OPEN GRADED ASPHALT CONCRETE
OGFC	OPEN GRADED FRICTION COURSE
OH	OVERHEAD
OHWM	ORDINARY HIGH WATER MARK
O-O	OUT TO OUT
Opp	OPPOSITE
OSD	OVERSIDE DRAIN

P

p	PAGE
PAP	PERFORATED ALUMINUM PIPE
PB	PULL BOX
PC	POINT OF CURVATURE,
	PRECAST
PCC	POINT OF COMPOUND CURVE,
	PORTLAND CEMENT CONCRETE
PCMS	PORTABLE CHANGEABLE MESSAGE SIGN
PCP	PERFORATED CONCRETE PIPE,
	PRESTRESSED CONCRETE PIPE
PCVC	POINT OF COMPOUND VERTICAL CURVE
PEC	PERMIT TO ENTER AND CONSTRUCT
Ped	PEDESTRIAN
Ped OC	PEDESTRIAN OVERCROSSING
Ped UC	PEDESTRIAN UNDERCROSSING
Perm Mtl	PERMEABLE MATERIAL

P continued

PG	PROFILE GRADE
PI	POINT OF INTERSECTION
PJP	PARTIAL JOINT PENETRATION
Pkwy	PARKWAY
ℙ,PL	PLATE
P/L	PROPERTY LINE
PM	POST MILE,
	TIME FROM NOON TO MIDNIGHT
PN	PAVING NOTCH
POC	POINT OF HORIZONTAL CURVE
POT	POINT OF TANGENT
POVC	POINT OF VERTICAL CURVE
PP	PIPE PILE,
	PLASTIC PIPE,
	POWER POLE
PPL	PREFORMED PERMEABLE LINER
PPP	PERFORATED PLASTIC PIPE
PRC	POINT OF REVERSE CURVE
PRF	PAVEMENT REINFORCING FABRIC
PRVC	POINT OF REVERSE VERTICAL CURVE
PS&E	PLANS, SPECIFICATIONS AND ESTIMATES
PS, P/S	PRESTRESSED
PSP	PERFORATED STEEL PIPE
PT	POINT OF TANGENCY
PVC	POLYVINYL CHLORIDE
Pvmt	PAVEMENT

Q

Qty	QUANTITY

R

R	RADIUS
R & D	REMOVE AND DISPOSE
R & S	REMOVE AND SALVAGE
R/C	RATE OF CHANGE
RCA	REINFORCED CONCRETE ARCH
RCB	REINFORCED CONCRETE BOX
RCP	REINFORCED CONCRETE PIPE
RCPA	REINFORCED CONCRETE PIPE ARCH
Rd	ROAD
Reinf	REINFORCED,
	REINFORCEMENT,
	REINFORCING
Rel	RELOCATE
Repl	REPLACEMENT
Ret	RETAINING
Rev	REVISED, REVISION
Rdwy	ROADWAY
RHMA	RUBBERIZED HOT MIX ASPHALT
Riv	RIVER
RM	ROAD-MIXED
RP	RADIUS POINT,
	REFERENCE POINT
RR	RAILROAD
RSP	ROCK SLOPE PROTECTION,
	REVISED STANDARD PLAN
Rt	RIGHT
Rte	ROUTE
RW	REDWOOD,
	RETAINING WALL
R/W	RIGHT OF WAY
Rwy	RAILWAY

S

S	SOUTH,
	SUPPLEMENT
SAE	STRUCTURE APPROACH EMBANKMENT
Salv	SALVAGE
SAPP	STRUCTURAL ALUMINUM PLATE PIPE
SB	SOUTHBOUND
SC	SAND CUSHION
SCSP	SLOTTED CORRUGATED STEEL PIPE
SD	STORM DRAIN
Sec	SECOND,
	SECTION
Sep	SEPARATION
SG	SUBGRADE
Shld	SHOULDER
Sht	SHEET
Sim	SIMILAR
℄	STATION LINE
SM	SELECTED MATERIAL
Spec	SPECIAL,
	SPECIFICATIONS
SPP	SLOTTED PLASTIC PIPE
SS	SLOPE STAKE
SSBM	STRAP AND SADDLE BRACKET METHOD
SSD	STRUCTURAL SECTION DRAIN
SSPA	STRUCTURAL STEEL PLATE ARCH
SSPP	STRUCTURAL STEEL PLATE PIPE
SSPPA	STRUCTURAL STEEL PLATE PIPE ARCH
SSRP	STEEL SPIRAL RIB PIPE
St	STREET
Sta	STATION
STBB	SINGLE THRIE BEAM BARRIER
Std	STANDARD
Str	STRUCTURE
Surf	SURFACING
SW	SIDEWALK,
	SOUND WALL
Swr	SEWER
Sym	SYMMETRICAL
S4S	SURFACE 4 SIDES

T

T	SEMI-TANGENT
Tan	TANGENT
TBB	THRIE BEAM BARRIER
Tbr	TIMBER
TC	TOP OF CURB
TCB	TRAFFIC CONTROL BOX
TCE	TEMPORARY CONSTRUCTION EASEMENT
Tel	TELEPHONE
Temp	TEMPORARY
TG	TOP OF GRADE
Tot	TOTAL
TP	TELEPHONE POLE
TPB	TREATED PERMEABLE BASE
TPM	TREATED PERMEABLE MATERIAL
Trans	TRANSITION

T continued

TS	TRANSVERSE,
	TRAFFIC SIGNAL,
	TUBULAR STEEL
Typ	TYPICAL

U

UC	UNDERCROSSING
UD	UNDERDRAIN
UG	UNDERGROUND
UON	UNLESS OTHERWISE NOTED
UP	UNDERPASS

V

V	VALVE,
	DESIGN SPEED
Var	VARIABLE,
	VARIES
VC	VERTICAL CURVE
VCP	VITRIFIED CLAY PIPE
Vert	VERTICAL
Via	VIADUCT
Vol	VOLUME

W

W	WEST,
	WIDTH
WB	WESTBOUND
WH	WEEP HOLE
WM	WIRE MESH
WS	WATER SURFACE
WSP	WELDED STEEL PIPE
Wt	WEIGHT
WV	WATER VALVE
WW	WINGWALL
WWLOL	WINGWALL LAYOUT LINE

X

X Sec	CROSS SECTION
Xing	CROSSING

Y

Yr	YEAR
Yrs	YEARS

Dist	COUNTY	ROUTE	POST MILES TOTAL PROJECT	SHEET No.	TOTAL SHEETS
03	ED, Pla	50, 80, 193	Var	35	64

Grace M. Tsushima
REGISTERED CIVIL ENGINEER

July 19, 2013
PLANS APPROVAL DATE

REGISTERED PROFESSIONAL ENGINEER
Grace M. Tsushima
No. C49814
Exp. 9-30-14
CIVIL
STATE OF CALIFORNIA

THE STATE OF CALIFORNIA OR ITS OFFICERS OR AGENTS SHALL NOT BE RESPONSIBLE FOR THE ACCURACY OR COMPLETENESS OF SCANNED COPIES OF THIS PLAN SHEET.

TO ACCOMPANY PLANS DATED 6-1-15

UNIT OF MEASUREMENT SYMBOLS:

Some of the symbols used in the project plan quantity tables and in the Bid Item List are:

TABLE A

SYMBOL USED	DEFINITIONS
ACRE	ACRE
CF	CUBIC FOOT
CY	CUBIC YARD
EA	EACH
GAL	GALLON
LB	POUND
LF	LINEAR FOOT
SQFT	SQUARE FOOT
SQYD	SQUARE YARD
STA	100 FEET
TAB	TABLET
TON	2,000 POUNDS

Some of the symbols used in the plans other than in the project plan quantity tables are:

TABLE B

SYMBOL USED	DEFINITIONS
ksi	KIPS PER SQUARE INCH
ksf	KIPS PER SQUARE FOOT
psi	POUNDS PER SQUARE INCH
psf	POUNDS PER SQUARE FOOT
lb/ft^3, pcf	POUNDS PER CUBIC FOOT
tsf	TONS PER SQUARE FOOT
mph, MPH *	MILES PER HOUR
ø	NOMINAL DIAMETER
oz	OUNCE
lb	POUND
kip	1,000 POUNDS
cal	CALORIE
ft	FOOT OR FEET
gal	GALLON

* For use on a sign panel only

STATE OF CALIFORNIA
DEPARTMENT OF TRANSPORTATION

ABBREVIATIONS (SHEET 2 OF 2)

NO SCALE

RSP A10B DATED JULY 19, 2013 SUPERSEDES STANDARD PLAN A10B DATED MAY 20, 2011 - PAGE 2 OF THE STANDARD PLANS BOOK DATED 2010.

REVISED STANDARD PLAN RSP A10B

2010 REVISED STANDARD PLAN RSP A10B

6-7-13

Dist	COUNTY	ROUTE	POST MILES TOTAL PROJECT	SHEET No.	TOTAL SHEETS
03	ED, Pla	50, 80, 193	Var	36	64

REGISTERED CIVIL ENGINEER

July 19, 2013
PLANS APPROVAL DATE

REGISTERED PROFESSIONAL ENGINEER Roberta L. McLaughlin No. C40375 Exp. 3-31-15 CIVIL STATE OF CALIFORNIA

THE STATE OF CALIFORNIA OR ITS OFFICERS OR AGENTS SHALL NOT BE RESPONSIBLE FOR THE ACCURACY OR COMPLETENESS OF SCANNED COPIES OF THIS PLAN SHEET.

TO ACCOMPANY PLANS DATED 6-1-15

EXIT RAMP NEUTRAL AREA (GORE) TREATMENT

DETAIL 36

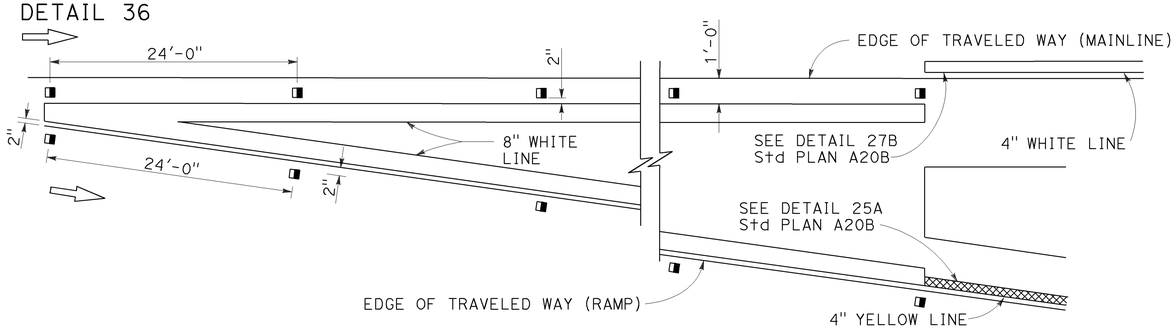

ENTRANCE RAMP NEUTRAL AREA (MERGE) TREATMENT

DETAIL 36A

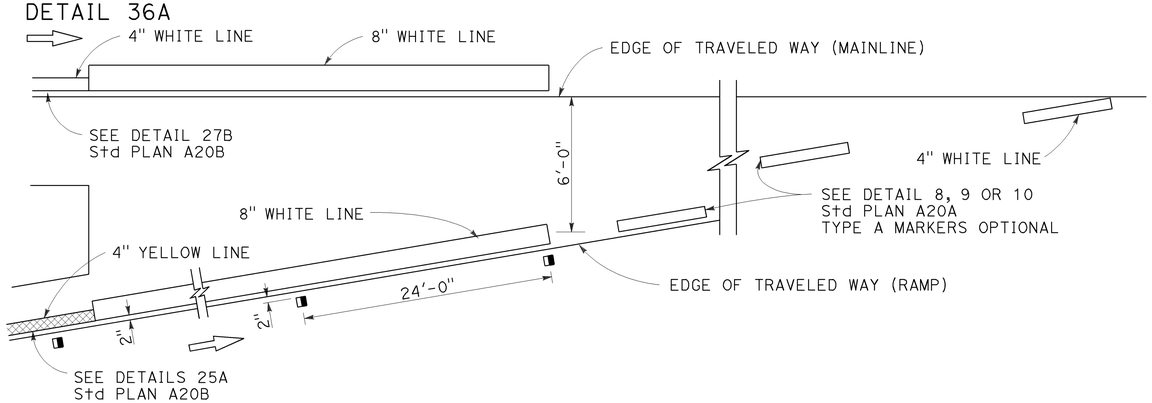

ENTRANCE RAMP NEUTRAL AREA (ACCELERATION LANE) TREATMENT

DETAIL 36B

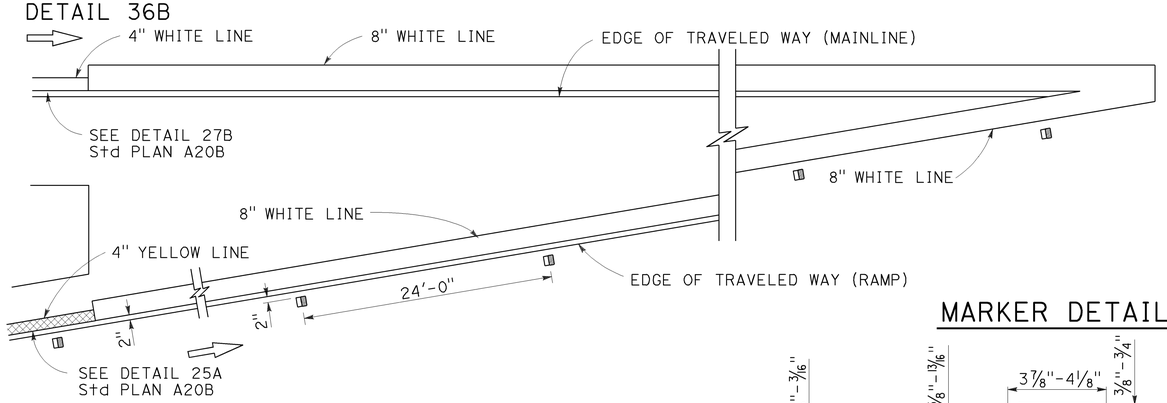

LANE DROP AT EXIT RAMPS

DETAIL 37

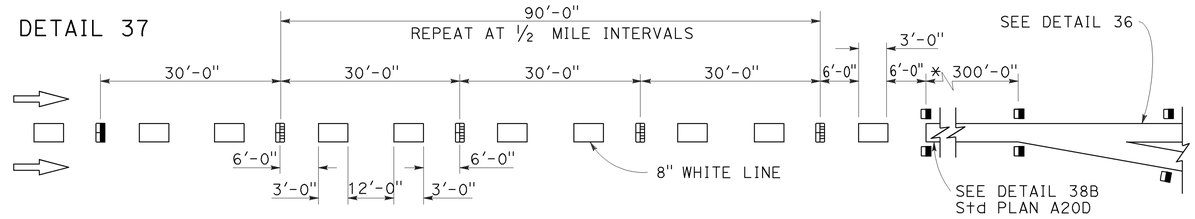

DETAIL 37A

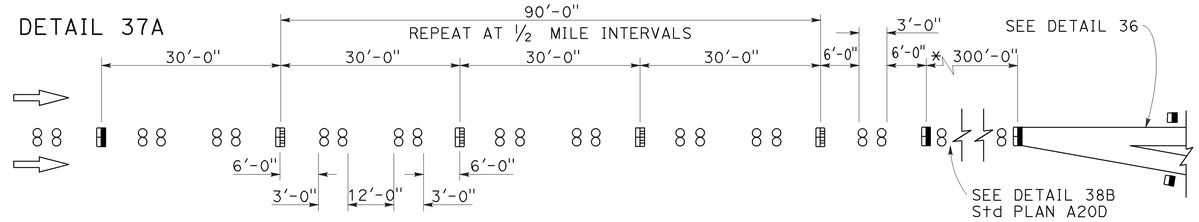

* The solid channelizing line shown may be omitted on short auxiliary lanes where weaving length is critical.

LANE DROP AT INTERSECTIONS

DETAIL 37B

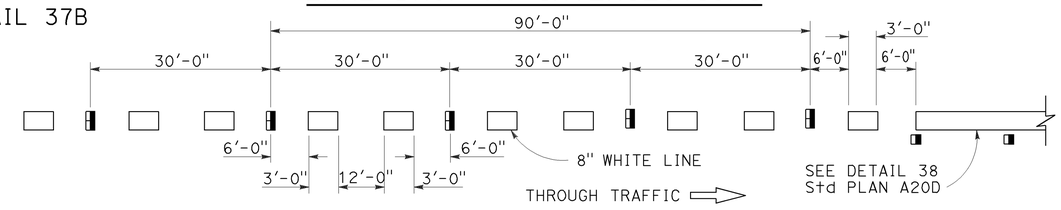

DETAIL 37C

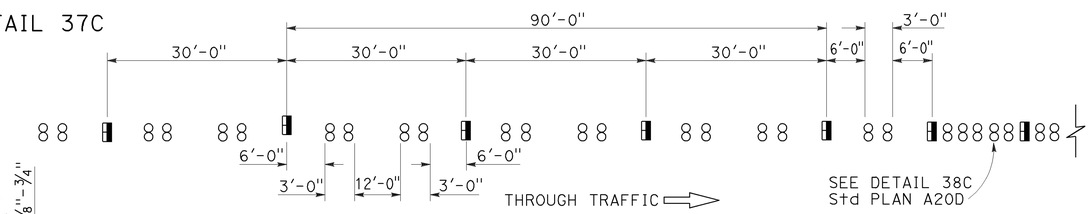

MARKER DETAILS

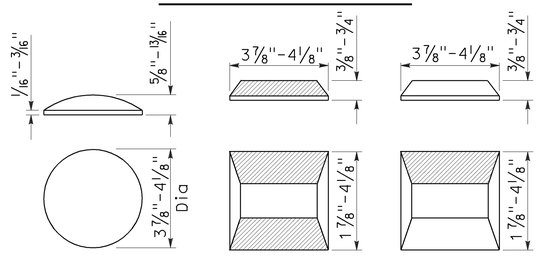

RETROREFLECTIVE FACE

LEGEND:

MARKERS

- ○ TYPE A WHITE NON-REFLECTIVE
- ⊟ TYPE C RED-CLEAR RETROREFLECTIVE
- ◨ TYPE G ONE-WAY CLEAR RETROREFLECTIVE

STATE OF CALIFORNIA
DEPARTMENT OF TRANSPORTATION

PAVEMENT MARKERS AND TRAFFIC LINE TYPICAL DETAILS

NO SCALE

RSP A20C DATED JULY 19, 2013 SUPERSEDES STANDARD PLAN A20C DATED MAY 20, 2011 - PAGE 11 OF THE STANDARD PLANS BOOK DATED 2010.

REVISED STANDARD PLAN RSP A20C

2010 REVISED STANDARD PLAN RSP A20C

4-29-13

Dist	COUNTY	ROUTE	POST MILES TOTAL PROJECT	SHEET No.	TOTAL SHEETS
03	ED, Pla	50, 80, 193	Var	37	64

REGISTERED CIVIL ENGINEER

April 20, 2012
PLANS APPROVAL DATE

REGISTERED PROFESSIONAL ENGINEER
Roberta L. McLaughlin
No. C40375
Exp. 3-31-13
CIVIL
STATE OF CALIFORNIA

THE STATE OF CALIFORNIA OR ITS OFFICERS OR AGENTS SHALL NOT BE RESPONSIBLE FOR THE ACCURACY OR COMPLETENESS OF SCANNED COPIES OF THIS PLAN SHEET.

TO ACCOMPANY PLANS DATED 6-1-15

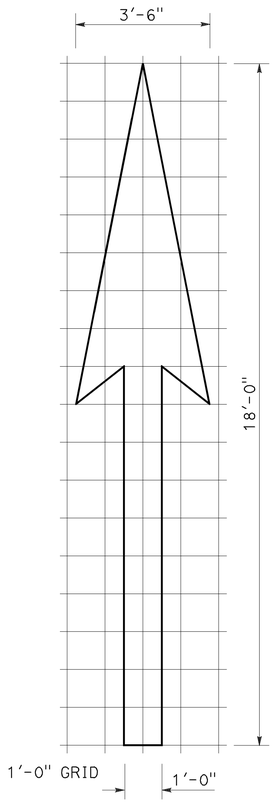

A=25 ft^2

TYPE I 18'-0" ARROW

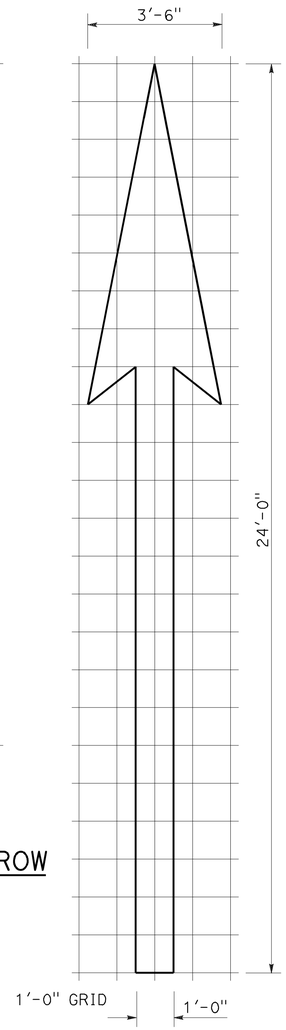

A=31 ft^2

TYPE I 24'-0" ARROW

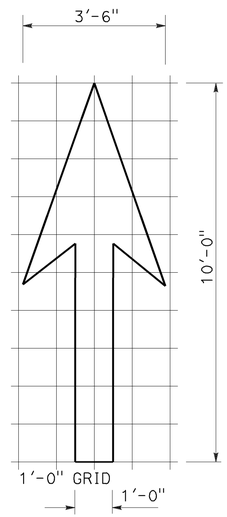

A=14 ft^2

TYPE I 10'-0" ARROW

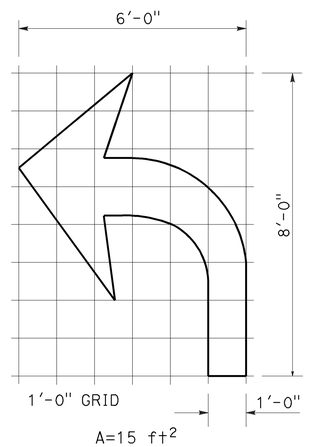

A=15 ft^2

TYPE IV (L) ARROW

(For Type IV (R) arrow, use mirror image)

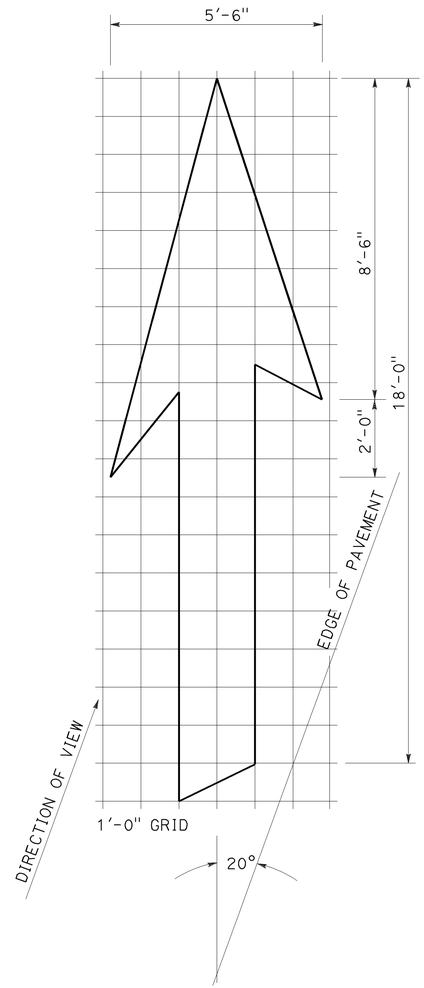

A=42 ft^2

TYPE VI ARROW

Right lane drop arrow
(For left lane, use mirror image)

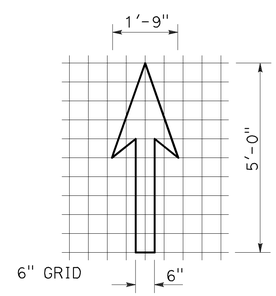

A=3.5 ft^2

BIKE LANE ARROW

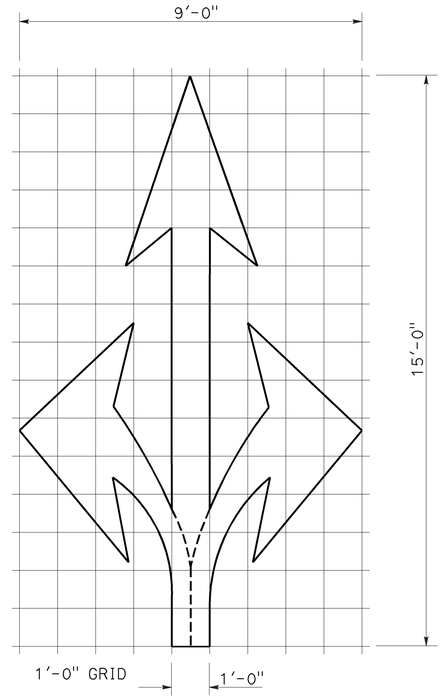

A=36 ft^2

TYPE VIII ARROW

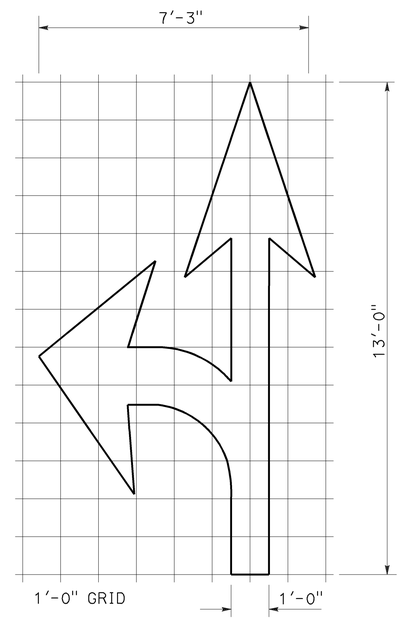

A=27 ft^2

TYPE VII (L) ARROW

(For Type VII (R) arrow, use mirror image)

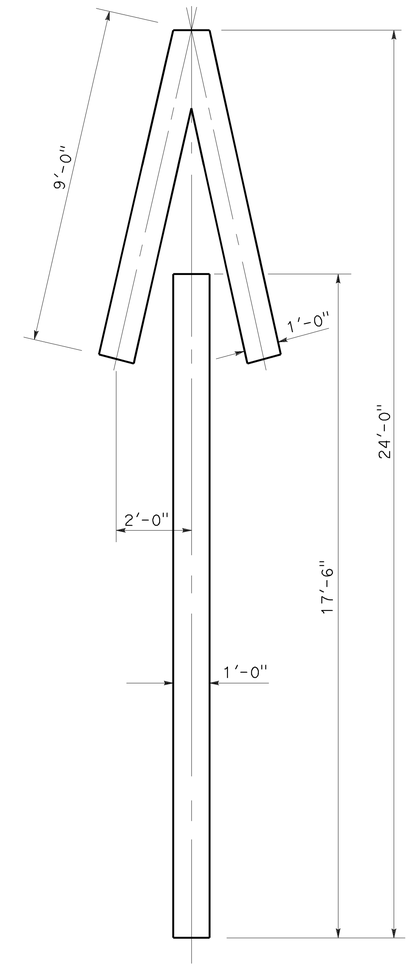

A=33 ft^2

TYPE V ARROW

NOTE:
Minor variations in dimensions may be accepted by the Engineer.

STATE OF CALIFORNIA
DEPARTMENT OF TRANSPORTATION

PAVEMENT MARKINGS ARROWS

NO SCALE

RSP A24A DATED APRIL 20, 2012 SUPERSEDES STANDARD PLAN A24A DATED MAY 20, 2011 - PAGE 13 OF THE STANDARD PLANS BOOK DATED 2010.

REVISED STANDARD PLAN RSP A24A

2010 REVISED STANDARD PLAN RSP A24A

3-14-12

Dist	COUNTY	ROUTE	POST MILES TOTAL PROJECT	SHEET No.	TOTAL SHEETS
03	ED, Pla	50, 80, 193	Var	38	64

Randell D. Hiatt
REGISTERED CIVIL ENGINEER

January 23, 2015
PLANS APPROVAL DATE

REGISTERED PROFESSIONAL ENGINEER
Randell D. Hiatt
No. C50200
Exp. 6-30-15
CIVIL
STATE OF CALIFORNIA

THE STATE OF CALIFORNIA OR ITS OFFICERS OR AGENTS SHALL NOT BE RESPONSIBLE FOR THE ACCURACY OR COMPLETENESS OF SCANNED COPIES OF THIS PLAN SHEET.

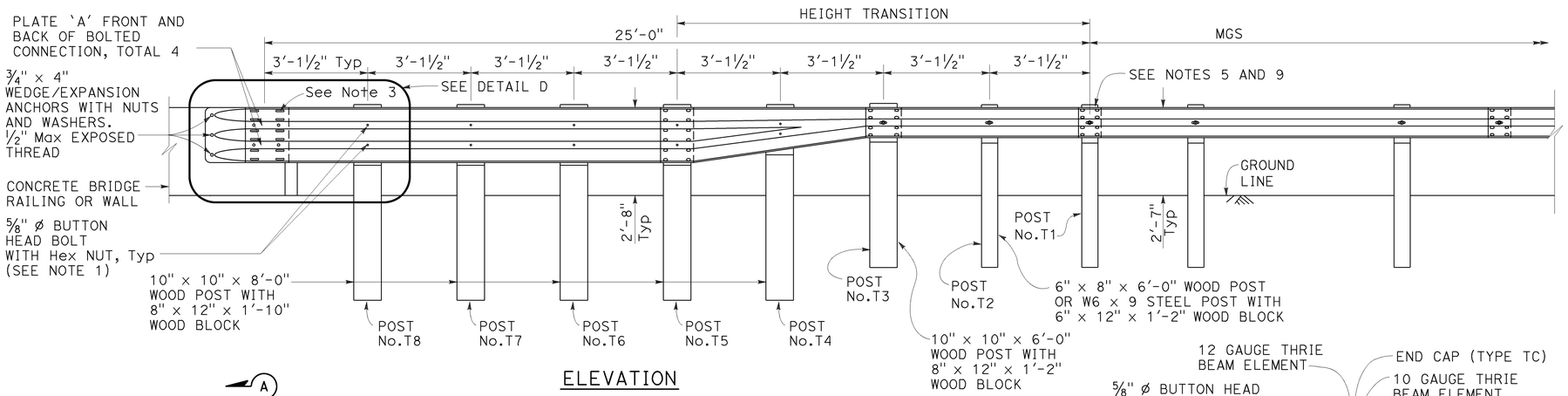

ELEVATION

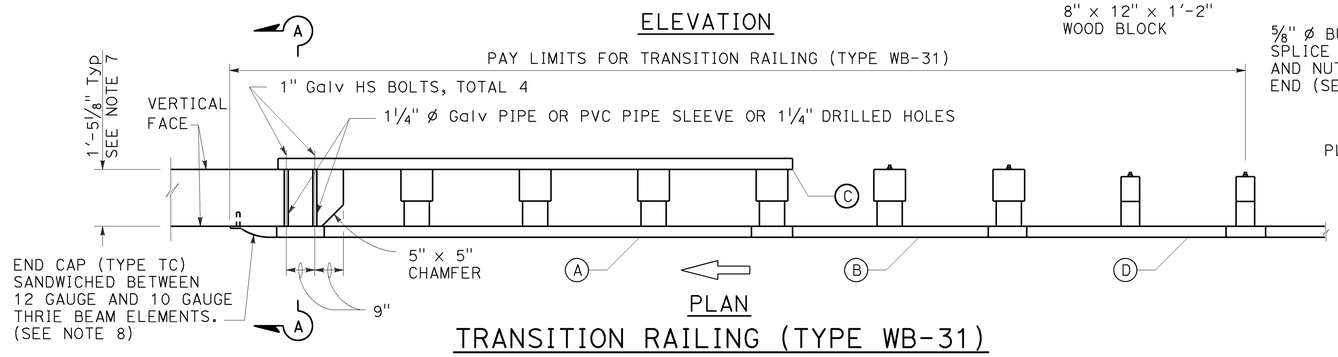

PLAN

TRANSITION RAILING (TYPE WB-31)

(No Blockout Attachment)

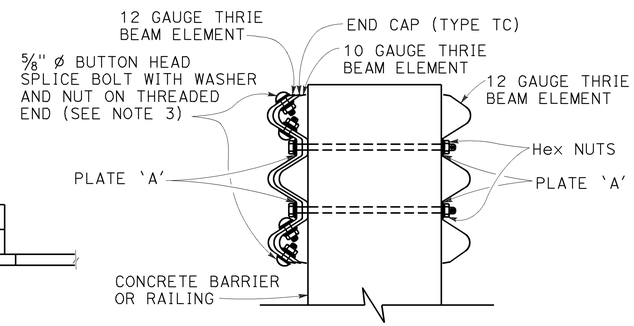

SECTION A-A

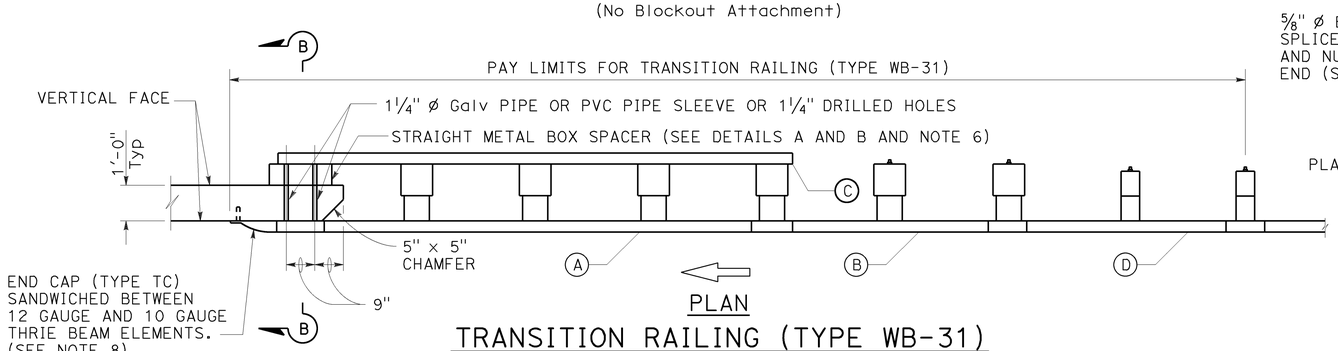

PLAN

TRANSITION RAILING (TYPE WB-31)

(Blockout Attachment)

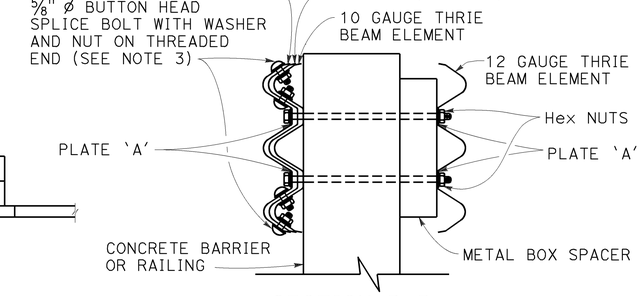

SECTION B-B

LEGEND:

(A) NESTED THRIE BEAM ELEMENTS (ONE 12 GAUGE ELEMENT NESTED OVER ONE 10 GAUGE ELEMENT).

(B) ONE ASYMMETRICAL 10 GAUGE "W" BEAM TO THRIE BEAM ELEMENT.

(C) ONE 12 GAUGE THRIE BEAM ELEMENT.

(D) ONE 10 GAUGE "W" BEAM RAIL ELEMENT (7'-3 1/2"LENGTH)

10 GAUGE = 0.138" THICK
12 GAUGE = 0.108" THICK

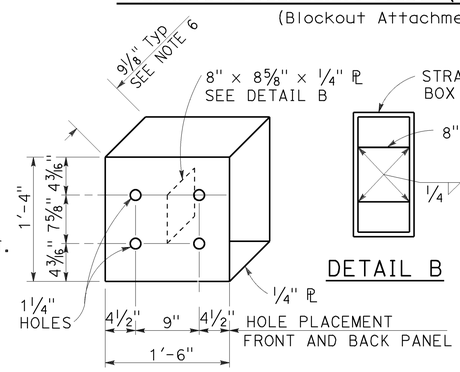

DETAIL A

STRAIGHT METAL BOX SPACER

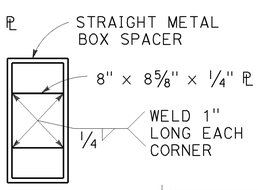

DETAIL B

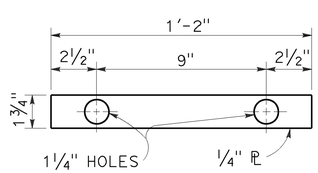

DETAIL C

PLATE 'A'

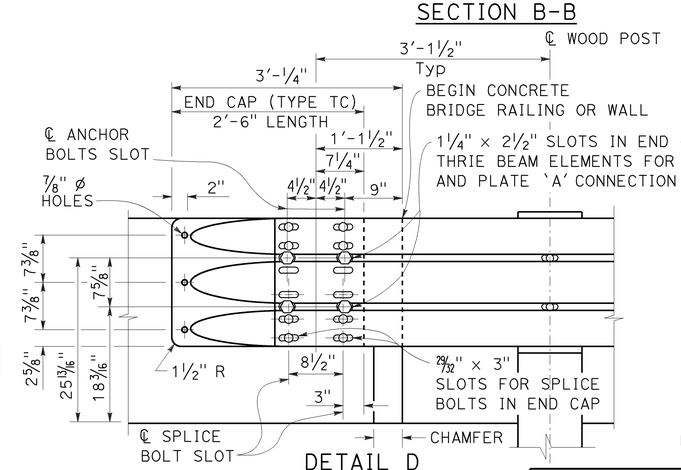

DETAIL D

NOTES:

TO ACCOMPANY PLANS DATED 6-1-15

1. Use 5/8" ø Button head bolts and hex nuts for connections to posts. No washer on rail face for bolted connections to post.

2. The nested rail elements, end cap, and 'W' beam to thrie beam element may be spliced together prior to bolting the elements to the wood post and concrete barrier or railing.

3. Exterior splice bolt holes for rail element splices at Post No. T5 and the connection to the concrete barrier or railing shall be the standard 29/32" x 1 1/8" slot size. Interior splice bolt holes at these locations may be increased up to 1 1/4" ø. Only the top 4 and the bottom 4 splice bolts with washers and nuts are required for rail splices at Post No. T5 and the connection to the concrete barrier or railing.

4. The top elevation of Posts No. T2 through No. T7 shall not project more than 1" above the top elevation of the rail element.

5. Typically, the railing connected to Transition Railing (Type WB-31) will be either standard railing section of MGS with height transition ratio of 150:1 or a Caltrans approved 31" end treatment attached to Post No. T1.

6. The depth of the metal box spacer varies from the 9 1/8" to 1 1/2" and is dependent on the width of the concrete railing or wall. The combined dimension for the depth of the metal box spacer plus the width of railing or wall is typically 21 1/8". Where the space between the backside of the concrete railing or wall and the rear thrie beam element is less than 1 1/2", metal plates similar to Plate 'A' are to be used as spacers.

7. Where the width of the concrete railing or wall is greater than 17 1/8", wood blocks are to be used to fill the space created between the backside of Posts No. T5 through No. T8 and the rear thrie beam element. These wood blocks shall be 8" in width and 1'-2" in length. The dimension between the front thrie beam element and the rear thrie beam element is to match the width of the concrete railing or wall.

8. End cap may be installed over 12 gauge and 10 gauge thrie beam elements where transition railing is installed on the departure end of bridge railing.

9. Conform standard railing section height to 31" at Post No. T1 using height transition ratio of 150:1.

STATE OF CALIFORNIA
DEPARTMENT OF TRANSPORTATION

MIDWEST GUARDRAIL SYSTEM TRANSITION RAILING (TYPE WB-31)

NO SCALE

RSP A77U4 DATED JANUARY 23, 2015 SUPERSEDES RSP A77U4 DATED NOVEMBER 15, 2013 AND RSP A77U4 DATED JULY 19, 2013 THAT SUPPLEMENTS THE STANDARD PLANS BOOK DATED 2010.

REVISED STANDARD PLAN RSP A77U4

2010 REVISED STANDARD PLAN RSP A77U4

1-8-15

Dist	COUNTY	ROUTE	POST MILES TOTAL PROJECT	SHEET No.	TOTAL SHEETS
03	ED, Pla	50, 80, 193	Var	39	64

REGISTERED CIVIL ENGINEER

July 19, 2013
PLANS APPROVAL DATE

REGISTERED PROFESSIONAL ENGINEER
Gurinderpal Bhullar
No. C48815
Exp. 9-30-14
CIVIL
STATE OF CALIFORNIA

THE STATE OF CALIFORNIA OR ITS OFFICERS OR AGENTS SHALL NOT BE RESPONSIBLE FOR THE ACCURACY OR COMPLETENESS OF SCANNED COPIES OF THIS PLAN SHEET.

TO ACCOMPANY PLANS DATED 6-1-15

2010 REVISED STANDARD PLAN RSP T9

TABLE 1

TAPER LENGTH CRITERIA AND CHANNELIZING DEVICE SPACING

SPEED (S)	MINIMUM TAPER LENGTH * FOR WIDTH OF OFFSET 12 FEET (W)				MAXIMUM CHANNELIZING DEVICE SPACING		
					X	Y	Z **
	TANGENT 2L	MERGING L	SHIFTING L/2	SHOULDER L/3	TAPER	TANGENT	CONFLICT
mph	ft	ft	ft	ft	ft	ft	ft
20	160	80	40	27	20	40	10
25	250	125	63	42	25	50	12
30	360	180	90	60	30	60	15
35	490	245	123	82	35	70	17
40	640	320	160	107	40	80	20
45	1080	540	270	180	45	90	22
50	1200	600	300	200	50	100	25
55	1320	660	330	220	55	110	27
60	1440	720	360	240	60	120	30
65	1560	780	390	260	65	130	32
70	1680	840	420	280	70	140	35

* - For other offsets, use the following merging taper length formula for L:
For speed of 40 mph or less, $L = WS^2/60$
For speed of 45 mph or more, $L = WS$

Where: L = Taper length in feet
W = Width of offset in feet
S = Posted speed limit, off-peak 85th-percentile speed prior to work starting, or the anticipated operating speed in mph

** - Use for taper and tangent sections where there are no pavement markings or where there is a conflict between existing pavement markings and channelizers (CA).

TABLE 2

LONGITUDINAL BUFFER SPACE AND FLAGGER STATION SPACING

SPEED *	Min D **	DOWNGRADE Min D ***		
		-3%	-6%	-9%
mph	ft	ft	ft	ft
20	115	116	120	126
25	155	158	165	173
30	200	205	215	227
35	250	257	271	287
40	305	315	333	354
45	360	378	400	427
50	425	446	474	507
55	495	520	553	593
60	570	598	638	686
65	645	682	728	785
70	730	771	825	891

* - Speed is posted speed limit, off-peak 85th-percentile speed prior to work starting, or the anticipated operating speed in mph

** - Longitudinal buffer space or flagger station spacing

*** - Use on sustained downgrade steeper than -3 percent and longer than 1 mile.

TABLE 3

ADVANCE WARNING SIGN SPACING

ROAD TYPE	DISTANCE BETWEEN SIGNS *		
	A	B	C
	ft	ft	ft
URBAN - 25 mph OR LESS	100	100	100
URBAN - MORE THAN 25 mph TO 40 mph	250	250	250
URBAN - MORE THAN 40 mph	350	350	350
RURAL	500	500	500
EXPRESSWAY / FREEWAY	1000	1500	2640

* - The distances are approximate, are intended for guidance purposes only, and should be applied with engineering judgment. These distances should be adjusted by the Engineer for field conditions, if necessary, by increasing or decreasing the recommmended distances.

STATE OF CALIFORNIA
DEPARTMENT OF TRANSPORTATION

TRAFFIC CONTROL SYSTEM TABLES FOR LANE AND RAMP CLOSURES

NO SCALE

RSP T9 DATED JULY 19, 2013 SUPERSEDES RSP T9 DATED APRIL 19, 2013 THAT SUPPLEMENTS THE STANDARD PLANS BOOK DATED 2010.

REVISED STANDARD PLAN RSP T9

Dist	COUNTY	ROUTE	POST MILES TOTAL PROJECT	SHEET No.	TOTAL SHEETS
03	ED, Pla	50, 80, 193	Var	40	64

REGISTERED CIVIL ENGINEER

April 19, 2013
PLANS APPROVAL DATE

REGISTERED PROFESSIONAL ENGINEER Gurinderpal Bhullar No. C48815 Exp. 9-30-14 CIVIL STATE OF CALIFORNIA

THE STATE OF CALIFORNIA OR ITS OFFICERS OR AGENTS SHALL NOT BE RESPONSIBLE FOR THE ACCURACY OR COMPLETENESS OF SCANNED COPIES OF THIS PLAN SHEET.

TO ACCOMPANY PLANS DATED 6-1-15

NOTES:

See Revised Standard Plan RSP T9 for tables.

Use cone spacing X for taper segment, Y for tangent segment or Z for conflict situations, as approriate, per Table 1, unless X, Y, or Z cone spacing is shown on this sheet.

Unless otherwise specified in the special provisions, all temporary warning signs shall have black legend on fluorescent orange background.

California codes are designated by (CA). Otherwise, Federal (MUTCD) codes are shown.

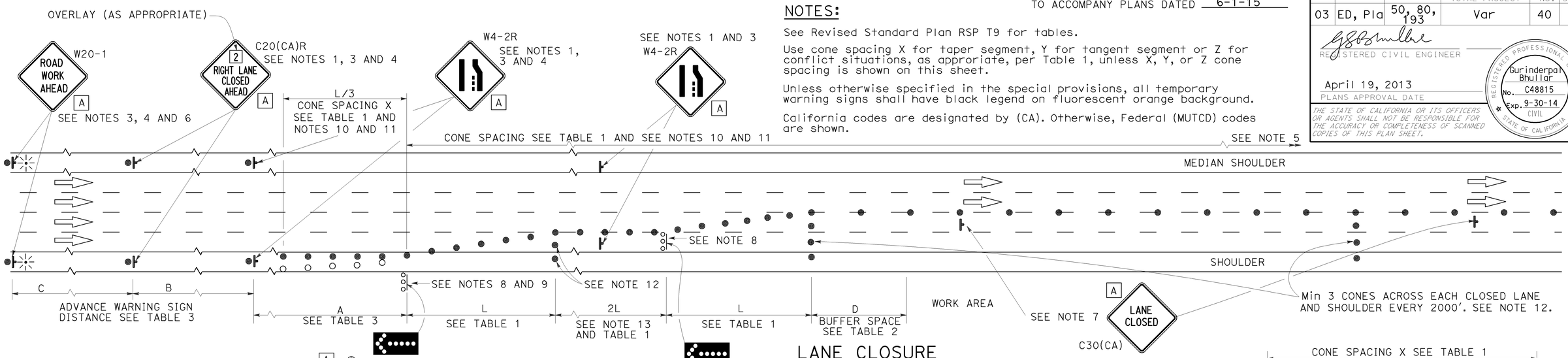

LANE CLOSURE

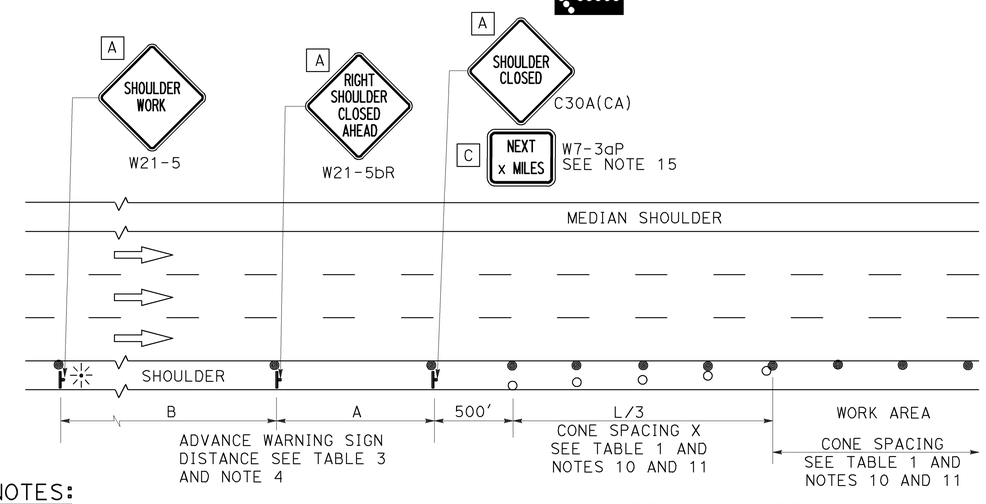

SHOULDER CLOSURE

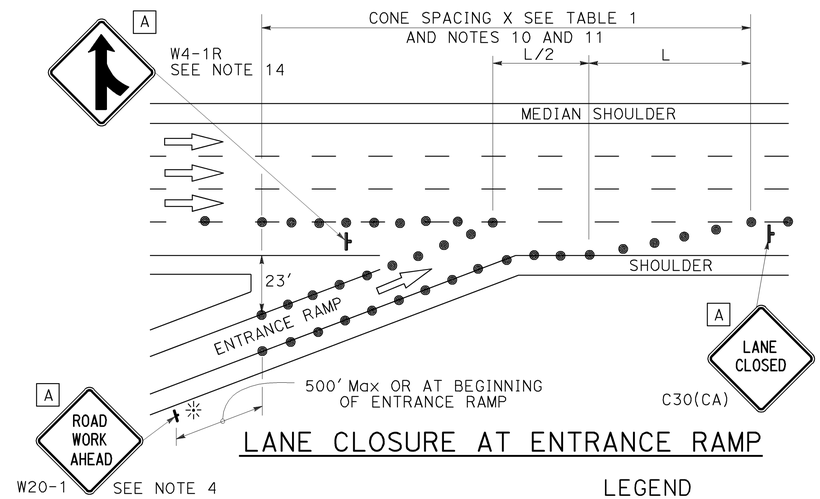

LANE CLOSURE AT ENTRANCE RAMP

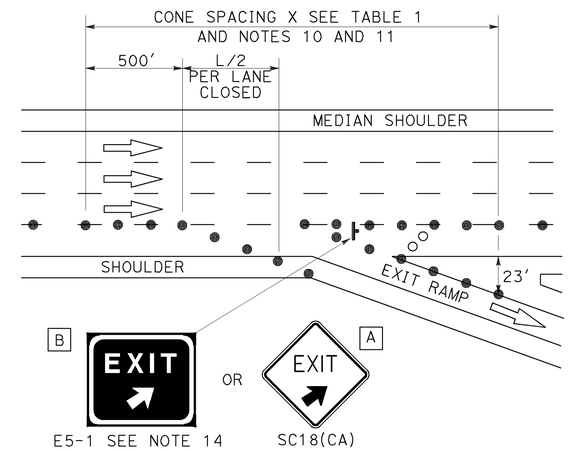

LANE CLOSURE AT EXIT RAMP

NOTES:

1. Median lane closures shall conform to the details as shown except that C20(CA)L and W4-2L signs shall be used.
2. At least one person shall be assigned to provide full time maintenance of traffic control devices for lane closures.
3. Duplicate sign installations are not required:
   a) On opposite shoulder if at least one-half of the available lanes remain open to traffic.
   b) In the median if the width of the median shoulder is less than 8' and the outside lanes are to be closed.
4. Each advance warning sign on each side of the roadway shall be equipped with at least two flags for daytime closure. Each flag shall be at least 16" x 16" in size and shall be orange or fluorescent red-orange in color. Flashing beacons shall be placed at the locations indicated for lane closure during hours of darkness.
5. A G20-2 "END ROAD WORK" sign, with minimum size of 48" x 24" as appropriate, shall be placed at the end of the lane closure unless the end of work area is obvious or ends within a larger project's limits.
6. If the W20-1 sign would follow within 2000' of a stationary W20-1 or G20-1 "ROAD WORK NEXT _____ MILES", use a C20(CA) sign for the first advance warning sign.
7. Place a C30(CA) sign every 2000' throughout length of lane closure.
8. One flashing arrow sign for each lane closed. The flashing arrow signs shall be Type I.
9. A minimum 1500' of sight distance shall be provided where possible for vehicles approaching the first flashing arrow sign. Lane closures shall not begin at top of crest vertical curve or on a horizontal curve.
10. All cones used for lane closures during the hours of darkness shall be fitted with retroreflective bands (or sleeves) as specified in the specifications.
11. Portable delineators, placed at one-half the spacing indicated for traffic cones may be used instead of cones for daytime closures only.
12. Unless otherwise specified in the special provisions, a minimum of 3 cones shall be placed transversely across each closed lane and shoulder at each location where a taper across a traffic lane ends and every 2000' as shown on the "Lane Closure" detail. Two Type II barricades may be used instead of the 3 cones. The transverse alignment of the cones or barricades on the closed shoulder may be shifted from the transverse alignment to provide access to the work.
13. Unless otherwise specified in the special provisions, the 2L tangent shown along lane lines shall be used between the L tapers required for each closed traffic lane.
14. Unless otherwise specified in the special provisions, the E5-1 or SC18(CA) and W4-1 signs shall be used as shown.
15. A W7-3aP "NEXT____ MILES" plaque must be used if theshoulder closure extends beyond the distance that can be perceived by road users.

LEGEND

- TRAFFIC CONE
- TRAFFIC CONE (OPTIONAL TAPER)
- TEMPORARY TRAFFIC CONTROL SIGN
- FLASHING ARROW SIGN (FAS)
- FAS SUPPORT OR TRAILER
- PORTABLE FLASHING BEACON

SIGN PANEL SIZE (Min)

A	48" x 48"
B	72" x 60"
C	36" x 30"

STATE OF CALIFORNIA
DEPARTMENT OF TRANSPORTATION

TRAFFIC CONTROL SYSTEM FOR LANE CLOSURE ON FREEWAYS AND EXPRESSWAYS

NO SCALE

RSP T10 DATED APRIL 19, 2013 SUPERSEDES STANDARD PLAN T10 DATED MAY 20, 2011 - PAGE 237 OF THE STANDARD PLANS BOOK DATED 2010.

REVISED STANDARD PLAN RSP T10

2010 REVISED STANDARD PLAN RSP T10

12-18-12

TO ACCOMPANY PLANS DATED 6-1-15

Dist	COUNTY	ROUTE	POST MILES TOTAL PROJECT	SHEET No.	TOTAL SHEETS
03	ED, Pla	50, 80, 193	Var	41	64

REGISTERED CIVIL ENGINEER

April 19, 2013
PLANS APPROVAL DATE

REGISTERED PROFESSIONAL ENGINEER Gurinderpal Bhullar No. C48815 Exp. 9-30-14 CIVIL STATE OF CALIFORNIA

THE STATE OF CALIFORNIA OR ITS OFFICERS OR AGENTS SHALL NOT BE RESPONSIBLE FOR THE ACCURACY OR COMPLETENESS OF SCANNED COPIES OF THIS PLAN SHEET.

NOTES: See Revised Standard Plan RSP T9 for tables.

Use cone spacing X for taper segment, Y for tangent segment or Z for conflict situations, as approriate, per Table 1, unless X, Y, or Z cone spacing is shown on this sheet.

Unless otherwise specified in the special provisions, all temporary warning signs shall have black legend on fluorescent orange background.

California codes are designated by (CA). Otherwise, Federal (MUTCD) codes are shown.

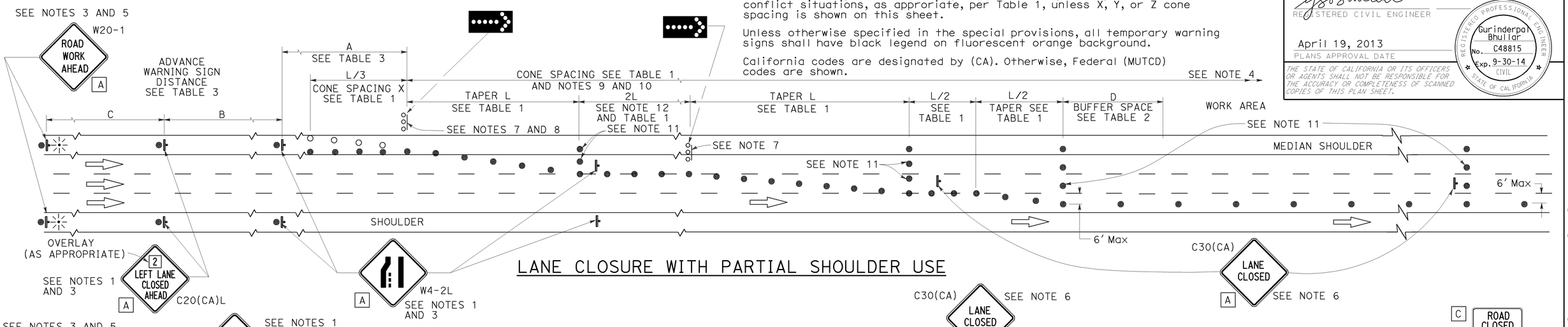

LANE CLOSURE WITH PARTIAL SHOULDER USE

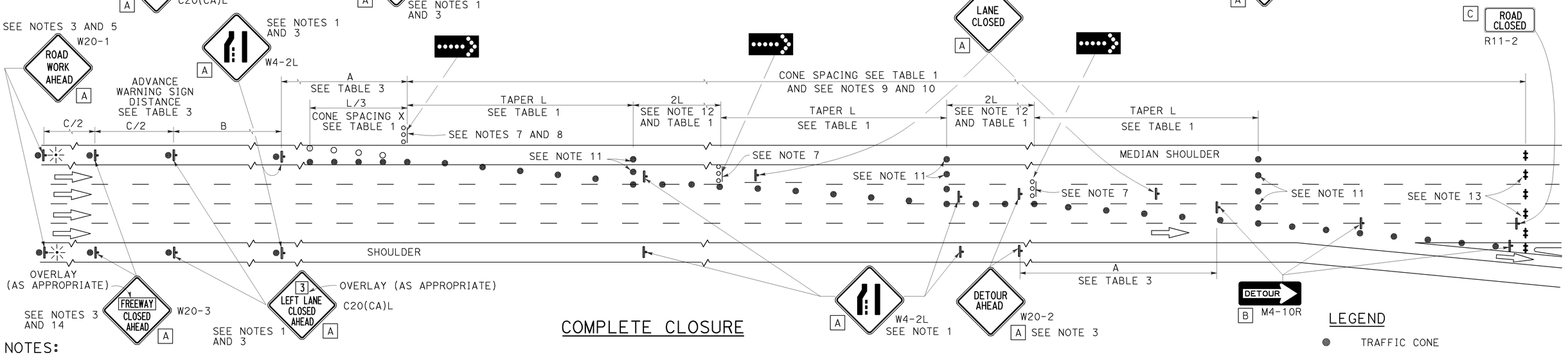

COMPLETE CLOSURE

NOTES:

1. Lane closures on the right side using partial median shoulder as a traffic lane shall conform to the details as shown except that C20(CA)R and W4-2R signs shall be used.
2. At least one person shall be assigned to provide full time maintenance of traffic control devices for lane closures.
3. Each advance warning sign on each side of the roadway shall be equipped with at least two flags for daytime closure. Each flag shall be at least 16" X 16" in size and shall be orange or fluorescent red-orange in color. Flashing beacons shall be placed at the locations indicated for lane closure during hours of darkness.
4. A G20-2 "END ROAD WORK" sign, with minimum size of 48" x 24" as appropriate, shall be placed at the end of the lane closure unless the end of work area is obvious or ends within a larger project's limits.
5. If the W20-1 sign would follow within 2000' of a stationary W20-1 or G20-1 "ROAD WORK NEXT ___ MILES", use a C20(CA) sign for the first advance warning sign.
6. Place a C30(CA) sign every 2000' throughout length of lane closure.
7. One flashing arrow sign for each lane closed. The flashing arrow signs shall be Type I.
8. A minimum 1500' of sight distance shall be provided where possible for vehicles approaching the first flashing arrow sign. Lane closures shall not begin at the top of crest vertical curve or on a horizontal curve.
9. All cones used for lane closures during the hours of darkness shall be fitted with retroreflective bands (or sleeves) as specified in the specifications.
10. Portable delineators, placed at one-half the spacing indicated for traffic cones, may be used instead of cones for daytime closures only.
11. Unless otherwise specified in the special provisions, a minimum of 3 cones shall be placed transversely across each closed lane and shoulder at each location where a taper across a traffic lane ends and every 2000' as shown on the "Lane Closure With Partial Shoulder Use" detail. Two Type II barricades may be used instead of the 3 cones. The transverse alignment of the cones or barricades on the closed shoulder may be shifted from the transverse alignment to provide access to the work.
12. Unless otherwise specified in the special provisions, the 2L tangent shown along lane lines shall be used between the L tapers required for each closed traffic lane.
13. A minimum of Two Type II or III barricades shall be placed across each closed lane and shoulder at the location shown and every 2000' within the complete closure area. Within the complete closure area, the transverse alignment of the barricades on the closed shoulder may be shifted from the transverse alignment to provide access to the work.
14. When specified in the special provisions, a W20-2 "DETOUR AHEAD" sign is to be used in place of the W20-3 "FREEWAY CLOSED AHEAD" sign.

SIGN PANEL SIZE (Min)

A	48" x 48"
B	48" x 18"
C	48" x 30"

LEGEND

- TRAFFIC CONE
- TRAFFIC CONE (OPTIONAL TAPER)
- TEMPORARY TRAFFIC CONTROL SIGN
- FLASHING ARROW SIGN (FAS)
- FAS SUPPORT OR TRAILER
- PORTABLE FLASHING BEACON

STATE OF CALIFORNIA
DEPARTMENT OF TRANSPORTATION

TRAFFIC CONTROL SYSTEM FOR LANE CLOSURES ON FREEWAYS AND EXPRESSWAYS

NO SCALE

RSP T10A DATED APRIL 19, 2013 SUPERSEDES STANDARD PLAN T10A DATED MAY 20, 2011 - PAGE 238 OF THE STANDARD PLANS BOOK DATED 2010.

REVISED STANDARD PLAN RSP T10A

2010 REVISED STANDARD PLAN RSP T10A

12-18-12

Dist	COUNTY	ROUTE	POST MILES TOTAL PROJECT	SHEET No.	TOTAL SHEETS
03	ED, Pla	50, 80, 193	Var	42	64

Devinder Singh
REGISTERED CIVIL ENGINEER

October 17, 2014
PLANS APPROVAL DATE

REGISTERED PROFESSIONAL ENGINEER
Devinder Singh
No. C50470
Exp. 6-30-15
CIVIL
STATE OF CALIFORNIA

THE STATE OF CALIFORNIA OR ITS OFFICERS OR AGENTS SHALL NOT BE RESPONSIBLE FOR THE ACCURACY OR COMPLETENESS OF SCANNED COPIES OF THIS PLAN SHEET.

TO ACCOMPANY PLANS DATED 6-1-15

NOTES:

See Revised Standard Plan RSP T9 for tables.

Use cone spacing X for taper segment, Y for tangent segment or Z for conflict situations, as approriate, per Table 1, unless X, Y, or Z cone spacing is shown on this sheet.

Unless otherwise specified in the special provisions, all temporary warning signs shall have black legend on fluorescent orange background.

California codes are designated by (CA). Otherwise, Federal (MUTCD) codes are shown.

TYPICAL LANE CLOSURE WITH REVERSIBLE CONTROL

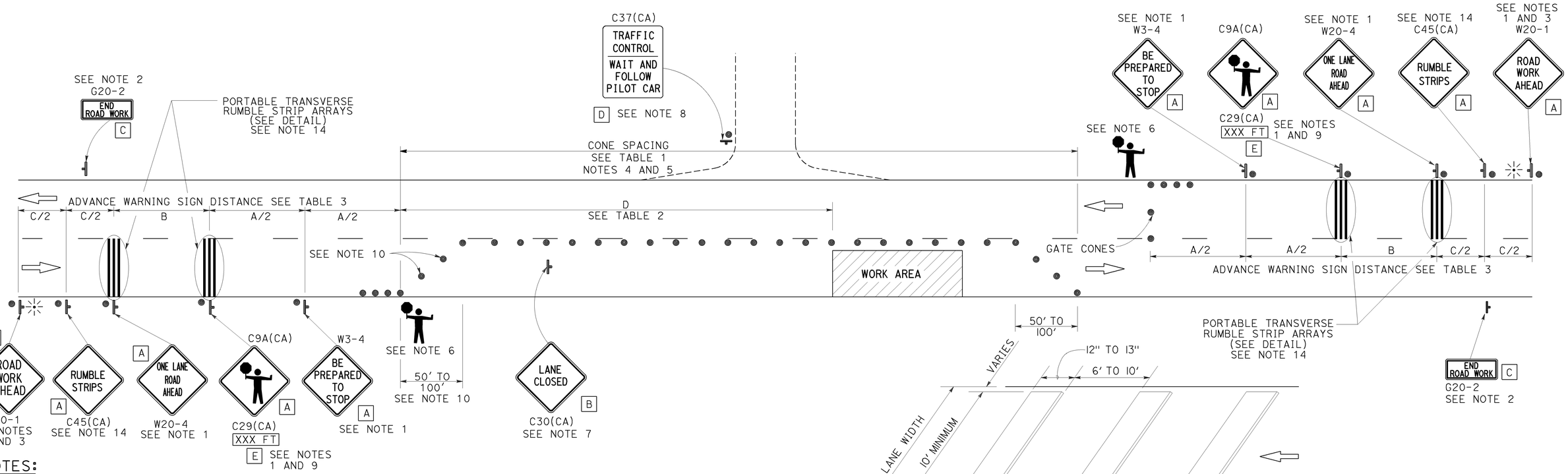

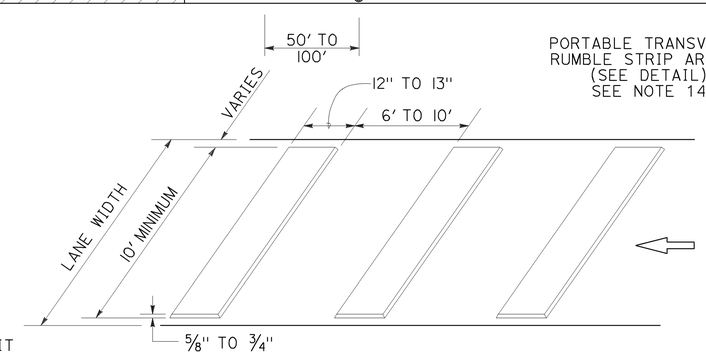

PORTABLE TRANSVERSE RUMBLE STRIP ARRAY DETAIL

NOTES:

1. Each advance warning sign in each direction of travel shall be equipped with at least two flags for daytime closure. Each flag shall be at least 16" x 16" in size and shall be orange or fluorescent red-orange in color. Flashing beacons shall be placed at the locations indicated for lane closure during hours of darkness.
2. A G20-2 "END ROAD WORK" sign, as appropriate, shall be placed at the end of the lane control unless the end of work area is obvious, or ends within a larger project's limits.
3. If the W20-1 sign would follow within 2000' of a stationary W20-1 or G20-1 "ROAD WORK NEXT _____ MILES", use a W20-4 sign for the first advance warning sign.
4. All cones used for lane closures during the hours of darkness shall be fitted with retroreflective bands (or sleeves) as specified in the specifications.
5. Portable delineators, placed at one-half the spacing indicated for traffic cones, may be used instead of cones for daytime closures only.
6. Additional advance flaggers may be required. Flagger should stand in a conspicuous place, be visible to approaching traffic as well as approaching vehicles after the first vehicle has stopped. During the hours of darkness, the flagging-station and flagger shall be illuminated and clearly visible to approaching traffic. The illumination footprint of the lighting on the ground shall be at least 20' in diameter. Place a minimum of four cones at 50' intervals in advance of flagger station as shown.
7. Place C30(CA) "LANE CLOSED" sign at 500' to 1000' intervals throughout extended work areas. They are optional if the work area is visible from the flagger station.
8. When a pilot car is used, place a C37(CA) "TRAFFIC CONTROL-WAIT AND FOLLOW PILOT CAR" sign with black legend on white background at all intersections, driveways and alleys without a flagger within traffic control area. Signs shall be clean and visible at all times. Where traffic can not be effectively self-regulated, at least one flagger shall be used at each intersection within traffic control area.
9. An optional C29(CA) sign may be placed below the C9A(CA) sign.
10. Either traffic cones or barricades shall be placed on the taper. Barricades shall be Type I, II, or III.
11. The color of the portable transverse rumble strips shall be black or orange. Use 2 arrays, each array shall consist of 3 rumble strips.
12. Portable transverse rumble strips shall not be placed on sharp horizontal or vertical curves nor shall they be placed through pedestrian crossings.
13. If the portable transverse rumble strips become out of alignment (skewed) by more than 6 inches, measured from one end to the other, they shall be readjusted to bring the placement back to the original location.
14. Portable transverse rumble strips are not required if any one of the following conditions is satisfied:
    A. Work duration occupies a location for four hours or less
    B. Posted speed limit is below 45 MPH
    C. Work is of emergency nature
    D. Work zone is in snow or icy weather conditions

LEGEND

- TRAFFIC CONE
- TEMPORARY TRAFFIC CONTROL SIGN
- PORTABLE FLASHING BEACON
- FLAGGER

SIGN PANEL SIZE (Min)

A	48" x 48"
B	30" x 30"
C	36" x 18"
D	36" x 42"
E	20" x 7"

STATE OF CALIFORNIA
DEPARTMENT OF TRANSPORTATION

TRAFFIC CONTROL SYSTEM FOR LANE CLOSURE ON TWO LANE CONVENTIONAL HIGHWAYS

NO SCALE

RSP T13 DATED OCTOBER 17, 2014 SUPERSEDES RSP T13 DATED JULY 18, 2014 AND RSP T13 DATED APRIL 19, 2013 AND STANDARD PLAN T13 DATED MAY 20, 2011 - PAGE 241 OF THE STANDARD PLANS BOOK DATED 2010.

REVISED STANDARD PLAN RSP T13

2010 REVISED STANDARD PLAN RSP T13

9-26-14

Dist	COUNTY	ROUTE	POST MILES TOTAL PROJECT	SHEET No.	TOTAL SHEETS
03	ED, Pla	50, 80, 193	Var	43	64

REGISTERED CIVIL ENGINEER

April 19, 2013
PLANS APPROVAL DATE

REGISTERED PROFESSIONAL ENGINEER Gurinderpal Bhullar No. C48815 Exp. 9-30-14 CIVIL STATE OF CALIFORNIA

THE STATE OF CALIFORNIA OR ITS OFFICERS OR AGENTS SHALL NOT BE RESPONSIBLE FOR THE ACCURACY OR COMPLETENESS OF SCANNED COPIES OF THIS PLAN SHEET.

TO ACCOMPANY PLANS DATED 6-1-15

TYPICAL RAMP CLOSURES

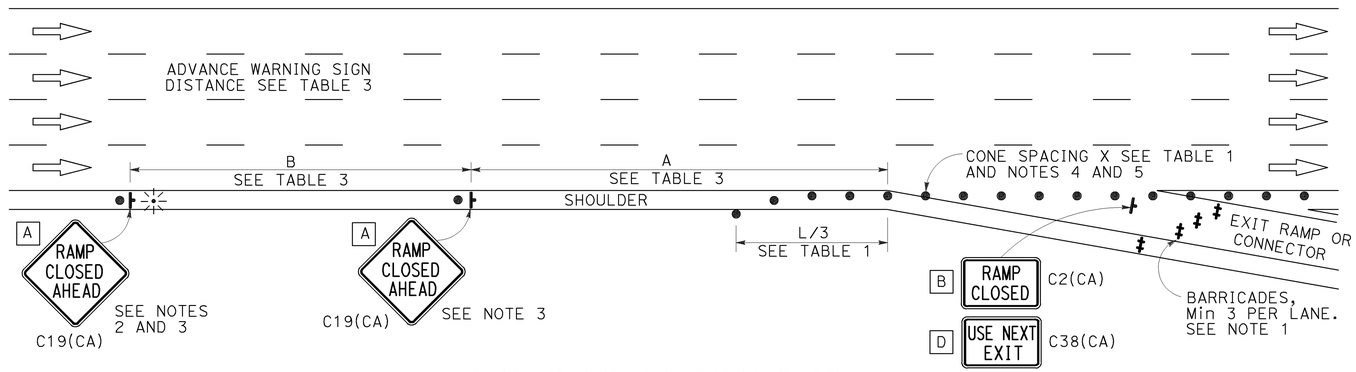

EXIT RAMP OR CONNECTOR

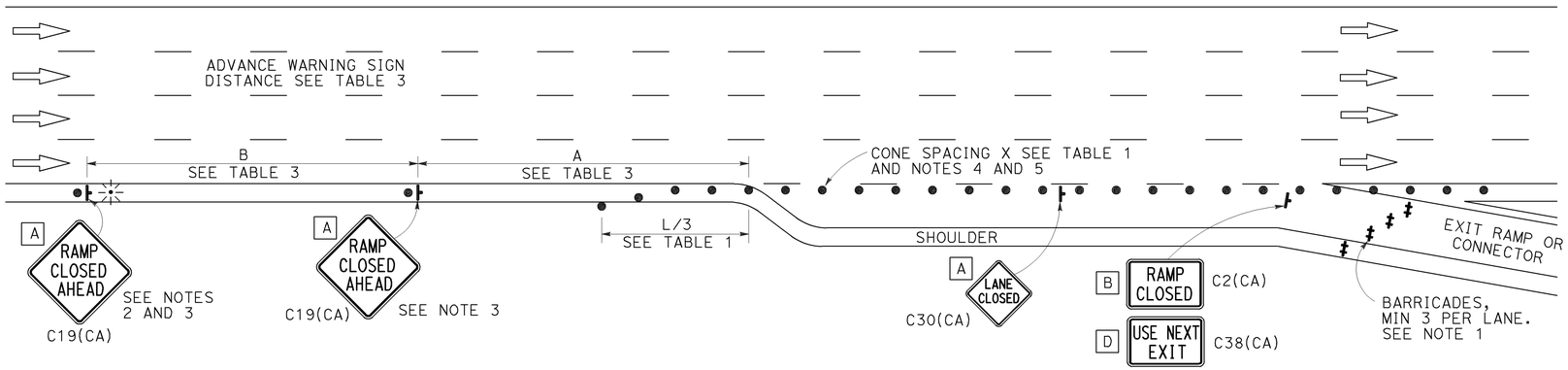

EXIT RAMP OR CONNECTOR WITH ADDITIONAL LANE

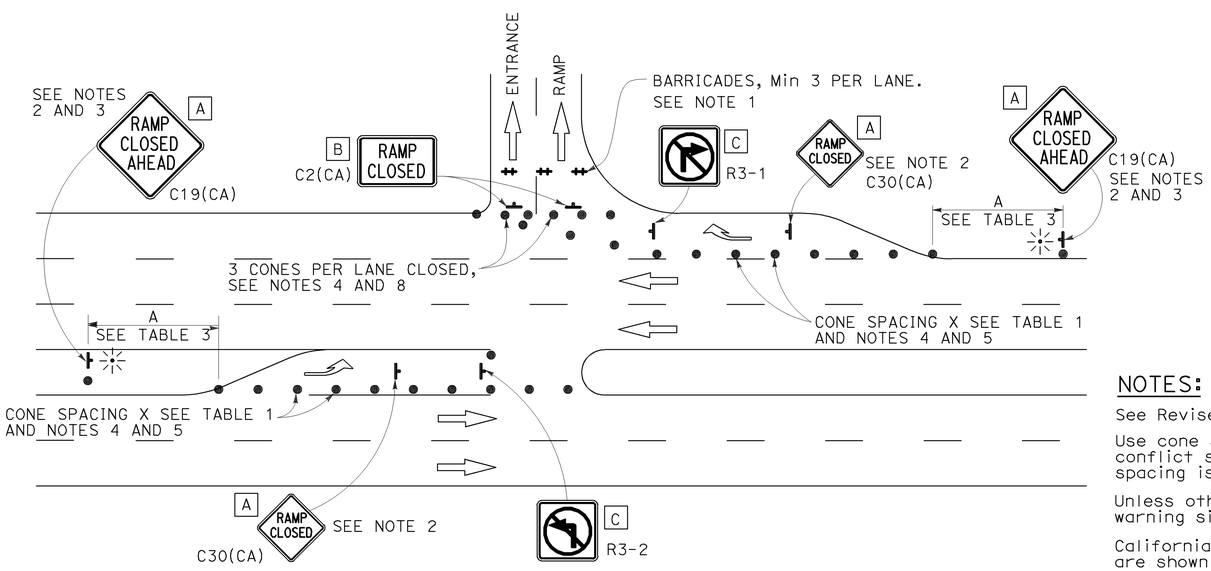

ENTRANCE RAMP WITH TURNING POCKETS

SIGN PANEL SIZE (Min)

- A 48" × 48"
- B 48" × 30"
- C 36" × 36"
- D 48" × 36"

LEGEND

- TRAFFIC CONE
- TEMPORARY TRAFFIC CONTROL SIGN
- BARRICADES
- PORTABLE FLASHING BEACON

NOTES:

1. Barricades shall be Type I, II, or III for closures lasting one week or less and Type III for closures lasting longer than one week.
2. In addition to placing the C19(CA) "RAMP CLOSED AHEAD" and C30(CA) "RAMP CLOSED" signs, black on orange overlay plates with the word "CLOSED" may be mounted, as directed by the Engineer, on all guide signs that refer to the closed ramp. The letter size on the overlay shall be the same as the guide sign.
3. Each advance C19(CA) "RAMP CLOSED AHEAD" sign shall be equipped with at least two flags for daytime closure. Each flag shall be at least 16" × 16" in size and shall be orange or fluorescent red-orange in color. A flashing beacon shall be placed on top of the first C19(CA) sign during hours of darkness.
4. All cones used for ramp closures during the hours of darkness shall be fitted with retroreflective bands (or sleeves) as specified in the specifications.
5. Portable delineators, placed at one-half the spacing indicated for traffic cones, may be used instead of cones for daytime ramp closures only.
6. At least one person shall be assigned to provide full time maintenance of traffic control devices, unless otherwise directed by the Engineer.
7. The existing "EXIT" signs shall be covered during ramp closures.
8. A minimum of 3 cones shall be placed transversely across each closed lane and shoulder.

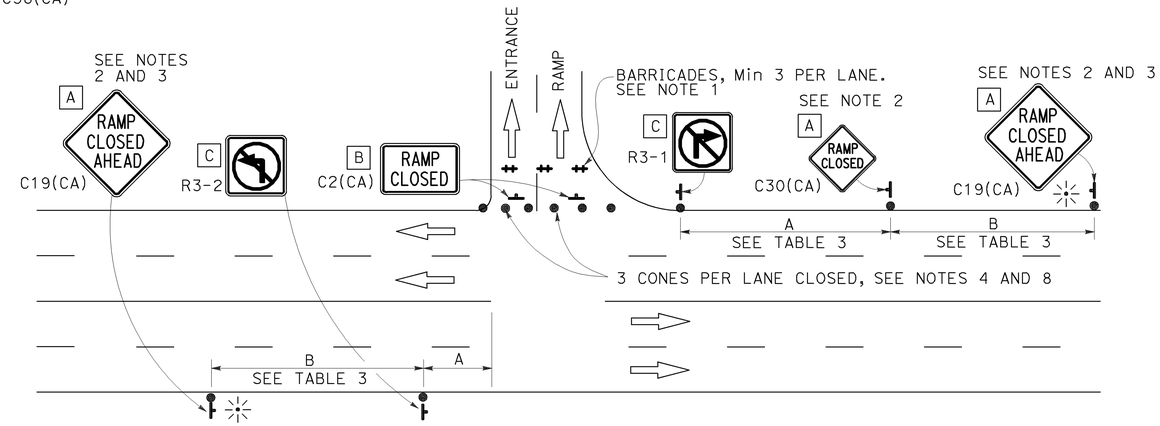

ENTRANCE RAMP WITHOUT TURNING POCKETS

NOTES:

See Revised Standard Plan RSP T9 for tables.

Use cone spacing X for taper segment, Y for tangent segment or Z for conflict situations, as approriate, per Table 1, unless X, Y, or Z cone spacing is shown on this sheet.

Unless otherwise specified in the special provisions, all temporary warning signs shall have black legend on fluorescent orange background.

California codes are designated by (CA). Otherwise, Federal (MUTCD) codes are shown.

STATE OF CALIFORNIA
DEPARTMENT OF TRANSPORTATION

TRAFFIC CONTROL SYSTEM FOR RAMP CLOSURE

NO SCALE

RSP T14 DATED APRIL 19, 2013 SUPERSEDES STANDARD PLAN T14 DATED MAY 20, 2011 - PAGE 242 OF THE STANDARD PLANS BOOK DATED 2010.

REVISED STANDARD PLAN RSP T14

2010 REVISED STANDARD PLAN RSP T14

12-18-12

Dist	COUNTY	ROUTE	POST MILES TOTAL PROJECT	SHEET No.	TOTAL SHEETS
03	ED, Pla	50, 80, 193	Var	44	64

REGISTERED CIVIL ENGINEER

November 15, 2013
PLANS APPROVAL DATE

REGISTERED PROFESSIONAL ENGINEER Tillat Satter No. C42892 Exp. 3-31-14 CIVIL STATE OF CALIFORNIA

THE STATE OF CALIFORNIA OR ITS OFFICERS OR AGENTS SHALL NOT BE RESPONSIBLE FOR THE ACCURACY OR COMPLETENESS OF SCANNED COPIES OF THIS PLAN SHEET.

TO ACCOMPANY PLANS DATED 6-1-15

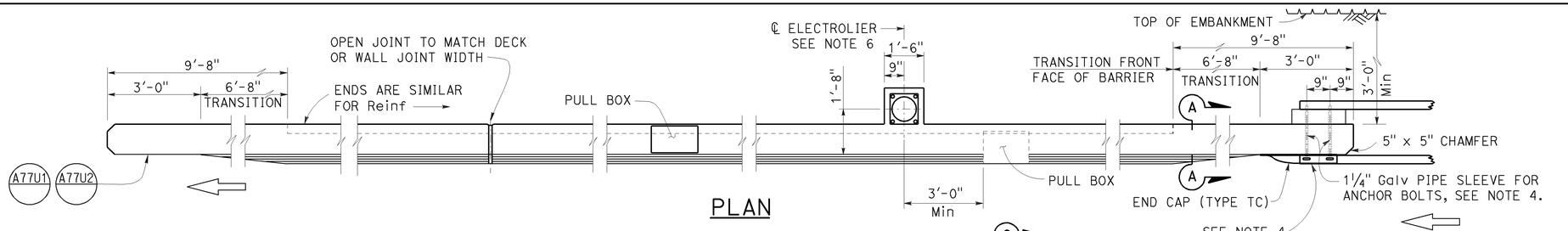

PLAN

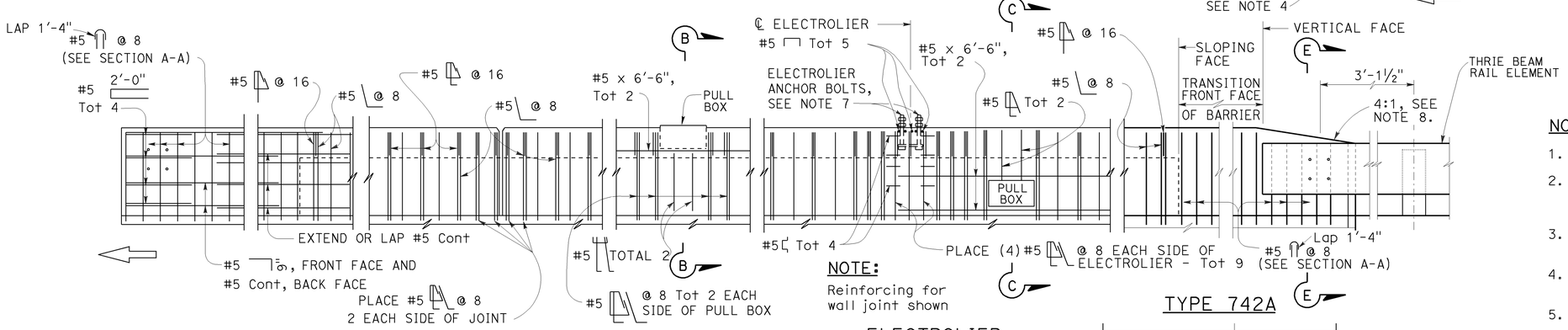

METAL RAILING CONNECTION

DECK OR WALL JOINT

NOTE:
Reinforcing for wall joint shown

ELEVATION

ELECTROLIER
(See Note 5)

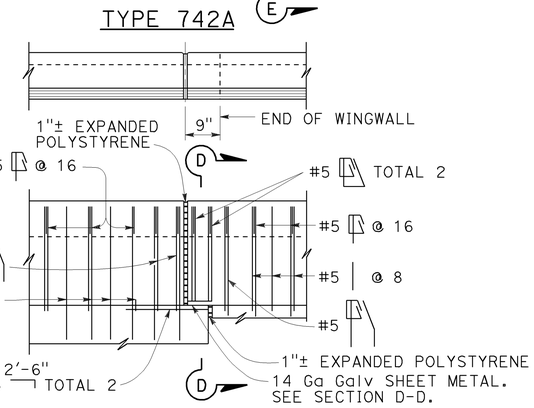

TYPE 742A TYPE 742B

NOTES:

1. Walls are to be backfilled before barrier is placed.
2. Clearance to reinforcing steel in barrier to be 1", except as noted. Longitudinal reinforcement to stop at all expansion joints.
3. Dimensions may vary with roadway cross slope and with certain thickness of surfacing. See Project Plans.
4. For typical metal railing connection details not shown, see Revised Standard Plans RSP A77U1 and RSP A77U2.
5. See Standard Plans ES-9A, ES-9B, ES-9C, ES-9D and ES-9E for electrical details. The maximum number of conduits in the barrier is limited to two 2" conduits along with one 3" conduit. When a 3" conduit is used, it is restricted to the base of the barrier.
6. For electrolier mounting details, See Standard Plans ES-6A and ES-6B.
7. Minimum concrete edge distance, to the reinforcing shown, shall be maintained. Edge distance may be adjusted to accommodate increase in concrete cover for architectual treatment.
8. Taper the top of the end of the bridge railing at 4:1 to match the top elevation of the thrie beam rail element.

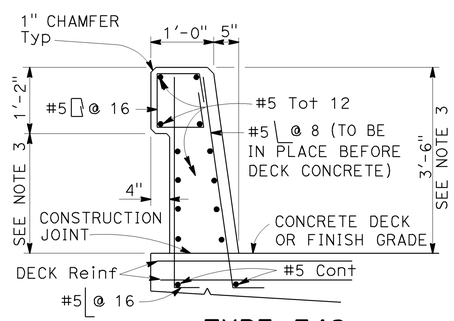

TYPE 742

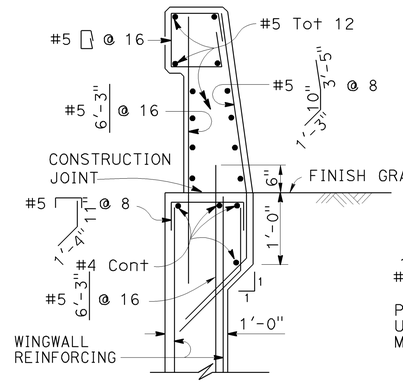

TYPE 742A

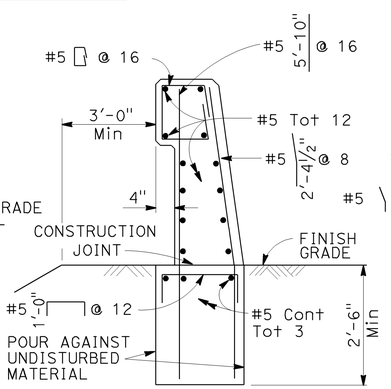

TYPE 742B

NOTE:
Types 742A & 742B are similar to Type 742 except as noted

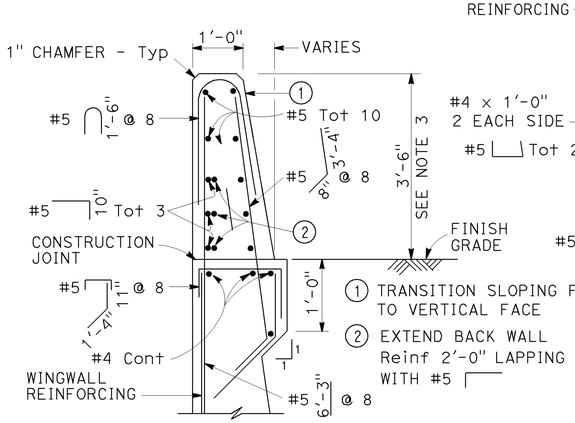

SECTION A-A

Details shown for barrier anchorage to Type 742A. Anchorage for barrier Types 742 and 742A are similar to their respective details.

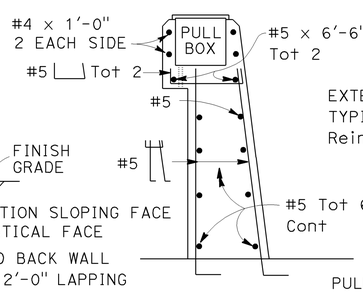

SECTION B-B

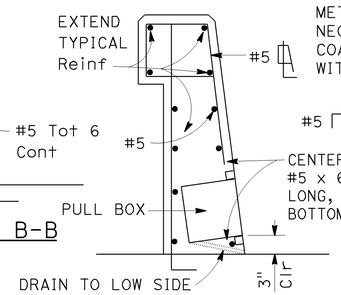

SECTION C-C
See Notes

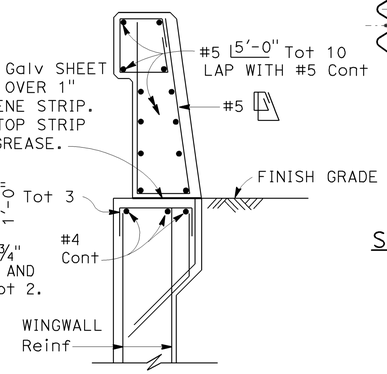

SECTION D-D

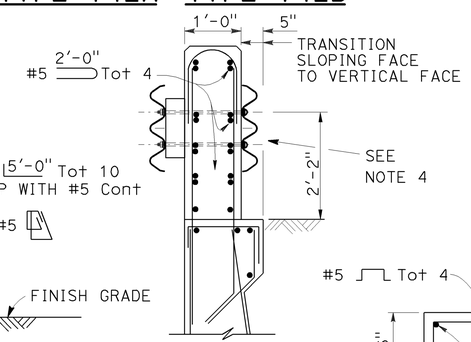

SECTION E-E
See Note 4

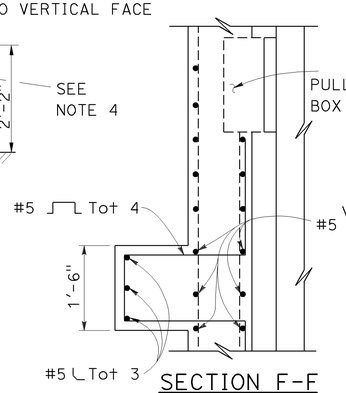

SECTION F-F

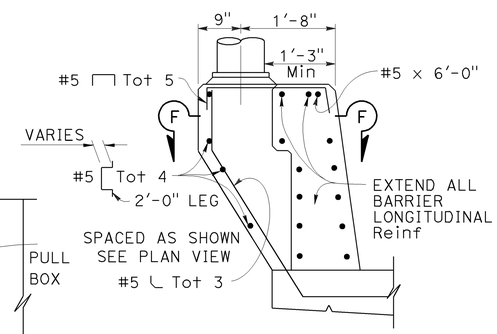

PEDESTAL ELEVATION

STATE OF CALIFORNIA
DEPARTMENT OF TRANSPORTATION

CONCRETE BARRIER TYPE 742

NO SCALE

RSP B11-57 DATED NOVEMBER 15, 2013 SUPERSEDES RSP B11-57 DATED JULY 19, 2013 AND STANDARD PLAN B11-57 DATED MAY 20, 2011 - PAGE 299 OF THE STANDARD PLANS BOOK DATED 2010.

REVISED STANDARD PLAN RSP B11-57

2010 REVISED STANDARD PLAN RSP B11-57

10-4-13

Dist	COUNTY	ROUTE	POST MILES TOTAL PROJECT	SHEET No.	TOTAL SHEETS
03	ED, Pla	50, 80, 193	Var	45	64

Theresa Gabriel
REGISTERED ELECTRICAL ENGINEER

July 19, 2013
PLANS APPROVAL DATE

REGISTERED PROFESSIONAL ENGINEER
Theresa Aziz Gabriel
No. E15129
Exp. 6-30-14
ELECTRICAL
STATE OF CALIFORNIA

THE STATE OF CALIFORNIA OR ITS OFFICERS OR AGENTS SHALL NOT BE RESPONSIBLE FOR THE ACCURACY OR COMPLETENESS OF SCANNED COPIES OF THIS PLAN SHEET.

TO ACCOMPANY PLANS DATED 6-1-15

LEGEND:

AB	ABANDON. IF APPLIED TO CONDUIT, REMOVE CONDUCTORS
BC	INSTALL PULL BOX IN EXISTING CONDUIT RUN
BP	PEDESTRIAN BARRICADE, TYPE AS INDICATED ON PLAN
CB	INSTALL CONDUIT INTO EXISTING PULL BOX
CC	CONNECT NEW AND EXISTING CONDUIT. REMOVE EXISTING CONDUCTORS AND INSTALL CONDUCTORS AS INDICATED
CF	CONDUIT TO REMAIN FOR FUTURE USE. REMOVE CONDUCTORS. INSTALL PULL TAPE
DH	DETECTOR HANDHOLE
FA	FOUNDATION TO BE ABANDONED
IS	INSTALL SIGN ON SIGNAL MAST ARM
NS	NO SLIP BASE ON STANDARD
PEC	PHOTOELECTRIC CONTROL
PEU	PHOTOELECTRIC UNIT
RC	EQUIPMENT OR MATERIAL TO BE REMOVED AND BECOME THE PROPERTY OF THE CONTRACTOR
RE	REMOVE ELECTROLIER, FUSES AND BALLAST. TAPE ENDS OF CONDUCTORS
RL	RELOCATE EQUIPMENT
RR	REMOVE AND REUSE EQUIPMENT
RS	REMOVE AND SALVAGE EQUIPMENT
SC	SPLICE NEW TO EXISTING CONDUCTORS
SD	SERVICE DISCONNECT
TSP	TELEPHONE SERVICE POINT

ABBREVIATIONS

APS	ACCESSIBLE PEDESTRIAN SIGNAL
BBS	BATTERY BACKUP SYSTEM
BC	BOLT CIRCLE
BPB	BICYCLE PUSH BUTTON
C	CONDUIT
CB	CIRCUIT BREAKER
CCTV	CLOSED CIRCUIT TELEVISION
Ckt	CIRCUIT
CMS	CHANGEABLE MESSAGE SIGN
Ctid	CALTRANS IDENTIFICATION
Comm	COMMUNICATION
DLC	LOOP DETECTOR LEAD-IN CABLE
EMS	EXTINGUISHABLE MESSAGE SIGN
EVUC	EMERGENCY VEHICLE UNIT CABLE
EVUD	EMERGENCY VEHICLE UNIT DETECTOR
FB	FLASHING BEACON
FBCA	FLASHING BEACON CONTROL ASSEMBLY
FBS	FLASHING BEACON WITH SLIP BASE
FO	FIBER OPTIC
G	EQUIPMENT GROUNDING CONDUCTOR
GB	GROUND BUS
GFCI	GROUND FAULT CIRCUIT INTERRUPTER
HAR	HIGHWAY ADVISORY RADIO
Hex	HEXAGONAL
HPS	HIGH PRESSURE SODIUM
IISNS	INTERNALLY ILLUMINATED STREET NAME SIGN
ISL	INDUCTION SIGN LIGHTING
LED	LIGHT EMITTING DIODE
LMA	LUMINAIRE MAST ARM
LPS	LOW PRESSURE SODIUM
Ltg	LIGHTING
Lum	LUMINAIRE
M	METERED
MAT	MAST ARM MOUNTING TOP ATTACHMENT
MAS	MAST ARM MOUNTING SIDE ATTACHMENT
M/M	MULTIPLE TO MULTIPLE TRANSFORMER
Mtg	MOUNTING
MV	MERCURY VAPOR LIGHTING FIXTURE
MVDS	MICROWAVE VEHICLE DETECTION SYSTEM
N	NEUTRAL (GROUNDED CONDUCTOR)
NB	NEUTRAL BUS
NC	NORMALLY CLOSE
NO	NORMALLY OPEN
P	CIRCUIT BREAKER'S POLE
PB	PULL BOX
PBA	PUSH BUTTON ASSEMBLY
PEC	PHOTOELECTRIC CONTROL
Ped	PEDESTRIAN
PEU	PHOTOELECTRIC UNIT
PT	CONDUIT WITH PULL TAPE
RE	RELOCATED EQUIPMENT
RM	RAMP METERING
RWIS	ROADSIDE WEATHER INFORMATION SYSTEM
SB	SLIP BASE
SIC	SIGNAL INTERCONNECT CABLE
Sig	SIGNAL
SMA	SIGNAL MAST ARM
SNS	STREET NAME SIGN
SP	SERVICE POINT
TDC	TELEPHONE DEMARCATION CABINET
TMS	TRAFFIC MONITORING STATION
TOS	TRAFFIC OPERATIONS SYSTEM
Veh	VEHICLE
VIVDS	VIDEO IMAGE VEHICLE DETECTION SYSTEM
WIM	WEIGH-IN-MOTION
Xfmr	TRANSFORMER

SOFFIT AND WALL MOUNTED LUMINAIRES

PENDANT, 70 W HPS UNLESS OTHERWISE SPECIFIED

FLUSH, 70 W HPS UNLESS OTHERWISE SPECIFIED

WALL SURFACE, 70 W HPS UNLESS OTHERWISE SPECIFIED

EXISTING SOFFIT OR WALL LUMINAIRE TO REMAIN UNMODIFIED

EXISTING SOFFIT OR WALL LUMINAIRE TO BE MODIFIED AS SPECIFIED

NOTE:
Arrow indicates "street side" of luminaire.

COMMONLY USED SYMBOLS FOR UNITED STATES CUSTOMARY UNITS OF MEASUREMENT:

SYMBOL USED	DEFINITIONS
Ω	OHMS
min	MINUTE
s	SECOND
bps	BITS PER SECOND
Bps	BYTES PER SECOND
A	AMPERE
V	VOLT
V(dc)	VOLT (DIRECT CURRENT)
V(ac)	VOLT (ALTERNATING CURRENT)
FC	FOOT - CANDLE
W	WATTS
VA	VOLT-AMPERE
M	MEGA
k	KILO
m	MILLI
μ	MICRO
P	PICO
Hz	HERTZ

MISCELLANEOUS ELECTROLIERS

NEW	EXISTING	
		LUMINAIRE ON WOOD POLE
		NON-STANDARD ELECTROLIER (SEE PROJECT NOTES OR PROJECT PLANS)
		CITY ELECTROLIER
		ELECTROLIER FOUNDATION (FUTURE INSTALLATION)

NOTES:

1. HPS luminaires shall be 310 W HPS when installed on Type 21, 21D, 30, 31 and 32 Standards, unless otherwise specified. HPS luminaires shall be 200 W when installed on other type standards or poles, unless otherwise specified.
2. LED luminaires shall be 235 W when installed on Type 21, 21D, 30, 31 and 32 Standards, unless otherwise specified. LED luminaires shall be 165 W when installed on other type standards or poles, unless otherwise specified.
3. Luminaires shall be the cutoff type, ANSI Type III medium cutoff lighting distribution, unless otherwise specified.

STANDARD ELECTROLIER

NEW	EXISTING	STANDARD TYPE
		15
		15D
		15 STRUCTURE
		15D STRUCTURE
		21
		21D
		21 STRUCTURE
		21D STRUCTURE
		30
		31
		32

STATE OF CALIFORNIA
DEPARTMENT OF TRANSPORTATION

ELECTRICAL SYSTEMS (LEGEND AND ABBREVIATIONS)

NO SCALE

RSP ES-1A DATED JULY 19, 2013 SUPERSEDES STANDARD PLAN ES-1A DATED MAY 20, 2011 - PAGE 425 OF THE STANDARD PLANS BOOK DATED 2010.

REVISED STANDARD PLAN RSP ES-1A

2010 REVISED STANDARD PLAN RSP ES-1A

Dist	COUNTY	ROUTE	POST MILES TOTAL PROJECT	SHEET No.	TOTAL SHEETS
03	ED, Pla	50, 80, 193	Var	46	64

Theresa Gabriel
REGISTERED ELECTRICAL ENGINEER

July 19, 2013
PLANS APPROVAL DATE

REGISTERED PROFESSIONAL ENGINEER
Theresa Aziz Gabriel
No. E15129
Exp. 6-30-14
ELECTRICAL
STATE OF CALIFORNIA

THE STATE OF CALIFORNIA OR ITS OFFICERS OR AGENTS SHALL NOT BE RESPONSIBLE FOR THE ACCURACY OR COMPLETENESS OF SCANNED COPIES OF THIS PLAN SHEET.

TO ACCOMPANY PLANS DATED 6-1-15

CONDUIT

NEW	EXISTING	
		LIGHTING CONDUIT, UNLESS OTHERWISE INDICATED OR NOTED
		TRAFFIC SIGNAL CONDUIT
C	c	COMMUNICATION CONDUIT
T	t	TELEPHONE CONDUIT
F	f	FIRE ALARM CONDUIT
FO	fo	FIBER OPTIC CONDUIT
		CONDUIT TERMINATION
R	r	CONDUIT RISER ATTACHED TO THE STRUCTURE OR SERVICE POLE

SERVICE EQUIPMENT

NEW	EXISTING	
OH	oh	OVERHEAD LINES
U	U	WOOD POLE, "U" INDICATES UTILITY OWNED
		POLE GUY WITH ANCHOR
		UTILITY TRANSFORMER - GROUND MOUNTED
III	III	SERVICE EQUIPMENT ENCLOSURE TYPE. DOOR INDICATES FRONT OF ENCLOSURE
T	t	TELEPHONE DEMARCATION CABINET

POLE-MOUNTED SERVICE DESIGNATION

TYPE H SERVICE, 28'-10" — TYPE OF INSTALLATION AND POLE HEIGHT ABOVE GRADE

FLASHING BEACON

NEW	EXISTING	
R	R	FLASHING BEACON (ONE VEHICLE SIGNAL HEAD WITH BACKPLATE AND VISOR) "R" INDICATES RED INDICATION, "Y" INDICATES YELLOW INDICATION
Y Y	Y Y	FLASHING BEACON WITH TYPE 15-FBS STANDARD AND A SIGN.
R R	R R	FLASHING BEACON WITH TYPES 9, 9A OR 9B SIGN UNLESS OTHERWISE SPECIFIED OR INDICATED

SIGNAL EQUIPMENT

NEW	EXISTING	
C	C	PEDESTRIAN SIGNAL HEAD "C" INDICATES COUNTDOWN PEDESTRIAN HEAD
		PUSH BUTTON ASSEMBLY POST
		PEDESTRIAN BARRICADE
		VEHICLE SIGNAL HEAD (WITH BACKPLATE AND 3-SECTIONS: RED, YELLOW AND GREEN)
		VEHICLE SIGNAL HEAD WITH ANGLE VISOR
PV	PV	MODIFICATIONS OF BASIC SYMBOL: "L" INDICATES ALL NON-ARROW SECTIONS LOUVERED "LG" INDICATES LOUVERED GREEN SECTION ONLY "PV" INDICATES ALL 12" SECTIONS PROGRAMMED VISIBILITY "8" INDICATES ALL 8" SECTIONS (ONLY WHEN SPECIFIED)
		VEHICLE SIGNAL HEAD CONSISTING OF RED, YELLOW AND GREEN LEFT ARROW SECTIONS
		VEHICLE SIGNAL HEAD CONSISTING OF RED AND YELLOW SECTIONS WITH AN UP GREEN ARROW SECTION
		VEHICLE SIGNAL HEAD (5 SECTION) CONSISTING OF RED, YELLOW AND GREEN SECTIONS WITH YELLOW AND GREEN RIGHT ARROW SECTIONS
		TYPE 15TS STANDARD WITH VEHICLE SIGNAL HEAD AND LUMINAIRE
		TYPE 21TS STANDARD WITH VEHICLE SIGNAL HEAD AND LUMINAIRE
		STANDARD WITH LUMINAIRE AND SIGNAL MAST ARMS AND ATTACHED VEHICLE SIGNAL HEADS
		TYPE 1 STANDARD WITH ATTACHED VEHICLE SIGNAL HEADS
		STANDARD WITH A SIGNAL MAST ARM, ATTACHED VEHICLE SIGNAL HEADS AND INTERNALLY ILLUMINATED STREET NAME SIGN
		CONTROLLER ASSEMBLY. DOOR INDICATES FRONT OF CABINET

SIGNAL EQUIPMENT Cont

NEW	EXISTING	
		GUARD POST
		TYPE 1 STANDARD WITH RAMP METERING SIGN
		OPTICAL DETECTOR FOR THE EMERGENCY VEHICLE DETECTION SYSTEM

NOTES:

1. All signal sections shall be 12" unless shown otherwise.
2. Signal heads shall be provided with backplates unless shown otherwise.

ILLUMINATED OVERHEAD SIGN

NEW	EXISTING	
		SINGLE POST, SINGLE ILLUMINATED SIGN, BALANCED BUTTERFLY
		SINGLE POST, DOUBLE ILLUMINATED SIGN, BALANCED BUTTERFLY
		SINGLE POST, SINGLE ILLUMINATED SIGN, FULL CANTILEVER
		DOUBLE POST, SINGLE ILLUMINATED SIGN
		SINGLE ILLUMINATED SIGN MOUNTED ON STRUCTURE
		DOUBLE POST, SINGLE ILLUMINATED SIGN WITH ELECTROLIER

STATE OF CALIFORNIA
DEPARTMENT OF TRANSPORTATION

ELECTRICAL SYSTEMS (LEGEND AND ABBREVIATIONS)

NO SCALE

RSP ES-1B DATED JULY 19, 2013 SUPERSEDES STANDARD PLAN ES-1B DATED MAY 20, 2011 - PAGE 426 OF THE STANDARD PLANS BOOK DATED 2010.

REVISED STANDARD PLAN RSP ES-1B

2010 REVISED STANDARD PLAN RSP ES-1B

7-15-13

Dist	COUNTY	ROUTE	POST MILES TOTAL PROJECT	SHEET No.	TOTAL SHEETS
03	ED, Pla	50, 80, 193	Var	47	64

Theresa Gabriel
REGISTERED ELECTRICAL ENGINEER

July 19, 2013
PLANS APPROVAL DATE

REGISTERED PROFESSIONAL ENGINEER
Theresa Aziz Gabriel
No. E15129
Exp. 6-30-14
ELECTRICAL
STATE OF CALIFORNIA

THE STATE OF CALIFORNIA OR ITS OFFICERS OR AGENTS SHALL NOT BE RESPONSIBLE FOR THE ACCURACY OR COMPLETENESS OF SCANNED COPIES OF THIS PLAN SHEET.

TO ACCOMPANY PLANS DATED 6-1-15

EQUIPMENT IDENTIFICATION

ILLUMINATED SIGN IDENTIFICATION NUMBER:

SIGN No. 12345

10 ISL SCI 1.0

- SIGN NUMBER - PLACE ON POST OR STRUCTURE
- TRANSFORMER RATING (kVA)
- LIGHTING CONTROL TYPE
- NUMBER AND TYPE OF FIXTURES

DO NOT PLACE ON STANDARD OR STRUCTURE

ELECTROLIER OR EQUIPMENT IDENTIFICATION NUMBER:

12345 - 15'-0"

- MAST ARM LENGTH, IF SHOWN. DO NOT PLACE ON STANDARD OR STRUCTURE
- EQUIPMENT NUMBER - PLACE ON STANDARD OR STRUCTURE. EXISTING EQUIPMENT NUMBERS ARE SHOWN IN PARENTHESIS

CONDUIT AND CONDUCTOR IDENTIFICATION:

1½"C, 2#10, 15#14, 2 DLC, 12P#18

- PAIR
- NUMBER AND SIZE OF CONDUCTORS AND CABLES
- SIZE OF CONDUIT IN INCHES

ø1, ø2, ø2P, etc.	TRAFFIC PHASE IDENTIFICATION FOR SIGNAL FACES, DETECTORS AND PHASE DIAGRAMS
1 2 3	LEGEND NUMBERS
A B C	EQUIPMENT, SIGNAL POLES, INSTALLATION OR ITEMS
1 2 3	CONDUIT RUN NUMBERS

SIGNAL AND LIGHTING STANDARD (TYPICAL DESIGNATION):

19A - 3 - 100

- WIND VELOCITY = 100 mph
- CASE 3 ARM LOADING
- STANDARD TYPE
- STANDARD PLAN SHEET NUMBER
- DETAIL, NUMBER, SECTION, TYPE OR ELEVATION

MISCELLANEOUS EQUIPMENT

NEW	EXISTING	
CMS	cms	CHANGEABLE MESSAGE SIGN
		CLOSED CIRCUIT TELEVISION CAMERA
		HIGHWAY ADVISORY RADIO POLE AND ANTENNA
EMS	ems	EXTINGUISHABLE MESSAGE SIGN
M V	m v	DETECTION DEVICE M = MICROWAVE SENSOR V = VIDEO IMAGE SENSOR

WIRING DIAGRAM LEGEND

- EXTERNAL CONDUCTOR
- CONDUCTOR OR BUS
- TIE POINT
- CONTACTOR COIL
- CONTACTOR, NO CONTACT
- TERMINAL BLOCKS
- CONTACTOR, NC CONTACT
- ENCLOSURE BOND
- GROUNDING ELECTRODE
- CIRCUIT BREAKER
- RECEPTACLE

PULL BOXES

NEW	EXISTING	
		PULL BOX, No. 5 UNLESS OTHERWISE INDICATED OR NOTED
3	9A(21)	PULL BOX, ADDITIONAL DESIGNATIONS OR DESCRIPTIONS

3 No. 3½ PULL BOX
5 No. 5 PULL BOX
6 No. 6 PULL BOX
7 No. 7 (CEILING PULL BOX)
8 No. 8 (PENDANT SOFFIT PULL BOX)
9 No. 9 PULL BOX
9A No. 9A PULL BOX

(C) COMMUNICATIONS PULL BOX
(E) PULL BOX WITH EXTENSION
(S) SPRINKLER CONTROL PULL BOX
(21) ANCHOR BOLTS AND CONDUIT FOR FUTURE INSTALLATION OF TYPE 21 STANDARD
(T) TRAFFIC PULL BOX

VEHICLE DETECTORS

5 J 9 U

- VEHICLE DETECTOR DESIGNATION
- U = UPPER
  L = LOWER
- SLOT NUMBER IN INPUT FILE
- INPUT FILE (I OR J)
- PHASE

NEW	EXISTING	
		TYPE A DETECTOR LOOP. OUTLINE OF SAWCUT SHOWN
		TYPE B DETECTOR LOOP. OUTLINE OF SAWCUT SHOWN
		TYPE C DETECTOR LOOP. OUTLINE OF SAWCUT SHOWN
		TYPE D DETECTOR LOOP. OUTLINE OF SAWCUT SHOWN
		TYPE E DETECTOR LOOP. OUTLINE OF SAWCUT SHOWN
		TYPE Q DETECTOR LOOP. OUTLINE OF SAWCUT SHOWN
		MAGNETIC DETECTOR
DH	dh	DETECTOR HANDHOLE
		MICROWAVE OR VIDEO DETECTION ZONE

STATE OF CALIFORNIA
DEPARTMENT OF TRANSPORTATION

ELECTRICAL SYSTEMS (LEGEND AND ABBREVIATIONS)

NO SCALE

RSP ES-1C DATED JULY 19, 2013 SUPERSEDES STANDARD PLAN ES-1C DATED MAY 20, 2011 - PAGE 427 OF THE STANDARD PLANS BOOK DATED 2010.

REVISED STANDARD PLAN RSP ES-1C

2010 REVISED STANDARD PLAN RSP ES-1C

7-11-13

Dist	COUNTY	ROUTE	POST MILES TOTAL PROJECT	SHEET No.	TOTAL SHEETS
03	ED, Pla	50, 80, 193	Var	48	64

Theresa Gabriel
REGISTERED ELECTRICAL ENGINEER

July 19, 2013
PLANS APPROVAL DATE

REGISTERED PROFESSIONAL ENGINEER
Theresa Aziz Gabriel
No. E15129
Exp. 6-30-14
ELECTRICAL
STATE OF CALIFORNIA

THE STATE OF CALIFORNIA OR ITS OFFICERS OR AGENTS SHALL NOT BE RESPONSIBLE FOR THE ACCURACY OR COMPLETENESS OF SCANNED COPIES OF THIS PLAN SHEET.

TO ACCOMPANY PLANS DATED 6-1-15

ISOFOOTCANDLE CURVE - MINIMUM

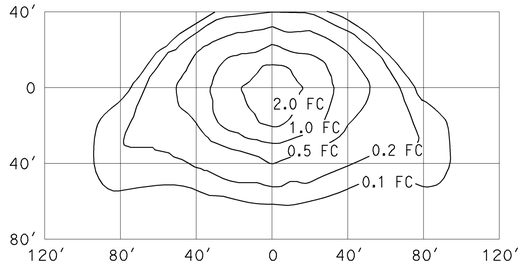

TYPE III MEDIUM CUTOFF

Cutoff Luminaire
34′ Mounting Height
Lamp operated at 22,000 lm
200-W high pressure sodium lamp
ANSI Designation S66

ISOFOOTCANDLE CURVE - MINIMUM

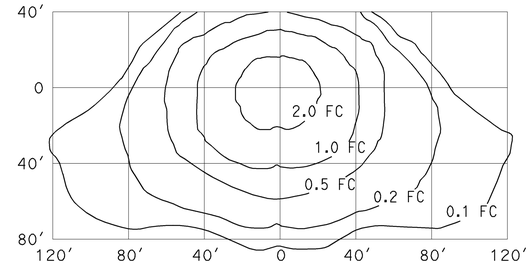

TYPE III MEDIUM CUTOFF

Cutoff Luminaire
40′ Mounting Height
Lamp operated at 37,000 lm
310-W high pressure sodium lamp
ANSI Designation S67

ISOFOOTCANDLE CURVE - MINIMUM

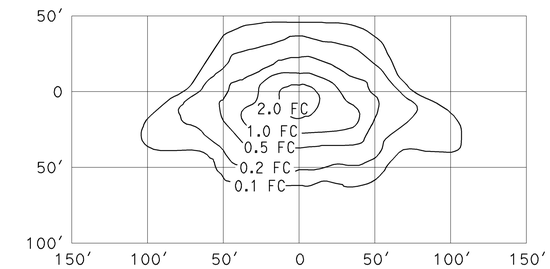

TYPE III MEDIUM CUTOFF

Cutoff Luminaire
30′ Mounting Height
Lamp operated at 16,000 lm
150-W high pressure sodium lamp
ANSI Designation S55

ISOFOOTCANDLE CURVE - MINIMUM

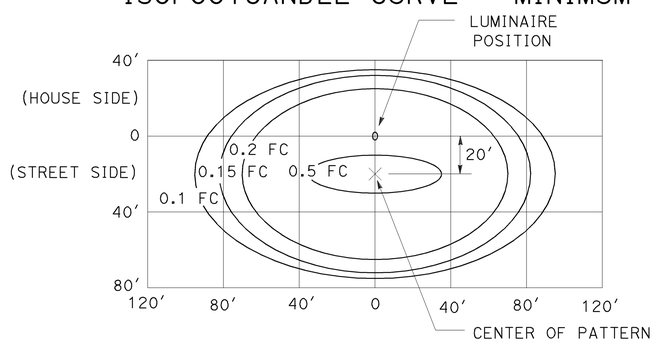

LED LUMINAIRE ROADWAY 1

165-W at 34′ Mounting Height

ISOFOOTCANDLE CURVE - MINIMUM

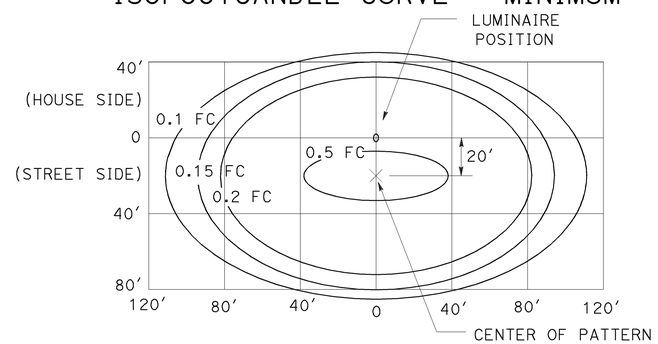

LED LUMINAIRE ROADWAY 2

235-W at 40′ Mounting Height

ISOFOOTCANDLE CURVE - MINIMUM

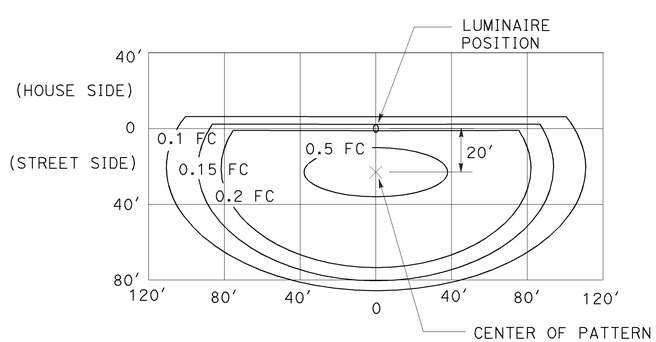

LED LUMINAIRE ROADWAY 3

235-W at 40′ Mounting Height
with back side control

ISOFOOTCANDLE CURVE - MINIMUM

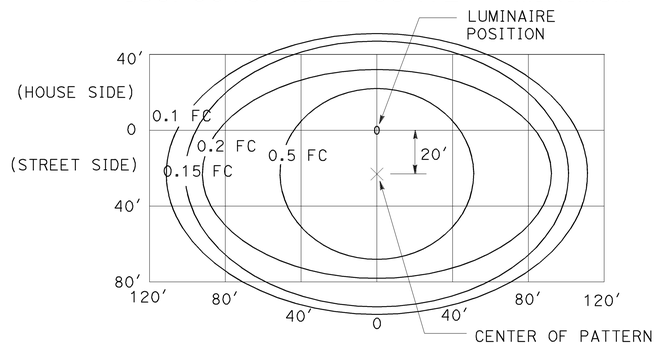

LED LUMINAIRE ROADWAY 4

300-W at 40′ Mounting Height

ISOFOOTCANDLE CURVE - MINIMUM

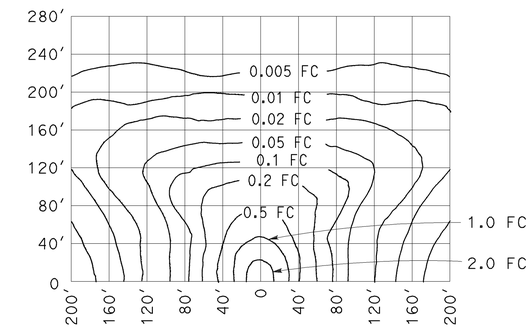

LOW PRESSURE SODIUM LUMINAIRE

40′ Mounting Height
Lamp operated at 33,000 lm
180-W low pressure sodium lamp

STATE OF CALIFORNIA
DEPARTMENT OF TRANSPORTATION

ELECTRICAL SYSTEMS (ISOFOOTCANDLE DIAGRAMS)

NO SCALE

RSP ES-10A DATED JULY 19, 2013 SUPERSEDES RSP ES-10A DATED JULY 20, 2012 THAT SUPPLEMENTS THE STANDARD PLANS BOOK DATED 2010.

REVISED STANDARD PLAN RSP ES-10A

2010 REVISED STANDARD PLAN RSP ES-10A

7-9-13

DIST	COUNTY	ROUTE	POST MILES TOTAL PROJECT	SHEET No.	TOTAL SHEETS
03	ED,Pla	50,80,193	Var	49	64

REGISTERED CIVIL ENGINEER 2-23-15 DATE

6-1-15
PLANS APPROVAL DATE

REGISTERED PROFESSIONAL ENGINEER ARLENE FRANK No. C 55562 Exp. 12-31-16 CIVIL STATE OF CALIFORNIA

The State of California or its officers or agents shall not be responsible for the accuracy or completeness of scanned copies of this plan sheet.

NOTES: (APPLY TO THIS SHEET ONLY)

Indicates limits of prepare concrete bridge deck surface and treat bridge deck with high molecular weight methacrylate. Prior to treating bridge deck, remove unsound concrete and place rapid setting concrete (patch) as shown on "Joint And Deck Repair Detail" on "JOINT SEAL DETAILS NO. 3" sheet.

(1) Clean concrete surface area and paint Bridge Name, Bridge Number and Post Mile.

NOTE: (APPLY TO ALL SHEETS)

Indicates existing.

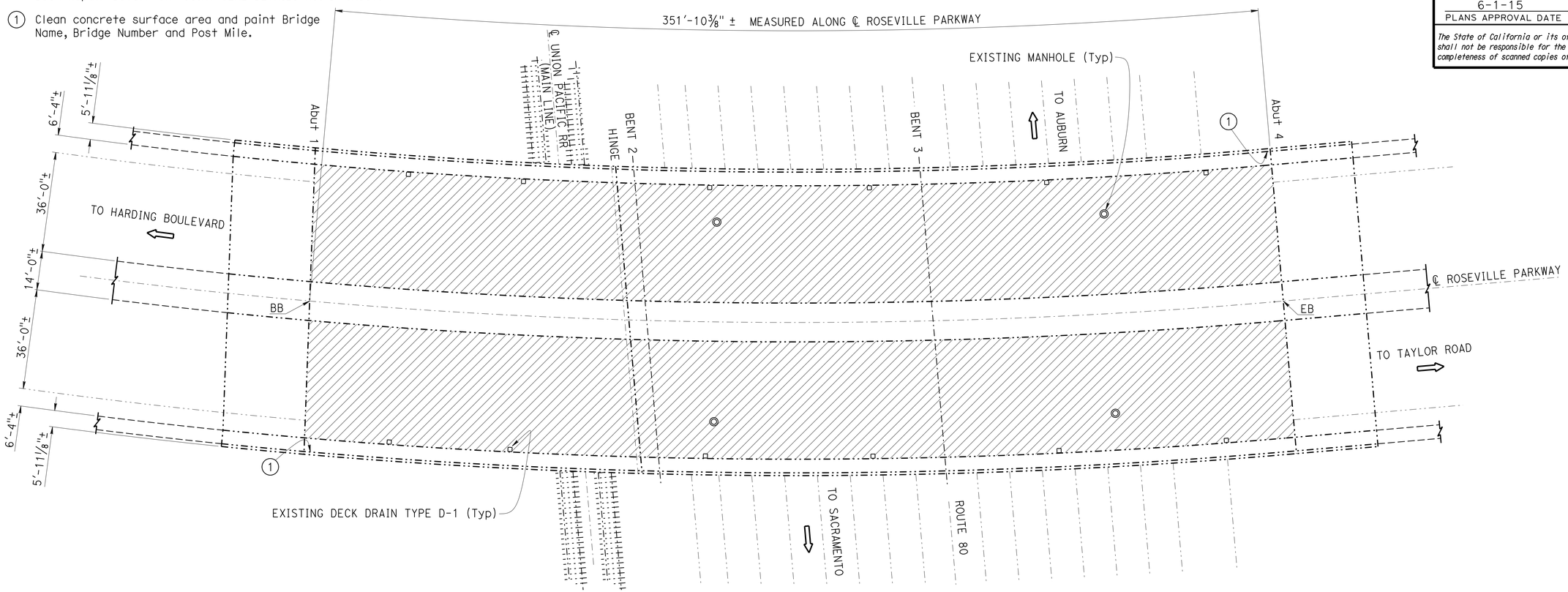

ROSEVILLE PARKWAY OVERHEAD

Br No. 19-0177, ROUTE 80, Pla, PM 3.50
1"=20'

ROSEVILLE PARKWAY OVERHEAD BR NO.19-0177

QUANTITIES

RAPID SETTING CONCRETE (PATCH)	75	CF
REMOVE UNSOUND CONCRETE	75	CF
PREPARE CONCRETE BRIDGE DECK SURFACE	29,791	SQFT
TREAT BRIDGE DECK	29,791	SQFT
FURNISH BRIDGE DECK TREATMENT MATERIAL	331	GAL

NOTE:
THE CONTRACTOR MUST VERIFY ALL CONTROLLING FIELD DIMENSIONS BEFORE ORDERING OR FABRICATING ANY MATERIAL.

INDEX TO PLANS

SHEET NO.	TITLE
1	GENERAL PLAN NO. 1
2	GENERAL PLAN NO. 2
3	GENERAL PLAN NO. 3
4	GENERAL PLAN NO. 4
5	DECK ON DECK DETAILS NO. 1
6	DECK ON DECK DETAILS NO. 2
7	DECK ON DECK DETAILS NO. 3
8	DECK ON DECK DETAILS NO. 4
9	DECK ON DECK DETAILS NO. 5
10	DECK ON DECK DETAILS NO. 6
11	DECK ON DECK DETAILS NO. 7
12	DECK ON DECK DETAILS NO. 8
13	MISCELLANEOUS DETAILS
14	JOINT SEAL DETAILS NO. 1
15	JOINT SEAL DETAILS NO. 2
16	JOINT SEAL DETAILS NO. 3

STANDARD PLANS 2010

SHEET NO.	TITLE
A10A	ABBREVIATIONS (SHEET 1 OF 2)
RSP A10B	ABBREVIATIONS (SHEET 2 OF 2)
A76A	CONCRETE BARRIER TYPE 60
A76B	CONCRETE BARRIER TYPE 60
B0-5	BRIDGE DETAILS
B6-21	JOINT SEALS (MAXIMUM MOVEMENT RATING = 2")
RSP B11-57	CONCRETE BARRIER TYPE 742

STANDARD PLAN SHEET NO.

DETAIL NO.

DESIGN ENGINEER 2-23-15	DESIGN	BY J. Radu	CHECKED A. Frank	LOAD FACTOR DESIGN	LIVE LOADING: HS20-44 AND ALTERNATIVE AND PERMIT DESIGN LOAD
	DETAILS	BY Dale Kubochi	CHECKED A. Frank	LAYOUT	BY Dale Kubochi / CHECKED A. Frank
	QUANTITIES	BY J. Radu	CHECKED A. Frank	SPECIFICATIONS	BY Tanya Kershell / PLANS AND SPECS COMPARED Tanya Kershell

STATE OF CALIFORNIA
DEPARTMENT OF TRANSPORTATION

DIVISION OF MAINTENANCE
STRUCTURE MAINTENANCE DESIGN

BRIDGE NO. VARIOUS
POST MILE VARIES

ROUTE 50, 80, 193 BRIDGES
GENERAL PLAN NO. 1

STRUCTURES MAINTENANCE GENERAL PLAN SHEET (ENGLISH) (REV. 09-01-10)

ORIGINAL SCALE IN INCHES FOR REDUCED PLANS 0 1 2 3

UNIT: 3488
PROJECT NUMBER & PHASE: 0314000027
CONTRACT NO.: 03-0G0301

DISREGARD PRINTS BEARING EARLIER REVISION DATES
REVISION DATES 6-1-14 2-23-15 5-6-15

SHEET 1 OF 16

FILE => 03-0g0301-a-gp01.dgn

USERNAME => s119538 DATE PLOTTED => 24-JUL-2015 TIME PLOTTED => 11:53

DIST	COUNTY	ROUTE	POST MILES TOTAL PROJECT	SHEET No.	TOTAL SHEETS
03	ED,Pla	50,80,193	Var	50	64

REGISTERED CIVIL ENGINEER 2-23-15 DATE

6-1-15
PLANS APPROVAL DATE

REGISTERED PROFESSIONAL ENGINEER ARLENE FRANK No. C 55562 Exp. 12-31-16 CIVIL STATE OF CALIFORNIA

The State of California or its officers or agents shall not be responsible for the accuracy or completeness of scanned copies of this plan sheet.

NOTES: (APPLY TO THIS SHEET ONLY)

Indicates limits of prepare concrete bridge deck surface, furnish and place new 1" minimum depth polyester concrete overlay. Prior to placing new polyester concrete overlay, remove unsound concrete and place rapid setting concrete (patch) as shown on the "Deck Repair Detail - Overlay" on "JOINT SEAL DETAILS NO. 3" sheet.

Indicates limits of remove existing 1"± chip seal overlay.

Indicates limits of grind existing PCC Paving to conform to existing pavement. For details, see "Taper Details" on "MISCELLANEOUS DETAILS" sheet.

Indicates limits of clean expansion joint and install joint seal.

(1) For approach roadway taper, see "Roadway Plans".

(2) Grind existing concrete along bridge barrier rail. For details, see "Taper Details" on "MISCELLANEOUS DETAILS" sheet.

(3) Clean concrete surface area and paint Bridge Name, Bridge Number and Post Mile.

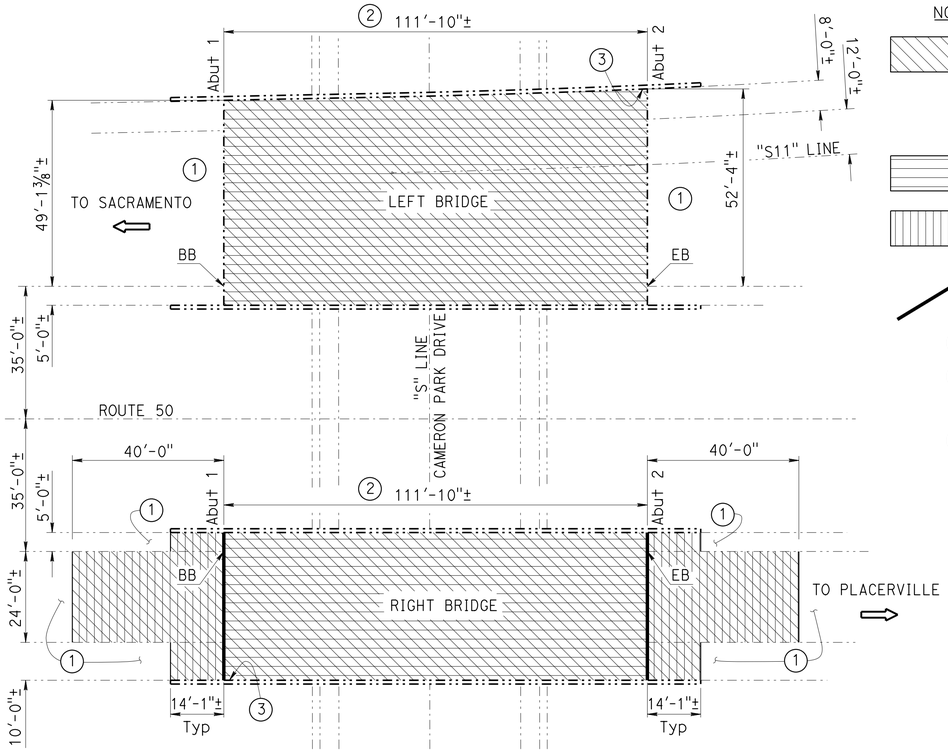

CAMERON PARK DRIVE UNDERCROSSING

Br No. 25-0084L/R, ROUTE 50, ED, PM 6.57
1"=20'

CAMERON PARK DRIVE UNDERCROSSING BR NO.25-0084 L/R

QUANTITIES

RAPID SETTING CONCRETE (PATCH)	30	CF
REMOVE UNSOUND CONCRETE	30	CF
PREPARE CONCRETE BRIDGE DECK SURFACE	12,035	SQFT
FURNISH POLYESTER CONCRETE OVERLAY	1,204	CF
PLACE POLYESTER CONCRETE OVERLAY	12,035	SQFT
REMOVE CHIP SEAL	12,035	SQFT
GRIND EXISTING BRIDGE DECK	276	SQYD
CLEAN EXPANSION JOINT	79	LF
JOINT SEAL (MR 1")	79	LF

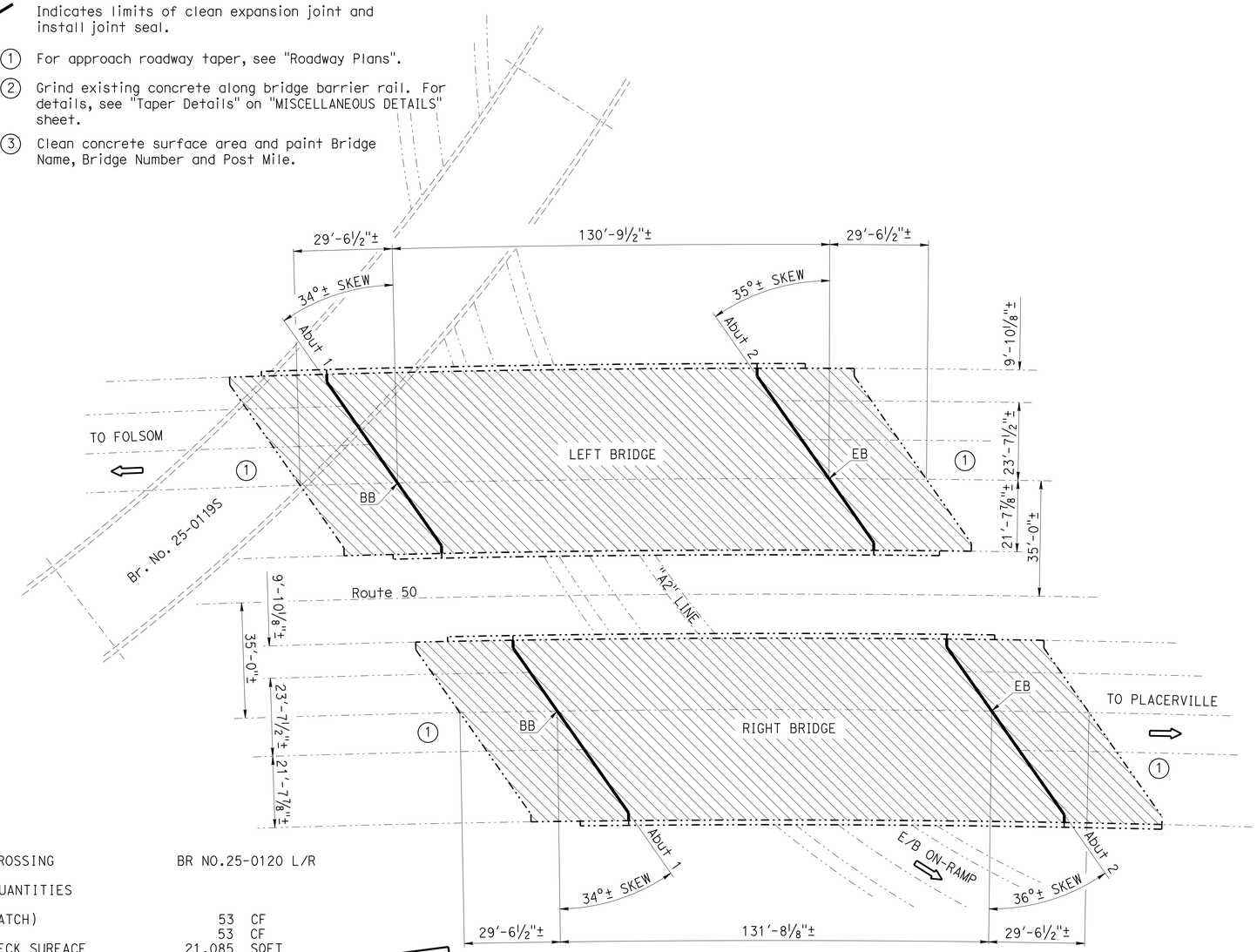

RED HAWK PARKWAY UNDERCROSSING BR NO.25-0120 L/R

QUANTITIES

RAPID SETTING CONCRETE (PATCH)	53	CF
REMOVE UNSOUND CONCRETE	53	CF
PREPARE CONCRETE BRIDGE DECK SURFACE	21,085	SQFT
FURNISH POLYESTER CONCRETE OVERLAY	2,109	CF
PLACE POLYESTER CONCRETE OVERLAY	21,085	SQFT
CLEAN EXPANSION JOINT	271	LF
JOINT SEAL (MR 1 1/2")	271	LF

RED HAWK PARKWAY UNDERCROSSING

Br No. 25-0120L/R, ROUTE 50, ED, PM R11.25
1"=20'

NOTE:
THE CONTRACTOR MUST VERIFY ALL CONTROLLING FIELD DIMENSIONS BEFORE ORDERING OR FABRICATING ANY MATERIAL.

DESIGN ENGINEER 2-23-15	DESIGN	BY J. Radu	CHECKED A. Frank	LOAD FACTOR DESIGN	LIVE LOADING: HS20-44 AND ALTERNATIVE AND PERMIT DESIGN LOAD
	DETAILS	BY Dale Kubochi	CHECKED A. Frank	LAYOUT	BY Dale Kubochi / CHECKED A. Frank
	QUANTITIES	BY J. Radu	CHECKED A. Frank	SPECIFICATIONS	BY Tanya Kershell / PLANS AND SPECS COMPARED Tanya Kershell

STATE OF CALIFORNIA
DEPARTMENT OF TRANSPORTATION

DIVISION OF MAINTENANCE
STRUCTURE MAINTENANCE DESIGN

BRIDGE NO. VARIOUS
POST MILE VARIES

ROUTE 50, 80, 193 BRIDGES
GENERAL PLAN NO. 2

STRUCTURES MAINTENANCE GENERAL PLAN SHEET (ENGLISH) (REV. 09-01-10)

ORIGINAL SCALE IN INCHES FOR REDUCED PLANS 0 1 2 3

UNIT: 3488
PROJECT NUMBER & PHASE: 0314000027
CONTRACT NO.: 03-0G0301

DISREGARD PRINTS BEARING EARLIER REVISION DATES

REVISION DATES 9-14-14 3-30-15 5-6-15

SHEET 2 OF 16

FILE => 03-0g0301-a-gp02.dgn

USERNAME => s119538 DATE PLOTTED => 24-JUL-2015 TIME PLOTTED => 11:53

DIST	COUNTY	ROUTE	POST MILES TOTAL PROJECT	SHEET No.	TOTAL SHEETS
03	ED,Pla	50,80,193	Var	51	64

Arlene Frank 2-23-15
REGISTERED CIVIL ENGINEER DATE

6-1-15
PLANS APPROVAL DATE

REGISTERED PROFESSIONAL ENGINEER
ARLENE FRANK
No. C 55562
Exp. 12-31-16
CIVIL
STATE OF CALIFORNIA

The State of California or its officers or agents shall not be responsible for the accuracy or completeness of scanned copies of this plan sheet.

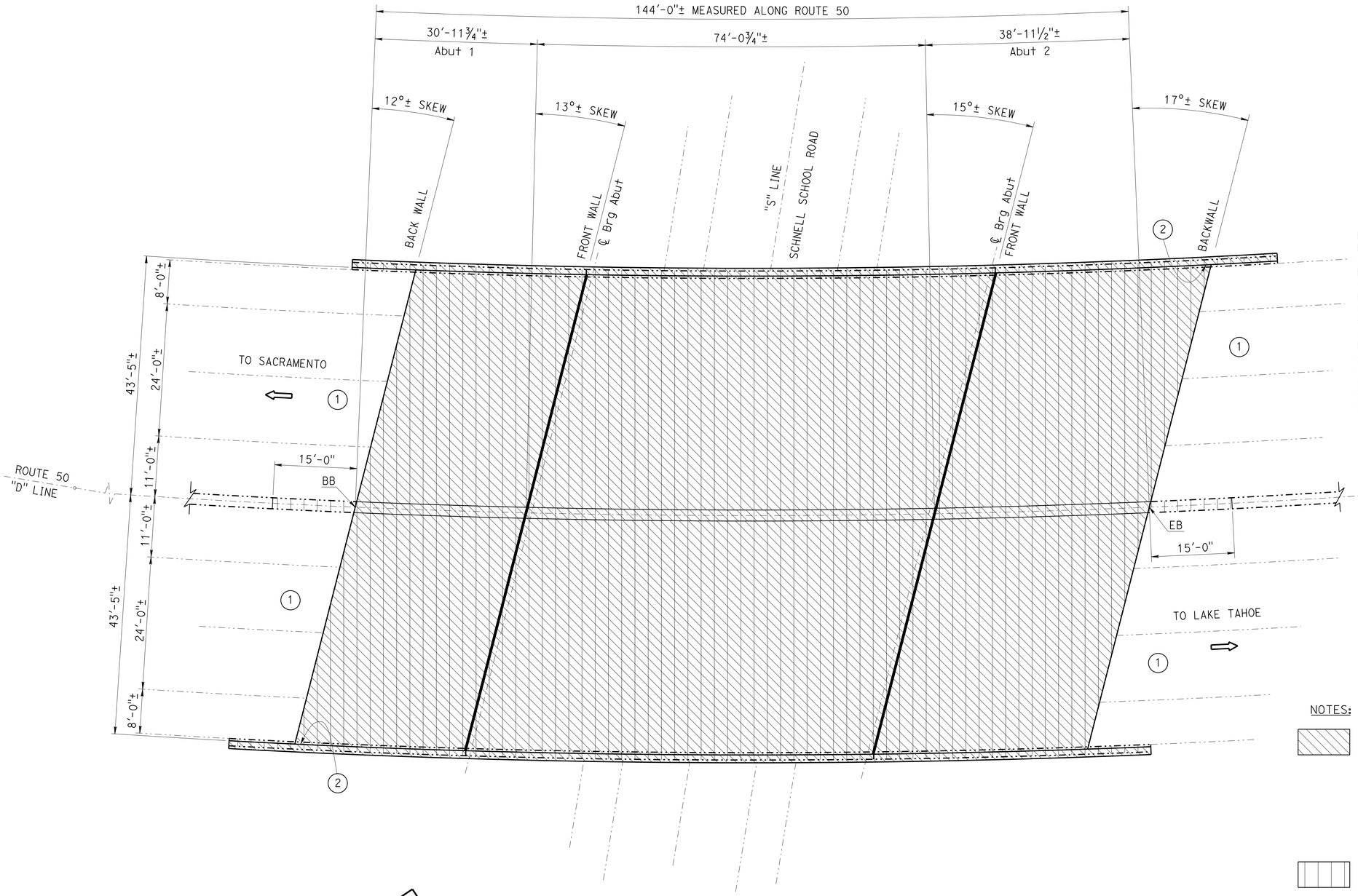

SCHNELL SCHOOL ROAD UNDERCROSSING

Br No. 25-0063, ROUTE 50, ED, PM 19.12
1" = 10'

SCHNELL SCHOOL ROAD UNDERCROSSING — BR NO.25-0063

QUANTITIES

RAPID SETTING CONCRETE (PATCH)	31	CF
REMOVE ASPHALT CONCRETE SURFACING	12,478	SQFT
SALVAGE METAL BRIDGE RAILING	326	LF
REMOVE UNSOUND CONCRETE	31	CF
PREPARE CONCRETE BRIDGE DECK SURFACE	24,432	SQFT
FURNISH POLYESTER CONCRETE OVERLAY	1,222	CF
PLACE POLYESTER CONCRETE OVERLAY	12,217	SQFT
BRIDGE REMOVAL (PORTION), LOCATION A	LUMP	SUM
STRUCTURAL CONCRETE, BRIDGE (POLYMER FIBER)	165	CY
DRILL AND BOND DOWEL (CHEMICAL ADHESIVE)	590	EA
CLEAN EXPANSION JOINT	180	LF
JOINT SEAL (MR 1")	180	LF
BAR REINFORCING STEEL (BRIDGE)	38,544	LB
CONCRETE BARRIER (TYPE 60A MODIFIED)	174	LF
CONCRETE BARRIER (TYPE 742 MODIFIED)	336	LF

NOTES: (APPLY TO THIS SHEET ONLY)

Indicates limits of roughen concrete deck surface and 6" edge of deck surface to ¼" amplitude and prepare concrete bridge deck surface. Drill and bond dowels and place new 4" structural concrete, new concrete barrier Type 742 (Mod) and Type 60A (Mod). Prepare concrete bridge deck surface and place new 1" minimum depth polyester concrete overlay. For details, see "DECK ON DECK DETAILS NO. 1" thru "DECK ON DECK DETAILS NO. 8" sheets.

Indicates limits of remove existing 4"± AC Overlay, existing concrete barrier rails Type 1 and concrete barrier Type 50A and 50. Salvage metal tube rail and supports.

Indicates limits of clean expansion joint and install joint seal. For details, see "JOINT SEAL DETAILS NO. 3" sheet.

(1) For approach roadway taper, see "Roadway Plans".

(2) Paint Bridge Name, Bridge Number and Post Mile.

NOTE:
THE CONTRACTOR MUST VERIFY ALL CONTROLLING FIELD DIMENSIONS BEFORE ORDERING OR FABRICATING ANY MATERIAL.

Matthew Lee 2-23-15
DESIGN ENGINEER

	BY	CHECKED
DESIGN	J. Radu	A. Frank
DETAILS	Dale Kubochi	A. Frank
QUANTITIES	J. Radu	A. Frank

LOAD FACTOR DESIGN — LIVE LOADING: HS20-44 AND ALTERNATIVE AND PERMIT DESIGN LOAD
LAYOUT — BY Dale Kubochi — CHECKED A. Frank
SPECIFICATIONS — BY Tanya Kershell — PLANS AND SPECS COMPARED Tanya Kershell

STATE OF CALIFORNIA
DEPARTMENT OF TRANSPORTATION

DIVISION OF MAINTENANCE
STRUCTURE MAINTENANCE DESIGN

BRIDGE NO. VARIOUS
POST MILE VARIES

ROUTE 50, 80, 193 BRIDGES
GENERAL PLAN NO. 3

STRUCTURES MAINTENANCE GENERAL PLAN SHEET (ENGLISH) (REV. 09-01-10)

ORIGINAL SCALE IN INCHES FOR REDUCED PLANS 0 1 2 3

UNIT: 3488
PROJECT NUMBER & PHASE: 0314000027
CONTRACT NO.: 03-0G0301

DISREGARD PRINTS BEARING EARLIER REVISION DATES
REVISION DATES 6-1-14 6-5-15 5-12-15
SHEET 3 OF 16

FILE => 03-0g0301-a-gp03.dgn

USERNAME => s119538 DATE PLOTTED => 24-JUL-2015 TIME PLOTTED => 11:53

DIST	COUNTY	ROUTE	POST MILES TOTAL PROJECT	SHEET No.	TOTAL SHEETS
03	ED,Pla	50,80,193	Var	52	64

REGISTERED CIVIL ENGINEER 2-23-15 DATE

6-1-15
PLANS APPROVAL DATE

REGISTERED PROFESSIONAL ENGINEER ARLENE FRANK No. C 55562 Exp. 12-31-16 CIVIL STATE OF CALIFORNIA

The State of California or its officers or agents shall not be responsible for the accuracy or completeness of scanned copies of this plan sheet.

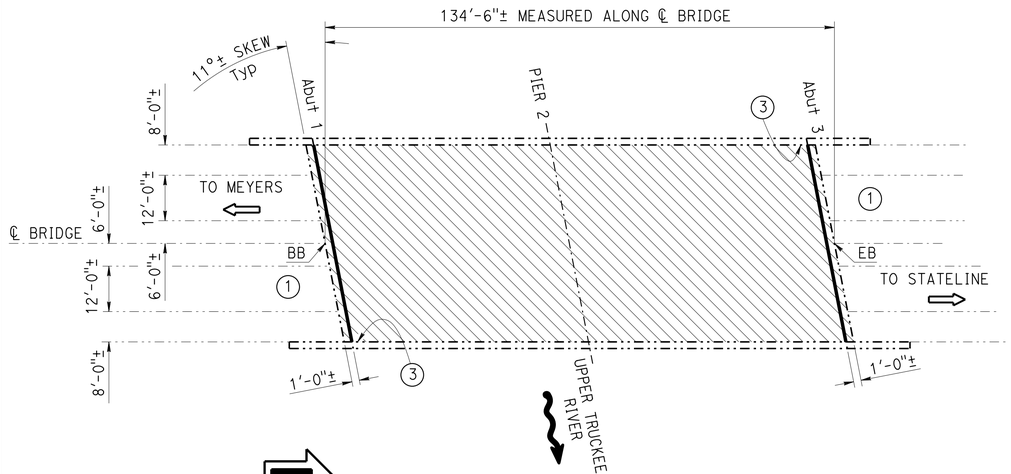

UPPER TRUCKEE RIVER

Br No. 25-0015, ROUTE 50, ED, PM 72.66
1"=20'

UPPER TRUCKEE RIVER BR NO.25-0015

QUANTITIES

RAPID SETTING CONCRETE (PATCH)	53	CF
REMOVE UNSOUND CONCRETE	53	CF
PREPARE CONCRETE BRIDGE DECK SURFACE	6,994	SQFT
FURNISH POLYESTER CONCRETE OVERLAY	699	CF
PLACE POLYESTER CONCRETE OVERLAY	6,994	SQFT
CLEAN EXPANSION JOINT	107	LF
JOINT SEAL (MR 1 1/2")	107	LF

NOTES: (APPLY TO THIS SHEET ONLY)

Indicates limits of prepare concrete bridge deck surface, furnish and place new 1" minimum depth polyester concrete overlay. Prior to placing new polyester concrete overlay, remove unsound concrete and place rapid setting concrete (patch) as shown on the "Deck Repair Detail - Overlay" on "JOINT SEAL DETAILS NO. 3" sheet.

Indicates limits of clean expansion joint and install joint seal.

Indicates limits of joint reconstruction and install joint seal. For details, see "JOINT SEAL DETAILS NO. 1" sheet.

(1) For approach roadway taper, see "Roadway Plans".

(2) Taper new polyester concrete overlay around deck drains. For details, see "Deck Drain Taper" on "MISCELLANEOUS DETAILS" sheet.

(3) Clean concrete surface area and paint Bridge Name, Bridge Number and Post Mile.

SOUTH FORK AMERICAN RIVER BR NO.25-0033

QUANTITIES

RAPID SETTING CONCRETE (PATCH)	40	CF
REMOVE CONCRETE DECK SURFACE	23	SQFT
REMOVE UNSOUND CONCRETE	40	CF
PREPARE CONCRETE BRIDGE DECK SURFACE	16,000	SQFT
FURNISH POLYESTER CONCRETE OVERLAY	1,600	CF
PLACE POLYESTER CONCRETE OVERLAY	16,000	SQFT
BRIDGE REMOVAL (PORTION), LOCATION B	LUMP	SUM
STRUCTURAL CONCRETE, BRIDGE	3.8	CY
CLEAN EXPANSION JOINT	102	LF
JOINT SEAL (MR 2")	102	LF
BAR REINFORCING STEEL (BRIDGE)	780	LB

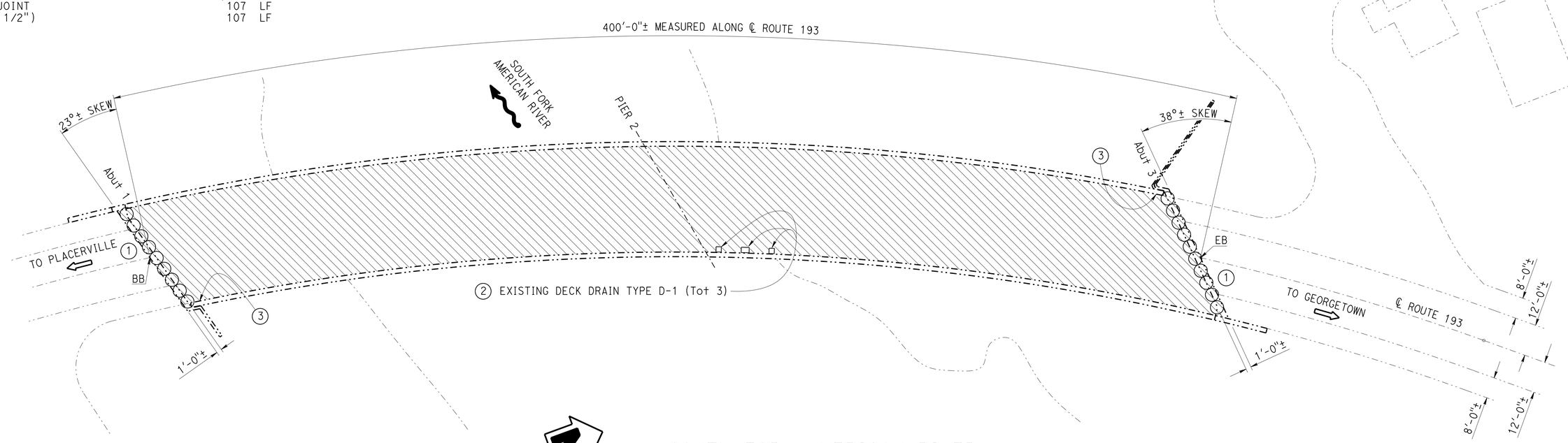

NOTE:
THE CONTRACTOR MUST VERIFY ALL CONTROLLING FIELD DIMENSIONS BEFORE ORDERING OR FABRICATING ANY MATERIAL.

SOUTH FORK AMERICAN RIVER

Br No. 25-0033, ROUTE 193, ED, PM R24.65
1"=20'

DESIGN	BY J. Radu	CHECKED A. Frank	LOAD FACTOR DESIGN	LIVE LOADING: HS20-44 AND ALTERNATIVE AND PERMIT DESIGN LOAD	
DETAILS	BY Dale Kubochi	CHECKED A. Frank	LAYOUT	BY Dale Kubochi	CHECKED A. Frank
QUANTITIES	BY J. Radu	CHECKED A. Frank	SPECIFICATIONS	BY Tanya Kershell	PLANS AND SPECS COMPARED Tanya Kershell

2-23-15
DESIGN ENGINEER

STATE OF CALIFORNIA
DEPARTMENT OF TRANSPORTATION

DIVISION OF MAINTENANCE
STRUCTURE MAINTENANCE DESIGN

BRIDGE NO. VARIOUS
POST MILE VARIES

ROUTE 50, 80, 193 BRIDGES
GENERAL PLAN NO. 4

STRUCTURES MAINTENANCE GENERAL PLAN SHEET (ENGLISH) (REV. 09-01-10)

ORIGINAL SCALE IN INCHES FOR REDUCED PLANS 0 1 2 3

UNIT: 3488
PROJECT NUMBER & PHASE: 0314000027
CONTRACT NO.: 03-0G0301

DISREGARD PRINTS BEARING EARLIER REVISION DATES

REVISION DATES 9-12-14 5-6-15 5-20-15

SHEET 4 OF 16

FILE => 03-0g0301-a-gp04.dgn

USERNAME => s119538 DATE PLOTTED => 24-JUL-2015 TIME PLOTTED => 11:53

DIST	COUNTY	ROUTE	POST MILES TOTAL PROJECT	SHEET No.	TOTAL SHEETS
03	ED,Pla	50,80,193	Var	53	64

REGISTERED CIVIL ENGINEER — DATE 2-23-15

6-1-15
PLANS APPROVAL DATE

REGISTERED PROFESSIONAL ENGINEER — ARLENE FRANK — No. C 55562 — Exp. 12-31-16 — CIVIL — STATE OF CALIFORNIA

The State of California or its officers or agents shall not be responsible for the accuracy or completeness of electronic copies of this plan sheet.

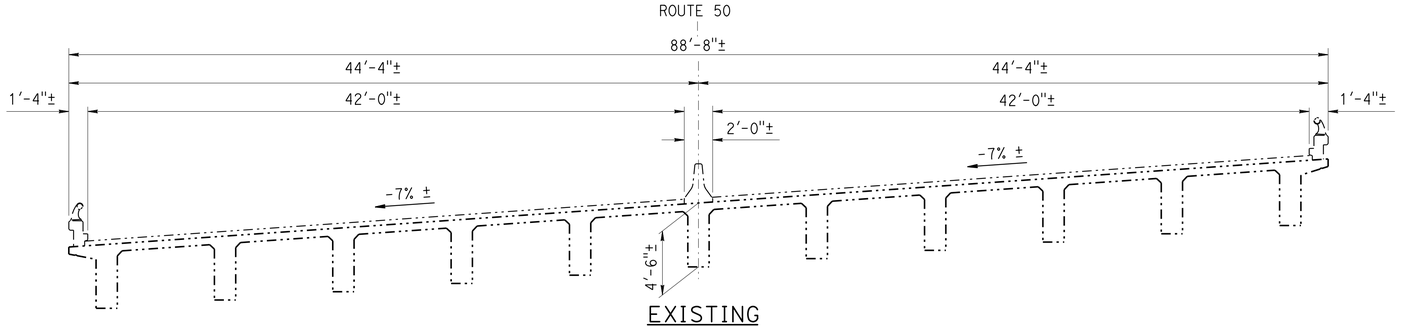

EXISTING

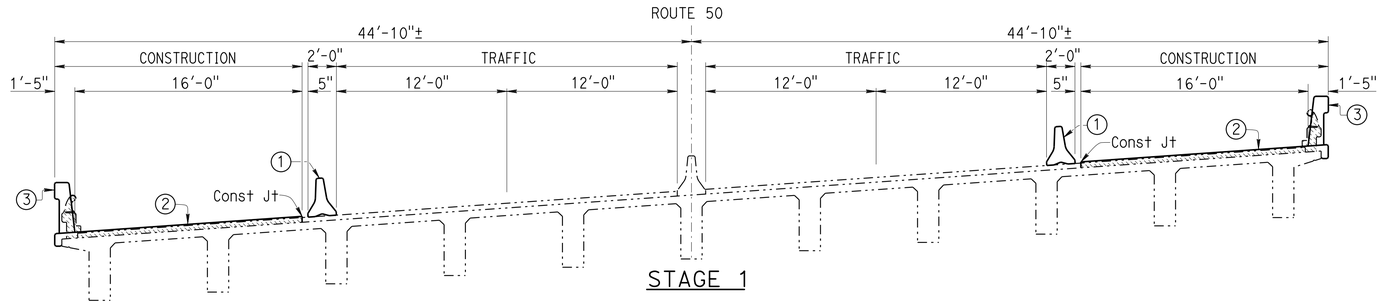

STAGE 1

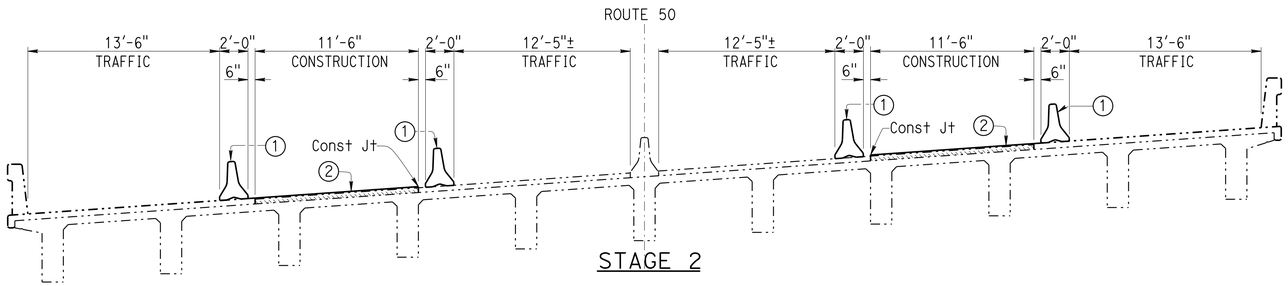

STAGE 2

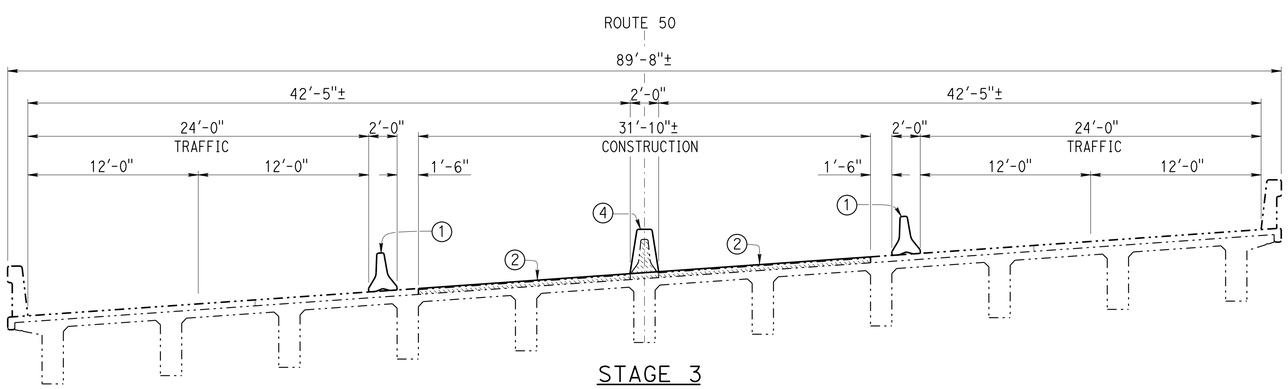

STAGE 3

STAGE CONSTRUCTION

3/16" = 1'-0"

Notes: (APPLY TO THIS SHEET ONLY)

1. Temporary railing (Type K), staking not required.
2. Remove 4"± AC Overlay and place 4" Structural Concrete.
3. Concrete Barrier Type 742 (Mod)
4. Concrete Barrier Type 60A (Mod)

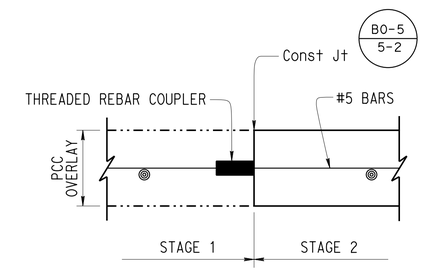

LONGITUDINAL CONSTRUCTION JOINT

3" = 1'-0"

NOTE:
THE CONTRACTOR MUST VERIFY ALL CONTROLLING FIELD DIMENSIONS BEFORE ORDERING OR FABRICATING ANY MATERIAL.

(SCHNELL SCHOOL ROAD UNDERCROSSING Br. No. 25-0063)

	BY	CHECKED
DESIGN	J. Radu	A. Frank
DETAILS	Dale Kubochi	A. Frank
QUANTITIES	J. Radu	A. Frank

STATE OF CALIFORNIA
DEPARTMENT OF TRANSPORTATION

DIVISION OF MAINTENANCE
STRUCTURE MAINTENANCE DESIGN

BRIDGE NO. VARIOUS
POST MILE VARIES

ROUTE 50, 80, 193 BRIDGES
DECK ON DECK DETAILS NO. 1

STRUCTURES MAINTENANCE DETAIL SHEET (ENGLISH) (REV. 09-01-10)

ORIGINAL SCALE IN INCHES FOR REDUCED PLANS 0 1 2 3

UNIT: 3488
PROJECT NUMBER & PHASE:
CONTRACT NO.: 03-0G0301

DISREGARD PRINTS BEARING EARLIER REVISION DATES

REVISION DATES: 8-29-14 11-5-14 2-13-15 2-26-15

SHEET 5 OF 16

FILE => 03-0g0301-d-deck-01.dgn

USERNAME => s119538 DATE PLOTTED => 24-JUL-2015 TIME PLOTTED => 11:53

DIST	COUNTY	ROUTE	POST MILES TOTAL PROJECT	SHEET No.	TOTAL SHEETS
03	ED,Pla	50,80,193	Var	54	64

Arlene Frank 2-23-15
REGISTERED CIVIL ENGINEER DATE

6-1-15
PLANS APPROVAL DATE

REGISTERED PROFESSIONAL ENGINEER
ARLENE FRANK
No. C 55562
Exp. 12-31-16
CIVIL
STATE OF CALIFORNIA

The State of California or its officers or agents shall not be responsible for the accuracy or completeness of electronic copies of this plan sheet.

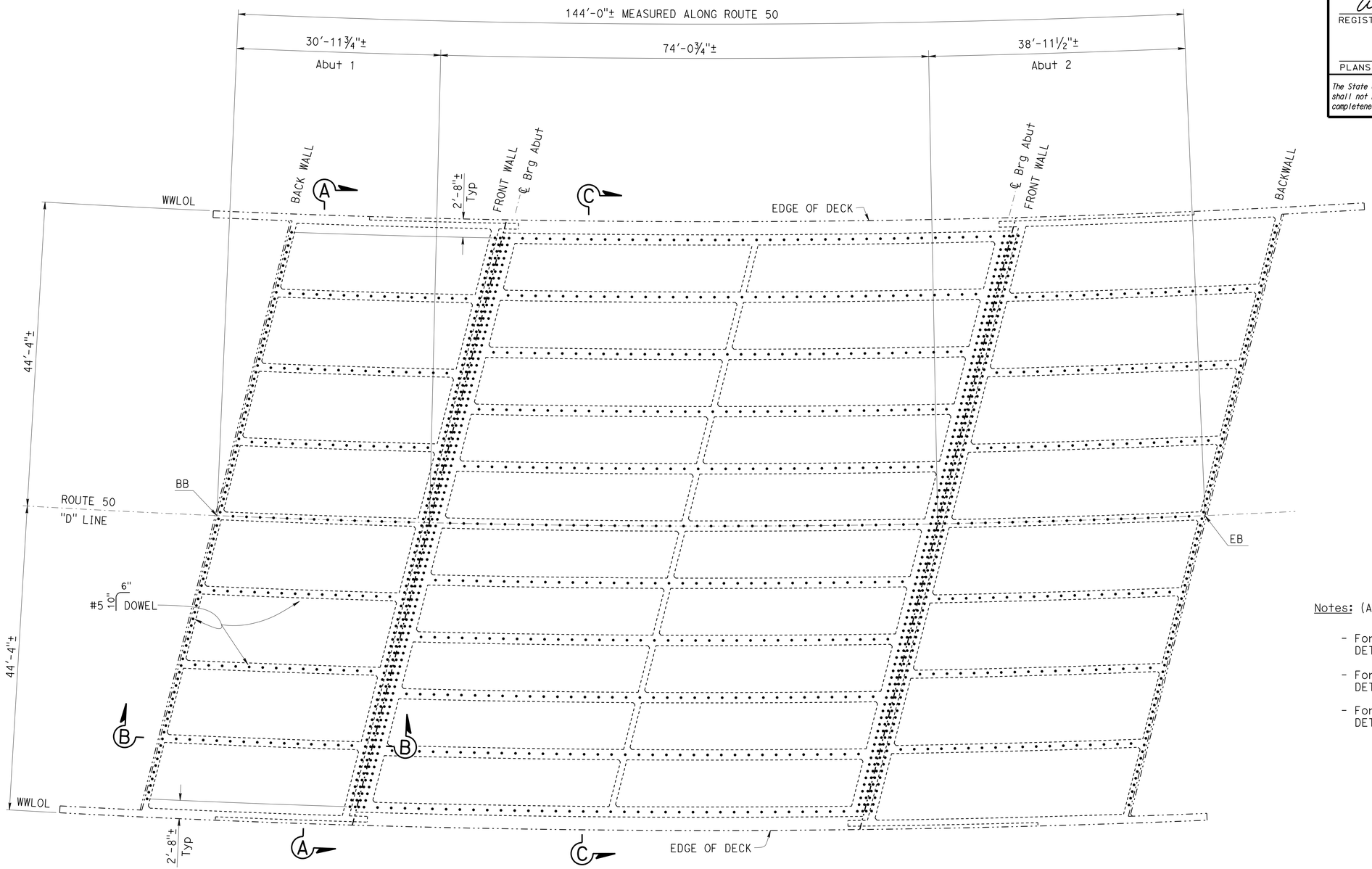

Notes: (APPLY TO THIS SHEET ONLY)

- For "Section A-A" see "DECK ON DECK DETAILS NO. 3" sheet.
- For "Section B-B" see "DECK ON DECK DETAILS NO. 4" sheet.
- For "Section C-C" see "DECK ON DECK DETAILS NO. 5" sheet.

NOTE:
THE CONTRACTOR MUST VERIFY ALL CONTROLLING FIELD DIMENSIONS BEFORE ORDERING OR FABRICATING ANY MATERIAL.

EXISTING GIRDER LAYOUT

⅛" = 1'-0"

(SCHNELL SCHOOL ROAD UNDERCROSSING Br. No. 25-0063)

	BY	CHECKED
DESIGN	J. Radu	A. Frank
DETAILS	Dale Kubochi	A. Frank
QUANTITIES	J. Radu	A. Frank

STATE OF CALIFORNIA
DEPARTMENT OF TRANSPORTATION

DIVISION OF MAINTENANCE
STRUCTURE MAINTENANCE DESIGN

BRIDGE NO. VARIOUS
POST MILE VARIES

ROUTE 50, 80, 193 BRIDGES
DECK ON DECK DETAILS NO. 2

STRUCTURES MAINTENANCE DETAIL SHEET (ENGLISH) (REV. 09-01-10)

ORIGINAL SCALE IN INCHES FOR REDUCED PLANS 0 1 2 3

UNIT: 3488
PROJECT NUMBER & PHASE:
CONTRACT NO.: 03-0G0301

DISREGARD PRINTS BEARING EARLIER REVISION DATES

REVISION DATES: 6-1-14 10-31-14

SHEET 6 OF 16

FILE => 03-0g0301-d-deck-02.dgn

USERNAME => s119538 DATE PLOTTED => 24-JUL-2015 TIME PLOTTED => 11:53

DIST	COUNTY	ROUTE	POST MILES TOTAL PROJECT	SHEET No.	TOTAL SHEETS
03	ED,Pla	50,80,193	Var	55	64

Arlene Frank 2-23-15
REGISTERED CIVIL ENGINEER DATE

6-1-15
PLANS APPROVAL DATE

REGISTERED PROFESSIONAL ENGINEER ARLENE FRANK No. C 55562 Exp. 12-31-16 CIVIL STATE OF CALIFORNIA

The State of California or its officers or agents shall not be responsible for the accuracy or completeness of electronic copies of this plan sheet.

Notes: (APPLY TO THIS SHEET ONLY)

Remove existing 4"± AC overlay with waterproof membrane, Type 1 Barrier Railing and Concrete Barrier Type 50A.

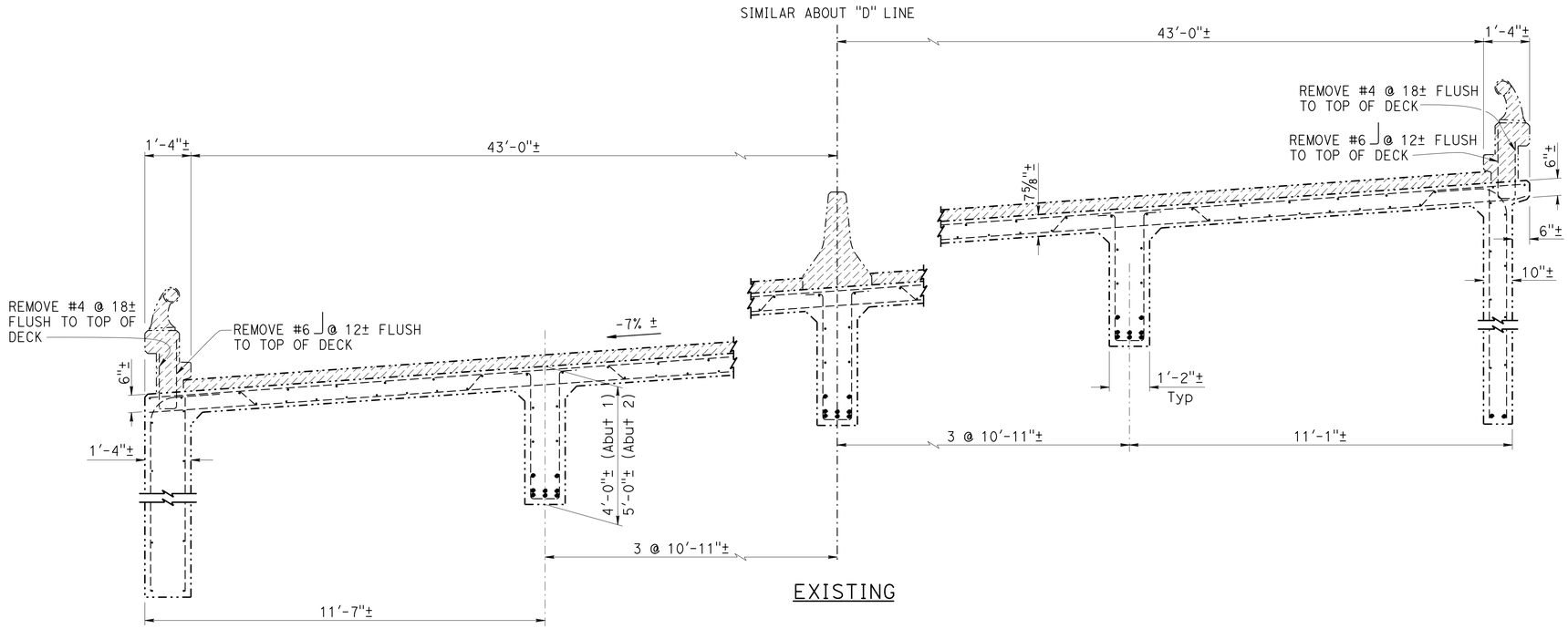

EXISTING

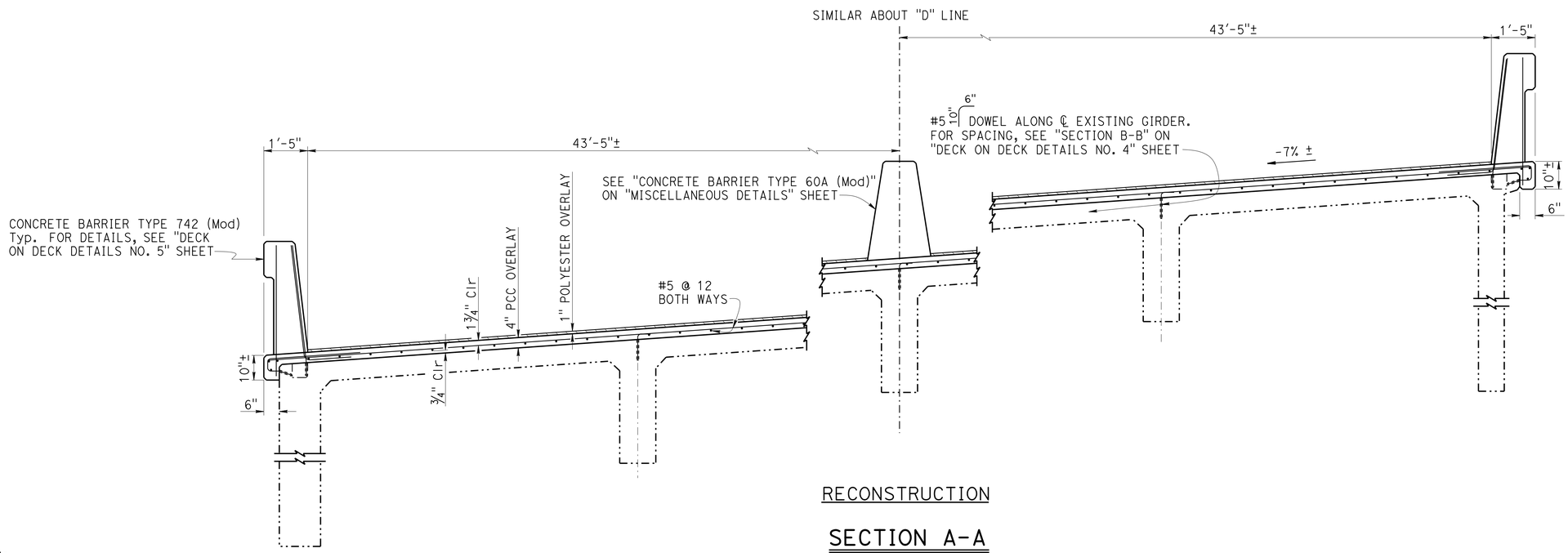

RECONSTRUCTION

SECTION A-A

½" = 1'-0"

NOTE:
THE CONTRACTOR MUST VERIFY ALL CONTROLLING FIELD DIMENSIONS BEFORE ORDERING OR FABRICATING ANY MATERIAL.

(SCHNELL SCHOOL ROAD UNDERCROSSING Br. No. 25-0063)

	BY	CHECKED
DESIGN	J. Radu	A. Frank
DETAILS	Dale Kubochi	A. Frank
QUANTITIES	J. Radu	A. Frank

STATE OF CALIFORNIA
DEPARTMENT OF TRANSPORTATION

DIVISION OF MAINTENANCE
STRUCTURE MAINTENANCE DESIGN

BRIDGE NO. VARIOUS
POST MILE VARIES

ROUTE 50, 80, 193 BRIDGES
DECK ON DECK DETAILS NO. 3

STRUCTURES MAINTENANCE DETAIL SHEET (ENGLISH) (REV. 09-01-10)

ORIGINAL SCALE IN INCHES FOR REDUCED PLANS 0 1 2 3

UNIT: 3488
PROJECT NUMBER & PHASE:
CONTRACT NO.: 03-0G0301

DISREGARD PRINTS BEARING EARLIER REVISION DATES
REVISION DATES 6-18-14 10-27-14 2-20-15

SHEET 7 OF 16

FILE => 03-0g0301-d-deck-03.dgn

USERNAME => s119538 DATE PLOTTED => 24-JUL-2015 TIME PLOTTED => 11:53

DIST	COUNTY	ROUTE	POST MILES TOTAL PROJECT	SHEET No.	TOTAL SHEETS
03	ED,Pla	50,80,193	Var	56	64

Arlene Frank 2-23-15
REGISTERED CIVIL ENGINEER DATE

6-1-15
PLANS APPROVAL DATE

REGISTERED PROFESSIONAL ENGINEER ARLENE FRANK No. C 55562 Exp. 12-31-16 CIVIL STATE OF CALIFORNIA

The State of California or its officers or agents shall not be responsible for the accuracy or completeness of electronic copies of this plan sheet.

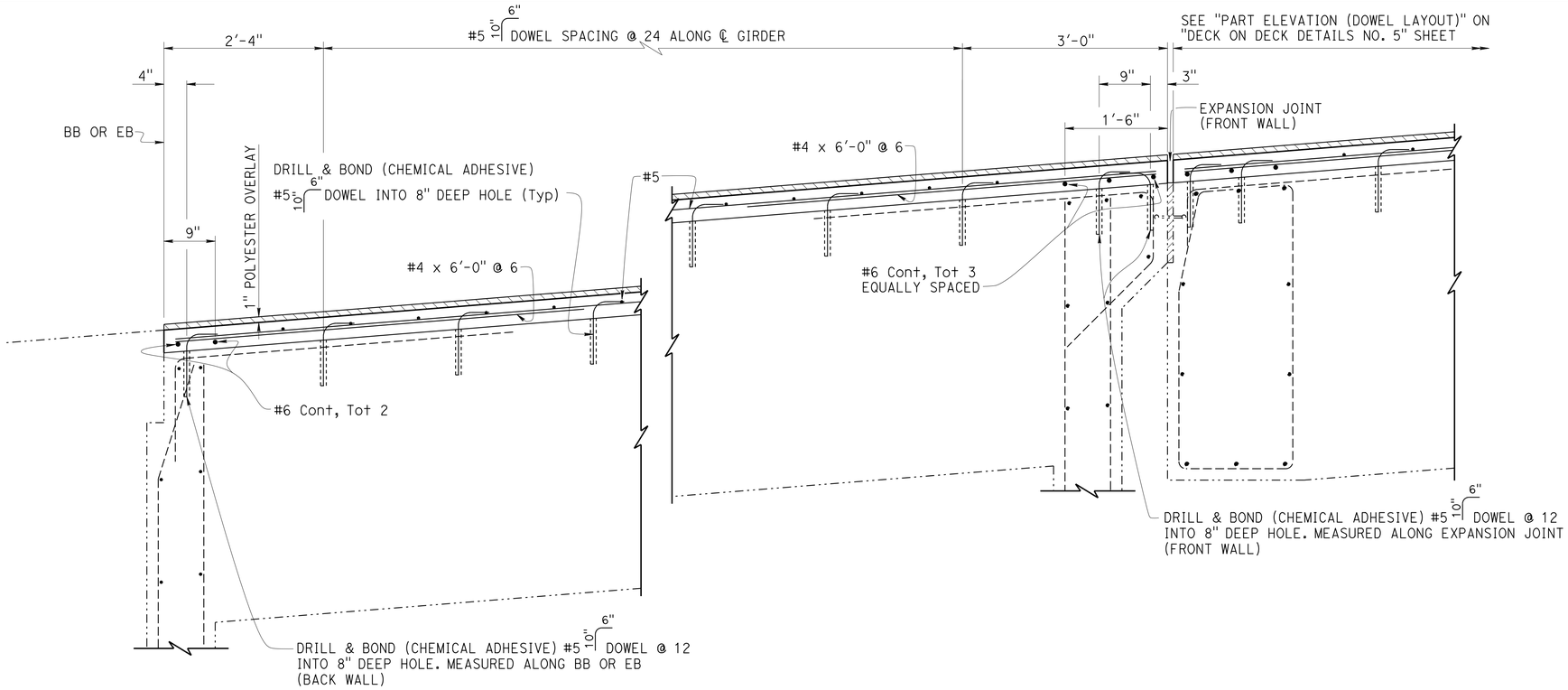

SECTION B-B

1" = 1'-0"

NOTE:
THE CONTRACTOR MUST VERIFY ALL CONTROLLING FIELD DIMENSIONS BEFORE ORDERING OR FABRICATING ANY MATERIAL.

(SCHNELL SCHOOL ROAD UNDERCROSSING Br. No. 25-0063)

	BY	CHECKED
DESIGN	J. Radu	A. Frank
DETAILS	Dale Kubochi	A. Frank
QUANTITIES	J. Radu	A. Frank

STATE OF CALIFORNIA
DEPARTMENT OF TRANSPORTATION

DIVISION OF MAINTENANCE
STRUCTURE MAINTENANCE DESIGN

BRIDGE NO. VARIOUS
POST MILE VARIES

ROUTE 50, 80, 193 BRIDGES
DECK ON DECK DETAILS NO. 4

STRUCTURES MAINTENANCE DETAIL SHEET (ENGLISH) (REV. 09-01-10)

ORIGINAL SCALE IN INCHES FOR REDUCED PLANS 0 1 2 3

UNIT: 3488
PROJECT NUMBER & PHASE:
CONTRACT NO.: 03-0G0301

DISREGARD PRINTS BEARING EARLIER REVISION DATES

REVISION DATES 6-16-14 10-31-14 2-28-15 3-30-15

SHEET 8 OF 16

FILE => 03-0g0301-d-deck-04.dgn

USERNAME => s119538 DATE PLOTTED => 24-JUL-2015 TIME PLOTTED => 11:53

DIST	COUNTY	ROUTE	POST MILES TOTAL PROJECT	SHEET No.	TOTAL SHEETS
03	ED,Pla	50,80,193	Var	57	64

REGISTERED CIVIL ENGINEER 2-23-15 DATE

6-1-15
PLANS APPROVAL DATE

REGISTERED PROFESSIONAL ENGINEER ARLENE FRANK No. C 55562 Exp. 12-31-16 CIVIL STATE OF CALIFORNIA

The State of California or its officers or agents shall not be responsible for the accuracy or completeness of electronic copies of this plan sheet.

Notes: (APPLY TO THIS SHEET ONLY)

Remove existing 4"± AC overlay with waterproof membrane, Type 1 Barrier Railing and Concrete Barrier Type 50A.

- All reinforcement epoxy coated.

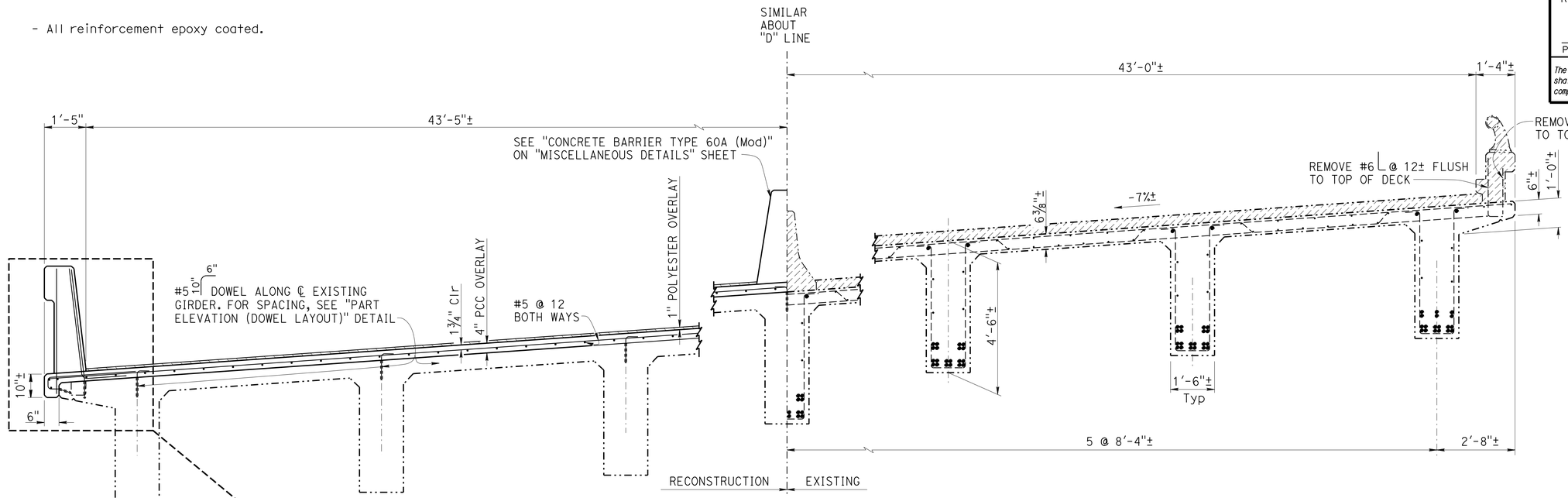

SECTION C-C

½" = 1'-0"

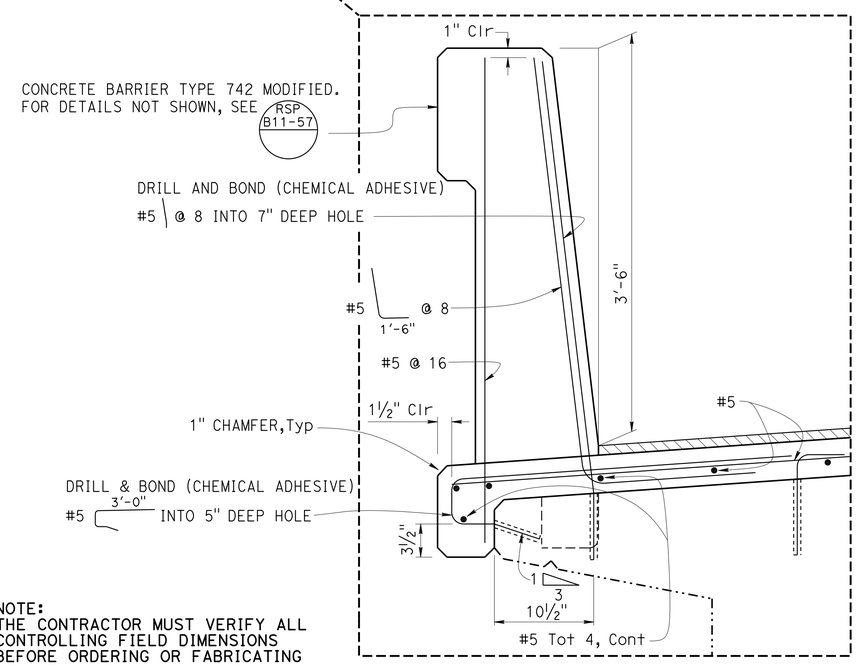

NOTE:
THE CONTRACTOR MUST VERIFY ALL CONTROLLING FIELD DIMENSIONS BEFORE ORDERING OR FABRICATING ANY MATERIAL.

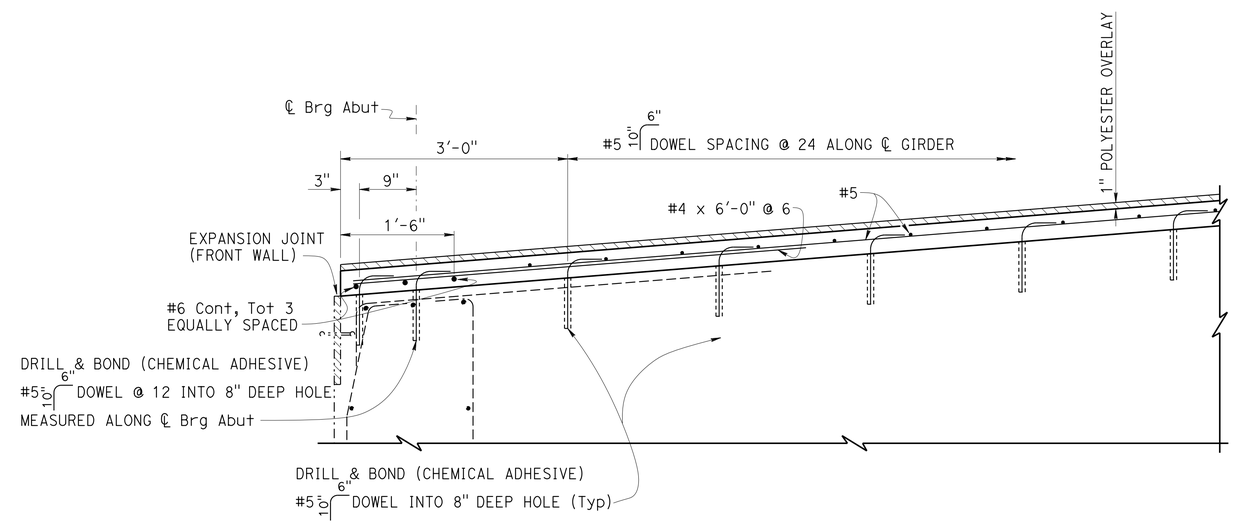

PART ELEVATION (DOWEL LAYOUT)

1" = 1'-0"

NOTE: Abut 1 shown, Abut 2 similar.

(SCHNELL SCHOOL ROAD UNDERCROSSING Br. No. 25-0063)

	BY	CHECKED
DESIGN	J. Radu	A. Frank
DETAILS	Dale Kubochi	A. Frank
QUANTITIES	J. Radu	A. Frank

STATE OF CALIFORNIA
DEPARTMENT OF TRANSPORTATION

DIVISION OF MAINTENANCE
STRUCTURE MAINTENANCE DESIGN

BRIDGE NO. VARIOUS
POST MILE VARIES

ROUTE 50, 80, 193 BRIDGES
DECK ON DECK DETAILS NO. 5

STRUCTURES MAINTENANCE DETAIL SHEET (ENGLISH) (REV. 09-01-10)

ORIGINAL SCALE IN INCHES FOR REDUCED PLANS 0 1 2 3

UNIT: 3488
PROJECT NUMBER & PHASE:
CONTRACT NO.: 03-0G0301

DISREGARD PRINTS BEARING EARLIER REVISION DATES

REVISION DATES 6-16-14 3-30-15 5-6-15

SHEET 9 OF 16

FILE => 03-0g0301-d-deck-05.dgn

USERNAME => s119538 DATE PLOTTED => 24-JUL-2015 TIME PLOTTED => 11:54

DIST	COUNTY	ROUTE	POST MILES TOTAL PROJECT	SHEET No.	TOTAL SHEETS
03	ED,Pla	50,80,193	Var	58	64

Arlene Frank 2-23-15
REGISTERED CIVIL ENGINEER DATE

6-1-15
PLANS APPROVAL DATE

REGISTERED PROFESSIONAL ENGINEER ARLENE FRANK No. C 55562 Exp. 12-31-16 CIVIL STATE OF CALIFORNIA

The State of California or its officers or agents shall not be responsible for the accuracy or completeness of electronic copies of this plan sheet.

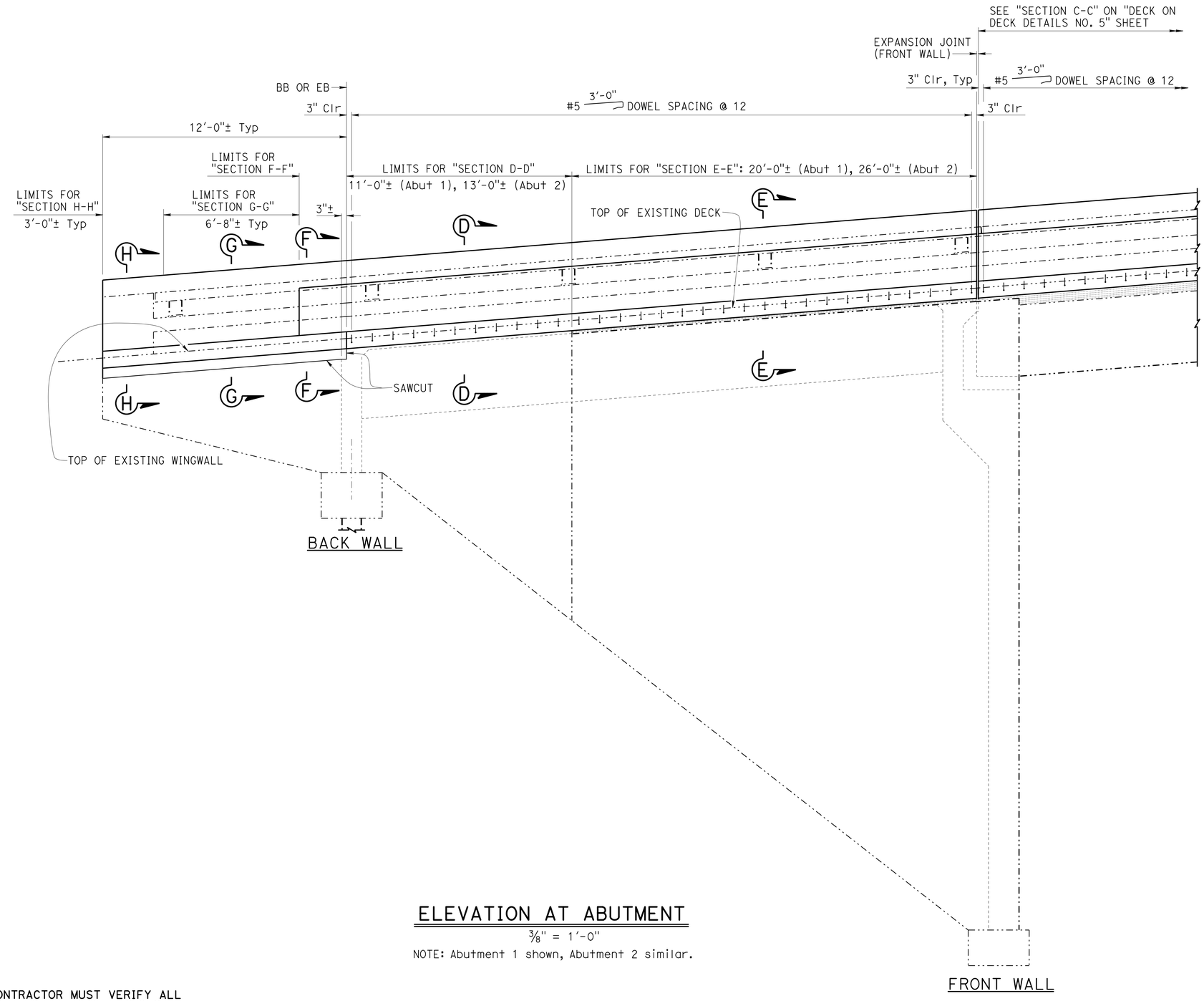

ELEVATION AT ABUTMENT

3/8" = 1'-0"

NOTE: Abutment 1 shown, Abutment 2 similar.

Notes: (APPLY TO THIS SHEET ONLY)

- For "Section D-D" and "Section E-E" see "DECK ON DECK DETAILS NO. 7" sheet.
- For "Section F-F", "Section G-G" and "Section H-H" see "DECK ON DECK DETAILS NO. 8" sheet.

NOTE:
THE CONTRACTOR MUST VERIFY ALL CONTROLLING FIELD DIMENSIONS BEFORE ORDERING OR FABRICATING ANY MATERIAL.

(SCHNELL SCHOOL ROAD UNDERCROSSING Br. No. 25-0063)

	BY	CHECKED
DESIGN	J. Radu	A. Frank
DETAILS	Dale Kubochi	A. Frank
QUANTITIES	J. Radu	A. Frank

STATE OF CALIFORNIA
DEPARTMENT OF TRANSPORTATION

DIVISION OF MAINTENANCE
STRUCTURE MAINTENANCE DESIGN

BRIDGE NO. VARIOUS
POST MILE VARIES

ROUTE 50, 80, 193 BRIDGES
DECK ON DECK DETAILS NO. 6

STRUCTURES MAINTENANCE DETAIL SHEET (ENGLISH) (REV. 09-01-10)

ORIGINAL SCALE IN INCHES FOR REDUCED PLANS 0 1 2 3

UNIT: 3488
PROJECT NUMBER & PHASE:
CONTRACT NO.: 03-0G0301

DISREGARD PRINTS BEARING EARLIER REVISION DATES

REVISION DATES 6-10-14

SHEET 10 OF 16

FILE => 03-0g0301-d-deck-06.dgn

USERNAME => s119538 DATE PLOTTED => 24-JUL-2015 TIME PLOTTED => 11:54

DIST	COUNTY	ROUTE	POST MILES TOTAL PROJECT	SHEET No.	TOTAL SHEETS
03	ED,Pla	50,80,193	Var	59	64

REGISTERED CIVIL ENGINEER — DATE 2-23-15

6-1-15
PLANS APPROVAL DATE

REGISTERED PROFESSIONAL ENGINEER — ARLENE FRANK — No. C 55562 — Exp. 12-31-16 — CIVIL — STATE OF CALIFORNIA

The State of California or its officers or agents shall not be responsible for the accuracy or completeness of electronic copies of this plan sheet.

Notes: (APPLY TO THIS SHEET ONLY)

Remove existing 4"± AC overlay with waterproof membrane and Type 1 barrier railing, except as noted.

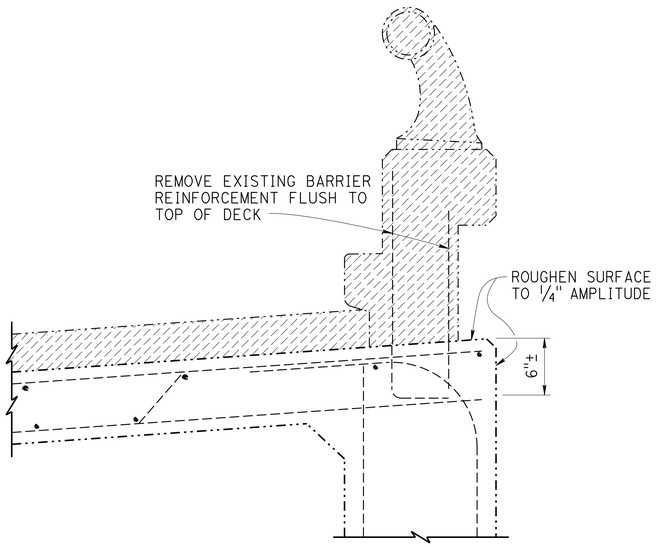

EXISTING

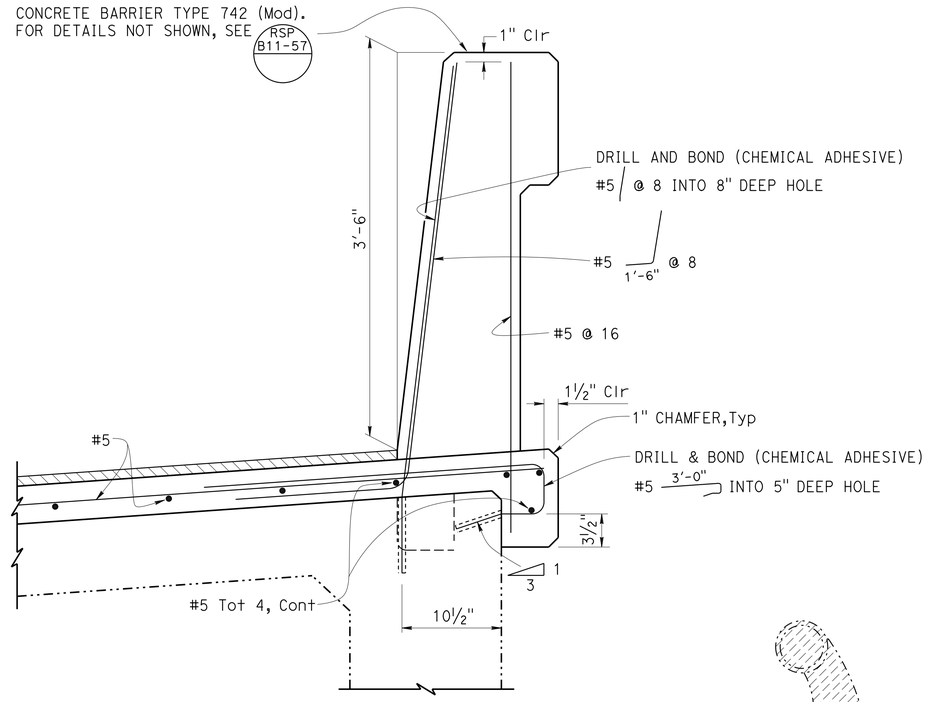

RECONSTRUCTION

SECTION D-D

1 1/2" = 1'-0"

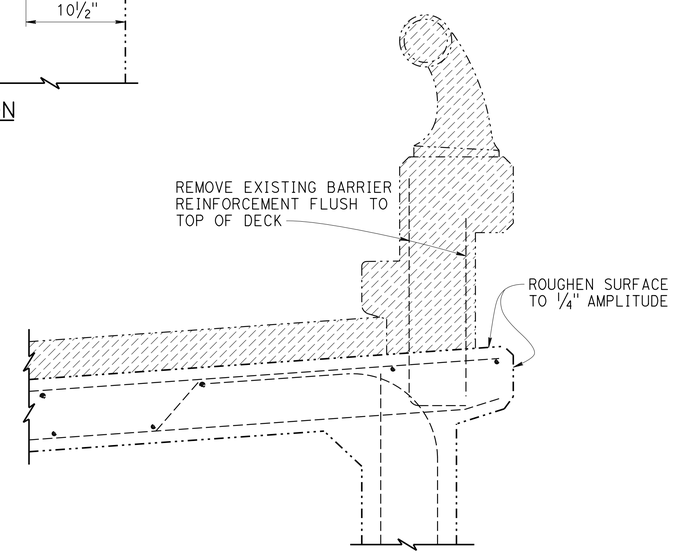

EXISTING

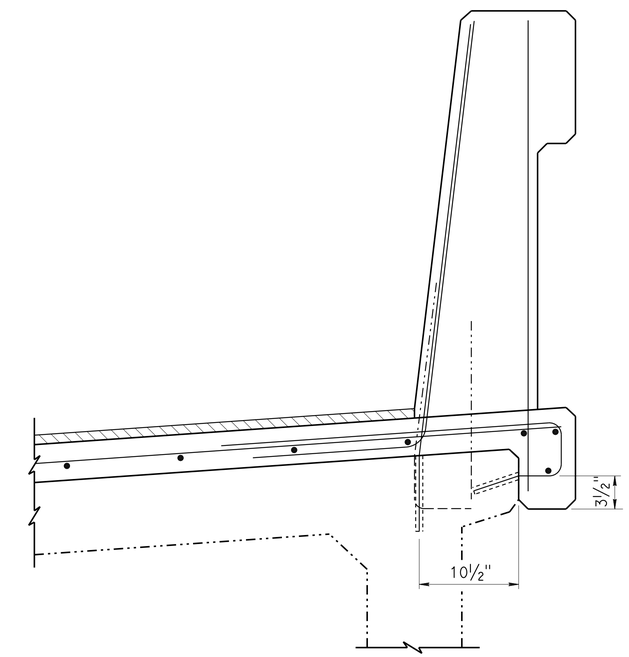

RECONSTRUCTION

SECTION E-E

1 1/2" = 1'-0"

Note: For reinforcement and details not noted, see "Section D-D".

NOTE:
THE CONTRACTOR MUST VERIFY ALL CONTROLLING FIELD DIMENSIONS BEFORE ORDERING OR FABRICATING ANY MATERIAL.

(SCHNELL SCHOOL ROAD UNDERCROSSING Br. No. 25-0063)

	BY	CHECKED
DESIGN	J. Radu	A. Frank
DETAILS	Dale Kubochi	A. Frank
QUANTITIES	J. Radu	A. Frank

STATE OF CALIFORNIA
DEPARTMENT OF TRANSPORTATION

DIVISION OF MAINTENANCE
STRUCTURE MAINTENANCE DESIGN

BRIDGE NO. VARIOUS
POST MILE VARIES

ROUTE 50, 80, 193 BRIDGES
DECK ON DECK DETAILS NO. 7

STRUCTURES MAINTENANCE DETAIL SHEET (ENGLISH) (REV. 09-01-10)

ORIGINAL SCALE IN INCHES FOR REDUCED PLANS 0 1 2 3

UNIT: 3488
PROJECT NUMBER & PHASE:
CONTRACT NO.: 03-0G0301

DISREGARD PRINTS BEARING EARLIER REVISION DATES

REVISION DATES: 6-16-14 5-6-15 2-26-15

SHEET 11 OF 16

FILE => 03-0g0301-d-deck-07.dgn

USERNAME => s179538 DATE PLOTTED => 24-JUL-2015 TIME PLOTTED => 11:54

DIST	COUNTY	ROUTE	POST MILES TOTAL PROJECT	SHEET No.	TOTAL SHEETS
03	ED,Pla	50,80,193	Var	60	64

Arlene Frank 2-23-15
REGISTERED CIVIL ENGINEER DATE

6-1-15
PLANS APPROVAL DATE

REGISTERED PROFESSIONAL ENGINEER
ARLENE FRANK
No. C 55562
Exp. 12-31-16
CIVIL
STATE OF CALIFORNIA

The State of California or its officers or agents shall not be responsible for the accuracy or completeness of electronic copies of this plan sheet.

Notes: (APPLY TO THIS SHEET ONLY)

Remove existing Type 1 barrier railing and top of Wingwall, except as noted.

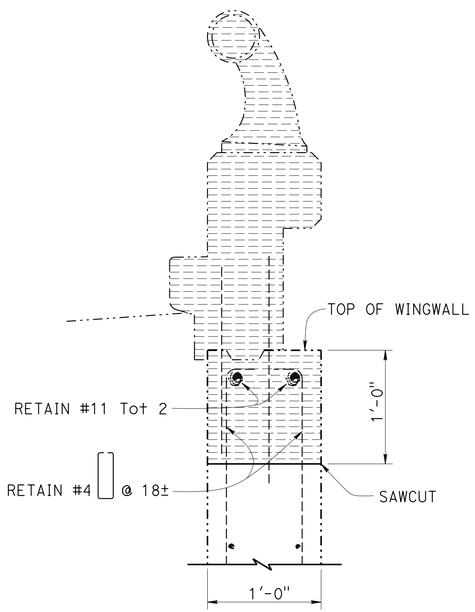

EXISTING

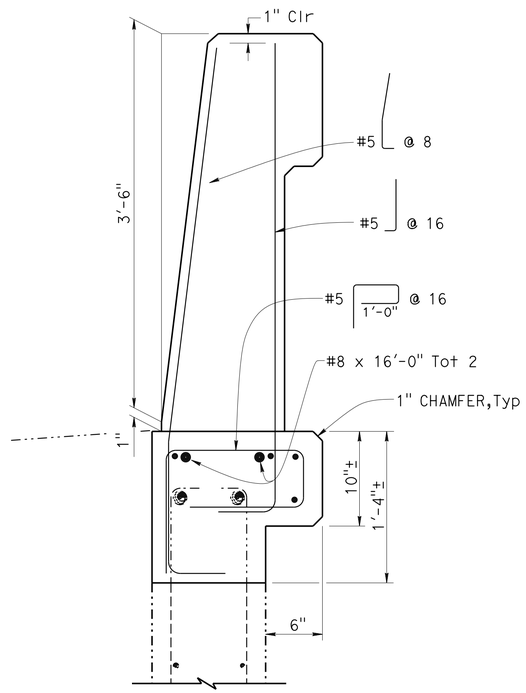

RECONSTRUCTION

SECTION F-F

1½" = 1'-0"

Note: For reinforcement not noted, see "Section D-D" on "DECK ON DECK DETAILS NO. 7" sheet.

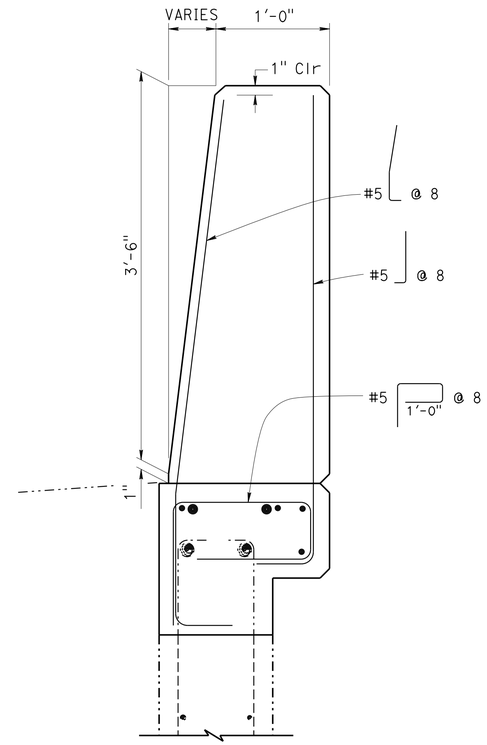

RECONSTRUCTION

SECTION G-G

1½" = 1'-0"

Note: For details not shown or noted, see "SECTION F-F"

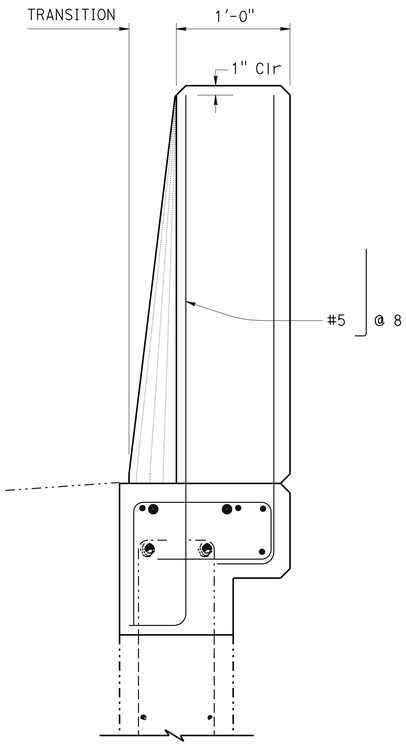

RECONSTRUCTION

SECTION H-H

1½" = 1'-0"

Note: For details not shown or noted, see "SECTION G-G"

NOTE:
THE CONTRACTOR MUST VERIFY ALL CONTROLLING FIELD DIMENSIONS BEFORE ORDERING OR FABRICATING ANY MATERIAL.

(SCHNELL SCHOOL ROAD UNDERCROSSING Br. No. 25-0063)

	BY	CHECKED
DESIGN	J. Radu	A. Frank
DETAILS	Dale Kubochi	A. Frank
QUANTITIES	J. Radu	A. Frank

STATE OF CALIFORNIA
DEPARTMENT OF TRANSPORTATION

DIVISION OF MAINTENANCE
STRUCTURE MAINTENANCE DESIGN

BRIDGE NO. VARIOUS
POST MILE VARIES

ROUTE 50, 80, 193 BRIDGES
DECK ON DECK DETAILS NO. 8

STRUCTURES MAINTENANCE DETAIL SHEET (ENGLISH) (REV. 09-01-10)

ORIGINAL SCALE IN INCHES FOR REDUCED PLANS 0 1 2 3

UNIT: 3488
PROJECT NUMBER & PHASE:
CONTRACT NO.: 03-0G0301

DISREGARD PRINTS BEARING EARLIER REVISION DATES

REVISION DATES: 6-10-14

SHEET 12 OF 16

FILE => 03-0g0301-d-deck-08.dgn

USERNAME => s119538 DATE PLOTTED => 24-JUL-2015 TIME PLOTTED => 11:54

DIST	COUNTY	ROUTE	POST MILES TOTAL PROJECT	SHEET No.	TOTAL SHEETS
03	ED,Pla	50,80,193	Var	61	64

Arlene Frank 2-23-15
REGISTERED CIVIL ENGINEER DATE

6-1-15
PLANS APPROVAL DATE

REGISTERED PROFESSIONAL ENGINEER ARLENE FRANK No. C 55562 Exp. 12-31-16 CIVIL STATE OF CALIFORNIA

The State of California or its officers or agents shall not be responsible for the accuracy or completeness of electronic copies of this plan sheet.

NOTES: (APPLY TO THIS SHEET ONLY)

Indicates limits of prepare concrete bridge deck surface, furnish and place new 1" minimum depth polyester concrete overlay, except where shown.

Indicates limits of grind concrete surfacing.

✱ - Remove concrete deck surface around existing deck drain. Typ

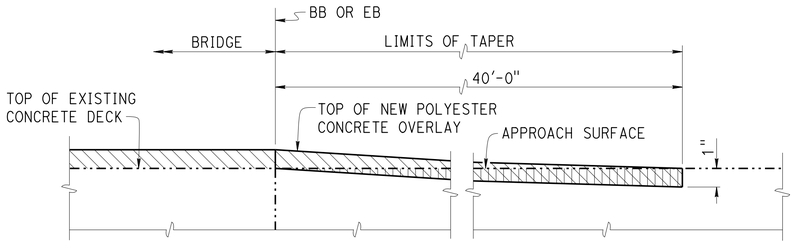

LONGITUDINAL

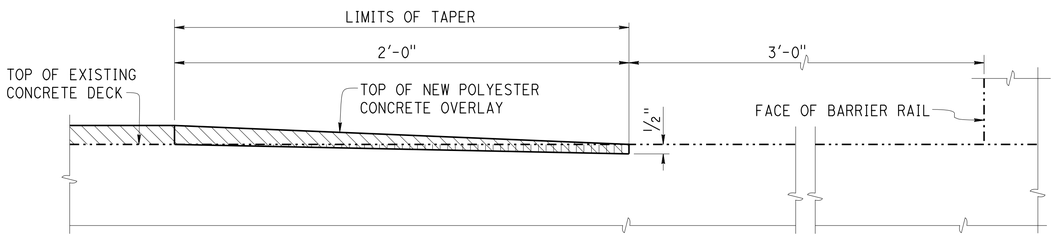

TRANSVERSE

TAPER DETAILS

No Scale

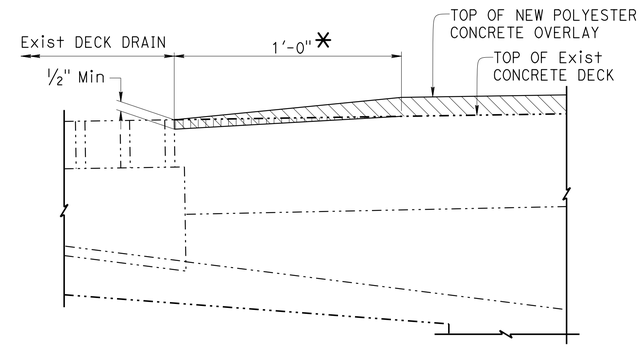

SECTION Q-Q

3" = 1'-0"

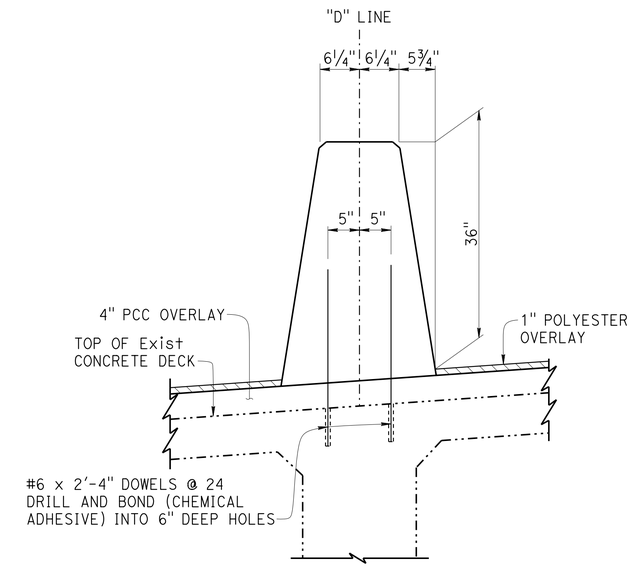

CONCRETE BARRIER TYPE 60A (MOD)

1" = 1'-0"

NOTE:
For other details not shown or noted, see A76A

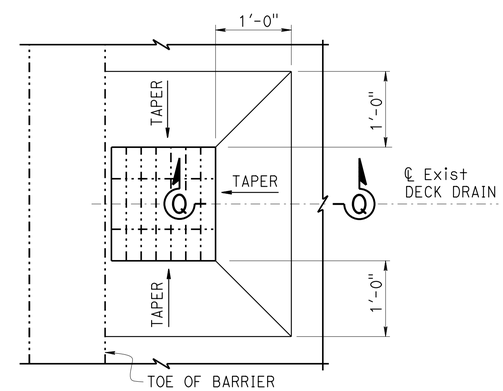

DECK DRAIN TAPER

1" = 1'-0"

NOTE:
- Detail shown for polyester overlay taper around existing deck drains. (Typ)

NOTE:
THE CONTRACTOR MUST VERIFY ALL CONTROLLING FIELD DIMENSIONS BEFORE ORDERING OR FABRICATING ANY MATERIAL.

	BY	CHECKED
DESIGN	J. Radu	A. Frank
DETAILS	Dale Kubochi	A. Frank
QUANTITIES	J. Radu	A. Frank

STATE OF CALIFORNIA
DEPARTMENT OF TRANSPORTATION

DIVISION OF MAINTENANCE
STRUCTURE MAINTENANCE DESIGN

BRIDGE NO. VARIOUS
POST MILE VARIES

ROUTE 50, 80, 193 BRIDGES
MISCELLANEOUS DETAILS

STRUCTURES MAINTENANCE DETAIL SHEET (ENGLISH) (REV. 09-01-10)

ORIGINAL SCALE IN INCHES FOR REDUCED PLANS 0 1 2 3

UNIT: 3488
PROJECT NUMBER & PHASE: 0314000027
CONTRACT NO.: 03-0G0301

DISREGARD PRINTS BEARING EARLIER REVISION DATES

REVISION DATES: 9-1-14 5-8-16 5-8-15

SHEET 13 OF 16

FILE => 03-0g0301-h-misc-det.dgn

USERNAME => s119538 DATE PLOTTED => 24-JUL-2015 TIME PLOTTED => 11:54

DIST	COUNTY	ROUTE	POST MILES TOTAL PROJECT	SHEET No.	TOTAL SHEETS
03	ED,Pla	50,80,193	Var	62	64

Arlene Frank 2-23-15
REGISTERED CIVIL ENGINEER DATE

6-1-15
PLANS APPROVAL DATE

REGISTERED PROFESSIONAL ENGINEER ARLENE FRANK No. C 55562 Exp. 12-31-16 CIVIL STATE OF CALIFORNIA

The State of California or its officers or agents shall not be responsible for the accuracy or completeness of electronic copies of this plan sheet.

Notes: (APPLY TO THIS SHEET ONLY)

Indicates limits of remove existing concrete backwall, concrete barrier type 28, and AC approach.

-For "View J-J", see "JOINT SEAL DETAILS NO. 2" sheet.

-New reinforcement must be epoxy coated.

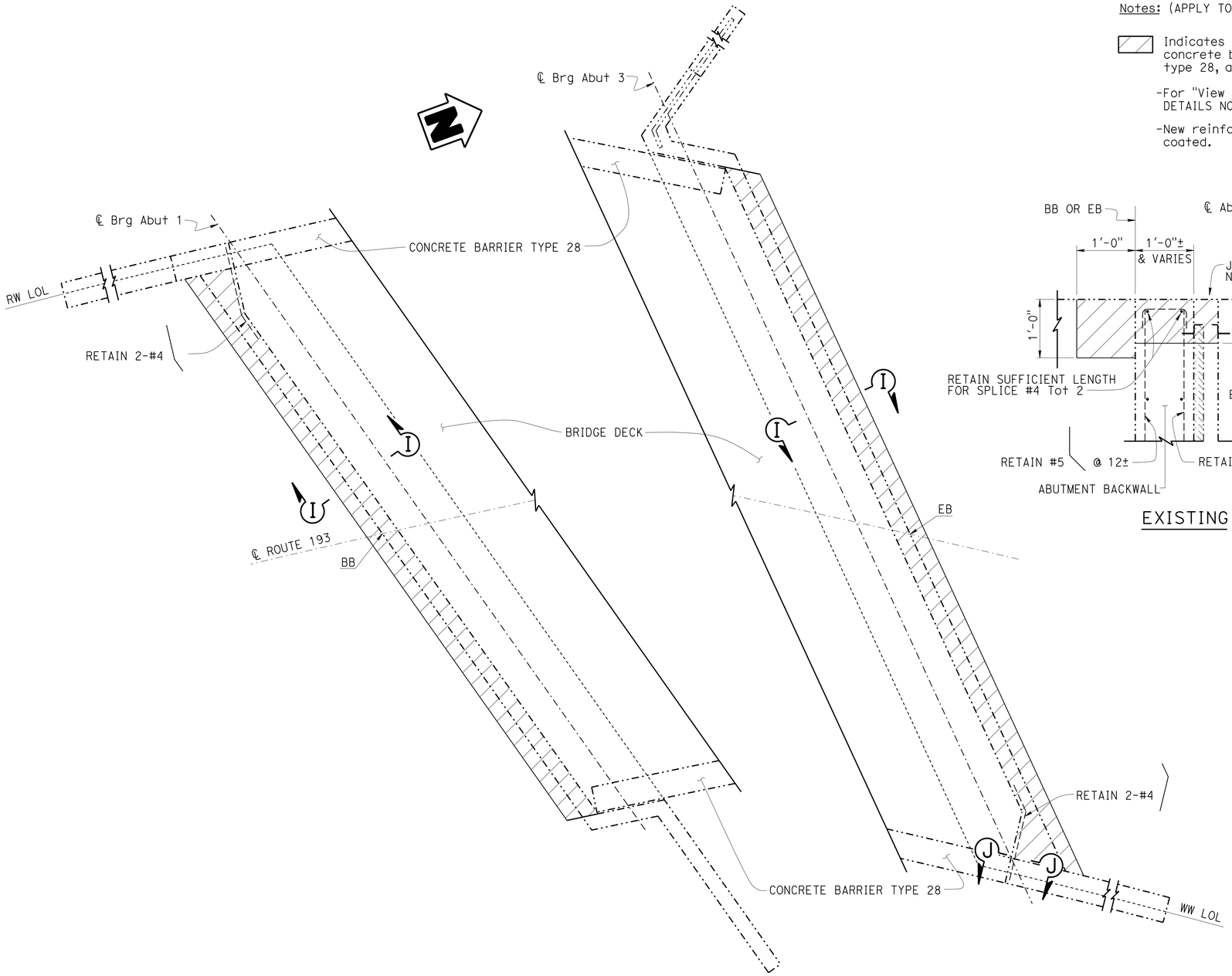

PLAN
1/4" = 1'-0"

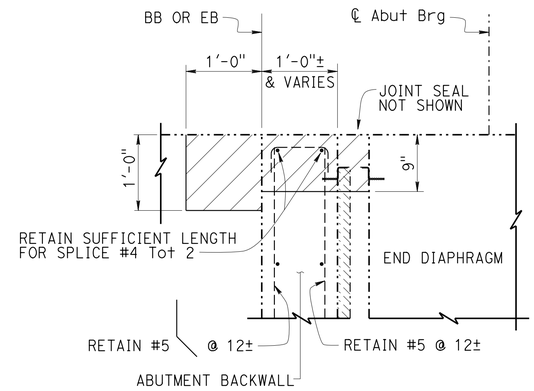

EXISTING

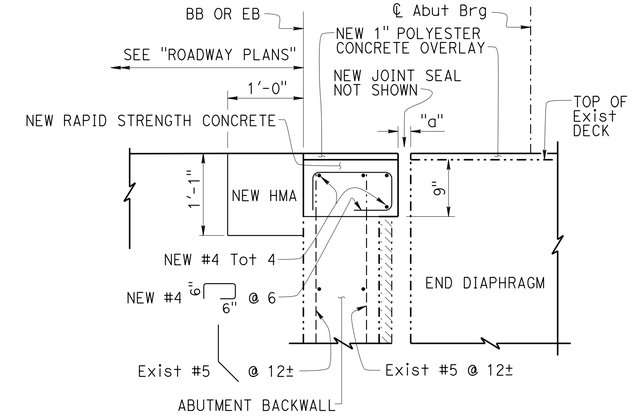

RECONSTRUCTION

SECTION I-I
1" = 1'-0"

TEMPORARY DECK PLATE LOAD CRITERIA		
MOMENT DEMAND/FOOT (kip-ft/ft)	BOLT SHEAR/FOOT (kip/ft)	BOLT TENSION (kip)
4.8	8.0	4.6

Plate deflection must not exceed s/300 (s = span in feet).
Maximum anchor bolt spacing = 9".

GENERAL NOTES
LOAD FACTOR DESIGN

DESIGN: BRIDGE DESIGN SPECIFICATIONS (1996 AASHTO with Interims and Revisions by CALTRANS)

DEAD LOAD: Includes 35 psf for future wearing surface.

LIVE LOADING: HS20-44 and alternative.

REINFORCED CONCRETE: fy = 60 ksi
f'c = 3.6 ksi
n = 8

NOTE:
THE CONTRACTOR MUST VERIFY ALL CONTROLLING FIELD DIMENSIONS BEFORE ORDERING OR FABRICATING ANY MATERIAL.

(SOUTH FORK AMERICAN RIVER Br. No. 25-0033)

	BY	CHECKED
DESIGN	J. Radu	A. Frank
DETAILS	Dale Kubochi	A. Frank
QUANTITIES	J. Radu	A. Frank

STATE OF CALIFORNIA
DEPARTMENT OF TRANSPORTATION

DIVISION OF MAINTENANCE
STRUCTURE MAINTENANCE DESIGN

BRIDGE NO. VARIOUS
POST MILE VARIES

ROUTE 50, 80, 193 BRIDGES
JOINT SEAL DETAILS NO. 1

STRUCTURES MAINTENANCE DETAIL SHEET (ENGLISH) (REV. 09-01-10)

ORIGINAL SCALE IN INCHES FOR REDUCED PLANS 0 1 2 3

UNIT: 3488
PROJECT NUMBER & PHASE: 0314000027
CONTRACT NO.: 03-0G0301

DISREGARD PRINTS BEARING EARLIER REVISION DATES

REVISION DATES 6-18-14 8-15-14 2-20-15 5-6-15

SHEET 14 OF 16

FILE => 03-0g0301-j-jt-det01.dgn

USERNAME => s119538 DATE PLOTTED => 24-JUL-2015 TIME PLOTTED => 11:54

DIST	COUNTY	ROUTE	POST MILES TOTAL PROJECT	SHEET No.	TOTAL SHEETS
03	ED,Pla	50,80,193	Var	63	64

Arlene Frank 2-23-15
REGISTERED CIVIL ENGINEER DATE

6-1-15
PLANS APPROVAL DATE

REGISTERED PROFESSIONAL ENGINEER ARLENE FRANK No. C 55562 Exp. 12-31-16 CIVIL STATE OF CALIFORNIA

The State of California or its officers or agents shall not be responsible for the accuracy or completeness of electronic copies of this plan sheet.

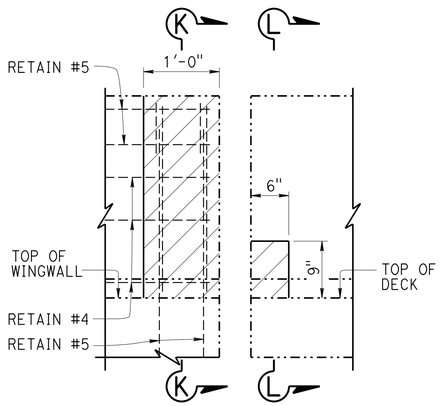

EXISTING

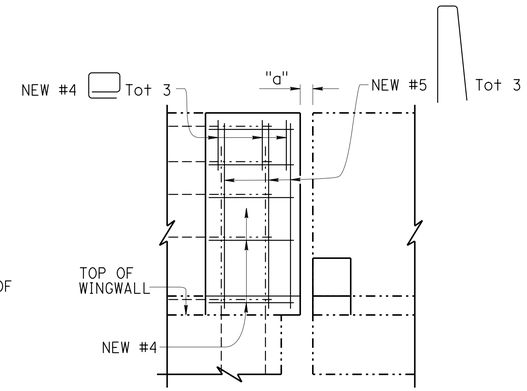

RECONSTRUCTION

VIEW J-J

1" = 1'-0"

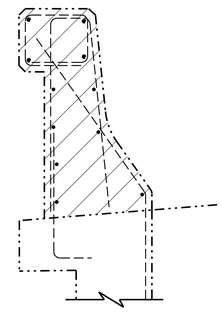

EXISTING

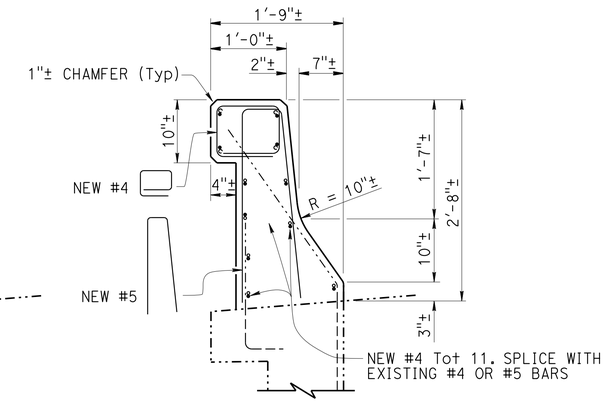

RECONSTRUCTION

SECTION K-K

1" = 1'-0"

Notes: (APPLY TO THIS SHEET ONLY)

Indicates limits of remove portions of concrete barrier rail. Retain reinforcing steel bars where noted. Place new concrete.

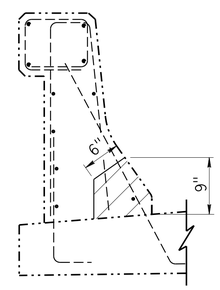

EXISTING

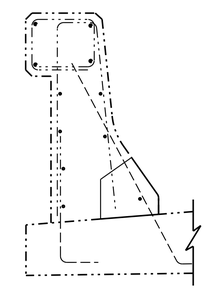

RECONSTRUCTION

SECTION L-L

1" = 1'-0"

NOTE:
THE CONTRACTOR MUST VERIFY ALL CONTROLLING FIELD DIMENSIONS BEFORE ORDERING OR FABRICATING ANY MATERIAL.

(SOUTH FORK AMERICAN RIVER Br. No. 25-0033)

	BY	CHECKED
DESIGN	J. Radu	A. Frank
DETAILS	Dale Kubochi	A. Frank
QUANTITIES	J. Radu	A. Frank

STATE OF CALIFORNIA
DEPARTMENT OF TRANSPORTATION

DIVISION OF MAINTENANCE
STRUCTURE MAINTENANCE DESIGN

BRIDGE NO. VARIOUS
POST MILE VARIES

ROUTE 50, 80, 193 BRIDGES
JOINT SEAL DETAILS NO. 2

STRUCTURES MAINTENANCE DETAIL SHEET (ENGLISH) (REV. 09-01-10)

ORIGINAL SCALE IN INCHES FOR REDUCED PLANS 0 1 2 3

UNIT: 3488
PROJECT NUMBER & PHASE: 0314000027
CONTRACT NO.: 03-0G0301

DISREGARD PRINTS BEARING EARLIER REVISION DATES

REVISION DATES 6-18-14 9-12-14 2-20-15

SHEET 15 OF 16

FILE => 03-0g0301-j-jt-det02.dgn

USERNAME => s119538 DATE PLOTTED => 24-JUL-2015 TIME PLOTTED => 11:54

DIST	COUNTY	ROUTE	POST MILES TOTAL PROJECT	SHEET No.	TOTAL SHEETS
03	ED,Pla	50,80,193	Var	64	64

REGISTERED CIVIL ENGINEER — DATE 2-23-15

6-1-15
PLANS APPROVAL DATE

REGISTERED PROFESSIONAL ENGINEER — ARLENE FRANK — No. C 55562 — Exp. 12-31-16 — CIVIL — STATE OF CALIFORNIA

The State of California or its officers or agents shall not be responsible for the accuracy or completeness of electronic copies of this plan sheet.

JOINT SEAL TABLE

BRIDGE NAME	BRIDGE NUMBER	LOCATION		MINIMUM "MR" (INCHES)	APPROXIMATE LENGTH (FEET)	EXISTING WATERSTOP	APPROX DEPTH TO CLEAN EXP JOINT (INCHES)
CAMERON PARK DRIVE UNDERCROSSING	25-0084R	Abut 1	BB	✱ 1	39.5	NO	11.5
		Abut 2	EB	✱ 1	39.5	NO	11.5
RED HAWK PARKWAY UNDERCROSSING	25-0120L	Abut 1	BW	1½	67.2	NO	12
		Abut 2	BW	1½	67.8	NO	12
	25-0120R	Abut 1	BW	1½	67.2	NO	12
		Abut 2	BW	1½	68.8	NO	12
SCHNELL SCHOOL ROAD UNDERCROSSING	25-0063	Abut 1	FW	✱ 1	89.7	YES	12
		Abut 2	FW	✱ 1	90.3	YES	12
UPPER TRUCKEE RIVER	25-0015	Abut 1	BW	1½	53.5	YES	6
		Abut 3	BW	1½	53.5	YES	6
SOUTH FORK AMERICAN RIVER	25-0033	Abut 1	BW	2	47.0	YES	6
		Abut 3	BW	2	55.0	YES	6

LEGEND:
BW - Abutment backwall joint
BB - Paving Notch at beginning of bridge
EB - Paving Notch at end of bridge
FW - Abutment front wall joint
✱ - Joint seal Type B only

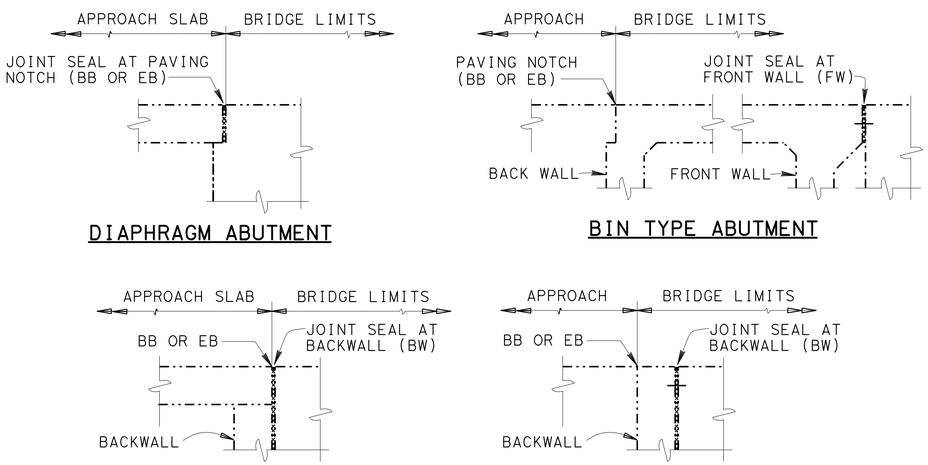

JOINT SEAL LOCATION

NOTE:
THE CONTRACTOR MUST VERIFY ALL CONTROLLING FIELD DIMENSIONS BEFORE ORDERING OR FABRICATING ANY MATERIAL.

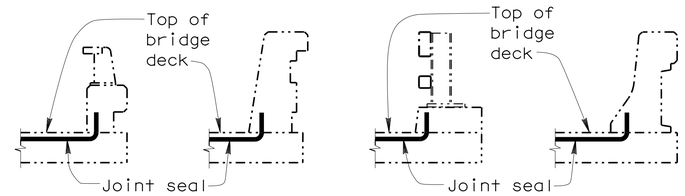

BARRIER RAIL

JOINT SEAL AT LOW SIDE OF DECK

Notes: Details shown for illustration purposes only. For use only where deck joint matches the sidewalk, curb or barrier rail joint.

DECK REPAIR TABLE
REMOVE UNSOUND CONCRETE AND RAPID SETTING CONCRETE (PATCH)

BRIDGE NAME	BRIDGE NUMBER	APPROXIMATE AREA DAMAGED (PERCENT)	APPROXIMATE DEPTH (INCHES)
ROSEVILLE PARKWAY OVERHEAD	19-0177	1	3
CAMERON PARK DRIVE UNDERCROSSING	25-0084L/R	1	3
RED HAWK PARKWAY UNDERCROSSING	25-0120L/R	1	3
SCHNELL SCHOOL ROAD UNDERCROSSING	25-0063	1	3
UPPER TRUCKEE RIVER	25-0015	3	3
SOUTH FORK AMERICAN RIVER	25-0033	1	3

Locations to be determined by the Engineer.
For details see "Deck Repair Detail - Overlay".

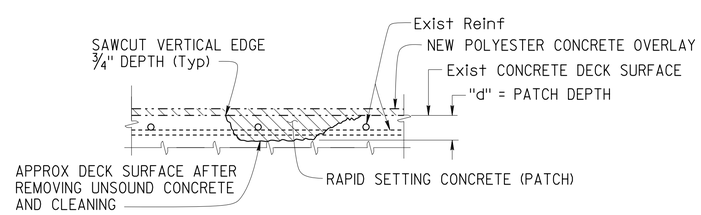

DECK REPAIR DETAIL - OVERLAY

Note: Locations to be determined by the Engineer. Reinforcement may be encountered during deck concrete removal.

NO SCALE

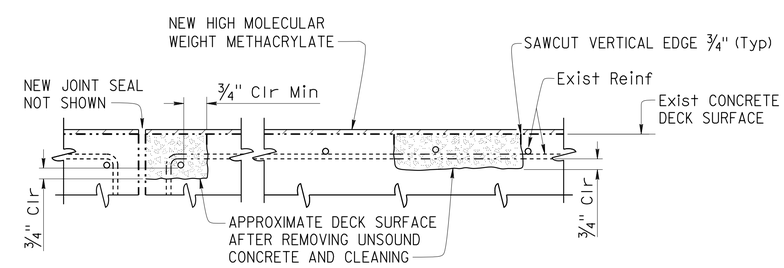

JOINT AND DECK REPAIR DETAIL

Note: Locations to be determined by the Engineer. Reinforcement may be encountered during deck concrete removal.

NO SCALE

The following notes apply to JOINT SEAL TYPE B:

1) Seal must satisfy both minimum Movement Rating (MR) and minimum W1 requirements.
2) Minimum W1 is the calculated maximum width of the joint based on field measurements. After the joints have been cleaned, minimum W1 is to be calculated by the Engineer.
3) W1 must be the smaller of the values determined as follows:
   A) 0.85 times the manufacturer's designed minimum uncompressed width of the seal.
   B) The width of the seal on the third successive test cycle of the pressure deflection test, when compressed to an average pressure of 3 psi.
4) Bend Type B joint seal 6" up into curb or rail on the low side of the deck where deck joint matches curb or rail joint.
5) For details not shown, see B6-21

The following notes apply to JOINT SEAL TYPE A:

1) Install Type A joint seal 3" up into rail on the low side of deck where joint matches curb or rail joint.
2) For details not shown, see B6-21

DESIGN	BY J. Radu	CHECKED A. Frank	
DETAILS	BY Dale Kubochi	CHECKED A. Frank	
QUANTITIES	BY J. Radu	CHECKED A. Frank	

STATE OF CALIFORNIA
DEPARTMENT OF TRANSPORTATION

DIVISION OF MAINTENANCE
STRUCTURE MAINTENANCE DESIGN

BRIDGE NO. VARIOUS
POST MILE VARIES

ROUTE 50, 80, 193 BRIDGES
JOINT SEAL DETAILS NO. 3

STRUCTURES MAINTENANCE DETAIL SHEET (ENGLISH) (REV. 09-01-10)

ORIGINAL SCALE IN INCHES FOR REDUCED PLANS 0 1 2 3

UNIT: 3488
PROJECT NUMBER & PHASE: 0314000027
CONTRACT NO.: 03-0G0301

DISREGARD PRINTS BEARING EARLIER REVISION DATES

REVISION DATES: 6-16-14 | 2-23-15 | 5-6-15

SHEET 16 OF 16

FILE => 03-0g0301-j-jt-det03.dgn

USERNAME => s119538 DATE PLOTTED => 24-JUL-2015 TIME PLOTTED => 11:54