ACSTP-X045(026)E

Dist	COUNTY	ROUTE	POST MILES TOTAL PROJECT	SHEET No.	TOTAL SHEETS
01	Men	20,162	7.14/29.18 5.28/22.45	1	40

STATE OF CALIFORNIA
DEPARTMENT OF TRANSPORTATION

PROJECT PLANS FOR CONSTRUCTION ON
STATE HIGHWAY

IN MENDOCINO COUNTY
AT VARIOUS LOCATIONS

TO BE SUPPLEMENTED BY STANDARD PLANS DATED 2010

INDEX OF PLANS

SHEET No.	DESCRIPTION
1	TITLE AND LOCATION MAP
2-7	TYPICAL CROSS SECTIONS
8-23	LAYOUTS
25-26	CONSTRUCTION AREA SIGNS
27	TRAFFIC HANDLING PLAN
28	PAVEMENT DELINEATION DETAILS AND QUANTITIES
29	SIGN DETAILS AND QUANTITIES
30-31	SUMMARY OF QUANTITIES
32-40	REVISED STANDARD PLANS

THE STANDARD PLANS LIST APPLICABLE TO THIS CONTRACT IS INCLUDED IN THE NOTICE TO BIDDERS AND SPECIAL PROVISIONS BOOK.

LOCATIONS OF CONSTRUCTION

ROUTE 20			
Loc No.	PM FROM	PM TO	Dir
1	7.14	7.22	WB
2	8.23	8.28	WB
3	9.19	9.22	WB
4	14.24	14.30	EB
5	19.94	19.98	EB
6	21.50	21.60	WB
7	22.98	23.05	WB
8	28.02	28.06	EB
9	29.11	29.18	EB

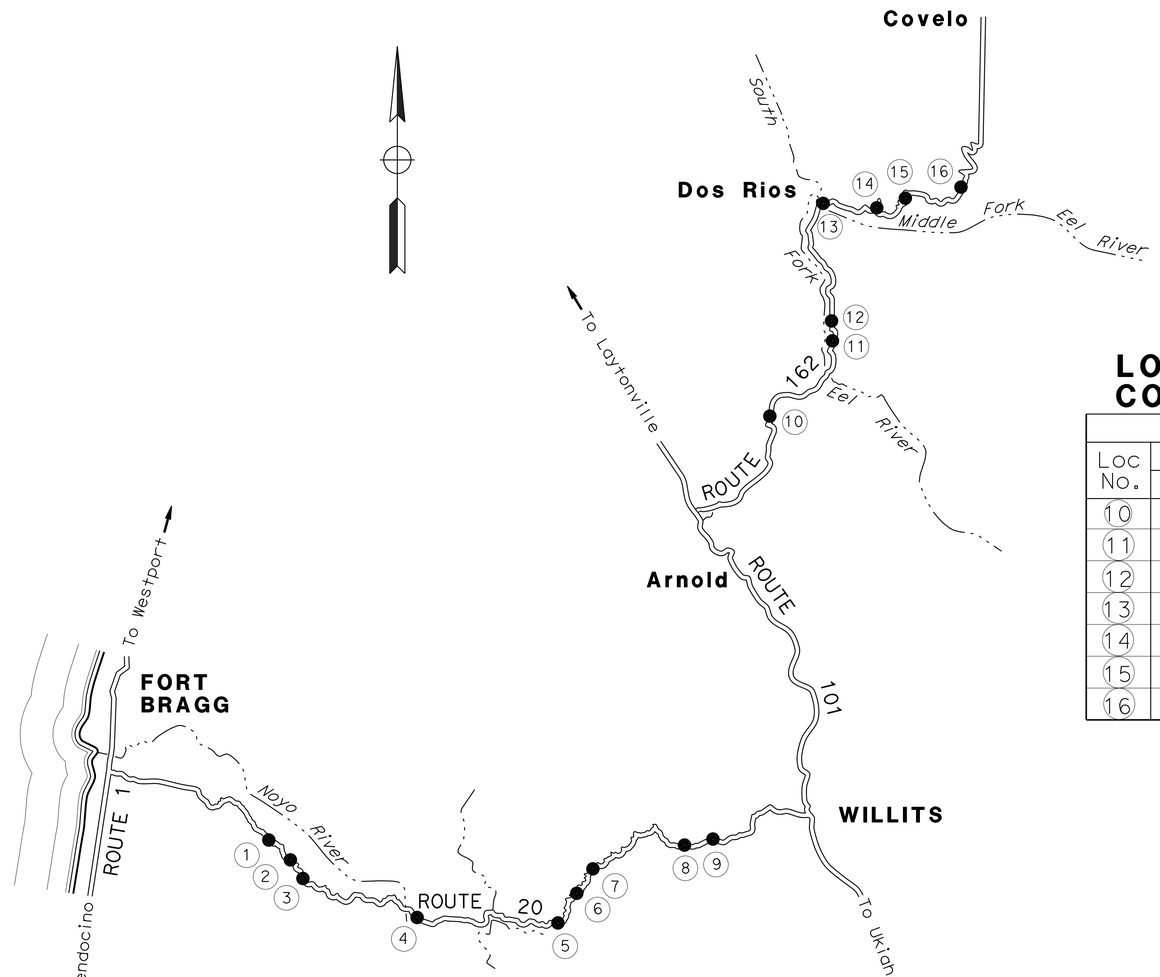

NO SCALE

LOCATIONS OF CONSTRUCTION

ROUTE 162			
Loc No.	PM FROM	PM TO	Dir
10	5.28	5.33	WB
11	9.47	9.51	WB
12	10.00	10.04	WB
13	15.01	15.07	WB
14	17.84	17.90	EB
15	19.57	19.62	EB
16	22.37	22.45	EB

THE CONTRACTOR SHALL POSSESS THE CLASS (OR CLASSES) OF LICENSE AS SPECIFIED IN THE "NOTICE TO BIDDERS."

PROJECT ENGINEER REGISTERED CIVIL ENGINEER — DATE 02-04-15

REGISTERED PROFESSIONAL ENGINEER BRIAN R. HODGSON No. C 81667 Exp. 9-30-15 CIVIL STATE OF CALIFORNIA

March 19, 2015
PLANS APPROVAL DATE

THE STATE OF CALIFORNIA OR ITS OFFICERS OR AGENTS SHALL NOT BE RESPONSIBLE FOR THE ACCURACY OR COMPLETENESS OF SCANNED COPIES OF THIS PLAN SHEET.

CONTRACT No.	01-4939U4
PROJECT ID	0114000085

P:\PROJ\01\4939u\drafting\01_4939U\0114000085ab001.dgn

PROJECT MANAGER: STEVEN BLAIR
DESIGN MANAGER: L. R. ASHLEY

LAST REVISION 02-04-15
DATE PLOTTED => 25-MAR-2015
TIME PLOTTED => 13:57

Dist	COUNTY	ROUTE	POST MILES TOTAL PROJECT	SHEET No.	TOTAL SHEETS
01	Men	20,162	7.14/29.18 5.28/22.45	2	40

REGISTERED CIVIL ENGINEER DATE 02-04-15

March 19, 2015
PLANS APPROVAL DATE

REGISTERED PROFESSIONAL ENGINEER BRIAN R. HODGSON No. C 81667 Exp. 9-30-15 CIVIL STATE OF CALIFORNIA

THE STATE OF CALIFORNIA OR ITS OFFICERS OR AGENTS SHALL NOT BE RESPONSIBLE FOR THE ACCURACY OR COMPLETENESS OF SCANNED COPIES OF THIS PLAN SHEET.

NOTES:

1. DIMENSIONS OF THE PAVEMENT STRUCTURE (STRUCTURAL SECTIONS) ARE SUBJECT TO TOLERANCES SPECIFIED IN THE STANDARD SPECIFICATIONS.

2. SUPERELEVATIONS AS SHOWN OR AS DIRECTED BY THE ENGINEER.

ABBREVIATIONS:

SR - TRAVELED WAY SUPERELEVATION RATE
GPI - GEOSYNTHETIC PAVEMENT INTERLAYER (SEE DETAILS ON C-1)
SEG - SUBGRADE ENHANCEMENT GEOTEXTILE, CLASS B
RHMA-G - RUBBERIZED HOT MIX ASPHALT (GAP GRADED)
HMA-A - HOT MIX ASPHALT (TYPE A)
HMA-O - HOT MIX ASPHALT (OPEN GRADED FRICTION COURSE)

DESIGN DESIGNATION ROUTE 20 (PM 7.1/19.9)

2015 ADT = 3130 D = 60
2035 ADT = 3310 T = 7%
DHV (2015) = 300 V = 50
ESAL (2035) = 1,000,000 TI_{20} = 9.0

PAVEMENT CLIMATE REGION
NORTH COAST

DESIGN DESIGNATION ROUTE 20 (PM 21.5/29.1)

2015 ADT = 2520 D = 60
2035 ADT = 2670 T = 7%
DHV (2015) = 270 V = 50
ESAL (2035) = 1,000,000 TI_{20} = 9.0

PAVEMENT CLIMATE REGION
LOW MOUNTAIN

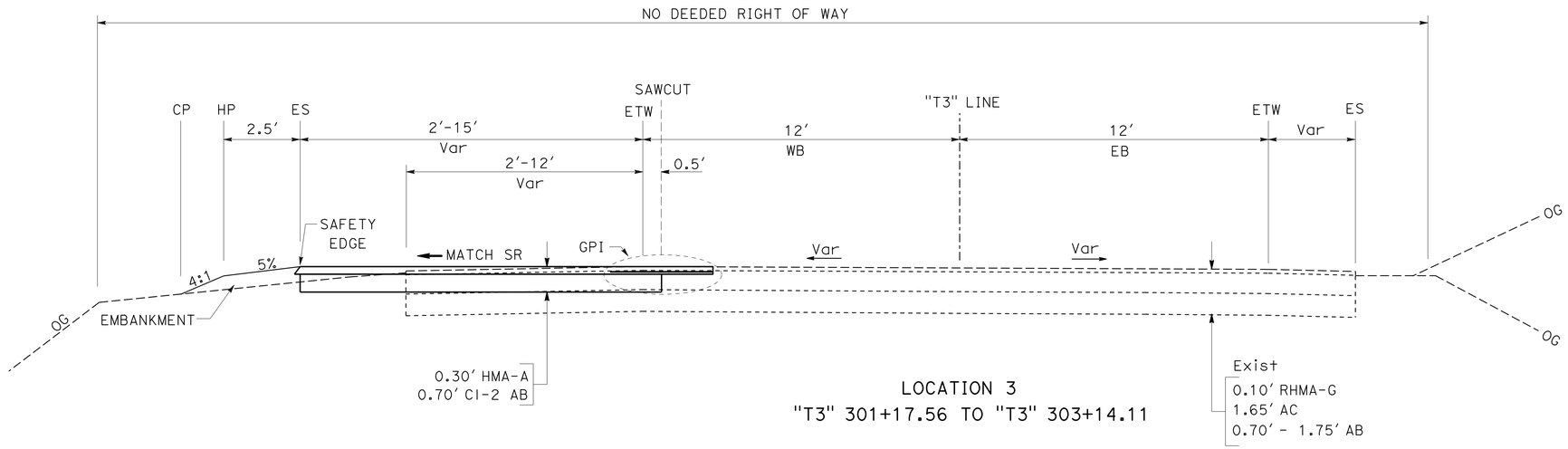

LOCATION 3
"T3" 301+17.56 TO "T3" 303+14.11

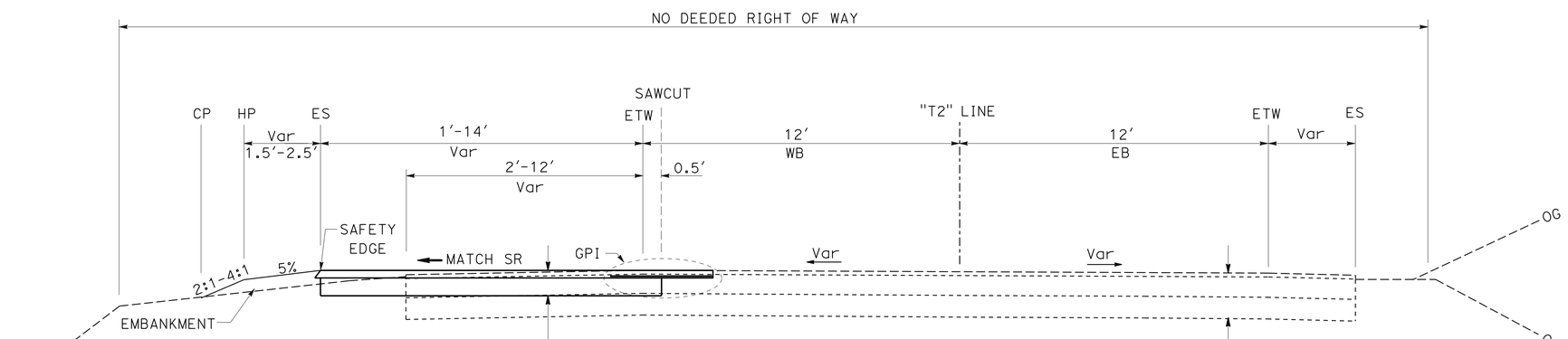

LOCATION 2
"T2" 201+60.05 TO "T2" 205+34.95

ROUTE 20

TYPICAL CROSS SECTIONS

NO SCALE

X-1

REVISED BY | DATE REVISED
BRIAN HODGSON | BIJAN SAMRAD
CALCULATED-DESIGNED BY | CHECKED BY
FUNCTIONAL SUPERVISOR
L.R. ASHLEY

STATE OF CALIFORNIA - DEPARTMENT OF TRANSPORTATION
Caltrans
DESIGN

P:\PROJ\01\4939u\drafting\01_4939U\01140000085ca001.dgn

LAST REVISION 03-10-15 | DATE PLOTTED => 25-MAR-2015 | TIME PLOTTED => 13:57

Dist	COUNTY	ROUTE	POST MILES TOTAL PROJECT	SHEET No.	TOTAL SHEETS
01	Men	20,162	7.14/29.18 5.28/22.45	3	40

REGISTERED CIVIL ENGINEER 02-04-15 DATE

March 19, 2015
PLANS APPROVAL DATE

REGISTERED PROFESSIONAL ENGINEER BRIAN R. HODGSON No. C 81667 Exp. 9-30-15 CIVIL STATE OF CALIFORNIA

THE STATE OF CALIFORNIA OR ITS OFFICERS OR AGENTS SHALL NOT BE RESPONSIBLE FOR THE ACCURACY OR COMPLETENESS OF SCANNED COPIES OF THIS PLAN SHEET.

NOTES:

1. DIMENSIONS OF THE PAVEMENT STRUCTURE (STRUCTURAL SECTIONS) ARE SUBJECT TO TOLERANCES SPECIFIED IN THE STANDARD SPECIFICATIONS.

2. SUPERELEVATIONS AS SHOWN OR AS DIRECTED BY THE ENGINEER.

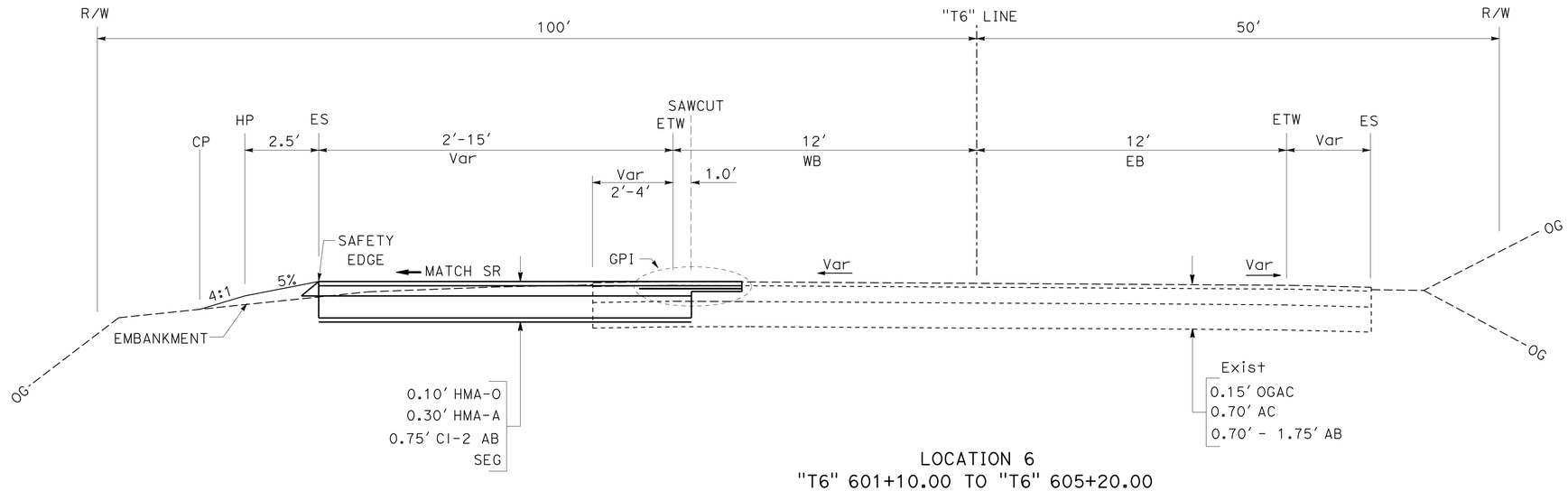

LOCATION 6
"T6" 601+10.00 TO "T6" 605+20.00

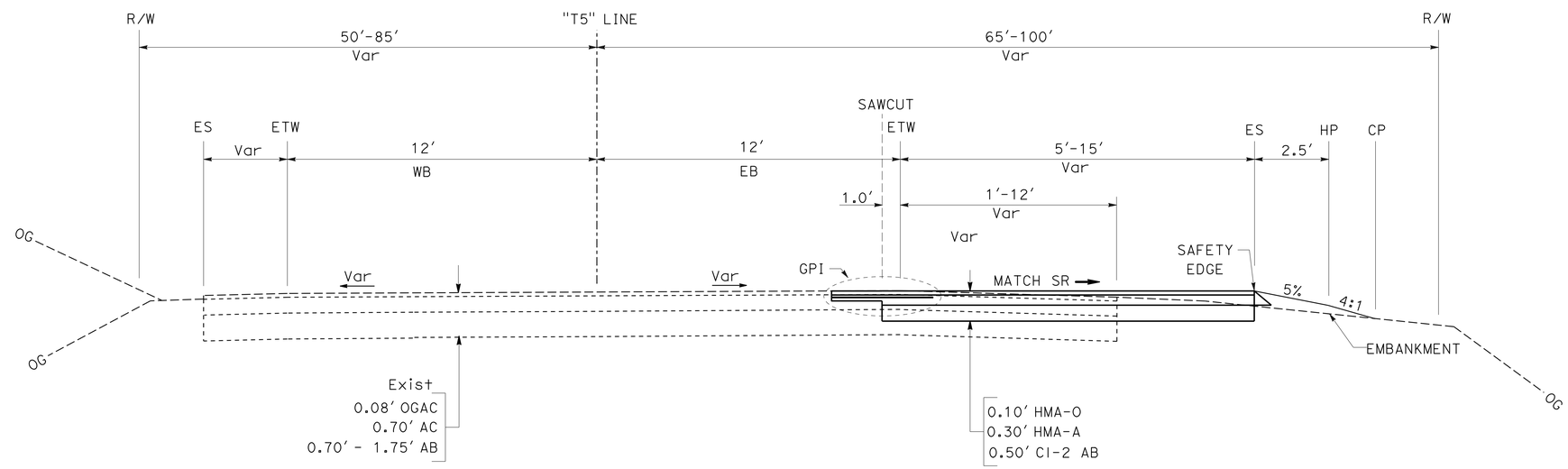

LOCATION 5
"T5" 501+90.00 TO "T5" 503+98.18

ROUTE 20

TYPICAL CROSS SECTIONS

NO SCALE

X-2

REVISED BY | DATE REVISED
BRIAN HODGSON | BIJAN SAMRAD
CALCULATED-DESIGNED BY | CHECKED BY
FUNCTIONAL SUPERVISOR
L.R. ASHLEY

STATE OF CALIFORNIA - DEPARTMENT OF TRANSPORTATION
Caltrans®
DESIGN

P:\PROJ\01\4939u\drafting\01_4939U01140000085ca002.dgn

LAST REVISION 03-10-15 | DATE PLOTTED => 25-MAR-2015 | TIME PLOTTED => 13:57

Dist	COUNTY	ROUTE	POST MILES TOTAL PROJECT	SHEET No.	TOTAL SHEETS
01	Men	20,162	7.14/29.18 5.28/22.45	4	40

REGISTERED CIVIL ENGINEER 02-04-15 DATE

March 19, 2015
PLANS APPROVAL DATE

REGISTERED PROFESSIONAL ENGINEER BRIAN R. HODGSON No. C 81667 Exp. 9-30-15 CIVIL STATE OF CALIFORNIA

THE STATE OF CALIFORNIA OR ITS OFFICERS OR AGENTS SHALL NOT BE RESPONSIBLE FOR THE ACCURACY OR COMPLETENESS OF SCANNED COPIES OF THIS PLAN SHEET.

NOTES:

1. DIMENSIONS OF THE PAVEMENT STRUCTURE (STRUCTURAL SECTIONS) ARE SUBJECT TO TOLERANCES SPECIFIED IN THE STANDARD SPECIFICATIONS.
2. SUPERELEVATIONS AS SHOWN OR AS DIRECTED BY THE ENGINEER.

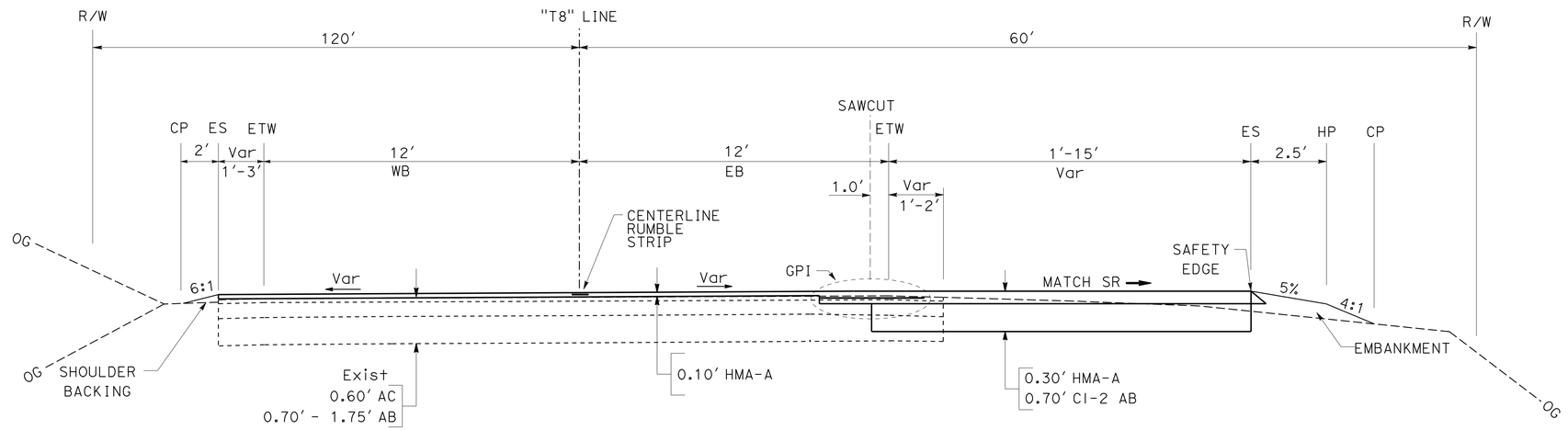

LOCATION 8
"T8" 800+14.38 TO "T8" 804+01.78

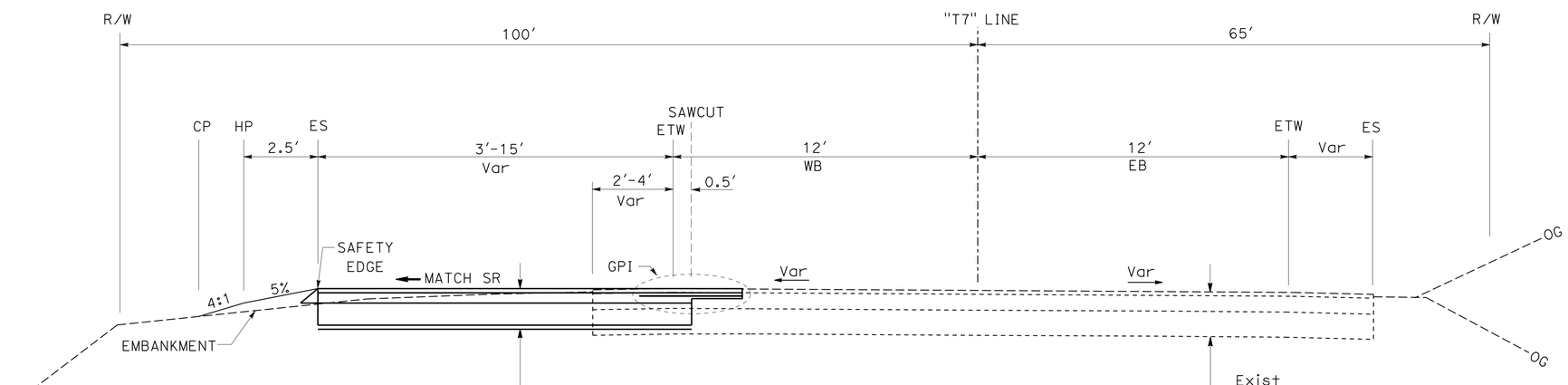

LOCATION 7
"T7" 700+78.86 TO "T7" 703+69.15
ROUTE 20

TYPICAL CROSS SECTIONS

NO SCALE

X-3

REVISED BY | DATE REVISED
BRIAN HODGSON | BIJAN SAMRAD
CALCULATED-DESIGNED BY | CHECKED BY
FUNCTIONAL SUPERVISOR
L.R. ASHLEY

STATE OF CALIFORNIA - DEPARTMENT OF TRANSPORTATION
Caltrans
DESIGN

P:\PROJ\01\4939u\drafting\01_4939U\0114000085ca003.dgn

LAST REVISION 03-10-15 | DATE PLOTTED => 25-MAR-2015 | TIME PLOTTED => 13:57

Dist	COUNTY	ROUTE	POST MILES TOTAL PROJECT	SHEET No.	TOTAL SHEETS
01	Men	20,162	7.14/29.18 5.28/22.45	5	40

REGISTERED CIVIL ENGINEER DATE 02-04-15

March 19, 2015
PLANS APPROVAL DATE

REGISTERED PROFESSIONAL ENGINEER BRIAN R. HODGSON No. C 81667 Exp. 9-30-15 CIVIL STATE OF CALIFORNIA

THE STATE OF CALIFORNIA OR ITS OFFICERS OR AGENTS SHALL NOT BE RESPONSIBLE FOR THE ACCURACY OR COMPLETENESS OF SCANNED COPIES OF THIS PLAN SHEET.

NOTES:

1. DIMENSIONS OF THE PAVEMENT STRUCTURE (STRUCTURAL SECTIONS) ARE SUBJECT TO TOLERANCES SPECIFIED IN THE STANDARD SPECIFICATIONS.

2. SUPERELEVATIONS AS SHOWN OR AS DIRECTED BY THE ENGINEER.

DESIGN DESIGNATION
ROUTE 162 (PM 5.3/22.5)

2015 ADT =	830	D =	60
2035 ADT =	880	T =	9%
DHV (2015) =	80	V =	50
ESAL (2035) =	371,661	TI_{20} =	8.0

PAVEMENT CLIMATE REGION

LOW MOUNTAIN

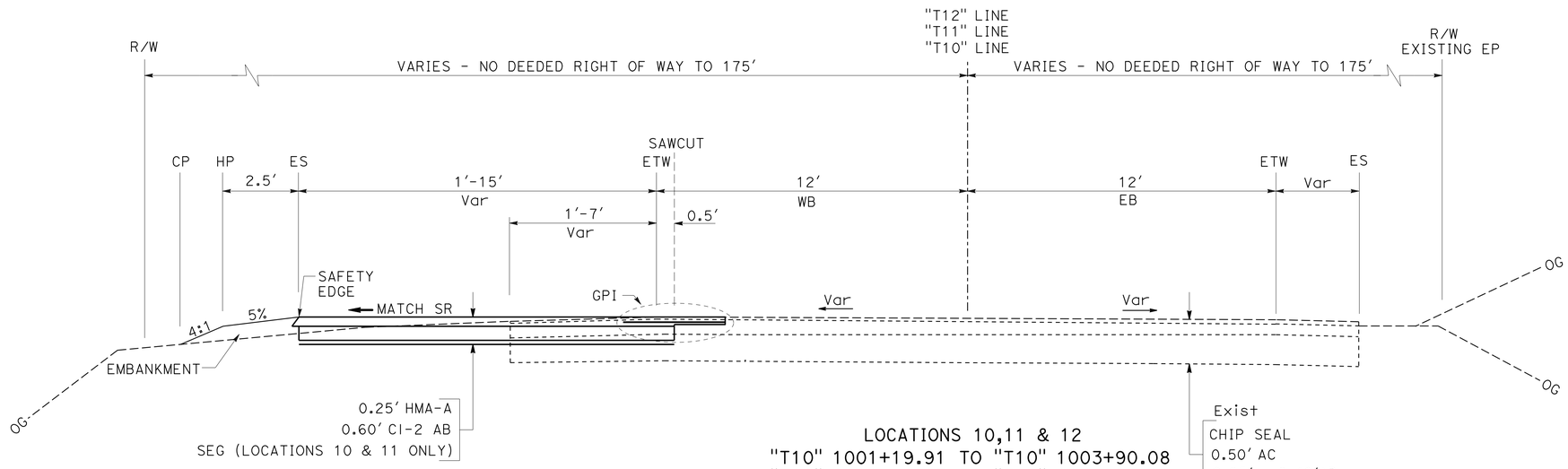

LOCATIONS 10,11 & 12
"T10" 1001+19.91 TO "T10" 1003+90.08
"T11" 1100+89.93 TO "T11" 1104+09.99
"T12" 1200+33.86 TO "T12" 1204+33.90
ROUTE 162

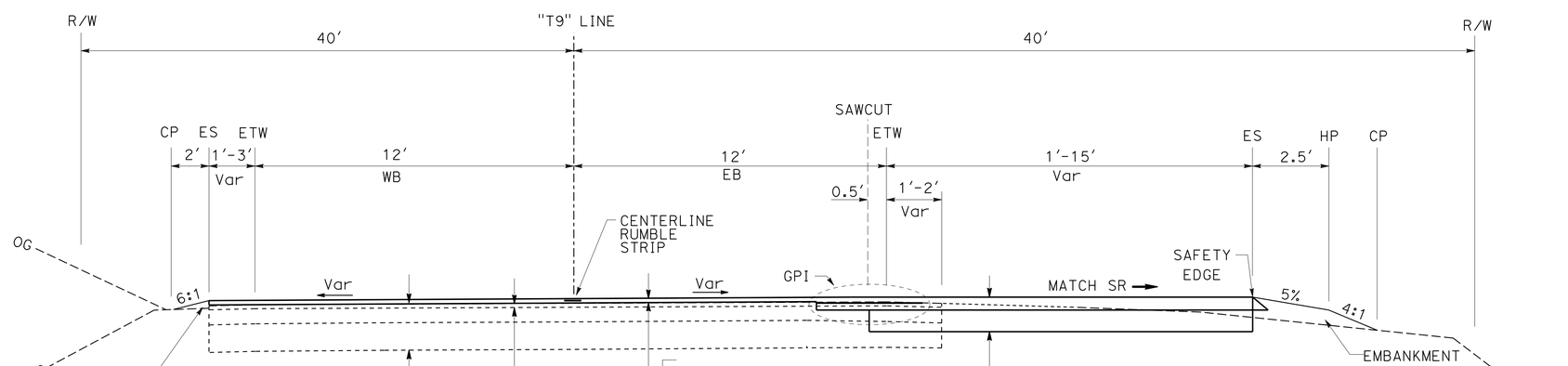

LOCATION 9
"T9" 900+50.00 TO "T9" 904+70.00
ROUTE 20

TYPICAL CROSS SECTIONS

NO SCALE

X-4

REVISED BY | DATE REVISED
BRIAN HODGSON | BIJAN SAMRAD
CALCULATED-DESIGNED BY | CHECKED BY
FUNCTIONAL SUPERVISOR
L.R. ASHLEY

STATE OF CALIFORNIA - DEPARTMENT OF TRANSPORTATION
Caltrans®
DESIGN

P:\PROJ\01\4939u\draffing\01_4939U\0114000085ca004.dgn

LAST REVISION 03-10-15 | DATE PLOTTED => 25-MAR-2015 | TIME PLOTTED => 13:57

Dist	COUNTY	ROUTE	POST MILES TOTAL PROJECT	SHEET No.	TOTAL SHEETS
01	Men	20,162	7.14/29.18 5.28/22.45	6	40

REGISTERED CIVIL ENGINEER 02-04-15 DATE

March 19, 2015
PLANS APPROVAL DATE

REGISTERED PROFESSIONAL ENGINEER BRIAN R. HODGSON No. C 81667 Exp. 9-30-15 CIVIL STATE OF CALIFORNIA

THE STATE OF CALIFORNIA OR ITS OFFICERS OR AGENTS SHALL NOT BE RESPONSIBLE FOR THE ACCURACY OR COMPLETENESS OF SCANNED COPIES OF THIS PLAN SHEET.

NOTES:

1. DIMENSIONS OF THE PAVEMENT STRUCTURE (STRUCTURAL SECTIONS) ARE SUBJECT TO TOLERANCES SPECIFIED IN THE STANDARD SPECIFICATIONS.

2. SUPERELEVATIONS AS SHOWN OR AS DIRECTED BY THE ENGINEER.

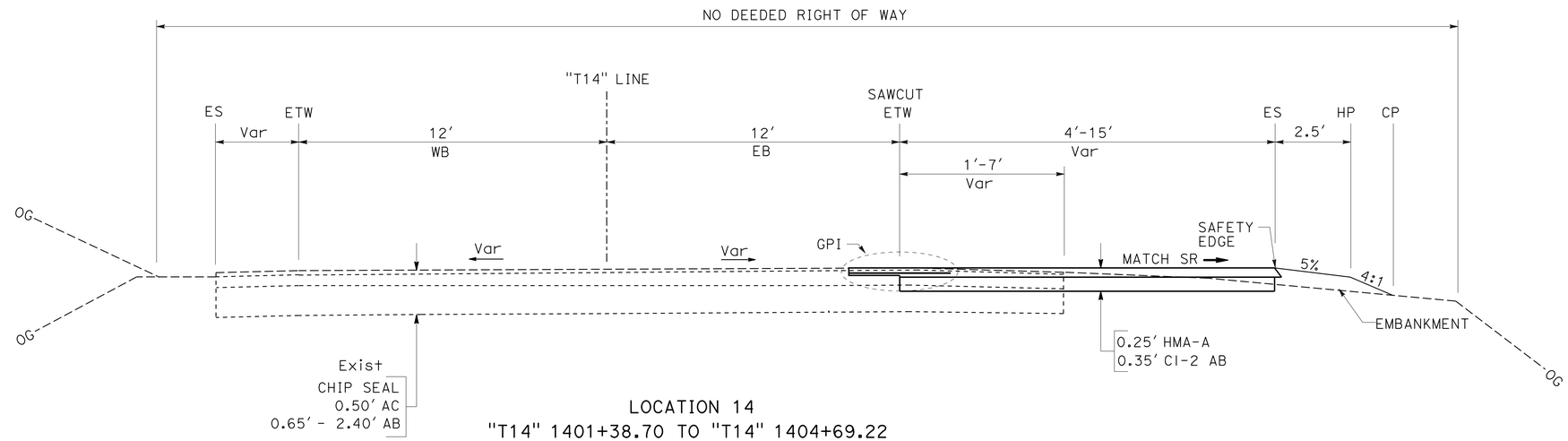

LOCATION 14
"T14" 1401+38.70 TO "T14" 1404+69.22
ROUTE 162

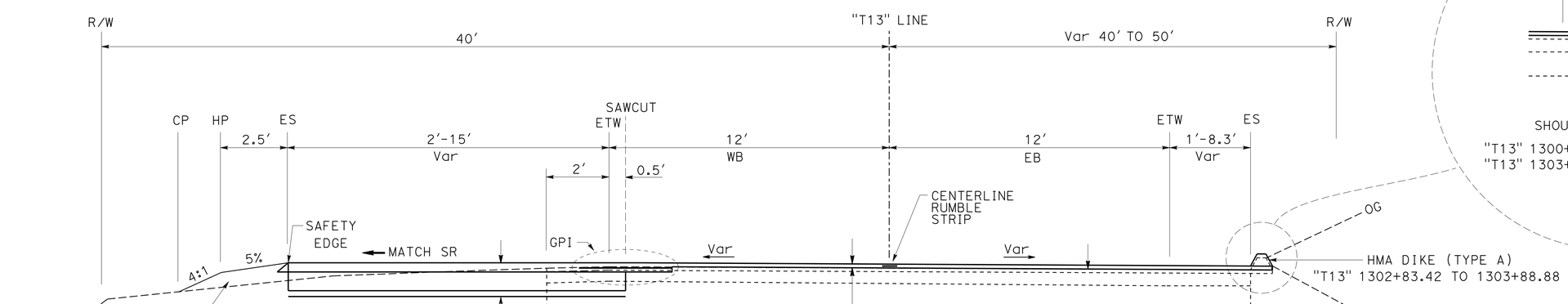

LOCATION 13
"T13" 1300+91.31 TO "T13" 1305+12.24
ROUTE 162

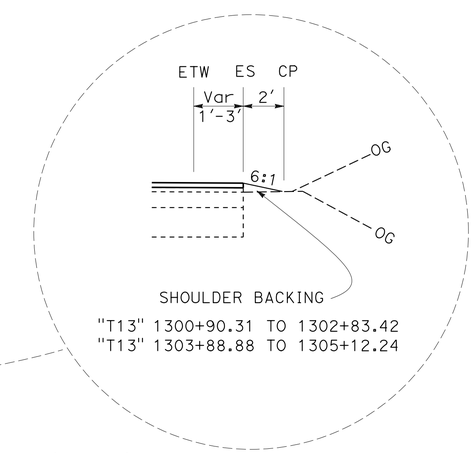

TYPICAL CROSS SECTIONS

NO SCALE

X-5

REVISED BY | DATE REVISED
BRIAN HODGSON | BIJAN SAMRAD
CALCULATED-DESIGNED BY | CHECKED BY
FUNCTIONAL SUPERVISOR
L.R. ASHLEY

STATE OF CALIFORNIA - DEPARTMENT OF TRANSPORTATION
DESIGN
Caltrans

P:\PROJ\01\4939u\draffing\01_4939U\01140000085ca005.dgn

LAST REVISION 03-10-15 | DATE PLOTTED => 25-MAR-2015 | TIME PLOTTED => 13:57

Dist	COUNTY	ROUTE	POST MILES TOTAL PROJECT	SHEET No.	TOTAL SHEETS
01	Men	20,162	7.14/29.18 5.28/22.45	7	40

REGISTERED CIVIL ENGINEER DATE 02-04-15

March 19, 2015
PLANS APPROVAL DATE

REGISTERED PROFESSIONAL ENGINEER BRIAN R. HODGSON No. C 81667 Exp. 9-30-15 CIVIL STATE OF CALIFORNIA

THE STATE OF CALIFORNIA OR ITS OFFICERS OR AGENTS SHALL NOT BE RESPONSIBLE FOR THE ACCURACY OR COMPLETENESS OF SCANNED COPIES OF THIS PLAN SHEET.

NOTES:

1. DIMENSIONS OF THE PAVEMENT STRUCTURE (STRUCTURAL SECTIONS) ARE SUBJECT TO TOLERANCES SPECIFIED IN THE STANDARD SPECIFICATIONS.
2. SUPERELEVATIONS AS SHOWN OR AS DIRECTED BY THE ENGINEER.

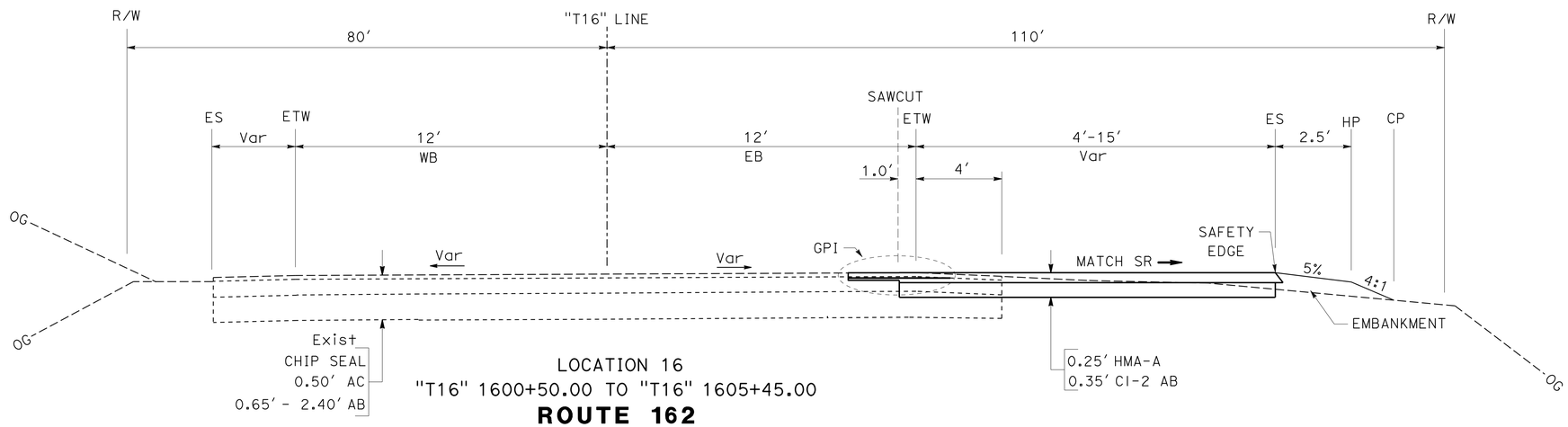

LOCATION 16
"T16" 1600+50.00 TO "T16" 1605+45.00
ROUTE 162

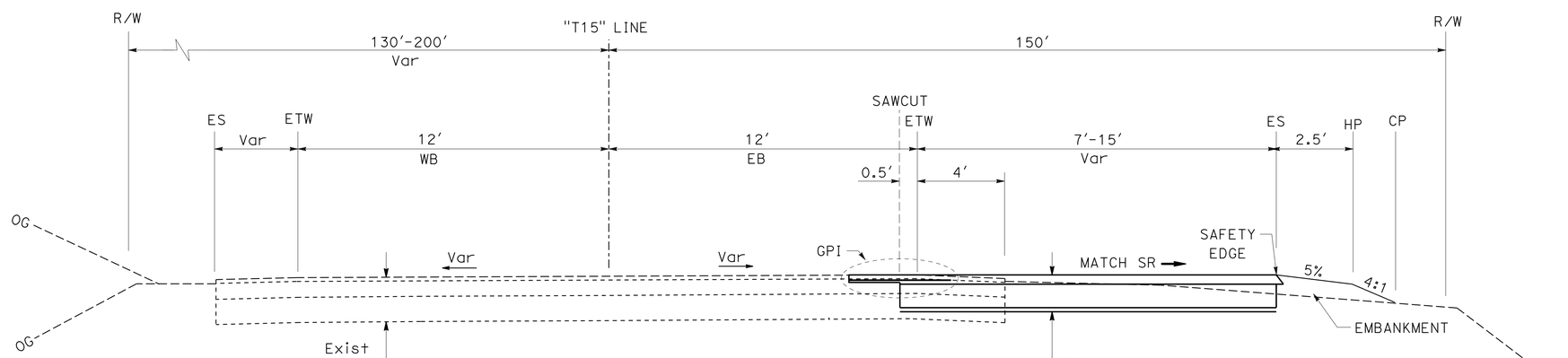

LOCATION 15
"T15" 1500+60.00 TO "T15" 1504+00.00
ROUTE 162

TYPICAL CROSS SECTIONS

NO SCALE

X-6

REVISED BY | DATE REVISED
BRIAN HODGSON | BIJAN SAMRAD
CALCULATED-DESIGNED BY | CHECKED BY
FUNCTIONAL SUPERVISOR | L.R. ASHLEY

STATE OF CALIFORNIA - DEPARTMENT OF TRANSPORTATION
Caltrans
DESIGN

P:\PROJ\01\4939u\draft\ing\01_4939U\0114000085ca006.dgn

LAST REVISION | DATE PLOTTED => 25-MAR-2015 | TIME PLOTTED => 13:57
03-10-15

Dist	COUNTY	ROUTE	POST MILES TOTAL PROJECT	SHEET No.	TOTAL SHEETS
01	Men	20,162	7.14/29.18 5.28/22.45	8	40

REGISTERED CIVIL ENGINEER DATE 02-04-15

March 19, 2015
PLANS APPROVAL DATE

REGISTERED PROFESSIONAL ENGINEER BRIAN R. HODGSON No. C 81667 Exp. 9-30-15 CIVIL STATE OF CALIFORNIA

THE STATE OF CALIFORNIA OR ITS OFFICERS OR AGENTS SHALL NOT BE RESPONSIBLE FOR THE ACCURACY OR COMPLETENESS OF SCANNED COPIES OF THIS PLAN SHEET.

NOTES:

1. FOR ACCURATE RIGHT OF WAY DATA, CONTACT RIGHT OF WAY ENGINEERING AT THE DISTRICT OFFICE.
2. NO DEEDED RIGHT OF WAY.
3. TEMPORARY FENCE (TYPE ESA) PLACED AS DIRECTED BY QUALIFIED CALTRANS BIOLOGIST.

CURVE DATA

No. ⊕	R	Δ	T	L
1	575′	24°22′03″	124.19′	244.62′
2	393′	25°26′03″	88.59′	174.27′

LEGEND

REPLACE AC SURFACING

TRAFFIC STRIPE DETAIL No.

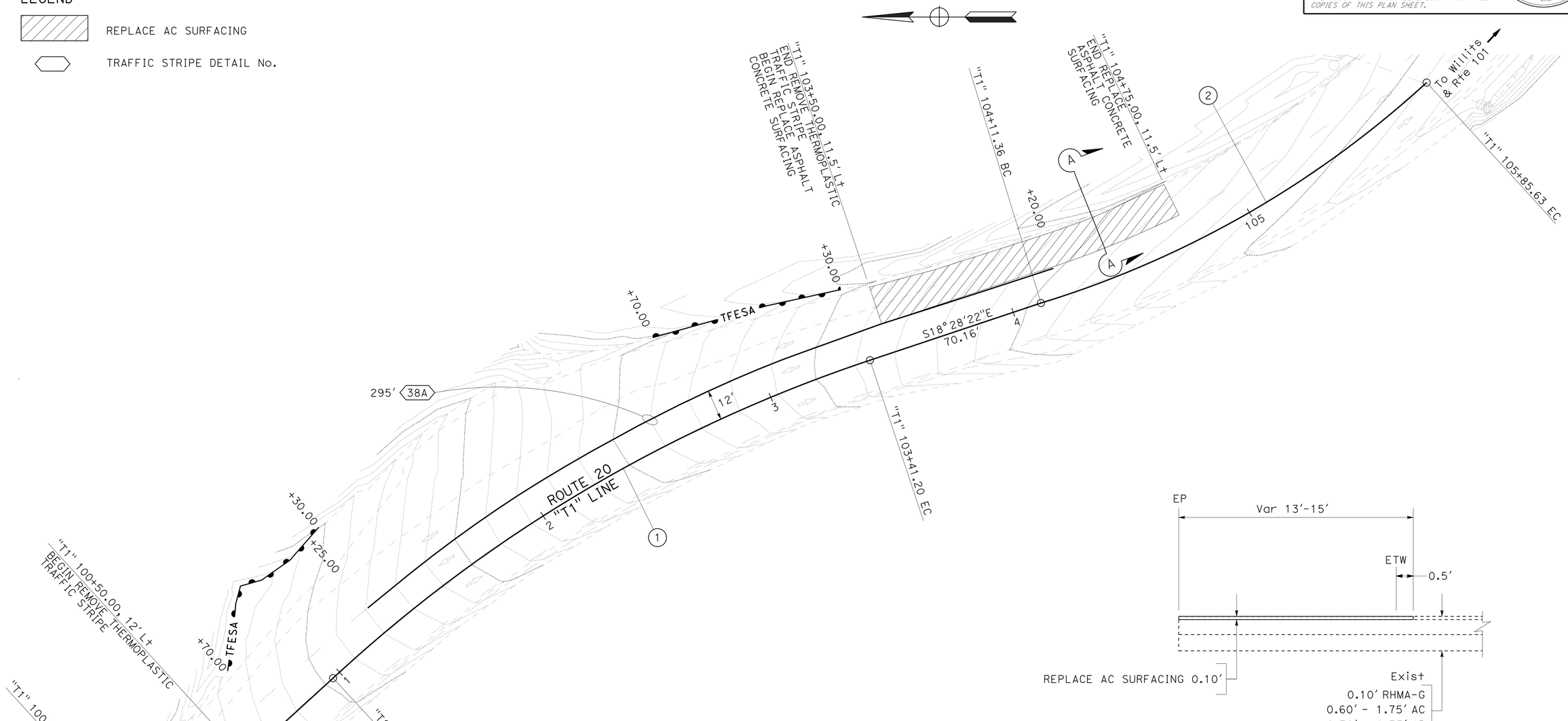

LOCATION 1

ROUTE 20-WB
PM 7.14/7.22

SECTION A-A

TYPICAL CROSS SECTION (LOCATION 1)

LAYOUT

SCALE: 1"=20′

L-1

REVISED BY	DATE REVISED

CALCULATED-DESIGNED BY	CHECKED BY
BRIAN HODGSON	BIJAN SAMRAD

FUNCTIONAL SUPERVISOR: L.R. ASHLEY

STATE OF CALIFORNIA - DEPARTMENT OF TRANSPORTATION

Caltrans

DESIGN

P:\PROJ\01\4939u\drafting\01_4939U\01140000085ea001.dgn

LAST REVISION 03-10-15 | DATE PLOTTED => 25-MAR-2015 | TIME PLOTTED => 13:57

Dist	COUNTY	ROUTE	POST MILES TOTAL PROJECT	SHEET No.	TOTAL SHEETS
01	Men	20,162	7.14/29.18 5.28/22.45	9	40

REGISTERED CIVIL ENGINEER 02-04-15 DATE

March 19, 2015
PLANS APPROVAL DATE

REGISTERED PROFESSIONAL ENGINEER
LENA R. ASHLEY
No. 48764
Exp. 9-30-16
CIVIL
STATE OF CALIFORNIA

THE STATE OF CALIFORNIA OR ITS OFFICERS OR AGENTS SHALL NOT BE RESPONSIBLE FOR THE ACCURACY OR COMPLETENESS OF SCANNED COPIES OF THIS PLAN SHEET.

NOTES:

1. FOR ACCURATE RIGHT OF WAY DATA, CONTACT RIGHT OF WAY ENGINEERING AT THE DISTRICT OFFICE.
2. NO DEEDED RIGHT OF WAY.
3. PLACE TEMPORARY FENCE (TYPE ESA) AT LIMITS OF Exist TURNOUT
4. NO EARTHWORK WITHIN SRZ.

ABBREVIATIONS:

SRZ STRUCTURAL ROOT ZONE

CURVE DATA

No. ⊕	R	Δ	T	L
1	500′	05°23′39″	23.55′	47.07′
2	540′	24°34′00″	117.58′	231.54′
3	1250′	04°52′19″	53.18′	106.29′

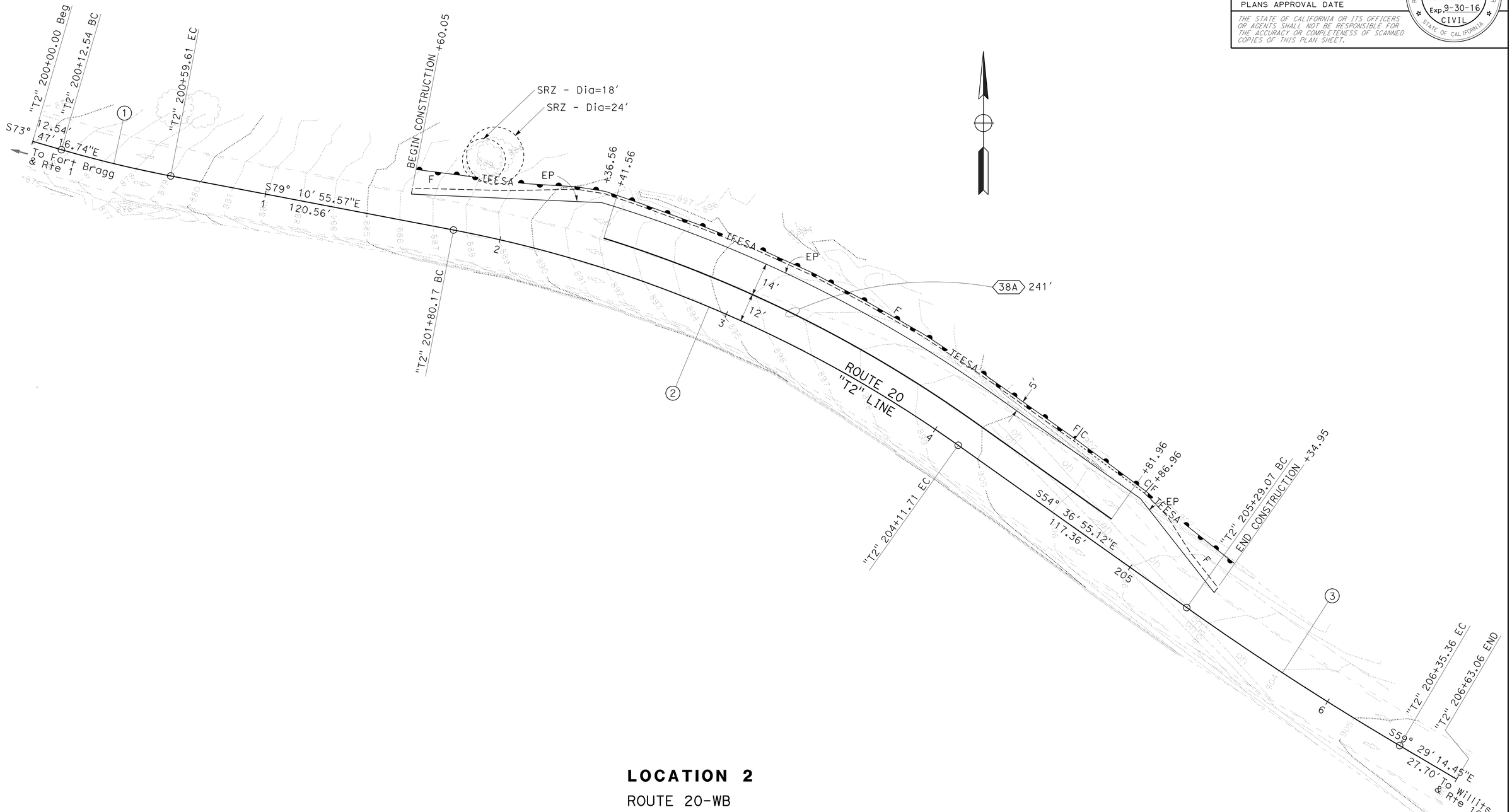

LOCATION 2

ROUTE 20-WB
PM 8.23/8.28

LAYOUT

SCALE: 1″=20′

L-2

STATE OF CALIFORNIA - DEPARTMENT OF TRANSPORTATION
Caltrans® DESIGN

FUNCTIONAL SUPERVISOR: L.R. ASHLEY
CALCULATED-DESIGNED BY: BIJAN SAMRAD
CHECKED BY: BRIAN HODGSON
REVISED BY / DATE REVISED

LAST REVISION 03-10-15 | DATE PLOTTED => 25-MAR-2015 | TIME PLOTTED => 13:57

P:\PROJ\01\4939u\drafting\01_4939U\01140000085ea002.dgn

BORDER LAST REVISED 7/2/2010 | USERNAME => s120115 | DGN FILE => 01140000085ea002.dgn | RELATIVE BORDER SCALE IS IN INCHES 0 1 2 3 | UNIT 0313 | PROJECT NUMBER & PHASE 01140000851

Dist	COUNTY	ROUTE	POST MILES TOTAL PROJECT	SHEET No.	TOTAL SHEETS
01	Men	20,162	7.14/29.18 5.28/22.45	10	40

REGISTERED CIVIL ENGINEER 02-04-15 DATE

March 19, 2015
PLANS APPROVAL DATE

REGISTERED PROFESSIONAL ENGINEER
LENA R. ASHLEY
No. 48764
Exp. 9-30-16
CIVIL
STATE OF CALIFORNIA

THE STATE OF CALIFORNIA OR ITS OFFICERS OR AGENTS SHALL NOT BE RESPONSIBLE FOR THE ACCURACY OR COMPLETENESS OF SCANNED COPIES OF THIS PLAN SHEET.

NOTES:

1. FOR ACCURATE RIGHT OF WAY DATA, CONTACT RIGHT OF WAY ENGINEERING AT THE DISTRICT OFFICE.
2. NO DEEDED RIGHT OF WAY.

CURVE DATA

No. ⊕	R	Δ	T	L
1	1800.00′	05°50′29″	91.84′	183.51′

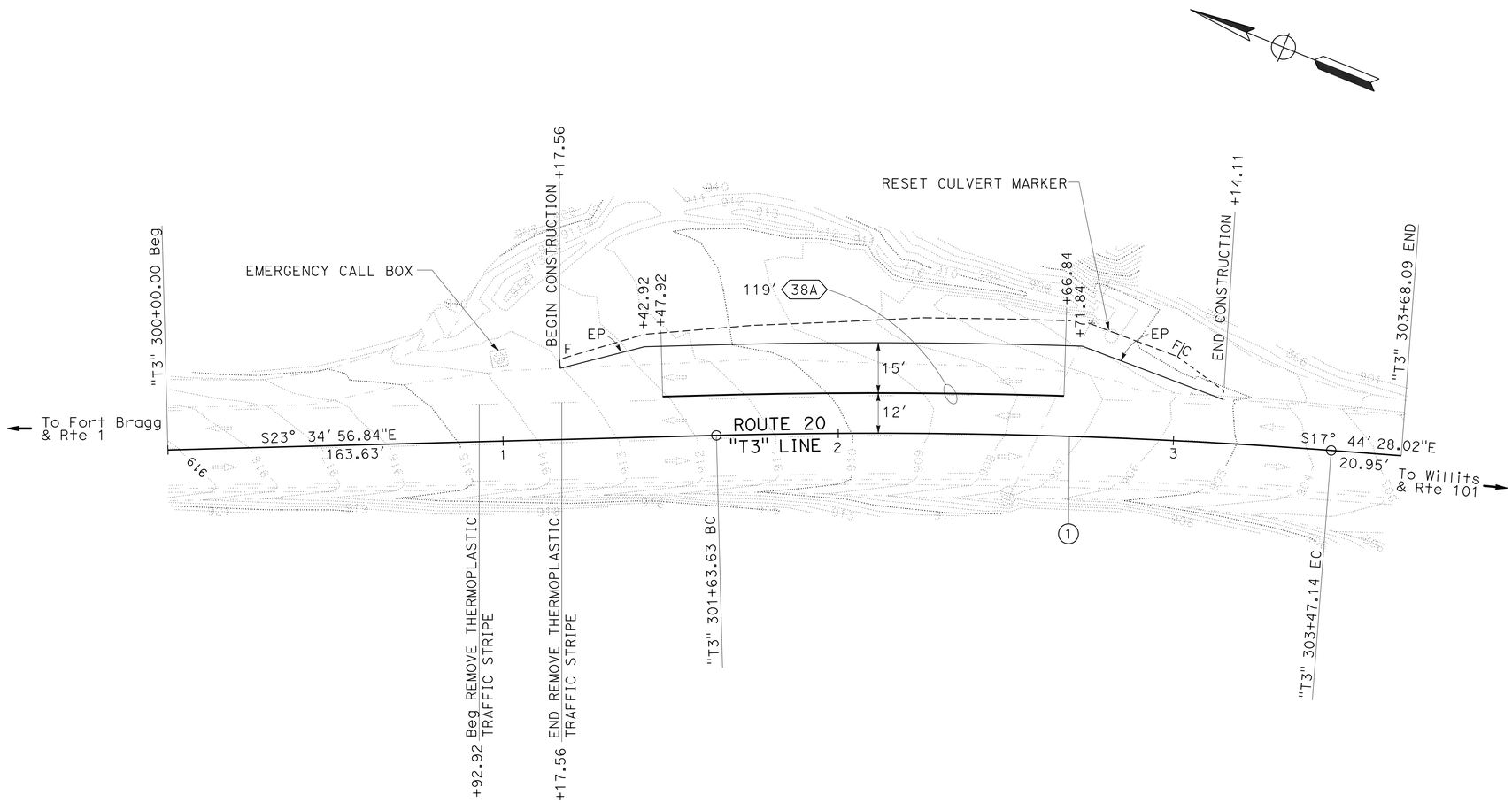

LOCATION 3

ROUTE 20-WB
PM 9.19/9.22

LAYOUT
SCALE: 1″=20′

L-3

STATE OF CALIFORNIA - DEPARTMENT OF TRANSPORTATION
Caltrans
DESIGN

FUNCTIONAL SUPERVISOR: L.R. ASHLEY
CALCULATED-DESIGNED BY: BIJAN SAMRAD
CHECKED BY: BRIAN HODGSON
REVISED BY
DATE REVISED

P:\PROJ\01\4939u\drafting\01_4939U\01140000085ea003.dgn

LAST REVISION 03-10-15
DATE PLOTTED => 25-MAR-2015
TIME PLOTTED => 13:57

Dist	COUNTY	ROUTE	POST MILES TOTAL PROJECT	SHEET No.	TOTAL SHEETS
01	Men	20,162	7.14/29.18 5.28/22.45	11	40

REGISTERED CIVIL ENGINEER DATE 02-04-15

March 19, 2015
PLANS APPROVAL DATE

REGISTERED PROFESSIONAL ENGINEER
BRIAN R. HODGSON
No. C 81667
Exp. 9-30-15
CIVIL
STATE OF CALIFORNIA

THE STATE OF CALIFORNIA OR ITS OFFICERS OR AGENTS SHALL NOT BE RESPONSIBLE FOR THE ACCURACY OR COMPLETENESS OF SCANNED COPIES OF THIS PLAN SHEET.

NOTES:

1. FOR ACCURATE RIGHT OF WAY DATA, CONTACT RIGHT OF WAY ENGINEERING AT THE DISTRICT OFFICE.
2. NO DEEDED RIGHT OF WAY.

CURVE DATA

No. ⊕	R	Δ	T	L
1	2510′	03°02′42"	66.71′	133.39′

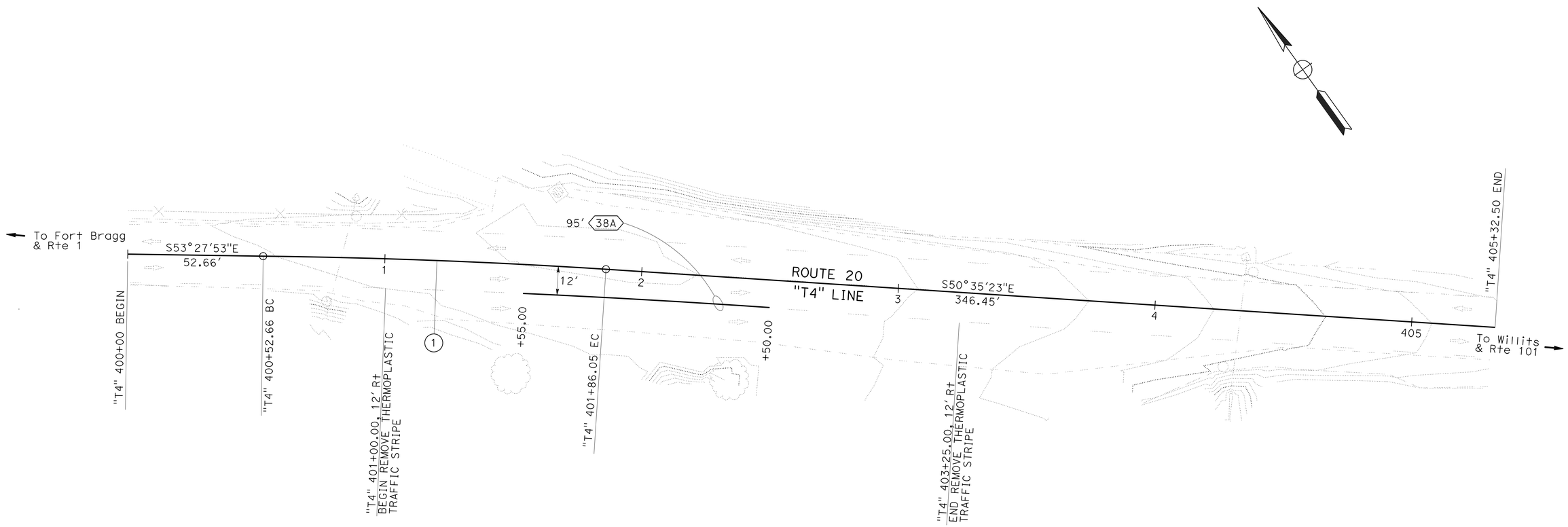

LOCATION 4

ROUTE 20-EB
PM 14.24/14.30

LAYOUT
SCALE: 1"=20′

L-4

BRIAN HODGSON | REVISED BY
BIJAN SAMRAD | DATE REVISED
CALCULATED-DESIGNED BY
CHECKED BY
FUNCTIONAL SUPERVISOR
L.R. ASHLEY

STATE OF CALIFORNIA - DEPARTMENT OF TRANSPORTATION
Caltrans
DESIGN

P:\PROJ\01\4939u\drafting\01_4939U\0114000085ea004.dgn

LAST REVISION 03-10-15 | DATE PLOTTED => 25-MAR-2015 | TIME PLOTTED => 13:57

NOTE:

FOR ACCURATE RIGHT OF WAY DATA, CONTACT
RIGHT OF WAY ENGINEERING AT THE DISTRICT OFFICE.

CURVE DATA

No. ⊕	R	Δ	T	L
1	546′	52°23′42″	268.64′	499.30′

Dist	COUNTY	ROUTE	POST MILES TOTAL PROJECT	SHEET No.	TOTAL SHEETS
01	Men	20,162	7.14/29.18 5.28/22.45	12	40

REGISTERED CIVIL ENGINEER 02-04-15 DATE

March 19, 2015
PLANS APPROVAL DATE

REGISTERED PROFESSIONAL ENGINEER BRIAN R. HODGSON No. C 81667 Exp. 9-30-15 CIVIL STATE OF CALIFORNIA

THE STATE OF CALIFORNIA OR ITS OFFICERS OR AGENTS SHALL NOT BE RESPONSIBLE FOR THE ACCURACY OR COMPLETENESS OF SCANNED COPIES OF THIS PLAN SHEET.

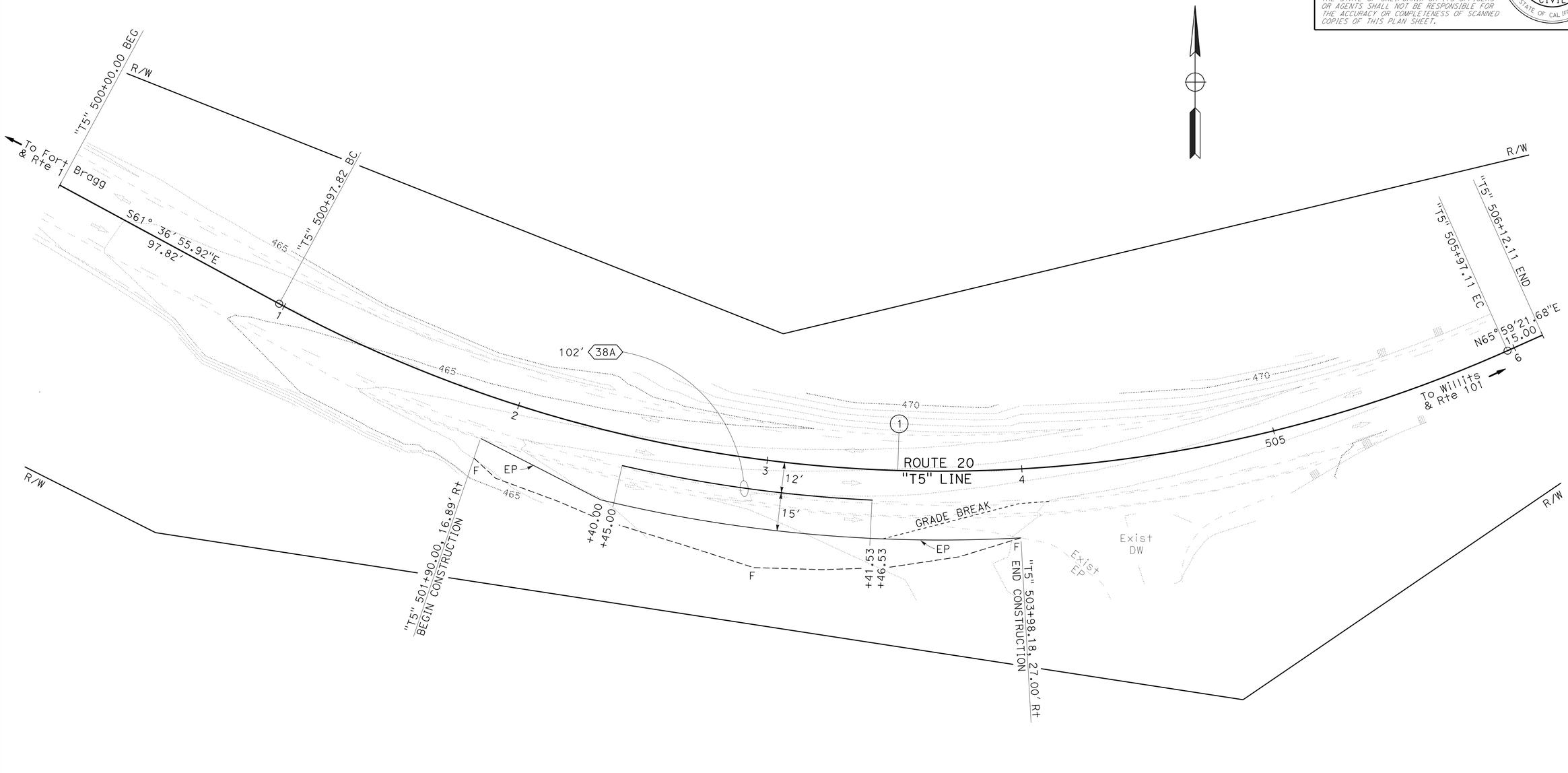

LOCATION 5

ROUTE 20-EB
PM 19.94/19.98

LAYOUT
SCALE: 1"=20′

L-5

STATE OF CALIFORNIA - DEPARTMENT OF TRANSPORTATION
Caltrans
DESIGN

FUNCTIONAL SUPERVISOR: L.R. ASHLEY
CALCULATED-DESIGNED BY: JEFF COON
CHECKED BY: BRIAN HODGSON
REVISED BY
DATE REVISED

P:\PROJ\01\49390\drafting\01_49390\0114000085ea005.dgn

LAST REVISION 03-10-15
DATE PLOTTED => 25-MAR-2015
TIME PLOTTED => 13:57

Dist	COUNTY	ROUTE	POST MILES TOTAL PROJECT	SHEET No.	TOTAL SHEETS
01	Men	20,162	7.14/29.18 5.28/22.45	13	40

REGISTERED CIVIL ENGINEER 02-04-15 DATE

March 19, 2015
PLANS APPROVAL DATE

REGISTERED PROFESSIONAL ENGINEER BRIAN R. HODGSON No. C 81667 Exp. 9-30-15 CIVIL STATE OF CALIFORNIA

THE STATE OF CALIFORNIA OR ITS OFFICERS OR AGENTS SHALL NOT BE RESPONSIBLE FOR THE ACCURACY OR COMPLETENESS OF SCANNED COPIES OF THIS PLAN SHEET.

NOTE:
FOR ACCURATE RIGHT OF WAY DATA, CONTACT RIGHT OF WAY ENGINEERING AT THE DISTRICT OFFICE.

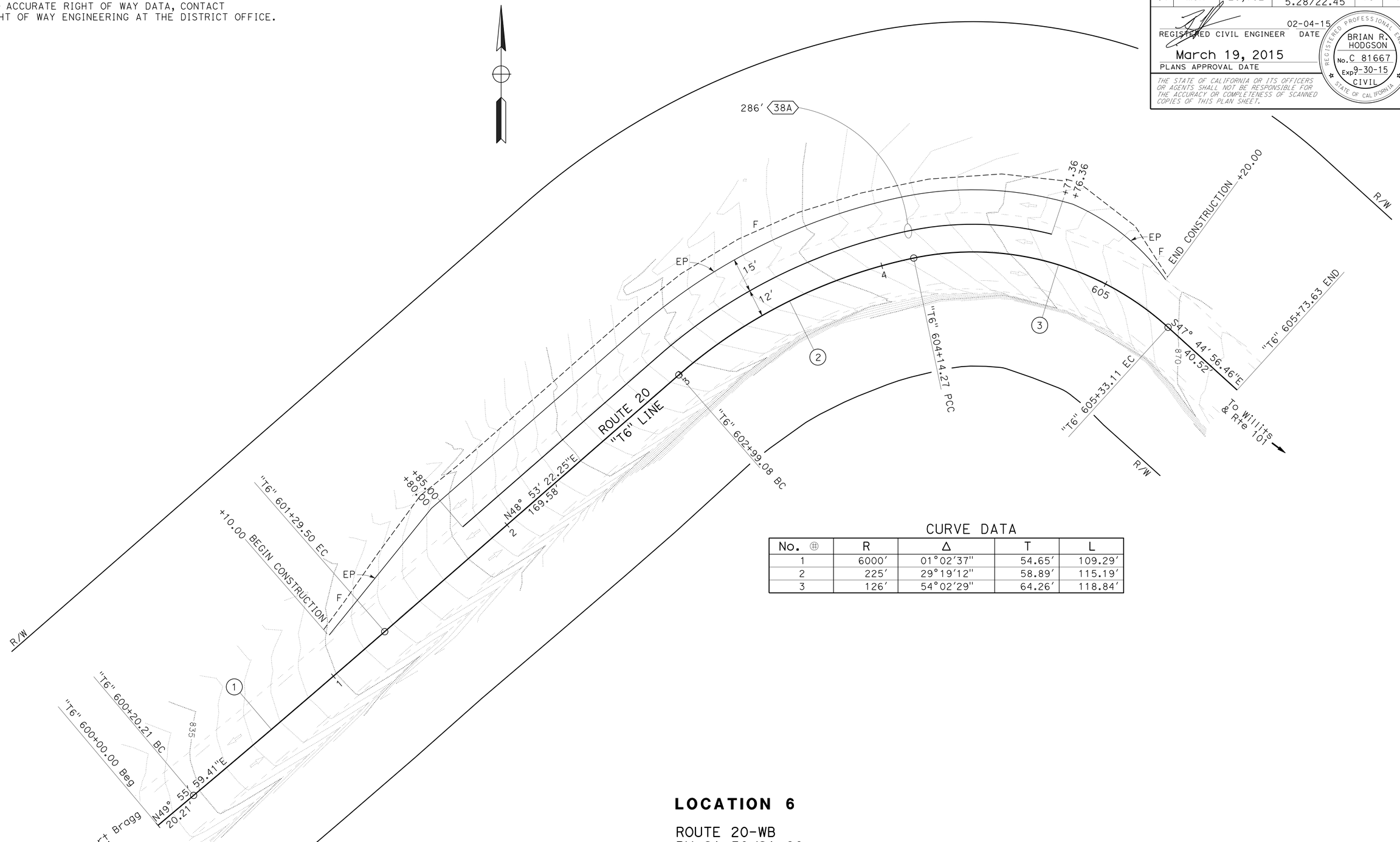

CURVE DATA

No. ⊕	R	Δ	T	L
1	6000'	01°02'37"	54.65'	109.29'
2	225'	29°19'12"	58.89'	115.19'
3	126'	54°02'29"	64.26'	118.84'

LOCATION 6

ROUTE 20-WB
PM 21.50/21.60

LAYOUT
SCALE: 1"=20'

L-6

STATE OF CALIFORNIA - DEPARTMENT OF TRANSPORTATION
Caltrans® **DESIGN**

FUNCTIONAL SUPERVISOR: L.R. ASHLEY
CALCULATED-DESIGNED BY: JEFF COON
CHECKED BY: BRIAN HODGSON
REVISED BY / DATE REVISED

P:\PROJ\01\4939u\drafting\01_4939U\01140000085ea006.dgn

LAST REVISION 03-10-15 | DATE PLOTTED => 25-MAR-2015 | TIME PLOTTED => 13:57

NOTE:

FOR ACCURATE RIGHT OF WAY DATA, CONTACT
RIGHT OF WAY ENGINEERING AT THE DISTRICT OFFICE.

CURVE DATA

No. ⊕	R	Δ	T	L
1	400′	05°56′15″	20.74′	41.45′
2	380′	11°07′56″	37.03′	73.83′

Dist	COUNTY	ROUTE	POST MILES TOTAL PROJECT	SHEET No.	TOTAL SHEETS
01	Men	20,162	7.14/29.18 5.28/22.45	14	40

REGISTERED CIVIL ENGINEER 02-04-15 DATE

March 19, 2015
PLANS APPROVAL DATE

REGISTERED PROFESSIONAL ENGINEER
LENA R. ASHLEY
No. 48764
Exp. 9-30-16
CIVIL
STATE OF CALIFORNIA

THE STATE OF CALIFORNIA OR ITS OFFICERS OR AGENTS SHALL NOT BE RESPONSIBLE FOR THE ACCURACY OR COMPLETENESS OF SCANNED COPIES OF THIS PLAN SHEET.

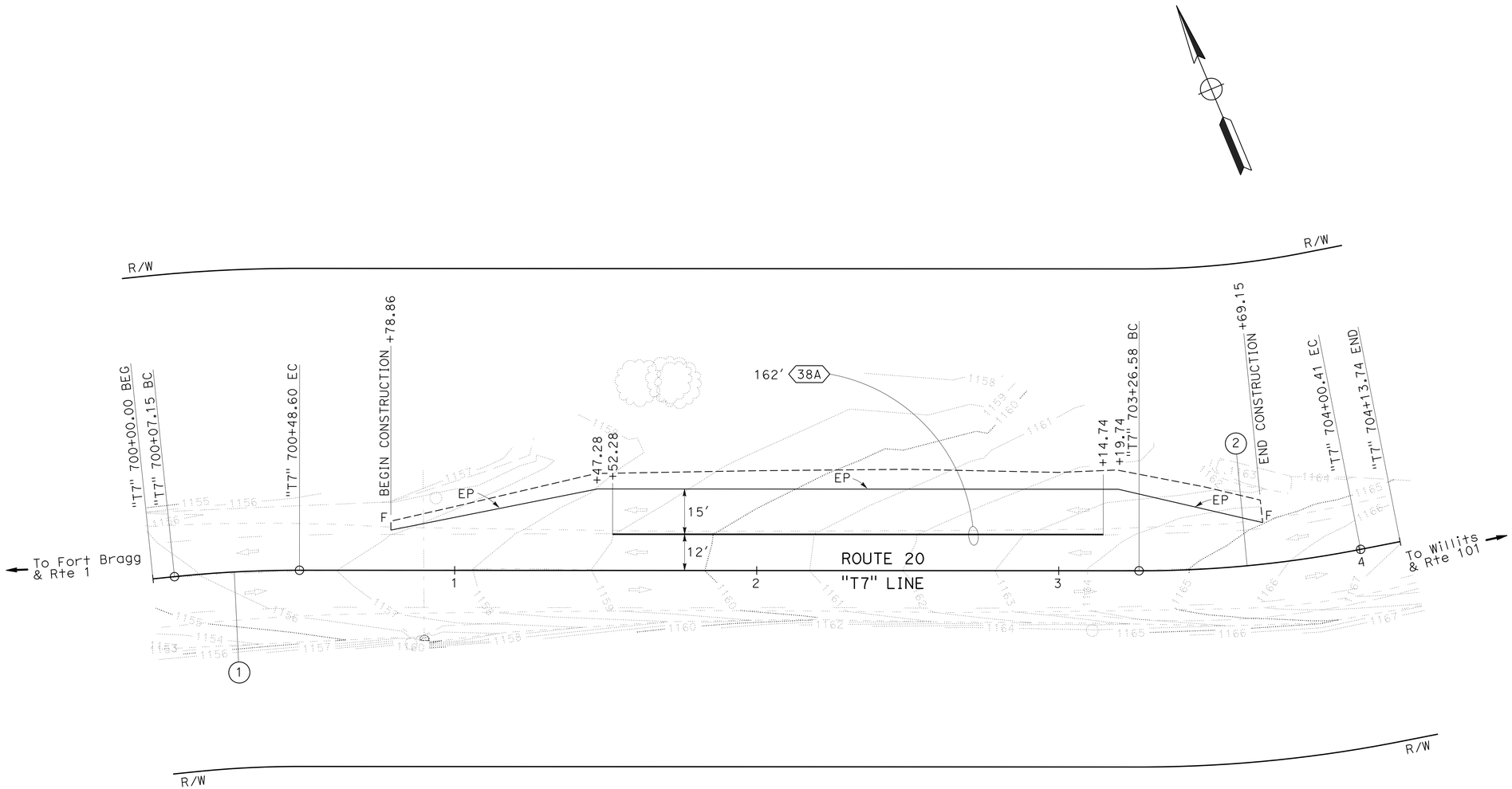

LOCATION 7

ROUTE 20-WB
PM 22.98/23.05

LAYOUT

SCALE: 1"=20′

L-7

REVISED BY	DATE REVISED
BIJAN SAMRAD	
BRIAN HODGSON	

CALCULATED-DESIGNED BY
CHECKED BY

FUNCTIONAL SUPERVISOR
L.R. ASHLEY

STATE OF CALIFORNIA - DEPARTMENT OF TRANSPORTATION
Caltrans
DESIGN

P:\PROJ\01\49339u\draffing\01_49339U\0114000085ea007.dgn

LAST REVISION 03-10-15 | DATE PLOTTED => 25-MAR-2015 | TIME PLOTTED => 13:57

NOTE:

FOR ACCURATE RIGHT OF WAY DATA, CONTACT
RIGHT OF WAY ENGINEERING AT THE DISTRICT OFFICE.

CURVE DATA

No. ⊕	R	Δ	T	L
1	3000′	01°27′22″	38.13′	76.25′
2	1000′	00°37′50″	5.50′	11.00′
3	3000′	00°41′22″	18.05′	36.10′

Dist	COUNTY	ROUTE	POST MILES TOTAL PROJECT	SHEET No.	TOTAL SHEETS
01	Men	20,162	7.14/29.18 5.28/22.45	15	40

REGISTERED CIVIL ENGINEER 02-04-15 DATE

March 19, 2015
PLANS APPROVAL DATE

REGISTERED PROFESSIONAL ENGINEER BRIAN R. HODGSON No. C 81667 Exp. 9-30-15 CIVIL STATE OF CALIFORNIA

THE STATE OF CALIFORNIA OR ITS OFFICERS OR AGENTS SHALL NOT BE RESPONSIBLE FOR THE ACCURACY OR COMPLETENESS OF SCANNED COPIES OF THIS PLAN SHEET.

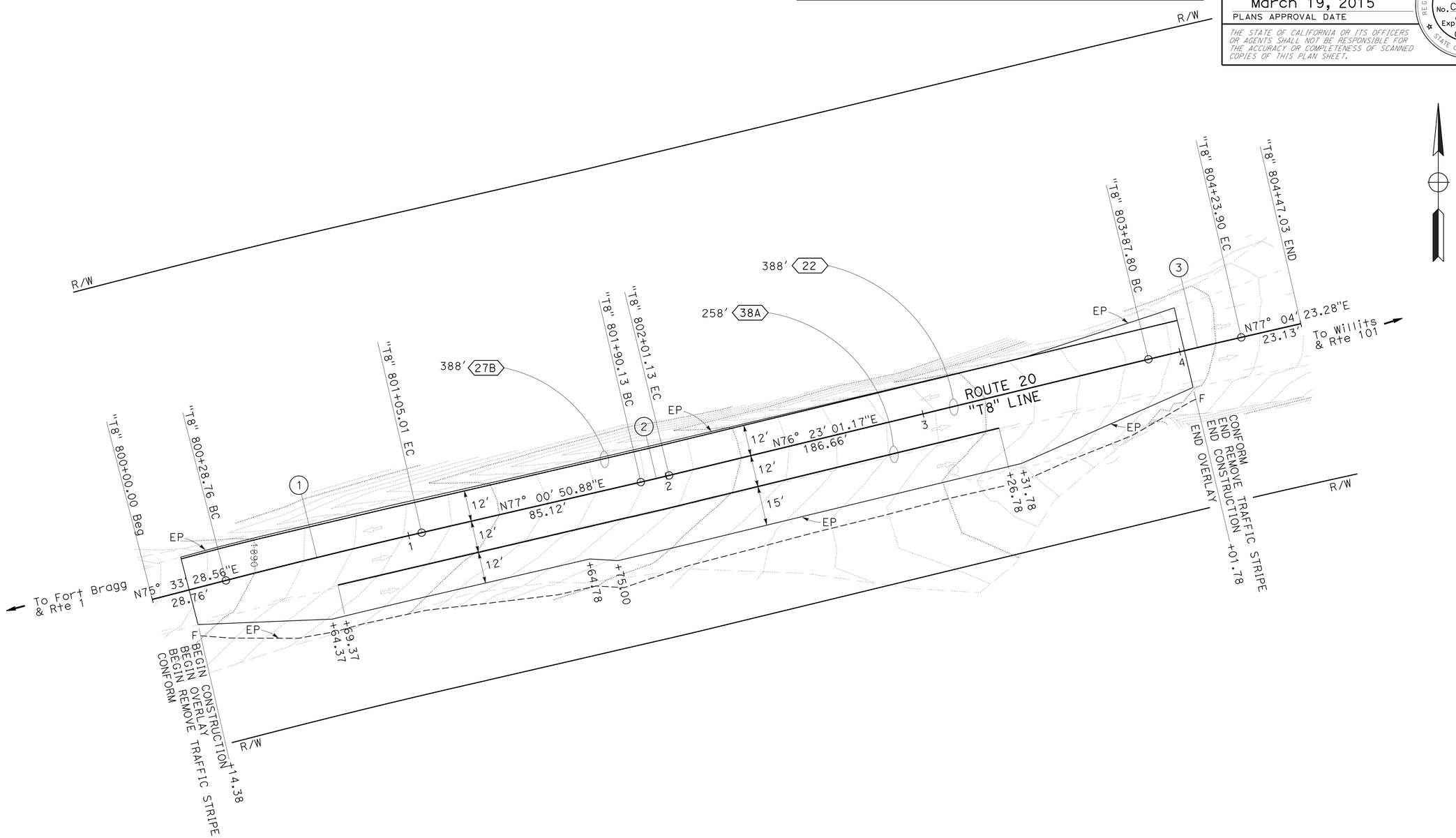

LOCATION 8

ROUTE 20-EB
PM 28.02/28.06

LAYOUT

SCALE: 1″=20′

L-8

REVISED BY	DATE REVISED
JEFF COON	BRIAN HODGSON

CALCULATED-DESIGNED BY
CHECKED BY

FUNCTIONAL SUPERVISOR: L.R. ASHLEY

STATE OF CALIFORNIA - DEPARTMENT OF TRANSPORTATION
Caltrans
DESIGN

P:\PROJ\01\49390\draffing\01_49390\0114000085ea008.dgn

LAST REVISION 03-10-15 | DATE PLOTTED => 25-MAR-2015 | TIME PLOTTED => 13:57

Dist	COUNTY	ROUTE	POST MILES TOTAL PROJECT	SHEET No.	TOTAL SHEETS
01	Men	20,162	7.14/29.18 5.28/22.45	16	40

REGISTERED CIVIL ENGINEER DATE 02-04-15

March 19, 2015
PLANS APPROVAL DATE

REGISTERED PROFESSIONAL ENGINEER
BRIAN R. HODGSON
No. C 81667
Exp. 9-30-15
CIVIL
STATE OF CALIFORNIA

THE STATE OF CALIFORNIA OR ITS OFFICERS OR AGENTS SHALL NOT BE RESPONSIBLE FOR THE ACCURACY OR COMPLETENESS OF SCANNED COPIES OF THIS PLAN SHEET.

NOTE:

FOR ACCURATE RIGHT OF WAY DATA, CONTACT RIGHT OF WAY ENGINEERING AT THE DISTRICT OFFICE.

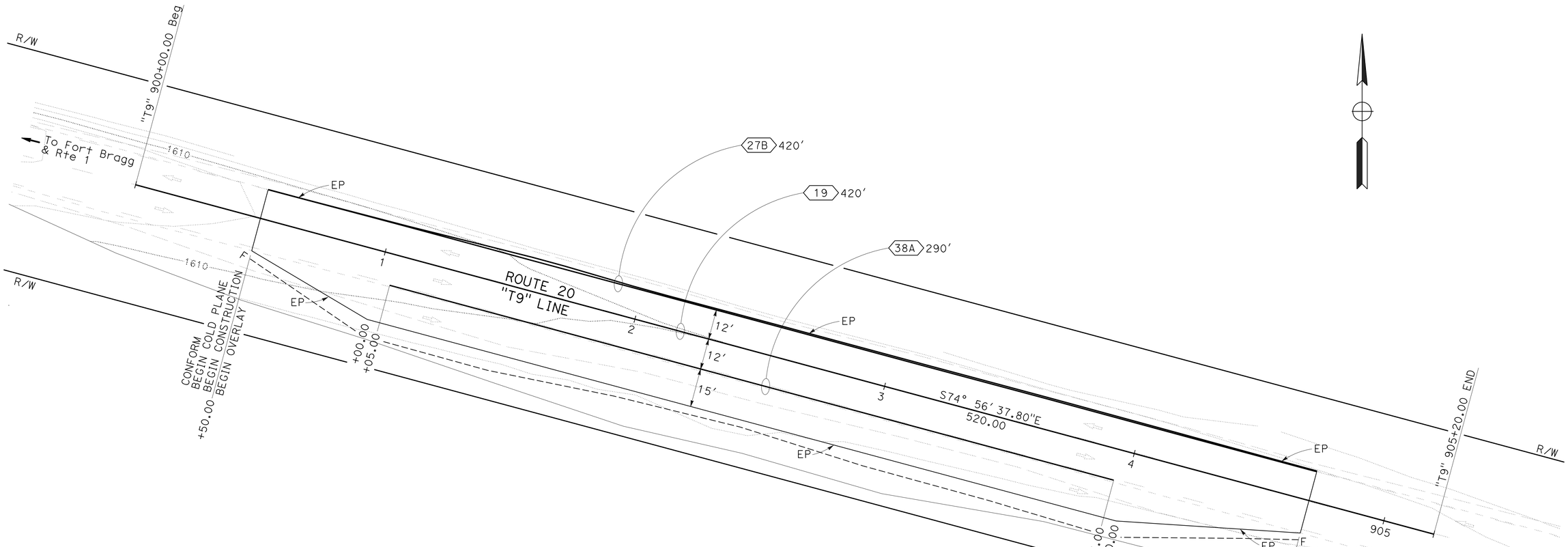

LOCATION 9

ROUTE 20-EB
PM 29.11/29.18

LAYOUT

SCALE: 1"=20'

L-9

REVISED BY	DATE REVISED

CALCULATED-DESIGNED BY	CHECKED BY
BRIAN HODGSON	BIJAN SAMRAD

FUNCTIONAL SUPERVISOR: L.R. ASHLEY

STATE OF CALIFORNIA - DEPARTMENT OF TRANSPORTATION

Caltrans® **DESIGN**

P:\PROJ\01\49339\Drafting\01_49339\0114000085ea009.dgn

LAST REVISION 03-10-15 | DATE PLOTTED => 25-MAR-2015 | TIME PLOTTED => 13:57

NOTE:

FOR ACCURATE RIGHT OF WAY DATA, CONTACT
RIGHT OF WAY ENGINEERING AT THE DISTRICT OFFICE.

CURVE DATA

No. ⊕	R	Δ	T	L
1	1500.00′	10°02′28"	131.78′	262.88′

Dist	COUNTY	ROUTE	POST MILES TOTAL PROJECT	SHEET No.	TOTAL SHEETS
01	Men	20,162	7.14/29.18 5.28/22.45	17	40

Lena R. Ashley 02-04-15
REGISTERED CIVIL ENGINEER DATE

March 19, 2015
PLANS APPROVAL DATE

REGISTERED PROFESSIONAL ENGINEER
LENA R. ASHLEY
No. 48764
Exp. 9-30-16
CIVIL
STATE OF CALIFORNIA

THE STATE OF CALIFORNIA OR ITS OFFICERS OR AGENTS SHALL NOT BE RESPONSIBLE FOR THE ACCURACY OR COMPLETENESS OF SCANNED COPIES OF THIS PLAN SHEET.

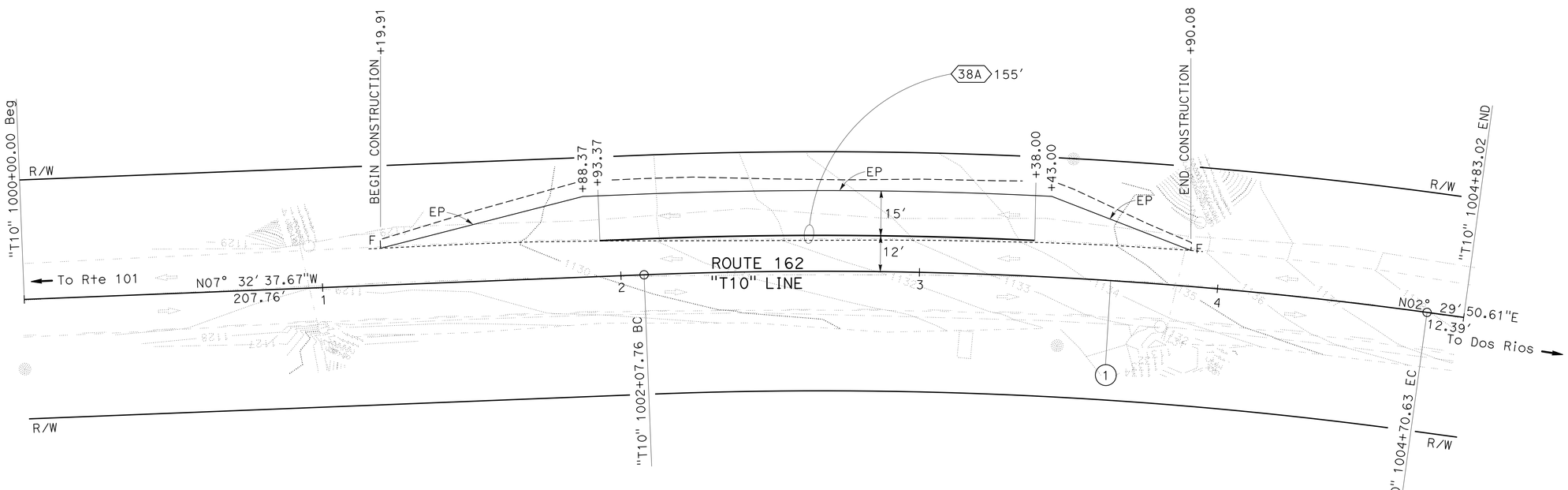

LOCATION 10

ROUTE 162-WB
PM 5.28/5.33

LAYOUT
SCALE: 1"=20′

L-10

BIJAN SAMRAD
BRIAN HODGSON
REVISED BY
DATE REVISED
CALCULATED-DESIGNED BY
CHECKED BY
FUNCTIONAL SUPERVISOR
L.R. ASHLEY

STATE OF CALIFORNIA - DEPARTMENT OF TRANSPORTATION
Caltrans
DESIGN

P:\PROJ\01\49390\draffing\01_49390\0114000085ea010.dgn

LAST REVISION 03-10-15
DATE PLOTTED => 25-MAR-2015
TIME PLOTTED => 13:57

Dist	COUNTY	ROUTE	POST MILES TOTAL PROJECT	SHEET No.	TOTAL SHEETS
01	Men	20,162	7.14/29.18 5.28/22.45	18	40

REGISTERED CIVIL ENGINEER 02-04-15 DATE

March 19, 2015
PLANS APPROVAL DATE

REGISTERED PROFESSIONAL ENGINEER LENA R. ASHLEY No. 48764 Exp. 9-30-16 CIVIL STATE OF CALIFORNIA

THE STATE OF CALIFORNIA OR ITS OFFICERS OR AGENTS SHALL NOT BE RESPONSIBLE FOR THE ACCURACY OR COMPLETENESS OF SCANNED COPIES OF THIS PLAN SHEET.

NOTES:

1. FOR ACCURATE RIGHT OF WAY DATA, CONTACT RIGHT OF WAY ENGINEERING AT THE DISTRICT OFFICE.
2. NO DEEDED RIGHT OF WAY.

CURVE DATA

No. ⊕	R	Δ	T	L
1	490′	15°16′45"	65.72′	130.67′
2	2700′	04°06′02"	96.66′	193.23′

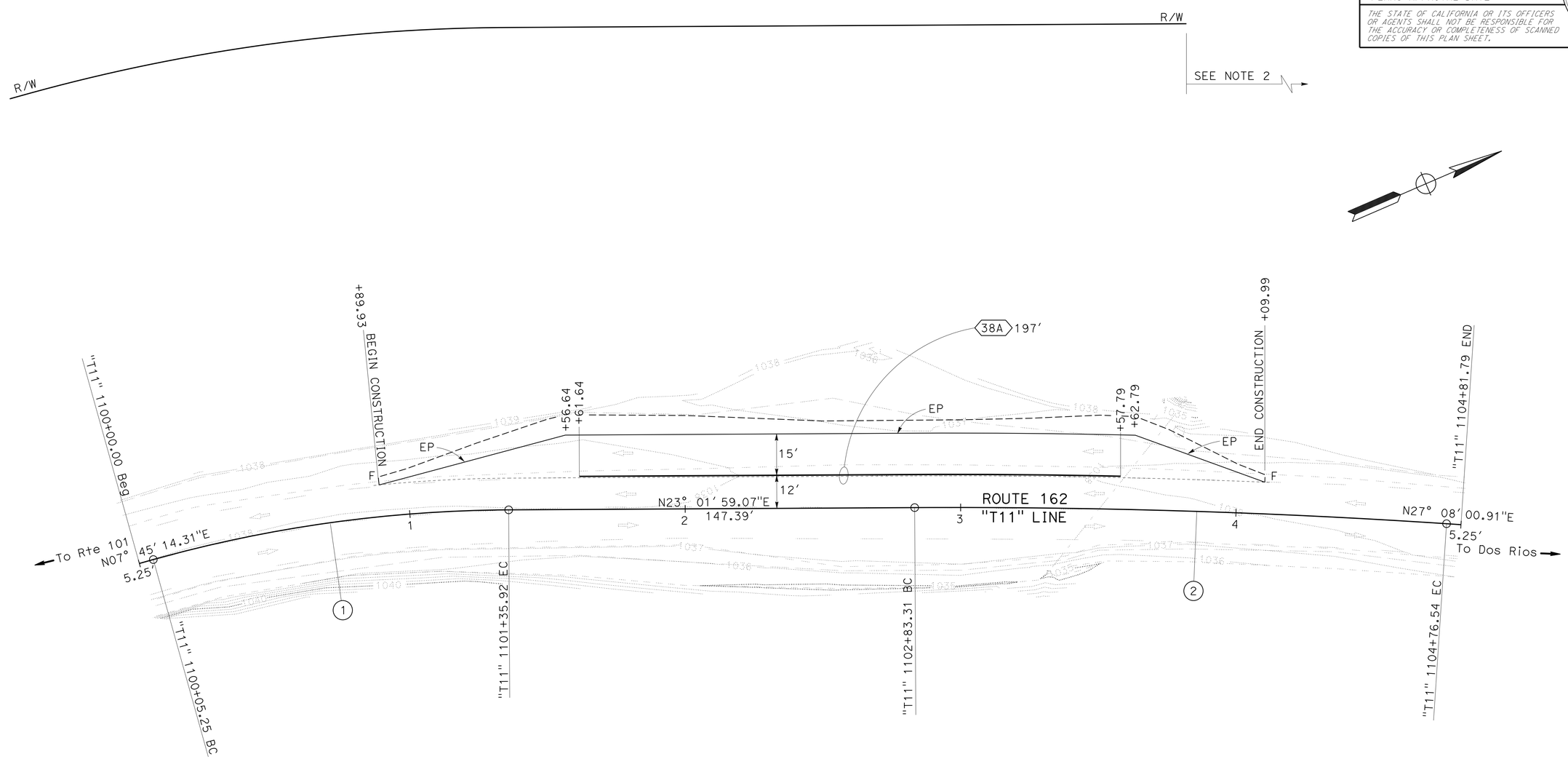

LOCATION 11

ROUTE 162-WB
PM 9.47/9.51

LAYOUT
SCALE: 1"=20′

L-11

REVISED BY | DATE REVISED
BIJAN SAMRAD | BRIAN HODGSON
CALCULATED-DESIGNED BY | CHECKED BY
FUNCTIONAL SUPERVISOR: L.R. ASHLEY

STATE OF CALIFORNIA - DEPARTMENT OF TRANSPORTATION
Caltrans
DESIGN

P:\PROJ\01\4939U\draft ing\01_4939U\01140000085ea011.dgn

LAST REVISION 03-10-15 | DATE PLOTTED => 25-MAR-2015 | TIME PLOTTED => 13:57

Dist	COUNTY	ROUTE	POST MILES TOTAL PROJECT	SHEET No.	TOTAL SHEETS
01	Men	20,162	7.14/29.18 5.28/22.45	19	40

REGISTERED CIVIL ENGINEER 02-04-15 DATE

March 19, 2015
PLANS APPROVAL DATE

REGISTERED PROFESSIONAL ENGINEER
LENA R. ASHLEY
No. 48764
Exp 9-30-16
CIVIL
STATE OF CALIFORNIA

THE STATE OF CALIFORNIA OR ITS OFFICERS OR AGENTS SHALL NOT BE RESPONSIBLE FOR THE ACCURACY OR COMPLETENESS OF SCANNED COPIES OF THIS PLAN SHEET.

NOTE:

FOR ACCURATE RIGHT OF WAY DATA, CONTACT
RIGHT OF WAY ENGINEERING AT THE DISTRICT OFFICE.

CURVE DATA

No. ⊕	R	Δ	T	L
1	1100′	02°45′39"	26.51′	53.01′
2	1600′	09°37′28"	134.70′	268.77′

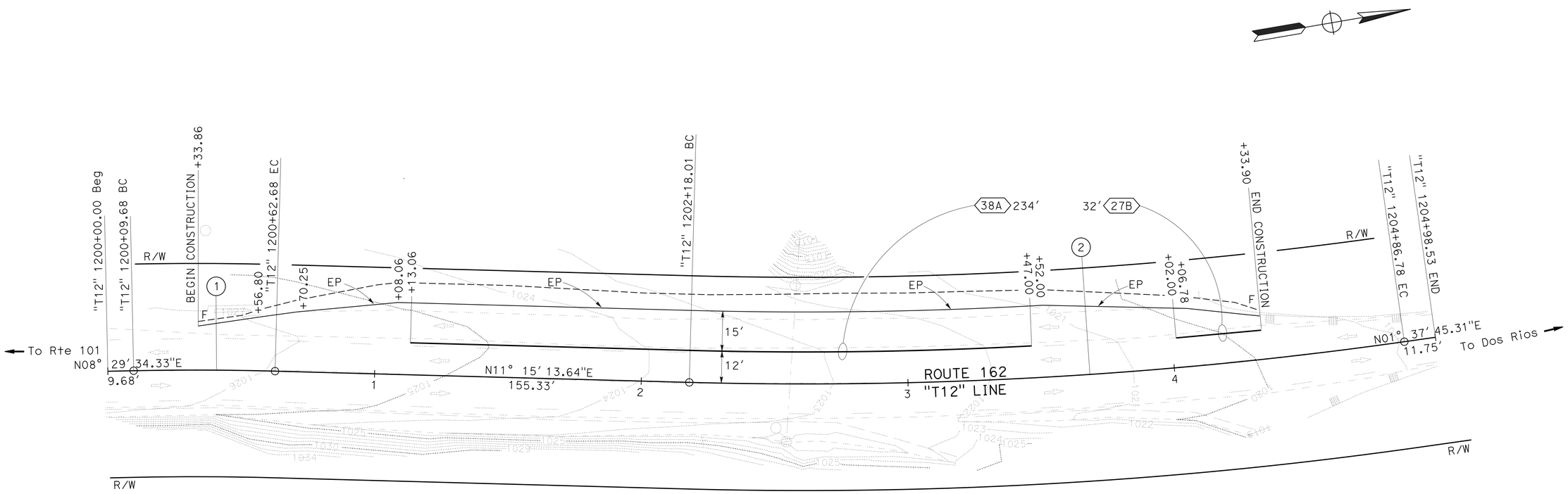

LOCATION 12

ROUTE 162-WB
PM 10.00/10.04

LAYOUT

SCALE: 1"=20′

L-12

BIJAN SAMRAD — CALCULATED-DESIGNED BY
BRIAN HODGSON — CHECKED BY
L.R. ASHLEY — FUNCTIONAL SUPERVISOR
REVISED BY — DATE REVISED

STATE OF CALIFORNIA - DEPARTMENT OF TRANSPORTATION
Caltrans
DESIGN

P:\PROJ\01\4939u\drafting\01_4939U\01140000085ea012.dgn

LAST REVISION 03-10-15 | DATE PLOTTED => 25-MAR-2015 | TIME PLOTTED => 13:57

BORDER LAST REVISED 7/2/2010 | USERNAME => s120115 | DGN FILE => 01140000085ea012.dgn | RELATIVE BORDER SCALE IS IN INCHES 0 1 2 3 | UNIT 0313 | PROJECT NUMBER & PHASE 01140000851

Dist	COUNTY	ROUTE	POST MILES TOTAL PROJECT	SHEET No.	TOTAL SHEETS
01	Men	20,162	7.14/29.18 5.28/22.45	20	40

REGISTERED CIVIL ENGINEER 02-04-15 DATE

March 19, 2015
PLANS APPROVAL DATE

REGISTERED PROFESSIONAL ENGINEER
LENA R. ASHLEY
No. 48764
Exp 9-30-16
CIVIL
STATE OF CALIFORNIA

THE STATE OF CALIFORNIA OR ITS OFFICERS OR AGENTS SHALL NOT BE RESPONSIBLE FOR THE ACCURACY OR COMPLETENESS OF SCANNED COPIES OF THIS PLAN SHEET.

NOTE:

FOR ACCURATE RIGHT OF WAY DATA, CONTACT
RIGHT OF WAY ENGINEERING AT THE DISTRICT OFFICE.

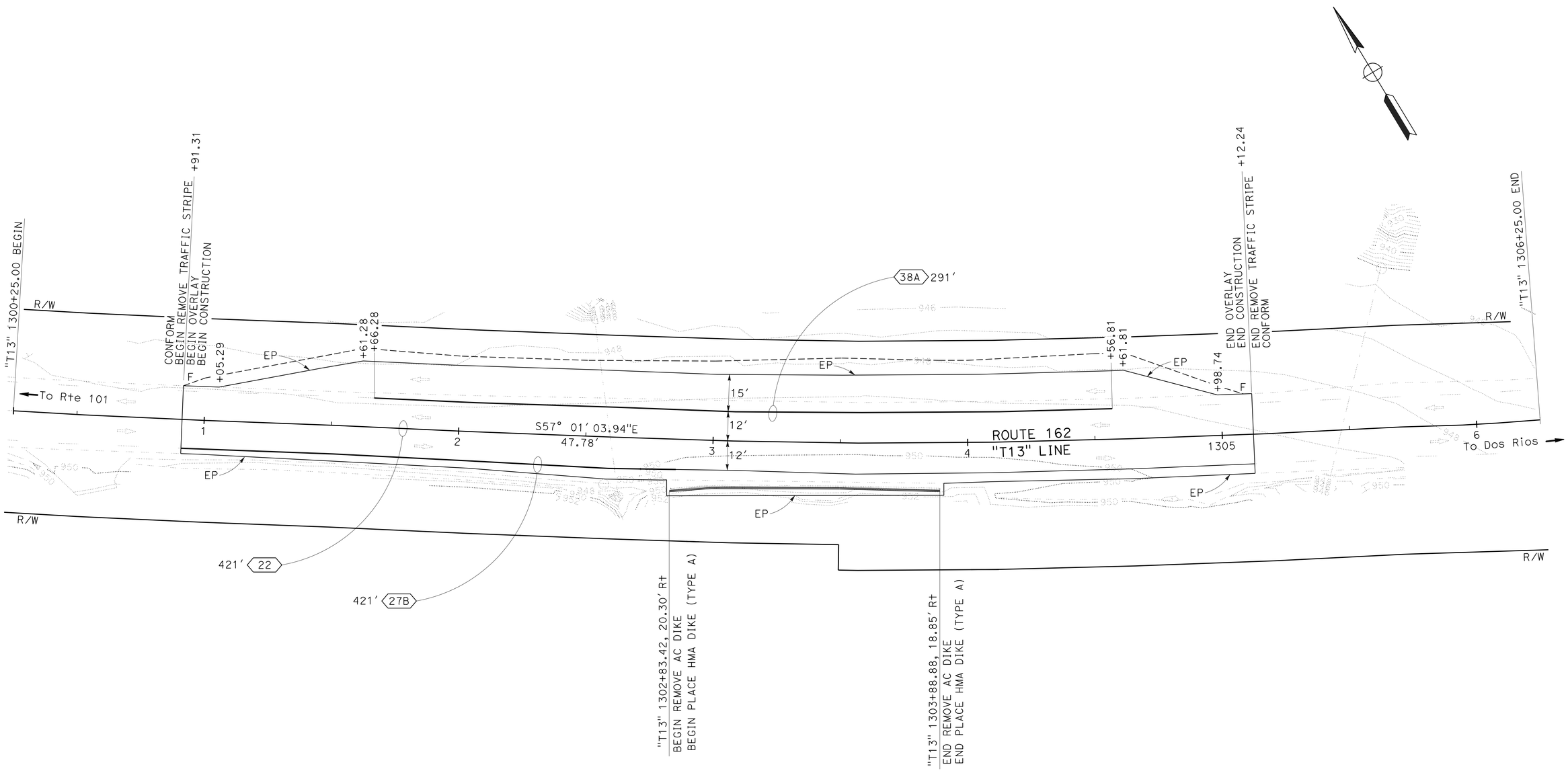

LOCATION 13

ROUTE 162-WB
PM 15.02/15.07

LAYOUT
SCALE: 1"=20'

L-13

REVISED BY	DATE REVISED

CALCULATED-DESIGNED BY: ELISA MEYER
CHECKED BY: BRIAN HODGSON
FUNCTIONAL SUPERVISOR: L.R. ASHLEY

STATE OF CALIFORNIA - DEPARTMENT OF TRANSPORTATION
Caltrans
DESIGN

P:\PROJ\01\4939u\drafting\01_4939U\0114000085ea013.dgn

LAST REVISION 03-10-15
DATE PLOTTED => 25-MAR-2015
TIME PLOTTED => 13:57

Dist	COUNTY	ROUTE	POST MILES TOTAL PROJECT	SHEET No.	TOTAL SHEETS
01	Men	20,162	7.14/29.18 5.28/22.45	21	40

REGISTERED CIVIL ENGINEER 02-04-15 DATE

March 19, 2015
PLANS APPROVAL DATE

REGISTERED PROFESSIONAL ENGINEER
T. LARK
No. 52481
Exp. 12/31/16
CIVIL
STATE OF CALIFORNIA

THE STATE OF CALIFORNIA OR ITS OFFICERS OR AGENTS SHALL NOT BE RESPONSIBLE FOR THE ACCURACY OR COMPLETENESS OF SCANNED COPIES OF THIS PLAN SHEET.

NOTES:

1. FOR ACCURATE RIGHT OF WAY DATA, CONTACT RIGHT OF WAY ENGINEERING AT THE DISTRICT OFFICE.
2. NO DEEDED RIGHT OF WAY.

CURVE DATA

No. ⊕	R	Δ	T	L
1	800′	06°48′34"	47.59′	95.08′
2	400′	37°14′13"	134.76′	259.96′
3	400′	08°15′49"	28.90′	57.69′

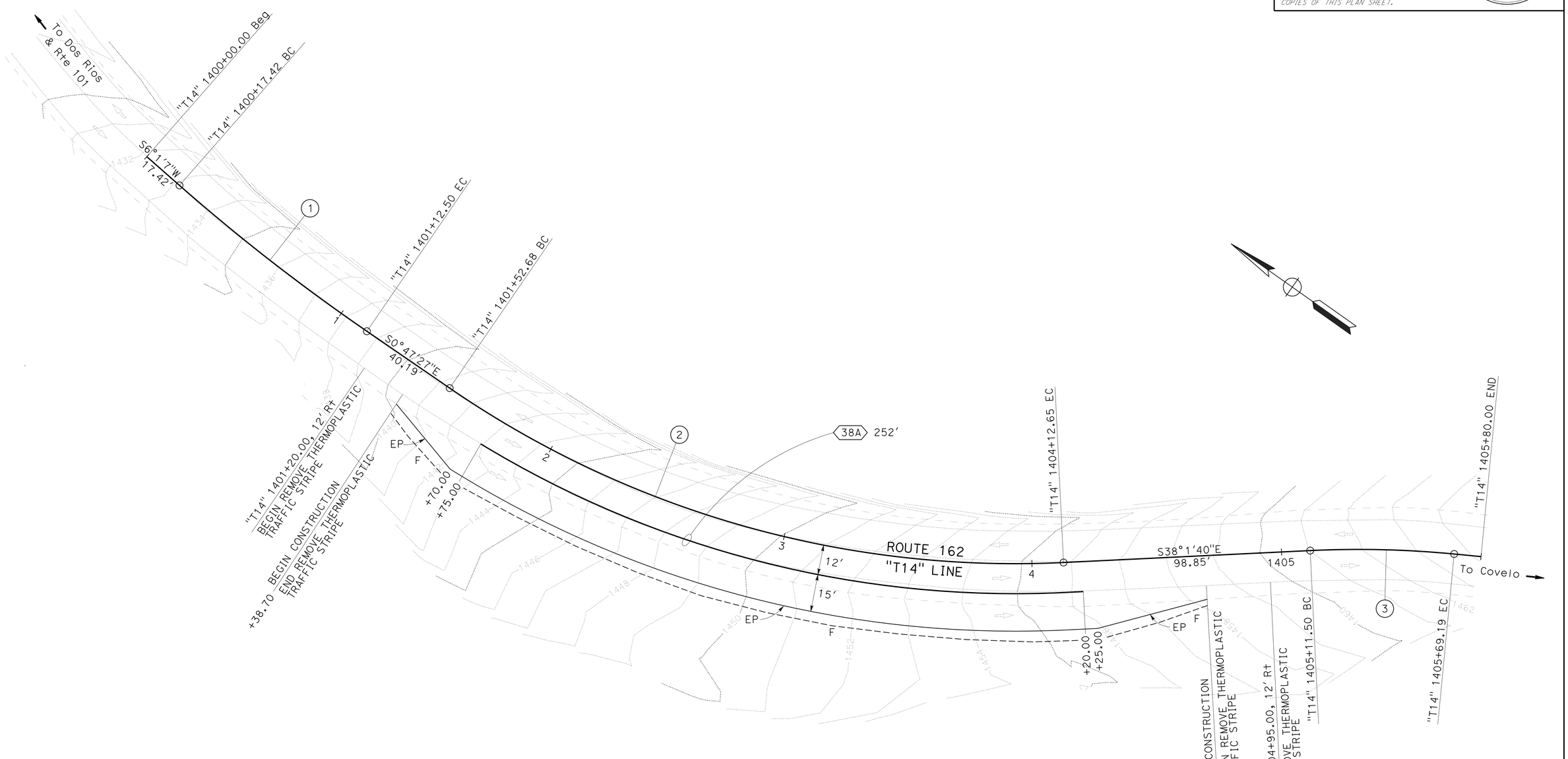

LOCATION 14

ROUTE 162-EB
PM 17.84/17.90

LAYOUT

SCALE: 1"=20′

L-14

STATE OF CALIFORNIA - DEPARTMENT OF TRANSPORTATION
Caltrans® **DESIGN**

FUNCTIONAL SUPERVISOR: L.R. ASHLEY
CALCULATED-DESIGNED BY: TODD LARK
CHECKED BY: BRIAN HODGSON
REVISED BY
DATE REVISED

P:\PROJ\01\4939u\drafting\01_4939U\01140000085ea014.dgn

LAST REVISION 03-10-15 | DATE PLOTTED => 25-MAR-2015 | TIME PLOTTED => 13:57

BORDER LAST REVISED 7/2/2010 | USERNAME => s120115 | DGN FILE => 01140000085ea014.dgn | RELATIVE BORDER SCALE IS IN INCHES 0 1 2 3 | UNIT 0313 | PROJECT NUMBER & PHASE 01140000851

NOTE:

FOR ACCURATE RIGHT OF WAY DATA, CONTACT RIGHT OF WAY ENGINEERING AT THE DISTRICT OFFICE.

Dist	COUNTY	ROUTE	POST MILES TOTAL PROJECT	SHEET No.	TOTAL SHEETS
01	Men	20,162	7.14/29.18 5.28/22.45	22	40

REGISTERED CIVIL ENGINEER 02-04-15 DATE

March 19, 2015
PLANS APPROVAL DATE

REGISTERED PROFESSIONAL ENGINEER LENA R. ASHLEY No. 48764 Exp. 9-30-16 CIVIL STATE OF CALIFORNIA

THE STATE OF CALIFORNIA OR ITS OFFICERS OR AGENTS SHALL NOT BE RESPONSIBLE FOR THE ACCURACY OR COMPLETENESS OF SCANNED COPIES OF THIS PLAN SHEET.

CURVE DATA

No. ⊕	R	Δ	T	L
1	1750′	03°29′15"	53.28′	106.52′
2	260′	11°11′21"	25.47′	50.77′

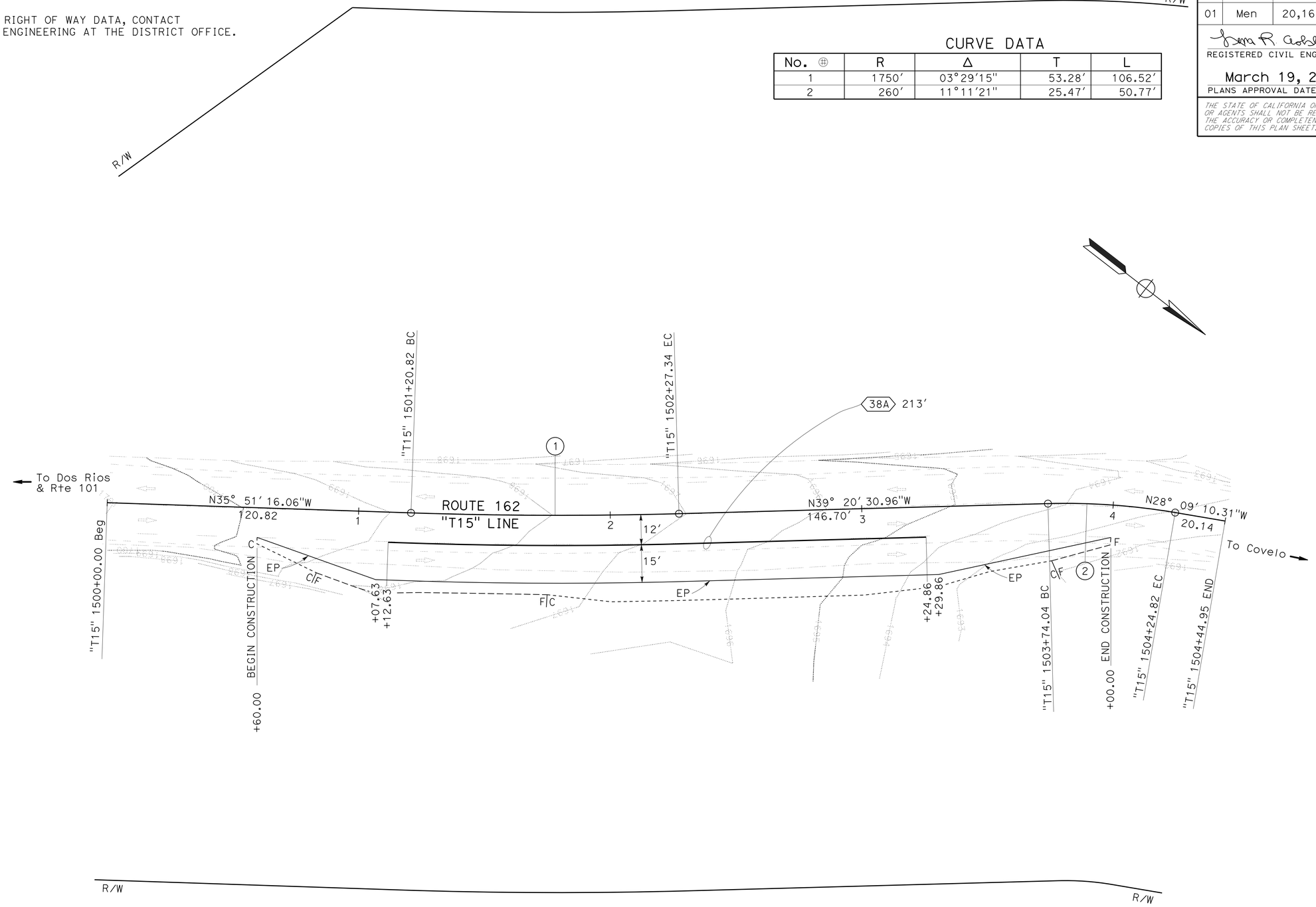

LOCATION 15

ROUTE 162-EB
PM 19.57/19.62

LAYOUT
SCALE: 1"=20′

L-15

BIJAN SAMRAD | BRIAN HODGSON | L.R. ASHLEY | REVISED BY | DATE REVISED | CALCULATED-DESIGNED BY | CHECKED BY | FUNCTIONAL SUPERVISOR

STATE OF CALIFORNIA - DEPARTMENT OF TRANSPORTATION
Caltrans
DESIGN

P:\PROJ\01\4939u\draffing\01_4939U\0114000085ea015.dgn

LAST REVISION 03-10-15 | DATE PLOTTED => 25-MAR-2015 | TIME PLOTTED => 13:57

NOTE:

FOR ACCURATE RIGHT OF WAY DATA, CONTACT
RIGHT OF WAY ENGINEERING AT THE DISTRICT OFFICE.

CURVE DATA

No. ⊕	R	Δ	T	L
1	474.36′	11°19′29″	47.03′	93.76′
2	394.83′	49°46′19″	183.15′	342.98′
3	152.20′	04°39′07″	6.18′	12.36′
4	422.47′	04°11′50″	15.48′	30.95′
5	574.26′	06°40′38″	33.50′	66.93′

Dist	COUNTY	ROUTE	POST MILES TOTAL PROJECT	SHEET No.	TOTAL SHEETS
01	Men	20,162	7.14/29.18 5.28/22.45	23	40

REGISTERED CIVIL ENGINEER 02-04-15 DATE

March 19, 2015
PLANS APPROVAL DATE

REGISTERED PROFESSIONAL ENGINEER BRIAN R. HODGSON No. C 81667 Exp. 9-30-15 CIVIL STATE OF CALIFORNIA

THE STATE OF CALIFORNIA OR ITS OFFICERS OR AGENTS SHALL NOT BE RESPONSIBLE FOR THE ACCURACY OR COMPLETENESS OF SCANNED COPIES OF THIS PLAN SHEET.

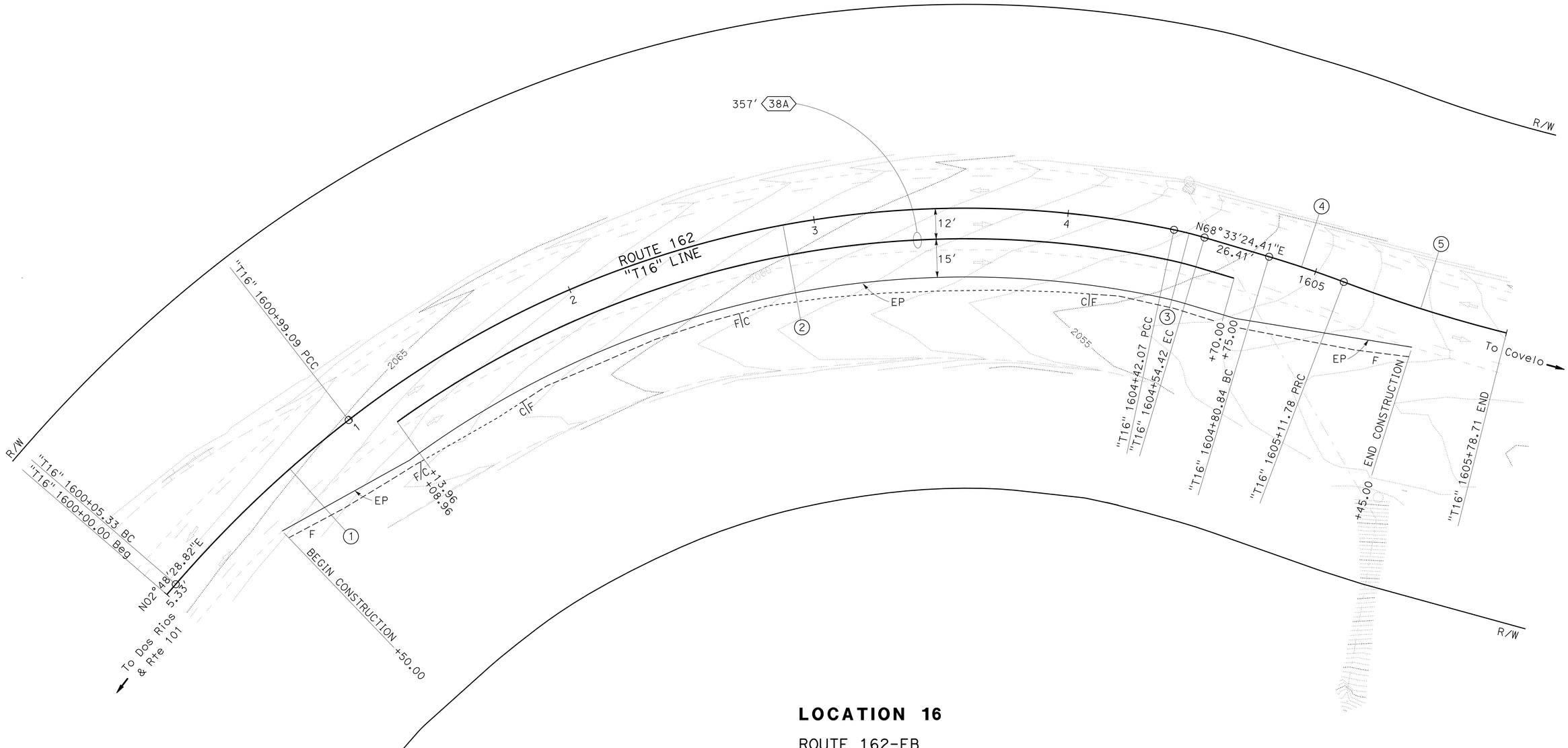

LOCATION 16

ROUTE 162-EB
PM 22.37/22.45

LAYOUT
SCALE: 1"=20′

L-16

STATE OF CALIFORNIA - DEPARTMENT OF TRANSPORTATION
Caltrans
DESIGN

FUNCTIONAL SUPERVISOR: L.R. ASHLEY
CALCULATED-DESIGNED BY: JEFF COON
CHECKED BY: BRIAN HODGSON
REVISED BY
DATE REVISED

P:\PROJ\01\4939u\draf+ing\01_4939U\01140000085ea016.dgn

LAST REVISION 03-10-15 | DATE PLOTTED => 25-MAR-2015 | TIME PLOTTED => 13:57

Dist	COUNTY	ROUTE	POST MILES TOTAL PROJECT	SHEET No.	TOTAL SHEETS
01	Men	20,162	7.14/29.18 5.28/22.45	24	40

REGISTERED CIVIL ENGINEER DATE 02-04-15

March 19, 2015
PLANS APPROVAL DATE

REGISTERED PROFESSIONAL ENGINEER BRIAN R. HODGSON No. C 81667 Exp. 9-30-15 CIVIL STATE OF CALIFORNIA

THE STATE OF CALIFORNIA OR ITS OFFICERS OR AGENTS SHALL NOT BE RESPONSIBLE FOR THE ACCURACY OR COMPLETENESS OF SCANNED COPIES OF THIS PLAN SHEET.

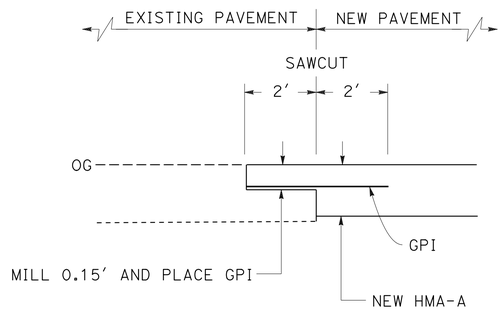

GEOSYNTHETIC PAVEMENT INTERLAYER (GPI)
LOCATIONS 2, 3, 10, 11, 12, 14, 15 & 16

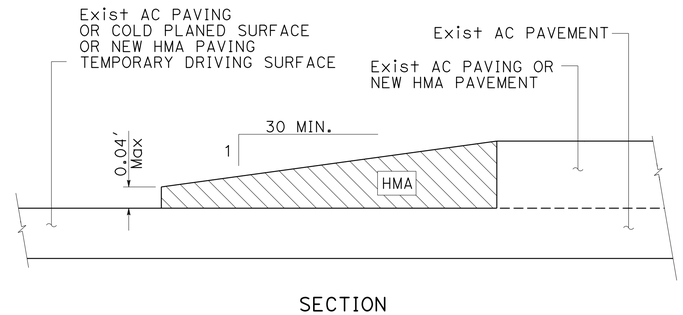

SECTION

TEMPORARY TRANSVERSE PAVEMENT TAPER

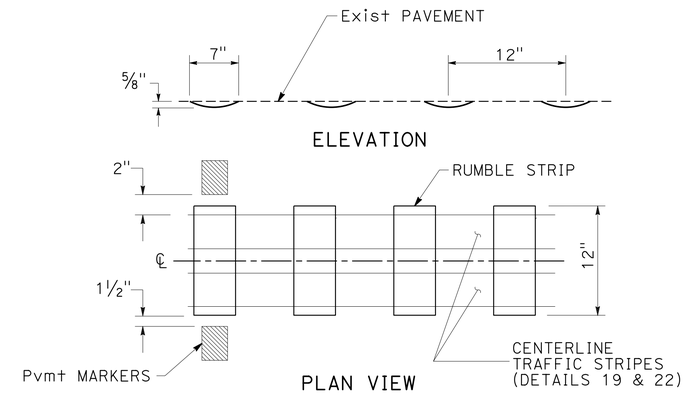

CENTERLINE RUMBLE STRIP
LOCATIONS 8, 9 & 13

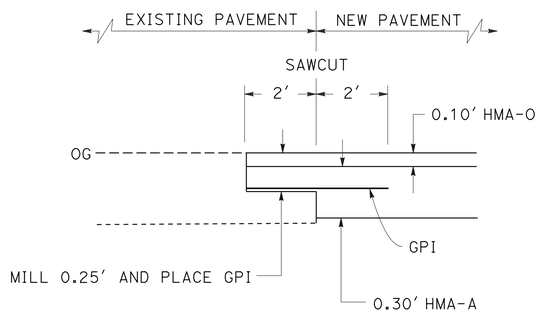

GEOSYNTHETIC PAVEMENT INTERLAYER (GPI)
LOCATIONS 5, 6 & 7

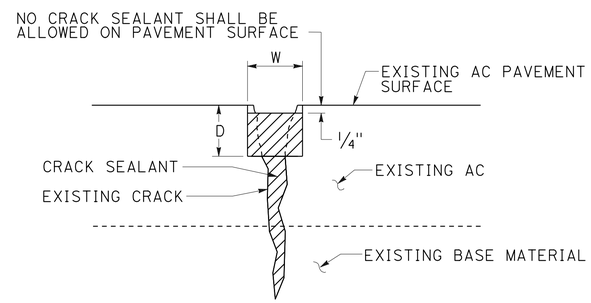

SECTION

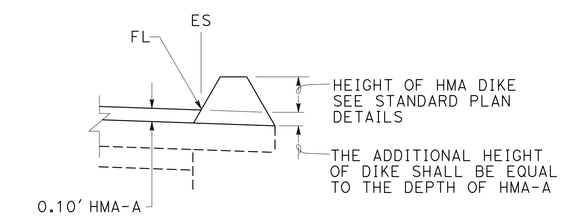

HMA DIKE WHEN PLACED WITH HMA-A
LOCATION 13

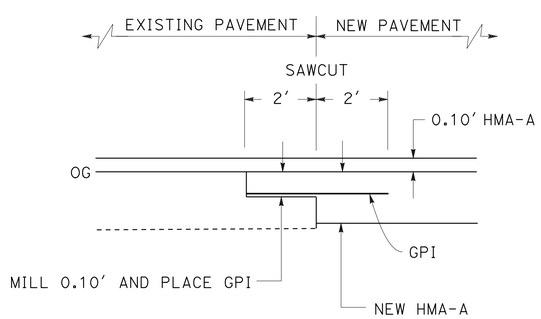

GEOSYNTHETIC PAVEMENT INTERLAYER (GPI)
LOCATIONS 8, 9 & 13

NOTES:

1. ALL CRACKS 1/4" WIDE OR GREATER ARE TO BE ROUTED AND SEALED.
2. IF ANY PART OF ANY CRACK IS 1/4" OR WIDER, THEN THE ENTIRE CRACK WILL BE ROUTED AND SEALED.
3. NO SEALANT MATERIAL WILL BE ALLOWED ON HMA PAVEMENT SURFACE.

LEGEND:

CRACK SEALANT

W = WIDTH OF ROUTING = WIDTH OF CRACK +1/4" Min
D = DEPTH OF ROUTING = W+1/4" Min

CRACK SEAL (TREATMENT)
LOCATIONS 8, 11, 12, 13, 14, 15 & 16

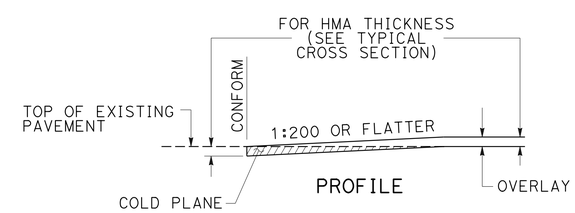

CONFORM
LOCATIONS 8, 9 & 13

CONSTRUCTION DETAILS

NO SCALE

C-1

REVISED BY | DATE REVISED
BRIAN HODGSON | BIJAN SAMRAD
CALCULATED-DESIGNED BY | CHECKED BY
FUNCTIONAL SUPERVISOR: L.R. ASHLEY

STATE OF CALIFORNIA - DEPARTMENT OF TRANSPORTATION
DESIGN
Caltrans

P:\PROJ\01\4939u\drafting\01_4939U01140000085ga001.dgn

LAST REVISION 03-10-15 | DATE PLOTTED => 25-MAR-2015 | TIME PLOTTED => 13:57

BORDER LAST REVISED 7/2/2010 | USERNAME => s120115 | DGN FILE => 01140000085ga001.dgn | RELATIVE BORDER SCALE IS IN INCHES 0 1 2 3 | UNIT 0313 | PROJECT NUMBER & PHASE 01140000851

Dist	COUNTY	ROUTE	POST MILES TOTAL PROJECT	SHEET No.	TOTAL SHEETS
01	Men	20,162	7.14/29.18 5.28/22.45	25	40

REGISTERED CIVIL ENGINEER DATE 02-04-15

March 19, 2015
PLANS APPROVAL DATE

REGISTERED PROFESSIONAL ENGINEER BRIAN R. HODGSON No. C 81667 Exp. 9-30-15 CIVIL STATE OF CALIFORNIA

THE STATE OF CALIFORNIA OR ITS OFFICERS OR AGENTS SHALL NOT BE RESPONSIBLE FOR THE ACCURACY OR COMPLETENESS OF SCANNED COPIES OF THIS PLAN SHEET.

STATIONARY MOUNTED CONSTRUCTION AREA SIGNS

SIGN ◯	SIGN CODE	SIGN MESSAGE	PANEL SIZE	NUMBER AND SIZE OF POSTS	NUMBER OF SIGNS
			INCHES	INCHES	EA
A	C40 (CA)	TRAFFIC FINES DOUBLED IN CONSTRUCTION ZONES	108 x 60	2 - 6 x 6	2
B	G20-1	ROAD WORK NEXT 23 MILES	60 x 36	2 - 4 x 6	2
C	W11-1	BICYCLE SYMBOL	36 x 36	1 - 4 x 6	2
	W16-1P	SHARE THE ROAD	24 x 30		
E	G20-2	END ROAD WORK	36 x 18	1 - 4 x 4	2

NOTES:
1. EXACT SIGN LOCATIONS TO BE DETERMINED BY THE ENGINEER.
2. SEE CS-2 FOR ADDITIONAL CONSTRUCTION AREA SIGNS.

LEGEND
● LOCATIONS OF CONSTRUCTION

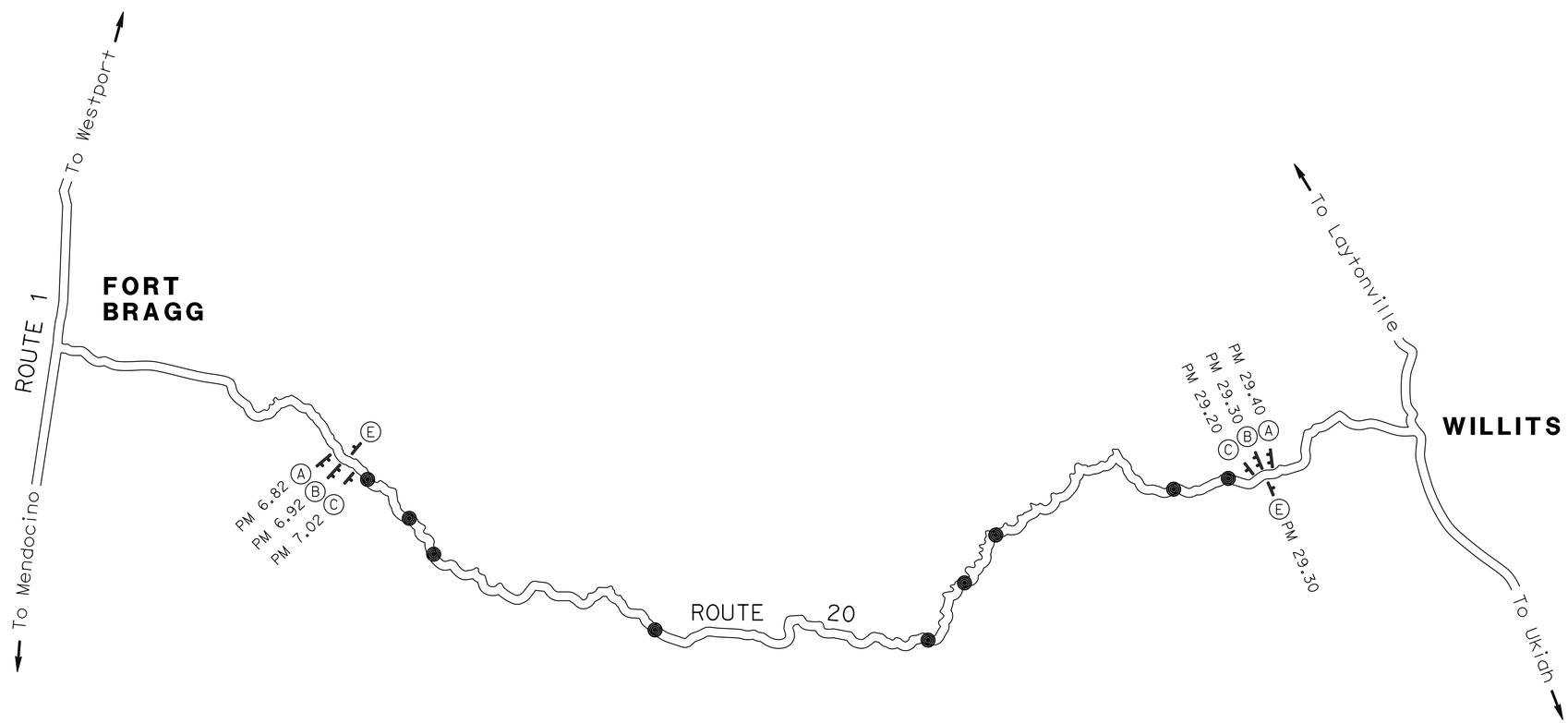

CONSTRUCTION AREA SIGNS

APPROVED FOR CONSTRUCTION AREA SIGN WORK ONLY

NO SCALE

CS-1

STATE OF CALIFORNIA - DEPARTMENT OF TRANSPORTATION
Caltrans® DESIGN

FUNCTIONAL SUPERVISOR: L.R. ASHLEY
CALCULATED-DESIGNED BY: BRIAN HODGSON
CHECKED BY: BIJAN SAMRAD
REVISED BY / DATE REVISED

P:\PROJ\01\49390\draffing\01_49390\01140000851a001.dgn

LAST REVISION 03-10-15 | DATE PLOTTED => 25-MAR-2015 | TIME PLOTTED => 13:57

BORDER LAST REVISED 7/2/2010 | USERNAME => s120115 | DGN FILE => 01140000851a001.dgn | RELATIVE BORDER SCALE IS IN INCHES 0 1 2 3 | UNIT 0313 | PROJECT NUMBER & PHASE 01140000851

Dist	COUNTY	ROUTE	POST MILES TOTAL PROJECT	SHEET No.	TOTAL SHEETS
01	Men	20,162	7.14/29.18 5.28/22.45	26	40

REGISTERED CIVIL ENGINEER DATE 02-04-15

March 19, 2015
PLANS APPROVAL DATE

REGISTERED PROFESSIONAL ENGINEER BRIAN R. HODGSON No. C 81667 Exp. 9-30-15 CIVIL STATE OF CALIFORNIA

THE STATE OF CALIFORNIA OR ITS OFFICERS OR AGENTS SHALL NOT BE RESPONSIBLE FOR THE ACCURACY OR COMPLETENESS OF SCANNED COPIES OF THIS PLAN SHEET.

STATIONARY MOUNTED CONSTRUCTION AREA SIGNS

SIGN ◯	SIGN CODE	SIGN MESSAGE	PANEL SIZE	NUMBER AND SIZE OF POSTS	NUMBER OF SIGNS
			INCHES	INCHES	EA
A	C40 (CA)	TRAFFIC FINES DOUBLED IN CONSTRUCTION ZONES	108 x 42	2 - 6 x 6	2
B	G20-1	ROAD WORK NEXT 18 MILES	60 x 36	2 - 4 x 6	2
C	W11-1	BICYCLE SYMBOL	36 x 36	1 - 4 x 6	2
	W16-1P	SHARE THE ROAD	24 x 30		
D	W20-1	ROAD WORK AHEAD	36 x 36	1 - 4 x 6	1
E	G20-2	END ROAD WORK	36 x 18	1 - 4 x 4	2

NOTE:

1. EXACT SIGN LOCATIONS TO BE DETERMINED BY THE ENGINEER.

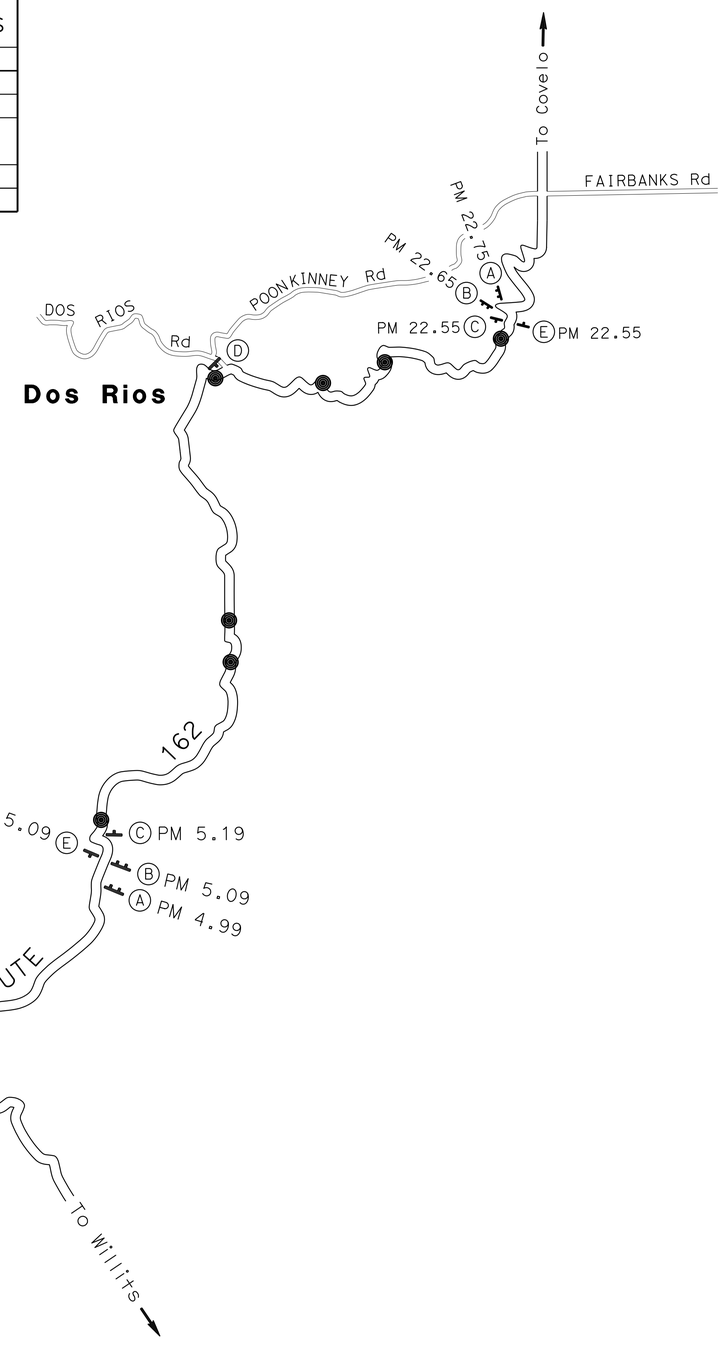

CONSTRUCTION AREA SIGNS

NO SCALE

CS-2

APPROVED FOR CONSTRUCTION AREA SIGN WORK ONLY

STATE OF CALIFORNIA - DEPARTMENT OF TRANSPORTATION
Caltrans
DESIGN

FUNCTIONAL SUPERVISOR: L.R. ASHLEY
CALCULATED-DESIGNED BY: BRIAN HODGSON
CHECKED BY: BIJAN SAMRAD
REVISED BY
DATE REVISED

P:\PROJ\01\4939u\draffing\01_4939U\01140000851a002.dgn

LAST REVISION 03-10-15
DATE PLOTTED => 25-MAR-2015
TIME PLOTTED => 13:57

BORDER LAST REVISED 7/2/2010
USERNAME => s120115
DGN FILE => 01140000851a002.dgn
RELATIVE BORDER SCALE IS IN INCHES 0 1 2 3
UNIT 0313
PROJECT NUMBER & PHASE 01140000851

Dist	COUNTY	ROUTE	POST MILES TOTAL PROJECT	SHEET No.	TOTAL SHEETS
01	Men	20,162	7.14/29.18 5.28/22.45	27	40

Sheri M. Rodriguez 3-5-15
REGISTERED CIVIL ENGINEER DATE

March 19, 2015
PLANS APPROVAL DATE

REGISTERED PROFESSIONAL ENGINEER SHERI M. RODRIGUEZ No. C66861 Exp. 9-30-16 CIVIL STATE OF CALIFORNIA

THE STATE OF CALIFORNIA OR ITS OFFICERS OR AGENTS SHALL NOT BE RESPONSIBLE FOR THE ACCURACY OR COMPLETENESS OF SCANNED COPIES OF THIS PLAN SHEET.

NOTES:

1. CALIFORNIA CODES ARE DESIGNATED BY (CA). OTHERWISE, FEDERAL (MUTCD) CODES ARE SHOWN.
2. ALL SIGNS SHALL HAVE A BLACK LEGEND ON FLUORESCENT ORANGE BACKGROUND AND SHALL BE EQUIPPED WITH AT LEAST TWO 16" x 16" ORANGE FLAGS FOR DAYTIME CLOSURE OR FLASHING BEACONS FOR LANE CLOSURE DURING HOURS OF DARKNESS.
3. ALL CONES USED FOR LANE CLOSURES DURING THE HOURS OF DARKNESS SHALL BE FITTED WITH RETROREFLECTIVE BANDS OR SLEEVES.
4. WHEN A PILOT CAR IS USED, PLACE A C37 (CA) SIGN AT ALL INTERSECTIONS WITHIN TRAFFIC CONTROL AREA. WHERE VEHICULAR TRAFFIC CAN NOT EFFECTIVELY SELF-REGULATE, AT LEAST ONE FLAGGER SHALL BE USED AT EACH INTERSECTION WITHIN THE TRAFFIC CONTROL AREA.
5. FLAGGER SHOULD STAND IN A CONSPICUOUS PLACE, FACING TRAFFIC AT ALL TIMES, BE VISIBLE TO APPROACHING TRAFFIC AS WELL AS APPROACHING VEHICLES AFTER THE FIRST VEHICLE HAS STOPPED.
6. ADDITIONAL ADVANCE FLAGGERS ARE REQUIRED.
7. WHEN FLAGGER IS NOT VISIBLE FROM THIS LOCATION PLACE A C29 (CA) SIGN BELOW THE C9A (CA) SIGN.

LEGEND

- TRAFFIC CONE
- TEMPORARY SIGN
- DIRECTION OF TRAVEL
- PORTABLE FLASHING BEACON
- FLAGGER

SIGN PANEL SIZE (MINIMUM)

- A — 48" x 48" - SPEED OF 45 mph OR MORE; 36" x 36" - SPEED LESS THAN 45 mph
- B — 30" x 30"
- C — UNUSED
- D — UNUSED
- E — 20" x 7"

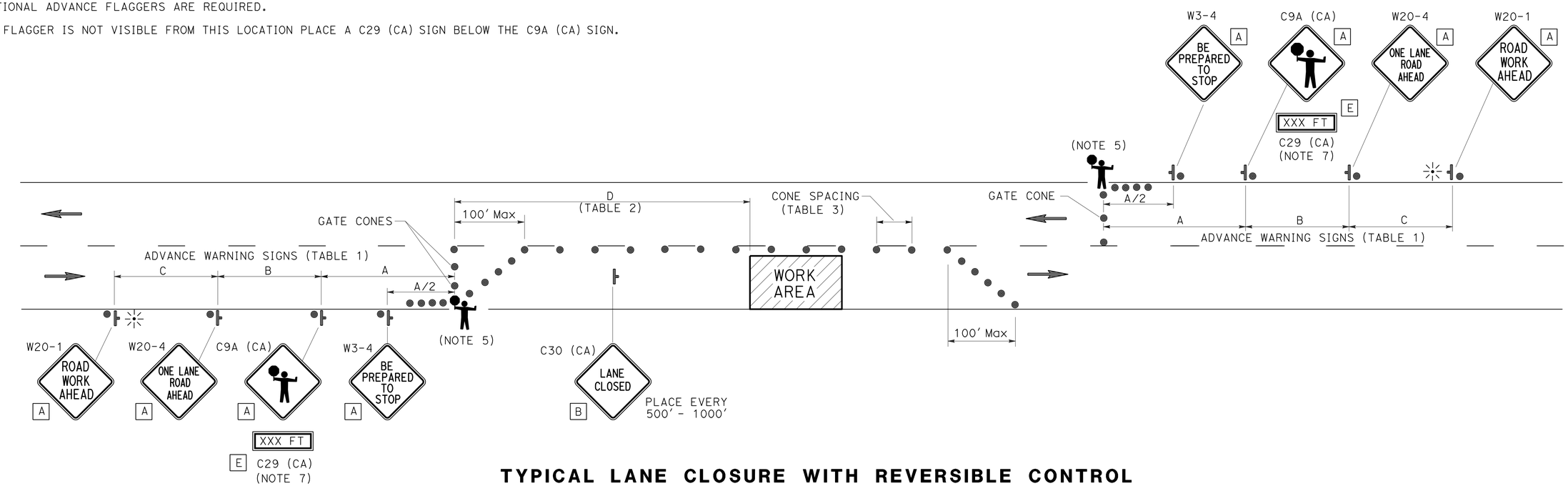

TYPICAL LANE CLOSURE WITH REVERSIBLE CONTROL

TABLE 1

ADVANCE WARNING SIGN SPACING

ROAD TYPE	Min A	Min B	Min C
	ft		
URBAN (25 mph OR LESS)	100	100	100
URBAN (30 mph TO 40 mph)	250	250	250
URBAN (MORE THAN 40 mph)	350	350	350
RURAL	500	500	500
EXPRESSWAY / FREEWAY	1000	1500	2640

TABLE 2

BUFFER SPACE

APPROACH SPEED	Min D	DOWNGRADE Min D		
		-3%*	-6%*	-9%*
mph	ft			
25 & BELOW	155	158	165	173
30	200	205	215	227
35	250	257	271	287
40	305	315	333	354
45	360	378	400	427
50	425	446	474	507
55	495	520	553	593
60	570	598	638	686
65	645	682	728	785

* USE ON SUSTAINED DOWNGRADE STEEPER THAN -3 PERCENT AND LONGER THAN 1 MILE.

TABLE 3

Max CONE SPACING

POSTED SPEED	TAPER	TANGENT	CONFLICT*
mph	ft		
20	20	40	10
25	25	50	12
30	30	60	15
35	35	70	17
40	40	80	20
45	45	90	22
50	50	100	25
55	55	110	27
60	60	120	30
65	65	130	32

* USE WHERE THERE IS A CONFLICT BETWEEN EXISTING PAVEMENT MARKINGS AND CHANNELIZERS.

TRAFFIC HANDLING PLAN

NO SCALE

TH-1

APPROVED FOR TRAFFIC HANDLING WORK ONLY

REVISED BY | DATE REVISED
SHERI M. RODRIGUEZ | TROY A. ARSENEAU
CALCULATED-DESIGNED BY | CHECKED BY
FUNCTIONAL SUPERVISOR: RICHARD MULLEN

STATE OF CALIFORNIA - DEPARTMENT OF TRANSPORTATION
Caltrans® TRAFFIC OPERATIONS

P:\PROJ\01\4939u\drafting\01_4939U0114000085md001.dgn

DATE PLOTTED => 25-MAR-2015
TIME PLOTTED => 13:57
LAST REVISION 00-00-00

Dist	COUNTY	ROUTE	POST MILES TOTAL PROJECT	SHEET No.	TOTAL SHEETS
01	Men	20,162	7.14/29.18 5.28/22.45	28	40

REGISTERED CIVIL ENGINEER DATE 02-04-15

March 19, 2015
PLANS APPROVAL DATE

REGISTERED PROFESSIONAL ENGINEER BRIAN R. HODGSON No. C 81667 Exp. 9-30-15 CIVIL STATE OF CALIFORNIA

THE STATE OF CALIFORNIA OR ITS OFFICERS OR AGENTS SHALL NOT BE RESPONSIBLE FOR THE ACCURACY OR COMPLETENESS OF SCANNED COPIES OF THIS PLAN SHEET.

REMOVE PAVEMENT DELINEATION QUANTITIES

SHEET No.	DETAIL NUMBER	L†/R†	LOCATION (STATION) FROM	LOCATION (STATION) TO	DETAIL LENGTH (N)	REMOVE YELLOW THERMOPLASTIC TRAFFIC STRIPE (HAZARDOUS WASTE)	REMOVE THERMOPLASTIC TRAFFIC STRIPE	REMOVE PAVEMENT MARKER
					LF			EA
L-1	27B	L†	100+50.00	103+50.00	300		300	
L-3	27B	L†	300+92.92	301+17.56	25		25	
L-4	27B	L†	401+00.00	403+25.00	225		225	
L-8	22		800+14.38	804+01.78	388	776		36
	27B	L†	800+14.38	804+01.78	388		388	
L-9	19		900+50.00	904+70.00	420			29
L-13	22		1300+91.31	1305+12.24	421	842		
	27B	R†	1300+91.31	1305+12.24	421		421	
L-14	27B	R†	1401+20.00	1401+38.70	19		19	
	27B	R†	1404+69.22	1404+95.00	26		26	
					TOTAL	1618	1404	65

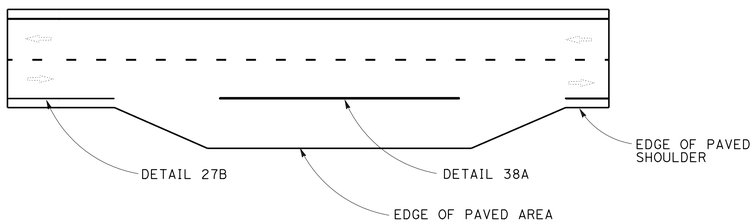

TYPICAL TURNOUT MARKING

NO SCALE

PAVEMENT DELINEATION QUANTITIES

SHEET No.	DETAIL NUMBER	L†/R†	LOCATION (STATION) FROM	LOCATION (STATION) TO	DETAIL LENGTH (N)	4" THERMOPLASTIC TRAFFIC STRIPE WHITE	4" THERMOPLASTIC TRAFFIC STRIPE YELLOW	8" THERMOPLASTIC TRAFFIC STRIPE WHITE	4" THERMOPLASTIC TRAFFIC STRIPE (BROKEN 36-12) YELLOW	PAVEMENT MARKER (RETROREFLECTIVE) TYPE D	PAVEMENT MARKER (RETROREFLECTIVE) TYPE H	PAVEMENT MARKER (RETROREFLECTIVE-RECESSED) TYPE D	TEMPORARY TRAFFIC STRIPE (PAINT) 4" WHITE (SOLID)	TEMPORARY TRAFFIC STRIPE (PAINT) 4" YELLOW (SOLID)	TEMPORARY TRAFFIC STRIPE (PAINT) 8" WHITE (SOLID)	TEMPORARY TRAFFIC STRIPE (PAINT) 1-4" YELLOW (SOLID) 1-4" YELLOW (BROKEN)
						LF				EA			LF			
L-1	38A	L†	101+25.00	104+20.00	295			295							295	
L-2	38A	L†	202+41.56	204+81.96	241			241							241	
L-3	38A	L†	301+47.92	302+66.84	119			119							119	
L-4	38A	R†	401+55.00	402+50.00	95			95							95	
L-5	38A	R†	502+45.00	503+41.53	102			102							102	
L-6	38A	L†	601+85.00	604+71.36	286			286							286	
L-7	38A	L†	701+52.28	703+14.74	162			162							162	
L-8	22		800+14.38	804+01.78	388		776			36				388		
	27B	L†	800+14.38	804+01.78	388	388							388			
	38A	R†	800+69.37	803+26.78	258			258							258	
L-9	19		900+50.00	904+70.00	420		420		420	10	19					420
	27B	L†	900+50.00	904+70.00	420	420							420			
	38A	R†	901+05.00	903+95.00	290			290							290	
L-10	38A	L†	1001+93.37	1003+38.00	155			155							155	
L-11	38A	L†	1101+61.64	1103+57.79	197			197							197	
L-12	27B	L†	1204+02.00	1204+33.90	32	32							32			
	38A	L†	1201+13.06	1203+47.00	234			234							234	
L-13	22		1300+91.31	1305+12.24	421		842					38		421		
	27B	R†	1300+91.31	1305+12.24	421	421							421			
	38A	L†	1301+66.28	1304+56.81	291			291							291	
L-14	38A	R†	1401+75.00	1404+20.00	252			252							252	
L-15	38A	R†	1501+12.63	1503+24.86	213			213							213	
L-16	38A	R†	1601+13.96	1604+70.00	357			357							357	
				SUBTOTAL		1261	2038	3547	420	46	19	38	1261	809	3547	420
				TOTAL		3299		3547	420	65		38	6037			

(N) NOT A SEPARATE PAY ITEM. FOR INFORMATION ONLY.

PAVEMENT DELINEATION DETAILS AND QUANTITIES

PDD-1

REVISED BY	DATE REVISED	BRIAN HODGSON	ELISA MEYER	CALCULATED-DESIGNED BY	CHECKED BY	FUNCTIONAL SUPERVISOR	L.R. ASHLEY

STATE OF CALIFORNIA - DEPARTMENT OF TRANSPORTATION
Caltrans® DESIGN

P:\PROJ\01\49339u\draffing\01_49339U\0114000085nb001.dgn

LAST REVISION 03-10-15 | DATE PLOTTED => 25-MAR-2015 | TIME PLOTTED => 13:57

Dist	COUNTY	ROUTE	POST MILES TOTAL PROJECT	SHEET No.	TOTAL SHEETS
01	Men	20,162	7.14/29.18 5.28/22.45	29	40

REGISTERED CIVIL ENGINEER DATE 02-04-15

March 19, 2015
PLANS APPROVAL DATE

REGISTERED PROFESSIONAL ENGINEER
BRIAN R. HODGSON
No. C 81667
Exp. 9-30-15
CIVIL
STATE OF CALIFORNIA

THE STATE OF CALIFORNIA OR ITS OFFICERS OR AGENTS SHALL NOT BE RESPONSIBLE FOR THE ACCURACY OR COMPLETENESS OF SCANNED COPIES OF THIS PLAN SHEET.

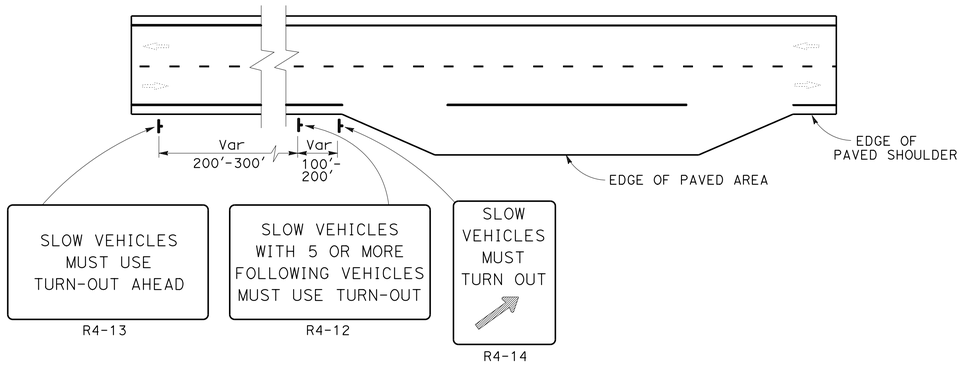

TYPICAL TURNOUT SIGNAGE

NO SCALE

ROADSIDE SIGN QUANTITIES

SHEET No.	ROADSIDE SIGN (ONE POST)	SIGN CODE (CA)	L+/R+	PANEL SIZE	POST SIZE	POST LENGTH	FURNISH SINGLE SHEET ALUMINUM SIGN (0.063" UNFRAMED)	FURNISH SINGLE SHEET ALUMINUM SIGN (0.080" UNFRAMED)	REMARKS
						FT	SQFT	SQFT	
L-1	1	R4-13	L+-FWBT	42" x 24"	4" x 6"	11.5	7		
	1	R4-14	L+-FWBT	30" x 42"	4" x 6"	13	8.75		
L-2	1	R4-13	L+-FWBT	42" x 24"	4" x 6"	11.5	7		
	1	R4-14	L+-FWBT	30" x 42"	4" x 6"	13	8.75		
L-3	1	R4-12	L+-FWBT	42" x 24"	4" x 6"	11.5	7		
	1	R4-13	L+-FWBT	42" x 24"	4" x 6"	11.5	7		
	1	R4-14	L+-FWBT	30" x 42"	4" x 6"	13	8.75		
L-4	1	R4-13	R+-FEBT	42" x 24"	4" x 6"	11.5	7		
	1	R4-14	R+-FEBT	30" x 42"	4" x 6"	13	8.75		
L-5	1	R4-13	R+-FEBT	42" x 24"	4" x 6"	11.5	7		
	1	R4-14	R+-FEBT	30" x 42"	4" x 6"	13	8.75		
L-6	1	R4-13	L+-FWBT	42" x 24"	4" x 6"	11.5	7		
	1	R4-14	L+-FWBT	30" x 42"	4" x 6"	13	8.75		
L-7	1	R4-12	L+-FWBT	42" x 24"	4" x 6"	11.5	7		
	1	R4-13	L+-FWBT	42" x 24"	4" x 6"	11.5	7		
	1	R4-14	L+-FWBT	30" x 42"	4" x 6"	13	8.75		
L-8	1	R4-12	R+-FEBT	42" x 24"	4" x 6"	11.5	7		
	1	R4-13	R+-FEBT	42" x 24"	4" x 6"	11.5	7		
	1	R4-14	R+-FEBT	30" x 42"	4" x 6"	13	8.75		
	1	W1-6R	L+-FEBT	48" x 24"	4" x 6"	11.5		8	TO BE LOCATED NEAR PM 26.13
		OM1-3	L+-FEBT	18" x 18"			2.25		
L-9	1	R4-13	R+-FEBT	42" x 24"	4" x 6"	11.5	7		
	1	R4-14	R+-FEBT	30" x 42"	4" x 6"	13	8.75		
L-10	1	R4-13	L+-FWBT	42" x 24"	4" x 6"	11.5	7		
	1	R4-14	L+-FWBT	30" x 42"	4" x 6"	13	8.75		
L-11	1	R4-13	L+-FWBT	42" x 24"	4" x 6"	11.5	7		
	1	R4-14	L+-FWBT	30" x 42"	4" x 6"	13	8.75		
L-12	1	R4-13	L+-FWBT	42" x 24"	4" x 6"	11.5	7		
	1	R4-14	L+-FWBT	30" x 42"	4" x 6"	13	8.75		
L-13	1	R4-13	L+-FWBT	42" x 24"	4" x 6"	11.5	7		
	1	R4-14	L+-FWBT	30" x 42"	4" x 6"	13	8.75		
L-14	1	R4-12	R+-FEBT	42" x 24"	4" x 6"	11.5	7		
	1	R4-13	R+-FEBT	42" x 24"	4" x 6"	11.5	7		
	1	R4-14	R+-FEBT	30" x 42"	4" x 6"	13	8.75		
L-15	1	R4-12	R+-FEBT	42" x 24"	4" x 6"	11.5	7		
	1	R4-13	R+-FEBT	42" x 24"	4" x 6"	11.5	7		
	1	R4-14	R+-FEBT	30" x 42"	4" x 6"	13	8.75		
L-16	1	R4-13	R+-FEBT	42" x 24"	4" x 6"	11.5	7		
	1	R4-14	R+-FEBT	30" x 42"	4" x 6"	13	8.75		
TOTAL	38						289.25	8	

SIGN DETAILS AND QUANTITIES

SD-1

REVISED BY | DATE REVISED
BRIAN HODGSON | ELISA MEYER
CALCULATED-DESIGNED BY | CHECKED BY
FUNCTIONAL SUPERVISOR
L.R. ASHLEY
STATE OF CALIFORNIA - DEPARTMENT OF TRANSPORTATION
Caltrans
DESIGN

P:\PROJ\01\49390\Drafting\01_49390\0114000085ob001.dgn

LAST REVISION 03-10-15 | DATE PLOTTED => 25-MAR-2015 | TIME PLOTTED => 13:57

Dist	COUNTY	ROUTE	POST MILES TOTAL PROJECT	SHEET No.	TOTAL SHEETS
01	Men	20,162	7.14/29.18 5.28/22.45	30	40

REGISTERED CIVIL ENGINEER 02-04-15 DATE

March 19, 2015
PLANS APPROVAL DATE

REGISTERED PROFESSIONAL ENGINEER BRIAN R. HODGSON No. C 81667 Exp. 9-30-15 CIVIL STATE OF CALIFORNIA

THE STATE OF CALIFORNIA OR ITS OFFICERS OR AGENTS SHALL NOT BE RESPONSIBLE FOR THE ACCURACY OR COMPLETENESS OF SCANNED COPIES OF THIS PLAN SHEET.

REPLACE ASPHALT CONCRETE SURFACING

SHEET No.	STATION	LENGTH	WIDTH	DEPTH	QUANTITY	REMARKS
		LF		FT	CY	
L-1	"T1" 103+50.00 TO "T1" 104+75.00	125	Var 13 TO 15	0.10	6.1	REPLACE WB SHOULDER RHMA-G
				TOTAL	6.1	

COLD PLANE ASPHALT CONCRETE PAVEMENT

SHEET No.	STATION	MAINLINE AREA	GEOSYNTHETIC PAVEMENT INTERLAYER	TOTAL AREA	REMARKS
		SQYD			
L-2	"T2" 201+60.05 TO "T2" 205+34.95		84	84	
L-3	"T3" 301+17.56 TO "T3" 303+14.11		44	44	
L-5	"T5" 501+90.00 TO "T5" 503+98.18		47	47	
L-6	"T6" 601+10.00 TO "T6" 605+20.00		92	92	
L-7	"T7" 700+78.86 TO "T7" 703+69.15		65	65	
L-8	"T8" 800+14.38 TO "T8" 804+01.78	116	87	203	CONFORMS FOR OVERLAY
L-9	"T9" 900+50.00 TO "T9" 904+70.00	1453		1453	COLD PLANE EXISTING OGAC
L-10	"T10" 1001+19.91 TO "T10" 1003+90.08		61	61	
L-11	"T11" 1100+89.93 TO "T11" 1104+09.99		72	72	
L-12	"T12" 1200+33.86 TO "T12" 1204+33.90		90	90	
L-13	"T13" 1300+91.31 TO "T13" 1305+12.24	116	94	210	CONFORMS FOR OVERLAY
L-14	"T14" 1401+38.70 TO "T14" 1404+69.22		74	74	
L-15	"T15" 1500+60.00 TO "T15" 1504+00.00		76	76	
L-16	"T16" 1600+50.00 TO "T16" 1605+45.00		110	110	
			TOTAL	2681	

CRACK TREATMENT

SHEET No.	STATION	TURNOUT LENGTH (N)	NUMBER OF LANES	LENGTH
		LNMI		LNMI
L-8	"T8" 800+14.38 TO "T8" 804+01.78	0.074	2	0.148
L-11	"T11" 1100+89.93 TO "T11" 1104+09.99	0.061	2	0.122
L-12	"T12" 1200+33.86 TO "T12" 1204+33.90	0.076	2	0.152
L-13	"T13" 1300+91.31 TO "T13" 1305+12.24	0.080	2	0.160
L-14	"T14" 1401+38.70 TO "T14" 1404+69.22	0.063	2	0.126
L-15	"T15" 1500+60.00 TO "T15" 1504+00.00	0.065	2	0.130
L-16	"T16" 1600+50.00 TO "T16" 1605+45.00	0.094	2	0.188
			TOTAL	1.026

(N) NOT A SEPARATE PAY ITEM. FOR INFORMATION ONLY.

TEMPORARY FENCE (TYPE ESA)

SHEET No.	STATION	TEMPORARY FENCE (TYPE ESA)
		LF
L-1	"T1" 100+70.00 TO "T1" 101+30.00	72
L-1	"T1" 102+70.00 TO "T1" 103+30.00	75
L-2	"T2" 201+60.05 TO "T2" 205+34.95	398
	TOTAL	545

RESET MARKER

SHEET No.	STATION	QUANTITY
		EA
L-3	"T3" 302+80.00	1
	TOTAL	1

SUMMARY OF QUANTITIES

Q-1

REVISED BY | DATE REVISED
BRIAN HODGSON | ELISA MEYER
CALCULATED-DESIGNED BY | CHECKED BY
FUNCTIONAL SUPERVISOR: L.R. ASHLEY
STATE OF CALIFORNIA - DEPARTMENT OF TRANSPORTATION
Caltrans DESIGN

P:\PROJ\01\4939u\draft\ing\01_4939U\0114000085pa001.dgn

LAST REVISION 03-10-15 | DATE PLOTTED => 25-MAR-2015 | TIME PLOTTED => 13:57

Dist	COUNTY	ROUTE	POST MILES TOTAL PROJECT	SHEET No.	TOTAL SHEETS
01	Men	20,162	7.14/29.18 5.28/22.45	31	40

REGISTERED CIVIL ENGINEER 02-04-15 DATE

March 19, 2015
PLANS APPROVAL DATE

REGISTERED PROFESSIONAL ENGINEER BRIAN R. HODGSON No. C 81667 Exp. 9-30-15 CIVIL STATE OF CALIFORNIA

THE STATE OF CALIFORNIA OR ITS OFFICERS OR AGENTS SHALL NOT BE RESPONSIBLE FOR THE ACCURACY OR COMPLETENESS OF SCANNED COPIES OF THIS PLAN SHEET.

ABBREVIATIONS

(N) - NOT A SEPERATE PAY ITEM. FOR INFORMATION ONLY

SAFETY EDGE QUANTITIES

SHEET No.	STATION	DIRECTION	(N) TOTAL THICKNESS OF SAFETY EDGE	(N) LENGTH SAFETY EDGE	HOT MIX ASPHALT (TYPE A)
			FT	LF	TON
L-2	"T2" 201+60.05 TO "T2" 205+34.95	WB	0.30	375	2.47
L-3	"T3" 301+17.56 TO "T3" 303+14.11	WB	0.30	197	1.24
L-5	"T5" 501+90.00 TO "T5" 503+98.18	EB	0.40	209	2.20
L-6	"T6" 601+10.00 TO "T6" 605+20.00	WB	0.40	410	4.39
L-7	"T7" 700+78.86 TO "T7" 703+69.15	WB	0.40	291	3.29
L-8	"T8" 800+14.38 TO "T8" 804+01.78	EB	0.30	388	2.47
L-9	"T9" 900+50.00 TO "T9" 904+70.00	EB	0.30	420	2.47
L-10	"T10" 1001+19.91 TO "T10" 1003+90.08	WB	0.25	271	1.34
L-11	"T11" 1100+89.93 TO "T11" 1104+09.99	WB	0.25	321	1.56
L-12	"T12" 1200+33.86 TO "T12" 1204+33.90	WB	0.25	401	1.78
L-13	"T13" 1300+91.31 TO "T13" 1305+12.24	WB	0.30	421	2.47
L-14	"T14" 1401+38.70 TO "T14" 1404+69.22	EB	0.25	331	1.56
L-15	"T15" 1500+60.00 TO "T15" 1504+00.00	EB	0.25	340	1.56
L-16	"T16" 1600+50.00 TO "T16" 1605+45.00	EB	0.25	495	2.23
				SUBTOTAL	31.03

RUMBLE STRIP

SHEET No.	STATION	CENTERLINE RUMBLE STRIP (HMA, GROUND-IN INDENTATIONS)
		STA
L-8	"T8" 800+14.38 TO "T8" 804+01.78	3.9
L-9	"T9" 900+50.00 TO "T9" 904+70.00	4.2
L-13	"T13" 1300+91.31 TO "T13" 1305+12.24	4.3
	TOTAL	12.4

DIKE QUANTITIES

SHEET No.	STATION	L+/R+	REMOVE AC DIKE	PLACE HMA DIKE (TYPE A)	HMA (TYPE A)
			LF		TON
L-13	"T13" 1302+83.42 TO "T13" 1303+88.88	R+	106	106	2.9
		TOTAL	106	106	2.9

ROADWAY QUANTITIES

SHEET No.	STATION	ROADWAY EXCAVATION	(N) EMBANKMENT	SUBGRADE ENHANCEMENT GEOTEXTILE, CLASS B2	CLASS 2 AGGREGATE BASE (CY)	HOT MIX ASPHALT-OPEN GRADED (OPEN GRADED FRICTION COURSE)	HOT MIX ASPHALT (TYPE A)	TACK COAT	GEOSYNTHETIC PAVEMENT INTERLAYER (PAVING FABRIC)	ASPHALT BINDER (GEOSYNTHETIC PAVEMENT INTERLAYER)	SHOULDER BACKING	REMARKS
		CY		SQYD	CY	TON			SQYD	TON		
L-2	"T2" 201+60.05 TO "T2" 205+34.95	109	34		100		100.30	0.07	167	0.20		
L-3	"T3" 301+17.56 TO "T3" 303+14.11	129	86		70		60.20	0.04	88	0.11		
L-5	"T5" 501+90.00 TO "T5" 503+98.18	171	73		65	21.9	76.40	0.11	93	0.11		
L-6	"T6" 601+10.00 TO "T6" 605+20.00	179	58	695	172	38.6	42.00	0.21	183	0.22		
L-7	"T7" 700+78.86 TO "T7" 703+69.15	107	25	419	95	21.4	76.40	0.13	130	0.16		
L-8	"T8" 800+14.38 TO "T8" 804+01.78	99	74		131		182.00	0.24	173	0.21	14	MAINLINE OVERLAY
L-9	"T9" 900+50.00 TO "T9" 904+70.00	158	32		158		202.20	0.28	187	0.22	15	MAINLINE OVERLAY
L-10	"T10" 1001+19.91 TO "T10" 1003+90.08	63	18	393	75		62.50	0.05	121	0.15		
L-11	"T11" 1100+89.93 TO "T11" 1104+09.99	85	33	467	90		75.50	0.06	143	0.17		
L-12	"T12" 1200+33.86 TO "T12" 1204+33.90	117	45		123		103.60	0.08	179	0.21		
L-13	"T13" 1300+91.31 TO "T13" 1305+12.24	129	38	597	125		187.20	0.30	188	0.22	18	MAINLINE OVERLAY
L-14	"T14" 1401+38.70 TO "T14" 1404+69.22	65	18		62		88.40	0.07	148	0.18		
L-15	"T15" 1500+60.00 TO "T15" 1504+00.00	132	6	502	97		81.40	0.07	152	0.18		
L-16	"T16" 1600+50.00 TO "T16" 1605+45.00	152	6		93		134.20	0.10	220	0.26		
	SUBTOTAL	1695	546	3073	1456	81.9	1472.30	1.81	2172	2.60	47	
	FROM SAFETY EDGE QUANTITIES						31.03					
	FROM DIKE QUANTITIES						2.90					
	TOTAL	1695	546	3073	1456	81.9	1506.20	1.81	2172	2.60	47	

SUMMARY OF QUANTITIES

Q-2

BRIAN HODGSON | REVISED BY | DATE REVISED
ELISA MEYER | CALCULATED-DESIGNED BY | CHECKED BY
L.R. ASHLEY | FUNCTIONAL SUPERVISOR

STATE OF CALIFORNIA - DEPARTMENT OF TRANSPORTATION
Caltrans DESIGN

P:\PROJ\01\4939u\drafting\01_4939U\01140000085pa002.dgn

LAST REVISION 03-10-15 | DATE PLOTTED => 25-MAR-2015 | TIME PLOTTED => 13:57

M

Maint	MAINTENANCE
Max	MAXIMUM
MB	METAL BEAM
MBB	METAL BEAM BARRIER
MBGR	METAL BEAM GUARD RAILING
Med	MEDIAN
MGS	MIDWEST GUARDRAIL SYSTEM
MH	MANHOLE
Min	MINIMUM
Misc	MISCELLANEOUS
Misc I & S	MISCELLANEOUS IRON AND STEEL
Mkr	MARKER
Mod	MODIFIED, MODIFY
Mon	MONUMENT
MP	METAL PLATE
MPGR	METAL PLATE GUARD RAILING
MR	MOVEMENT RATING
MSE	MECHANICALLY STABILIZED EMBANKMENT
Mt	MOUNTAIN, MOUNT
Mtl	MATERIAL
MVP	MAINTENANCE VEHICLE PULLOUT

N

N	NORTH
NB	NORTHBOUND
No.	NUMBER (MUST HAVE PERIOD)
Nos.	NUMBERS (MUST HAVE PERIOD)
NPS	NOMINAL PIPE SIZE
NS	NEAR SIDE
NSP	NEW STANDARD PLAN
NTS	NOT TO SCALE

O

Oblr	OBLITERATE
OC	OVERCROSSING
OD	OUTSIDE DIAMETER
OF	OUTSIDE FACE
OG	ORIGINAL GROUND
OGAC	OPEN GRADED ASPHALT CONCRETE
OGFC	OPEN GRADED FRICTION COURSE
OH	OVERHEAD
OHWM	ORDINARY HIGH WATER MARK
O-O	OUT TO OUT
Opp	OPPOSITE
OSD	OVERSIDE DRAIN

P

P	PAGE
PAP	PERFORATED ALUMINUM PIPE
PB	PULL BOX
PC	POINT OF CURVATURE, PRECAST
PCC	POINT OF COMPOUND CURVE, PORTLAND CEMENT CONCRETE
PCMS	PORTABLE CHANGEABLE MESSAGE SIGN
PCP	PERFORATED CONCRETE PIPE, PRESTRESSED CONCRETE PIPE
PCVC	POINT OF COMPOUND VERTICAL CURVE
PEC	PERMIT TO ENTER AND CONSTRUCT
Ped	PEDESTRIAN
Ped OC	PEDESTRIAN OVERCROSSING
Ped UC	PEDESTRIAN UNDERCROSSING
Perm Mtl	PERMEABLE MATERIAL

P continued

PG	PROFILE GRADE
PI	POINT OF INTERSECTION
PJP	PARTIAL JOINT PENETRATION
Pkwy	PARKWAY
₱,PL	PLATE
P/L	PROPERTY LINE
PM	POST MILE, TIME FROM NOON TO MIDNIGHT
PN	PAVING NOTCH
POC	POINT OF HORIZONTAL CURVE
POT	POINT OF TANGENT
POVC	POINT OF VERTICAL CURVE
PP	PIPE PILE, PLASTIC PIPE, POWER POLE
PPL	PREFORMED PERMEABLE LINER
PPP	PERFORATED PLASTIC PIPE
PRC	POINT OF REVERSE CURVE
PRF	PAVEMENT REINFORCING FABRIC
PRVC	POINT OF REVERSE VERTICAL CURVE
PS&E	PLANS, SPECIFICATIONS AND ESTIMATES
PS, P/S	PRESTRESSED
PSP	PERFORATED STEEL PIPE
PT	POINT OF TANGENCY
PVC	POLYVINYL CHLORIDE
Pvmt	PAVEMENT

Q

Qty	QUANTITY

R

R	RADIUS
R & D	REMOVE AND DISPOSE
R & S	REMOVE AND SALVAGE
R/C	RATE OF CHANGE
RCA	REINFORCED CONCRETE ARCH
RCB	REINFORCED CONCRETE BOX
RCP	REINFORCED CONCRETE PIPE
RCPA	REINFORCED CONCRETE PIPE ARCH
Rd	ROAD
Reinf	REINFORCED, REINFORCEMENT, REINFORCING
Rel	RELOCATE
Repl	REPLACEMENT
Ret	RETAINING
Rev	REVISED, REVISION
Rdwy	ROADWAY
RHMA	RUBBERIZED HOT MIX ASPHALT
Riv	RIVER
RM	ROAD-MIXED
RP	RADIUS POINT, REFERENCE POINT
RR	RAILROAD
RSP	ROCK SLOPE PROTECTION, REVISED STANDARD PLAN
Rt	RIGHT
Rte	ROUTE
RW	REDWOOD, RETAINING WALL
R/W	RIGHT OF WAY
Rwy	RAILWAY

S

S	SOUTH, SUPPLEMENT
SAE	STRUCTURE APPROACH EMBANKMENT
Salv	SALVAGE
SAPP	STRUCTURAL ALUMINUM PLATE PIPE
SB	SOUTHBOUND
SC	SAND CUSHION
SCSP	SLOTTED CORRUGATED STEEL PIPE
SD	STORM DRAIN
Sec	SECOND, SECTION
Sep	SEPARATION
SG	SUBGRADE
Shld	SHOULDER
Sht	SHEET
Sim	SIMILAR
₺	STATION LINE
SM	SELECTED MATERIAL
Spec	SPECIAL, SPECIFICATIONS
SPP	SLOTTED PLASTIC PIPE
SS	SLOPE STAKE
SSBM	STRAP AND SADDLE BRACKET METHOD
SSD	STRUCTURAL SECTION DRAIN
SSPA	STRUCTURAL STEEL PLATE ARCH
SSPP	STRUCTURAL STEEL PLATE PIPE
SSPPA	STRUCTURAL STEEL PLATE PIPE ARCH
SSRP	STEEL SPIRAL RIB PIPE
St	STREET
Sta	STATION
STBB	SINGLE THRIE BEAM BARRIER
Std	STANDARD
Str	STRUCTURE
Surf	SURFACING
SW	SIDEWALK, SOUND WALL
Swr	SEWER
Sym	SYMMETRICAL
S4S	SURFACE 4 SIDES

T

T	SEMI-TANGENT
Tan	TANGENT
TBB	THRIE BEAM BARRIER
Tbr	TIMBER
TC	TOP OF CURB
TCB	TRAFFIC CONTROL BOX
TCE	TEMPORARY CONSTRUCTION EASEMENT
Tel	TELEPHONE
Temp	TEMPORARY
TG	TOP OF GRADE
Tot	TOTAL
TP	TELEPHONE POLE
TPB	TREATED PERMEABLE BASE
TPM	TREATED PERMEABLE MATERIAL
Trans	TRANSITION

T continued

TS	TRANSVERSE, TRAFFIC SIGNAL, TUBULAR STEEL
Typ	TYPICAL

U

UC	UNDERCROSSING
UD	UNDERDRAIN
UG	UNDERGROUND
UON	UNLESS OTHERWISE NOTED
UP	UNDERPASS

V

V	VALVE, DESIGN SPEED
Var	VARIABLE, VARIES
VC	VERTICAL CURVE
VCP	VITRIFIED CLAY PIPE
Vert	VERTICAL
Via	VIADUCT
Vol	VOLUME

W

W	WEST, WIDTH
WB	WESTBOUND
WH	WEEP HOLE
WM	WIRE MESH
WS	WATER SURFACE
WSP	WELDED STEEL PIPE
Wt	WEIGHT
WV	WATER VALVE
WW	WINGWALL
WWLOL	WINGWALL LAYOUT LINE

X

X Sec	CROSS SECTION
Xing	CROSSING

Y

Yr	YEAR
Yrs	YEARS

Dist	COUNTY	ROUTE	POST MILES TOTAL PROJECT	SHEET No.	TOTAL SHEETS
01	Men	20,162	7.14/29.18 5.28/22.45	32	40

Grace M. Tsushima
REGISTERED CIVIL ENGINEER

July 19, 2013
PLANS APPROVAL DATE

REGISTERED PROFESSIONAL ENGINEER
Grace M. Tsushima
No. C49814
Exp. 9-30-14
CIVIL
STATE OF CALIFORNIA

THE STATE OF CALIFORNIA OR ITS OFFICERS OR AGENTS SHALL NOT BE RESPONSIBLE FOR THE ACCURACY OR COMPLETENESS OF SCANNED COPIES OF THIS PLAN SHEET.

TO ACCOMPANY PLANS DATED 03-19-15

UNIT OF MEASUREMENT SYMBOLS:

Some of the symbols used in the project plan quantity tables and in the Bid Item List are:

TABLE A

SYMBOL USED	DEFINITIONS
ACRE	ACRE
CF	CUBIC FOOT
CY	CUBIC YARD
EA	EACH
GAL	GALLON
LB	POUND
LF	LINEAR FOOT
SQFT	SQUARE FOOT
SQYD	SQUARE YARD
STA	100 FEET
TAB	TABLET
TON	2,000 POUNDS

Some of the symbols used in the plans other than in the project plan quantity tables are:

TABLE B

SYMBOL USED	DEFINITIONS
ksi	KIPS PER SQUARE INCH
ksf	KIPS PER SQUARE FOOT
psi	POUNDS PER SQUARE INCH
psf	POUNDS PER SQUARE FOOT
lb/ft^3, pcf	POUNDS PER CUBIC FOOT
tsf	TONS PER SQUARE FOOT
mph, MPH *	MILES PER HOUR
ø	NOMINAL DIAMETER
oz	OUNCE
lb	POUND
kip	1,000 POUNDS
cal	CALORIE
ft	FOOT OR FEET
gal	GALLON

* For use on a sign panel only

STATE OF CALIFORNIA
DEPARTMENT OF TRANSPORTATION

ABBREVIATIONS (SHEET 2 OF 2)

NO SCALE

RSP A10B DATED JULY 19, 2013 SUPERSEDES STANDARD PLAN A10B DATED MAY 20, 2011 - PAGE 2 OF THE STANDARD PLANS BOOK DATED 2010.

REVISED STANDARD PLAN RSP A10B

2010 REVISED STANDARD PLAN RSP A10B

P:\PROJ\01\4939u\drafting\01_4939Uva001.dgn

6-7-13

Dist	COUNTY	ROUTE	POST MILES TOTAL PROJECT	SHEET No.	TOTAL SHEETS
01	Men	20,162	7.14/29.18 5.28/22.45	33	40

REGISTERED CIVIL ENGINEER

July 19, 2013
PLANS APPROVAL DATE

REGISTERED PROFESSIONAL ENGINEER Roberta L. McLaughlin No. C40375 Exp. 3-31-15 CIVIL STATE OF CALIFORNIA

THE STATE OF CALIFORNIA OR ITS OFFICERS OR AGENTS SHALL NOT BE RESPONSIBLE FOR THE ACCURACY OR COMPLETENESS OF SCANNED COPIES OF THIS PLAN SHEET.

TO ACCOMPANY PLANS DATED 03-19-15

EXIT RAMP NEUTRAL AREA (GORE) TREATMENT

DETAIL 36

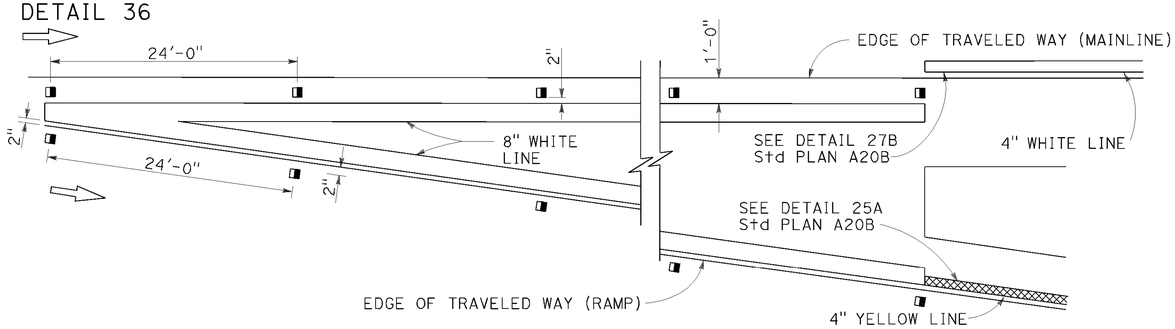

ENTRANCE RAMP NEUTRAL AREA (MERGE) TREATMENT

DETAIL 36A

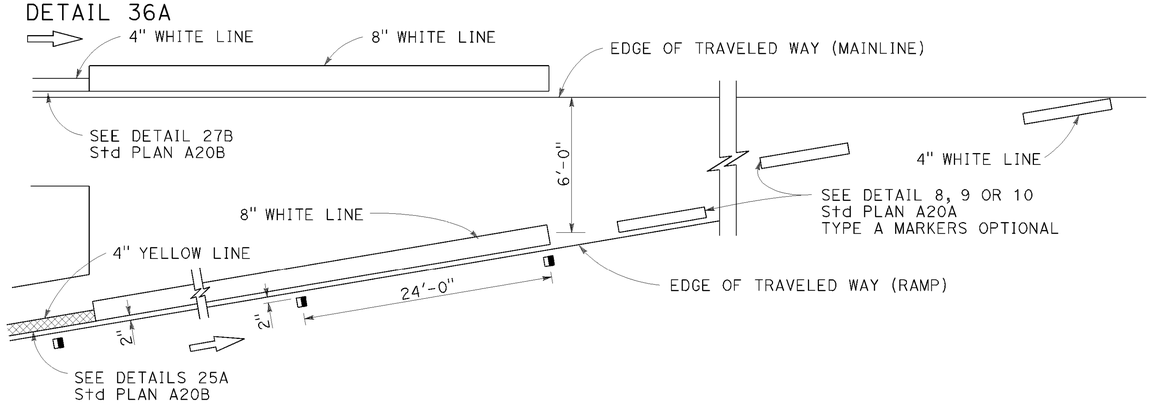

ENTRANCE RAMP NEUTRAL AREA (ACCELERATION LANE) TREATMENT

DETAIL 36B

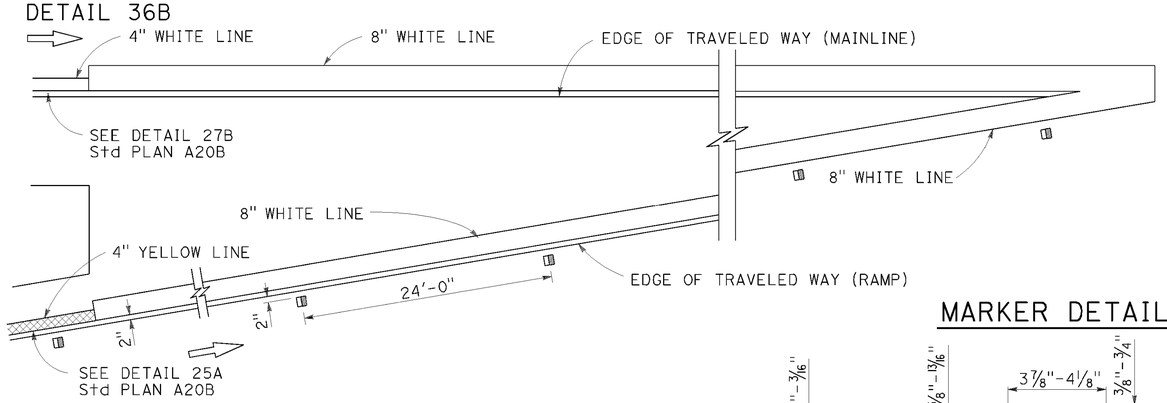

LANE DROP AT EXIT RAMPS

DETAIL 37

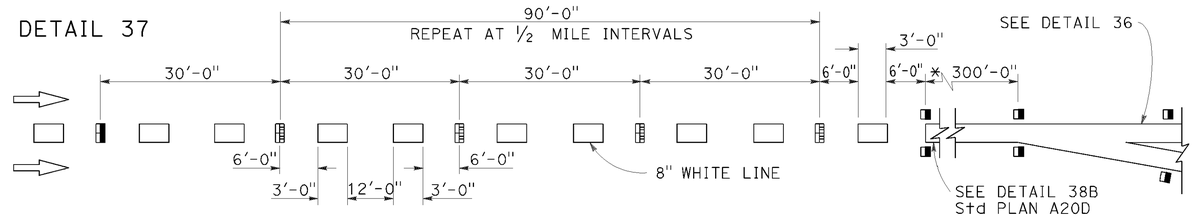

DETAIL 37A

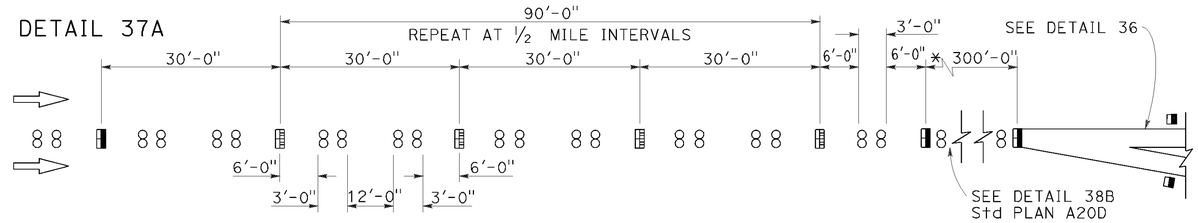

* The solid channelizing line shown may be omitted on short auxiliary lanes where weaving length is critical.

LANE DROP AT INTERSECTIONS

DETAIL 37B

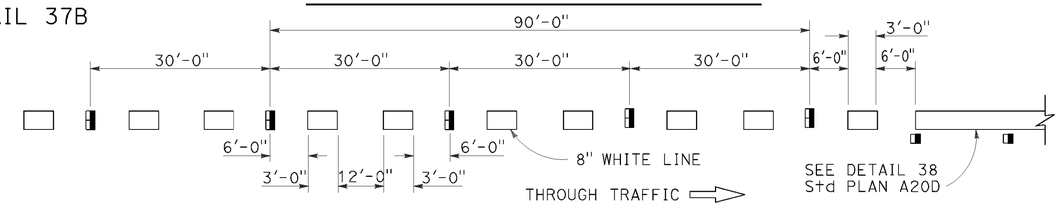

DETAIL 37C

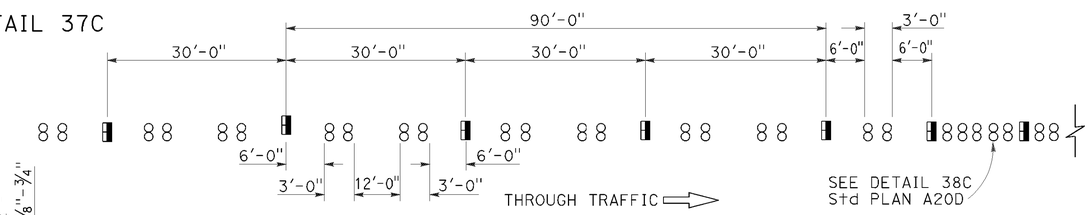

MARKER DETAILS

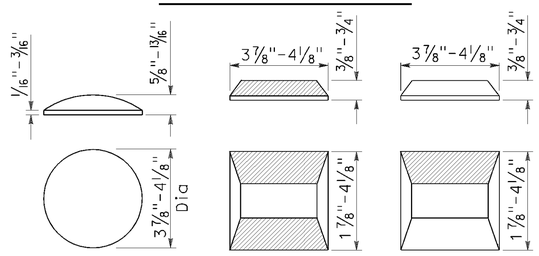

LEGEND:

MARKERS

- ○ TYPE A WHITE NON-REFLECTIVE
- TYPE C RED-CLEAR RETROREFLECTIVE
- TYPE G ONE-WAY CLEAR RETROREFLECTIVE

STATE OF CALIFORNIA
DEPARTMENT OF TRANSPORTATION

PAVEMENT MARKERS AND TRAFFIC LINE TYPICAL DETAILS

NO SCALE

RSP A20C DATED JULY 19, 2013 SUPERSEDES STANDARD PLAN A20C DATED MAY 20, 2011 - PAGE 11 OF THE STANDARD PLANS BOOK DATED 2010.

REVISED STANDARD PLAN RSP A20C

2010 REVISED STANDARD PLAN RSP A20C

P:\PROJ\01\14939u\drafting\01_14939uva002.dgn

4-29-13

Dist	COUNTY	ROUTE	POST MILES TOTAL PROJECT	SHEET No.	TOTAL SHEETS
01	Men	20,162	7.14/29.18 5.28/22.45	34	40

REGISTERED CIVIL ENGINEER

July 19, 2013
PLANS APPROVAL DATE

REGISTERED PROFESSIONAL ENGINEER
Michael Janzen
No. 44788
Exp. 03-31-14
CIVIL
STATE OF CALIFORNIA

THE STATE OF CALIFORNIA OR ITS OFFICERS OR AGENTS SHALL NOT BE RESPONSIBLE FOR THE ACCURACY OR COMPLETENESS OF SCANNED COPIES OF THIS PLAN SHEET.

TO ACCOMPANY PLANS DATED 03-19-15

2010 REVISED STANDARD PLAN RSP A87A

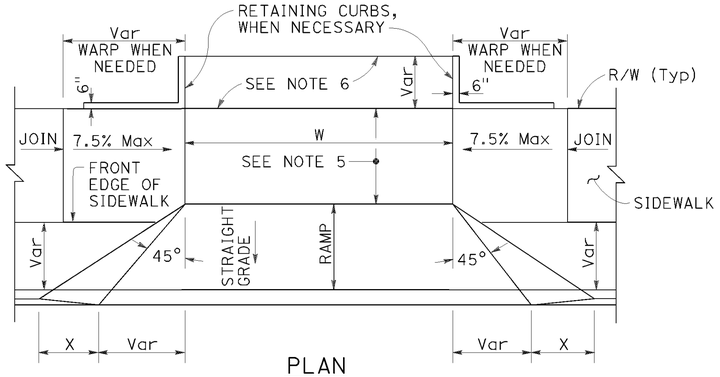

PLAN

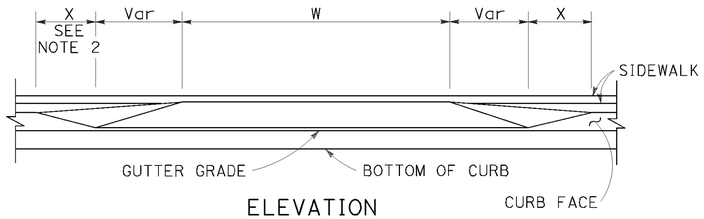

ELEVATION

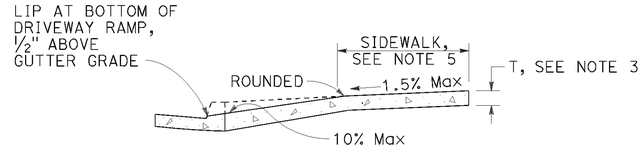

CASE A

Typical driveway, sidewalk not depressed

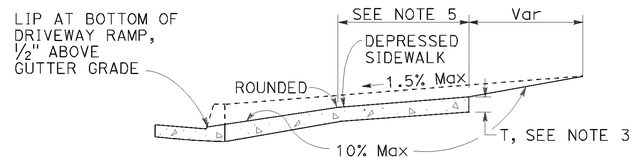

CASE B

Driveway with depressed sidewalk

SECTIONS

DRIVEWAYS

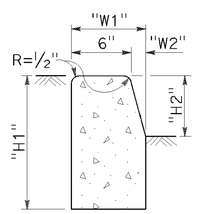

TYPE A1 CURBS

See Table A

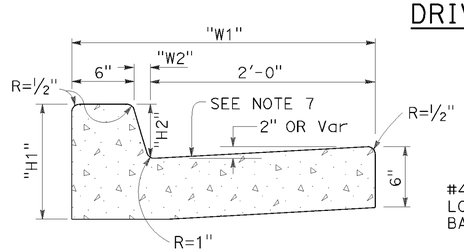

TYPE A2 CURBS

See Table A

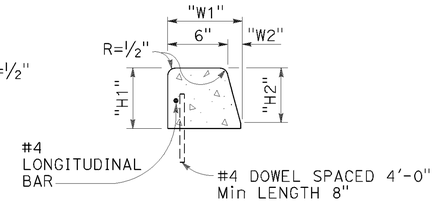

TYPE A3 CURBS

Superimposed on existing pavement
See Table A

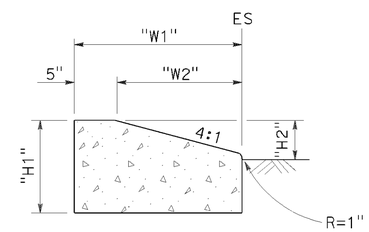

TYPE D CURBS

See Table A

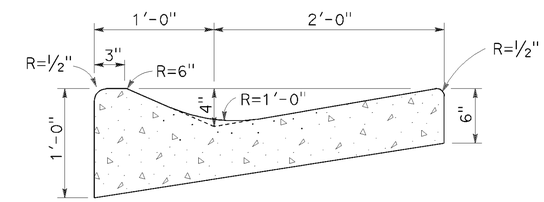

TYPE E CURB

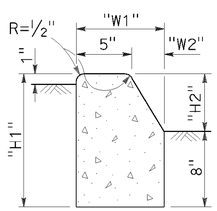

TYPE B1 CURBS

See Table A

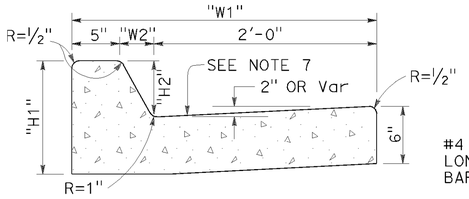

TYPE B2 CURBS

See Table A

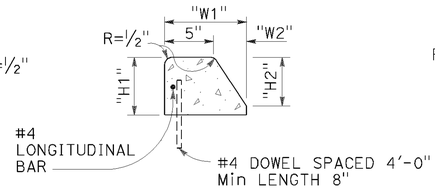

TYPE B3 CURBS

Superimposed on existing pavement
See Table A

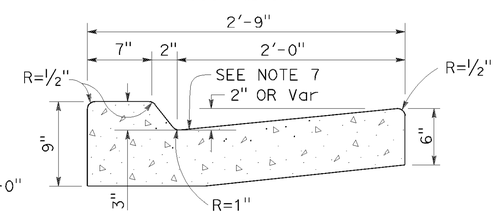

TYPE B4 CURBS

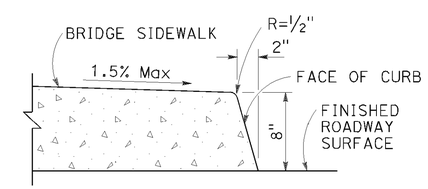

TYPE H CURB

On Bridges

CURBS

TABLE A

CURB TYPE	DIMENSIONS			
	"H1"	"H2"	"W1"	"W2"
A1-6	1'-2"	6"	7½"	1½"
A1-8	1'-4"	8"	8"	2"
A2-6	1'-0"	6"	2'-7½"	1½"
A2-8	1'-2"	8"	2'-8"	2"
A3-6	6"	5"	7¼"	1¼"
A3-8	8"	7"	7¾"	1¾"
B1-4	1'-0"	4"	7½"	2½"
B1-6	1'-2"	6"	9"	4"
B2-4	10"	4"	2'-7½"	2½"
B2-6	1'-0"	6"	2'-9"	4"
B3-4	4"	3"	7"	2"
B3-6	6"	5"	8½"	3½"
D-4	10"	4"	1'-6"	1'-1"
D-6	1'-0"	6"	2'-2"	1'-9"

CURB QUANTITIES

TYPE	CUBIC YARDS PER LINEAR FOOT
A1-6	0.02585
A1-8	0.03084
A2-6	0.05903
A2-8	0.06379
A3-6	0.01036
A3-8	0.01435
B1-4	0.02185
B1-6	0.02930
B2-4	0.05515
B2-6	0.06171
B3-4	0.00641
B3-6	0.01074
B4	0.05709
D-4	0.04083
D-6	0.06804
E	0.06661

NOTES:

1. Case A driveway section typically applies.
2. X=3'-0" except for curb heights over 10" where 4:1 slopes shall be used on curb slope.
3. Sidewalk and ramp thickness "T" at driveway shall be 4" for residental and 6" for commercial.
4. Difference in slope of the driveway ramp and the slope of a line between the gutter and a point on the roadway 5'-0" from gutter line shall not exceed 15%. Reduce driveway ramp slope, not gutter slope, where required.
5. Minimum width of clear passageway for sidewalk shall be 4'-2".
6. Retaining curbs and acquisition of construction easement may be necessary for narrow sidewalks or curb heights in excess of 6".
7. Across the pedestrian route at curb ramp locations, the gutter pan slope shall not exceed 1" of depth for each 2'-0" of width.

STATE OF CALIFORNIA
DEPARTMENT OF TRANSPORTATION

CURBS AND DRIVEWAYS

NO SCALE

RSP A87A DATED JULY 19, 2013 SUPERSEDES STANDARD PLAN A87A
DATED MAY 20, 2011 - PAGE 119 OF THE STANDARD PLANS BOOK DATED 2010.

REVISED STANDARD PLAN RSP A87A

P:\PROJ\01\4939u\drafting\01_4939u\va003.dgn

7-8-13

DIST	COUNTY	ROUTE	POST MILES TOTAL PROJECT	SHEET No.	TOTAL SHEETS
01	Men	20,162	7.14/29.18 5.28/22.45	35	40

REGISTERED CIVIL ENGINEER

November 15, 2013
PLANS APPROVAL DATE

REGISTERED PROFESSIONAL ENGINEER
Cornelis M. Hakim
No. C55610
Exp. 12-31-14
CIVIL
STATE OF CALIFORNIA

THE STATE OF CALIFORNIA OR ITS OFFICERS OR AGENTS SHALL NOT BE RESPONSIBLE FOR THE ACCURACY OR COMPLETENESS OF SCANNED COPIES OF THIS PLAN SHEET.

TO ACCOMPANY PLANS DATED 03-19-15

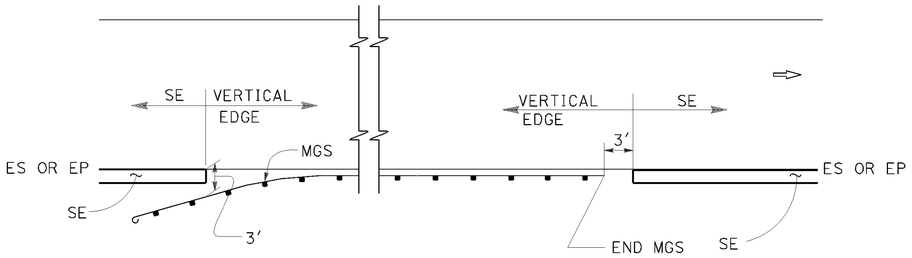

MGS

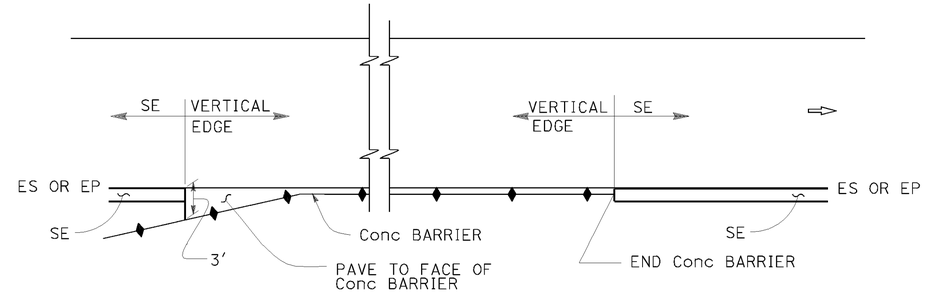

CONCRETE BARRIER

ABBREVIATIONS:

SE SAFETY EDGE

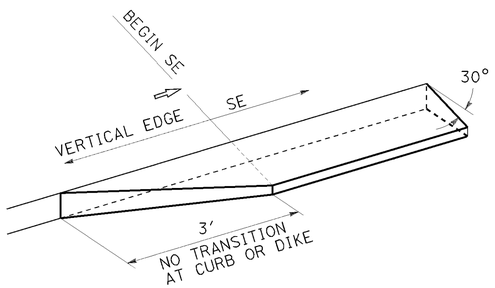

TRANSITION DETAIL
FOR CONCRETE ONLY

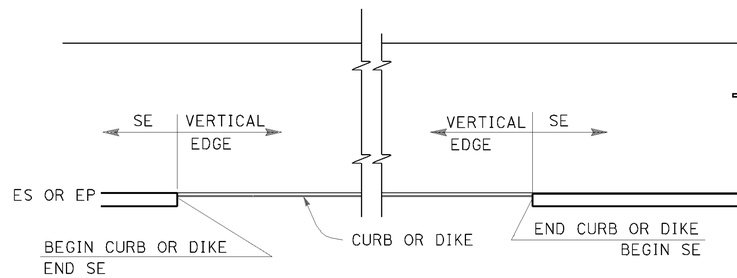

CURB OR DIKE

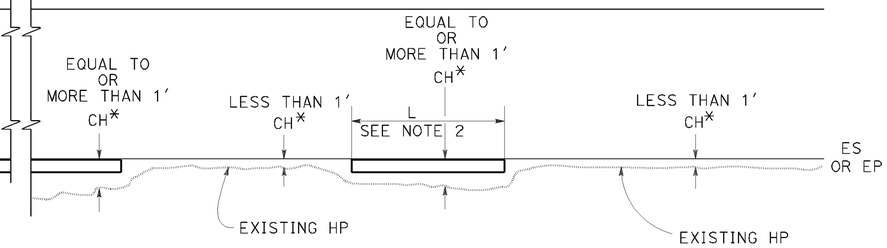

NARROW SIDE SLOPE

* CH = Distance from ES or EP to existing HP.

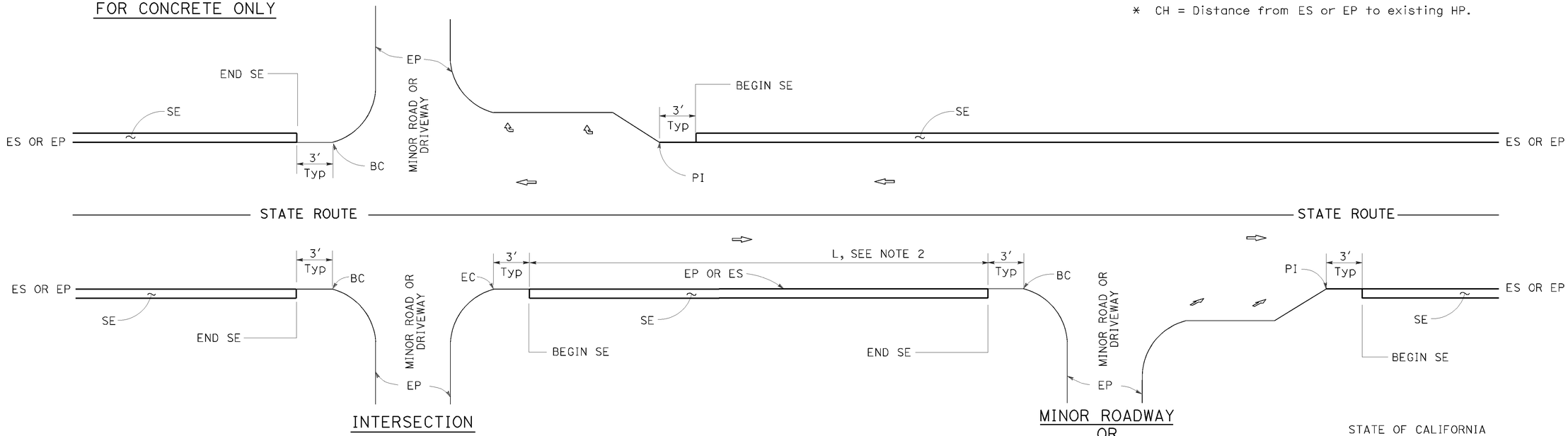

INTERSECTION

MINOR ROADWAY OR DRIVEWAY

DRIVEWAY AND INTERSECTION

NOTES:

1. For details not shown, see Revised Standard Plans RSP P75 and RSP P76.
2. Safety edge is optional when L is less than 30′.

STATE OF CALIFORNIA
DEPARTMENT OF TRANSPORTATION

PAVEMENT EDGE TREATMENTS

NO SCALE

RSP P74 DATED NOVEMBER 15, 2013 SUPERSEDES RSP P74 DATED JANUARY 20, 2012 THAT SUPPLEMENTS THE STANDARD PLANS BOOK DATED 2010.

REVISED STANDARD PLAN RSP P74

2010 REVISED STANDARD PLAN RSP P74

P:\PROJ\01\4939u\drafting\01_4939uvg004.dgn

10-11-13

DIST	COUNTY	ROUTE	POST MILES TOTAL PROJECT	SHEET No.	TOTAL SHEETS
01	Men	20,162	7.14/29.18 5.28/22.45	36	40

REGISTERED CIVIL ENGINEER

November 15, 2013
PLANS APPROVAL DATE

REGISTERED PROFESSIONAL ENGINEER
Cornelis M. Hakim
No. C55610
Exp. 12-31-14
CIVIL
STATE OF CALIFORNIA

THE STATE OF CALIFORNIA OR ITS OFFICERS OR AGENTS SHALL NOT BE RESPONSIBLE FOR THE ACCURACY OR COMPLETENESS OF SCANNED COPIES OF THIS PLAN SHEET.

TO ACCOMPANY PLANS DATED 03-19-15

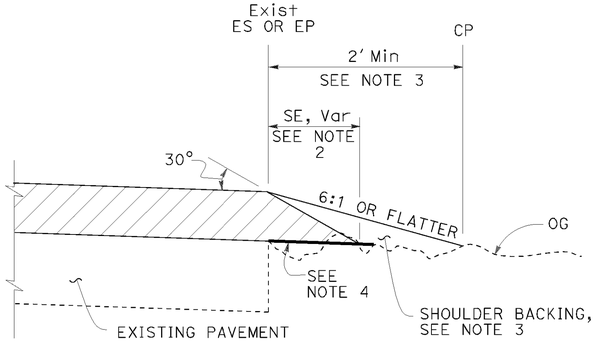

CASE A
Safety Edge

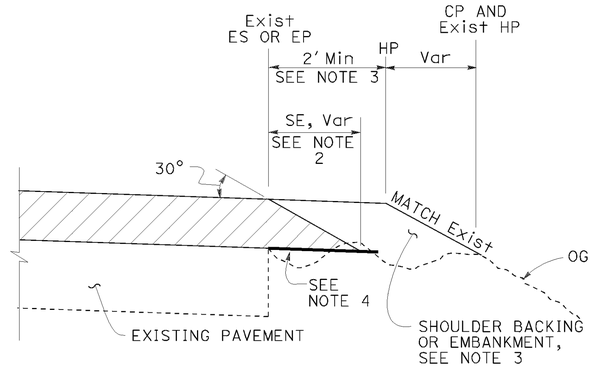

CASE B
Safety Edge

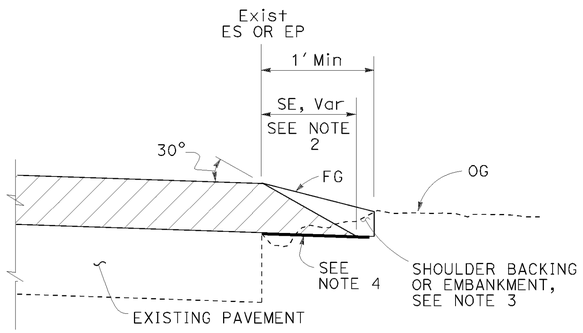

CASE C
Safety Edge

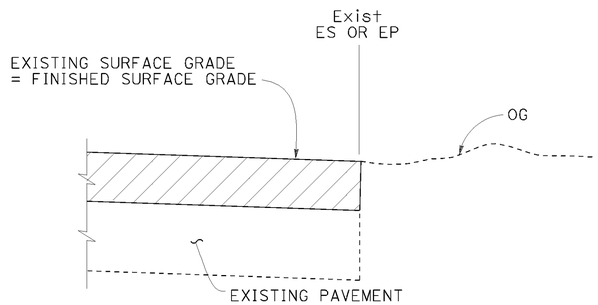

CASE D
Vertical Edge

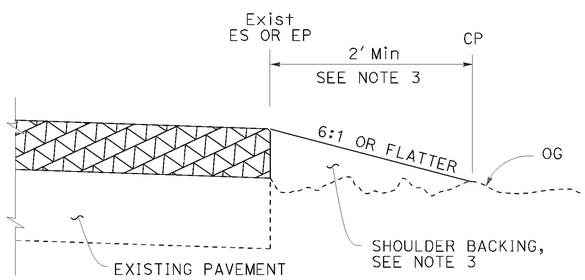

CASE E
Vertical Edge

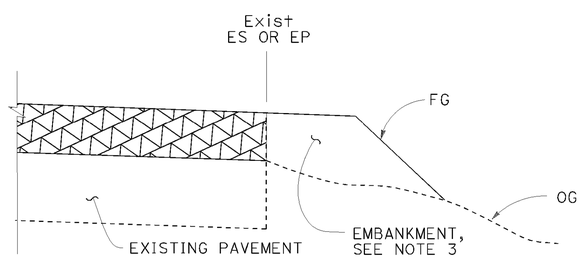

CASE F
Vertical Edge
* See Table A and Revised Std Plan RSP P74

LEGEND:

- HMA OVERLAY
- HMA OR CONCRETE OVERLAY
- CONCRETE OVERLAY

ABBREVIATIONS:

SE SAFETY EDGE
TT TOTAL THICKNESS OF SE

TABLE A
EDGE TREATMENT FOR VARIOUS OVERLAY THICKNESS AND CONDITIONS

	OVERLAY THICKNESS	
FIELD CONDITION	LESS THAN 0.15'	0.15' OR MORE
Exist SLOPE 6:1 OR FLATTER	CASE E	CASE A
Exist SLOPE 3:1 TO 6:1	CASE E	CASE B
Exist SLOPE STEEPER THAN 3:1	CASE F	CASE F
CUT SECTION (REPLACE, COLD PLANE, MILL PAVEMENT)	CASE D	CASE C

ADDITIONAL HMA OR CONCRETE QUANTITIES FOR SE/SIDE/MILE

TYPICAL CROSS SECTION	TT	TOTAL ADDITIONAL MATERIAL FOR SE/SIDE/MILE		
		HMA (TON)	CONCRETE (CY)*	CONCRETE (CY)**
TT	0.15'	NA	NA	NA
	0.20'	13.7	NA	NA
	0.30'	30.9	NA	NA
	0.40'	54.9	NA	NA
	0.45'	69.4	NA	NA
TT 0.43'	0.50'	84.2	NA	NA
	0.60'	113.9	NA	NA
	0.70'	143.6	70.9	94.2
	0.80'	173.3	85.6	112.2
	0.90'	203.0	100.3	130.2
	1.00'	232.7	114.9	148.2
	1.10'	262.4	129.6	166.2
	1.20'	292.1	144.3	184.2

* For Detail "A"
** For Optional Detail "A"

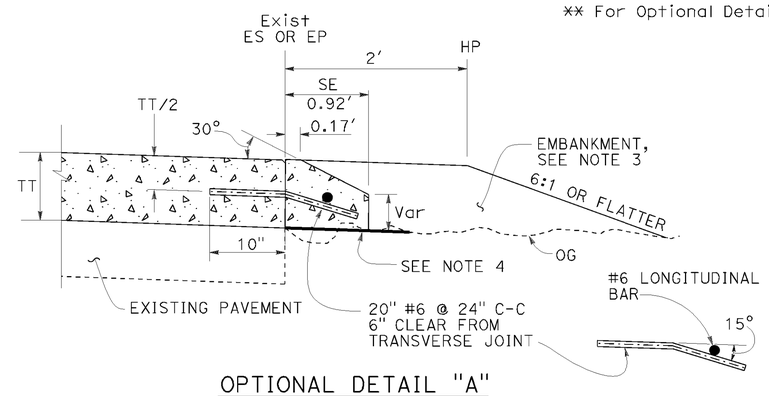

OPTIONAL DETAIL "A"
For concrete overlay
See Note 5

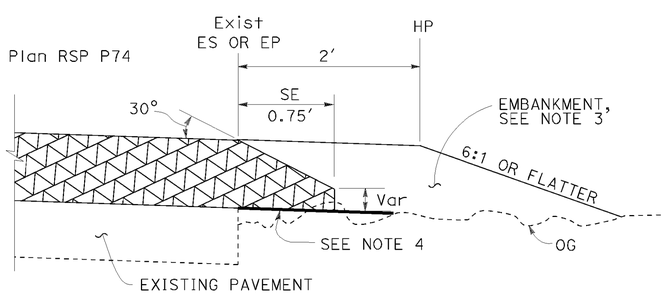

DETAIL "A"
For HMA overlay thickness more than 0.43' or concrete overlay

NOTES:

1. For limits of safety edge and vertical edge treatments, see Revised Standard Plan RSP P74.
2. Details shown for HMA overlay thickness less than 0.43'. See Detail "A" for HMA overlay thickness more than 0.43' or concrete overlay.
3. For locations and limits of shoulder backing or embankment see project plans.
4. Grade existing ground to place safety edge. 1' minimum width
5. Safety edge transverse joint must match overlay transverse joint. End of #6 longitudinal bar must be 2" ±½" clear from transverse joint.
6. Safety edge is not needed in the area of MGS, barrier, right turn lane and acceleration lane. See Revised Standard Plan RSP P74.

STATE OF CALIFORNIA
DEPARTMENT OF TRANSPORTATION

PAVEMENT EDGE TREATMENTS-OVERLAYS

NO SCALE

RSP P75 DATED NOVEMBER 15, 2013 SUPERSEDES RSP P75 DATED JANUARY 20, 2012 THAT SUPPLEMENTS THE STANDARD PLANS BOOK DATED 2010.

REVISED STANDARD PLAN RSP P75

2010 REVISED STANDARD PLAN RSP P75

P:\PROJ\01\4939u\drafting\01_4939U\va005.dgn

10-4-13

DIST	COUNTY	ROUTE	POST MILES TOTAL PROJECT	SHEET No.	TOTAL SHEETS
01	Men	20,162	7.14/29.18 5.28/22.45	37	40

REGISTERED CIVIL ENGINEER

November 15, 2013
PLANS APPROVAL DATE

REGISTERED PROFESSIONAL ENGINEER
Cornelis M. Hakim
No. C55610
Exp. 12-31-14
CIVIL
STATE OF CALIFORNIA

THE STATE OF CALIFORNIA OR ITS OFFICERS OR AGENTS SHALL NOT BE RESPONSIBLE FOR THE ACCURACY OR COMPLETENESS OF SCANNED COPIES OF THIS PLAN SHEET.

TO ACCOMPANY PLANS DATED 03-19-15

LEGEND:

- HMA PAVEMENT
- HMA OR CONCRETE PAVEMENT
- CONCRETE PAVEMENT

ABBREVIATIONS:

SE SAFETY EDGE
TT TOTAL THICKNESS OF SE
HW HINGE WIDTH, DISTANCE FROM ES OR EP TO HP

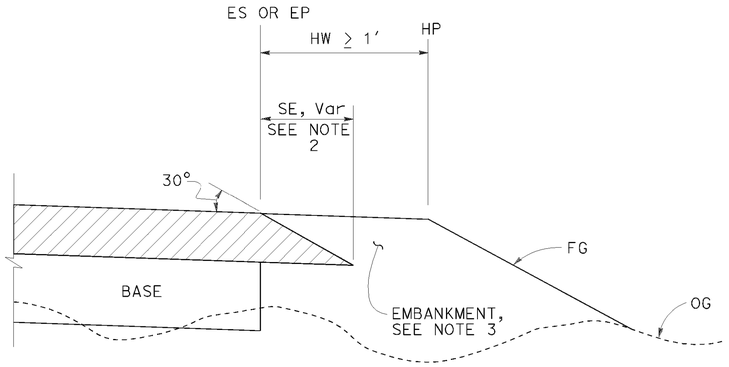

CASE K
Safety Edge - Fill Section, HW ≥ 1′

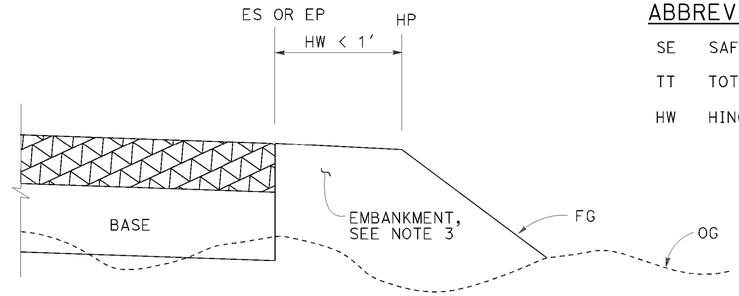

CASE L
Vertical Edge - Fill Section, HW < 1′

FILL SECTION

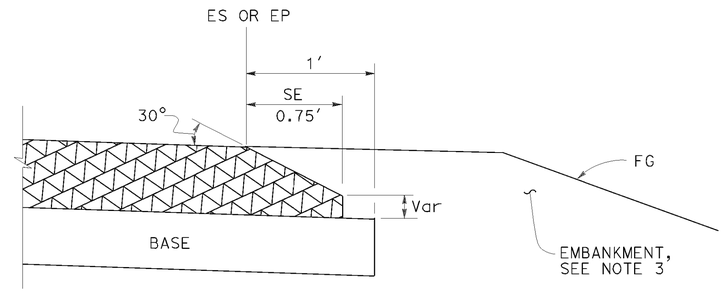

DETAIL "B"
For HMA pavement thickness more than 0.43′ or concrete pavement

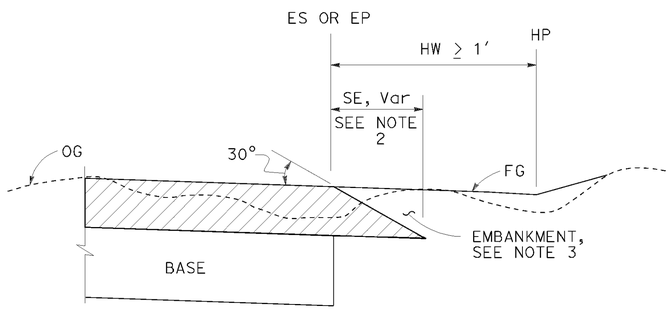

CASE M
Safety Edge - Cut Section, HW ≥ 1′

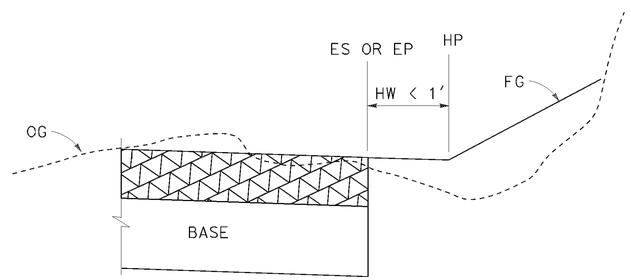

CASE N
Vertical Edge - Cut Section, HW < 1′

CUT SECTION

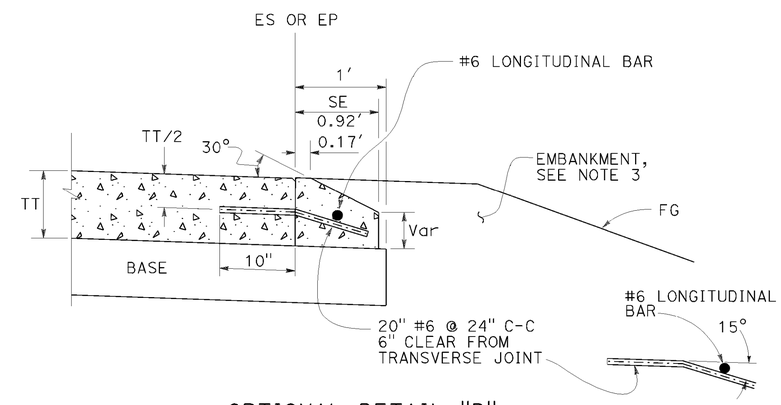

OPTIONAL DETAIL "B"
For concrete pavement
See Note 4

NOTES:

1. For limits of safety edge and vertical edge treatments, see Revised Standard Plan RSP P74
2. Details shown for HMA pavement thickness less than 0.43′. See Detail "B" for HMA pavement thickness more than 0.43′ or concrete pavement.
3. For locations and limits of embankment see project plans.
4. Safety edge transverse joint must match pavement transverse joint. End of #6 longitudinal bar must be 2" ±½" clear from transverse joint.
5. Safety edge is not needed in the area of MGS, barrier, right turn lane and acceleration lane. See Revised Standard Plan RSP P74.

STATE OF CALIFORNIA
DEPARTMENT OF TRANSPORTATION

PAVEMENT EDGE TREATMENTS-NEW CONSTRUCTION

NO SCALE

RSP P76 DATED NOVEMBER 15, 2013 SUPERSEDES RSP P76 DATED JANUARY 20, 2012 THAT SUPPLEMENTS THE STANDARD PLANS BOOK DATED 2010.

REVISED STANDARD PLAN RSP P76

2010 REVISED STANDARD PLAN RSP P76

P:\PROJ\01\4939u\drafting\01_4939U\va006.dgn

10-4-13

Dist	COUNTY	ROUTE	POST MILES TOTAL PROJECT	SHEET No.	TOTAL SHEETS
01	Men	20,162	7.14/29.18 5.28/22.45	38	40

REGISTERED CIVIL ENGINEER

July 19, 2013
PLANS APPROVAL DATE

REGISTERED PROFESSIONAL ENGINEER
Gurinderpal Bhullar
No. C48815
Exp. 9-30-14
CIVIL
STATE OF CALIFORNIA

THE STATE OF CALIFORNIA OR ITS OFFICERS OR AGENTS SHALL NOT BE RESPONSIBLE FOR THE ACCURACY OR COMPLETENESS OF SCANNED COPIES OF THIS PLAN SHEET.

TO ACCOMPANY PLANS DATED 03-19-15

2010 REVISED STANDARD PLAN RSP T9

TABLE 1

TAPER LENGTH CRITERIA AND CHANNELIZING DEVICE SPACING

SPEED (S)	MINIMUM TAPER LENGTH * FOR WIDTH OF OFFSET 12 FEET (W)				MAXIMUM CHANNELIZING DEVICE SPACING		
					X	Y	Z **
	TANGENT 2L	MERGING L	SHIFTING L/2	SHOULDER L/3	TAPER	TANGENT	CONFLICT
mph	ft	ft	ft	ft	ft	ft	ft
20	160	80	40	27	20	40	10
25	250	125	63	42	25	50	12
30	360	180	90	60	30	60	15
35	490	245	123	82	35	70	17
40	640	320	160	107	40	80	20
45	1080	540	270	180	45	90	22
50	1200	600	300	200	50	100	25
55	1320	660	330	220	55	110	27
60	1440	720	360	240	60	120	30
65	1560	780	390	260	65	130	32
70	1680	840	420	280	70	140	35

* - For other offsets, use the following merging taper length formula for L:
For speed of 40 mph or less, $L = WS^2/60$
For speed of 45 mph or more, $L = WS$

Where: L = Taper length in feet
W = Width of offset in feet
S = Posted speed limit, off-peak 85th-percentile speed prior to work starting, or the anticipated operating speed in mph

** - Use for taper and tangent sections where there are no pavement markings or where there is a conflict between existing pavement markings and channelizers (CA).

TABLE 2

LONGITUDINAL BUFFER SPACE AND FLAGGER STATION SPACING

SPEED *	Min D **	DOWNGRADE Min D ***		
		-3%	-6%	-9%
mph	ft	ft	ft	ft
20	115	116	120	126
25	155	158	165	173
30	200	205	215	227
35	250	257	271	287
40	305	315	333	354
45	360	378	400	427
50	425	446	474	507
55	495	520	553	593
60	570	598	638	686
65	645	682	728	785
70	730	771	825	891

* - Speed is posted speed limit, off-peak 85th-percentile speed prior to work starting, or the anticipated operating speed in mph

** - Longitudinal buffer space or flagger station spacing

*** - Use on sustained downgrade steeper than -3 percent and longer than 1 mile.

TABLE 3

ADVANCE WARNING SIGN SPACING

ROAD TYPE	DISTANCE BETWEEN SIGNS *		
	A	B	C
	ft	ft	ft
URBAN - 25 mph OR LESS	100	100	100
URBAN - MORE THAN 25 mph TO 40 mph	250	250	250
URBAN - MORE THAN 40 mph	350	350	350
RURAL	500	500	500
EXPRESSWAY / FREEWAY	1000	1500	2640

* - The distances are approximate, are intended for guidance purposes only, and should be applied with engineering judgment. These distances should be adjusted by the Engineer for field conditions, if necessary, by increasing or decreasing the recommmended distances.

STATE OF CALIFORNIA
DEPARTMENT OF TRANSPORTATION

TRAFFIC CONTROL SYSTEM TABLES FOR LANE AND RAMP CLOSURES

NO SCALE

RSP T9 DATED JULY 19, 2013 SUPERSEDES RSP T9 DATED APRIL 19, 2013 THAT SUPPLEMENTS THE STANDARD PLANS BOOK DATED 2010.

REVISED STANDARD PLAN RSP T9

P:\PROJ\01\49339\drafting\01_49339Uva007.dgn

4-30-13

TO ACCOMPANY PLANS DATED 03-19-15

Dist	COUNTY	ROUTE	POST MILES TOTAL PROJECT	SHEET No.	TOTAL SHEETS
01	Men	20,162	7.14/29.18 5.28/22.45	39	40

REGISTERED CIVIL ENGINEER

April 19, 2013
PLANS APPROVAL DATE

REGISTERED PROFESSIONAL ENGINEER Gurinderpal Bhullar No. C48815 Exp. 9-30-14 CIVIL STATE OF CALIFORNIA

THE STATE OF CALIFORNIA OR ITS OFFICERS OR AGENTS SHALL NOT BE RESPONSIBLE FOR THE ACCURACY OR COMPLETENESS OF SCANNED COPIES OF THIS PLAN SHEET.

NOTES:

See Revised Standard Plan RSP T9 for tables.

Use cone spacing X for taper segment, Y for tangent segment or Z for conflict situations, as approriate, per Table 1, unless X, Y, or Z cone spacing is shown on this sheet.

Unless otherwise specified in the special provisions, all temporary warning signs shall have black legend on fluorescent orange background.

California codes are designated by (CA). Otherwise, Federal (MUTCD) codes are shown.

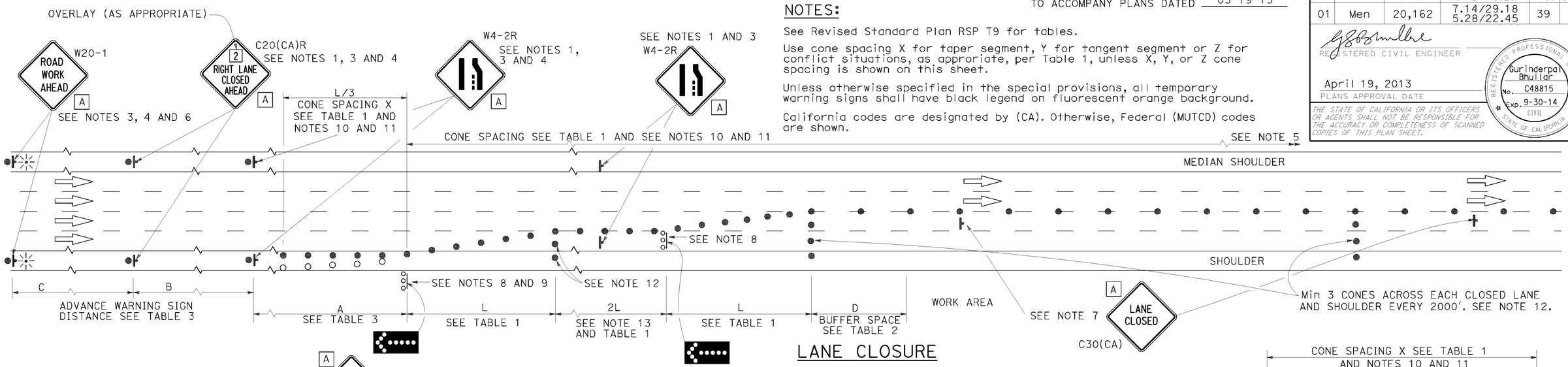

LANE CLOSURE

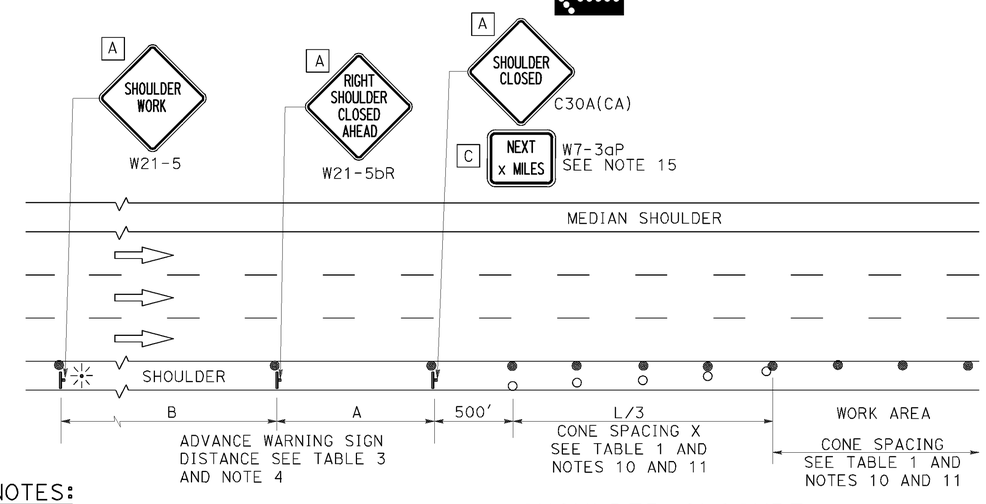

SHOULDER CLOSURE

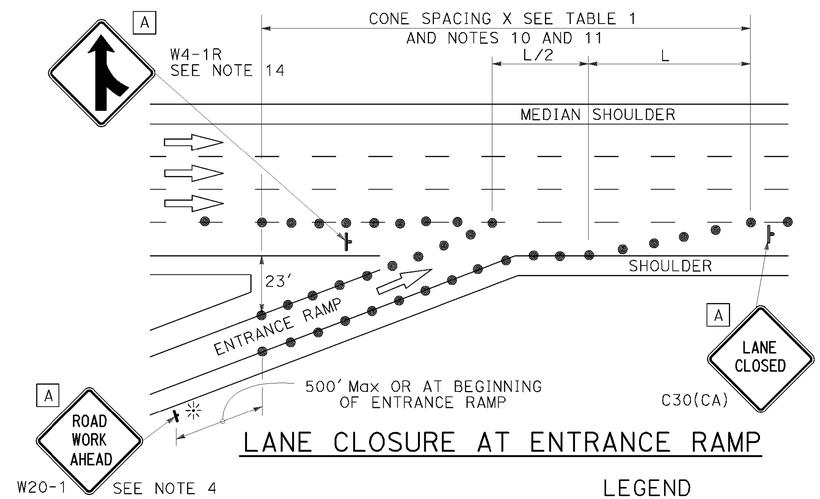

LANE CLOSURE AT ENTRANCE RAMP

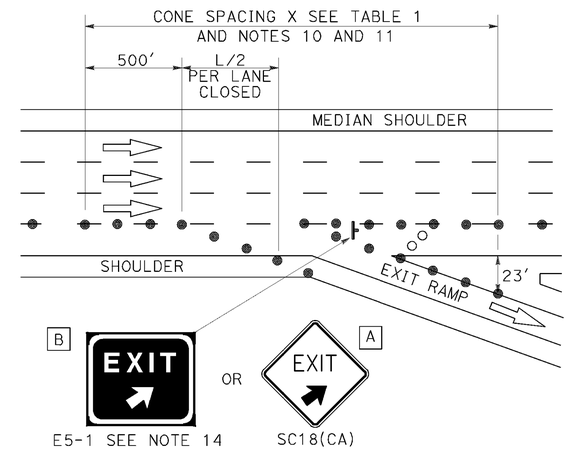

LANE CLOSURE AT EXIT RAMP

NOTES:

1. Median lane closures shall conform to the details as shown except that C20(CA)L and W4-2L signs shall be used.
2. At least one person shall be assigned to provide full time maintenance of traffic control devices for lane closures.
3. Duplicate sign installations are not required:
   a) On opposite shoulder if at least one-half of the available lanes remain open to traffic.
   b) In the median if the width of the median shoulder is less than 8' and the outside lanes are to be closed.
4. Each advance warning sign on each side of the roadway shall be equipped with at least two flags for daytime closure. Each flag shall be at least 16" x 16" in size and shall be orange or fluorescent red-orange in color. Flashing beacons shall be placed at the locations indicated for lane closure during hours of darkness.
5. A G20-2 "END ROAD WORK" sign, with minimum size of 48" x 24" as appropriate, shall be placed at the end of the lane closure unless the end of work area is obvious or ends within a larger project's limits.
6. If the W20-1 sign would follow within 2000' of a stationary W20-1 or G20-1 "ROAD WORK NEXT _____ MILES", use a C20(CA) sign for the first advance warning sign.
7. Place a C30(CA) sign every 2000' throughout length of lane closure.
8. One flashing arrow sign for each lane closed. The flashing arrow signs shall be Type I.
9. A minimum 1500' of sight distance shall be provided where possible for vehicles approaching the first flashing arrow sign. Lane closures shall not begin at top of crest vertical curve or on a horizontal curve.
10. All cones used for lane closures during the hours of darkness shall be fitted with retroreflective bands (or sleeves) as specified in the specifications.
11. Portable delineators, placed at one-half the spacing indicated for traffic cones may be used instead of cones for daytime closures only.
12. Unless otherwise specified in the special provisions, a minimum of 3 cones shall be placed transversely across each closed lane and shoulder at each location where a taper across a traffic lane ends and every 2000' as shown on the "Lane Closure" detail. Two Type II barricades may be used instead of the 3 cones. The transverse alignment of the cones or barricades on the closed shoulder may be shifted from the transverse alignment to provide access to the work.
13. Unless otherwise specified in the special provisions, the 2L tangent shown along lane lines shall be used between the L tapers required for each closed traffic lane.
14. Unless otherwise specified in the special provisions, the E5-1 or SC18(CA) and W4-1 signs shall be used as shown.
15. A W7-3aP "NEXT____ MILES" plaque must be used if theshoulder closure extends beyond the distance that can be perceived by road users.

LEGEND

- TRAFFIC CONE
- TRAFFIC CONE (OPTIONAL TAPER)
- TEMPORARY TRAFFIC CONTROL SIGN
- FLASHING ARROW SIGN (FAS)
- FAS SUPPORT OR TRAILER
- PORTABLE FLASHING BEACON

SIGN PANEL SIZE (Min)

A	48" x 48"
B	72" x 60"
C	36" x 30"

STATE OF CALIFORNIA
DEPARTMENT OF TRANSPORTATION

TRAFFIC CONTROL SYSTEM FOR LANE CLOSURE ON FREEWAYS AND EXPRESSWAYS

NO SCALE

RSP T10 DATED APRIL 19, 2013 SUPERSEDES STANDARD PLAN T10 DATED MAY 20, 2011 - PAGE 237 OF THE STANDARD PLANS BOOK DATED 2010.

REVISED STANDARD PLAN RSP T10

2010 REVISED STANDARD PLAN RSP T10

P:\PROJ\01\4939u\drafting\01_4939U\va008.dgn

12-18-12

Dist	COUNTY	ROUTE	POST MILES TOTAL PROJECT	SHEET No.	TOTAL SHEETS
01	Men	20,162	7.14/29.18 5.28/22.45	40	40

REGISTERED CIVIL ENGINEER

April 19, 2013
PLANS APPROVAL DATE

REGISTERED PROFESSIONAL ENGINEER
Gurinderpal Bhullar
No. C48815
Exp. 9-30-14
CIVIL
STATE OF CALIFORNIA

THE STATE OF CALIFORNIA OR ITS OFFICERS OR AGENTS SHALL NOT BE RESPONSIBLE FOR THE ACCURACY OR COMPLETENESS OF SCANNED COPIES OF THIS PLAN SHEET.

TO ACCOMPANY PLANS DATED 03-19-15

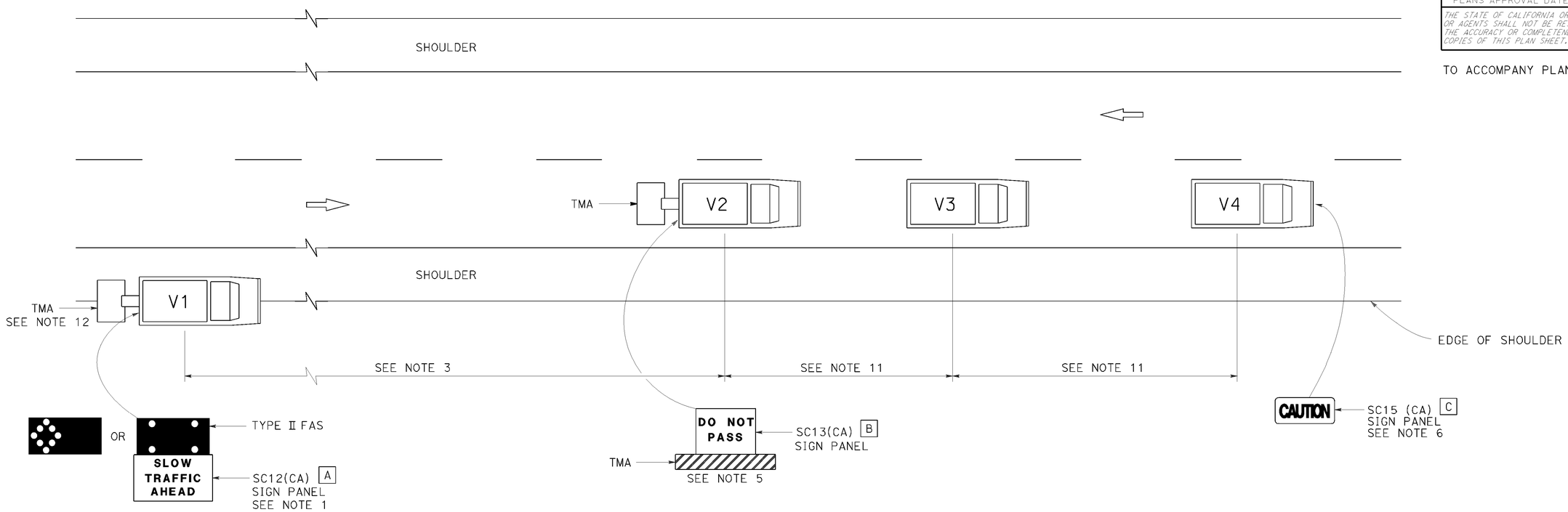

LEGEND

V1	SIGN VEHICLE
V2	SHADOW VEHICLE
V3	WORK/APPLICATION VEHICLE
V4	SIGN VEHICLE
TMA	TRUCK-MOUNTED ATTENUATOR
	FLASHING ARROW SIGN (FAS) IN FLASHING CAUTION MODE
	FLASHING ARROW SIGN (FAS) IN ALTERNATING DIAMOND CAUTION

SIGN PANEL SIZE (Min)

A	72" × 42"
B	54" × 42"
C	54" × 24"

NOTES:

1. Either a changeable message sign or a SC12(CA) "SLOW TRAFFIC AHEAD" sign shall be mounted on the rear of sign vehicle V1. The changeable message sign shall be sequenced to show the "CAUTION" message first, follow by the "SLOW TRAFFIC AHEAD" message. A Type II flashing arrow sign may be used with the SC12(CA) sign panel.
2. Sign vehicle V1 should be positioned where highly visible when shoulders are not available.
3. If traffic queues develop, sign vehicle V1 should be positioned upstream from the end of queue.
4. Vehicle-mounted sign panels shall have Type III or above retroreflective sheeting, black on white, or black on fluorescent orange, with 6" minimum series D letters per Caltrans sign specifications.
5. Shadow vehicle shall be equipped with a truck-mounted attenuator. The sign panel shown shall be mounted on the rear of shadow vehicle V2. The message "LANE CLOSED" may be used in place of the "DO NOT PASS" message.
6. The sign panel shown shall be mounted on the front of sign vehicle V4, facing opposing traffic.
7. All vehicles shall be equipped with flashing or rotating amber lights.
8. Sign vehicle V4 will not be required when the work and vehicles V2 and V3 are 2′ or more from the centerline of the highway during the work or application operations.
9. All vehicles used for lane closures shall be equipped with two-way radios and the vehicle operators shall maintain communication during the work or application operation.
10. This plan shall not be used where workers would be on foot in the work area. Use a stationary type lane closure (Revised Standard Plan T13) for this condition.
11. Minimize spacing between vehicles V2 and V3 and vehicles V3 and V4 to deter road users from driving in between them.
12. If sign vehicle V1 encroaches into the traffic lane due to insufficient shoulder width, sign vehicle V1 shall be equipped with a truck-mounted attenuator. Sign vehicle V1 shall stay as close to the edge of shoulder as practicable.

STATE OF CALIFORNIA
DEPARTMENT OF TRANSPORTATION

TRAFFIC CONTROL SYSTEM FOR MOVING LANE CLOSURE ON TWO LANE HIGHWAYS

NO SCALE

RSP T17 DATED APRIL 19, 2013 SUPERSEDES STANDARD PLAN T17
DATED MAY 20, 2011 - PAGE 245 OF THE STANDARD PLANS BOOK DATED 2010.

REVISED STANDARD PLAN RSP T17

2010 REVISED STANDARD PLAN RSP T17

P:\PROJ\01\4939u\drafting\01_4939Uva009.dgn

12-18-12