Dist	COUNTY	ROUTE	POST MILES TOTAL PROJECT	SHEET No.	TOTAL SHEETS
01	DN	199	20.3/25.9	1	184

NHP-P199(033)E

STATE OF CALIFORNIA
DEPARTMENT OF TRANSPORTATION

PROJECT PLANS FOR CONSTRUCTION ON
STATE HIGHWAY
IN DEL NORTE COUNTY
ABOUT 7 MILES NORTH OF GASQUET
AT VARIOUS LOCATIONS
FROM 0.5 MILE NORTH OF
MIDDLE FORK SMITH RIVER BRIDGE No. 01-0019
TO 0.8 MILE NORTH OF
MIDDLE FORK SMITH RIVER BRIDGE No. 01-0016

TO BE SUPPLEMENTED BY STANDARD PLANS DATED MAY 2010

INDEX OF PLANS

SHEET No.	DESCRIPTION
1	TITLE AND LOCATION MAP
2-7	TYPICAL CROSS SECTIONS
8-19	LAYOUTS
20-24	CONSTRUCTION DETAILS
25	EROSION CONTROL LEGEND
26-32	EROSION CONTROL PLANS AND QUANTITIES
33-39	DRAINAGE, PROFILES, DETAILS AND QUANTITIES
40	CONSTRUCTION AREA SIGNS
41-52	STAGE CONSTRUCTION AND TRAFFIC HANDLING PLANS
53-54	STAGE CONSTRUCTION DETAILS AND QUANTITIES
55-56	SUMMARY OF QUANTITIES
57-71	ELECTRICAL PLANS
72-86	REVISED STANDARD PLANS

STRUCTURE PLANS

87-150	MIDDLE FORK SMITH RIVER BRIDGE (REPLACE) Br. No. 01-0800
151-159	KELLY CREEK BARRIER
160-172	MONKEY CREEK RETAINING WALL
173-184	NORTH RETAINING WALL

THE STANDARD PLANS LIST APPLICABLE TO THIS CONTRACT IS INCLUDED IN THE NOTICE TO BIDDERS AND SPECIAL PROVISIONS BOOK.

LOCATION MAP

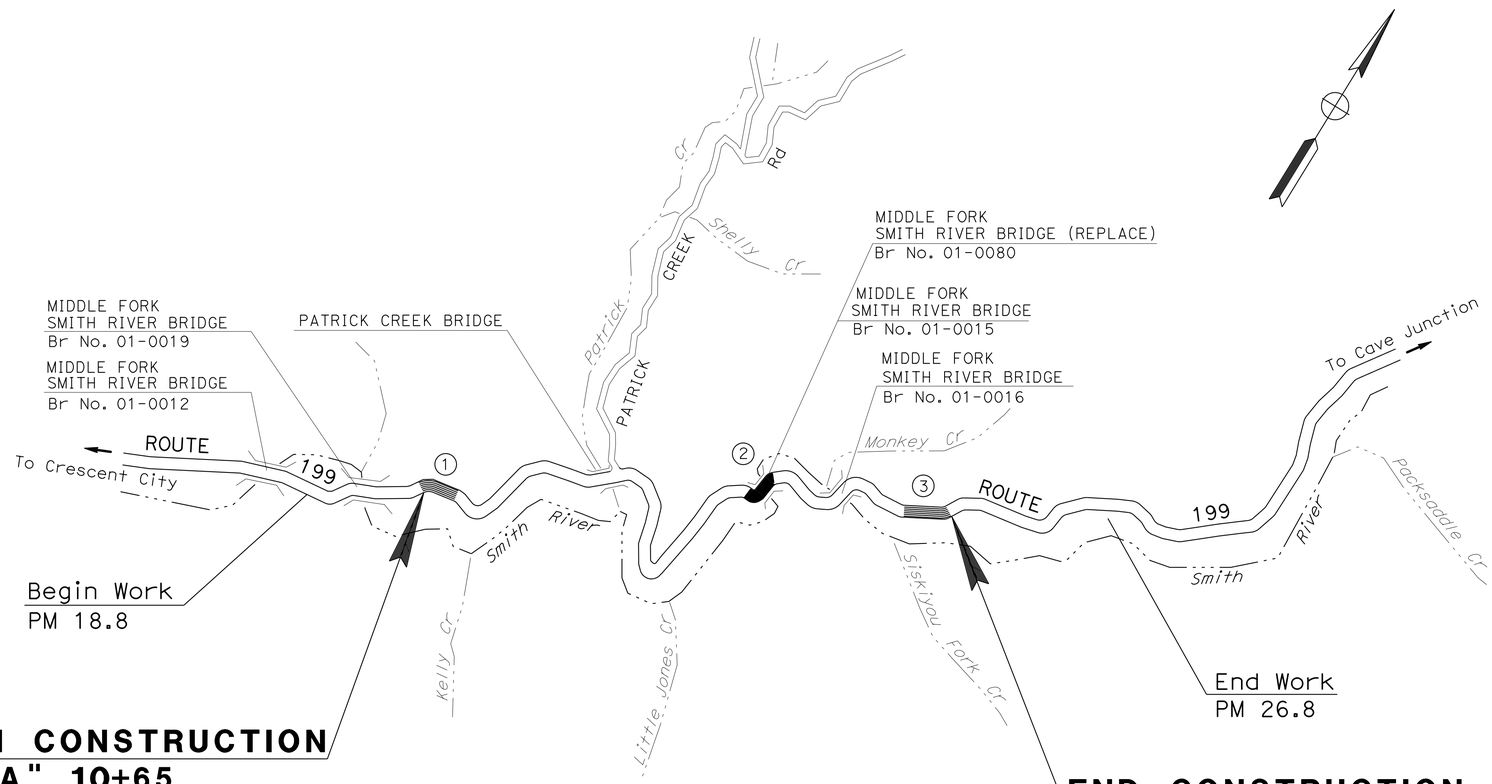

LOCATIONS OF CONSTRUCTION

Loc	COUNTY	ROUTE	PM	DESIGNATION
1	DEL NORTE	199	20.3/20.7	KELLY CREEK BARRIER
2	DEL NORTE	199	23.9/24.2	MIDDLE FORK SMITH RIVER BRIDGE, NORTH RETAINING WALL
3	DEL NORTE	199	25.5/25.75	MONKEY CREEK RETAINING WALL

THE CONTRACTOR SHALL POSSESS THE CLASS (OR CLASSES) OF LICENSE AS SPECIFIED IN THE "NOTICE TO BIDDERS."

NO SCALE

PROJECT ENGINEER REGISTERED CIVIL ENGINEER — DATE 04/09/13

June 24, 2013
PLANS APPROVAL DATE

REGISTERED PROFESSIONAL ENGINEER — T. LARK — No. 52481 — Exp. 12/31/14 — CIVIL — STATE OF CALIFORNIA

THE STATE OF CALIFORNIA OR ITS OFFICERS OR AGENTS SHALL NOT BE RESPONSIBLE FOR THE ACCURACY OR COMPLETENESS OF SCANNED COPIES OF THIS PLAN SHEET.

CONTRACT No.	01-479404
PROJECT ID	0100000371

LAST REVISION 04-08-13 — DATE PLOTTED => 24-JUL-2013 — TIME PLOTTED => 06:35

P:\PROJ\01\47940\drafting\0100000371\0100000371ab001.dgn

PROJECT MANAGER: KEVIN CHURCH
DESIGN ENGINEER: L. R. ASHLEY

Dist	COUNTY	ROUTE	POST MILES TOTAL PROJECT	SHEET No.	TOTAL SHEETS
01	DN	199	20.3/25.9	2	184

REGISTERED CIVIL ENGINEER 04/09/13 DATE

6-24-13
PLANS APPROVAL DATE

REGISTERED PROFESSIONAL ENGINEER T. LARK No. 52481 Exp. 12/31/14 CIVIL STATE OF CALIFORNIA

THE STATE OF CALIFORNIA OR ITS OFFICERS OR AGENTS SHALL NOT BE RESPONSIBLE FOR THE ACCURACY OR COMPLETENESS OF SCANNED COPIES OF THIS PLAN SHEET.

NOTES:

1. DIMENSIONS OF THE PAVEMENT STRUCTURES (STRUCTURAL SECTIONS) ARE SUBJECT TO TOLERANCES SPECIFIED IN THE STANDARD SPECIFICATIONS.
2. SUPERELEVATIONS ARE SHOWN ON THE SUPERELEVATION DIAGRAMS.
3. FOR LOCATIONS OF MBGR, SEE LAYOUT AND SUMMARY OF QUANTITY SHEETS.

LEGEND:

SR = SUPERELEVATION RATE
GPI = GEOSYNTHETIC PAVEMENT INTERLAYER

DESIGN DESIGNATION (ROUTE 199)

ADT (2013) 3,100 — D 60%
ADT (2033) 3,880 — T 12%
DHV (2033) = 520 — V 55 mph (DESIGN SPEED)
ESAL 1,575,000 — TI_{20} 9.5
CLIMATE REGION: LOW MOUNTAIN

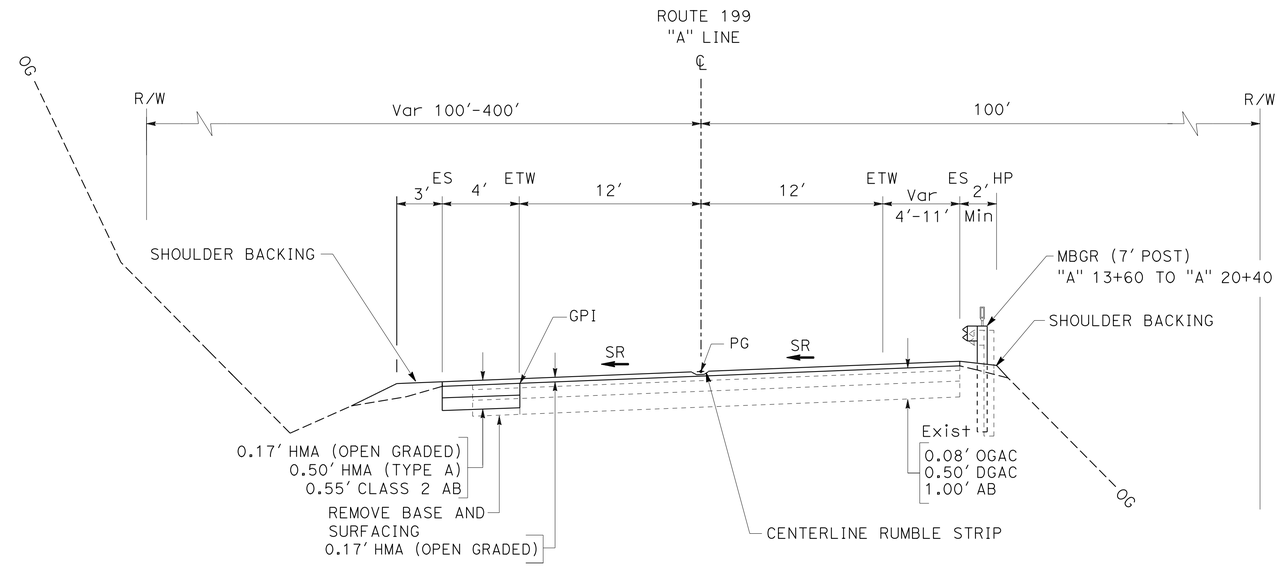

"A" 13+60.0 TO "A" 20+40.0

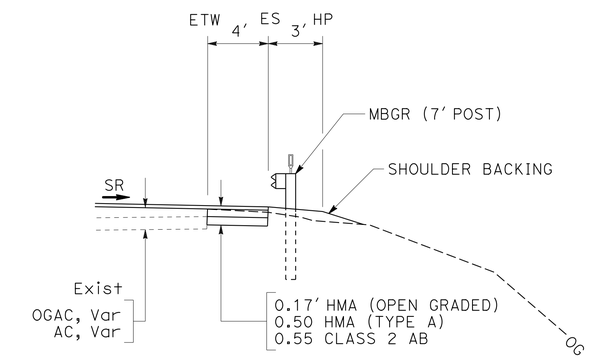

"A" 19+60.0 TO "A" 20+40.0

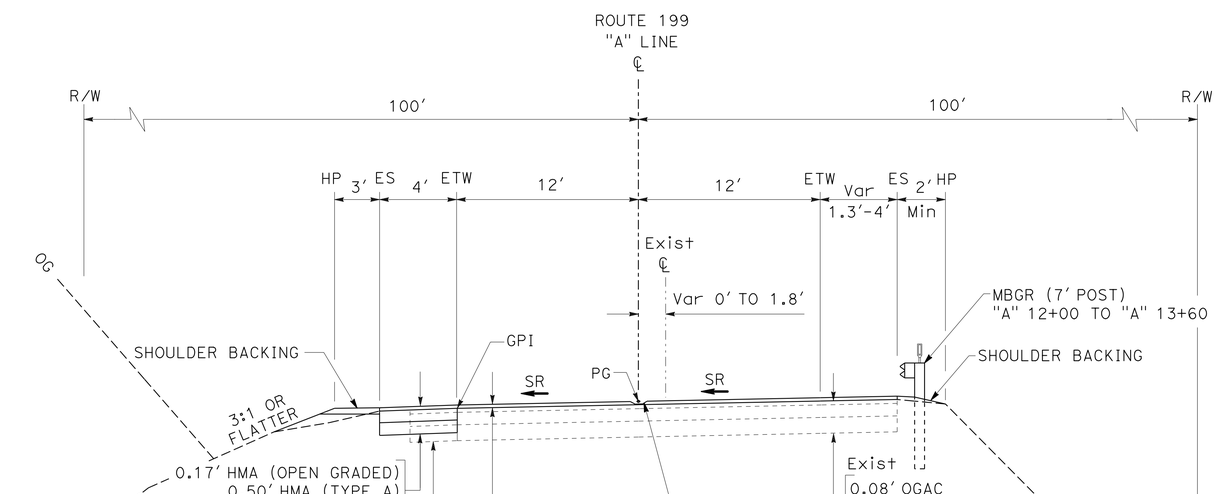

"A" 10+65.0 TO "A" 13+60.0

LOCATION 1
TYPICAL CROSS SECTIONS
NO SCALE **X-1**

REVISED BY	DATE REVISED
TODD LARK	BIJAN SAMRAD
CALCULATED-DESIGNED BY	CHECKED BY
FUNCTIONAL SUPERVISOR	L.R. ASHLEY

STATE OF CALIFORNIA - DEPARTMENT OF TRANSPORTATION
Caltrans® DESIGN

P:\PROJ\01\47940\drafting\0100000371\0100000371ca001.dgn

LAST REVISION 04-08-13 | DATE PLOTTED => 22-JUN-2013 | TIME PLOTTED => 08:37

Dist	COUNTY	ROUTE	POST MILES TOTAL PROJECT	SHEET No.	TOTAL SHEETS
01	DN	199	20.3/25.9	3	184

REGISTERED CIVIL ENGINEER 04/09/13 DATE

6-24-13
PLANS APPROVAL DATE

REGISTERED PROFESSIONAL ENGINEER T. LARK No. 52481 Exp. 12/31/14 CIVIL STATE OF CALIFORNIA

THE STATE OF CALIFORNIA OR ITS OFFICERS OR AGENTS SHALL NOT BE RESPONSIBLE FOR THE ACCURACY OR COMPLETENESS OF SCANNED COPIES OF THIS PLAN SHEET.

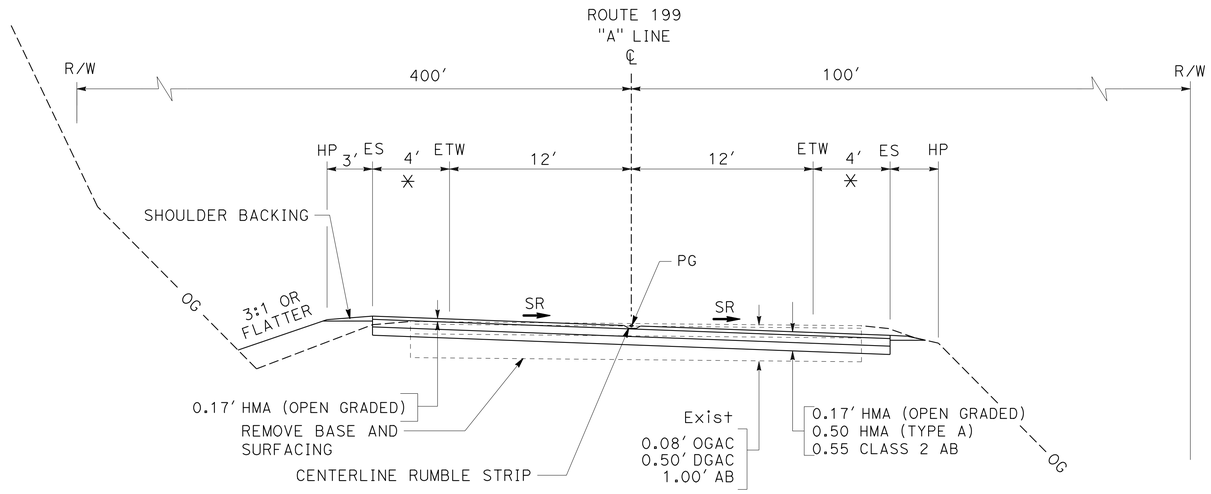

"A" 22+29.71 TO "A" 27+70.00
✳ (Var 4′ TO 2′) "A" 27+00 TO "A" 27+70

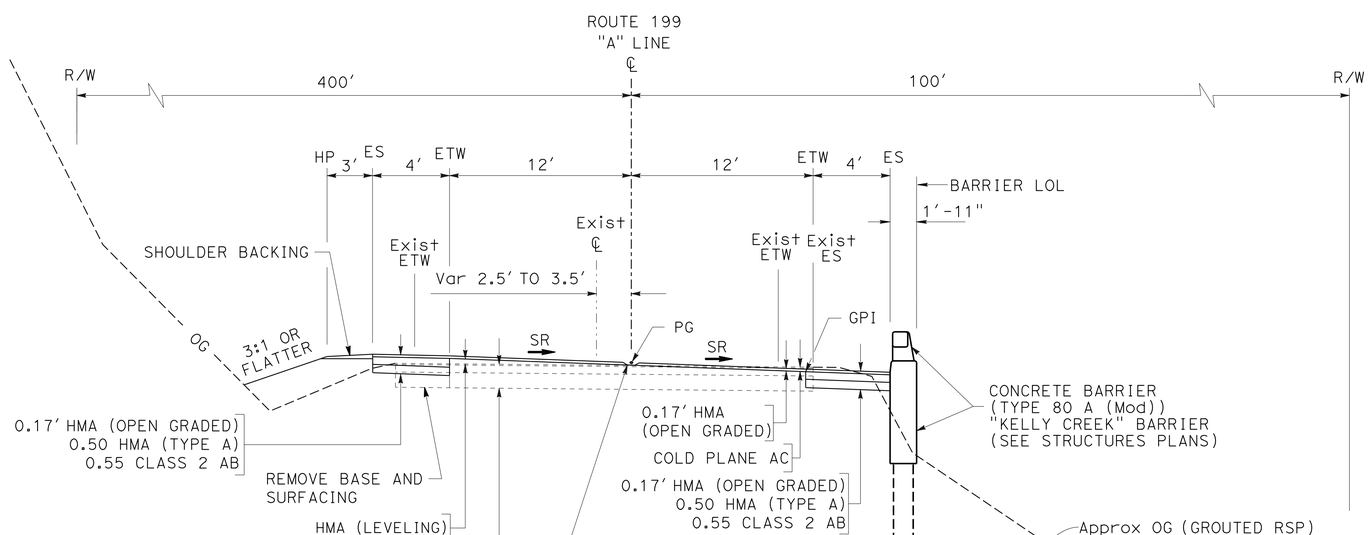

"A" 20+40.0 TO "A" 22+29.71

LOCATION 1

TYPICAL CROSS SECTIONS

NO SCALE

X-2

REVISED BY	DATE REVISED

CALCULATED-DESIGNED BY	CHECKED BY
TODD LARK	BIJAN SAMRAD

FUNCTIONAL SUPERVISOR: L.R. ASHLEY

STATE OF CALIFORNIA - DEPARTMENT OF TRANSPORTATION

Caltrans® DESIGN

P:\PROJ\01\47940\drafting\0100000371\0100000371ca002.dgn

LAST REVISION 04-08-13 | DATE PLOTTED => 22-JUN-2013 | TIME PLOTTED => 08:37

Dist	COUNTY	ROUTE	POST MILES TOTAL PROJECT	SHEET No.	TOTAL SHEETS
01	DN	199	20.3/25.9	4	184

REGISTERED CIVIL ENGINEER 04/09/13 DATE

6-24-13
PLANS APPROVAL DATE

REGISTERED PROFESSIONAL ENGINEER T. LARK No. 52481 Exp. 12/31/14 CIVIL STATE OF CALIFORNIA

THE STATE OF CALIFORNIA OR ITS OFFICERS OR AGENTS SHALL NOT BE RESPONSIBLE FOR THE ACCURACY OR COMPLETENESS OF SCANNED COPIES OF THIS PLAN SHEET.

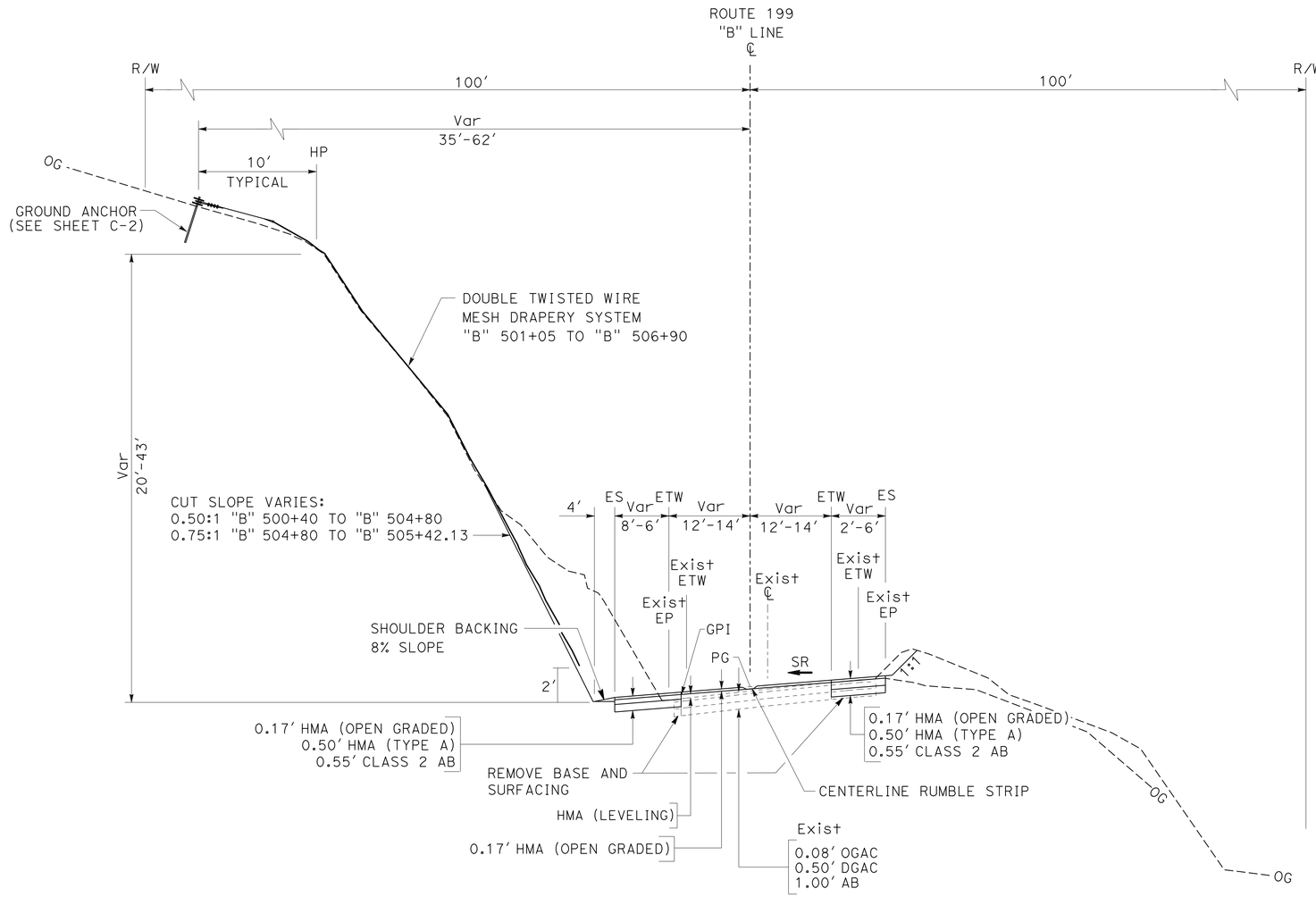

"B" 500+50.0 TO "B" 505+38.69

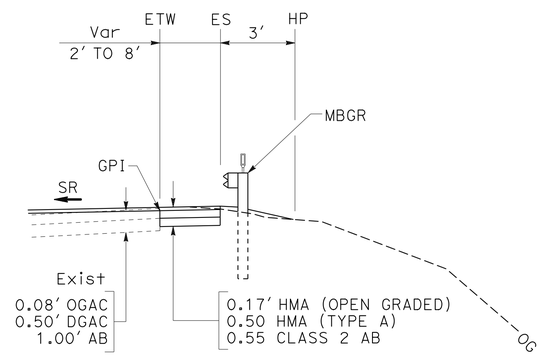

MBGR
"B" 500+90 TO "B" 502+52

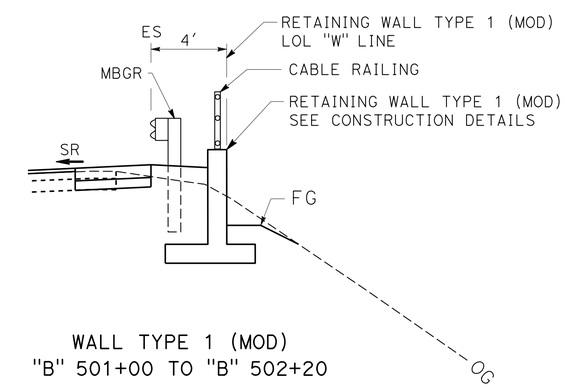

WALL TYPE 1 (MOD)
"B" 501+00 TO "B" 502+20

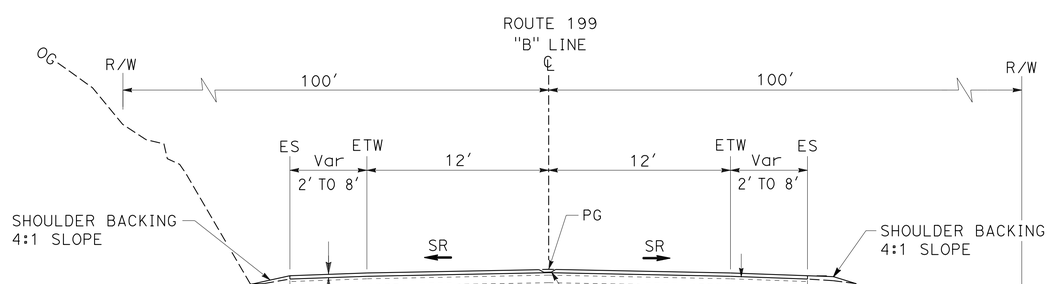

"B" 500+00.0 TO "B" 500+50.0
"B" 517+20.0 TO "B" 517+56.26

LOCATION 2
TYPICAL CROSS SECTIONS
NO SCALE

X-3

REVISED BY | DATE REVISED
TODD LARK | BIJAN SAMRAD
CALCULATED-DESIGNED BY | CHECKED BY
FUNCTIONAL SUPERVISOR | L.R. ASHLEY

STATE OF CALIFORNIA - DEPARTMENT OF TRANSPORTATION
Caltrans
DESIGN

P:\PROJ\01\47940\drafting\0100000371\0100000371ca003.dgn

LAST REVISION 04-08-13 | DATE PLOTTED => 22-JUN-2013 | TIME PLOTTED => 08:37

Dist	COUNTY	ROUTE	POST MILES TOTAL PROJECT	SHEET No.	TOTAL SHEETS
01	DN	199	20.3/25.9	5	184

REGISTERED CIVIL ENGINEER 04/09/13 DATE

6-24-13
PLANS APPROVAL DATE

REGISTERED PROFESSIONAL ENGINEER T. LARK No. 52481 Exp. 12/31/14 CIVIL STATE OF CALIFORNIA

THE STATE OF CALIFORNIA OR ITS OFFICERS OR AGENTS SHALL NOT BE RESPONSIBLE FOR THE ACCURACY OR COMPLETENESS OF SCANNED COPIES OF THIS PLAN SHEET.

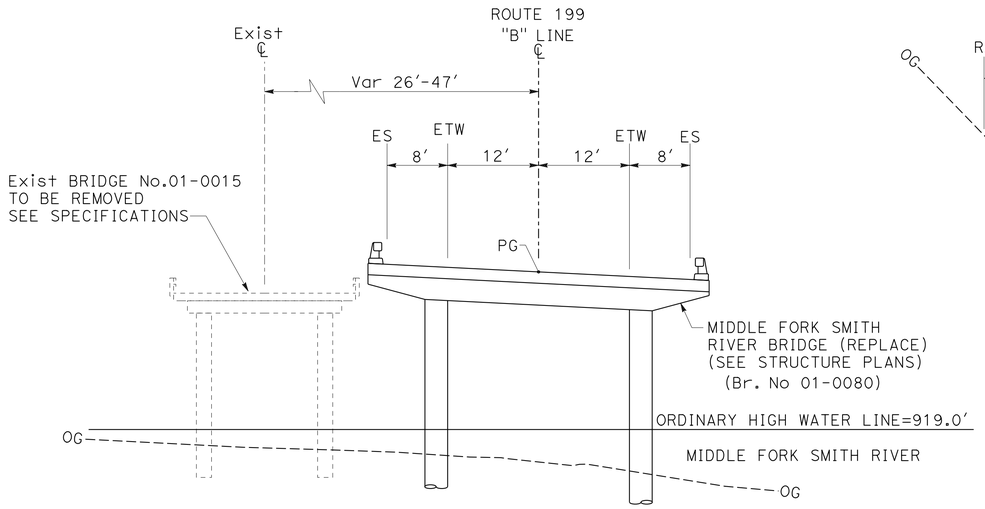

"B" 507+80.00 TO "B" 510+31.83

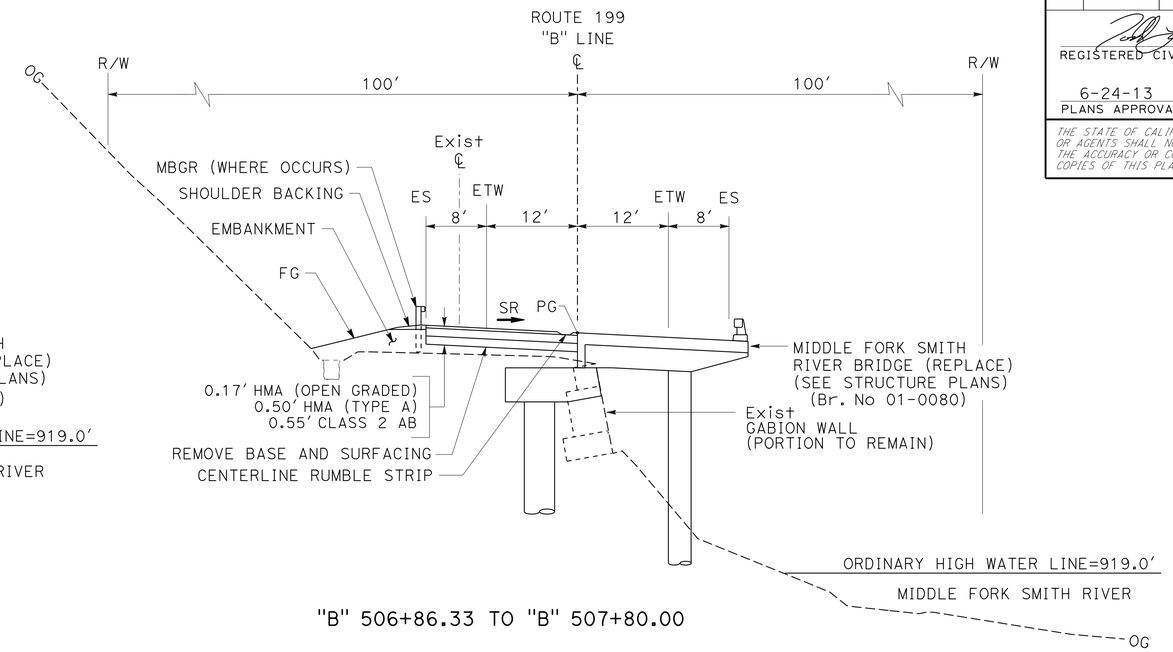

"B" 506+86.33 TO "B" 507+80.00

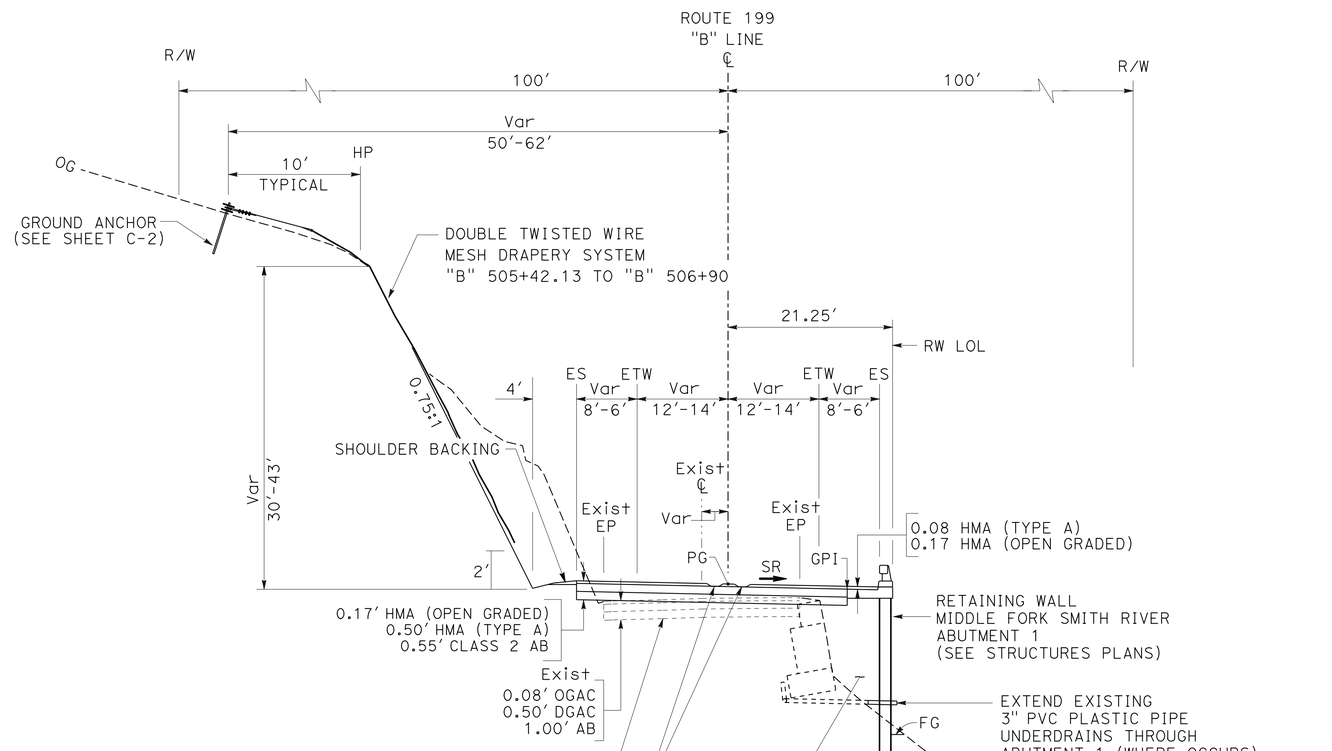

"B" 505+38.69 TO "B" 506+86.33

LOCATION 2

TYPICAL CROSS SECTIONS

NO SCALE

X-4

REVISED BY	DATE REVISED
TODD LARK	BIJAN SAMRAD
CALCULATED-DESIGNED BY	CHECKED BY
FUNCTIONAL SUPERVISOR	L.R. ASHLEY

STATE OF CALIFORNIA - DEPARTMENT OF TRANSPORTATION

Caltrans® DESIGN

P:\PROJ\01\4794\drafting\01000003711\01000003711ca004.dgn

LAST REVISION DATE PLOTTED => 22-JUN-2013 TIME PLOTTED => 08:37

04-08-13

Dist	COUNTY	ROUTE	POST MILES TOTAL PROJECT	SHEET No.	TOTAL SHEETS
01	DN	199	20.3/25.9	6	184

REGISTERED CIVIL ENGINEER 04/09/13 DATE

6-24-13
PLANS APPROVAL DATE

REGISTERED PROFESSIONAL ENGINEER T. LARK No. 52481 Exp. 12/31/14 CIVIL STATE OF CALIFORNIA

THE STATE OF CALIFORNIA OR ITS OFFICERS OR AGENTS SHALL NOT BE RESPONSIBLE FOR THE ACCURACY OR COMPLETENESS OF SCANNED COPIES OF THIS PLAN SHEET.

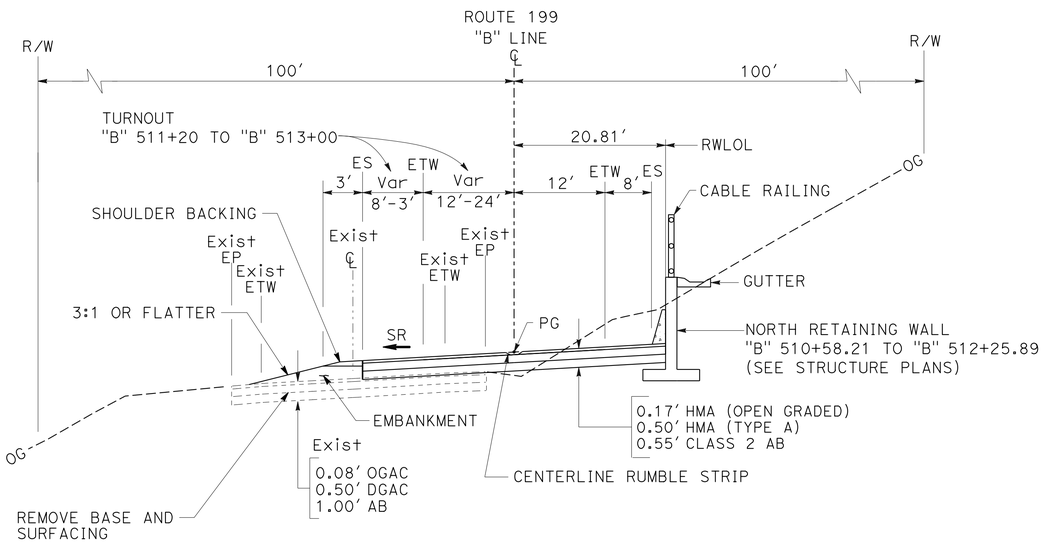

"B" 510+58.21 TO "B" 513+00

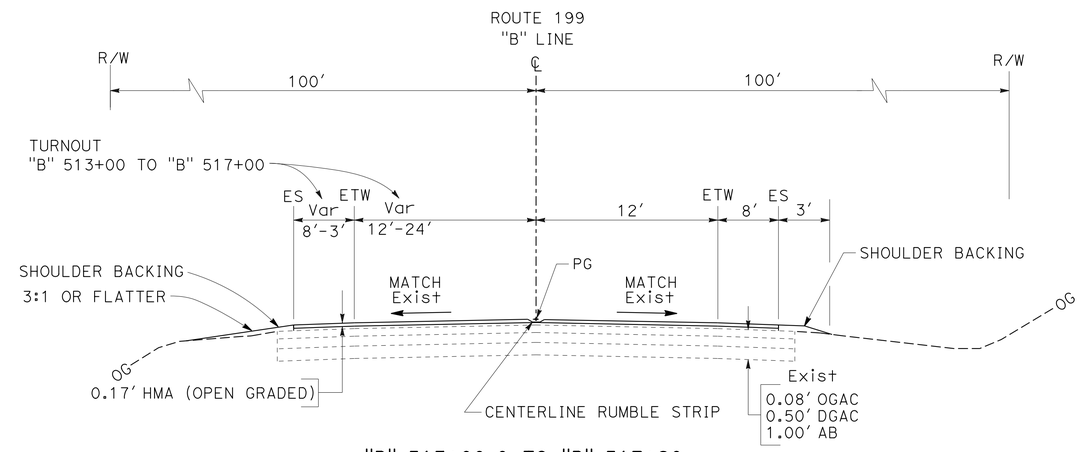

"B" 513+00.0 TO "B" 517+20

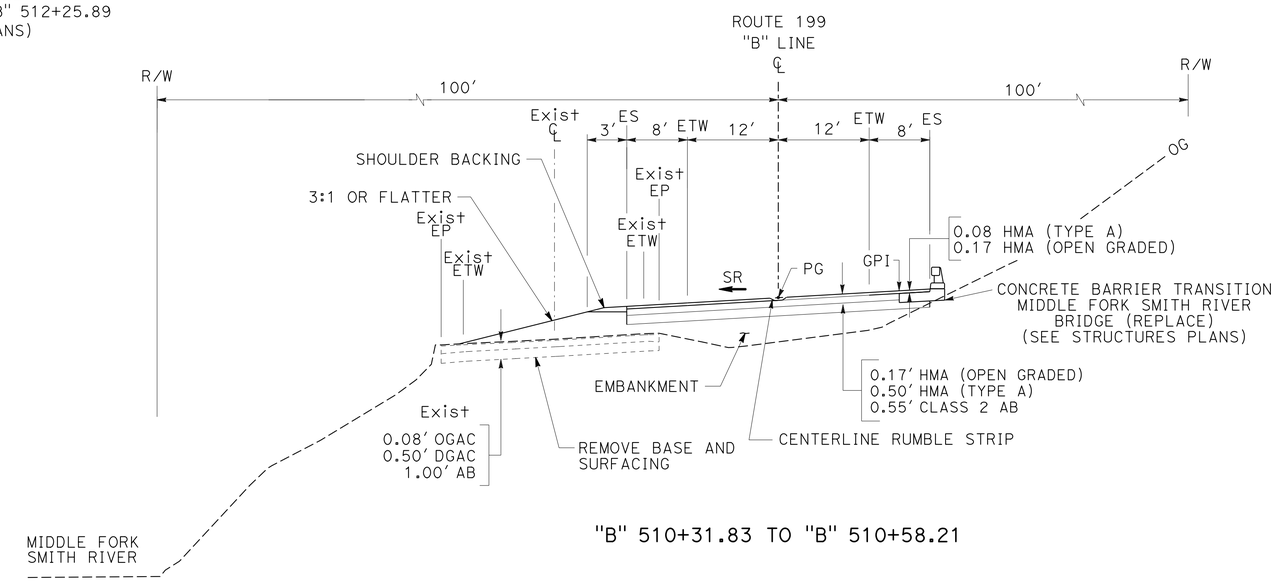

"B" 510+31.83 TO "B" 510+58.21

LOCATION 2

TYPICAL CROSS SECTIONS

NO SCALE **X-5**

REVISED BY	DATE REVISED

CALCULATED-DESIGNED BY	CHECKED BY
TODD LARK	BIJAN SAMRAD

FUNCTIONAL SUPERVISOR: L.R. ASHLEY

STATE OF CALIFORNIA - DEPARTMENT OF TRANSPORTATION **DESIGN**

Caltrans

P:\PROJ\01\47940\drafting\0100000371\0100000371ca005.dgn

LAST REVISION 04-08-13 | DATE PLOTTED => 22-JUN-2013 | TIME PLOTTED => 08:38

Dist	COUNTY	ROUTE	POST MILES TOTAL PROJECT	SHEET No.	TOTAL SHEETS
01	DN	199	20.3/25.9	7	184

REGISTERED CIVIL ENGINEER 04/09/13 DATE

6-24-13
PLANS APPROVAL DATE

REGISTERED PROFESSIONAL ENGINEER T. LARK No. 52481 Exp. 12/31/14 CIVIL STATE OF CALIFORNIA

THE STATE OF CALIFORNIA OR ITS OFFICERS OR AGENTS SHALL NOT BE RESPONSIBLE FOR THE ACCURACY OR COMPLETENESS OF SCANNED COPIES OF THIS PLAN SHEET.

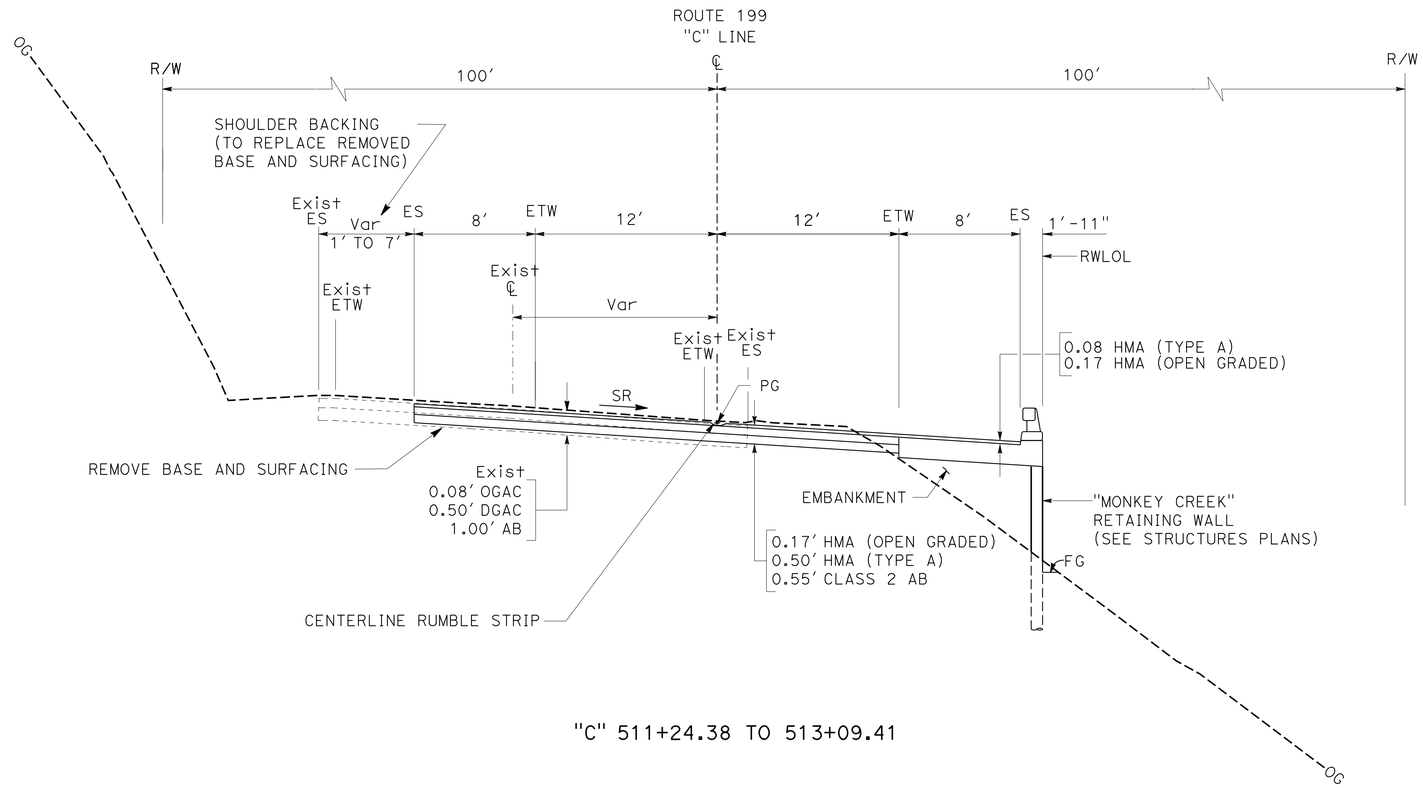

"C" 511+24.38 TO 513+09.41

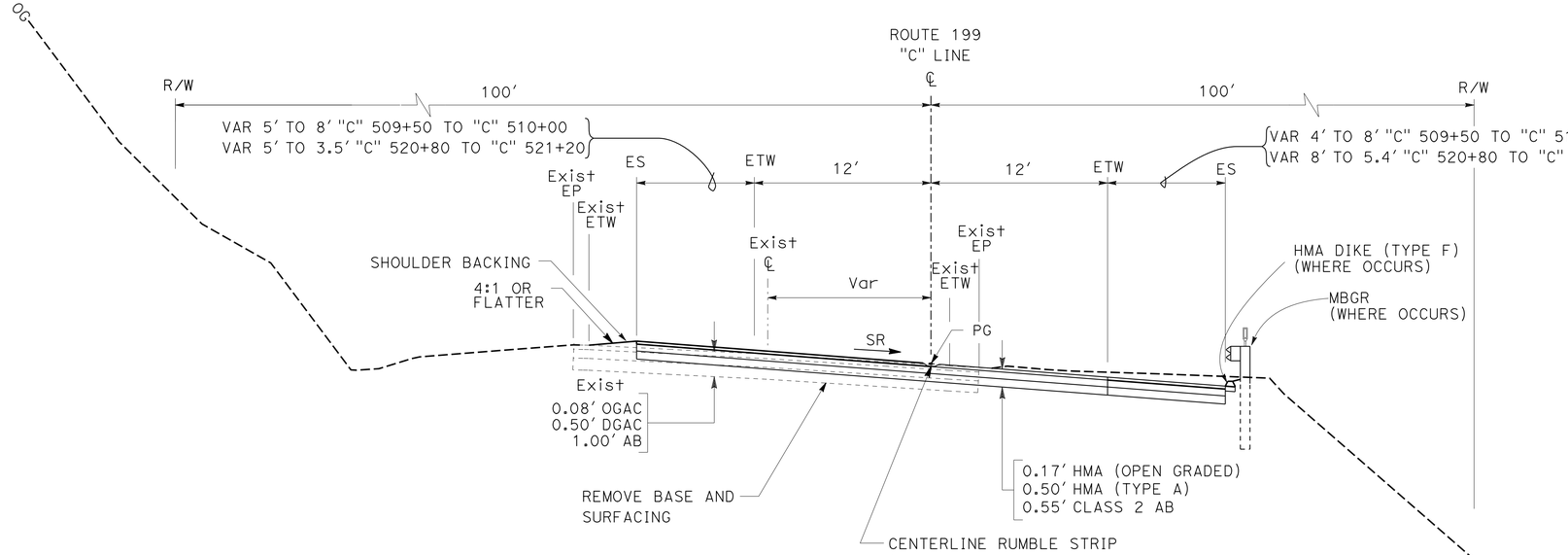

"C" 509+50.0 TO 511+24.38
"C" 513+09.41 TO 521+20

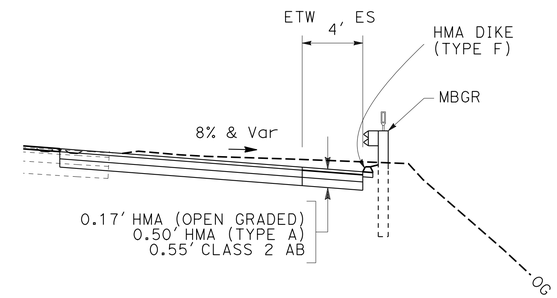

"C" 514+00 TO 516+50

LOCATION 3

TYPICAL CROSS SECTIONS

NO SCALE

X-6

REVISED BY	DATE REVISED
TODD LARK	BIJAN SAMRAD

CALCULATED-DESIGNED BY
CHECKED BY

FUNCTIONAL SUPERVISOR L.R. ASHLEY

STATE OF CALIFORNIA - DEPARTMENT OF TRANSPORTATION
Caltrans® DESIGN

P:\PROJ\01\47940\drafting\01000003711\01000003711ca006.dgn

LAST REVISION 04-08-13 | DATE PLOTTED => 22-JUN-2013 | TIME PLOTTED => 08:38

Dist	COUNTY	ROUTE	POST MILES TOTAL PROJECT	SHEET No.	TOTAL SHEETS
01	DN	199	20.3/25.9	8	184

REGISTERED CIVIL ENGINEER 04/09/13 DATE

6-24-13
PLANS APPROVAL DATE

REGISTERED PROFESSIONAL ENGINEER T. LARK No. 52481 Exp. 12/31/14 CIVIL STATE OF CALIFORNIA

THE STATE OF CALIFORNIA OR ITS OFFICERS OR AGENTS SHALL NOT BE RESPONSIBLE FOR THE ACCURACY OR COMPLETENESS OF SCANNED COPIES OF THIS PLAN SHEET.

NOTES:

1. FOR ACCURATE RIGHT OF WAY DATA, CONTACT RIGHT OF WAY ENGINEERING AT THE DISTRICT OFFICE.
2. ELEVATION IS BASED ON NAVD88 DATUM. COORDINATE VALUES SHOWN ARE THE 1983 CALIFORNIA COORDINATE SYSTEM, ZONE 1.

ABBREVIATIONS:

TW = TRAVELED WAY
VPI = VERTICAL POINT OF INTERCEPTION

LEGEND:

= DRAINAGE SYSTEM NUMBER
= CONFORM
= REMOVE BASE AND SURFACING
4 = GROUND ANCHOR AND NUMBER
= TRAFFIC STRIPE DETAIL No.
(B) = SIGN AND DESIGNATION (SEE SUMMARY OF QUANTITIES SHEET, ROADSIDE SIGNS TABLE)

CURVE DATA

No. (11)	R	Δ	T	L	N	E
10	500′	30°47′37″	137.69′	268.72′	2567997.26	6053238.82

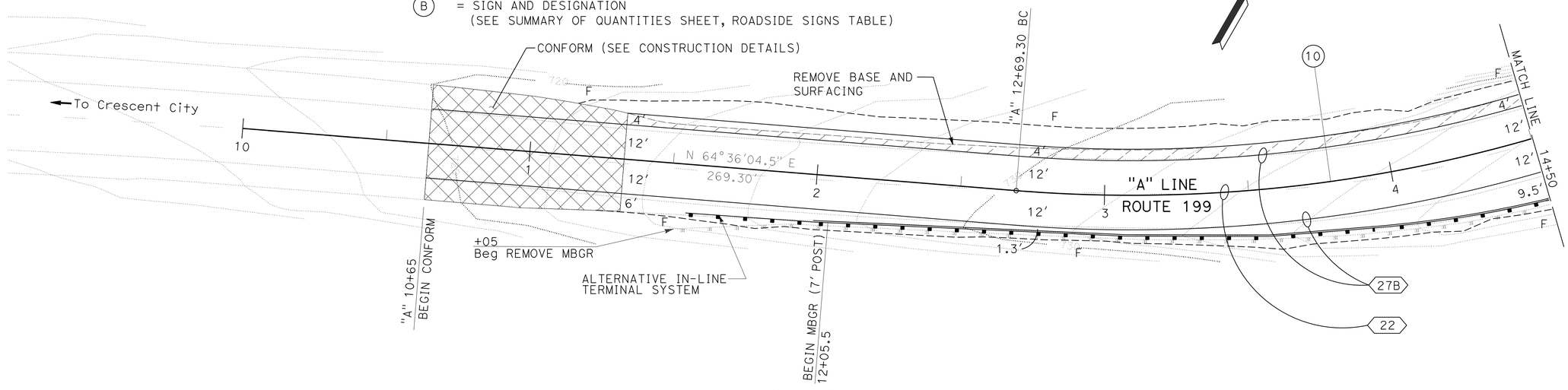

SCALE: 1" = 20′

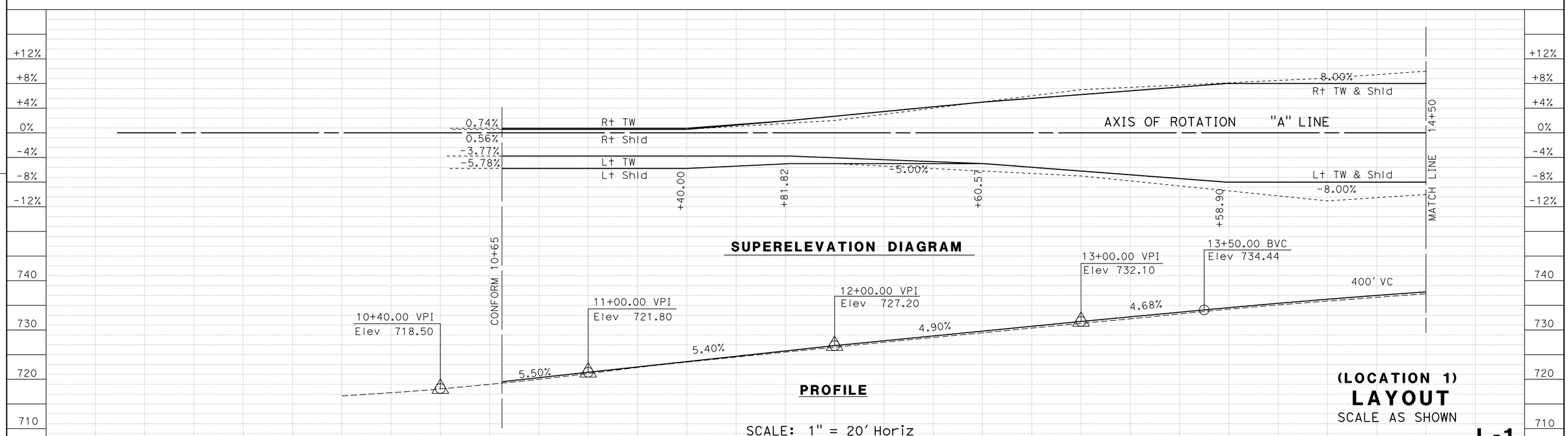

(LOCATION 1)
LAYOUT
SCALE AS SHOWN

L-1

REVISED BY | DATE REVISED
TODD LARK | BIJAN SAMRAD
CALCULATED-DESIGNED BY | CHECKED BY
FUNCTIONAL SUPERVISOR | L.R. ASHLEY

STATE OF CALIFORNIA - DEPARTMENT OF TRANSPORTATION
Caltrans
DESIGN

P:\PROJ\01\47940\drafting\0100000371\0100000371ea001.dgn

LAST REVISION 04-08-13 | DATE PLOTTED => 22-JUN-2013 | TIME PLOTTED => 08:38

Dist	COUNTY	ROUTE	POST MILES TOTAL PROJECT	SHEET No.	TOTAL SHEETS
01	DN	199	20.3/25.9	9	184

REGISTERED CIVIL ENGINEER 04/09/13 DATE

6-24-13
PLANS APPROVAL DATE

REGISTERED PROFESSIONAL ENGINEER T. LARK No. 52481 Exp. 12/31/14 CIVIL STATE OF CALIFORNIA

THE STATE OF CALIFORNIA OR ITS OFFICERS OR AGENTS SHALL NOT BE RESPONSIBLE FOR THE ACCURACY OR COMPLETENESS OF SCANNED COPIES OF THIS PLAN SHEET.

CURVE DATA

No. ⊕	R	Δ	T	L	N	E
10	500′	30°47′37″	137.69′	268.72′	2567997.26	6053238.82
11	318′	41°11′13″	119.49′	228.59′	2567838.26	6054116.82

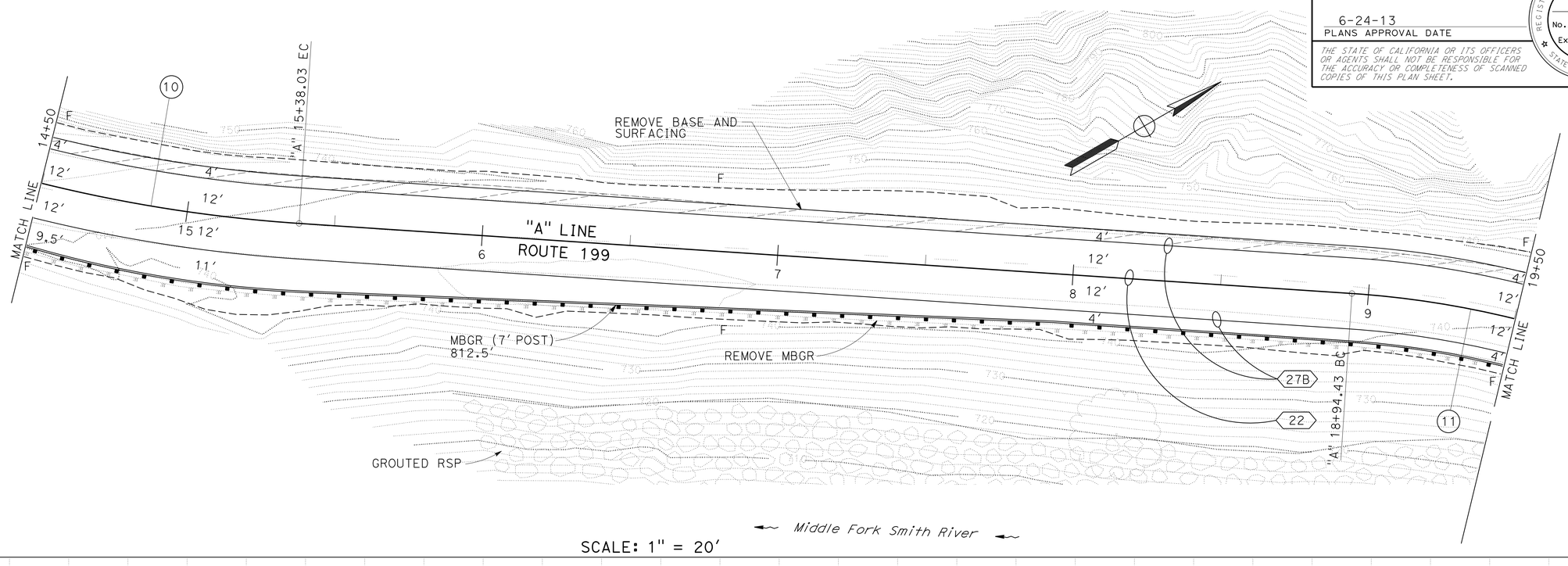

SCALE: 1" = 20′

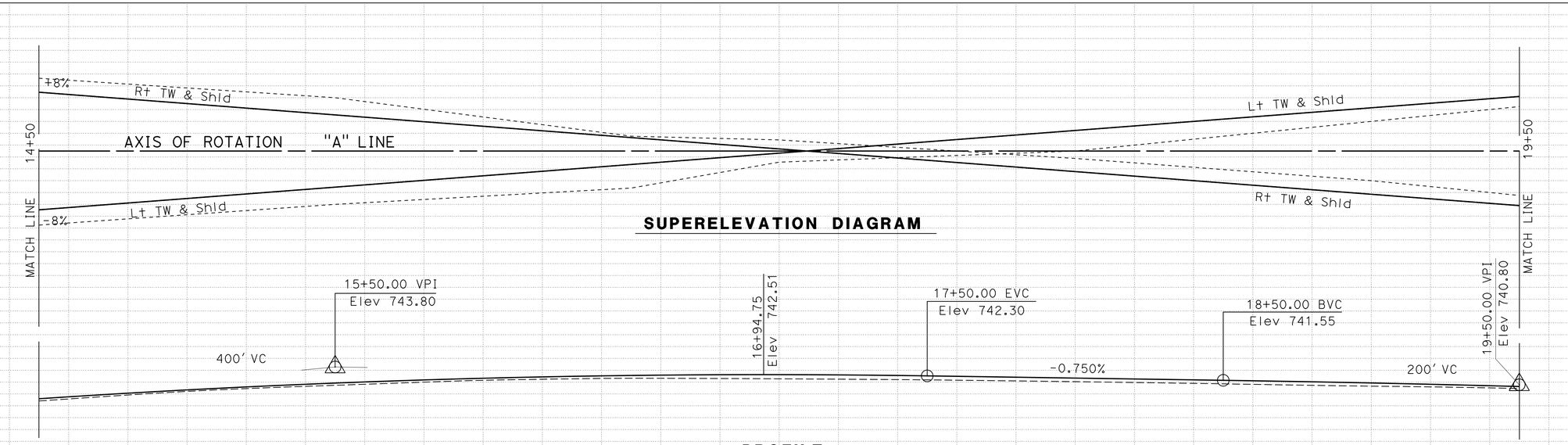

(LOCATION 1)

LAYOUT

SCALE AS SHOWN

L-2

REVISED BY	DATE REVISED
TODD LARK	BIJAN SAMRAD
CALCULATED-DESIGNED BY	CHECKED BY
FUNCTIONAL SUPERVISOR	L.R. ASHLEY

STATE OF CALIFORNIA - DEPARTMENT OF TRANSPORTATION
Caltrans DESIGN

P:\PROJ\01\47940\draffing\01000003711\01000003711ea002.dgn

LAST REVISION 04-08-13 | DATE PLOTTED => 22-JUN-2013 | TIME PLOTTED => 08:38

Dist	COUNTY	ROUTE	POST MILES TOTAL PROJECT	SHEET No.	TOTAL SHEETS
01	DN	199	20.3/25.9	10	184

REGISTERED CIVIL ENGINEER 04/09/13 DATE

6-24-13
PLANS APPROVAL DATE

REGISTERED PROFESSIONAL ENGINEER T. LARK No. 52481 Exp. 12/31/14 CIVIL STATE OF CALIFORNIA

THE STATE OF CALIFORNIA OR ITS OFFICERS OR AGENTS SHALL NOT BE RESPONSIBLE FOR THE ACCURACY OR COMPLETENESS OF SCANNED COPIES OF THIS PLAN SHEET.

CURVE DATA

No. ⊕	R	Δ	T	L	N	E
11	318′	41°11′13″	119.49′	228.59′	2567838.26	6054116.82
12	942′	42°41′24″	368.12′	701.87′	2567235.54	6054278.37

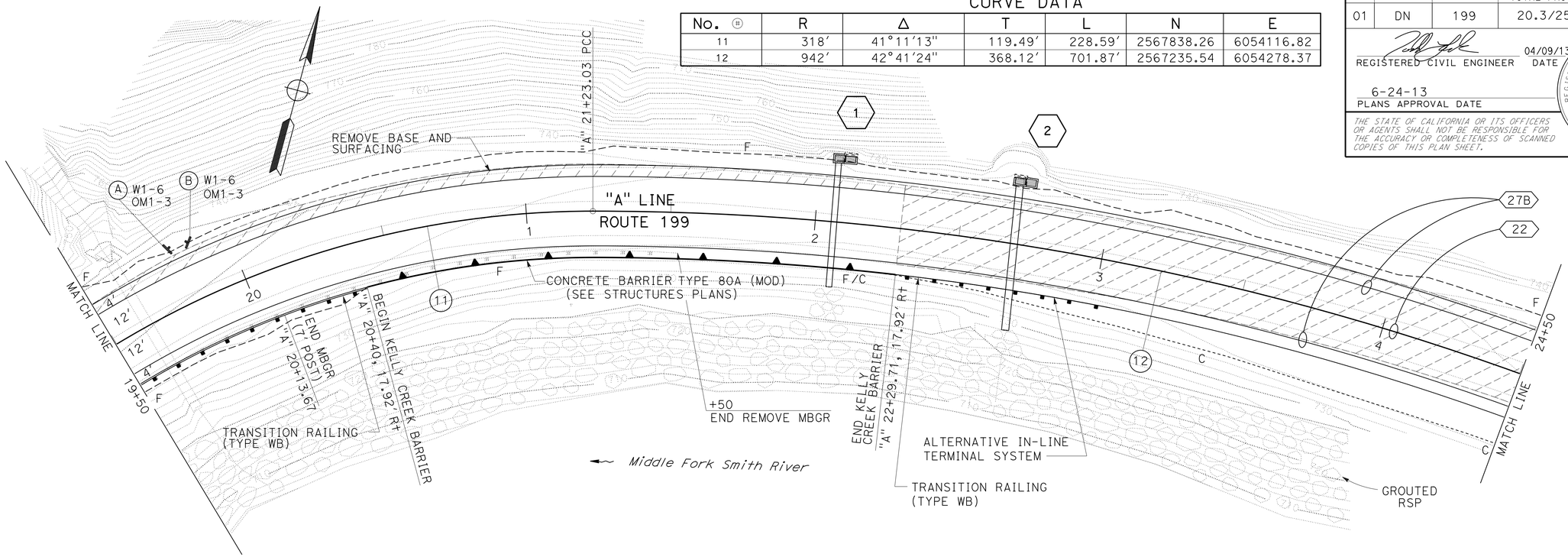

SCALE: 1" = 20′

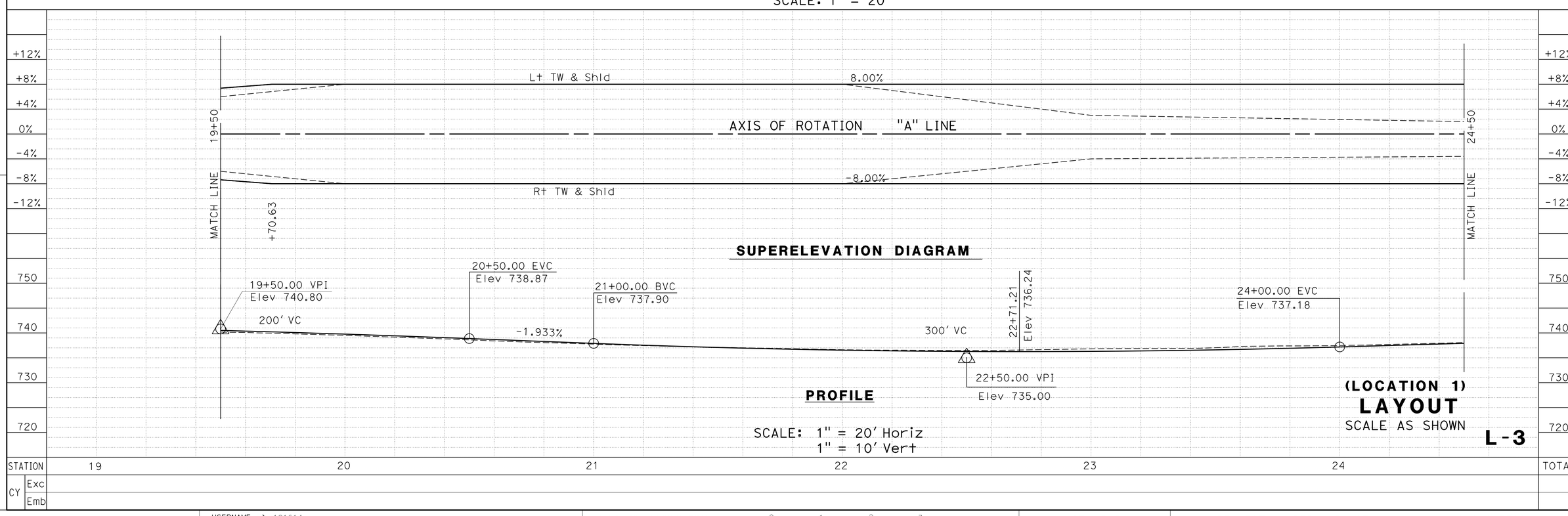

(LOCATION 1)
LAYOUT
SCALE AS SHOWN

L-3

REVISED BY	DATE REVISED

CALCULATED-DESIGNED BY	CHECKED BY
TODD LARK	BIJAN SAMRAD

FUNCTIONAL SUPERVISOR: L.R. ASHLEY

STATE OF CALIFORNIA - DEPARTMENT OF TRANSPORTATION
Caltrans® **DESIGN**

P:\PROJ\01\47940\drafting\0100000371\0100000371ea003.dgn

LAST REVISION 04-08-13 | DATE PLOTTED => 26-JUN-2013 | TIME PLOTTED => 11:14

Dist	COUNTY	ROUTE	POST MILES TOTAL PROJECT	SHEET No.	TOTAL SHEETS
01	DN	199	20.3/25.9	11	184

REGISTERED CIVIL ENGINEER 04/09/13 DATE

6-24-13
PLANS APPROVAL DATE

REGISTERED PROFESSIONAL ENGINEER T. LARK No. 52481 Exp. 12/31/14 CIVIL STATE OF CALIFORNIA

THE STATE OF CALIFORNIA OR ITS OFFICERS OR AGENTS SHALL NOT BE RESPONSIBLE FOR THE ACCURACY OR COMPLETENESS OF SCANNED COPIES OF THIS PLAN SHEET.

CURVE DATA

No.	R	Δ	T	L	N	E
12	942′	42°41′24"	368.12′	701.87′	2567235.54	6054278.37

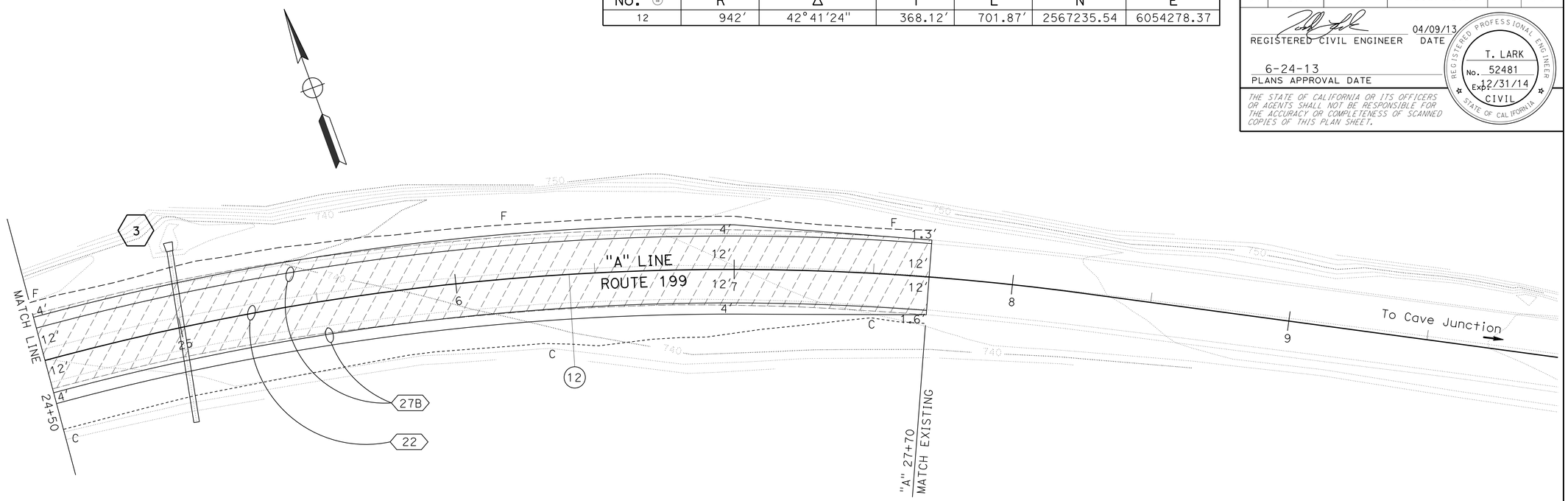

SCALE: 1" = 20′

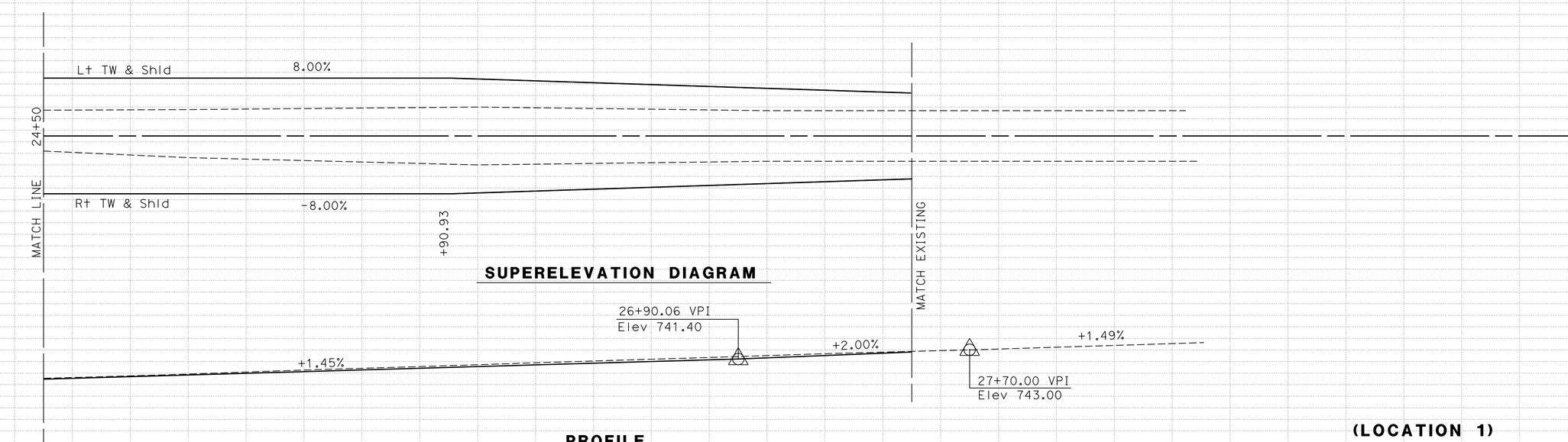

SUPERELEVATION DIAGRAM

PROFILE

SCALE: 1" = 20′ Horiz
1" = 10′ Vert

(LOCATION 1)
LAYOUT
SCALE AS SHOWN

L-4

STATION	25	26	27	28	TOTAL
CY Exc					
CY Emb					

REVISED BY | DATE REVISED
TODD LARK | BIJAN SAMRAD
CALCULATED-DESIGNED BY | CHECKED BY
FUNCTIONAL SUPERVISOR: L.R. ASHLEY

STATE OF CALIFORNIA - DEPARTMENT OF TRANSPORTATION
Caltrans® DESIGN

P:\PROJ\01\47940\drafting\01000003711\01000003371ea004.dgn

LAST REVISION 04-08-13 | DATE PLOTTED => 22-JUN-2013 | TIME PLOTTED => 10:08

Dist	COUNTY	ROUTE	POST MILES TOTAL PROJECT	SHEET No.	TOTAL SHEETS
01	DN	199	20.3/25.9	12	184

REGISTERED CIVIL ENGINEER 04/09/13 DATE

6-24-13
PLANS APPROVAL DATE

REGISTERED PROFESSIONAL ENGINEER T. LARK No. 52481 Exp. 12/31/14 CIVIL STATE OF CALIFORNIA

THE STATE OF CALIFORNIA OR ITS OFFICERS OR AGENTS SHALL NOT BE RESPONSIBLE FOR THE ACCURACY OR COMPLETENESS OF SCANNED COPIES OF THIS PLAN SHEET.

CURVE DATA

No. ⓡ	R	Δ	T	L	N	E
21	214′	124°29′05"	406.61′	464.95′	2572997.56	6063855.24

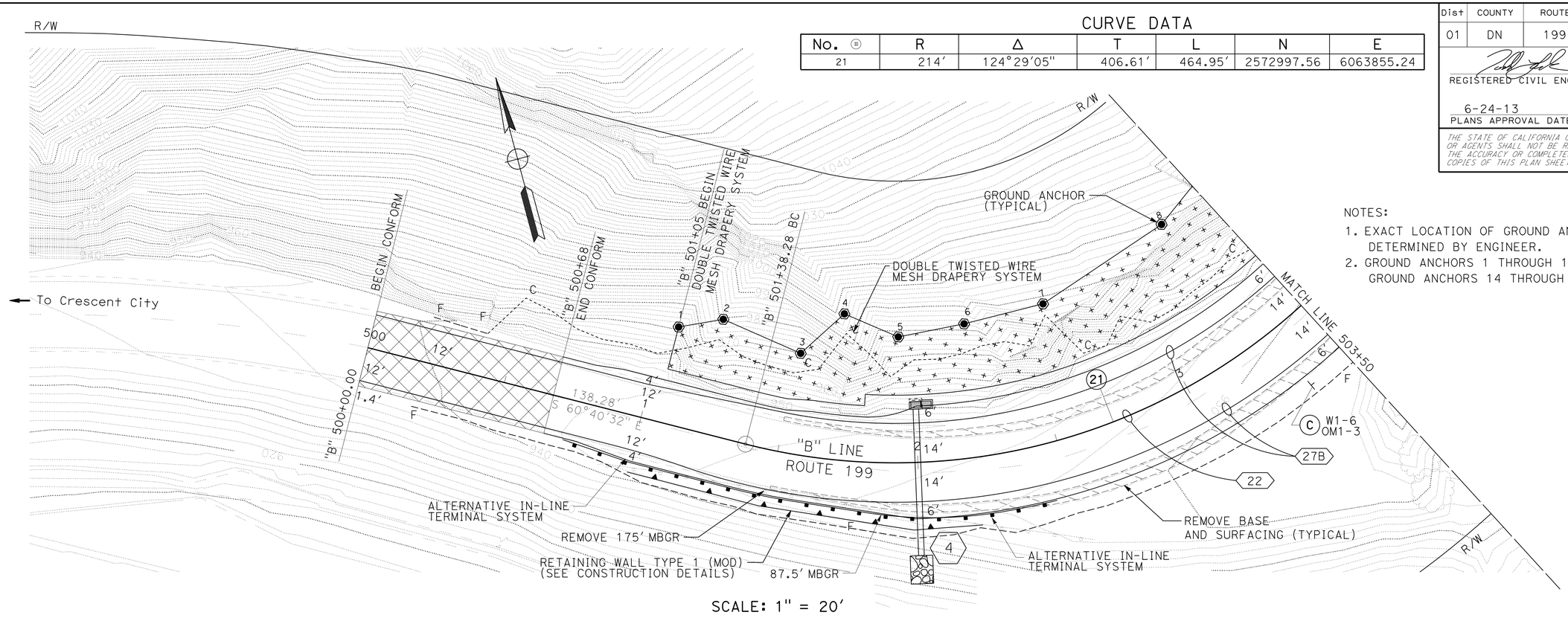

NOTES:

1. EXACT LOCATION OF GROUND ANCHORS TO BE DETERMINED BY ENGINEER.
2. GROUND ANCHORS 1 THROUGH 13 ARE IN ROCK. GROUND ANCHORS 14 THROUGH 19 ARE IN SOIL.

SCALE: 1" = 20′

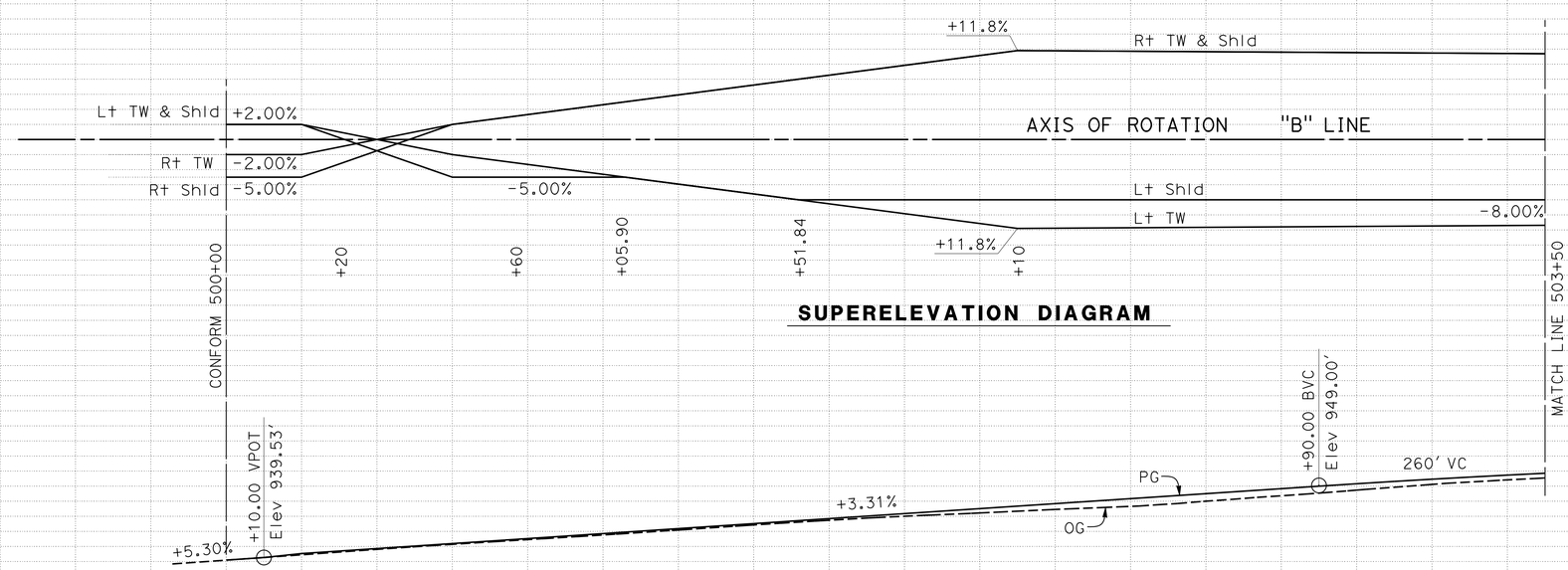

SUPERELEVATION DIAGRAM

PROFILE

SCALE: 1" = 20′ Horiz
1" = 10′ Vert

(LOCATION 2)
LAYOUT
SCALE AS SHOWN

L-5

STATION	500	501	502	503	504	TOTAL
CY Exc						
CY Emb						

STATE OF CALIFORNIA - DEPARTMENT OF TRANSPORTATION
Caltrans® DESIGN

FUNCTIONAL SUPERVISOR: L.R. ASHLEY
CALCULATED-DESIGNED BY: TODD LARK
CHECKED BY: BIJAN SAMRAD
REVISED BY / DATE REVISED

LAST REVISION 04-08-13
DATE PLOTTED => 27-JUN-2013
TIME PLOTTED => 12:27

P:\PROJ\01\47940\draffing\01000003711\01000003711ea005.dgn

Dist	COUNTY	ROUTE	POST MILES TOTAL PROJECT	SHEET No.	TOTAL SHEETS
01	DN	199	20.3/25.9	13	184

REGISTERED CIVIL ENGINEER 04/09/13 DATE

6-24-13
PLANS APPROVAL DATE

REGISTERED PROFESSIONAL ENGINEER T. LARK No. 52481 Exp. 12/31/14 CIVIL STATE OF CALIFORNIA

THE STATE OF CALIFORNIA OR ITS OFFICERS OR AGENTS SHALL NOT BE RESPONSIBLE FOR THE ACCURACY OR COMPLETENESS OF SCANNED COPIES OF THIS PLAN SHEET.

CURVE DATA

No. ⊕	R	Δ	T	L	N	E
21	214′	124°29′05″	406.61′	464.95′	2572997.56	6063855.24

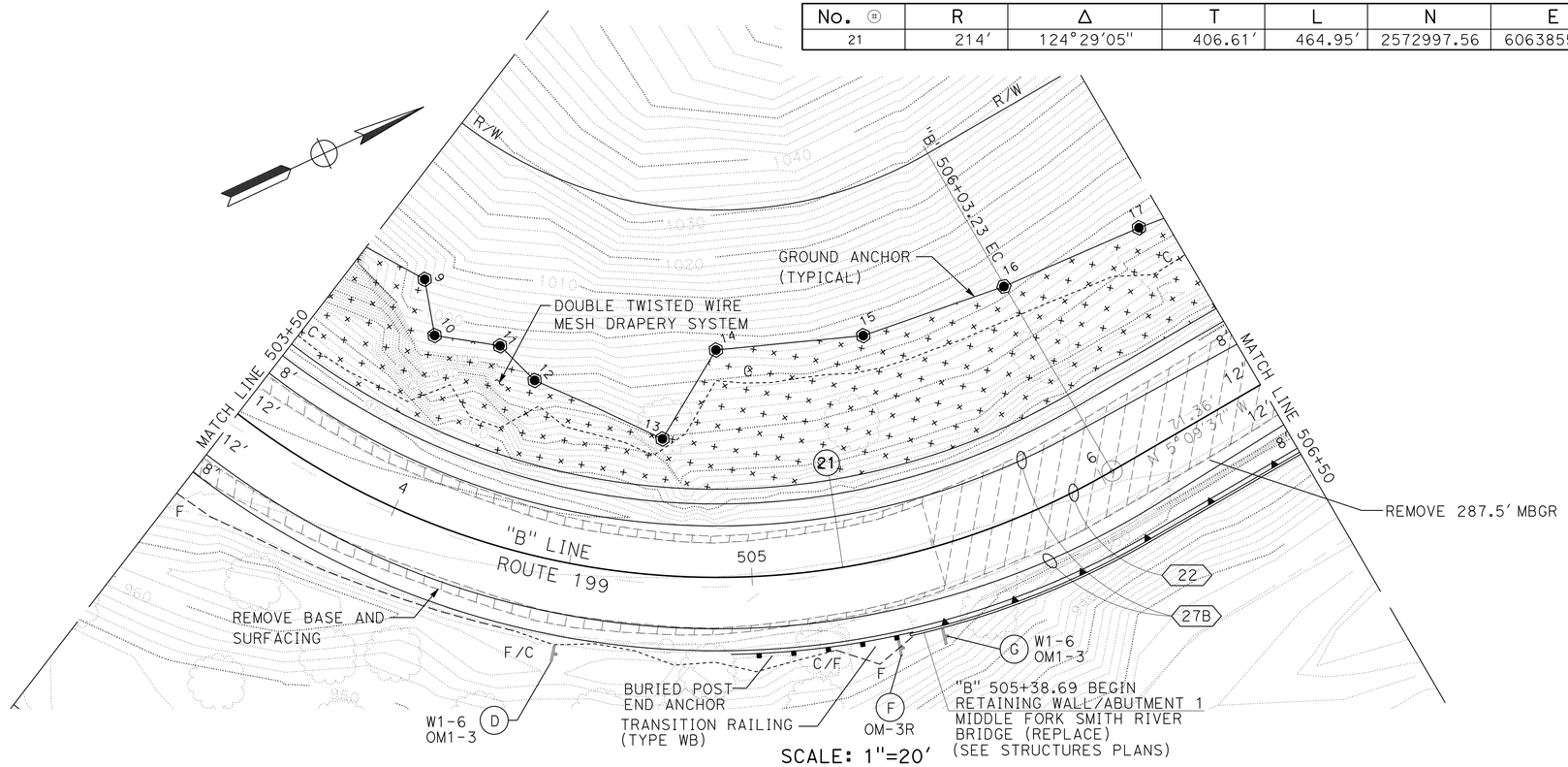

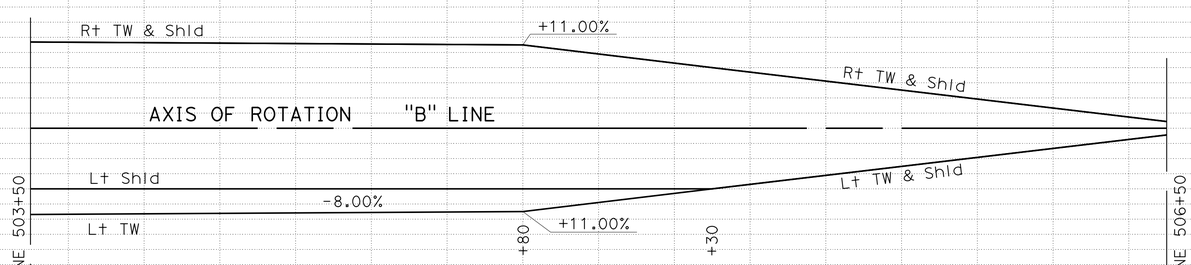

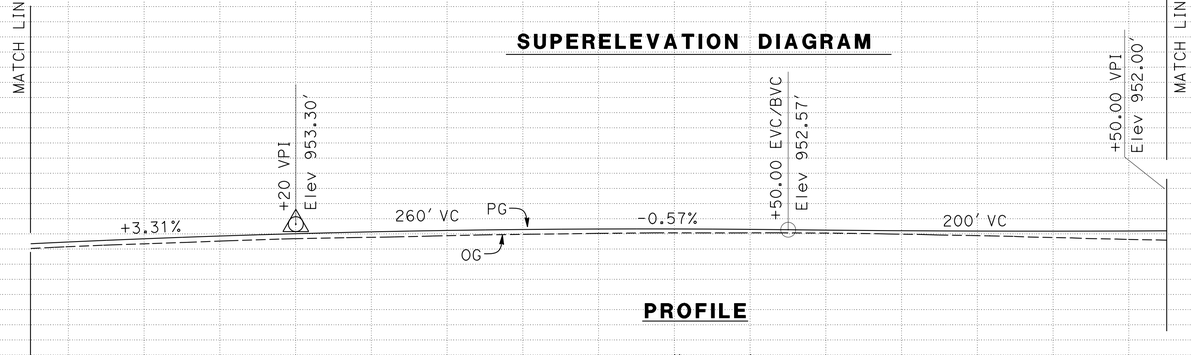

(LOCATION 2)
LAYOUT
SCALE AS SHOWN

L-6

STATION	503	504	505	506	507	TOTAL
CY Exc						
CY Emb						

REVISED BY | DATE REVISED
TODD LARK | BIJAN SAMRAD
CALCULATED-DESIGNED BY | CHECKED BY
FUNCTIONAL SUPERVISOR | L.R. ASHLEY

STATE OF CALIFORNIA - DEPARTMENT OF TRANSPORTATION
Caltrans DESIGN

P:\PROJ\01\47940\draffing\01000003711\01000003711ea006.dgn

LAST REVISION 04-08-13 | DATE PLOTTED => 22-JUN-2013 | TIME PLOTTED => 10:08

Dist	COUNTY	ROUTE	POST MILES TOTAL PROJECT	SHEET No.	TOTAL SHEETS
01	DN	199	20.3/25.9	14	184

REGISTERED CIVIL ENGINEER 04/09/13 DATE

6-24-13
PLANS APPROVAL DATE

REGISTERED PROFESSIONAL ENGINEER T. LARK No. 52481 Exp. 12/31/14 CIVIL STATE OF CALIFORNIA

THE STATE OF CALIFORNIA OR ITS OFFICERS OR AGENTS SHALL NOT BE RESPONSIBLE FOR THE ACCURACY OR COMPLETENESS OF SCANNED COPIES OF THIS PLAN SHEET.

CURVE DATA

No. ⊕	R	Δ	T	L	N	E
22	350′	26°01′47″	80.90′	159.01′	2573119.36	6064410.54
23	350′	31°48′06″	99.71′	194.27′	2573512.22	6063811.17

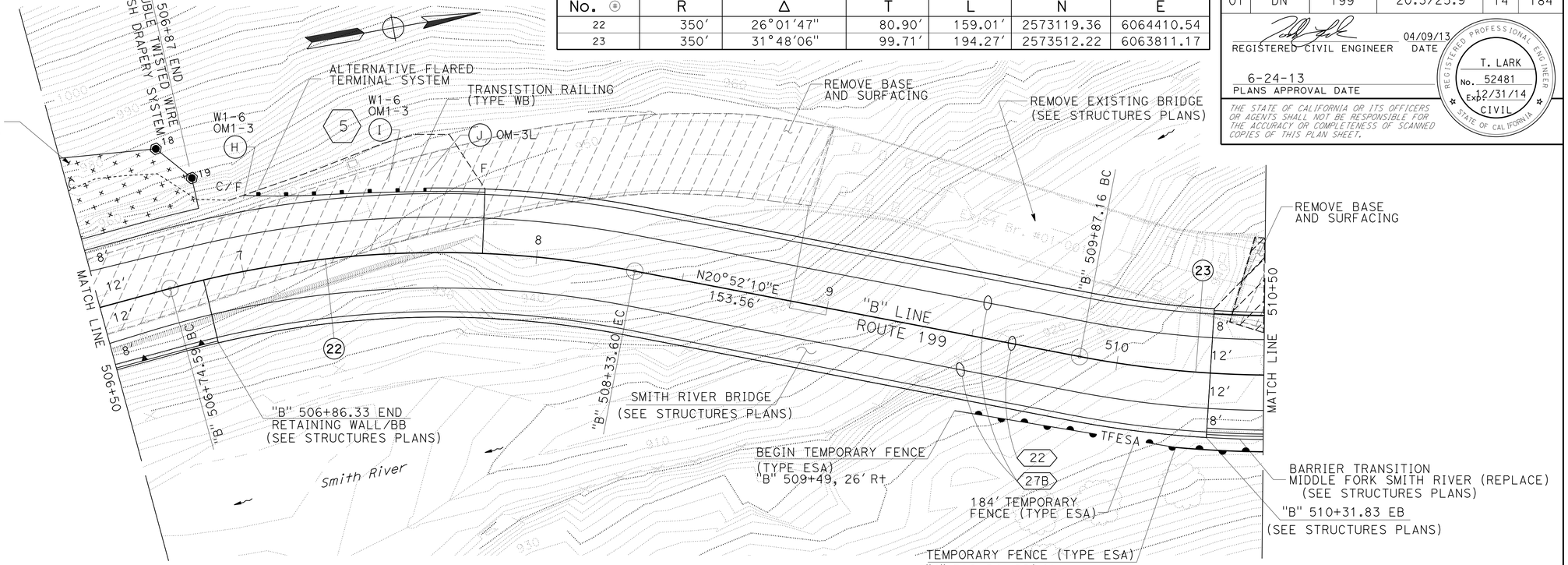

SCALE: 1"=20′

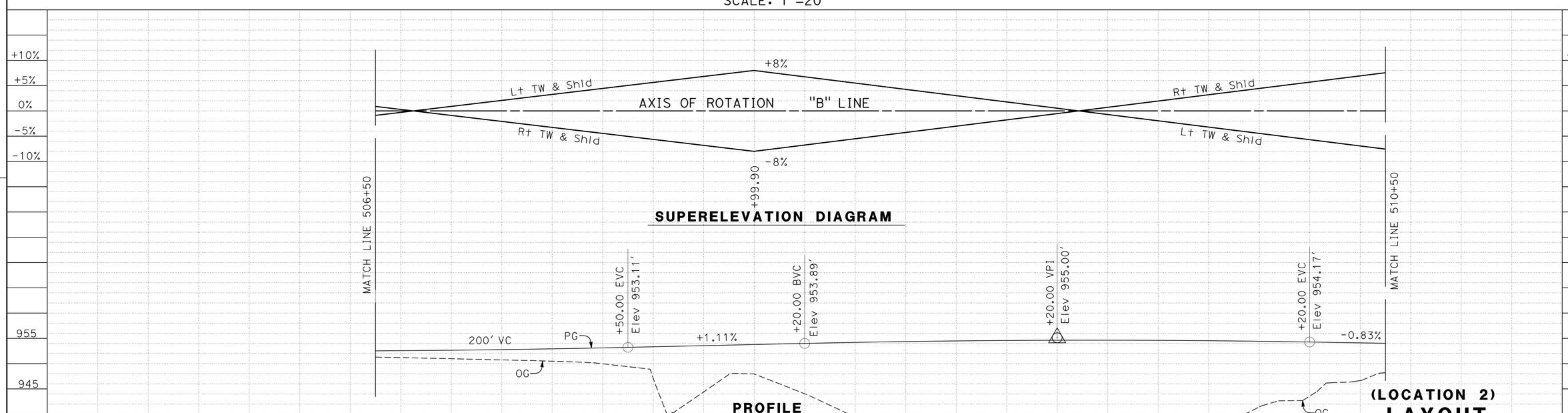

PROFILE

SCALE: 1" = 20′ Horiz
1" = 10′ Vert

(LOCATION 2)
LAYOUT
SCALE AS SHOWN

L-7

REVISED BY	DATE REVISED
TODD LARK	BIJAN SAMRAD
CALCULATED-DESIGNED BY	CHECKED BY
FUNCTIONAL SUPERVISOR	L.R. ASHLEY

STATE OF CALIFORNIA - DEPARTMENT OF TRANSPORTATION
DESIGN
Caltrans

P:\PROJ\01\47940\drafting\0100000371\0100000371ea007.dgn

LAST REVISION 04-08-13
DATE PLOTTED => 26-JUN-2013
TIME PLOTTED => 11:18

Dist	COUNTY	ROUTE	POST MILES TOTAL PROJECT	SHEET No.	TOTAL SHEETS
01	DN	199	20.3/25.9	15	184

REGISTERED CIVIL ENGINEER 04/09/13 DATE

6-24-13
PLANS APPROVAL DATE

REGISTERED PROFESSIONAL ENGINEER T. LARK No. 52481 Exp. 12/31/14 CIVIL STATE OF CALIFORNIA

THE STATE OF CALIFORNIA OR ITS OFFICERS OR AGENTS SHALL NOT BE RESPONSIBLE FOR THE ACCURACY OR COMPLETENESS OF SCANNED COPIES OF THIS PLAN SHEET.

CURVE DATA

No.	R	Δ	T	L	N	E
23	350′	31°48′06″	99.71′	194.27′	2573512.22	6063811.17

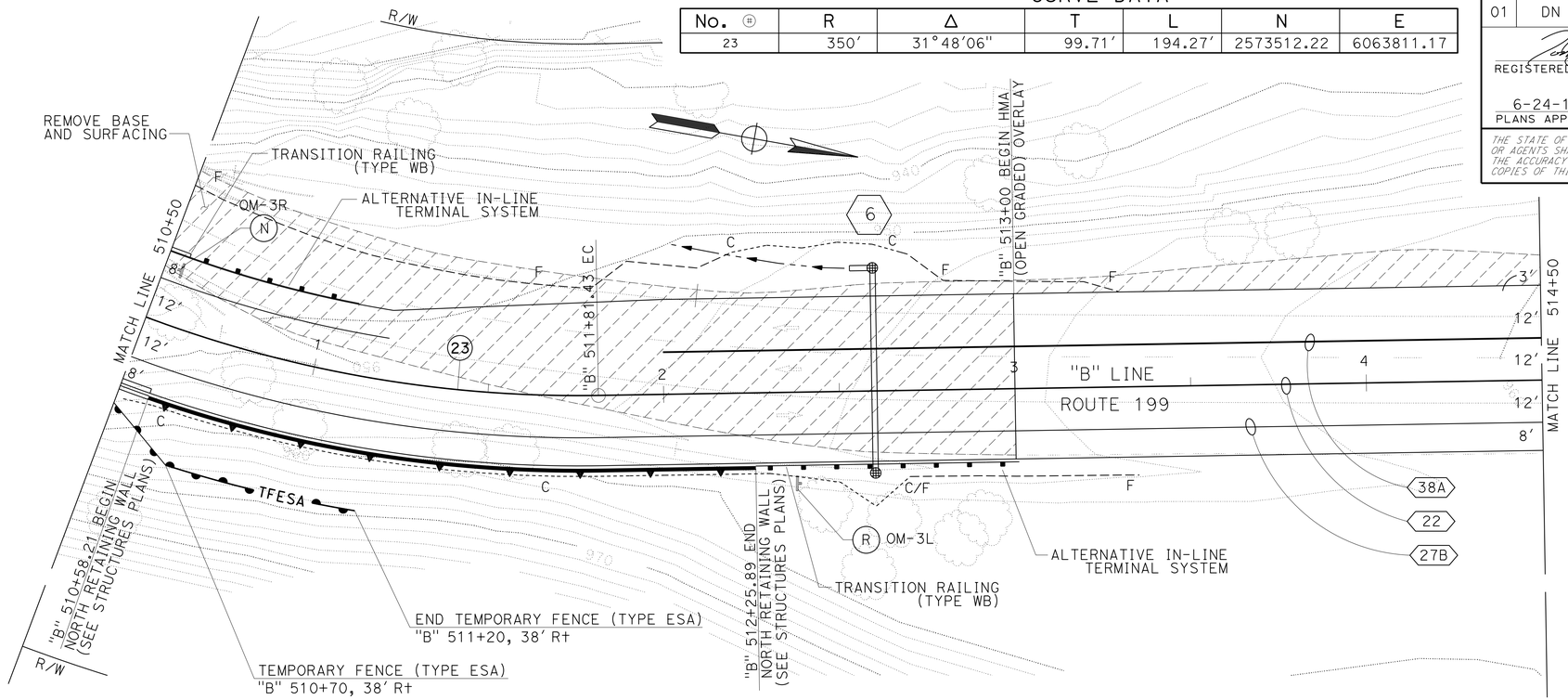

SCALE: 1"=20′

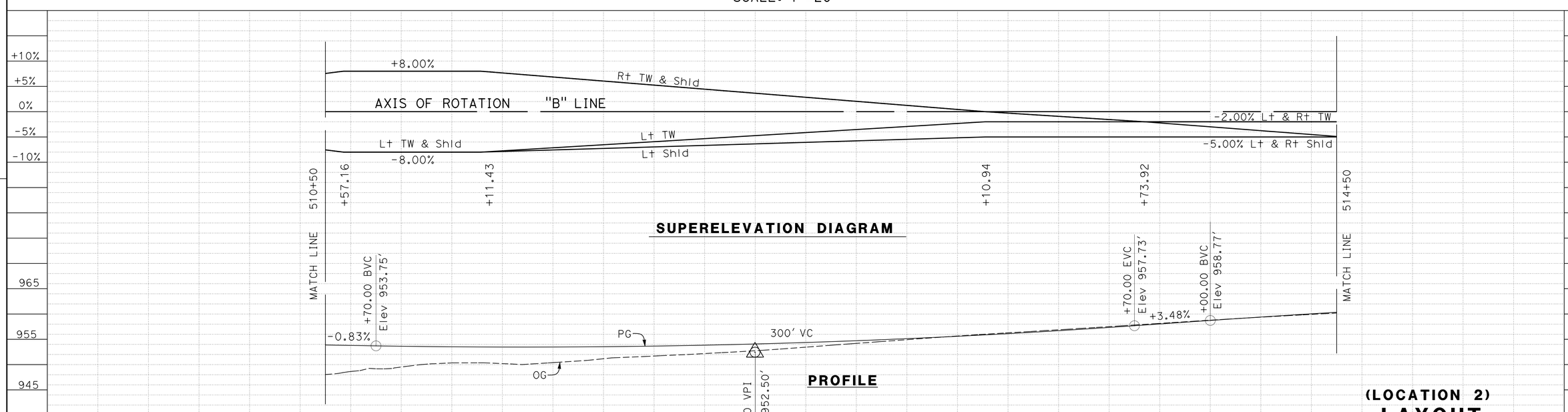

(LOCATION 2)
LAYOUT
SCALE AS SHOWN

L-8

REVISED BY | DATE REVISED
TODD LARK | BIJAN SAMRAD
CALCULATED-DESIGNED BY | CHECKED BY
FUNCTIONAL SUPERVISOR: L.R. ASHLEY

STATE OF CALIFORNIA - DEPARTMENT OF TRANSPORTATION
DESIGN
Caltrans

P:\PROJ\01\47940\drafting\01000003711\0100000371ea008.dgn

LAST REVISION 04-08-13 | DATE PLOTTED => 22-JUN-2013 | TIME PLOTTED => 10:08

Dist	COUNTY	ROUTE	POST MILES TOTAL PROJECT	SHEET No.	TOTAL SHEETS
01	DN	199	20.3/25.9	16	184

REGISTERED CIVIL ENGINEER 04/09/13 DATE

6-24-13
PLANS APPROVAL DATE

REGISTERED PROFESSIONAL ENGINEER T. LARK No. 52481 Exp. 12/31/14 CIVIL STATE OF CALIFORNIA

THE STATE OF CALIFORNIA OR ITS OFFICERS OR AGENTS SHALL NOT BE RESPONSIBLE FOR THE ACCURACY OR COMPLETENESS OF SCANNED COPIES OF THIS PLAN SHEET.

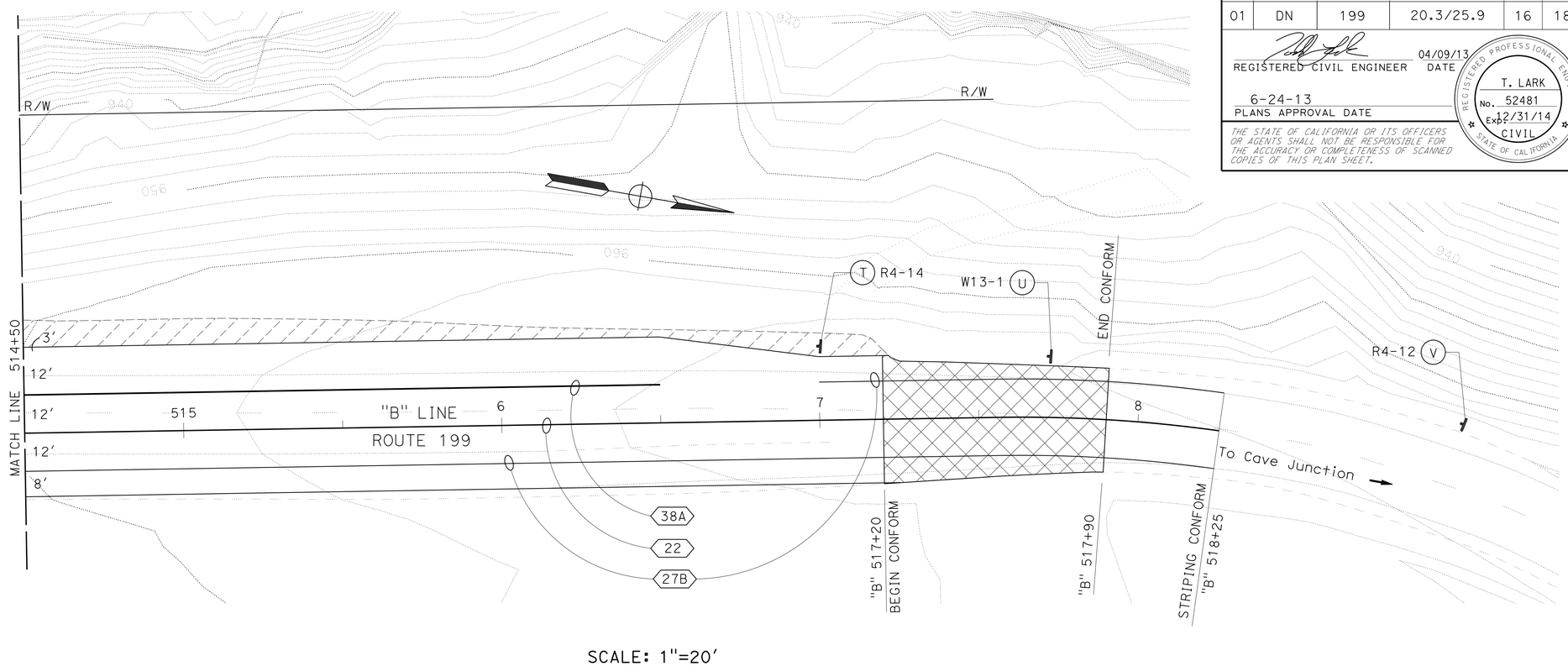

SCALE: 1"=20'

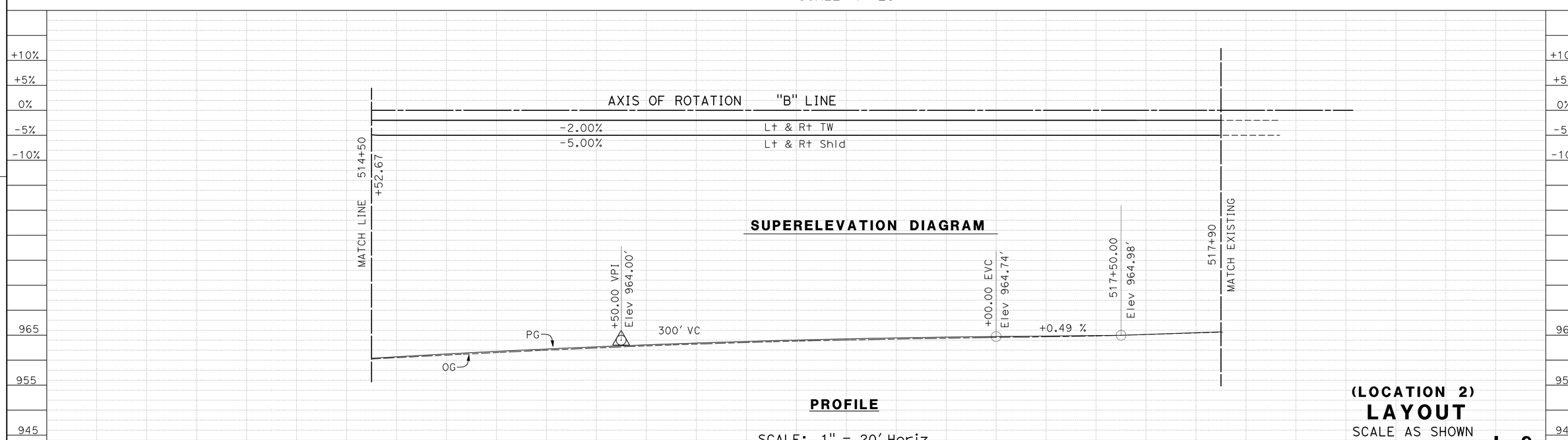

SUPERELEVATION DIAGRAM

PROFILE

SCALE: 1" = 20' Horiz
1" = 10' Vert

(LOCATION 2)
LAYOUT
SCALE AS SHOWN

L-9

REVISED BY	DATE REVISED
TODD LARK	BIJAN SAMRAD
CALCULATED-DESIGNED BY	CHECKED BY
FUNCTIONAL SUPERVISOR	L.R. ASHLEY

STATE OF CALIFORNIA - DEPARTMENT OF TRANSPORTATION
Caltrans
DESIGN

P:\PROJ\01\47940\drafting\0100000371\0100000371ea009.dgn

LAST REVISION 04-08-13
DATE PLOTTED => 22-JUN-2013
TIME PLOTTED => 10:08

Dist	COUNTY	ROUTE	POST MILES TOTAL PROJECT	SHEET No.	TOTAL SHEETS
01	DN	199	20.3/25.9	17	184

REGISTERED CIVIL ENGINEER 04/09/13 DATE

6-24-13
PLANS APPROVAL DATE

REGISTERED PROFESSIONAL ENGINEER T. LARK No. 52481 Exp. 12/31/14 CIVIL STATE OF CALIFORNIA

THE STATE OF CALIFORNIA OR ITS OFFICERS OR AGENTS SHALL NOT BE RESPONSIBLE FOR THE ACCURACY OR COMPLETENESS OF SCANNED COPIES OF THIS PLAN SHEET.

CURVE DATA

No. ⊕	R	Δ	T	L	N	E
31	895′	25°56′10"	206.10′	405.14′	2575738.14	6068613.84
32	300′	30°12′35"	80.97′	158.18′	2575448.28	6069774.31

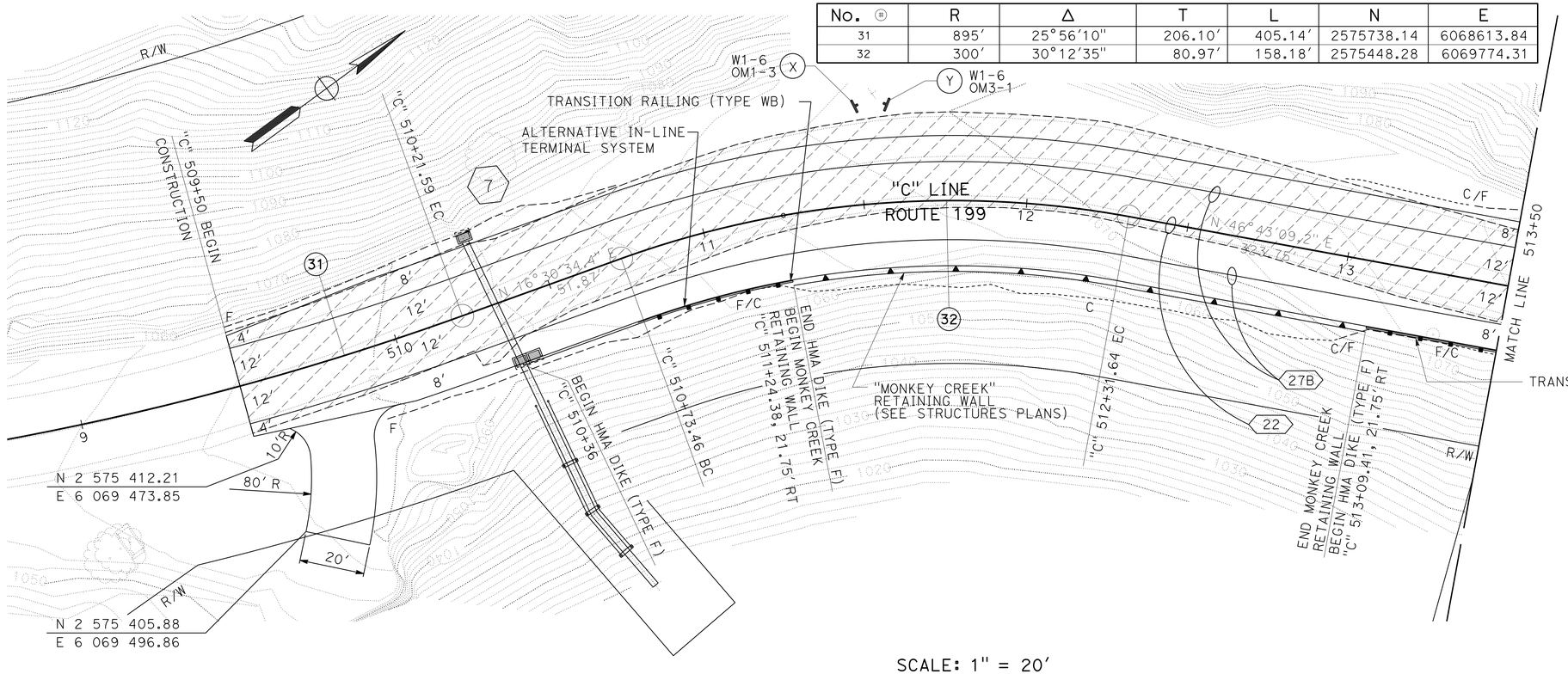

SCALE: 1" = 20′

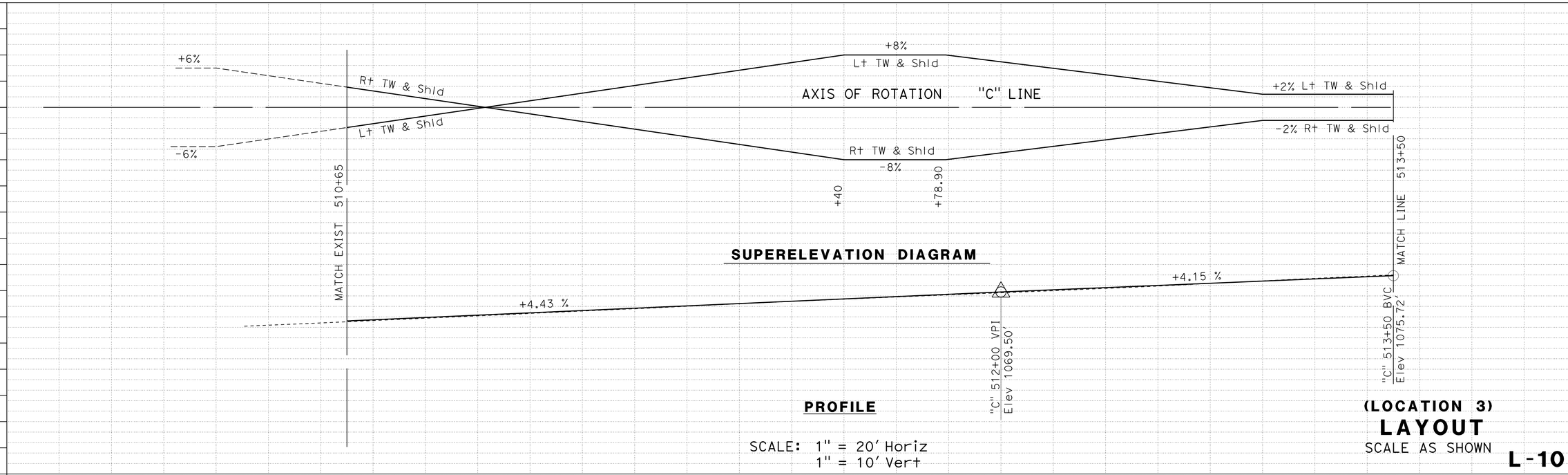

(LOCATION 3)
LAYOUT
SCALE AS SHOWN

L-10

REVISED BY	DATE REVISED

CALCULATED-DESIGNED BY: TODD LARK
CHECKED BY: BIJAN SAMRAD

FUNCTIONAL SUPERVISOR: L.R. ASHLEY

STATE OF CALIFORNIA - DEPARTMENT OF TRANSPORTATION
Caltrans
DESIGN

P:\PROJ\01\47940\draffing\01000003711\01000003711ea010.dgn

LAST REVISION 04-08-13
DATE PLOTTED => 22-JUN-2013
TIME PLOTTED => 10:08

Dist	COUNTY	ROUTE	POST MILES TOTAL PROJECT	SHEET No.	TOTAL SHEETS
01	DN	199	20.3/25.9	18	184

REGISTERED CIVIL ENGINEER 04/09/13 DATE

6-24-13
PLANS APPROVAL DATE

REGISTERED PROFESSIONAL ENGINEER T. LARK No. 52481 Exp. 12/31/14 CIVIL STATE OF CALIFORNIA

THE STATE OF CALIFORNIA OR ITS OFFICERS OR AGENTS SHALL NOT BE RESPONSIBLE FOR THE ACCURACY OR COMPLETENESS OF SCANNED COPIES OF THIS PLAN SHEET.

CURVE DATA

No. ⊕	R	Δ	T	L	N	E
33	300′	26°37′31″	70.99′	139.41′	2575670.23	6070010.00

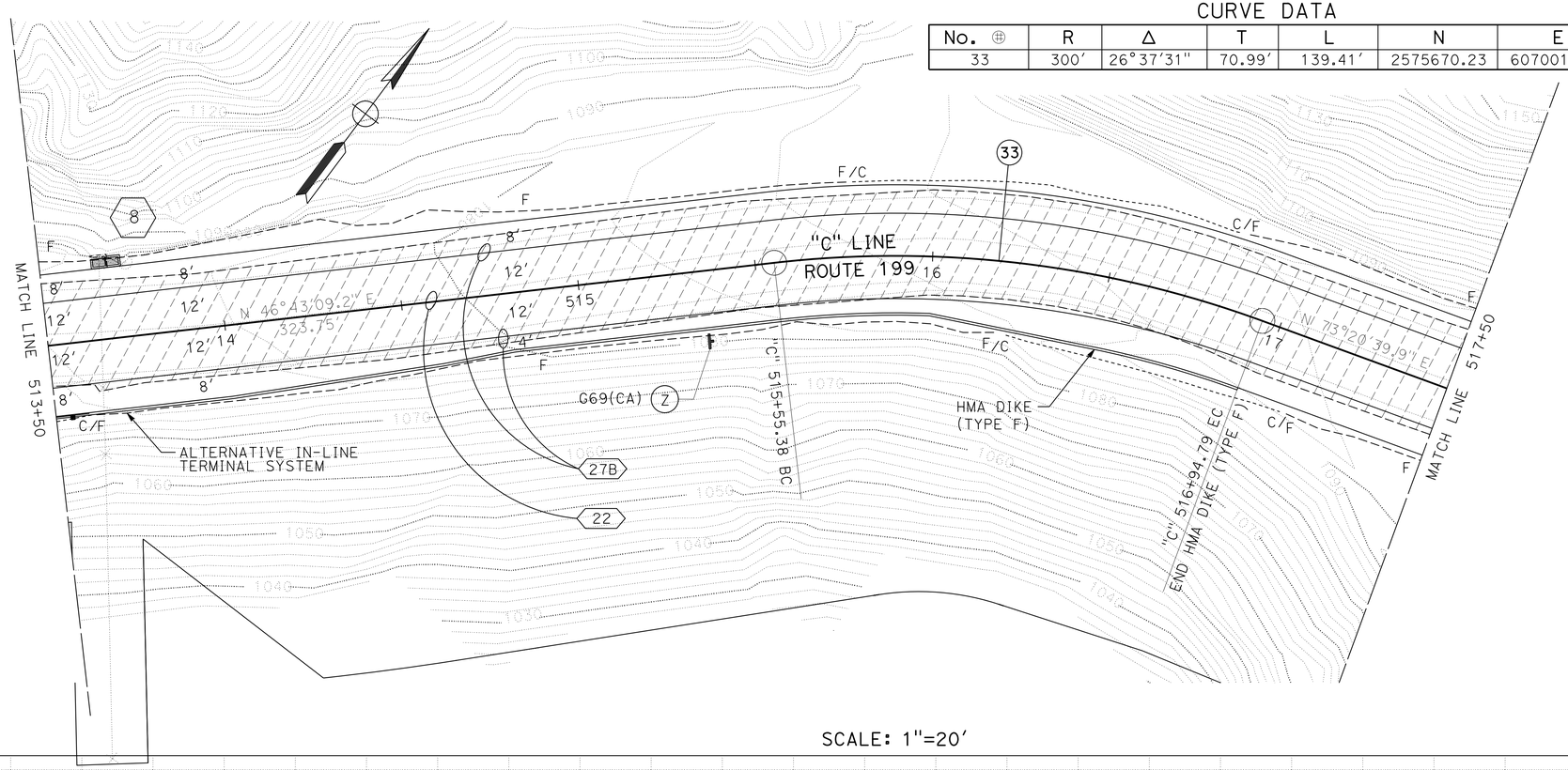

SCALE: 1"=20′

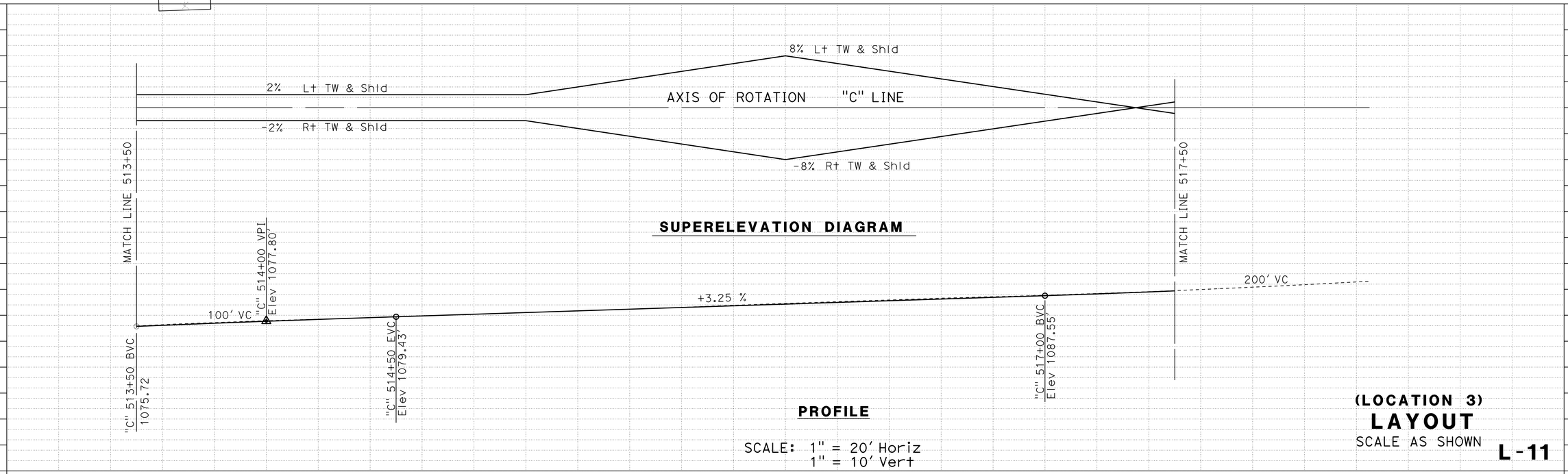

(LOCATION 3)
LAYOUT
SCALE AS SHOWN

L-11

STATE OF CALIFORNIA - DEPARTMENT OF TRANSPORTATION
Caltrans® **DESIGN**

FUNCTIONAL SUPERVISOR: L.R. ASHLEY
CALCULATED-DESIGNED BY: TODD LARK
CHECKED BY: BIJAN SAMRAD
REVISED BY
DATE REVISED

P:\PROJ\01\47940\draffing\0100000371\0100000371ea011.dgn

LAST REVISION 04-08-13
DATE PLOTTED => 26-JUN-2013
TIME PLOTTED => 11:14

Dist	COUNTY	ROUTE	POST MILES TOTAL PROJECT	SHEET No.	TOTAL SHEETS
01	DN	199	20.3/25.9	19	184

REGISTERED CIVIL ENGINEER 04/09/13 DATE

6-24-13
PLANS APPROVAL DATE

REGISTERED PROFESSIONAL ENGINEER T. LARK No. 52481 Exp. 12/31/14 CIVIL STATE OF CALIFORNIA

THE STATE OF CALIFORNIA OR ITS OFFICERS OR AGENTS SHALL NOT BE RESPONSIBLE FOR THE ACCURACY OR COMPLETENESS OF SCANNED COPIES OF THIS PLAN SHEET.

CURVE DATA

No. ⊕	R	Δ	T	L	N	E
34	300′	36°48′11"	99.81′	192.70′	2576265.77	6069907.25
35	500′	10°53′02"	47.63′	94.98′	2575840.17	6070587.58

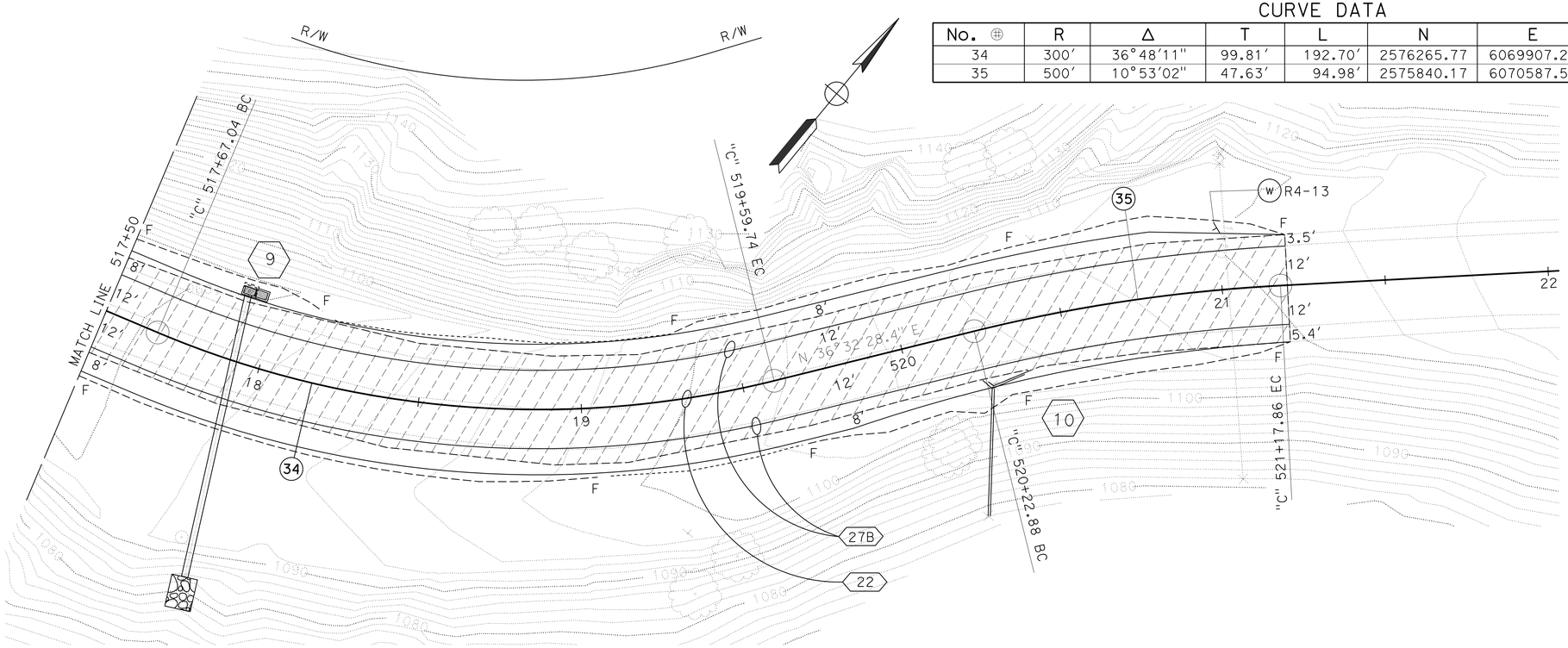

SCALE: 1"=20′

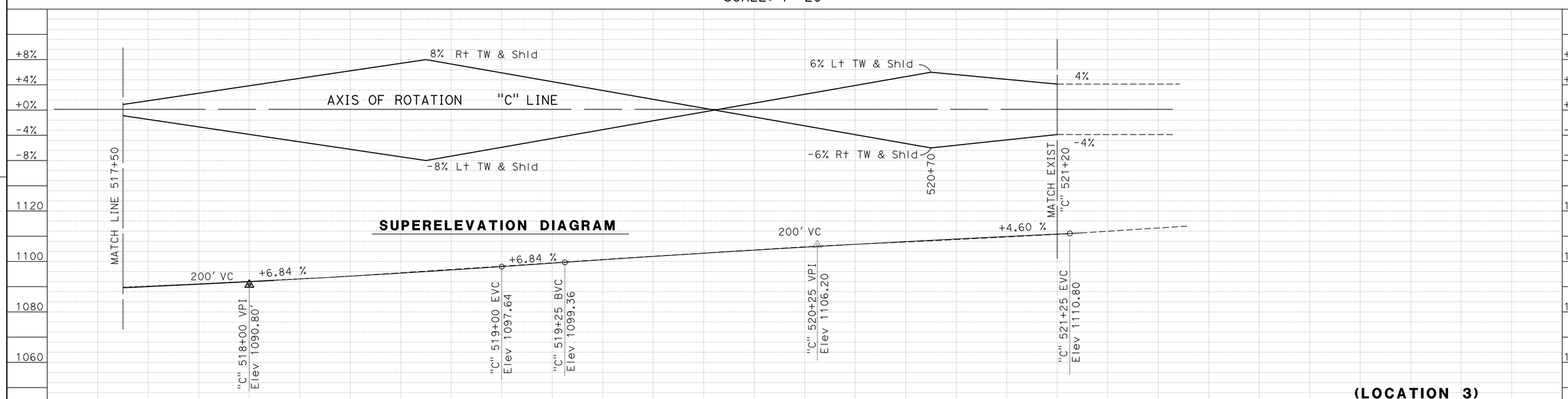

PROFILE

SCALE: 1" = 20′ Horiz
1" = 10′ Vert

(LOCATION 3)

LAYOUT

SCALE AS SHOWN

L-12

REVISED BY	DATE REVISED
TODD LARK	BIJAN SAMRAD

CALCULATED-DESIGNED BY / CHECKED BY

FUNCTIONAL SUPERVISOR: L.R. ASHLEY

STATE OF CALIFORNIA - DEPARTMENT OF TRANSPORTATION

DESIGN

Caltrans

P:\PROJ\01\47940\drafting\010000371\010000371ea012.dgn

LAST REVISION 04-08-13 | DATE PLOTTED => 27-JUN-2013 | TIME PLOTTED => 10:26

Dist	COUNTY	ROUTE	POST MILES TOTAL PROJECT	SHEET No.	TOTAL SHEETS
01	DN	199	20.3/25.9	20	184

REGISTERED CIVIL ENGINEER 04/09/13 DATE

6-24-13
PLANS APPROVAL DATE

REGISTERED PROFESSIONAL ENGINEER T. LARK No. 52481 Exp. 12/31/14 CIVIL STATE OF CALIFORNIA

THE STATE OF CALIFORNIA OR ITS OFFICERS OR AGENTS SHALL NOT BE RESPONSIBLE FOR THE ACCURACY OR COMPLETENESS OF SCANNED COPIES OF THIS PLAN SHEET.

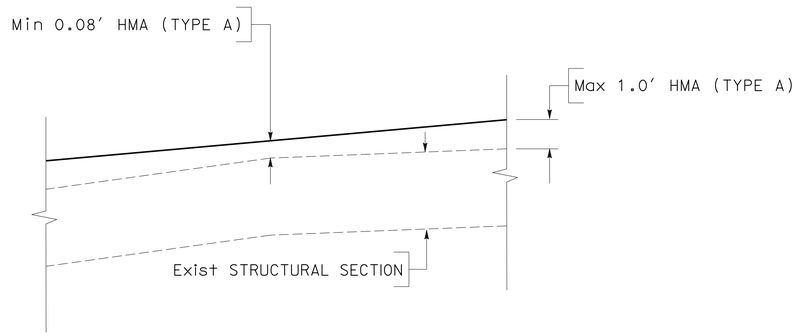

SUPERELEVATION CORRECTION DETAIL

LOCATIONS 1 and 2

Sta "A" 11+00 TO "A" 22+29.64
Sta "B" 500+00 TO "B" 505+40

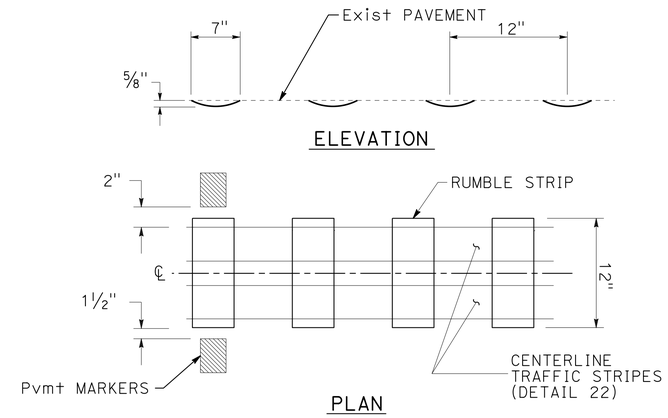

CENTERLINE RUMBLE STRIP DETAIL 22

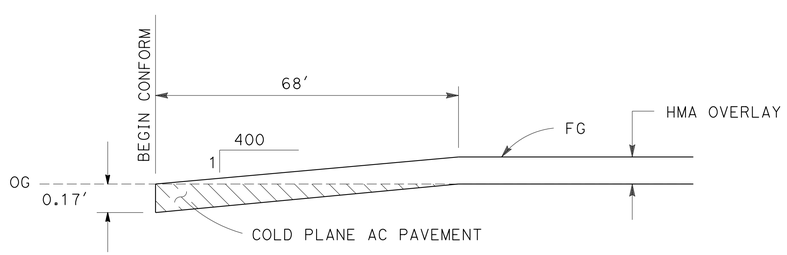

COLD PLANE AC PAVEMENT

"A" 10+65 CONFORM TO BEGIN HMA OVERLAY
"B" 500+00 CONFORM TO BEGIN HMA OVERLAY
"B" 517+90 CONFORM TO END HMA OVERLAY

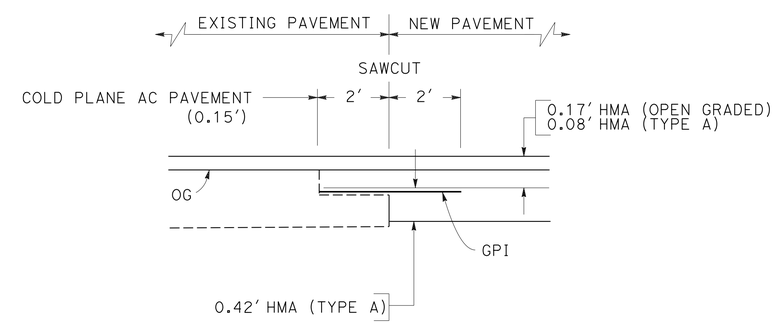

GEOSYNTHETIC PAVEMENT INTERLAYER (GPI)

"A" 11+00.00 TO "A" 22+29.64 Lt
"A" 20+40.00 TO "A" 22+29.64 Rt
"B" 500+50.00 TO "B" 505+38.69 Lt & Rt
"B" 505+38.69 TO "B" 506+86.33 Rt

CONSTRUCTION DETAILS

NO SCALE

C-1

REVISED BY | DATE REVISED
TODD LARK | BIJAN SAMRAD
CALCULATED-DESIGNED BY | CHECKED BY
FUNCTIONAL SUPERVISOR: L.R. ASHLEY

STATE OF CALIFORNIA - DEPARTMENT OF TRANSPORTATION
Caltrans
DESIGN

P:\PROJ\01\47940\drafting\01000003711\0100000371ga001.dgn

LAST REVISION 04-08-13 | DATE PLOTTED => 22-JUN-2013 | TIME PLOTTED => 10:08

Dist	COUNTY	ROUTE	POST MILES TOTAL PROJECT	SHEET No.	TOTAL SHEETS
01	DN	199	20.3/25.9	21	184

REGISTERED CIVIL ENGINEER 04/09/13 DATE

6-24-13
PLANS APPROVAL DATE

REGISTERED PROFESSIONAL ENGINEER T. LARK No. 52481 Exp. 12/31/14 CIVIL STATE OF CALIFORNIA

THE STATE OF CALIFORNIA OR ITS OFFICERS OR AGENTS SHALL NOT BE RESPONSIBLE FOR THE ACCURACY OR COMPLETENESS OF SCANNED COPIES OF THIS PLAN SHEET.

NOTES:

1. MINIMUM ALLOWABLE DESIGN LOAD OF ANCHORS SHALL BE 2 TONS.
2. TAG LINES ARE USED TO CONNECT THE TOP SUPPORT WIRE ROPE TO AN ALTERNATE, MORE SUITABLE, GROUND ANCHOR LOCATION, AS DETERMINED BY THE ENGINEER.
3. THE LENGTH OF THE SUPPORT WIRE ROPE SHOULD BE A MAXIMUM OF 200 FEET.

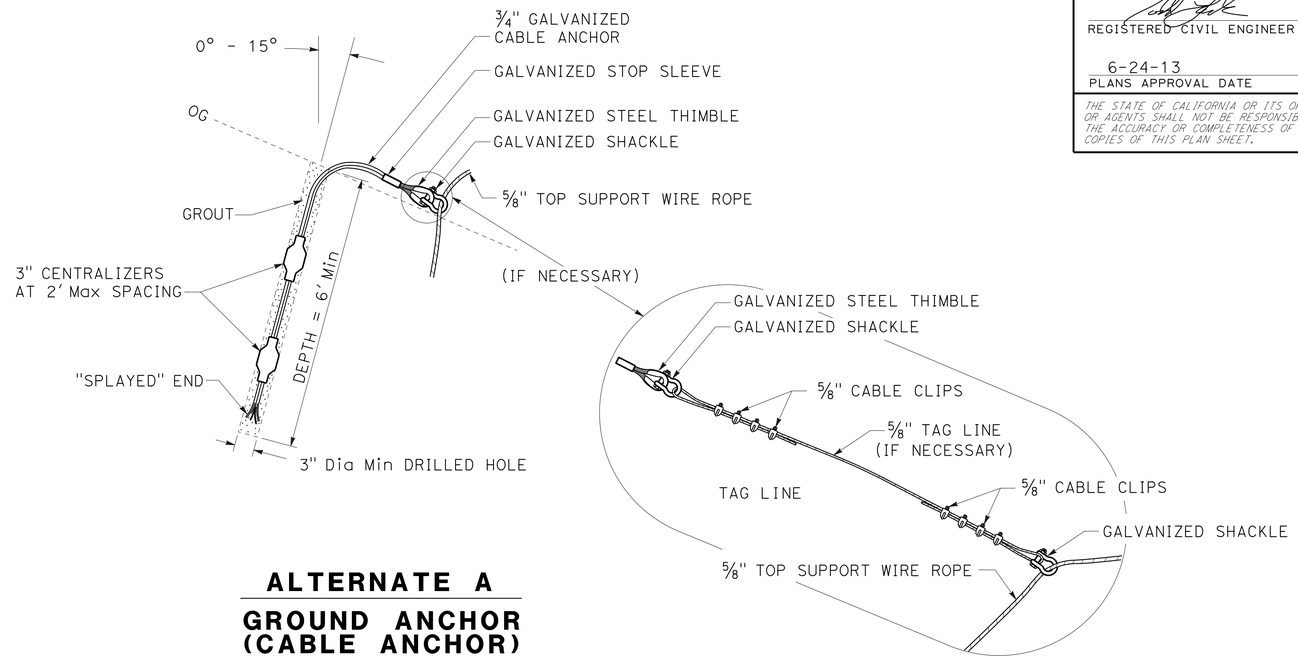

ALTERNATE A

GROUND ANCHOR (CABLE ANCHOR)

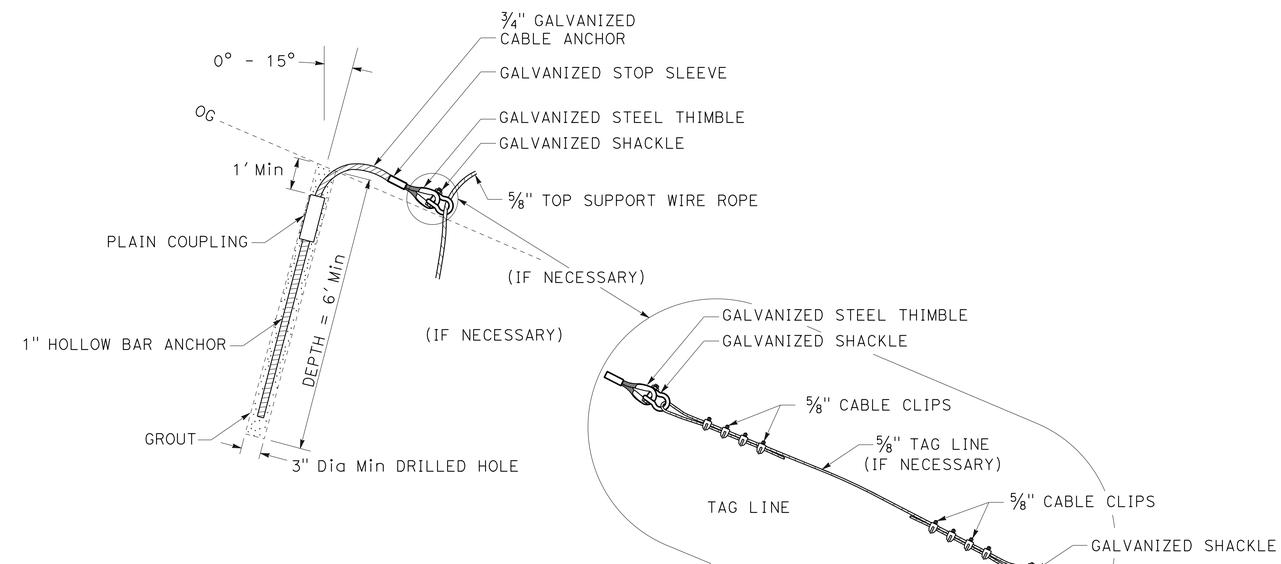

ALTERNATE B

GROUND ANCHOR (HOLLOW BAR ANCHOR)

CONSTRUCTION DETAILS
DOUBLE TWISTED WIRE MESH DRAPERY

NO SCALE

C-2

REVISED BY	DATE REVISED
TODD LARK	BIJAN SAMRAD

CALCULATED-DESIGNED BY / CHECKED BY

FUNCTIONAL SUPERVISOR: L.R. ASHLEY

STATE OF CALIFORNIA - DEPARTMENT OF TRANSPORTATION

Caltrans® DESIGN

P:\PROJ\01\47940\drafting\0100000371\0100000371ga002.dgn

LAST REVISION 04-08-13 | DATE PLOTTED => 22-JUN-2013 | TIME PLOTTED => 10:08

Dist	COUNTY	ROUTE	POST MILES TOTAL PROJECT	SHEET No.	TOTAL SHEETS
01	DN	199	20.3/25.9	22	184

REGISTERED CIVIL ENGINEER 04/09/13 DATE

6-24-13
PLANS APPROVAL DATE

REGISTERED PROFESSIONAL ENGINEER T. LARK No. 52481 Exp. 12/31/14 CIVIL STATE OF CALIFORNIA

THE STATE OF CALIFORNIA OR ITS OFFICERS OR AGENTS SHALL NOT BE RESPONSIBLE FOR THE ACCURACY OR COMPLETENESS OF SCANNED COPIES OF THIS PLAN SHEET.

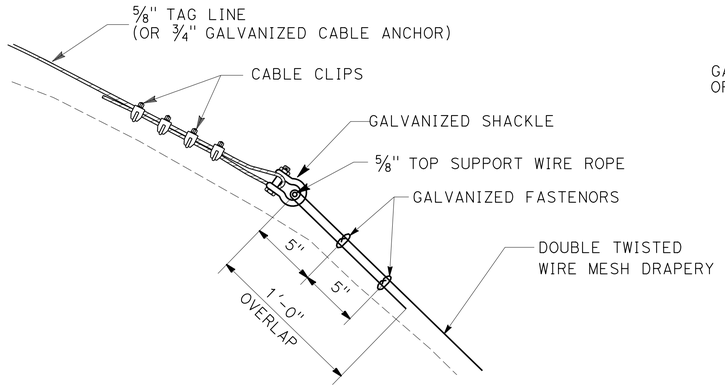

SECTION A-A

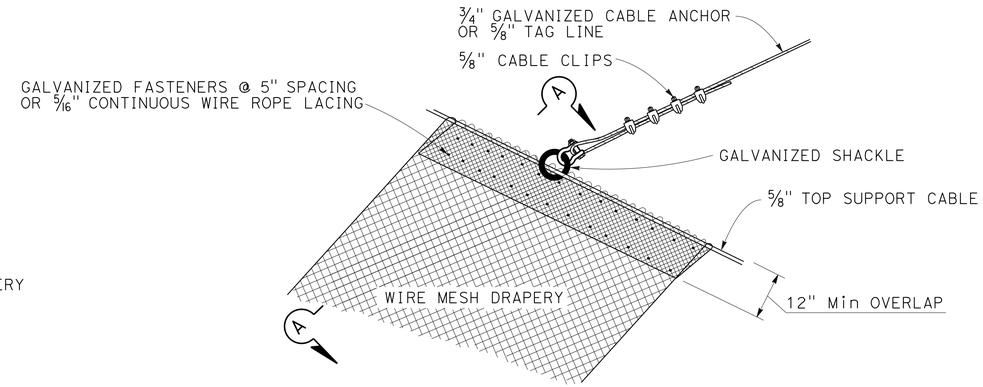

TAG LINE TO TOP SUPPORT CABLE CONNECTION
DETAIL A

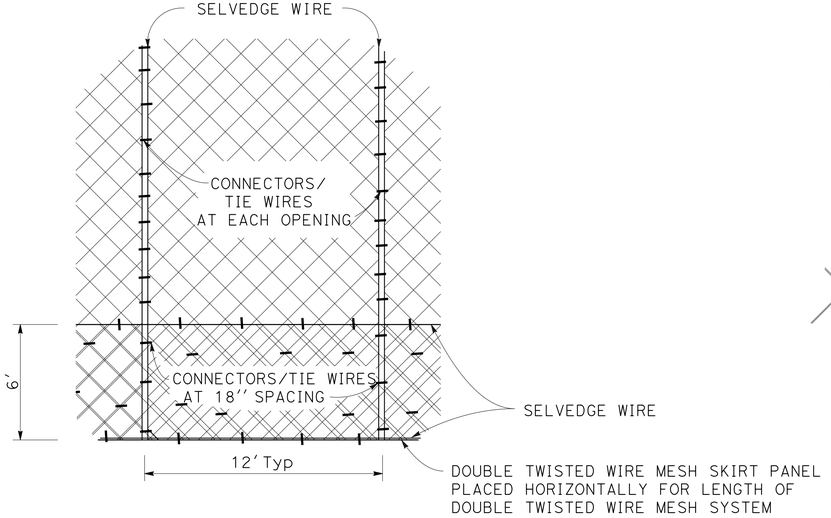

SKIRT PANEL DETAIL

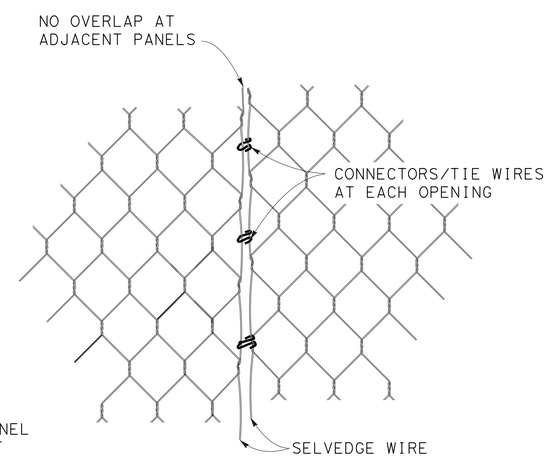

ADJACENT PANEL DETAIL

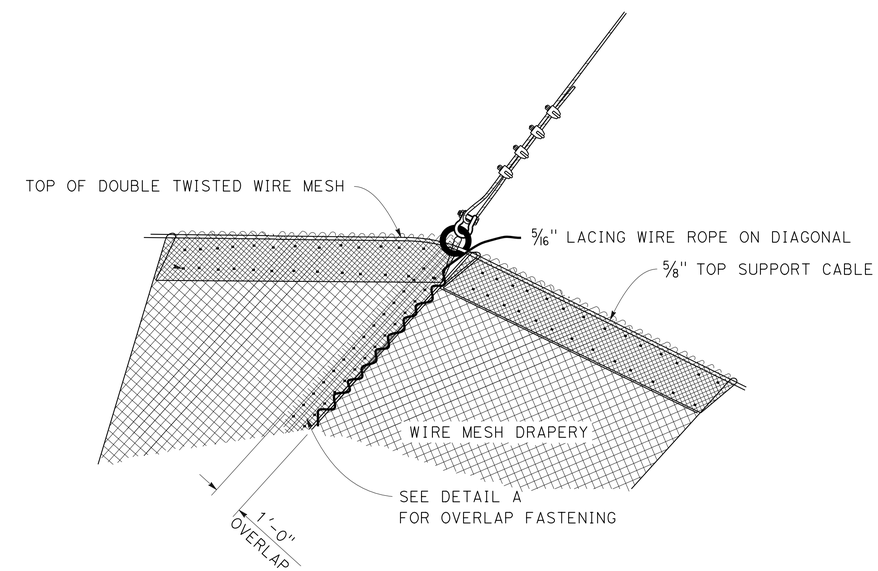

DOUBLE TWISTED WIRE MESH TO DIAGONAL TOP SUPPORT ROPE CONNECTION DETAIL

CONSTRUCTION DETAILS
DOUBLE TWISTED WIRE MESH DRAPERY
NO SCALE

C-3

REVISED BY	DATE REVISED

CALCULATED-DESIGNED BY	CHECKED BY
TODD LARK	BIJAN SAMRAD

FUNCTIONAL SUPERVISOR: L.R. ASHLEY

STATE OF CALIFORNIA - DEPARTMENT OF TRANSPORTATION
Caltrans
DESIGN

P:\PROJ\01\47940\drafting\01000003711\01000003711ga003.dgn

LAST REVISION 04-08-13 | DATE PLOTTED => 22-JUN-2013 | TIME PLOTTED => 10:08

Dist	COUNTY	ROUTE	POST MILES TOTAL PROJECT	SHEET No.	TOTAL SHEETS
01	DN	199	20.3/25.9	23	184

REGISTERED CIVIL ENGINEER 04/09/13 DATE

6-24-13
PLANS APPROVAL DATE

REGISTERED PROFESSIONAL ENGINEER T. LARK No. 52481 Exp. 12/31/14 CIVIL STATE OF CALIFORNIA

THE STATE OF CALIFORNIA OR ITS OFFICERS OR AGENTS SHALL NOT BE RESPONSIBLE FOR THE ACCURACY OR COMPLETENESS OF SCANNED COPIES OF THIS PLAN SHEET.

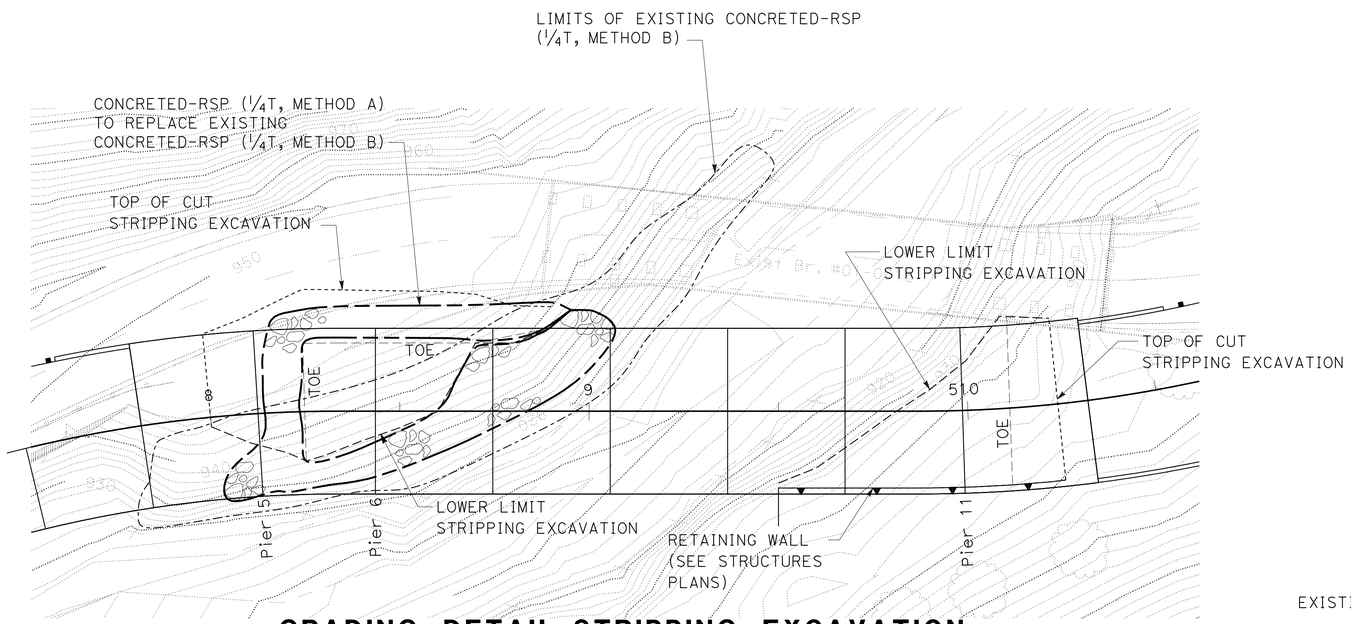

GRADING DETAIL-STRIPPING EXCAVATION

PLAN

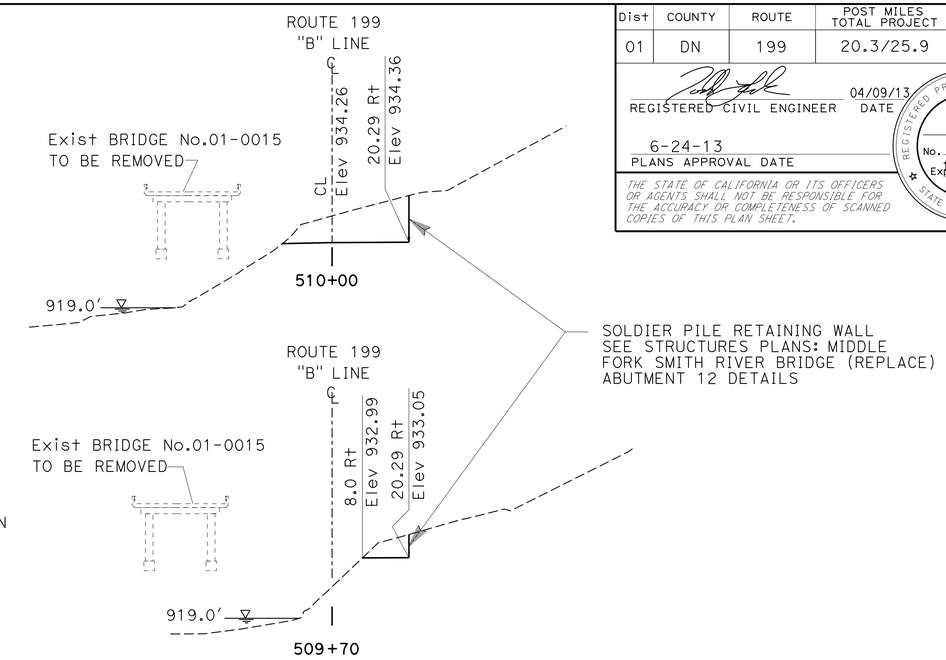

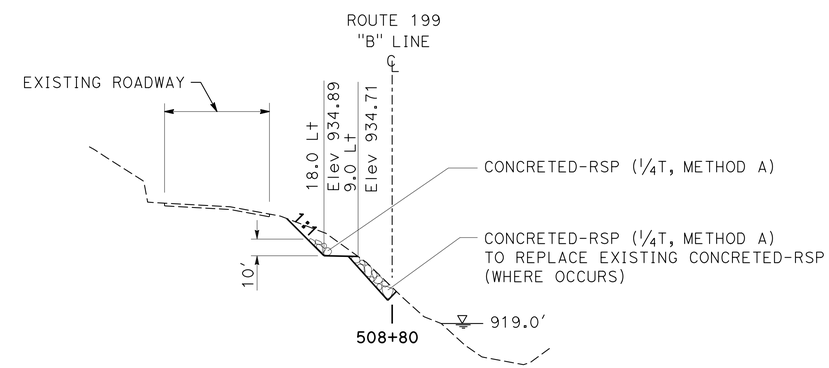

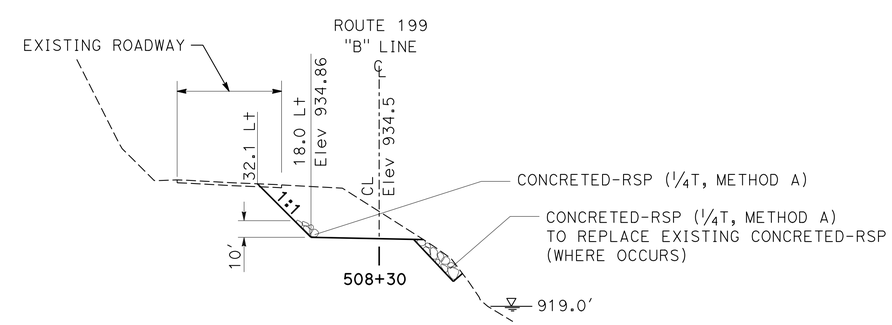

TYPICAL CROSS SECTIONS STRIPPING EXCAVATION

SECTIONS

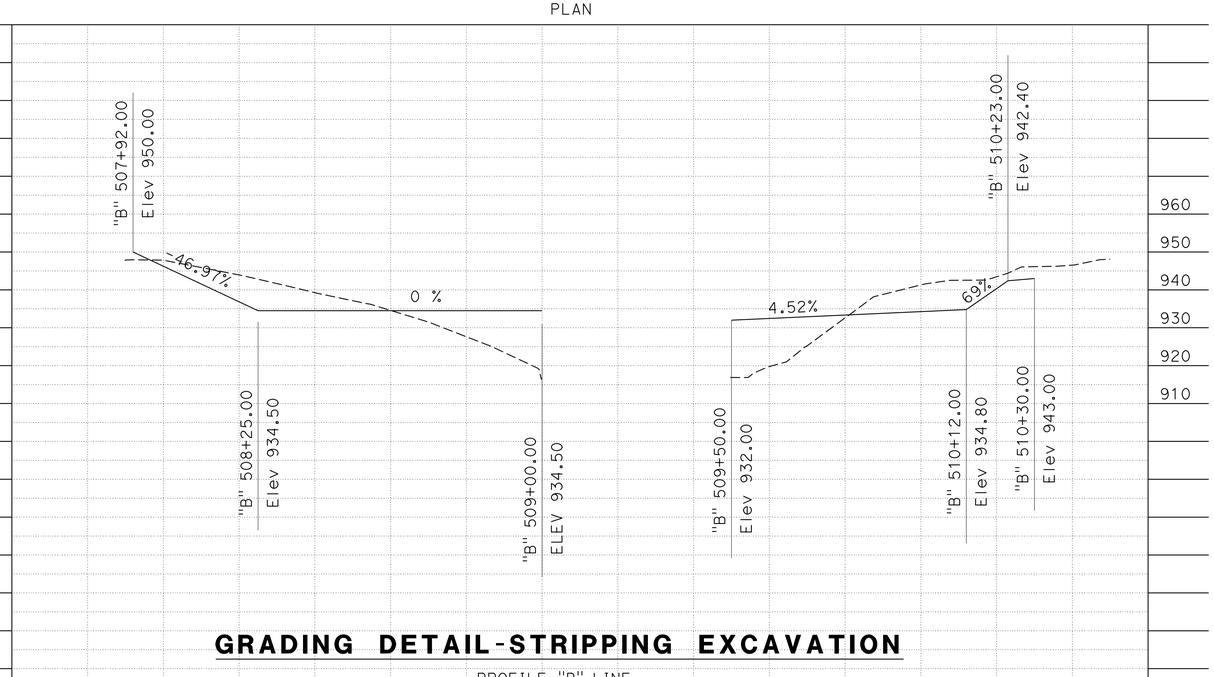

GRADING DETAIL-STRIPPING EXCAVATION

PROFILE "B" LINE

STATION		508	509	510	TOTAL
CY	Exc	785		407	
	Emb				

CONSTRUCTION DETAILS

NO SCALE

C-4

REVISED BY | DATE REVISED
TODD LARK | BIJAN SAMRAD
CALCULATED-DESIGNED BY | CHECKED BY
FUNCTIONAL SUPERVISOR: L.R. ASHLEY

STATE OF CALIFORNIA - DEPARTMENT OF TRANSPORTATION
Caltrans DESIGN

P:\PROJ\01\47940\drafting\01000003711\01000003371ga004.dgn

LAST REVISION 04-08-13 | DATE PLOTTED => 22-JUN-2013 | TIME PLOTTED => 10:52

Dist	COUNTY	ROUTE	POST MILES TOTAL PROJECT	SHEET No.	TOTAL SHEETS
01	DN	199	20.3/25.9	24	184

REGISTERED CIVIL ENGINEER 04/09/13 DATE

6-24-13
PLANS APPROVAL DATE

REGISTERED PROFESSIONAL ENGINEER T. LARK No. 52481 Exp. 12/31/14 CIVIL STATE OF CALIFORNIA

THE STATE OF CALIFORNIA OR ITS OFFICERS OR AGENTS SHALL NOT BE RESPONSIBLE FOR THE ACCURACY OR COMPLETENESS OF SCANNED COPIES OF THIS PLAN SHEET.

ABBREVIATION:

TOW - TOP OF WALL

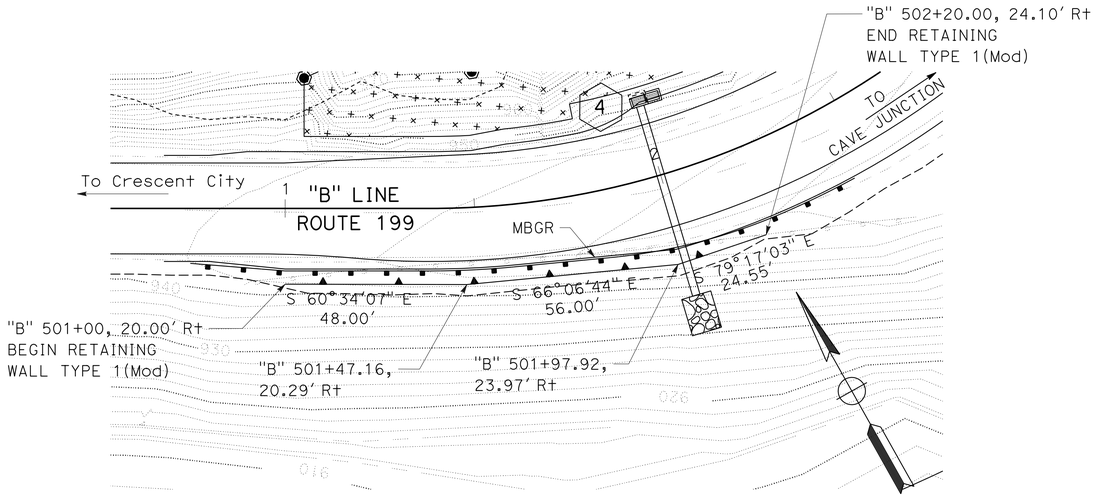

PLAN
RETAINING WALL TYPE 1 (MOD)

SCALE: 1" = 20'

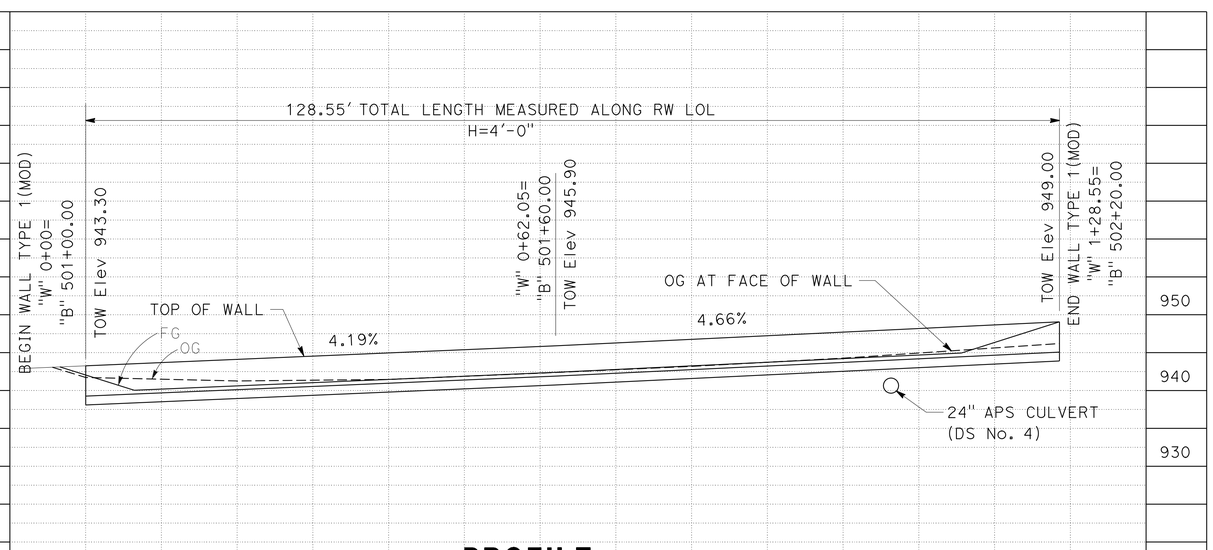

PROFILE
RETAINING WALL TYPE 1 (MOD)

AT WALL LAYOUT LINE
SCALE: 1" = 10' Horiz & Vert

STATION	0	1+00	TOTAL
CY Exc			
CY Emb			

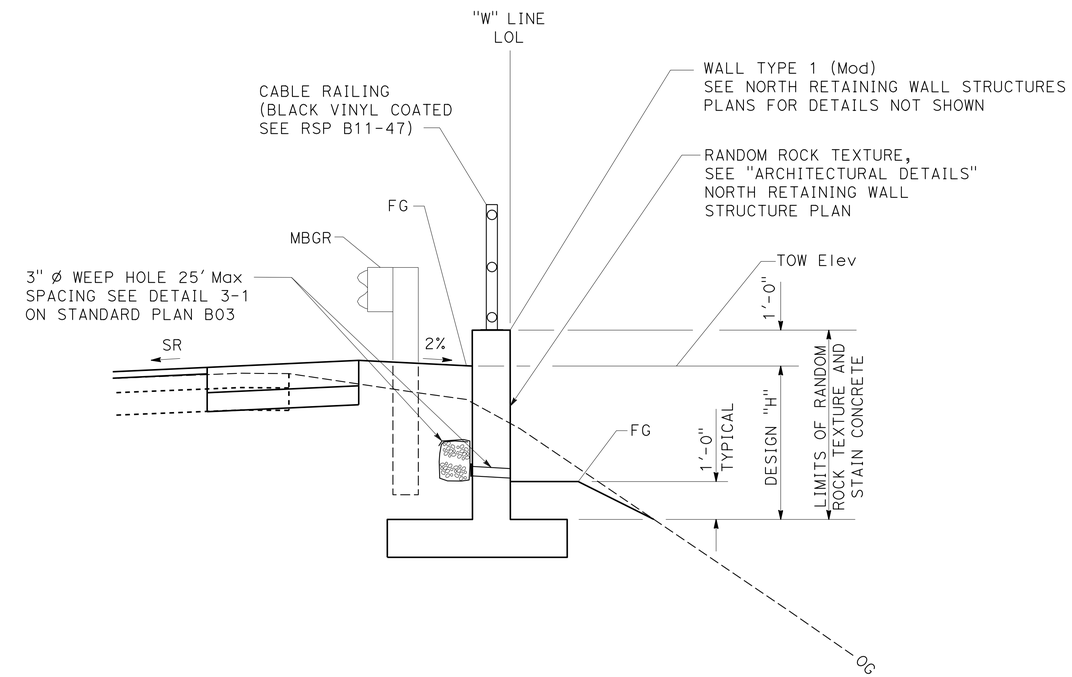

WALL TYPE 1 (Mod)

CONSTRUCTION DETAILS
SCALE AS SHOWN

C-5

REVISED BY | DATE REVISED
TODD LARK | BIJAN SAMRAD
CALCULATED-DESIGNED BY | CHECKED BY
FUNCTIONAL SUPERVISOR | L.R. ASHLEY

STATE OF CALIFORNIA - DEPARTMENT OF TRANSPORTATION
Caltrans DESIGN

P:\PROJ\01\47940\drafting\01000003711\01000003711ga005.dgn

LAST REVISION 04-08-13 | DATE PLOTTED => 22-JUN-2013 | TIME PLOTTED => 10:08

Dist	COUNTY	ROUTE	POST MILES TOTAL PROJECT	SHEET No.	TOTAL SHEETS
01	DN	199	20.3/25.9	25	184

Laura Lazzarotto
LICENSED LANDSCAPE ARCHITECT

6-24-13
PLANS APPROVAL DATE

LICENSED LANDSCAPE ARCHITECT
Laura Lazzarotto
Signature
8-31-13
Renewal Date
04/09/13
Date
STATE OF CALIFORNIA

THE STATE OF CALIFORNIA OR ITS OFFICERS OR AGENTS SHALL NOT BE RESPONSIBLE FOR THE ACCURACY OR COMPLETENESS OF SCANNED COPIES OF THIS PLAN SHEET.

LEGEND

- EC TYPE 1
- EC TYPE 2
- EC TYPE 3
- SELECTED MATERIAL (FURNISH) (N)
- SELECTED MATERIAL (PLACE)

EROSION CONTROL TYPE 1

SEQUENCE	ITEM	MATERIAL		APPLICATION RATE
		DESCRIPTION	TYPE	
STEP 1	MULCH	BARK	SMALL	404 CY/ACRE

EROSION CONTROL TYPE 2

SEQUENCE	ITEM	MATERIAL		APPLICATION RATE	REMARKS
		DESCRIPTION	TYPE		
STEP 1	INCORPORATE MATERIALS	SELECTED MATERIAL		1614 CY/ACRE	6" DEPTH
STEP 2	INCORPORATE MATERIALS	COMPOST	MEDIUM	540 CY/ACRE	12" DEPTH
STEP 3	FIBER ROLLS	FIBER ROLL	TYPE B 8" TO 10" Dia		TYPE 1 FIBER ROLL INSTALLATION
STEP 4	HYDROSEED	SEED	MIX 1	69 LB/ACRE	
		FIBER	WOOD	1200 LB/ACRE	
STEP 5	STRAW	STRAW	WHEAT &/OR BARLEY	3 TON/ACRE	
STEP 6	HYDROMULCH	FIBER	WOOD	1200 LB/ACRE	
		TACKIFIER	PSYLLIUM	150 LB/ACRE	

EROSION CONTROL TYPE 3

SEQUENCE	ITEM	MATERIAL		APPLICATION RATE
		DESCRIPTION	TYPE	
STEP 1	HYDROSEED	SEED	MIX 2	68 LB/ACRE
		FIBER	WOOD	1200 LB/ACRE
		TACKIFIER	PSYLLIUM	150 LB/ACRE

SEED MIX 1

SEED	BOTANICAL NAME (COMMON NAME)	PERCENT GERMINATION (MINIMUM)	POUNDS PURE LIVE SEED PER ACRE (SLOPE MEASUREMENT)
MIX 1	ACHILLEA MILLEFOLIUM [1] (WHITE YARROW)	40	1
	DESCHAMPSIA CESPITOSA ssp. CESPITOSA [1] (TUFTED HAIRGRASS)	40	3
	ELYMUS GLAUCUS 'ELKTON' [1] (BLUE WILDRYE, ELKTON)	45	20
	FESTUCA CALIFORNICA [1] (CALIFORNIA FESCUE)	40	8
	FESTUCA IDAHOENSIS 'NATIVE' [1] (IDAHO FESCUE, NATIVE)	50	12
	LOTUS PURSHIANUS 'SHASTA' [1] (SPANISH CLOVER, SHASTA)	40	10
	LUPINUS BICOLOR [1] (PYGMY-LEAF LUPINE)	50	5
	TRIFOLIUM WILLDENOVII [1] (TOMCAT CLOVER)	45	10

[1] SEED PRODUCED IN NORTHWEST CALIFORNIA ONLY.

SEED MIX 2

SEED	BOTANICAL NAME (COMMON NAME)	PERCENT GERMINATION (MINIMUM)	POUNDS PURE LIVE SEED PER ACRE (SLOPE MEASUREMENT)
MIX 2	ACHNATHERUM LEMMONII [1] (LEMMON'S NEEDLEGRASS)	50	20
	EPILOBIUM CANUM [1] (CALIFORNIA FUSCHIA)	20	4
	FESTUCA CALIFORNICA [1] (CALIFORNIA FESCUE)	40	6
	FESTUCA IDAHOENSIS 'NATIVE' [1] (IDAHO FESCUE, NATIVE)	50	18
	LUPINUS BICOLOR [1] (PYGMY-LEAFED LUPINE)	50	5
	NEMOPHILA MENZIESII [1] (BABY BLUE EYES)	45	5
	TRIFOLIUM WILLDENOVII [1] (TOMCAT CLOVER)	45	10

[1] SEED PRODUCED IN NORTHWEST CALIFORNIA ONLY.

EROSION CONTROL LEGEND
ECL-1

REVISED BY | DATE REVISED
LAURA LAZZAROTTO | JIM HIBBERT
CALCULATED-DESIGNED BY | CHECKED BY
SENIOR LANDSCAPE ARCHITECT | RON FLORY

STATE OF CALIFORNIA - DEPARTMENT OF TRANSPORTATION
Caltrans® LANDSCAPE DESIGN

P:\PROJ\01\47940\drafting\01000003711\01000003711tc001.dgn

LAST REVISION 04-08-13 | DATE PLOTTED => 22-JUN-2013 | TIME PLOTTED => 10:08

Dist	COUNTY	ROUTE	POST MILES TOTAL PROJECT	SHEET No.	TOTAL SHEETS
01	DN	199	20.3/25.9	26	184

Laura Lazzarotto
LICENSED LANDSCAPE ARCHITECT

6-24-13
PLANS APPROVAL DATE

LICENSED LANDSCAPE ARCHITECT
Laura Lazzarotto
Signature
8-31-13
Renewal Date
04/09/13
Date
STATE OF CALIFORNIA

THE STATE OF CALIFORNIA OR ITS OFFICERS OR AGENTS SHALL NOT BE RESPONSIBLE FOR THE ACCURACY OR COMPLETENESS OF SCANNED COPIES OF THIS PLAN SHEET.

NOTE:

FOR ACCURATE RIGHT OF WAY DATA, CONTACT
RIGHT OF WAY ENGINEERING AT THE DISTRICT OFFICE.

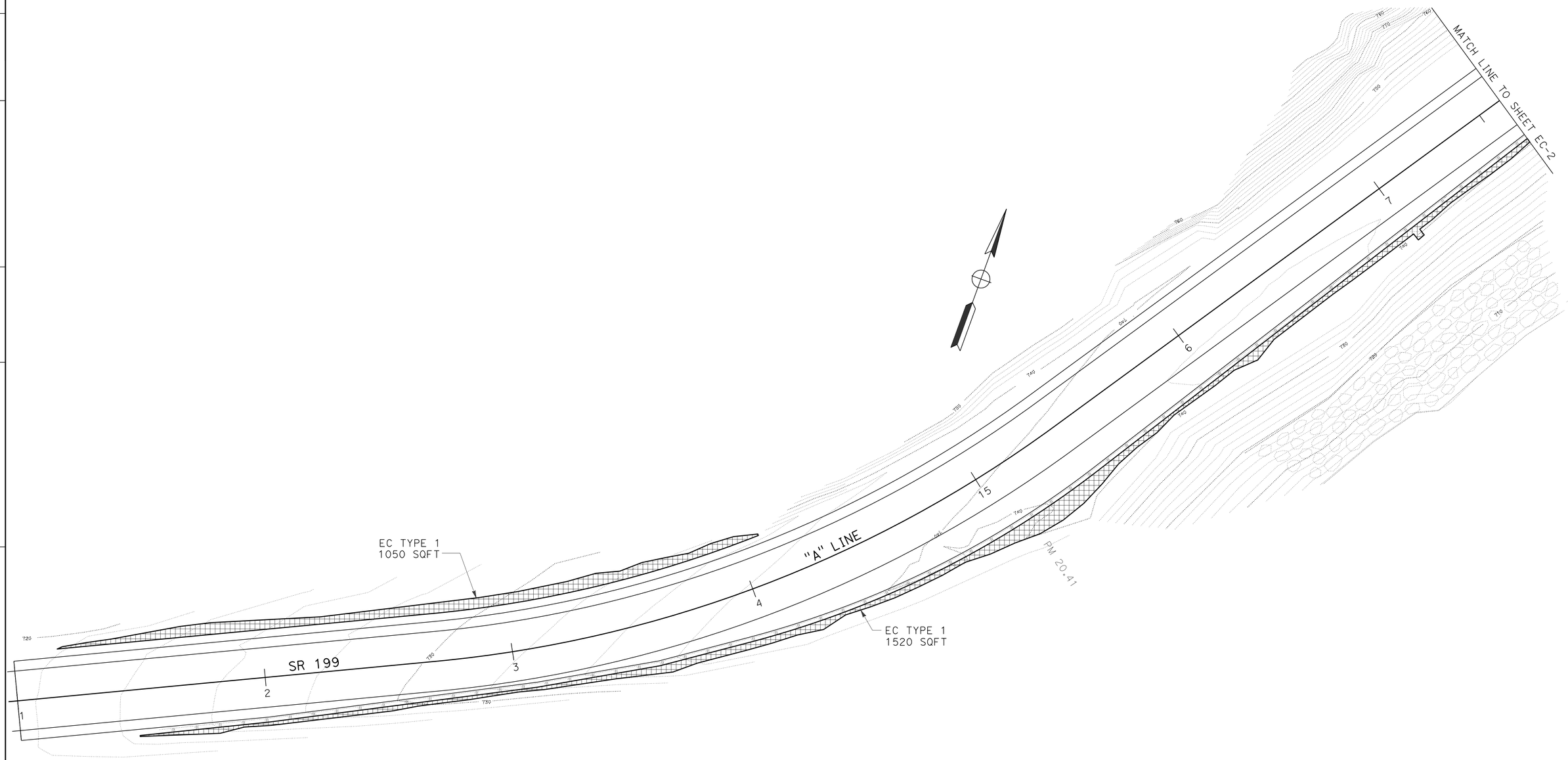

APPROVED FOR EROSION CONTROL WORK ONLY

EROSION CONTROL PLAN (LOCATION 1)

SCALE: 1" = 20'

EC-1

REVISED BY | DATE REVISED
LAURA LAZZAROTTO | JIM HIBBERT
CALCULATED-DESIGNED BY | CHECKED BY
SENIOR LANDSCAPE ARCHITECT
RON FLORY

STATE OF CALIFORNIA - DEPARTMENT OF TRANSPORTATION
Caltrans® LANDSCAPE DESIGN

P:\PROJ\01\47940\drafting\0100000371\0100000371te001.dgn

LAST REVISION 04-08-13 | DATE PLOTTED => 22-JUN-2013 | TIME PLOTTED => 10:15

Dist	COUNTY	ROUTE	POST MILES TOTAL PROJECT	SHEET No.	TOTAL SHEETS
01	DN	199	20.3/25.9	27	184

Laura Lazzarotto
LICENSED LANDSCAPE ARCHITECT

6-24-13
PLANS APPROVAL DATE

LICENSED LANDSCAPE ARCHITECT
Laura Lazzarotto
Signature
8-31-13
Renewal Date
04/09/13
Date
STATE OF CALIFORNIA

THE STATE OF CALIFORNIA OR ITS OFFICERS OR AGENTS SHALL NOT BE RESPONSIBLE FOR THE ACCURACY OR COMPLETENESS OF SCANNED COPIES OF THIS PLAN SHEET.

NOTE:

FOR ACCURATE RIGHT OF WAY DATA, CONTACT RIGHT OF WAY ENGINEERING AT THE DISTRICT OFFICE.

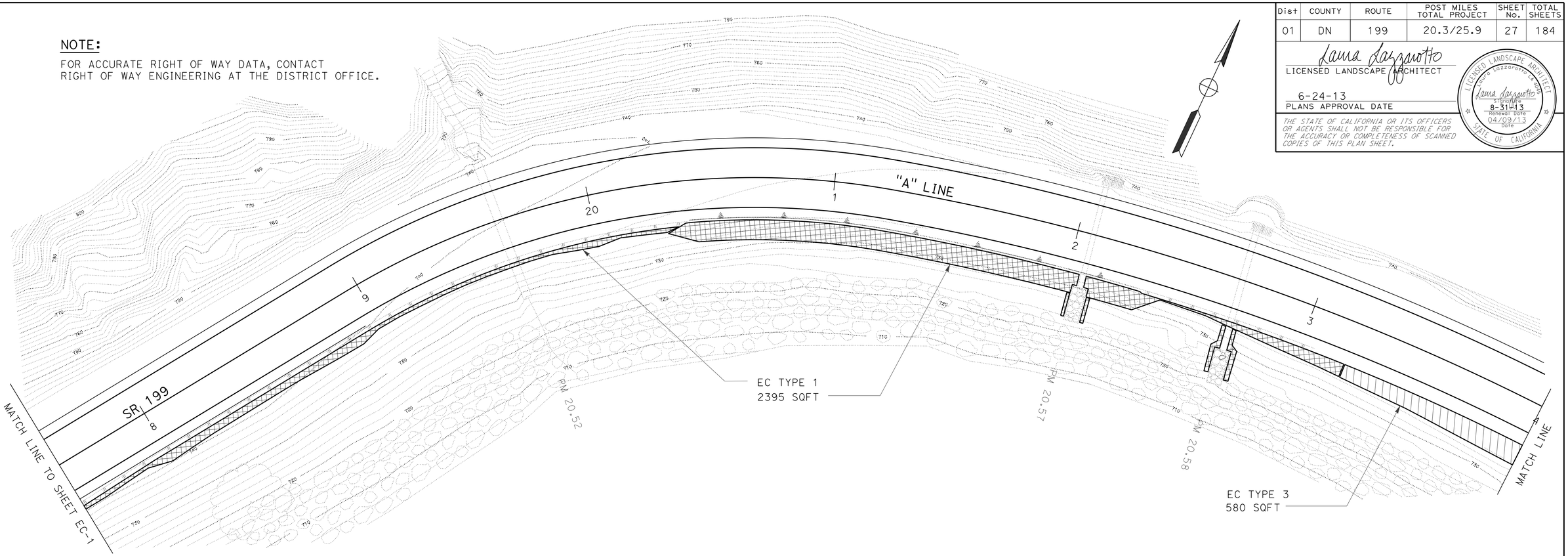

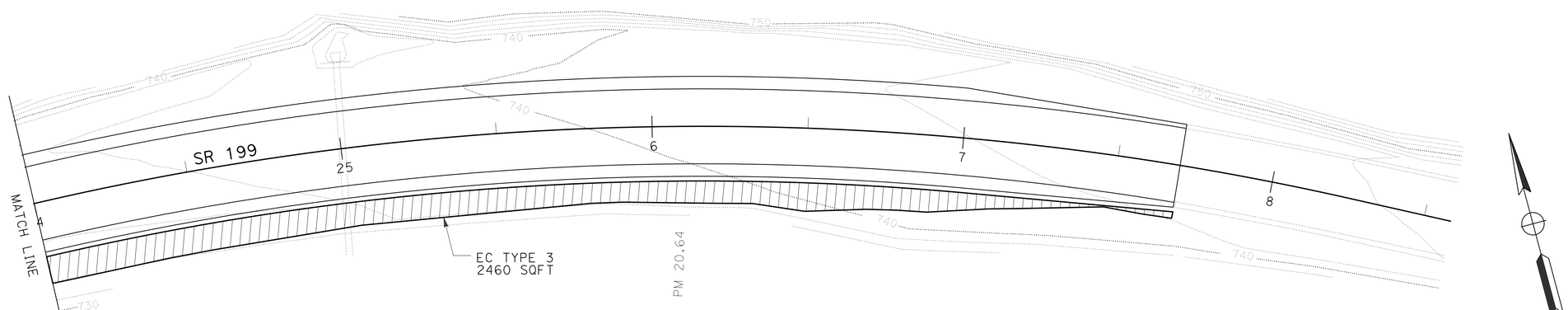

EROSION CONTROL PLAN (LOCATION 1)

SCALE: 1" = 20'

EC-2

APPROVED FOR EROSION CONTROL WORK ONLY

STATE OF CALIFORNIA - DEPARTMENT OF TRANSPORTATION

Caltrans® LANDSCAPE DESIGN

SENIOR LANDSCAPE ARCHITECT: RON FLORY

CALCULATED-DESIGNED BY: LAURA LAZZAROTTO

CHECKED BY: JIM HIBBERT

REVISED BY / DATE REVISED

P:\PROJ\01\47940\drafting\0100000371\0100000371te002.dgn

LAST REVISION 04-08-13

DATE PLOTTED => 22-JUN-2013
TIME PLOTTED => 10:09

BORDER LAST REVISED 7/2/2010

USERNAME => s128843
DGN FILE => 0100000371te002.dgn

RELATIVE BORDER SCALE IS IN INCHES 0 1 2 3

UNIT 0313

PROJECT NUMBER & PHASE 01000003711

Dist	COUNTY	ROUTE	POST MILES TOTAL PROJECT	SHEET No.	TOTAL SHEETS
01	DN	199	20.3/25.9	28	184

Laura Lazzarotto
LICENSED LANDSCAPE ARCHITECT

6-24-13
PLANS APPROVAL DATE

LICENSED LANDSCAPE ARCHITECT
Laura Lazzarotto
Signature
8-31-13
Renewal Date
04/09/13
Date
STATE OF CALIFORNIA

THE STATE OF CALIFORNIA OR ITS OFFICERS OR AGENTS SHALL NOT BE RESPONSIBLE FOR THE ACCURACY OR COMPLETENESS OF SCANNED COPIES OF THIS PLAN SHEET.

NOTE:

FOR ACCURATE RIGHT OF WAY DATA, CONTACT RIGHT OF WAY ENGINEERING AT THE DISTRICT OFFICE.

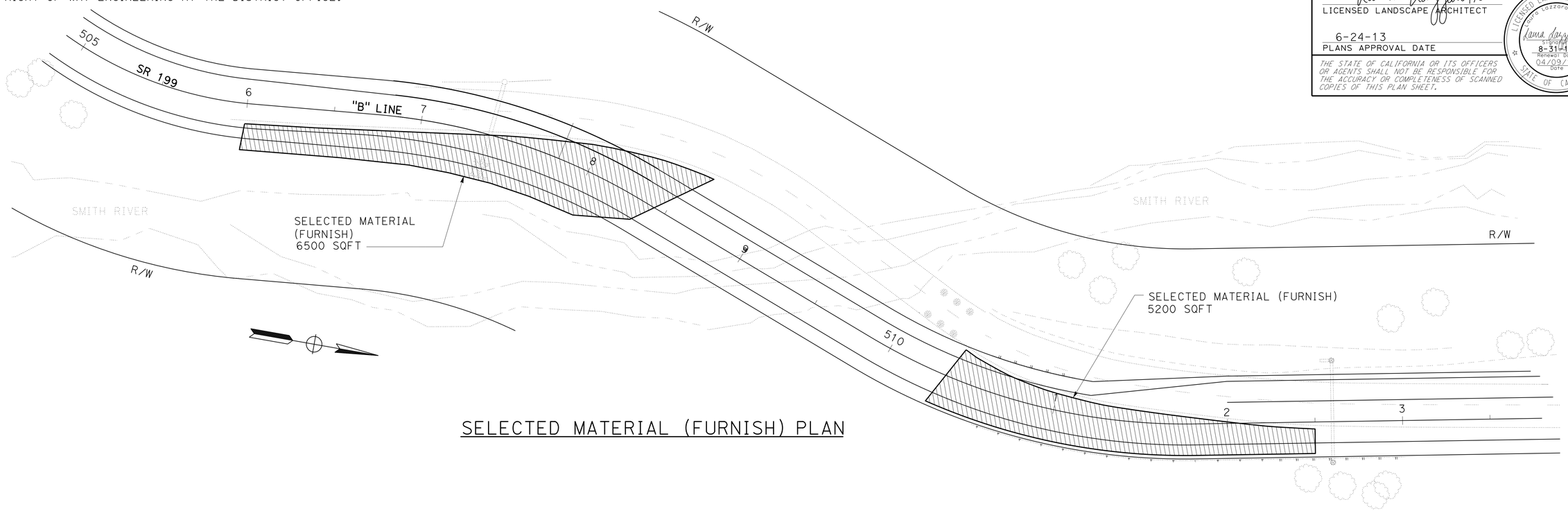

SELECTED MATERIAL (FURNISH) PLAN

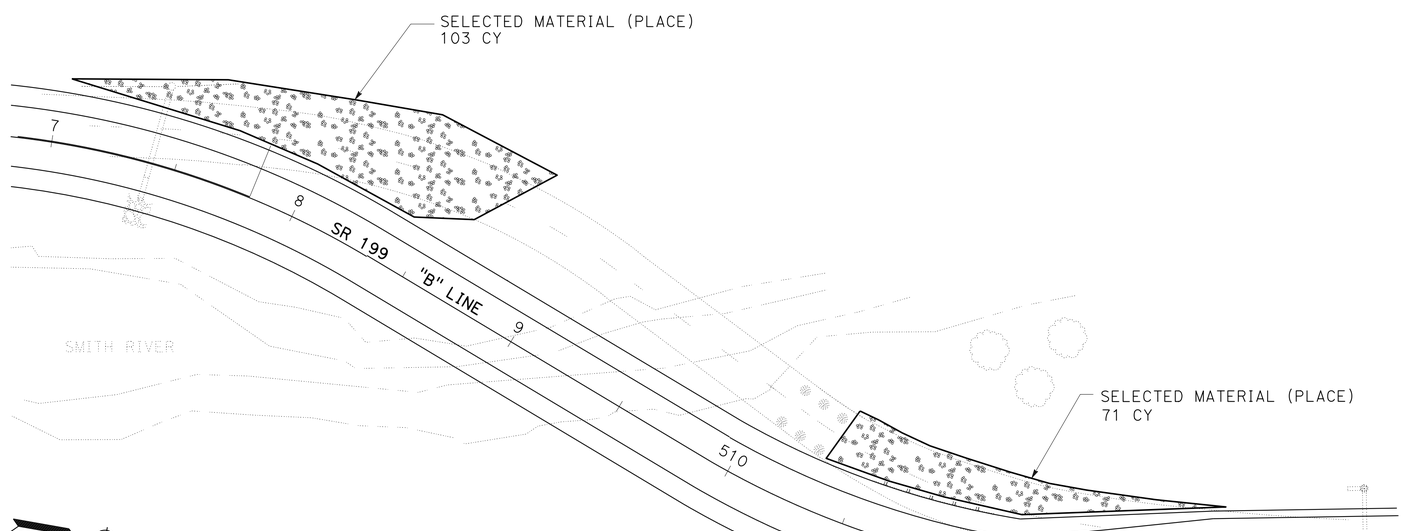

SELECTED MATERIAL (PLACE) PLAN

EROSION CONTROL PLAN (LOCATION 2)

SCALE: 1" = 30'

EC-3

APPROVED FOR EROSION CONTROL WORK ONLY

REVISED BY | DATE REVISED
LAURA LAZZAROTTO | JIM HIBBERT
CALCULATED-DESIGNED BY | CHECKED BY
SENIOR LANDSCAPE ARCHITECT | RON FLORY

STATE OF CALIFORNIA - DEPARTMENT OF TRANSPORTATION
Caltrans® LANDSCAPE DESIGN

P:\PROJ\01\47940\drafting\01000003711\01000003711te003.dgn

LAST REVISION 04-08-13 | DATE PLOTTED => 22-JUN-2013 | TIME PLOTTED => 10:09

BORDER LAST REVISED 7/2/2010 | USERNAME => s128843 | DGN FILE => 01000003711te003.dgn | RELATIVE BORDER SCALE IS IN INCHES 0 1 2 3 | UNIT 0313 | PROJECT NUMBER & PHASE 01000003711

Dist	COUNTY	ROUTE	POST MILES TOTAL PROJECT	SHEET No.	TOTAL SHEETS
01	DN	199	20.3/25.9	29	184

Laura Lazzarotto
LICENSED LANDSCAPE ARCHITECT

6-24-13
PLANS APPROVAL DATE

LICENSED LANDSCAPE ARCHITECT
Laura Lazzarotto
Signature
8-31-13
Renewal Date
04/09/13
Date
STATE OF CALIFORNIA

THE STATE OF CALIFORNIA OR ITS OFFICERS OR AGENTS SHALL NOT BE RESPONSIBLE FOR THE ACCURACY OR COMPLETENESS OF SCANNED COPIES OF THIS PLAN SHEET.

NOTE:

FOR ACCURATE RIGHT OF WAY DATA, CONTACT RIGHT OF WAY ENGINEERING AT THE DISTRICT OFFICE.

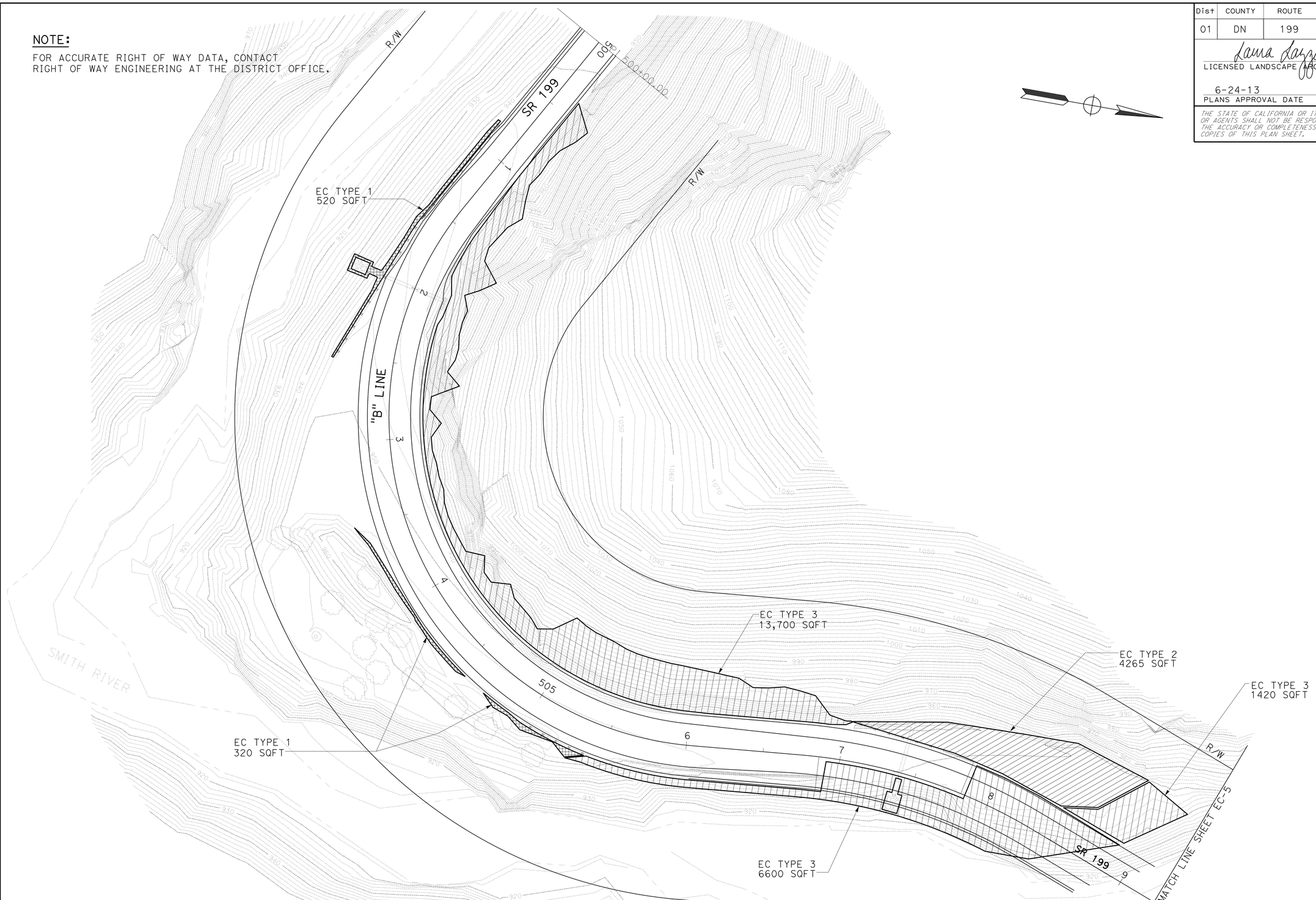

EROSION CONTROL PLAN (LOCATION 2)

SCALE: 1" = 30'

EC-4

APPROVED FOR EROSION CONTROL WORK ONLY

REVISED BY	
DATE REVISED	
LAURA LAZZAROTTO	
JIM HIBBERT	
CALCULATED-DESIGNED BY	
CHECKED BY	
SENIOR LANDSCAPE ARCHITECT	
RON FLORY	

STATE OF CALIFORNIA - DEPARTMENT OF TRANSPORTATION
Caltrans® **LANDSCAPE DESIGN**

P:\PROJ\01\47940\drafting\01000003711\01000003711te004.dgn

LAST REVISION 04-08-13
DATE PLOTTED => 22-JUN-2013
TIME PLOTTED => 10:09

Dist	COUNTY	ROUTE	POST MILES TOTAL PROJECT	SHEET No.	TOTAL SHEETS
01	DN	199	20.3/25.9	30	184

Laura Lazzarotto
LICENSED LANDSCAPE ARCHITECT

6-24-13
PLANS APPROVAL DATE

LICENSED LANDSCAPE ARCHITECT
Laura Lazzarotto
Signature
8-31-13
Renewal Date
04/09/13
Date
STATE OF CALIFORNIA

THE STATE OF CALIFORNIA OR ITS OFFICERS OR AGENTS SHALL NOT BE RESPONSIBLE FOR THE ACCURACY OR COMPLETENESS OF SCANNED COPIES OF THIS PLAN SHEET.

NOTE:

FOR ACCURATE RIGHT OF WAY DATA, CONTACT
RIGHT OF WAY ENGINEERING AT THE DISTRICT OFFICE.

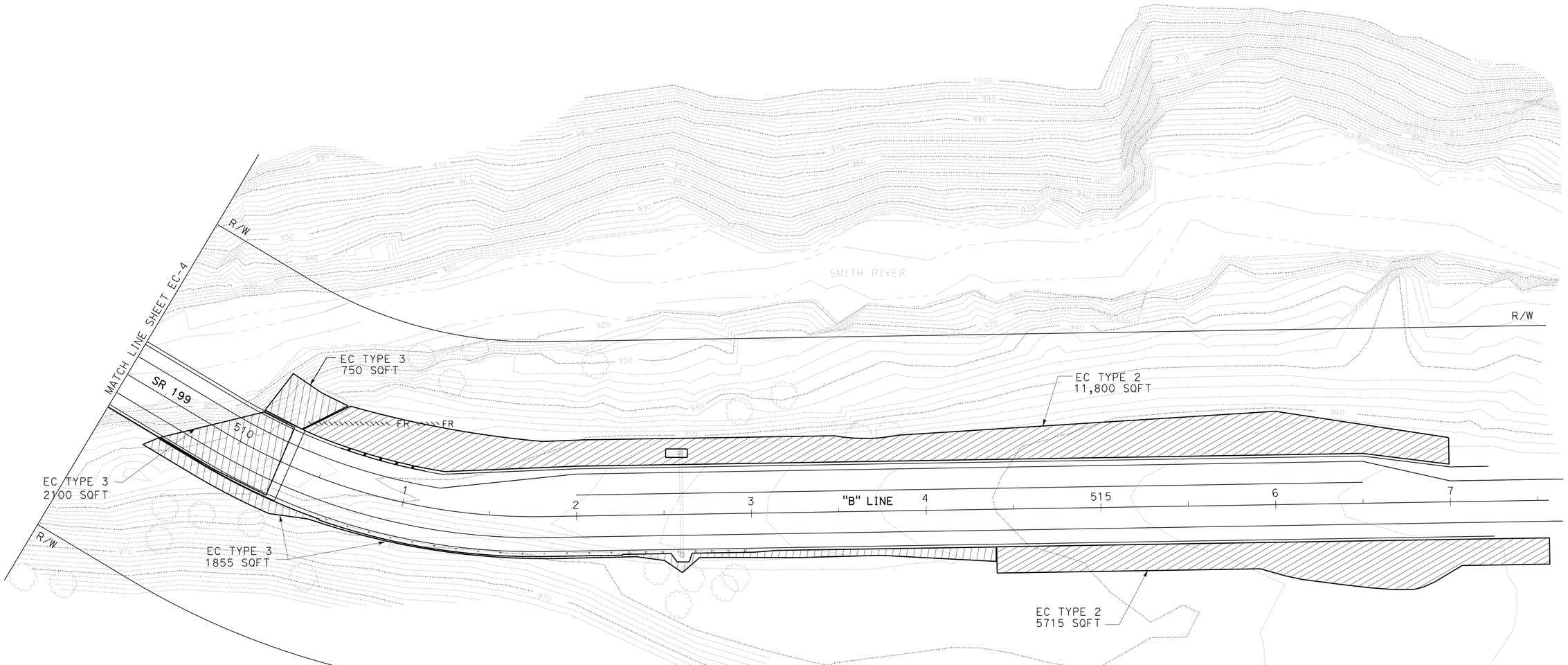

APPROVED FOR EROSION CONTROL WORK ONLY

EROSION CONTROL PLAN (LOCATION 2)

SCALE: 1" = 30'

EC-5

STATE OF CALIFORNIA - DEPARTMENT OF TRANSPORTATION
Caltrans® **LANDSCAPE DESIGN**

SENIOR LANDSCAPE ARCHITECT: RON FLORY
CALCULATED-DESIGNED BY: LAURA LAZZAROTTO
CHECKED BY: JIM HIBBERT
REVISED BY
DATE REVISED

P:\PROJ\01\47940\drafting\01000003711\01000003711e005.dgn

LAST REVISION 04-08-13
DATE PLOTTED => 22-JUN-2013
TIME PLOTTED => 09:56

BORDER LAST REVISED 7/2/2010
USERNAME => s109858
DGN FILE => 01000003711e005.dgn
RELATIVE BORDER SCALE IS IN INCHES 0 1 2 3
UNIT 0313
PROJECT NUMBER & PHASE 01000003711

Dist	COUNTY	ROUTE	POST MILES TOTAL PROJECT	SHEET No.	TOTAL SHEETS
01	DN	199	20.3/25.9	31	184

LICENSED LANDSCAPE ARCHITECT

6-24-13
PLANS APPROVAL DATE

LICENSED LANDSCAPE ARCHITECT
Laura Lazzarotto
Signature
8-31-13
Renewal Date
04/09/13
Date
STATE OF CALIFORNIA

THE STATE OF CALIFORNIA OR ITS OFFICERS OR AGENTS SHALL NOT BE RESPONSIBLE FOR THE ACCURACY OR COMPLETENESS OF SCANNED COPIES OF THIS PLAN SHEET.

NOTE:

FOR ACCURATE RIGHT OF WAY DATA, CONTACT RIGHT OF WAY ENGINEERING AT THE DISTRICT OFFICE.

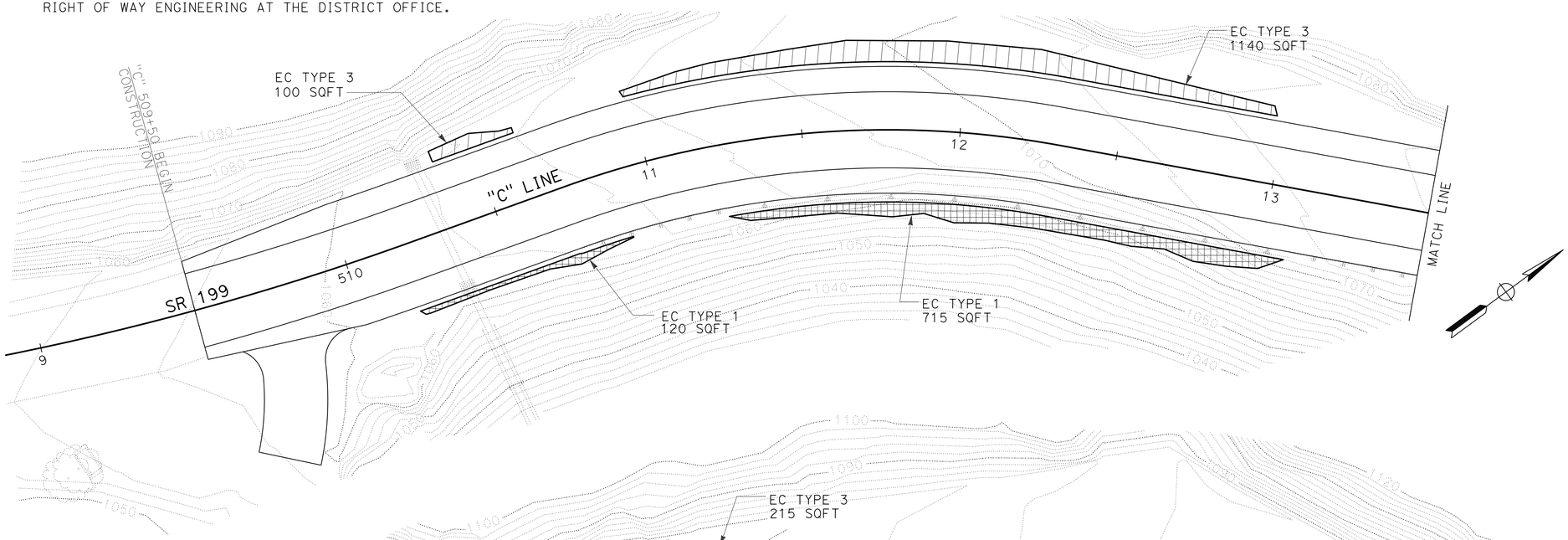

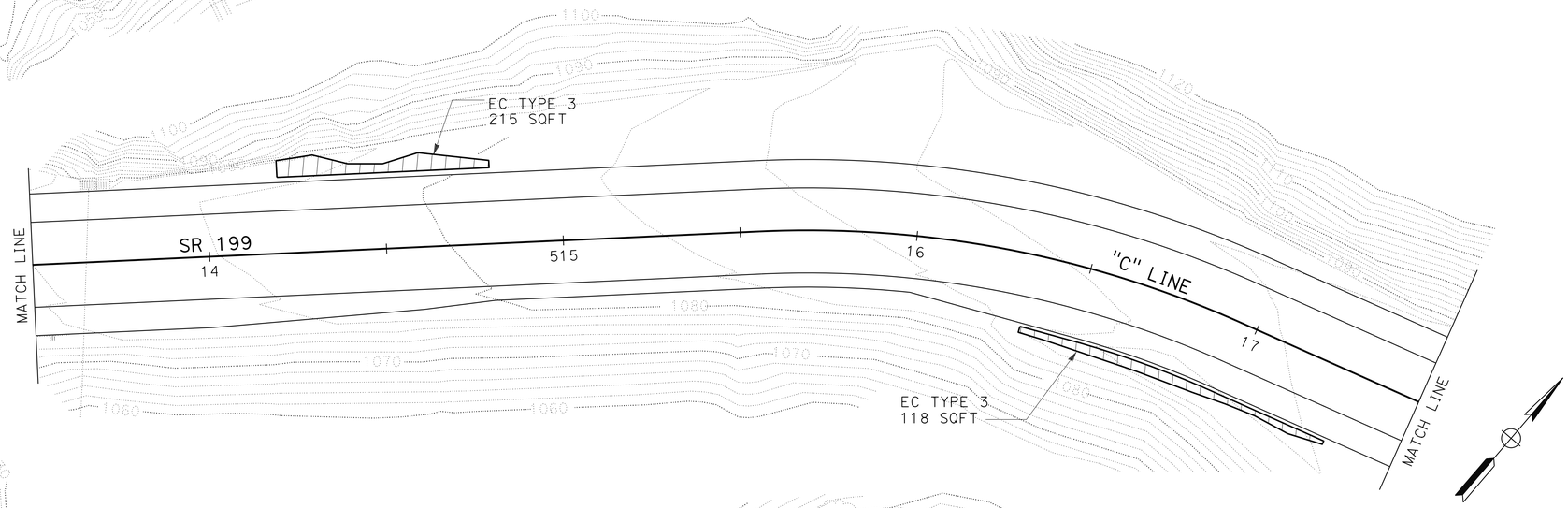

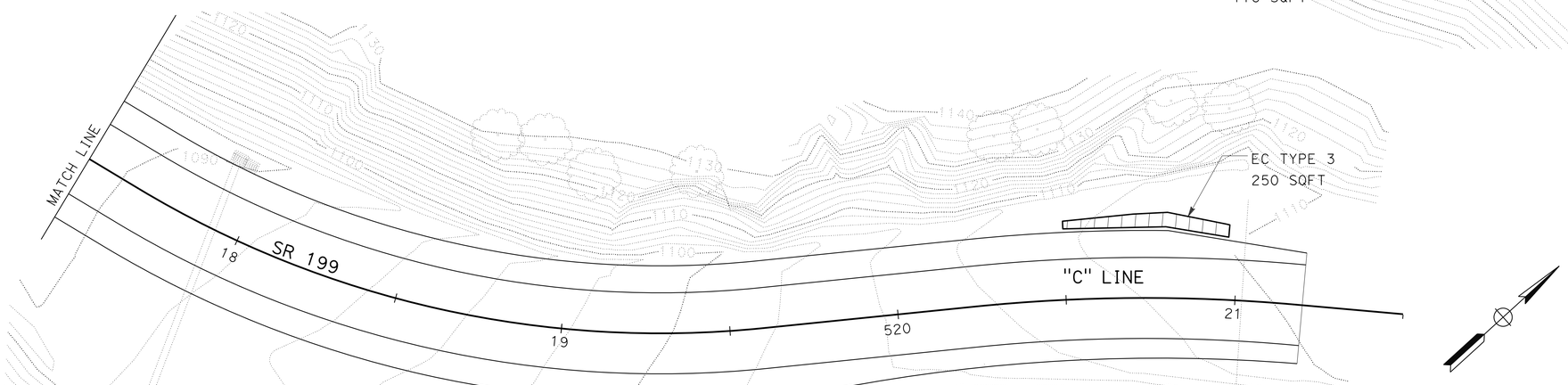

APPROVED FOR EROSION CONTROL WORK ONLY

EROSION CONTROL PLAN (LOCATION 3)

SCALE: 1" = 20'

EC-6

STATE OF CALIFORNIA - DEPARTMENT OF TRANSPORTATION
Caltrans® LANDSCAPE DESIGN

SENIOR LANDSCAPE ARCHITECT: RON FLORY
CALCULATED-DESIGNED BY: LAURA LAZZAROTTO
CHECKED BY: JIM HIBBERT
REVISED BY
DATE REVISED

P:\PROJ\01\47940\drafting\01000003711\01000003711te006.dgn

LAST REVISION 04-08-13
DATE PLOTTED => 22-JUN-2013
TIME PLOTTED => 09:56

Dist	COUNTY	ROUTE	POST MILES TOTAL PROJECT	SHEET No.	TOTAL SHEETS
01	DN	199	20.3/25.9	32	184

Laura Lazzarotto
LICENSED LANDSCAPE ARCHITECT

6-24-13
PLANS APPROVAL DATE

LICENSED LANDSCAPE ARCHITECT
Laura Lazzarotto
Signature
8-31-13
Renewal Date
04/09/13
Date
STATE OF CALIFORNIA

THE STATE OF CALIFORNIA OR ITS OFFICERS OR AGENTS SHALL NOT BE RESPONSIBLE FOR THE ACCURACY OR COMPLETENESS OF SCANNED COPIES OF THIS PLAN SHEET.

EROSION CONTROL QUANTITIES

SHEET	LOCATION	L†	R†	EROSION CONTROL TYPE	FIBER ROLLS	SELECTED MATERIAL	SELECTED MATERIAL (FURNISH)	INCORPORATE MATERIALS	COMPOST	HYDROSEED	STRAW	HYDROMULCH	MULCH	PURE LIVE SEED	FIBER	TACKIFIER	COMPOST	STRAW	AREA
					LF	CY	SQFT (N)	SQFT	SQFT	SQFT	SQFT	SQFT	CY	LBS (N)			CY (N)	TON (N)	SQFT (N)
EC-1 EC-2	1	X		TYPE 1									9.7						1050
			X	TYPE 1									36.3						3915
			X	TYPE 3						3040				4.75	84	10.5			3040
EC-3	2	X				174													—
			X				11,700												—
EC-4	2	X		TYPE 2				4265	4265	4265	4265	4265		6.76	235	14.7	53	0.29	4265
		X		TYPE 3						15,120				23.60	417	52.0			15,120
			X	TYPE 1									7.8						840
			X	TYPE 3						6600				10.30	182	22.7			6600
EC-5	2	X		TYPE 2	75			11,800	11,800	11,800	11,800	11,800		18.69	650	40.6	146	0.81	11,800
		X		TYPE 3						750				1.17	21	2.6			750
			X	TYPE 2				5715	5715	5715	5715	5715		9.05	315	19.7	71	0.40	5175
			X	TYPE 3						3955				6.17	110	13.7			3985
EC-6	3	X		TYPE 3						1705				2.66	47	5.9			1705
			X	TYPE 1									7.7						835
			X	TYPE 3						370				0.58	11	1.3			370
				TOTAL	75	174	11,700	21,780	21,780	53,350	21,780	21,780	61.5	83.74	2070	183.7	270	1.50	61,595

NOTE: (N) DENOTES NON PAY ITEM. (FOR INFORMATION ONLY)

REVISED BY | DATE REVISED
LAURA LAZZAROTTO | JIM HIBBERT
CALCULATED-DESIGNED BY | CHECKED BY
SENIOR LANDSCAPE ARCHITECT | RON FLORY

STATE OF CALIFORNIA - DEPARTMENT OF TRANSPORTATION
Caltrans® LANDSCAPE DESIGN

P:\PROJ\01\47940\drafting\0100000371\0100000371tg001.dgn

EROSION CONTROL QUANTITIES
ECQ-1

LAST REVISION 04-08-13 | DATE PLOTTED => 22-JUN-2013 | TIME PLOTTED => 09:56

Dist	COUNTY	ROUTE	POST MILES TOTAL PROJECT	SHEET No.	TOTAL SHEETS
01	DN	199	20.3/25.9	33	184

REGISTERED CIVIL ENGINEER 04/09/13 DATE

6-24-13
PLANS APPROVAL DATE

REGISTERED PROFESSIONAL ENGINEER T. LARK No. 52481 Exp. 12/31/14 CIVIL STATE OF CALIFORNIA

THE STATE OF CALIFORNIA OR ITS OFFICERS OR AGENTS SHALL NOT BE RESPONSIBLE FOR THE ACCURACY OR COMPLETENESS OF SCANNED COPIES OF THIS PLAN SHEET.

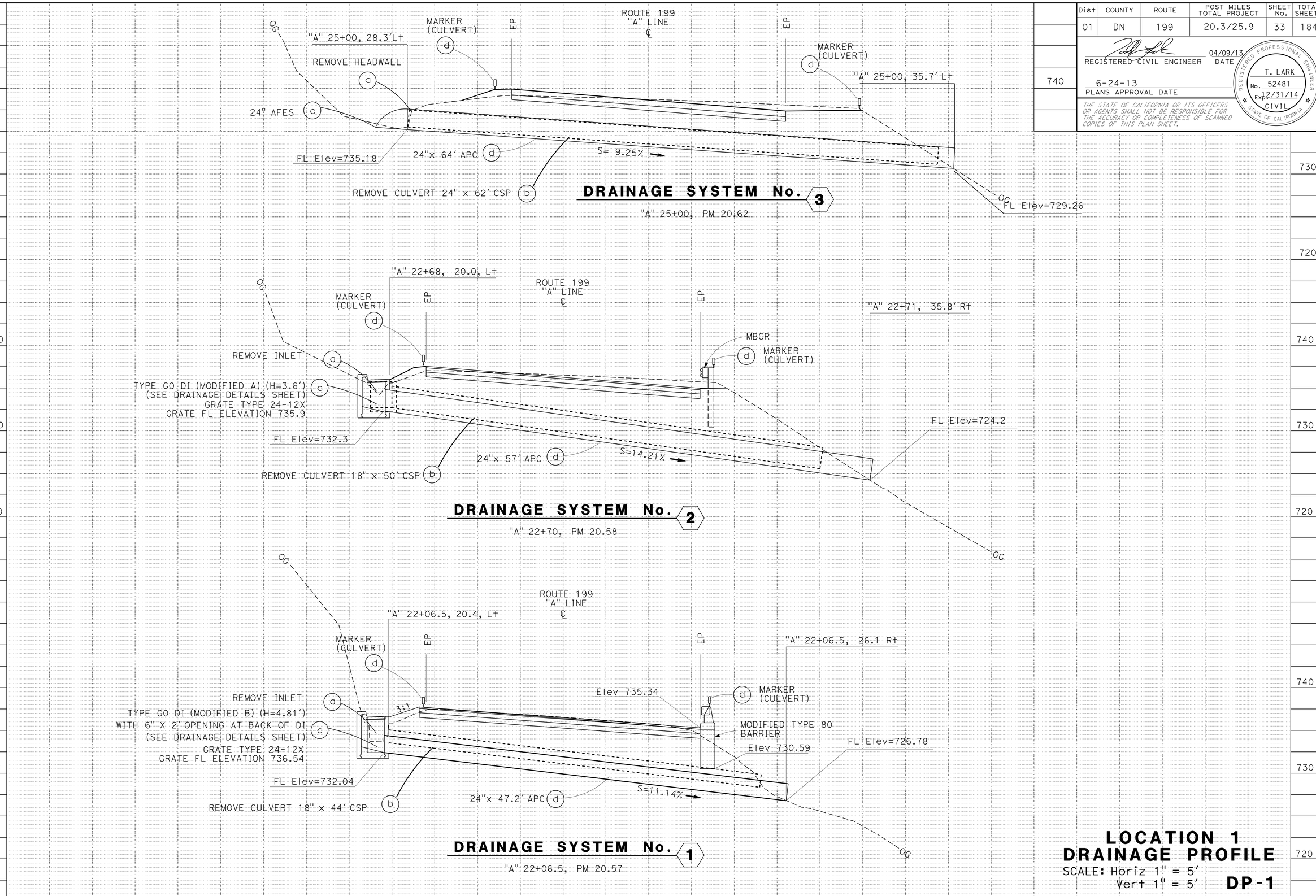

LOCATION 1
DRAINAGE PROFILE

SCALE: Horiz 1" = 5'
Vert 1" = 5'

DP-1

STATE OF CALIFORNIA - DEPARTMENT OF TRANSPORTATION
Caltrans® DESIGN

FUNCTIONAL SUPERVISOR: L.R. ASHLEY
CALCULATED-DESIGNED BY: ELISA MEYER
CHECKED BY: BIJAN SAMRAD
REVISED BY / DATE REVISED

P:\PROJ\01\4794p\drafting\01000003711\01000003711ib001.dgn

LAST REVISION 04-08-13 | DATE PLOTTED => 22-JUN-2013 | TIME PLOTTED => 09:56

BORDER LAST REVISED 7/2/2010 | USERNAME => s109858 | DGN FILE => 01000003711ib001.dgn | RELATIVE BORDER SCALE IS IN INCHES 0 1 2 3 | UNIT 0313 | PROJECT NUMBER & PHASE 01000003711

Dist	COUNTY	ROUTE	POST MILES TOTAL PROJECT	SHEET No.	TOTAL SHEETS
01	DN	199	20.3/25.9	34	184

REGISTERED CIVIL ENGINEER 04/09/13 DATE

6-24-13
PLANS APPROVAL DATE

REGISTERED PROFESSIONAL ENGINEER T. LARK No. 52481 Exp. 12/31/14 CIVIL STATE OF CALIFORNIA

THE STATE OF CALIFORNIA OR ITS OFFICERS OR AGENTS SHALL NOT BE RESPONSIBLE FOR THE ACCURACY OR COMPLETENESS OF SCANNED COPIES OF THIS PLAN SHEET.

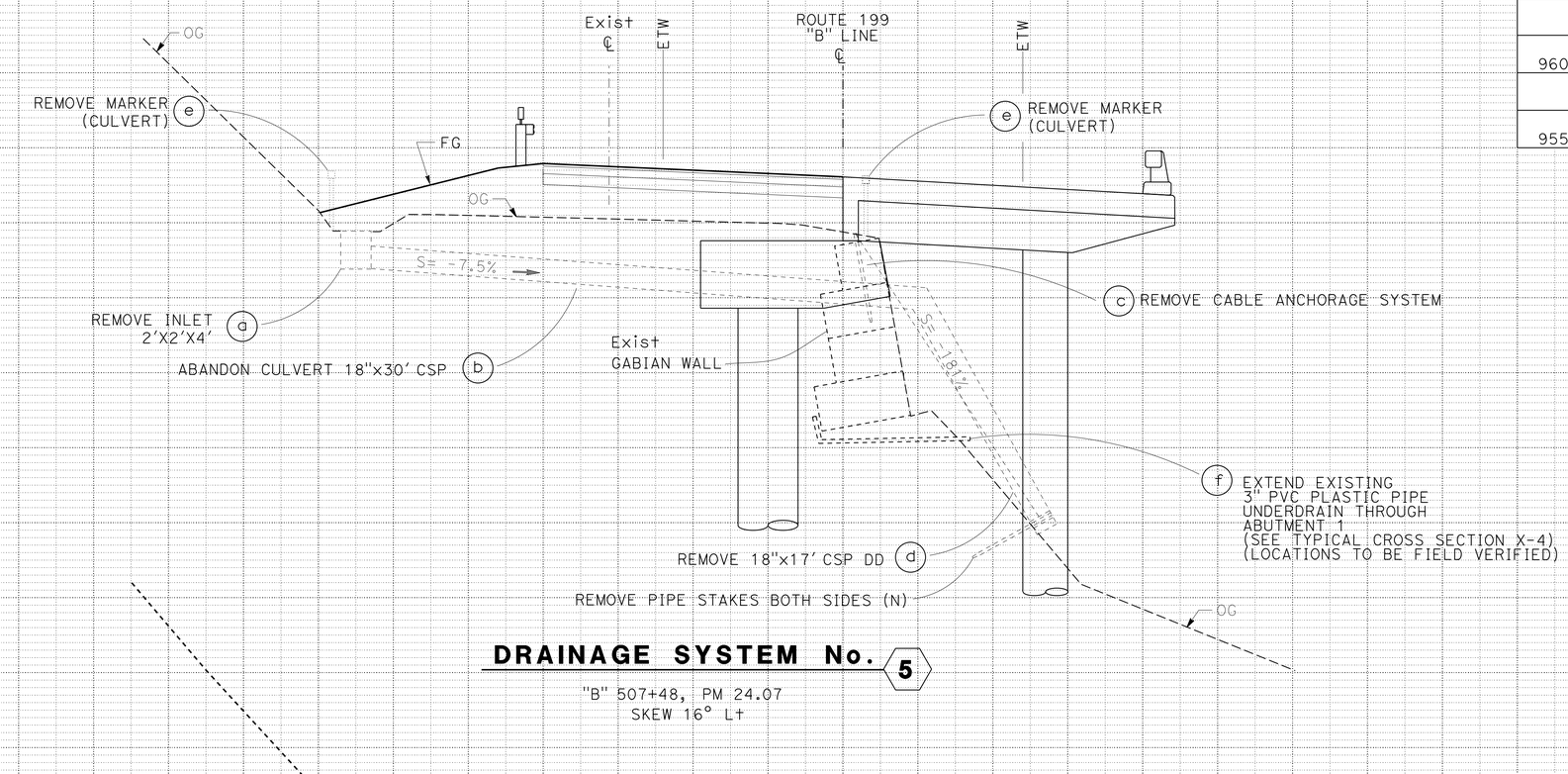

DRAINAGE SYSTEM No. 5

"B" 507+48, PM 24.07
SKEW 16° Lt

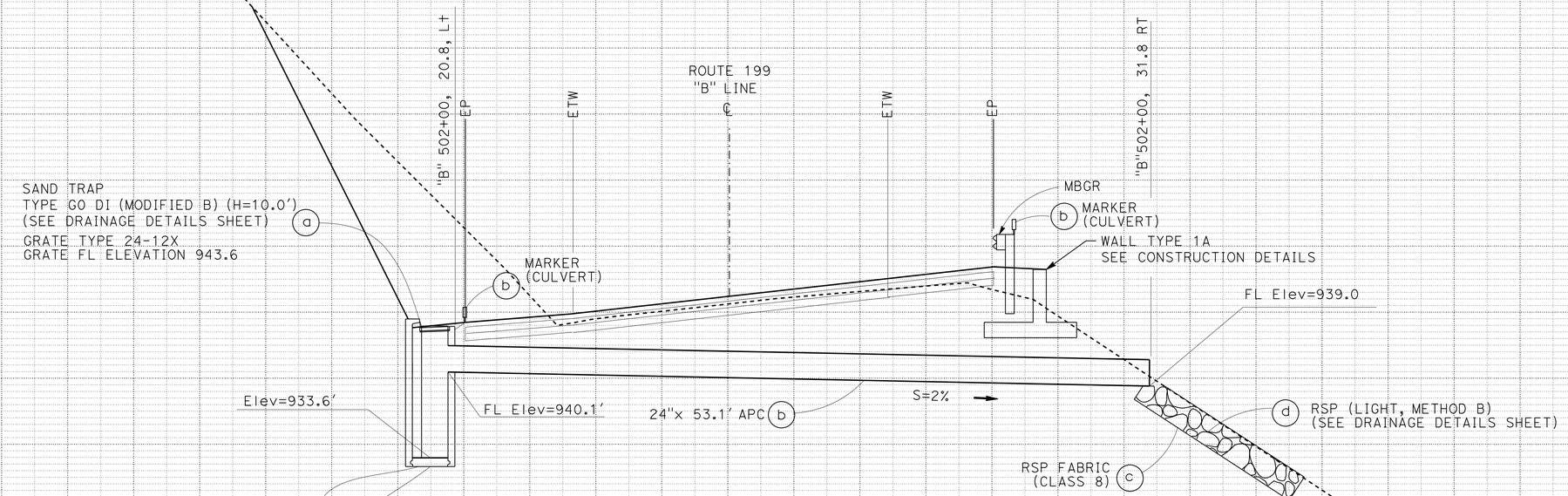

DRAINAGE SYSTEM No. 4

"B" 502+00, PM 23.95
SKEW 0°

LOCATION 2 DRAINAGE PROFILE

SCALE: Horiz 1" = 5'
Vert 1" = 5'

DP-2

REVISED BY | DATE REVISED
Bijan Samrad | BIJAN SAMRAD
CALCULATED-DESIGNED BY | CHECKED BY
FUNCTIONAL SUPERVISOR | L.R. ASHLEY

STATE OF CALIFORNIA - DEPARTMENT OF TRANSPORTATION
Caltrans® DESIGN

P:\PROJ\01\47940\drafting\01000003711\01000003711ib002.dgn

LAST REVISION 04-08-13 | DATE PLOTTED => 22-JUN-2013 | TIME PLOTTED => 09:56

Dist	COUNTY	ROUTE	POST MILES TOTAL PROJECT	SHEET No.	TOTAL SHEETS
01	DN	199	20.3/25.9	35	184

REGISTERED CIVIL ENGINEER 04/09/13 DATE

6-24-13
PLANS APPROVAL DATE

REGISTERED PROFESSIONAL ENGINEER T. LARK No. 52481 Exp. 12/31/14 CIVIL STATE OF CALIFORNIA

THE STATE OF CALIFORNIA OR ITS OFFICERS OR AGENTS SHALL NOT BE RESPONSIBLE FOR THE ACCURACY OR COMPLETENESS OF SCANNED COPIES OF THIS PLAN SHEET.

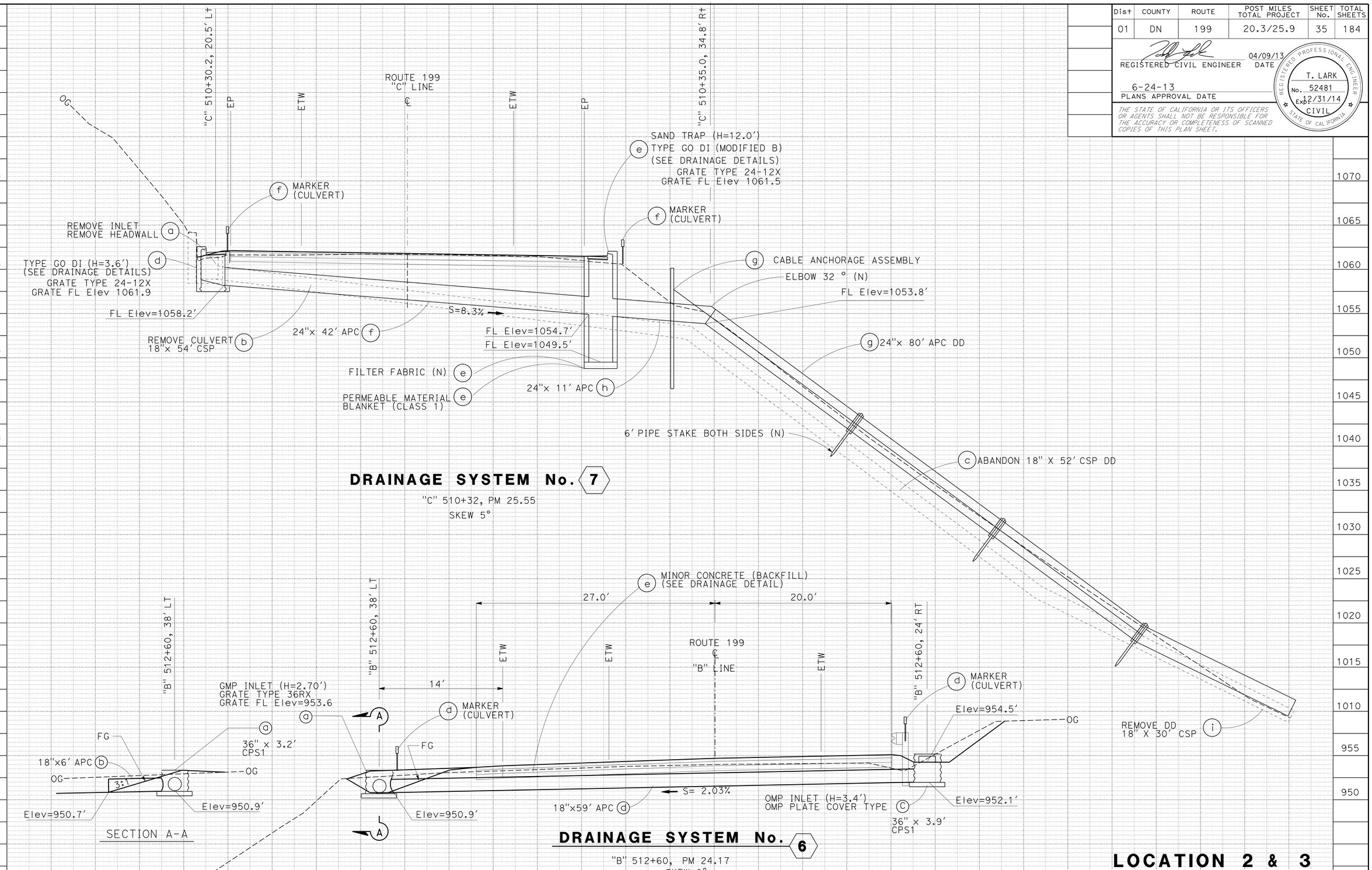

LOCATION 2 & 3 DRAINAGE PROFILE

SCALE: Horiz 1" = 5'
Vert 1" = 5'

DP-3

REVISED BY | DATE REVISED
Bijan Samrad | BIJAN SAMRAD
CALCULATED-DESIGNED BY | CHECKED BY
FUNCTIONAL SUPERVISOR | L.R. ASHLEY
STATE OF CALIFORNIA - DEPARTMENT OF TRANSPORTATION
Caltrans DESIGN
P:\PROJ\01\47940\drafting\01000003711\01000003711ib003.dgn

LAST REVISION 04-08-13 | DATE PLOTTED => 22-JUN-2013 | TIME PLOTTED => 10:00

Dist	COUNTY	ROUTE	POST MILES TOTAL PROJECT	SHEET No.	TOTAL SHEETS
01	DN	199	20.3/25.9	36	184

REGISTERED CIVIL ENGINEER 04/09/13 DATE

6-24-13
PLANS APPROVAL DATE

REGISTERED PROFESSIONAL ENGINEER T. LARK No. 52481 Exp. 12/31/14 CIVIL STATE OF CALIFORNIA

THE STATE OF CALIFORNIA OR ITS OFFICERS OR AGENTS SHALL NOT BE RESPONSIBLE FOR THE ACCURACY OR COMPLETENESS OF SCANNED COPIES OF THIS PLAN SHEET.

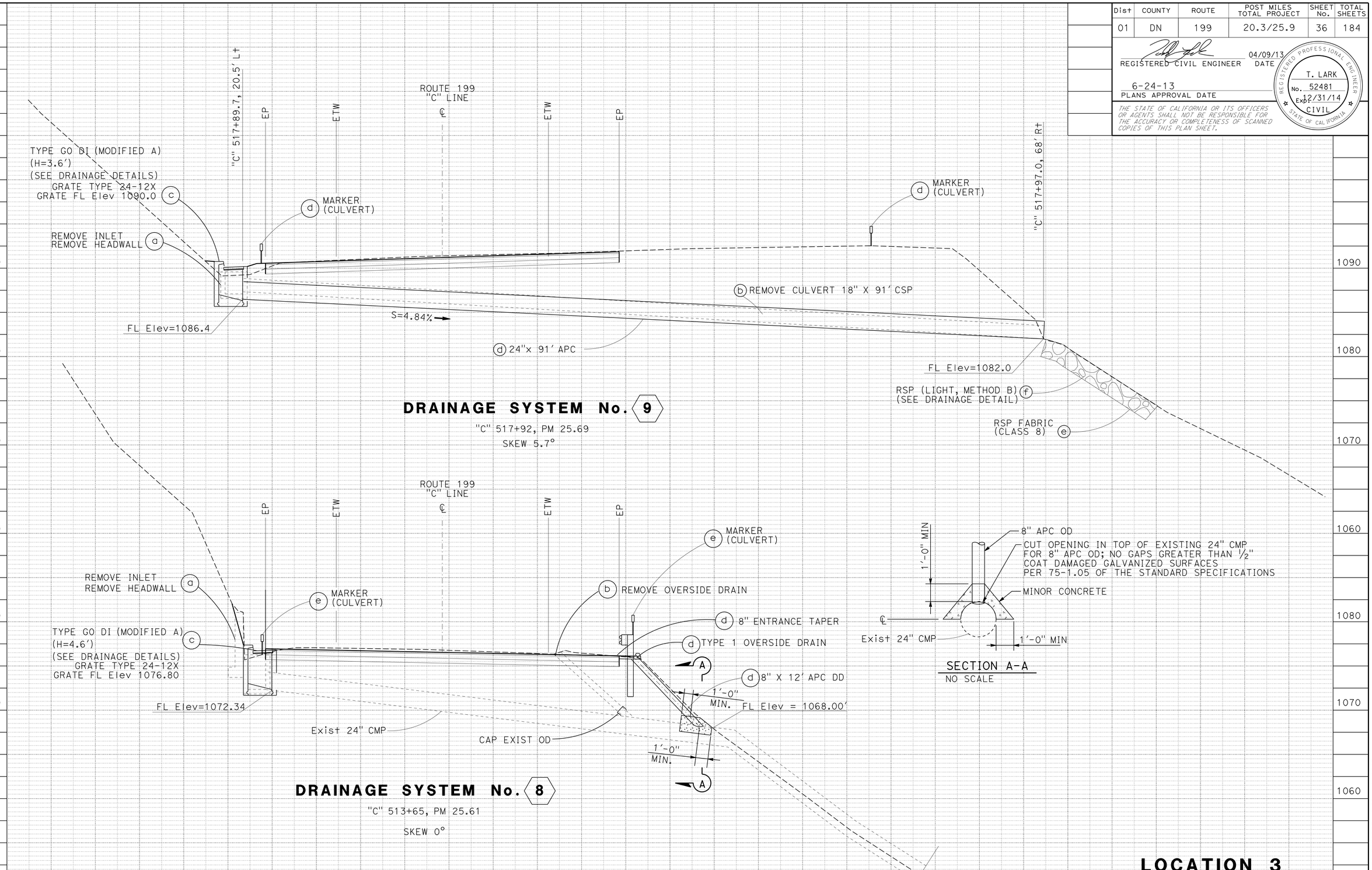

LOCATION 3
DRAINAGE PROFILE

SCALE: Horiz 1" = 5'
Vert 1" = 5'

DP-4

REVISED BY | DATE REVISED

Bijan Samrad | BIJAN SAMRAD

CALCULATED-DESIGNED BY | CHECKED BY

FUNCTIONAL SUPERVISOR | L.R. ASHLEY

STATE OF CALIFORNIA - DEPARTMENT OF TRANSPORTATION | DESIGN

P:\PROJ\01\47940\drafting\01000003711\01000003711ib004.dgn

LAST REVISION 04-08-13 | DATE PLOTTED => 22-JUN-2013 | TIME PLOTTED => 10:40

Dist	COUNTY	ROUTE	POST MILES TOTAL PROJECT	SHEET No.	TOTAL SHEETS
01	DN	199	20.3/25.9	37	184

REGISTERED CIVIL ENGINEER 04/09/13 DATE

6-24-13
PLANS APPROVAL DATE

REGISTERED PROFESSIONAL ENGINEER T. LARK No. 52481 Exp. 12/31/14 CIVIL STATE OF CALIFORNIA

THE STATE OF CALIFORNIA OR ITS OFFICERS OR AGENTS SHALL NOT BE RESPONSIBLE FOR THE ACCURACY OR COMPLETENESS OF SCANNED COPIES OF THIS PLAN SHEET.

NOTES:

1. FOR DETAILS NOT SHOWN, SEE STANDARD PLAN D74-B FOR TYPE GO AND STANDARD PLAN D73 FOR TYPE G1 DRAINAGE INLETS.
2. FOR FRAME AND GRATE DETAILS, SEE STANDARD PLAN D77A AND D77B.

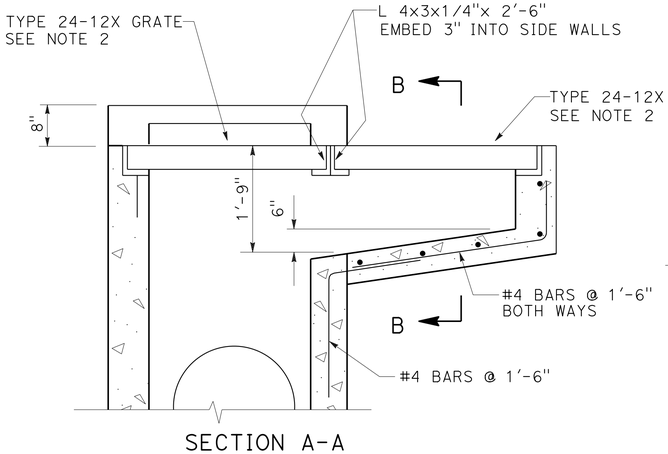

SECTION A-A

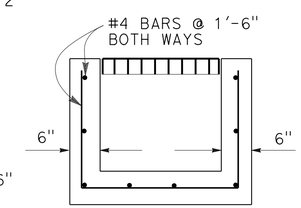

SECTION B-B

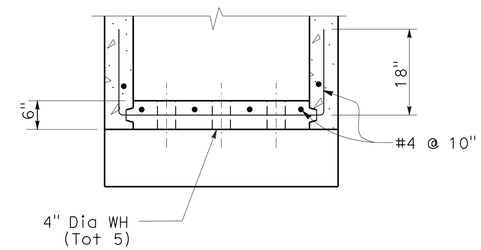

SECTION E-E

DRAINAGE SYSTEMS: 4 "B" 502+00
7 "C" 510.32 Rt
(SAND TRAP ONLY)

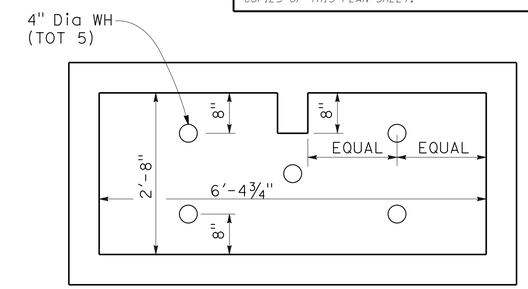

SECTION D-D

DRAINAGE SYSTEMS: 4 "B" 502+00
7 "C" 510.32 Rt
(SAND TRAP ONLY)

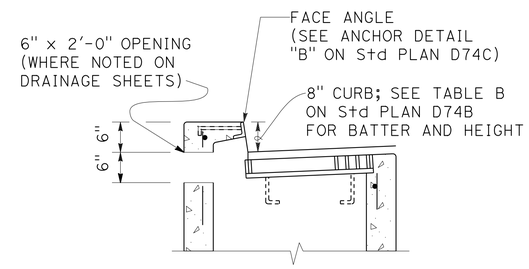

SECTION E-E

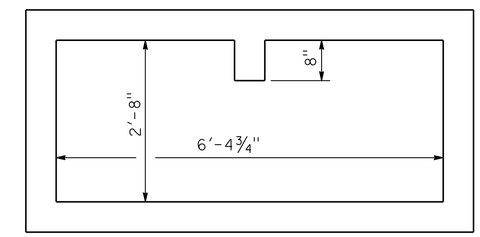

SECTION D-D

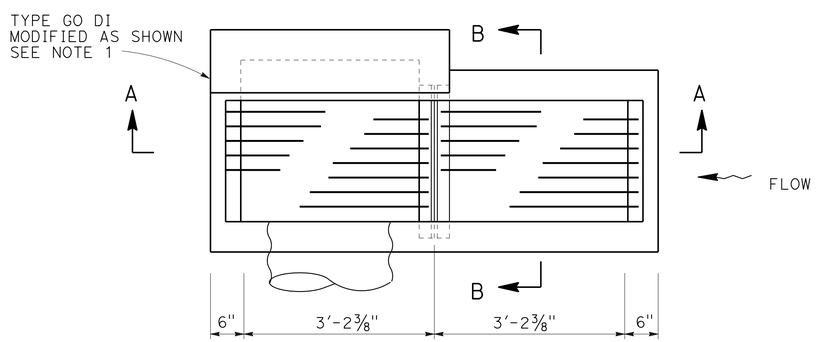

PLAN

TYPE GO INLET (MODIFIED A)

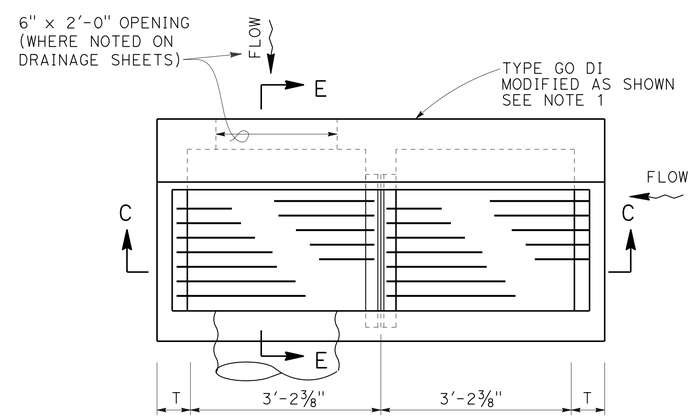

PLAN

TYPE GO INLET (MODIFIED B)

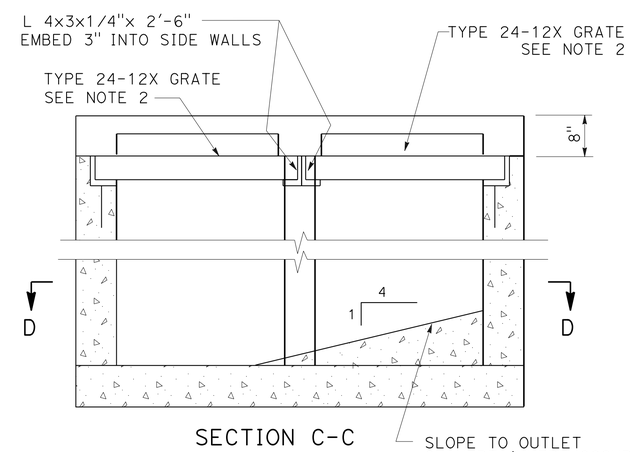

SECTION C-C

DRAINAGE DETAILS

NO SCALE

DD-1

REVISED BY | DATE REVISED
ELISA MEYER | BIJAN SAMRAD
CALCULATED-DESIGNED BY | CHECKED BY
FUNCTIONAL SUPERVISOR | L.R. ASHLEY

STATE OF CALIFORNIA - DEPARTMENT OF TRANSPORTATION
Caltrans
DESIGN

P:\PROJ\01\47940\drafting\01000003711\01000003711ic001.dgn

LAST REVISION | DATE PLOTTED => 22-JUN-2013
04-08-13 | TIME PLOTTED => 10:40

Dist	COUNTY	ROUTE	POST MILES TOTAL PROJECT	SHEET No.	TOTAL SHEETS
01	DN	199	20.3/25.9	38	184

REGISTERED CIVIL ENGINEER 04/09/13 DATE

6-24-13
PLANS APPROVAL DATE

REGISTERED PROFESSIONAL ENGINEER T. LARK No. 52481 Exp. 12/31/14 CIVIL STATE OF CALIFORNIA

THE STATE OF CALIFORNIA OR ITS OFFICERS OR AGENTS SHALL NOT BE RESPONSIBLE FOR THE ACCURACY OR COMPLETENESS OF SCANNED COPIES OF THIS PLAN SHEET.

NOTES:
1. FOR DETAILS NOT SHOWN, SEE STANDARD PLAN SHEET D87A.
2. 20′ MINIMUM LENGTH OF GUTTER ON BOTH SIDES IN A SAG LOCATION.

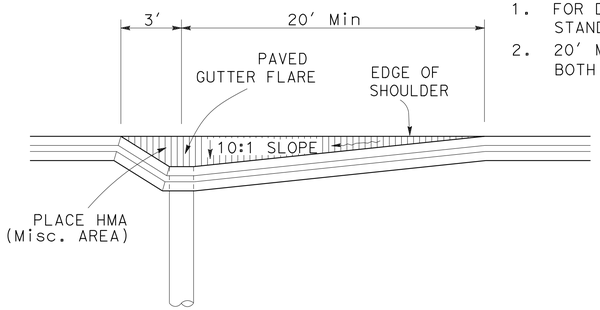

PLAN

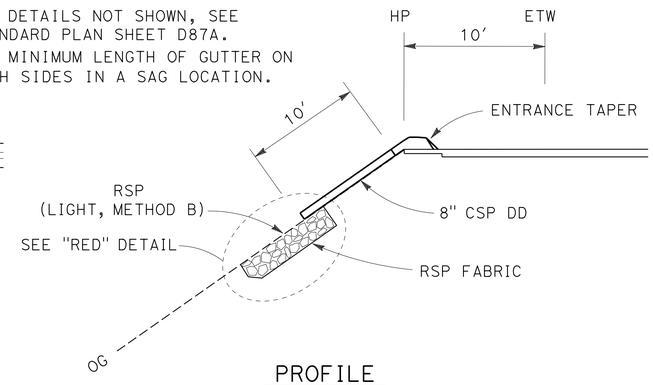

PROFILE

TYPE 1 OVERSIDE DRAIN DETAIL

DRAINAGE SYSTEM No. 8 d

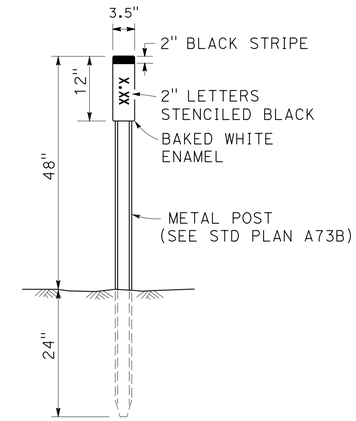

MARKER (CULVERT)

APC ALLOWABLE ALTERNATIVES

SYSTEM NUMBER ⬡	DRAINAGE UNIT ◯	GALVANIZED CSP 0.168" (8 GA) THICK	GALVANIZED CSP 0.138" (10 GA) THICK	GALVANIZED CSP 0.109" (12 GA) THICK	GALVANIZED CSP 0.079" (14 GA) THICK	GALVANIZED CSP POLYMERIC SHEET COATED 0.138" (10 GA) THICKNESS	GALVANIZED CSP POLYMERIC SHEET COATED 0.109" (12 GA) THICKNESS	GALVANIZED CSP POLYMERIC SHEET COATED 0.079" (14 GA) THICKNESS	HDPE OPTION
1	d			X				X	YES
2	d			X				X	YES
3	d		X					X	YES
4	b	X				X			YES
6	d	X					X		YES
7	f/i		X					X	YES
8	d		X					X	YES
9	d		X					X	YES

NOTE:
PLASTIC PIPE SHALL BE HIGH DENSITY POLYETHYLENE (HDPE, TYPE S), CONFORMING TO SECTION 64 OF THE STANDARD SPECIFICATIONS. REFERENCE SHOULD BE MADE TO DURABILITY IN SECTION 854.8 OF THE HIGHWAY DESIGN MANUAL.

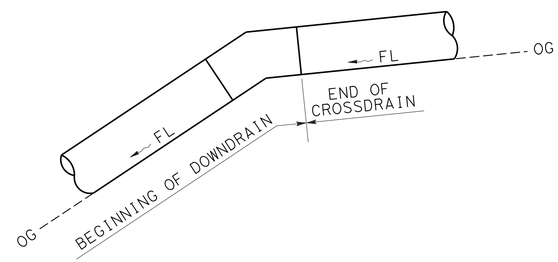

DOWNDRAIN PAYMENT LIMITS

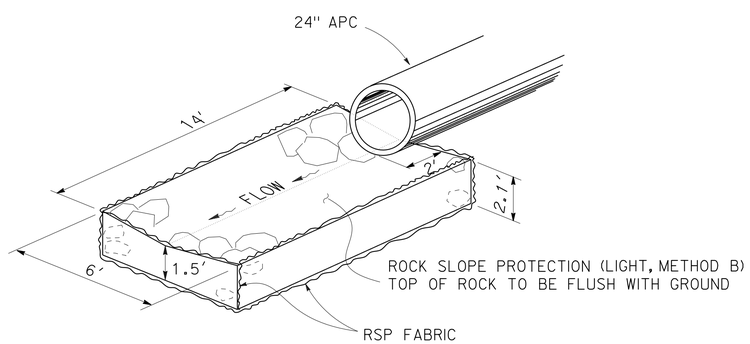

ROCK ENERGY DISSIPATOR (RED) AT DRAINAGE OUTLET

DRAINAGE SYSTEM No. 4 d 9 f

NOTE: DIMENSIONS AS SHOWN OR AS DIRECTED BY THE ENGINEER.

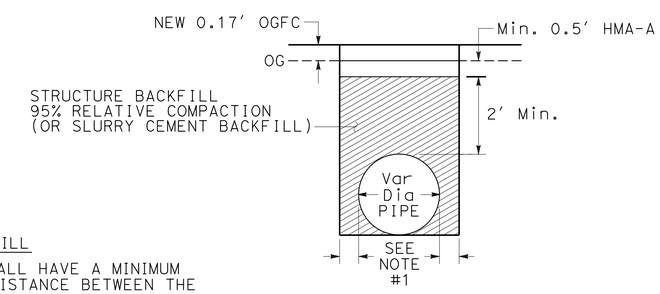

NOTE#1

STRUCTURE BACKFILL

TRENCH WIDTH SHALL HAVE A MINIMUM OF 2′ OF CLEAR DISTANCE BETWEEN THE OUTSIDE OF THE PIPE AND THE SIDE OF EXCAVATION ON EACH SIDE.

SLURRY CEMENT BACKFILL

TRENCH WIDTH SHALL BE A MINIMUM OF 0.5′ BEYOND OUTSIDE EDGE OF PIPE AND THE SIDE OF EXCAVATION ON EACH SIDE FOR PIPE DIAMETERS UP TO AND INCLUDING 42", OR 1′ FOR PIPES OVER 42" IN DIAMETER SEE STANDARD SPECIFICATIONS 19-3.062

STRUCTURE BACKFILL UNDER EXISTING PAVEMENT

SEE Std. PLAN A62F FOR EXCAVATION AND BACKFILL DETAILS.

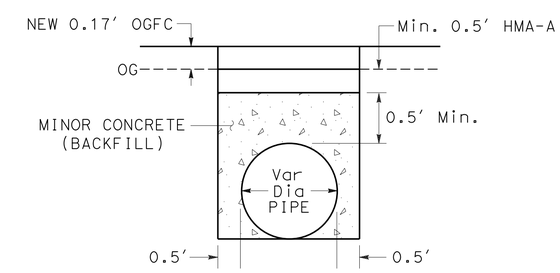

MINOR CONCRETE (BACKFILL)

DRAINAGE DETAILS
NO SCALE **DD-2**

STATE OF CALIFORNIA - DEPARTMENT OF TRANSPORTATION
DESIGN
FUNCTIONAL SUPERVISOR L.R. ASHLEY
CALCULATED-DESIGNED BY ELISA MEYER
CHECKED BY BIJAN SAMRAD
REVISED BY
DATE REVISED
P:\PROJ\01\47940\drafting\01000003711\01000003711ic002.dgn
LAST REVISION 04-08-13
DATE PLOTTED => 22-JUN-2013
TIME PLOTTED => 10:40

Dist	COUNTY	ROUTE	POST MILES TOTAL PROJECT	SHEET No.	TOTAL SHEETS
01	DN	199	20.3/25.9	39	184

REGISTERED CIVIL ENGINEER 04/09/13 DATE

6-24-13
PLANS APPROVAL DATE

REGISTERED PROFESSIONAL ENGINEER T. LARK No. 52481 Exp. 12/31/14 CIVIL STATE OF CALIFORNIA

THE STATE OF CALIFORNIA OR ITS OFFICERS OR AGENTS SHALL NOT BE RESPONSIBLE FOR THE ACCURACY OR COMPLETENESS OF SCANNED COPIES OF THIS PLAN SHEET.

NOTES:

1. ALL CULVERT JOINTS SHALL BE POSITIVE.
2. THE JOINT CLASSIFICATIONS FOR DOWNDRAINS SHALL BE DOWNDRAINS.
3. LENGTHS OF PIPES, DOWNDRAINS AND ANGLES OF ELBOWS SHALL BE VERIFIED IN THE FIELD BY THE CONTRACTOR.

DRAINAGE QUANTITIES

POST MILE	DRAINAGE SYSTEM NUMBER	DRAINAGE UNIT	REMOVE INLET	REMOVE HEADWALL	REMOVE CULVERT	ABANDON CULVERT	REMOVE CABLE ANCHORAGE SYSTEM	REMOVE DD	ABANDON DD	REMOVE OVERSIDE DRAIN	36" CSPI (.0.109" THICK)	INLET HEIGHT "H" (N)	24" APC	18" APC	CABLE ANCHORAGE SYSTEM (N)	24" APC DD	MINOR CONCRETE/ MINOR STRUCTURE	Misc IRON AND STEEL	RSP FABRIC (CLASS 8)	RSP (LIGHT, METHOD B)	REMOVE MARKER	MARKER (CULVERT)	24" AFES	OVERSIDE DRAIN 8" ENTRANCE TAPER	OVERSIDE DRAIN 8" ANCHOR ASSEMBLY	OVERSIDE DRAIN 8" APC DOWNDRAIN	MINOR CONCRETE (BACKFILL)	PERMEABLE MATERIAL CLASS 1 (BLANKET)	FILTER FABRIC (N)	3" PLASTIC PIPE UNDERDRAIN	REMARKS
			EA								LF	LF	LF	LF	EA	LF	CY	LB	SQYD	CY	EA	EA	EA	EA	EA	LF	CY	CY	SQYD	LF	
20.57	1	a	1																												
		b			1																										18" X 44' EXISTING CSP
		c										4.8					2.7	478													TYPE GO DI (MODIFIED B) W/ (2) 24-12X GRATE
		d											47.2									2									24" X 47.2' APC
20.58	2	a	1																												
		b			1																										18" X 50' EXISTING CUVLVERT
		c										3.6					1.8	478													TYPE GO DI (MODIFIED A) W/ (2) 24-12X GRATE
		d											57									2									24" X 57' APC
20.62	3	a		1																											
		b			1																										24" X 62' EXISTING CSP
		c																					1								
		d											64									2									24" X 64' APC
23.95	4	a										10					6.7	478										1.2	12		SAND TRAP TYPE GO DI (MODIFIED B) W/ (2) 24-12X GRATE
		b											53.1									2									24" X 53.1' APC
		c																	18.7												
		d																		7.5											ROCK ENERGY DISSIPATOR (R.E.D)
24.07	5	a	1																												
		b				1																									18" X 30' EXISTING CSP
		c					1																								
		d						1																							18" X 17' EXISTING DD
		e																			2										
		f																												100	EXTEND 3" PIPE THROUGH ABUTMENT 1
24.17	6	a									3.2	2.7						215													TYPE GMP INLET W/ 36RX GRATE
		b												6																	18" X 6' APC
		c									3.9	3.4						177													TYPE OMP INLET W/ PLATE COVER
		d												59								2									18" X 59' APC
		e																									5.7				
25.55	7	a	1	1																											
		b			1																										18" X 54' EXISTING CSP
		c							1																						18" X 52' EXISTING CSP DD
		d										3.6					1.4	239													TYPE GO DI W/ 24-12X GRATE
		e										12					7.8	478										1.2	12		SAND TRAP TYPE GO DI (MODIFIED B) W/ (2) 24-12X GRATE
		f											42									2									24" X 42' APC
		g													1	80															24" X 80' APC DD
		h											11																		24" X 11' APC
		i						1																							18" X 30' EXISTING CSP DD
25.61	8	a	1	1																											
		b								1																					
		c										4.6					2.1	478													TYPE GO DI (MODIFIED A) W/ (2) 24-12X GRATE
		d																						1	1	12					8" X 12' APC OVERSIDE DD
		e																				2									
25.69	9	a	1	1																											
		b			1																										18" X 91' EXISTING CSP
		c										3.6					1.8	478													TYPE GO DI (MODIFIED A) W/ (2) 24-12X GRATE
		d											91									2									24" X 91' APC
		e																	18.7												
		f																		7.5											ROCK ENERGY DISSIPATOR (R.E.D)
25.73	10	a						1																							8" X 44' EXISTING DD, LOC 3 520+22, (SEE LAYOUT L-12)
		b								1																					
TOTAL			6	4	5	1	1	3	1	2	7.1		365.3	65		80	24.3	3499	37.4	15	2	16	1	1	1	12	5.7	2.4	24	100	

(N) - NOT A SEPARATE PAY ITEM, FOR INFORMATION ONLY

DRAINAGE QUANTITIES
DQ-1

REVISED BY | DATE REVISED
ELISA MEYER | BIJAN SAMRAD
CALCULATED-DESIGNED BY | CHECKED BY
FUNCTIONAL SUPERVISOR
L.R. ASHLEY

STATE OF CALIFORNIA - DEPARTMENT OF TRANSPORTATION
Caltrans
DESIGN

P:\PROJ\01\47940\drafting\01000003711\01000003711id001.dgn

LAST REVISION 04-08-13 | DATE PLOTTED => 22-JUN-2013 | TIME PLOTTED => 10:40

Dist	COUNTY	ROUTE	POST MILES TOTAL PROJECT	SHEET No.	TOTAL SHEETS
01	DN	199	20.3/25.9	40	184

Sheri M. Rodriguez 04/09/13
REGISTERED ELECTRICAL ENGINEER DATE

6-24-13
PLANS APPROVAL DATE

REGISTERED PROFESSIONAL ENGINEER SHERI M. RODRIGUEZ No. C66861 Exp. 9-30-14 STATE OF CALIFORNIA

THE STATE OF CALIFORNIA OR ITS OFFICERS OR AGENTS SHALL NOT BE RESPONSIBLE FOR THE ACCURACY OR COMPLETENESS OF SCANNED COPIES OF THIS PLAN SHEET.

STATIONARY MOUNTED CONSTRUCTION AREA SIGNS

SIGN ◯	SIGN CODE	SIGN MESSAGE	PANEL SIZE	NUMBER AND SIZE OF POSTS	NUMBER OF SIGNS	REMARKS
			INCHES	INCHES	EA	
A	C40 (CA)	TRAFFIC FINES DOUBLED IN CONSTRUCTION ZONES	108 X 42	2 - 6 x 6	2	
B	W20-1	ROAD WORK AHEAD	36 X 36	40' WOOD POLE	2	SEE ELECTRICAL PLANS
	W7-3a	NEXT 6 MILES	24 X 18		2	
C	W11-1	BICYCLE SYMBOL	36 X 36	1 - 4 x 6	6	
	W16-1	SHARE THE ROAD	24 X 30		6	
D	G20-2	END ROAD WORK	36 X 18	1 - 4 x 4	2	
E	W20-1	ROAD WORK AHEAD	36 X 36	40' WOOD POLE	3	SEE ELECTRICAL PLANS
F	W20-1	ROAD WORK AHEAD	36 X 36	1 - 4 x 6	2	
				TOTAL	25	

NOTE: EXACT SIGN LOCATION TO BE DETERMINED BY THE ENGINEER.

LEGEND

= Temp FLASHING BEACON
(SEE ELECTRICAL PLANS)

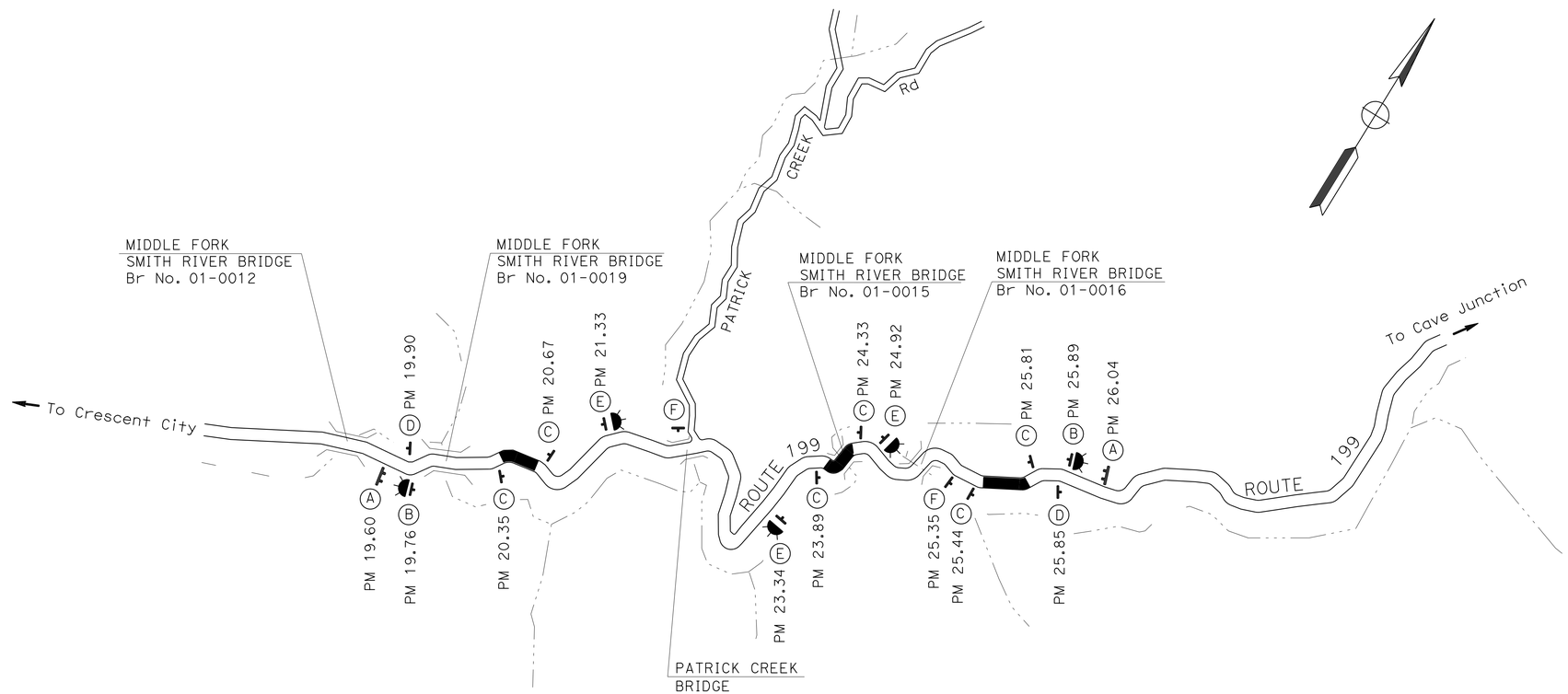

APPROVED FOR CONSTRUCTION AREA SIGN WORK ONLY

CONSTRUCTION AREA SIGNS
CS-1

NO SCALE

STATE OF CALIFORNIA - DEPARTMENT OF TRANSPORTATION
Caltrans® TRAFFIC OPERATIONS

FUNCTIONAL SUPERVISOR: TROY ARSENEAU
CALCULATED-DESIGNED BY: SHERI RODRIGUEZ
CHECKED BY: TODD LARK
REVISED BY
DATE REVISED

P:\PROJ\01\47940\drafting\01000003711\01000003711a001.dgn

LAST REVISION 04-08-13
DATE PLOTTED => 22-JUN-2013
TIME PLOTTED => 10:40

Dist	COUNTY	ROUTE	POST MILES TOTAL PROJECT	SHEET No.	TOTAL SHEETS
01	DN	199	20.3/25.9	41	184

Sheri M. Rodriguez 04/09/13
REGISTERED ELECTRICAL ENGINEER DATE

6-24-13
PLANS APPROVAL DATE

REGISTERED PROFESSIONAL ENGINEER
SHERI M. RODRIGUEZ
No. C66861
Exp. 9-30-14
STATE OF CALIFORNIA

THE STATE OF CALIFORNIA OR ITS OFFICERS OR AGENTS SHALL NOT BE RESPONSIBLE FOR THE ACCURACY OR COMPLETENESS OF SCANNED COPIES OF THIS PLAN SHEET.

LEGEND

- CONSTRUCTION THIS STAGE
- DIRECTION OF TRAFFIC
- XX TRAFFIC STRIPE DETAIL NUMBER
- ROADSIDE SIGN (SINGLE POST)
- X SIGN CODE
- REMOVE SIGN
- RP REPLACE SIGN PANEL
- Temp RAILING (TYPE K)
- ALTERNATIVE Temp CRASH CUSHION
- Temp TRAFFIC SIGNAL SYSTEMS
- Temp FLASHING BEACON
- FLASHING BEACON (PORTABLE)
- CHANNELIZER (SURFACE MOUNTED) - 20' OC

STAGE 1 CONSTRUCTION:

NOTE:
- DRAINAGE SYSTEMS 1 & 2 MUST BE CONSTRUCTED PRIOR TO IMPLEMENTING STAGE 1 CONSTRUCTION.
- CONTRACTOR TO LAYOUT LOCATION OF CIDH PILES AND MBGR POSTS PRIOR TO PERFORMING DRAINAGE WORK TO AVOID CONFLICTS.

1. INSTALL Temp SIGNAL SYSTEM AND ASSOCIATED STATIONARY MOUNTED SIGNS.
2. INSTALL Temp RAILING (TYPE K), ALTERNATIVE Temp CRASH CUSHIONS AND COMPLETE ALL Temp PAVEMENT DELINEATION WORK, INCLUDING CHANNELIZERS (SURFACE MOUNTED).
3. CONSTRUCT KELLY CREEK BARRIER PER STRUCTURE PLANS.
4. CONSTRUCT METAL BEAM GUARDRAILING.

STAGE 2 CONSTRUCTION:

1. REMOVE Temp SIGNAL SYSTEM, Temp RAILING (TYPE K), ALTERNATIVE Temp CRASH CUSHIONS AND CHANNELIZERS (SURFACE MOUNTED).
2. PERFORM ALL Temp PAVEMENT DELINEATION AND SIGN WORK AS REQUIRED FOR STAGE 2.
3. COMPLETE ANY REMAINING DRAINAGE WORK.
4. CONSTRUCT SHOULDER WIDENING AND HMA LEVELING (Sta "A" 11+00.0 TO "A" 22+29.6) AND ROADWAY RECONSTRUCTION (Sta "A" 22+29.6 TO "A" 27+70.0), EXCLUDING PLACEMENT OF HMA (OPEN GRADED).
5. PLACE HMA (OPEN GRADED) AND COMPLETE ALL PAVEMENT DELINEATION WORK.
6. COMPLETE ALL REMAINING ROADWAY ITEMS AS REQUIRED.

LOCATION 1

INDEX

STAGE CONSTRUCTION AND TRAFFIC HANDLING PLAN SC-1

REVISED BY | DATE REVISED
SHERI RODRIGUEZ | TODD LARK
CALCULATED-DESIGNED BY | CHECKED BY
FUNCTIONAL SUPERVISOR: TROY ARSENEAU
STATE OF CALIFORNIA - DEPARTMENT OF TRANSPORTATION
Caltrans® TRAFFIC OPERATIONS

P:\PROJ\01\47940\drafting\01000003711\01000003371ma001.dgn

LAST REVISION 04-08-13 | DATE PLOTTED => 22-JUN-2013 | TIME PLOTTED => 08:55

Dist	COUNTY	ROUTE	POST MILES TOTAL PROJECT	SHEET No.	TOTAL SHEETS
01	DN	199	20.3/25.9	42	184

Sheri M. Rodriguez 04/09/13
REGISTERED ELECTRICAL ENGINEER DATE

6-24-13
PLANS APPROVAL DATE

REGISTERED PROFESSIONAL ENGINEER SHERI M. RODRIGUEZ No. C66861 Exp. 9-30-14 STATE OF CALIFORNIA

THE STATE OF CALIFORNIA OR ITS OFFICERS OR AGENTS SHALL NOT BE RESPONSIBLE FOR THE ACCURACY OR COMPLETENESS OF SCANNED COPIES OF THIS PLAN SHEET.

NOTES:

1. DRAINAGE SYSTEMS 1 & 2 MUST BE CONSTRUCTED PRIOR TO IMPLEMENTING STAGE 1 CONSTRUCTION.
2. CONTRACTOR TO LAYOUT LOCATION OF CIDH PILES AND MBGR POSTS PRIOR TO PERFORMING DRAINAGE WORK TO AVOID CONFLICTS.

STAGE 1:

1. INSTALL Temp SIGNAL SYSTEM AND ASSOCIATED STATIONARY MOUNTED SIGNS.
2. INSTALL Temp RAILING (TYPE K), ALTERNATIVE Temp CRASH CUSIONS AND COMPLETE ALL Temp PAVEMENT DELINEATION WORK, INCLUDING CHANNELIZERS (SURFACE MOUNTED).
3. CONSTRUCT KELLY CREEK BARRIER PER STRUCTURE PLANS.
4. CONSTRUCT METAL BEAM GUARDRAILING.

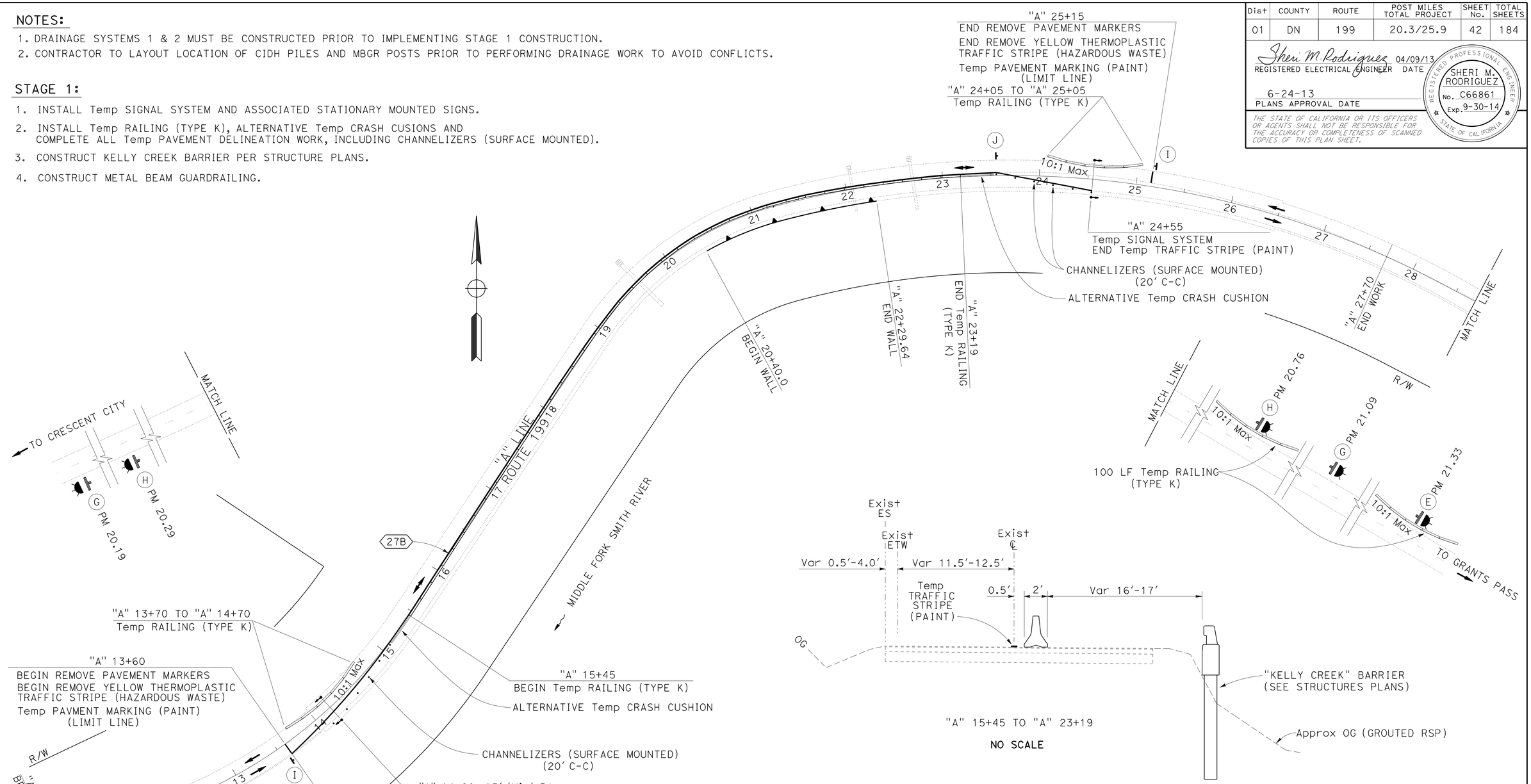

LOCATION 1

STAGE 1

STAGE CONSTRUCTION AND TRAFFIC HANDLING PLAN

SCALE: 1" = 50'

SC-2

APPROVED FOR STAGE CONSTRUCTION AND TRAFFIC HANDLING WORK ONLY

STATE OF CALIFORNIA - DEPARTMENT OF TRANSPORTATION
Caltrans TRAFFIC OPERATIONS

FUNCTIONAL SUPERVISOR: TROY ARSENEAU
CALCULATED-DESIGNED BY: SHERI RODRIGUEZ
CHECKED BY: TODD LARK
REVISED BY
DATE REVISED

P:\PROJ\01\47940\drafting\0100000371\0100000371ma002.dgn

LAST REVISION 04-08-13
DATE PLOTTED => 22-JUN-2013
TIME PLOTTED => 08:56

Dist	COUNTY	ROUTE	POST MILES TOTAL PROJECT	SHEET No.	TOTAL SHEETS
01	DN	199	20.3/25.9	43	184

Sheri M. Rodriguez 04/09/13
REGISTERED ELECTRICAL ENGINEER DATE

6-24-13
PLANS APPROVAL DATE

REGISTERED PROFESSIONAL ENGINEER SHERI M. RODRIGUEZ No. C66861 Exp. 9-30-14 STATE OF CALIFORNIA

THE STATE OF CALIFORNIA OR ITS OFFICERS OR AGENTS SHALL NOT BE RESPONSIBLE FOR THE ACCURACY OR COMPLETENESS OF SCANNED COPIES OF THIS PLAN SHEET.

NOTES:

1. DETAILS OF THIS STAGE TO BE IMPLEMENTED WHEN TRAFFIC IS RUNNING ON UNPAVED SURFACE.
2. W8-3 SIGNS SHALL BE COVERED WHEN TRAFFIC IS NOT RUNNING ON UNPAVED SURFACE.
3. WHEN TWO-WAY TRAFFIC CONTROL IS RUNNING ON BASE, CENTERLINE SHALL BE CLEARLY MARKED.

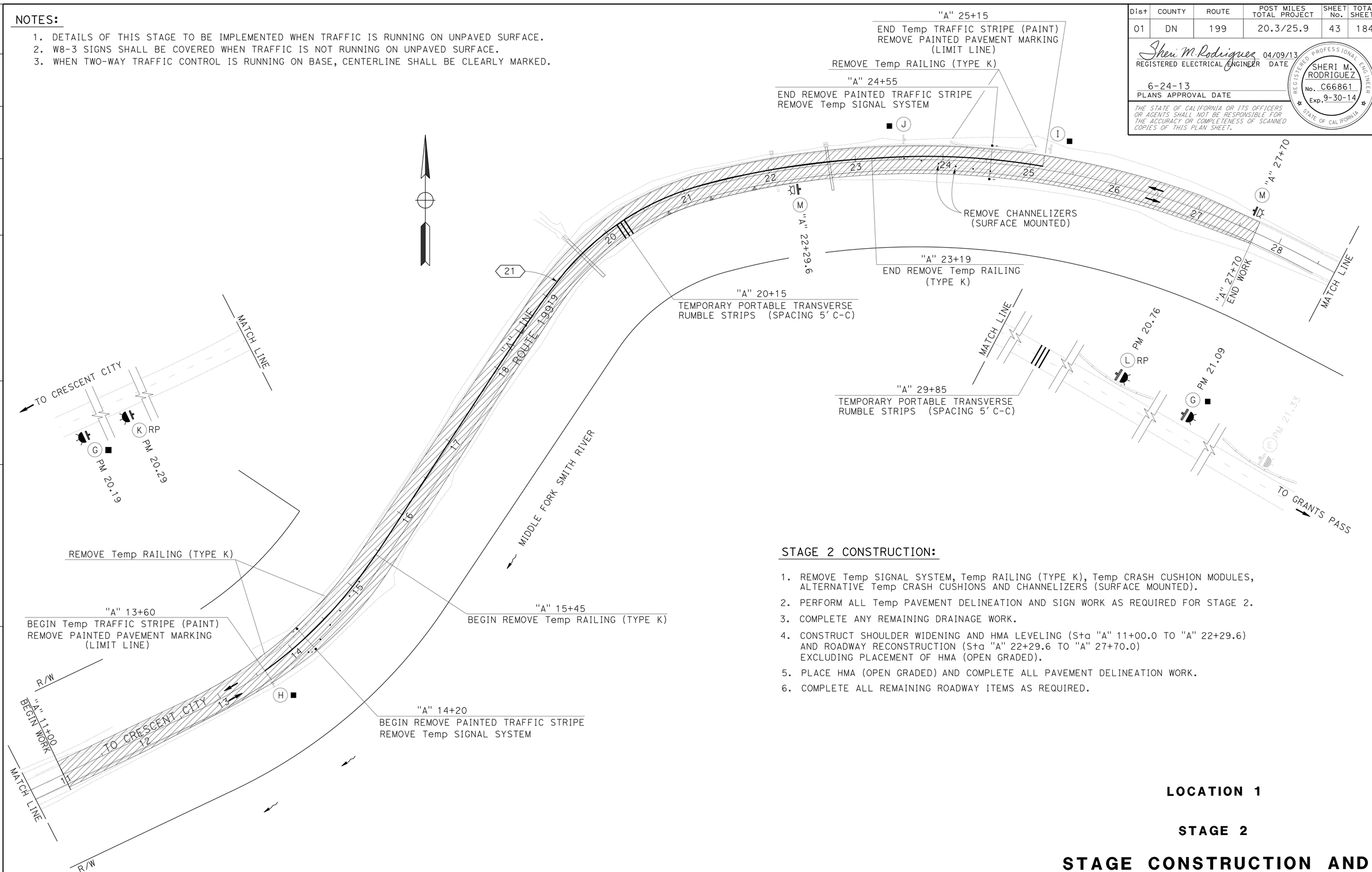

STAGE 2 CONSTRUCTION:

1. REMOVE Temp SIGNAL SYSTEM, Temp RAILING (TYPE K), Temp CRASH CUSHION MODULES, ALTERNATIVE Temp CRASH CUSHIONS AND CHANNELIZERS (SURFACE MOUNTED).
2. PERFORM ALL Temp PAVEMENT DELINEATION AND SIGN WORK AS REQUIRED FOR STAGE 2.
3. COMPLETE ANY REMAINING DRAINAGE WORK.
4. CONSTRUCT SHOULDER WIDENING AND HMA LEVELING (Sta "A" 11+00.0 TO "A" 22+29.6) AND ROADWAY RECONSTRUCTION (Sta "A" 22+29.6 TO "A" 27+70.0) EXCLUDING PLACEMENT OF HMA (OPEN GRADED).
5. PLACE HMA (OPEN GRADED) AND COMPLETE ALL PAVEMENT DELINEATION WORK.
6. COMPLETE ALL REMAINING ROADWAY ITEMS AS REQUIRED.

LOCATION 1

STAGE 2

STAGE CONSTRUCTION AND TRAFFIC HANDLING PLAN

SCALE: 1" = 50'

SC-3

APPROVED FOR STAGE CONSTRUCTION AND TRAFFIC HANDLING WORK ONLY

REVISED BY | DATE REVISED
SHERI RODRIGUEZ | TODD LARK
CALCULATED-DESIGNED BY | CHECKED BY
FUNCTIONAL SUPERVISOR
TROY ARSENEAU

STATE OF CALIFORNIA - DEPARTMENT OF TRANSPORTATION
Caltrans® TRAFFIC OPERATIONS

P:\PROJ\01\47940\drafting\0100000371\0100000371ma003.dgn

LAST REVISION 04-08-13 | DATE PLOTTED => 22-JUN-2013 | TIME PLOTTED => 10:46

Dist	COUNTY	ROUTE	POST MILES TOTAL PROJECT	SHEET No.	TOTAL SHEETS
01	DN	199	20.3/25.9	44	184

Sheri M. Rodriguez 04/09/13
REGISTERED ELECTRICAL ENGINEER DATE

6-24-13
PLANS APPROVAL DATE

REGISTERED PROFESSIONAL ENGINEER SHERI M. RODRIGUEZ No. C66861 Exp. 9-30-14 STATE OF CALIFORNIA

THE STATE OF CALIFORNIA OR ITS OFFICERS OR AGENTS SHALL NOT BE RESPONSIBLE FOR THE ACCURACY OR COMPLETENESS OF SCANNED COPIES OF THIS PLAN SHEET.

LEGEND

- CONSTRUCTION THIS STAGE
- DOUBLE-TWISTED WIRE MESH DRAPERY
- STRUCTURE REMOVAL AND PAVEMENT OBLITERATION
- DIRECTION OF TRAFFIC
- XX TRAFFIC STRIPE DETAIL NUMBER
- ROADSIDE SIGN (SINGLE POST)
- X SIGN CODE
- ALTERNATIVE Temp CRASH CUSHION
- Temp TRAFFIC SIGNAL SYSTEMS
- Temp FLASHING BEACON
- CHANNELIZER (SURFACE MOUNTED) - 20' OC
- TRAFFIC PLASTIC DRUM - 20' OC
- Temp RETAINING WALL

STAGE 1 CONSTRUCTION:

1. PERFORM ROCK EXCAVATION ("B" 500+40 TO "B" 507+00).
2. CONSTRUCT DOUBLE-TWISTED WIRE MESH DRAPERY AND ROCK BOLT ANCHORS.
3. CONSTRUCT DRAINAGE SYSTEM 4.
4. CONSTRUCT WALL TYPE 1A ("B" 501+00 TO "B" 502+20).
5. CONSTRUCT SHOULDER WIDENING AND HMA LEVELING ("B" 500+40 TO "B" 505+42.13).
6. CONSTRUCT MBGR ("B" 500+90 TO "B" 502+52).
7. CONSTRUCT ACCESS FOR FOUNDATION WORK.

STAGE 2A CONSTRUCTION:

1. INSTALL Temp SIGNAL SYSTEM.
2. PLACE Temp RAILING (TYPE K), ALTERNATIVE Temp CRASH CUSHIONS AND PLASTIC TRAFFIC DRUMS AS SHOWN ON THESE PLANS.
3. PERFORM PAVEMENT DELINEATION WORK AS REQUIRED FOR THIS STAGE, INCLUDING PLACEMENT OF CHANNELIZERS (SURFACE MOUNTED).
4. DETOUR TRAFFIC TO SOUTHBOUND LANE.
5. BEGIN REMOVAL/ABANDONMENT OF DRAINAGE SYSTEM 5.
6. AS PER STRUCTURE PLANS, PERFORM THE FOLLOWING:
   - CONSTRUCT FOUNDATIONS.
   - CONSTRUCT NORTH RETAINING WALL.
   - CONSTRUCT SOUTH RETAINING WALL (ABUTMENT 1, MIDDLE FORK SMITH RIVER BRIDGE).
   - CONSTRUCT CIDH PILE SHAFTS.
7. REMOVE AND REPLACE CONCRETED RSP.

STAGE 2B CONSTRUCTION:

NOTES:

DRAINAGE SYSTEM 6 TO BE CONSTRUCTED PRIOR TO MBGR CONSTRUCTION.

CONTRACTOR TO LAYOUT LOCATION OF MBGR POSTS PRIOR TO DRAINAGE SYSTEM 6 CONSTRUCTION.

1. REMOVE ALTERNATIVE Temp CRASH CUSHIONS AND TRAFFIC PLASTIC DRUMS AS NECESSARY TO PLACE Temp RAILING (TYPE K) AS SHOWN ON THESE PLANS.
2. AS PER STRUCTURE PLANS, PERFORM THE FOLLOWING:
   - CONSTRUCT FALSEWORK FOR ARCH.
   - CONSTRUCT ABUTMENTS.
   - CONSTRUCT SUPERSTRUCTURES.
   - INSTALL RAILING.
3. CONSTRUCT NB TRAFFIC LANE AND ROAD APPROACHES ("B" 505+42.13 TO "B" 513+00) AND Temp RETAINING WALLS ("B" 506+60 TO "B" 506+86.33 & "B" 510+31.83 TO "B" 512+20). EXCLUDING PLACEMENT OF HMA (OPEN GRADED).
4. COMPLETE MBGR WORK ADJACENT TO NB TRAFFIC LANE.

STAGE 3 CONSTRUCTION:

1. RESET Temp RAILING (TYPE K) AND ALTERNATIVE Temp CRASH CUSHIONS AS SHOWN.
2. PERFORM PAVEMENT DELINEATION WORK AS REQUIRED FOR THIS STAGE.
3. SHIFT TRAFFIC TO NB LANE AND ONTO NEW BRIDGE.
4. CONSTRUCT SB TRAFFIC LANE AND ROAD APPROACHES ("B" 505+42.13 TO "B" 513+00), EXCLUDING PLACEMENT OF HMA (OPEN GRADED).
5. COMPLETE DRAINAGE WORK.
6. COMPLETE MGBR WORK.
7. DEMOLISH OLD BRIDGE.

STAGE 4 CONSTRUCTION:

1. REMOVE Temp RAILING (TYPE K), ALTERNATIVE Temp CRASH CUSHIONS, Temp SIGNAL SYSTEM AND ALL ASSOCIATED SIGNS.
2. PERFORM CONFORM GRINDS AND REPLACE HMA (OPEN GRADED).
3. CONSTRUCT CENTERLINE RUMBLE STRIPS AND PERFORM ALL DELINEATION WORK.
4. COMPLETE ANY REMAINING WORK ITEMS.

LOCATION 2

INDEX

STAGE CONSTRUCTION AND TRAFFIC HANDLING PLAN SC-4

REVISED BY | DATE REVISED
SHERI RODRIGUEZ | TODD LARK
CALCULATED-DESIGNED BY | CHECKED BY
FUNCTIONAL SUPERVISOR: TROY ARSENEAU
STATE OF CALIFORNIA - DEPARTMENT OF TRANSPORTATION
Caltrans® TRAFFIC OPERATIONS

P:\PROJ\01\47940\drafting\01000003711\01000003711ma004.dgn

LAST REVISION 04-08-13 | DATE PLOTTED => 22-JUN-2013 | TIME PLOTTED => 08:56

Dist	COUNTY	ROUTE	POST MILES TOTAL PROJECT	SHEET No.	TOTAL SHEETS
01	DN	199	20.3/25.9	45	184

Sheri M. Rodriguez 04/09/13
REGISTERED ELECTRICAL ENGINEER DATE

6-24-13
PLANS APPROVAL DATE

REGISTERED PROFESSIONAL ENGINEER SHERI M. RODRIGUEZ No. C66861 Exp. 9-30-14 STATE OF CALIFORNIA

THE STATE OF CALIFORNIA OR ITS OFFICERS OR AGENTS SHALL NOT BE RESPONSIBLE FOR THE ACCURACY OR COMPLETENESS OF SCANNED COPIES OF THIS PLAN SHEET.

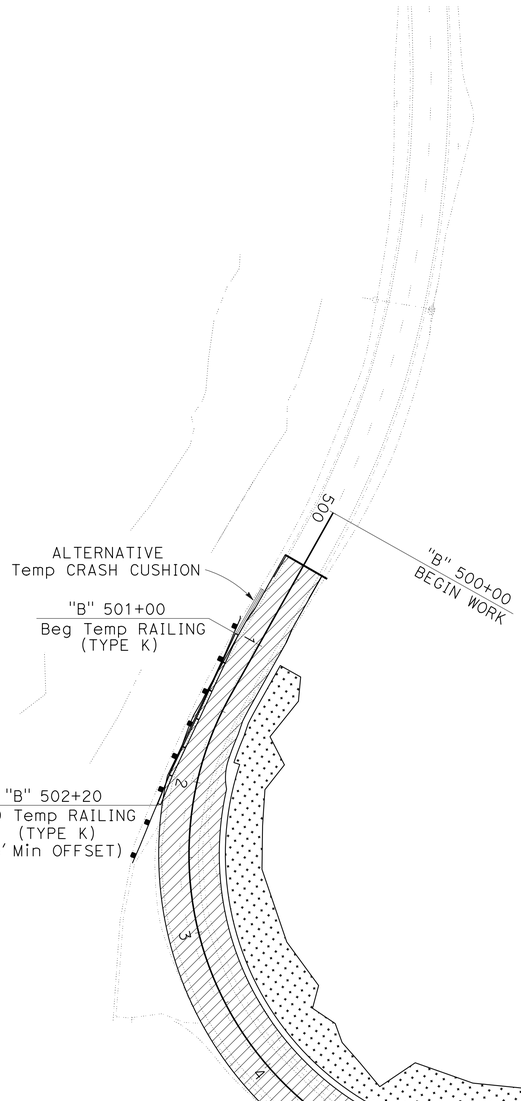

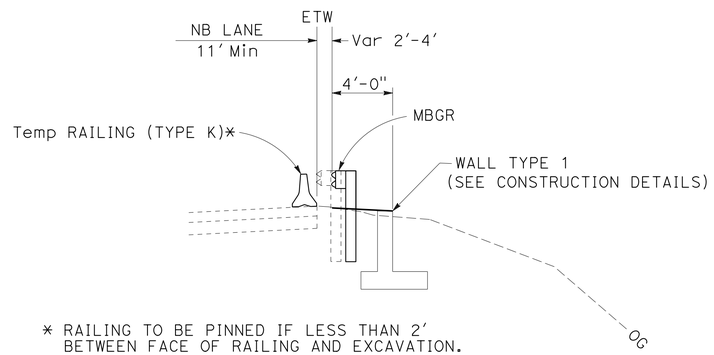

* RAILING TO BE PINNED IF LESS THAN 2' BETWEEN FACE OF RAILING AND EXCAVATION.

WALL TYPE 1A
"B" 501+00 TO "B" 502+20
NO SCALE

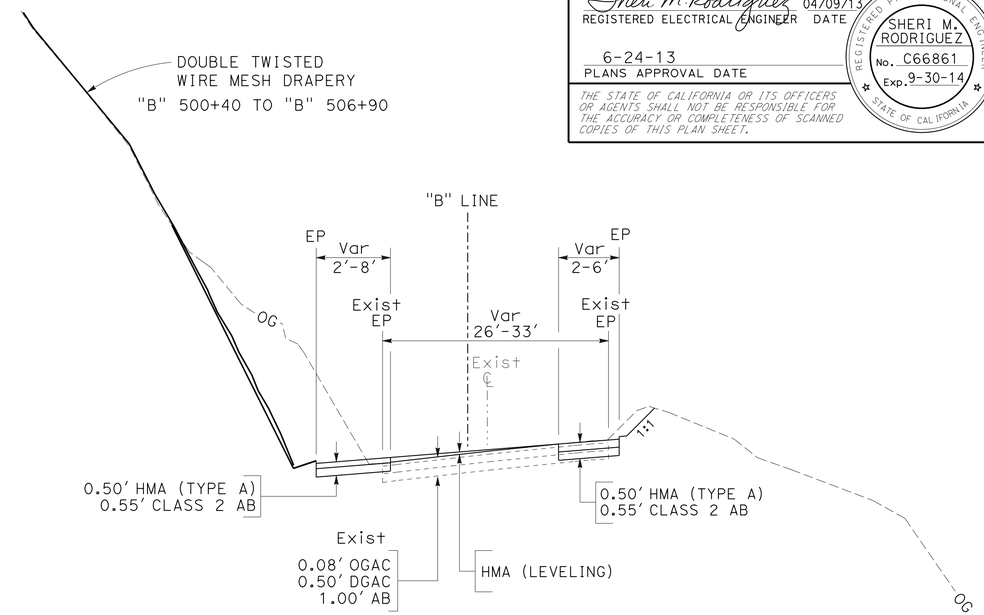

"B" 500+40 TO "B" 505+42.13
NO SCALE

STAGE 1 CONSTRUCTION:

1. PERFORM ROCK EXCAVATION ("B" 500+40 TO "B" 507+00).
2. CONSTRUCT DOUBLE-TWISTED WIRE MESH DRAPERY AND ROCK BOLT ANCHORS.
3. CONSTRUCT DRAINAGE SYSTEM 4.
4. CONSTRUCT WALL TYPE 1A ("B" 501+00 TO "B" 502+20).
5. CONSTRUCT SHOULDER WIDENING AND HMA LEVELING ("B" 500+40 TO "B" 505+42.13).
6. CONSTRUCT MBGR ("B" 500+90 TO "B" 502+52).
7. CONSTRUCT ACCESS FOR FOUNDATION WORK.

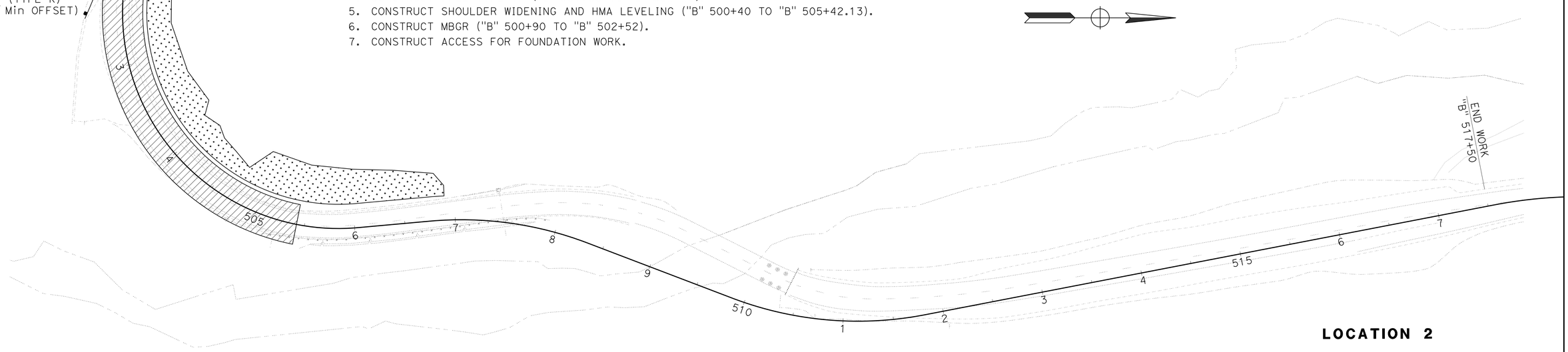

LOCATION 2

STAGE 1

STAGE CONSTRUCTION AND TRAFFIC HANDLING PLAN

SCALE: 1" = 50'

SC-5

APPROVED FOR STAGE CONSTRUCTION AND TRAFFIC HANDLING WORK ONLY

STATE OF CALIFORNIA - DEPARTMENT OF TRANSPORTATION
Caltrans® TRAFFIC OPERATIONS

FUNCTIONAL SUPERVISOR: TROY ARSENEAU
CALCULATED-DESIGNED BY: SHERI RODRIGUEZ
CHECKED BY: TODD LARK
REVISED BY / DATE REVISED

P:\PROJ\01\47940\drafting\01000003711\01000003711ma005.dgn

LAST REVISION 04-08-13
DATE PLOTTED => 22-JUN-2013
TIME PLOTTED => 08:56

Dist	COUNTY	ROUTE	POST MILES TOTAL PROJECT	SHEET No.	TOTAL SHEETS
01	DN	199	20.3/25.9	46	184

Sheri M. Rodriguez 04/09/13
REGISTERED ELECTRICAL ENGINEER DATE

6-24-13
PLANS APPROVAL DATE

REGISTERED PROFESSIONAL ENGINEER SHERI M. RODRIGUEZ No. C66861 Exp. 9-30-14 STATE OF CALIFORNIA

THE STATE OF CALIFORNIA OR ITS OFFICERS OR AGENTS SHALL NOT BE RESPONSIBLE FOR THE ACCURACY OR COMPLETENESS OF SCANNED COPIES OF THIS PLAN SHEET.

STAGE 2A CONSTRUCTION:

1. INSTALL Temp SIGNAL SYSTEM.
2. PLACE Temp RAILING (TYPE K), ALTERNATIVE Temp CRASH CUSHIONS AND TRAFFIC PLASTIC DRUMS AS SHOWN ON THESE PLANS.
3. PERFORM PAVMENT DELINEATION WORK AS REQUIRED FOR THIS STAGE, INCLUDING PLACEMENT OF CHANNELIZERS (SURFACE MOUNTED).
4. DETOUR TRAFFIC TO SOUTHBOUND LANE.
5. BEGIN REMOVAL/ABANDONMENT OF DRAINAGE SYSTEM 5.
6. AS PER STRUCTURE PLANS, PERFORM THE FOLLOWING:
   - CONSTRUCT FOUNDATIONS.
   - CONSTRUCT NORTH RETAINING WALL.
   - CONSTRUCT SOUTH RETAINING WALL (ABUTMENT 1, MIDDLE FORK SMITH RIVER BRIDGE.)
   - CONSTRUCT CIDH PILE SHAFTS.
7. REMOVE AND REPLACE CONCRETED RSP.

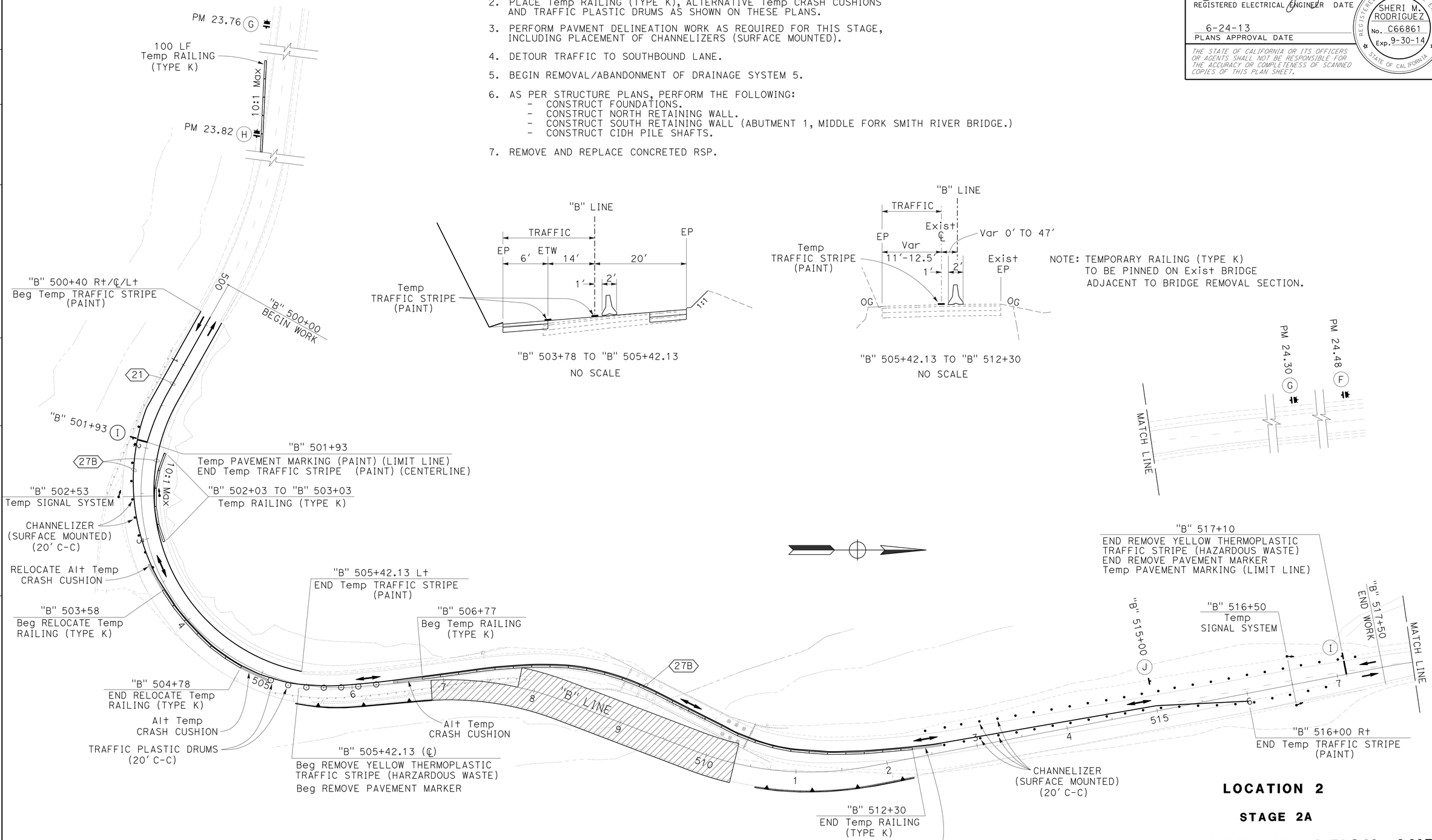

NOTE: TEMPORARY RAILING (TYPE K) TO BE PINNED ON Exist BRIDGE ADJACENT TO BRIDGE REMOVAL SECTION.

LOCATION 2

STAGE 2A

STAGE CONSTRUCTION AND TRAFFIC HANDLING PLAN

SCALE: 1" = 50'

SC-6

APPROVED FOR STAGE CONSTRUCTION AND TRAFFIC HANDLING WORK ONLY

STATE OF CALIFORNIA - DEPARTMENT OF TRANSPORTATION
Caltrans® TRAFFIC OPERATIONS

FUNCTIONAL SUPERVISOR: TROY ARSENEAU
CALCULATED-DESIGNED BY: SHERI RODRIGUEZ
CHECKED BY: TODD LARK
REVISED BY
DATE REVISED

P:\PROJ\01\47940\drafting\0100000371\0100000371ma006.dgn

LAST REVISION 04-08-13
DATE PLOTTED => 22-JUN-2013
TIME PLOTTED => 08:56

Dist	COUNTY	ROUTE	POST MILES TOTAL PROJECT	SHEET No.	TOTAL SHEETS
01	DN	199	20.3/25.9	47	184

Sheri M. Rodriguez 04/09/13
REGISTERED ELECTRICAL ENGINEER DATE

6-24-13
PLANS APPROVAL DATE

REGISTERED PROFESSIONAL ENGINEER
SHERI M. RODRIGUEZ
No. C66861
Exp. 9-30-14
STATE OF CALIFORNIA

THE STATE OF CALIFORNIA OR ITS OFFICERS OR AGENTS SHALL NOT BE RESPONSIBLE FOR THE ACCURACY OR COMPLETENESS OF SCANNED COPIES OF THIS PLAN SHEET.

STAGE 2B CONSTRUCTION:

NOTES:

DRAINAGE SYSTEM 6 TO BE CONSTRUCTED PRIOR TO MBGR CONSTRUCTION.
CONTRACTOR TO LAYOUT LOCATION OF MBGR POSTS PRIOR TO DRAINAGE SYSTEM 6 CONSTRUCTION.

1. REMOVE ALTERNATIVE Temp CRASH CUSHIONS AND TRAFFIC PLASTIC DRUMS AS NECESSARY TO PLACE Temp RAILING (TYPE K) AS SHOWN ON THESE PLANS.
2. AS PER STRUCTURE PLANS, PERFORM THE FOLLOWING:
   - CONSTRUCT FALSEWORK FOR ARCH.
   - CONSTRUCT ABUTMENTS.
   - CONSTRUCT SUPERSTRUCTURES.
   - INSTALL RAILING.
3. CONSTRUCT NB TRAFFIC LANE AND ROAD APPROACHES ("B" 505+42.13 TO "B" 513+00) AND Temp RETAINING WALLS ("B" 506+60 TO "B" 506+86.33 & "B" 510+31.83 TO "B" 512+20). EXCLUDING PLACEMENT OF HMA (OPEN GRADED).
4. COMPLETE MBGR WORK ADJACENT TO NB TRAFFIC LANE.

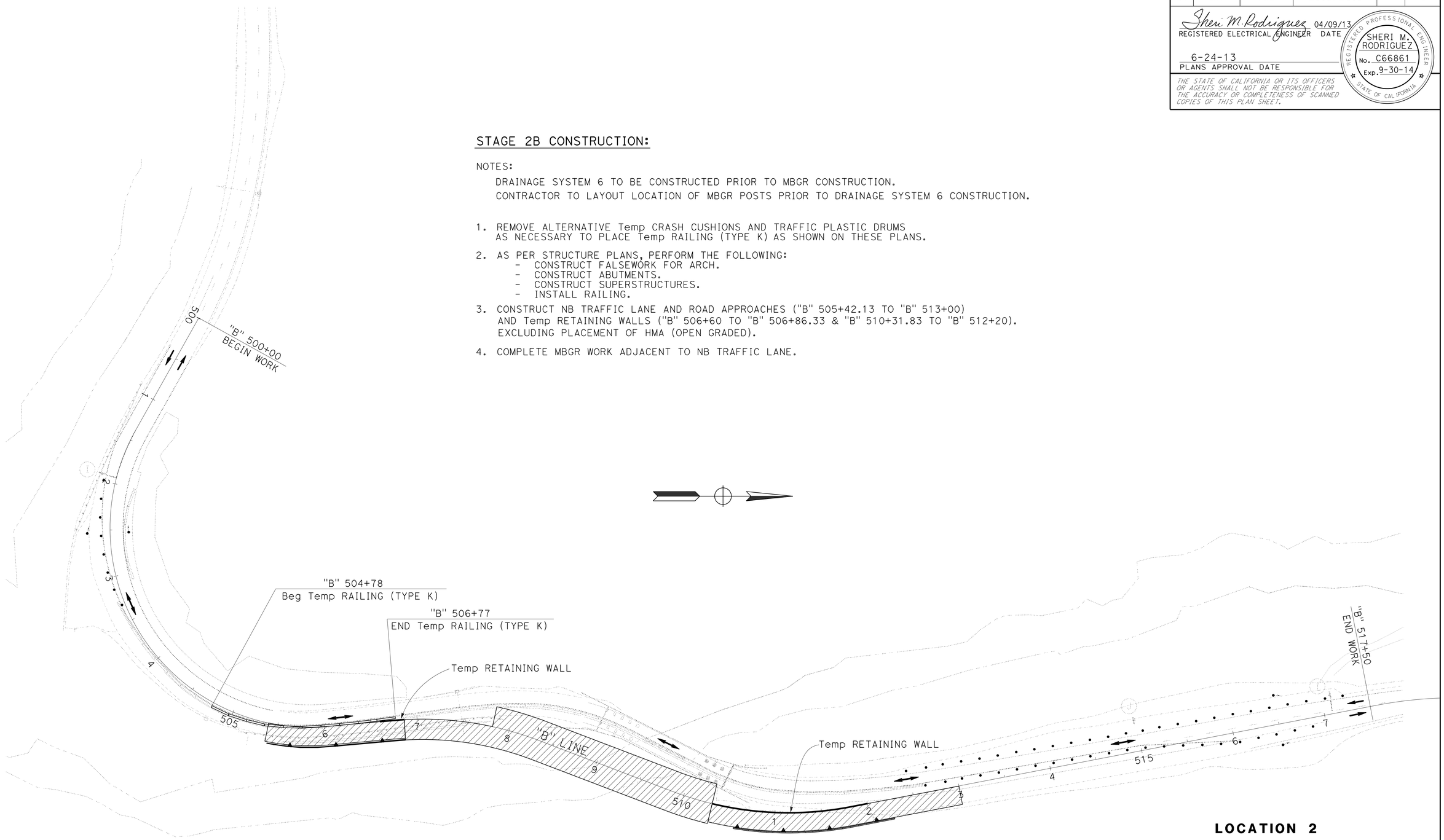

LOCATION 2

STAGE 2B

STAGE CONSTRUCTION AND TRAFFIC HANDLING PLAN

SCALE: 1" = 50'

SC-7

APPROVED FOR STAGE CONSTRUCTION AND TRAFFIC HANDLING WORK ONLY

STATE OF CALIFORNIA - DEPARTMENT OF TRANSPORTATION
Caltrans® TRAFFIC OPERATIONS

FUNCTIONAL SUPERVISOR: TROY ARSENEAU
CALCULATED-DESIGNED BY: SHERI RODRIGUEZ
CHECKED BY: TODD LARK
REVISED BY
DATE REVISED

P:\PROJ\01\47940\drafting\01000003711\01000003711ma007.dgn

LAST REVISION 04-08-13
DATE PLOTTED => 22-JUN-2013
TIME PLOTTED => 08:56

Dist	COUNTY	ROUTE	POST MILES TOTAL PROJECT	SHEET No.	TOTAL SHEETS
01	DN	199	20.3/25.9	48	184

Sheri M. Rodriguez 04/09/13
REGISTERED ELECTRICAL ENGINEER DATE

6-24-13
PLANS APPROVAL DATE

REGISTERED PROFESSIONAL ENGINEER
SHERI M. RODRIGUEZ
No. C66861
Exp. 9-30-14
STATE OF CALIFORNIA

THE STATE OF CALIFORNIA OR ITS OFFICERS OR AGENTS SHALL NOT BE RESPONSIBLE FOR THE ACCURACY OR COMPLETENESS OF SCANNED COPIES OF THIS PLAN SHEET.

STAGE 3 CONSTRUCTION:

1. RESET Temp RAILING (TYPE K) AND ALTERNATIVE Temp CRASH CUSHIONS AS SHOWN.
2. PERFORM PAVEMENT DELINEATION WORK AS REQUIRED FOR THIS STAGE.
3. SHIFT TRAFFIC TO NB LANE AND ONTO NEW BRIDGE.
4. CONSTRUCT SB TRAFFIC LANE AND ROAD APPROACHES ("B" 505+42.13 TO "B" 513+00), EXCLUDING PLACEMENT OF HMA (OPEN GRADED).
5. COMPLETE DRAINAGE WORK.
6. COMPLETE MGBR WORK.
7. DEMOLISH OLD BRIDGE.

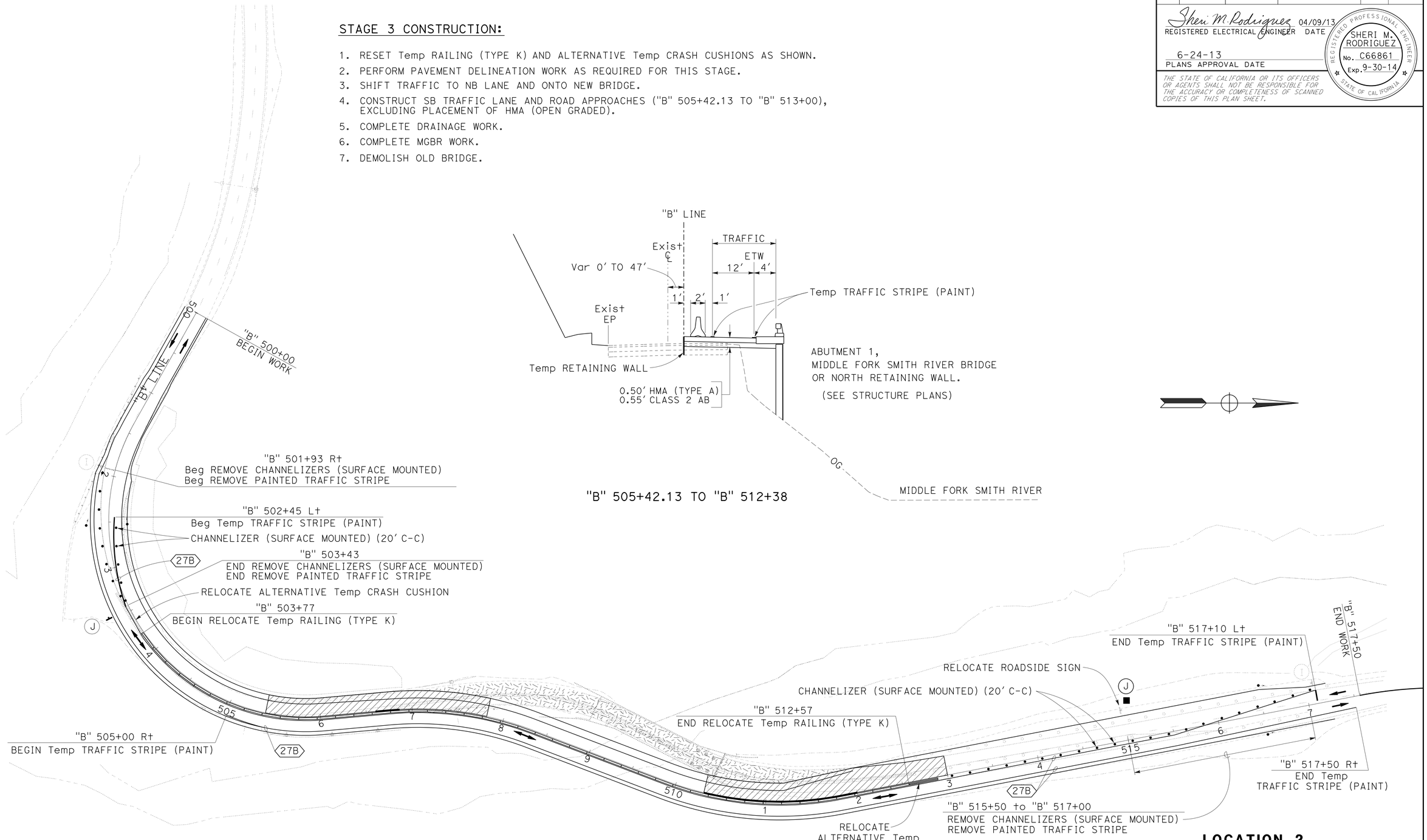

LOCATION 2

STAGE 3

STAGE CONSTRUCTION AND TRAFFIC HANDLING PLAN

SCALE: 1" = 50'

SC-8

APPROVED FOR STAGE CONSTRUCTION AND TRAFFIC HANDLING WORK ONLY

STATE OF CALIFORNIA - DEPARTMENT OF TRANSPORTATION
Caltrans® TRAFFIC OPERATIONS

FUNCTIONAL SUPERVISOR: TROY ARSENEAU
CALCULATED-DESIGNED BY: SHERI RODRIGUEZ
CHECKED BY: TODD LARK
REVISED BY
DATE REVISED

P:\PROJ\01\47940\drafting\01000003711\01000003711ma008.dgn

LAST REVISION 04-08-13
DATE PLOTTED => 22-JUN-2013
TIME PLOTTED => 08:56

Dist	COUNTY	ROUTE	POST MILES TOTAL PROJECT	SHEET No.	TOTAL SHEETS
01	DN	199	20.3/25.9	49	184

Sheri M. Rodriguez 04/09/13
REGISTERED ELECTRICAL ENGINEER DATE

6-24-13
PLANS APPROVAL DATE

REGISTERED PROFESSIONAL ENGINEER
SHERI M. RODRIGUEZ
No. C66861
Exp. 9-30-14
STATE OF CALIFORNIA

THE STATE OF CALIFORNIA OR ITS OFFICERS OR AGENTS SHALL NOT BE RESPONSIBLE FOR THE ACCURACY OR COMPLETENESS OF SCANNED COPIES OF THIS PLAN SHEET.

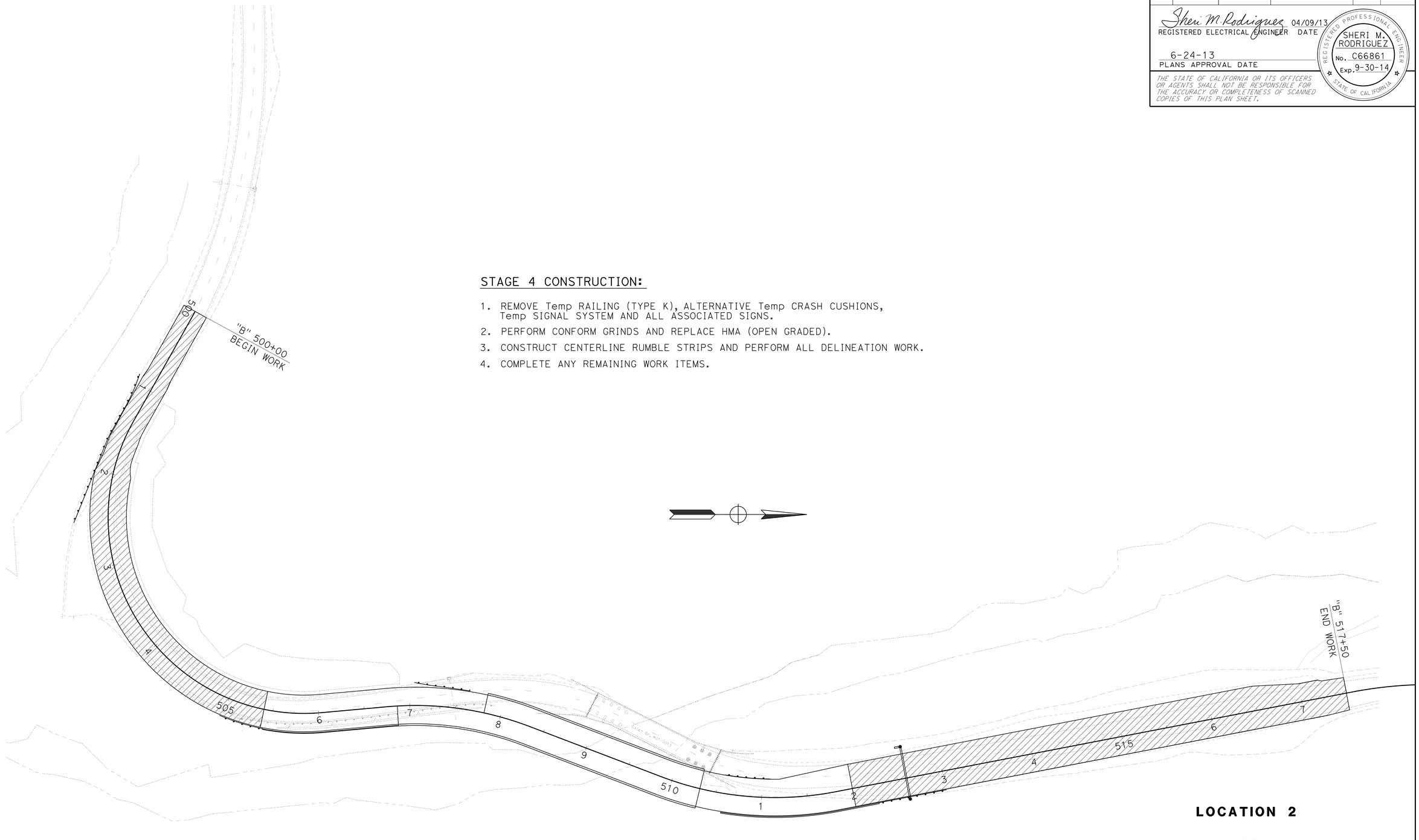

STAGE 4 CONSTRUCTION:

1. REMOVE Temp RAILING (TYPE K), ALTERNATIVE Temp CRASH CUSHIONS, Temp SIGNAL SYSTEM AND ALL ASSOCIATED SIGNS.
2. PERFORM CONFORM GRINDS AND REPLACE HMA (OPEN GRADED).
3. CONSTRUCT CENTERLINE RUMBLE STRIPS AND PERFORM ALL DELINEATION WORK.
4. COMPLETE ANY REMAINING WORK ITEMS.

LOCATION 2

STAGE 4

STAGE CONSTRUCTION AND TRAFFIC HANDLING PLAN

SCALE: 1" = 50'

SC-9

APPROVED FOR STAGE CONSTRUCTION AND TRAFFIC HANDLING WORK ONLY

STATE OF CALIFORNIA - DEPARTMENT OF TRANSPORTATION
Caltrans® TRAFFIC OPERATIONS

FUNCTIONAL SUPERVISOR: TROY ARSENEAU
CALCULATED-DESIGNED BY: SHERI RODRIGUEZ
CHECKED BY: TODD LARK
REVISED BY
DATE REVISED

P:\PROJ\01\47940\drafting\01000003711\01000003711ma009.dgn

LAST REVISION 04-08-13
DATE PLOTTED => 22-JUN-2013
TIME PLOTTED => 08:56

Dist	COUNTY	ROUTE	POST MILES TOTAL PROJECT	SHEET No.	TOTAL SHEETS
01	DN	199	20.3/25.9	50	184

Sheri M. Rodriguez 04/09/13
REGISTERED ELECTRICAL ENGINEER DATE

6-24-13
PLANS APPROVAL DATE

REGISTERED PROFESSIONAL ENGINEER
SHERI M. RODRIGUEZ
No. C66861
Exp. 9-30-14
STATE OF CALIFORNIA

THE STATE OF CALIFORNIA OR ITS OFFICERS OR AGENTS SHALL NOT BE RESPONSIBLE FOR THE ACCURACY OR COMPLETENESS OF SCANNED COPIES OF THIS PLAN SHEET.

LEGEND

- CONSTRUCTION THIS STAGE
- DIRECTION OF TRAFFIC
- XX TRAFFIC STRIPE DETAIL NUMBER
- ROADSIDE SIGN (SINGLE POST)
- X SIGN CODE
- REMOVE SIGN
- Temp RAILING (TYPE K)
- ALTERNATIVE Temp CRASH CUSHION
- Temp TRAFFIC SIGNAL SYSTEMS
- Temp FLASHING BEACON
- FLASHING BEACON (PORTABLE)
- CHANNELIZER (SURFACE MOUNTED) - 20' OC

STAGE 1 CONSTRUCTION:

NOTE:
- DRAINAGE SYSTEM 8 MUST BE CONSTRUCTED PRIOR TO CONSTRUCTING THE MBGR.
- CONTRACTOR TO LAYOUT LOCATION OF MBGR POSTS PRIOR TO DRAINAGE SYSTEM 8 CONSTRUCTION.

1. INSTALL Temp RAILING (TYPE K), ALTERNATIVE Temp CRASH CUSHIONS AND CHANNELIZERS (SURFACE MOUNTED).
2. CONSTRUCT MONKEY CREEK RETAINING WALL PER STRUCTURE PLANS.
3. CONSTRUCT DRAINAGE SYSTEMS 8, 9 & 10.
4. CONSTRUCT METAL BEAM GUARDRAILING.

STAGE 2 CONSTRUCTION:

NOTE:
- SIGNS ASSOCIATED WITH STAGE 2 SHALL BE COVERED UNLESS TRAFFIC IS RUNNING ON UNPAVED SURFACES.

1. REMOVE Temp RAILING (TYPE K), ALTERNATIVE Temp CRASH CUSHIONS AND CHANNELIZERS (SURFACE MOUNTED).
2. INSTALL SIGNS AS REQUIRED FOR THIS STAGE. (SEE NOTE)
3. RECONSTRUCT ROADWAY STA "C" 509+50 TO "C" 521+20.
4. PERFORM ALL DELINEATION WORK.
5. COMPLETE ANY REMAINING ROADWAY ITEMS.

LOCATION 3

INDEX

STAGE CONSTRUCTION AND TRAFFIC HANDLING PLAN SC-10

REVISED BY | DATE REVISED
SHERI RODRIGUEZ | TODD LARK
CALCULATED-DESIGNED BY | CHECKED BY
FUNCTIONAL SUPERVISOR: TROY ARSENEAU
STATE OF CALIFORNIA - DEPARTMENT OF TRANSPORTATION
Caltrans® TRAFFIC OPERATIONS

P:\PROJ\01\47940\drafting\0100000371\0100000371ma010.dgn

LAST REVISION 04-08-13 | DATE PLOTTED => 22-JUN-2013 | TIME PLOTTED => 08:56

Dist	COUNTY	ROUTE	POST MILES TOTAL PROJECT	SHEET No.	TOTAL SHEETS
01	DN	199	20.3/25.9	51	184

Sheri M. Rodriguez 04/09/13
REGISTERED ELECTRICAL ENGINEER DATE

6-24-13
PLANS APPROVAL DATE

REGISTERED PROFESSIONAL ENGINEER
SHERI M. RODRIGUEZ
No. C66861
Exp. 9-30-14
STATE OF CALIFORNIA

THE STATE OF CALIFORNIA OR ITS OFFICERS OR AGENTS SHALL NOT BE RESPONSIBLE FOR THE ACCURACY OR COMPLETENESS OF SCANNED COPIES OF THIS PLAN SHEET.

NOTES:

1. DRAINAGE SYSTEM 8 MUST BE CONSTRUCTED PRIOR TO CONSTRUCTING THE MBGR.
2. CONTRACTOR TO LAY OUT LOCATION OF MBGR POSTS PRIOR TO DRAINAGE SYSTEM 8 CONSTRUCTION.

STAGE 1 CONSTRUCTION:

1. INSTALL Temp RAILING (TYPE K), ALTERNATIVE Temp CRASH CUSHIONS AND CHANNELIZERS (SURFACE MOUNTED).
2. CONSTRUCT MONKEY CREEK RETAINING WALL PER STRUCTURE PLANS.
3. CONSTRUCT DRAINAGE SYSTEMS 8 & 9.
4. CONSTRUCT METAL BEAM GUARDRAILING.

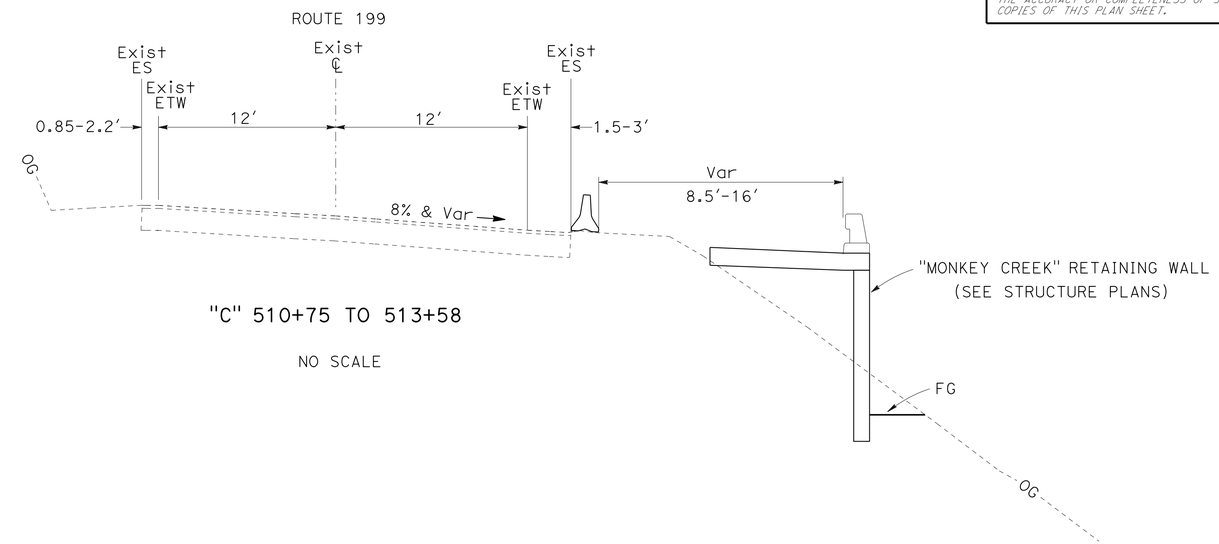

"C" 510+75 TO 513+58

NO SCALE

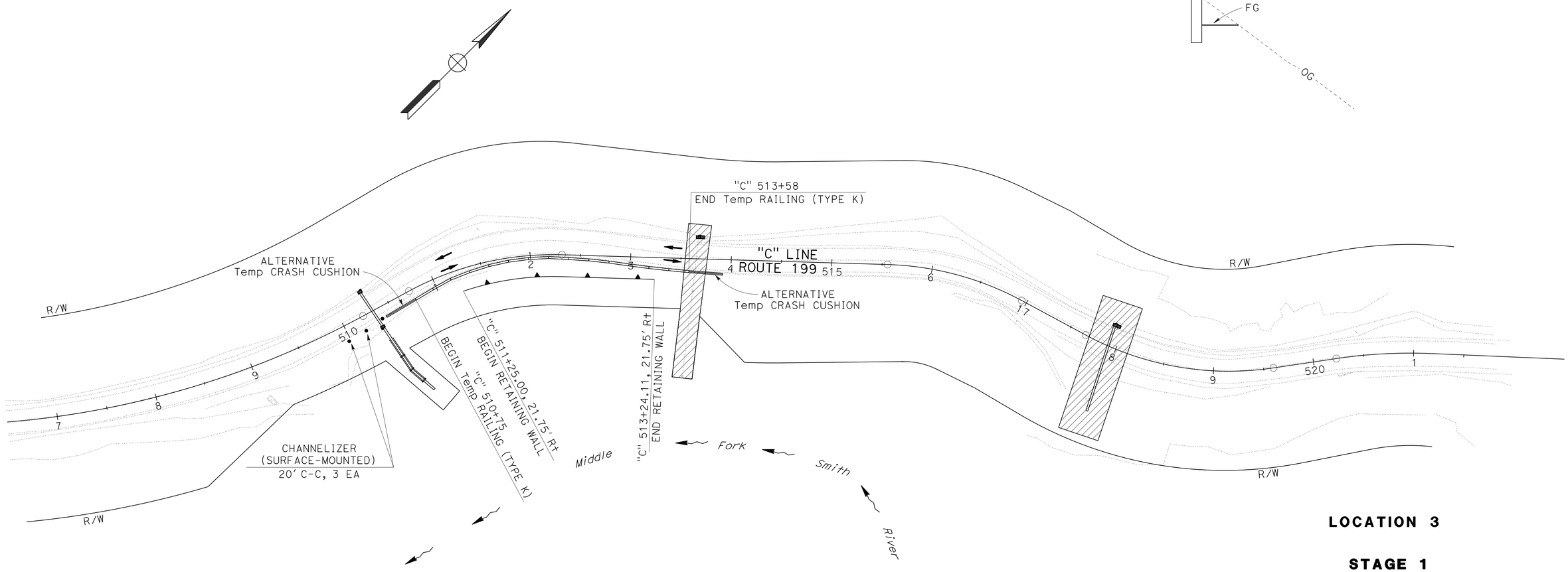

LOCATION 3

STAGE 1

STAGE CONSTRUCTION AND TRAFFIC HANDLING PLAN

SCALE: 1" = 50′ **SC-11**

APPROVED FOR STAGE CONSTRUCTION AND TRAFFIC HANDLING WORK ONLY

STATE OF CALIFORNIA - DEPARTMENT OF TRANSPORTATION
Caltrans® TRAFFIC OPERATIONS

FUNCTIONAL SUPERVISOR: TROY ARSENEAU
CALCULATED-DESIGNED BY: SHERI RODRIGUEZ
CHECKED BY: TODD LARK
REVISED BY / DATE REVISED

P:\PROJ\01\47940\drafting\0100000371\0100000371ma011.dgn

LAST REVISION 04-08-13 | DATE PLOTTED => 22-JUN-2013 | TIME PLOTTED => 10:08

BORDER LAST REVISED 7/2/2010 | USERNAME => s119571 | DGN FILE => 0100000371ma011.dgn | RELATIVE BORDER SCALE IS IN INCHES 0 1 2 3 | UNIT 0313 | PROJECT NUMBER & PHASE 01000003711

Dist	COUNTY	ROUTE	POST MILES TOTAL PROJECT	SHEET No.	TOTAL SHEETS
01	DN	199	20.3/25.9	52	184

Sheri M. Rodriguez 04/09/13
REGISTERED ELECTRICAL ENGINEER DATE

6-24-13
PLANS APPROVAL DATE

REGISTERED PROFESSIONAL ENGINEER
SHERI M. RODRIGUEZ
No. C66861
Exp. 9-30-14
STATE OF CALIFORNIA

THE STATE OF CALIFORNIA OR ITS OFFICERS OR AGENTS SHALL NOT BE RESPONSIBLE FOR THE ACCURACY OR COMPLETENESS OF SCANNED COPIES OF THIS PLAN SHEET.

NOTES:

1. DETAILS OF THIS STAGE TO BE IMPLEMENTED WHEN TRAFFIC IS RUNNING ON UNPAVED SURFACE.
2. SIGNS ASSOCIATED WITH THIS STAGE SHALL BE COVERED UNLESS TRAFFIC IS RUNNING ON UNPAVED SURFACE.
3. WHEN TWO-WAY TRAFFIC IS RUNNING ON BASE, CENTERLINE SHALL BE CLEARLY MARKED.

STAGE 2 CONSTRUCTION:

1. REMOVE Temp RAILING (TYPE K), ALTERNATIVE Temp CRASH CUSHIONS AND CHANNELIZERS (SURFACE MOUNTED).
2. INSTALL SIGNS AS REQUIRED FOR THIS STAGE. (SEE NOTE)
3. RECONSTRUCT ROADWAY STA "C" 509+50 TO "C" 521+20.
4. PERFORM ALL DELINEATION WORK.
5. COMPLETE ANY REMAINING ROADWAY ITEMS.

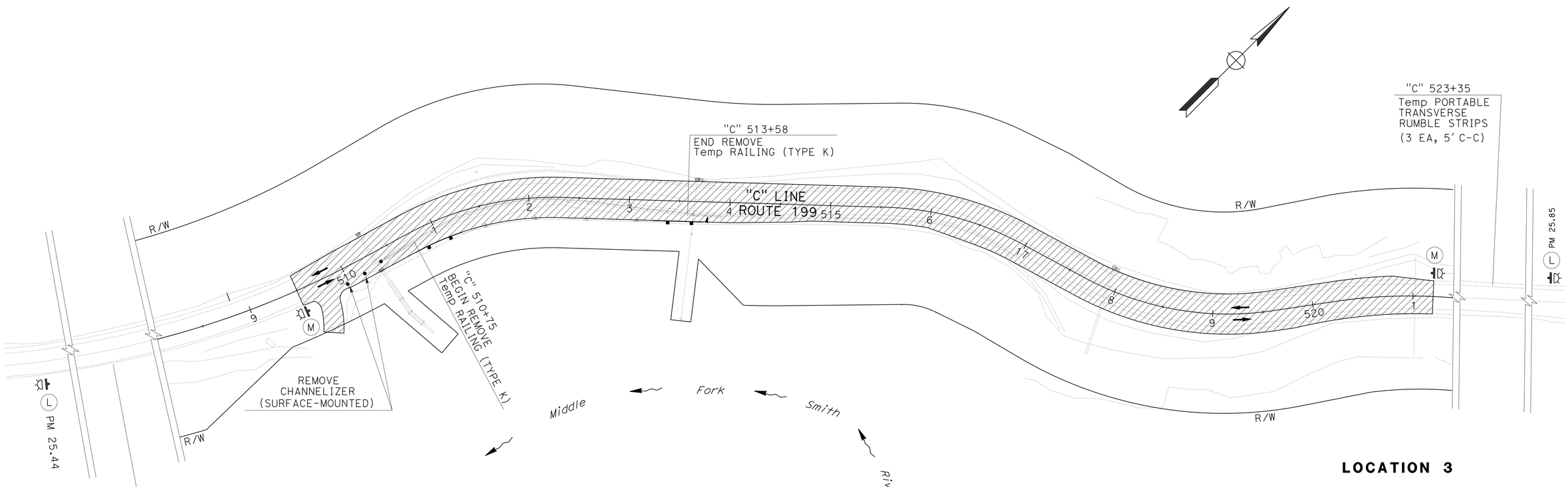

LOCATION 3

STAGE 2

STAGE CONSTRUCTION AND TRAFFIC HANDLING PLAN

SCALE: 1" = 50'

SC-12

APPROVED FOR STAGE CONSTRUCTION AND TRAFFIC HANDLING WORK ONLY

REVISED BY | DATE REVISED
SHERI RODRIGUEZ | TODD LARK
CALCULATED-DESIGNED BY | CHECKED BY
FUNCTIONAL SUPERVISOR: TROY ARSENEAU
STATE OF CALIFORNIA - DEPARTMENT OF TRANSPORTATION
Caltrans® TRAFFIC OPERATIONS

P:\PROJ\01\47940\drafting\01000003711\01000003711ma012.dgn

LAST REVISION 04-08-13 | DATE PLOTTED => 22-JUN-2013 | TIME PLOTTED => 10:08

Dist	COUNTY	ROUTE	POST MILES TOTAL PROJECT	SHEET No.	TOTAL SHEETS
01	DN	199	20.3/25.9	53	184

Sheri M. Rodriguez 04/09/13
REGISTERED ELECTRICAL ENGINEER DATE

6-24-13
PLANS APPROVAL DATE

REGISTERED PROFESSIONAL ENGINEER SHERI M. RODRIGUEZ No. C66861 Exp. 9-30-14 STATE OF CALIFORNIA

THE STATE OF CALIFORNIA OR ITS OFFICERS OR AGENTS SHALL NOT BE RESPONSIBLE FOR THE ACCURACY OR COMPLETENESS OF SCANNED COPIES OF THIS PLAN SHEET.

TEMPORARY RETAINING WALL

LOCATION STATION	H	L	AREA
	FT		SQFT
"B" 506+60 TO "B" 507+00	0.5-1.2	40	34
"B" 510+40 TO "B" 512+20	0.5-6.6	180	639
		TOTAL	673

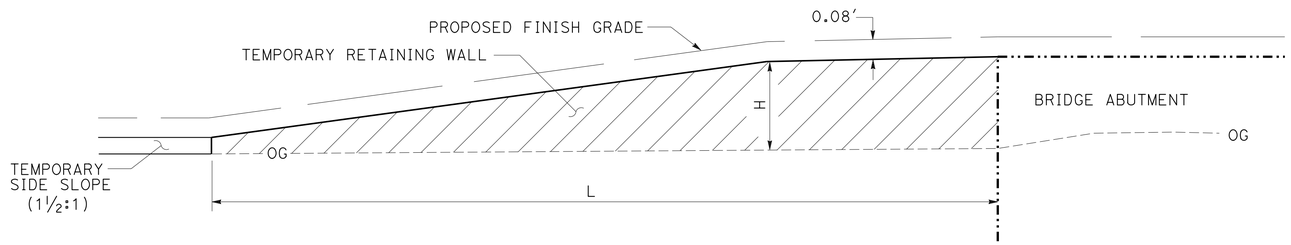

TEMPORARY RETAINING WALL

NOTE: CONTRACTOR TO PROVIDE WALL DETAILS PER SPECIAL PROVISIONS

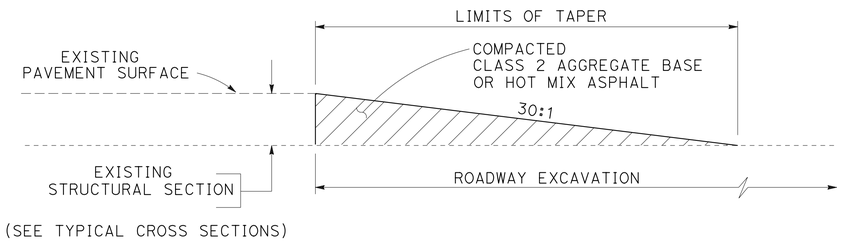

(SEE TYPICAL CROSS SECTIONS)

TEMPORARY TAPER DETAIL

FLASHING BEACON (PORTABLE)

LOCATION NUMBER	STAGE	EA	ATTACHED TO SIGN ◯
1	2	2	M
3	2	2	L
		2	M
	TOTAL	6	

CONSTRUCTION AREA SIGNS (DURING STAGING)

SIGN ◯	SIGN CODE	SIGN MESSAGE	PANEL SIZE	NUMBER AND SIZE OF POSTS	STATIONARY MOUNTED CAS			SIGN PANEL QUANTITIES					NUMBER OF PANELS (N)	SIGN CODE	SIGN ◯
					PLACE	RELOCATE	REPLACE PANEL	LOCATION 1		LOCATION 2		LOCATION 3			
								STAGE 1	STAGE 2	STAGE 2a	STAGE 2b	STAGE 2			
			INCHES		EA			EA					EA		
G	W20-4	ONE LANE ROAD AHEAD	36 x 36	WOOD POLE *	4			2		2			4	W20-4	G
H	W3-3	SIGNAL AHEAD SYMBOL	36 x 36	WOOD POLE *	4			2		2			4	W3-3	H
	W16-2A	500 FT	24 x 12					2		2			4	W16-2A	
I	R10-6	STOP HERE ON RED	24 x 36	1 - 4" x 6"	4			2		2			4	R10-6	I
J	W1-4	Horiz ALIGNMENT ARROW	36 x 36	1 - 4" x 6"	2	1		1		1	R		2	W1-4	J
K	W8-3	PAVEMENT ENDS	36 x 36	WOOD POLE *			1		1				1	W8-3	K
	W16-2a	1500 FT	24 x 12				1		1				1	W16-2aP	
L	W8-3	PAVEMENT ENDS	36 x 36	1 - 4" x 6"	2		1		1			2	3	W8-3	L
	W16-2a	500 FT	24 x 12				1		1			2	3	W16-2aP	
M	W8-3	PAVEMENT ENDS	36 x 36	1 - 4" x 6"	4				2			2	4	W8-3	M
	W13-1	ADVISORY SPEED (25 MPH)	24 x 24						2			2	4	W13-1	
				TOTAL	20	1	4					TOTAL	34 (N)		

NOTE: EXACT SIGN LOCATION TO BE DETERMINED BY THE ENGINEER.

(N) NOT A PAY ITEM. FOR INFORMATION ONLY.
R RELOCATE ROADSIDE SIGN
* SEE ELECTRICAL PLANS

STAGE CONSTRUCTION DETAILS AND QUANTITIES

NO SCALE

SCD-1

THIS PLAN ACCURATE FOR STAGE CONSTRUCTION ONLY

REVISED BY | DATE REVISED
SHERI RODRIGUEZ | TODD LARK
CALCULATED-DESIGNED BY | CHECKED BY
FUNCTIONAL SUPERVISOR: TROY ARSENEAU

STATE OF CALIFORNIA - DEPARTMENT OF TRANSPORTATION
Caltrans® TRAFFIC OPERATIONS

P:\PROJ\01\47940\drafting\01000003711\01000003711mb001.dgn

LAST REVISION 04-08-13 | DATE PLOTTED => 22-JUN-2013 | TIME PLOTTED => 10:08

Dist	COUNTY	ROUTE	POST MILES TOTAL PROJECT	SHEET No.	TOTAL SHEETS
01	DN	199	20.3/25.9	54	184

Sheri M. Rodriguez 04/09/13
REGISTERED ELECTRICAL ENGINEER DATE

6-24-13
PLANS APPROVAL DATE

REGISTERED PROFESSIONAL ENGINEER SHERI M. RODRIGUEZ No. C66861 Exp. 9-30-14 STATE OF CALIFORNIA

THE STATE OF CALIFORNIA OR ITS OFFICERS OR AGENTS SHALL NOT BE RESPONSIBLE FOR THE ACCURACY OR COMPLETENESS OF SCANNED COPIES OF THIS PLAN SHEET.

TEMPORARY TRAFFIC CONTROL

Loc	STAGE	LOCATION STATION	CHANNELIZER (SURFACE MOUNTED)	TRAFFIC PLASTIC DRUM	Temp RAILING (TYPE K)	RELOCATE Temp RAILING (TYPE K)	ALTERNATIVE Temp CRASH CUSHION	RELOCATE ALTERNATIVE Temp CRASH CUSHION	Temp PORTABLE TRANSVERSE RUMBLE STRIPS
			EA	EA	LF	LF	EA	EA	LF
1	1	"A" 13+70 Lt to "A" 14+70 Lt			100				
		"A" 14+20 Rt TO "A" 24+55 Rt	12						
		"A" 15+11 TO "A" 23+53			780		2		
		"A" 24+05 Lt TO "A" 25+05 Lt			100				
		"A" 31+70 Lt TO "A" 32+70 Lt			100				
		"A" 61+80 Lt TO "A" 62+80 Lt			100				
	2	"A" 20+15 Rt							33
		"A" 29+85 Lt							33
2	1	"B" 501+00 Rt TO "B" 502+20 Rt			120		1		
	2A	"B" 493+58 Rt TO "B" 494+58 Rt			100				
		"B" 501+93 Rt TO "B" 503+33 Rt	8						
		"B" 502+03 Lt TO "B" 503+03 Lt			100				
		"B" 503+24 TO "B" 505+12				120	1	1	
		"B" 505+12 TO "B"506+43		7					
		"B" 506+43 TO "B" 512+64			560		2		
		"B" 512+40 Rt TO "B" 517+20 Rt	25						
		"B" 512+64 Lt TO "B" 517+00 Lt	22						
	2B	"B" 504+78 TO "B" 506+77			200				
	3	"B" 503+43 TO "B" 512+91				880		2	
		"B" 502+45 Lt TO "B" 503+43 Lt	6						
		"B" 513+00 Lt TO "B" 517+10 Lt	21						
3	1	"C" 509+96 Rt TO "C" 510+41 Rt	3						
		"C" 510+41 Rt TO "C" 513+92 Rt			280		2		
	2	"C" 507+35 Rt							33
		"C" 523+35 Lt							33
		TOTAL	85	7	2540	1000	8	3	132

TEMPORARY PAVEMENT DELINEATION

Loc	STAGE	LOCATION STATION	Temp PAVEMENT MARKING (PAINT)	Temp TRAFFIC STRIPE (PAINT)	REMOVE YELLOW THERMOPLASTIC STRIPE (HAZARDOUS WASTE)	REMOVE PAINTED TRAFFIC STRIPE	REMOVE PAINTED PAVEMENT MARKING	REMOVE PAVEMENT MARKER	REMARKS
			SQFT	LF	LF	LF	SQFT	EA	
1	1	"A" 13+60 Rt	12						LIMIT LINE
		"A" 13+60 TO "A" 25+15			2310			98	
		"A" 13+60 Rt TO "A" 24+55 Rt		1095					
		"A" 25+15 Lt	12						LIMIT LINE
	2	"A" 13+60 Rt					12		
		"A" 13+60 TO "A" 25+15		2310					
		"A" 14+20 Rt TO "A" 24+55 Rt				1035			
		"A" 25+15 Lt					12		
2	2A	"B" 500+40 TO "B" 501+93		306					
		"B" 500+40 Lt TO "B" 505+42.13 Lt		502					
		"B" 500+40 Rt TO "B" 516+00 Rt		1560					
		"B" 501+93 Rt	12						LIMIT LINE
		"B" 505+42.13 TO "B" 513+69			1654			70	
		"B" 517+10 Lt	12						LIMIT LINE
	3	"B" 501+93 Rt TO "B" 503+43 Rt				150			
		"B" 501+93 Rt TO "B" 517+50 Rt		1557					
		"B" 502+45 Lt TO "B" 517+10 Lt		1465					
		"B" 515+00 Rt TO "B" 517+00 Rt				200			
		TOTAL	48	8795	3964	1385	24	168	

STAGE CONSTRUCTION DETAILS AND QUANTITIES

SCD-2

REVISED BY | DATE REVISED
SHERI RODRIGUEZ | TODD LARK
CALCULATED-DESIGNED BY | CHECKED BY
FUNCTIONAL SUPERVISOR
TROY ARSENEAU

STATE OF CALIFORNIA - DEPARTMENT OF TRANSPORTATION
Caltrans® TRAFFIC OPERATIONS

P:\PROJ\01\47940\drafting\01000003711\01000003711mb002.dgn

LAST REVISION 04-08-13 | DATE PLOTTED => 22-JUN-2013 | TIME PLOTTED => 10:08

Dist	COUNTY	ROUTE	POST MILES TOTAL PROJECT	SHEET No.	TOTAL SHEETS
01	DN	199	20.3/25.9	55	184

REGISTERED CIVIL ENGINEER 04/09/13 DATE

6-24-13
PLANS APPROVAL DATE

REGISTERED PROFESSIONAL ENGINEER T. LARK No. 52481 Exp. 12/31/14 CIVIL STATE OF CALIFORNIA

THE STATE OF CALIFORNIA OR ITS OFFICERS OR AGENTS SHALL NOT BE RESPONSIBLE FOR THE ACCURACY OR COMPLETENESS OF SCANNED COPIES OF THIS PLAN SHEET.

STORMWATER AND TEMPORARY EROSION CONTROL

LOCATION (STATION)		TEMPORARY SILT FENCE	TEMPORARY FIBER ROLL	TEMPORARY GRAVEL BAG BERM	TEMPORARY COVER	TEMPORARY CHECK DAM	TEMPORARY DRAINAGE INLET PROTECTION	TEMPORARY REINFORCED SILT FENCE	TEMPORARY MULCH	ROLLED EROSION CONTROL PRODUCT (BLANKET)	TEMPORARY CONSTRUCTION ENTRANCE /EXIT
		LF	LF	LF	SQYD	LF	EA	LF	SQYD	FT	EA
"A" 10+65	"A" 27+70	230	405	140	210	180	3		67	1890	1
"B" 500+00	"B" 517+90	280	260		2039	210	2	590	23	4509	2
"C" 509+50	"C" 521+18	30	420		206	90	3	200	145	1836	1
	TOTAL	540	1085	140	2455	480	8	790	235	8235	4

ROADWAY

LOCATION (STATION)		ROADWAY EXCAVATION	STRIPPING EXCAVATION	CONCRETED-RSP (1/4 T, METHOD A)	ROADWAY EXCAVATION (NATURALLY OCCURRING ASBESTOS)	REMOVE BASE AND SURFACING	(N) EMBANKMENT	CLASS 2 AGGREGATE BASE	SHOULDER BACKING	HMA (TYPE A)	HMA (LEVELING)	HMA (OPEN GRADED)	TACK COAT	PAVING ASPHALT (BINDER, GEOSYNTHETIC PAVEMENT INTERLAYER)	COLD PLANE AC PAVEMENT	GEOSYNTHETIC PAVEMENT INTERLAYER (PAVING FABRIC)	PLACE HMA DIKE (TYPE F)	DOUBLE TWISTED WIRE MESH DRAPERY	MILE POST MARKER	REMARKS
FROM	TO	CY	CY	TON	CY	CY	CY	CY	TON	TON	TON	TON	TON		SQYD	SQYD	LF	SQFT	EA	
"A" 10+65	"A" 22+20				50	160	180	70	100	130	480	373	2.88	0.67	606	632				
"A" 22+20	"A" 27+70				750	550	30	355	60	653		185	1.15							
"B" 500+00	"B" 505+42	1840				90	100	135	25	250	303	214	1.59	0.47	429	437			2	
"B" 501+05	"B" 506+87																	26,500		
"B" 505+42	"B" 507+79.33	860				350	350	140	10	258		73	0.46							
"B" 508+00	"B" 509+00		785	500																
"B" 509+50	"B" 510+30		407																	
"B" 510+58.21	"B" 513+00	400				350	500	240	10	442		125	0.78							
"B" 513+00	"B" 517+20					100			70			245	0.76		277					
"C" 509+50	"C" 521+20	1970				1340	200	944	70	1740		492	3.07				452			
	TOTAL	5070	1192	500	800	2940		1884	345	3473	783	1707	10.69	1.14	1312	1069	452	26,500	2	

(N) - NOT A SEPARATE PAY ITEM, FOR INFORMATION ONLY

METAL BEAM GUARD RAILING

LOCATION (STATION)		REMOVE MBGR	TREATED WOOD WASTE	MBGR (7' POST)	MBGR	(N) BURIED POST END ANCHOR	TRANSITION RAILING (TYPE WB)	ALTERNATIVE IN-LINE TERMINAL SYSTEM	ALTERNATIVE FLARED TERMINAL SYSTEM	GUARD RAILING DELINEATOR
FROM	TO	LF	LB	LF	LF	EA		EA	EA	EA
"A" 12+05	"A" 21+50	1000	13000	812.5			1	1		17
"A" 22+29	"A" 22+80						1	1		2
"B" 500+90	"B" 502+52	175	2275		87.5			2		2
"B" 504+94	"B" 507+63	287.5	3738			1	1			
"B" 507+05	"B" 507+63						1		1	2
"B" 510+56	"B" 511+10						1	1		2
"B" 512+25	"B" 513+00						1	1		2
"C" 506+18	"C" 508+98				287.5			1	1	
"C" 510+71	"C" 511+25						1	1		2
"C" 513+09	"C" 513+75						1	1		2
	TOTAL	1462.5	19,013	812.5	375		8	9	2	31

RETAINING WALL TYPE 1 (Mod)

LOCATION (STATION)		STRUCTURAL CONCRETE (RETAINING WALL)	BAR REINFORCING STEEL (RETAINING WALL)	PREPARE AND STAIN CONCRETE	RANDOM ROCK TEXTURE	CABLE RAILING (MODIFIED)
FROM	TO	CY	LB	SQFT	SQFT	LF
"B" 500+00	"B" 506+86.33	56	4360	643	643	125
	TOTAL	56	4360	643	643	125

THERMOPLASTIC TRAFFIC STRIPE AND PAVEMENT MARKER

LOCATION (STATION)		DETAIL NUMBER	DETAIL LENGTH	THERMOPLASTIC TRAFFIC STRIPE			PAVEMENT MARKER (RETROREFLECTIVE-RECESSED) TYPE D	REMARKS
				4" YELLOW	4" WHITE	8" WHITE		
FROM	TO		LF	LF			EA	
"A" 10+65	"A" 27+70	22	1705	3410			146	
"A" 11+00 R†	"A" 27+70 R†	27B	1695		1695			
"A" 11+00 L†	"A" 27+70 L†	27B	1716		1716			
"B" 500+00	"B" 518+25	22	1826	3652			152	
"B" 500+00 R†	"B" 518+25 R†	27B	1856		1856			
"B" 500+00 L†	"B" 518+25 L†	27B	1220		1220			
"B" 512+00 L†	"B" 516+50 L†	38A	450			450		TURNOUT
"C" 509+50	"C" 521+18	22	1168	2336			100	
"C" 509+50 R†	"C" 521+18 R†	27B	1162		1162			
"C" 509+50 L†	"C" 521+18 L†	27B	1170		1170			
	SUB TOTAL			9398	8819			
	TOTAL			18,217		450	398	

CENTERLINE RUMBLE STRIP

LOCATION (STATION)		DETAIL NUMBER	CENTERLINE RUMBLE STRIP
FROM	TO		STA
"A" 11+00	"A" 27+70	22	16.7
"B" 500+00	"B" 506+86.33	22	6.9
"B" 510+31.83	"B" 518+25	22	11.7
"C" 509+50	"C" 521+18	22	7.9
		TOTAL	43.2

SUMMARY OF QUANTITIES
Q-1

REVISED BY | DATE REVISED
TODD LARK | BIJAN SAMRAD
CALCULATED-DESIGNED BY | CHECKED BY
FUNCTIONAL SUPERVISOR: L.R. ASHLEY

STATE OF CALIFORNIA - DEPARTMENT OF TRANSPORTATION
Caltrans DESIGN

P:\PROJ\01\47940\drafting\0100000371\0100000371pa001.dgn

LAST REVISION | DATE PLOTTED => 27-JUN-2013 | TIME PLOTTED => 10:12
04-08-13

Dist	COUNTY	ROUTE	POST MILES TOTAL PROJECT	SHEET No.	TOTAL SHEETS
01	DN	199	20.3/25.9	56	184

REGISTERED CIVIL ENGINEER 04/09/13 DATE

6-24-13
PLANS APPROVAL DATE

REGISTERED PROFESSIONAL ENGINEER T. LARK No. 52481 Exp. 12/31/14 CIVIL STATE OF CALIFORNIA

THE STATE OF CALIFORNIA OR ITS OFFICERS OR AGENTS SHALL NOT BE RESPONSIBLE FOR THE ACCURACY OR COMPLETENESS OF SCANNED COPIES OF THIS PLAN SHEET.

FURNISH ROADSIDE SIGNS

SIGN CODE	SIGN MESSAGE	PANEL SIZE	PANEL AREA	NO. OF PANELS	BACKGROUND		LEGEND		PROTECTIVE OVERLAY	FURNISH SINGLE SHEET ALUMINUM SIGN (UNFRAMED)	
					SHEETING COLOR	RETROREFLECTIVE ASTM TYPE	COLOR	RETROREFLECTIVE ASTM TYPE	PREMIUM	0.063"	0.080"
		INCHES	SQ FT							SQ FT	
W1-6	ONE-DIRECTION LARGE ARROW	48 x 24	8.00	9	YELLOW	III	BLACK	NA			72.00
W13-1	30 MPH	18 x 18	2.25	1	YELLOW	III	BLACK	NA		2.25	
R4-12	SLOW VEHICLES WITH 5 OR MORE FOLLOWING VEHICLES MUST USE TURN-OUT	42 x 24	7.00	1	WHITE	III	BLACK	NA		7.00	
R4-13	SLOW VEHICLES MUST USE TURN-OUT AHEAD	42 X 24	7.00	1	WHITE	III	BLACK	NA		7.00	
R4-14	SLOW VEHICLES MUST TURN-OUT	30 X 42	8.75	1	WHITE	III	BLACK	NA		8.75	
G69(CA)	PASSING LANE AHEAD	48 X 36	12.00	1	GREEN	III	WHITE	III			12.00
OM1-3	TYPE N (CA) OBJECT MARKER	18 x 18	2.25	9	YELLOW	III	YELLOW	III		20.25	
OM-3R	TYPE P OBJECT MARKER	12 X 36	3.00	2	YELLOW	III	BLACK	NA		6.00	
OM-3L	TYPE P OBJECT MARKER	12 X 36	3.00	2	YELLOW	III	BLACK	NA		6.00	
									TOTAL	57.25	84.00

ROADSIDE SIGNS

LOC	SIGN	STATION	ORIENTATION	SIGN CODE	SIGN MESSAGE	PANEL SIZE	NUMBER AND SIZE OF POSTS	REMOVE SIGN	ROADSIDE SIGN (ONE-POST)	INSTALL ROADSIDE SIGN PANEL ON EXISTING POST	METAL (ROADSIDE SIGN)
						INCHES		EA			LB
1	A	"A" 20+00 - L+	FNBT	W1-6	ONE-DIRECTION LARGE ARROW	48 x 24	1-4"x6"		1		
				OM1-3	TYPE N (CA) OBJECT MARKER	18 x 18					
	B	"A" 20+00 - L+	FSBT	W1-6	ONE-DIRECTION LARGE ARROW	48 x 24	1-4"x6"		1		
				OM1-3	TYPE N (CA) OBJECT MARKER	18 x 18					
2	C	"B" 503+35 - R+	FNBT	W1-6	ONE-DIRECTION LARGE ARROW	48 x 24	1-4"x6"		1		
				OM1-3	TYPE N (CA) OBJECT MARKER	18 x 18					
	D	"B" 504+50 - R+	FNBT	W1-6	ONE-DIRECTION LARGE ARROW	48 x 24	1-4"x6"		1		
				OM1-3	TYPE N (CA) OBJECT MARKER	18 x 18					
	E	"B" 505+40 - R+	FNBT	W5-2	NARROW BRIDGE			1			
	F	"B" 505+39 - R+	FNBT	OM-3R	TYPE P OBJECT MARKER	12 X 36					12.3
	G	"B" 505+50 - R+	FNBT	W1-6	ONE-DIRECTION LARGE ARROW	48 x 24	1-4"x6"		1		
				OM1-3	TYPE N (CA) OBJECT MARKER	18 x 18					
	H	"B" 507+00 - L+	FSBT	W1-6	ONE-DIRECTION LARGE ARROW	48 x 24	1-4"x6"		1		
				OM1-3	TYPE N (CA) OBJECT MARKER	18 x 18					
	I	"B" 507+50 - L+	FSBT	W1-6	ONE-DIRECTION LARGE ARROW	48 x 24	1-4"x6"		1		
				OM1-3	TYPE N (CA) OBJECT MARKER	18 x 18					
	J	"B" 507+86 - L+	FNBT	OM-3L	TYPE P OBJECT MARKERS	12 X 36					12.3
	K	"B" 508+50 - L+	FSBT	W1-6	ONE-DIRECTION LARGE ARROW			1			
				OM1-3	TYPE N (CA) OBJECT MARKER						
	L	"B" 508+70 - R+&L+	FNBT	OM-3R/L	TYPE P OBJECT MARKERS			2			
	M	"B" 510+35 - R+&L+	FSBT	OM-3R/L	TYPE P OBJECT MARKERS			2			
	N	"B" 510+56 - L+	FSBT	OM-3R	TYPE P OBJECT MARKERS	12 X 36					12.3
	O	"B" 510+60 - R+	FNBT	R52(CA)	SLOWER TRAFFIC USE TURNOUT			1			
	P	"B" 511+50 - R+	FSBT	W1-6	ONE-DIRECTION LARGE ARROW			1			
				OM1-3	TYPE N (CA) OBJECT MARKER						
	Q	"B" 512+05 - R+	FNBT	R51(CA)	TURNOUT			1			
	R	"B" 512+26 - R+	FNBT	OM-3L	TYPE P OBJECT MARKER	12 X 36					12.3
	S	"B" 514+65 - L+	FSBT	W5-2	NARROW BRIDGE			1			
	T	"B" 517+00 - L+	FSBT	R4-14	SLOW VEHICLES MUST TURN-OUT	30 X 42	1-4"x6"		1		
	U	"B" 517+70 - L+	FSBT	W13-1	30 MPH	18 x 18				1	
	V	"B" 519+00 - L+	FSBT	R4-12	SLOW VEHICLES WITH 5 OR MORE FOLLOWING VEHICLES MUST USE TURN-OUT	42 x 24	1-4"x6"		1		
	W	"B" 521+00 - L+	FSBT	R4-13	SLOW VEHICLES MUST USE TURN-OUT AHEAD	42 X 24	1-4"x6"		1		
3	X	"C" 511+50 - L+	FNBT	W1-6	ONE-DIRECTION LARGE ARROW	48 x 24	1-4"x6"	1	1		
				OM1-3	TYPE N (CA) OBJECT MARKER	18 x 18					
	Y	"C" 511+50 - L+	FSBT	W1-6	ONE-DIRECTION LARGE ARROW	48 x 24	1-4"x6"		1		
				OM1-3	TYPE N (CA) OBJECT MARKER	18 x 18					
	Z	"C" 515+46 - R+	FNBT	G69(CA)	PASSING LANE AHEAD	48 X 36	1-4"x6"	1	1		
							TOTAL	12	13	1	49.2

NOTE: EXACT SIGN LOCATION TO BE DETERMINED BY THE ENGINEER.

SUMMARY OF QUANTITIES
Q-2

REVISED BY | DATE REVISED
TODD LARK | BIJAN SAMRAD
CALCULATED-DESIGNED BY | CHECKED BY
FUNCTIONAL SUPERVISOR
L.R. ASHLEY

STATE OF CALIFORNIA - DEPARTMENT OF TRANSPORTATION
Caltrans DESIGN

P:\PROJ\01\47940\drafting\01000003711\01000003711pa002.dgn

LAST REVISION 04-08-13 | DATE PLOTTED => 27-JUN-2013 | TIME PLOTTED => 10:17

Dist	COUNTY	ROUTE	POST MILES TOTAL PROJECT	SHEET No.	TOTAL SHEETS
01	DN	199	20.3/25.9	57	184

Brian T. Finck 04/09/13
REGISTERED ELECTRICAL ENGINEER DATE

6-24-13
PLANS APPROVAL DATE

REGISTERED PROFESSIONAL ENGINEER
BRIAN T. FINCK
No. 17756
Exp. 6-30-14
ELECTRICAL
STATE OF CALIFORNIA

THE STATE OF CALIFORNIA OR ITS OFFICERS OR AGENTS SHALL NOT BE RESPONSIBLE FOR THE ACCURACY OR COMPLETENESS OF SCANNED COPIES OF THIS PLAN SHEET.

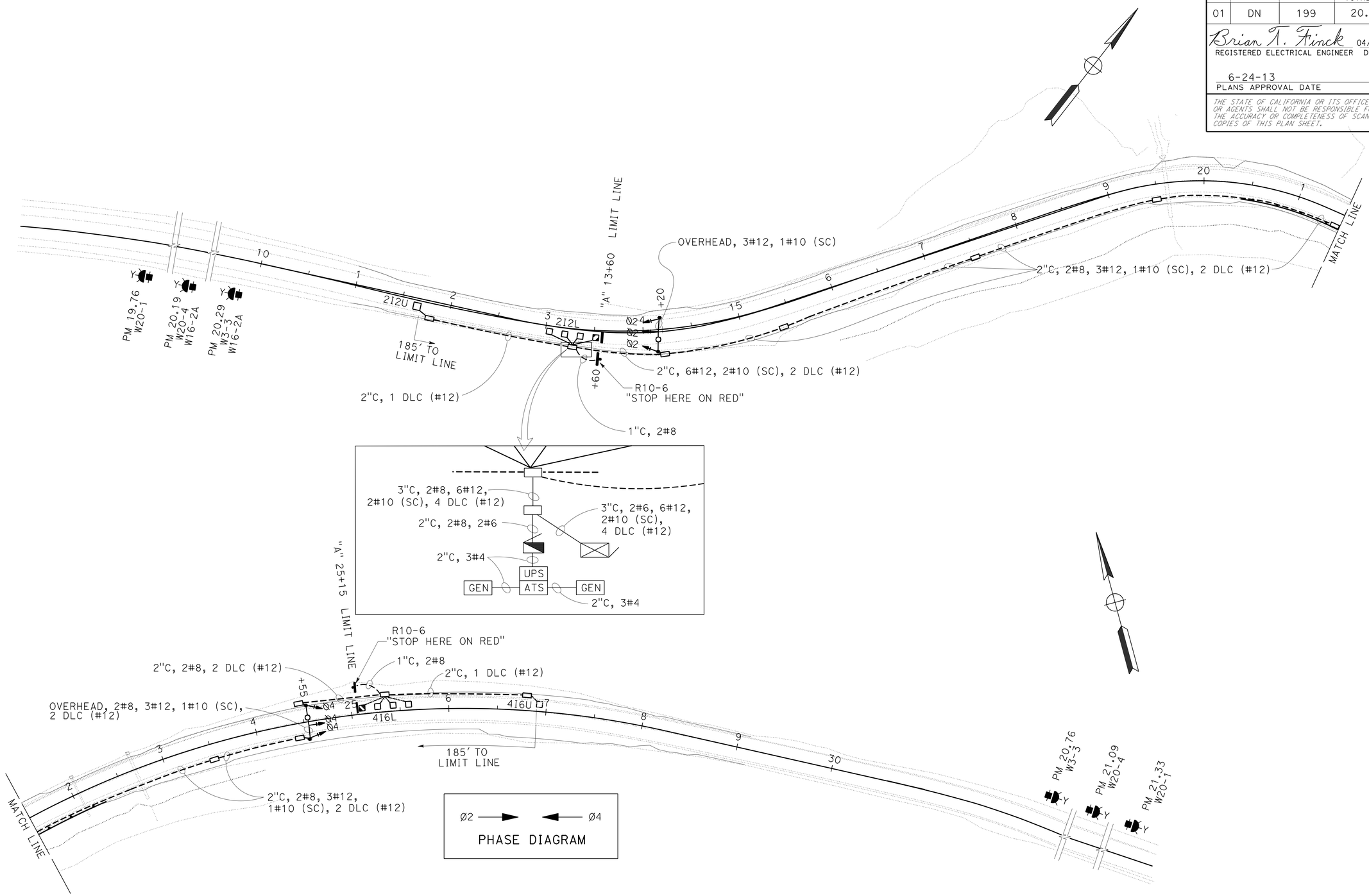

TEMPORARY SIGNAL SYSTEM (LOCATION 1)

SCALE: 1" = 50'

E-1

APPROVED FOR ELECTRICAL WORK ONLY

REVISED BY	DATE REVISED

CALCULATED-DESIGNED BY	CHECKED BY
BRIAN FINCK	TODD LARK

FUNCTIONAL SUPERVISOR: TROY ARSENEAU

STATE OF CALIFORNIA - DEPARTMENT OF TRANSPORTATION
Caltrans® TRAFFIC ELECTRICAL

P:\PROJ\01\47940\drafting\0100000371\0100000371ua001.dgn

LAST REVISION 04-08-13 | DATE PLOTTED => 25-JUN-2013 | TIME PLOTTED => 09:07

Dist	COUNTY	ROUTE	POST MILES TOTAL PROJECT	SHEET No.	TOTAL SHEETS
01	DN	199	20.3/25.9	58	184

Brian T. Finck 04/09/13
REGISTERED ELECTRICAL ENGINEER DATE

6-24-13
PLANS APPROVAL DATE

REGISTERED PROFESSIONAL ENGINEER
BRIAN T. FINCK
No. 17756
Exp. 6-30-14
ELECTRICAL
STATE OF CALIFORNIA

THE STATE OF CALIFORNIA OR ITS OFFICERS OR AGENTS SHALL NOT BE RESPONSIBLE FOR THE ACCURACY OR COMPLETENESS OF SCANNED COPIES OF THIS PLAN SHEET.

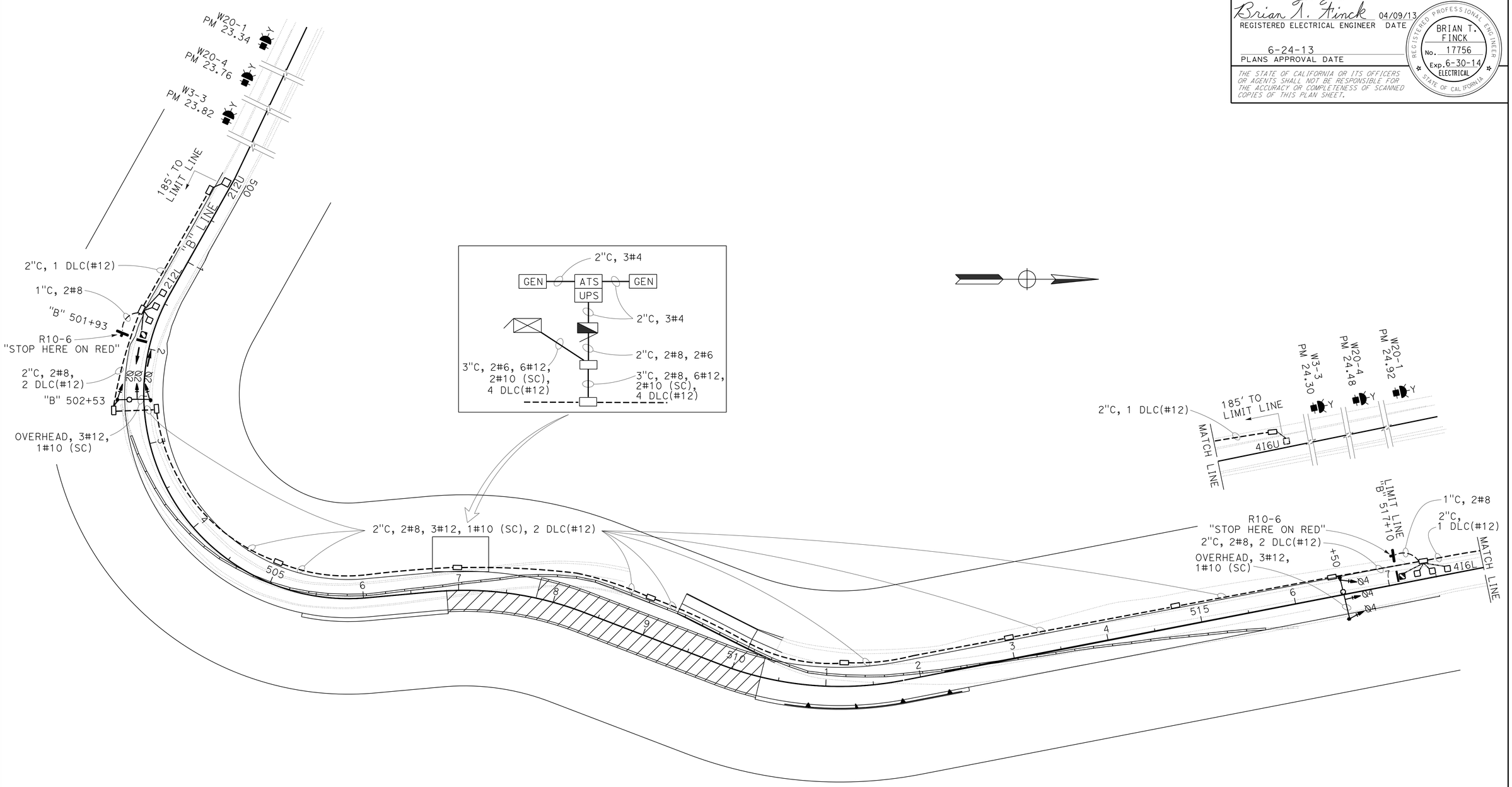

TEMPORARY SIGNAL SYSTEM

(LOCATION 2)

SCALE: 1" = 50'

E-2

APPROVED FOR ELECTRICAL WORK ONLY

REVISED BY	DATE REVISED
BRIAN FINCK	TODD LARK
CALCULATED-DESIGNED BY	CHECKED BY
FUNCTIONAL SUPERVISOR	TROY ARSENEAU

STATE OF CALIFORNIA - DEPARTMENT OF TRANSPORTATION
Caltrans® TRAFFIC ELECTRICAL

P:\PROJ\01\47940\drafting\01000003711\01000003711ua002.dgn

LAST REVISION 04-08-13 | DATE PLOTTED => 24-JUN-2013 | TIME PLOTTED => 15:18

Dist	COUNTY	ROUTE	POST MILES TOTAL PROJECT	SHEET No.	TOTAL SHEETS
01	DN	199	20.3/25.9	59	184

Brian T. Finck 04/09/13
REGISTERED ELECTRICAL ENGINEER DATE

6-24-13
PLANS APPROVAL DATE

REGISTERED PROFESSIONAL ENGINEER BRIAN T. FINCK No. 17756 Exp. 6-30-14 ELECTRICAL STATE OF CALIFORNIA

THE STATE OF CALIFORNIA OR ITS OFFICERS OR AGENTS SHALL NOT BE RESPONSIBLE FOR THE ACCURACY OR COMPLETENESS OF SCANNED COPIES OF THIS PLAN SHEET.

NOTE: (THIS SHEET)

1 WOOD POLES SHALL BE LOCATED OUTSIDE THE CLEAR RECOVERY ZONE OR PROTECTED IN PLACE.

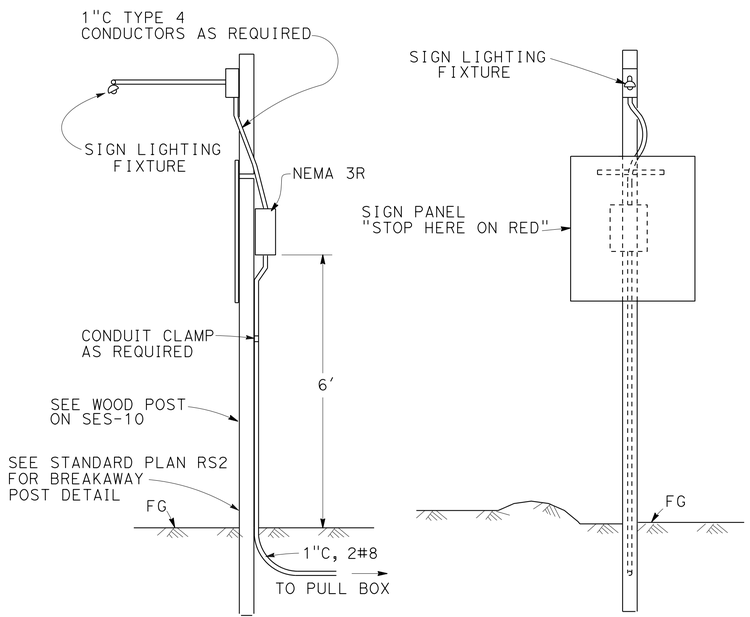

SIDE VIEW FRONT VIEW

TYPICAL SIGN ILLUMINATION

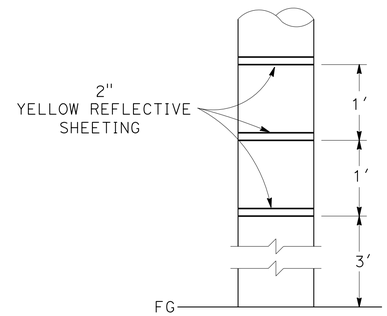

REFLECTIVE MARKING FOR WOOD POLE

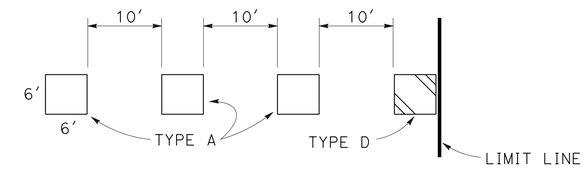

TYPICAL LOOP DETAIL

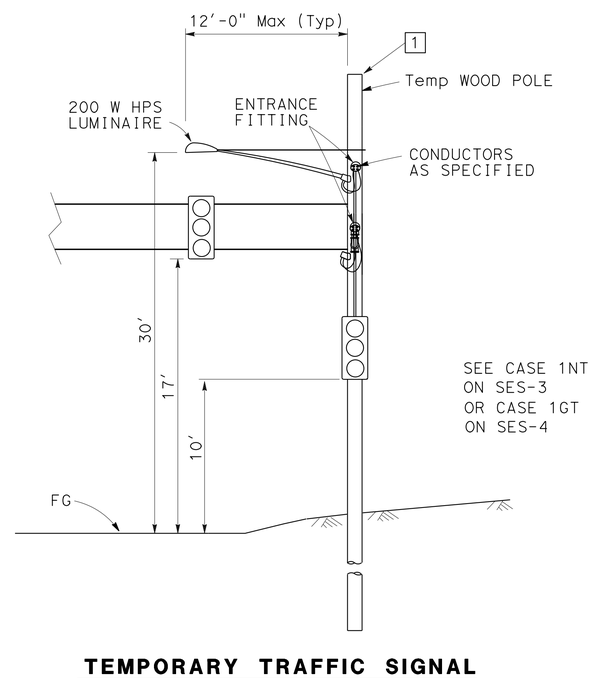

TEMPORARY TRAFFIC SIGNAL

SEE SES SHEETS FOR DETAILS

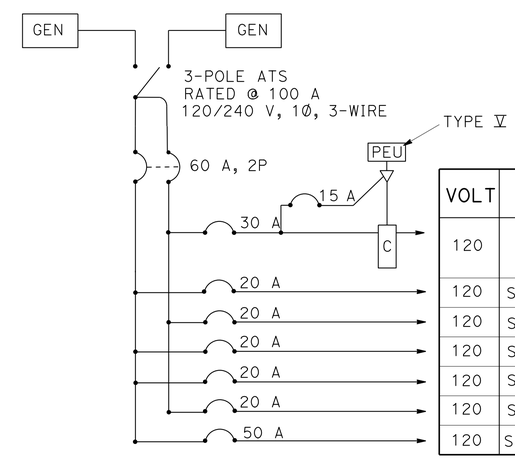

VOLT	NAMEPLATE DESCRIPTION
120	LIGHTING/ SIGN LIGHTING
120	SPARE
120	SPARE
120	SPARE
120	SPARE
120	SPARE
120	SIGNALS

SERVICE WIRING DIAGRAM

TYPE III-AF SERVICE EQUIPMENT ENCLOSURE

ELECTRICAL DETAILS

NO SCALE

E-3

REVISED BY	DATE REVISED
BRIAN FINCK	TODD LARK
CALCULATED-DESIGNED BY	CHECKED BY
FUNCTIONAL SUPERVISOR	TROY ARSENEAU

STATE OF CALIFORNIA - DEPARTMENT OF TRANSPORTATION
Caltrans® TRAFFIC ELECTRICAL

P:\PROJ\01\47940\drafting\0100000371\0100000371ua003.dgn

LAST REVISION 04-08-13 | DATE PLOTTED => 22-JUN-2013 | TIME PLOTTED => 10:46

Dist	COUNTY	ROUTE	POST MILES TOTAL PROJECT	SHEET No.	TOTAL SHEETS
01	DN	199	20.3/25.9	60	184

Brian T. Finck 04/09/13
REGISTERED ELECTRICAL ENGINEER DATE

6-24-13
PLANS APPROVAL DATE

REGISTERED PROFESSIONAL ENGINEER BRIAN T. FINCK No. 17756 Exp. 6-30-14 ELECTRICAL STATE OF CALIFORNIA

THE STATE OF CALIFORNIA OR ITS OFFICERS OR AGENTS SHALL NOT BE RESPONSIBLE FOR THE ACCURACY OR COMPLETENESS OF SCANNED COPIES OF THIS PLAN SHEET.

LEGEND:

A•h = AMPERE HOUR

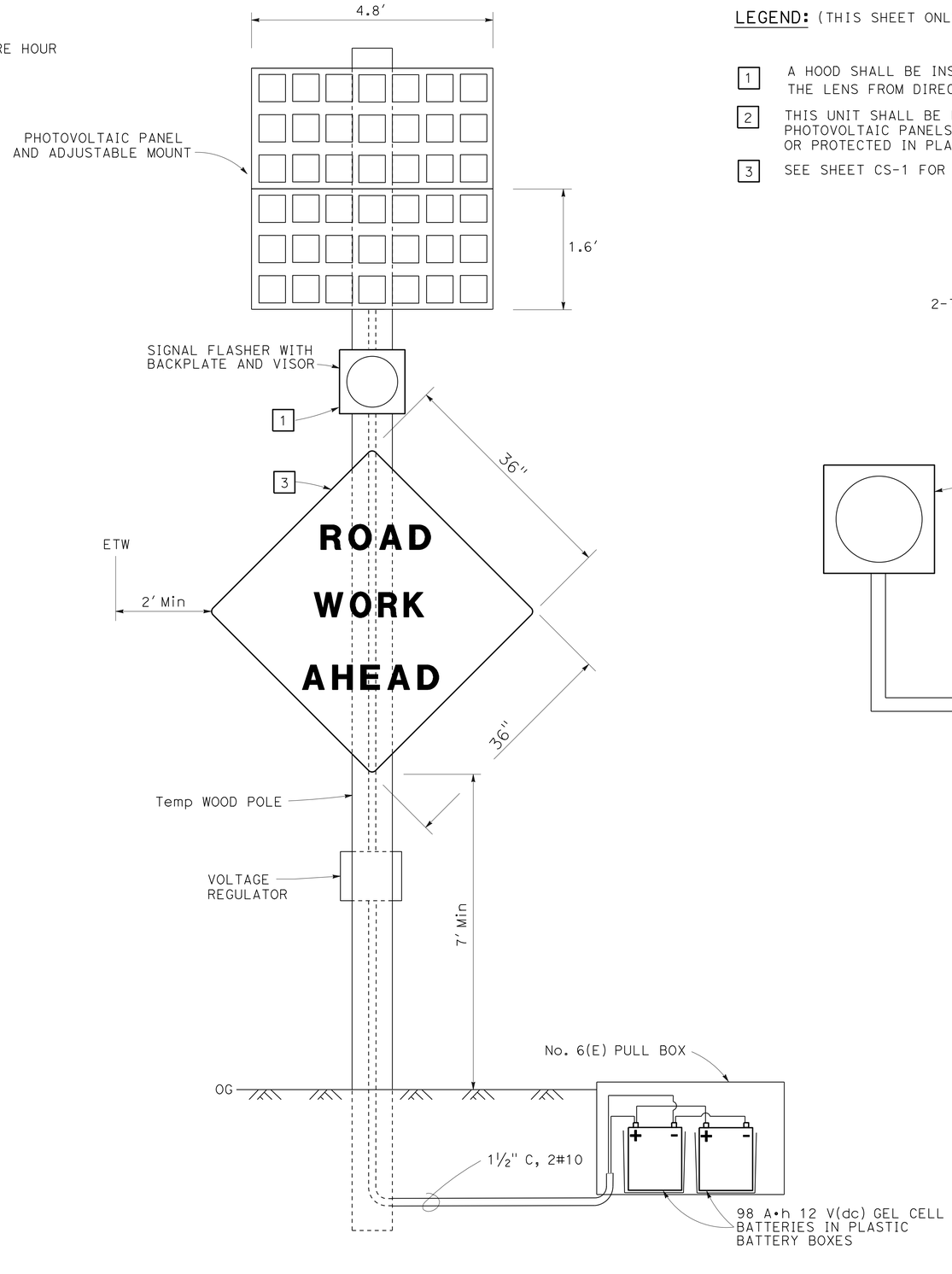

FLASHING BEACON (PHOTOVOLTAIC POWERED)

LEGEND: (THIS SHEET ONLY)

1. A HOOD SHALL BE INSTALLED ON EACH FLASHER HEAD TO SHIELD THE LENS FROM DIRECT EXPOSURE OF SOLAR RADIATION.
2. THIS UNIT SHALL BE LOCATED IN AN UNSHADED AREA. WOOD POLE WITH PHOTOVOLTAIC PANELS SHALL BE LOCATED OUTSIDE THE CLEAR RECOVERY ZONE OR PROTECTED IN PLACE.
3. SEE SHEET CS-1 FOR SIGNS (B) & (E) AND SHEET SCD-1 FOR SIGNS (G) & (H).

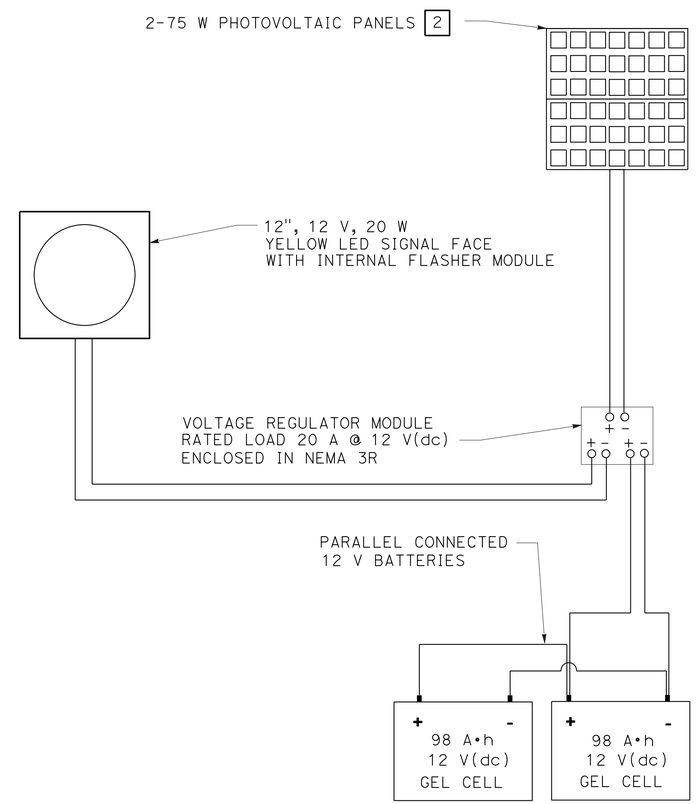

CONNECTION DIAGRAM

ELECTRICAL DETAILS

NO SCALE

E-4

REVISED BY | DATE REVISED
BRIAN FINCK | TODD LARK
CALCULATED-DESIGNED BY | CHECKED BY
FUNCTIONAL SUPERVISOR: TROY ARSENEAU

STATE OF CALIFORNIA - DEPARTMENT OF TRANSPORTATION
Caltrans® TRAFFIC ELECTRICAL

P:\PROJ\01\47940\drafting\01000003711\01000003711ua004.dgn

LAST REVISION 04-08-13 | DATE PLOTTED => 24-JUN-2013 | TIME PLOTTED => 14:25

Dist	COUNTY	ROUTE	POST MILES TOTAL PROJECT	SHEET No.	TOTAL SHEETS
01	DN	199	20.3/25.9	61	184

Brian T. Finck 04/09/13
REGISTERED ELECTRICAL ENGINEER DATE

6-24-13
PLANS APPROVAL DATE

REGISTERED PROFESSIONAL ENGINEER
BRIAN T. FINCK
No. 17756
Exp. 6-30-14
ELECTRICAL
STATE OF CALIFORNIA

THE STATE OF CALIFORNIA OR ITS OFFICERS OR AGENTS SHALL NOT BE RESPONSIBLE FOR THE ACCURACY OR COMPLETENESS OF SCANNED COPIES OF THIS PLAN SHEET.

NOTE:

THE QUANTITIES ON THIS SHEET ARE NOT SEPARATE PAY ITEMS AND ARE FOR INFORMATION ONLY.

TEMPORARY SIGNAL SYSTEM

SHEET NUMBER	WOOD POLE	2" CONDUIT TYPE 3	GENERATOR	NUMBER 5 PULL BOX	3 SECTION SIGNAL HEAD	FBCA	SIGN LIGHTING FIXTURE	200 W HPS LUMINAIRE	MESSENGER CABLE	TYPE D LOOP	TYPE A LOOP	DLC	#4 CONDUCTORS	#6 CONDUCTORS	#8 CONDUCTORS	#8 CONDUCTORS (G)	#10 CONDUCTORS	#12 CONDUCTORS	NEMA 3R SERVICE ENCLOSURE	MODEL 332L CABINET FOUNDATION PLATFORM	UPS
	EA	LF	EA	EA	EA	EA	EA	EA	LF	EA	EA	LF	LF	LF	LF	LF	LF	LF	EA	EA	EA
E-1	10	1100	2	13	6	6	2	2	50	2	8	2500	100	50	2500	1250	1250	4250	2	1	1
E-2	10	1900	2	14	6	6	2	2	50	2	8	3800	100	50	3800	1900	1900	3800	2	1	1

ELECTRICAL QUANTITIES
E-5

REVISED BY	DATE REVISED

CALCULATED-DESIGNED BY: BRIAN FINCK
CHECKED BY: TODD LARK
FUNCTIONAL SUPERVISOR: TROY ARSENEAU

STATE OF CALIFORNIA - DEPARTMENT OF TRANSPORTATION
Caltrans® TRAFFIC ELECTRICAL

P:\PROJ\01\47940\drafting\01_479401\0100000371ua005.dgn

LAST REVISION 04-08-13 | DATE PLOTTED => 24-JUN-2013 | TIME PLOTTED => 14:25

DIST	COUNTY	ROUTE	POST MILES TOTAL PROJECT	SHEET No.	TOTAL SHEETS
01	DN	199	20.3/25.9	62	184

REGISTERED CIVIL ENGINEER — DATE 04-12-13

PLANS APPROVAL DATE 6-24-13

REGISTERED PROFESSIONAL ENGINEER AIMAN MALAK No. C73369 Exp.12-31-14 CIVIL STATE OF CALIFORNIA

The State of California or its officers or agents shall not be responsible for the accuracy or completeness of electronic copies of this plan sheet.

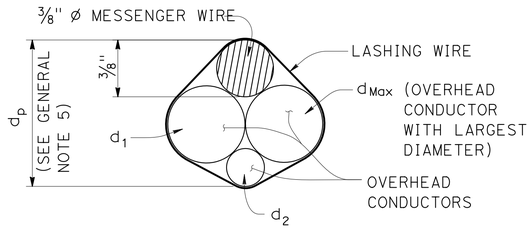

$d_p = 3/8" + d_{Max} + 0.30 * (d_1 + d_2 + ... d_n)$

PROJECTED DEPTH OF OVERHEAD BUNDLE, (d_p)

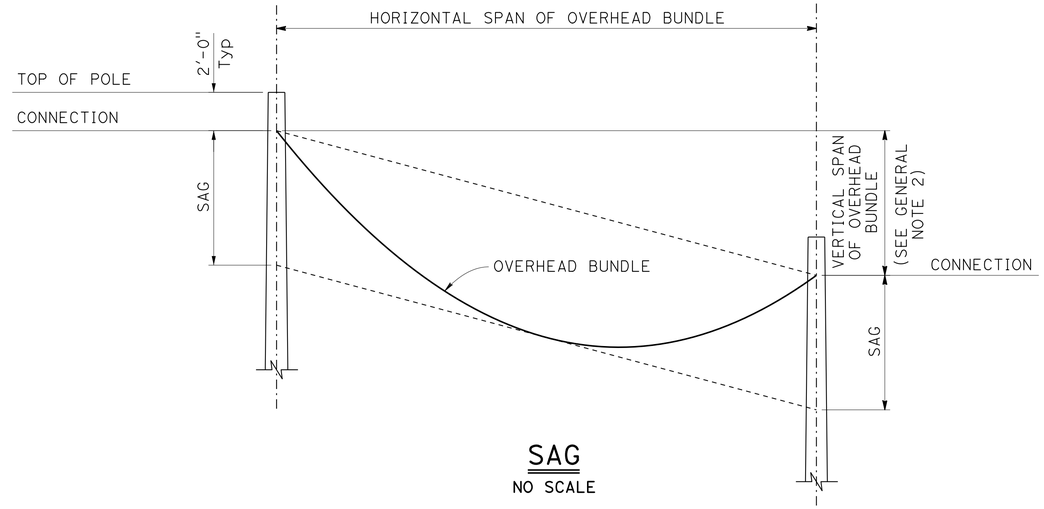

SAG

NO SCALE

Design: AASHTO Standard Specifications for Structural Supports for Highway Signs, Luminaires and Traffic Signals, Fifth Edition (LTS-5).

GROUP LOAD COMBINATIONS:

I Dead Load
II Dead Load + Wind Load
III Dead Load + 0.5 (Wind Load) + Ice Load
IV Fatigue: Not used

LOADING:

Wind Loading: 100 mph (3-second gust)
Wind Recurrence Interval: 10 years
Combined height, exposure, and elevated terrain factor = 1.05 (Exposure C, structure is not located on or over the top half of a ridge, hill, or escarpment)

Ice Loading: 3.0 psf on surfaces, 0.60 in radial thickness of ice at a unit weight of 60 pcf on overhead bundles

BASIC DESIGN VALUES:

Timber Poles: Fb = 1850 psi
Fv = 110 psi
Fcp = 230 psi
Fc = 950 psi
E = 1500 x 10^3 psi

DESIGN WIRE BREAKING STRENGTHS:

ASTM A475, Utilities Grade, 7 strand modified by termination efficiency factor of 0.8

FOUNDATION DESIGN NOTES:

1. Pole embedment depth design is based on Broms' approximate procedure as described in Article 13.6 of AASHTO LTS-5.

2. Embedment depth is calculated based on following soil parameters,
Cohesive Soil:
Shear strength of soil c = 1500 psf.
Cohesionless Soil:
Ø = 30 deg, γ = 120 pcf.
Soil assumed to be unsaturated.

3. An overload factor of 2.0 and an undercapacity factor of 0.7 were used for safety factor of 2.86.

4. Allowable vertical bearing pressure at the end bearing of poles is 3000 psf at 6 feet or more embedment.

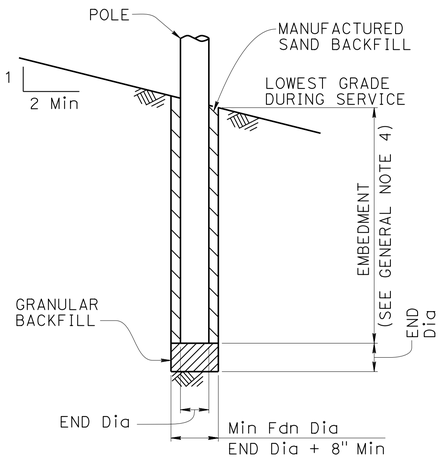

POLE FOUNDATION

GENERAL NOTES:

1. The messenger wire and any combination of overhead conductors must not exceed either a self weight of 3.0 lb/ft or the maximun d_p.

2. The maximum vertical span is 10% of the horizontal span.

3. For poles with adjacent unbalanced horizontal spans, the shortest horizontal span must be at least 50% of the largest horizontal span.

4. Add 2'-0" for slopes above 1V:4H.

5. For a pole supporting multiple spans, calculate d_p for each span and use the largest value.

6. Do not exceed the attachments shown.

DIAMETERS AND SELF WEIGHT OF OVERHEAD CONDUCTORS

CONDUCTOR OR CABLE TYPE	DIAMETER d (in)	WEIGHT w (plf)
3 CONDUCTOR SIGNAL CABLE (3CSC)	0.400	0.0980
5 CONDUCTOR SIGNAL CABLE (5CSC)	0.500	0.1560
9 CONDUCTOR SIGNAL CABLE (9CSC)	0.650	0.2760
12 CONDUCTOR SIGNAL CABLE (12CSC)	0.800	0.3970
28 CONDUCTOR SIGNAL CABLE (28CSC)	0.900	0.6490
1#14	0.166	0.0235
1#12	0.185	0.0330
1#10	0.210	0.0476
1#8	0.271	0.0774
1#6	0.310	0.1130
1#4	0.359	0.1690
1#3	0.388	0.2080
1#2	0.420	0.2560
1#1	0.498	0.3340
6-CONDUCTOR SIGNAL INTERCONNECT CABLE (SIC)	0.350	0.0860
12-CONDUCTOR SIGNAL INTERCONNECT CABLE (SIC)	0.500	0.1440
DETECTOR LEAD-IN CABLE (DLC)	0.310	0.0440
12 to 48-STRAND FIBER OPTIC CABLE (48FOC)	0.424	0.0600
72-STRAND FIBER OPTIC CABLE (72FOC)	0.484	0.0770
96-STRAND FIBER OPTIC CABLE (96FOC)	0.535	0.1050
144-STRAND FIBER OPTIC CABLE (144FOC)	0.670	0.1890
3/8" Ø MESSENGER WIRE	0.375	0.2730

NO SCALE

BRANCH CHIEF DAVID A. NEUMANN

	BY	CHECKED
DESIGN	NIRANJEN KANEPATHIPILLAI	AIMAN MALAK
DETAILS	SHUMEI JIANG	AIMAN MALAK
QUANTITIES	X	X

STATE OF CALIFORNIA DEPARTMENT OF TRANSPORTATION

DIVISION OF ENGINEERING SERVICES STRUCTURE DESIGN SPECIAL DESIGN BRANCH

BRIDGE NO. X POST MILE 20.5/25.7

TEMPORARY WOOD POLES GENERAL NOTES

SES-1

STRUCTURES DESIGN SPECIAL DESIGN SHEET (ENGLISH) (REV. 09-01-10)

ORIGINAL SCALE IN INCHES FOR REDUCED PLANS 0 1 2 3

UNIT: 3619
PROJECT NUMBER & PHASE: 0100000371-1 CONTRACT NO.: 01-479401

DISREGARD PRINTS BEARING EARLIER REVISION DATES 04-08-13

SHEET 1 OF 10

FILE => ea-01-479401_ses-sheet01.dgn

USERNAME => s124496 DATE PLOTTED => 21-JUN-2013 TIME PLOTTED => 19:40

DIST	COUNTY	ROUTE	POST MILES TOTAL PROJECT	SHEET No.	TOTAL SHEETS
01	DN	199	20.3/25.9	63	184

Aiman Malak 04-12-13
REGISTERED CIVIL ENGINEER DATE

6-24-13
PLANS APPROVAL DATE

REGISTERED PROFESSIONAL ENGINEER AIMAN MALAK No. C73369 Exp.12-31-14 CIVIL STATE OF CALIFORNIA

The State of California or its officers or agents shall not be responsible for the accuracy or completeness of electronic copies of this plan sheet.

LEGEND

- Wood Pole No Attachments
- A Wood Pole with Attachments
- —OH— Overhead Bundle

POLE SELECTION TABLE

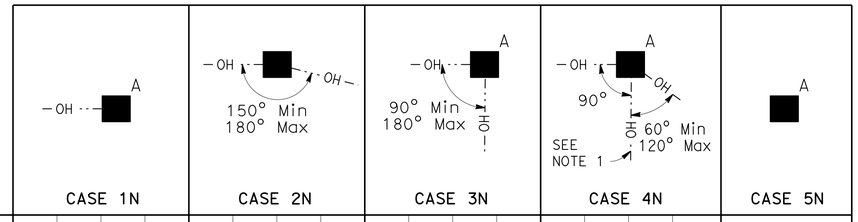

			CASE 1N				CASE 2N				CASE 3N				CASE 4N				CASE 5N
		MAXIMUM d_p	1"	1.5"	2.0"	2.5"	1"	1.5"	2.0"	2.5"	1.0"	1.5"	2.0"	2.5"	1"	1.5"	2.0"	2.5"	N/A
OVERHEAD BUNDLE HORIZONTAL SPAN Max	50'	MINIMUM POLE CLASS	H-1	H-2	H-2	H-2	4	3	2	1	H-2	H-2	H-3	H-3	H-4	H-4	H-4	H-5	CLASS 1 E = 10'
		POLE EMBEDMENT (E)	11'				10'				11'				12'				
	100'	MINIMUM POLE CLASS	H-2	H-3	H-4	H-5	1	H-1	H-2	H-3	H-4	H-5	H-5	H-6	H-5	H-5	H-6		
		POLE EMBEDMENT (E)	12'				11'				12'				12'				
	150'	MINIMUM POLE CLASS	H-4	H-5	H-6		H-1	H-2	H-3	H-5	H-6				H-6				
		POLE EMBEDMENT (E)	12'				12'				12'				12'				
	200'	MINIMUM POLE CLASS	H-5	H-6			H-2	H-3	H-5										
		POLE EMBEDMENT (E)	12'				12'												

1. CCTV camera assembly or vehicle detection system
2. Overhead bundle consisting of a 3/8" ø messenger wire and overhead conductors and lashing wire.
3. Luminaire with mast arm
4. Pedestrian pushbutton
5. Signal face with 3 indications or single sheet sign panel (10 SQFT Max)
6. Riser with weather head as required
7. Pull box as required
8. Grounding as required
9. Single section flashing beacon or single sheet sign panel (4 SQFT Max)
10. Single sheet sign panel (4' x 4' Max) or signal face with 3 indications
11. Flashing beacon control assembly
12. NEMA 3R enclosure, 26"(W) x 56"(H) x 12"(D) Max dimensions. Max weight including batteries, 450 lbs
13. 25' SQFT Max total photovoltaic panels mounted as shown as required
14. 2-section 12" flashing beacon

NOTES:

1. In addition to other restrictions on maximum horizontal span, this horizontal span must not exceed 100'.
2. Cases 1N, 3N and 4N may substitute the attachments shown in Case 5N if the photovoltaic panel is not included.

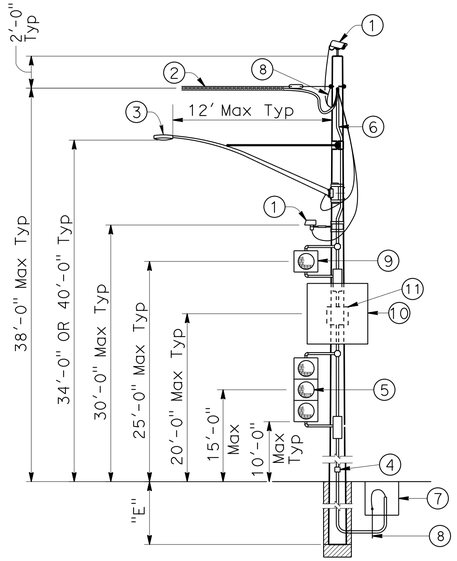

CASE 1N
POLE AT DEAD END
WITH ATTACHMENTS
SEE NOTE 2

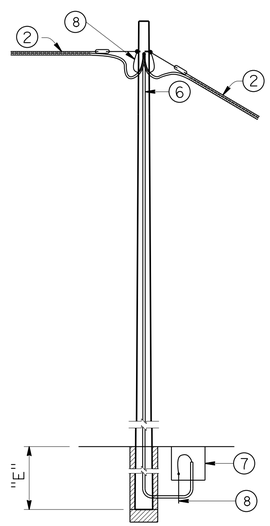

CASE 2N
POLE AT TANGENT
WITHOUT ATTACHMENTS

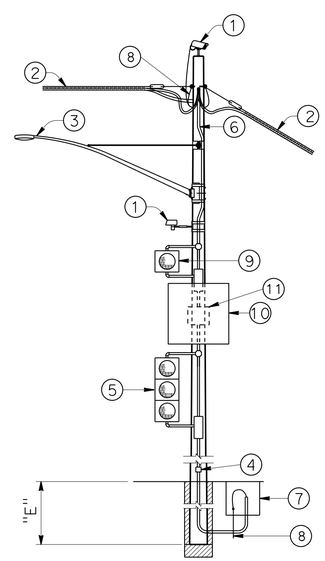

CASE 3N
POLE AT TANGENT OR CORNER
WITH ATTACHMENTS
SEE NOTE 2

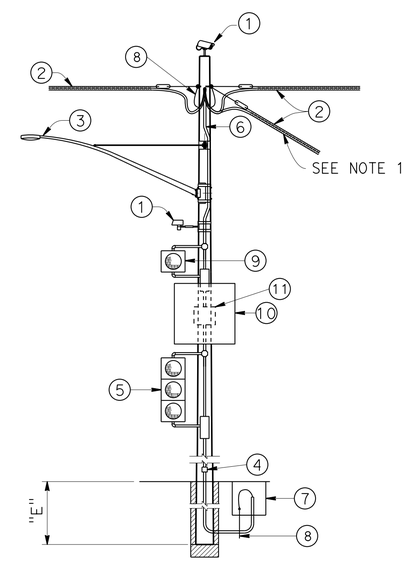

CASE 4N
POLE AT JUNCTION
WITH ATTACHMENTS
SEE NOTE 2

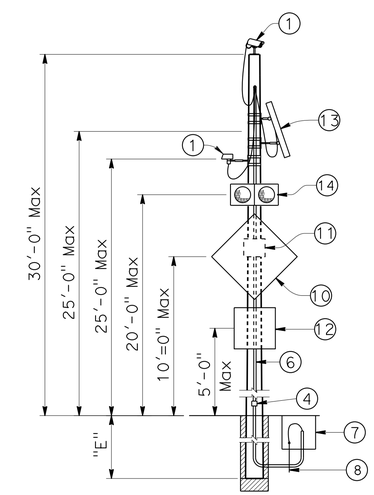

CASE 5N
POLE WITHOUT OVERHEAD BUNDLE
WITH ATTACHMENTS

NO SCALE

BRANCH CHIEF DAVID A. NEUMANN	DESIGN	BY NIRANJEN KANEPATHIPILLAI	CHECKED AIMAN MALAK	STATE OF CALIFORNIA DEPARTMENT OF TRANSPORTATION	DIVISION OF ENGINEERING SERVICES STRUCTURE DESIGN SPECIAL DESIGN BRANCH
	DETAILS	BY SHUMEI JIANG	CHECKED AIMAN MALAK		
	QUANTITIES	BY X	CHECKED X		

BRIDGE NO. X
POST MILE 20.5/25.7

TEMPORARY WOOD POLES
NON-GUYED-NO SIGNALS ON SPANS

SES-2

STRUCTURES DESIGN SPECIAL DESIGN SHEET (ENGLISH) (REV. 09-01-10)

ORIGINAL SCALE IN INCHES FOR REDUCED PLANS 0 1 2 3

UNIT: 3619
PROJECT NUMBER & PHASE: 0100000371-1
CONTRACT NO.: 01-479401

DISREGARD PRINTS BEARING EARLIER REVISION DATES

REVISION DATES 04-08-13

SHEET 2 OF 10

FILE => ea-01-479401_ses-sheet02.dgn

USERNAME => s124496 DATE PLOTTED => 21-JUN-2013 TIME PLOTTED => 19:38

DIST	COUNTY	ROUTE	POST MILES TOTAL PROJECT	SHEET No.	TOTAL SHEETS
01	DN	199	20.3/25.9	64	184

Aiman Malak 04-12-13
REGISTERED CIVIL ENGINEER DATE

6-24-13
PLANS APPROVAL DATE

REGISTERED PROFESSIONAL ENGINEER AIMAN MALAK No. C73369 Exp.12-31-14 CIVIL STATE OF CALIFORNIA

The State of California or its officers or agents shall not be responsible for the accuracy or completeness of electronic copies of this plan sheet.

LEGEND

A — Wood Pole with Attachments

—··TS—··· Overhead Bundle with Signal Faces (See Note 1)

POLE SELECTION TABLE

			CASE 1NT (A —··TS—··—·)		
OVERHEAD BUNDLE HORIZONTAL SPAN Max	75′	MAXIMUM d_p	1"	1.5"	2.0"
		MINIMUM POLE CLASS	H-5	H-6	H-6
		POLE EMBEDMENT (E)	13′		

1. CCTV camera assembly or vehicle detection system
2. Overhead bundle consisting of a ⅜" ø messenger wire and overhead conductors and lashing wire
3. Luminaire with mast arm
4. Pedestrian pushbutton
5. Signal face with 3 indications or single sheet sign panel (10 SQFT Max)
6. Riser with weather head as required
7. Pull box as required
8. Grounding as required
9. ⅜" ø tether wire
10. Pedestrian signal head

NOTES:

1. Maximum of 2 SIGNAL FACES per span within the hatched regions indicated by "LOCATION OF SIGNAL FACES".

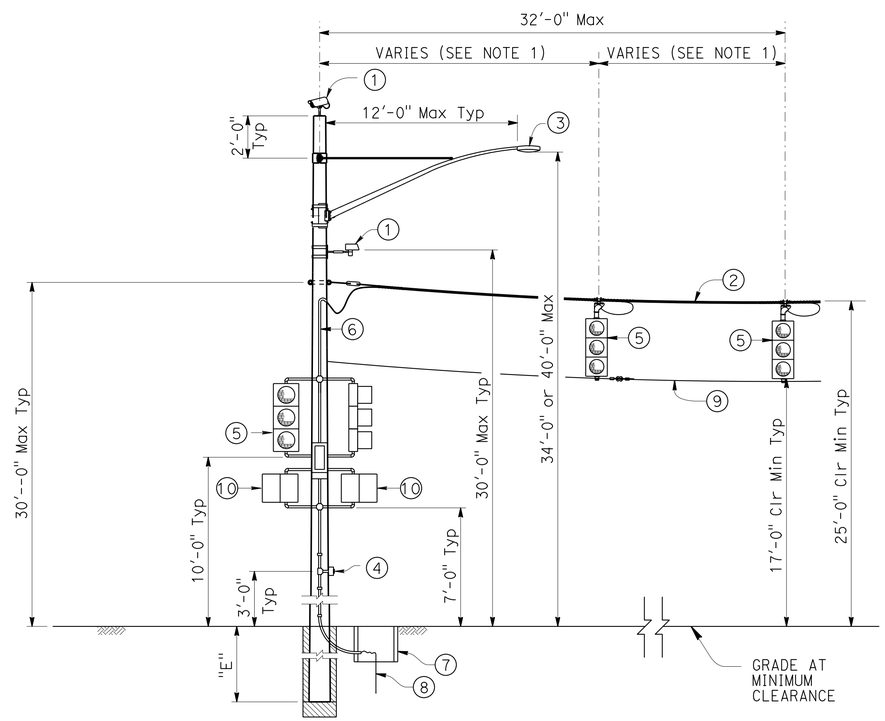

CASE 1NT
POLE AT DEAD END WITH ATTACHMENTS

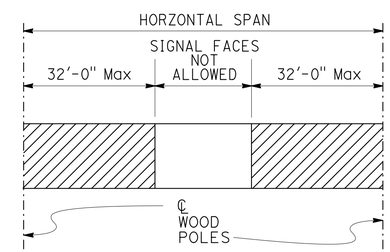

LOCATION OF SIGNAL FACES

NO SCALE

BRANCH CHIEF	DAVID A. NEUMANN			
DESIGN	BY NIRANJEN KANEPATHIPILLAI	CHECKED AIMAN MALAK		
DETAILS	BY SHUMEI JIANG	CHECKED AIMAN MALAK		
QUANTITIES	BY X	CHECKED X		

STATE OF CALIFORNIA DEPARTMENT OF TRANSPORTATION

DIVISION OF ENGINEERING SERVICES STRUCTURE DESIGN SPECIAL DESIGN BRANCH

BRIDGE NO. X
POST MILE 20.5/25.7

TEMPORARY WOOD POLES NON-GUYED-WITH SIGNALS ON SPANS

SES-3

STRUCTURES DESIGN SPECIAL DESIGN SHEET (ENGLISH) (REV. 09-01-10)

ORIGINAL SCALE IN INCHES FOR REDUCED PLANS 0 1 2 3

UNIT: 3619
PROJECT NUMBER & PHASE: 0100000371-1 CONTRACT NO.: 01-479401

DISREGARD PRINTS BEARING EARLIER REVISION DATES

REVISION DATES 04-08-13

SHEET 3 OF 10

FILE => eq-01-479401_ses-sheet03.dgn

USERNAME => s124936 DATE PLOTTED => 21-JUN-2013 TIME PLOTTED => 13:38

DIST	COUNTY	ROUTE	POST MILES TOTAL PROJECT	SHEET No.	TOTAL SHEETS
01	DN	199	20.3/25.9	65	184

REGISTERED CIVIL ENGINEER 04-12-13 DATE

6-24-13
PLANS APPROVAL DATE

REGISTERED PROFESSIONAL ENGINEER AIMAN MALAK No. C73369 Exp. 12-31-14 CIVIL STATE OF CALIFORNIA

The State of California or its officers or agents shall not be responsible for the accuracy or completeness of electronic copies of this plan sheet.

LEGEND

- A — Wood Pole with Attachments
- —TS— Overhead Bundle with Signal Faces (See Note 2)
- —OH— Overhead Bundle
- Guy Anchor

POLE SELECTION TABLE

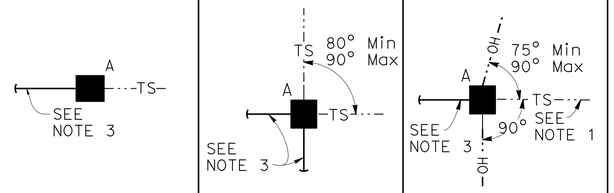

			CASE 1GT			CASE 2GT			CASE 3GT		
		MAXIMUM dp	1"	1.5"	2.0"	1"	1.5"	2.0"	1"	1.5"	2.0"
OVERHEAD BUNDLE HORIZONTAL SPAN Max	50'	MINIMUM POLE CLASS	H-2	H-3	H-3	H-2	H-2	H-2	H-3	H-4	H-4
		POLE EMBEDMENT (E)	10'			10'			11'		
	100'	MINIMUM POLE CLASS	H-3	H-3	H-4	H-2	H-3	H-3	H-4	H-4	H-5
		POLE EMBEDMENT (E)	11'			10'			11'		
	150'	MINIMUM POLE CLASS	H-3	H-4	H-4	H-2	H-3	H-4	H-4	H-5	H-5
		POLE EMBEDMENT (E)	11'			10'			11'		

NOTES:

1. In addition to other restrictions on maximum horizontal span, this horizontal span must not exceed 100'.
2. Maximum of 2 SIGNAL FACES per span within the hatched regions indicated by "LOCATION OF SIGNAL FACES".
3. Guy wire in line with opposing span ± 5°.

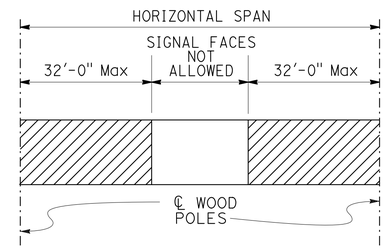

LOCATION OF SIGNAL FACES

1. CCTV camera assembly or vehicle detection system
2. Overhead bundle consisting of 3/8" ø messenger wire and overhead conductors and lashing wire
3. Luminaire with mast arm
4. Pedestrian pushbutton
5. Signal face with 3 indications or single sheet sign panel (10 SQFT Max)
6. Riser with weather head as required
7. Pull box as required
8. Grounding as required
9. 3/8" ø tether wire
10. 1/2" ø guy wire with white guy marker and strain insulator. For anchorage see "TEMPORARY WOOD POLES-DETAILS No. 2" sheet
11. Pedestrian signal head

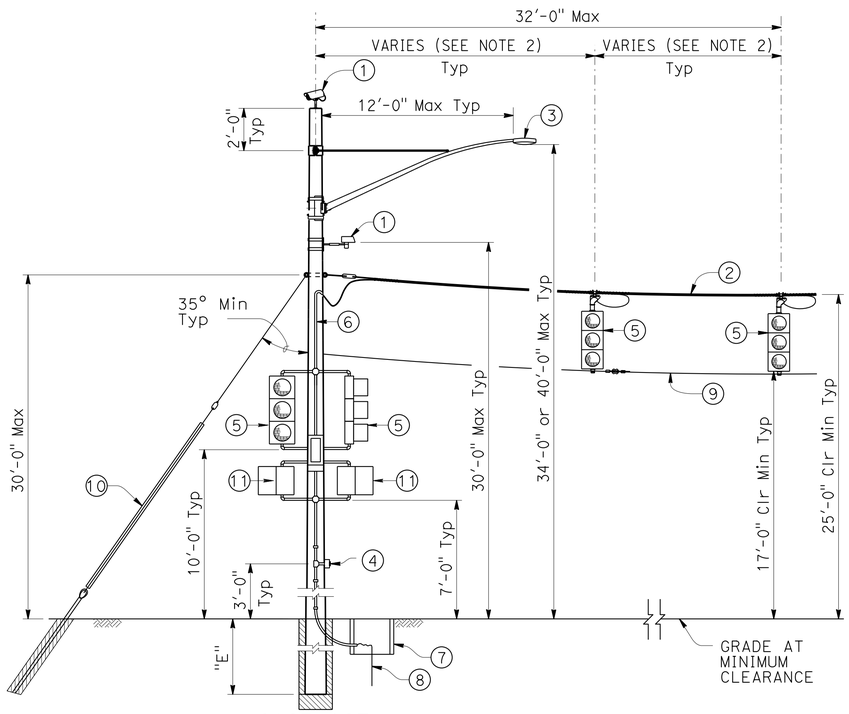

CASE 1GT
POLE AT DEAD END WITH ATTACHMENTS

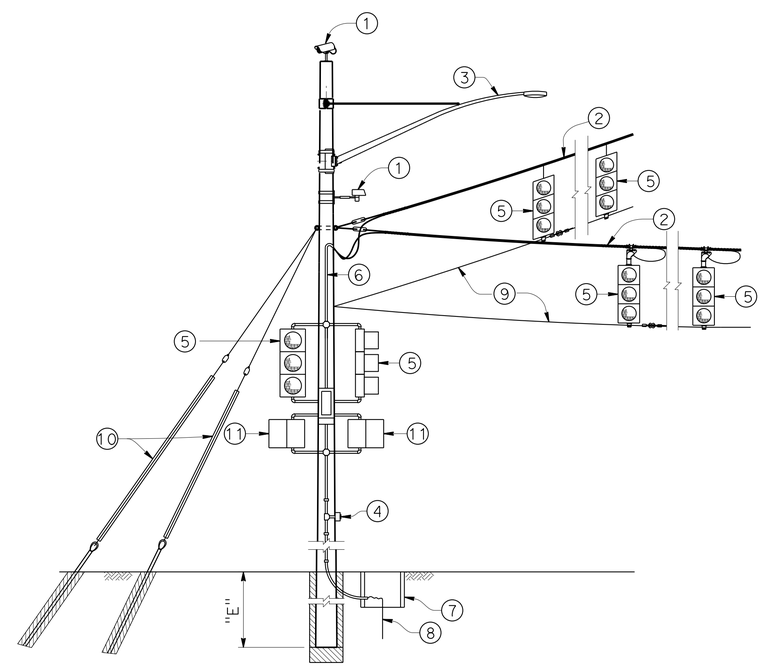

CASE 2GT
POLE AT CORNER WITH ATTACHMENTS

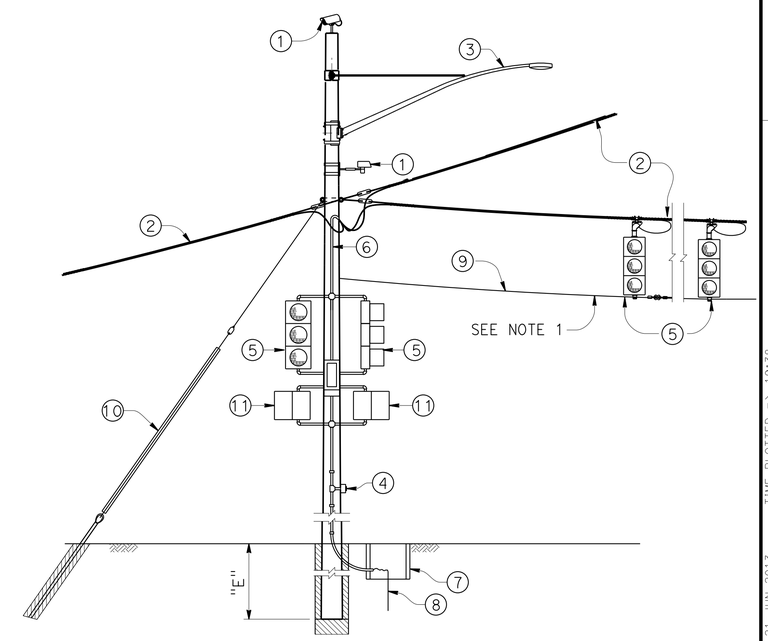

CASE 3GT
POLE AT JUNCTION WITH ATTACHMENTS

NO SCALE

BRANCH CHIEF DAVID A. NEUMANN	DESIGN	BY NIRANJEN KANEPATHIPILLAI	CHECKED AIMAN MALAK	STATE OF CALIFORNIA DEPARTMENT OF TRANSPORTATION	DIVISION OF ENGINEERING SERVICES STRUCTURE DESIGN SPECIAL DESIGN BRANCH
	DETAILS	BY SHUMEI JIANG	CHECKED AIMAN MALAK		
	QUANTITIES	BY X	CHECKED X		

BRIDGE NO. X
POST MILE 20.5/25.7

TEMPORARY WOOD POLES
GUYED-WITH SIGNALS ON SPANS

SES-4

STRUCTURES DESIGN SPECIAL DESIGN SHEET (ENGLISH) (REV. 09-01-10)

ORIGINAL SCALE IN INCHES FOR REDUCED PLANS 0 1 2 3

UNIT: 3619
PROJECT NUMBER & PHASE: 0100000371-1 CONTRACT NO.: 01-479401

DISREGARD PRINTS BEARING EARLIER REVISION DATES

REVISION DATES 04-08-13

SHEET 4 OF 10

FILE => eq-01-479401_ses-sheet04.dgn

USERNAME => s124496 DATE PLOTTED => 21-JUN-2013 TIME PLOTTED => 19:38

DIST	COUNTY	ROUTE	POST MILES TOTAL PROJECT	SHEET No.	TOTAL SHEETS
01	DN	199	20.3/25.9	66	184

REGISTERED CIVIL ENGINEER 04-12-13 DATE

6-24-13
PLANS APPROVAL DATE

REGISTERED PROFESSIONAL ENGINEER AIMAN MALAK No. C73369 Exp.12-31-14 CIVIL STATE OF CALIFORNIA

The State of California or its officers or agents shall not be responsible for the accuracy or completeness of electronic copies of this plan sheet.

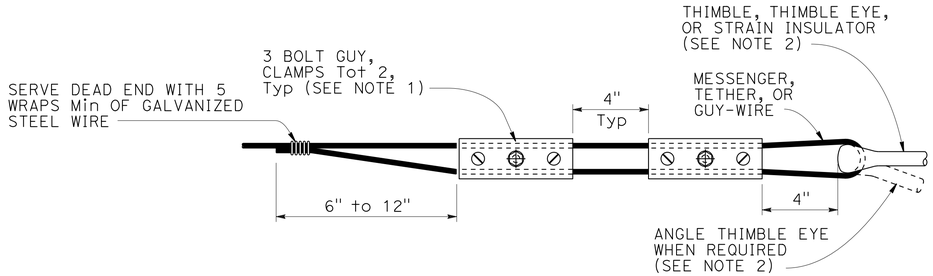

ALTERNATIVE TERMINATION OF MESSENGER WIRES USING GUY CLAMPS

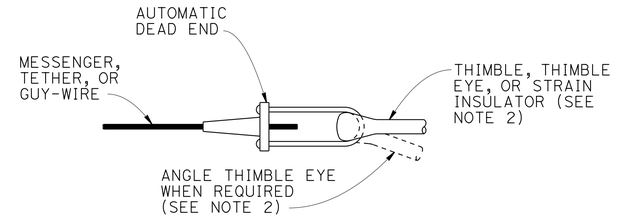

TERMINATION OF WIRES USING AUTOMATIC DEAD END

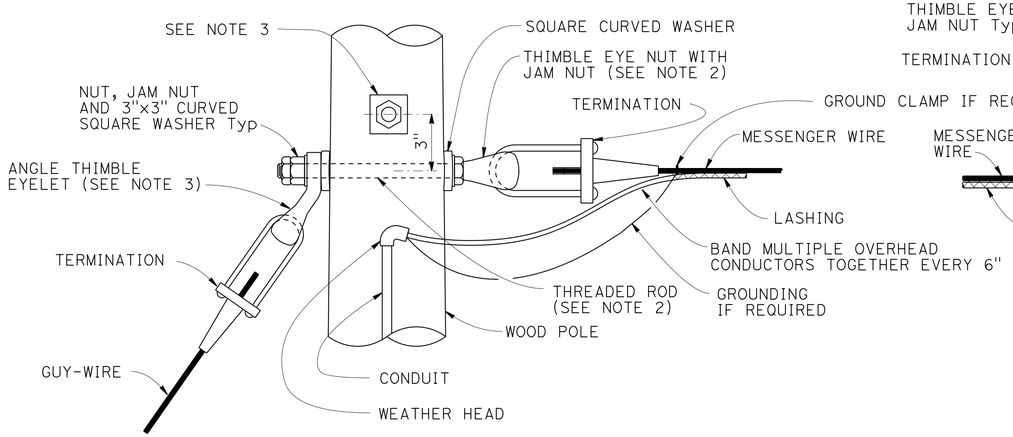

POLE AT DEAD END WITH GUY-WIRE CONNECTION

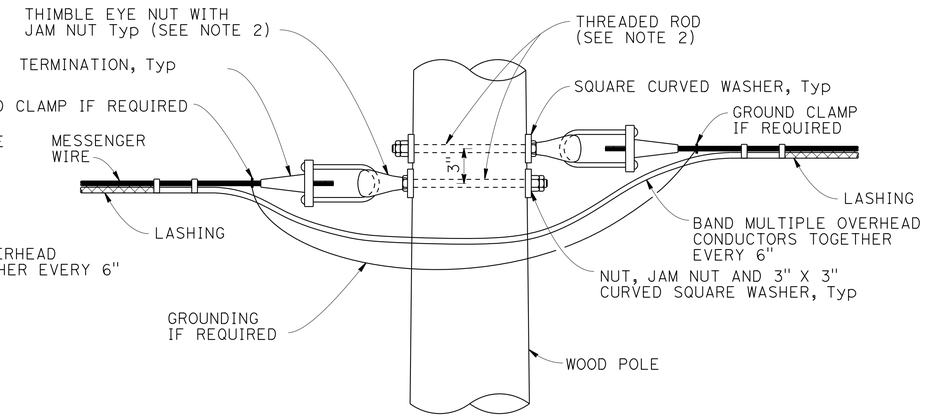

POLE AT TANGENT OR CORNER CONNECTION

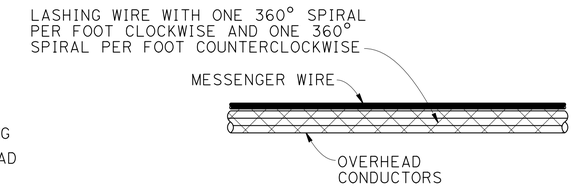

DOUBLE LASHING DETAIL

USE IF d_p IS GREATER THAN 1½"

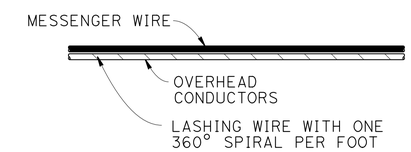

TYPICAL LASHING DETAIL

USE IF d_p IS 1½" OR LESS

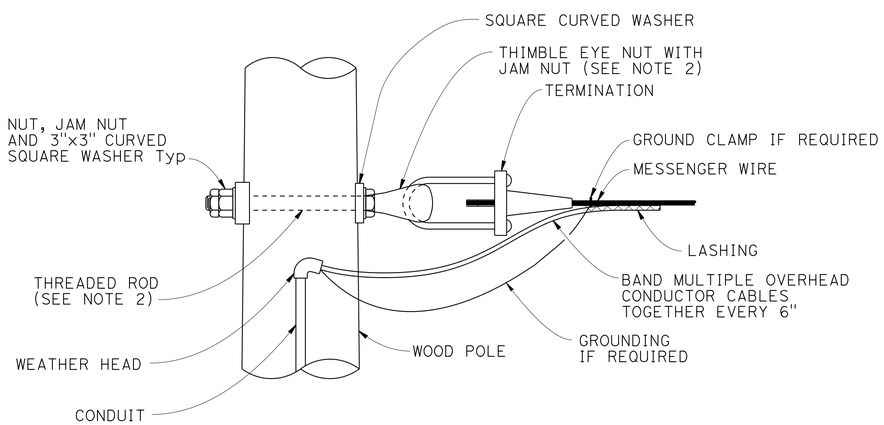

POLE AT DEAD END CONNECTION

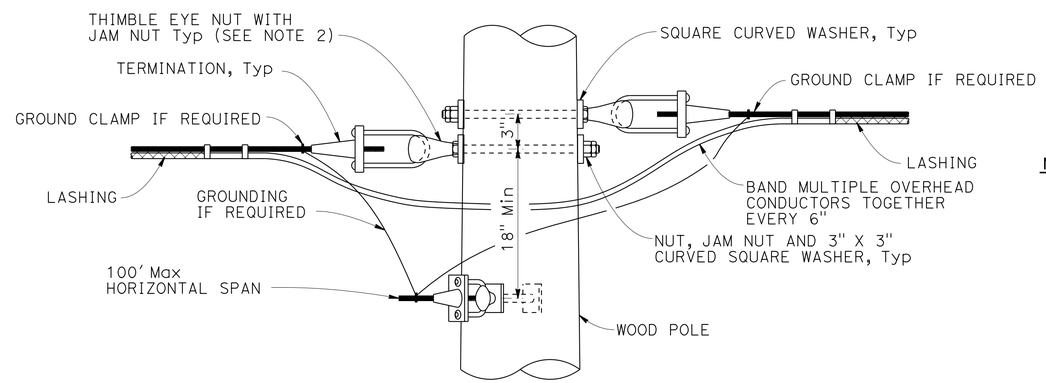

POLE AT JUNCTION CONNECTION

NOTES:

1. For guy wires use 3 clamps.
2. Use ⅝" ø except ¾" ø at guyed wires
3. Install additional angle thimble eyelet at poles with two guy wires.

NO SCALE

BRANCH CHIEF DAVID A. NEUMANN	DESIGN	BY NIRANJEN KANEPATHIPILLAI	CHECKED AIMAN MALAK	STATE OF CALIFORNIA DEPARTMENT OF TRANSPORTATION	DIVISION OF ENGINEERING SERVICES STRUCTURE DESIGN SPECIAL DESIGN BRANCH
	DETAILS	BY SHUMEI JIANG	CHECKED AIMAN MALAK		BRIDGE NO. X POST MILE 20.5/25.7
	QUANTITIES	BY X	CHECKED X		

TEMPORARY WOOD POLES
DETAILS No. 1

SES-5

STRUCTURES DESIGN SPECIAL DESIGN SHEET (ENGLISH) (REV. 09-01-10)

ORIGINAL SCALE IN INCHES FOR REDUCED PLANS 0 1 2 3

UNIT: 3619
PROJECT NUMBER & PHASE: 0100000371-1 CONTRACT NO.: 01-479401

DISREGARD PRINTS BEARING EARLIER REVISION DATES 04-08-13

REVISION DATES | SHEET 5 | OF 10

FILE => ea-01-479401_ses-sheet05.dgn

USERNAME => s12161 4 DATE PLOTTED => 24-JUN-2013 TIME PLOTTED => 14:30

DIST	COUNTY	ROUTE	POST MILES TOTAL PROJECT	SHEET No.	TOTAL SHEETS
01	DN	199	20.3/25.9	67	184

REGISTERED CIVIL ENGINEER 04-12-13 DATE

6-24-13
PLANS APPROVAL DATE

REGISTERED PROFESSIONAL ENGINEER AIMAN MALAK No. C73369 Exp. 12-31-14 CIVIL STATE OF CALIFORNIA

The State of California or its officers or agents shall not be responsible for the accuracy or completeness of electronic copies of this plan sheet.

NOTES:

1. Minimum allowable tension capacity "Qa" = 8,900 lbs.
2. Minimum installation torque "T" = 1780 lbs-ft.
3. Helical anchor detail may be used in place of expanded steel anchors.

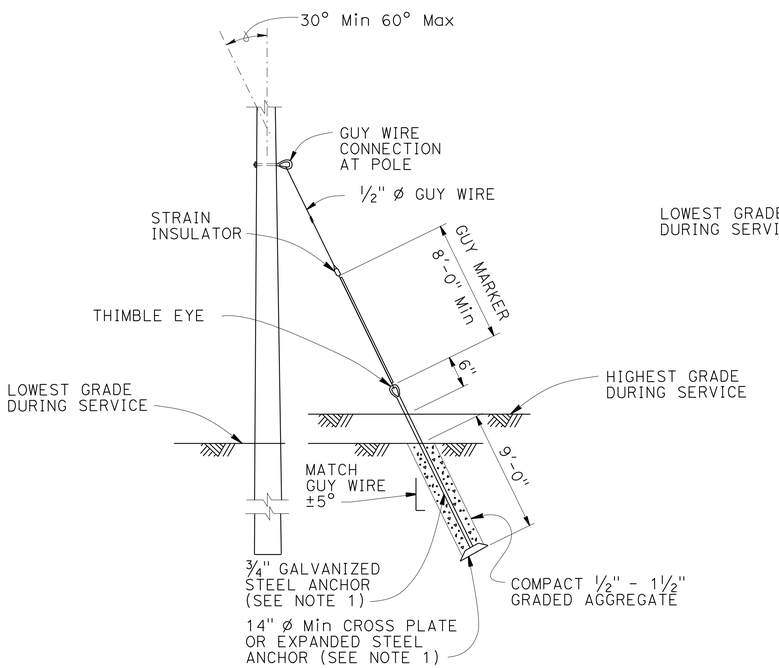

EXPANDED STEEL ANCHOR DETAIL

SEE NOTE 3

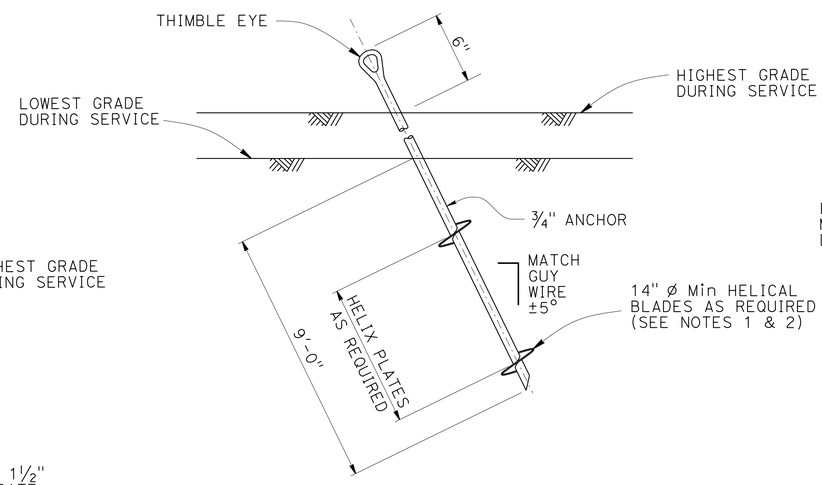

HELICAL ANCHOR DETAIL

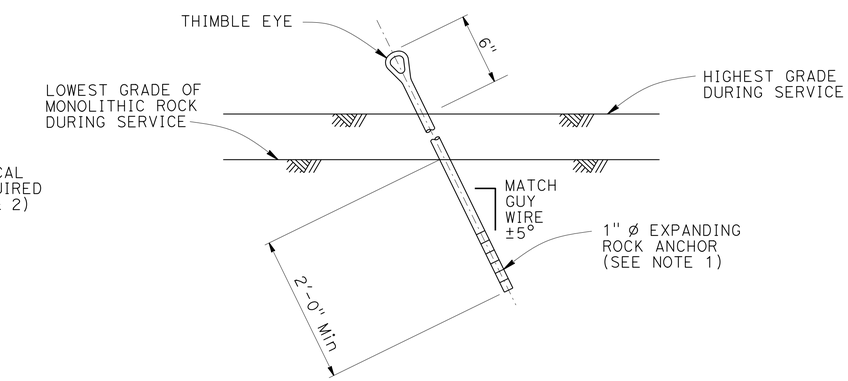

EXPANDING ROCK ANCHOR DETAIL

NO SCALE

BRANCH CHIEF	DAVID A. NEUMANN		
DESIGN	BY NIRANJEN KANEPATHIPILLAI	CHECKED AIMAN MALAK	
DETAILS	BY SHUMEI JIANG	CHECKED AIMAN MALAK	
QUANTITIES	BY X	CHECKED X	

STATE OF CALIFORNIA
DEPARTMENT OF TRANSPORTATION

DIVISION OF ENGINEERING SERVICES
STRUCTURE DESIGN
SPECIAL DESIGN BRANCH

BRIDGE NO. X
POST MILE 20.5/25.7

TEMPORARY WOOD POLES
DETAILS No. 2

SES-6

STRUCTURES DESIGN SPECIAL DESIGN SHEET (ENGLISH) (REV. 09-01-10)

ORIGINAL SCALE IN INCHES FOR REDUCED PLANS 0 1 2 3

UNIT: 3619
PROJECT NUMBER & PHASE: 0100000371-1 CONTRACT NO.: 01-479401

DISREGARD PRINTS BEARING EARLIER REVISION DATES

REVISION DATES 04-08-13

SHEET 6 OF 10

FILE => ea-01-479401_ses-sheet06.dgn

USERNAME => s124496 DATE PLOTTED => 21-JUN-2013 TIME PLOTTED => 19:38

DIST	COUNTY	ROUTE	POST MILES TOTAL PROJECT	SHEET No.	TOTAL SHEETS
01	DN	199	20.3/25.9	68	184

REGISTERED CIVIL ENGINEER 04-12-13 DATE

6-24-13
PLANS APPROVAL DATE

REGISTERED PROFESSIONAL ENGINEER AIMAN MALAK No. C73369 Exp. 12-31-14 CIVIL STATE OF CALIFORNIA

The State of California or its officers or agents shall not be responsible for the accuracy or completeness of electronic copies of this plan sheet.

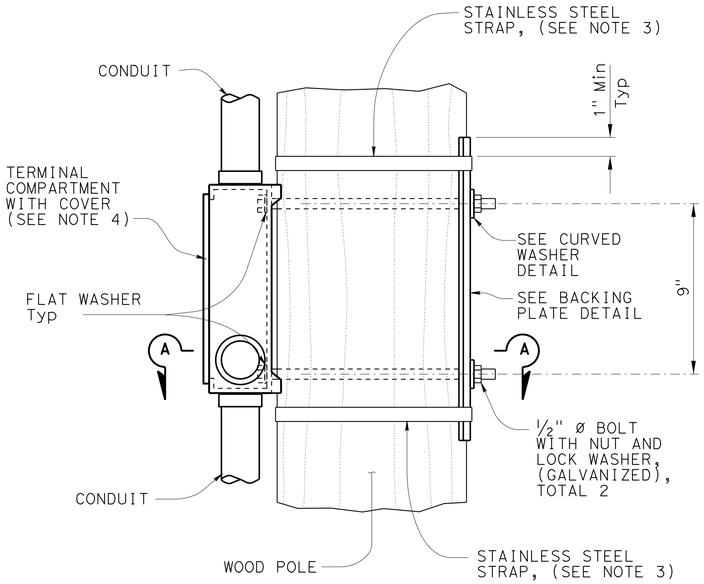

ELEVATION

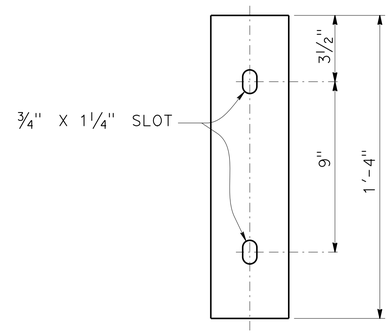

ELEVATION

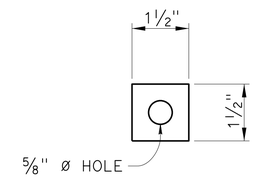

ELEVATION

PLAN

BACKING PLATE DETAIL

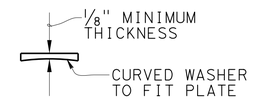

PLAN

CURVED WASHER DETAIL

NOTES:

1. Verify pole dimensions at terminal compartment for fabrication of backing plate and curved washer.
2. Backing plate to be galvanized after fabrication.
3. ¾" x 0.044" minimum, rounded edge stainless steel straps, double wrapped with 2" long bend under stainless steel strap buckle.
4. For details not shown see Standard Plan ES-4D.

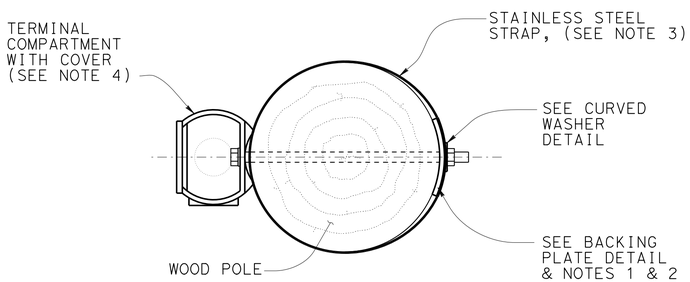

SECTION A-A

SIDE MOUNTING TERMINAL COMPARTMENT

NOTE:
THE CONTRACTOR SHALL VERIFY ALL CONTROLLING FIELD DIMENSIONS BEFORE ORDERING OR FABRICATING ANY MATERIAL.

NO SCALE

BRANCH CHIEF DAVID A. NEUMANN

	BY	CHECKED
DESIGN	NIRANJEN KANEPATHIPILLAI	AIMAN MALAK
DETAILS	SHUMEI JIANG	AIMAN MALAK
QUANTITIES	X	X

STATE OF CALIFORNIA DEPARTMENT OF TRANSPORTATION

DIVISION OF ENGINEERING SERVICES STRUCTURE DESIGN SPECIAL DESIGN BRANCH

BRIDGE NO. X
POST MILE 20.5/25.7

TEMPOARARY WOOD POLES DETAILS No. 3

SES-7

STRUCTURES DESIGN SPECIAL DESIGN SHEET (ENGLISH) (REV. 09-01-10)

ORIGINAL SCALE IN INCHES FOR REDUCED PLANS 0 1 2 3

UNIT: 3619
PROJECT NUMBER & PHASE: 0100000371-1 CONTRACT NO.: 01-479401

DISREGARD PRINTS BEARING EARLIER REVISION DATES 04-08-13

REVISION DATES

SHEET 7 OF 10

FILE => eq-01-479401_ses-sheet07.dgn

USERNAME => s121614 DATE PLOTTED => 24-JUN-2013 TIME PLOTTED => 14:30

DIST	COUNTY	ROUTE	POST MILES TOTAL PROJECT	SHEET No.	TOTAL SHEETS
01	DN	199	20.3/25.9	69	184

REGISTERED CIVIL ENGINEER — DATE 04-12-13

6-24-13
PLANS APPROVAL DATE

The State of California or its officers or agents shall not be responsible for the accuracy or completeness of electronic copies of this plan sheet.

REGISTERED PROFESSIONAL ENGINEER — AIMAN MALAK — No. C73369 — Exp. 12-31-14 — CIVIL — STATE OF CALIFORNIA

NOTES:

1. Luminaire mast arms must be in compliance with Standard Plan ES-6D with noted modifications.
2. Verify pole dimensions at tie-rod attachment height. Fabricate 8" flat bar with "L" Dimension to maintain an open gap between flanges in finished installation.
3. Not all screw heads and bolt heads are shown for clarity.
4. Mast arm not shown for clarity.

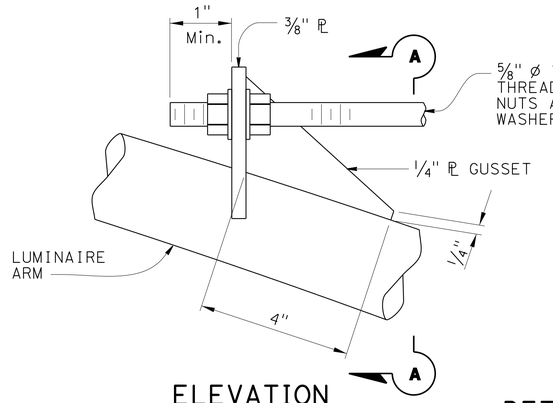

ELEVATION

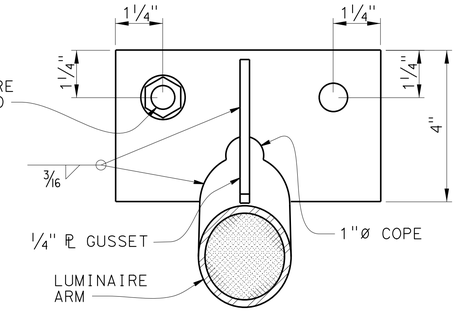

SECTION A-A

DETAIL A
TIE-ROD AT LUMINAIRE ARM
NO SCALE

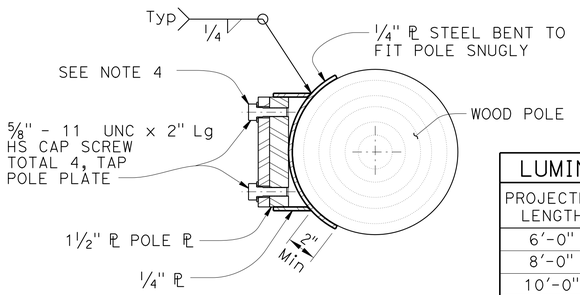

SECTION E-E

LUMINAIRE MAST ARM DATA			
PROJECTED LENGTH	N RISE	Min OD AT POLE	NOMINAL THICKNESS
6'-0"	2'-0"±	3 1/4"	0.1196"
8'-0"	2'-6"±	3 1/2"	
10'-0"	3'-3"±	3 7/8"	
12'-0"	4'-3"±		

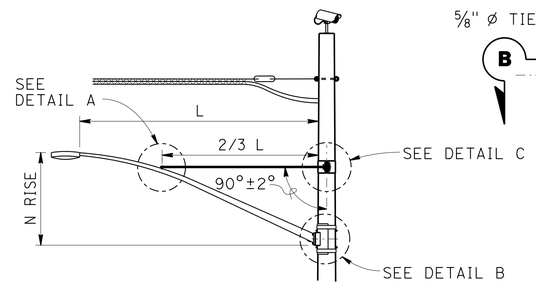

LUMINAIRE MAST ARM

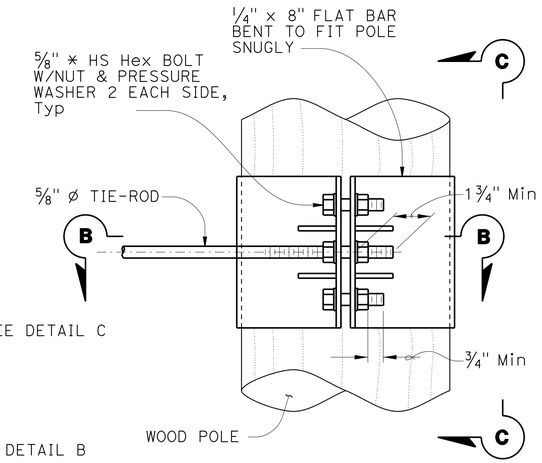

ELEVATION

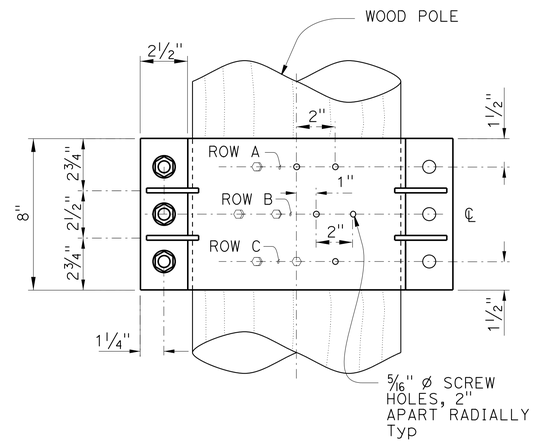

VIEW C-C

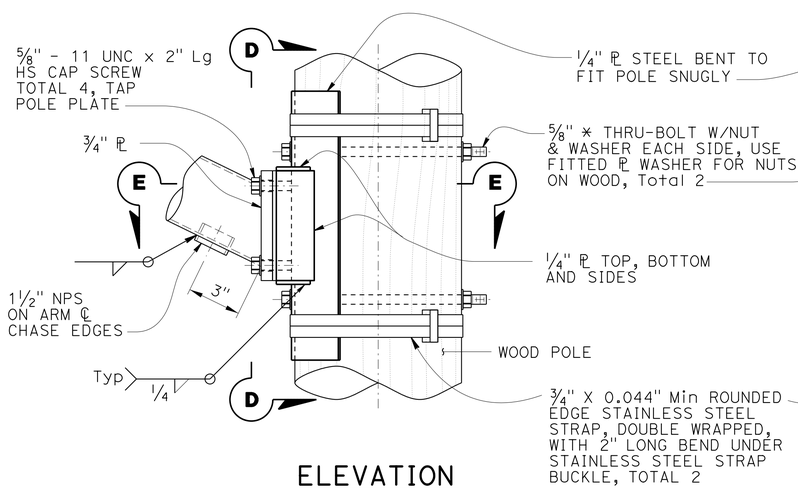

ELEVATION

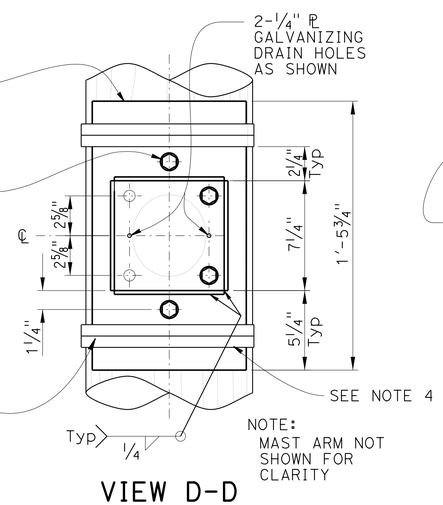

VIEW D-D

DETAIL B
ARM CONNECTION DETAILS
NO SCALE

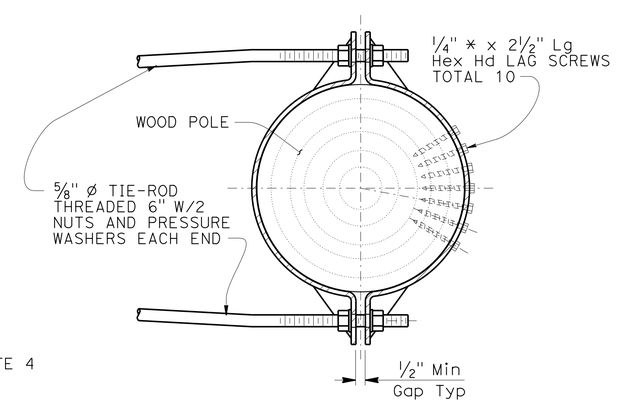

SECTION B-B

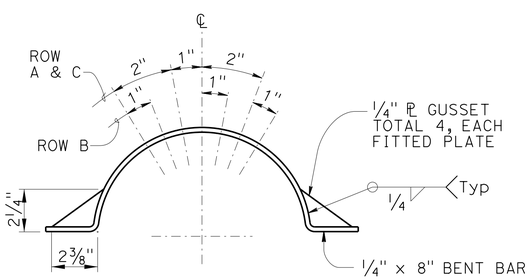

LAG SCREW AND GUSSET PLATE LAYOUT

DETAIL C
TIE-ROD AT POLE
NO SCALE

BRANCH CHIEF	DAVID A. NEUMANN		
DESIGN	BY NIRANJEN KANEPATHIPILLAI	CHECKED AIMAN MALAK	
DETAILS	BY SHUMEI JIANG	CHECKED AIMAN MALAK	
QUANTITIES	BY X	CHECKED X	

STATE OF CALIFORNIA
DEPARTMENT OF TRANSPORTATION

DIVISION OF ENGINEERING SERVICES
STRUCTURE DESIGN
SPECIAL DESIGN BRANCH

BRIDGE NO. X
POST MILE 20.5/25.7

TEMPORARY WOOD POLES
DETAILS No. 4

SES-8

STRUCTURES DESIGN SPECIAL DESIGN SHEET (ENGLISH) (REV. 09-01-10)

ORIGINAL SCALE IN INCHES FOR REDUCED PLANS 0 1 2 3

UNIT: 3619
PROJECT NUMBER & PHASE: 0100000371-1
CONTRACT NO.: 01-479401

DISREGARD PRINTS BEARING EARLIER REVISION DATES

REVISION DATES 04-08-13

SHEET 8 OF 10

FILE => ea-01-479401_ses-sheet08.dgn

USERNAME => s124496 DATE PLOTTED => 21-JUN-2013 TIME PLOTTED => 19:33

DIST	COUNTY	ROUTE	POST MILES TOTAL PROJECT	SHEET No.	TOTAL SHEETS
01	DN	199	20.3/25.9	70	184

REGISTERED CIVIL ENGINEER 04-12-13 DATE

6-24-13
PLANS APPROVAL DATE

The State of California or its officers or agents shall not be responsible for the accuracy or completeness of electronic copies of this plan sheet.

REGISTERED PROFESSIONAL ENGINEER AIMAN MALAK No. C73369 Exp.12-31-14 CIVIL STATE OF CALIFORNIA

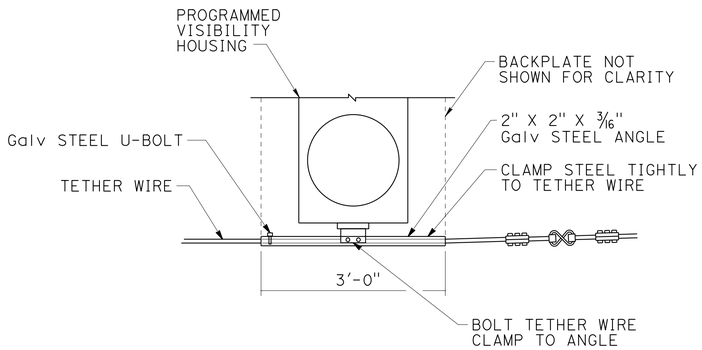

TETHER WIRE ATTACHMENT FOR PROGRAMMED VISIBILITY SIGNAL FACE

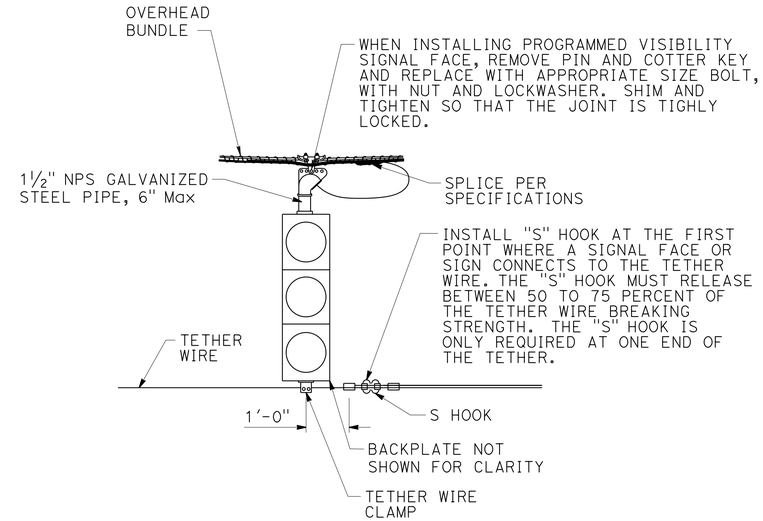

SIGNAL FACE SUPPORT

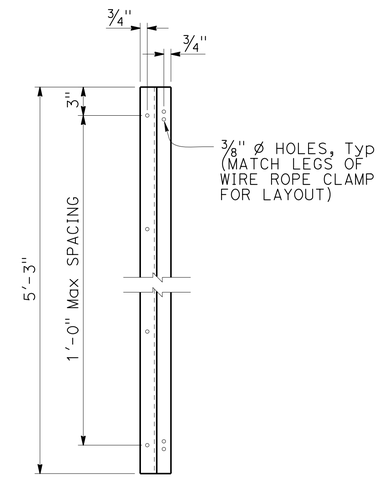

Z-BAR ELEVATION

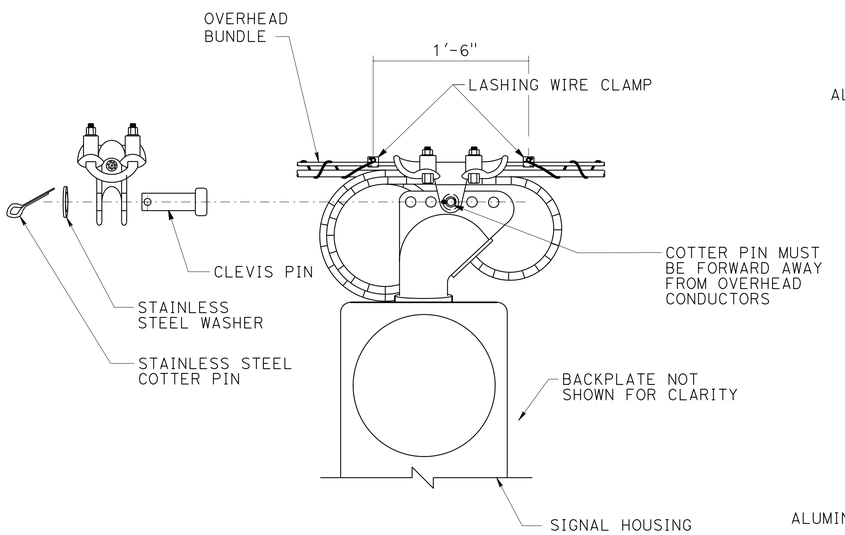

MESSENGER WIRE CLAMP COTTER PIN DETAIL

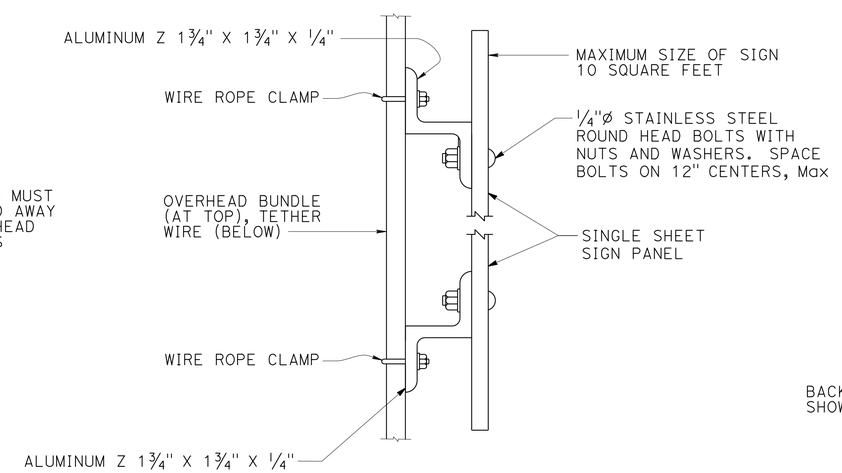

THE OVERLAPPED CONNECTION OF ADJUSTABLE HANGERS MUST USE A MINIMUM OF 2 BOLTS WITH A MINIMUM SPACING BETWEEN BOLTS OF 2"

SIGN MOUNTING DETAIL

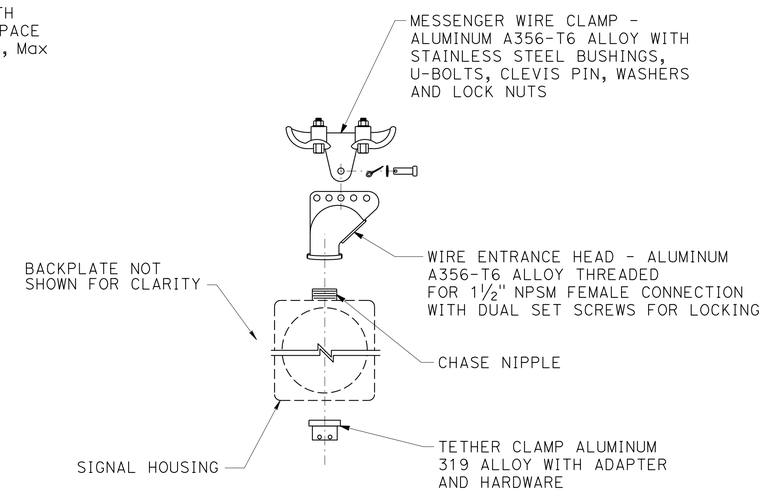

SIGNAL FACE SUPPORT EXPLODED VIEW

NO SCALE

BRANCH CHIEF DAVID A. NEUMANN	DESIGN	BY NIRANJEN KANEPATHIPILLAI	CHECKED AIMAN MALAK
	DETAILS	BY SHUMEI JIANG	CHECKED AIMAN MALAK
	QUANTITIES	BY X	CHECKED X

STATE OF CALIFORNIA DEPARTMENT OF TRANSPORTATION

DIVISION OF ENGINEERING SERVICES STRUCTURE DESIGN SPECIAL DESIGN BRANCH

BRIDGE NO. X POST MILE 20.5/25.7

TEMPORARY WOOD POLES DETAILS No. 5

SES-9

STRUCTURES DESIGN SPECIAL DESIGN SHEET (ENGLISH) (REV. 09-01-10)

ORIGINAL SCALE IN INCHES FOR REDUCED PLANS 0 1 2 3

UNIT: 3619
PROJECT NUMBER & PHASE: 0100000371-1 CONTRACT NO.: 01-479401

DISREGARD PRINTS BEARING EARLIER REVISION DATES → 04-08-13

REVISION DATES | SHEET 9 | OF 10

FILE => eq-01-479401_ses-sheet09.dgn

USERNAME => s124496 DATE PLOTTED => 21-JUN-2013 TIME PLOTTED => 13:39

DIST	COUNTY	ROUTE	POST MILES TOTAL PROJECT	SHEET No.	TOTAL SHEETS
01	DN	199	20.3/25.9	71	184

REGISTERED CIVIL ENGINEER 04-12-13 DATE

6-24-13
PLANS APPROVAL DATE

REGISTERED PROFESSIONAL ENGINEER AIMAN MALAK No. C73369 Exp.12-31-14 CIVIL STATE OF CALIFORNIA

The State of California or its officers or agents shall not be responsible for the accuracy or completeness of electronic copies of this plan sheet.

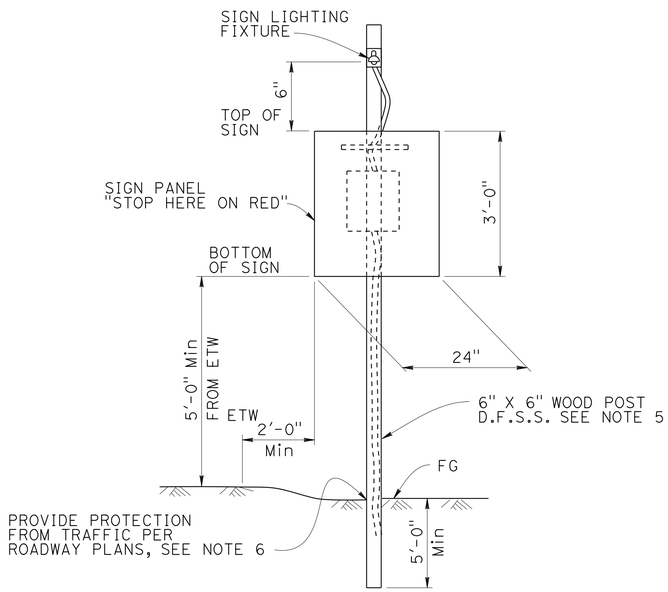

FRONT VIEW

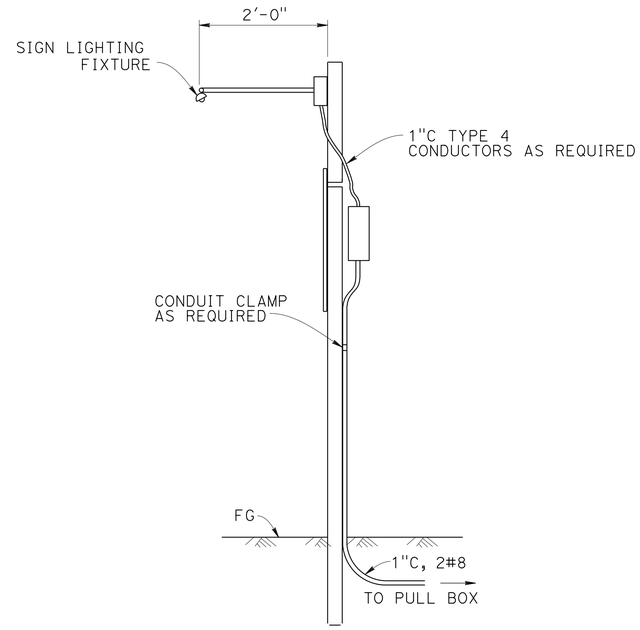

SIDE VIEW

NOTES:

1. For details not shown, see "STANDARD PLANS 2010".
2. For sign location see "Roadway Plans".
3. Design is based on 1V:4H Max slope
   Contractor to verify before post fabricating.
4. Refer to sign Manufacturer to verify bolt hole layout.
5. D.F.S.S. is Douglas Fir-Larch Select Structural.
6. Breakaway feature is not allowed, provide protection from traffic by means according to California Department of Transportation Highway Manual as required. See "Roadway Plans".

BRANCH CHIEF DAVID A. NEUMANN

	BY	CHECKED
DESIGN	AIMAN MALAK	NIRANJEN KANEPATHIPILLAI
DETAILS	SHUMEI JIANG	AIMAN MALAK
QUANTITIES	X	X

STATE OF CALIFORNIA
DEPARTMENT OF TRANSPORTATION

DIVISION OF ENGINEERING SERVICES
STRUCTURE DESIGN
SPECIAL DESIGN BRANCH

BRIDGE NO. X
POST MILE 20.5/25.7

ROADSIDE SIGN
STOP HERE ON RED SIGN DETAILS

SES-10

STRUCTURES DESIGN SPECIAL DESIGN SHEET (ENGLISH) (REV. 09-01-10)

ORIGINAL SCALE IN INCHES FOR REDUCED PLANS 0 1 2 3

UNIT: 3619
PROJECT NUMBER & PHASE: 0100000371-1 CONTRACT NO.: 01-479401

DISREGARD PRINTS BEARING EARLIER REVISION DATES

REVISION DATES 04-08-13

SHEET 10 OF 10

FILE => ea-01-479401_ses-sheet10.dgn

USERNAME => s121614 DATE PLOTTED => 22-JUN-2013 TIME PLOTTED => 10:04

Dist	COUNTY	ROUTE	POST MILES TOTAL PROJECT	SHEET No.	TOTAL SHEETS
01	DN	199	20.3/25.9	72	184

REGISTERED CIVIL ENGINEER

July 20, 2012
PLANS APPROVAL DATE

REGISTERED PROFESSIONAL ENGINEER
Roberta L. McLaughlin
No. C40375
Exp. 3-31-13
CIVIL
STATE OF CALIFORNIA

THE STATE OF CALIFORNIA OR ITS OFFICERS OR AGENTS SHALL NOT BE RESPONSIBLE FOR THE ACCURACY OR COMPLETENESS OF SCANNED COPIES OF THIS PLAN SHEET.

TO ACCOMPANY PLANS DATED 6-24-13

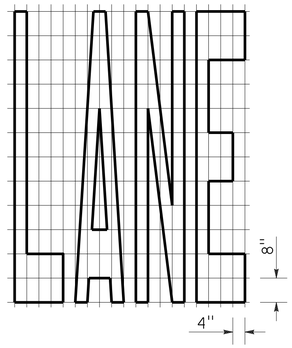

A=24 ft²

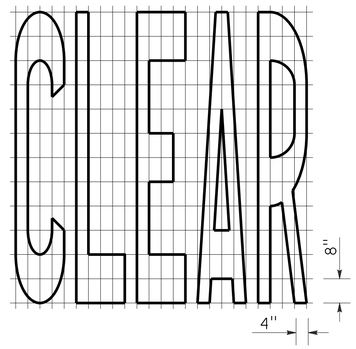

A=27 ft²

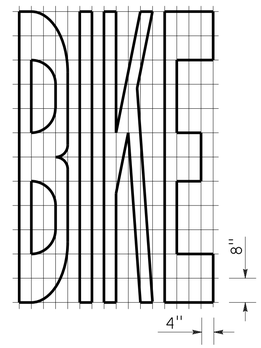

A=21 ft²

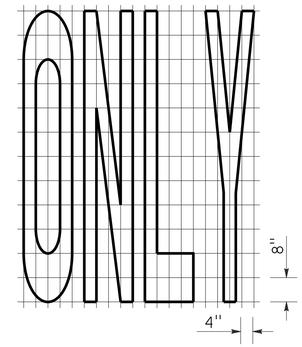

A=22 ft²

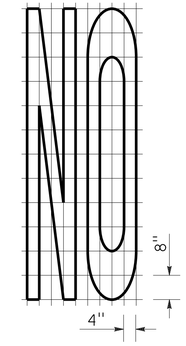

A=14 ft²

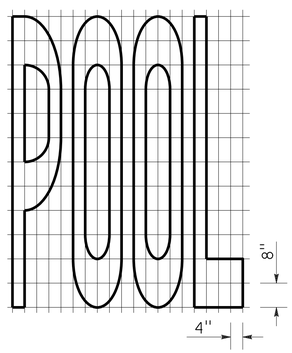

A=23 ft²

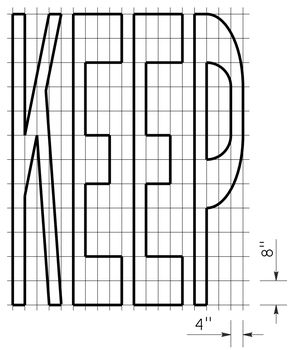

A=24 ft²

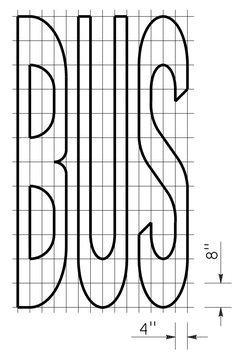

A=20 ft²

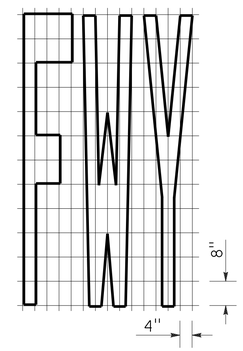

A=16 ft²

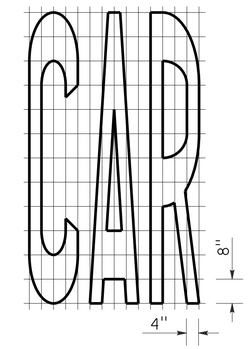

A=17 ft²

WORD MARKINGS			
ITEM	ft²	ITEM	ft²
LANE	24	NO	14
POOL	23	BIKE	21
CAR	17	BUS	20
CLEAR	27	ONLY	22
KEEP	24	FWY	16

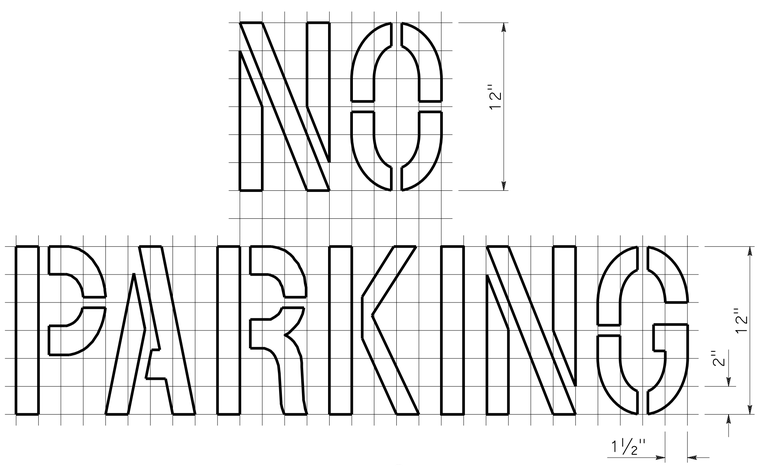

A=2 ft²

See Notes 6 and 7

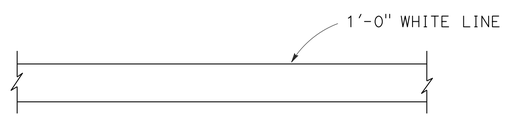

LIMIT LINE (STOP LINE)

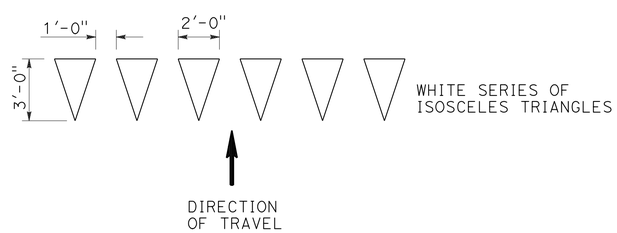

YIELD LINE

NOTES:

1. If a message consists of more than one word, it should read "UP", i.e., the first word should be nearest the driver.
2. The space between words should be at least four times the height of the characters for low speed roads, but not more than ten times the height of the characters. The space may be reduced appropriately where there is limited space because of local conditions.
3. Minor variations in dimensions may be accepted by the Engineer.
4. Portions of a letter, number or symbol may be separated by connecting segments not to exceed 2" in width.
5. The words "NO PARKING" pavement marking is to be used for parking facilities. For typical locations of markings, see Standard Plans A90A and A90B.
6. The words "NO PARKING", shall be painted in white letters no less than 1'-0" high on a contrasting background and located so that it is visible to traffic enforcement officials.

STATE OF CALIFORNIA
DEPARTMENT OF TRANSPORTATION

PAVEMENT MARKINGS WORDS, LIMIT AND YIELD LINES

NO SCALE

RSP A24E DATED JULY 20, 2012 SUPERSEDES STANDARD PLAN A24E
DATED MAY 20, 2011 - PAGE 17 OF THE STANDARD PLANS BOOK DATED 2010.

REVISED STANDARD PLAN RSP A24E

2010 REVISED STANDARD PLAN RSP A24E

6-12-12

DIST	COUNTY	ROUTE	POST MILES TOTAL PROJECT	SHEET No.	TOTAL SHEETS
01	DN	199	20.3/25.9	73	184

REGISTERED CIVIL ENGINEER

January 20, 2012
PLANS APPROVAL DATE

REGISTERED PROFESSIONAL ENGINEER
Cornelis M. Hakim
No. C55610
Exp. 12-31-12
CIVIL
STATE OF CALIFORNIA

THE STATE OF CALIFORNIA OR ITS OFFICERS OR AGENTS SHALL NOT BE RESPONSIBLE FOR THE ACCURACY OR COMPLETENESS OF SCANNED COPIES OF THIS PLAN SHEET.

TO ACCOMPANY PLANS DATED 6-24-13

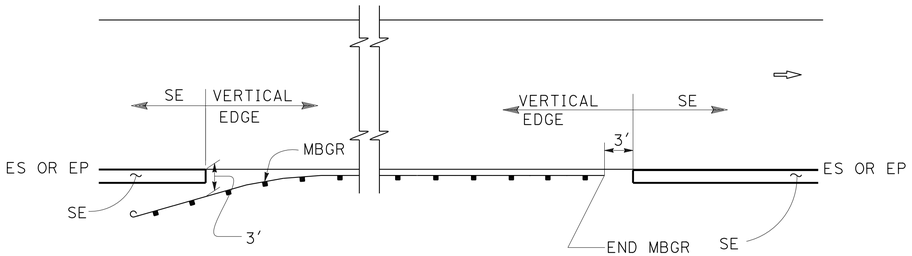

MBGR

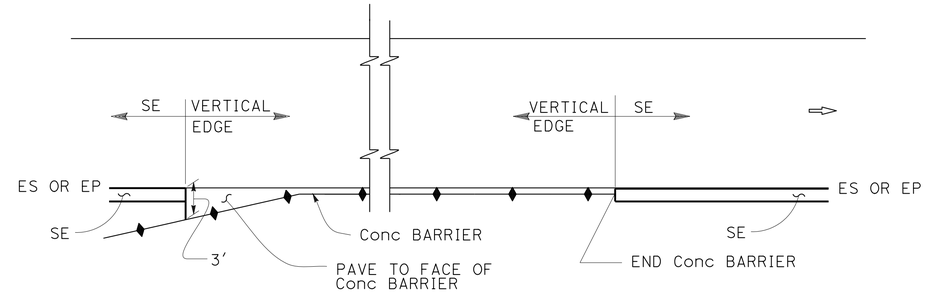

CONCRETE BARRIER

ABBREVIATIONS:

SE SAFETY EDGE

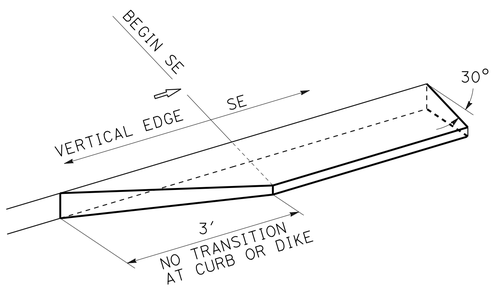

TRANSITION DETAIL FOR CONCRETE ONLY

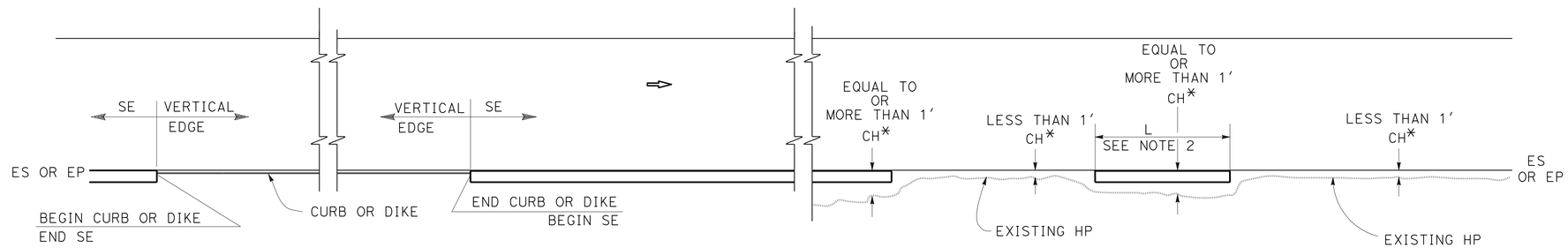

CURB OR DIKE

NARROW SIDE SLOPE

* CH = Distance from ES or EP to existing HP.

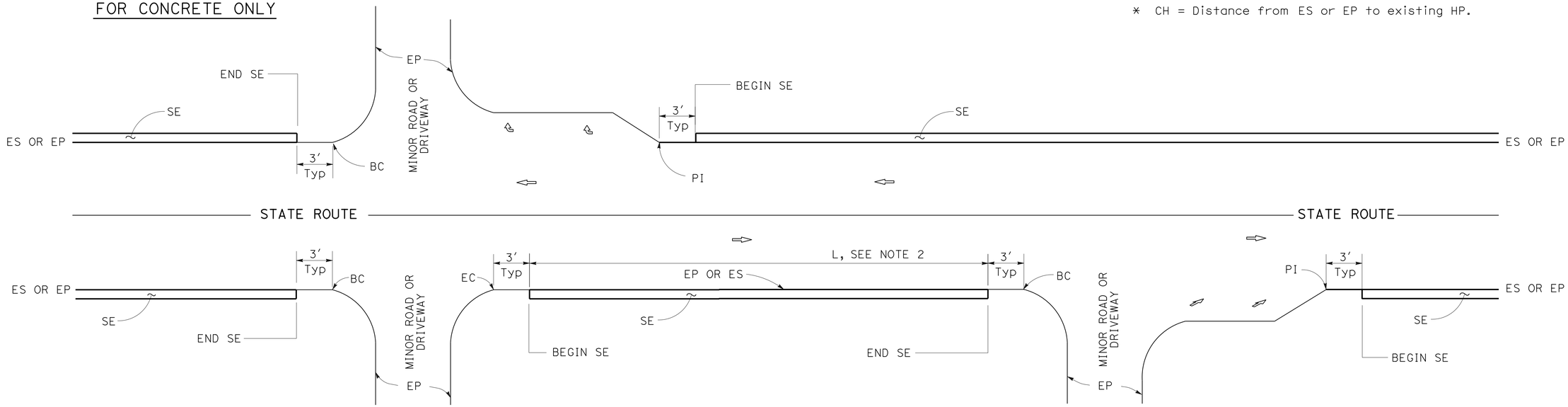

INTERSECTION

MINOR ROADWAY OR DRIVEWAY

DRIVEWAY AND INTERSECTION

NOTES:

1. For details not shown, see Revised Standard Plans RSP P75 and RSP P76.
2. Safety edge is optional when L is less than 30′.

STATE OF CALIFORNIA
DEPARTMENT OF TRANSPORTATION

PAVEMENT EDGE TREATMENTS

NO SCALE

RSP P74 DATED JANUARY 20, 2012 SUPPLEMENTS THE STANDARD PLANS BOOK DATED 2010.

REVISED STANDARD PLAN RSP P74

2010 REVISED STANDARD PLAN RSP P74

01-05-12

DIST	COUNTY	ROUTE	POST MILES TOTAL PROJECT	SHEET No.	TOTAL SHEETS
01	DN	199	20.3/25.9	74	184

REGISTERED CIVIL ENGINEER

January 20, 2012
PLANS APPROVAL DATE

REGISTERED PROFESSIONAL ENGINEER Cornelis M. Hakim No. C55610 Exp. 12-31-12 CIVIL STATE OF CALIFORNIA

THE STATE OF CALIFORNIA OR ITS OFFICERS OR AGENTS SHALL NOT BE RESPONSIBLE FOR THE ACCURACY OR COMPLETENESS OF SCANNED COPIES OF THIS PLAN SHEET.

TO ACCOMPANY PLANS DATED 6-24-13

2010 REVISED STANDARD PLAN RSP P75

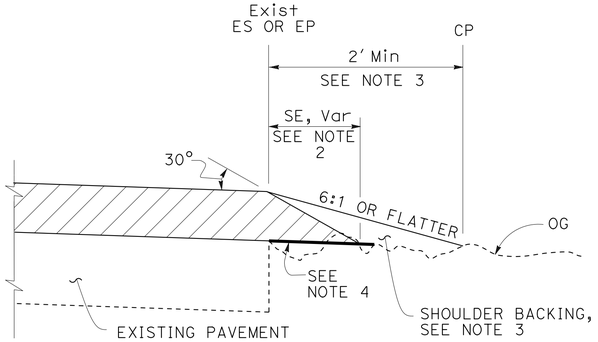

CASE A
Safety Edge

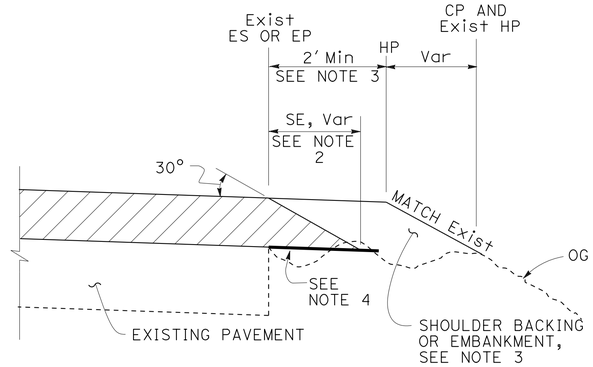

CASE B
Safety Edge

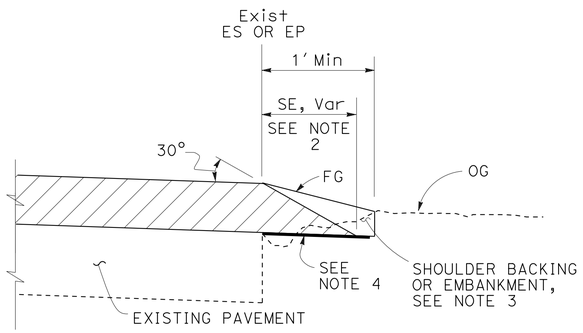

CASE C
Safety Edge

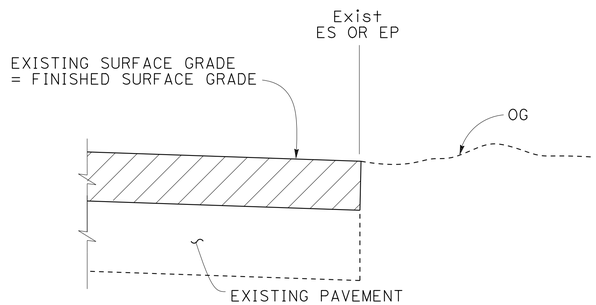

CASE D
Vertical Edge

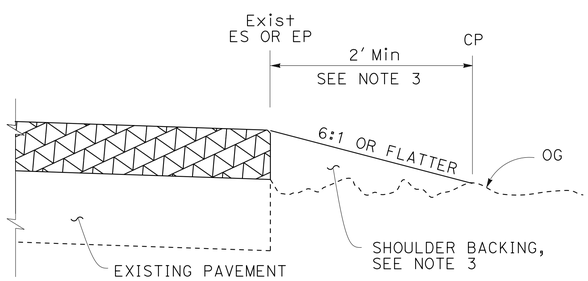

CASE E
Vertical Edge

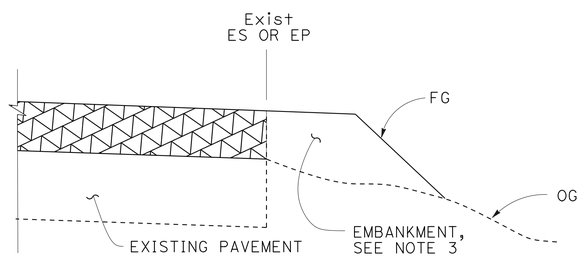

CASE F
Vertical Edge
* See Table A and Revised Std Plan RSP P74

LEGEND:

- HMA OVERLAY
- HMA OR CONCRETE OVERLAY
- CONCRETE OVERLAY

ABBREVIATIONS:

SE SAFETY EDGE
TT TOTAL THICKNESS OF SE

TABLE A
EDGE TREATMENT FOR VARIOUS OVERLAY THICKNESS AND CONDITIONS

	OVERLAY THICKNESS	
FIELD CONDITION	LESS THAN 0.15′	0.15′ OR MORE
Exist SLOPE 6:1 OR FLATTER	CASE E	CASE A
Exist SLOPE 3:1 TO 6:1	CASE E	CASE B
Exist SLOPE STEEPER THAN 3:1	CASE F	CASE F
CUT SECTION (REPLACE, COLD PLANE, MILL PAVEMENT)	CASE D	CASE C

ADDITIONAL HMA OR CONCRETE QUANTITIES FOR SE/SIDE/MILE

TYPICAL CROSS SECTION	TT	TOTAL ADDITIONAL MATERIAL FOR SE/SIDE/MILE		
		HMA (TON)	CONCRETE (CY)*	CONCRETE (CY)**
TT	0.15′	NA	NA	NA
	0.20′	13.7	NA	NA
	0.30′	30.9	NA	NA
	0.40′	54.9	NA	NA
	0.45′	69.4	NA	NA
TT 0.43′	0.50′	84.2	NA	NA
	0.60′	113.9	NA	NA
	0.70′	143.6	70.9	94.2
	0.80′	173.3	85.6	112.2
	0.90′	203.0	100.3	130.2
	1.00′	232.7	114.9	148.2
	1.10′	262.4	129.6	166.2
	1.20′	292.1	144.3	184.2

* For Detail "A"
** For Optional Detail "A"

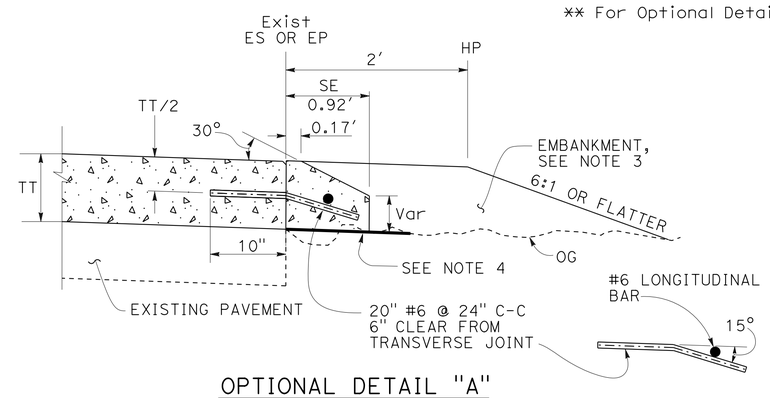

OPTIONAL DETAIL "A"
For concrete overlay
See Note 5

NOTES:

1. For limits of safety edge and vertical edge treatments, see Revised Standard Plan RSP P74.
2. Details shown for HMA overlay thickness less than 0.43′. See Detail "A" for HMA overlay thickness more than 0.43′ or concrete overlay.
3. For locations and limits of shoulder backing or embankment see project plans.
4. Grade existing ground to place safety edge. 1′ minimum width
5. Safety edge transverse joint must match overlay transverse joint. End of #6 longitudinal bar must be 2" ±½" clear from transverse joint.
6. Safety edge is not needed in the area of MBGR, barrier, right turn lane and acceleration lane. See Revised Standard Plan RSP P74.

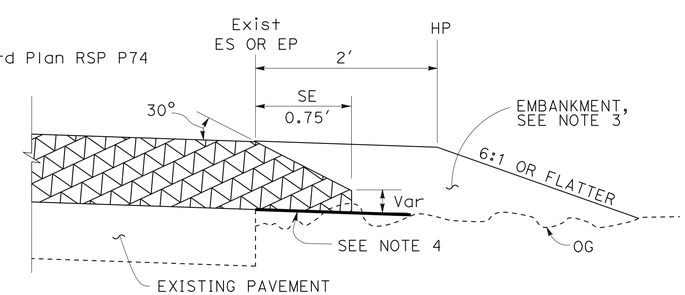

DETAIL "A"
For HMA overlay thickness more than 0.43′ or concrete overlay

STATE OF CALIFORNIA
DEPARTMENT OF TRANSPORTATION

PAVEMENT EDGE TREATMENTS-OVERLAYS

NO SCALE

RSP P75 DATED JANUARY 20, 2012 SUPPLEMENTS THE STANDARD PLANS BOOK DATED 2010.

REVISED STANDARD PLAN RSP P75

01-09-12

DIST	COUNTY	ROUTE	POST MILES TOTAL PROJECT	SHEET No.	TOTAL SHEETS
01	DN	199	20.3/25.9	75	184

REGISTERED CIVIL ENGINEER

January 20, 2012
PLANS APPROVAL DATE

REGISTERED PROFESSIONAL ENGINEER
Cornelis M. Hakim
No. C55610
Exp. 12-31-12
CIVIL
STATE OF CALIFORNIA

THE STATE OF CALIFORNIA OR ITS OFFICERS OR AGENTS SHALL NOT BE RESPONSIBLE FOR THE ACCURACY OR COMPLETENESS OF SCANNED COPIES OF THIS PLAN SHEET.

TO ACCOMPANY PLANS DATED 6-24-13

LEGEND:

- HMA PAVEMENT
- HMA OR CONCRETE PAVEMENT
- CONCRETE PAVEMENT

ABBREVIATIONS:

SE SAFETY EDGE

TT TOTAL THICKNESS OF SE

HW HINGE WIDTH, DISTANCE FROM ES OR EP TO HP

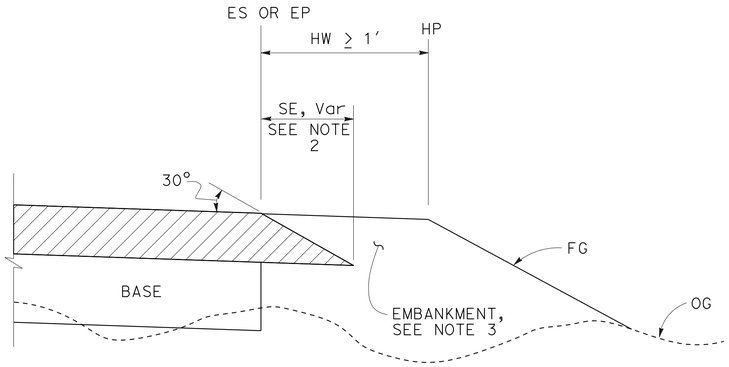

CASE K
Safety Edge - Fill Section, HW ≥ 1′

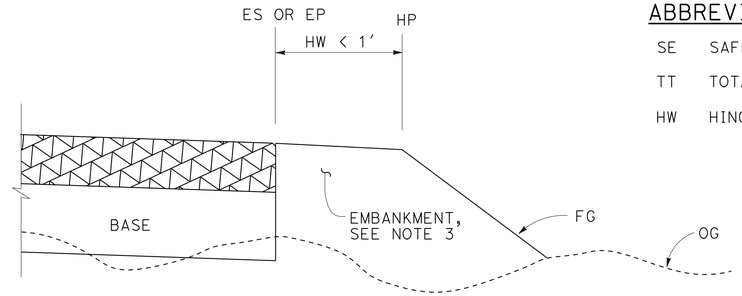

CASE L
Vertical Edge - Fill Section, HW < 1′

FILL SECTION

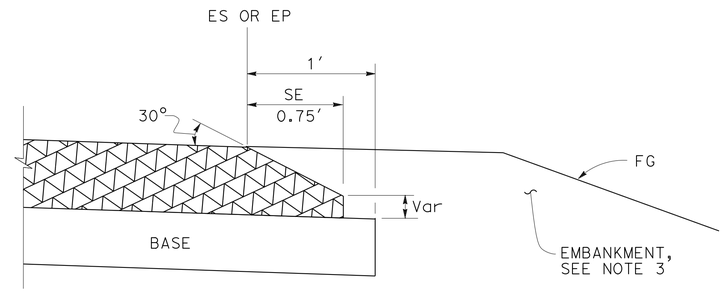

DETAIL "B"
For HMA pavement thickness more than 0.43′ or concrete pavement

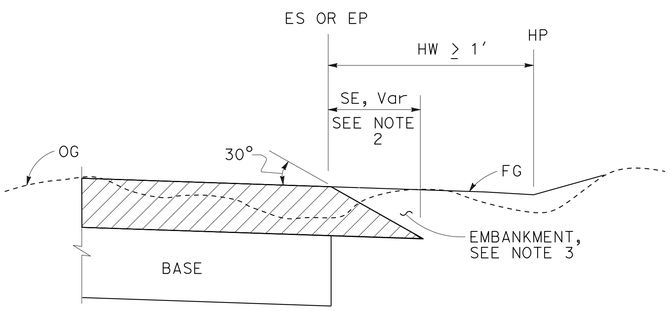

CASE M
Safety Edge - Cut Section, HW ≥ 1′

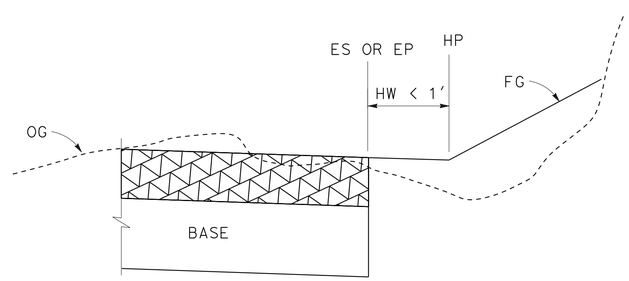

CASE N
Vertical Edge - Cut Section, HW < 1′

CUT SECTION

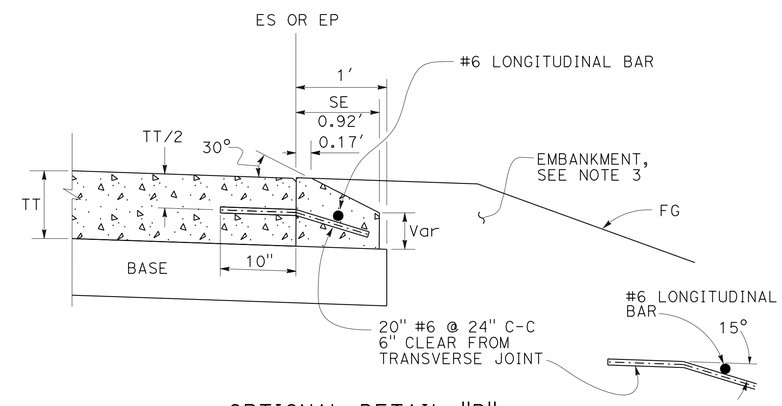

OPTIONAL DETAIL "B"
For concrete pavement
See Note 4

NOTES:

1. For limits of safety edge and vertical edge treatments, see Revised Standard Plan RSP P74
2. Details shown for HMA pavement thickness less than 0.43′. See Detail "B" for HMA pavement thickness more than 0.43′ or concrete pavement.
3. For locations and limits of embankment see project plans.
4. Safety edge transverse joint must match pavement transverse joint. End of #6 longitudinal bar must be 2" ±½" clear from transverse joint.
5. Safety edge is not needed in the area of MBGR, barrier, right turn lane and acceleration lane. See Revised Standard Plan RSP P74.

STATE OF CALIFORNIA
DEPARTMENT OF TRANSPORTATION

PAVEMENT EDGE TREATMENTS-NEW CONSTRUCTION

NO SCALE

RSP P76 DATED JANUARY 20, 2012 SUPPLEMENTS THE STANDARD PLANS BOOK DATED 2010.

REVISED STANDARD PLAN RSP P76

2010 REVISED STANDARD PLAN RSP P76

TO ACCOMPANY PLANS DATED 6-24-13

Dist	COUNTY	ROUTE	POST MILES TOTAL PROJECT	SHEET No.	TOTAL SHEETS
01	DN	199	20.3/25.9	76	184

REGISTERED CIVIL ENGINEER

October 19, 2012
PLANS APPROVAL DATE

REGISTERED PROFESSIONAL ENGINEER Glenn DeCou No. C34547 Exp. 9-30-13 CIVIL STATE OF CALIFORNIA

THE STATE OF CALIFORNIA OR ITS OFFICERS OR AGENTS SHALL NOT BE RESPONSIBLE FOR THE ACCURACY OR COMPLETENESS OF SCANNED COPIES OF THIS PLAN SHEET.

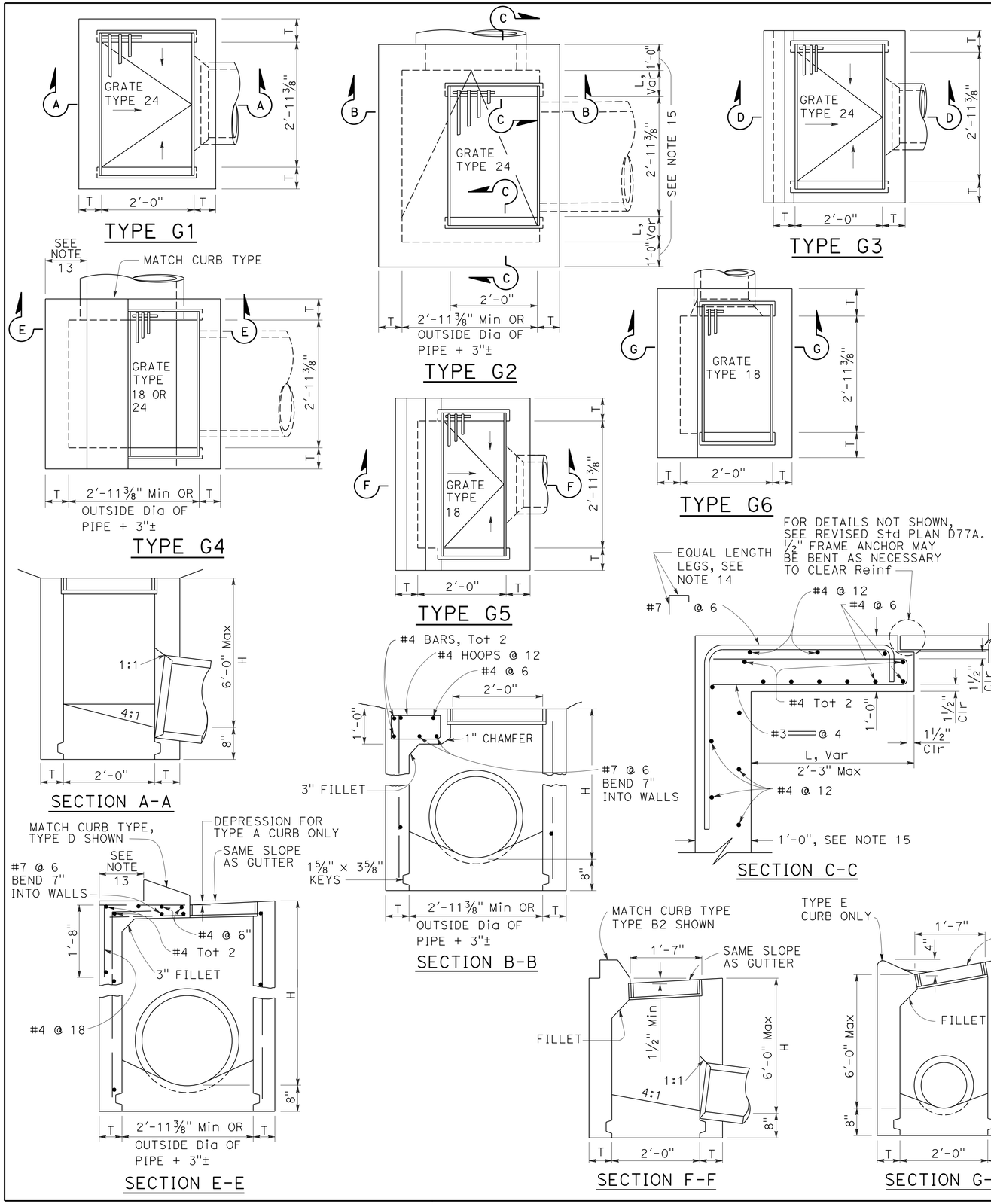

NOTES:

1. "H" is the difference in elevation between the outlet pipe flow line and the normal gutter grade line undepressed.
2. For "T" wall thickness, see Table A below.
3. Wall reinforcing not required when "H" is 8'-0" or less and the unsupported width or length is 7'-0" or less. Walls exceeding these limits shall be reinforced with #4 bars @ 1'-6" ± centers placed 1½" clear to inside of box unless otherwise shown.
4. Inlet bottom reinforcing not required. See Standard Plan D74C for alternative reinforced bottom and alternative half round bottom.
5. Steps-None required where "H" is less than 2'-6". Where "H" is 2'-6" or more, install steps with lowest rung 1'-0" above the floor and highest rung not more than 6" below top of inlet. The distance between steps shall not exceed 1'-0" and shall be uniform throughout the length of the wall. Place steps in the wall without an opening. Steps inserts may be substituted for the bar steps. Step inserts shall comply with State Industrial Safety requirements. See Standard Plan D74C for step details.
6. Details shown apply to both metal and concrete pipe.
7. Pipe(s) can be placed in any wall.
8. Curb section shall match adjacent curb.
9. Basin floors shall have wood trowel finish and a minimum slope of 12:3 from all directions toward outlet pipe.
10. Set inlet so that grate bars are parallel to direction of principal surface flow.
11. See Revised Standard Plans D77A and D77B for grate and frame details and weights of miscellaneous iron and steel.
12. See Standard Plan D78A for gutter depression details.
13. This dimenison will vary with different grates, curbs types, box width and wall thickness.
14. Bar may be rotated as necessary to clear opening. Where "L" is 6" or less, bar may be omitted.
15. Where "L" is 6" or less, wall thickness shall be as shown in Table A.
16. Cast-in-place inlets to be formed around all pipes/stubs intersecting the inlet, and concrete poured in one continuous operation. Precast inlets shall have mortared connections conforming to details for Type GCP Inlet shown on Standard Plan D75B. See Standard Specifications for mortar composition.

TABLE A

CONCRETE QUANTITIES				
TYPE	H=3'-0" TO 8'-0" (T=6")		H=8'-1" TO 20'-0" (T=8")	
	H=3'-0" (CY)	ADDITIONAL PCC PER FOOT (CY)	H=8'-1" (CY)	ADDITIONAL PCC PER FOOT (CY)
G-1	0.95	0.220	See Note A	SEE NOTE A
G-2*	1.31	0.255	3.50	0.357
G-3	1.03	0.220	See Note A	SEE NOTE A
G-4* (TYPE 24)	1.27	0.255	3.48	0.357
G-4* (TYPE 18)	1.30	0.255	3.50	0.357
G-5	1.02	0.220	SEE NOTE A	SEE NOTE A
G-6	1.04	0.220	SEE NOTE A	SEE NOTE A

TABLE BASED ON 8" FLOOR SLAB. NO DEDUCTIONS ARE TO BE MADE TO THESE QUANTITIES BECAUSE OF PIPE OPENINGS, DIFFERENT FLOOR ALTERNATIVES OR DIFFERENT CURB TYPES. * QUANTITIES FOR TYPE G-2 AND G-4 INLETS BASED ON THE MINIMUM INTERIOR DIMENSIONS.

NOTE A:

Maximum allowable height 6'-0".

STATE OF CALIFORNIA
DEPARTMENT OF TRANSPORTATION

DRAINAGE INLETS

NO SCALE

RSP D73 DATED OCTOBER 19, 2012 SUPERSEDES STANDARD PLAN D73 DATED MAY 20, 2011 - PAGE 156 OF THE STANDARD PLANS BOOK DATED 2010.

REVISED STANDARD PLAN RSP D73

2010 REVISED STANDARD PLAN RSP D73

7-19-12

Dist	COUNTY	ROUTE	POST MILES TOTAL PROJECT	SHEET No.	TOTAL SHEETS
01	DN	199	20.3/25.9	77	184

Raymond Don Tsztoo
REGISTERED CIVIL ENGINEER

April 19, 2013
PLANS APPROVAL DATE

REGISTERED PROFESSIONAL ENGINEER Raymond Don Tsztoo No. C37332 Exp. 6-30-14 CIVIL STATE OF CALIFORNIA

THE STATE OF CALIFORNIA OR ITS OFFICERS OR AGENTS SHALL NOT BE RESPONSIBLE FOR THE ACCURACY OR COMPLETENESS OF SCANNED COPIES OF THIS PLAN SHEET.

TO ACCOMPANY PLANS DATED 6-24-13

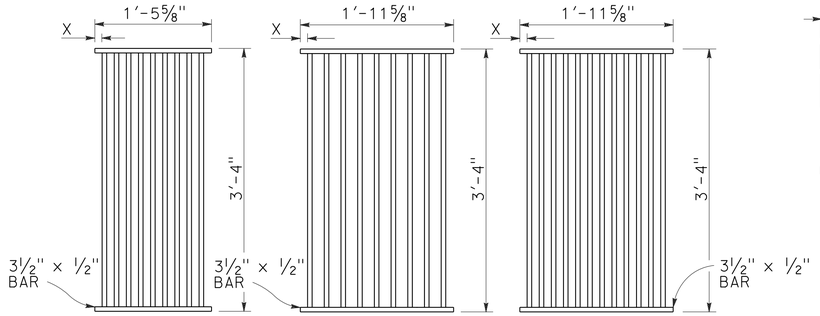

TYPE 18-9

1⅜" Clear spacing. Use within the roadbed on highways where bicycles and pedestrians are excluded.

TYPE 24-9

2" Clear spacing. Use in locations off the roadbed on all types of highways.

TYPE 24-12

1⅜" Clear spacing. Use within the roadbed on highways where bicycles and pedestrians are excluded.

RECTANGULAR GRATE DETAILS

(See table below)

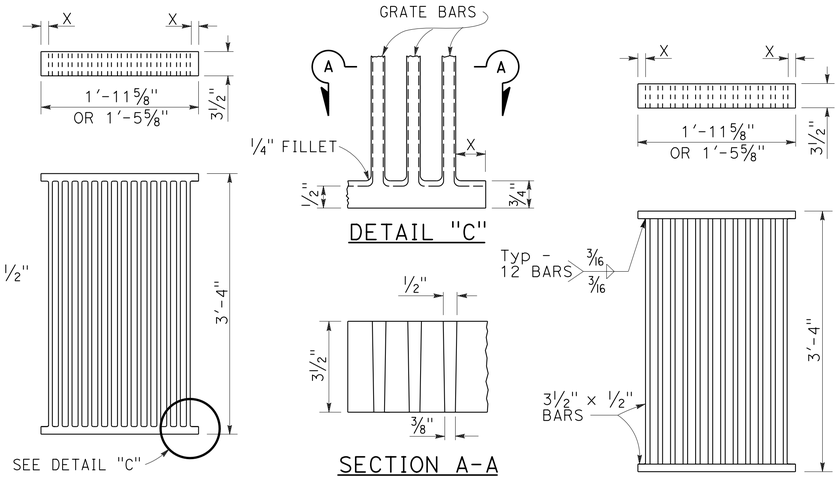

ALTERNATIVE CAST DUCTILE IRON GRATE OR CAST CARBON STEEL GRATE

ALTERNATIVE WELDED GRATE

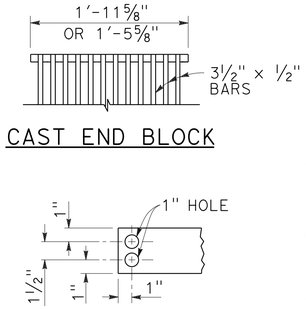

CAST END BLOCK

END OF BAR

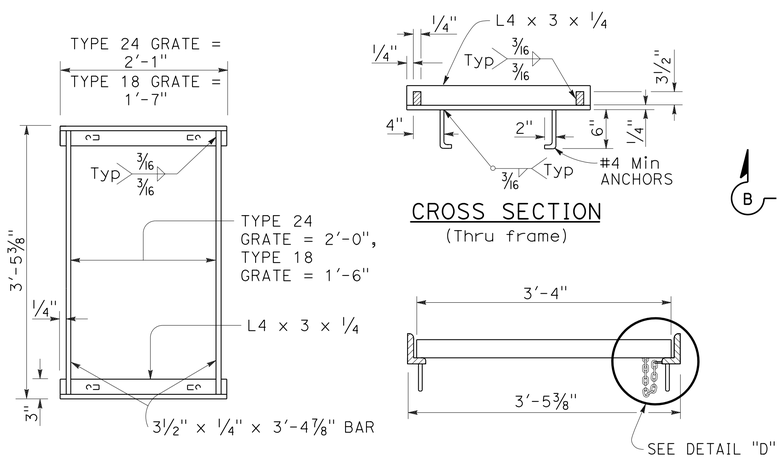

TYPICAL FRAME

CROSS SECTION
(Thru frame)

LONGITUDINAL SECTION
(Thru frame and grate)

RECTANGULAR FRAME DETAILS

(For all rectangular grates)

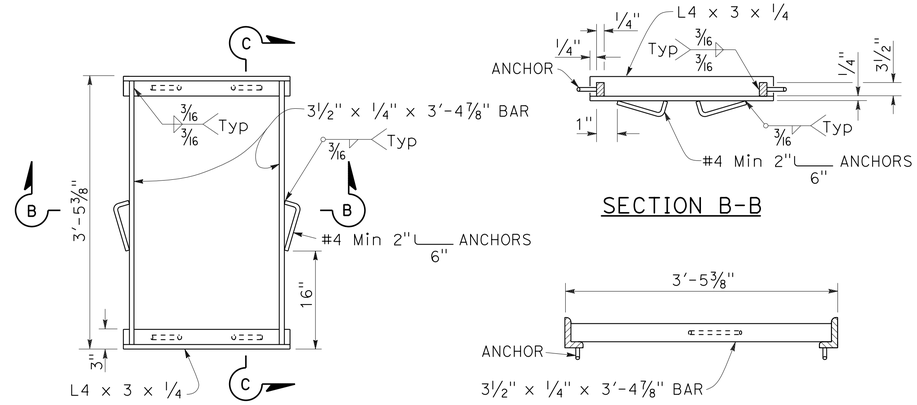

TYPICAL FRAME

SECTION B-B

SECTION C-C

ALTERNATIVE ANCHOR FOR RECTANGULAR FRAME

(For details not shown, See Rectangular Frame Details)

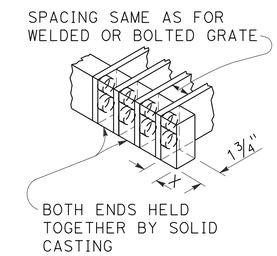

ALTERNATIVE CAST DUCTILE IRON OR CAST CARBON STEEL END BLOCK GRATE

NOTES:

1. Grate type numbers refer to approximate width of grate in inches and number of bars, respectively.
2. Contractor has the option of using cast ductile iron, cast carbon steel, welded, bolted, or cast end block grate.
3. Rounded top of bars optional on all grates.
4. Pipe inlets with a grate shall be placed so that bars parallel direction of principle surface flow.
5. Complete joint penetration butt welds may be substituted for the fillet welds on all anchors.
6. Standard square, hexagon, round or equivalent headed anchors may be substituted for the right angle hooks on the anchors shown on this plan.
7. Grate and frame weights are based on welded grates (weights of face angles, steps, protection bars, etc. are not included).
8. Connect chain to grate and frame only at locations shown on the plans. When chain is required, do not use cast ductile iron grates.

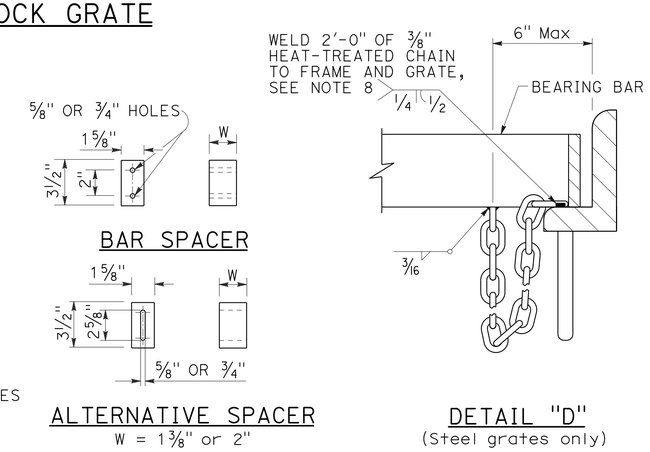

GRATE BAR SPACING TABLE

TYPE	No. OF BARS	CLEAR BAR SPACING	X
18-9	9	1⅜"	1 1/16"
24-9	9	2"	1 9/16"
24-12	12	1⅜"	1¼"

INLET TYPE	COVER TYPE	WEIGHT LB
OS	PLATE	174
OL-7	PLATE	170
OL-10	PLATE	170
OL-14	PLATE	170
OL-21	PLATE	170
OCP	PLATE	112
OCPI	PLATE	112
OCPI	REDWOOD	42
OMP	PLATE	177
OMPI	PLATE	177

INLET TYPE	GRATE TYPE	No. OF GRATES	WEIGHT LB
GDO	24-12	2	634
GOL-7	24-12	1	326
GOL-10	24-12	1	326
GO,G1,G2,G3,G4 (TYPE 24)	24-9	1	263
	24-12	1	326
G4 (TYPE 18),G5,G6	18-9	1	249
GT1	18-9	2	498
GT2	18-9	2	498
GT3	24-12	2	652
GT4	24-12	2	652
TRASH RACK			22
GRATE CHAIN			3

BASIS FOR Misc IRON & STEEL FINAL PAY WEIGHTS FOR DRAINAGE INLETS

(See Note 7)

STATE OF CALIFORNIA
DEPARTMENT OF TRANSPORTATION

GRATE DETAILS No. 1

NO SCALE

RSP D77A DATED APRIL 19, 2013 SUPERSEDES RSP D77A DATED JULY 20, 2012 AND STANDARD PLAN D77A DATED MAY 20, 2011 - PAGE 164 OF THE STANDARD PLANS BOOK DATED 2010.

REVISED STANDARD PLAN RSP D77A

2010 REVISED STANDARD PLAN RSP D77A

4-4-13

Dist	COUNTY	ROUTE	POST MILES TOTAL PROJECT	SHEET No.	TOTAL SHEETS
01	DN	199	20.3/25.9	78	184

Raymond Don Tsztoo
REGISTERED CIVIL ENGINEER

April 19, 2013
PLANS APPROVAL DATE

REGISTERED PROFESSIONAL ENGINEER Raymond Don Tsztoo No. C37332 Exp. 6-30-14 CIVIL STATE OF CALIFORNIA

THE STATE OF CALIFORNIA OR ITS OFFICERS OR AGENTS SHALL NOT BE RESPONSIBLE FOR THE ACCURACY OR COMPLETENESS OF SCANNED COPIES OF THIS PLAN SHEET.

TO ACCOMPANY PLANS DATED 6-24-13

2010 REVISED STANDARD PLAN RSP D77B

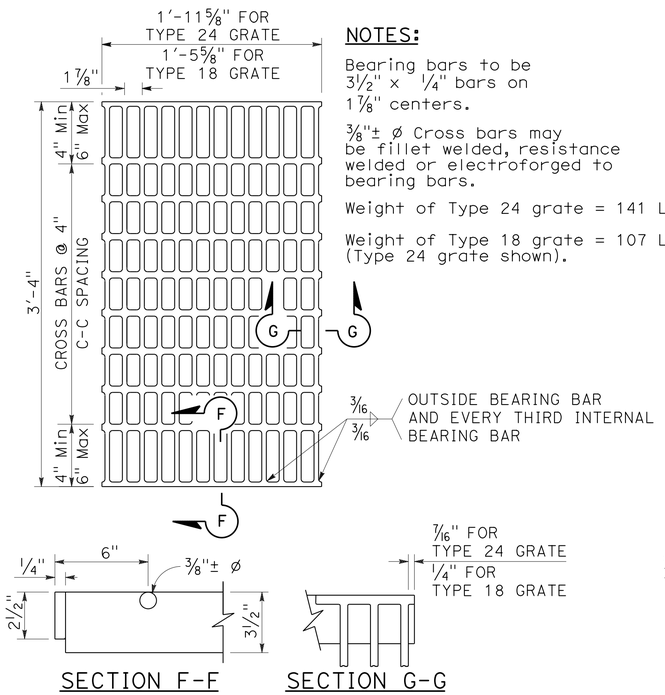

SECTION F-F SECTION G-G

TYPE 18-10 AND 24-13 GRATE

(Welded Steel)

NOTES:

Bearing bars to be 3½" x ¼" bars on 1⅞" centers.

⅜"± ø Cross bars may be fillet welded, resistance welded or electroforged to bearing bars.

Weight of Type 24 grate = 141 LBS.

Weight of Type 18 grate = 107 LBS. (Type 24 grate shown).

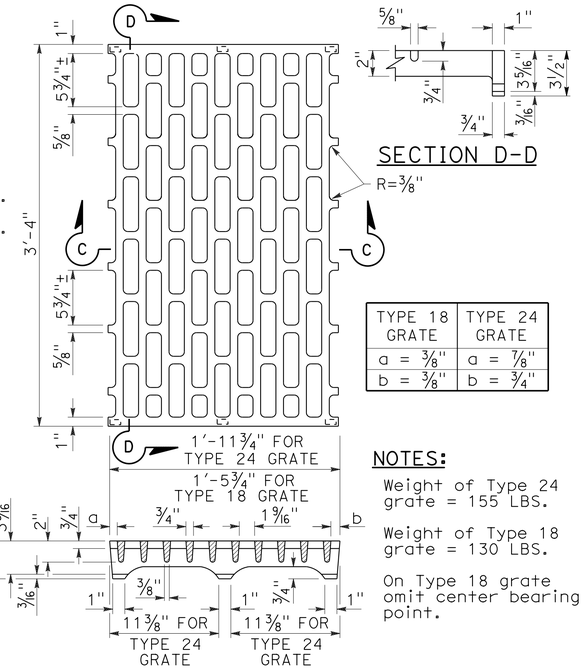

SECTION D-D

TYPE 18 GRATE	TYPE 24 GRATE
a = ⅜"	a = ⅞"
b = ⅜"	b = ¾"

NOTES:

Weight of Type 24 grate = 155 LBS.

Weight of Type 18 grate = 130 LBS.

On Type 18 grate omit center bearing point.

SECTION C-C

TYPE 18-8C AND 24-10C GRATE

(Cast ductile iron)

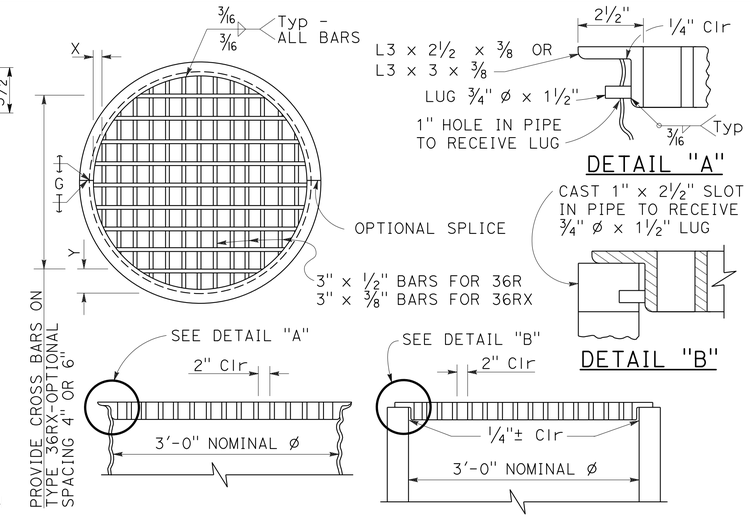

DETAIL "A"

DETAIL "B"

TYPE 36R AND 36RX GRATE DETAILS

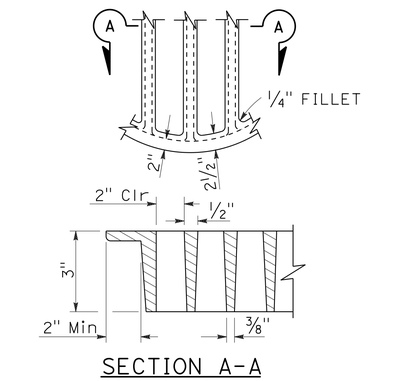

SECTION A-A

ALTERNATIVE CAST DUCTILE IRON GRATE OR CAST CARBON STEEL GRATE TYPE 36R AND 36RX

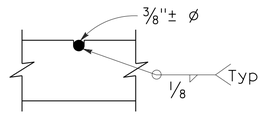

⅜"± ø Cross bars may be fillet welded, resistance welded or electroforged to bearing bars.

CROSS BAR DETAIL TYPE 36RX GRATE (WELDED STEEL)

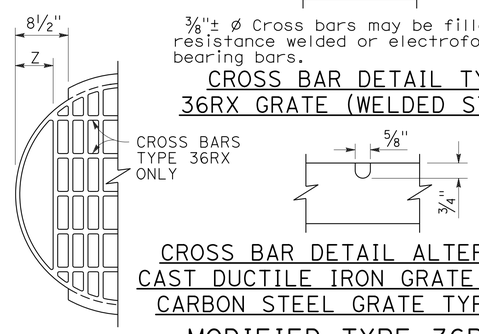

CROSS BAR DETAIL ALTERNATIVE CAST DUCTILE IRON GRATE OR CAST CARBON STEEL GRATE TYPE 36RX

MODIFIED TYPE 36R AND 36RX GRATE FOR ODI INLET

BASIS FOR Misc IRON AND STEEL FINAL PAY WEIGHTS FOR DRAINAGE INLETS

INLET TYPE	GRATE TYPE	No. OF GRATES	WEIGHT LB
GDO (SEE NOTE 4)	24-10C	2	391
	24-10S	2	456
	24-12X	2	473
	24-13	2	374
GO,GOL,G1,G2, G3,G4 (TYPE 24)	24-10C	1	202
	24-10S	1	229
	24-12X	1	239
	24-13	1	188
G4 (TYPE 18) G5,G6	18-8S	1	187
	18-9X	1	187
	18-10	1	149
GT1,GT2	18-8S	2	374
	18-9X	2	374
	18-10	2	298
GT3,GT4	24-10C	2	404
	24-10S	2	458
	24-12X	2	478
	24-13	2	376
ODI	36RX (Mod)	1	196
GMP,GCP,GCPI	36RX	1	215
ODI	36R (Mod)	1	220
GMP,GCP,GCPI	36R	1	236
TRASH RACK			22
GRATE CHAIN			3

NOTES:

1. When alternative grates are allowed - Final pay based on alternative with the lesser weight.
2. Use frame shown on Standard Plan D74A, D74B or RSP D77A as appropriate.
3. When Type 24-10S, 24-12X or 24-13 grates are used with GDO Inlets, a ¼" x 3½" x 3'-4⅞" steel bar shall be welded across the center of inlet frame to separate the individual grates.
4. See Revised Standard Plan RSP D77A for connecting chain to welded grate and frame. When chain is required, do not use cast ductile iron grate.

GRATE BAR SPACING TABLE

TYPE	No. OF BARS	CLEAR BAR SPACING	X	Y 4" SPACING	Y 6" SPACING	Z
36R	13	2"	2⅛"	-	-	-
36RX (STEEL)	15	2"	9/16"	3¾"	5¾"	-
36RX (CAST)	13	2"	2⅛"	3¾"	5¾"	-
36R Mod	12	2"	2⅛"	-	-	5"
36RX Mod (STEEL)	13	2"	9/16"	3¾"	5¾"	5 11/16"
36RX Mod (CAST)	12	2"	2⅛"	3¾"	5¾"	5"

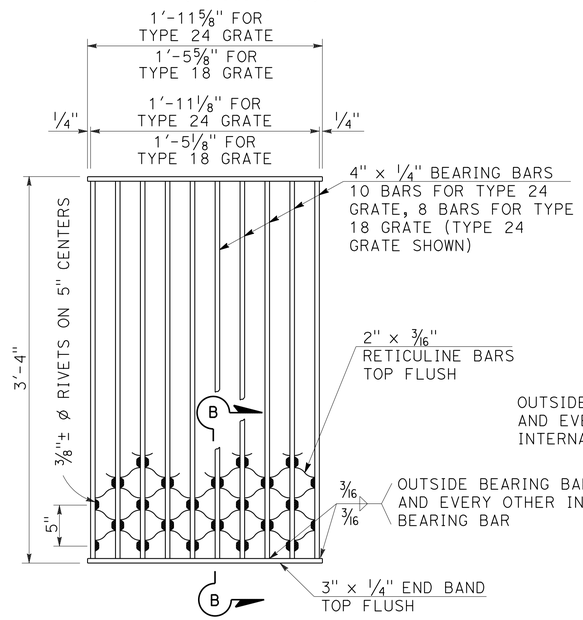

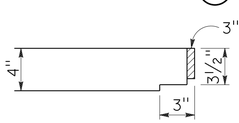

NOTES:

Weight of Type 24 grate = 182 LBS.
Weight of Type 18 grate = 145 LBS.

SECTION B-B

TYPE 18-8S AND 24-10S GRATE

(Welded Steel) Reticuline type

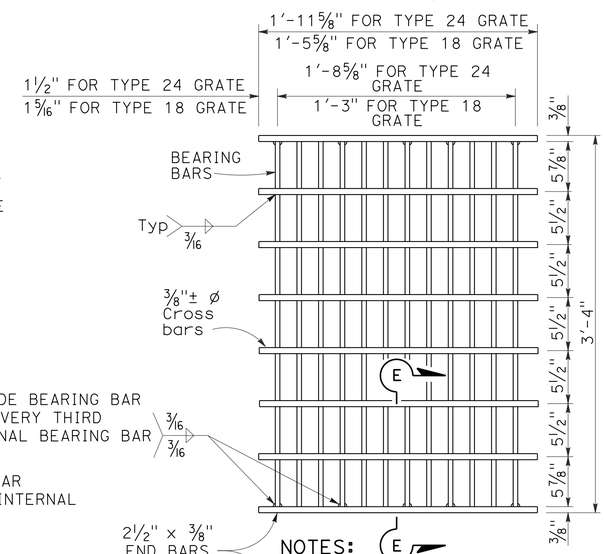

SECTION E-E

NOTES:

Bearing bars to be 3½" x ⅜" bars on 1⅞" centers.

12 Bars for Type 24 grate - 9 bars for Type 18 grates. (Type 24 grate shown).

Weight of Type 24 grate = 192 LBS.

Weight of Type 18 grate = 145 LBS.

⅜"± ø Cross bars may be fillet welded, resistance welded or electroforged to bearing bars.

TYPE 18-9X AND 24-12X GRATE

(Welded Steel)

STATE OF CALIFORNIA
DEPARTMENT OF TRANSPORTATION

GRATE DETAILS No. 2

NO SCALE

RSP D77B DATED APRIL 19, 2013 SUPERSEDES RSP D77B DATED JULY 20, 2012 AND STANDARD PLAN D77B DATED MAY 20, 2011 - PAGE 165 OF THE STANDARD PLANS BOOK DATED 2010.

REVISED STANDARD PLAN RSP D77B

4-4-13

Dist	COUNTY	ROUTE	POST MILES TOTAL PROJECT	SHEET No.	TOTAL SHEETS
01	DN	199	20.3/25.9	79	184

REGISTERED CIVIL ENGINEER

April 19, 2013
PLANS APPROVAL DATE

REGISTERED PROFESSIONAL ENGINEER Gurinderpal Bhullar No. C48815 Exp. 9-30-14 CIVIL STATE OF CALIFORNIA

THE STATE OF CALIFORNIA OR ITS OFFICERS OR AGENTS SHALL NOT BE RESPONSIBLE FOR THE ACCURACY OR COMPLETENESS OF SCANNED COPIES OF THIS PLAN SHEET.

TO ACCOMPANY PLANS DATED 6-24-13

NOTES:

See Revised Standard Plan RSP T9 for tables.

Use cone spacing X for taper segment, Y for tangent segment or Z for conflict situations, as approriate, per Table 1, unless X, Y, or Z cone spacing is shown on this sheet.

Unless otherwise specified in the special provisions, all temporary warning signs shall have black legend on fluorescent orange background.

California codes are designated by (CA). Otherwise, Federal (MUTCD) codes are shown.

TYPICAL LANE CLOSURE WITH REVERSIBLE CONTROL

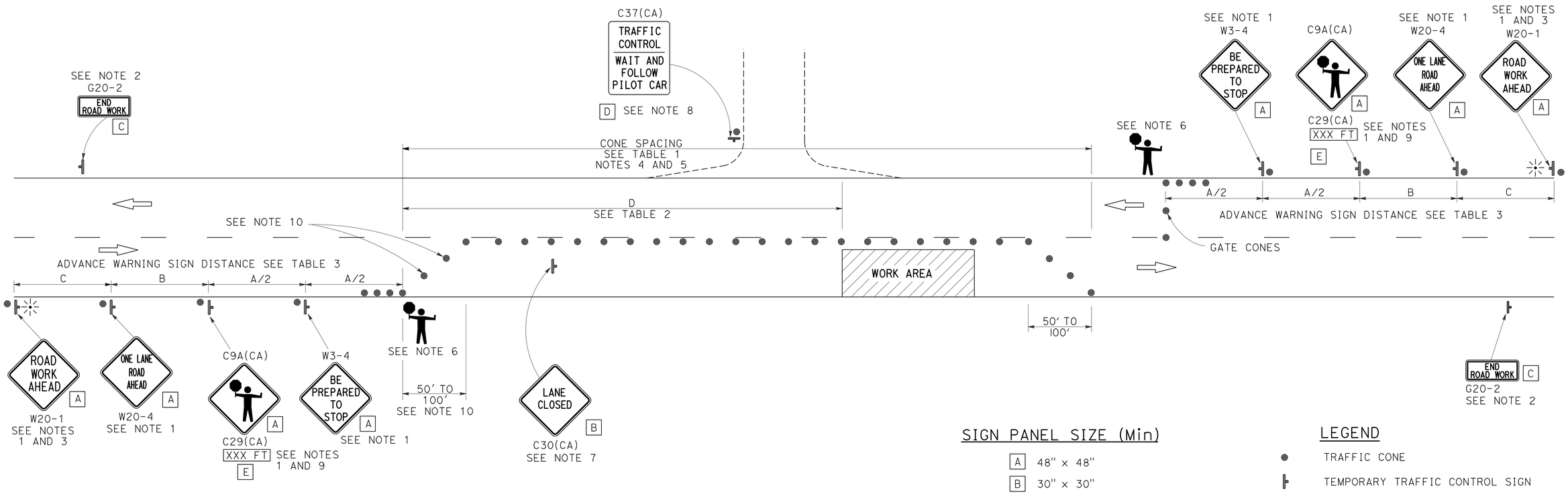

SIGN PANEL SIZE (Min)

A	48" x 48"
B	30" x 30"
C	36" x 18"
D	36" x 42"
E	20" x 7"

LEGEND

- TRAFFIC CONE
- TEMPORARY TRAFFIC CONTROL SIGN
- PORTABLE FLASHING BEACON
- FLAGGER

NOTES:

1. Each advance warning sign in each direction of travel shall be equipped with at least two flags for daytime closure. Each flag shall be at least 16" x 16" in size and shall be orange or fluorescent red-orange in color. Flashing beacons shall be placed at the locations indicated for lane closure during hours of darkness.
2. A G20-2 "END ROAD WORK" sign, as appropriate, shall be placed at the end of the lane control unless the end of work area is obvious, or ends within a larger project's limits.
3. If the W20-1 sign would follow within 2000' of a stationary W20-1 or G20-1 "ROAD WORK NEXT _____ MILES", use a W20-4 sign for the first advance warning sign.
4. All cones used for lane closures during the hours of darkness shall be fitted with retroreflective bands (or sleeves) as specified in the specifications.
5. Portable delineators, placed at one-half the spacing indicated for traffic cones, may be used instead of cones for daytime closures only.
6. Additional advance flaggers may be required. Flagger should stand in a conspicuous place, be visible to approaching traffic as well as approaching vehicles after the first vehicle has stopped. During the hours of darkness, the flagging-station and flagger shall be illuminated and clearly visible to approaching traffic. The illumination footprint of the lighting on the ground shall be at least 20' in diameter. Place a minimum of four cones at 50' intervals in advance of flagger station as shown.
7. Place C30(CA) "LANE CLOSED" sign at 500' to 1000' intervals throughout extended work areas. They are optional if the work area is visible from the flagger station.
8. When a pilot car is used, place a C37(CA) "TRAFFIC CONTROL-WAIT AND FOLLOW PILOT CAR" sign with black legend on white background at all intersections, driveways and alleys without a flagger within traffic control area. Signs shall be clean and visible at all times. Where traffic can not be effectively self-regulated, at least one flagger shall be used at each intersection within traffic control area.
9. An optional C29(CA) sign may be placed below the C9A(CA) sign.
10. Either traffic cones or barricades shall be placed on the taper. Barricades shall be Type I, II, or III.

STATE OF CALIFORNIA
DEPARTMENT OF TRANSPORTATION

TRAFFIC CONTROL SYSTEM FOR LANE CLOSURE ON TWO LANE CONVENTIONAL HIGHWAYS

NO SCALE

RSP T13 DATED APRIL 19, 2013 SUPERSEDES STANDARD PLAN T13 DATED MAY 20, 2011 - PAGE 241 OF THE STANDARD PLANS BOOK DATED 2010.

REVISED STANDARD PLAN RSP T13

2010 REVISED STANDARD PLAN RSP T13

4-2-13

Dist	COUNTY	ROUTE	POST MILES TOTAL PROJECT	SHEET No.	TOTAL SHEETS
01	DN	199	20.3/25.9	80	184

REGISTERED CIVIL ENGINEER

April 20, 2012
PLANS APPROVAL DATE

REGISTERED PROFESSIONAL ENGINEER Gary Wang No. C58298 Exp. 6-30-12 CIVIL STATE OF CALIFORNIA

THE STATE OF CALIFORNIA OR ITS OFFICERS OR AGENTS SHALL NOT BE RESPONSIBLE FOR THE ACCURACY OR COMPLETENESS OF SCANNED COPIES OF THIS PLAN SHEET.

TO ACCOMPANY PLANS DATED 6-24-13

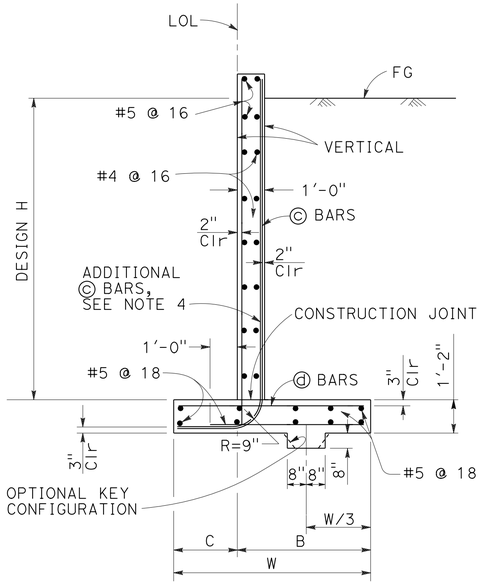

SPREAD FOOTING SECTION

Place concrete in toe against undisturbed material, except as permitted by the Engineer.

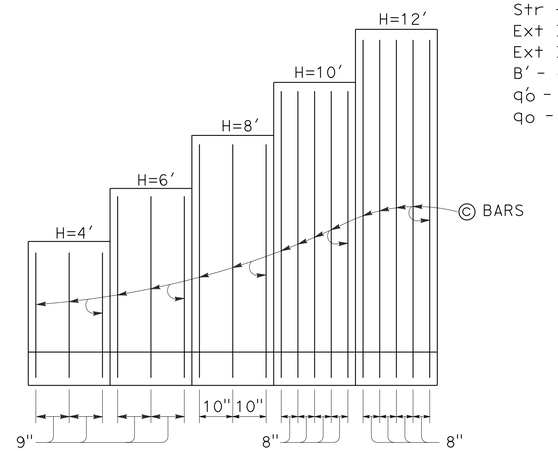

ELEVATION

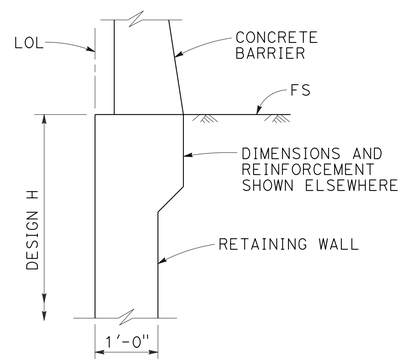

STEM HAUNCH DETAIL

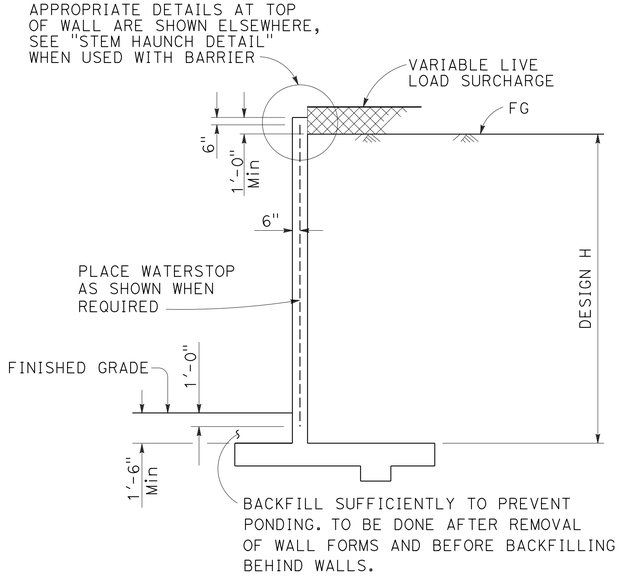

DESIGN SECTION

TABLE OF REINFORCING STEEL, DIMENSIONS AND DATA					
DESIGN H	4'	6'	8'	10'	12'
W	7'-0"	7'-0"	7'-3"	7'-5"	8'-2"
C	2'-3"	2'-3"	2'-3"	2'-5"	2'-7"
B	4'-9"	4'-9"	5'-0"	5'-0"	5'-7"
© BARS	#6 @ 9	#6 @ 9	#7 @ 10	#7 @ 8	#7 @ 8
ⓓ BARS	#5 @ 9	#5 @ 9	#6 @ 10	#7 @ 8	#7 @ 8
Ser: B', q_o'	6.7, 0.8	6.7, 1.0	6.3, 1.3	5.8, 1.6	6.2, 1.9
Str: B', q_o	6.6, 1.6	5.2, 1.7	3.7, 2.2	2.8, 3.3	3.0, 3.9
Ext I: B', q_o	5.6, 0.9	4.8, 1.4	4.1, 2.0	3.1, 3.2	2.7, 4.5
Ext II: B', q_o	2.8, 1.9	2.7, 2.5	2.8, 3.0	2.6, 3.7	3.4, 3.6

SYMBOLS:

Ser - service limit state I
Str - strength limit state I
Ext I - extreme event limit state I
Ext II - extreme event limit state II
B' - effective footing width (ft)
q_o' - net bearing stress (ksf), OG assumed to be FG at toe
q_o - gross uniform bearing stress (ksf)

DESIGN CONDITIONS:

Design H may be exceeded by 6" before going to the next size. Special footing design is required where foundation material is incapable of supporting bearing stress listed in the table.

DESIGN NOTES:

DESIGN: AASHTO LRFD Bridge Design Specifications, 4th Edition with California Amendments

LS: Varied surcharge on level ground surface

DC: Stem Architectural Treatment of thickness up to 6" of concrete (75 psf) considered

CT: 54 kip transverse force applied at He = 32", distributed over 10 feet at the top of wall and 1 : 1 distribution down and outward. Distribution below footing taken no less than 40'.

SEISMIC: $k_h = 0.2$
$k_v = 0.0$

SOIL: $\phi = 34°$
$\gamma = 120$ pcf

REINFORCED CONCRETE: f'c = 3,600 psi
fy = 60,000 psi

LOAD COMBINATIONS AND LIMIT STATES:

Service I	Q = 1.00DC+1.00EV+1.00EH+1.00LS
Strength I	Q = αDC+βEV+ηEH+1.75LS
Extreme I	Q = 1.00DC+1.00EV+1.00EH+1.00EQD+1.00EQE
Extreme II	Q = 1.00DC+1.00EV+1.00EH+1.00CT

Where:

Q:	Force Effects
α:	1.25 or 0.90, Whichever Controls Design
β:	1.35 or 1.00, Whichever Controls Design
η:	1.50 or 0.90, Whichever Controls Design
DC:	Dead Load of Structure Components
EH:	Horizontal Earth Fill Pressure
EV:	Vertical Earth Pressure from Earth Fill Weight
LS:	Live Load Surcharge
EQE:	Seismic Earth Pressure
EQD:	Soil and Structural and Nonstructural Components Inertia
CT:	Vehicular Collision Force

NOTES:

1. For details not shown and drainage notes see RSP B3-5
2. For wall stem joint details see B0-3 3-3 and B0-3 3-4
3. At © bars:
   H ≤ 6', no splices are allowed within 1'-8" above the top of footing.
   H > 6', no splices are allowed within H/4 above the top of footing.
4. Provide #6 @ 8" © bars in addition to tabulated © bars over a distance of 8'-0" measured from all expansion joints, begin wall and end wall location.

STATE OF CALIFORNIA
DEPARTMENT OF TRANSPORTATION

RETAINING WALL TYPE 1A (CASE 1)

NO SCALE

RSP B3-3A DATED APRIL 20, 2012 SUPPLEMENTS THE STANDARD PLANS BOOK DATED 2010.

REVISED STANDARD PLAN RSP B3-3A

2010 REVISED STANDARD PLAN RSP B3-3A

Dist	COUNTY	ROUTE	POST MILES TOTAL PROJECT	SHEET No.	TOTAL SHEETS
01	DN	199	20.3/25.9	81	184

REGISTERED CIVIL ENGINEER

April 20, 2012
PLANS APPROVAL DATE

REGISTERED PROFESSIONAL ENGINEER Gary Wang No. C58298 Exp. 6-30-12 CIVIL STATE OF CALIFORNIA

THE STATE OF CALIFORNIA OR ITS OFFICERS OR AGENTS SHALL NOT BE RESPONSIBLE FOR THE ACCURACY OR COMPLETENESS OF SCANNED COPIES OF THIS PLAN SHEET.

TO ACCOMPANY PLANS DATED 6-24-13

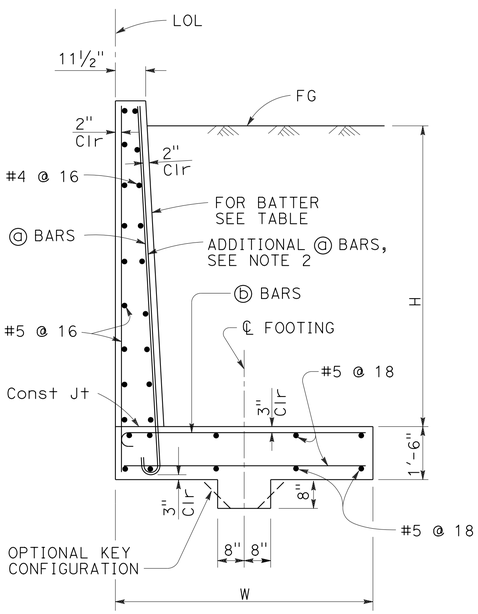

SPREAD FOOTING SECTION

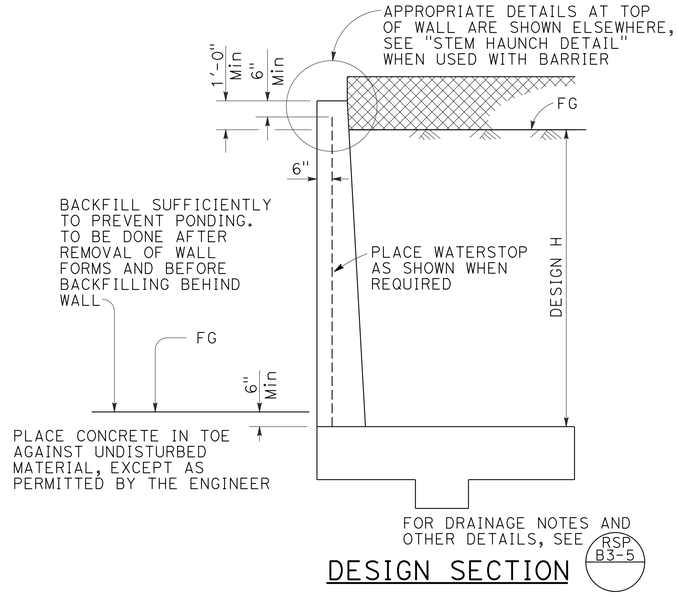

DESIGN SECTION

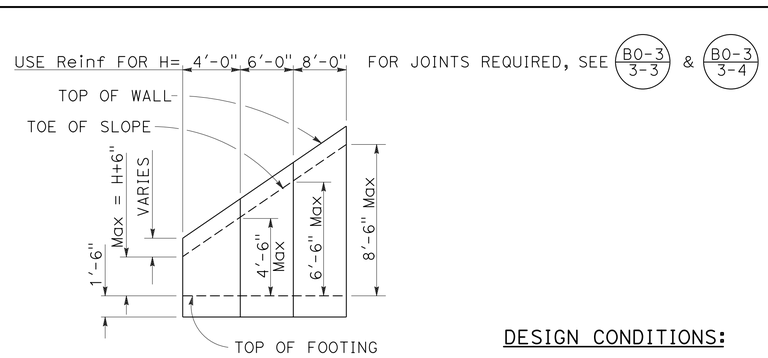

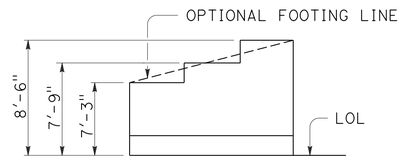

TYPICAL LAYOUT EXAMPLE

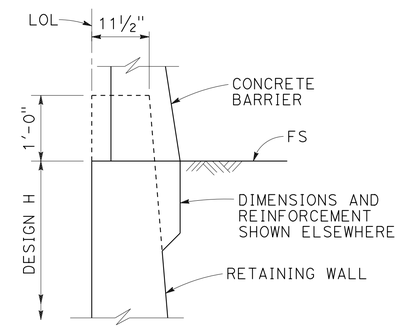

STEM HAUNCH DETAIL

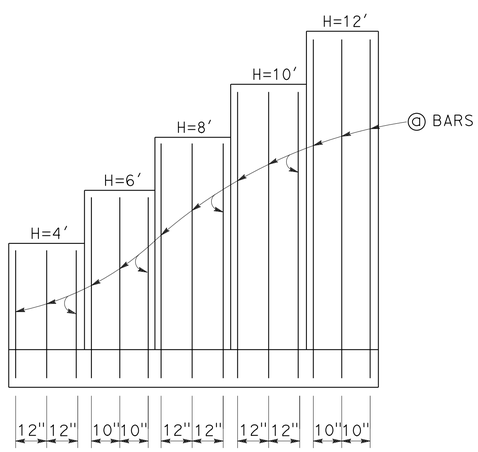

ELEVATION

SYMBOLS:

Ser - service limit state I
Str - strength limit state I
Ext I - extreme event limit state I
Ext II - extreme event limit state II
B' - effective footing width (ft)
q_o' - net bearing stress (ksf), OG assumed to be FG at toe
q_o - gross uniform bearing stress (ksf)

TABLE OF REINFORCING STEEL, DIMENSIONS AND DATA

DESIGN H	4'	6'	8'	10'	12'
W	7'-3"	7'-9"	8'-6"	9'-6"	10'-6"
BATTER	NONE	NONE	100 : 2	100 : 3	100 : 4
ⓐ BARS	#7 @ 12	#7 @ 10	#7 @ 12	#7 @ 12	#7 @ 10
ⓑ BARS	#7 @ 12	#7 @ 10	#8 @ 12	#9 @ 12	#10 @ 10
Ser: B', q_o'	6.2, 1.4	6.1, 1.8	6.4, 2.1	7.0, 2.5	7.7, 2.8
Str: B', q_o	6.2, 2.4	6.1, 2.9	5.3, 3.0	6.0, 3.5	6.6, 4.0
Ext I: B', q_o	4.4, 1.5	4.1, 2.2	4.0, 3.1	4.1, 3.9	4.2, 4.8
Ext II: B', q_o	2.5, 2.7	3.1, 3.0	3.8, 3.2	4.9, 3.3	5.8, 3.5

DESIGN CONDITIONS:

Design H may be exceeded by 6" before going to the next size. Special footing design is required where foundation material is incapable of supporting bearing stress listed in the table.

DESIGN NOTES:

DESIGN: AASHTO LRFD Bridge Design Specifications, 4th Edition with California Amendments

LS: Varied surcharge on level ground surface

DC: Stem Architectural Treatment of thickness up to 6" of concrete (75 psf) considered

CT: 54 kip transverse force applied at He = 32", distributed over 10 feet at the top of wall and 1 : 1 distribution down and outward. Distribution below footing taken no less than 40'.

SEISMIC: $k_h = 0.2$
$k_v = 0.0$

SOIL: $\phi = 34°$
$\gamma = 120$ pcf

REINFORCED CONCRETE: f'c = 3,600 psi
fy = 60,000 psi

LOAD COMBINATIONS AND LIMIT STATES:

Service I	Q = 1.00DC+1.00EV+1.00EH+1.00LS
Strength I	Q = αDC+βEV+ηEH+1.75LS
Extreme I	Q = 1.00DC+1.00EV+1.00EH+1.00EQD+1.00EQE
Extreme II	Q = 1.00DC+1.00EV+1.00EH+1.00CT

Where:

Q:	Force Effects
α:	1.25 or 0.90, Whichever Controls Design
β:	1.35 or 1.00, Whichever Controls Design
η:	1.50 or 0.90, Whichever Controls Design
DC:	Dead Load of Structure Components
EH:	Horizontal Earth Fill Pressure
EV:	Vertical Earth Pressure from Earth Fill Weight
LS:	Live Load Surcharge
EQE:	Seismic Earth Pressure
EQD:	Soil and Structural and Nonstructural Components Inertia
CT:	Vehicular Collision Force

NOTES:

1. At ⓐ bars:
   H ≤ 6', no splices are allowed within 1'-8" above the top of footing.
   H > 6', no splices are allowed within H/4 above the top of footing.

2. Provide #6 @ 8" ⓐ bars in addition to tabulated ⓐ bars over a distance of 8'-0" measured from all expansion joints, begin wall and end wall locations.

STATE OF CALIFORNIA
DEPARTMENT OF TRANSPORTATION

RETAINING WALL TYPE 5 (CASE 1)

NO SCALE

RSP B3-4A DATED APRIL 20, 2012 SUPPLEMENTS THE STANDARD PLANS BOOK DATED 2010.

REVISED STANDARD PLAN RSP B3-4A

2010 REVISED STANDARD PLAN RSP B3-4A

3-1-12

Dist	COUNTY	ROUTE	POST MILES TOTAL PROJECT	SHEET No.	TOTAL SHEETS
01	DN	199	20.3/25.9	82	184

REGISTERED CIVIL ENGINEER

April 20, 2012
PLANS APPROVAL DATE

REGISTERED PROFESSIONAL ENGINEER Gary Wang No. C58298 Exp. 6-30-12 CIVIL STATE OF CALIFORNIA

THE STATE OF CALIFORNIA OR ITS OFFICERS OR AGENTS SHALL NOT BE RESPONSIBLE FOR THE ACCURACY OR COMPLETENESS OF SCANNED COPIES OF THIS PLAN SHEET.

TO ACCOMPANY PLANS DATED 6-24-13

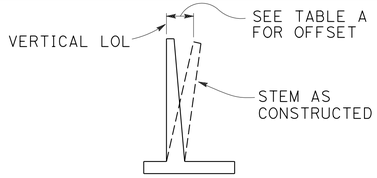

APPROXIMATE WALL OFFSET VALUES

Values for offseting forms to be determined by the Engineer.

TABLE A

H	OFFSET
4'-12'	H/200
14'-16'	H/160
18'-20'	H/140
22'-24'	H/130
26'-36'	2½"

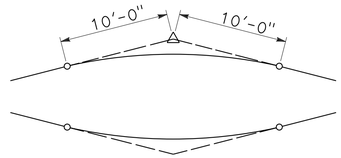

20'-0" VC AT TOP OF WALL SLOPE CHANGE

Where shown on the plans

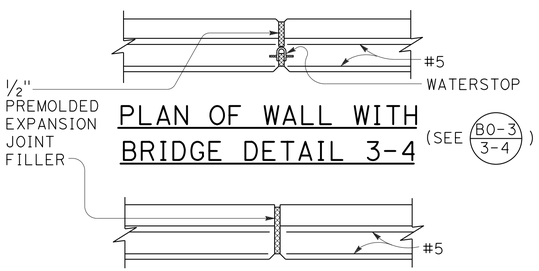

PLAN OF WALL WITH BRIDGE DETAIL 3-4

(SEE B0-3 / 3-4)

PLAN OF WALL WITH EXPANSION JOINT ONLY

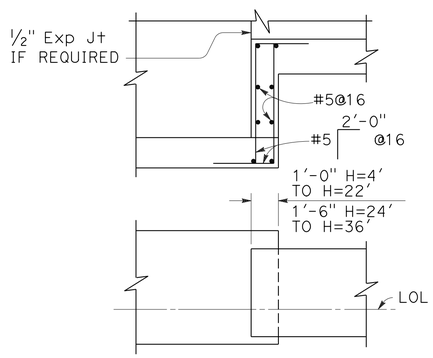

FOOTING STEP

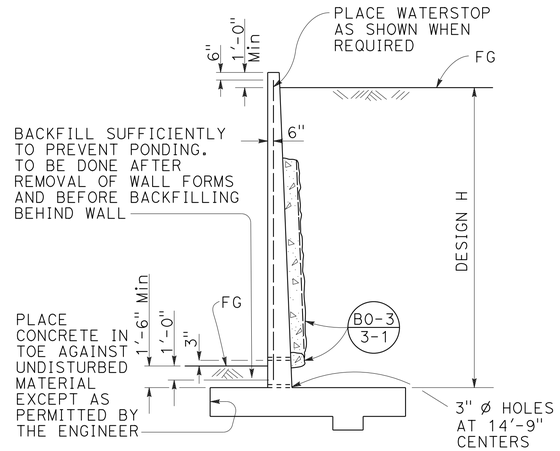

DESIGN AND DRAINAGE

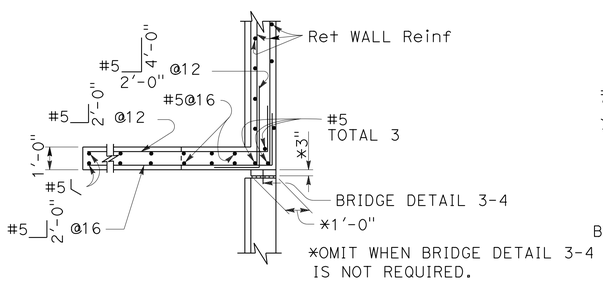

PLAN

(For return wall Type "A")

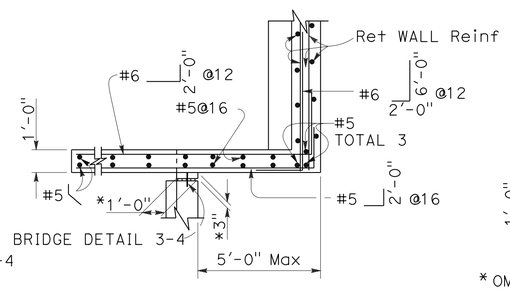

PLAN

(For return wall Type "B")

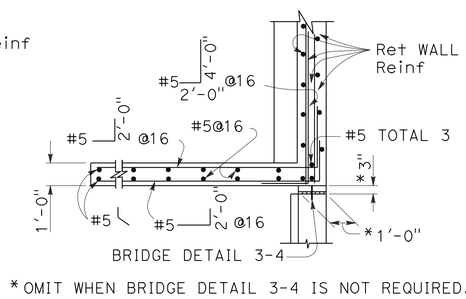

*OMIT WHEN BRIDGE DETAIL 3-4 IS NOT REQUIRED.

PLAN

(For return wall Type "C")

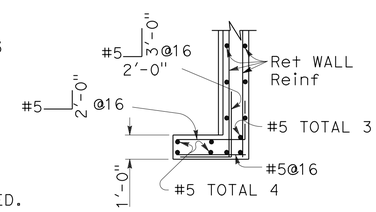

PLAN

(For return wall Type "D")

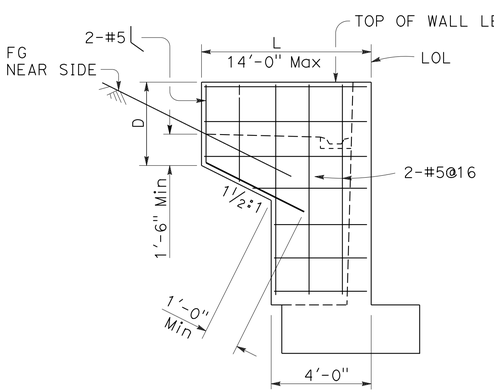

ELEVATION

RETURN WALL TYPE "A"

Use where H=8' or less

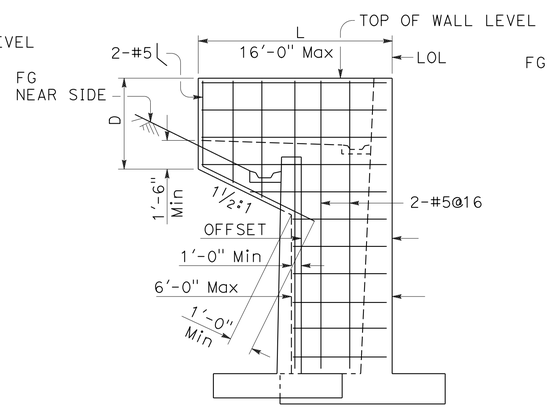

ELEVATION

RETURN WALL TYPE "B"

Use where H=10' or more on offset walls

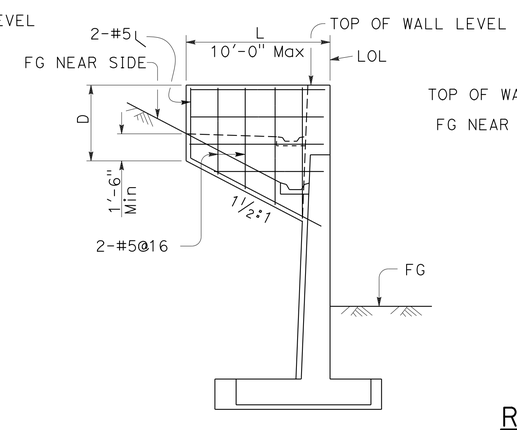

ELEVATION

RETURN WALL TYPE "C"

Use where H=10' or more on straight walls

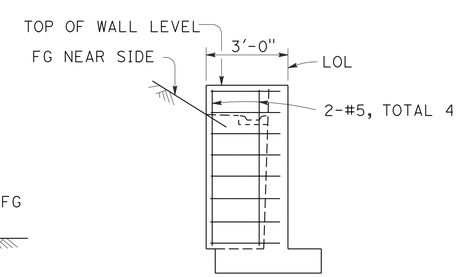

ELEVATION

RETURN WALL TYPE "D"

Use where H=6' or less

DESIGN CONDITIONS:

Design "H" may be exceeded by 6" before going to the next size. Special footing design is required where foundation material is incapable of supporting bearing stress listed in table

Return wall not required unless shown elsewhere

DESIGN NOTES:

DESIGN: AASHTO LRFD Bridge Design Specifications, 4th edition with California Amendments

LIVE LOAD: Surcharge on level ground surface

SOIL: ϕ = 34°
γ = 120 pcf

REINFORCED CONCRETE: fy = 60,000 psi
fc' = 3,600 psi

STATE OF CALIFORNIA
DEPARTMENT OF TRANSPORTATION

RETAINING WALL DETAILS No. 1

NO SCALE

RSP B3-5 DATED APRIL 20, 2012 SUPERSEDES STANDARD PLAN B3-5
DATED MAY 20, 2011 - PAGE 277 OF THE STANDARD PLANS BOOK DATED 2010.

REVISED STANDARD PLAN RSP B3-5

2010 REVISED STANDARD PLAN RSP B3-5

2-22-12

Dist	COUNTY	ROUTE	POST MILES TOTAL PROJECT	SHEET No.	TOTAL SHEETS
01	DN	199	20.3/25.9	83	184

REGISTERED CIVIL ENGINEER

October 21, 2011
PLANS APPROVAL DATE

REGISTERED PROFESSIONAL ENGINEER
Tillat Satter
No. C42892
Exp. 3-31-12
CIVIL
STATE OF CALIFORNIA

THE STATE OF CALIFORNIA OR ITS OFFICERS OR AGENTS SHALL NOT BE RESPONSIBLE FOR THE ACCURACY OR COMPLETENESS OF SCANNED COPIES OF THIS PLAN SHEET.

TO ACCOMPANY PLANS DATED 6-24-13

2010 REVISED STANDARD PLAN RSP B11-47

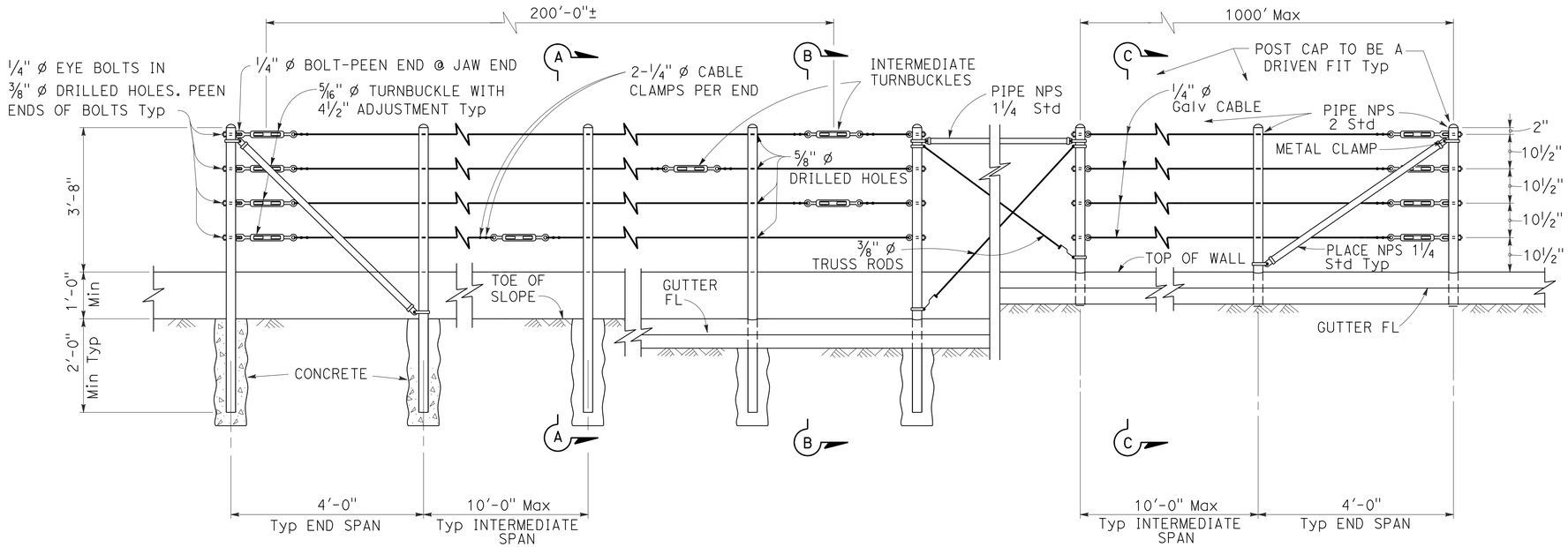

EXISTING WALL (WITHOUT GUTTER)
Existing

RETAINING WALL (WITH GUTTER)
Existing

RETAINING WALL (WITH GUTTER)
New construction

ELEVATION

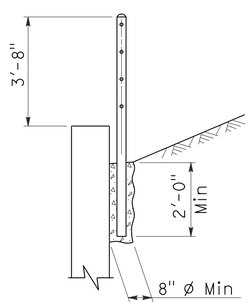

SECTION A-A
Existing

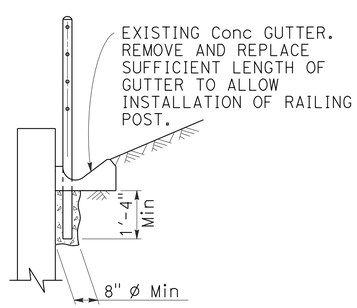

SECTION B-B
Existing

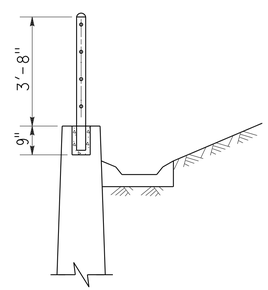

SECTION C-C
New construction

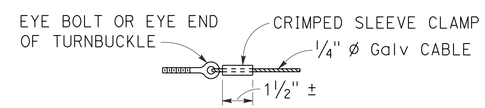

ALTERNATIVE CABLE CONNECTION

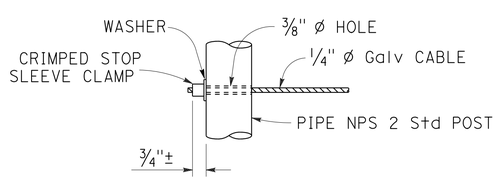

ALTERNATIVE DEAD END ANCHORAGE

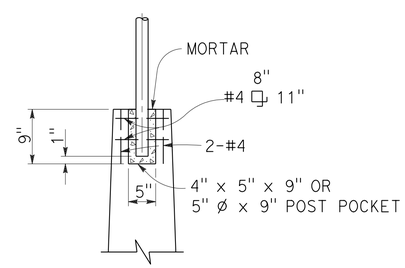

POST POCKET

NOTES:

1. Maximum distance between turnbuckles shall be 200'-0"±.
2. Intermediate turnbuckles to be placed in adjacent spans.
3. Cable shall not be spliced between intermediate turnbuckles and end posts.
4. Posts to be vertical.
5. Alignment of holes in posts may vary to conform to slope of top of retaining wall.
6. The Contractor shall verify all dependent dimensions in the field before ordering or fabricating any material.
7. Line posts shall be braced horizontally and trussed diagonally in both directions at intervals not to exceed 1000'.
8. Post pockets to be centered in top of wall.
9. Typical end spans, braced in both directions, shall be constructed at changes in line where the angle of deflection is 15° or more.
10. Provide thimbles at all cable loops.

STATE OF CALIFORNIA
DEPARTMENT OF TRANSPORTATION

CABLE RAILING

NO SCALE

RSP B11-47 DATED OCTOBER 21, 2011 SUPERSEDES STANDARD PLAN B11-47 DATED MAY 20, 2011 - PAGE 293 OF THE STANDARD PLANS BOOK DATED 2010.

REVISED STANDARD PLAN RSP B11-47

Dist	COUNTY	ROUTE	POST MILES TOTAL PROJECT	SHEET No.	TOTAL SHEETS
01	DN	199	20.3/25.9	84	184

REGISTERED CIVIL ENGINEER

April 20, 2012
PLANS APPROVAL DATE

REGISTERED PROFESSIONAL ENGINEER
Tillat Satter
No. C42892
Exp. 3-31-14
CIVIL
STATE OF CALIFORNIA

THE STATE OF CALIFORNIA OR ITS OFFICERS OR AGENTS SHALL NOT BE RESPONSIBLE FOR THE ACCURACY OR COMPLETENESS OF SCANNED COPIES OF THIS PLAN SHEET.

TO ACCOMPANY PLANS DATED 6-24-13

2010 REVISED STANDARD PLAN RSP B11-60

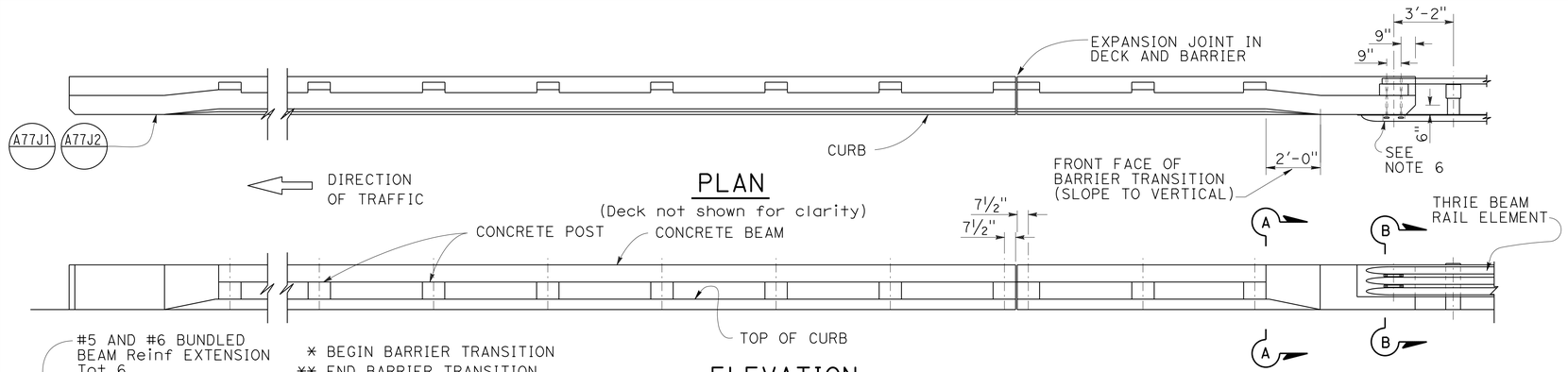

PLAN

(Deck not shown for clarity)

ELEVATION

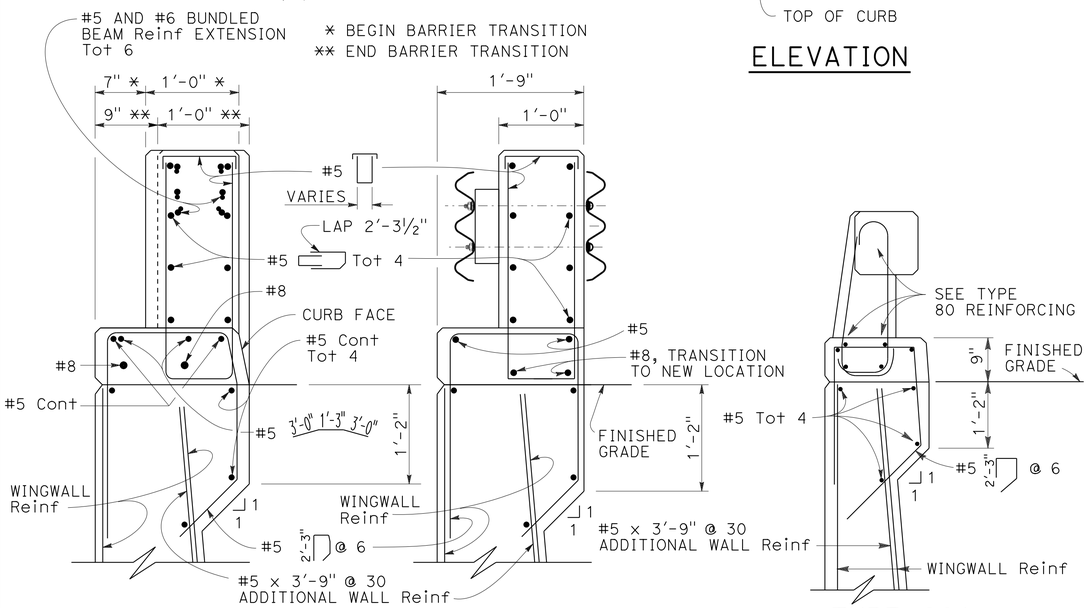

SECTION A-A

SECTION B-B

TYPE 80A

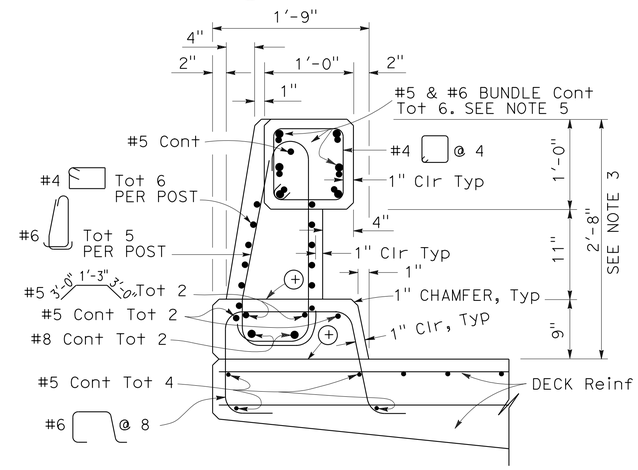

TYPE 80

⊕ Construction joint

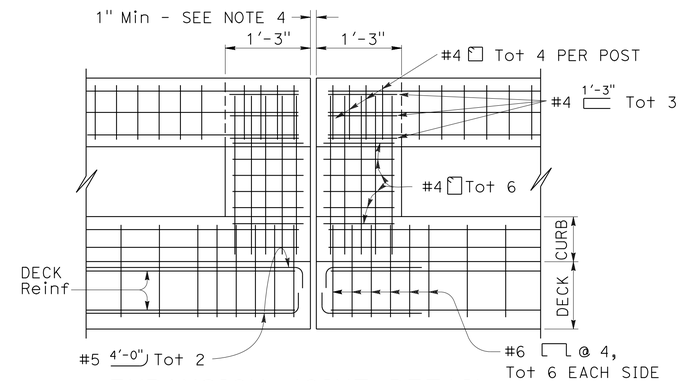

EXPANSION JOINT DETAIL

NOTES:

1. Walls are to be backfilled before the barrier is placed.
2. Longitudinal reinforcing steel to stop at all expansion joints.
3. The front face dimensions are to be constant above the finish roadway profile, but the overall height will vary with certain thicknesses of surfacing and roadway slopes.
4. Expansion joint to match deck joint.
5. No lap splicing allowed on the longitudinal rail reinforcing. Splicing shall be staggered.
6. For typical metal railing connection details not shown, see Standard Plans A77J1 and A77J2.
7. Chain link railing is not allowed on Type 80 Barriers.
8. Post to be spaced equally, typically 6'-6" spacing. Post spacing may be reduced where location of hinges or expansion joints or the length of wingwalls will not accommodate the 6'-6" spacing. Maximum see-through availability is to be strived for, where 6'-6" post spacing can not be achieved.

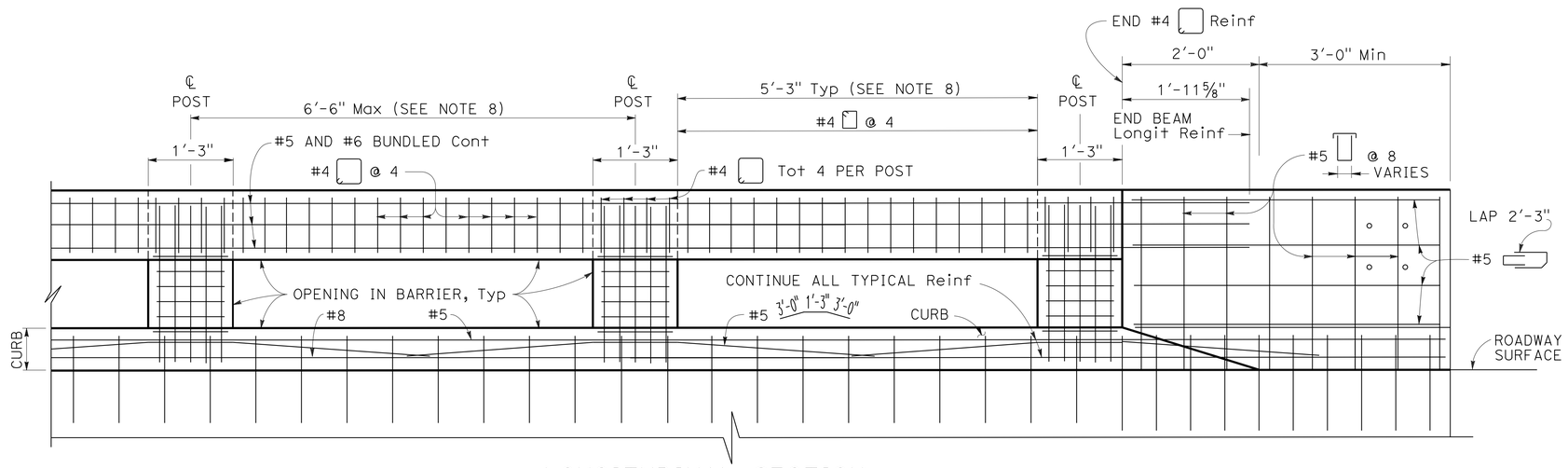

LONGITUDINAL SECTION

(Deck or wingwall reinforcing not shown)

STATE OF CALIFORNIA
DEPARTMENT OF TRANSPORTATION

CONCRETE BARRIER TYPE 80 (SHEET 1 OF 2)

NO SCALE

RSP B11-60 DATED APRIL 20, 2012 SUPERSEDES STANDARD PLAN B11-60 DATED MAY 20, 2011 - PAGE 300 OF THE STANDARD PLANS BOOK DATED 2010.

REVISED STANDARD PLAN RSP B11-60

4-5-12

DIST	COUNTY	ROUTE	POST MILES TOTAL PROJECT	SHEET NO.	TOTAL SHEETS
01	DN	199	20.3/25.9	85	184

REGISTERED ELECTRICAL ENGINEER

January 20, 2012
PLANS APPROVAL DATE

REGISTERED PROFESSIONAL ENGINEER
Jeffery G. McRae
No. E14512
Exp. 6-30-12
ELECTRICAL
STATE OF CALIFORNIA

THE STATE OF CALIFORNIA OR ITS OFFICERS OR AGENTS SHALL NOT BE RESPONSIBLE FOR THE ACCURACY OR COMPLETENESS OF SCANNED COPIES OF THIS PLAN SHEET.

TO ACCOMPANY PLANS DATED 6-24-13

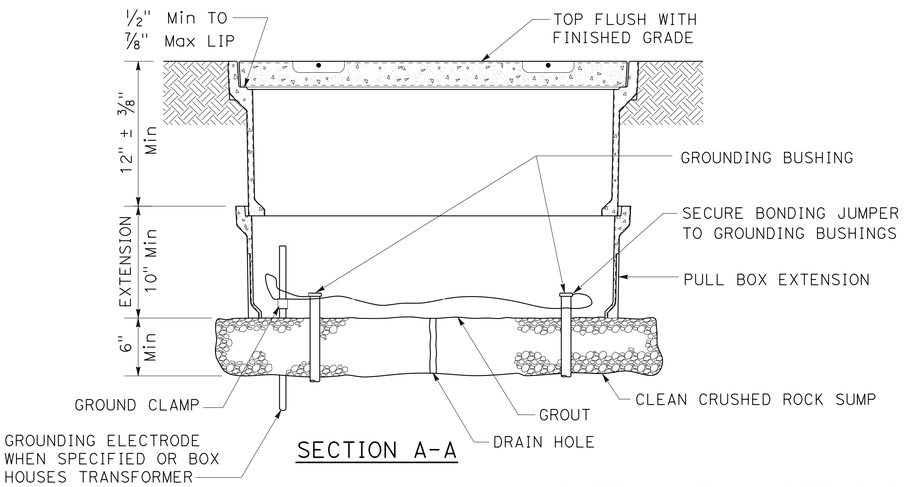

SECTION A-A

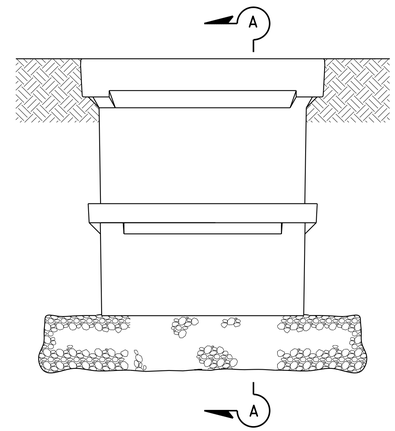

SIDE VIEW

INSTALLATION DETAILS

DETAIL A

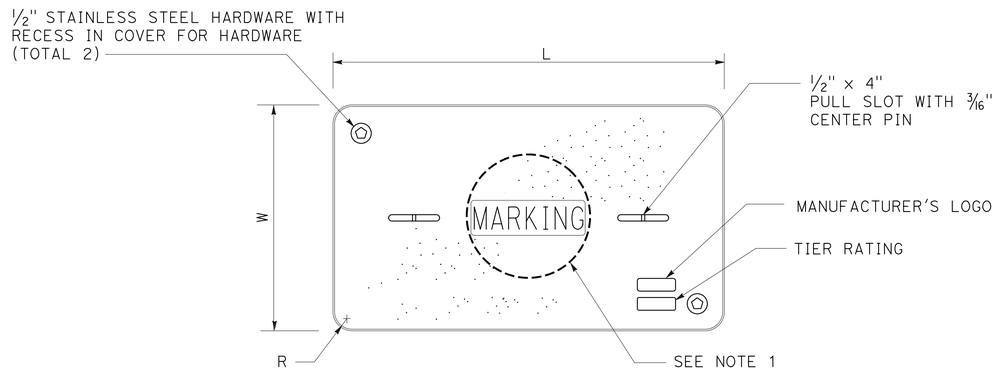

COVER TOP VIEW

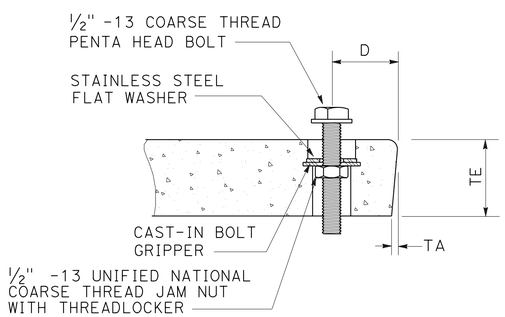

TYPICAL COVER CAPTIVE BOLT

OR SIMILAR

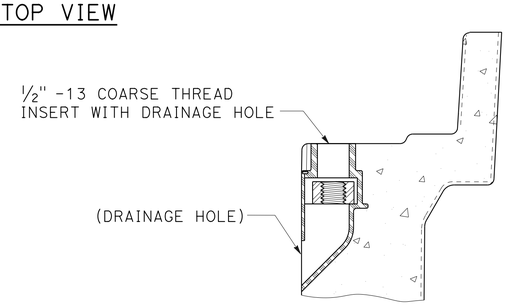

TYPICAL THREADED INSERT

OR SIMILAR

DIMENSION TABLE										
PULL BOX	PULL BOX			COVER						
	MINIMUM DEPTH BOX	MINIMUM DEPTH EXTENSION	MAXIMUM WEIGHT	L	W	R	TE	TA	D	MAXIMUM WEIGHT
No. 3 1/2	12"	N/A	40 lb	1' - 3 3/8"	10 1/8"	1 3/8"	2"	1/8"	1 3/4"	30 lb
No. 5	12"	10"	55 lb	1' - 11 1/4"	1' - 1 3/4"	1 3/8"	2"	1/8"	1 3/4"	60 lb
No. 6	12"	10"	70 lb	2' - 6 1/2"	1' - 5 1/2"	1 3/8"	2"	1/8"	2"	85 lb

NOTES ON PULL BOXES:

1. Pull box covers must be marked as follows: "SERVICE" Service circuits between service point and service disconnect; "SPRINKLER-CONTROL" sprinkler control circuits, 50 V or less; "CALTRANS" on all pull boxes, except pull boxes marked "SPRINKLER-CONTROL"; and "TELEPHONE" Telephone service;

   A) No. 3 1/2 pull box.
      1) "SIGNAL" - Traffic signal circuits with or without street or sign lighting circuits.
      2) "ST LIGHTING" - Street or sign lighting circuits where voltage is under 600 V.

   B) No. 5, 6, 9 or 9A pull box.
      1) "TRAFFIC SIGNAL" - Traffic signal circuits with or without street or sign lighting circuits.
      2) "STREET LIGHTING" - Street or sign lighting circuits where voltage is under 600 V.
      3) "STREET LIGHTING-HIGH VOLTAGE" - Street or sign lighting circuits where voltage is above 600 V.
      4) "IRRIGATION" - Circuits to irrigation controller 120 V or more.
      5) "RAMP METER" - Ramp meter circuits.
      6) "COUNT STATION" - Count or speed monitor circuits.
      7) "COMMUNICATIONS" - Communication circuits.
      8) "TOS COMMUNICATIONS" - TOS communication line.
      9) "TOS POWER" - TOS power.
      10) "TDC POWER" - Telephone demarcation cabinet power.
      11) "CCTV" - Closed circuit television circuits.
      12) "TMS" - Traffic monitoring station circuits.
      13) "CMS" - Changeable message sign circuits.
      14) "HAR" - Highway advisory radio circuits.

2. The nominal dimensions of the opening in which the cover sets must be the same as the cover dimensions (L and W) plus 1/8" or greater.

3. Covers and boxes must be interchangeable with California Standard. When interchanged with a standard, the top surfaces must be flush within 1/8". Top outside radius of covers and pull boxes must have a 1/8" radius.

4. Pull box extension may be another pull box as long as the bottom edge of the pull box can fit into the cover opening.

STATE OF CALIFORNIA
DEPARTMENT OF TRANSPORTATION

ELECTRICAL SYSTEMS (PULL BOX)

NO SCALE

RSP ES-8A DATED JANUARY 20, 2012 SUPPLEMENTS THE STANDARD PLANS BOOK DATED 2010.

REVISED STANDARD PLAN RSP ES-8A

2010 REVISED STANDARD PLAN RSP ES-8A

Dist	COUNTY	ROUTE	POST MILES TOTAL PROJECT	SHEET No.	TOTAL SHEETS
01	DN	199	20.3/25.9	86	184

REGISTERED ELECTRICAL ENGINEER

July 20, 2012
PLANS APPROVAL DATE

REGISTERED PROFESSIONAL ENGINEER
Jeffery G. McRae
No. E14512
Exp. 6-30-14
ELECTRICAL
STATE OF CALIFORNIA

THE STATE OF CALIFORNIA OR ITS OFFICERS OR AGENTS SHALL NOT BE RESPONSIBLE FOR THE ACCURACY OR COMPLETENESS OF SCANNED COPIES OF THIS PLAN SHEET.

TO ACCOMPANY PLANS DATED 6-24-13

ISOFOOTCANDLE CURVE - MINIMUM

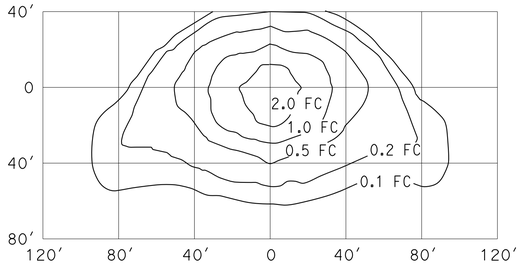

TYPE III MEDIUM CUTOFF

Cutoff Luminaire
34′ Mounting Height
Lamp operated at 22,000 lm
200-W high pressure sodium lamp
ANSI Designation S66

ISOFOOTCANDLE CURVE - MINIMUM

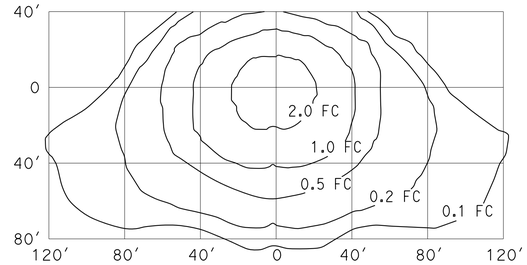

TYPE III MEDIUM CUTOFF

Cutoff Luminaire
40′ Mounting Height
Lamp operated at 37,000 lm
310-W high pressure sodium lamp
ANSI Designation S67

ISOFOOTCANDLE CURVE - MINIMUM

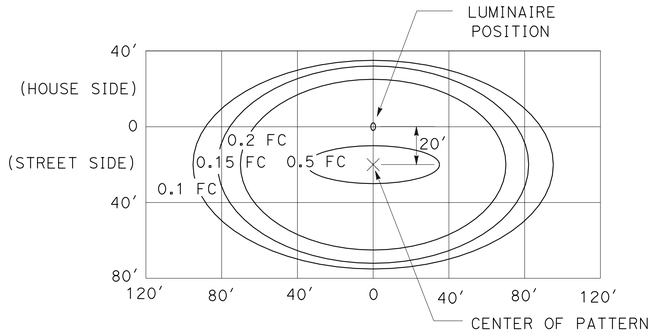

LED LUMINAIRE ROADWAY 1

200-W HPS Equivalent at 34′ Mounting Height

ISOFOOTCANDLE CURVE - MINIMUM

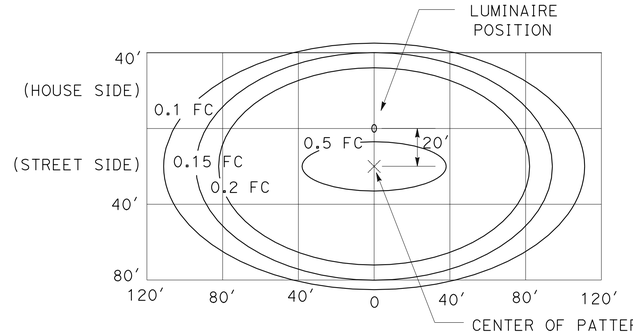

LED LUMINAIRE ROADWAY 2

310-W HPS Equivalent at 40′ Mounting Height

ISOFOOTCANDLE CURVE - MINIMUM

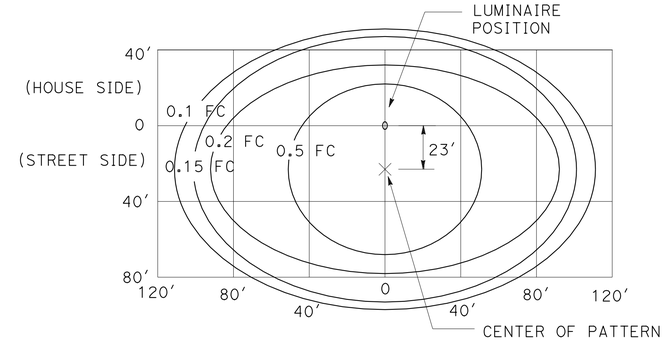

LED LUMINAIRE ROADWAY 4

400-W HPS Equivalent at 40′ Mounting Height

ISOFOOTCANDLE CURVE - MINIMUM

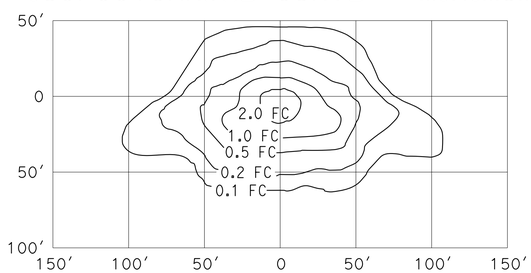

TYPE III MEDIUM CUTOFF

Cutoff Luminaire
30′ Mounting Height
Lamp operated at 16,000 lm
150-W high pressure sodium lamp
ANSI Designation S55

ISOFOOTCANDLE CURVE - MINIMUM

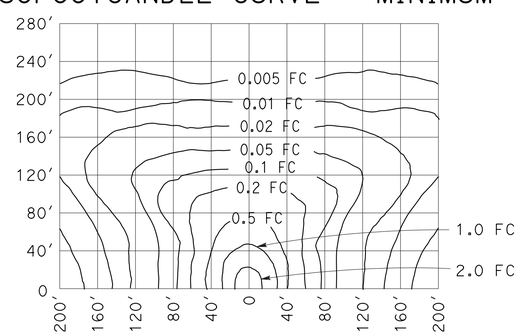

LOW PRESSURE SODIUM LUMINAIRE

40′ Mounting Height
Lamp operated at 33,000 lm
180-W low pressure sodium lamp

STATE OF CALIFORNIA
DEPARTMENT OF TRANSPORTATION

ELECTRICAL SYSTEMS (ISOFOOTCANDLE DIAGRAMS)

NO SCALE

RSP ES-10A DATED JULY 20, 2012 SUPPLEMENTS THE STANDARD PLANS BOOK DATED 2010.

REVISED STANDARD PLAN RSP ES-10A

2010 REVISED STANDARD PLAN RSP ES-10A

DIST	COUNTY	ROUTE	POST MILES TOTAL PROJECT	SHEET No.	TOTAL SHEETS
01	DN	199	20.3/25.9	87	184

REGISTERED CIVIL ENGINEER — DATE 3/20/13

6-24-13
PLANS APPROVAL DATE

REGISTERED PROFESSIONAL ENGINEER — Kevin Harper — No. 42221 — Exp. 3/31/14 — CIVIL — STATE OF CALIFORNIA

The State of California or its officers or agents shall not be responsible for the accuracy or completeness of electronic copies of this plan sheet.

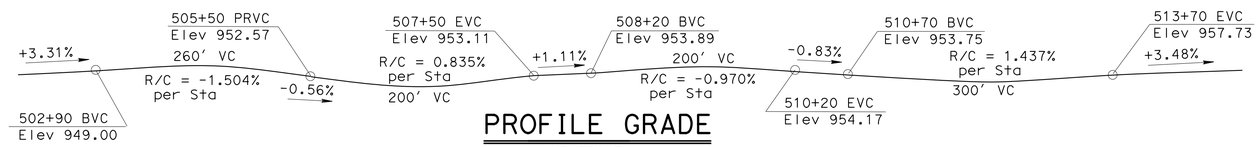

PROFILE GRADE

NO SCALE

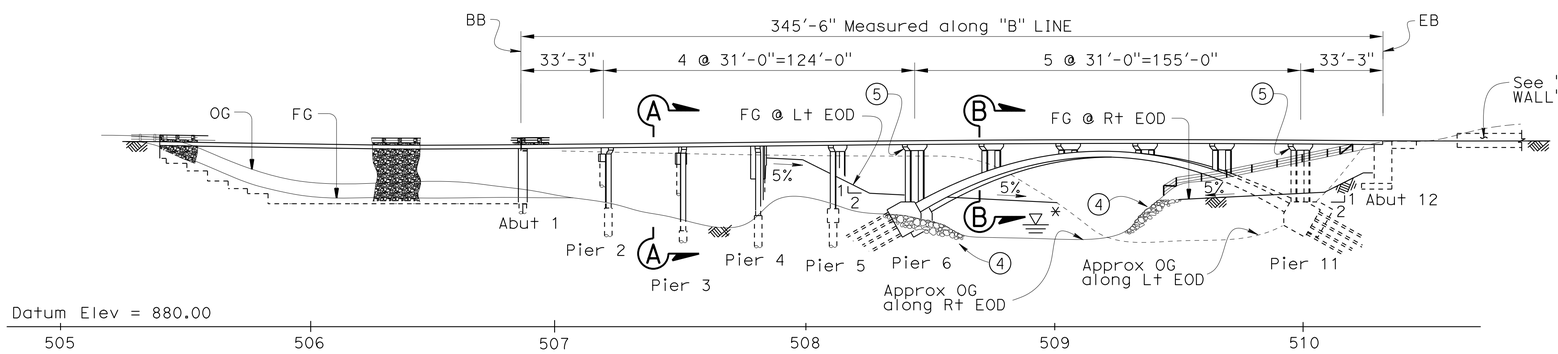

ELEVATION

1" = 30'

* See "Hydrologic/Hydraulic Summary" on "FOUNDATION PLAN" sheet.

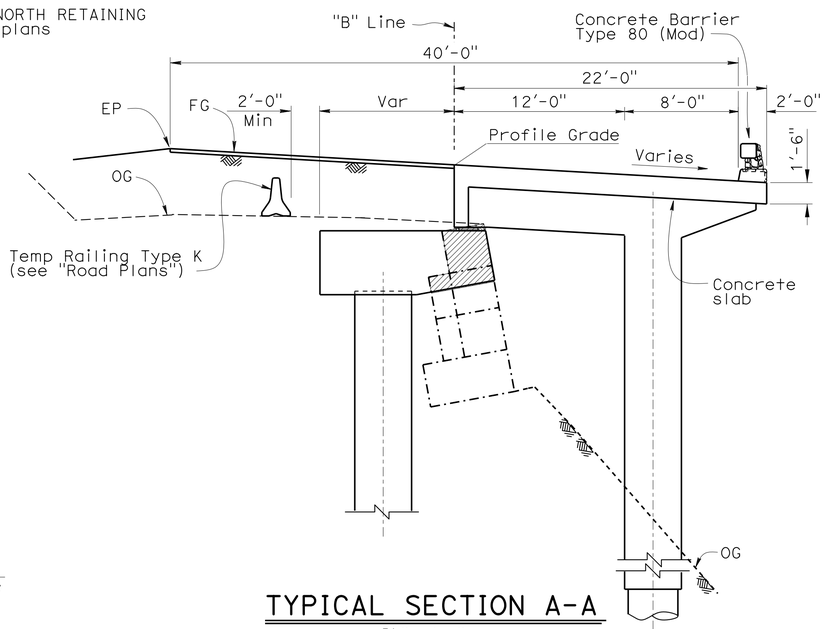

TYPICAL SECTION A-A

3/16"=1'-0"

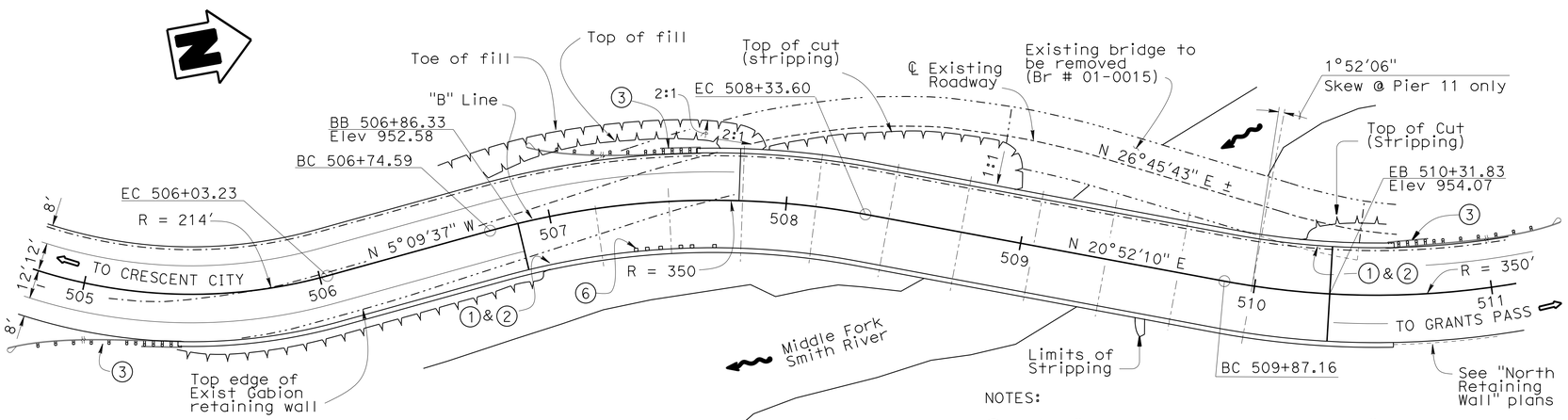

PLAN

1" = 30'

CURVE DATA

R = 214.00	R = 350.00	R = 350.00
D = 124°29'04"	D = 26°01'47"	D = 31°48'06"
T = 406.61	T = 80.90	T = 99.70
L = 464.95	L = 159.01	L = 194.27

For GENERAL NOTES, see "INDEX TO PLANS" sheet

NOTES:

1. Paint "MIDDLE FORK SMITH RIVER BRIDGE"
2. Paint "Br No. 01-0080"
3. MBGR, see "Road Plans"
4. Rock Slope Protection, see "Road Plans"
5. Bat Habitats attached to South Face of Pier Caps at Pier 6 & 11
6. Deck Drain Type D-3 (Mod)

LEGEND:

Indicates limits of reconstruct Gabion Wall

Indicates Exist structure

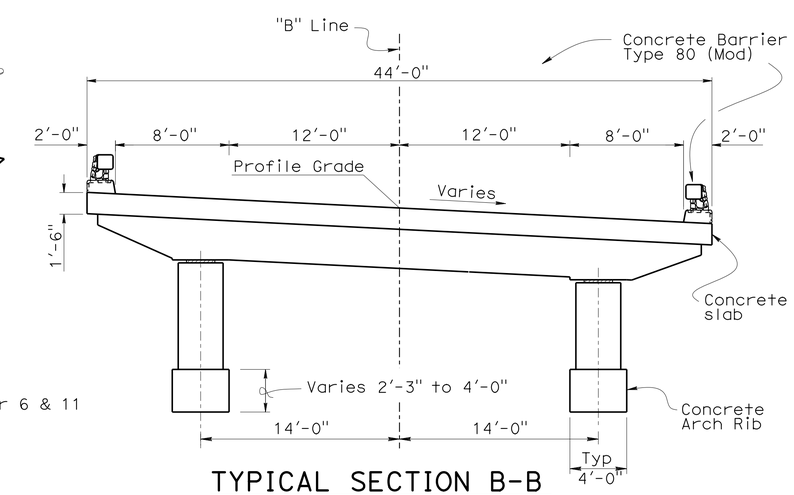

TYPICAL SECTION B-B

3/16"=1'-0"

Jeff Sims — DESIGN ENGINEER	DESIGN	BY Kevin Harper	CHECKED Kyoung Lee	LOAD & RESISTANCE FACTOR DESIGN	LIVE LOADING: HL93 AND ALTERNATIVE AND PERMIT DESIGN LOAD
	DETAILS	BY Bruno Jenko	CHECKED Kyoung Lee	LAYOUT: BY Kevin Harper	CHECKED Kyoung Lee
	QUANTITIES	BY Greg Thornton	CHECKED Vadim Shostak	SPECIFICATIONS: BY Dave Klein	PLANS AND SPECS COMPARED Dave Klein

STATE OF CALIFORNIA — DEPARTMENT OF TRANSPORTATION

DIVISION OF ENGINEERING SERVICES — STRUCTURE DESIGN — DESIGN BRANCH 1

BRIDGE NO. 01-0080 — POST MILE 24.04

MIDDLE FORK SMITH RIVER BRIDGE (REPLACE)

GENERAL PLAN

ORIGINAL SCALE IN INCHES FOR REDUCED PLANS 0 1 2 3

UNIT: 3576
PROJECT NUMBER & PHASE: 01 0000 03711 CONTRACT NO.: 01-479404

DISREGARD PRINTS BEARING EARLIER REVISION DATES

REVISION DATES: 4-6-11 — 01/07/13 — 12-10-12

SHEET 1 OF 64

USERNAME => s124436 DATE PLOTTED => 22-JUN-2013 TIME PLOTTED => 08:56

STRUCTURES DESIGN GENERAL PLAN SHEET (ENGLISH) (REV.09-01-10)

FILE => 01-0080-a-gp01.dgn

DIST	COUNTY	ROUTE	POST MILES TOTAL PROJECT	SHEET No.	TOTAL SHEETS
01	DN	199	20.3/25.9	88	184

REGISTERED CIVIL ENGINEER 3/20/13 DATE

6-24-13
PLANS APPROVAL DATE

REGISTERED PROFESSIONAL ENGINEER Kevin Harper No. 42221 Exp. 3/31/14 CIVIL STATE OF CALIFORNIA

The State of California or its officers or agents shall not be responsible for the accuracy or completeness of electronic copies of this plan sheet.

INDEX TO PLANS

1 GENERAL PLAN
2 INDEX TO PLANS
3 DECK CONTOURS
4 FOUNDATION PLAN
5 EXCAVATION AND BACKFILL LIMITS
6 MISCELLANEOUS DETAILS
7 ABUTMENT 1 LAYOUT
8 ABUTMENT 1 DETAILS NO. 1
9 ABUTMENT 1 DETAILS NO. 2
10 ABUTMENT 1 DETAILS NO. 3
11 ABUTMENT 1 DETAILS NO. 4
12 ABUTMENT 12 LAYOUT
13 ABUTMENT 12 DETAILS NO. 1
14 ABUTMENT 12 DETAILS NO. 2
15 RETAINING WALL A12 LAYOUT
16 RETAINING WALL A12 DETAILS
17 GROUND ANCHOR DETAILS
18 SOLDIER PILE WALL DETAILS
19 BARRIER TRANSITION DETAILS
20 PIER 2
21 PIER 3
22 PIER 2 & 3 DETAILS
23 PIER 4
24 PIER 4 DETAILS NO. 1
25 PIER 4 DETAILS NO. 2
26 PIER 5
27 PIER 5 DETAILS
28 PIER 6 & 11
29 PIER 6 & 11 DETAILS
30 SKEWBACK DETAILS NO. 1
31 SKEWBACK DETAILS NO. 2
32 MICROPILE DETAILS NO. 1
33 MICROPILE DETAILS NO. 2
34 ARCH RIB DETAILS
35 SPANDRAL BENTS 7, 8, 9 &10
36 TYPICAL SECTION
37 SLAB DETAILS
38 BOTTOM OF SLAB REINFORCEMENT 1 OF 2
39 BOTTOM OF SLAB REINFORCEMENT 2 OF 2
40 TOP OF SLAB REINFORCEMENT 1 OF 2
41 TOP OF SLAB REINFORCEMENT 2 OF 2
42 DRAIN DETAILS NO. 1
43 DRAIN DETAILS NO. 2
44 CONSTRUCTION SEQUENCE
45 CONCRETE BARRIER TYPE 80 (MOD) No. 1
46 CONCRETE BARRIER TYPE 80 (MOD) No. 2
47 FUTURE BICYCLE RAILING DETAILS
48 BAT HABITAT DETAILS
49 LOG OF TEST BORINGS 1 OF 16
50 LOG OF TEST BORINGS 2 OF 16
51 LOG OF TEST BORINGS 3 OF 16
52 LOG OF TEST BORINGS 4 OF 16
53 LOG OF TEST BORINGS 5 OF 16
54 LOG OF TEST BORINGS 6 OF 16
55 LOG OF TEST BORINGS 7 OF 16
56 LOG OF TEST BORINGS 8 OF 16
57 LOG OF TEST BORINGS 9 OF 16
58 LOG OF TEST BORINGS 10 OF 16
59 LOG OF TEST BORINGS 11 OF 16
60 LOG OF TEST BORINGS 12 OF 16
61 LOG OF TEST BORINGS 13 OF 16
62 LOG OF TEST BORINGS 14 OF 16
63 LOG OF TEST BORINGS 15 OF 16
64 LOG OF TEST BORINGS 16 OF 16

LEGEND:

- Structural concrete, Bridge (f'c = 3600 psi)
- Structural concrete, Bridge (f'c = 5000 psi)
- Structural concrete, Bridge (f'c = 6000 psi)
- Structural concrete, Bridge footing (f'c = 3600 psi)
- Cost-in-Drilled-Hole Concrete Pile
  f'c = 5000 psi @ 42" Ø CIDH @ Rt Col of Piers 2, 3 & 4
  f'c = 3600 psi @ all other locations
- Structural Conc, Ret Wall (f'c = 3600 psi)

STANDARD PLANS DATED MAY 2010

	A10A	ABBREVIATIONS (SHEET 1 OF 2)
	A10B	ABBREVIATIONS (SHEET 2 OF 2)
	A10F	LEGEND - SOIL (SHEET 1 OF 2)
	A10G	LEGEND - SOIL (SHEET 2 OF 2)
	A10H	LEGEND - ROCK
	A62C	LIMITS OF PAYMENT FOR EXCAVATION AND BACKFILL - BRIDGE
	B0-1	BRIDGE DETAILS
	B0-3	BRIDGE DETAILS
	B0-5	BRIDGE DETAILS
	B0-13	BRIDGE DETAILS
RSP	B3-4A	RETAINING WALL TYPE 5
RSP	B3-5	RETAINING WALL DETAILS NO. 1
	B3-6	RETAINING WALL DETAILS NO.2
	B6-21	JOINT SEALS (MAXIMUM MOVEMENT RATING = 2")
	B7-7	DECK DRAINS - TYPE D-3
RSP	B11-47	CABLE RAILING
RSP	B11-60	CONCRETE BARRIER TYPE 80 (SHEET 1 OF 2)

STANDARD PLAN SHEET NO.

DETAIL NO.

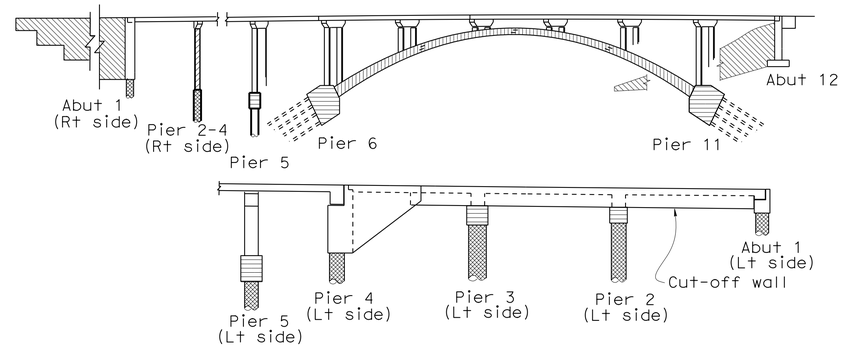

CONCRETE STRENGTH AND TYPE LIMITS

No Scale

GENERAL NOTES
LOAD AND RESISTANCE FACTOR DESIGN

DESIGN: AASHTO BRIDGE DESIGN SPECIFICATIONS, Fourth Edition with California Amendments

SEISMIC DESIGN: Caltrans Seismic Design Criteria (SDC), Version 1.6 dated Nov 2010

DEAD LOAD: Includes 35 psf for future wearing surface.

CREEP AND SHRINKAGE: CEB-FIP Model Code for Concrete Structures, 1990
Average Relative Humidity = 75%
Average ambient Temperature = 60°F

LIVE LOADING: HL-93 and Permit Design Load
2 ft level surcharge on earth retaining structures

SEISMIC LOADING: Acceleration Response Curve per Caltrans 2009 Seismic Design Procedure (SDP)

Soil Profile: $V_{S}30$ = 2500 ft/sec
Moment Magnitude: M (max) = 8.3
Peak Ground Acceleration: 0.31g

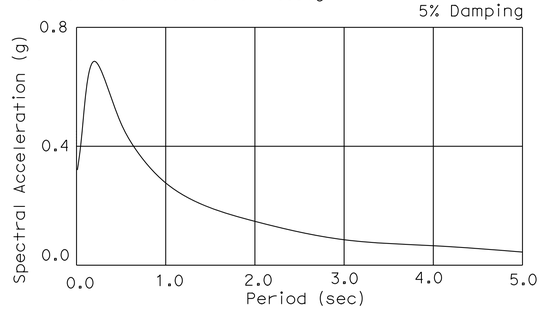

REINFORCED CONCRETE:
f_y = 60,000 psi
f'_c = 3,600 psi, 5,000 psi and 6,000 psi
n = 8, 7 and 6

MICROPILES:
HS Thread Bar: ASTM Designation A722
f_u = 150,000 psi
f_y = 120,000 psi
Casing: API N-80, f_y = 80,000 psi
Grout: f'_c = 4000 psi
Structural Steel : f_y = 50,000 psi (other than casing)

FOOTING PRESSURE:

LOCATION	ALLOWABLE (ksf)	DESIGN (ksf)
ABUTMENT 12	3.0	3.0

SOLDIER PILE RETAINING WALL: See "RETAINING WALL DESIGN NOTES" on "GROUND ANCHOR DETAILS" sheet

QUANTITIES

RECONSTRUCT GABION WALL	LUMP	SUM
BRIDGE REMOVAL	LUMP	SUM
STRUCTURE EXCAVATION (BRIDGE)	727	CY
STRUCTURE EXCAVATION (TYPE D)	595	CY
STRUCTURE EXCAVATION (SOLDIER PILE WALL)	163	CY
STRUCTURE BACKFILL (BRIDGE)	735	CY
STRUCTURE BACKFILL (SOLDIER PILE WALL)	32	CY
CONCRETE BACKFILL (SOLDIER PILE WALL)	118	CY
CONCRETE BACKFILL	112	CY
LEAN CONCRETE BACKFILL	44	CY
GROUND ANCHOR (SUBHORIZONTAL)	36	EA
TEMPORARY SUPPORT	LUMP	SUM
STEEL SOLDIER PILE (C 15 X 50)	1,820	LF
STEEL SOLDIER PILE (W 16 X 67)	259	LF
24" DRILLED HOLE	259	LF
30" DRILLED HOLE	736	LF
36" CAST-IN-DRILLED-HOLE CONCRETE PILING	100	LF
42" CAST-IN-DRILLED-HOLE CONCRETE PILING	303	LF
48" CAST-IN-DRILLED-HOLE CONCRETE PILING	24	LF
MICROPILE	55	EA
STRUCTURAL CONCRETE, BRIDGE FOOTING	355	CY
STRUCTURAL CONCRETE, BRIDGE	1,258	CY
STRUCTURAL CONCRETE, RETAINING WALL	182	CY
STRUCTURAL CONCRETE, BARRIER SLAB	75	CY
RANDOM ROCK TEXTURE	4,300	SQFT
JOINT SEAL (MR½")	20	LF
JOINT SEAL (MR 1½")	20.5	LF
JOINT SEAL (MR 2")	40.5	LF
JOINT SEAL (TYPE AL)	3	LF
BAR REINFORCING STEEL (BRIDGE)	350,200	LB
BAR REINFORCING STEEL (RETAINING WALL)	16,200	LB
BAR REINFORCING STEEL (EPOXY COATED)	94,025	LB
BAR REINFORCING STEEL (BARRIER SLAB) (EPOXY COATED)	8,170	LB
BAR REINFORCING STEEL (GALVANIZED)	670	LB
TIMBER LAGGING	19	MFBM
PREPARE AND STAIN CONCRETE	4,300	SQFT
GEOCOMPOSITE DRAIN	620	SQFT
MINOR CONCRETE (GUTTER) (CY)	4	CY
ISOLATION CASING	1,555	LB
MISCELLANEOUS METAL (BRIDGE)	438	LB
BRIDGE DECK DRAINAGE SYSTEM	780	LB
BAT HABITAT	4	EA
CABLE RAILING (MODIFIED)	77	LF
CONCRETE BARRIER (TYPE 80 MODIFIED)	818	LF

	BY	CHECKED
DESIGN	K. Harper / E. Watson	Kyoung Lee
DETAILS	Bruno Jenko	Kyoung Lee
QUANTITIES	Greg Thornton	Vadim Shostak

STATE OF CALIFORNIA
DEPARTMENT OF TRANSPORTATION

DIVISION OF ENGINEERING SERVICES
STRUCTURE DESIGN
DESIGN BRANCH 1

BRIDGE NO. 01-0080
POST MILE 24.04

MIDDLE FORK SMITH RIVER BRIDGE (REPLACE)
INDEX TO PLANS

STRUCTURES DESIGN DETAIL SHEET (ENGLISH) (REV. 09-01-10)

ORIGINAL SCALE IN INCHES FOR REDUCED PLANS 0 1 2 3

UNIT: 3576
PROJECT NUMBER & PHASE: 01 0000 03711
CONTRACT NO.: 01-479404

DISREGARD PRINTS BEARING EARLIER REVISION DATES

REVISION DATES 11/02/12 03/18/13 2-28-13

SHEET 2 OF 64

FILE => 01-0080-a-itp.dgn

USERNAME => s124496 DATE PLOTTED => 22-JUN-2013 TIME PLOTTED => 05:56

DIST	COUNTY	ROUTE	POST MILES TOTAL PROJECT	SHEET No.	TOTAL SHEETS
01	DN	199	20.3/25.9	89	184

REGISTERED CIVIL ENGINEER 3/20/13 DATE

6-24-13
PLANS APPROVAL DATE

REGISTERED PROFESSIONAL ENGINEER Kevin Harper No. 42221 Exp. 3/31/14 CIVIL STATE OF CALIFORNIA

The State of California or its officers or agents shall not be responsible for the accuracy or completeness of electronic copies of this plan sheet.

NOTES:

× - Indicates 5'-0" intervals along station line

Contours do not include camber

Contour interval = 0.10'

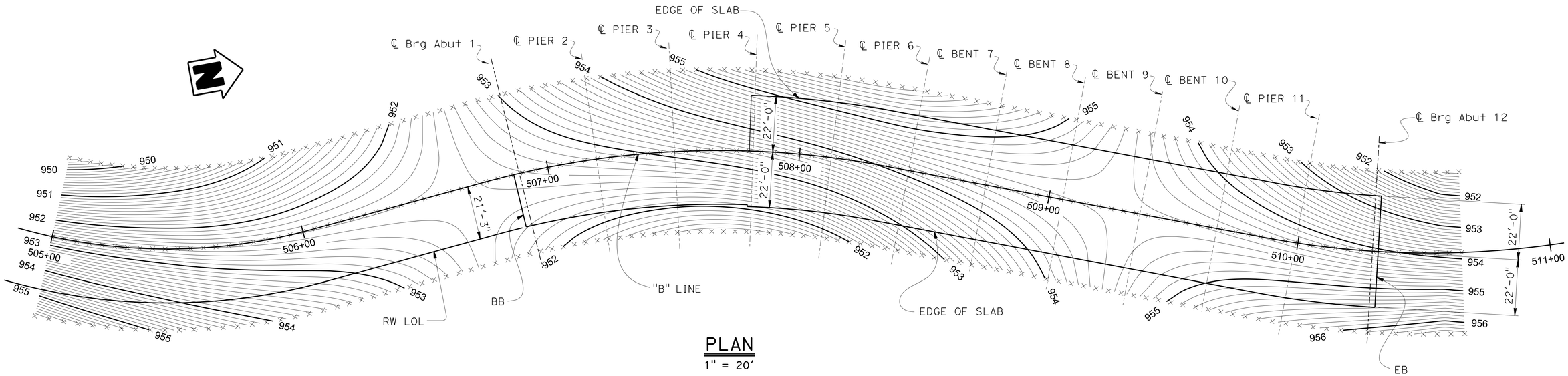

PLAN

1" = 20'

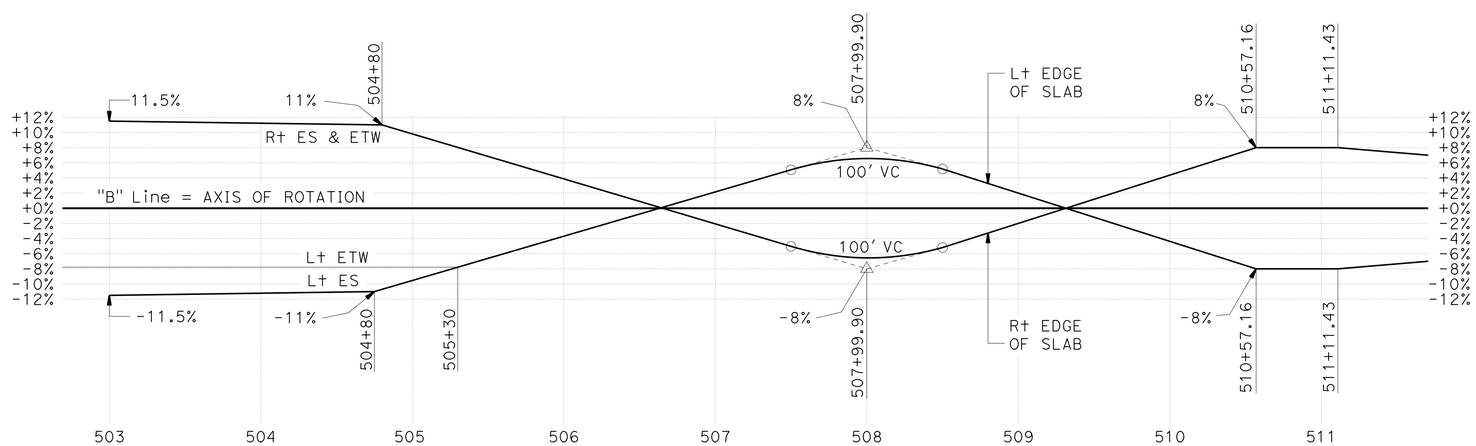

SUPERELEVATION DIAGRAM

NO SCALE

DESIGN	BY Kevin Harper	CHECKED Kyoung Lee	
DETAILS	BY Bob Huddleston	CHECKED Kyoung Lee	
QUANTITIES	BY Greg Thornton	CHECKED Vadim Shostak	

STATE OF CALIFORNIA
DEPARTMENT OF TRANSPORTATION

DIVISION OF ENGINEERING SERVICES
STRUCTURE DESIGN
DESIGN BRANCH 1

BRIDGE NO. 01-0080
POST MILE 24.04

MIDDLE FORK SMITH RIVER BRIDGE (REPLACE)

DECK CONTOURS

STRUCTURES DESIGN DETAIL SHEET (ENGLISH) (REV. 09-01-10)

ORIGINAL SCALE IN INCHES FOR REDUCED PLANS 0 1 2 3

UNIT: 3576
PROJECT NUMBER & PHASE: 01 0000 03711 CONTRACT NO.: 01-479404

DISREGARD PRINTS BEARING EARLIER REVISION DATES

REVISION DATES 03-23-12 01-08-13 1-30-13

SHEET 3 OF 64

FILE => 01-0080-d-dc01.dgn

USERNAME => s124496 DATE PLOTTED => 22-JUN-2013 TIME PLOTTED => 05:56

DIST	COUNTY	ROUTE	POST MILES TOTAL PROJECT	SHEET No.	TOTAL SHEETS
01	DN	199	20.3/25.9	90	184

Kevin J. Harper 3/20/13
REGISTERED CIVIL ENGINEER DATE

6-24-13
PLANS APPROVAL DATE

REGISTERED PROFESSIONAL ENGINEER Kevin Harper No. 42221 Exp. 3/31/14 CIVIL STATE OF CALIFORNIA

The State of California or its officers or agents shall not be responsible for the accuracy or completeness of electronic copies of this plan sheet.

PILE DATA TABLE

Support Location	Pile Type	Nominal Resistance Compression (kips)	Nominal Resistance Tension (kips)	Cut-off Elevation (ft)	Design Tip Elevation (ft)	Specified Elevation (ft)
Abutment 1 Lt	42" CIDH	720	0	N/A	922.0 (a)	922.0
Abutment 1 Rt	42" CIDH	720	0	N/A	900.0 (a) 908.0 (c)	900.0
Pier 2 Lt Bearing Support	36" CIDH	640	0	N/A	918.0 (a)	918.0
Pier 2 Rt Column	42" CIDH	1200	0	925.0	890.0 (a) 910.0 (c)	890.0
Pier 3 Lt Bearing Support	48" CIDH	600	0	N/A	920.0 (a)	920.0
Pier 3 Rt Column	42" CIDH	1160	0	918.0	880.0 (a) 903.0 (c)	880.0
Pier 4 Lt Bearing Support	36" CIDH	880	0	N/A	905.0 (a)	905.0
Pier 4 Rt Column	42" CIDH	1440	0	924.0	880.0 (a) 908.0 (c)	880.0
Pier 5	42" CIDH	2220	200	N/A	855.0 (a) 904.9 (b) 906.0 (c)	855.0
Pier 6	Micropile	640	200	*	*	*
Pier 11	Micropile	640	200	*	*	*

NOTES:

1. Design Tip elevations are controlled by:
   (a) Compression, (b) Tension, (c) Lateral Load

* Inclined Micropile cut-off end Tip elevation vary, see "MICROPILE DETAILS NO. 1" sheet.

HYDROLOGIC / HYDRAULIC SUMMARY

Total Drainage Basin Area: 76.9 square miles

	Design Flood	Base Flood	Overtopping Flood
Frequency, years	50	100	N/A
Discharge, cubic feet per second (cfs)	22,900	25,900	N/A
Water Surface Elevation at Bridge *, feet	943.0	945.6	N/A

Flood plain data are based upon information available when the plans were prepared and are shown to meet federal requirements. The accuracy of said information is not warranted by the State and interested or affected parties should make their own investigation.

CURVE DATA

No.	R	Δ	T	L
Ⓐ	214.00	124°29'04"	406.61	464.95
Ⓑ	350.00	26°01'47"	80.90	159.01
Ⓒ	350.00	31°48'06"	99.70	194.27

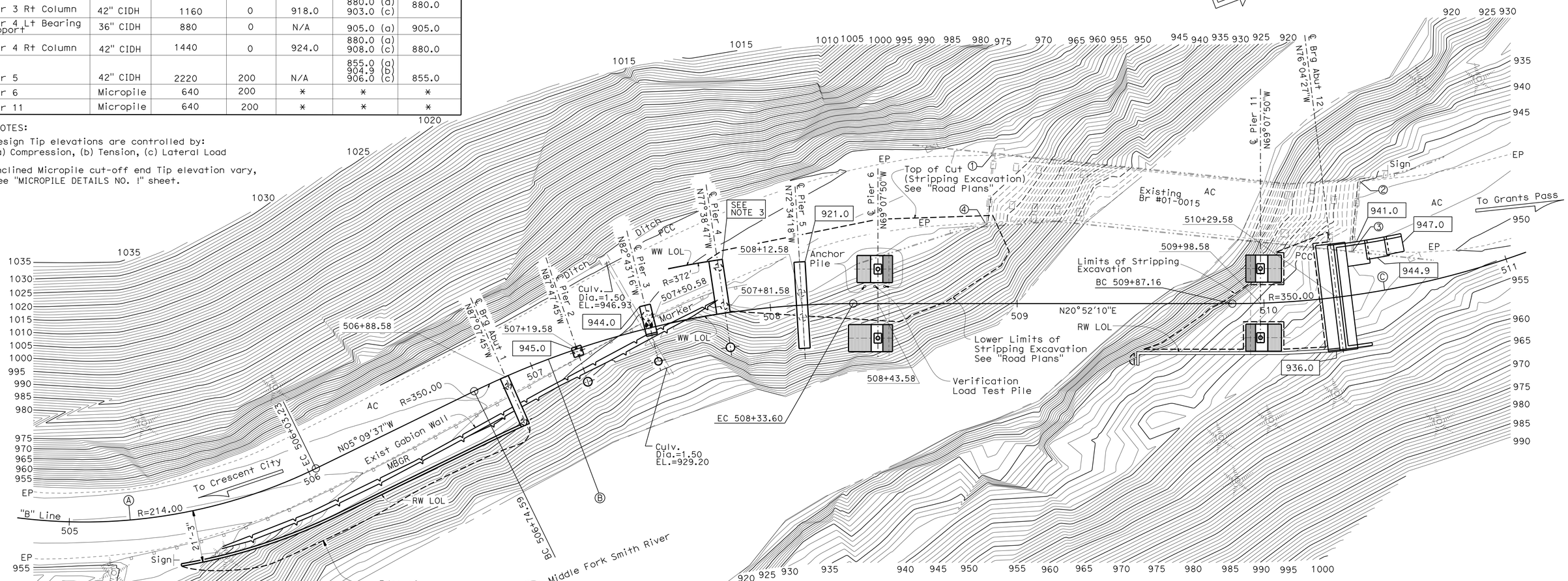

Bridge Location #01-0080 (Calculated)

① 60.17 Lt. "B" Line, Sta 508+89.76, EL.=947.21±
② 45.01 Lt. "B" Line, Sta 510+46.91, EL.=947.68±
③ 17.72 Lt. "B" Line, Sta 510+38.85, EL.=949.00±
④ 32.82 Lt. "B" Line, Sta 508+86.94, EL.=946.95±

SURVEY CONTROL

DN199-24.00 (Not Shown)

Fnd 2¼" Brass Disk, Stamped "EG"
31.02 Rt. "A" Line, ℄ Rte 199
Sta. 504+41.62
N 2,572,846.34
E 6,064,048.03
EL.=958.76

DN199-24.20 (Not Shown)

Fnd 1½" Alum. cap on ¾" Rebar
25.31 Rt. "A" Line, ℄ Rte 199
Sta. 515+01.76
N 2,573,897.92
E 6,064,118.92
EL.=960.50

NOTES:

1. For footing elevation of Pier 4, see "PIER 4" sheet.
2. For footing elevation of Pier 6 & 11, see "SKEWBACK DETAILS NO. 1" sheet
3. For footing elevation of Abut 1, see "ABUTMENT 1 DETAILS NO. 1" sheet.
4. For details of stripping excavation not shown, see "EXCAVATION AND BACKFILL LIMITS" sheet.

LEGEND:

---- - indicates stripping limits
⊕ or ⊕ - indicates CIDH pile
▭ - indicates bottom of footing Elev

PRELIMINARY INVESTIGATION SECTION

SCALE	VERT.DATUM NAVD 88	PHOTOGRAMMETRY AS OF: X			
1"=20'	HORZ.DATUM NAD83	SURVEYED	BY District	CHECKED	BY Tim Schmalz 05/2011
ALIGNMENT TIES Dist. Traverse Sheet		DRAFTED	BY Sharon Zheng 05/2011	CHECKED	BY Chris Fassett 05/2011

	BY	CHECKED
DESIGN	K. Harper / E. Watson	Kyoung Lee
DETAILS	B.Jenko / B.Huddleston	Kyoung Lee
QUANTITIES	Greg Thornton	Vadim Shostak

STATE OF CALIFORNIA
DEPARTMENT OF TRANSPORTATION

DIVISION OF ENGINEERING SERVICES
STRUCTURE DESIGN
DESIGN BRANCH 1

BRIDGE NO. 01-0080
POST MILE 24.04

MIDDLE FORK SMITH RIVER BRIDGE (REPLACE)
FOUNDATION PLAN

STRUCTURES FOUNDATION PLAN SHEET (ENGLISH) (REV. 09-01-10)

ORIGINAL SCALE IN INCHES FOR REDUCED PLANS 0 1 2 3

UNIT: 3646
PROJECT NUMBER & PHASE: 01 0000 03711 CONTRACT NO.: 01-479404

DISREGARD PRINTS BEARING EARLIER REVISION DATES

REVISION DATES: 05-26-11 3-18-13 2-22-13

SHEET 4 OF 64

FILE => 01-0080-ee-fpi01.dgn

DIST	COUNTY	ROUTE	POST MILES TOTAL PROJECT	SHEET No.	TOTAL SHEETS
01	DN	199	20.3/25.9	91	184

REGISTERED CIVIL ENGINEER 3/20/13 DATE

6-24-13
PLANS APPROVAL DATE

REGISTERED PROFESSIONAL ENGINEER Kevin Harper No. 42221 Exp. 3/31/14 CIVIL STATE OF CALIFORNIA

The State of California or its officers or agents shall not be responsible for the accuracy or completeness of electronic copies of this plan sheet.

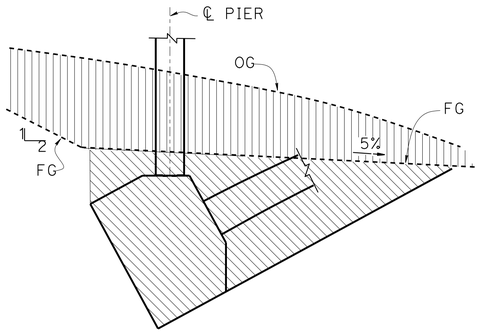

SKEWBACK 6L & 11R

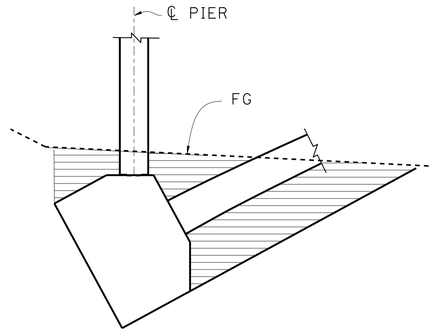

SKEWBACK 6L & 11R

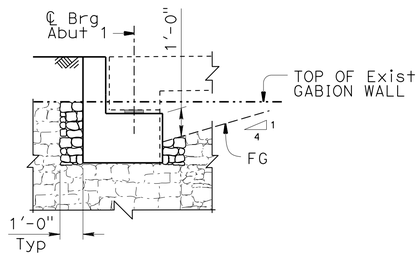

NOTE: For details at piers, see "PIER 2" and "PIER 3" sheets.

LIMITS OF PAYMENT FOR RECONSTRUCT GABION WALL

NO SCALE

LEGEND:

- Indicates Stripping Excavation, see "Road Plans"
- Indicates Structure Excavation
- Indicates Structure Excavation (Type D)
- Indicates Structure Backfill
- Indicates Class 1, Type B Permeable Backfill
- Indicates Reconstruct Gabion Wall

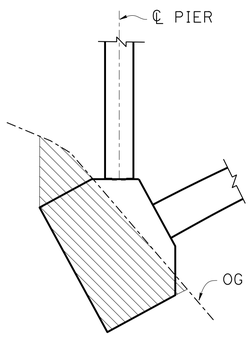

SKEWBACK 6R & 11L

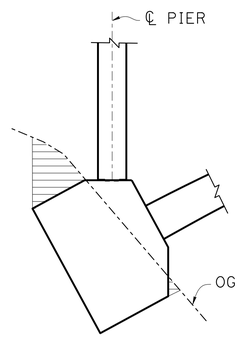

SKEWBACK 6R & 11L

SKEWBACK PAY LIMITS

NO SCALE

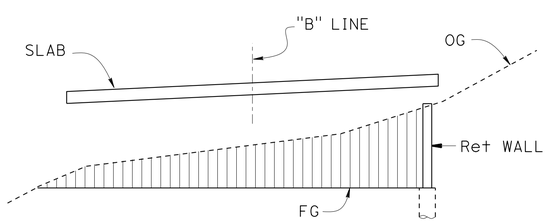

SECTION AT STRIPPING NEAR ABUT

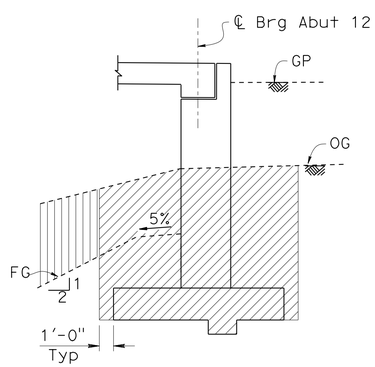

SECTION THROUGH ABUTMENT

ABUTMENT 12 PAY LIMITS

NO SCALE

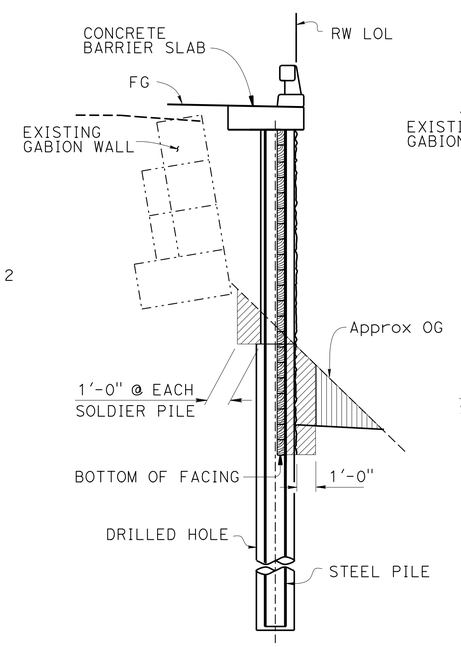

STRUCTURE EXCAVATION

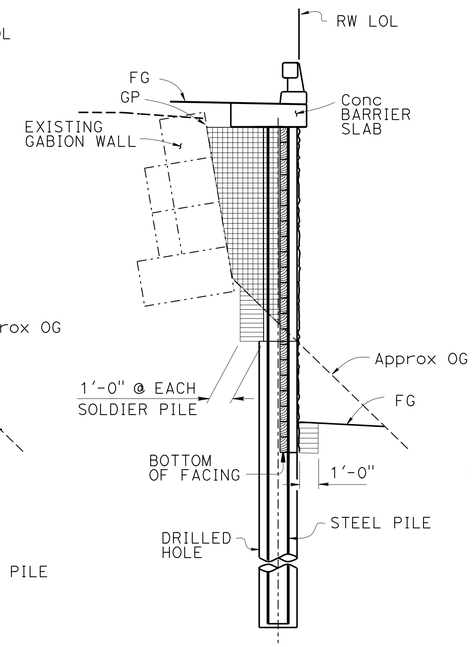

STRUCTURE BACKFILL

ABUTMENT 1 SOLDIER PILE WALL PAY LIMITS

NO SCALE

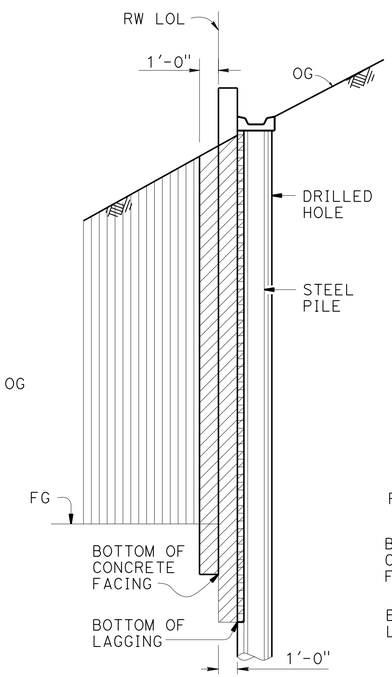

STRUCTURE EXCAVATION

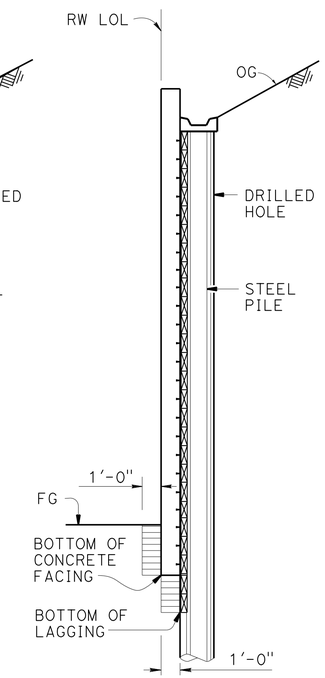

STRUCTURE BACKFILL

ABUTMENT 12 SOLDIER PILE WALL PAY LIMITS

NO SCALE

DESIGN	BY K. Harper / E. Watson	CHECKED Kyoung Lee	
DETAILS	BY B.Jenko / B.Huddleston	CHECKED Kyoung Lee	
QUANTITIES	BY G. Thornton / E. Watson	CHECKED V. Shostak / D. Sessions	

STATE OF CALIFORNIA
DEPARTMENT OF TRANSPORTATION

DIVISION OF ENGINEERING SERVICES
STRUCTURE DESIGN
DESIGN BRANCH 1

BRIDGE NO. 01-0080
POST MILE 24.04

MIDDLE FORK SMITH RIVER BRIDGE (REPLACE)
EXCAVATION AND BACKFILL LIMITS

STRUCTURES DESIGN DETAIL SHEET (ENGLISH) (REV. 09-01-10)

ORIGINAL SCALE IN INCHES FOR REDUCED PLANS 0 1 2 3

UNIT: 3576
PROJECT NUMBER & PHASE: 01 0000 03711 CONTRACT NO.: 01-479404

DISREGARD PRINTS BEARING EARLIER REVISION DATES

REVISION DATES 04-05-12 2-22-13 1-30-13

SHEET 5 OF 64

FILE => 01-0080-e-excav01.dgn

USERNAME => s124496 DATE PLOTTED => 22-JUN-2013 TIME PLOTTED => 05:56

DIST	COUNTY	ROUTE	POST MILES TOTAL PROJECT	SHEET No.	TOTAL SHEETS
01	DN	199	20.3/25.9	92	184

Kevin J. Harper 3/20/13
REGISTERED CIVIL ENGINEER DATE

6-24-13
PLANS APPROVAL DATE

REGISTERED PROFESSIONAL ENGINEER Kevin Harper No. 42221 Exp. 3/31/14 CIVIL STATE OF CALIFORNIA

The State of California or its officers or agents shall not be responsible for the accuracy or completeness of scanned copies of this plan sheet.

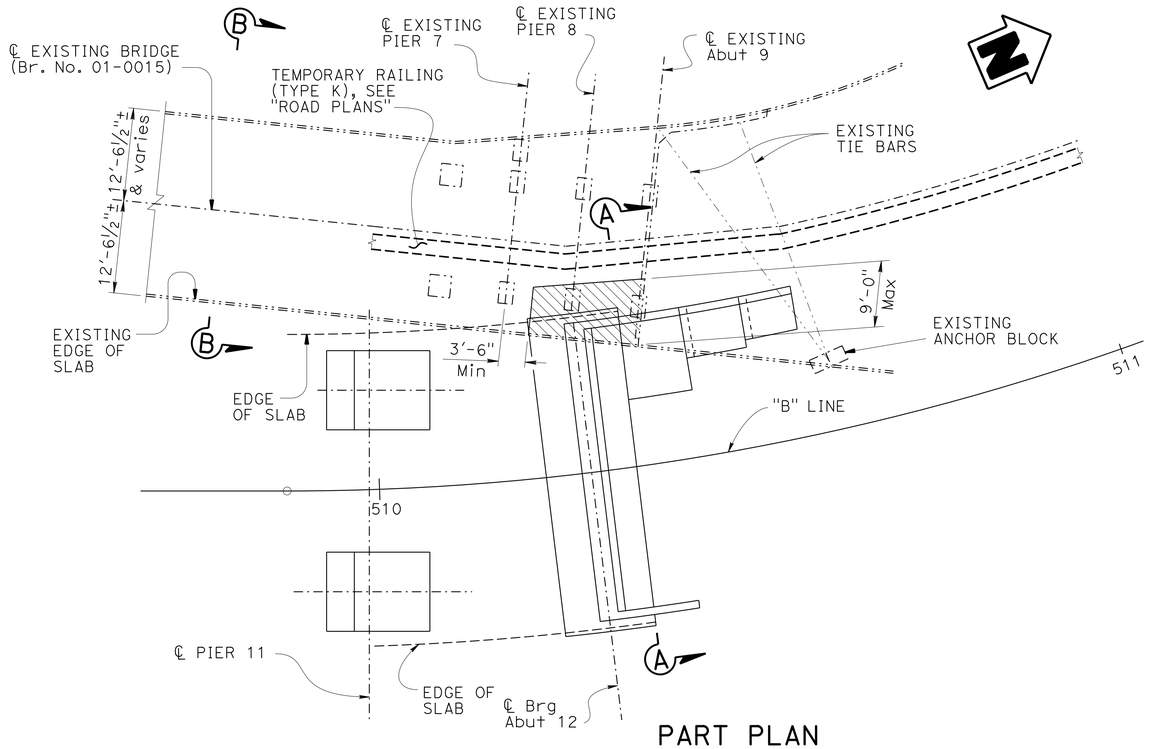

PART PLAN

1" = 10'

TEMPORARY SUPPORT NOTES

1. Temporary Support Reaction, R = 84 kips @ Pier 8 and 74 kips @ Abut 9.
2. Temporary Support Reaction, R, includes Dead Load, Live Load and Impact (Service Load).
3. The temporary support shall be designed to resist a lateral seismic load of 12 kips @ Pier 8 and 10 kips @ Abut 9 applied parallel to ℄ of the existing pier or abutment (Service Load).
4. Existing support shown @ Abut 9, Pier 8 similar.

LEGEND:

Indicates approximate limits of Stage 1 Bridge Removal

Indicates existing structure

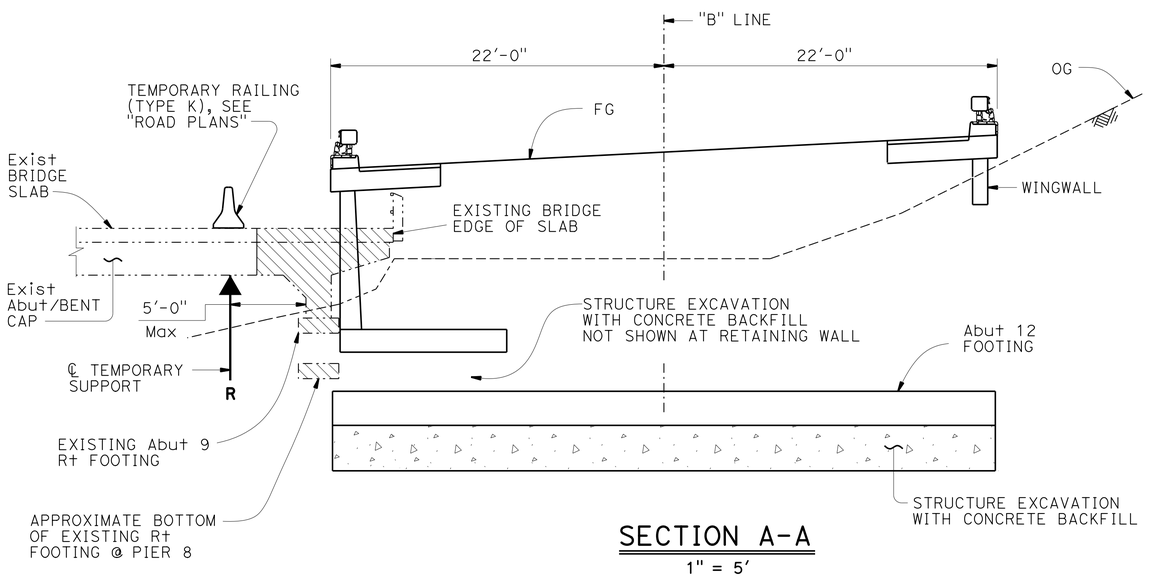

SECTION A-A

1" = 5'

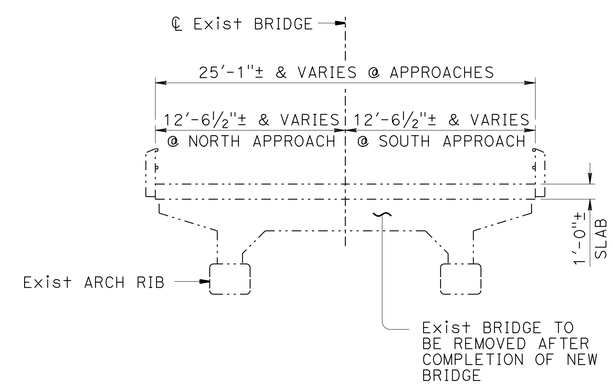

SECTION B-B

1" = 5'

	BY	CHECKED
DESIGN	Kevin Harper	Kyoung Lee
DETAILS	F.Rashedi / B.Huddleston	Kyoung Lee
QUANTITIES	Greg Thornton	Vadim Shostak

STATE OF CALIFORNIA
DEPARTMENT OF TRANSPORTATION

DIVISION OF ENGINEERING SERVICES
STRUCTURE DESIGN
DESIGN BRANCH 1

BRIDGE NO. 01-0080
POST MILE 24.04

MIDDLE FORK SMITH RIVER BRIDGE (REPLACE)
MISCELLANEOUS DETAILS

STRUCTURES DESIGN DETAIL SHEET (ENGLISH) (REV. 09-01-10)

ORIGINAL SCALE IN INCHES FOR REDUCED PLANS 0 1 2 3

UNIT: 3576
PROJECT NUMBER & PHASE: 01 0000 03711 CONTRACT NO.: 01-479404

DISREGARD PRINTS BEARING EARLIER REVISION DATES

REVISION DATES 11-19-12 03-20-13 11-26-13

SHEET 6 OF 64

FILE => 01-0080-e-miscdt.dgn

USERNAME => s124496 DATE PLOTTED => 22-JUN-2013 TIME PLOTTED => 05:56

DIST	COUNTY	ROUTE	POST MILES TOTAL PROJECT	SHEET No.	TOTAL SHEETS
01	DN	199	20.3/25.9	93	184

REGISTERED CIVIL ENGINEER 3/20/13 DATE

6-24-13
PLANS APPROVAL DATE

REGISTERED PROFESSIONAL ENGINEER Kevin Harper No. 42221 Exp. 3/31/14 CIVIL STATE OF CALIFORNIA

The State of California or its officers or agents shall not be responsible for the accuracy or completeness of electronic copies of this plan sheet.

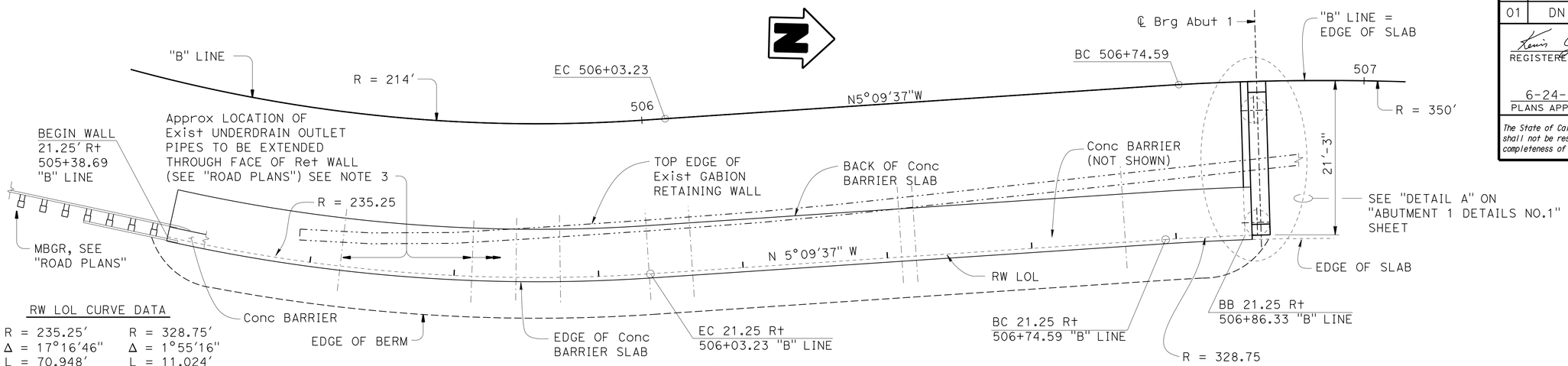

RW LOL CURVE DATA

R = 235.25'	R = 328.75'
Δ = 17°16'46"	Δ = 1°55'16"
L = 70.948'	L = 11.024'
T = 35.745'	T = 5.512'

PLAN

1/8" = 1'-0"

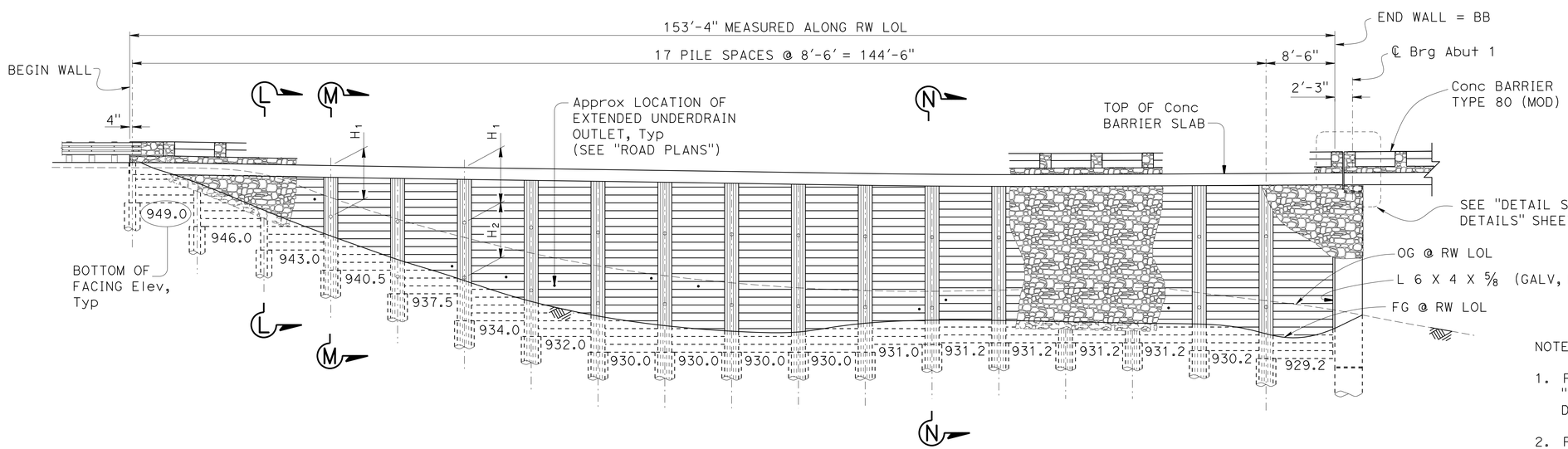

PILE NO.	1	2	3	4	5	6	7	8	9	10	11	12	13	14	15	16	17	18
PILE LENGTH	28'	28'	45'	45'	45'	45'	50'	50'	50'	50'	50'	50'	50'	50'	50'	50'	50'	50'
H_1				6'-0"	7'-0"	7'-0"	7'-6"	8'-0"	8'-0"	8'-0"	8'-0"	8'-0"	8'-0"	8'-0"	8'-0"	8'-0"	8'-0"	8'-0"
H_2					7'-0"	7'-0"	8'-0"	9'-0"	9'-0"	9'-0"	9'-0"	9'-0"	9'-0"	9'-0"	9'-0"	9'-0"	9'-0"	9'-0"

DEVELOPED ABUTMENT RIGHT SIDE ELEVATION

1/8" = 1'-0"

NOTES:

1. For "SECTION L-L", "SECTION M-M" & "SECTION N-N", see "ABUTMENT 1 DETAILS NO. 3" sheet.
2. For additional wall details, see "ABUTMENT 1 DETAILS NO. 4", "GROUND ANCHOR DETAILS" and "SOLDIER PILE WALL DETAILS" sheets.
3. Actual number and location of existing underdrains to be determined in the field.

LEGEND:

- • Indicates approximate underdrain location in "ELEVATION"
- ◦ Indicates ground anchor location in "ELEVATION"

	BY	CHECKED
DESIGN	Eric Watson	Kevin Harper
DETAILS	B.Jenko / B.Huddleston	Kevin Harper
QUANTITIES	Eric Watson	Greg Thornton

STATE OF CALIFORNIA
DEPARTMENT OF TRANSPORTATION

DIVISION OF ENGINEERING SERVICES
STRUCTURE DESIGN
DESIGN BRANCH 1

BRIDGE NO. 01-0080
POST MILE 24.04

MIDDLE FORK SMITH RIVER BRIDGE (REPLACE)

ABUTMENT 1 LAYOUT

STRUCTURES DESIGN DETAIL SHEET (ENGLISH) (REV. 09-01-10)

ORIGINAL SCALE IN INCHES FOR REDUCED PLANS 0 1 2 3

UNIT: 3576
PROJECT NUMBER & PHASE: 01000003711
CONTRACT NO.: 01-479404

DISREGARD PRINTS BEARING EARLIER REVISION DATES

REVISION DATES 1-18-12 03-20-13 03/06/13

SHEET 7 OF 64

FILE => 01-0080-f-a01_lo.dgn

USERNAME => s124496 DATE PLOTTED => 22-JUN-2013 TIME PLOTTED => 05:56

DIST	COUNTY	ROUTE	POST MILES TOTAL PROJECT	SHEET No.	TOTAL SHEETS
01	DN	199	20.3/25.9	94	184

REGISTERED CIVIL ENGINEER 3/20/13 DATE

6-24-13
PLANS APPROVAL DATE

REGISTERED PROFESSIONAL ENGINEER Kevin Harper No. 42221 Exp. 3/31/14 CIVIL STATE OF CALIFORNIA

The State of California or its officers or agents shall not be responsible for the accuracy or completeness of electronic copies of this plan sheet.

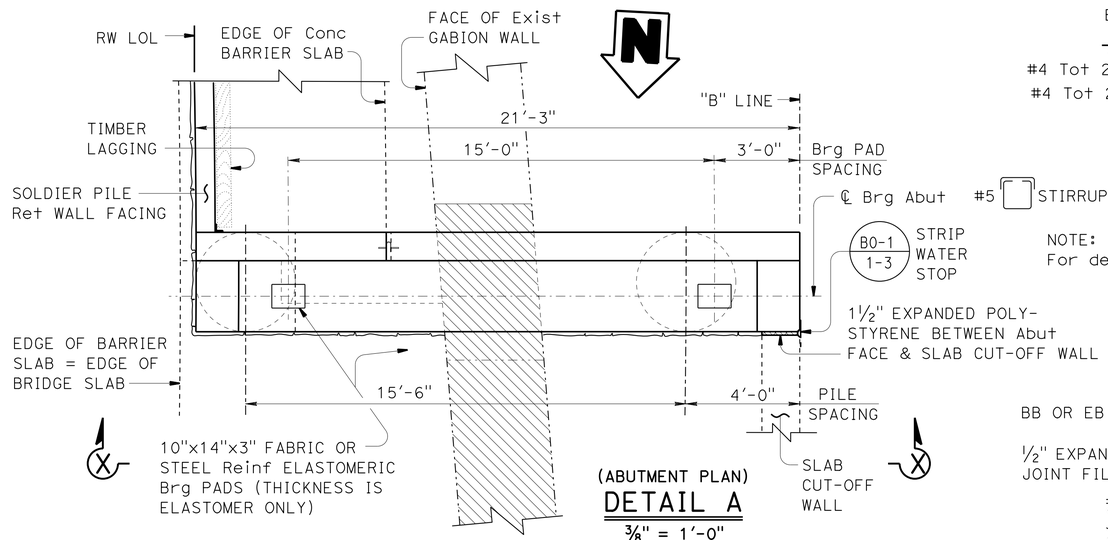

(ABUTMENT PLAN)
DETAIL A
⅜" = 1'-0"

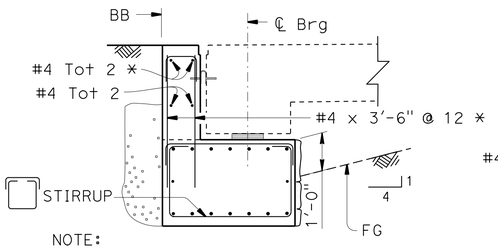

NOTE:
For details not shown, see "SECTION B-B".

SECTION H-H
½"-1'-0"

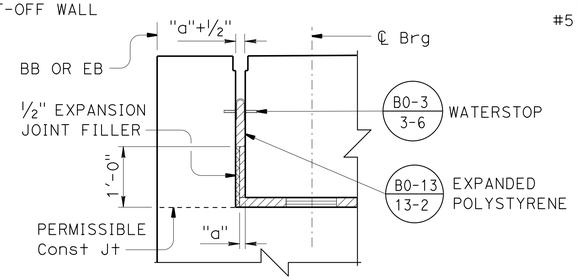

JOINT DETAIL
NO SCALE

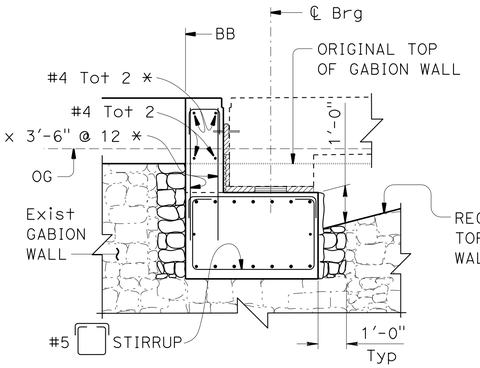

NOTE:
For details not shown, see "SECTION B-B".

SECTION C-C
½"-1'-0"

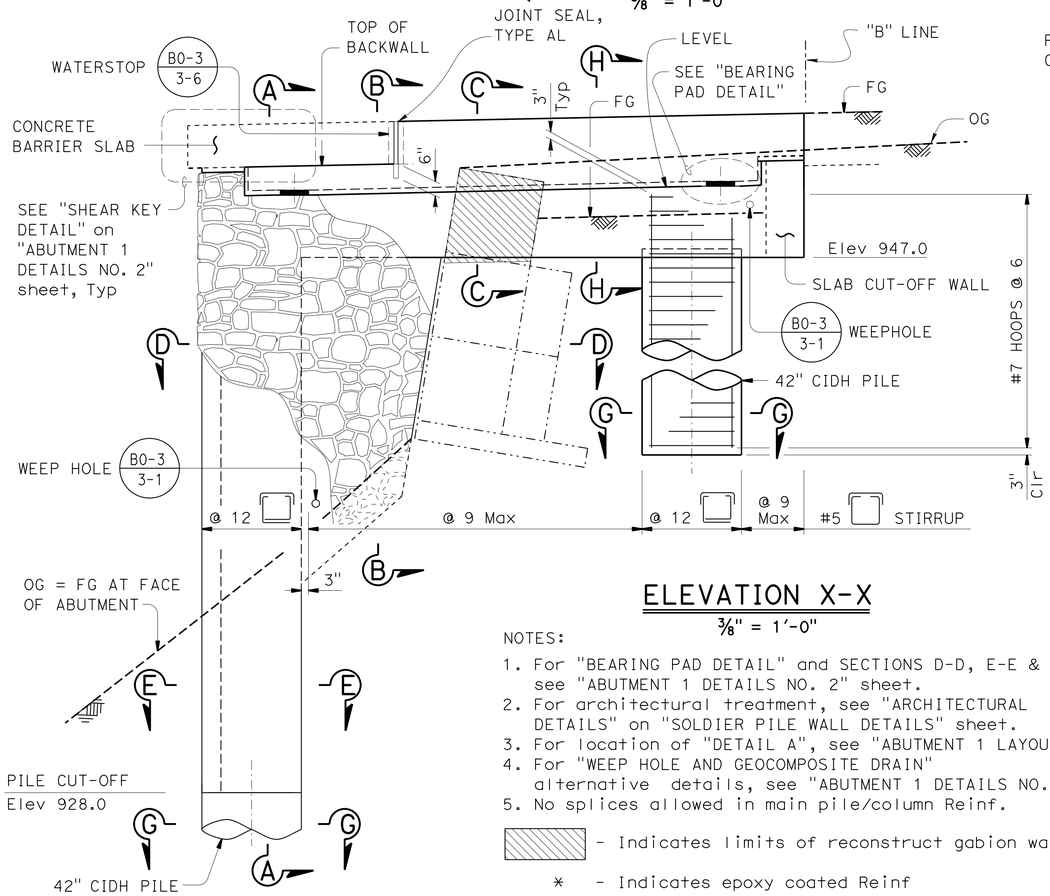

ELEVATION X-X
⅜" = 1'-0"

NOTES:
1. For "BEARING PAD DETAIL" and SECTIONS D-D, E-E & G-G, see "ABUTMENT 1 DETAILS NO. 2" sheet.
2. For architectural treatment, see "ARCHITECTURAL DETAILS" on "SOLDIER PILE WALL DETAILS" sheet.
3. For location of "DETAIL A", see "ABUTMENT 1 LAYOUT" sheet.
4. For "WEEP HOLE AND GEOCOMPOSITE DRAIN" alternative details, see "ABUTMENT 1 DETAILS NO. 2" sheet.
5. No splices allowed in main pile/column Reinf.

▨ - Indicates limits of reconstruct gabion wall

* - Indicates epoxy coated Reinf

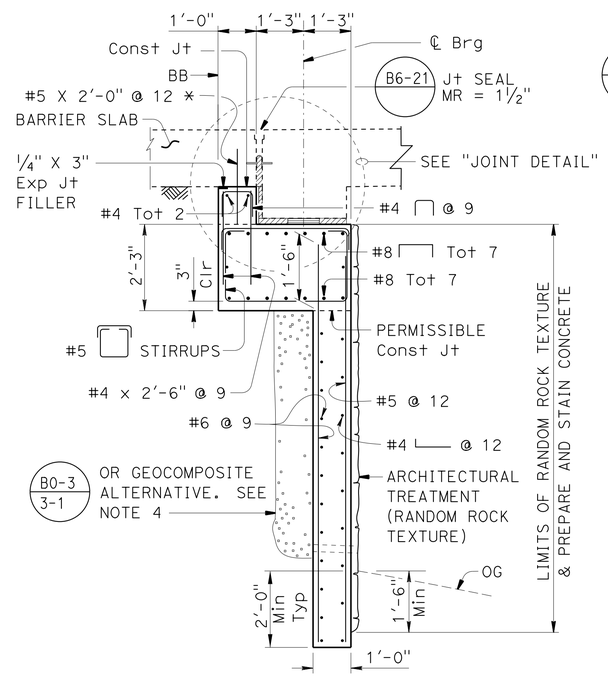

SECTION B-B
½"-1'-0"

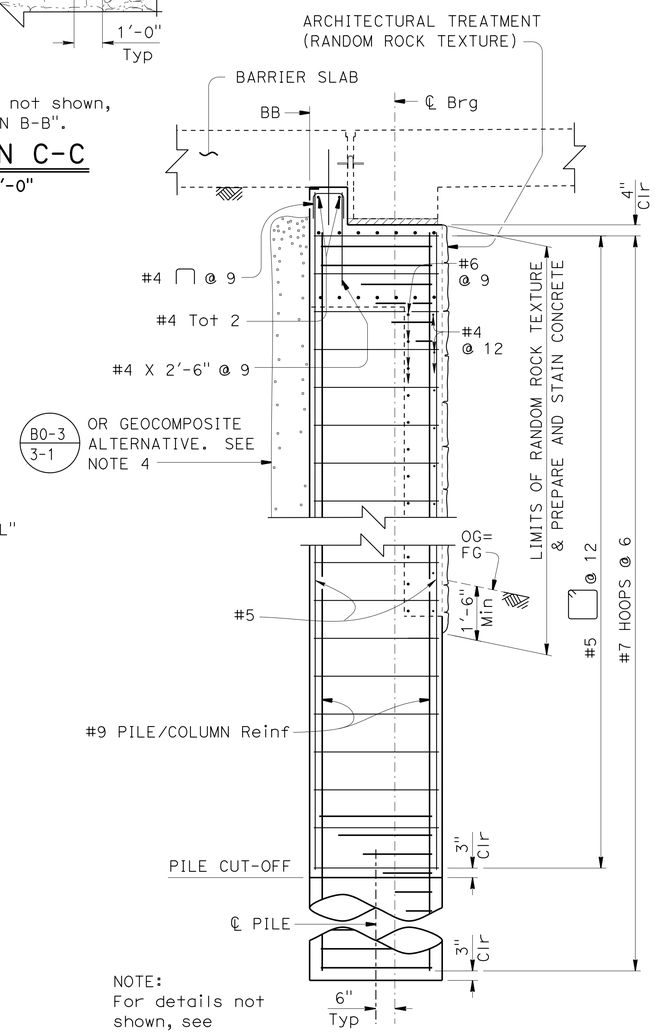

NOTE:
For details not shown, see "SECTION B-B"

SECTION A-A
½"=1'-0"

DESIGN	BY Eric Watson	CHECKED Kevin Harper	
DETAILS	BY B.Jenko / B.Huddleston	CHECKED Kevin Harper	
QUANTITIES	BY Eric Watson	CHECKED Greg Thornton	

STATE OF CALIFORNIA
DEPARTMENT OF TRANSPORTATION

DIVISION OF ENGINEERING SERVICES
STRUCTURE DESIGN
DESIGN BRANCH 1

BRIDGE NO. 01-0080
POST MILE 24.04

MIDDLE FORK SMITH RIVER BRIDGE (REPLACE)
ABUTMENT 1 DETAILS NO. 1

STRUCTURES DESIGN DETAIL SHEET (ENGLISH) (REV. 09-01-10)

ORIGINAL SCALE IN INCHES FOR REDUCED PLANS 0 1 2 3

UNIT: 3576
PROJECT NUMBER & PHASE: 01000003711
CONTRACT NO.: 01-479404

DISREGARD PRINTS BEARING EARLIER REVISION DATES

REVISION DATES 2-1-12 3-18-13 03/20/13

SHEET 8 OF 64

FILE => 01-0080-f-a01dt1.dgn

USERNAME => s124496 DATE PLOTTED => 22-JUN-2013 TIME PLOTTED => 05:56

DIST	COUNTY	ROUTE	POST MILES TOTAL PROJECT	SHEET No.	TOTAL SHEETS
01	DN	199	20.3/25.9	95	184

REGISTERED CIVIL ENGINEER 3/20/13 DATE

6-24-13
PLANS APPROVAL DATE

REGISTERED PROFESSIONAL ENGINEER Kevin Harper No. 42221 Exp. 3/31/14 CIVIL STATE OF CALIFORNIA

The State of California or its officers or agents shall not be responsible for the accuracy or completeness of electronic copies of this plan sheet.

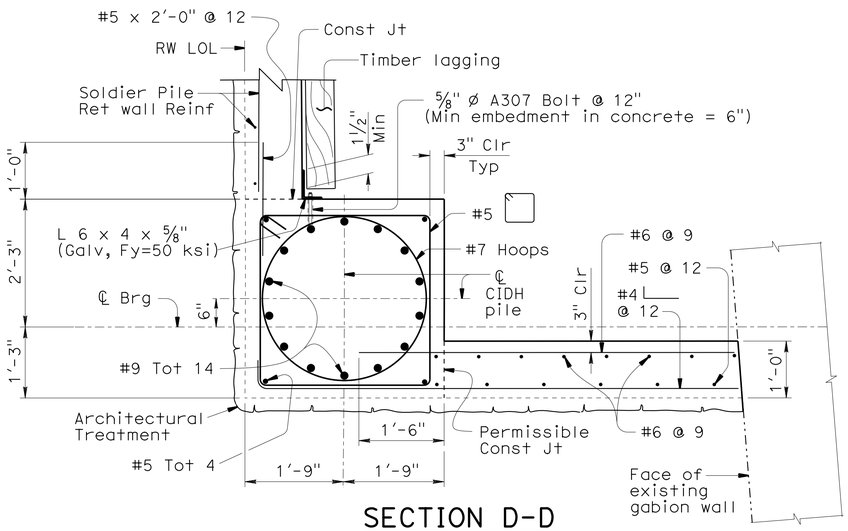

SECTION D-D

3/4"=1'-0"

NOTES:

1. All hoops are "Ultimate Butt" spliced continuous.
2. For locations of "SECTIONS D-D, E-E, & G-G", see "ABUTMENT 1 DETAILS NO. 1" sheet.

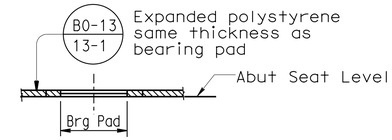

BEARING PAD DETAIL

No Scale

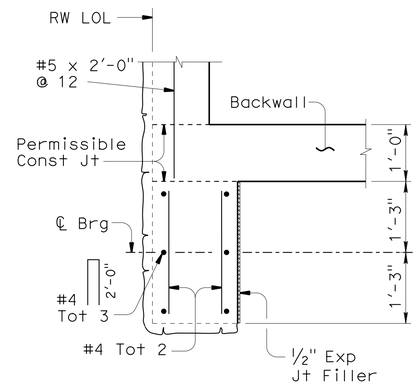

SECTION J-J

3/4"=1'-0"

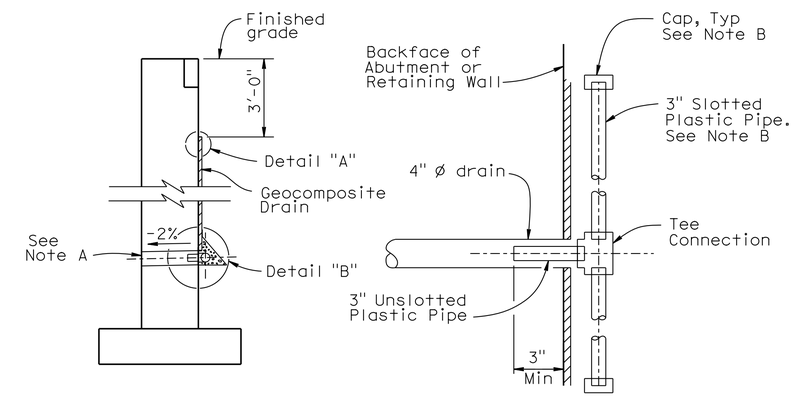

WALL SECTION

SECTION A-A

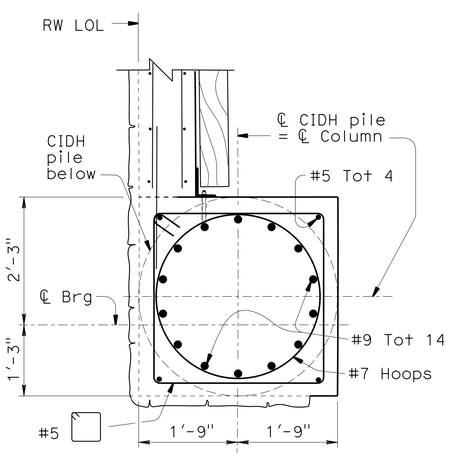

Note:
For details not shown, see "SECTION D-D"

SECTION E-E

3/4"=1'-0"

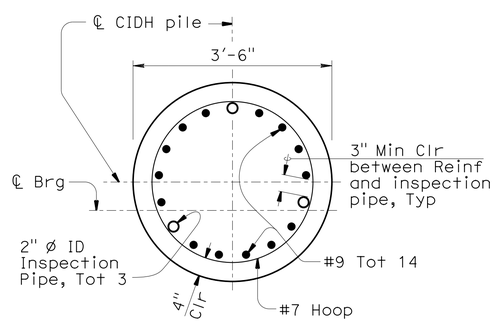

SECTION G-G

3/4"=1'-0"

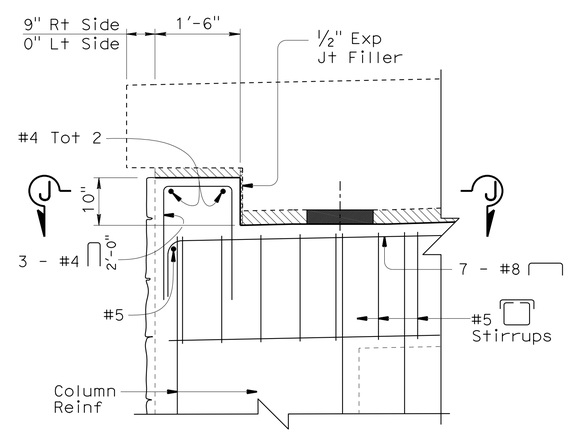

Note: Rt side shown, Lt side similar

SHEAR KEY DETAIL

3/4"=1'-0"

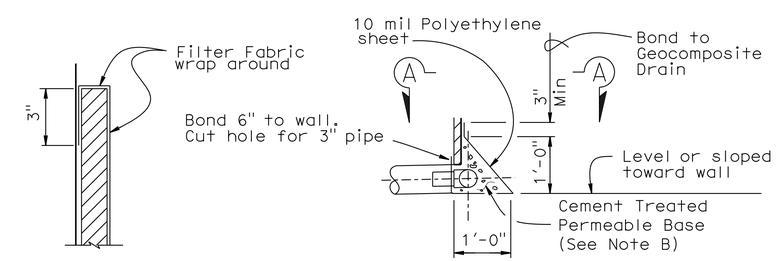

DETAIL "A"

DETAIL "B"

WEEP HOLE AND GEOCOMPOSITE DRAIN

ALTERNATIVE TO BRIDGE DETAIL B0-3 / 3-1

Notes:

A. 4" ø drains @ 25'-0" Max center to center. Exposed wall drains shall be located 3"± above finished grade.

B. Geocomposite drain, cement treated permeable base, and 3" ø slotted plastic pipe continuous behind retaining wall or abutment. Cap ends of pipe. Provide "Tee" connection at each 4" ø drain.

DESIGN	BY Eric Watson	CHECKED Kevin Harper	
DETAILS	BY B.Jenko / B.Huddleston	CHECKED Kevin Harper	
QUANTITIES	BY Eric Watson	CHECKED Greg Thornton	

STATE OF CALIFORNIA
DEPARTMENT OF TRANSPORTATION

DIVISION OF ENGINEERING SERVICES
STRUCTURE DESIGN
DESIGN BRANCH 1

BRIDGE NO. 01-0080
POST MILE 24.04

MIDDLE FORK SMITH RIVER BRIDGE (REPLACE)

ABUTMENT 1 DETAILS NO. 2

STRUCTURES DESIGN DETAIL SHEET (ENGLISH) (REV. 09-01-10)

ORIGINAL SCALE IN INCHES FOR REDUCED PLANS 0 1 2 3

UNIT: 3576
PROJECT NUMBER & PHASE: 01000003711
CONTRACT NO.: 01-479404

DISREGARD PRINTS BEARING EARLIER REVISION DATES

REVISION DATES 2-1-12 03-20-13 3-18-13

SHEET 9 OF 64

FILE => 01-0080-f-a01dt2.dgn

USERNAME => s124496 DATE PLOTTED => 22-JUN-2013 TIME PLOTTED => 05:56

DIST	COUNTY	ROUTE	POST MILES TOTAL PROJECT	SHEET No.	TOTAL SHEETS
01	DN	199	20.3/25.9	96	184

REGISTERED CIVIL ENGINEER — DATE 3/20/13

6-24-13
PLANS APPROVAL DATE

REGISTERED PROFESSIONAL ENGINEER — Kevin Harper — No. 42221 — Exp. 3/31/14 — CIVIL — STATE OF CALIFORNIA

The State of California or its officers or agents shall not be responsible for the accuracy or completeness of electronic copies of this plan sheet.

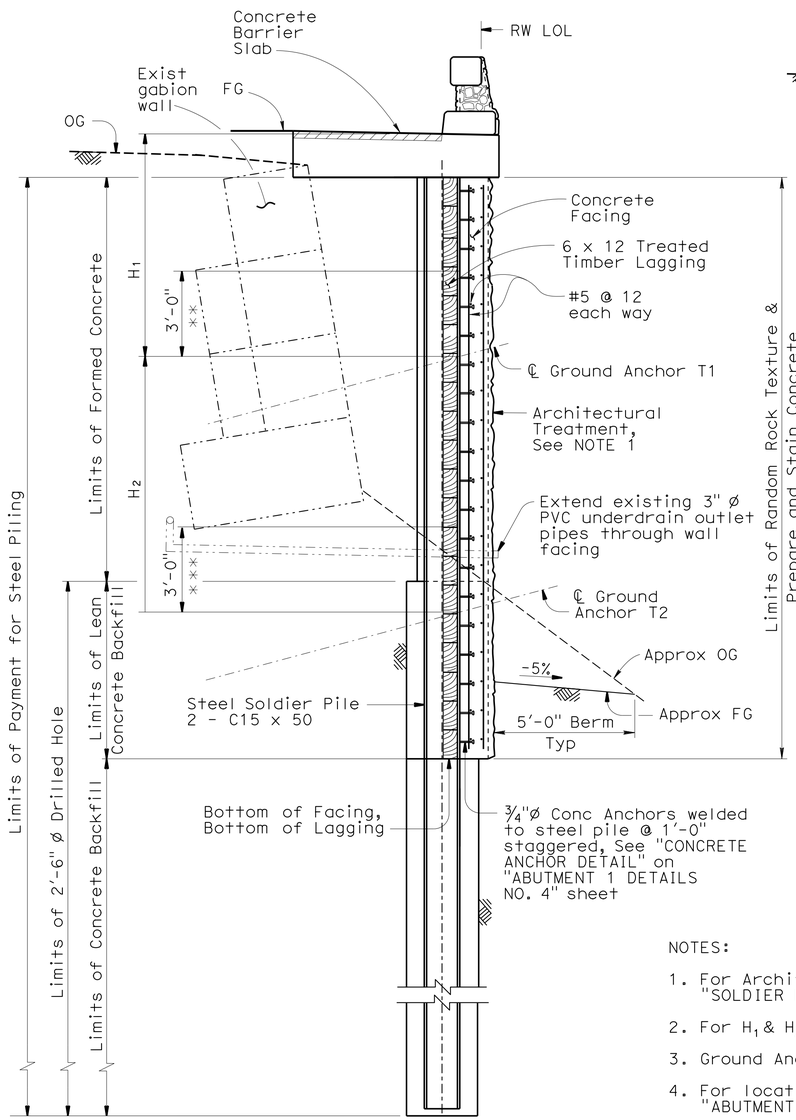

(Typical for Pile No. 5-18)

SECTION N-N

⅜" = 1'-0"

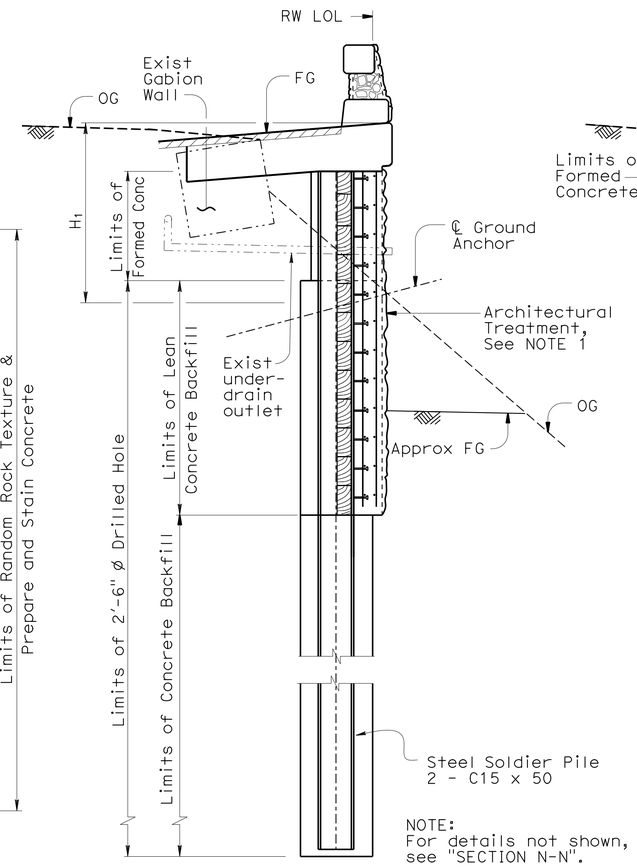

NOTE:
For details not shown, see "SECTION N-N".

(Pile No. 4)

SECTION M-M

⅜" = 1'-0"

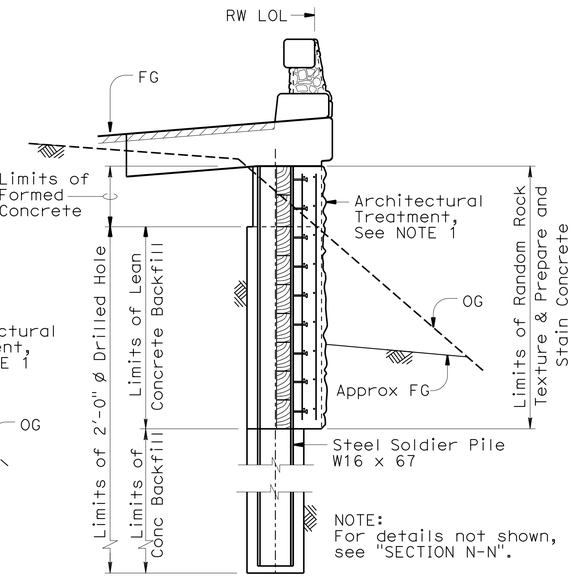

NOTE:
For details not shown, see "SECTION N-N".

(Typical for Pile No. 1-3)

SECTION L-L

⅜" = 1'-0"

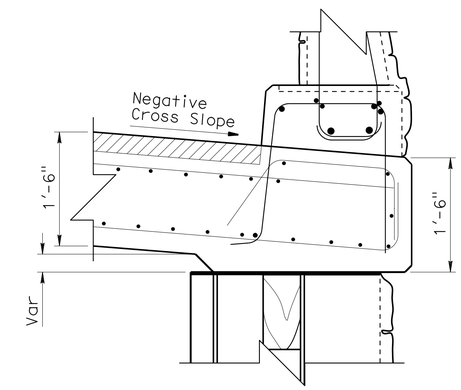

DETAIL X

1" = 1'-0"

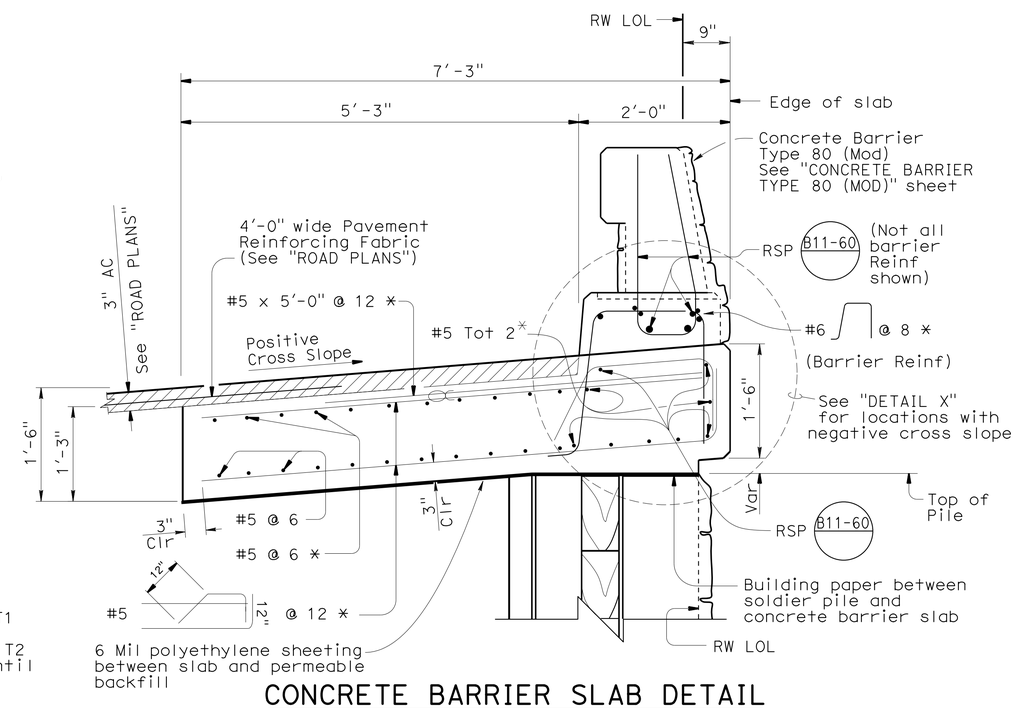

CONCRETE BARRIER SLAB DETAIL

1" = 1'-0"

NOTES:

1. For Architectural Treatment, see "ARCHITECTURAL DETAILS" on "SOLDIER PILE WALL DETAILS" sheet.
2. For H_1 & H_2 dimensions, see "ABUTMENT 1 LAYOUT" sheet.
3. Ground Anchor T2 shall be installed prior to Ground Anchor T1.
4. For location of sections and additional notes, see "ABUTMENT 1 LAYOUT" sheet.

LEGEND:

—·—·—	Indicates existing structure (Gabion Wall)
*	Indicates epoxy coated reinforcement
* *	Indicates level of backfill prior to stressing Ground Anchor T1
* * *	Indicates Min height of soil prior to stressing Ground Anchor T2 If backfill required, do not backfill above dimension shown until ground anchor is locked off
⌒	Indicates bundled bars

	BY	CHECKED
DESIGN	Eric Watson	Kevin Harper
DETAILS	B.Jenko / B.Huddleston	Kevin Harper
QUANTITIES	Eric Watson	D.Sessions / V.Shostak

STATE OF CALIFORNIA
DEPARTMENT OF TRANSPORTATION

DIVISION OF ENGINEERING SERVICES
STRUCTURE DESIGN
DESIGN BRANCH 1

BRIDGE NO. 01-0080
POST MILE 24.04

MIDDLE FORK SMITH RIVER BRIDGE (REPLACE)

ABUTMENT 1 DETAILS NO. 3

STRUCTURES DESIGN DETAIL SHEET (ENGLISH) (REV. 09-01-10)

ORIGINAL SCALE IN INCHES FOR REDUCED PLANS 0 1 2 3

UNIT: 3576
PROJECT NUMBER & PHASE: 01000003711
CONTRACT NO.: 01-479404

DISREGARD PRINTS BEARING EARLIER REVISION DATES

REVISION DATES 1-18-12 03-20-13 3-18-13

SHEET 10 OF 64

USERNAME => s124496 DATE PLOTTED => 22-JUN-2013 TIME PLOTTED => 05:57

FILE => 01-0080-f-a01d+3.dgn

DIST	COUNTY	ROUTE	POST MILES TOTAL PROJECT	SHEET No.	TOTAL SHEETS
01	DN	199	20.3/25.9	97	184

REGISTERED CIVIL ENGINEER 3/20/13 DATE

6-24-13
PLANS APPROVAL DATE

REGISTERED PROFESSIONAL ENGINEER Kevin Harper No. 42221 Exp. 3/31/14 CIVIL STATE OF CALIFORNIA

The State of California or its officers or agents shall not be responsible for the accuracy or completeness of electronic copies of this plan sheet.

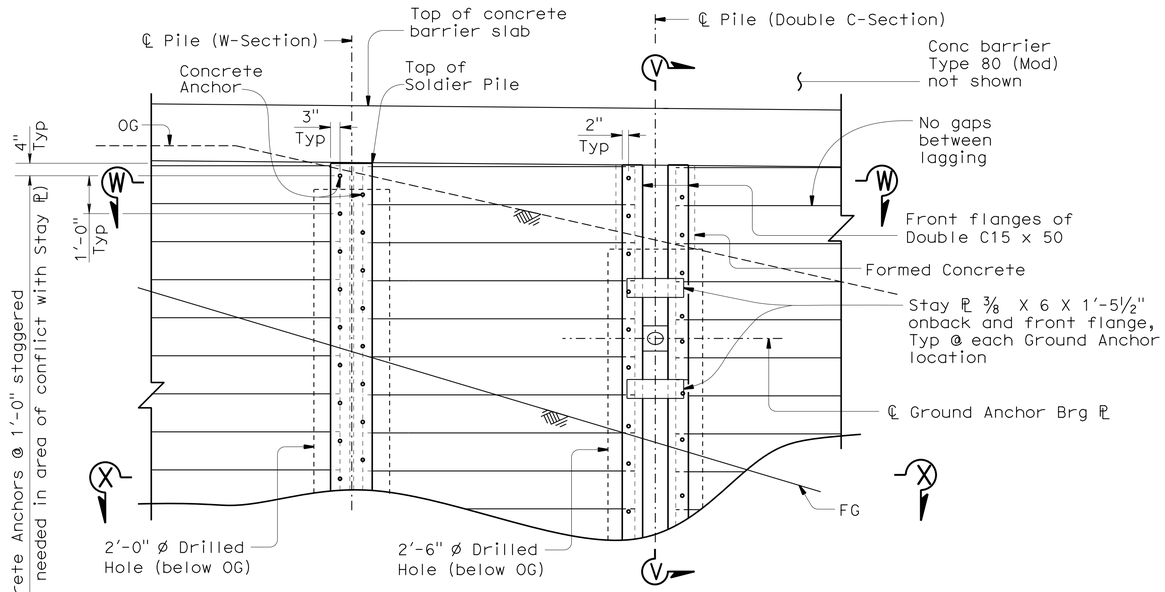

PART ELEVATION

½"=1'-0"

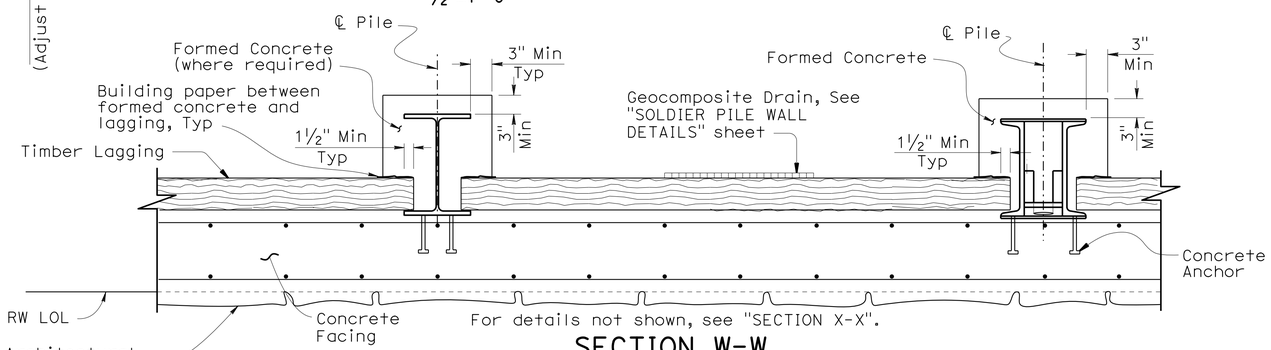

SECTION W-W

1" = 1'-0"

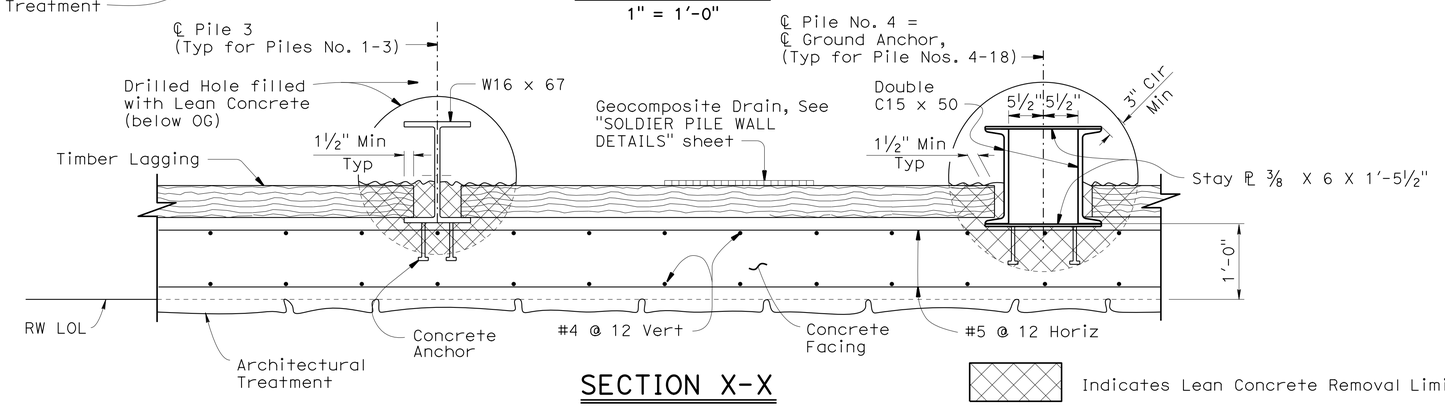

SECTION X-X

1" = 1'-0"

Indicates Lean Concrete Removal Limits

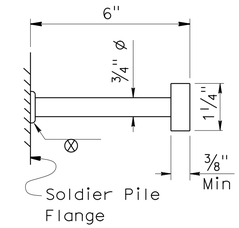

CONCRETE ANCHOR DETAIL

NO SCALE

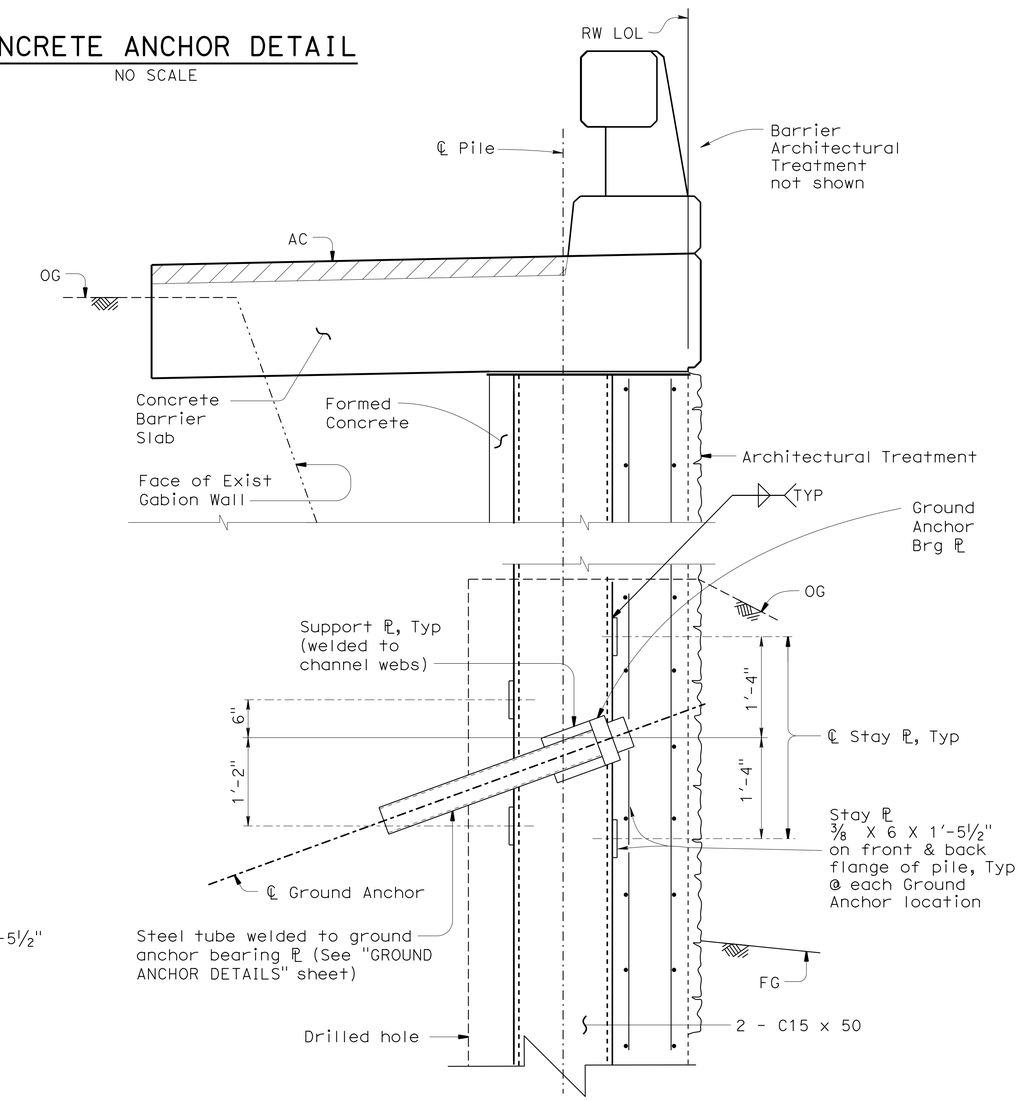

SECTION V-V

1" = 1'-0"

DESIGN	BY Eric Watson	CHECKED Kevin Harper	
DETAILS	BY B.Jenko / B.Huddleston	CHECKED Kevin Harper	
QUANTITIES	BY Eric Watson	CHECKED Greg Thornton	

STATE OF CALIFORNIA DEPARTMENT OF TRANSPORTATION

DIVISION OF ENGINEERING SERVICES STRUCTURE DESIGN DESIGN BRANCH 1

BRIDGE NO. 01-0080 POST MILE 24.04

MIDDLE FORK SMITH RIVER BRIDGE (REPLACE)

ABUTMENT 1 DETAILS NO. 4

STRUCTURES DESIGN DETAIL SHEET (ENGLISH) (REV. 09-01-10)

ORIGINAL SCALE IN INCHES FOR REDUCED PLANS 0 1 2 3

UNIT: 3576
PROJECT NUMBER & PHASE: 01000003711 CONTRACT NO.: 01-479404

DISREGARD PRINTS BEARING EARLIER REVISION DATES

REVISION DATES 1-18-12 3-18-13 3-19-13

SHEET 11 OF 64

FILE => 01-0080-f-a01d14.dgn

USERNAME => s124496 DATE PLOTTED => 22-JUN-2013 TIME PLOTTED => 05:57

DIST	COUNTY	ROUTE	POST MILES TOTAL PROJECT	SHEET No.	TOTAL SHEETS
01	DN	199	20.3/25.9	98	184

REGISTERED CIVIL ENGINEER 3/20/13 DATE

6-24-13
PLANS APPROVAL DATE

REGISTERED PROFESSIONAL ENGINEER Kevin Harper No. 42221 Exp. 3/31/14 CIVIL STATE OF CALIFORNIA

The State of California or its officers or agents shall not be responsible for the accuracy or completeness of electronic copies of this plan sheet.

NOTES:
1. For "SHEAR KEY DETAIL", see "ABUTMENT 12 DETAILS NO. 1" sheet.
2. For "BEARING PAD DETAIL", see "PIER 4 DETAILS NO. 2" sheet.

LEGEND:
* - Indicates epoxy coated reinforcement

⌒ - Indicates bundled bars

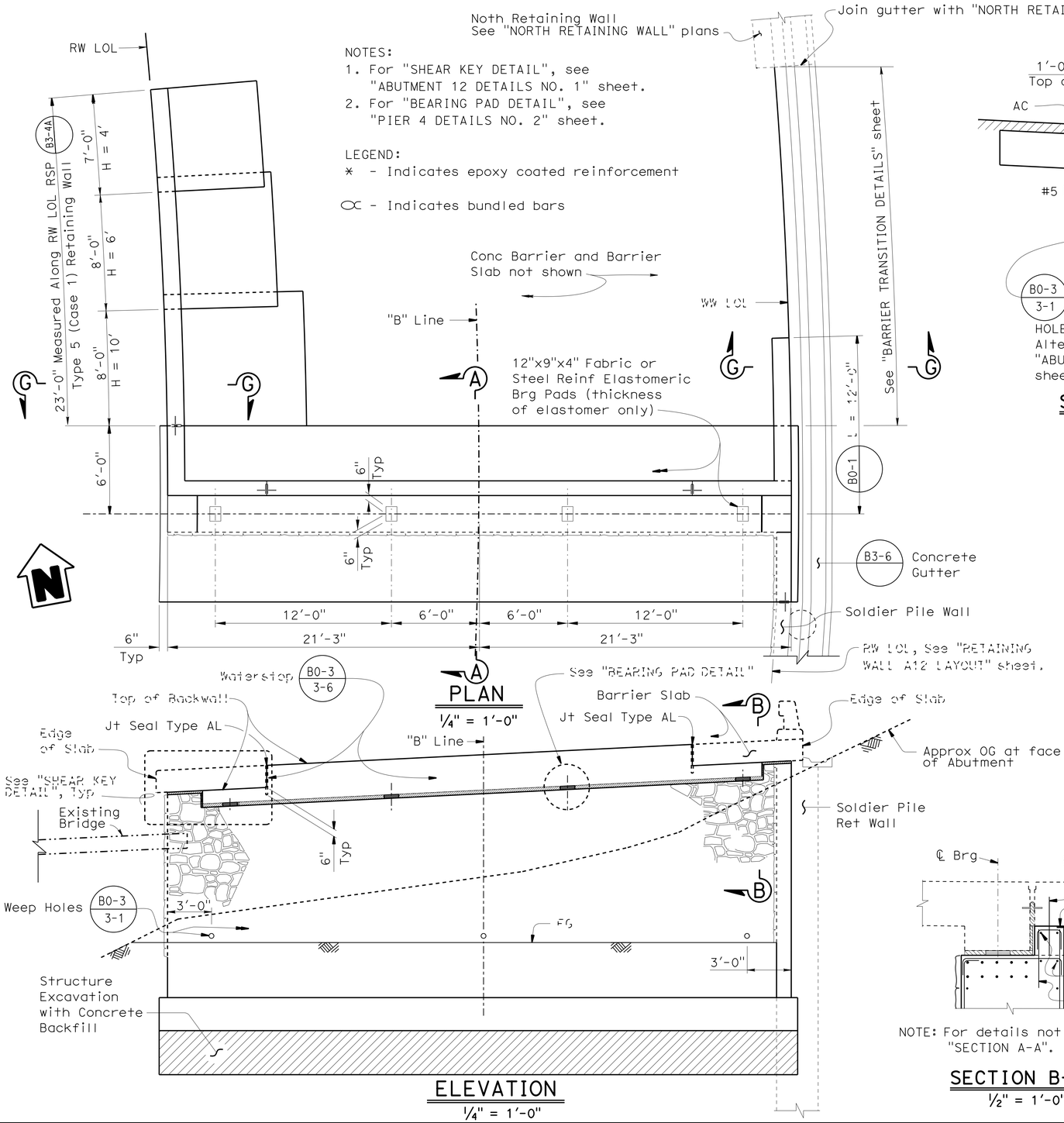

ELEVATION
1/4" = 1'-0"

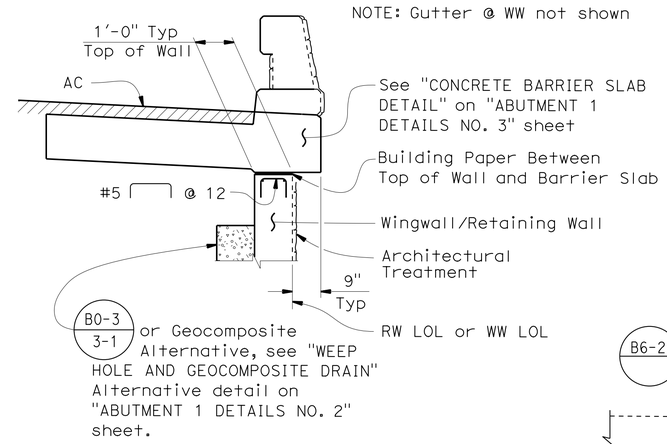

SECTION G-G
1/2" = 1'-0"

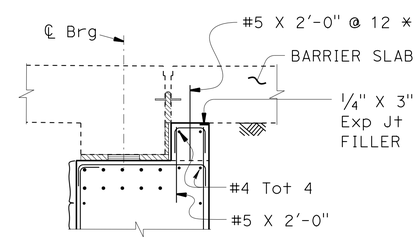

NOTE: For details not shown, see "SECTION A-A".

SECTION B-B
1/2" = 1'-0"

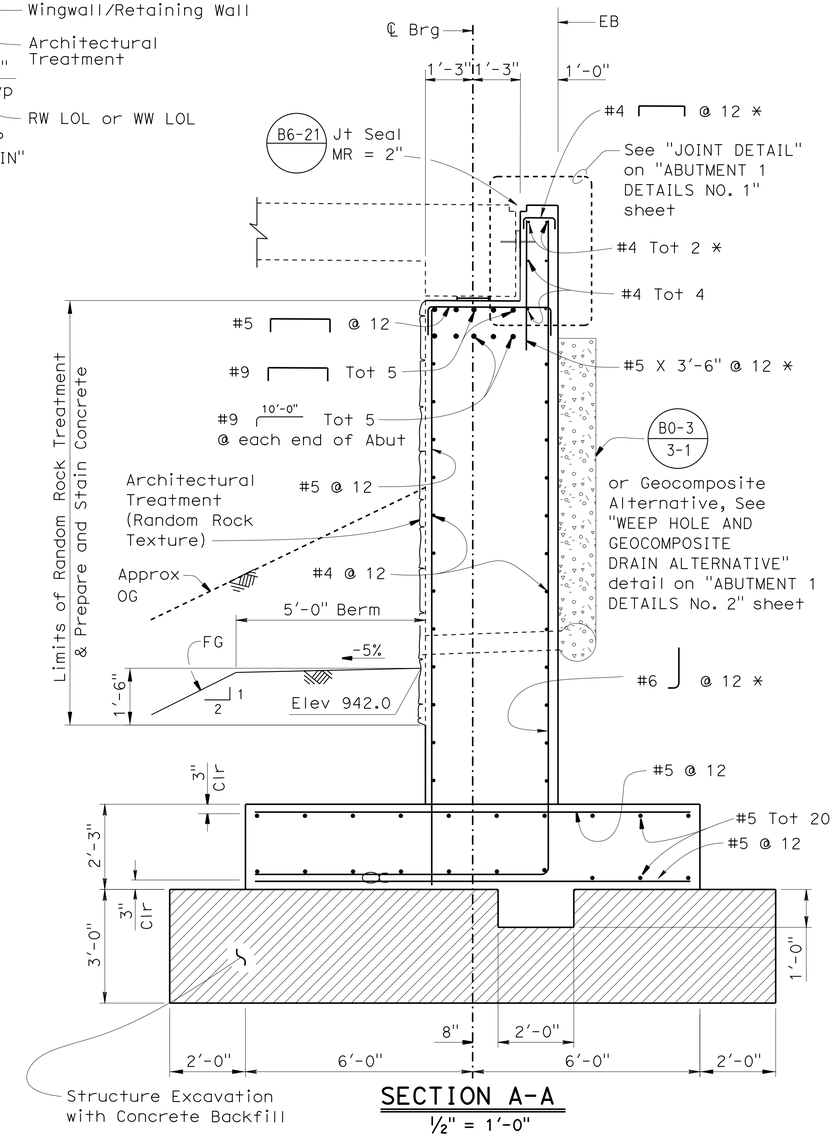

SECTION A-A
1/2" = 1'-0"

DESIGN	BY Eric Watson	CHECKED Kevin Harper	
DETAILS	BY J. Zhou	CHECKED Kevin Harper	
QUANTITIES	BY Eric Watson	CHECKED D.Sessions / V.Shostak	

STATE OF CALIFORNIA
DEPARTMENT OF TRANSPORTATION

DIVISION OF ENGINEERING SERVICES
STRUCTURE DESIGN
DESIGN BRANCH 1

BRIDGE NO. 01-0080
POST MILE 24.04

MIDDLE FORK SMITH RIVER BRIDGE (REPLACE)
ABUTMENT 12 LAYOUT

STRUCTURES DESIGN DETAIL SHEET (ENGLISH) (REV. 09-01-10)

ORIGINAL SCALE IN INCHES FOR REDUCED PLANS 0 1 2 3

UNIT: 3576
PROJECT NUMBER & PHASE: 01000003711
CONTRACT NO.: 01-479404

DISREGARD PRINTS BEARING EARLIER REVISION DATES

REVISION DATES 03-20-12 03-20-13 3-19-13

SHEET 12 OF 64

FILE => 01-0080-f-a12_lot.dgn

USERNAME => s124496 DATE PLOTTED => 22-JUN-2013 TIME PLOTTED => 09:57

DIST	COUNTY	ROUTE	POST MILES TOTAL PROJECT	SHEET No.	TOTAL SHEETS
01	DN	199	20.3/25.9	99	184

REGISTERED CIVIL ENGINEER 3/20/13 DATE

6-24-13
PLANS APPROVAL DATE

REGISTERED PROFESSIONAL ENGINEER Kevin Harper No. 42221 Exp. 3/31/14 CIVIL STATE OF CALIFORNIA

The State of California or its officers or agents shall not be responsible for the accuracy or completeness of electronic copies of this plan sheet.

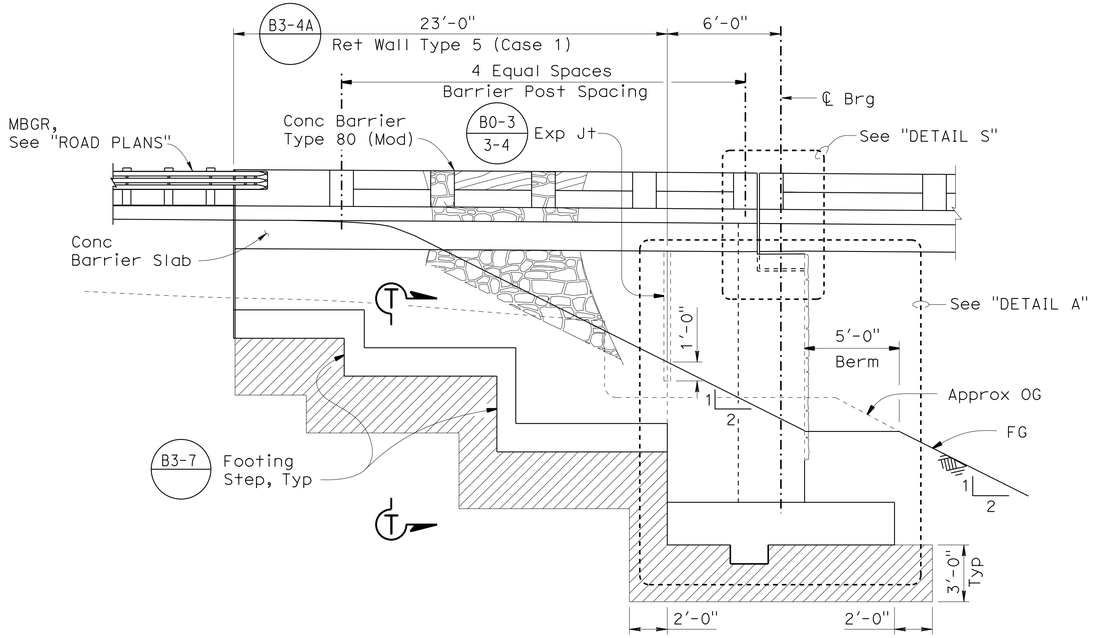

ABUTMENT LEFT SIDE ELEVATION

1/4" = 1'-0"

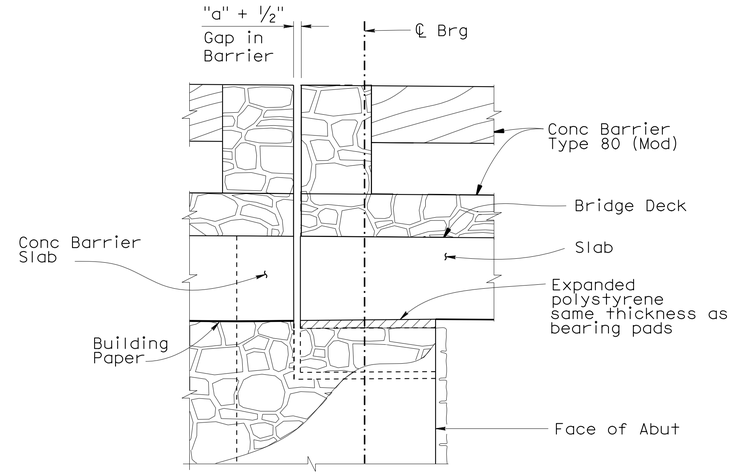

DETAIL S

NO SCALE

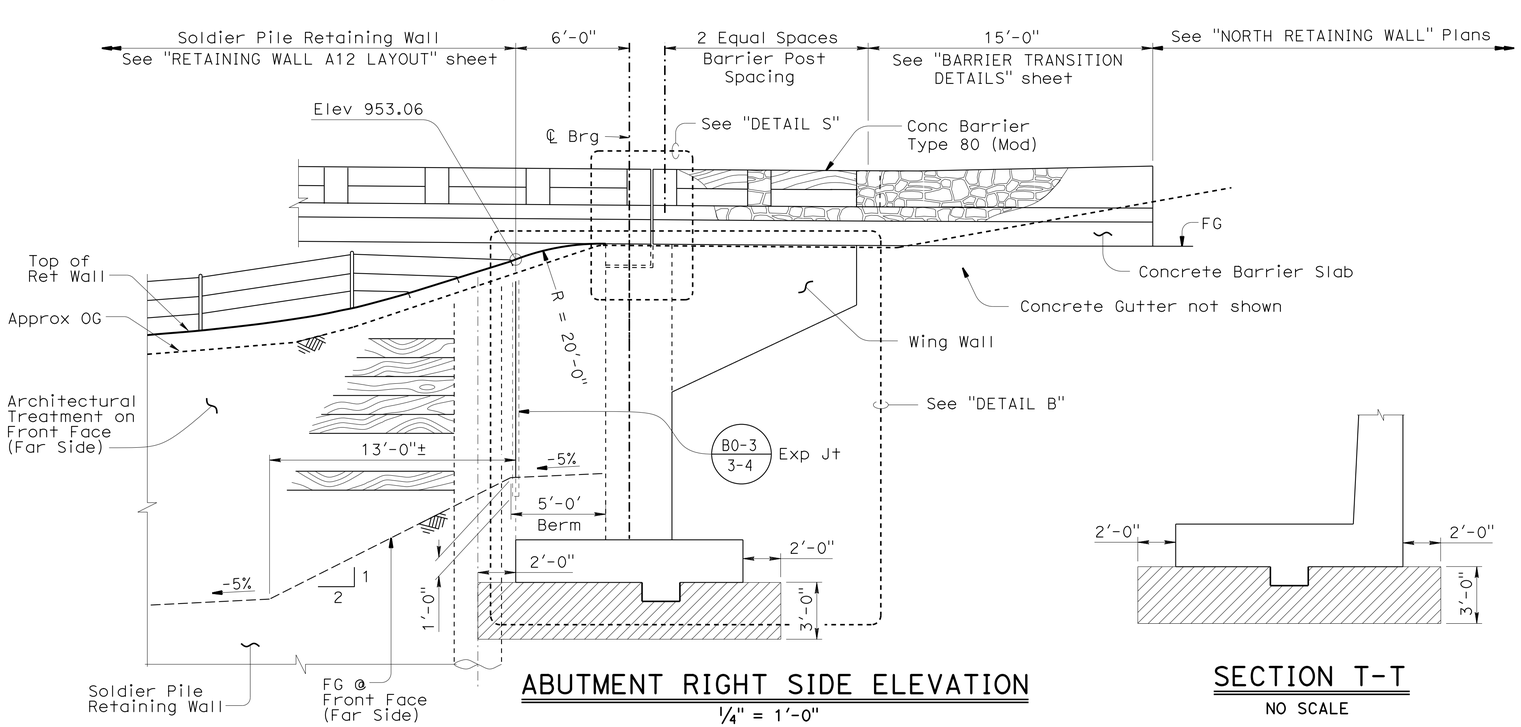

ABUTMENT RIGHT SIDE ELEVATION

1/4" = 1'-0"

SECTION T-T

NO SCALE

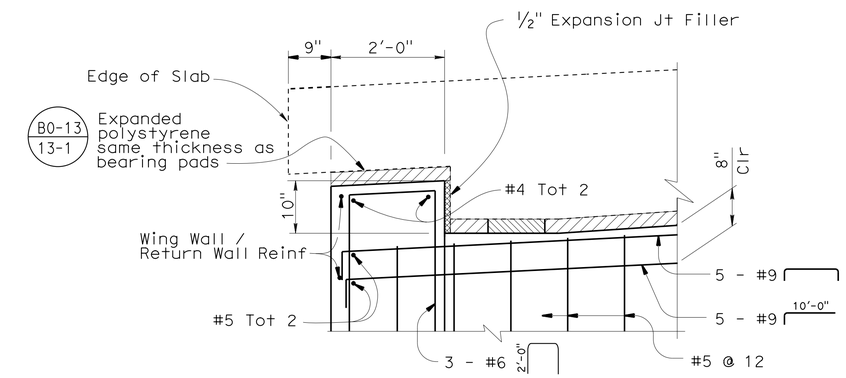

SHEAR KEY DETAIL

3/4" = 1'-0"

NOTE: For "DETAIL A" and "DETAIL B", see "ABUTMENT 12 DETAILS NO. 2" sheet.

LEGEND:

- Indicates Limits of Structure Excavation with Concrete Backfill

	BY	CHECKED
DESIGN	Eric Watson	Kevin Harper
DETAILS	J.Zhou / B.Huddleston	Kevin Harper
QUANTITIES	Eric Watson	D.Sessions / V.Shostak

STATE OF CALIFORNIA
DEPARTMENT OF TRANSPORTATION

DIVISION OF ENGINEERING SERVICES
STRUCTURE DESIGN
DESIGN BRANCH 1

BRIDGE NO. 01-0080
POST MILE 24.04

MIDDLE FORK SMITH RIVER BRIDGE (REPLACE)

ABUTMENT 12 DETAILS NO. 1

STRUCTURES DESIGN DETAIL SHEET (ENGLISH) (REV. 09-01-10)

ORIGINAL SCALE IN INCHES FOR REDUCED PLANS 0 1 2 3

UNIT: 3576
PROJECT NUMBER & PHASE: 01000003711
CONTRACT NO.: 01-479404

DISREGARD PRINTS BEARING EARLIER REVISION DATES

REVISION DATES 07-05-12 3-19-13 03-20-13

SHEET 13 OF 64

FILE => 01-0080-f-a12dt01.dgn

USERNAME => s124496

DIST	COUNTY	ROUTE	POST MILES TOTAL PROJECT	SHEET No.	TOTAL SHEETS
01	DN	199	20.3/25.9	100	184

Kevin J. Harper 3/20/13
REGISTERED CIVIL ENGINEER DATE

6-24-13
PLANS APPROVAL DATE

REGISTERED PROFESSIONAL ENGINEER Kevin Harper No. 42221 Exp. 3/31/12 CIVIL STATE OF CALIFORNIA

The State of California or its officers or agents shall not be responsible for the accuracy or completeness of electronic copies of this plan sheet.

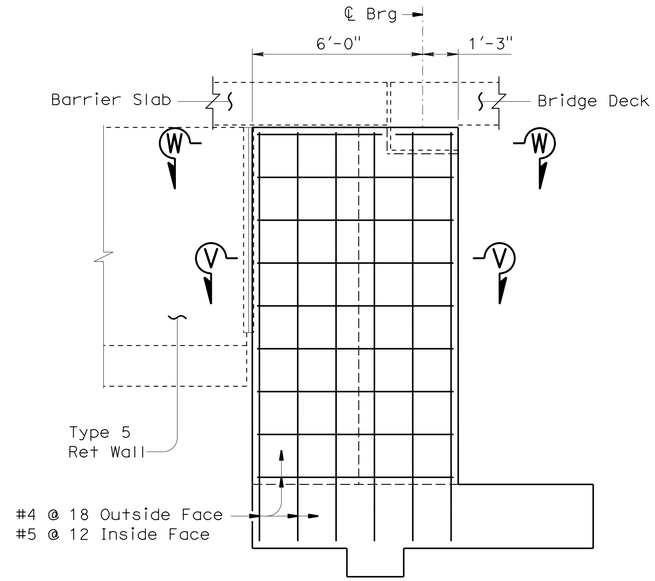

(ABUTMENT LEFT SIDE ELEVATION)

DETAIL A

3/8" = 1'-0"

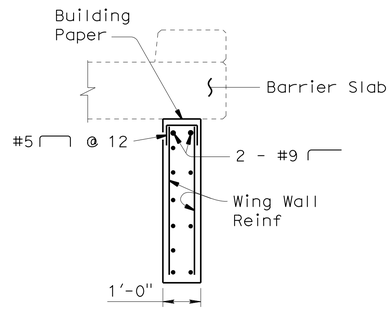

SECTION Z-Z

B0-1

1/2" = 1'-0"

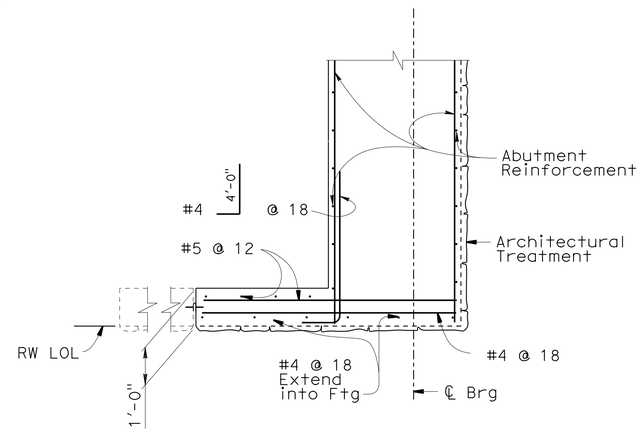

SECTION V-V

1/2" = 1'-0"

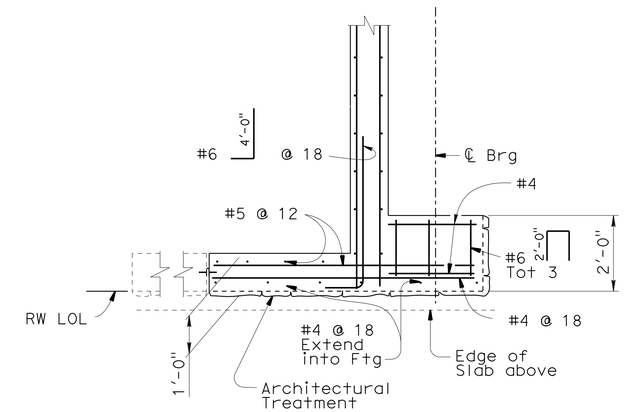

SECTION W-W

1/2" = 1'-0"

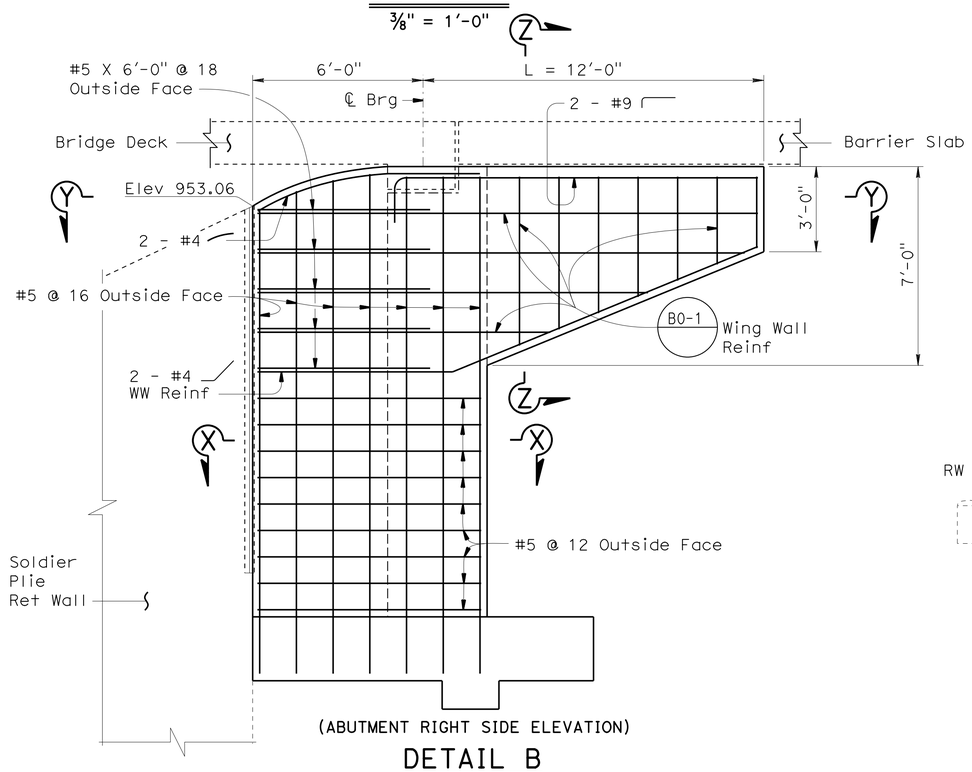

(ABUTMENT RIGHT SIDE ELEVATION)

DETAIL B

3/8" = 1'-0"

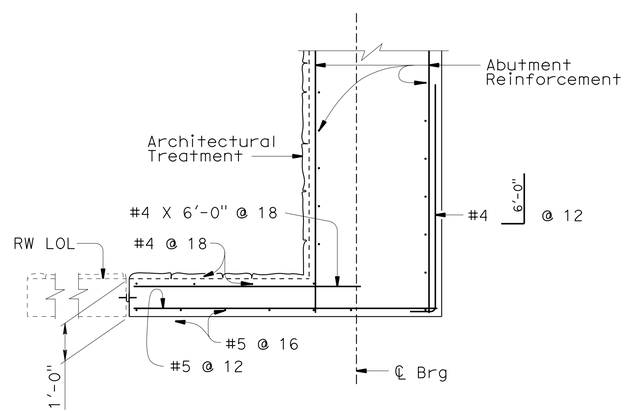

SECTION X-X

1/2" = 1'-0"

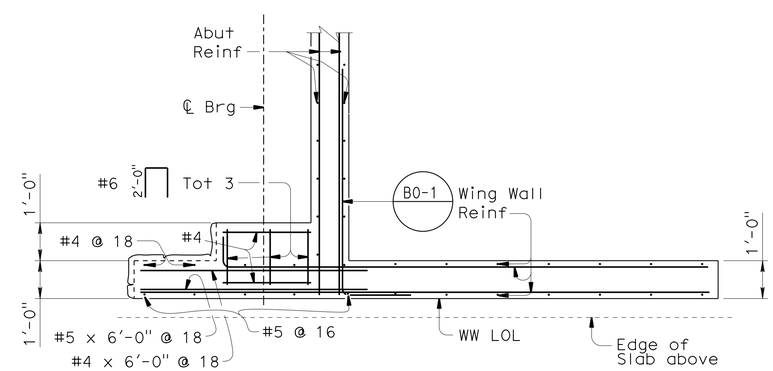

SECTION Y-Y

1/2" = 1'-0"

DESIGN	BY Eric Watson	CHECKED Kevin Harper	
DETAILS	BY P. Tong / B. Huddleston	CHECKED Kevin Harper	
QUANTITIES	BY Eric Watson	CHECKED D.Sessions / V.Shostak	

STATE OF CALIFORNIA
DEPARTMENT OF TRANSPORTATION

DIVISION OF ENGINEERING SERVICES
STRUCTURE DESIGN
DESIGN BRANCH 1

BRIDGE NO. 01-0080
POST MILE 24.04

MIDDLE FORK SMITH RIVER BRIDGE (REPLACE)
ABUTMENT 12 DETAILS NO. 2

STRUCTURES DESIGN DETAIL SHEET (ENGLISH) (REV. 09-01-10)

ORIGINAL SCALE IN INCHES FOR REDUCED PLANS 0 1 2 3

UNIT: 3576
PROJECT NUMBER & PHASE: 01000003711
CONTRACT NO.: 01-479404

DISREGARD PRINTS BEARING EARLIER REVISION DATES

REVISION DATES 12-6-12 03-20-13 3-19-13

SHEET 14 OF 64

FILE => 01-0080-f-a12dt02.dgn

USERNAME => s124496