ACHSSTPG-X023(035)E

Dist	COUNTY	ROUTE	POST MILES TOTAL PROJECT	SHEET No.	TOTAL SHEETS
01	Hum	36, 96, 169, 211, 254, etc.	Var	1	103

STATE OF CALIFORNIA

DEPARTMENT OF TRANSPORTATION

PROJECT PLANS FOR CONSTRUCTION ON

STATE HIGHWAY

IN HUMBOLDT COUNTY AT VARIOUS LOCATIONS

TO BE SUPPLEMENTED BY STANDARD PLANS DATED 2010

INDEX OF PLANS

SHEET No.	DESCRIPTION
1	TITLE AND LOCATION MAP
2-8	LOCATIONS OF CONSTRUCTION
9	TYPICAL CROSS SECTIONS
10	LAYOUTS
11-50	CONSTRUCTION DETAILS
51-53	DRAINAGE PLAN, PROFILE, DETAILS AND QUANTITIES
54	CONSTRUCTION AREA SIGNS
55-58	STAGE CONSTRUCTION AND TRAFFIC HANDLING PLANS
59-61	TRAFFIC HANDLING DETAILS AND QUANTITIES
62-84	SUMMARY OF QUANTITIES
85	EROSION CONTROL PLAN AND QUANTITIES
86-103	REVISED STANDARD PLANS

THE STANDARD PLANS LIST APPLICABLE TO THIS CONTRACT IS INCLUDED IN THE NOTICE TO BIDDERS AND SPECIAL PROVISIONS BOOK.

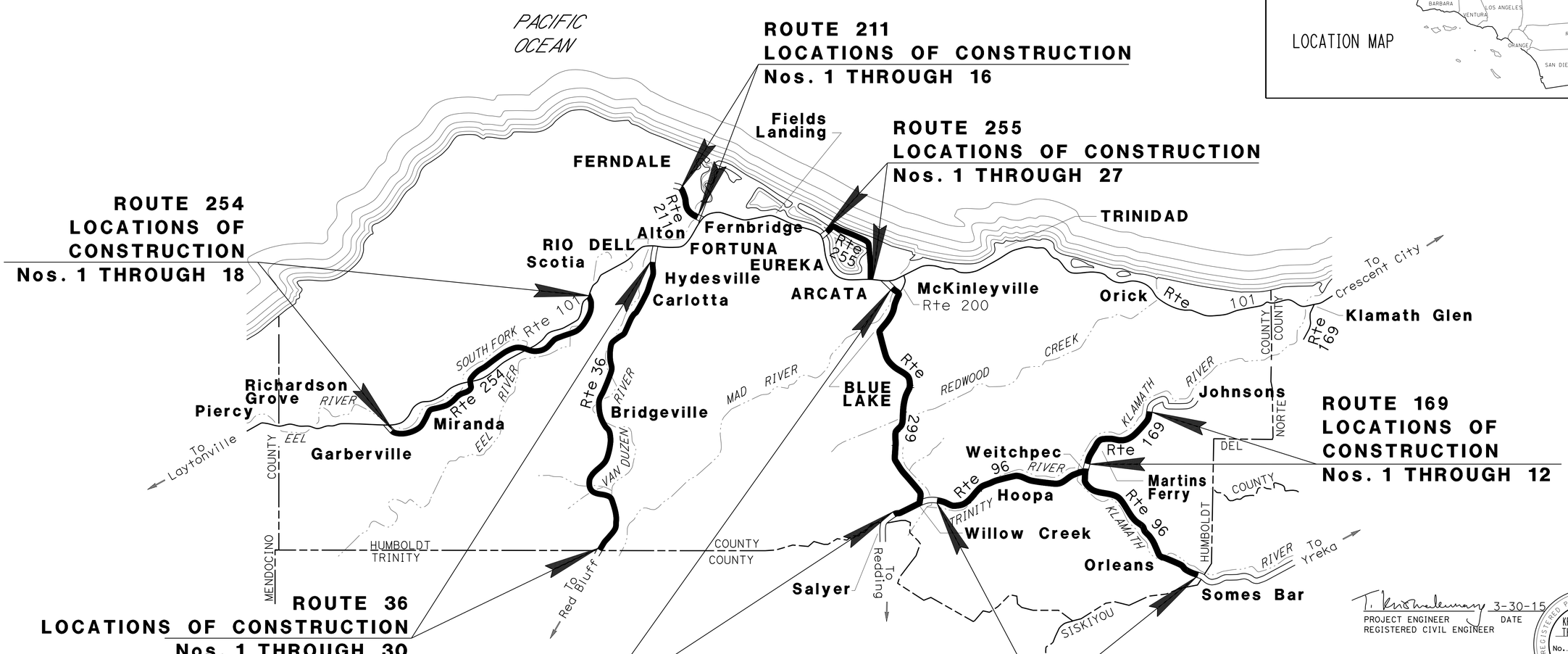

T. Krishnakumary 3-30-15
PROJECT ENGINEER DATE
REGISTERED CIVIL ENGINEER

REGISTERED PROFESSIONAL ENGINEER
KRISHNAKUMARY THAMILSERAN
No. C79630
Exp. 9/30/16
CIVIL
STATE OF CALIFORNIA

March 30, 2015
PLANS APPROVAL DATE

THE STATE OF CALIFORNIA OR ITS OFFICERS OR AGENTS SHALL NOT BE RESPONSIBLE FOR THE ACCURACY OR COMPLETENESS OF SCANNED COPIES OF THIS PLAN SHEET.

THE CONTRACTOR SHALL POSSESS THE CLASS (OR CLASSES) OF LICENSE AS SPECIFIED IN THE "NOTICE TO BIDDERS."

CONTRACT No.	01-463924
PROJECT ID	112000274

PROJECT MANAGER: KIM FLOYD
DESIGN ENGINEER: KEN KEATON

LAST REVISION 00-00-00 | DATE PLOTTED => 07-APR-2015 | TIME PLOTTED => 15:28

Dist	COUNTY	ROUTE	POST MILES TOTAL PROJECT	SHEET No.	TOTAL SHEETS
01	Hum	36, 96, 169, 211, 254, etc.	Var	2	103

T. Krishnakumary 3-30-15
REGISTERED CIVIL ENGINEER DATE

3-30-15
PLANS APPROVAL DATE

REGISTERED PROFESSIONAL ENGINEER
KRISHNAKUMARY THAMILSERAN
No. C79630
Exp. 9/30/16
CIVIL
STATE OF CALIFORNIA

THE STATE OF CALIFORNIA OR ITS OFFICERS OR AGENTS SHALL NOT BE RESPONSIBLE FOR THE ACCURACY OR COMPLETENESS OF SCANNED COPIES OF THIS PLAN SHEET.

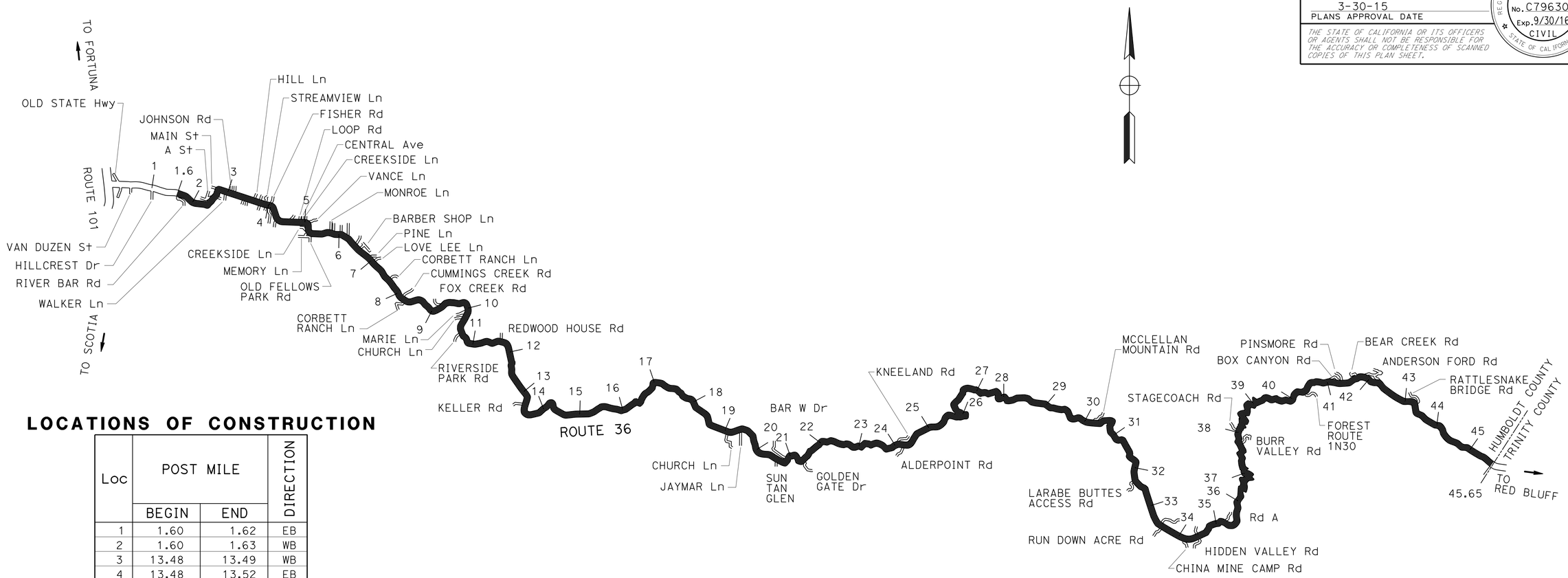

LOCATIONS OF CONSTRUCTION

Loc	POST MILE BEGIN	POST MILE END	DIRECTION
1	1.60	1.62	EB
2	1.60	1.63	WB
3	13.48	13.49	WB
4	13.48	13.52	EB
5	15.75	16.21	EB
6	16.93	16.94	WB
7	16.93	16.94	EB
8	16.96	16.97	WB
9	16.96	16.97	EB
10	17.88	17.91	WB
11	17.91	17.94	WB
12	17.93	17.94	EB
13	18.02	18.03	WB
14	18.02	18.07	EB
15	20.16	20.21	EB
16	20.19	20.21	WB
17	23.90	23.91	EB
18	32.47	32.50	EB
19	34.26	34.41	EB
20	35.59	35.67	WB
21	40.44	40.45	EB
22	40.44	40.45	WB
23	40.51	40.52	WB
24	40.52	40.53	EB
25	43.02	43.11	EB
26	43.12	43.46	EB
27	44.08	44.52	EB
28	44.60	44.90	EB
29	45.14	45.36	EB
30	45.60	45.65	EB

POSTMILE STATIONING
ROUTE 36

LOCATIONS OF CONSTRUCTION

NO SCALE

LC-1

REVISED BY | DATE REVISED
GARY DUGHI | KRISHNA THAMILSERAN
CALCULATED-DESIGNED BY | CHECKED BY
FUNCTIONAL SUPERVISOR | KEN KEATON
STATE OF CALIFORNIA - DEPARTMENT OF TRANSPORTATION
Caltrans
03 - DESIGN

LAST REVISION 00-00-00 | DATE PLOTTED => 07-APR-2015 | TIME PLOTTED => 13:03

Dist	COUNTY	ROUTE	POST MILES TOTAL PROJECT	SHEET No.	TOTAL SHEETS
01	Hum	36, 96, 169, 211, 254, etc.	Var	3	103

T. Krishnakumary 3-30-15
REGISTERED CIVIL ENGINEER DATE

3-30-15
PLANS APPROVAL DATE

REGISTERED PROFESSIONAL ENGINEER
KRISHNAKUMARY THAMILSERAN
No. C79630
Exp. 9/30/16
CIVIL
STATE OF CALIFORNIA

THE STATE OF CALIFORNIA OR ITS OFFICERS OR AGENTS SHALL NOT BE RESPONSIBLE FOR THE ACCURACY OR COMPLETENESS OF SCANNED COPIES OF THIS PLAN SHEET.

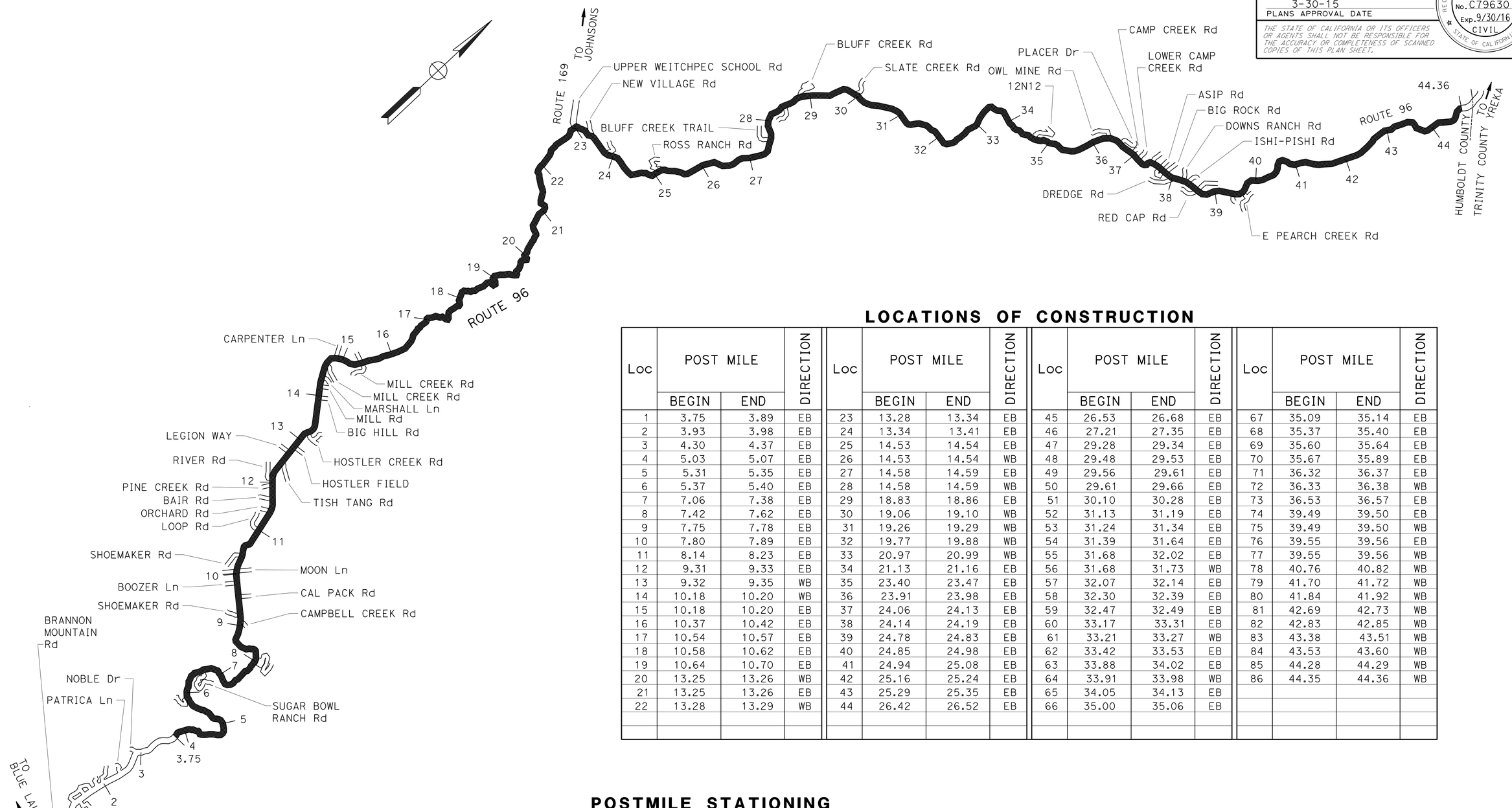

LOCATIONS OF CONSTRUCTION

Loc	POST MILE BEGIN	POST MILE END	DIRECTION	Loc	POST MILE BEGIN	POST MILE END	DIRECTION	Loc	POST MILE BEGIN	POST MILE END	DIRECTION	Loc	POST MILE BEGIN	POST MILE END	DIRECTION
1	3.75	3.89	EB	23	13.28	13.34	EB	45	26.53	26.68	EB	67	35.09	35.14	EB
2	3.93	3.98	EB	24	13.34	13.41	EB	46	27.21	27.35	EB	68	35.37	35.40	EB
3	4.30	4.37	EB	25	14.53	14.54	EB	47	29.28	29.34	EB	69	35.60	35.64	EB
4	5.03	5.07	EB	26	14.53	14.54	WB	48	29.48	29.53	EB	70	35.67	35.89	EB
5	5.31	5.35	EB	27	14.58	14.59	EB	49	29.56	29.61	EB	71	36.32	36.37	EB
6	5.37	5.40	EB	28	14.58	14.59	WB	50	29.61	29.66	EB	72	36.33	36.38	WB
7	7.06	7.38	EB	29	18.83	18.86	EB	51	30.10	30.28	EB	73	36.53	36.57	EB
8	7.42	7.62	EB	30	19.06	19.10	WB	52	31.13	31.19	EB	74	39.49	39.50	EB
9	7.75	7.78	EB	31	19.26	19.29	WB	53	31.24	31.34	EB	75	39.49	39.50	WB
10	7.80	7.89	EB	32	19.77	19.88	WB	54	31.39	31.64	EB	76	39.55	39.56	EB
11	8.14	8.23	EB	33	20.97	20.99	WB	55	31.68	32.02	EB	77	39.55	39.56	WB
12	9.31	9.33	EB	34	21.13	21.16	EB	56	31.68	31.73	WB	78	40.76	40.82	WB
13	9.32	9.35	WB	35	23.40	23.47	EB	57	32.07	32.14	EB	79	41.70	41.72	WB
14	10.18	10.20	WB	36	23.91	23.98	EB	58	32.30	32.39	EB	80	41.84	41.92	WB
15	10.18	10.20	EB	37	24.06	24.13	EB	59	32.47	32.49	EB	81	42.69	42.73	WB
16	10.37	10.42	EB	38	24.14	24.19	EB	60	33.17	33.31	EB	82	42.83	42.85	WB
17	10.54	10.57	EB	39	24.78	24.83	EB	61	33.21	33.27	WB	83	43.38	43.51	WB
18	10.58	10.62	EB	40	24.85	24.98	EB	62	33.42	33.53	EB	84	43.53	43.60	WB
19	10.64	10.70	EB	41	24.94	25.08	EB	63	33.88	34.02	EB	85	44.28	44.29	WB
20	13.25	13.26	WB	42	25.16	25.24	EB	64	33.91	33.98	WB	86	44.35	44.36	WB
21	13.25	13.26	EB	43	25.29	25.35	EB	65	34.05	34.13	EB				
22	13.28	13.29	WB	44	26.42	26.52	EB	66	35.00	35.06	EB				

POSTMILE STATIONING
ROUTE 96

LOCATIONS OF CONSTRUCTION

NO SCALE

LC-2

STATE OF CALIFORNIA - DEPARTMENT OF TRANSPORTATION
Caltrans
03 - DESIGN

FUNCTIONAL SUPERVISOR: KEN KEATON
CALCULATED-DESIGNED BY: GARY DUGHI
CHECKED BY: KRISHNA THAMILSERAN
REVISED BY
DATE REVISED

LAST REVISION 00-00-00
DATE PLOTTED => 07-APR-2015
TIME PLOTTED => 13:03

Dist	COUNTY	ROUTE	POST MILES TOTAL PROJECT	SHEET No.	TOTAL SHEETS
01	Hum	36, 96, 169, 211, 254, etc.	Var	4	103

T. Krishnakumary 3-30-15
REGISTERED CIVIL ENGINEER DATE

3-30-15
PLANS APPROVAL DATE

REGISTERED PROFESSIONAL ENGINEER
KRISHNAKUMARY THAMILSERAN
No. C79630
Exp. 9/30/16
CIVIL
STATE OF CALIFORNIA

THE STATE OF CALIFORNIA OR ITS OFFICERS OR AGENTS SHALL NOT BE RESPONSIBLE FOR THE ACCURACY OR COMPLETENESS OF SCANNED COPIES OF THIS PLAN SHEET.

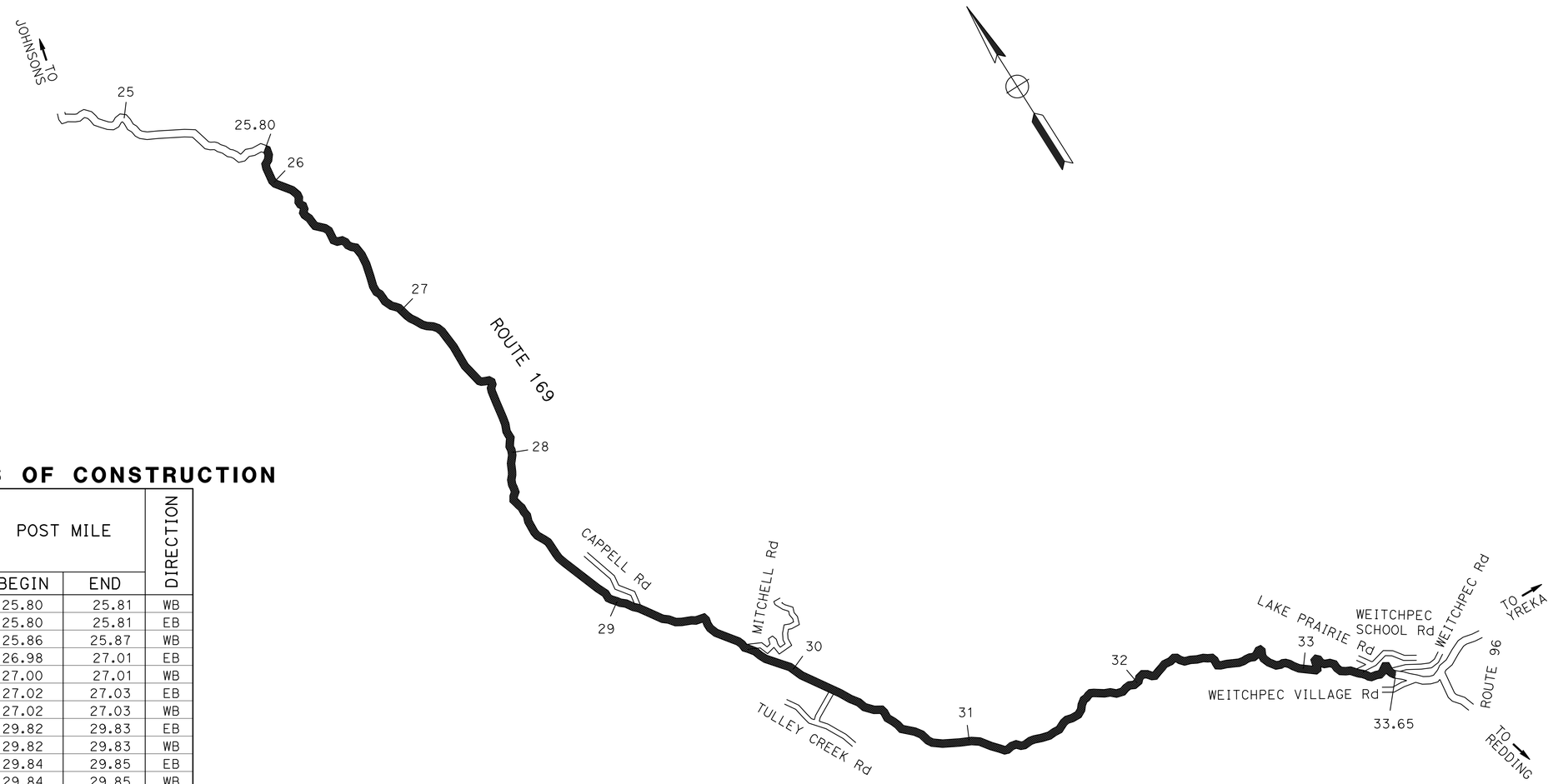

LOCATIONS OF CONSTRUCTION

Loc	POST MILE BEGIN	POST MILE END	DIRECTION
1	25.80	25.81	WB
2	25.80	25.81	EB
3	25.86	25.87	WB
4	26.98	27.01	EB
5	27.00	27.01	WB
6	27.02	27.03	EB
7	27.02	27.03	WB
8	29.82	29.83	EB
9	29.82	29.83	WB
10	29.84	29.85	EB
11	29.84	29.85	WB
12	33.60	33.65	EB

POSTMILE STATIONING
ROUTE 169

LOCATIONS OF CONSTRUCTION

NO SCALE

LC-3

STATE OF CALIFORNIA - DEPARTMENT OF TRANSPORTATION
Caltrans
03 - DESIGN

FUNCTIONAL SUPERVISOR: KEN KEATON
CALCULATED-DESIGNED BY: GARY DUGHI
CHECKED BY: KRISHNA THAMILSERAN
REVISED BY
DATE REVISED

LAST REVISION 00-00-00
DATE PLOTTED => 07-APR-2015
TIME PLOTTED => 13:03

Dist	COUNTY	ROUTE	POST MILES TOTAL PROJECT	SHEET No.	TOTAL SHEETS
01	Hum	36, 96, 169, 211, 254, etc.	Var	5	103

T. Krishnakumary 3-30-15
REGISTERED CIVIL ENGINEER DATE

3-30-15
PLANS APPROVAL DATE

REGISTERED PROFESSIONAL ENGINEER
KRISHNAKUMARY THAMILSERAN
No. C79630
Exp. 9/30/16
CIVIL
STATE OF CALIFORNIA

THE STATE OF CALIFORNIA OR ITS OFFICERS OR AGENTS SHALL NOT BE RESPONSIBLE FOR THE ACCURACY OR COMPLETENESS OF SCANNED COPIES OF THIS PLAN SHEET.

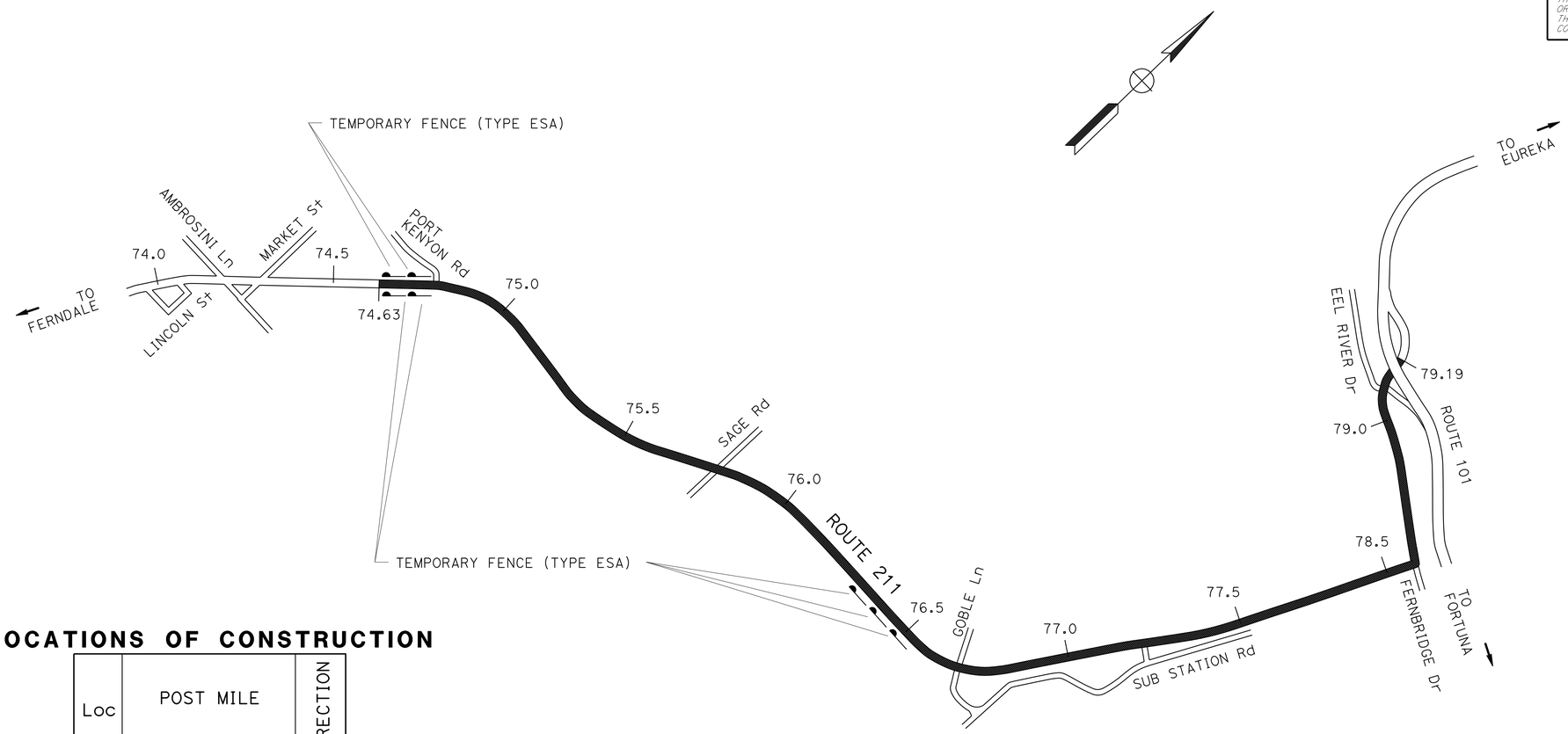

LOCATIONS OF CONSTRUCTION

Loc	POST MILE		DIRECTION
	BEGIN	END	
1	74.62	74.64	SB
2	74.63	74.64	NB
3	74.67	74.68	NB
4	74.67	74.68	SB
5	76.29	76.30	NB
6	76.29	76.30	SB
7	76.34	76.35	NB
8	76.34	76.35	SB
9	76.45	76.46	NB
10	76.45	76.46	SB
11	76.50	76.51	NB
12	76.50	76.51	SB
13	78.56	78.57	NB
14	78.58	78.56	SB
15	79.13	79.19	NB
16	79.13	79.19	SB

POSTMILE STATIONING
ROUTE 211

LOCATIONS OF CONSTRUCTION

NO SCALE

LC-4

STATE OF CALIFORNIA - DEPARTMENT OF TRANSPORTATION
Caltrans
03 - DESIGN

FUNCTIONAL SUPERVISOR: KEN KEATON
CALCULATED-DESIGNED BY: GARY DUGHI
CHECKED BY: KRISHNA THAMILSERAN
REVISED BY
DATE REVISED

LAST REVISION 00-00-00
DATE PLOTTED => 07-APR-2015
TIME PLOTTED => 13:04

Dist	COUNTY	ROUTE	POST MILES TOTAL PROJECT	SHEET No.	TOTAL SHEETS
01	Hum	36, 96, 169, 211, 254, etc.	Var	6	103

T. Krishnakumary 3-30-15
REGISTERED CIVIL ENGINEER DATE

3-30-15
PLANS APPROVAL DATE

REGISTERED PROFESSIONAL ENGINEER
KRISHNAKUMARY THAMILSERAN
No. C79630
Exp. 9/30/16
CIVIL
STATE OF CALIFORNIA

THE STATE OF CALIFORNIA OR ITS OFFICERS OR AGENTS SHALL NOT BE RESPONSIBLE FOR THE ACCURACY OR COMPLETENESS OF SCANNED COPIES OF THIS PLAN SHEET.

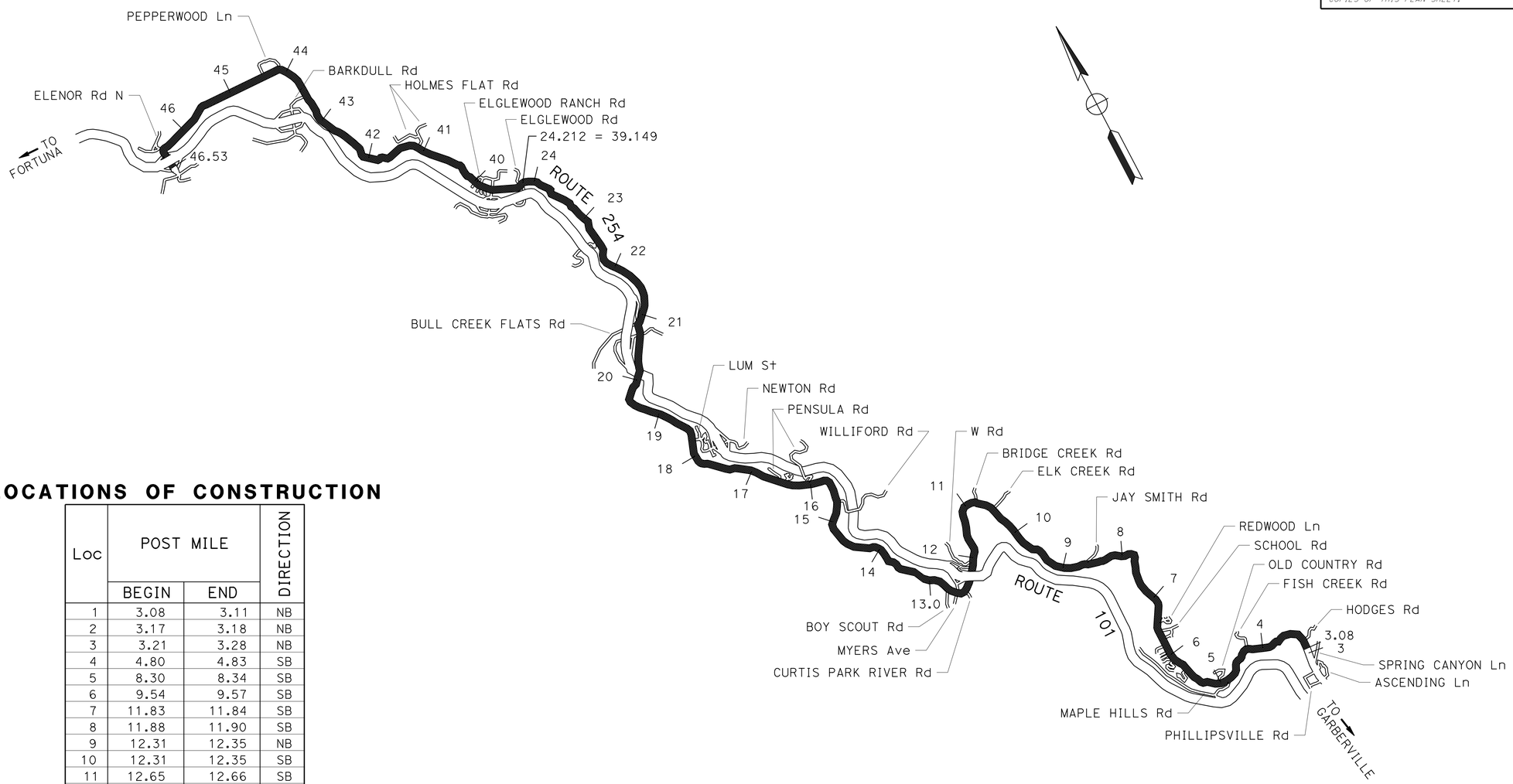

LOCATIONS OF CONSTRUCTION

Loc	POST MILE		DIRECTION
	BEGIN	END	
1	3.08	3.11	NB
2	3.17	3.18	NB
3	3.21	3.28	NB
4	4.80	4.83	SB
5	8.30	8.34	SB
6	9.54	9.57	SB
7	11.83	11.84	SB
8	11.88	11.90	SB
9	12.31	12.35	NB
10	12.31	12.35	SB
11	12.65	12.66	SB
12	12.72	12.73	SB
13	17.78	17.85	SB
14	17.82	17.83	SB
15	21.13	21.23	NB
16	42.42	42.62	NB
17	46.50	46.53	NB
18	46.50	46.53	SB

POSTMILE STATIONING
ROUTE 254

LOCATIONS OF CONSTRUCTION

NO SCALE

LC-5

STATE OF CALIFORNIA - DEPARTMENT OF TRANSPORTATION
Caltrans®
03 - DESIGN
FUNCTIONAL SUPERVISOR: KEN KEATON
CALCULATED-DESIGNED BY: GARY DUGHI
CHECKED BY: KRISHNA THAMILSERAN
REVISED BY
DATE REVISED

LAST REVISION 00-00-00
DATE PLOTTED => 07-APR-2015
TIME PLOTTED => 13:04

Dist	COUNTY	ROUTE	POST MILES TOTAL PROJECT	SHEET No.	TOTAL SHEETS
01	Hum	36, 96, 169, 211, 254, etc.	Var	7	103

REGISTERED CIVIL ENGINEER 3-30-15 DATE

3-30-15
PLANS APPROVAL DATE

REGISTERED PROFESSIONAL ENGINEER KRISHNAKUMARY THAMILSERAN No. C79630 Exp. 9/30/16 CIVIL STATE OF CALIFORNIA

THE STATE OF CALIFORNIA OR ITS OFFICERS OR AGENTS SHALL NOT BE RESPONSIBLE FOR THE ACCURACY OR COMPLETENESS OF SCANNED COPIES OF THIS PLAN SHEET.

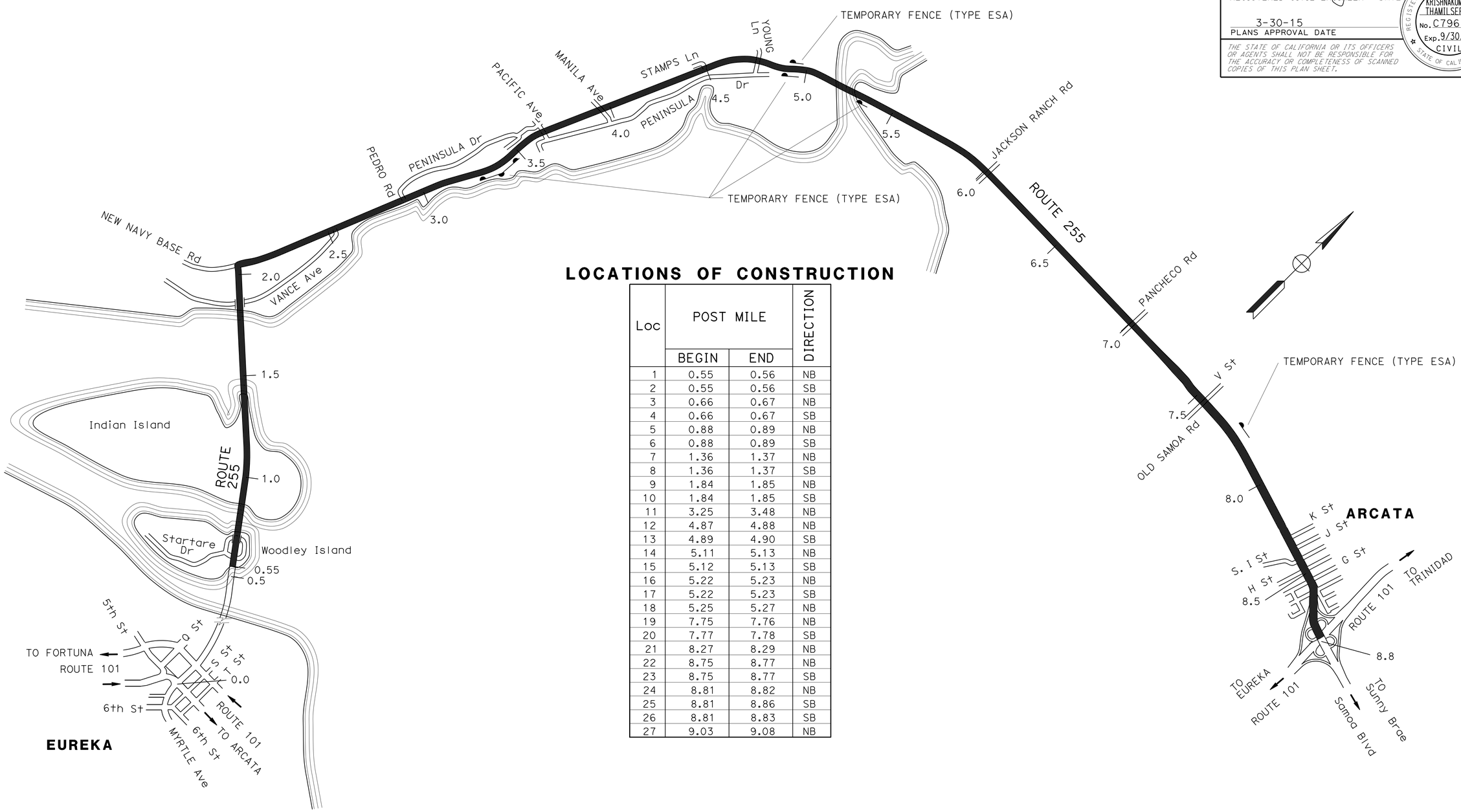

LOCATIONS OF CONSTRUCTION

Loc	POST MILE BEGIN	POST MILE END	DIRECTION
1	0.55	0.56	NB
2	0.55	0.56	SB
3	0.66	0.67	NB
4	0.66	0.67	SB
5	0.88	0.89	NB
6	0.88	0.89	SB
7	1.36	1.37	NB
8	1.36	1.37	SB
9	1.84	1.85	NB
10	1.84	1.85	SB
11	3.25	3.48	NB
12	4.87	4.88	NB
13	4.89	4.90	SB
14	5.11	5.13	NB
15	5.12	5.13	SB
16	5.22	5.23	NB
17	5.22	5.23	SB
18	5.25	5.27	NB
19	7.75	7.76	NB
20	7.77	7.78	SB
21	8.27	8.29	NB
22	8.75	8.77	NB
23	8.75	8.77	SB
24	8.81	8.82	NB
25	8.81	8.86	SB
26	8.81	8.83	SB
27	9.03	9.08	NB

POSTMILE STATIONING
ROUTE 255

LOCATIONS OF CONSTRUCTION

NO SCALE

LC-6

STATE OF CALIFORNIA - DEPARTMENT OF TRANSPORTATION
Caltrans
03 - DESIGN

FUNCTIONAL SUPERVISOR: KEN KEATON
CALCULATED-DESIGNED BY: GARY DUGHI
CHECKED BY: KRISHNA THAMILSERAN
REVISED BY
DATE REVISED

LAST REVISION 00-00-00
DATE PLOTTED => 07-APR-2015
TIME PLOTTED => 13:04

Dist	COUNTY	ROUTE	POST MILES TOTAL PROJECT	SHEET No.	TOTAL SHEETS
01	Hum	36, 96, 169, 211, 254, etc.	Var	8	103

T. Krishnakumary 3-30-15
REGISTERED CIVIL ENGINEER DATE

3-30-15
PLANS APPROVAL DATE

REGISTERED PROFESSIONAL ENGINEER
KRISHNAKUMARY THAMILSERAN
No. C79630
Exp. 9/30/16
CIVIL
STATE OF CALIFORNIA

THE STATE OF CALIFORNIA OR ITS OFFICERS OR AGENTS SHALL NOT BE RESPONSIBLE FOR THE ACCURACY OR COMPLETENESS OF SCANNED COPIES OF THIS PLAN SHEET.

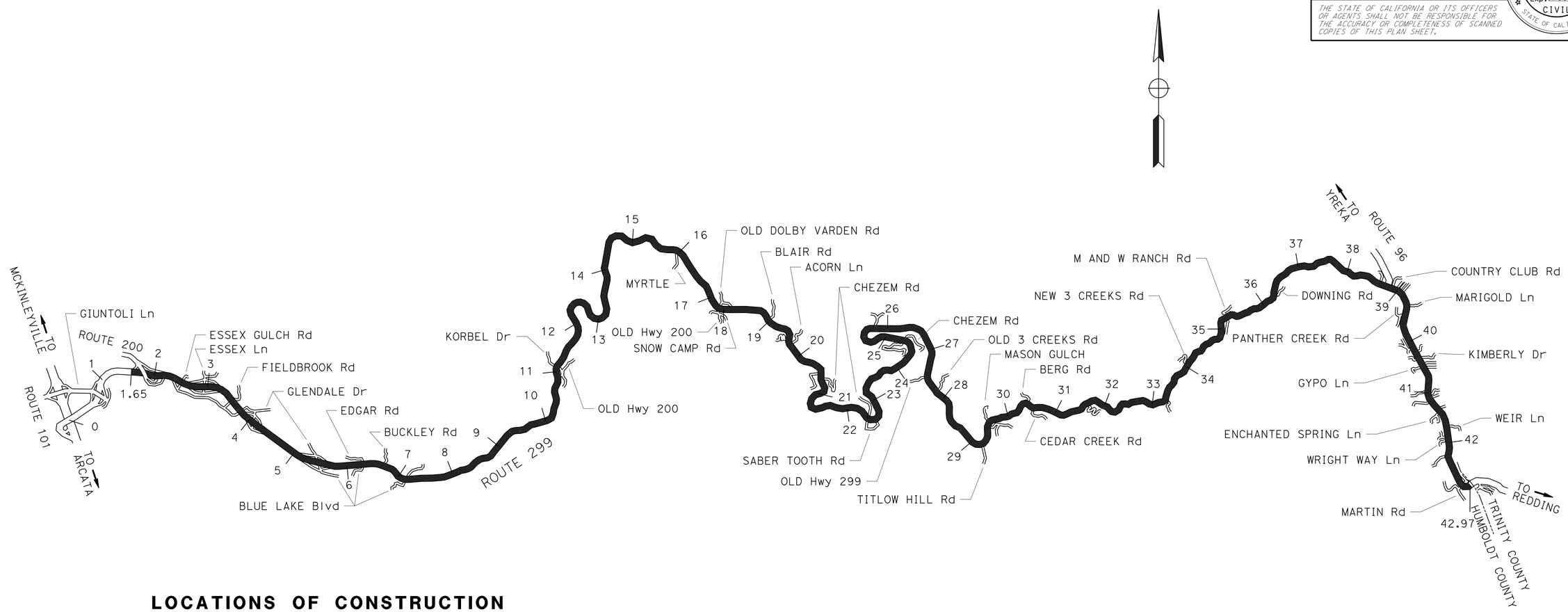

LOCATIONS OF CONSTRUCTION

Loc	POST MILE BEGIN	POST MILE END	DIRECTION
1	1.65	1.66	WB
2	1.78	1.81	MEDIAN
3	1.80	1.81	EB
4	1.80	1.81	WB
5	4.01	4.04	EB
6	42.97	42.98	EB
7	42.98	42.97	WB

POSTMILE STATIONING
ROUTE 299

LOCATIONS OF CONSTRUCTION

NO SCALE

LC-7

STATE OF CALIFORNIA - DEPARTMENT OF TRANSPORTATION
03 - DESIGN
FUNCTIONAL SUPERVISOR: KEN KEATON
CALCULATED-DESIGNED BY: GARY DUGHI
CHECKED BY: KRISHNA THAMILSERAN
REVISED BY
DATE REVISED

LAST REVISION 00-00-00
DATE PLOTTED => 07-APR-2015
TIME PLOTTED => 13:04

Dist	COUNTY	ROUTE	POST MILES TOTAL PROJECT	SHEET No.	TOTAL SHEETS
01	Hum	36, 96, 169, 211, 254, etc.	Var	9	103

T. Krishnakumary 3-30-15
REGISTERED CIVIL ENGINEER DATE

3-30-15
PLANS APPROVAL DATE

REGISTERED PROFESSIONAL ENGINEER KRISHNAKUMARY THAMILSERAN No. C79630 Exp. 9/30/16 CIVIL STATE OF CALIFORNIA

THE STATE OF CALIFORNIA OR ITS OFFICERS OR AGENTS SHALL NOT BE RESPONSIBLE FOR THE ACCURACY OR COMPLETENESS OF SCANNED COPIES OF THIS PLAN SHEET.

NOTE:

DIMENSIONS OF THE PAVEMENT STRUCTURE (STRUCTURAL SECTIONS) ARE SUBJECT TO TOLERANCES SPECIFIED IN THE STANDARD SPECIFICATIONS.

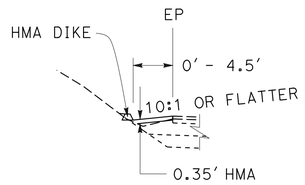

HMA DITCH
"A1" 7+52.67 TO 7+99.13

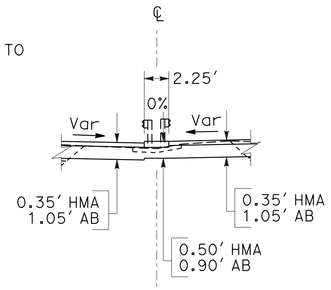

CRASH CUSHION PAD
"A1" 8+59.15 TO 8+83.15

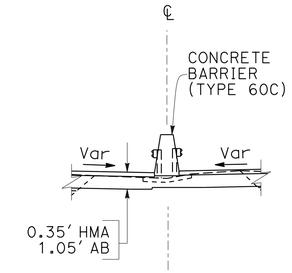

CONCRETE BARRIER (TYPE 60C)
"A1" 6+87.50 TO 7+00.00 AND "A1" 8+46.55 TO 8+59.15

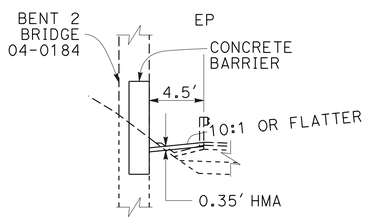

HMA DITCH
"A1" 6+98.60 TO 7+52.67

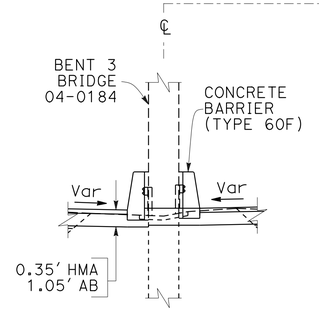

AT BRIDGE COLUMNS

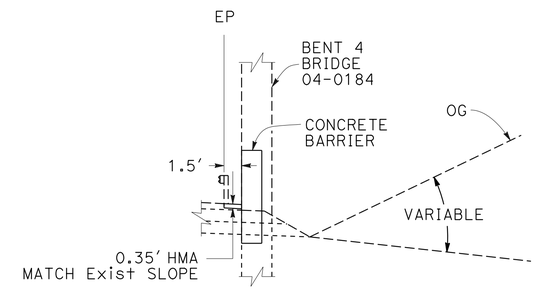

"A1" 7+85.87 TO 8+39.80

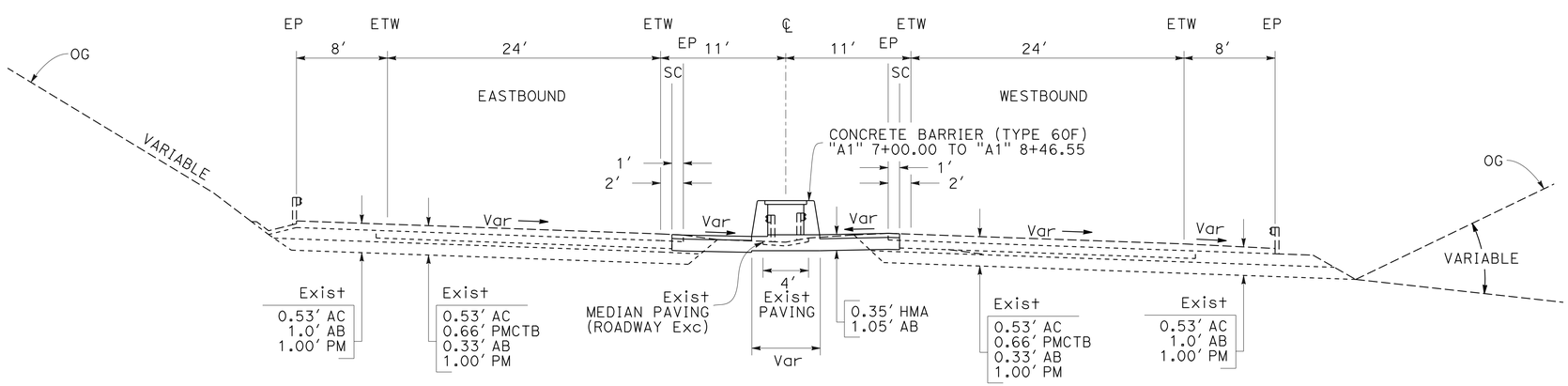

"A1" 6+63.50 TO 8+83.15

DESIGN DESIGNATION

ADT (2015)	13,600	D	60%
ADT (2035)	16,200	T	5%
DHV	800	V	65 mph
ESAL	5,400,000	TI_{20}	11.0

PAVEMENT CLIMATE REGION

NORTH COAST

ABBREVIATIONS

SC - SAW CUT
PMCTB - PERMEABLE CONCRETE TREATED BASE
PM - PERMEABLE BASE

ROUTE 299
PM 1.8

TYPICAL CROSS SECTIONS

NO SCALE

X-1

STATE OF CALIFORNIA - DEPARTMENT OF TRANSPORTATION
Caltrans®
03 - DESIGN

FUNCTIONAL SUPERVISOR: KEN KEATON
CALCULATED-DESIGNED BY: DAC LE
CHECKED BY: GARY DUGHI
REVISED BY
DATE REVISED

LAST REVISION 00-00-00
DATE PLOTTED => 07-APR-2015
TIME PLOTTED => 13:04

Dist	COUNTY	ROUTE	POST MILES TOTAL PROJECT	SHEET No.	TOTAL SHEETS
01	Hum	36, 96, 169, 211, 254, etc.	Var	10	103

T. Krishnakumary 3-30-15
REGISTERED CIVIL ENGINEER DATE

3-30-15
PLANS APPROVAL DATE

REGISTERED PROFESSIONAL ENGINEER
KRISHNAKUMARY THAMILSERAN
No. C79630
Exp. 9/30/16
CIVIL
STATE OF CALIFORNIA

THE STATE OF CALIFORNIA OR ITS OFFICERS OR AGENTS SHALL NOT BE RESPONSIBLE FOR THE ACCURACY OR COMPLETENESS OF SCANNED COPIES OF THIS PLAN SHEET.

NOTE:
1. FOR ACCURATE RIGHT OF WAY DATA, CONTACT RIGHT OF WAY ENGINEERING AT THE DISTRICT OFFICE.
2. THE TRANSITIONAL GRADING WORK CONSISTS OF MINOR SURFACE GRADING TO CONFORM TO THE MEDIAN PAVING AND TO MAINTAIN THE DRAINAGE FLOW LINE.

TRANSITIONAL GRADING

REMOVE MEDIAN PAVING

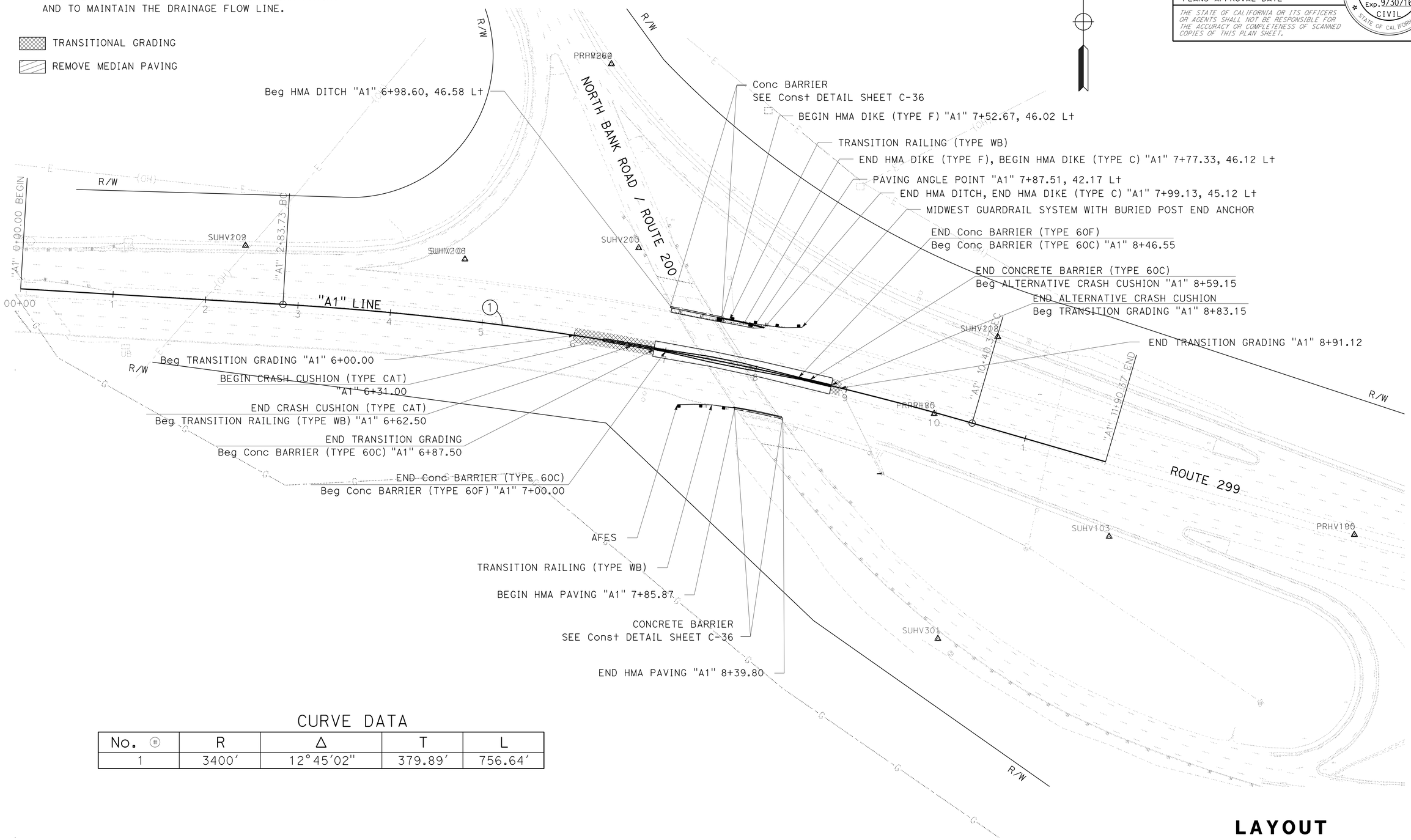

CURVE DATA

No. ⊕	R	Δ	T	L
1	3400′	12°45′02″	379.89′	756.64′

LAYOUT

SCALE: = 1" = 50′

L-1

STATE OF CALIFORNIA - DEPARTMENT OF TRANSPORTATION
Caltrans
03 - DESIGN

FUNCTIONAL SUPERVISOR: KEN KEATON
CALCULATED-DESIGNED BY: DAC LE
CHECKED BY: GARY DUGHI
REVISED BY
DATE REVISED

LAST REVISION 00-00-00
DATE PLOTTED => 07-APR-2015
TIME PLOTTED => 13:04

Dist	COUNTY	ROUTE	POST MILES TOTAL PROJECT	SHEET No.	TOTAL SHEETS
01	Hum	36, 96, 169, 211, 254, etc.	Var	11	103

T. Krishnakumary 3-30-15
REGISTERED CIVIL ENGINEER DATE

3-30-15
PLANS APPROVAL DATE

REGISTERED PROFESSIONAL ENGINEER
KRISHNAKUMARY THAMILSERAN
No. C79630
Exp. 9/30/16
CIVIL
STATE OF CALIFORNIA

THE STATE OF CALIFORNIA OR ITS OFFICERS OR AGENTS SHALL NOT BE RESPONSIBLE FOR THE ACCURACY OR COMPLETENESS OF SCANNED COPIES OF THIS PLAN SHEET.

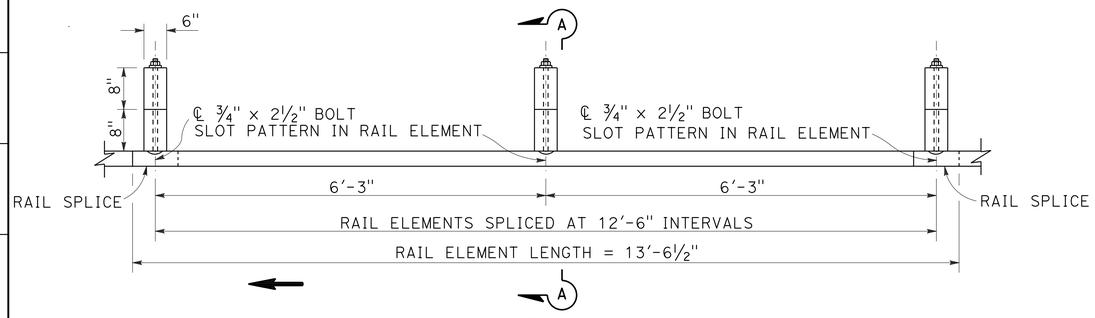

PLAN

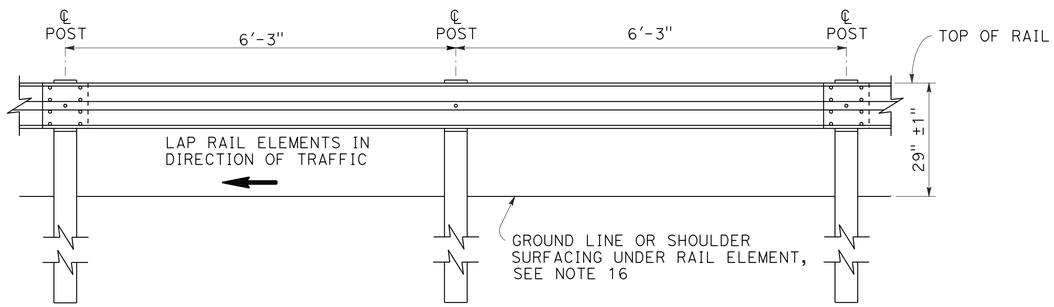

ELEVATION

METAL BEAM GUARD RAILING WITH WOOD POST AND BLOCKS

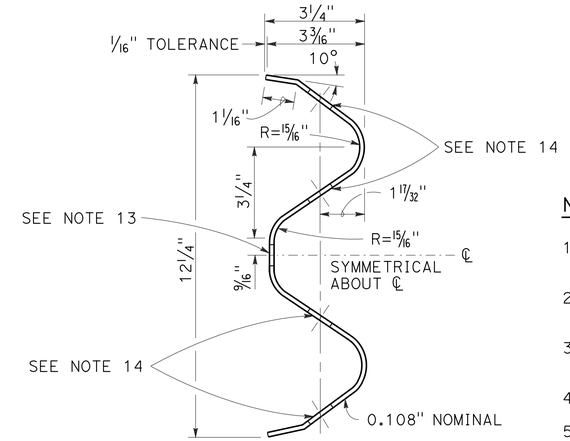

SECTION THRU

RAIL ELEMENT

NOTES:

1. FOR DETAILS OF STEEL POST INSTALLATIONS, SEE CONSTRUCTION DETAIL C-2.
2. FOR DETAILS OF STANDARD HARDWARE USED TO CONSTRUCT GUARD RAILING, SEE CONSTRUCTION DETAIL C-3.
3. FOR DETAILS OF WOOD POSTS AND WOOD BLOCKS USED TO CONSTRUCT GUARD RAILING, SEE STANDARD PLAN RSP A77N1.
4. FOR ADDITIONAL INSTALLATION DETAILS, SEE CONSTRUCTION DETAIL C-4.
5. GUARD RAILING POST SPACING TO BE 6'-3" CENTER TO CENTER, EXCEPT AS OTHERWISE NOTED.
6. FOR GUARD RAILING TYPICAL LAYOUTS, SEE CONSTRUCTION DETAIL C-8 THRU C-19.
7. TO CONNECT RAILING TO TERMINAL SYSTEM END TREATMENT, TRANSITION THE TOP OF RAILING HEIGHT AT A RATIO OF 120:1 TO TERMINAL SYSTEM END TREATMENT HEIGHT PLUS ONE 12'-6" STANDARD RAILING SECTION AT THE TRANSITIONED HEIGHT FOR A HORIZONTAL CONNECTION TO THE END TREATMENT.
8. FOR GUARD RAILING END ANCHOR DETAILS, SEE STANDARD PLAN RSP A77L3.
9. FOR DETAILS OF GUARD RAILING TRANSITION TO BRIDGE RAILING, SEE CONSTRUCTION DETAIL C-22.
10. FOR ADDITIONAL DETAILS OF GUARD RAILING CONNECTION TO BRIDGE RAILINGS, SEE CONSTRUCTION DETAIL C-20, C-21 AND C-23.
11. DIRECTION OF ADJACENT TRAFFIC INDICATED BY ⟶.
12. FOR TYPICAL GUARD RAILING DELINEATION AND DIKE POSITIONING DETAILS, SEE CONSTRUCTION DETAIL C-5.
13. SLOTTED HOLE FOR BOLTED CONNECTION OF RAIL ELEMENT TO BLOCK AND POST. SEE "SECTION THRU RAIL ELEMENT".
14. SLOTTED HOLES FOR SPLICE BOLTS TO OVERLAP ENDS OF RAIL ELEMENT. SEE "SECTION THRU RAIL ELEMENT".
15. ADDITIONAL HOLE IN UPPERMOST PORTION OF LINE POST IS FOR POTENTIAL FUTURE ADJUSTMENTS OF RAILING HEIGHT. SEE STANDARD PLAN RSP A77N1.
16. INSTALL POSTS IN SOIL.

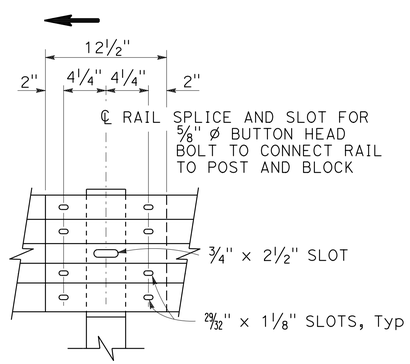

ELEVATION

RAIL ELEMENT SPLICE DETAIL

A) CONNECT THE OVER LAPPED END OF THE RAIL ELEMENTS WITH ⅝" ø X 1 ⅜" BUTTON HEAD OVAL SHOULDER SPLICE BOLTS INSERTED INTO THE ¹³⁄₁₆" X 1 ⅛" SLOTS AND BOLTED TOGETHER WITH ⅝" ø RECESSED HEX NUTS. RECESS OF HEX NUT POINTS TOWARD RAIL ELEMENT. A TOTAL OF 8 BOLTS AND NUTS ARE TO BE USED AT EACH RAIL SPLICE CONNECTION.

B) THE ENDS OF THE RAIL ELEMENTS ARE TO BE OVERLAPPED IN THE DIRECTION OF TRAFFIC (SEE DETAILS).

C) WHERE END CAP IS TO BE ATTACHED TO THE END OF A RAIL ELEMENT, A TOTAL OF 4 OF THE ABOVE DESCRIBED SPLICE BOLTS AND NUTS ARE TO BE USED.

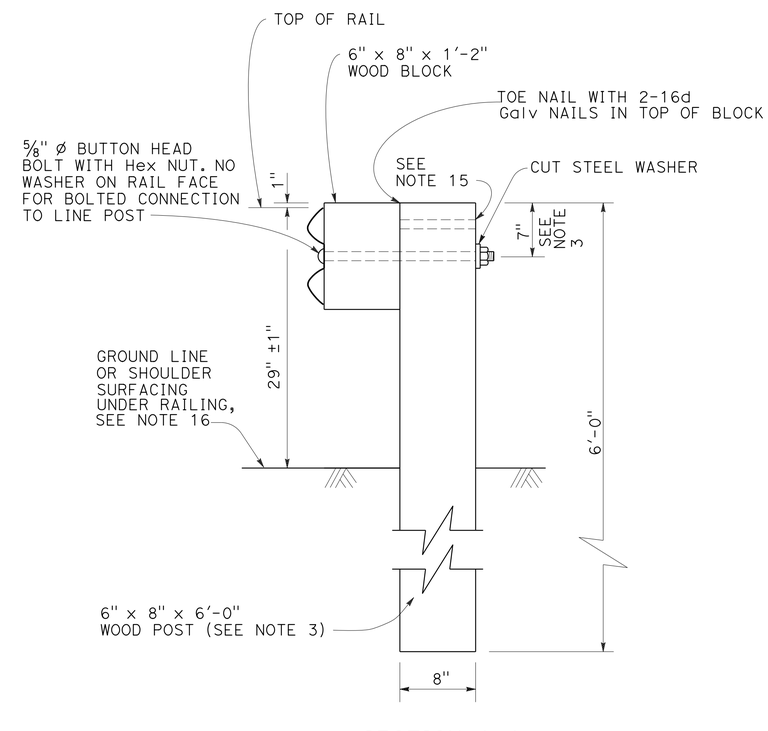

SECTION A-A

TYPICAL WOOD LINE

POST INSTALLATION

SEE NOTE 4

METAL BEAM GUARD RAILING

STANDARD RAILING SECTION

(WOOD POST WITH WOOD BLOCK)

CONSTRUCTION DETAILS

NO SCALE

C-1

STATE OF CALIFORNIA - DEPARTMENT OF TRANSPORTATION
Caltrans
03 - DESIGN
FUNCTIONAL SUPERVISOR: KEN KEATON
CALCULATED-DESIGNED BY: KRISHNA THAMILSERAN
CHECKED BY: CARLOS BURKS SR
REVISED BY
DATE REVISED

LAST REVISION 00-00-00
DATE PLOTTED => 07-APR-2015
TIME PLOTTED => 13:04

Dist	COUNTY	ROUTE	POST MILES TOTAL PROJECT	SHEET No.	TOTAL SHEETS
01	Hum	36, 96, 169, 211, 254, etc.	Var	12	103

T. Krishnakumary 3-30-15
REGISTERED CIVIL ENGINEER DATE

3-30-15
PLANS APPROVAL DATE

REGISTERED PROFESSIONAL ENGINEER
KRISHNAKUMARY THAMILSERAN
No. C79630
Exp. 9/30/16
CIVIL
STATE OF CALIFORNIA

THE STATE OF CALIFORNIA OR ITS OFFICERS OR AGENTS SHALL NOT BE RESPONSIBLE FOR THE ACCURACY OR COMPLETENESS OF SCANNED COPIES OF THIS PLAN SHEET.

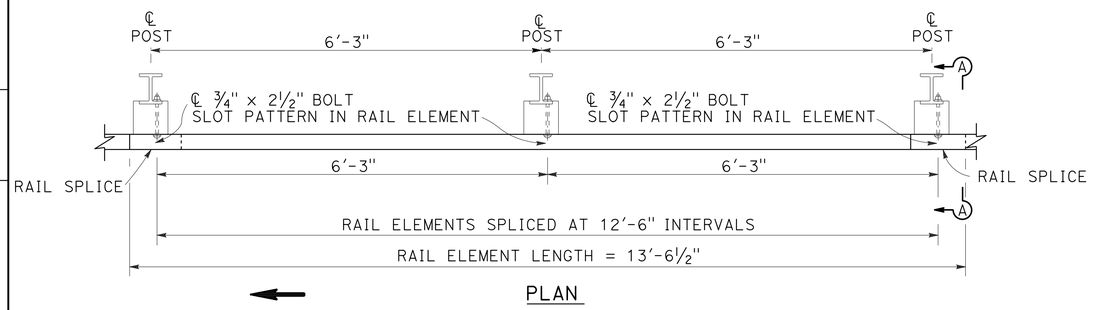

PLAN

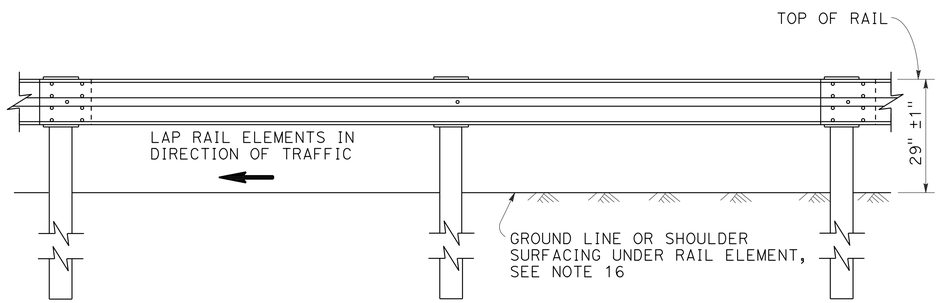

ELEVATION

METAL BEAM GUARD RAILING WITH STEEL POSTS
AND NOTCHED WOOD OR NOTCHED RECYCLED PLASTIC BLOCKS

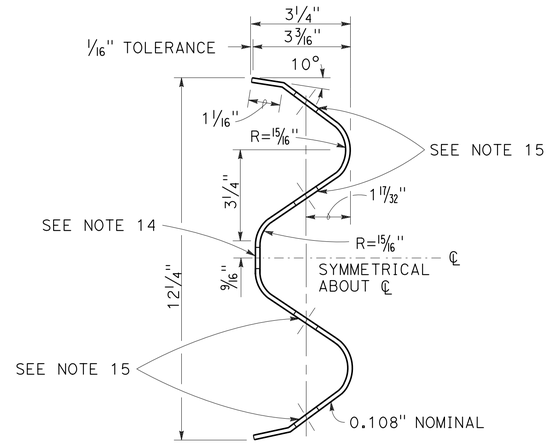

SECTION THRU
RAIL ELEMENT

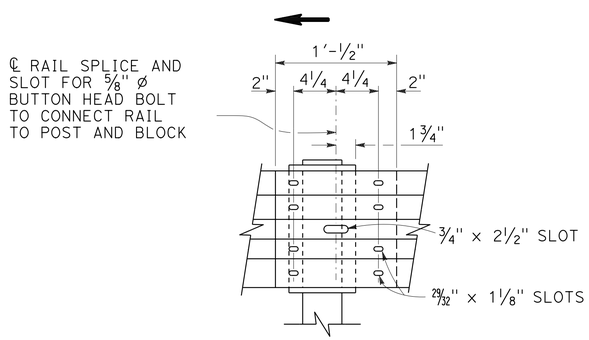

ELEVATION

RAIL ELEMENT SPLICE DETAIL

A) CONNECT THE OVER LAPPED END OF THE RAIL ELEMENTS WITH ⅝" ø X 1 ⅜" BUTTON HEAD OVAL SHOULDER SPLICE BOLTS INSERTED INTO THE 13⁄16" X 1 ⅛" SLOTS AND BOLTED TOGETHER WITH ⅝" ø RECESSED HEX NUTS. RECESS OF HEX NUT POINTS TOWARD RAIL ELEMENT. A TOTAL OF 8 BOLTS AND NUTS ARE TO BE USED AT EACH RAIL SPLICE CONNECTION.

B) THE ENDS OF THE RAIL ELEMENTS ARE TO BE OVERLAPPED IN THE DIRECTION OF TRAFFIC (SEE DETAILS).

C) WHERE END CAP IS TO BE ATTACHED TO THE END OF A RAIL ELEMENT, A TOTAL OF 4 OF THE ABOVE DESCRIBED SPLICE BOLTS AND NUTS ARE TO BE USED.

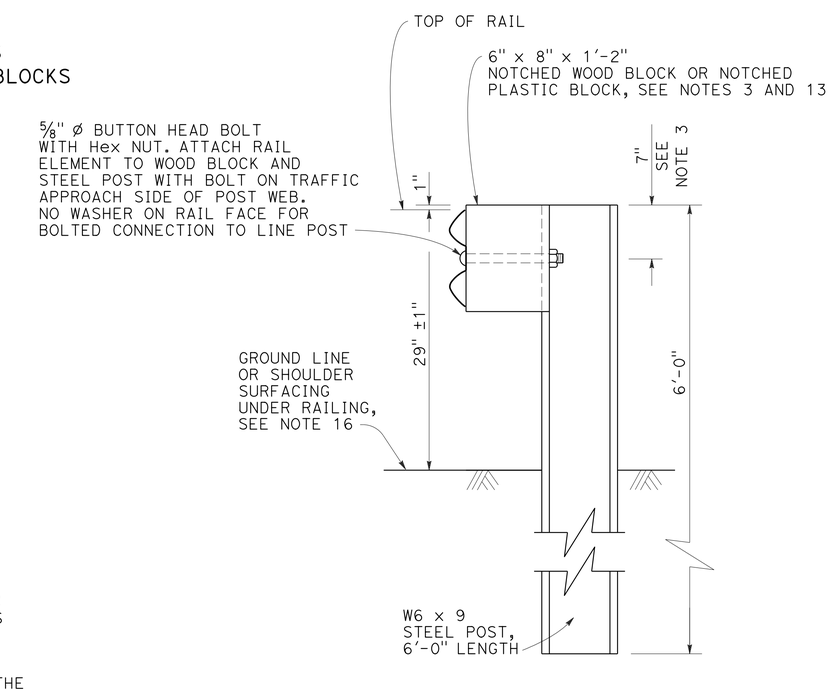

SECTION A-A
TYPICAL STEEL LINE
POST INSTALLATION
SEE NOTE 4

NOTES:

1. FOR DETAILS OF WOOD POST INSTALLATIONS, SEE CONSTRUCTION DETAIL C-1.
2. FOR DETAILS OF STANDARD HARDWARE USED TO CONSTRUCT GUARD RAILING, SEE CONSTRUCTION DETAIL C-3.
3. FOR DETAILS OF STEEL POSTS AND NOTCHED WOOD BLOCKS USED TO CONSTRUCT GUARD RAILING, SEE STANDARD PLAN RSP A77N2.
4. FOR ADDITIONAL INSTALLATION DETAILS, SEE CONSTRUCTION DETAIL C-4.
5. GUARD RAILING POST SPACING TO BE 6'-3" CENTER TO CENTER, EXCEPT AS OTHERWISE NOTED.
6. FOR GUARD RAILING TYPICAL LAYOUTS, SEE CONSTRUCTION DETAIL C-8 THRU C-19.
7. TO CONNECT RAILING TO TERMINAL SYSTEM END TREATMENT, TRANSITION THE TOP OF RAILING HEIGHT AT A RATIO OF 120:1 TO TERMINAL SYSTEM END TREATMENT HEIGHT PLUS ONE 12'-6" STANDARD RAILING SECTION AT THE TRANSITIONED HEIGHT FOR A HORIZONTAL CONNECTION TO THE END TREATMENT.
8. FOR GUARD RAILING END ANCHOR DETAILS, SEE STANDARD PLAN RSP A77L3.
9. FOR DETAILS OF GUARD RAILING TRANSITION TO BRIDGE RAILING, SEE CONSTRUCTION DETAIL C-22.
10. FOR ADDITIONAL DETAILS OF GUARD RAILING CONNECTION TO BRIDGE RAILINGS, SEE CONSTRUCTION DETAIL C-20, C-21, AND C-23.
11. FOR DIKE POSITIONING AND GUARD RAILING DELINEATION DETAILS, SEE CONSTRUCTION DETAIL C-5.
12. DIRECTION OF ADJACENT TRAFFIC INDICATED BY → .
13. NOTCHED FACE OF BLOCK FACES STEEL POST.
14. SLOTTED HOLE FOR BOLTED CONNECTION OF RAIL ELEMENT TO BLOCK AND POST. SEE "SECTION THRU RAIL ELEMENT".
15. SLOTTED HOLES FOR SPLICE BOLTS TO OVERLAP ENDS OF RAIL ELEMENT. SEE "SECTION THRU RAIL ELEMENT".
16. INSTALL POSTS IN SOIL.

METAL BEAM GUARD RAILING
STANDARD RAILING SECTION
(STEEL POST WITH NOTCHED WOOD
OR NOTCHED RECYCLED PLASTIC BLOCK)

CONSTRUCTION DETAILS

NO SCALE

C-2

REVISED BY	DATE REVISED
KRISHNA THAMILSERAN	CARLOS BURKS SR
CALCULATED-DESIGNED BY	CHECKED BY
FUNCTIONAL SUPERVISOR	KEN KEATON

STATE OF CALIFORNIA - DEPARTMENT OF TRANSPORTATION
Caltrans®
03 - DESIGN

LAST REVISION 00-00-00 | DATE PLOTTED => 07-APR-2015 | TIME PLOTTED => 13:04

Dist	COUNTY	ROUTE	POST MILES TOTAL PROJECT	SHEET No.	TOTAL SHEETS
01	Hum	36, 96, 169, 211, 254, etc.	Var	13	103

T. Krishnakumary 3-30-15
REGISTERED CIVIL ENGINEER DATE

3-30-15
PLANS APPROVAL DATE

REGISTERED PROFESSIONAL ENGINEER
KRISHNAKUMARY THAMILSERAN
No. C79630
Exp. 9/30/16
CIVIL
STATE OF CALIFORNIA

THE STATE OF CALIFORNIA OR ITS OFFICERS OR AGENTS SHALL NOT BE RESPONSIBLE FOR THE ACCURACY OR COMPLETENESS OF SCANNED COPIES OF THIS PLAN SHEET.

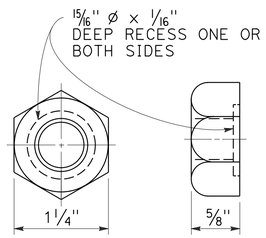

5/8" ø RECESS NUT

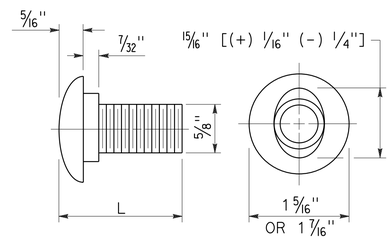

5/8" ø BUTTON HEAD BOLT

L	THREAD LENGTH
1 3/8"	FULL THREAD LENGTH
2"	FULL THREAD LENGTH
10"	4" Min THREAD LENGTH
18"	4" Min THREAD LENGTH
20"	4" Min THREAD LENGTH
22"	4" Min THREAD LENGTH
** 2 3/4"	2" Min THREAD LENGTH
** 19"	4" Min THREAD LENGTH

** FOR NESTED RAIL APPLICATIONS.

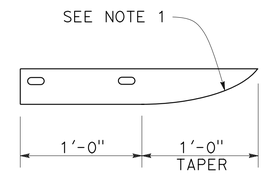

PLAN

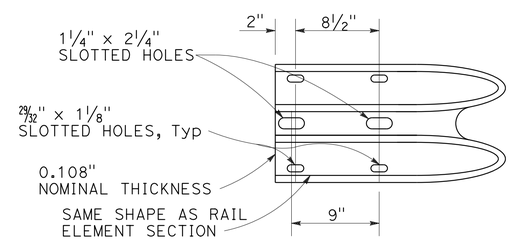

ELEVATION

END CAP (TYPE A)

NOTE:

1. SLOTTED HOLES FOR SPLICE BOLTS TO OVERLAP ENDS OF RAIL ELEMENT.

METAL BEAM GUARD RAILING
STANDARD HARDWARE

CONSTRUCTION DETAILS

NO SCALE

C-3

STATE OF CALIFORNIA - DEPARTMENT OF TRANSPORTATION
Caltrans
03 - DESIGN

FUNCTIONAL SUPERVISOR: KEN KEATON
CALCULATED-DESIGNED BY: KRISHNA THAMILSERAN
CHECKED BY: CARLOS BURKS SR
REVISED BY
DATE REVISED

LAST REVISION 00-00-00
DATE PLOTTED => 07-APR-2015
TIME PLOTTED => 13:04

Dist	COUNTY	ROUTE	POST MILES TOTAL PROJECT	SHEET No.	TOTAL SHEETS
01	Hum	36, 96, 169, 211, 254, etc.	Var	14	103

T. Krishnakumary 3-30-15
REGISTERED CIVIL ENGINEER DATE

3-30-15
PLANS APPROVAL DATE

REGISTERED PROFESSIONAL ENGINEER
KRISHNAKUMARY THAMILSERAN
No. C79630
Exp. 9/30/16
CIVIL
STATE OF CALIFORNIA

THE STATE OF CALIFORNIA OR ITS OFFICERS OR AGENTS SHALL NOT BE RESPONSIBLE FOR THE ACCURACY OR COMPLETENESS OF SCANNED COPIES OF THIS PLAN SHEET.

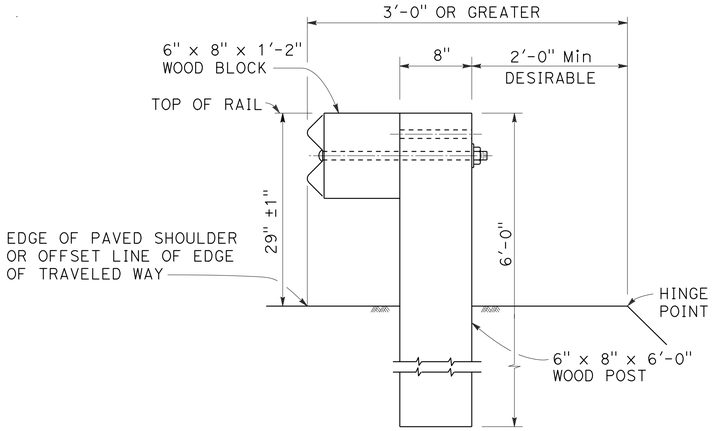

DETAIL A

TYPICAL ROADWAY INSTALLATION

See Note 1

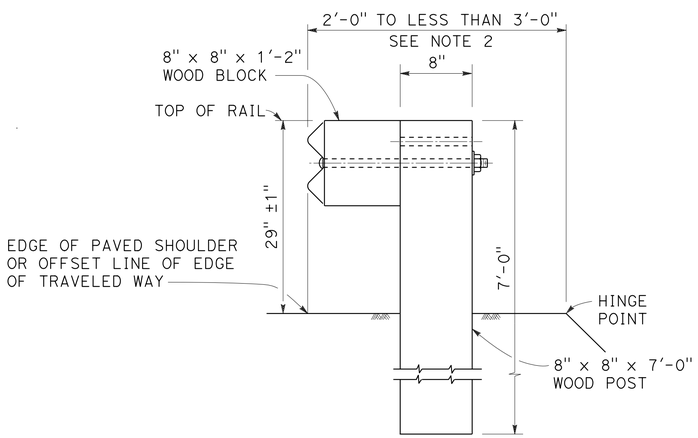

DETAIL B

NARROW ROADWAY INSTALLATION

See Note 1

POST EMBEDMENT

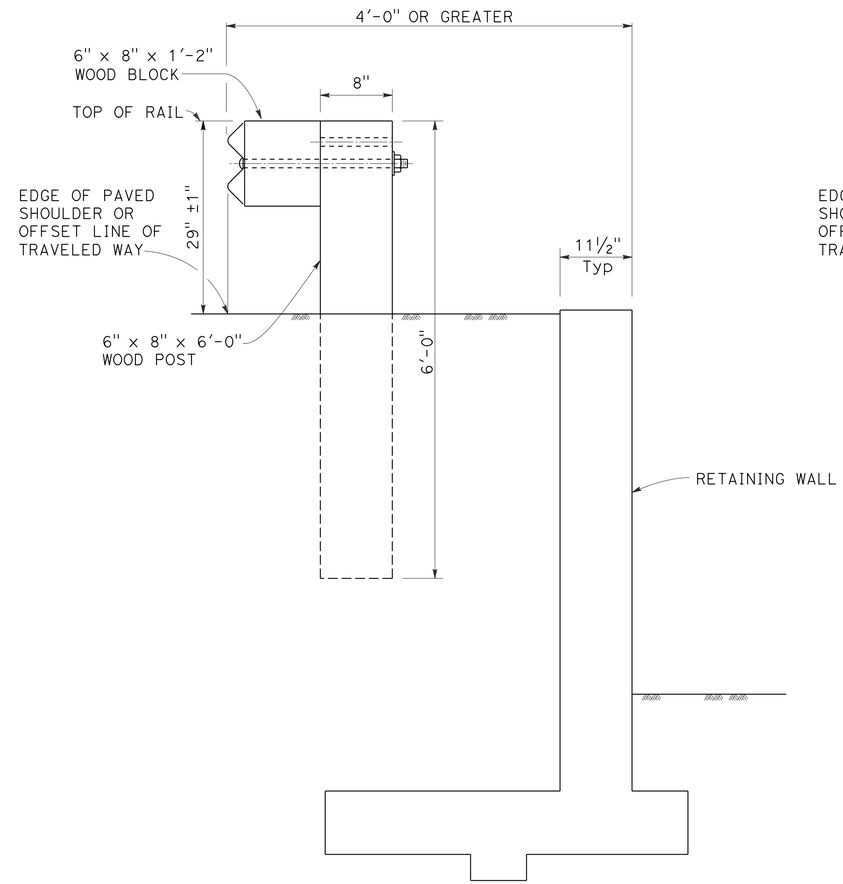

DETAIL C

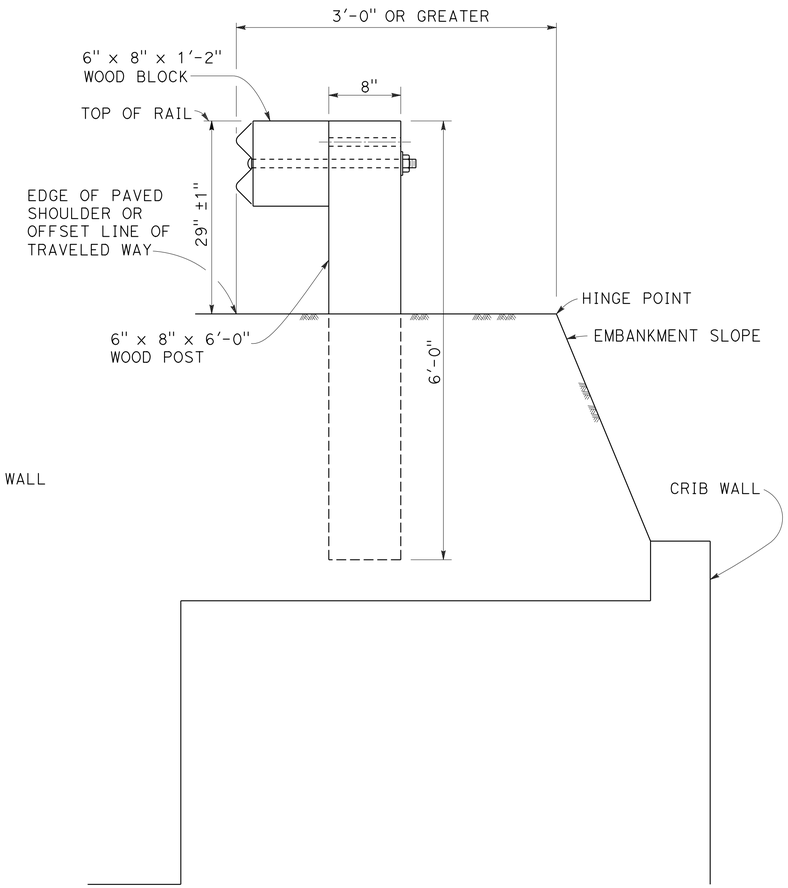

DETAIL D

INSTALLATION AT EARTH RETAINING WALLS

NOTES:

1. THESE INSTALLATION DETAILS ALSO APPLICABLE TO STEEL LINE POST INSTALLATIONS. FOR DETAIL A, C, AND D, WHERE STEEL LINE POST INSTALLATIONS ARE CONSTRUCTED, W6 X 9 STEEL POST, 6'-0" IN LENGTH, WITH 6" X 8" X 1'-2" NOTCHED WOOD BLOCKS OR NOTCHED RECYCLED PLASTIC BLOCKS ARE TO BE USED IN PLACE OF THE SIZE OF WOOD POST AND WOOD BLOCK SHOWN. FOR DETAIL B, WHERE STEEL LINE POST INSTALLATIONS ARE CONSTRUCTED, W6 X 9 STEEL POST, 7'-0" IN LENGTH, WITH 6" X 8" X 1'-2" NOTCHED WOOD BLOCKS OR NOTCHED RECYCLED PLASTIC BLOCKS ARE TO BE USED IN PLACE OF THE SIZE OF WOOD POST AND WOOD BLOCK SHOWN. FOR ADDITIONAL INSTALLATION DETAILS, SEE CONSTRUCTION DETAIL C-1 AND C-2.
2. WHERE THE DISTANCE BETWEEN THE FACE OF THE RAIL AND THE HINGE POINT IS LESS THAN 2'-0", SEE THE PROJECT PLANS FOR SPECIAL DETAILS.
3. FOR DIKE POSITIONING WITH GUARD RAILING INSTALLATIONS, SEE CONSTRUCTION DETAIL C-5.

METAL BEAM GUARD RAILING
TYPICAL LINE POST EMBEDMENT AND
HINGE POINT OFFSET DETAILS

CONSTRUCTION DETAILS

NO SCALE

C-4

STATE OF CALIFORNIA - DEPARTMENT OF TRANSPORTATION
Caltrans
03 - DESIGN
FUNCTIONAL SUPERVISOR: KEN KEATON
CALCULATED-DESIGNED BY: KRISHNA THAMILSERAN
CHECKED BY: CARLOS BURKS SR
REVISED BY
DATE REVISED

LAST REVISION 00-00-00
DATE PLOTTED => 07-APR-2015
TIME PLOTTED => 13:04

Dist	COUNTY	ROUTE	POST MILES TOTAL PROJECT	SHEET No.	TOTAL SHEETS
01	Hum	36, 96, 169, 211, 254, etc.	Var	15	103

T. Krishnakumary 3-30-15
REGISTERED CIVIL ENGINEER DATE

3-30-15
PLANS APPROVAL DATE

REGISTERED PROFESSIONAL ENGINEER
KRISHNAKUMARY THAMILSERAN
No. C79630
Exp. 9/30/16
CIVIL
STATE OF CALIFORNIA

THE STATE OF CALIFORNIA OR ITS OFFICERS OR AGENTS SHALL NOT BE RESPONSIBLE FOR THE ACCURACY OR COMPLETENESS OF SCANNED COPIES OF THIS PLAN SHEET.

NOTES:

1. WHEN NECESSARY TO PLACE DIKE IN FRONT OF FACE OF GUARD RAILING, ONLY TYPE C DIKE MAY BE USED. FOR DIKE DETAILS, SEE STANDARD PLAN RSP A87B.
2. FOR STANDARD RAILING POST EMBEDMENT, SEE CONSTRUCTION DETAIL C-4.
3. GUARD RAILING DELINEATION TO BE USED WHERE SHOWN ON THE PROJECT PLANS.
4. WHEN DIKE OR CURB IS PLACED UNDER GUARD RAILING, THE MAXIMUM HEIGHT OF THE DIKE OR CURB SHALL BE 4". MOUNTABLE DIKE SHOULD NOT BE USED. FOR DIKE AND CURB DETAILS, SEE STANDARD PLAN RSP A87A.
5. FOR DETAILS OF TYPICAL DISTANCE BETWEEN THE FACE OF RAIL AND HINGE POINT, SEE CONSTRUCTION DETAIL C-4.
6. FOR STEEL LINE POSTS, USE 1/4 - 20 SELF-TAPPING SCREWS IN 0.22" DIAMETER HOLES OR 1/4" BOLTS IN 9/32" DIAMETER HOLES.

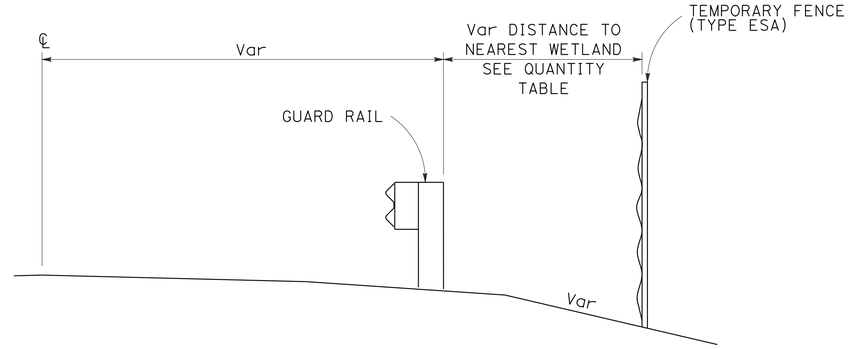

TEMPORARY FENCE (TYPE ESA)

ROUTES 211, 255

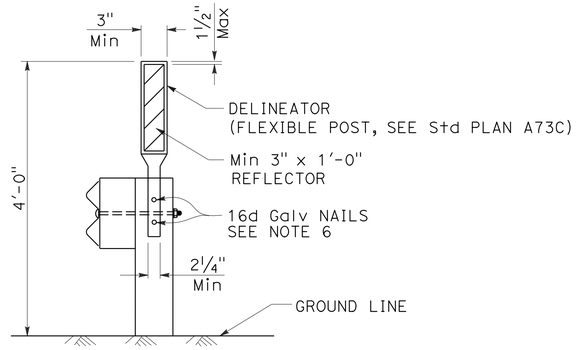

GUARD RAILING DELINEATION

SEE NOTE 3

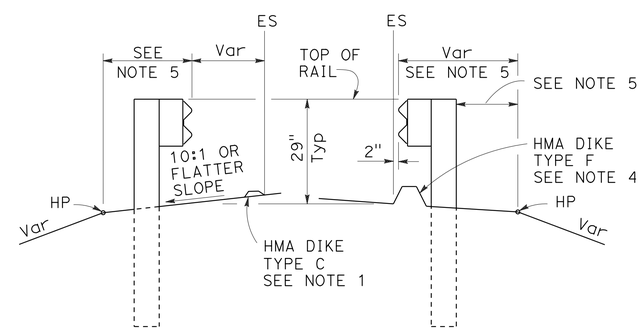

DIKE POSITIONING

SEE NOTE 1

METAL BEAM GUARD RAILING
TYPICAL RAILING DELINEATION
AND DIKE POSITIONING DETAILS

CONSTRUCTION DETAILS

NO SCALE

C-5

STATE OF CALIFORNIA - DEPARTMENT OF TRANSPORTATION
Caltrans
03 - DESIGN
FUNCTIONAL SUPERVISOR: KEN KEATON
CALCULATED-DESIGNED BY: KRISHNA THAMILSERAN
CHECKED BY: CARLOS BURKS SR
REVISED BY
DATE REVISED

LAST REVISION 00-00-00
DATE PLOTTED => 07-APR-2015
TIME PLOTTED => 13:04

Dist	COUNTY	ROUTE	POST MILES TOTAL PROJECT	SHEET No.	TOTAL SHEETS
01	Hum	36, 96, 169, 211, 254, etc.	Var	16	103

T. Krishnakumary 3-30-15
REGISTERED CIVIL ENGINEER DATE

3-30-15
PLANS APPROVAL DATE

REGISTERED PROFESSIONAL ENGINEER
KRISHNAKUMARY THAMILSERAN
No. C79630
Exp. 9/30/16
CIVIL
STATE OF CALIFORNIA

THE STATE OF CALIFORNIA OR ITS OFFICERS OR AGENTS SHALL NOT BE RESPONSIBLE FOR THE ACCURACY OR COMPLETENESS OF SCANNED COPIES OF THIS PLAN SHEET.

NOTES:

1. SEE STANDARD PLANS RSP A77N5, RSP A77N6, RSP A77N7 AND RSP A77N8 FOR ADDITIONAL VEGETATION CONTROL.
2. FOR LOCATIONS OF VEGETATION CONTROL TYPES SEE SUMMARY OF QUANTITIES SHEETS.
3. WHERE THE DISTANCE BETWEEN BACK OF POST AND HINGE POINT IS LESS THAN 42", CONSTRUCT VEGETATION CONTROL TO 6" FROM HINGE POINT WHILE MAINTAINING THE 8" BLOCK-OUT AT BACK OF POST. IF THE 8" BLOCK-OUT AT BACK OF POST CAN NOT BE MAINTAINED, CONSTRUCT VEGETATION CONTROL FLUSH WITH THE BACK EDGE OF POST.
4. WHERE EXISTING DIKE REMAINS UNDER RAILING, CONSTRUCT VEGETATION CONTROL MAT (FIBER) TO BACK EDGE OF DIKE. WHERE PAVED SHOULDER IS CONSTRUCTED WITHIN 36" IN FRONT OF THE POST, CONSTRUCT VEGETATION CONTROL MAT (FIBER) TO THE EDGE OF PAVED SHOULDER.
5. FOR LOCATIONS WHERE VEGETATION CONTROL MAT (FIBER) IS USED AND IS ADJACENT TO EP; SEAL TO EP.
6. POST SPACING & OTHER DIMENSIONS TO BE VERIFIED IN THE FIELD BY THE CONTRACTOR.
7. DIRECTION OF ADJACENT TRAFFIC INDICATED BY ←.
8. USE VEGETATION CONTROL MAT (FIBER) DETAIL FOR BURIED POST ANCHOR.

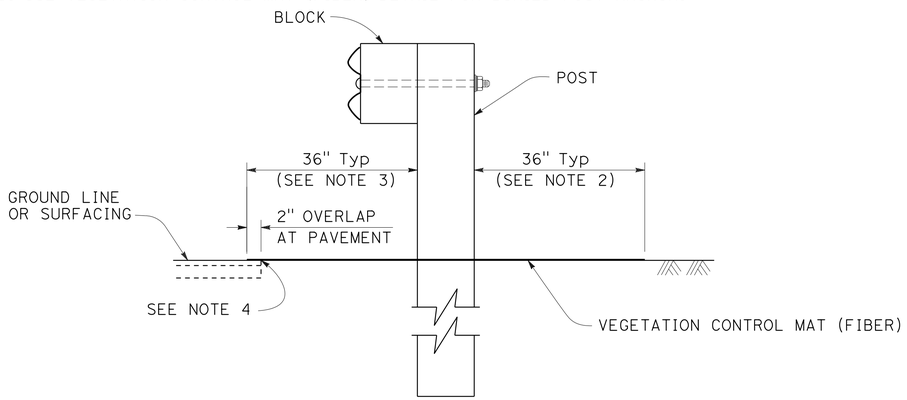

SECTION A-A

VEGETATION CONTROL MAT (FIBER)
AT EDGE OF PAVEMENT

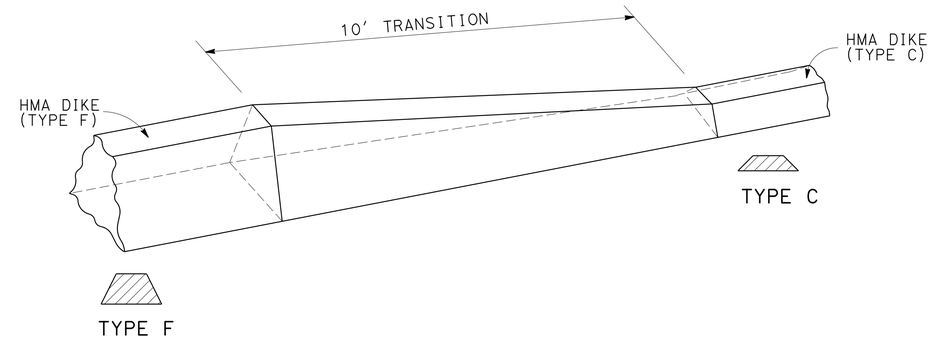

DIKE TRANSITION

TYPE C TO TYPE F

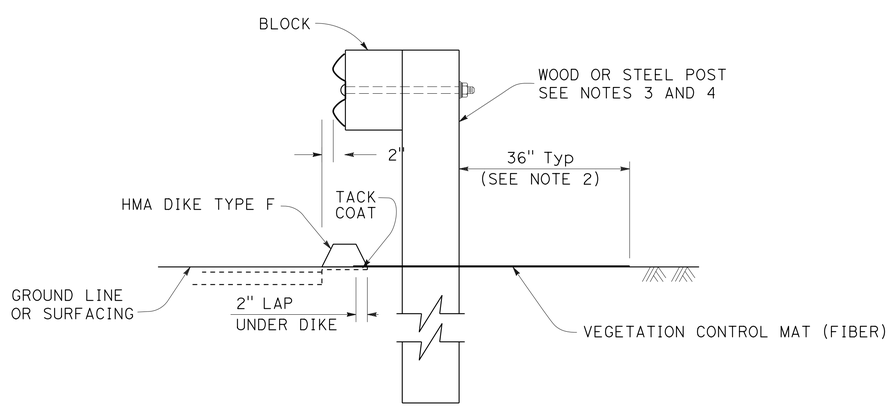

SECTION A-A

VEGETATION CONTROL MAT (FIBER)
WITH NEW HMA DIKE

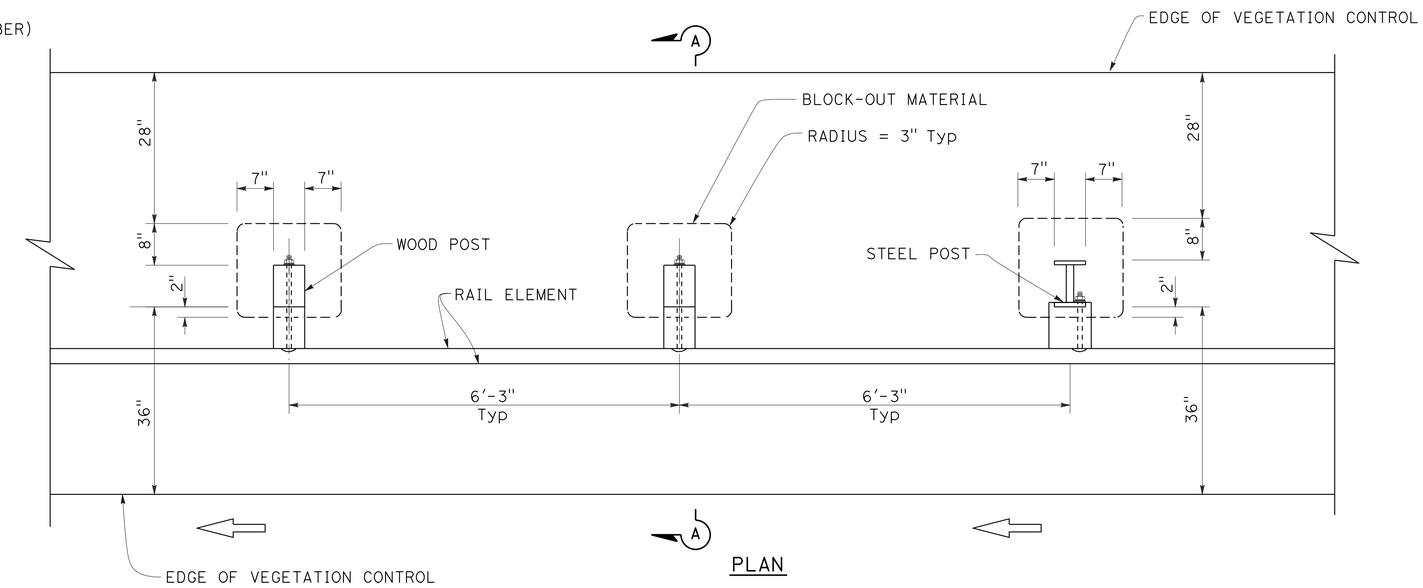

PLAN

METAL BEAM GUARD RAILING
TYPICAL VEGETATION CONTROL MAT (FIBER)
STANDARD RAILING SECTION

CONSTRUCTION DETAILS

NO SCALE

C-6

STATE OF CALIFORNIA - DEPARTMENT OF TRANSPORTATION
Caltrans
03 - DESIGN
FUNCTIONAL SUPERVISOR: KEN KEATON
CALCULATED-DESIGNED BY: KRISHNA THAMILSERAN
CHECKED BY: GARY DUGHI
REVISED BY
DATE REVISED

LAST REVISION 00-00-00
DATE PLOTTED => 07-APR-2015
TIME PLOTTED => 13:04

Dist	COUNTY	ROUTE	POST MILES TOTAL PROJECT	SHEET No.	TOTAL SHEETS
01	Hum	36, 96, 169, 211, 254, etc.	Var	17	103

T. Krishnakumary 3-30-15
REGISTERED CIVIL ENGINEER DATE

3-30-15
PLANS APPROVAL DATE

REGISTERED PROFESSIONAL ENGINEER
KRISHNAKUMARY THAMILSERAN
No. C79630
Exp. 9/30/16
CIVIL
STATE OF CALIFORNIA

THE STATE OF CALIFORNIA OR ITS OFFICERS OR AGENTS SHALL NOT BE RESPONSIBLE FOR THE ACCURACY OR COMPLETENESS OF SCANNED COPIES OF THIS PLAN SHEET.

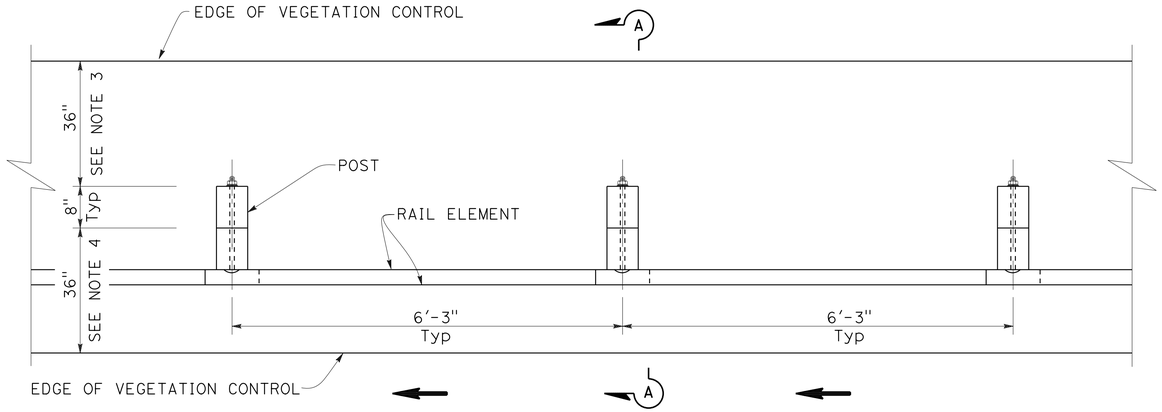

PLAN

NOTES:

1. SEE STANDARD PLANS RSP A77N5, RSP A77N6, RSP A77N7 AND RSP A77N8 FOR ADDITIONAL VEGETATION CONTROL.
2. FOR LOCATIONS OF VEGETATION CONTROL TYPES SEE SUMMARY OF QUANTITIES SHEETS.
3. WHERE THE DISTANCE BETWEEN BACK OF POST AND HINGE POINT IS LESS THAN 42", CONSTRUCT VEGETATION CONTROL TO 6" FROM HINGE POINT. WHERE THE DISTANCE BETWEEN BACK OF POST AND HINGE POINT IS LESS THAN 24", VEGETATION CONTROL TO BE CONSTRUCTED 6" BEYOND THE HINGE POINT WITH THE EDGE KEYED IN.
4. WHERE EXISTING DIKE REMAINS UNDER RAILING, CONSTRUCT VEGETATION CONTROL TO BACK EDGE OF DIKE. WHERE PAVED SHOULDER IS CONSTRUCTED WITHIN 36" IN FRONT OF THE POST, CONSTRUCT VEGETATION CONTROL TO THE EDGE OF PAVED SHOULDER.
5. FEATHER EDGE OF ASPHALT COMPOSITE TRANSITION UP POSTS AND BACK OF CURBS AND DIKES. TRANSITION LINE SHALL FORM A REASONABLY STRAIGHT LINE, HORIZONTALLY FROM POST TO POST OR ALONG TOP EDGE OF CURB OR DIKE.
6. DIRECTION OF ADJACENT TRAFFIC INDICATED BY ← .

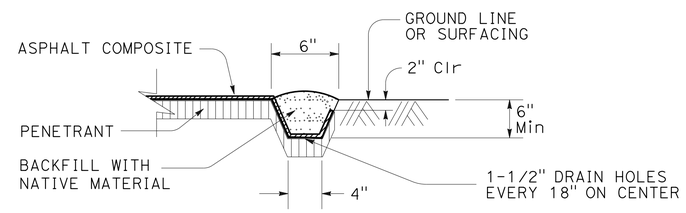

KEY EDGE

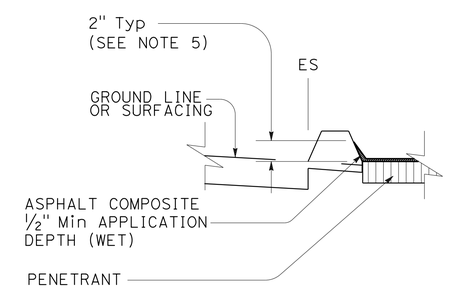

VEGETATION CONTROL at CURB OR DIKE

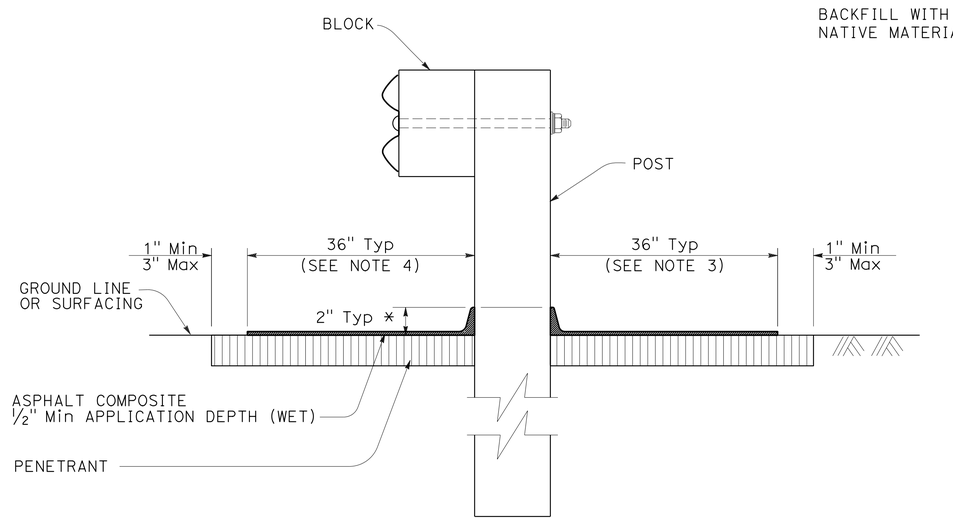

* (See Note 3)

SECTION A-A

METAL BEAM GUARD RAILING
VEGETATION CONTROL (ASPHALT COMPOSITE)
STANDARD RAILING SECTION

CONSTRUCTION DETAILS

NO SCALE

C-7

STATE OF CALIFORNIA - DEPARTMENT OF TRANSPORTATION
Caltrans
03 - DESIGN

FUNCTIONAL SUPERVISOR: KEN KEATON
CALCULATED-DESIGNED BY: KRISHNA THAMILSERAN
CHECKED BY: CARLOS BURKS SR
REVISED BY
DATE REVISED

LAST REVISION 00-00-00
DATE PLOTTED => 07-APR-2015
TIME PLOTTED => 13:04

Dist	COUNTY	ROUTE	POST MILES TOTAL PROJECT	SHEET No.	TOTAL SHEETS
01	Hum	36, 96, 169, 211, 254, etc.	Var	18	103

T. Krishnakumary 3-30-15
REGISTERED CIVIL ENGINEER DATE

3-30-15
PLANS APPROVAL DATE

REGISTERED PROFESSIONAL ENGINEER KRISHNAKUMARY THAMILSERAN No. C79630 Exp. 9/30/16 CIVIL STATE OF CALIFORNIA

THE STATE OF CALIFORNIA OR ITS OFFICERS OR AGENTS SHALL NOT BE RESPONSIBLE FOR THE ACCURACY OR COMPLETENESS OF SCANNED COPIES OF THIS PLAN SHEET.

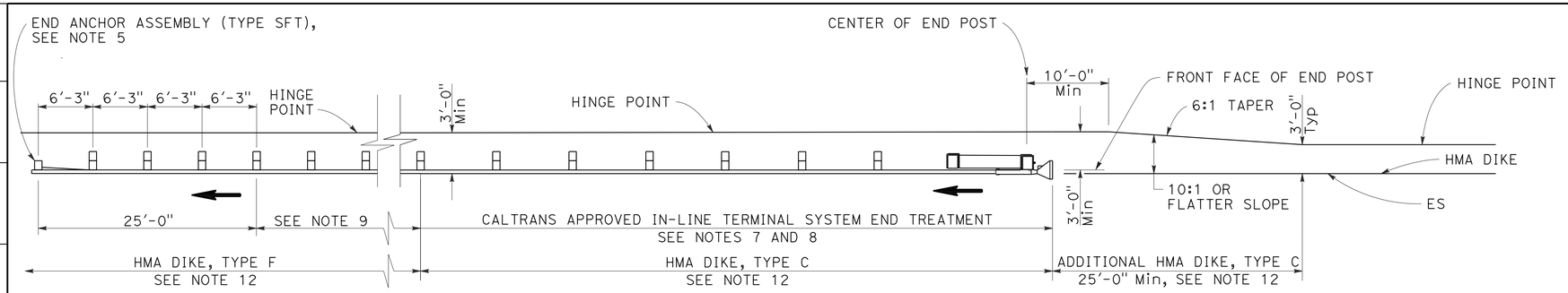

TYPE 11A LAYOUT

(EMBANKMENT GUARD RAILING INSTALLATION WITH IN-LINE END TREATMENT AT TRAFFIC APPROACH END OF RAILING) SEE NOTE 6

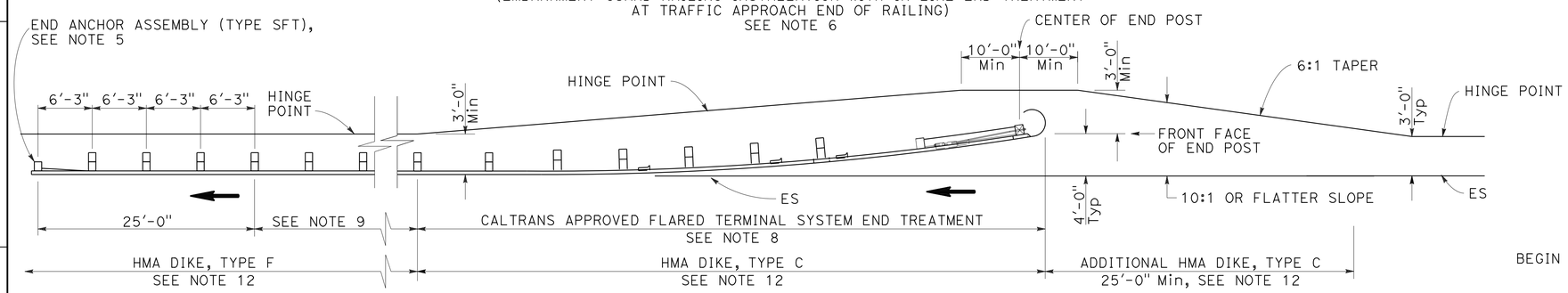

TYPE 11B LAYOUT

(EMBANKMENT GUARD RAILING INSTALLATION WITH FLARED END TREATMENT AT TRAFFIC APPROACH END OF RAILING) SEE NOTE 6

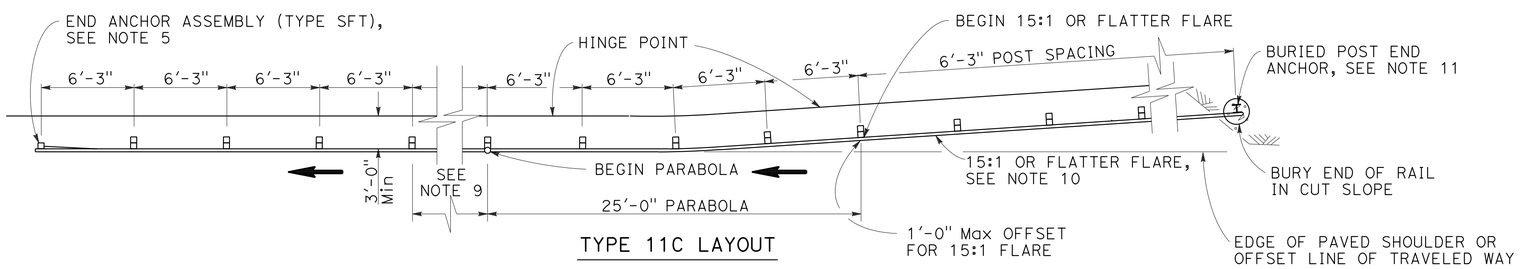

TYPE 11C LAYOUT

(EMBANKMENT GUARD RAILING INSTALLATION WITH BURIED END ANCHOR TREATMENT AT TRAFFIC APPROACH END OF RAILING) SEE NOTES 6AND 12.

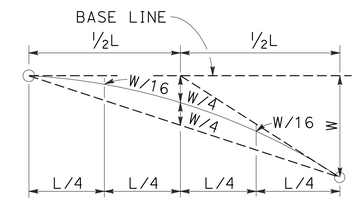

TYPICAL PARABOLIC LAYOUT

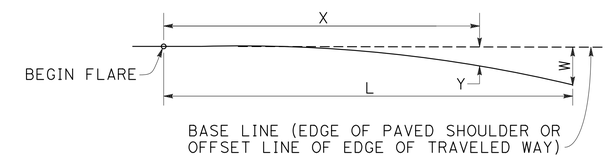

$$Y = \frac{WX^2}{L^2}$$

Y = OFFSET FROM BASE LINE
W = MAXIMUM OFFSET
X = DISTANCE ALONG BASE LINE
L = LENGTH OF FLARE

PARABOLIC FLARE OFFSETS

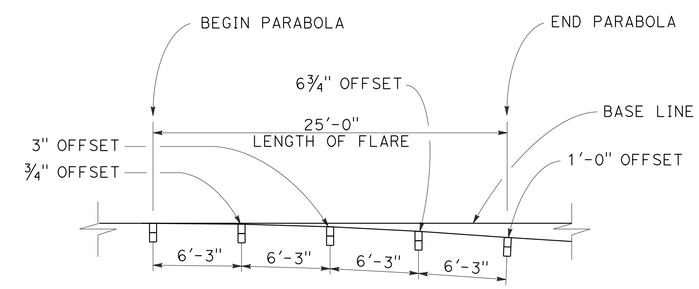

TYPICAL FLARE OFFSETS

FOR 1 FOOT Max END OFFSET

NOTES:

1. LINE POST, BLOCKS AND HARDWARE TO BE USED ARE SHOWN ON CONSTRUCTION DETAILS C-1, C-2, C-3 AND STANDARD PLANS RSP A77N1 AND RSP A77N2.
2. GUARD RAIL POST SPACING TO BE 6'-3" CENTER TO CENTER, EXCEPT AS OTHERWISE NOTED.
3. EXCEPT AS NOTED, LINE POSTS ARE 6" X 8" X 6'-0" WOOD WITH 6" X 8" X 1'-2" WOOD BLOCKS. W6 X 9 STEEL POSTS, 6'-0" IN LENGTH, WITH 6" X 8" X 1'-2" NOTCHED WOOD BLOCKS OR RECYCLED PLASTIC BLOCKS MAY BE USED FOR 6" X 8" X 6'-0" WOOD POST WITH 6" X 8" X 1'-2" WOOD BLOCKS WHERE APPLICABLE AND WHEN SPECIFIED.
4. DIRECTION OF ADJACENT TRAFFIC INDICATED BY ⟶.
5. FOR END ANCHOR ASSEMBLY (TYPE SFT) DETAILS, SEE STANDARD PLAN RSP A77L3.
6. LAYOUT TYPES 11A, 11B OR 11C ARE TYPICALLY USED WHERE GUARD RAILING IS RECOMMENDED TO SHIELD EMBANKMENT SLOPES AND A CRASHWORTHY END TREATMENT IS REQUIRED FOR ONLY ONE DIRECTION OF TRAFFIC.
7. IN-LINE TERMINAL SYSTEM END TREATMENTS ARE USED WHERE SITE CONDITIONS WILL NOT ACCOMMODATE A FLARED END TREATMENT.
8. THE TYPE OF TERMINAL SYSTEM END TREATMENT TO BE USED WILL BE SHOWN ON THE PROJECT PLANS.
9. DEPENDENT ON SITE CONDITIONS (EMBANKMENT HEIGHT AND SIDE SLOPE), CONSTRUCTION OF ADDITIONAL GUARD RAILING (LENGTH EQUAL TO MULTIPLES OF 12'-6" WITH 6'-3" POST SPACING) MAY BE ADVISABLE.
10. THE 15:1 OR FLATTER FLARE USED WITH BURIED END ANCHORS IS BASED ON THE EDGE OF THE PAVED SHOULDER OR OFFSET LINE OF EDGE OF THE TRAVELED WAY. THE LENGTH OF GUARD RAILING WITHIN THE 15:1 OR FLATTER FLARE IS BASED ON SITE CONDITIONS AND SHOULD BE A LENGTH EQUAL TO MULTIPLES OF 12'-6".
11. FOR DETAILS OF THE BURIED POST END ANCHOR USED WITH TYPE 11C LAYOUT, SEE STANDARD PLAN RSP A77L3.
12. WHERE PLACEMENT OF DIKE IS REQUIRED WITH GUARD RAILING INSTALLATIONS, SEE CONSTRUCTION DETAIL C-5 FOR DIKE POSITIONING DETAILS.

METAL BEAM GUARD RAILING
TYPICAL LAYOUTS FOR EMBANKMENTS

CONSTRUCTION DETAILS

NO SCALE

C-8

REVISED BY | DATE REVISED
KRISHNA THAMILSERAN | CARLOS BURKS SR
CALCULATED-DESIGNED BY | CHECKED BY
FUNCTIONAL SUPERVISOR | KEN KEATON
STATE OF CALIFORNIA - DEPARTMENT OF TRANSPORTATION | 03 - DESIGN

LAST REVISION 00-00-00 | DATE PLOTTED => 07-APR-2015 | TIME PLOTTED => 13:04

Dist	COUNTY	ROUTE	POST MILES TOTAL PROJECT	SHEET No.	TOTAL SHEETS
01	Hum	36, 96, 169, 211, 254, etc.	Var	19	103

T. Krishnakumary 3-30-15
REGISTERED CIVIL ENGINEER DATE

3-30-15
PLANS APPROVAL DATE

REGISTERED PROFESSIONAL ENGINEER
KRISHNAKUMARY THAMILSERAN
No. C79630
Exp. 9/30/16
CIVIL
STATE OF CALIFORNIA

THE STATE OF CALIFORNIA OR ITS OFFICERS OR AGENTS SHALL NOT BE RESPONSIBLE FOR THE ACCURACY OR COMPLETENESS OF SCANNED COPIES OF THIS PLAN SHEET.

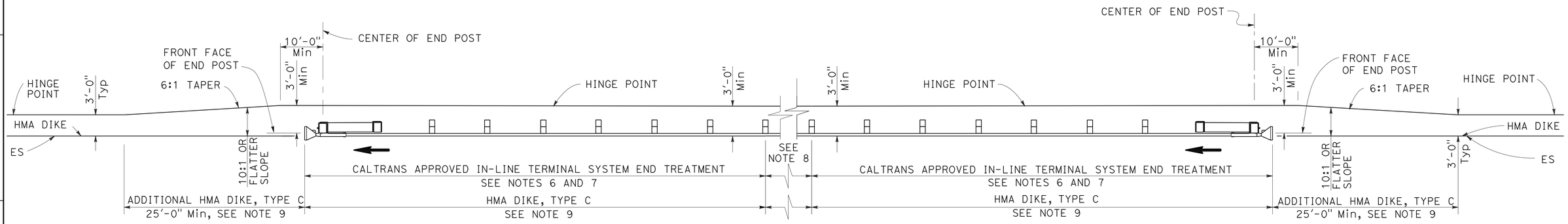

TYPE 11D LAYOUT

(EMBANKMENT GUARD RAILING INSTALLATION WITH IN-LINE END TREATMENT AT EACH END OF RAILING)
SEE NOTE 5

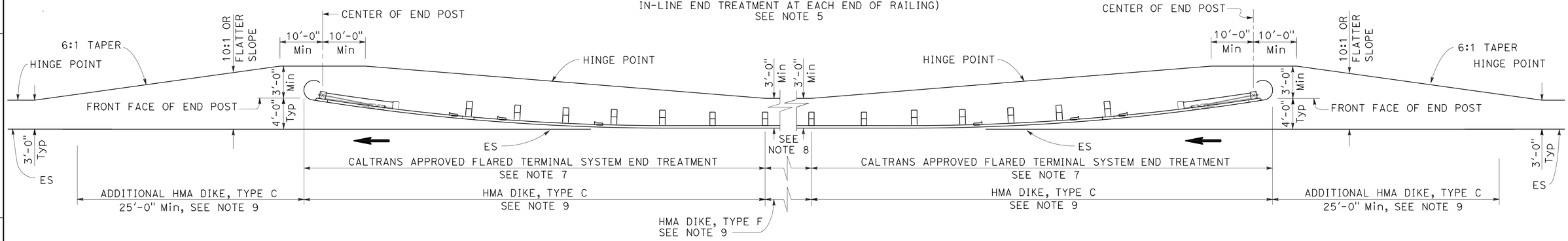

TYPE 11E LAYOUT

(EMBANKMENT GUARD RAILING INSTALLATION WITH FLARED END TREATMENT AT EACH END OF RAILING)
SEE NOTE 5

NOTES:

1. LINE POST, BLOCKS AND HARDWARE TO BE USED ARE SHOWN ON CONSTRUCTION DETAILS C-1, C-2, C-3 AND STANDARD PLANS RSP A77N1 AND RSP A77N2.
2. GUARD RAIL POST SPACING TO BE 6'-3" CENTER TO CENTER, EXCEPT AS OTHERWISE NOTED.
3. EXCEPT AS NOTED, LINE POSTS ARE 6" X 8" X 6'-0" WOOD WITH 6" X 8" X 1'-2" WOOD BLOCKS. W6 X 9 STEEL POSTS, 6'-0" IN LENGTH, WITH 6" X 8" X 1'-2" NOTCHED WOOD BLOCKS OR PLASTIC BLOCKS MAY BE USED FOR 6" X 8" X 6'-0" WOOD POST WITH 6" X 8" X 1'-2" WOOD BLOCKS WHERE APPLICABLE AND WHEN SPECIFIED.
4. DIRECTION OF ADJACENT TRAFFIC INDICATED BY ⟶.
5. LAYOUT TYPES 11D THROUGH 11L, SHOWN ON THE CONSTRUCTION DETAIL PLANS, ARE TYPICALLY USED WHERE GUARD RAILING IS RECOMMENDED TO SHIELD EMBANKMENT SLOPES AND A CRASHWORTHY END TREATMENT IS REQUIRED FOR BOTH DIRECTIONS OF TRAFFIC.
6. IN-LINE TERMINAL SYSTEM END TREATMENTS ARE USED WHERE SITE CONDITIONS WILL NOT ACCOMMODATE A FLARED END TREATMENT.
7. THE TYPE OF TERMINAL SYSTEM END TREATMENT TO BE USED WILL BE SHOWN ON THE PROJECT PLANS.
8. DEPENDENT ON SITE CONDITIONS (EMBANKMENT HEIGHT AND SIDE SLOPE), CONSTRUCTION OF ADDITIONAL GUARD RAILING (LENGTH EQUAL TO MULTIPLES OF 12'-6" WITH 6'-3" POST SPACING) MAY BE ADVISABLE.
9. WHERE PLACEMENT OF DIKE IS REQUIRED WITH GUARD RAILING INSTALLATIONS, SEE CONSTRUCTION DETAIL C-5 FOR DIKE POSITIONING DETAILS.

METAL BEAM GUARD RAILING
TYPICAL LAYOUTS FOR EMBANKMENTS

CONSTRUCTION DETAILS

NO SCALE

C-9

REVISED BY | DATE REVISED
KRISHNA THAMILSERAN | CARLOS BURKS SR
CALCULATED-DESIGNED BY | CHECKED BY
FUNCTIONAL SUPERVISOR | KEN KEATON

STATE OF CALIFORNIA - DEPARTMENT OF TRANSPORTATION
Caltrans 03 - DESIGN

LAST REVISION 00-00-00 | DATE PLOTTED => 07-APR-2015 | TIME PLOTTED => 13:04

Dist	COUNTY	ROUTE	POST MILES TOTAL PROJECT	SHEET No.	TOTAL SHEETS
01	Hum	36, 96, 169, 211, 254, etc.	Var	20	103

REGISTERED CIVIL ENGINEER 3-30-15 DATE

3-30-15
PLANS APPROVAL DATE

REGISTERED PROFESSIONAL ENGINEER KRISHNAKUMARY THAMILSERAN No. C79630 Exp. 9/30/16 CIVIL STATE OF CALIFORNIA

THE STATE OF CALIFORNIA OR ITS OFFICERS OR AGENTS SHALL NOT BE RESPONSIBLE FOR THE ACCURACY OR COMPLETENESS OF SCANNED COPIES OF THIS PLAN SHEET.

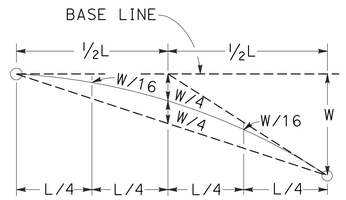

TYPICAL PARABOLIC LAYOUT

BASE LINE (EDGE OF PAVED SHOULDER OR OFFSET LINE OF EDGE OF TRAVELED WAY)

$$Y = \frac{WX^2}{L^2}$$

Y = OFFSET FROM BASE LINE
W = MAXIMUM OFFSET
X = DISTANCE ALONG BASE LINE
L = LENGTH OF FLARE

PARABOLIC FLARE OFFSETS

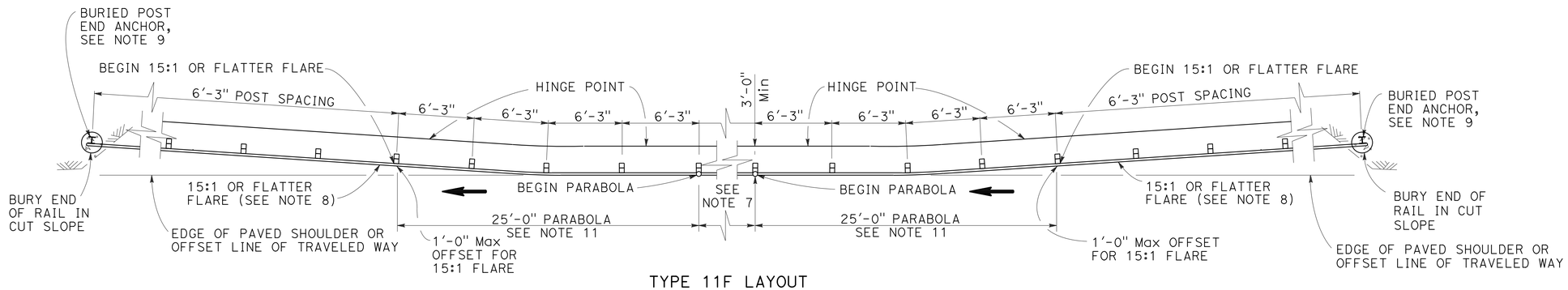

TYPE 11F LAYOUT

(EMBANKMENT GUARD RAILING INSTALLATION WITH A BURIED END ANCHOR TREATMENT AT EACH END OF RAILING)
SEE NOTES 5 AND 10

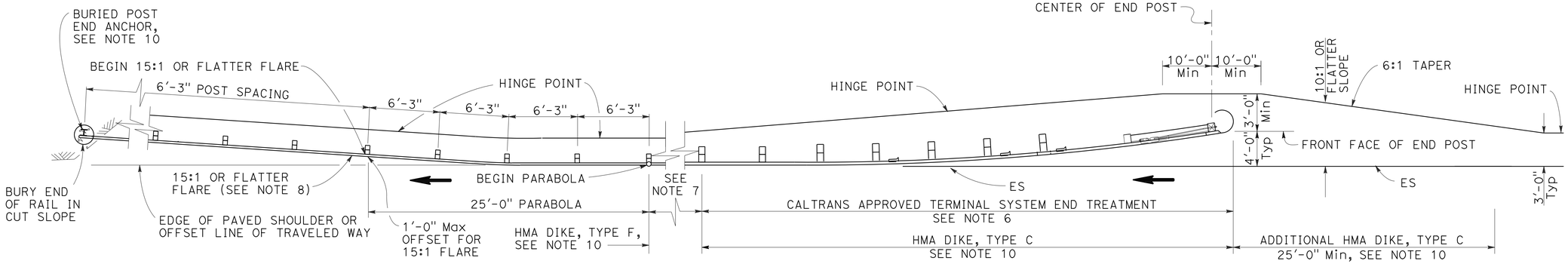

TYPE 11G LAYOUT

(EMBANKMENT GUARD RAILING INSTALLATION WITH FLARED END TREATMENT AND A BURIED END ANCHOR TREATMENT AT THE ENDS OF RAILING)
SEE NOTES 5 AND 10

NOTES:

1. LINE POST, BLOCKS AND HARDWARE TO BE USED ARE SHOWN ON CONSTRUCTION DETAILS C-1, C-2, C-3 AND STANDARD PLANS RSP A77N1 AND RSP A77N2.
2. GUARD RAIL POST SPACING TO BE 6'-3" CENTER TO CENTER, EXCEPT AS OTHERWISE NOTED.
3. EXCEPT AS NOTED, LINE POSTS ARE 6" X 8" X 6'-0" WOOD WITH 6" X 8" X 1'-2" WOOD BLOCKS. W6 X 9 STEEL POSTS, 6'-0" IN LENGTH, WITH 6" X 8" X 1'-2" NOTCHED WOOD BLOCKS OR PLASTIC BLOCKS MAY BE USED FOR 6" X 8" X 6'-0" WOOD POST WITH 6" X 8" X 1'-2" WOOD BLOCKS WHERE APPLICABLE AND WHEN SPECIFIED.
4. DIRECTION OF ADJACENT TRAFFIC INDICATED BY ⟶ .
5. LAYOUT TYPES 11D THROUGH 11L, CONSTRUCTION DETAIL PLANS, ARE TYPICALLY USED WHERE GUARD RAILING IS RECOMMENDED TO SHIELD EMBANKMENT SLOPES AND A CRASHWORTHY END TREATMENT IS REQUIRED FOR BOTH DIRECTIONS OF TRAFFIC.
6. THE TYPE OF TERMINAL SYSTEM END TREATMENT TO BE USED WILL BE SHOWN ON THE PROJECT PLANS.
7. DEPENDENT ON SITE CONDITIONS (EMBANKMENT HEIGHT AND SIDE SLOPE), CONSTRUCTION OF ADDITIONAL GUARD RAILING (LENGTH EQUAL TO MULTIPLES OF 12'-6" WITH 6'-3" POST SPACING) MAY BE ADVISABLE.
8. THE 15:1 OR FLATTER FLARE USED WITH BURIED END ANCHORS IS BASED ON THE EDGE OF THE PAVED SHOULDER OR OFFSET LINE OF EDGE OF THE TRAVELED WAY. THE LENGTH OF GUARD RAILING WITHIN THE 15:1 OR FLATTER FLARE IS BASED ON SITE CONDITIONS AND SHOULD BE A LENGTH EQUAL TO MULTIPLES OF 12'-6".
9. FOR DETAILS OF THE BURIED POST END ANCHOR USED WITH TYPE 11F AND 11G LAYOUTS, SEE STANDARD PLAN RSP A77L3.
10. WHERE PLACEMENT OF DIKE IS REQUIRED WITH GUARD RAILING INSTALLATIONS, SEE CNSTRUCTION DETAIL C-5 FOR DIKE POSITIONING DETAILS.
11. FOR TYPICAL FLARE OFFSETS FOR 25'-0" LENGTH PARABOLA WITH MAXIMUM OFFSET OF 1'-0", SEE CONSTRUCTION DETAIL C-8.

METAL BEAM GUARD RAILING
TYPICAL LAYOUTS FOR
EMBANKMENTS

CONSTRUCTION DETAILS

NO SCALE

C-10

REVISED BY | DATE REVISED
KRISHNA THAMILSERAN | CARLOS BURKS SR
CALCULATED-DESIGNED BY | CHECKED BY
FUNCTIONAL SUPERVISOR | KEN KEATON

STATE OF CALIFORNIA - DEPARTMENT OF TRANSPORTATION
Caltrans 03 - DESIGN

LAST REVISION 00-00-00 | DATE PLOTTED => 07-APR-2015 | TIME PLOTTED => 13:04

Dist	COUNTY	ROUTE	POST MILES TOTAL PROJECT	SHEET No.	TOTAL SHEETS
01	Hum	36, 96, 169, 211, 254, etc.	Var	21	103

T. Krishnakumary 3-30-15
REGISTERED CIVIL ENGINEER DATE

3-30-15
PLANS APPROVAL DATE

REGISTERED PROFESSIONAL ENGINEER
KRISHNAKUMARY THAMILSERAN
No. C79630
Exp. 9/30/16
CIVIL
STATE OF CALIFORNIA

THE STATE OF CALIFORNIA OR ITS OFFICERS OR AGENTS SHALL NOT BE RESPONSIBLE FOR THE ACCURACY OR COMPLETENESS OF SCANNED COPIES OF THIS PLAN SHEET.

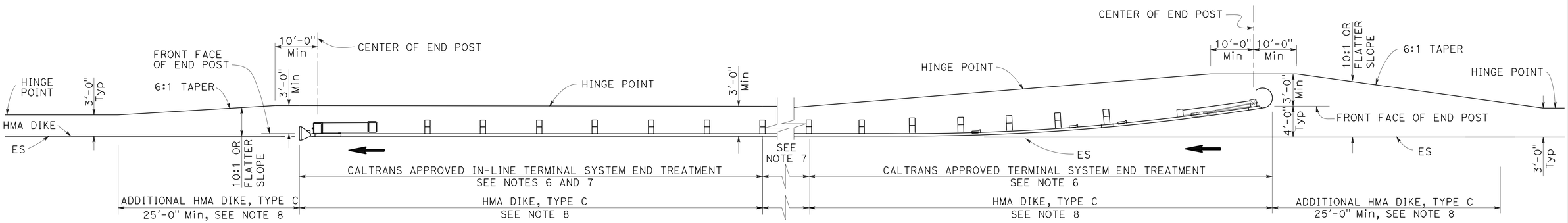

TYPE 11H LAYOUT

(EMBANKMENT GUARD RAILING INSTALLATION WITH FLARED END TREATMENT
AND AN IN-LINE TREATMENT AT THE ENDS OF RAILING)
SEE NOTES 5 AND 8

NOTES:

1. LINE POST, BLOCKS AND HARDWARE TO BE USED ARE SHOWN ON CONSTRUCTION DETAILS C-1, C-2, C-3 AND STANDARD PLANS RSP A77N1 AND RSP A77N2.
2. GUARD RAIL POST SPACING TO BE 6'-3" CENTER TO CENTER, EXCEPT AS OTHERWISE NOTED.
3. EXCEPT AS NOTED, LINE POSTS ARE 6" X 8" X 6'-0" WOOD WITH 6" X 8" X 1'-2" WOOD BLOCKS. W6 X 9 STEEL POSTS, 6'-0" IN LENGTH, WITH 6" X 8" X 1'-2" NOTCHED WOOD BLOCKS OR PLASTIC BLOCKS MAY BE USED FOR 6" X 8" X 6'-0" WOOD POST WITH 6" X 8" X 1'-2" WOOD BLOCKS WHERE APPLICABLE AND WHEN SPECIFIED.
4. DIRECTION OF ADJACENT TRAFFIC INDICATED BY ➡.
5. LAYOUT TYPES 11D THROUGH 11L, SHOWN ON THE CONSTRUCTION DETAIL PLANS, ARE TYPICALLY USED WHERE GUARD RAILING IS RECOMMENDED TO SHIELD EMBANKMENT SLOPES AND A CRASHWORTHY END TREATMENT IS REQUIRED FOR BOTH DIRECTIONS OF TRAFFIC.
6. THE TYPE OF TERMINAL SYSTEM END TREATMENT TO BE USED WILL BE SHOWN ON THE PROJECT PLANS.
7. DEPENDENT ON SITE CONDITIONS (EMBANKMENT HEIGHT AND SIDE SLOPE), CONSTRUCTION OF ADDITIONAL GUARD RAILING (LENGTH EQUAL TO MULTIPLES OF 12'-6" WITH 6'-3" POST SPACING) MAY BE ADVISABLE.
8. WHERE PLACEMENT OF DIKE IS REQUIRED WITH GUARD RAILING INSTALLATIONS, SEE CONSTRUCTION DETAIL C-5 FOR DIKE POSITIONING DETAILS.

METAL BEAM GUARD RAILING
TYPICAL LAYOUTS FOR EMBANKMENTS

CONSTRUCTION DETAILS

NO SCALE

C-11

REVISED BY | DATE REVISED
KRISHNA THAMILSERAN | CARLOS BURKS SR
CALCULATED-DESIGNED BY | CHECKED BY
FUNCTIONAL SUPERVISOR | KEN KEATON
STATE OF CALIFORNIA - DEPARTMENT OF TRANSPORTATION
Caltrans® 03 - DESIGN

LAST REVISION 00-00-00 | DATE PLOTTED => 07-APR-2015 | TIME PLOTTED => 13:04

Dist	COUNTY	ROUTE	POST MILES TOTAL PROJECT	SHEET No.	TOTAL SHEETS
01	Hum	36, 96, 169, 211, 254, etc.	Var	22	103

REGISTERED CIVIL ENGINEER 3-30-15 DATE

3-30-15
PLANS APPROVAL DATE

REGISTERED PROFESSIONAL ENGINEER KRISHNAKUMARY THAMILSERAN No. C79630 Exp. 9/30/16 CIVIL STATE OF CALIFORNIA

THE STATE OF CALIFORNIA OR ITS OFFICERS OR AGENTS SHALL NOT BE RESPONSIBLE FOR THE ACCURACY OR COMPLETENESS OF SCANNED COPIES OF THIS PLAN SHEET.

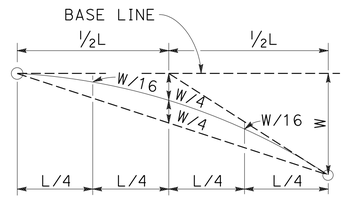

TYPICAL PARABOLIC LAYOUT

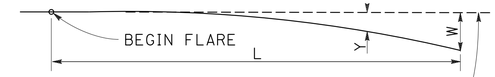

BASE LINE (EDGE OF PAVED SHOULDER OR OFFSET LINE OF EDGE OF TRAVELED WAY)

$$Y = \frac{WX^2}{L^2}$$

Y = OFFSET FROM BASE LINE
W = MAXIMUM OFFSET
X = DISTANCE ALONG BASE LINE
L = LENGTH OF FLARE

PARABOLIC FLARE OFFSETS

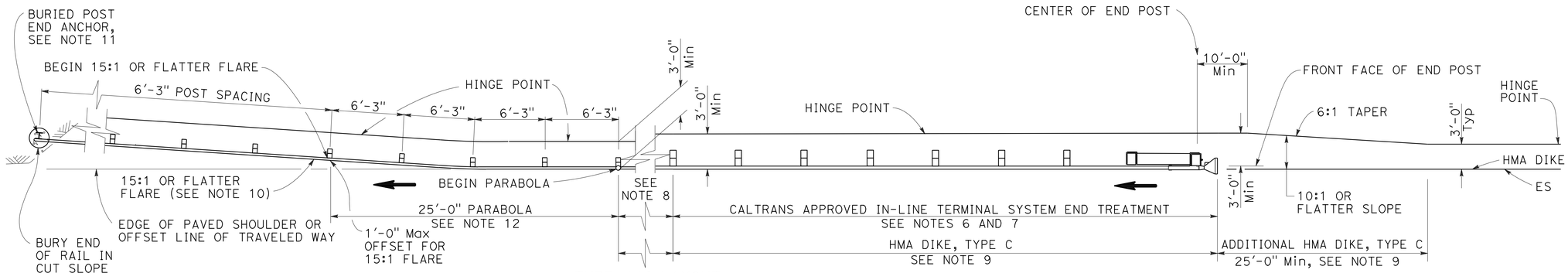

TYPE 11I LAYOUT

(EMBANKMENT GUARD RAILING INSTALLATION WITH IN-LINE END TREATMENT AND A BURIED END ANCHOR TREATMENT AT THE ENDS OF RAILING) SEE NOTE 5

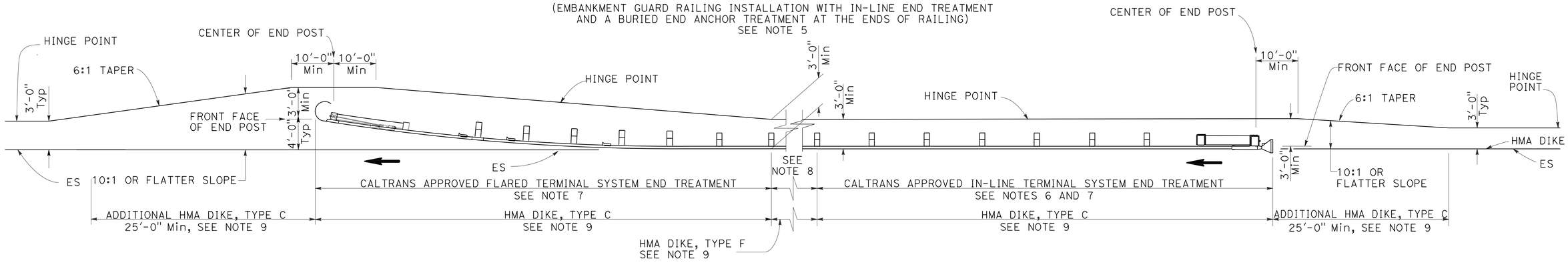

TYPE 11J LAYOUT

(EMBANKMENT GUARD RAILING INSTALLATION WITH IN-LINE END TREATMENT AND FLARED END TREATMENT AT THE ENDS OF RAILING) SEE NOTE 5

NOTES:

1. LINE POST, BLOCKS AND HARDWARE TO BE USED ARE SHOWN ON CONSTRUCTION DETAILS C-1, C-2, C-3 AND STANDARD PLANS RSP A77N1 AND RSP A77N2.
2. GUARD RAIL POST SPACING TO BE 6'-3" CENTER TO CENTER, EXCEPT AS OTHERWISE NOTED.
3. EXCEPT AS NOTED, LINE POSTS ARE 6" X 8" X 6'-0" WOOD WITH 6" X 8" X 1'-2" WOOD BLOCKS. W6 X 9 STEEL POSTS, 6'-0" IN LENGTH, WITH 6" X 8" X 1'-2" NOTCHED WOOD BLOCKS OR PLASTIC BLOCKS MAY BE USED FOR 6" X 8" X 6'-0" WOOD POST WITH 6" X 8" X 1'-2" WOOD BLOCKS WHERE APPLICABLE AND WHEN SPECIFIED.
4. DIRECTION OF ADJACENT TRAFFIC INDICATED BY ⟶.
5. LAYOUT TYPES 11D THROUGH 11L, SHOWN ON CONSTRUCTION DETAIL PLANS, ARE TYPICALLY USED WHERE GUARD RAILING IS RECOMMENDED TO SHIELD EMBAMKMENT SLOPES AND A CRASHWORTHY END TREATMENT IS REQUIRED FOR BOTH DIRECTIONS OF TRAFFIC.
6. IN-LINE TERMINAL SYSTEM END TREATMENTS ARE USED WHERE SITE CONDITIONS WILL NOT ACCOMMODATE A FLARED END TREATMENT.
7. THE TYPE OF TERMINAL SYSTEM END TREATMENT TO BE USED WILL BE SHOWN ON THE PROJECT PLANS.
8. DEPENDENT ON SITE CONDITIONS (EMBANKMENT HEIGHT AND SIDE SLOPE), CONSTRUCTION OF ADDITIONAL GUARD RAILING (LENGTH EQUAL TO MULTIPLES OF 12'-6" WITH 6'-3" POST SPACING) MAY BE ADVISABLE.
9. WHERE PLACEMENT OF DIKE IS REQUIRED WITH GUARD RAILING INSTALLATIONS, SEE CONSTRUCTION DETAIL C-5 FOR DIKE POSITIONING DETAILS.
10. THE 15:1 OR FLATTER FLARE USED WITH BURIED END ANCHORS IS BASED ON THE EDGE OF THE PAVED SHOULDER OR OFFSET LINE OF EDGE OF THE TRAVELED WAY. THE LENGTH OF GUARD RAILING WITHIN THE 15:1 OR FLATTER FLARE IS BASED ON SITE CONDITIONS AND SHOULD BE A LENGTH EQUAL TO MULTIPLES OF 12'-6".
11. FOR DETAILS OF THE BURIED POST END ANCHOR USED WITH TYPE 11I LAYOUT, SEE STANDARD PLAN RSP A77L3.
12. FOR TYPICAL FLARE OFFSETS FOR 25'-0" LENGTH PARABOLA WITH MAXIMUM OFFSET OF 1'-0", SEE CONSTRUCTION DETAIL C-8.

METAL BEAM GUARD RAILING
TYPICAL LAYOUTS FOR EMBANKMENTS

CONSTRUCTION DETAILS

NO SCALE

C-12

REVISED BY | DATE REVISED
KRISHNA THAMILSERAN | CARLOS BURKS SR
CALCULATED-DESIGNED BY | CHECKED BY
FUNCTIONAL SUPERVISOR | KEN KEATON
STATE OF CALIFORNIA - DEPARTMENT OF TRANSPORTATION | 03 - DESIGN
Caltrans

LAST REVISION 00-00-00 | DATE PLOTTED => 07-APR-2015 | TIME PLOTTED => 13:04

Dist	COUNTY	ROUTE	POST MILES TOTAL PROJECT	SHEET No.	TOTAL SHEETS
01	Hum	36, 96, 169, 211, 254, etc.	Var	23	103

T. Krishnakumary 3-30-15
REGISTERED CIVIL ENGINEER DATE

3-30-15
PLANS APPROVAL DATE

REGISTERED PROFESSIONAL ENGINEER
KRISHNAKUMARY THAMILSERAN
No. C79630
Exp. 9/30/16
CIVIL
STATE OF CALIFORNIA

THE STATE OF CALIFORNIA OR ITS OFFICERS OR AGENTS SHALL NOT BE RESPONSIBLE FOR THE ACCURACY OR COMPLETENESS OF SCANNED COPIES OF THIS PLAN SHEET.

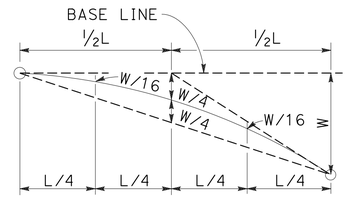

TYPICAL PARABOLIC LAYOUT

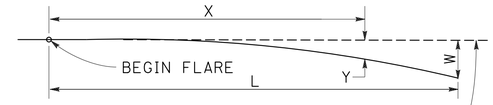

BASE LINE (EDGE OF PAVED SHOULDER OR OFFSET LINE OF EDGE OF TRAVELED WAY)

$$Y = \frac{WX^2}{L^2}$$

Y = OFFSET FROM BASE LINE
W = MAXIMUM OFFSET
X = DISTANCE ALONG BASE LINE
L = LENGTH OF FLARE

PARABOLIC FLARE OFFSETS

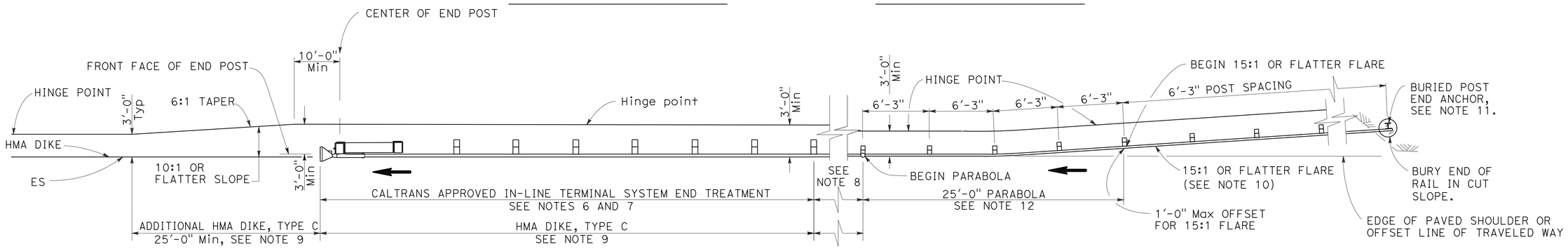

TYPE 11K LAYOUT

(EMBANKMENT GUARD RAILING INSTALLATION WITH A BURIED END ANCHOR TREATMENT AND AN IN-LINE END TREATMENT AT THE ENDS OF RAILING)
SEE NOTE 5

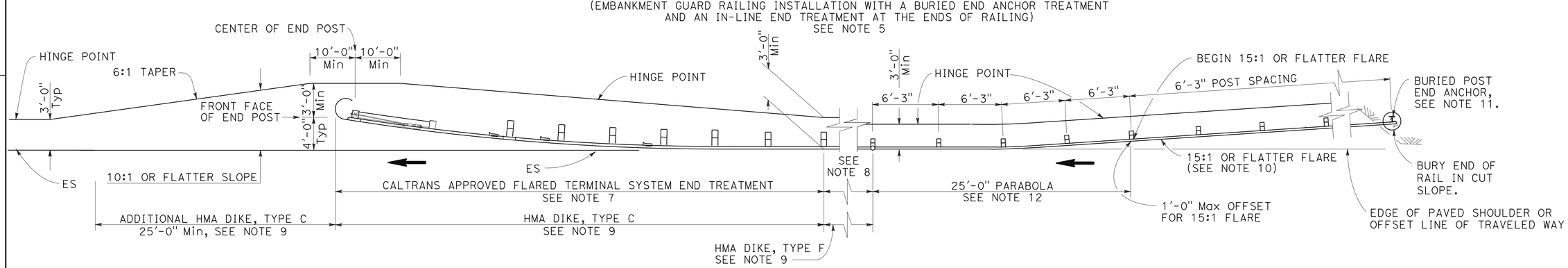

TYPE 11L LAYOUT

(EMBANKMENT GUARD RAILING INSTALLATION WITH A BURIED END ANCHOR TREATMENT AND A FLARED END TREATMENT AT THE ENDS OF RAILING)
SEE NOTE 5

NOTES:

1. LINE POST, BLOCKS AND HARDWARE TO BE USED ARE SHOWN ON CONSTRUCTION DETAILS C-1, C-2, C-3 AND STANDARD PLANS RSP A77N1 AND RSP A77N2.
2. GUARD RAIL POST SPACING TO BE 6'-3" CENTER TO CENTER, EXCEPT AS OTHERWISE NOTED.
3. EXCEPT AS NOTED, LINE POSTS ARE 6" X 8" X 6'-0" WOOD WITH 6" X 8" X 1'-2" WOOD BLOCKS. W6 X 9 STEEL POSTS, 6'-0" IN LENGTH, WITH 6" X 8" X 1'-2" NOTCHED WOOD BLOCKS OR PLASTIC BLOCKS MAY BE USED FOR 6" X 8" X 6'-0" WOOD POST WITH 6" X 8" X 1'-2" WOOD BLOCKS WHERE APPLICABLE AND WHEN SPECIFIED.
4. DIRECTION OF ADJACENT TRAFFIC INDICATED BY ⟶.
5. LAYOUT TYPES 11D THROUGH 11L, SHOWN ON THE CONSTRUCTION DETAIL PLANS, ARE TYPICALLY USED WHERE GUARD RAILING IS RECOMMENDED TO SHIELD EMBAMKMENT SLOPES AND A CRASHWORTHY END TREATMENT IS REQUIRED FOR BOTH DIRECTIONS OF TRAFFIC.
6. IN-LINE TERMINAL SYSTEM END TREATMENTS ARE USED WHERE SITE CONDITIONS WILL NOT ACCOMMODATE A FLARED END TREATMENT.
7. THE TYPE OF TERMINAL SYSTEM END TREATMENT TO BE USED WILL BE SHOWN ON THE PROJECT PLANS.
8. DEPENDENT ON SITE CONDITIONS (EMBANKMENT HEIGHT AND SIDE SLOPE), CONSTRUCTION OF ADDITIONAL GUARD RAILING (LENGTH EQUAL TO MULTIPLES OF 12'-6" WITH 6'-3" POST SPACING) MAY BE ADVISABLE.
9. WHERE PLACEMENT OF DIKE IS REQUIRED WITH GUARD RAILING INSTALLATIONS, SEE CONSTRUCTION DETAIL C-5 FOR DIKE POSITIONING DETAILS.
10. THE 15:1 OR FLATTER FLARE USED WITH BURIED END ANCHORS IS BASED ON THE EDGE OF THE PAVED SHOULDER OR OFFSET LINE OF EDGE OF THE TRAVELED WAY. THE LENGTH OF GUARD RAILING WITHIN THE 15:1 OR FLATTER FLARE IS BASED ON SITE CONDITIONS AND SHOULD BE A LENGTH EQUAL TO MULTIPLES OF 12'-6".
11. FOR DETAILS OF THE BURIED POST END ANCHOR USED WITH TYPE 11K AND 11L LAYOUTS, SEE STANDARD PLAN RSP A77L3.
12. FOR TYPICAL FLARE OFFSETS FOR 25'-0" LENGTH PARABOLA WITH MAXIMUM OFFSET OF 1'-0", SEE CONSTRUCTION DETAIL C-8.

METAL BEAM GUARD RAILING
TYPICAL LAYOUTS FOR EMBANKMENTS

CONSTRUCTION DETAILS

NO SCALE

C-13

REVISED BY | DATE REVISED
KRISHNA THAMILSERAN | CARLOS BURKS SR
CALCULATED-DESIGNED BY | CHECKED BY
FUNCTIONAL SUPERVISOR | KEN KEATON
STATE OF CALIFORNIA - DEPARTMENT OF TRANSPORTATION
Caltrans 03 - DESIGN

LAST REVISION 00-00-00 | DATE PLOTTED => 07-APR-2015 | TIME PLOTTED => 13:04

Dist	COUNTY	ROUTE	POST MILES TOTAL PROJECT	SHEET No.	TOTAL SHEETS
01	Hum	36, 96, 169, 211, 254, etc.	Var	24	103

T. Krishnakumary 3-30-15
REGISTERED CIVIL ENGINEER DATE

3-30-15
PLANS APPROVAL DATE

REGISTERED PROFESSIONAL ENGINEER
KRISHNAKUMARY THAMILSERAN
No. C79630
Exp. 9/30/16
CIVIL
STATE OF CALIFORNIA

THE STATE OF CALIFORNIA OR ITS OFFICERS OR AGENTS SHALL NOT BE RESPONSIBLE FOR THE ACCURACY OR COMPLETENESS OF SCANNED COPIES OF THIS PLAN SHEET.

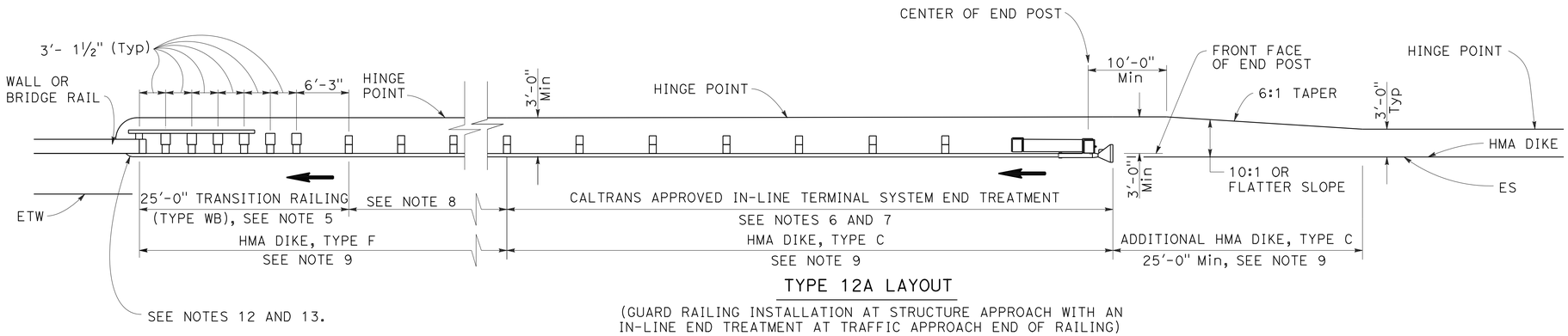

TYPE 12A LAYOUT

(GUARD RAILING INSTALLATION AT STRUCTURE APPROACH WITH AN IN-LINE END TREATMENT AT TRAFFIC APPROACH END OF RAILING)
SEE NOTES 10

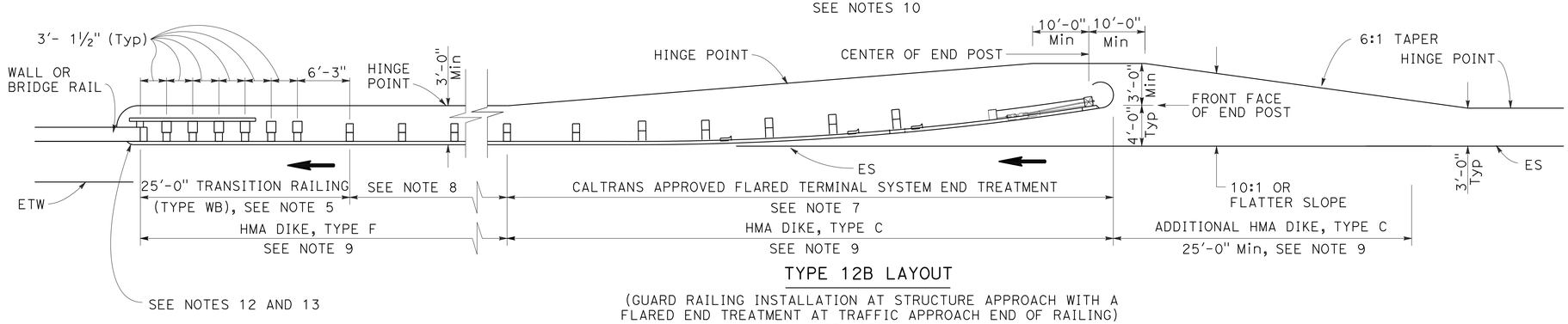

TYPE 12B LAYOUT

(GUARD RAILING INSTALLATION AT STRUCTURE APPROACH WITH A FLARED END TREATMENT AT TRAFFIC APPROACH END OF RAILING)
SEE NOTES 10

NOTES:

1. LINE POST, BLOCKS AND HARDWARE TO BE USED ARE SHOWN ON CONSTRUCTION DETAILS C-1, C-2, C-3 AND STANDARD PLANS RSP A77N1 AND RSP A77N2.
2. GUARD RAIL POST SPACING TO BE 6'-3" CENTER TO CENTER, EXCEPT AS OTHERWISE NOTED.
3. EXCEPT AS NOTED, LINE POSTS ARE 6" X 8" X 6'-0" WOOD WITH 6" X 8" X 1'-2" WOOD BLOCKS. W6 X 9 STEEL POSTS, 6'-0" IN LENGTH, WITH 6" X 8" X 1'-2" NOTCHED WOOD BLOCKS OR PLASTIC BLOCKS MAY BE USED FOR 6" X 8" X 6'-0" WOOD POSTS WITH 6" X 8" X 1'-2" WOOD BLOCKS WHERE APPLICABLE AND WHEN SPECIFIED.
4. DIRECTION OF ADJACENT TRAFFIC INDICATED BY ⟶ .
5. FOR TRANSITION RAILING (TYPE WB) DETAILS FOR TYPES 12A AND 12B LAYOUTS, SEE CONSTRUCTION DETAIL C-22.
6. IN-LINE TERMINAL SYSTEM END TREATMENTS ARE USED WHERE SITE CONDITIONS WILL NOT ACCOMMODATE A FLARED END TREATMENT.
7. THE TYPE OF TERMINAL SYSTEM END TREATMENT TO BE USED WILL BE SHOWN ON THE PROJECT PLANS.
8. DEPENDENT ON SITE CONDITIONS (EMBANKMENT HEIGHT, SIDE SLOPES, OR OTHER FIXED OBJECTS), IT MAY BE ADVISABLE TO CONSTRUCT ADDITIONAL GUARD RAILING (A LENGTH EQUAL TO MULTIPLES OF 12'-6" WITH 6'-3" POST SPACING) BETWEEN THE TRANSITION RAILING AND END TREATMENT.
9. WHERE PLACEMENT OF DIKE IS REQUIRED WITH GUARD RAILING INSTALLATIONS, SEE CONSTRUCTION DETAIL C-5 FOR DIKE POSITIONING DETAILS.
10. TYPE 12A OR TYPE 12B LAYOUTS ARE TYPICALLY USED:
    - A. TO THE RIGHT OF APPROACHING TRAFFIC, AT THE END OF A STRUCTURE, ON TWO-LANE CONVENTIONAL HIGHWAY WHERE THE ROADBED WIDTH ACROSS THE STRUCTURE IS LESS THAN 40 FEET.
    - B. TO THE LEFT OF APPROACHING TRAFFIC, AT THE END OF A STRUCTURE, ON TWO-LANE CONVENTIONAL HIGHWAY WHERE THE ROADBED WIDTH ACROSS THE STRUCTURE IS LESS THAN 40 FEET.
    - C. TO THE RIGHT OF APPROACHING TRAFFIC AT THE END OF EACH STRUCTURE ON MULTILANE FREEWAYS OR EXPRESSWAYS WITH SEPARATE ADJACENT OR PARALLEL BRIDGES.
    - D. TO THE RIGHT OF APPROACHING TRAFFIC AT THE END OF THE STRUCTURE ON MULTILANE FREEWAYS OR EXPRESSWAYS WITH DECKED MEDIAN ON THE BRIDGE.
11. FOR ADDITIONAL DETAILS OF TYPICAL CONNECTIONS TO BRIDGE RAIL, SEE CONNECTION DETAIL AA ON CONSTRUCTION DETAIL C-20 AND C-21 AND AND CONNECTION DETAIL FF ON CONSTRUCTION DETAIL C-23 AND C-24.

METAL BEAM GUARD RAILING
TYPICAL LAYOUTS FOR
STRUCTURE APPROACH

CONSTRUCTION DETAILS

NO SCALE

C-14

REVISED BY | DATE REVISED
KRISHNA THAMILSERAN | CARLOS BURKS SR
CALCULATED-DESIGNED BY | CHECKED BY
FUNCTIONAL SUPERVISOR
KEN KEATON

STATE OF CALIFORNIA - DEPARTMENT OF TRANSPORTATION
03 - DESIGN
Caltrans

LAST REVISION 00-00-00 | DATE PLOTTED => 07-APR-2015 | TIME PLOTTED => 13:04

Dist	COUNTY	ROUTE	POST MILES TOTAL PROJECT	SHEET No.	TOTAL SHEETS
01	Hum	36, 96, 169, 211, 254, etc.	Var	25	103

T. Krishnakumary 3-30-15
REGISTERED CIVIL ENGINEER DATE

3-30-15
PLANS APPROVAL DATE

REGISTERED PROFESSIONAL ENGINEER KRISHNAKUMARY THAMILSERAN No. C79630 Exp. 9/30/16 CIVIL STATE OF CALIFORNIA

THE STATE OF CALIFORNIA OR ITS OFFICERS OR AGENTS SHALL NOT BE RESPONSIBLE FOR THE ACCURACY OR COMPLETENESS OF SCANNED COPIES OF THIS PLAN SHEET.

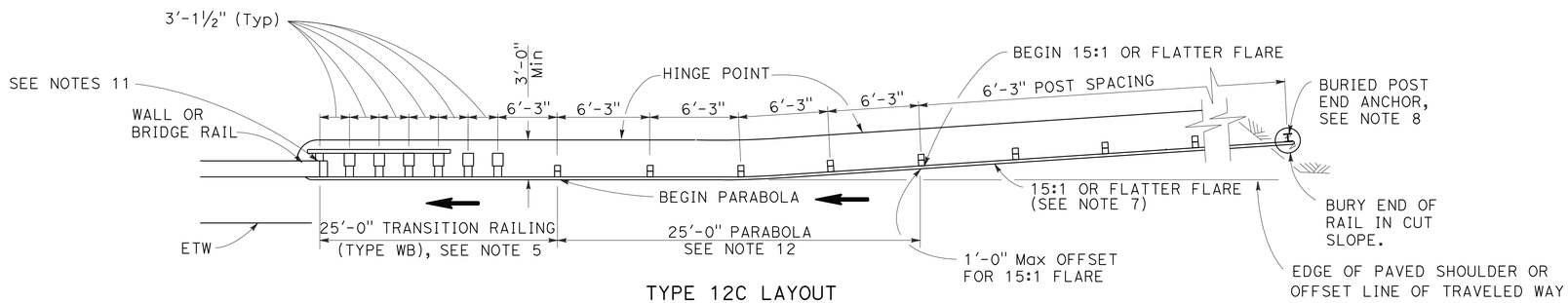

TYPE 12C LAYOUT

(GUARD RAILING INSTALLATION AT STRUCTURE APPROACH WITH A BURIED END ANCHOR TREATMENT AT TRAFFIC APPROACH END OF RAILING)
SEE NOTES 9 AND 10

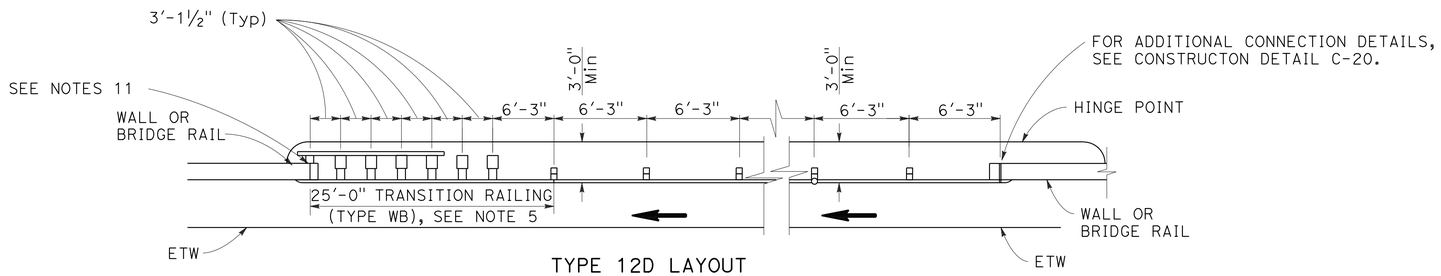

TYPE 12D LAYOUT

(CONTINUOUS GUARD RAILING INSTALLATION BETWEEN STRUCTURES)
SEE NOTES 6 AND 10

BASE LINE (EDGE OF PAVED SHOULDER OR OFFSET LINE OF EDGE OF TRAVELED WAY)

$$Y = \frac{WX^2}{L^2}$$

Y = OFFSET FROM BASE LINE
W = MAXIMUM OFFSET
X = DISTANCE ALONG BASE LINE
L = LENGTH OF FLARE

PARABOLIC FLARE OFFSETS

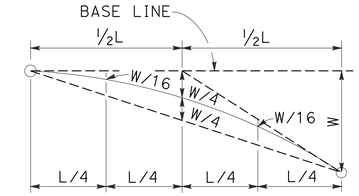

TYPICAL PARABOLIC LAYOUT

NOTES:

1. LINE POST, BLOCKS AND HARDWARE TO BE USED ARE SHOWN ON CONSTRUCTION DETAILS C-1, C-2, C-3 AND STANDARD PLANS RSP A77N1 AND RSP A77N2.
2. GUARD RAIL POST SPACING TO BE 6'-3" CENTER TO CENTER, EXCEPT AS OTHERWISE NOTED.
3. EXCEPT AS NOTED, LINE POSTS ARE 6" X 8" X 6'-0" M WOOD WITH 6" X 8" X 1'-2" WOOD BLOCKS. W6 X 9 STEEL POSTS, 6'-0" IN LENGTH, WITH 6" X 8" X 1'-2" NOTCHED WOOD BLOCKS OR PLASTIC BLOCKS MAY BE USED FOR 6" X 8" X 6'-0" WOOD POSTS WITH 6" X 8" X 1'-2" WOOD BLOCKS WHERE APPLICABLE AND WHEN SPECIFIED.
4. DIRECTION OF ADJACENT TRAFFIC INDICATED BY ➡.
5. FOR TRANSITION RAILING (TYPE WB) DETAILS FOR TYPES 12C AND 12D LAYOUTS, SEE CONSTRUCTION DETAIL C-22.
6. TYPE 12D LAYOUT IS TYPICALLY USED WHERE CONTINUOUS GUARD RAILING IS RECOMMENDED BETWEEN STRUCTURES.
7. THE 15:1 OR FLATTER FLARE FOR TYPE 12C LAYOUT IS BASED ON THE EDGE OF THE PAVED SHOULDER OR OFFSET LINE OF EDGE OF THE TRAVELED WAY. THE LENGTH OF GUARD RAILING WITH THE 15:1 OR FLATTER FLARE IS BASED ON SITE CONDITIONS AND SHOULD BE A LENGTH EQUAL TO MULTIPLES OF 12'-6".
8. FOR DETAILS OF THE BURIED POST END ANCHOR USED WITH TYPE 12C LAYOUT, SEE STANDARD PLAN RSP A77L3.
9. WHERE PLACEMENT OF DIKE IS REQUIRED WITH GUARD RAILING INSTALLATIONS, SEE CONSTRUCTION DETAIL C-5 FOR DIKE POSITIONING DETAILS.
10. TYPE 12C LAYOUT IS TYPICALLY USED:
    A. TO THE RIGHT OF APPROACHING TRAFFIC, AT THE END OF THE STRUCTURE, ON TWO-LANE CONVENTIONAL HIGHWAY WHERE THE ROADBED WIDTH ACROSS THE STRUCTURE IS LESS THAN 40 FEET.
    B. TO THE LEFT OF APPROACHING TRAFFIC, AT EACH OF A STRUCTURE, ON TWO-LANE CONVENTIONAL HIGHWAY WHERE THE ROADBED WIDTH ACROSS THE STRUCTURE IS LESS THAN 40 FEET.
    C. TO THE RIGHT OF APPROACHING TRAFFIC AT THE END OF EACH STRUCTURE ON MULTILANE FREEWAYS OR EXPRESSWAYS WITH SEPARATE ADJACENT OR PARALLEL BRIDGES.
    D. TO THE RIGHT OF APPROACHING TRAFFIC AT THE END OF THE STRUCTURE ON MULTILANE FREEWAYS OR EXPRESSWAYS WITH DECKED MEDIAN ON THE BRIDGE.
11. FOR ADDITIONAL DETAILS OF TYPICAL CONNECTIONS TO BRIDGE RAIL, SEE CONNECTION DETAIL AA ON CONSTRUCTION DETAIL C-20 AND C-21 AND CONNECTION DETAIL FF ON CONSTRUCTION DETAIL C-23 AND C-24.
12. FOR TYPICAL FLARE OFFSETS FOR 25'-0" LENGTH PARABOLA WITH MAXIMUM OFFSET OF 1'-0", SEE CONSTRUCTION DETAIL C-8.

METAL BEAM GUARD RAILING
TYPICAL LAYOUTS FOR STRUCTURE APPROACH AND BETWEEN STRUCTURES

CONSTRUCTION DETAILS

NO SCALE

C-15

REVISED BY | DATE REVISED
KRISHNA THAMILSERAN | CARLOS BURKS SR
CALCULATED-DESIGNED BY | CHECKED BY
FUNCTIONAL SUPERVISOR: KEN KEATON

STATE OF CALIFORNIA - DEPARTMENT OF TRANSPORTATION
Caltrans
03 - DESIGN

LAST REVISION 00-00-00 | DATE PLOTTED => 07-APR-2015 | TIME PLOTTED => 13:04

Dist	COUNTY	ROUTE	POST MILES TOTAL PROJECT	SHEET No.	TOTAL SHEETS
01	Hum	36, 96, 169, 211, 254, etc.	Var	26	103

T. Krishnakumary 3-30-15
REGISTERED CIVIL ENGINEER DATE

3-30-15
PLANS APPROVAL DATE

REGISTERED PROFESSIONAL ENGINEER
KRISHNAKUMARY THAMILSERAN
No. C79630
Exp. 9/30/16
CIVIL
STATE OF CALIFORNIA

THE STATE OF CALIFORNIA OR ITS OFFICERS OR AGENTS SHALL NOT BE RESPONSIBLE FOR THE ACCURACY OR COMPLETENESS OF SCANNED COPIES OF THIS PLAN SHEET.

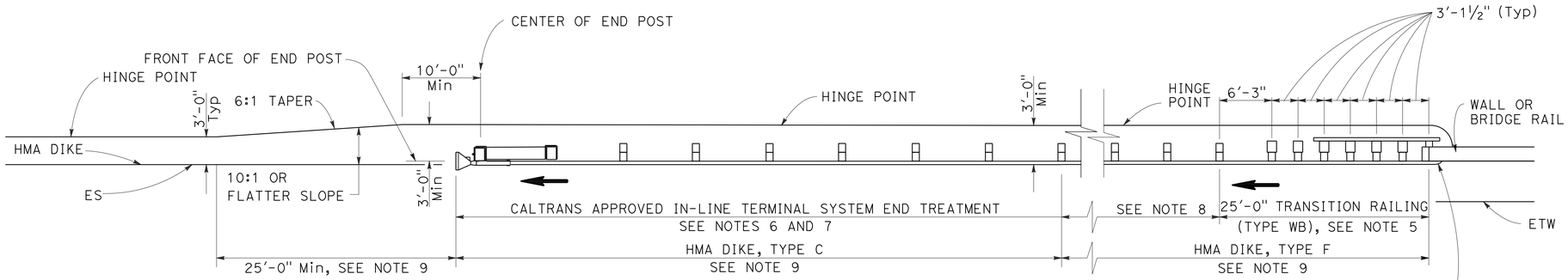

TYPE 12AA LAYOUT

(GUARD RAILING INSTALLATION AT STRUCTURE DEPARTURE WITH AN IN-LINE END TREATMENT AT TRAILING END OF RAILING)
SEE NOTES 9 AND 10

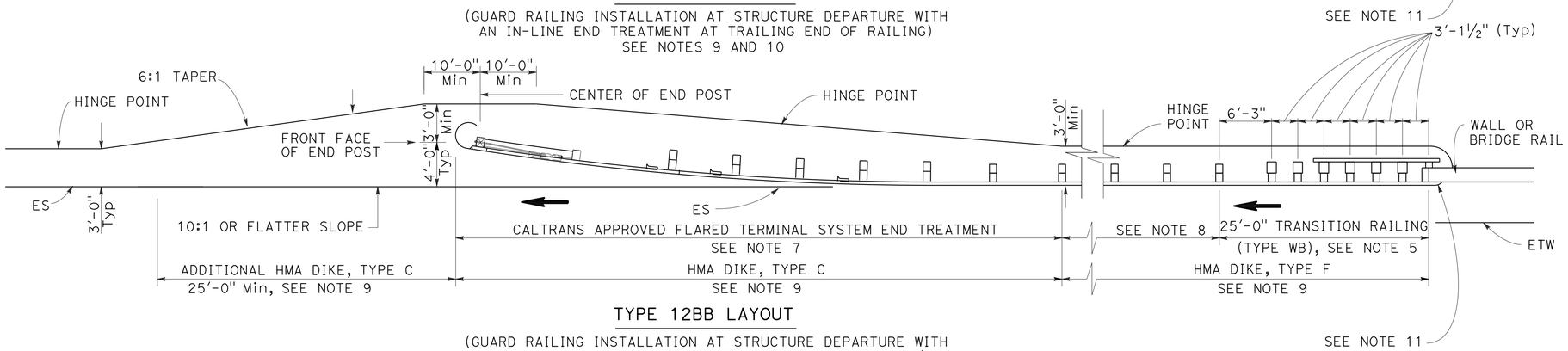

TYPE 12BB LAYOUT

(GUARD RAILING INSTALLATION AT STRUCTURE DEPARTURE WITH A FLARED END TREATMENT AT TRAILING END OF RAILING)
SEE NOTES 9 AND 10

NOTES:

1. LINE POST, BLOCKS AND HARDWARE TO BE USED ARE SHOWN ON CONSTRUCTION DETAILS C-1, C-2, C-3 AND STANDARD PLANS RSP A77N1 AND RSP A77N2.
2. GUARD RAIL POST SPACING TO BE 6'-3" CENTER TO CENTER, EXCEPT AS OTHERWISE NOTED.
3. EXCEPT AS NOTED, LINE POSTS ARE 6" X 8" X 6'-0" WOOD WITH 6" X 8" X 1'-2" WOOD BLOCKS. W6 X 9 STEEL POSTS, 6'-0" IN LENGTH, WITH 6" X 8" X 1-2" NOTCHED WOOD BLOCKS OR NOTCHED RECYCLED PLASTIC BLOCKS MAY BE USED FOR 6" X 8" X 6'-0" WOOD POSTS WITH 6" X 8" X 1'-2" WOOD BLOCKS WHERE APPLICABLE AND WHEN SPECIFIED.
4. DIRECTION OF ADJACENT TRAFFIC INDICATED BY ⟶.
5. FOR TRANSITION RAILING (TYPE WB) DETAILS FOR TYPES 12AA AND 12BB LAYOUTS, SEE CONSTRUCTION DETAIL C-22.
6. IN-LINE TERMINAL SYSTEM TREATMENTS ARE USED WHERE SITE CONDITIONS WILL NOT ACCOMMODATE A FLARED END TREATMENT.
7. THE TYPE OF TERMINAL SYSTEM TO BE USED WILL BE SHOWN ON THE PROJECT PLANS.
8. DEPENDENT ON SITE CONDITIONS (EMBANKMENT HEIGHT, SIDE SLOPES, OTHER FIXED OBJECTS), IT MAY BE ADVISABLE TO CONSTRUCT ADDITIONAL GUARD RAILING (A LENGTH EQUAL TO MULTIPLES OF 12'-6" WITH 6'-3" POST SPACING) BETWEEN THE TRANSITION RAILING AND END TREATMENTS.
9. WHERE PLACEMENT OF DIKE IS REQUIRED WITH GUARD RAILING INSTALLATIONS, SEE CONSTRUCTION DETAIL C-5 FOR DIKE POSITIONING DETAILS.
10. TYPE 12AA OR TYPE 12BB LAYOUTS ARE TYPICALLY USED TO THE RIGHT OF TRAFFIC DEPARTING A STRUCTURE ON TWO-WAY CONVENTIONAL HIGHWAYS WHERE THE ROADBED WIDTH ACROSS THE STRUCTURE IS LESS THAN 40 FEET.
11. FOR ADDITIONAL DETAILS OF TYPICAL CONNECTIONS TO BRIDGE RAIL, SEE CONNECTION DETAIL CC ON CONSTRUCTION DETAIL C-21 AND CONNECTION DETAIL HH ON CONSTRUCTION DETAIL C-24.

METAL BEAM GUARD RAILING
TYPICAL LAYOUTS FOR
STRUCTURE DEPARTURE

CONSTRUCTION DETAILS

NO SCALE

C-16

REVISED BY | DATE REVISED
KRISHNA THAMILSERAN | CARLOS BURKS SR
CALCULATED-DESIGNED BY | CHECKED BY
FUNCTIONAL SUPERVISOR: KEN KEATON

STATE OF CALIFORNIA - DEPARTMENT OF TRANSPORTATION
Caltrans
03 - DESIGN

LAST REVISION 00-00-00 | DATE PLOTTED => 07-APR-2015 | TIME PLOTTED => 13:04

Dist	COUNTY	ROUTE	POST MILES TOTAL PROJECT	SHEET No.	TOTAL SHEETS
01	Hum	36, 96, 169, 211, 254, etc.	Var	27	103

T. Krishnakumary 3-30-15
REGISTERED CIVIL ENGINEER DATE

3-30-15
PLANS APPROVAL DATE

REGISTERED PROFESSIONAL ENGINEER KRISHNAKUMARY THAMILSERAN No. C79630 Exp. 9/30/16 CIVIL STATE OF CALIFORNIA

THE STATE OF CALIFORNIA OR ITS OFFICERS OR AGENTS SHALL NOT BE RESPONSIBLE FOR THE ACCURACY OR COMPLETENESS OF SCANNED COPIES OF THIS PLAN SHEET.

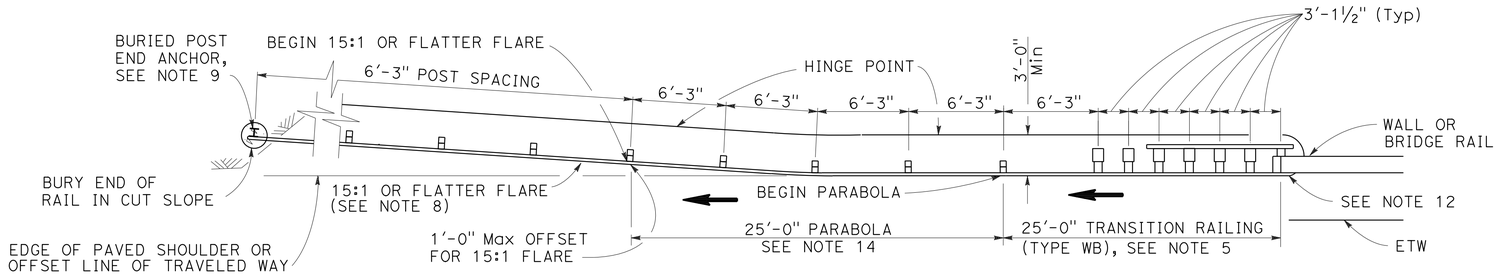

TYPE 12CC LAYOUT

(GUARD RAILING INSTALLATION AT STRUCTURE DEPARTURE WITH A BURIED END ANCHOR TREATMENT AT TRAILING END OF RAILING)
SEE NOTES 10 AND 11

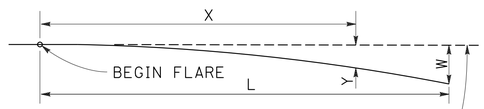

BASE LINE (EDGE OF PAVED SHOULDER OR OFFSET LINE OF EDGE OF TRAVELED WAY)

$$Y = \frac{WX^2}{L^2}$$

Y = OFFSET FROM BASE LINE
W = MAXIMUM OFFSET
X = DISTANCE ALONG BASE LINE
L = LENGTH OF FLARE

PARABOLIC FLARE OFFSETS

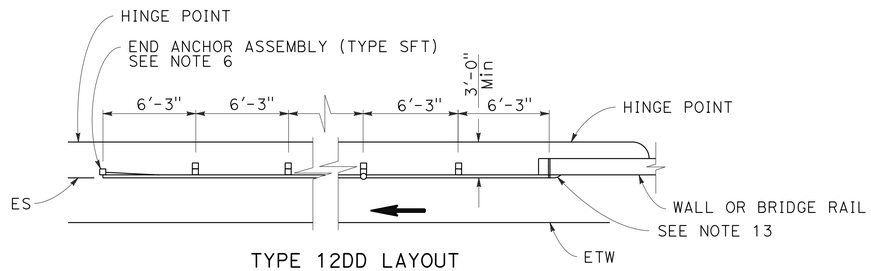

TYPE 12DD LAYOUT

(GUARD RAILING INSTALLATION AT STRUCTURE DEPARTURE WITH END ANCHOR ASSEMBLY AT TRAILING END OF RAILING)
SEE NOTES 7 AND 10

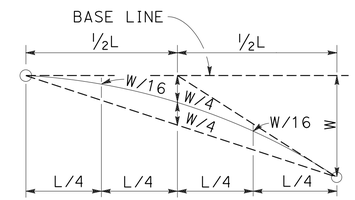

TYPICAL PARABOLIC LAYOUT

NOTES:

1. LINE POST, BLOCKS AND HARDWARE TO BE USED ARE SHOWN ON CONSTRUCTION DETAILS C-1, C-2, C-3 AND STANDARD PLANS RSP A77N1 AND RSP A77N2.
2. GUARD RAIL POST SPACING TO BE 6'-3" CENTER TO CENTER, EXCEPT AS OTHERWISE NOTED.
3. EXCEPT AS NOTED, LINE POSTS ARE 6" X 8" X 6'-0" WOOD WITH 6" X 8" X 1'-2" WOOD BLOCKS. W6 X 9 STEEL POSTS, 6'-0" IN LENGTH, WITH 6" X 8" X 1'-2" NOTCHED WOOD BLOCKS OR NOTCHED RECYCLED PLASTIC BLOCKS MAY BE USED FOR 6" X 8" X 6'-0" WOOD LINE POSTS WITH 6" X 8" X 1'-2" WOOD BLOCKS WHERE APPLICABLE AND WHEN SPECIFIED.
4. DIRECTION OF ADJACENT TRAFFIC INDICATED BY ⟶.
5. FOR TRANSITION RAILING (TYPE WB) DETAILS FOR TYPE 12CC LAYOUT, SEE CONSTRUCTION DETAIL C-22.
6. FOR DETAILS OF END ANCHOR ASSEMBLY (TYPE SFT) USED WITH TYPE 12DD LAYOUT, SEE STANDARD PLAN RSP A77L3.
7. TYPE 12DD LAYOUT IS TYPICALLY USED TO THE RIGHT OF TRAFFIC DEPARTING A STRUCTURE ON TWO-WAY CONVENTIONAL HIGHWAYS WHERE THE ROADBED WIDTH ACROSS THE STRUCTURE IS EQUAL TO OR GREATER THAN 40 FEET AND GUARD RAILING IS RECOMMENDED (EMBANKMENT HEIGHT, SIDE SLOPES, OTHER FIXED OBJECTS). LENGTH OF RAILING TO BE EQUAL TO MULTIPLES OF 12'-6". FOR GUARD RAILING CONNECTION DETAILS TO BRIDGE RAIL, SEE CONSTRUCTION DETAIL C-20 AND C-23.
8. THE 15:1 OR FLATTER FLARE FOR TYPE 12CC LAYOUT IS BASED ON THE EDGE OF THE PAVED SHOULDER OR OFFSET LINE OF EDGE OF THE TRAVELED WAY. THE LENGTH OF GUARD RAILING WITHIN THE 15:1 OR FLATTER FLARE IS BASED ON SITE CONDITIONS AND SHOULD BE A LENGTH EQUAL TO MULTIPLES OF 12'-6".
9. FOR DETAILS OF THE BURIED POST END ANCHOR USED WITH TYPE 12CC LAYOUT, SEE STANDARD PLAN RSP A77L3.
10. WHERE PLACEMENT OF DIKE IS REQUIRED WITH GUARD RAILING INSTALLATIONS, SEE CONSTRUCTION DETAIL C-5 FOR DIKE POSITIONING DETAILS.
11. TYPE 12CC LAYOUT IS TYPICALLY USED TO THE RIGHT OF TRAFFIC DEPARTING A STRUCTURE ON TWO-WAY CONVENTIONAL HIGHWAYS WHERE THE ROADBED WIDTH ACROSS THE STRUCTURE IS LESS THAN 40 FEET.
12. FOR ADDITIONAL DETAILS OF A TYPICAL CONNECTION TO BRIDGE RAIL FOR LAYOUT TYPE 12CC, SEE CONNECTION DETAIL CC ON CONSTRUCTION DETAIL C-21 AND CONNECTION DETAIL HH ON CONSTRUCTION DETAIL C-24.
13. FOR ADDITIONAL DETAILS OF A TYPICAL CONNECTION TO BRIDGE RAIL FOR LAYOUT TYPE 12DD, SEE CONNECTION DETAIL BB ON CONSTRUCTION DETAIL C-20 AND CONNECTION DETAIL GG ON CONSTRUCTION DETAIL C-23.
14. FOR TYPICAL FLARE OFFSETS FOR 25'-0" LENGTH PARABOLA WITH MAXIMUM OFFSET OF 1'-0", SEE CONSTRUCTION DETAIL C-8.

METAL BEAM GUARD RAILING
TYPICAL LAYOUTS FOR
STRUCTURE DEPARTURE

CONSTRUCTION DETAILS

NO SCALE

C-17

REVISED BY | DATE REVISED
KRISHNA THAMILSERAN | CARLOS BURKS SR
CALCULATED-DESIGNED BY | CHECKED BY
FUNCTIONAL SUPERVISOR: KEN KEATON

STATE OF CALIFORNIA - DEPARTMENT OF TRANSPORTATION
Caltrans
03 - DESIGN

LAST REVISION 00-00-00 | DATE PLOTTED => 07-APR-2015 | TIME PLOTTED => 13:04

Dist	COUNTY	ROUTE	POST MILES TOTAL PROJECT	SHEET No.	TOTAL SHEETS
01	Hum	36, 96, 169, 211, 254, etc.	Var	28	103

T. Krishnakumary 3-30-15
REGISTERED CIVIL ENGINEER DATE

3-30-15
PLANS APPROVAL DATE

REGISTERED PROFESSIONAL ENGINEER
KRISHNAKUMARY THAMILSERAN
No. C79630
Exp. 9/30/16
CIVIL
STATE OF CALIFORNIA

THE STATE OF CALIFORNIA OR ITS OFFICERS OR AGENTS SHALL NOT BE RESPONSIBLE FOR THE ACCURACY OR COMPLETENESS OF SCANNED COPIES OF THIS PLAN SHEET.

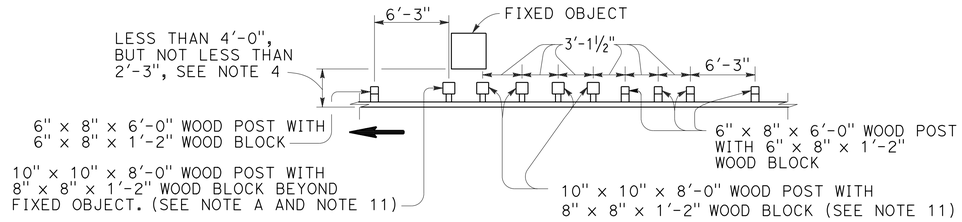

NOTE A: FOR A SERIES OF FIXED OBJECTS (BRIDGE COLUMNS, OVERHEAD SIGN SUPPORTS, ETC.) ADDITIONAL 10" x 10" x 8'-0" WOOD POST WITH 8" x 8" x1-2" WOOD BLOCK AT 3'-1½" CENTER TO CENTER SPACING ARE TO BE USED BETWEEN FIXED OBJECT(S)

STRENGTHENED RAILING SECTIONS FOR FIXED OBJECT

USE STRENGTHENED RAILING SECTION WITH LAYOUT TYPES 16D OR 16E WHERE MINIMUM CLEARANCE BETWEEN THE FACE OF THE GUARD RAILING AND FIXED OBJECT(s) IS LESS THAN 4'-0", BUT NOT LESS THAN 2'-3" (SEE NOTE 4).

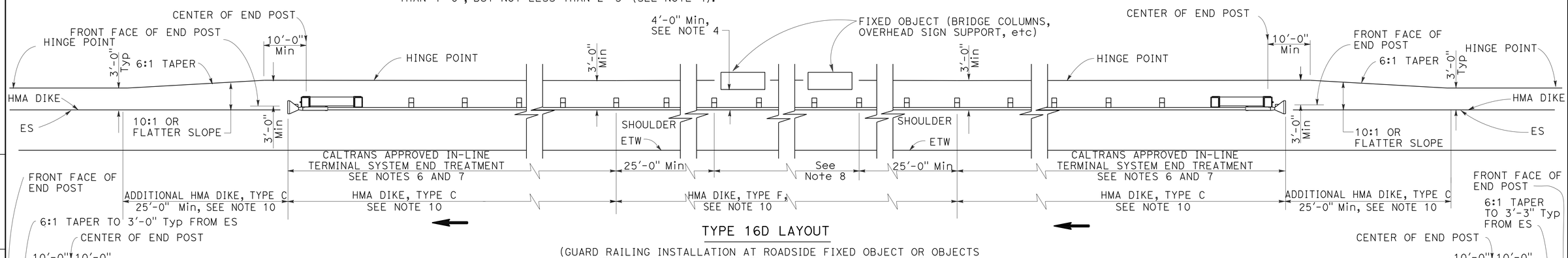

TYPE 16D LAYOUT

(GUARD RAILING INSTALLATION AT ROADSIDE FIXED OBJECT OR OBJECTS WITH AN IN-LINE END TREATMENT AT EACH END OF RAILING) SEE NOTE 9

TYPE 16E LAYOUT

(GUARD RAILING INSTALLATION AT ROADSIDE FIXED OBJECT OR OBJECTS WITH A FLARED END TREATMENT AT EACH END OF RAILING) SEE NOTE 9

NOTES:

1. LINE POST, BLOCKS AND HARDWARE TO BE USED ARE SHOWN ON CONSTRUCTION DETAILS C-1, C-2, C-3 AND STANDARD PLANS RSP A77N1 AND RSP A77N2.
2. GUARD RAILING POST SPACING TO BE 6'-3" CENTER TO CENTER, EXCEPT AS OTHERWISE NOTED.
3. EXCEPT AS NOTED, LINE POSTS ARE 6" X 8" X 6'-0" WOOD WITH 6" X 8" X 1'-2" WOOD BLOCKS. W6 X 9 STEEL POSTS, 6'-0" IN LENGTH, WITH 6" X 8" X 1'-2" NOTCHED WOOD BLOCKS OR NOTCHED RECYCLED PLASTIC BLOCKS MAY BE USED FOR 6" X 8" X 6'-0" WOOD LINE POSTS WITH 6" X 8" X 1'-2" WOOD BLOCKS WHERE APPLICABLE AND WHEN SPECIFIED.
4. A 4'-0" MINIMUM CLEARANCE IS REQUIRED BETWEEN THE FACE OF THE RAILING AND THE FACE OF A FIXED OBJECT LOCATED DIRECTLY BEHIND STANDARD GUARD RAILING SECTIONS WITH POST SPACING AT 6'-3". CONSTRUCT GUARD RAILING AS SHOWN IN THE DETAIL "STRENGTHENED RAILNG SECTIONS FOR FIXED OBJECTS" ON THIS PLAN, WHERE THE CLEARANCE BETWEEN THE FACE OF THE RAILING AND THE FACE OF A FIXED OBJECT IS LESS THAN 4'-0", BUT NOT LESS THAN 2'-3". WHERE THE CLEARANCE IS LESS THAN 2'-3", A CONCRETE WALL OR BARRIER SHOULD BE CONSTRUCTED TO SHIELD THE FIXED OBJECT(S).
5. DIRECTION OF ADJACENT TRAFFIC INDICATED BY ⟶ .
6. IN-LINE TERMINAL SYSTEM END TREATMENTS ARE USED WHERE SITE CONDITIONS WILL NOT ACCOMMODATE A FLARED END TREATMENT.
7. THE TYPE OF TERMINAL SYSTEM TO BE USED WILL BE SHOWN ON THE PROJECT PLANS.
8. AS SITE CONDITIONS DICTATE, CONSTRUCT ADDITIONAL GUARD RAILING TO SHIELD FIXED OBJECT(S). ADDITIONAL GUARD RAILING LENGTH EQUAL TO MULTIPLES OF 12'-6". POST SPACING AT 6'-3", EXCEPT AS SPECIFIED IN NOTE 4.
9. LAYOUT TYPES 16D THROUGH 16J, SHOWN ON THE CONSTRUCTION DETAILS, ARE TYPICALLY USED WHERE GUARD RAILING IS RECOMMENDED TO SHIELD ROADSIDE FIXED OBJECT(S) AND A CRASHWORTHY END TREATMENT IS REQUIRED FOR BOTH DIRECTIONS OF TRAFFIC.
10. WHERE PLACEMENT OF DIKE IS REQUIRED WITH GUARD RAILING, SEE CONSTRUCTION DETAIL C-5 FOR DIKE POSITIONING DETAILS.
11. W6 X 15 STEEL POST, 8'-0" IN LENGTH, WITH 8" X 8" X 1'-2" NOTCHED WOOD BLOCK OR NOTCHED RECYCLED PLASTIC BLOCK MAY BE USED IN PLACE OF THE 10" X 10" X 8'-0" WOOD POST WITH 8" X 8" X 1'-2" WOOD BLOCK SHOWN IN THE "STRENGTHENED RAILING SECTIONS DETAIL."

METAL BEAM GUARD RAILING
TYPICAL LAYOUTS FOR
ROADSIDE FIXED OBJECTS

CONSTRUCTION DETAILS

NO SCALE

C-18

REVISED BY | DATE REVISED
KRISHNA THAMILSERAN | CARLOS BURKS SR
CALCULATED-DESIGNED BY | CHECKED BY
FUNCTIONAL SUPERVISOR | KEN KEATON
STATE OF CALIFORNIA - DEPARTMENT OF TRANSPORTATION
Caltrans® 03 - DESIGN

LAST REVISION 00-00-00 | DATE PLOTTED => 07-APR-2015 | TIME PLOTTED => 13:04

Dist	COUNTY	ROUTE	POST MILES TOTAL PROJECT	SHEET No.	TOTAL SHEETS
01	Hum	36, 96, 169, 211, 254, etc.	Var	29	103

T. Krishnakumary 3-30-15
REGISTERED CIVIL ENGINEER DATE

3-30-15
PLANS APPROVAL DATE

REGISTERED PROFESSIONAL ENGINEER KRISHNAKUMARY THAMILSERAN No. C79630 Exp. 9/30/16 CIVIL STATE OF CALIFORNIA

THE STATE OF CALIFORNIA OR ITS OFFICERS OR AGENTS SHALL NOT BE RESPONSIBLE FOR THE ACCURACY OR COMPLETENESS OF SCANNED COPIES OF THIS PLAN SHEET.

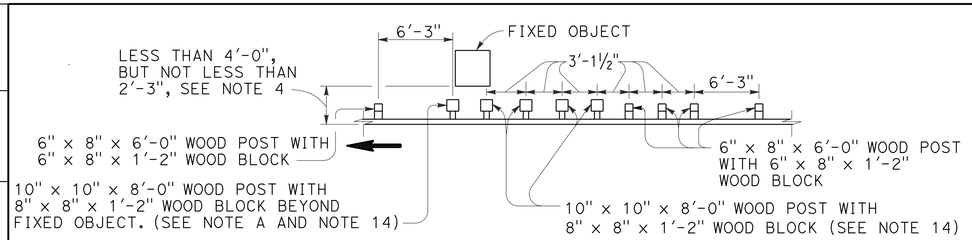

NOTE A: FOR A SERIES OF FIXED OBJECTS (BRIDGE COLUMNS, OVERHEAD SIGN SUPPORTS, ETC.) ADDITIONAL 10" X 10" X 8'-0" WOOD POST WITH 8" X 8" X 1'-2" WOOD BLOCKS AT 3'-1 ½" CENTER TO CENTER SPACING ARE TO BE USED BETWEEN FIXED OBJECT(S).

STRENGTHENED RAILING SECTIONS FOR FIXED OBJECT

USE STRENGTHENED RAILING SECTIONS WITH LAYOUT TYPES 16I OR 16J LAYOUTS WHERE MINIMUM CLEARANCE BETWEEN THE FACE OF THE GUARD RAILING AND FIXED OBJECT(S) IS LESS THAN 4'-0", BUT NOT LESS THAN 2'-3". SEE NOTE 4.

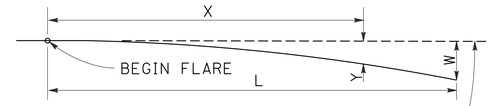

BASE LINE (EDGE OF PAVED SHOULDER OR OFFSET LINE OF EDGE OF TRAVELED WAY)

$$Y = \frac{WX^2}{L^2}$$

Y = OFFSET FROM BASE LINE
W = MAXIMUM OFFSET
X = DISTANCE ALONG BASE LINE
L = LENGTH OF FLARE

PARABOLIC FLARE OFFSETS

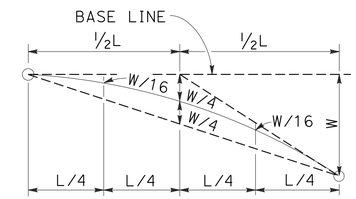

TYPICAL PARABOLIC LAYOUT

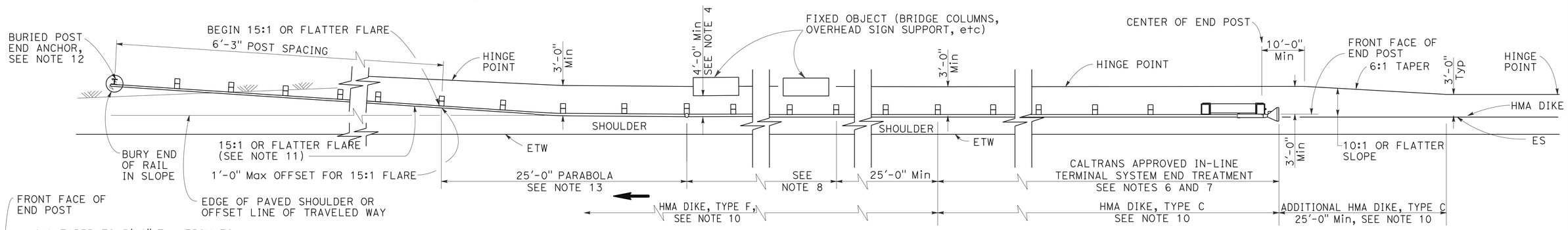

TYPE 16I LAYOUT

(GUARD RAILING INSTALLATION AT ROADSIDE FIXED OBJECT OR OBJECTS WITH AN IN-LINE END TREATMENT AND A BURIED END ANCHOR TREATMENT AT THE ENDS OF RAILING) SEE NOTE 9

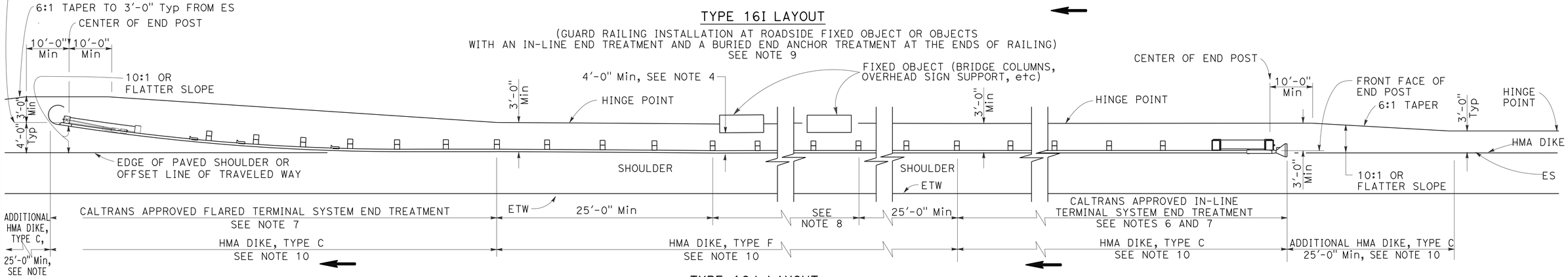

TYPE 16J LAYOUT

(GUARD RAILING INSTALLATION AT ROADSIDE FIXED OBJECT OR OBJECTS WITH AN IN-LINE END TREATMENT AND A FLARED END TREATMENT AT THE ENDS OF RAILING) SEE NOTE 9

NOTES:

1. LINE POST, BLOCKS AND HARDWARE TO BE USED ARE SHOWN ON CONSTRUCTION DETAILS C-1, C-2, C-3 AND STANDARD PLANS RSP A77N1 AND RSP A77N2.
2. GUARD RAILING POST SPACING TO BE 6'-3" CENTER TO CENTER, EXCEPT AS OTHERWISE noted.
3. EXCEPT AS NOTED, LINE POSTS ARE 6" X 8" X 6'-0" WOOD WITH 6" X 8" X 1'-2" WOOD BLOCKS. W6 X 9 STEEL POSTS, 6'-0" IN LENGTH, WITH 6" X 8" X 1'-2" NOTCHED WOOD BLOCKS OR NOTCHED RECYCLED PLASTIC BLOCKS MAY BE USED FOR 6" X 8" X 6'-0" WOOD POSTS WITH 6" X 8" X 1'-2" WOOD BLOCKS WHERE APPLICABLE AND WHEN SPECIFIED.
4. A 4'-0" MINIMUM CLEARANCE IS REQUIRED BETWEEN THE FACE OF THE RAILING AND THE FACE OF A FIXED OBJECT LOCATED DIRECTLY BEHIND STANDARD GUARD RAILING SECTIONS WITH POST SPACING AT 6'-3". CONSTRUCT GUARD RAILING AS SHOWN IN THE DETAIL "STRENGTHENED RAILING SECTIONS FOR FIXED OBJECTS" ON THIS PLAN, WHERE THE CLEARANCE BETWEEN THE FACE OF THE RAILING AND THE FACE OF A FIXED OBJECT IS LESS THAN 4'-0", BUT NOT LESS THAN 2'-3". WHERE THE CLEARANCE IS LESS THAN 2'-3", A CONCRETE WALL OR BARRIER SHOULD BE CONSTRUCTED TO SHIELD THE FIXED OBJECT(S).
5. DIRECTION OF ADJACENT TRAFFIC INDICATED BY ⟶ .
6. IN-LINE TERMINAL SYSTEM END TREATMENTS ARE USED WHERE SITE CONDITIONS WILL NOT ACCOMMODATE A FLARED END TREATMENT.
7. THE TYPE OF TERMINAL SYSTEM TO BE USED WILL BE SHOWN ON THE PROJECT PLANS.
8. AS SITE CONDITIONS DICTATE, CONSTRUCT ADDITIONAL GUARD RAILING TO SHIELD FIXED OBJECT(S). ADDITIONAL GUARD RAILING LENGTH EQUAL TO MULTIPLES OF 12'-6". POST SPACING AT 6'-3", EXCEPT AS SPECIFIED IN NOTE 4.
9. LAYOUT TYPES 16D THROUGH 16L, SHOWN ON THE CONSTRUCTION DETAIL ARE TYPICALLY USED WHERE GUARD RAILING IS RECOMMENDED TO SHIELD ROADSIDE FIXED OBJECT(S) AND A CRASHWORTHY END TREATMENT IS REQUIRED FOR BOTH DIRECTIONS OF TRAFFIC.
10. WHERE PLACEMENT OF DIKE IS REQUIRED WITH GUARD RAILING, SEE CONSTRUCTION DETAIL C-5 FOR DIKE POSITIONING DETAILS.
11. THE 15:1 OR FLATTER FLARE FOR THE BURIED POST ANCHOR IS BASED ON THE EDGE OF THE PAVED SHOULDER OR OFFSET LINE OF EDGE OF THE TRAVELED WAY. THE LENGTH OF GUARD RAILING WITHIN THE 15:1 OR FLATTER FLARE IS BASED ON SITE CONDITIONS AND SHOULD BE A LENGTH EQUAL TO MULTIPLES OF 12'-6".
12. FOR DETAILS OF BURIED POST END ANCHOR DETAILS, SEE RSP A77L3.
13. FOR TYPICAL FLARE OFFSETS FOR 25'-0" LENGTH PARABOLA WITH MAXIMUM OFFSET OF 1'-0", SEE CONSTRUCTION DETAIL C-8.
14. W6 X 15 STEEL POST, 8'-0" IN LENGTH, WITH 8" X 8" X 1'-2" NOTCHED WOOD BLOCK OR NOTCHED RECYCLED PLASTIC BLOCKS MAY BE USED IN PLACE OF THE 10" X 10" X 8'-0" WOOD POST WITH 8" X 8" X 1'-2" WOOD BLOCK SHOWN IN THE "STRENGTHENED RAILING SECTIONS DETAIL".

METAL BEAM GUARD RAILING
TYPICAL LAYOUTS FOR
ROADSIDE FIXED OBJECTS

CONSTRUCTION DETAILS

NO SCALE

C-19

REVISED BY | DATE REVISED
KRISHNA THAMILSERAN | CARLOS BURKS SR
CALCULATED-DESIGNED BY | CHECKED BY
FUNCTIONAL SUPERVISOR | KEN KEATON

STATE OF CALIFORNIA - DEPARTMENT OF TRANSPORTATION
Caltrans® 03 - DESIGN

LAST REVISION 00-00-00 | DATE PLOTTED => 07-APR-2015 | TIME PLOTTED => 13:04

Dist	COUNTY	ROUTE	POST MILES TOTAL PROJECT	SHEET No.	TOTAL SHEETS
01	Hum	36, 96, 169, 211, 254, etc.	Var	30	103

T. Krishnakumary 3-30-15
REGISTERED CIVIL ENGINEER DATE

3-30-15
PLANS APPROVAL DATE

REGISTERED PROFESSIONAL ENGINEER
KRISHNAKUMARY THAMILSERAN
No. C79630
Exp. 9/30/16
CIVIL
STATE OF CALIFORNIA

THE STATE OF CALIFORNIA OR ITS OFFICERS OR AGENTS SHALL NOT BE RESPONSIBLE FOR THE ACCURACY OR COMPLETENESS OF SCANNED COPIES OF THIS PLAN SHEET.

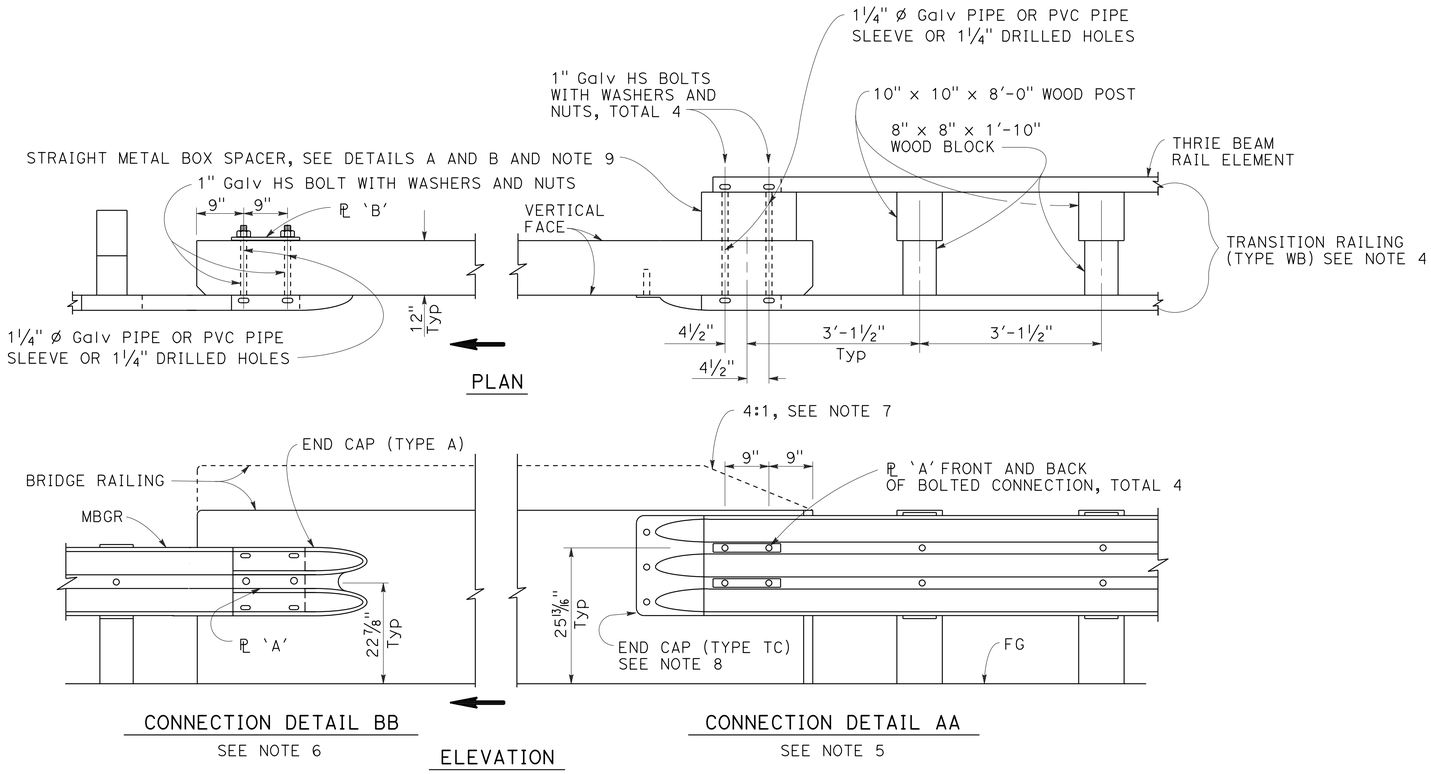

GUARD RAILING CONNECTION TO BRIDGE RAILING WITHOUT SIDEWALK

NOTES:

1. SEE CONSTRUCTION DETAIL C-21 FOR ADDITIONAL CONNECTION DETAILS TO BRIDGES WITHOUT SIDEWALKS.
2. ADDITIONAL DETAILS OF POSTS, BLOCKS AND HARDWARE ARE SHOWN ON CONSTRUCTION DETAIL C-1 THRU C-3 AND STANDARD PLANS RSP A77N1 AND RSP A77N2.
3. DIRECTION OF ADJACENT TRAFFIC INDICATED BY ⟶ .
4. FOR ADDITIONAL DETAILS OF TRANSITION RAILING (TYPE WB), SEE CONSTRUCTION DETAIL C-22. TRANSITION RAILING (TYPE WB) TRANSITIONS THE 12 GAUGE W-BEAM STANDARD RAILING SECTION OF GUARD RAILING TO A HEAVIER GAGE NESTED THRIE BEAM RAILING SECTION WHICH IS CONNECTED TO THE CONCRETE BRIDGE RAILING.
5. FOR TYPICAL USE OF CONNECTION DETAIL AA, SEE LAYOUT TYPES 12A AND 12B ON CONSTRUCTION DETAIL C-14, LAYOUT TYPES 12C AND 12D ON STANDARD PLAN C-15.
6. FOR TYPICAL USE OF CONNECTION DETAIL BB, SEE LAYOUT TYPE 12D (STRUCTURE DEPARTURE RAILING CONNECTION) ON CONSTRUCTION DETAIL C-15 AND LAYOUT TYPE 12DD ON CONSTRUCTION DETAIL C-17.
7. WHERE THE HEIGHT OF THE BRIDGE RAILING EXCEEDS THE HEIGHT OF THE THRIE BEAM RAILING BY MORE THAN 1" AT CONNECTION DETAIL AA, TAPER THE TOP OF THE END OF THE BRIDGE RAILING AT 4:1 TO MATCH THE TOP ELEVATION OF THE THRIE BEAM RAIL.
8. FOR DETAILS OF END CAP (TYPE TC), SEE CONSTRUCTION DETAIL C-22.
9. SEE CONSTRUCTION DETAIL C-22 FOR ADDITIONAL DETAILS REGARDING DEPTH DIMENSION FOR STRAIGHT METAL BOX SPACER.

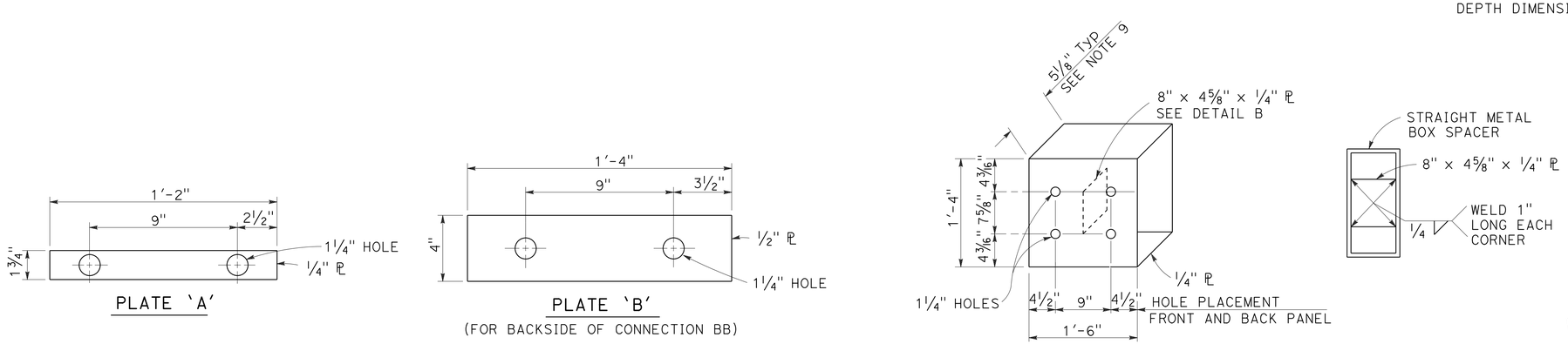

STRAIGHT METAL BOX SPACER

METAL BEAM GUARD RAILING
CONNECTIONS TO BRIDGE RAILINGS
WITHOUT SIDEWALKS (DETAILS No. 1)

CONSTRUCTION DETAILS

NO SCALE

C-20

STATE OF CALIFORNIA - DEPARTMENT OF TRANSPORTATION
03 - DESIGN
FUNCTIONAL SUPERVISOR: KEN KEATON
CALCULATED-DESIGNED BY: KRISHNA THAMILSERAN
CHECKED BY: CARLOS BURKS SR
REVISED BY
DATE REVISED

LAST REVISION 00-00-00
DATE PLOTTED => 07-APR-2015
TIME PLOTTED => 13:04

Dist	COUNTY	ROUTE	POST MILES TOTAL PROJECT	SHEET No.	TOTAL SHEETS
01	Hum	36, 96, 169, 211, 254, etc.	Var	31	103

T. Krishnakumary 3-30-15
REGISTERED CIVIL ENGINEER DATE

3-30-15
PLANS APPROVAL DATE

REGISTERED PROFESSIONAL ENGINEER
KRISHNAKUMARY THAMILSERAN
No. C79630
Exp. 9/30/16
CIVIL
STATE OF CALIFORNIA

THE STATE OF CALIFORNIA OR ITS OFFICERS OR AGENTS SHALL NOT BE RESPONSIBLE FOR THE ACCURACY OR COMPLETENESS OF SCANNED COPIES OF THIS PLAN SHEET.

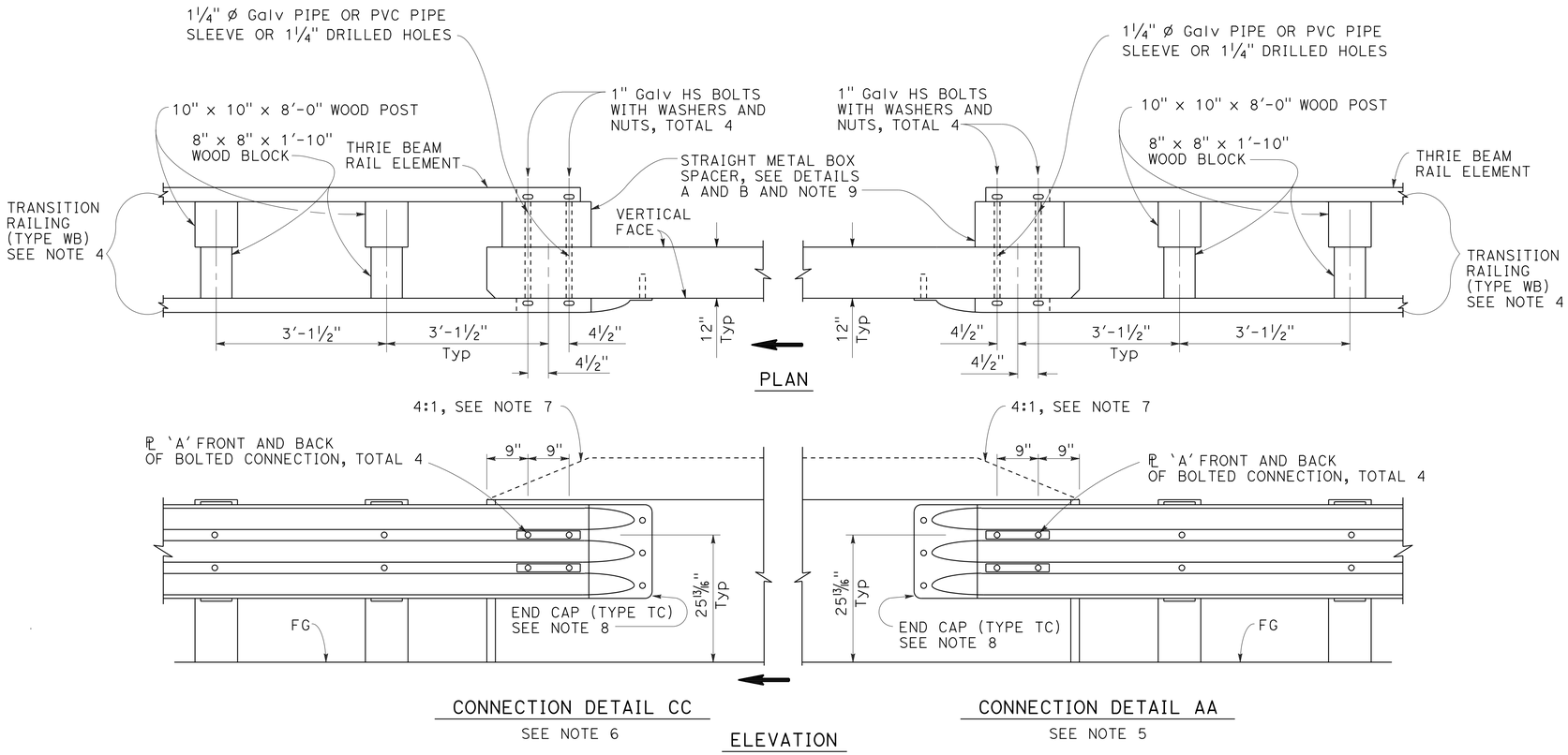

GUARD RAILING CONNECTION TO BRIDGE RAILING WITHOUT SIDEWALK

NOTES:

1. SEE CONSTRUCTION DETAIL C-20 FOR ADDITIONAL CONNECTION DETAILS TO BRIDGES WITHOUT SIDEWALKS.
2. ADDITIONAL DETAILS OF POSTS, BLOCKS AND HARDWARE ARE SHOWN ON CONSTRUCTION DETAIL C1 THRU C-3 AND STANDARD PLANS RSP A77N1 AND RSP A77N2.
3. DIRECTION OF ADJACENT TRAFFIC INDICATED BY ➡.
4. FOR ADDITIONAL DETAILS OF TRANSITION RAILING (TYPE WB), SEE CONSTRUCTION DETAIL C-22. TRANSITION RAILING (TYPE WB) TRANSITIONS THE 12 GAUGE W-BEAM STANDARD RAILING SECTION OF GUARD RAILING TO A HEAVIER GAGE NESTED THRIE BEAM RAILING SECTION WHICH IS CONNECTED TO THE CONCRETE BRIDGE RAILING.
5. FOR TYPICAL USE OF CONNECTION DETAIL AA, SEE LAYOUT TYPES 12A AND 12B ON CONSTRUCTION DETAIL C-14, LAYOUT TYPES 12C AND 12D ON CONSTRUCTION DETAIL C-15.
6. FOR TYPICAL USE OF CONNECTION DETAIL CC, SEE LAYOUT TYPES 12AA AND 12BB ON CONSTRUCTION DETAIL C-16 AND LAYOUT TYPE 12CC ON CONSTRUCTION DETAIL C-17
7. WHERE THE HEIGHT OF THE BRIDGE RAILING EXCEEDS THE HEIGHT OF THE THRIE BEAM RAILING BY MORE THAN 1" AT CONNECTION DETAIL AA AND CONNECTION DETAIL CC, TAPER THE TOP OF THE END OF THE BRIDGE RAILING AT 4:1 TO MATCH THE TOP ELEVATION OF THE THRIE BEAM RAILING.
8. FOR DETAILS OF END CAP (TYPE TC), SEE CONSTRUCTION DETAIL C-22.
9. SEE CONSTRUCTION DETAIL C-22 FOR ADDITIONAL DETAILS REGARDING DEPTH DIMENSION FOR STRAIGHT METAL BOX SPACER.

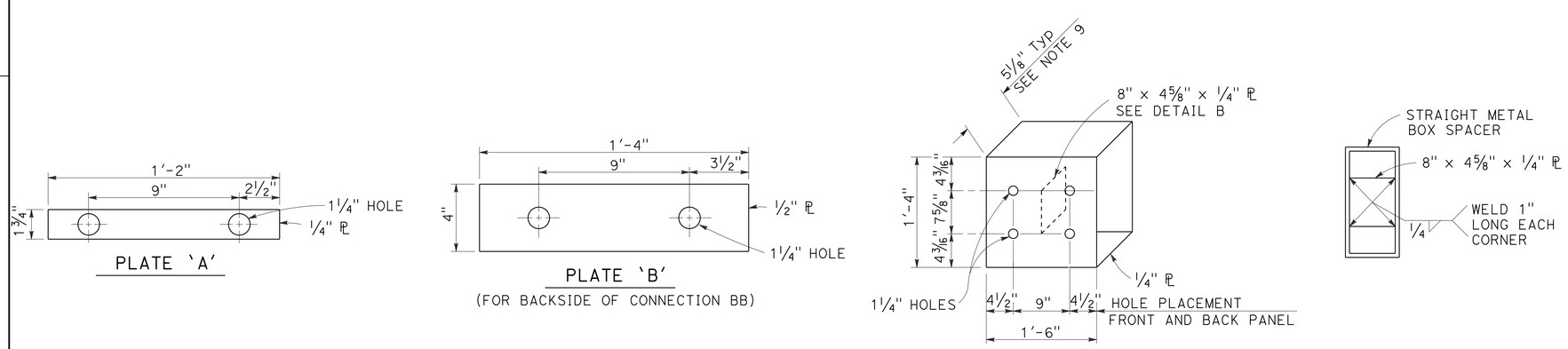

STRAIGHT METAL BOX SPACER

METAL BEAM GUARD RAILING CONNECTIONS TO BRIDGE RAILINGS WITHOUT SIDEWALKS (DETAILS No. 2)

CONSTRUCTION DETAILS

NO SCALE

C-21

REVISED BY | DATE REVISED
KRISHNA THAMILSERAN | CARLOS BURKS SR
CALCULATED-DESIGNED BY | CHECKED BY
FUNCTIONAL SUPERVISOR: KEN KEATON

STATE OF CALIFORNIA - DEPARTMENT OF TRANSPORTATION
03 - DESIGN
Caltrans

LAST REVISION 00-00-00 | DATE PLOTTED => 07-APR-2015 | TIME PLOTTED => 13:04

Dist	COUNTY	ROUTE	POST MILES TOTAL PROJECT	SHEET No.	TOTAL SHEETS
01	Hum	36, 96, 169, 211, 254, etc.	Var	32	103

T. Krishnakumary 3-30-15
REGISTERED CIVIL ENGINEER DATE

3-30-15
PLANS APPROVAL DATE

REGISTERED PROFESSIONAL ENGINEER KRISHNAKUMARY THAMILSERAN No. C79630 Exp. 9/30/16 CIVIL STATE OF CALIFORNIA

THE STATE OF CALIFORNIA OR ITS OFFICERS OR AGENTS SHALL NOT BE RESPONSIBLE FOR THE ACCURACY OR COMPLETENESS OF SCANNED COPIES OF THIS PLAN SHEET.

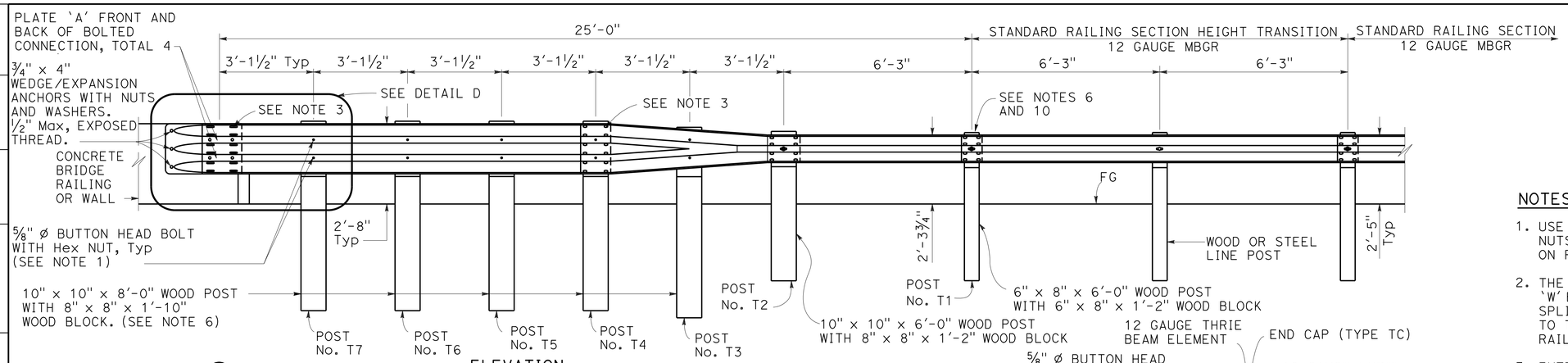

ELEVATION

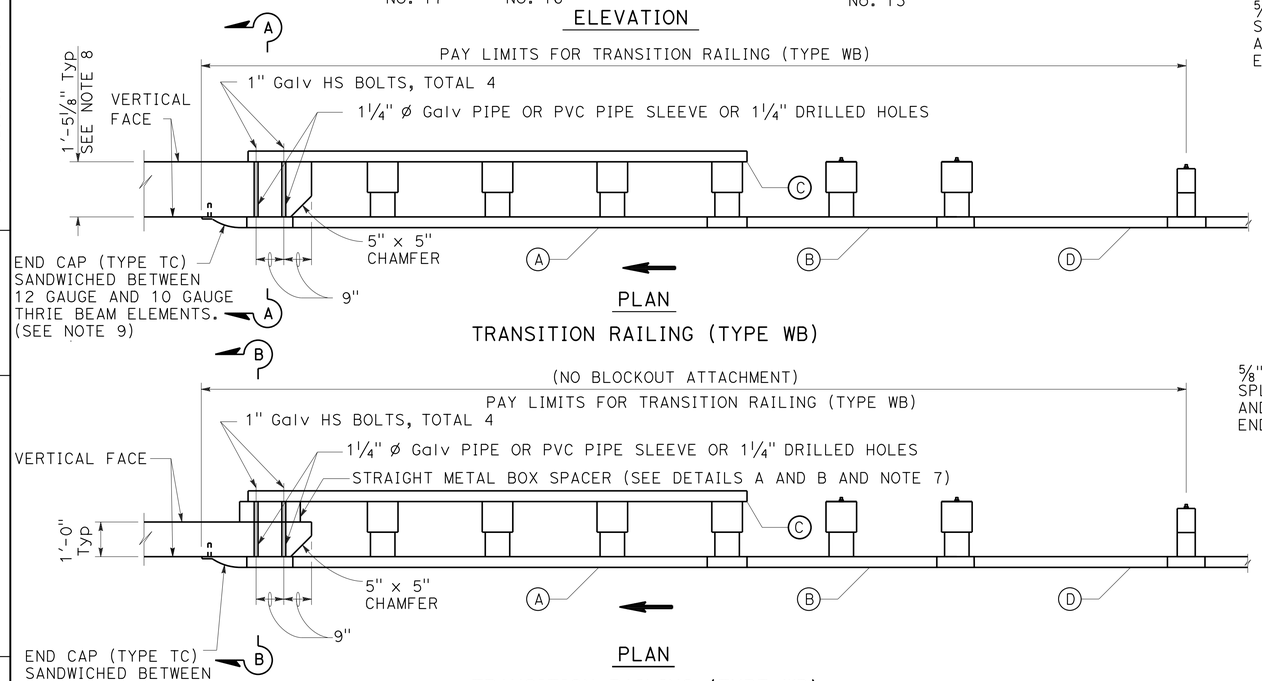

PLAN

TRANSITION RAILING (TYPE WB)

(BLOCKOUT ATTACHMENT)

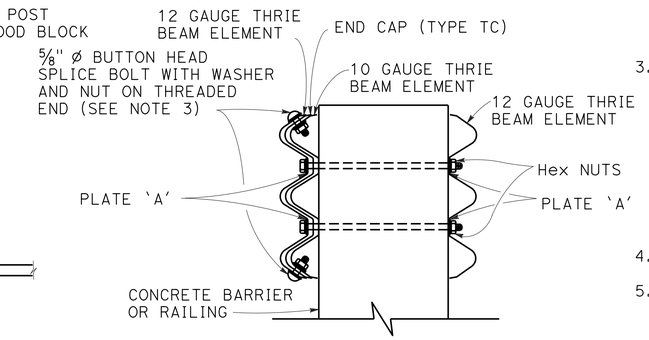

SECTION A-A

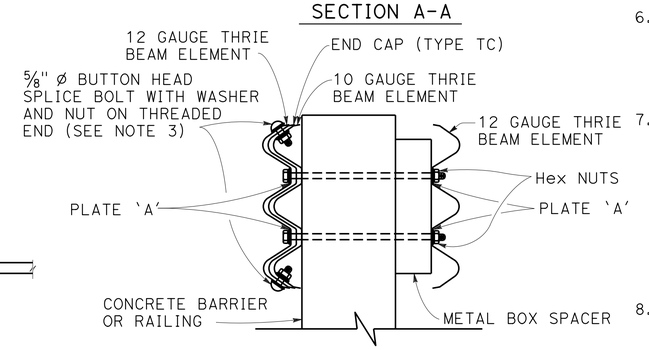

SECTION B-B

NOTES:

1. USE 5/8" Ø BUTTON HEAD BOLTS AND HEX NUTS FOR CONNECTIONS TO POSTS. NO WASHER ON RAIL FACE FOR BOLTED CONNECTIONS TO POST.
2. THE NESTED RAIL ELEMENTS, END CAP, AND 'W' BEAM TO THRIE BEAM ELEMENT MAY BE SPLICED TOGETHER PRIOR TO BOLTING THE ELEMENTS TO THE WOOD POST AND CONCRETE BARRIER OR RAILING.
3. EXTERIOR SPLICE BOLT HOLES FOR RAIL ELEMENT SPLICES AT POST NO. T4 AND THE CONNECTION TO THE CONCRETE BARRIER OR RAILING SHALL BE THE STANDARD 13/16" X 1 1/8" SLOT SIZE. INTERIOR SPLICE BOLT HOLES AT THESE LOCATIONS MAY BE INCREASED UP TO 1 1/4" Ø. ONLY THE TOP 2 AND THE BOTTOM 2 SPLICE BOLTS WITH WASHERS AND NUTS ARE REQUIRED FOR RAIL SPLICES AT POST NO. T4 AND THE CONNECTION TO THE CONCRETE BARRIER OR RAILING.
4. DIRECTION OF ADJACENT TRAFFIC INDICATED BY ➡.
5. THE TOP ELEVATION OF POSTS NO. T2 THROUGH NO. T7 SHALL NOT PROJECT MORE THAN 1" ABOVE THE TOP ELEVATION OF THE RAIL ELEMENT.
6. TYPICALLY, THE RAILING CONNECTED TO TRANSITION RAILING (TYPE WB) WILL BE EITHER STANDARD RAILING SECTION OF METAL BEAM GUARD RAILING WITH HEIGHT TRANSITION RATIO OF 120:1 OR AN APPROVED CALTRANS END TREATMENT ATTACHED TO POST NO. T1.
7. THE DEPTH OF THE METAL BOX SPACER VARIES FROM THE 5 1/8" TO 1 1/2" AND IS DEPENDENT ON THE WIDTH OF THE CONCRETE RAILING OR WALL. THE COMBINED DIMENSION FOR THE DEPTH OF THE METAL BOX SPACER PLUS THE WIDTH OF RAILING OR WALL IS TYPICALLY 17 1/8". WHERE THE SPACE BETWEEN THE BACKSIDE OF THE CONCRETE RAILING OR WALL AND THE REAR THRIE BEAM ELEMENT IS LESS THAN 1 1/2", METAL PLATES SIMILAR TO PLATE 'A' ARE TO BE USED AS SPACERS.
8. WHERE THE WIDTH OF THE CONCRETE RAILING OR WALL IS GREATER THAN 17 1/8", WOOD BLOCKS ARE TO BE USED TO FILL THE SPACE CREATED BETWEEN THE BACKSIDE OF POSTS NO. T4 THROUGH NO. T7 AND THE REAR THRIE BEAM ELEMENT. THESE WOOD BLOCKS SHALL BE 8" IN WIDTH AND 1'-2" IN LENGTH. THE DIMENSION BETWEEN THE FRONT THRIE BEAM ELEMENT AND THE REAR THRIE BEAM ELEMENT IS TO MATCH THE WIDTH OF THE CONCRETE RAILING OR WALL.
9. END CAP MAY BE INSTALLED OVER 12 GAUGE AND 10 GAUGE THRIE BEAM ELEMENTS WHERE TRANSITION RAILING IS INSTALLED ON THE DEPARTURE END OF BRIDGE RAILING.
10. CONFORM STANDARD RAILING SECTION HEIGHT TO 2'-3 3/4" AT POST NO. T1 USING HEIGHT TRANSITION RATIO OF 120:1.

LEGEND

(A) NESTED THRIE BEAM ELEMENTS (ONE 12 GAUGE ELEMENT NESTED OVER ONE 10 GAUGE ELEMENT).

(B) ONE 10 GAUGE "W" BEAM TO THRIE BEAM ELEMENT.

(C) ONE 12 GAUGE THRIE BEAM ELEMENT.

(D) ONE 10 GAUGE "W" BEAM RAIL ELEMENT (7'-3 1/2" LENGTH)

10 GAUGE = 0.135" THICK

12 GAUGE = 0.108" THICK

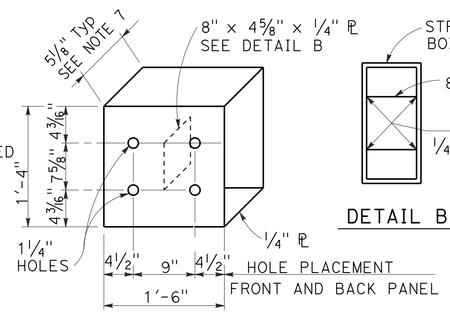

DETAIL A

STRAIGHT METAL BOX SPACER

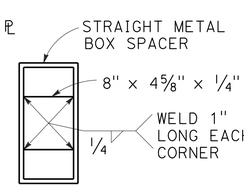

DETAIL B

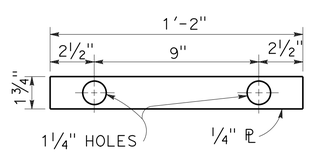

DETAIL C

PLATE 'A'

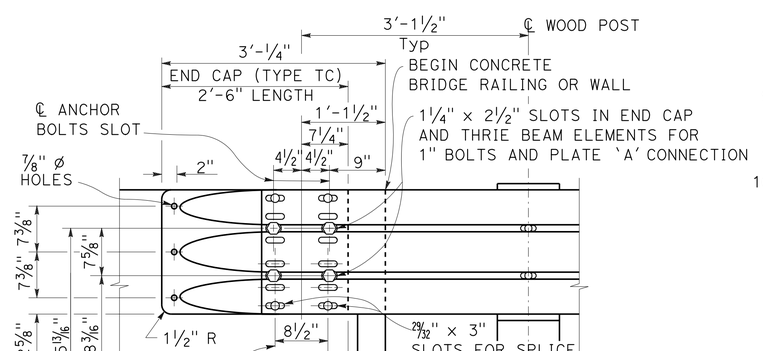

DETAIL D

METAL BEAM GUARD RAILING
TRANSITION RAILING
(TYPE WB)

CONSTRUCTION DETAILS

NO SCALE

C-22

STATE OF CALIFORNIA - DEPARTMENT OF TRANSPORTATION
03 - DESIGN
Caltrans
FUNCTIONAL SUPERVISOR: KEN KEATON
CALCULATED-DESIGNED BY: KRISHNA THAMILSERAN
CHECKED BY: CARLOS BURKS SR
REVISED BY / DATE REVISED

LAST REVISION 00-00-00
DATE PLOTTED => 07-APR-2015
TIME PLOTTED => 13:04

Dist	COUNTY	ROUTE	POST MILES TOTAL PROJECT	SHEET No.	TOTAL SHEETS
01	Hum	36, 96, 169, 211, 254, etc.	Var	33	103

REGISTERED CIVIL ENGINEER 3-30-15 DATE

3-30-15
PLANS APPROVAL DATE

REGISTERED PROFESSIONAL ENGINEER KRISHNAKUMARY THAMILSERAN No. C79630 Exp. 9/30/16 CIVIL STATE OF CALIFORNIA

THE STATE OF CALIFORNIA OR ITS OFFICERS OR AGENTS SHALL NOT BE RESPONSIBLE FOR THE ACCURACY OR COMPLETENESS OF SCANNED COPIES OF THIS PLAN SHEET.

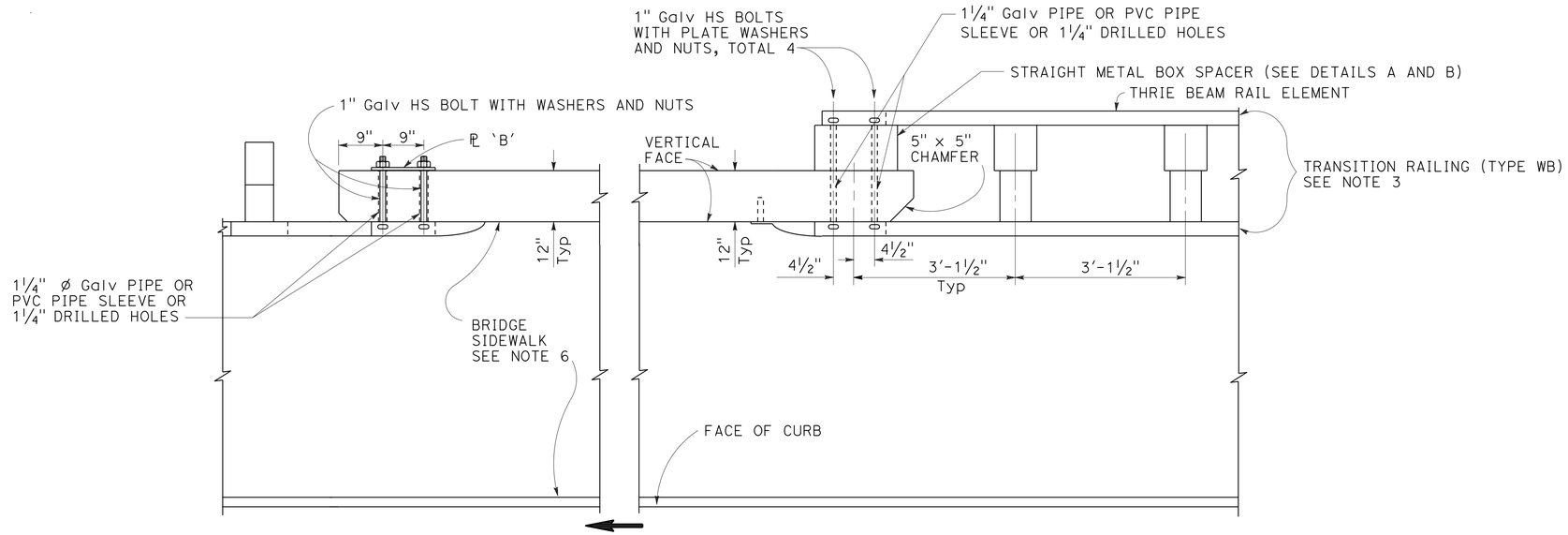

PLAN

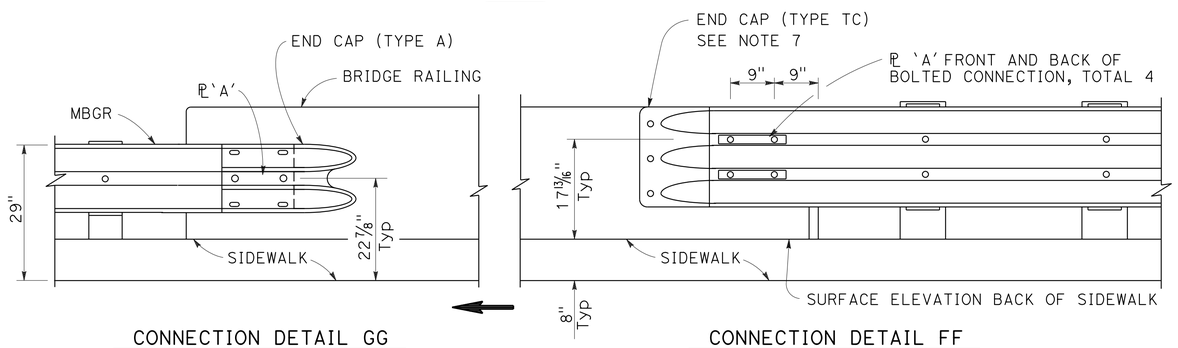

CONNECTION DETAIL GG
SEE NOTE 5

ELEVATION

CONNECTION DETAIL FF
SEE NOTE 4

GUARD RAILING CONNECTION TO BRIDGE RAILING WITH SIDEWALKS

NOTES:

1. SEE CONSTRUCTION DETAIL C-24 FOR ADDITIONAL CONNECTION DETAILS TO BRIDGES WITH SIDEWALKS.
2. DIRECTION OF ADJACENT TRAFFIC INDICATED BY ⟹.
3. FOR ADDITIONAL DETAILS OF TRANSITION RAILING (TYPE WB), SEE CONSTRUCTION DETAIL C-22. TRANSITION RAILING (TYPE WB) TRANSITIONS THE 12 GAGE W-BEAM STANDARD RAILING SECTION OF GUARD RAILING TO A HEAVIER GAGE NESTED THRIE BEAM RAILING WHICH IS CONNECTED TO THE CONCRETE BRIDGE RAILING.
4. FOR TYPICAL USE OF CONNECTION DETAIL FF, SEE LAYOUT TYPES 12A AND 12B ON CONSTRUCTION DETAIL C-14.
5. FOR TYPICAL USE OF CONNECTION DETAIL GG, SEE LAYOUT TYPE 12D ON CONSTRUCTION DETAIL C-15 AND LAYOUT TYPE 12DD ON STANDARD PLAN C-17.
6. WHERE THE BRIDGE SIDEWALK IS NOT CONTINUED BEYOND THE END OF THE BRIDGE RAILING, THE PORTION OF THE SIDEWALK BEYOND EACH END OF THE BRIDGE RAILING SHALL BE TRANSITIONED DOWN FROM THE TOP ELEVATION OF THE SIDEWALK, FOR ITS ENTIRE WIDTH, TO THE FINISHED GRADE OF THE ADJACENT ROADBED. THE LONGITUDINAL SLOPE OF EACH SIDEWALK ELEVATION TRANSITION SHALL NOT EXCEED 8.33 PERCENT.
7. FOR DETAILS OF END CAP (TYPE TC), SEE CONSTRUCTION DETAIL C-22.
8. SEE CONSTRUCTION DETAIL C-22 FOR ADDITIONAL DETAILS REGARDING DEPTH DIMENSION FOR STRAIGHT METAL BOX SPACER.

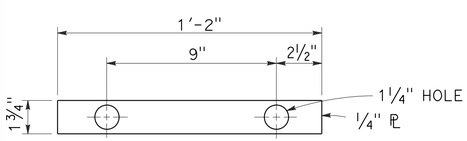

PLATE 'A'

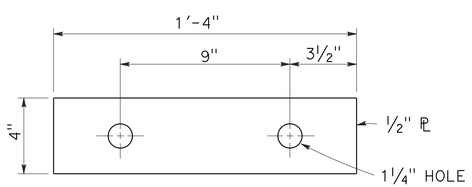

PLATE 'B'
(FOR BACKSIDE OF CONNECTION SB)

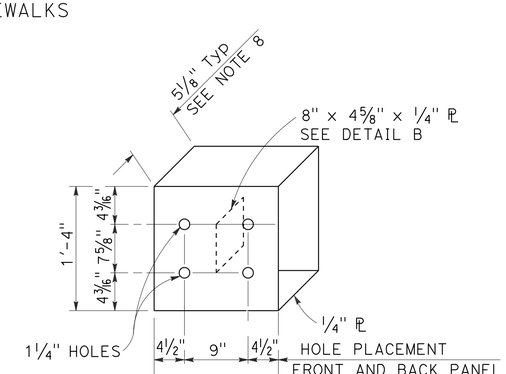

DETAIL A

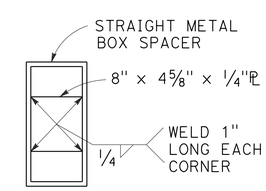

DETAIL B

STRAIGHT METAL BOX SPACER

METAL BEAM GUARD RAILING CONNECTIONS TO BRIDGE RAILINGS WITH SIDEWALKS DETAILS No. 1

CONSTRUCTION DETAILS

NO SCALE

C-23

STATE OF CALIFORNIA - DEPARTMENT OF TRANSPORTATION
Caltrans
03 - DESIGN
FUNCTIONAL SUPERVISOR: KEN KEATON
CALCULATED-DESIGNED BY: KRISHNA THAMILSERAN
CHECKED BY: CARLOS BURKS SR
REVISED BY
DATE REVISED

LAST REVISION 00-00-00
DATE PLOTTED => 07-APR-2015
TIME PLOTTED => 13:04

Dist	COUNTY	ROUTE	POST MILES TOTAL PROJECT	SHEET No.	TOTAL SHEETS
01	Hum	36, 96, 169, 211, 254, etc.	Var	34	103

REGISTERED CIVIL ENGINEER 3-30-15 DATE

3-30-15
PLANS APPROVAL DATE

REGISTERED PROFESSIONAL ENGINEER KRISHNAKUMARY THAMILSERAN No. C79630 Exp. 9/30/16 CIVIL STATE OF CALIFORNIA

THE STATE OF CALIFORNIA OR ITS OFFICERS OR AGENTS SHALL NOT BE RESPONSIBLE FOR THE ACCURACY OR COMPLETENESS OF SCANNED COPIES OF THIS PLAN SHEET.

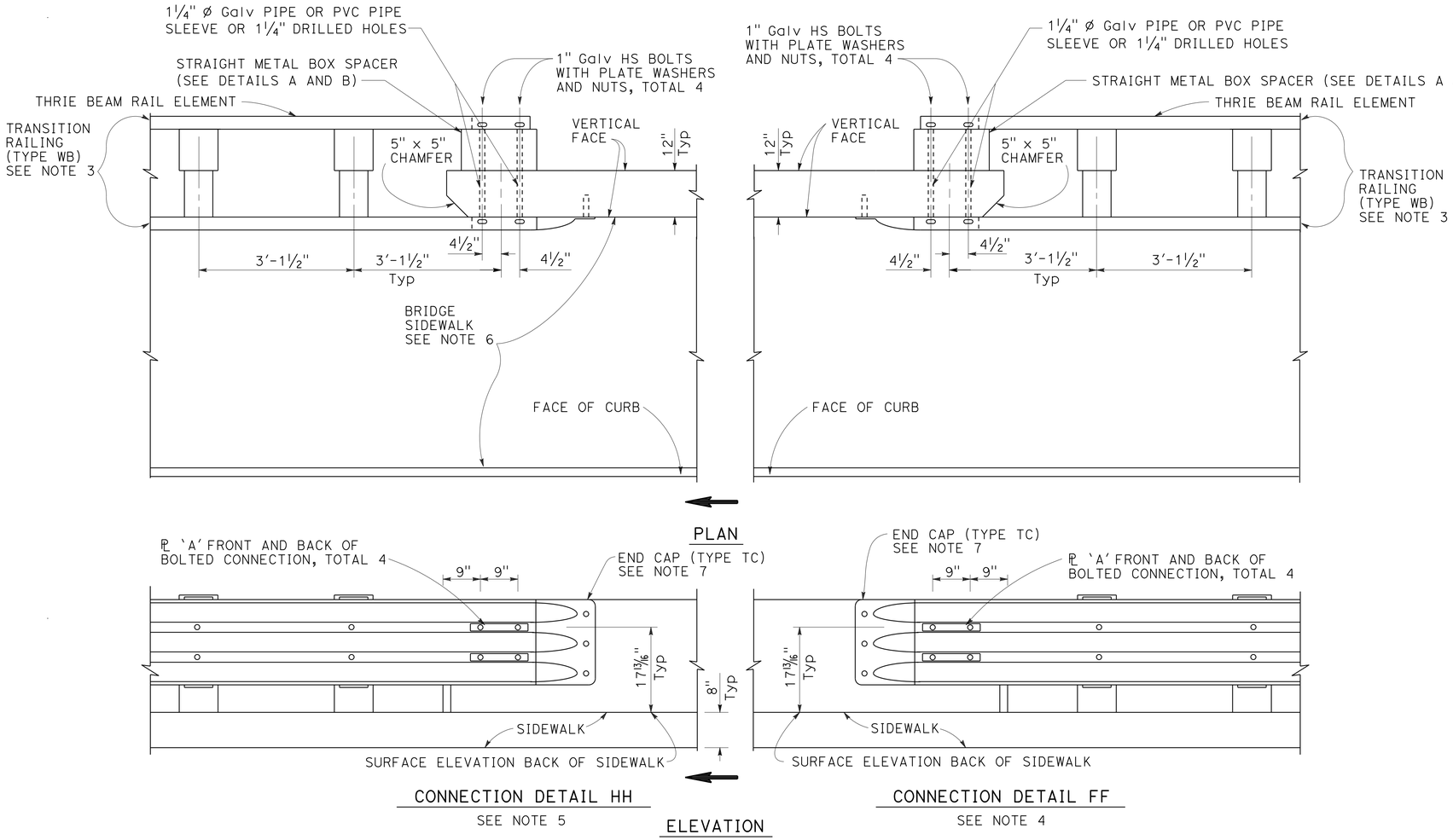

GUARD RAILING CONNECTION TO BRIDGE RAILING WITH SIDEWALKS

NOTES:

1. SEE CONSTRUCTION DETAIL C-23 FOR ADDITIONAL CONNECTION DETAILS TO BRIDGES WITH SIDEWALKS.
2. DIRECTION OF ADJACENT TRAFFIC INDICATED BY ⟶.
3. FOR ADDITIONAL DETAILS OF TRANSITION RAILING (TYPE WB), SEE CONSTRUCTION DETAIL C-22. TRANSITION RAILING (TYPE WB) TRANSITIONS THE 12 GAGE W-BEAM STANDARD RAILING SECTION OF GUARD RAILING TO A HEAVIER GAGE NESTED THRIE BEAM RAILING WHICH IS CONNECTED TO THE CONCRETE BRIDGE RAILING.
4. FOR TYPICAL USE OF CONNECTION DETAIL FF, SEE LAYOUT TYPES 12A AND 12B ON CONSTRUCTION DETAIL C-14.
5. FOR TYPICAL USE OF CONNECTION DETAIL HH, SEE LAYOUT TYPES 12AA AND 12BB ON CONSTRUCTION DETAIL C-16.
6. WHERE THE BRIDGE SIDEWALK IS NOT CONTINUED BEYOND THE END OF THE BRIDGE RAILING, THE PORTION OF THE SIDEWALK BEYOND EACH END OF THE BRIDGE RAILING SHALL BE TRANSITIONED DOWN FROM THE TOP ELEVATION OF THE SIDEWALK, FOR ITS ENTIRE WIDTH, TO THE FINISHED GRADE OF THE ADJACENT ROADBED. THE LONGITUDINAL SLOPE OF EACH SIDEWALK ELEVATION TRANSITION SHALL NOT EXCEED 8.33 PERCENT.
7. FOR DETAILS OF END CAP (TYPE TC), SEE CONSTRUCTION DETAIL C-22.
8. SEE CONSTRUCTION DETAIL C-22 FOR ADDITIONAL DETAILS REGARDING DEPTH DIMENSION FOR STRAIGHT METAL BOX SPACER.

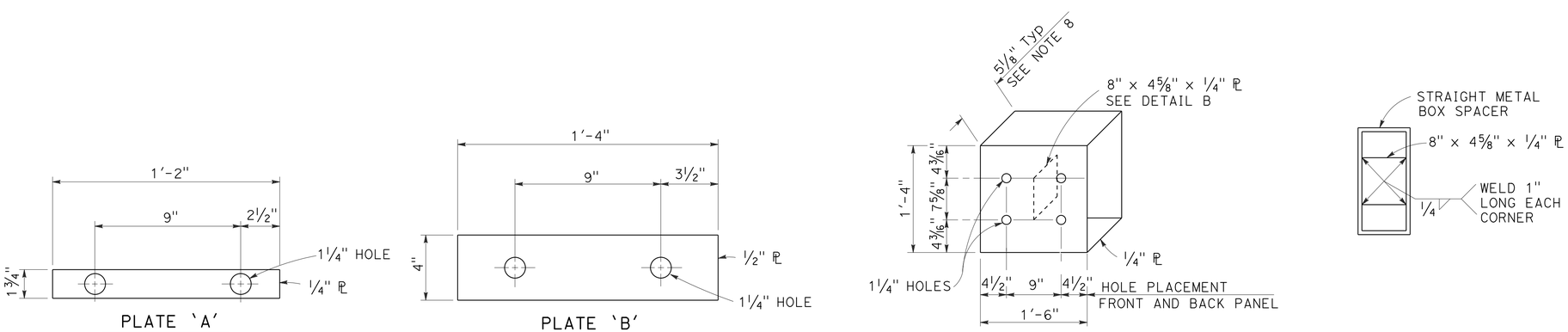

METAL BEAM GUARD RAILING CONNECTIONS TO BRIDGE RAILINGS WITH SIDEWALKS DETAILS No. 2

CONSTRUCTION DETAILS

NO SCALE

C-24

REVISED BY | DATE REVISED
KRISHNA THAMILSERAN | CARLOS BURKS SR
CALCULATED-DESIGNED BY | CHECKED BY
FUNCTIONAL SUPERVISOR | KEN KEATON
STATE OF CALIFORNIA - DEPARTMENT OF TRANSPORTATION | 03 - DESIGN
Caltrans

LAST REVISION 00-00-00 | DATE PLOTTED => 07-APR-2015 | TIME PLOTTED => 13:04

Dist	COUNTY	ROUTE	POST MILES TOTAL PROJECT	SHEET No.	TOTAL SHEETS
01	Hum	36, 96, 169, 211, 254, etc.	Var	35	103

T. Krishnakumary 3-30-15
REGISTERED CIVIL ENGINEER DATE

3-30-15
PLANS APPROVAL DATE

REGISTERED PROFESSIONAL ENGINEER
KRISHNAKUMARY THAMILSERAN
No. C79630
Exp. 9/30/16
CIVIL
STATE OF CALIFORNIA

THE STATE OF CALIFORNIA OR ITS OFFICERS OR AGENTS SHALL NOT BE RESPONSIBLE FOR THE ACCURACY OR COMPLETENESS OF SCANNED COPIES OF THIS PLAN SHEET.

NOTE:

1. See Standard Plan RSP A77L3 . for typical use of anchor cable and anchor plate.

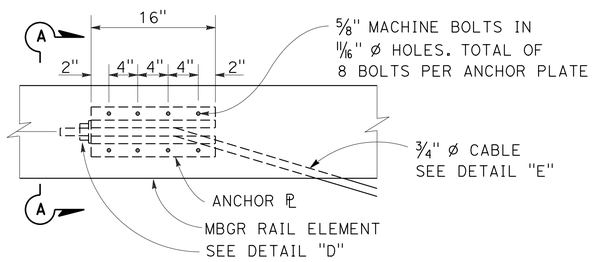

ANCHOR PLATE DETAIL

(MBGR shown, TBB similar)

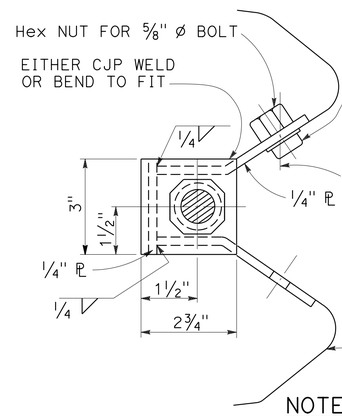

SECTION A-A (ALTERNATIVE TYPE 1)

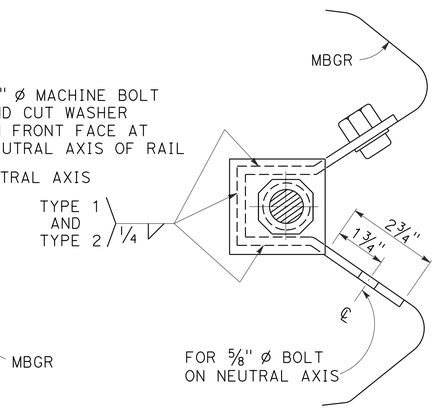

SECTION A-A (ALTERNATIVE TYPE 2)

NOTE:

Dimensioning applies to both types.

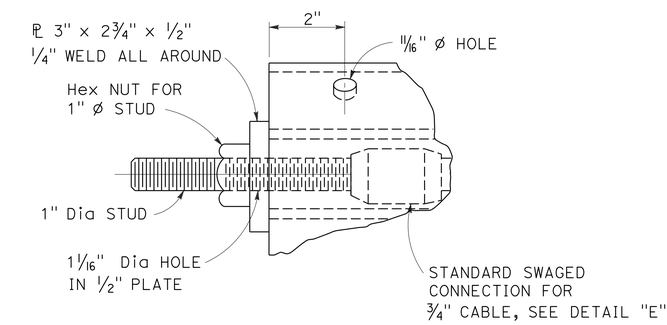

DETAIL "D"

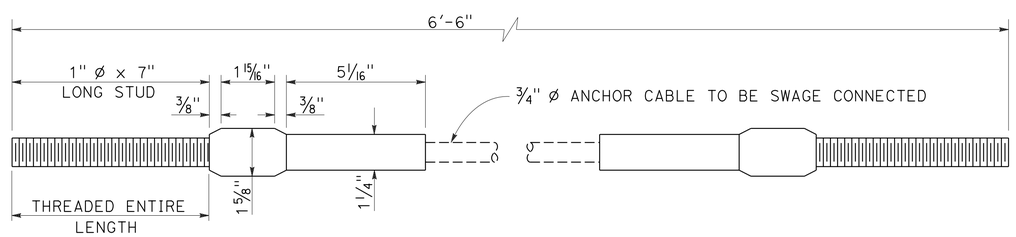

ANCHOR CABLE WITH SWAGED FITTING AND STUD

DETAIL "E"

METAL RAILING
ANCHOR CABLE AND
ANCHOR PLATE DETAILS

CONSTRUCTION DETAILS

NO SCALE

C-25

STATE OF CALIFORNIA - DEPARTMENT OF TRANSPORTATION
Caltrans
03 - DESIGN
FUNCTIONAL SUPERVISOR: KEN KEATON
CALCULATED-DESIGNED BY: KRISHNA THAMILSERAN
CHECKED BY: CARLOS BURKS SR
REVISED BY
DATE REVISED

LAST REVISION 00-00-00
DATE PLOTTED => 07-APR-2015
TIME PLOTTED => 13:04

Dist	COUNTY	ROUTE	POST MILES TOTAL PROJECT	SHEET No.	TOTAL SHEETS
01	Hum	36, 96, 169, 211, 254, etc.	Var	36	103

T. Krishnakumary 3-30-15
REGISTERED CIVIL ENGINEER DATE

3-30-15
PLANS APPROVAL DATE

REGISTERED PROFESSIONAL ENGINEER
KRISHNAKUMARY THAMILSERAN
No. C79630
Exp. 9/30/16
CIVIL
STATE OF CALIFORNIA

THE STATE OF CALIFORNIA OR ITS OFFICERS OR AGENTS SHALL NOT BE RESPONSIBLE FOR THE ACCURACY OR COMPLETENESS OF SCANNED COPIES OF THIS PLAN SHEET.

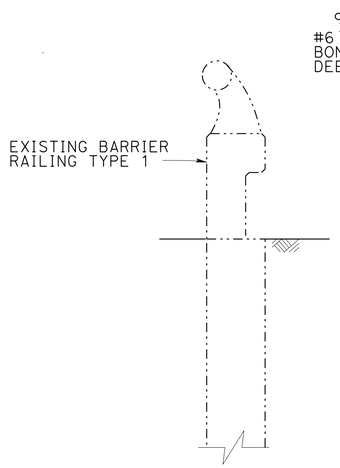

SECTION A-A

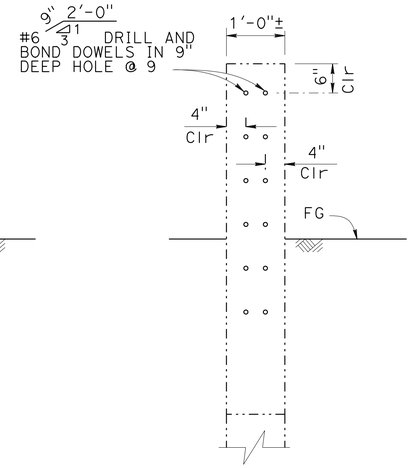

SECTION B-B

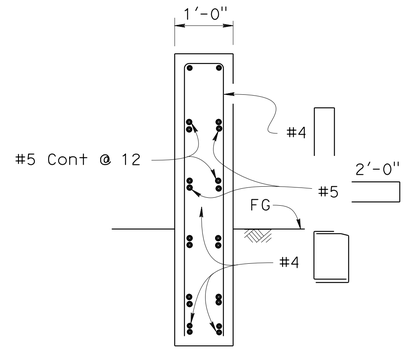

SECTION C-C

NOTE:
DRILL AND BOND DOWELS NOT SHOWN

LEGEND:
····-··· Indicates Existing Structure
——— Indicates New Structure

NOTE:
THE CONTRACTOR SHALL VERIFY ALL CONTROLLING FIELD DIMENSIONS BEFORE ORDERING OR FABRICATING ANY MATERIAL.

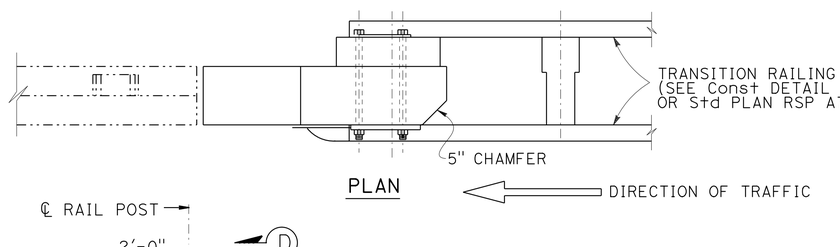

PLAN

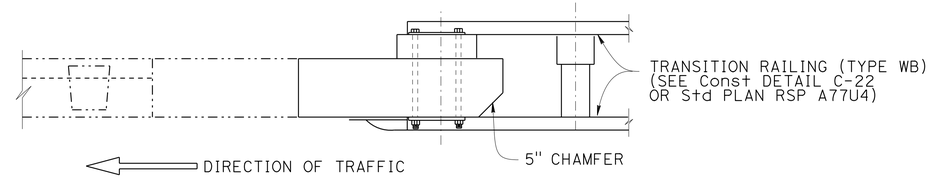

PLAN

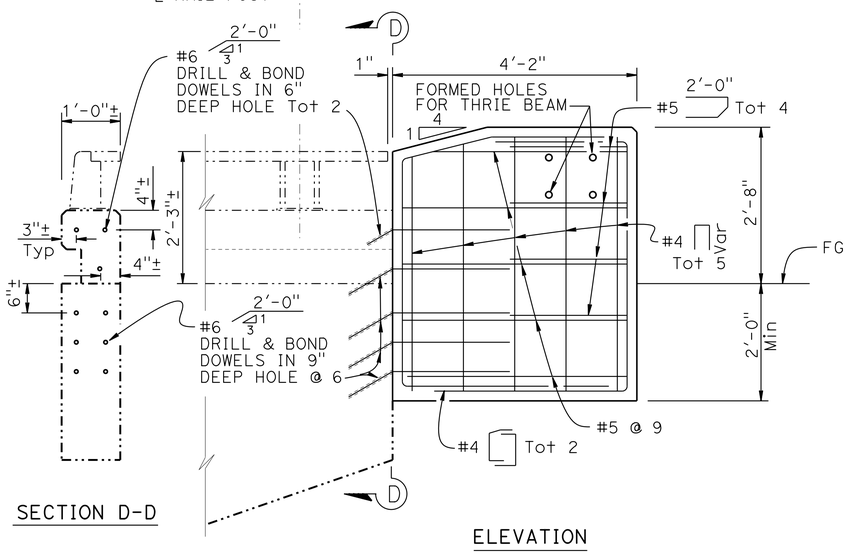

SECTION D-D

ELEVATION

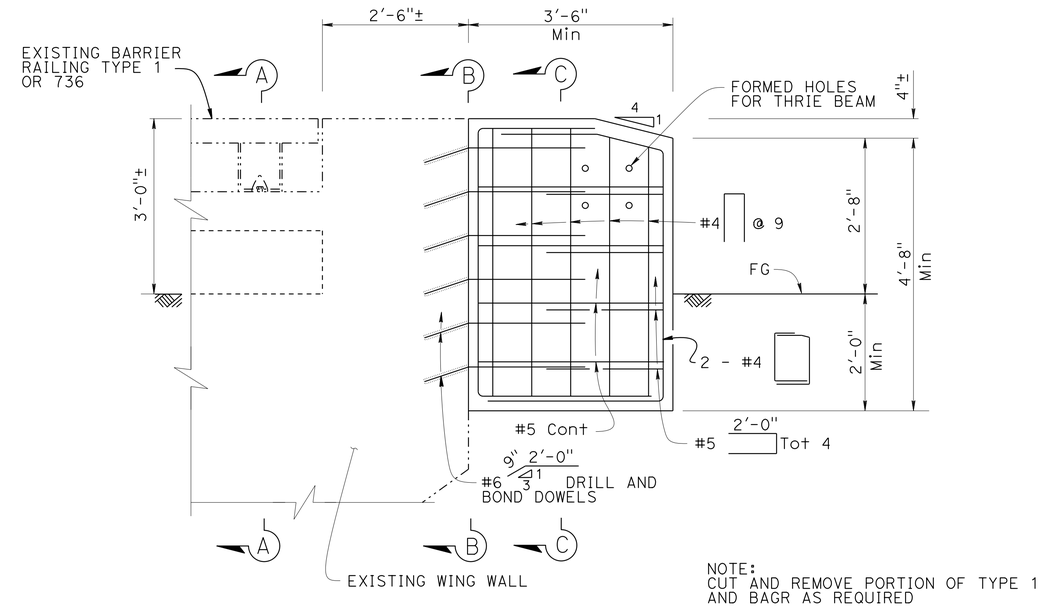

NOTE:
CUT AND REMOVE PORTION OF TYPE 1 AND BAGR AS REQUIRED

ELEVATION

ROUTE 96 PM 39.49 (EB, WB)
PM 39.55 (EB, WB)

ROUTE 255 PM 0.55 (NB, SB)
PM 0.66 (NB, SB)
PM 0.88 (NB, SB)
PM 1.36 (NB, SB)
PM 1.84 (NB, SB)

ANCHOR BLOCK FOR EXISTING BARRIER RAILING TYPE 9

ROUTE 36 PM 20.16 (EB)
PM 20.19 (WB)

ROUTE 96 PM 44.28 (WB)
PM 44.35 (WB)

ROUTE 211 PM 74.62 (SB)
PM 74.63 (NB)
PM 74.67 (NB, SB)
PM 76.29 (NB, SB)
PM 76.34 (NB, SB)
PM 76.45 (NB, SB)
PM 76.50 (NB, SB)

ROUTE 255 PM 7.75 (NB)
PM 7.77 (SB)

ROUTE 299 PM 1.65 (WB)
PM 4.01 (EB)

ANCHOR BLOCK FOR EXISTING BARRIER RAILING TYPE 1 AND TYPE 736

CONSTRUCTION DETAILS

NO SCALE

C-26

STATE OF CALIFORNIA - DEPARTMENT OF TRANSPORTATION
Caltrans
03 - DESIGN
FUNCTIONAL SUPERVISOR: KEN KEATON
CALCULATED-DESIGNED BY: KRISHNA THAMILSERAN
CHECKED BY: GARY DUGHI
REVISED BY
DATE REVISED

LAST REVISION 00-00-00
DATE PLOTTED => 07-APR-2015
TIME PLOTTED => 13:04

Dist	COUNTY	ROUTE	POST MILES TOTAL PROJECT	SHEET No.	TOTAL SHEETS
01	Hum	36, 96, 169, 211, 254, etc.	Var	37	103

T. Krishnakumary 3-30-15
REGISTERED CIVIL ENGINEER DATE

3-30-15
PLANS APPROVAL DATE

REGISTERED PROFESSIONAL ENGINEER
KRISHNAKUMARY THAMILSERAN
No. C79630
Exp. 9/30/16
CIVIL
STATE OF CALIFORNIA

THE STATE OF CALIFORNIA OR ITS OFFICERS OR AGENTS SHALL NOT BE RESPONSIBLE FOR THE ACCURACY OR COMPLETENESS OF SCANNED COPIES OF THIS PLAN SHEET.

NOTE:
THE CONTRACTOR MUST VERIFY ALL CONTROLLING FIELD DIMENSIONS BEFORE ORDERING OR FABRICATING ANY MATERIAL.

LEGEND:

-·-·-·- INDICATES EXISTING STRUCTURE

——— INDICATES NEW CONSTRUCTION

ROUTE 36 PM 13.48 (EB, WB)
PM 16.93 (WB)
PM 16.96 (WB)
PM 17.91 (WB)
PM 17.93 (EB)
PM 18.02 (EB, WB)
PM 23.90 (EB) (TYPE 28)
PM 40.44 (EB, WB)
PM 40.52 (EB, WB)

ROUTE 96 PM 8.14 (EB)
PM 13.25 (EB, WB)
PM 13.28 (EB,WB)
PM 14.53 (EB, WB)
PM 14.58 (EB, WB)

ROUTE 169 PM 25.80 (EB, WB)
PM 25.86 (WB)
PM 26.98 (EB)
PM 27.00 (WB)
PM 27.02 (EB, WB)
PM 29.82 (EB, WB)
PM 29.84 (EB, WB)

ROUTE 254 PM 11.83 (SB)
PM 11.88 (SB)

ROUTE 255 PM 5.12 (NB, SB)
PM 5.22 (NB, SB)

ROUTE 299 PM 42.97 (EB)
PM 42.98 (WB)

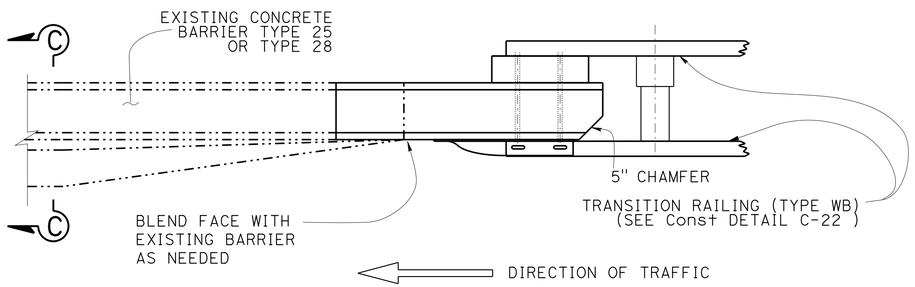

PLAN

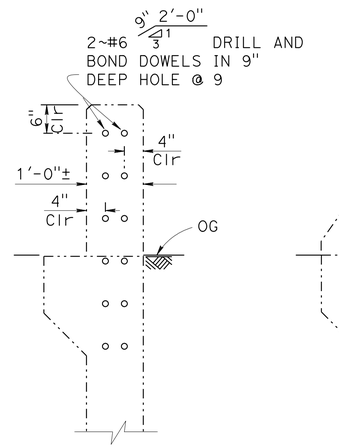

SECTION A-A

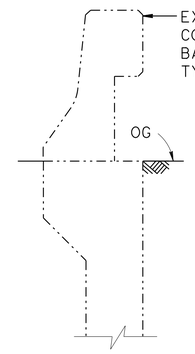

SECTION C-C

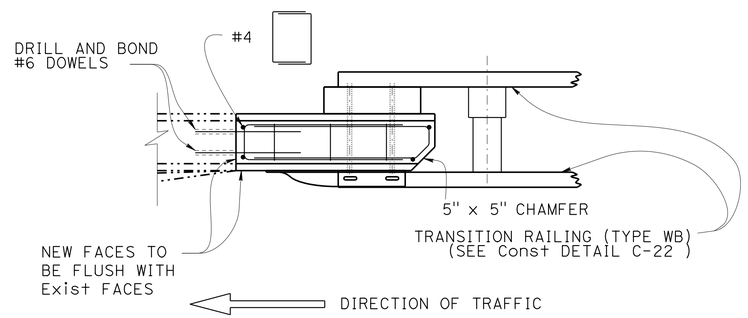

PLAN

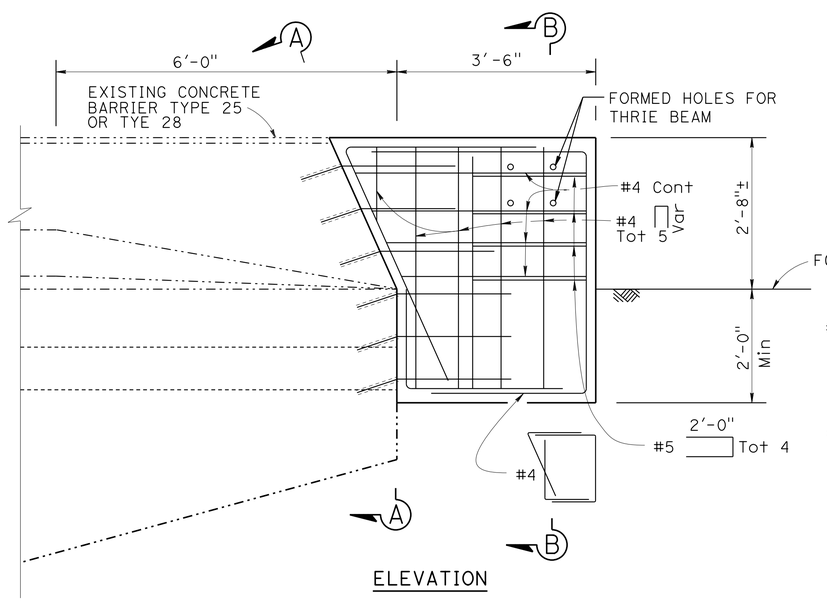

ELEVATION

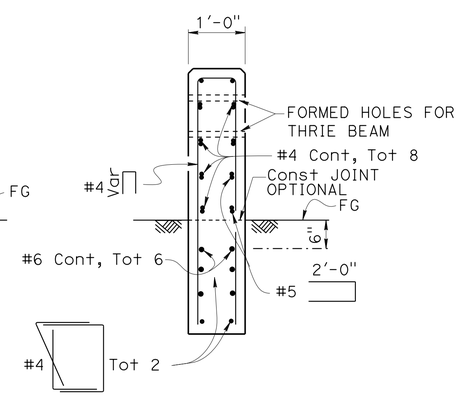

NOTE: THRIE BEAM NOT SHOWN

SECTION B-B

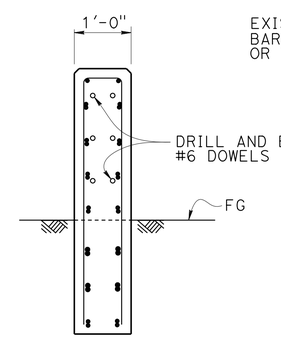

NOTE: THRIE BEAM NOT SHOWN

SECTION D-D

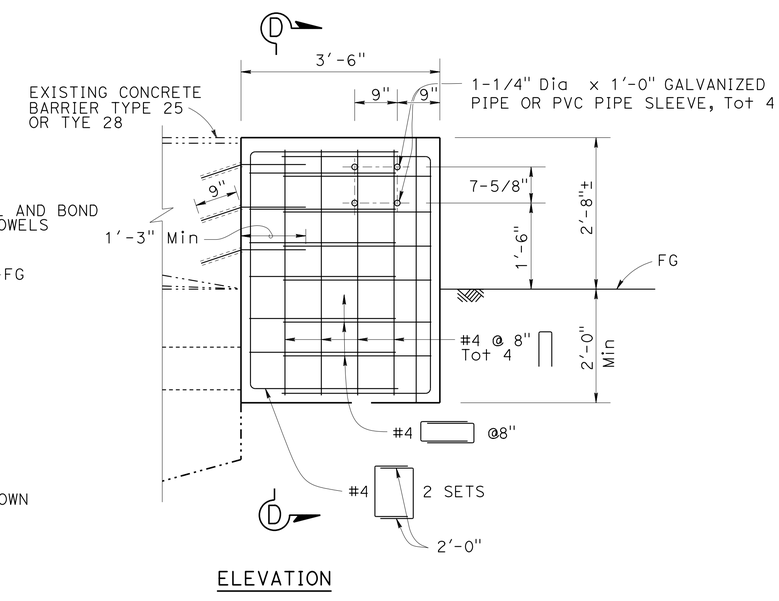

ELEVATION

ANCHOR BLOCK FOR EXISTING BARRIER RAILING TYPE 25 & 28

CONSTRUCTION DETAILS

NO SCALE

C-27

STATE OF CALIFORNIA - DEPARTMENT OF TRANSPORTATION
03 - DESIGN
FUNCTIONAL SUPERVISOR: KEN KEATON
CALCULATED-DESIGNED BY: KRISHNA THAMILSERAN
CHECKED BY: GARY DUGHI
REVISED BY / DATE REVISED

LAST REVISION 00-00-00
DATE PLOTTED => 07-APR-2015
TIME PLOTTED => 13:04

Dist	COUNTY	ROUTE	POST MILES TOTAL PROJECT	SHEET No.	TOTAL SHEETS
01	Hum	36, 96, 169, 211, 254, etc.	Var	38	103

T. Krishnakumary 3-30-15
REGISTERED CIVIL ENGINEER DATE

3-30-15
PLANS APPROVAL DATE

REGISTERED PROFESSIONAL ENGINEER KRISHNAKUMARY THAMILSERAN No. C79630 Exp. 9/30/16 CIVIL STATE OF CALIFORNIA

THE STATE OF CALIFORNIA OR ITS OFFICERS OR AGENTS SHALL NOT BE RESPONSIBLE FOR THE ACCURACY OR COMPLETENESS OF SCANNED COPIES OF THIS PLAN SHEET.

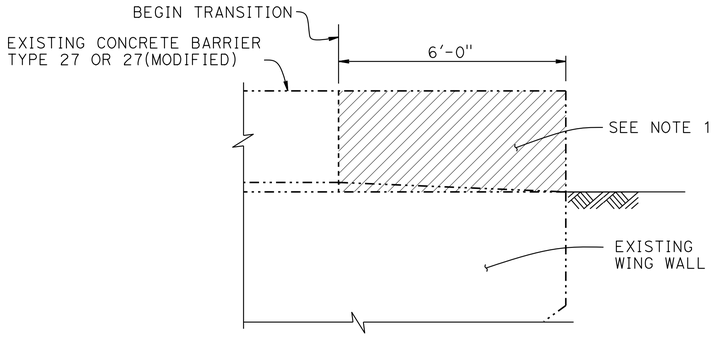

CONCRETE REMOVAL

NOTES:

1. CUT AND REMOVE THE PORTION OF (E) CONCRETE BARRIER TYPE 27 AS REQUIRED. EXISTING REINFORCEMENT TO REMAIN
2. WINGWALL REINFORCEMENT TO REMAIN
3. THE CONTRACTOR MUST VERIFY ALL CONTROLLING FIELD DIMENSIONS BEFORE ORDERING OR FABRICATING ANY MATERIAL.

LEGEND:

- INDICATES EXISTING STRUCTURE
- INDICATES NEW CONSTRUCTION
- CONCRETE REMOVAL
- INDICATES EXISTING REINFORCEMENT

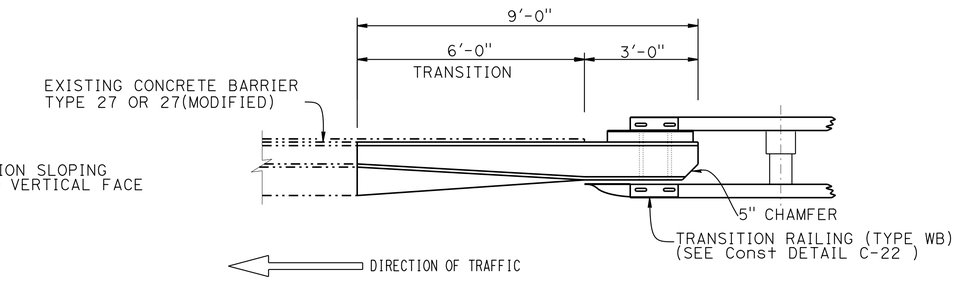

PLAN

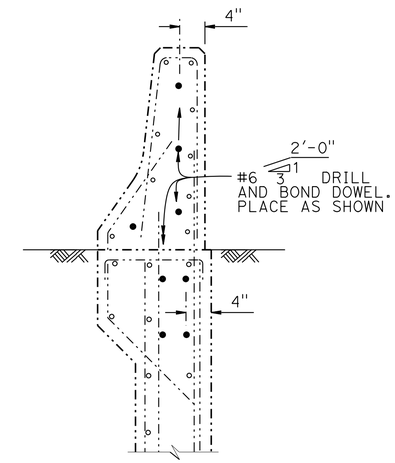

SECTION A-A

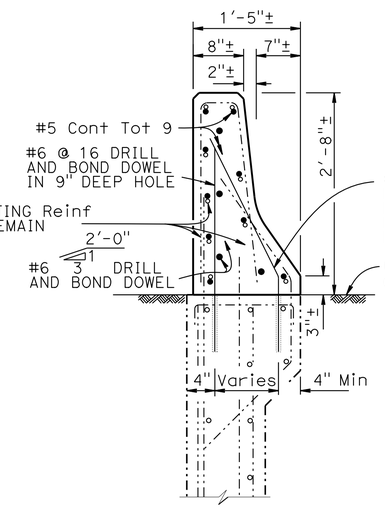

SECTION B-B

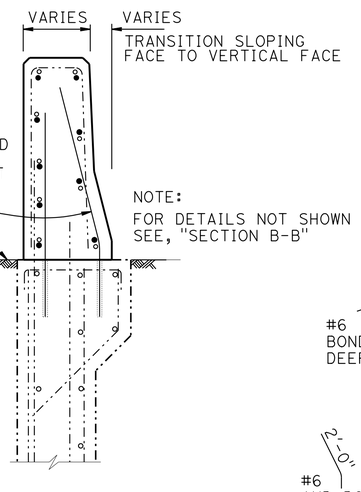

NOTE:
FOR DETAILS NOT SHOWN SEE, "SECTION B-B"

SECTION C-C

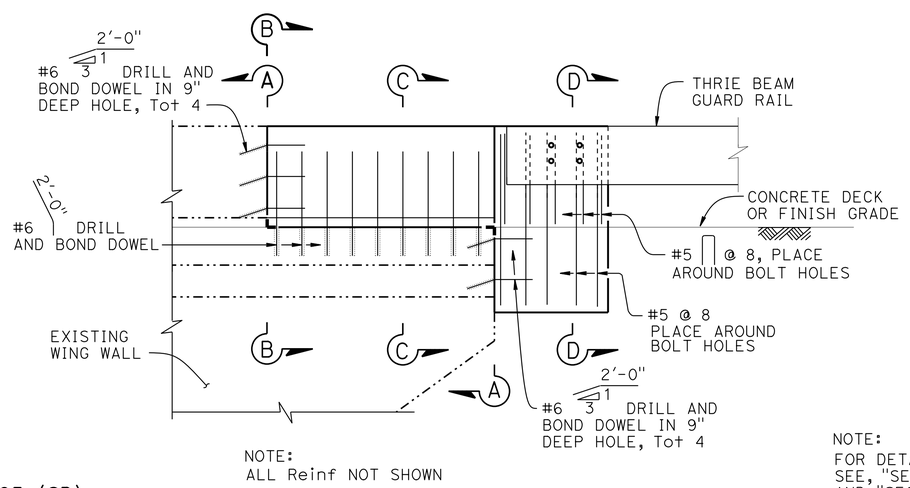

NOTE:
ALL Reinf NOT SHOWN

ELEVATION

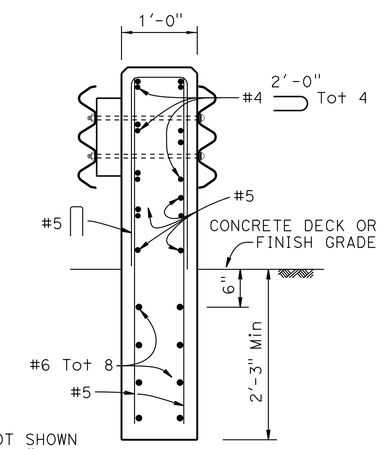

NOTE:
FOR DETAILS NOT SHOWN SEE, "SECTION B-B" AND "SECTION C-C"

SECTION D-D

ROUTE 254 PM 12.65 (SB)
PM 12.72 (SB)
PM 17.78 (SB)
PM 17.82 (SB)

ANCHOR BLOCK FOR EXISTING BARRIER RAILING TYPE 27 AND TYPE 27 (MODIFIED)

CONSTRUCTION DETAILS

NO SCALE

C-28

STATE OF CALIFORNIA - DEPARTMENT OF TRANSPORTATION
Caltrans
03 - DESIGN
FUNCTIONAL SUPERVISOR: KEN KEATON
CALCULATED-DESIGNED BY: KRISHNA THAMILSERAN
CHECKED BY: GARY DUGHI
REVISED BY
DATE REVISED

LAST REVISION 00-00-00
DATE PLOTTED => 07-APR-2015
TIME PLOTTED => 13:04

Dist	COUNTY	ROUTE	POST MILES TOTAL PROJECT	SHEET No.	TOTAL SHEETS
01	Hum	36, 96, 169, 211, 254, etc.	Var	39	103

T. Krishnakumary 3-30-15
REGISTERED CIVIL ENGINEER DATE

3-30-15
PLANS APPROVAL DATE

REGISTERED PROFESSIONAL ENGINEER
KRISHNAKUMARY THAMILSERAN
No. C79630
Exp. 9/30/16
CIVIL
STATE OF CALIFORNIA

THE STATE OF CALIFORNIA OR ITS OFFICERS OR AGENTS SHALL NOT BE RESPONSIBLE FOR THE ACCURACY OR COMPLETENESS OF SCANNED COPIES OF THIS PLAN SHEET.

NOTE:
THE CONTRACTOR MUST VERIFY ALL CONTROLLING FIELD DIMENSIONS BEFORE ORDERING OR FABRICATING ANY MATERIAL.

LEGEND:

- INDICATES EXISTING STRUCTURE
- INDICATES NEW STRUCTURE

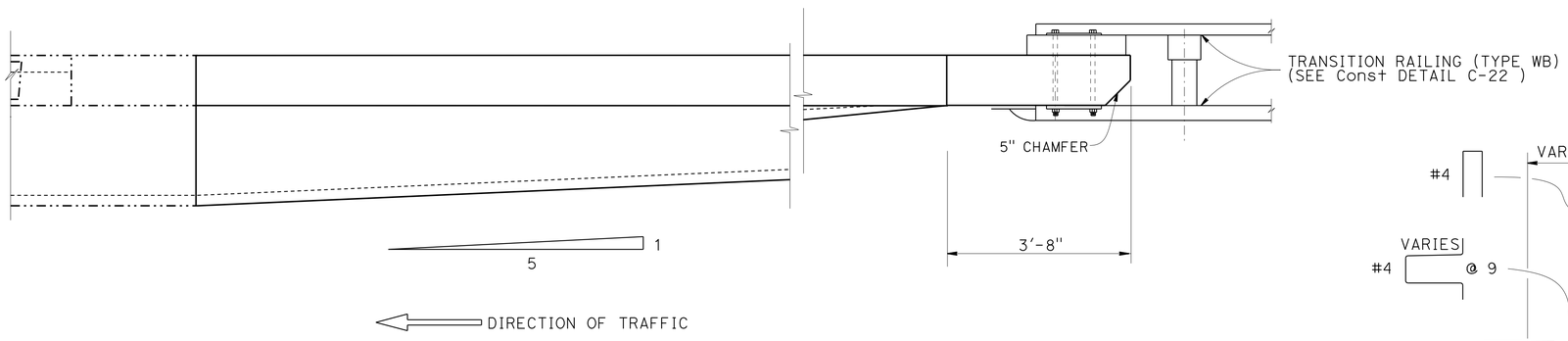

PLAN

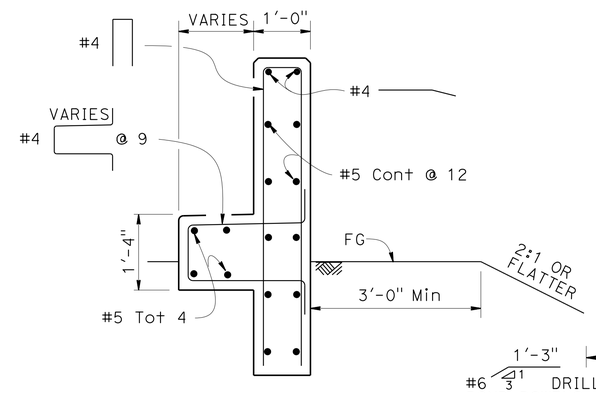

SECTION B-B

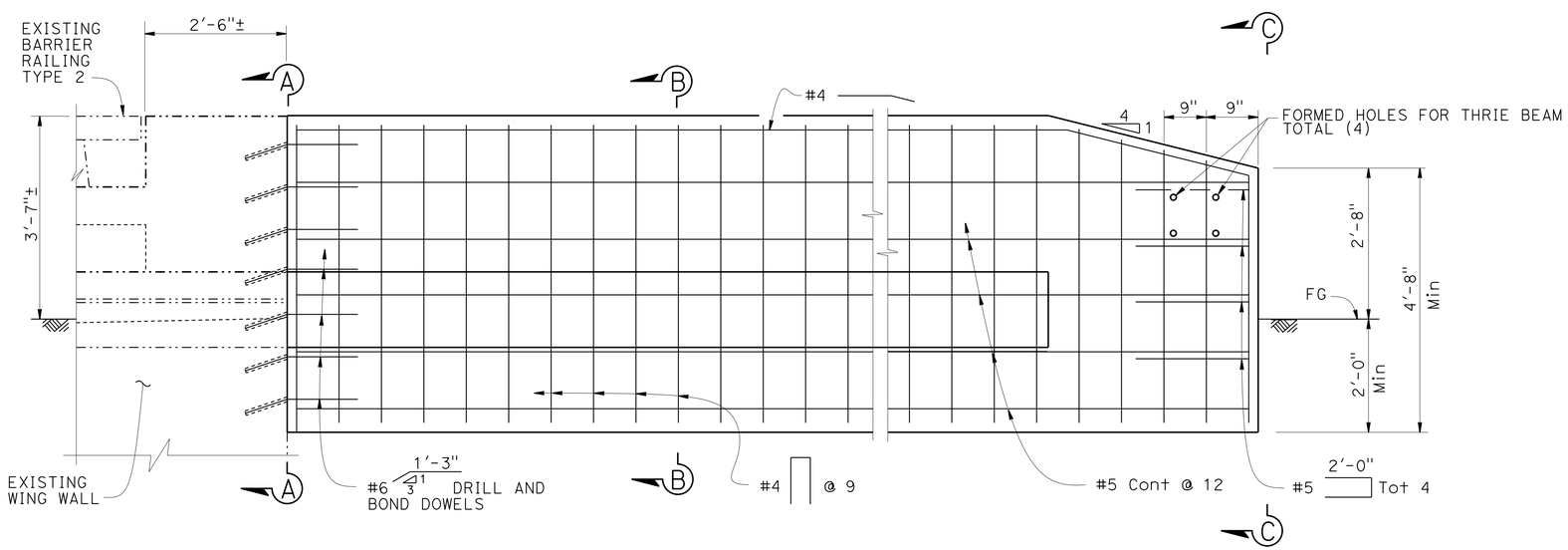

ELEVATION

ROUTE 255 PM 8.81 (NB)
PM 8.85 (SB)

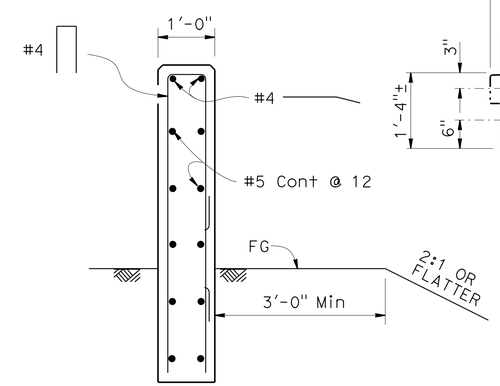

SECTION C-C

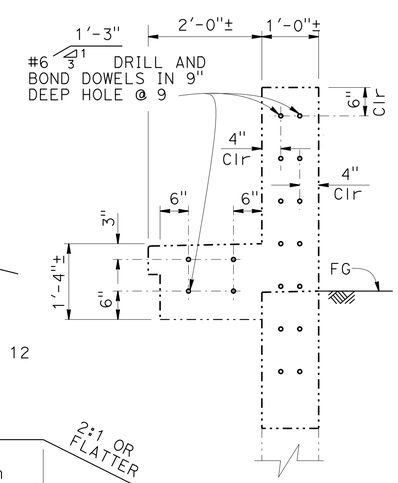

SECTION A-A

ANCHOR BLOCK FOR EXISTING BARRIER RAILING TYPE 2

CONSTRUCTION DETAILS

NO SCALE

C-29

STATE OF CALIFORNIA - DEPARTMENT OF TRANSPORTATION
03 - DESIGN
FUNCTIONAL SUPERVISOR: KEN KEATON
CALCULATED-DESIGNED BY: KRISHNA THAMILSERAN
CHECKED BY: GARY DUGHI
REVISED BY
DATE REVISED

LAST REVISION 00-00-00
DATE PLOTTED => 30-APR-2015
TIME PLOTTED => 11:13

Dist	COUNTY	ROUTE	POST MILES TOTAL PROJECT	SHEET No.	TOTAL SHEETS
01	Hum	36, 96, 169, 211, 254, etc.	Var	40	103

T. Krishnakumary 3-30-15
REGISTERED CIVIL ENGINEER DATE

3-30-15
PLANS APPROVAL DATE

REGISTERED PROFESSIONAL ENGINEER
KRISHNAKUMARY THAMILSERAN
No. C79630
Exp. 9/30/16
CIVIL
STATE OF CALIFORNIA

THE STATE OF CALIFORNIA OR ITS OFFICERS OR AGENTS SHALL NOT BE RESPONSIBLE FOR THE ACCURACY OR COMPLETENESS OF SCANNED COPIES OF THIS PLAN SHEET.

NOTES:

1. SEE STANDARD PLAN A76A FOR CONCRETE BARRIER TYPE 60 AND TYPE 60A.
2. FOOTING MONOLITHIC OR DOWELED WITH 2-#8 X 8" @ 2'-0". THE FOOTING IS REQUIRED AT CONCRETE BARRIER ENDS AND AT INTERRUPTIONS IN CONCRETE BARRIER.
3. 10" CONCRETE BARRIER FOOTING EXTENDS 10' BACK FROM STRUCTURE.
4. SEE STANDARD PLAN A78I FOR TRANSITION TO THRIE BEAM BARRIER.

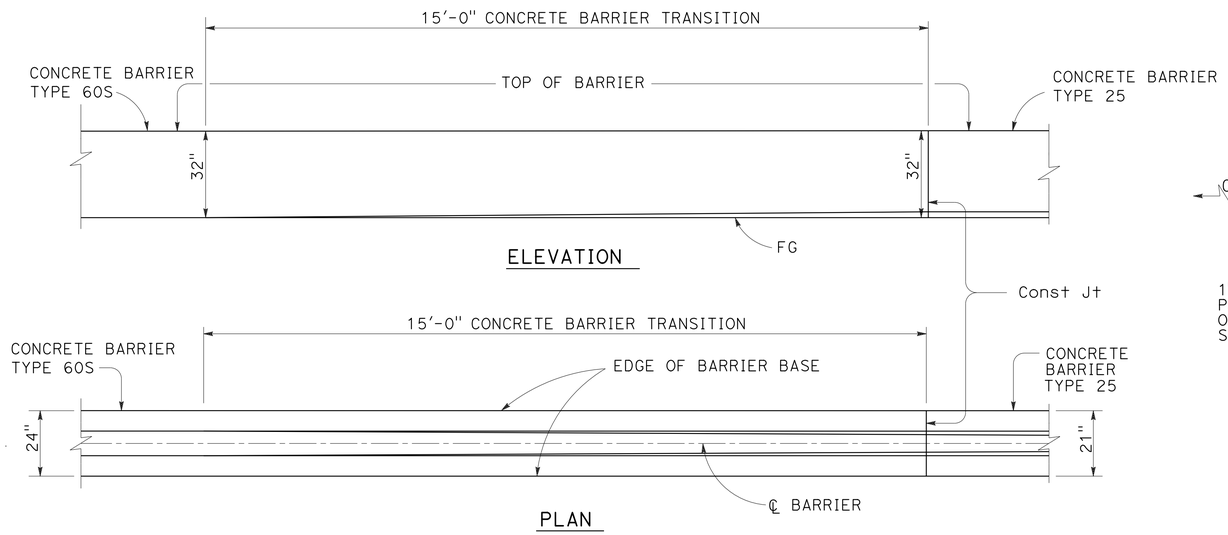

TRANSITION CONCRETE BARRIER TYPE 60 TO CONCRETE BARRIER TYPE 25

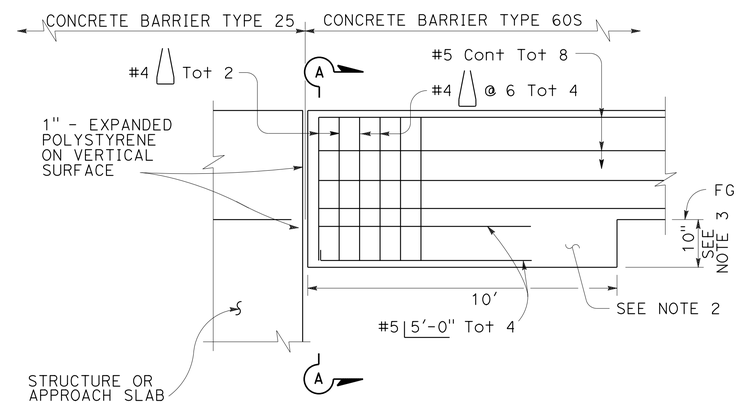

CONCRETE BARRIER TYPE 60S CONNECTION TO STRUCTURE

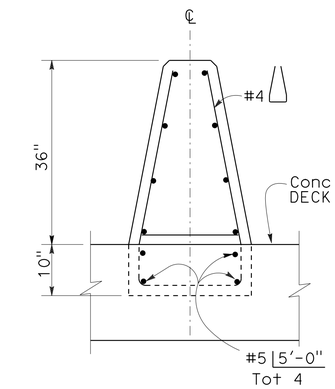

SECTION A-A

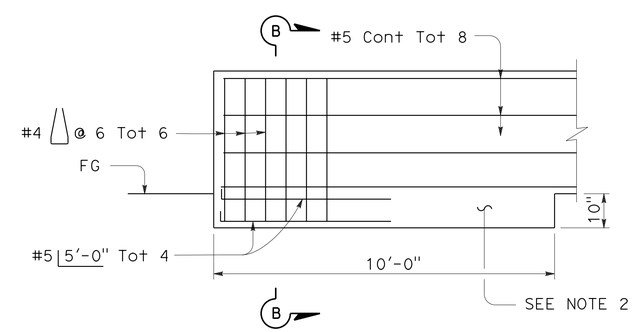

CONCRETE BARRIER TYPE 60S END ANCHORAGE

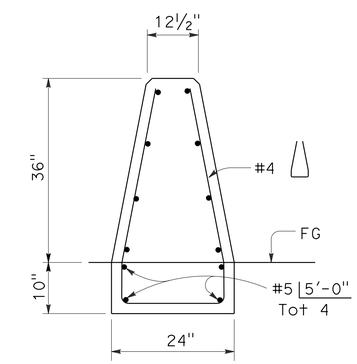

SECTION B-B

ROUTE 36
PM 16.93

CONSTRUCTION DETAILS

NO SCALE

C-30

STATE OF CALIFORNIA - DEPARTMENT OF TRANSPORTATION
Caltrans
03 - DESIGN

FUNCTIONAL SUPERVISOR: KEN KEATON
CALCULATED-DESIGNED BY: KRISHNA THAMILSERAN
CHECKED BY: GARY DUGHI
REVISED BY
DATE REVISED

LAST REVISION 00-00-00
DATE PLOTTED => 07-APR-2015
TIME PLOTTED => 13:04

Dist	COUNTY	ROUTE	POST MILES TOTAL PROJECT	SHEET No.	TOTAL SHEETS
01	Hum	36, 96, 169, 211, 254, etc.	Var	41	103

T. Krishnakumary 3-30-15
REGISTERED CIVIL ENGINEER DATE

3-30-15
PLANS APPROVAL DATE

REGISTERED PROFESSIONAL ENGINEER
KRISHNAKUMARY THAMILSERAN
No. C79630
Exp. 9/30/16
CIVIL
STATE OF CALIFORNIA

THE STATE OF CALIFORNIA OR ITS OFFICERS OR AGENTS SHALL NOT BE RESPONSIBLE FOR THE ACCURACY OR COMPLETENESS OF SCANNED COPIES OF THIS PLAN SHEET.

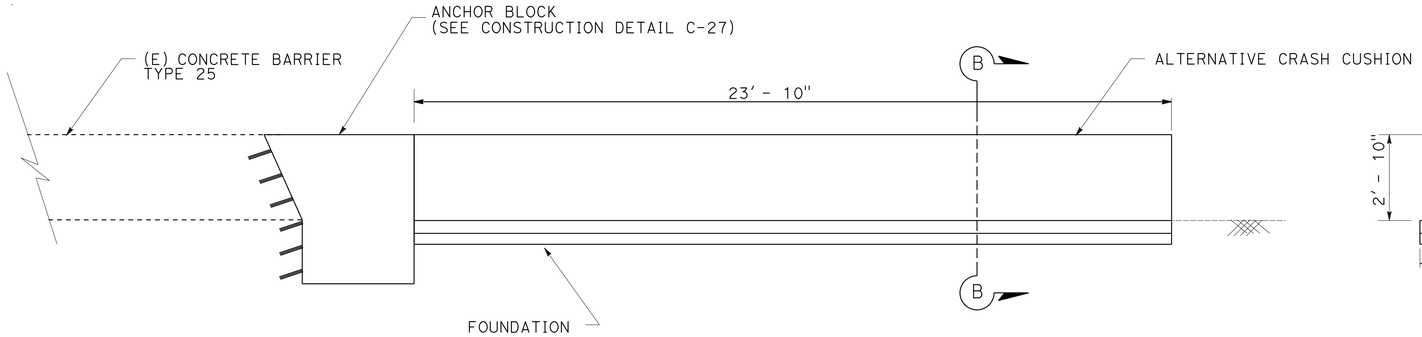

ELEVATION

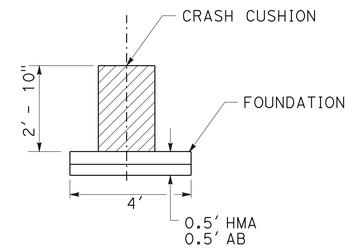

SECTION B-B

NOTE:
FOR ACCURATE RIGHT OF WAY DATA, CONTACT RIGHT OF WAY ENGINEERING AT THE DISTRICT OFFICE.

CRASH CUSHION WITH FOUNDATION AND ANCHOR BLOCK DETAIL

ROUTE 169 PM 29.82

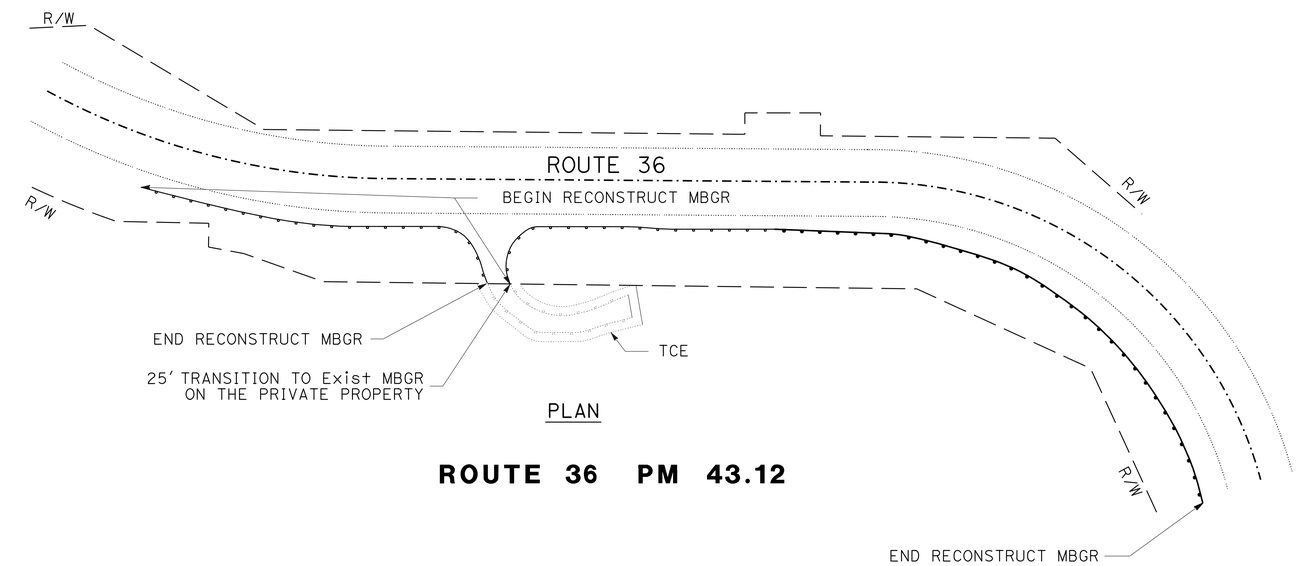

PLAN

ROUTE 36 PM 43.12

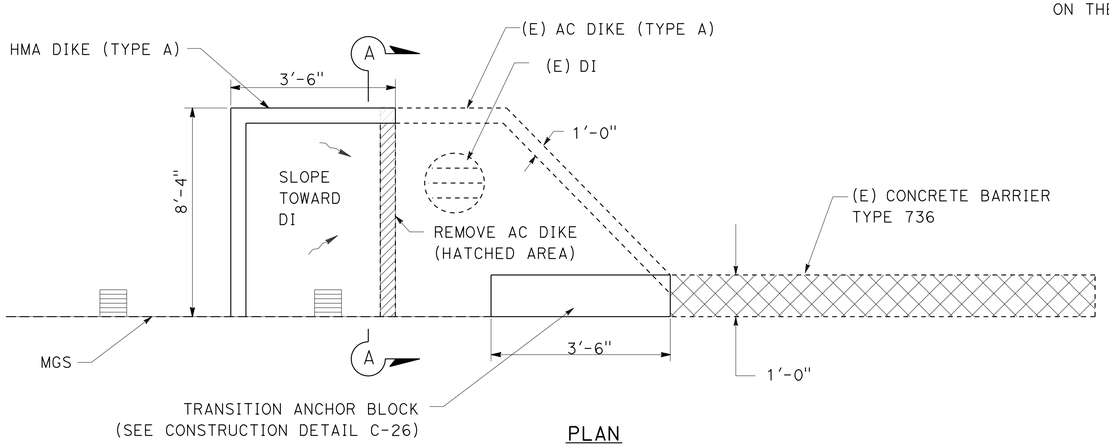

PLAN

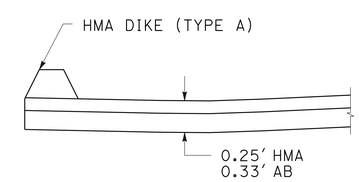

SECTION A-A

ROUTE 96 PM 44.28

CONSTRUCTION DETAILS

NO SCALE

C-31

STATE OF CALIFORNIA - DEPARTMENT OF TRANSPORTATION
Caltrans®
03 - DESIGN

FUNCTIONAL SUPERVISOR: KEN KEATON

CALCULATED-DESIGNED BY: KRISHNA THAMILSERAN
CHECKED BY: GARY DUGHI

REVISED BY
DATE REVISED

LAST REVISION 00-00-00
DATE PLOTTED => 07-APR-2015
TIME PLOTTED => 13:04

Dist	COUNTY	ROUTE	POST MILES TOTAL PROJECT	SHEET No.	TOTAL SHEETS
01	Hum	36, 96, 169, 211, 254, etc.	Var	42	103

T. Krishnakumary 3-30-15
REGISTERED CIVIL ENGINEER DATE

3-30-15
PLANS APPROVAL DATE

REGISTERED PROFESSIONAL ENGINEER
KRISHNAKUMARY THAMILSERAN
No. C79630
Exp. 9/30/16
CIVIL
STATE OF CALIFORNIA

THE STATE OF CALIFORNIA OR ITS OFFICERS OR AGENTS SHALL NOT BE RESPONSIBLE FOR THE ACCURACY OR COMPLETENESS OF SCANNED COPIES OF THIS PLAN SHEET.

NOTES:

1. NESTING OF MBGR IS NOT A SEPARATE PAY ITEM. IT IS FOR INFORMATION ONLY.
2. SEE QUANTITY SHEET FOR LOCATIONS OF NESTED GUARDRAIL SPAN LOCATIONS.
3. FOR OTHER DETAILS, SEE 2010 STANDARD PLANS AND CONSTRUCTION DETAILS.
4. EXISTING UTILITY FACILITIES HAVE NOT BEEN POSITIVELY LOCATED.

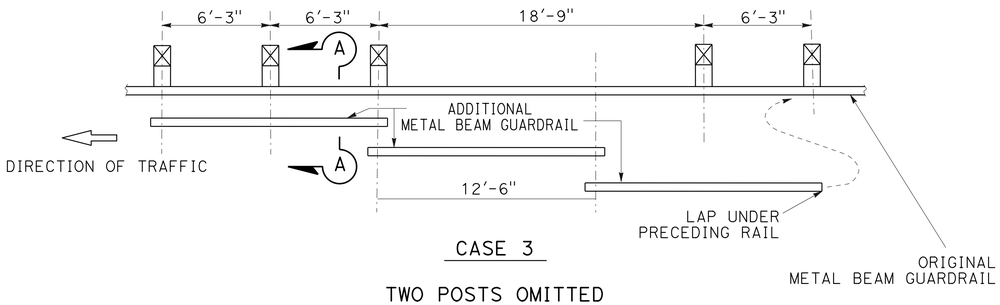

CASE 3

TWO POSTS OMITTED

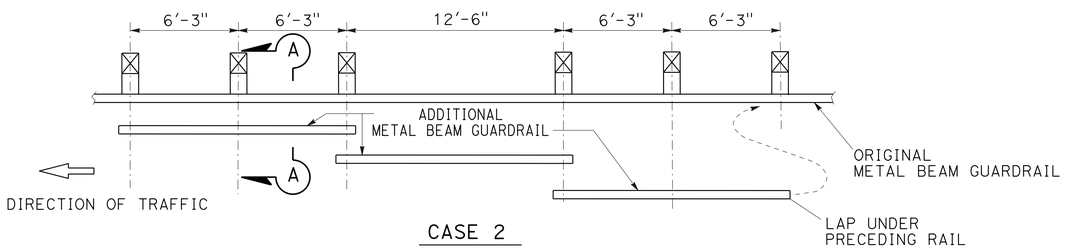

CASE 2

ONE POST OMITTED (SPLICE AT POSTS)

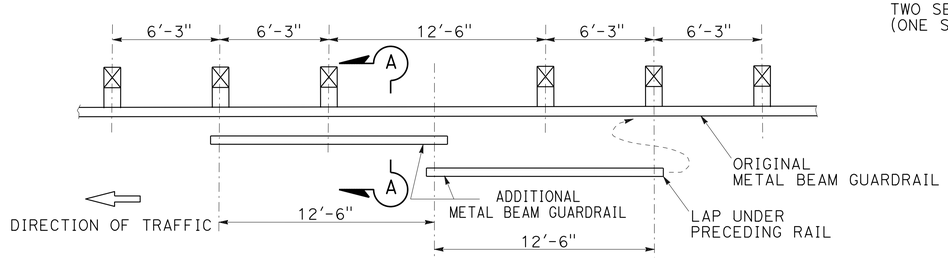

CASE 1

ONE POST OMITTED (SPLICE IN CENTER)

LONG SPAN NESTED GUARDRAIL

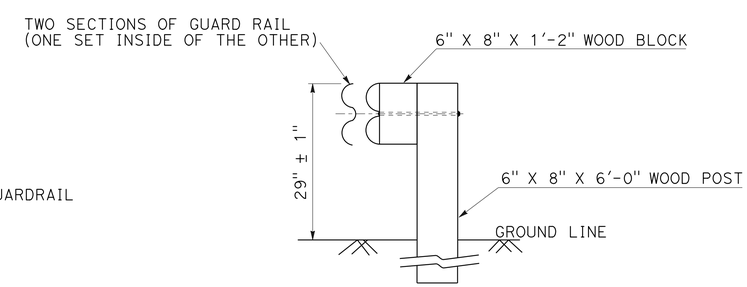

SECTION A-A

LEGEND

← DIRECTION OF TRAVEL

| DELINEATOR (CLASS 1)

S DELINEATOR SPACING (ft)

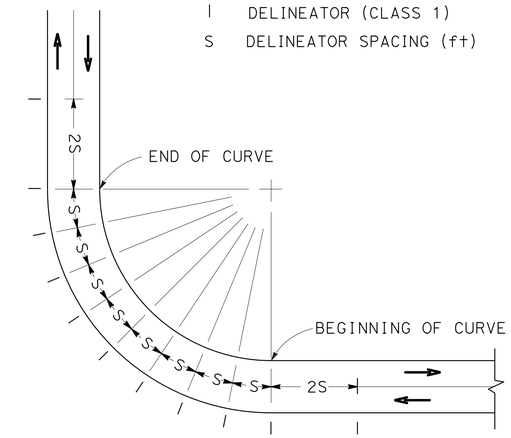

DELINEATOR SPACING TABLE

RADIUS OF CURVE	APPROX SPACING (S) ON CURVE
FEET	FEET
50	20
115	25
180	35
250	40
300	40
400	40
500	40
600	40
700	75
800	80
900	85
1,000 OR GREATER	90

NOTE: INSTALL DELINEATORS PERPENDICULAR TO ONCOMING TRAFFIC

DELINEATOR SPACING ON CURVES

CONSTRUCTION DETAILS

NO SCALE

C-32

STATE OF CALIFORNIA - DEPARTMENT OF TRANSPORTATION
03 - DESIGN
Caltrans
FUNCTIONAL SUPERVISOR: KEN KEATON
CALCULATED-DESIGNED BY: KRISHNA THAMILSERAN
CHECKED BY: GARY DUGHI
REVISED BY
DATE REVISED

LAST REVISION 00-00-00
DATE PLOTTED => 07-APR-2015
TIME PLOTTED => 13:04

Dist	COUNTY	ROUTE	POST MILES TOTAL PROJECT	SHEET No.	TOTAL SHEETS
01	Hum	36, 96, 169, 211, 254, etc.	Var	43	103

T. Krishnakumary 3-30-15
REGISTERED CIVIL ENGINEER DATE

3-30-15
PLANS APPROVAL DATE

REGISTERED PROFESSIONAL ENGINEER
KRISHNAKUMARY THAMILSERAN
No. C79630
Exp. 9/30/16
CIVIL
STATE OF CALIFORNIA

THE STATE OF CALIFORNIA OR ITS OFFICERS OR AGENTS SHALL NOT BE RESPONSIBLE FOR THE ACCURACY OR COMPLETENESS OF SCANNED COPIES OF THIS PLAN SHEET.

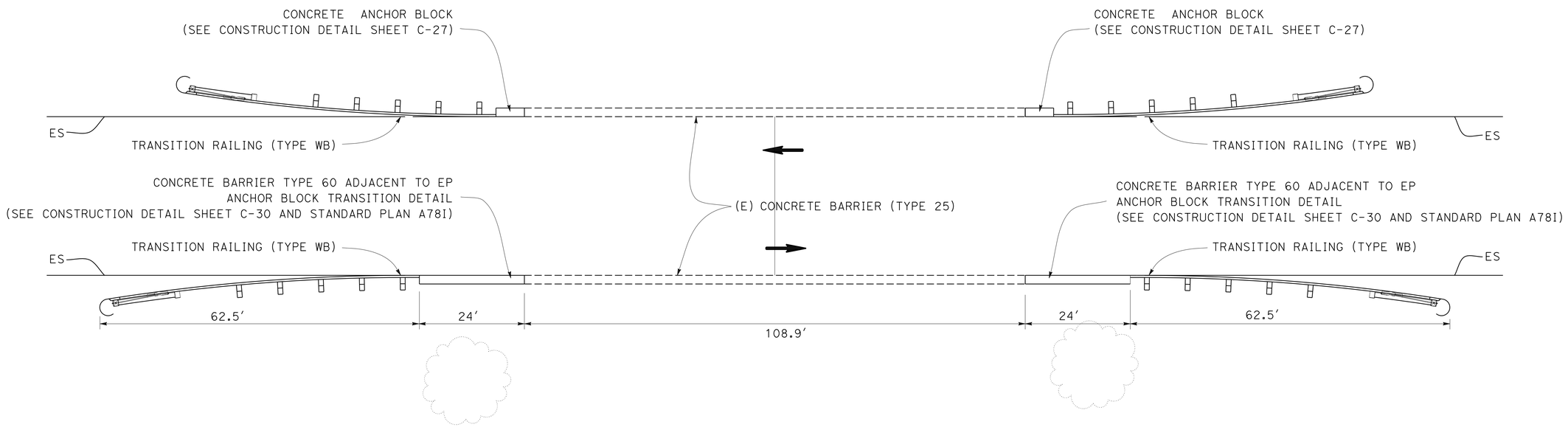

ROUTE 36
PM 16.93, 16.96

CONSTRUCTION DETAILS

NO SCALE

C-33

STATE OF CALIFORNIA - DEPARTMENT OF TRANSPORTATION
Caltrans
03 - DESIGN

FUNCTIONAL SUPERVISOR: KEN KEATON

CALCULATED-DESIGNED BY: KRISHNA THAMILSERAN
CHECKED BY: GARY DUGHI

REVISED BY
DATE REVISED

LAST REVISION 00-00-00
DATE PLOTTED => 07-APR-2015
TIME PLOTTED => 13:04

Dist	COUNTY	ROUTE	POST MILES TOTAL PROJECT	SHEET No.	TOTAL SHEETS
01	Hum	36, 96, 169, 211, 254, etc.	Var	44	103

T. Krishnakumary 3-30-15
REGISTERED CIVIL ENGINEER DATE

3-30-15
PLANS APPROVAL DATE

REGISTERED PROFESSIONAL ENGINEER
KRISHNAKUMARY THAMILSERAN
No. C79630
Exp. 9/30/16
CIVIL
STATE OF CALIFORNIA

THE STATE OF CALIFORNIA OR ITS OFFICERS OR AGENTS SHALL NOT BE RESPONSIBLE FOR THE ACCURACY OR COMPLETENESS OF SCANNED COPIES OF THIS PLAN SHEET.

NOTES:

1. PLACE DELINEATORS ON ALL GUARD RAIL INSTALLATIONS WITHIN 12 FEET OF THE ETW. THE SPACING ON TANGENT SECTIONS IS APPROXIMATELY 525 FEET. FOR SPACING ON CURVES, SEE TABLE ON THIS SHEET. SEE Q-SHEETS FOR QUANTITY.
2. SEE STANDARD PLAN A73C AND CONSTRUCTION DETAIL C-5 FOR PLACEMENT AND DELINEATOR/CHANNELIZER DETAILS.
3. FOR OTHER DETAILS, SEE 2010 STANDARD PLANS.
4. EXISTING UTILITY FACILITIES HAVE NOT BEEN POSITIVELY LOCATED.

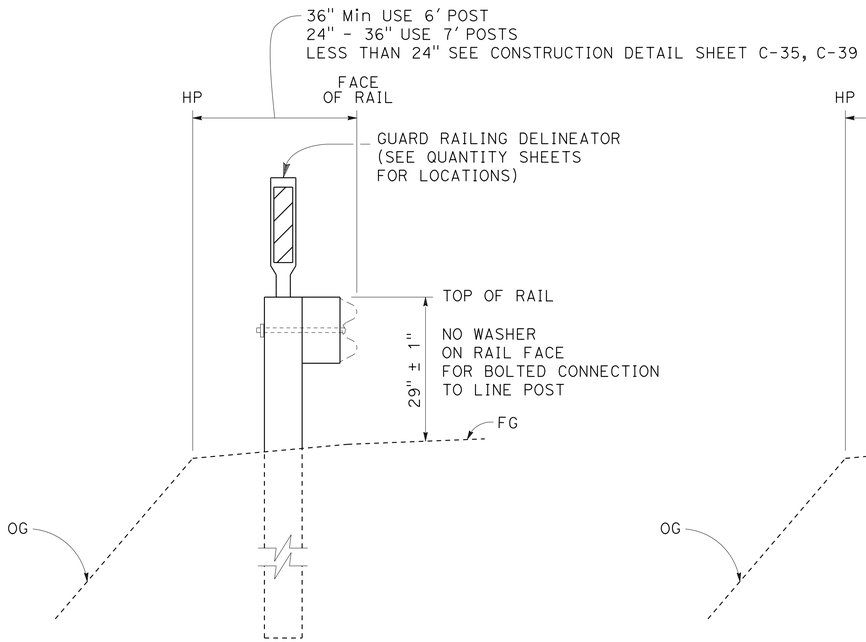

TYPICAL SECTION WITH DELINEATOR WOOD POST

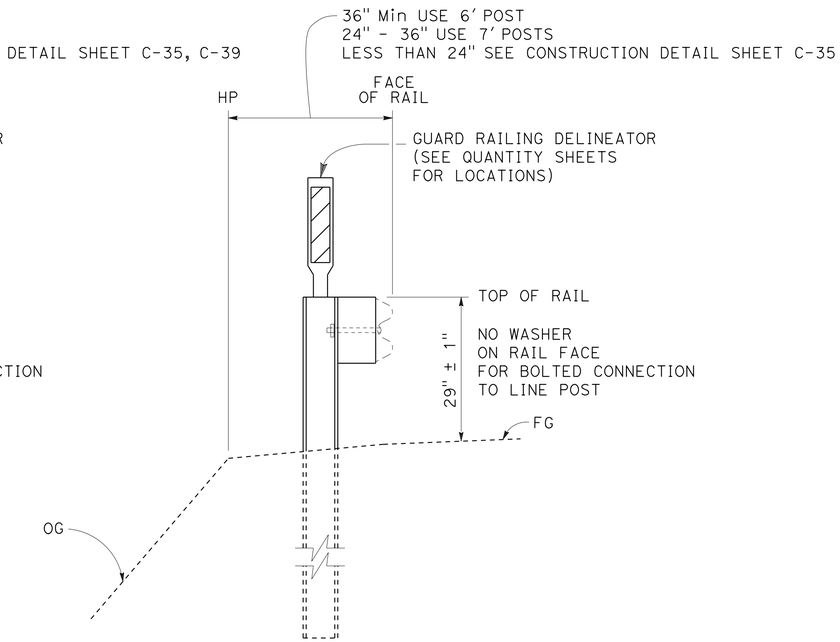

TYPICAL SECTION WITH DELINEATOR STEEL POST

RECONSTRUCT MBGR

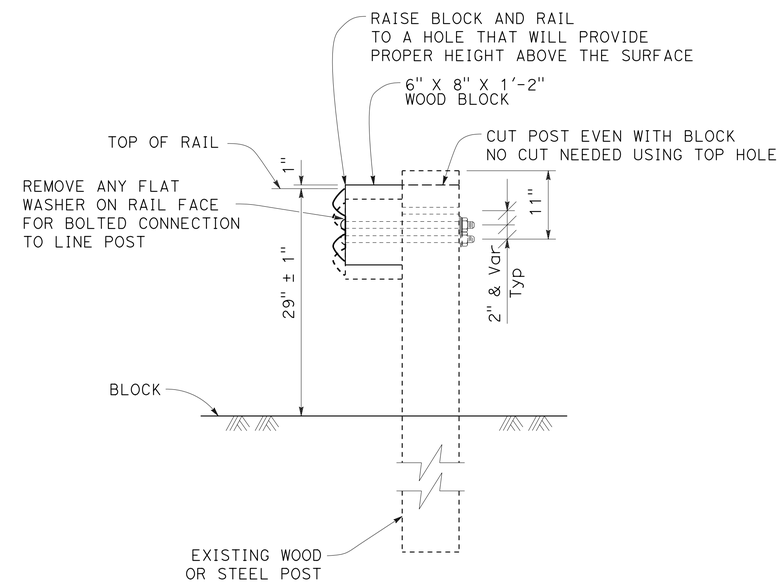

ADJUST MBGR ELEMENT

CONSTRUCTION DETAILS

NO SCALE

C-34

STATE OF CALIFORNIA - DEPARTMENT OF TRANSPORTATION
Caltrans
03 - DESIGN

FUNCTIONAL SUPERVISOR: KEN KEATON
CALCULATED-DESIGNED BY: KRISHNA THAMILSERAN
CHECKED BY: GARY DUGHI
REVISED BY
DATE REVISED

LAST REVISION 00-00-00
DATE PLOTTED => 07-APR-2015
TIME PLOTTED => 13:04

Dist	COUNTY	ROUTE	POST MILES TOTAL PROJECT	SHEET No.	TOTAL SHEETS
01	Hum	36, 96, 169, 211, 254, etc.	Var	45	103

T. Krishnakumary 3-30-15
REGISTERED CIVIL ENGINEER DATE

3-30-15
PLANS APPROVAL DATE

REGISTERED PROFESSIONAL ENGINEER KRISHNAKUMARY THAMILSERAN No. C79630 Exp. 9/30/16 CIVIL STATE OF CALIFORNIA

THE STATE OF CALIFORNIA OR ITS OFFICERS OR AGENTS SHALL NOT BE RESPONSIBLE FOR THE ACCURACY OR COMPLETENESS OF SCANNED COPIES OF THIS PLAN SHEET.

NOTES:

1. SEE HARDWARE CHART FOR DIMENSIONS.
2. NEST ELEMENTS TO THE SECOND CONVENTIONAL POST.

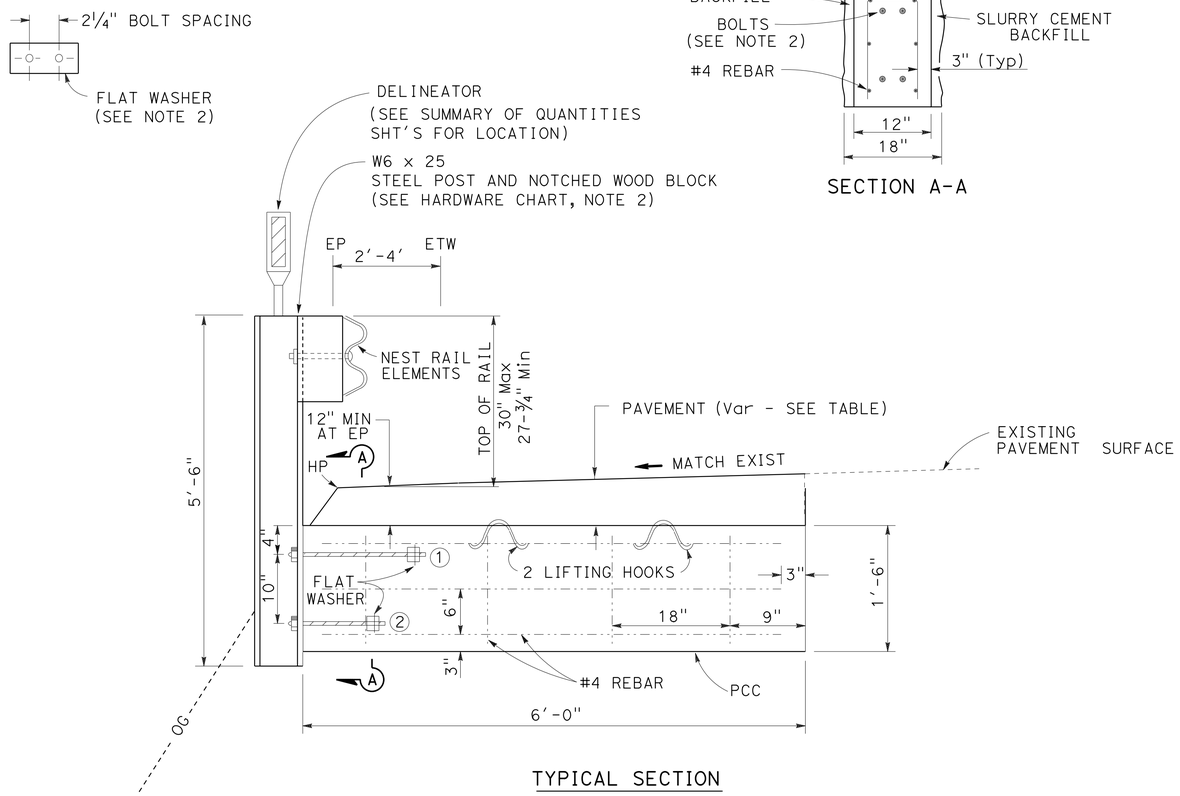

TYPICAL SECTION

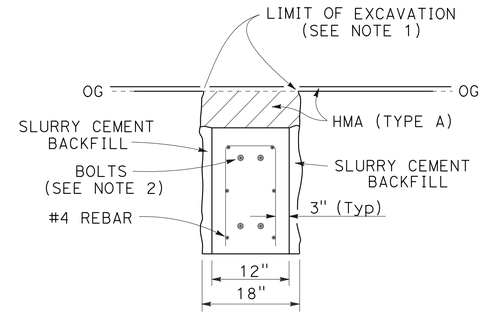

SECTION A-A

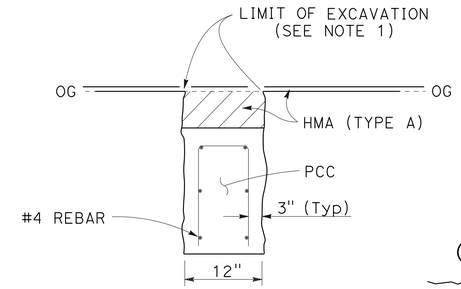

SECTION B-B

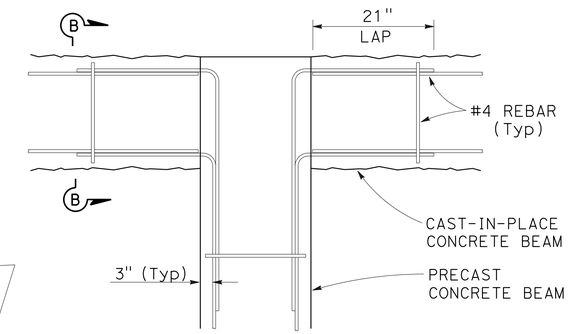

CONCRETE BEAM DETAIL

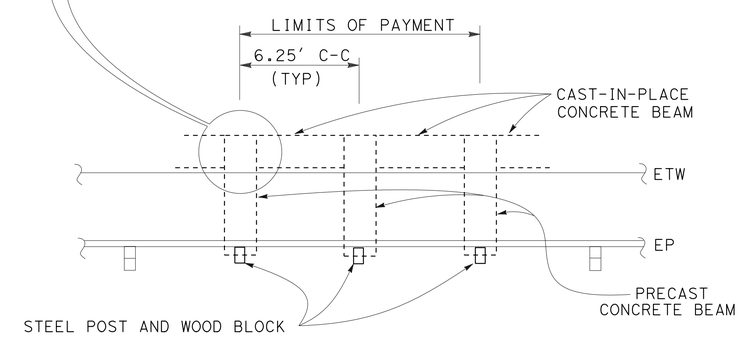

PLAN VIEW

MBGR (SPECIAL)

HARDWARE CHART FOR PRECAST CONCRETE BEAM

CASE	STEEL POST	WOOD BLOCK	①	②	BOLT SPACING
PRECAST BEAM	W6 x 25	6" x 8" x 1'-2"	2 EA ¾" DIA x 1'-6" HS BOLTS (THREADED BOTH ENDS) WITH 3 EA HEX NUTS AND 3" x 7" x ¼" FLAT WASHER	2 EA ⅝" DIA x 1' HS BOLTS (THREADED BOTH ENDS) WITH 3 EA HEX NUTS AND 2" X 7" X ¼" FLAT WASHER	2¼"

MBGR (SPECIAL)

ROUTE 36 PM 15.75 - 16.24 (EB)

Exist STRUCTURAL SECTION

ROUTE	PM	AC	PCC	AB
		FT	FT	FT
36	15.75 TO 16.24	1.00	1.25	-

MBGR ON PRECAST CONCRETE BEAM

CONSTRUCTION DETAILS

NO SCALE

C-35

STATE OF CALIFORNIA - DEPARTMENT OF TRANSPORTATION
Caltrans® 03 - DESIGN
FUNCTIONAL SUPERVISOR KEN KEATON
CALCULATED-DESIGNED BY GARY DUGHI
CHECKED BY KRISHNA THAMILSERAN
REVISED BY
DATE REVISED

LAST REVISION 00-00-00
DATE PLOTTED => 07-APR-2015
TIME PLOTTED => 13:04

Dist	COUNTY	ROUTE	POST MILES TOTAL PROJECT	SHEET No.	TOTAL SHEETS
01	Hum	36, 96, 169, 211, 254, etc.	Var	46	103

T. Krishnakumary 3-30-15
REGISTERED CIVIL ENGINEER DATE

3-30-15
PLANS APPROVAL DATE

REGISTERED PROFESSIONAL ENGINEER KRISHNAKUMARY THAMILSERAN No. C79630 Exp. 9/30/16 CIVIL STATE OF CALIFORNIA

THE STATE OF CALIFORNIA OR ITS OFFICERS OR AGENTS SHALL NOT BE RESPONSIBLE FOR THE ACCURACY OR COMPLETENESS OF SCANNED COPIES OF THIS PLAN SHEET.

NOTES:

1. EXISTING UTILITY FACILITIES HAVE NOT BEEN POSITIVELY IDENTIFIED.
2. FOR DETAILS B AND C, SEE SHEET C-37.
3. THE CONTRACTOR SHALL VERIFY ALL CONTROLLING FIELD DIMENSIONS BEFORE ORDERING OR FABRICATING ANY MATERIAL.
4. FOR ADDITIONAL INFORMATION, SEE SUMMARY OF QUANTITIES.

LOCATIONS

Beg PM	END PM	DIRECTION	LENGTH BETWEEN COLUMNS - L1	LENGTH - L2
			FT-IN	FT-IN
1.80	1.81	EB	27'-6"	9'-8"
1.80	1.81	WB	26'-6"	13'-7"

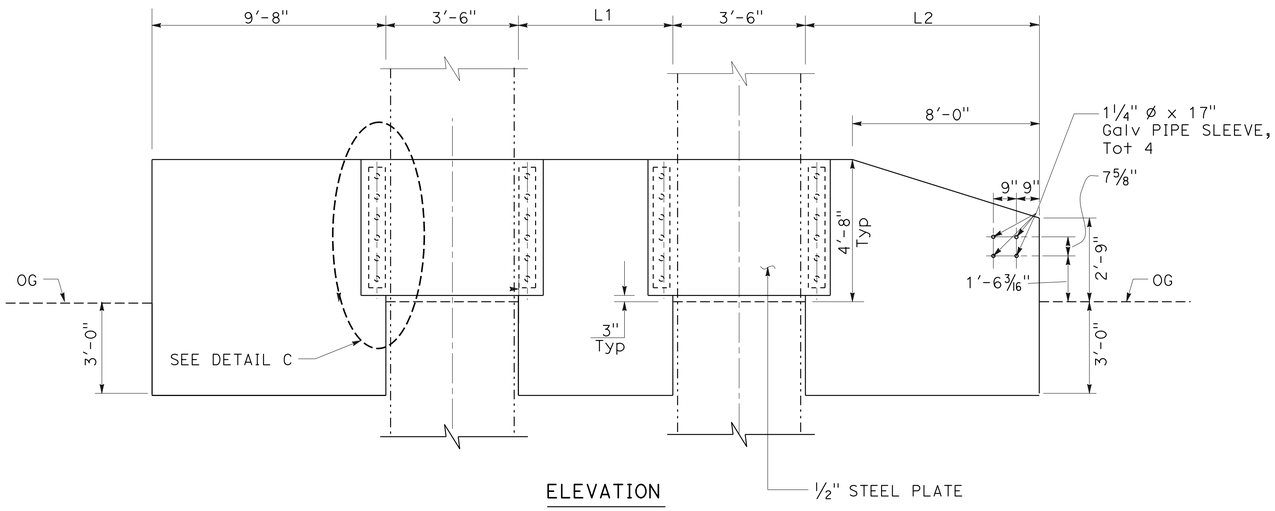

ELEVATION

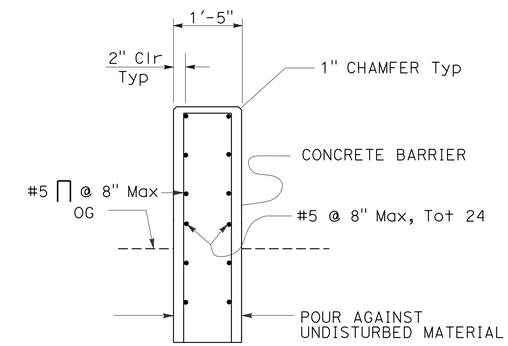

SECTION A-A

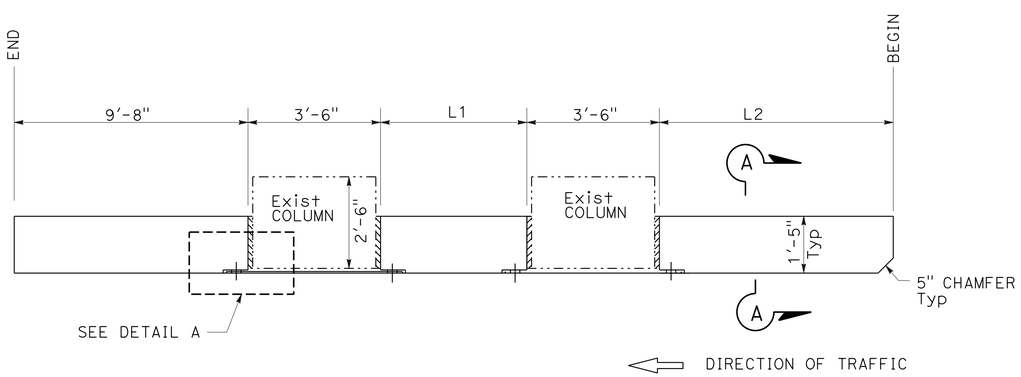

PLAN

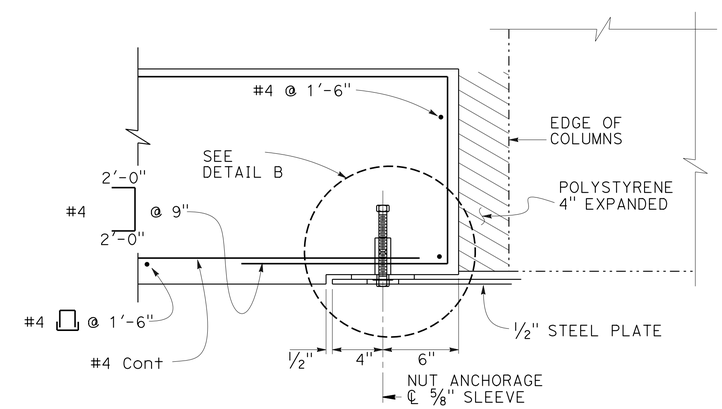

DETAIL A

CONCRETE BARRIER DETAIL

CONSTRUCTION DETAILS

NO SCALE

C-36

STATE OF CALIFORNIA - DEPARTMENT OF TRANSPORTATION
Caltrans
03 - DESIGN
FUNCTIONAL SUPERVISOR: KEN KEATON
CALCULATED-DESIGNED BY: KRISHNA THAMILSERAN
CHECKED BY: CARLOS BURKS SR
REVISED BY
DATE REVISED

LAST REVISION 00-00-00
DATE PLOTTED => 07-APR-2015
TIME PLOTTED => 13:04

Dist	COUNTY	ROUTE	POST MILES TOTAL PROJECT	SHEET No.	TOTAL SHEETS
01	Hum	36, 96, 169, 211, 254, etc.	Var	47	103

T. Krishnakumary 3-30-15
REGISTERED CIVIL ENGINEER DATE

3-30-15
PLANS APPROVAL DATE

REGISTERED PROFESSIONAL ENGINEER
KRISHNAKUMARY THAMILSERAN
No. C79630
Exp. 9/30/16
CIVIL
STATE OF CALIFORNIA

THE STATE OF CALIFORNIA OR ITS OFFICERS OR AGENTS SHALL NOT BE RESPONSIBLE FOR THE ACCURACY OR COMPLETENESS OF SCANNED COPIES OF THIS PLAN SHEET.

NOTES:

1. RESIN CAPSULE ANCHORAGE IS SUBJECT TO APPROVAL OF THE ENGINEER. INSTALLATION PROCEDURES SHALL COMPLY WITH MANUFACTURER'S INSTRUCTIONS.

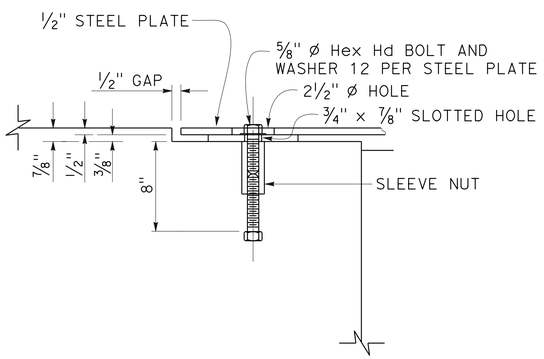

DETAIL B

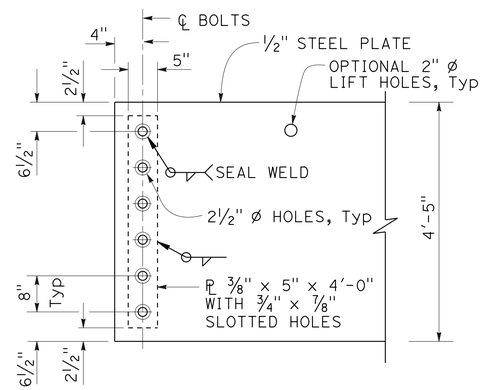

DETAIL C

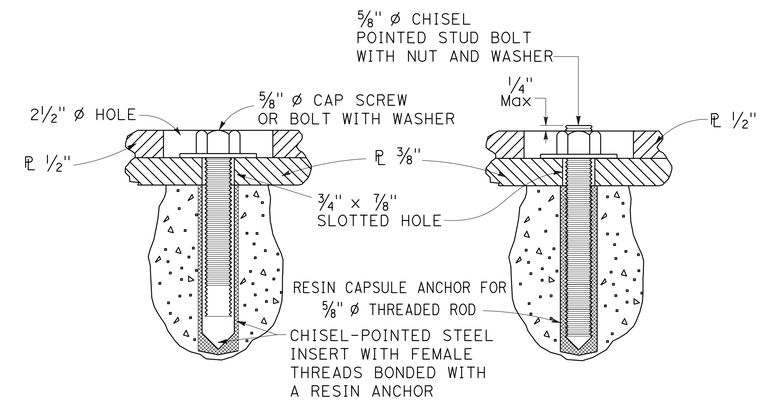

ALTERNATIVE #1 ALTERNATIVE #2

ALTERNATIVE ANCHORAGE

(SEE NOTE 2)

CONSTRUCTION DETAILS

NO SCALE

C-37

STATE OF CALIFORNIA - DEPARTMENT OF TRANSPORTATION
Caltrans
03 - DESIGN

FUNCTIONAL SUPERVISOR: KEN KEATON
CALCULATED-DESIGNED BY: KRISHNA THAMILSERAN
CHECKED BY: CARLOS BURKS SR
REVISED BY
DATE REVISED

LAST REVISION 00-00-00
DATE PLOTTED => 07-APR-2015
TIME PLOTTED => 13:04

Dist	COUNTY	ROUTE	POST MILES TOTAL PROJECT	SHEET No.	TOTAL SHEETS
01	Hum	36, 96, 169, 211, 254, etc.	Var	48	103

T. Krishnakumary 3-30-15
REGISTERED CIVIL ENGINEER DATE

3-30-15
PLANS APPROVAL DATE

REGISTERED PROFESSIONAL ENGINEER
KRISHNAKUMARY THAMILSERAN
No. C79630
Exp. 9/30/16
CIVIL
STATE OF CALIFORNIA

THE STATE OF CALIFORNIA OR ITS OFFICERS OR AGENTS SHALL NOT BE RESPONSIBLE FOR THE ACCURACY OR COMPLETENESS OF SCANNED COPIES OF THIS PLAN SHEET.

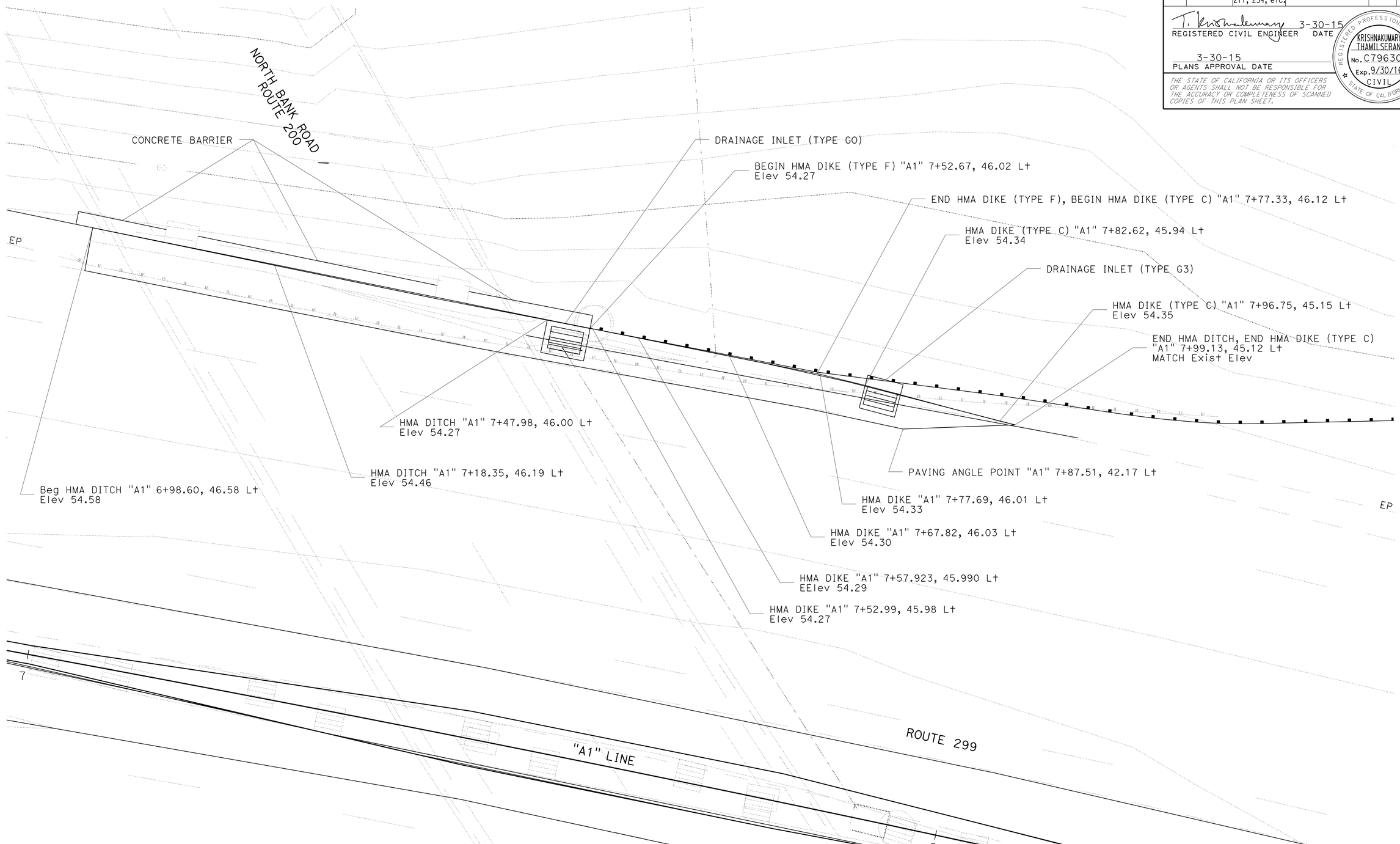

ROUTE 299 DRAINAGE
PM 1.8

CONSTRUCTION DETAILS

NO SCALE

C-38

STATE OF CALIFORNIA - DEPARTMENT OF TRANSPORTATION
Caltrans
03 - DESIGN

FUNCTIONAL SUPERVISOR: KEN KEATON

CALCULATED-DESIGNED BY: GARY DUGHI
CHECKED BY: KRISHNA THAMILSERAN

REVISED BY
DATE REVISED

LAST REVISION 00-00-00
DATE PLOTTED => 07-APR-2015
TIME PLOTTED => 13:04

Dist	COUNTY	ROUTE	POST MILES TOTAL PROJECT	SHEET No.	TOTAL SHEETS
01	Hum	36, 96, 169, 211, 254, etc.	Var	49	103

T. Krishnakumary 3-30-15
REGISTERED CIVIL ENGINEER DATE

3-30-15
PLANS APPROVAL DATE

REGISTERED PROFESSIONAL ENGINEER
KRISHNAKUMARY THAMILSERAN
No. C79630
Exp. 9/30/16
CIVIL
STATE OF CALIFORNIA

THE STATE OF CALIFORNIA OR ITS OFFICERS OR AGENTS SHALL NOT BE RESPONSIBLE FOR THE ACCURACY OR COMPLETENESS OF SCANNED COPIES OF THIS PLAN SHEET.

NOTES:

1. EXACT LOCATION OF THE MBGR (SLOPE RETAINING WALL) TO BE DETERMINED BY THE ENGINEER.
2. EXISTING UTILITY FACILITIES HAVE NOT BEEN PLOTTED ON THESE PLANS.
3. PLACE NEW MBGR POSTS IN EXISTING POST HOLES. FILL POST HOLE VOIDS WITH SAND FOR ROUTE 169 PM 33.60-33.65 (EB).

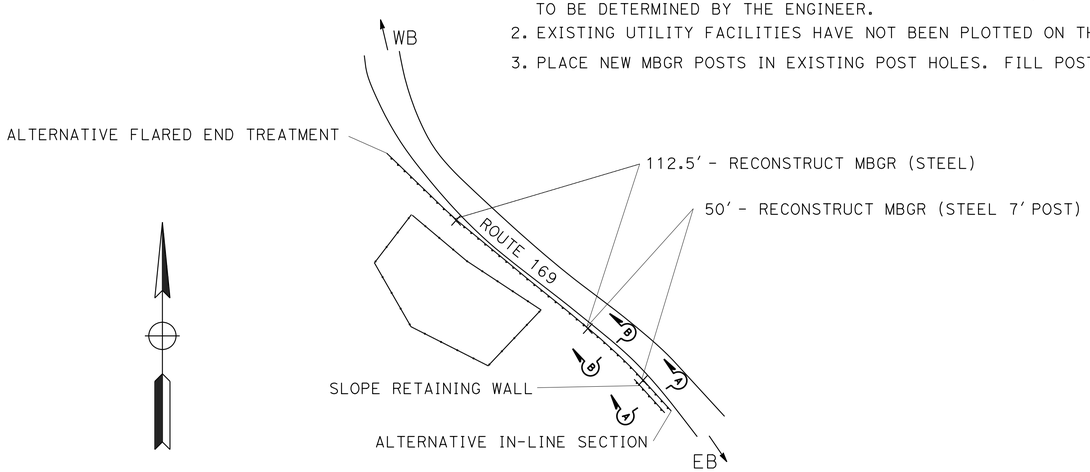

PLAN (Hum-169-33.60 / 33.65 EB)

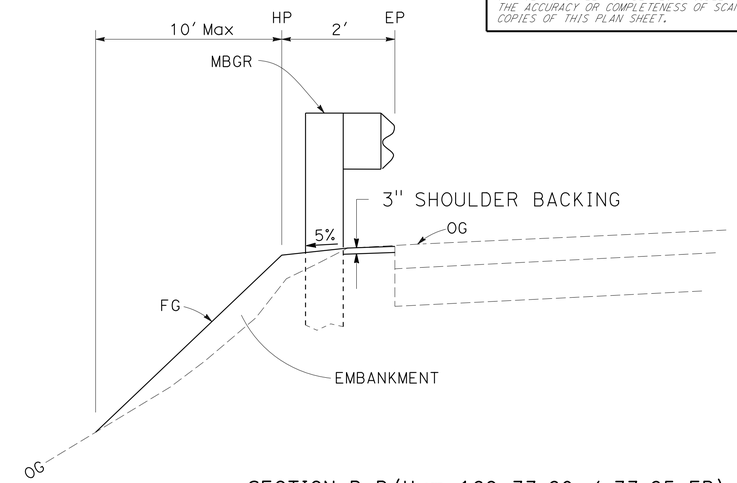

SECTION B-B (Hum-169-33.60 / 33.65 EB)

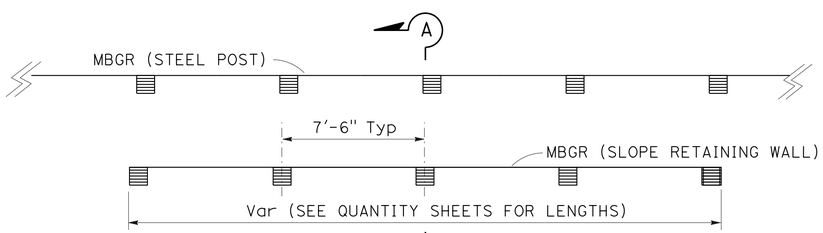

PLAN

MBGR (SLOPE RETAINING WALL)

SECTION A-A

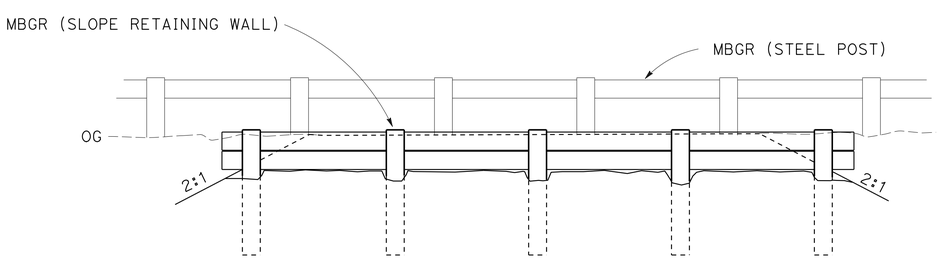

ELEVATION

MBGR (SLOPE RETAINING WALL)

ROUTE 96 PM 32.47 TO 32.49 (EB)
ROUTE 96 PM 41.84 TO 41.92 (WB)
ROUTE 169 PM 33.60 TO 33.65 (EB)

CONSTRUCTION DETAILS

NO SCALE

C-39

REVISED BY | DATE REVISED
GARY DUGH | KRISHNA THAMILSERAN
CALCULATED-DESIGNED BY | CHECKED BY
FUNCTIONAL SUPERVISOR | KEN KEATON
STATE OF CALIFORNIA - DEPARTMENT OF TRANSPORTATION
Caltrans
03 - DESIGN

LAST REVISION 00-00-00
DATE PLOTTED => 07-APR-2015
TIME PLOTTED => 13:04

Dist	COUNTY	ROUTE	POST MILES TOTAL PROJECT	SHEET No.	TOTAL SHEETS
01	Hum	36, 96, 169, 211, 254, etc.	Var	50	103

T. Krishnakumary 3-30-15
REGISTERED CIVIL ENGINEER DATE

3-30-15
PLANS APPROVAL DATE

REGISTERED PROFESSIONAL ENGINEER
KRISHNAKUMARY THAMILSERAN
No. C79630
Exp. 9/30/16
CIVIL
STATE OF CALIFORNIA

THE STATE OF CALIFORNIA OR ITS OFFICERS OR AGENTS SHALL NOT BE RESPONSIBLE FOR THE ACCURACY OR COMPLETENESS OF SCANNED COPIES OF THIS PLAN SHEET.

NOTES:

1. NOT ALL EXISTING UTILITY FACILITIES HAVE NOT BEEN PLOTTED ON THESE PLANS.
2. REMOVE RAILROAD SIGNAL EQUIPMENT INCLUDING FOOTINGS.

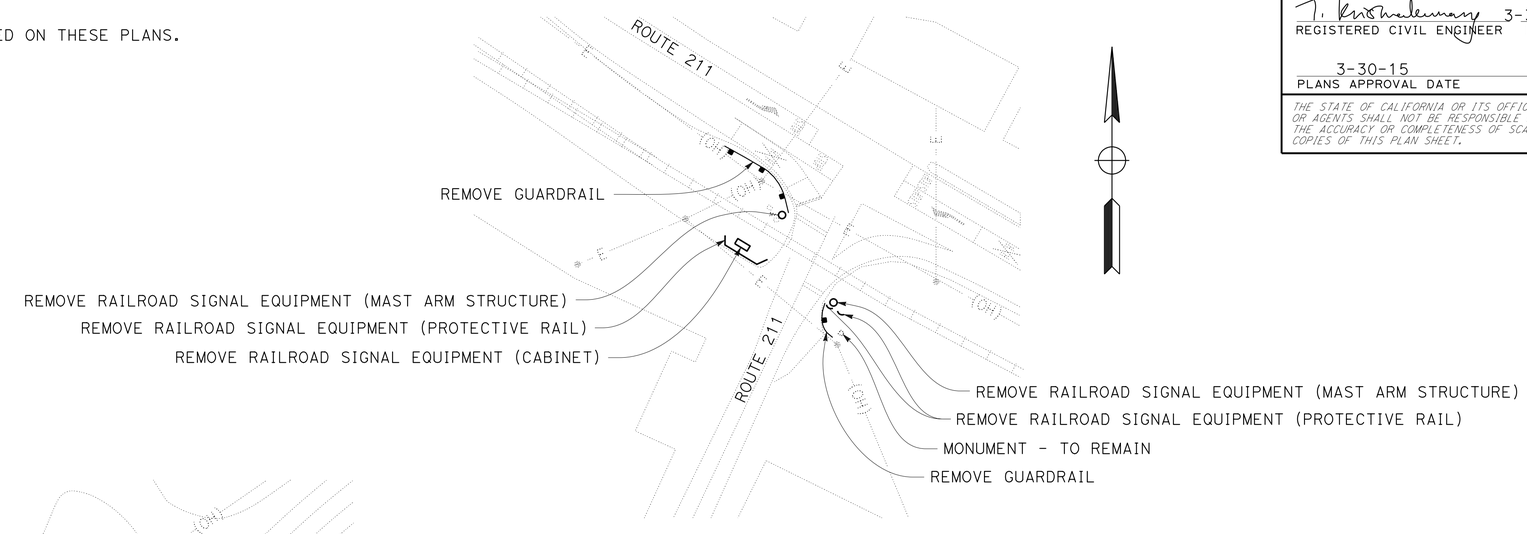

ROUTE 211 PM 78.56 & 78.58

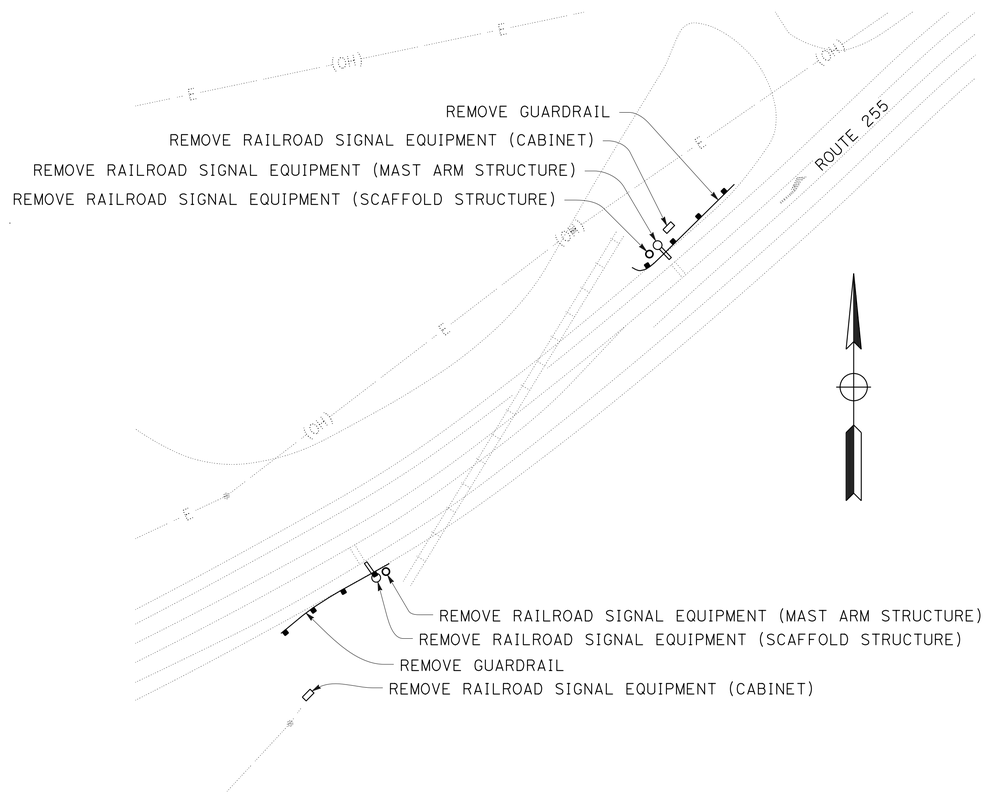

ROUTE 255 PM 4.87 & 4.89

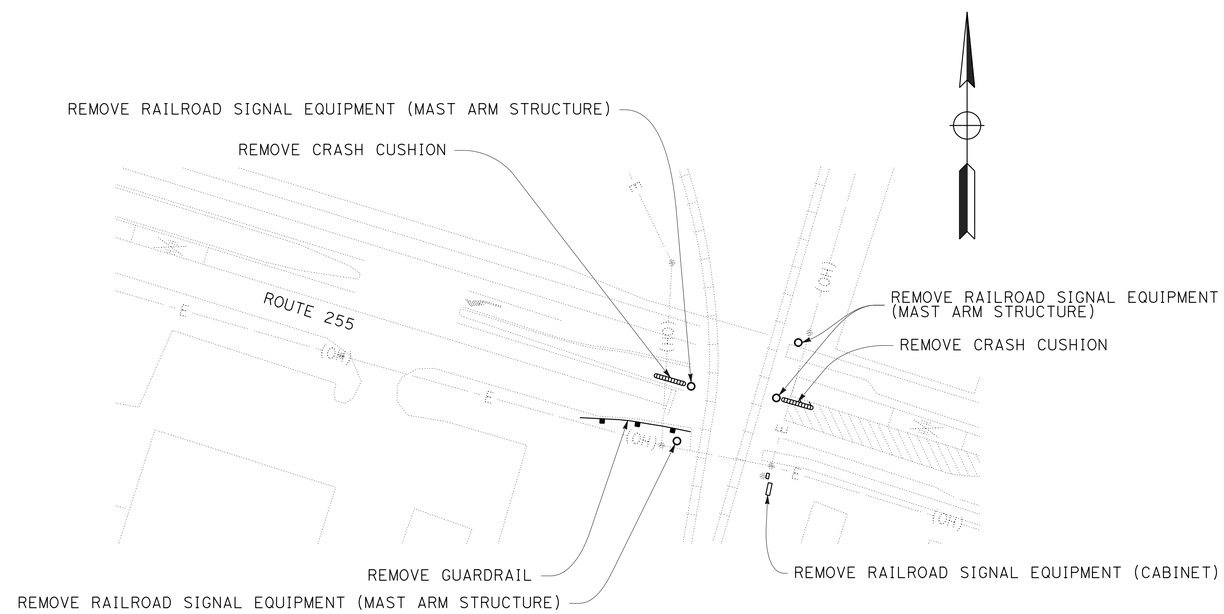

ROUTE 255 PM 8.27

REMOVE RAILROAD EQUIPMENT

CONSTRUCTION DETAILS
NO SCALE

C-40

STATE OF CALIFORNIA - DEPARTMENT OF TRANSPORTATION
Caltrans
03 - DESIGN

FUNCTIONAL SUPERVISOR: KEN KEATON
CALCULATED-DESIGNED BY: GARY DUGH
CHECKED BY: KRISHNA THAMILSERAN
REVISED BY
DATE REVISED

LAST REVISION 00-00-00
DATE PLOTTED => 07-APR-2015
TIME PLOTTED => 13:04

Dist	COUNTY	ROUTE	POST MILES TOTAL PROJECT	SHEET No.	TOTAL SHEETS
01	Hum	36, 96, 169, 211, 254, etc.	Var	51	103

T. Krishnakumary 3-30-15
REGISTERED CIVIL ENGINEER DATE

3-30-15
PLANS APPROVAL DATE

REGISTERED PROFESSIONAL ENGINEER
KRISHNAKUMARY THAMILSERAN
No. C79630
Exp. 9/30/16
CIVIL
STATE OF CALIFORNIA

THE STATE OF CALIFORNIA OR ITS OFFICERS OR AGENTS SHALL NOT BE RESPONSIBLE FOR THE ACCURACY OR COMPLETENESS OF SCANNED COPIES OF THIS PLAN SHEET.

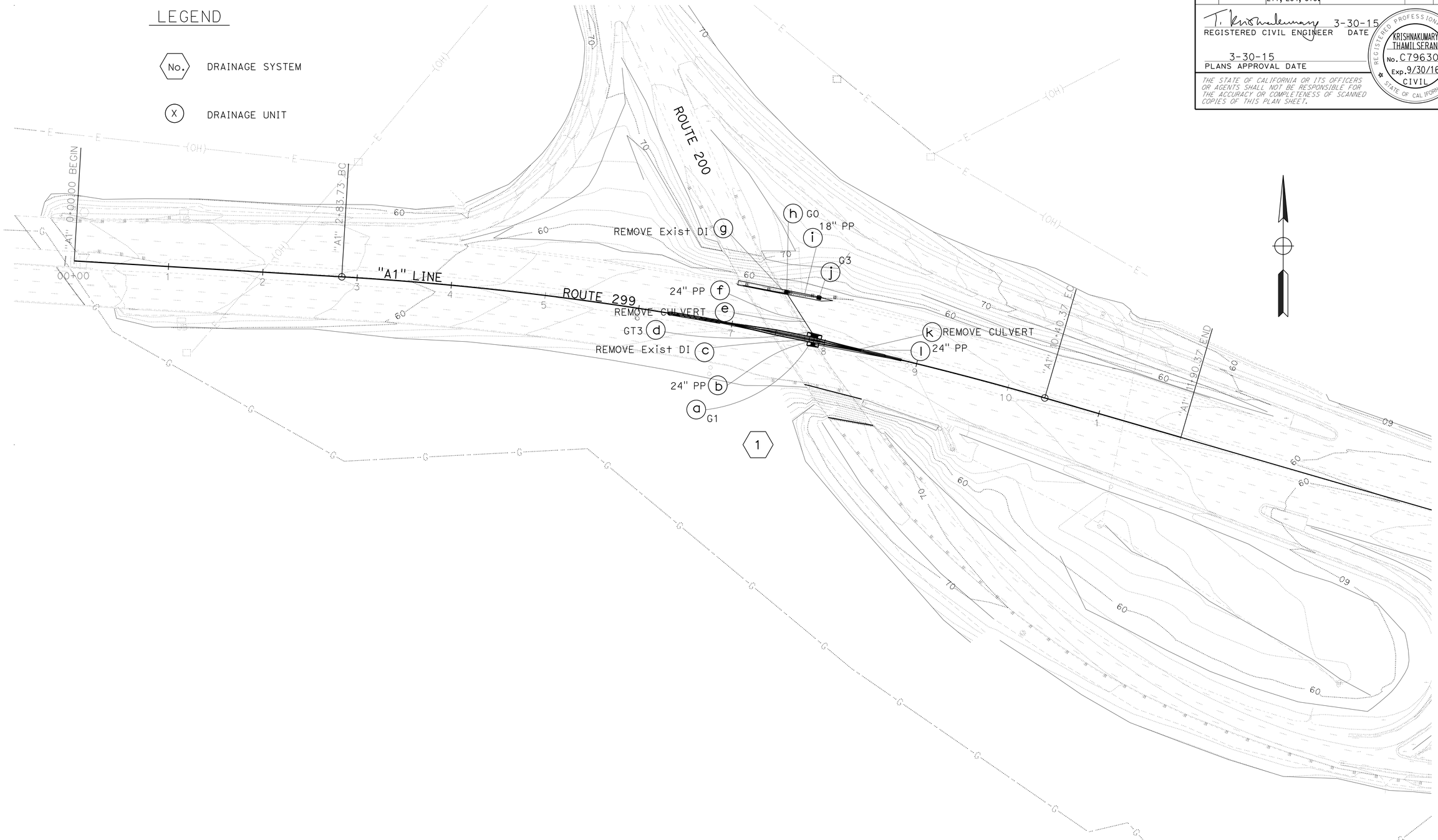

APPROVED FOR DRAINAGE WORK ONLY

DRAINAGE PLAN

SCALE: 1" = 50'

D-1

STATE OF CALIFORNIA - DEPARTMENT OF TRANSPORTATION
Caltrans
03 - DESIGN

FUNCTIONAL SUPERVISOR: KEN KEATON
CALCULATED-DESIGNED BY: KRISHNA THAMILSERAN
CHECKED BY: GARY DUGHI
REVISED BY
DATE REVISED

LAST REVISION 00-00-00
DATE PLOTTED => 07-APR-2015
TIME PLOTTED => 13:04

Dist	COUNTY	ROUTE	POST MILES TOTAL PROJECT	SHEET No.	TOTAL SHEETS
01	Hum	36, 96, 169, 211, 254, etc.	Var	52	103

T. Krishnakumary 3-30-15
REGISTERED CIVIL ENGINEER DATE

3-30-15
PLANS APPROVAL DATE

REGISTERED PROFESSIONAL ENGINEER
KRISHNAKUMARY THAMILSERAN
No. C79630
Exp. 9/30/16
CIVIL
STATE OF CALIFORNIA

THE STATE OF CALIFORNIA OR ITS OFFICERS OR AGENTS SHALL NOT BE RESPONSIBLE FOR THE ACCURACY OR COMPLETENESS OF SCANNED COPIES OF THIS PLAN SHEET.

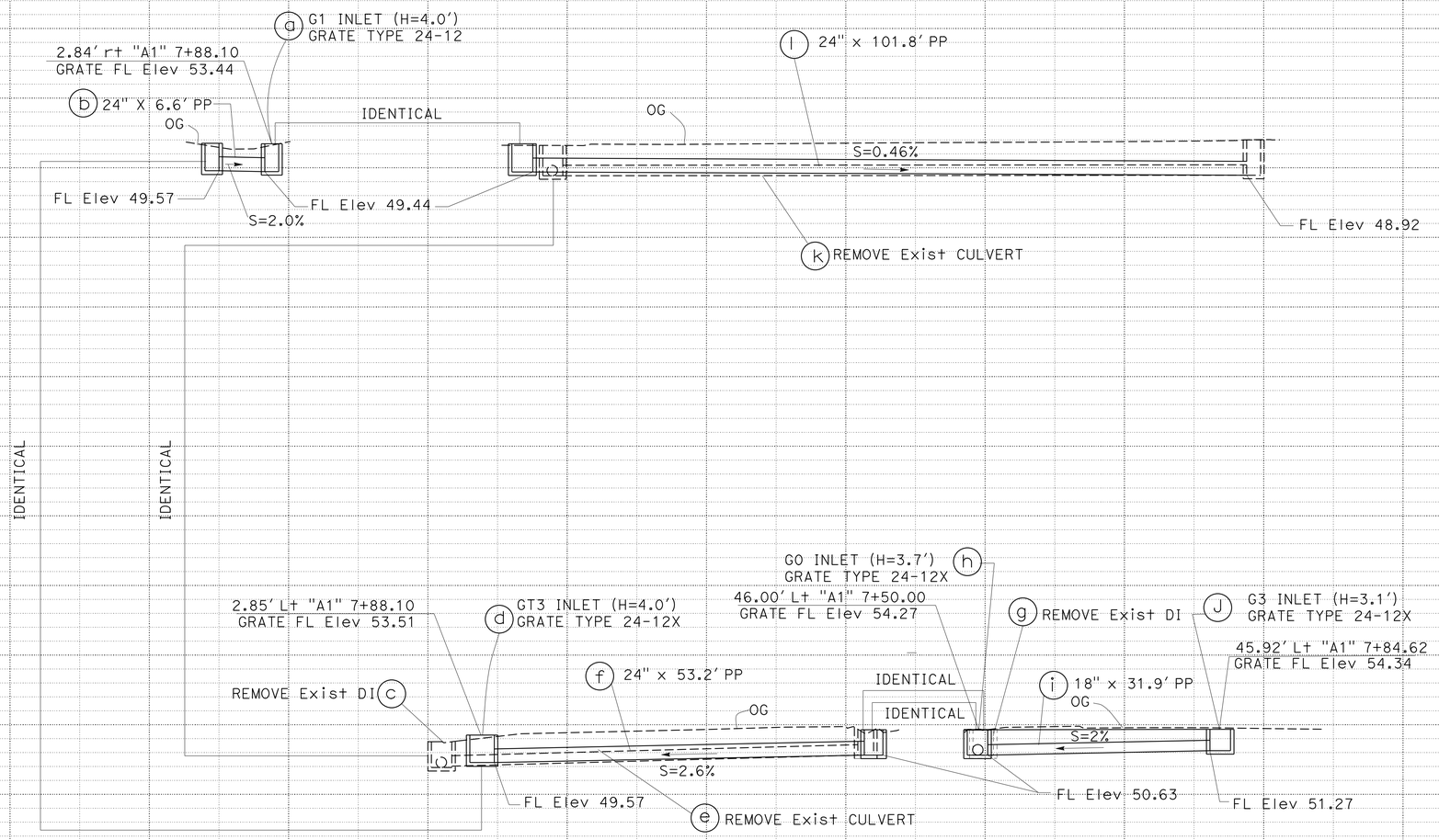

DRAINAGE SYSTEM No. 1

"A1" 7+50.00 TO "A1" 8+91.12

DRAINAGE PROFILE

SCALE: Horiz 1" = 10'
Vert 1" = 10'

DP-1

STATION		TOTAL
CY	Exc	
	Emb	

STATE OF CALIFORNIA - DEPARTMENT OF TRANSPORTATION
Caltrans
DESIGN

FUNCTIONAL SUPERVISOR: KEN KEATON
CALCULATED-DESIGNED BY: DAC LE
CHECKED BY: KRISHNA THAMILSERAN
REVISED BY
DATE REVISED

LAST REVISION 10-25-14
DATE PLOTTED => 07-APR-2015
TIME PLOTTED => 13:04

Dist	COUNTY	ROUTE	POST MILES TOTAL PROJECT	SHEET No.	TOTAL SHEETS
01	Hum	36, 96, 169, 211, 254, etc.	Var	53	103

T. Krishnakumary 3-30-15
REGISTERED CIVIL ENGINEER DATE

3-30-15
PLANS APPROVAL DATE

REGISTERED PROFESSIONAL ENGINEER
KRISHNAKUMARY THAMILSERAN
No. C79630
Exp. 9/30/16
CIVIL
STATE OF CALIFORNIA

THE STATE OF CALIFORNIA OR ITS OFFICERS OR AGENTS SHALL NOT BE RESPONSIBLE FOR THE ACCURACY OR COMPLETENESS OF SCANNED COPIES OF THIS PLAN SHEET.

DRAINAGE QUANTITIES

DRAINAGE SYSTEM No.	DRAINAGE UNIT	18" PLASTIC PIPE	24" PLASTIC PIPE	MINOR CONCRETE (MINOR STRUCTURE)	(N) HEIGHT OF INLET	MISCELLANEOUS IRON & STEEL	MINOR CONCRETE (MISCELLANEOUS CONSTRUCTION)	(N) REMOVE CULVERT	REMOVE INLET	COMMENTS	STATION	DRAINAGE SYSTEM No.	DRAINAGE UNIT
		LF	LF	CY	LF	LB	CY	LF	EA				
1	a			1.2	4.0	326	1.5			G1 DI, GRATE TYPE TYPE 24-12, GUTTER DEPRESSION	"A1" 7+88.10	1	a
	b		6.6										b
	c								1				c
	d			2.1	4.0	652	1.6			GT3 DI, GRATE TYPE TYPE 24-12, GUTTER DEPRESSION	"A1" 7+88.10		d
	e							58.3					e
	f		53.2										f
	g								1				g
	h			1.4	3.7	239				G0 DI, GRATE TYPE TYPE 24-12X	"A1" 7+50.00		h
	i	31.9											i
	j			1.1	3.1	239				G3 DI, GRATE TYPE TYPE 24-12X	"A1" 7+84.62		j
	k							97.0					k
	l		101.8										l
SUB TOTAL		31.9	161.6	5.8		1456	3.1		2				
TOTAL		31.9	161.6	5.8*		1456	3.1	155.3	2				

NOTES:
1. (N) - NOT A SEPARATE PAY ITEM, FOR INFORMATION ONLY
2. * - FOR TOTAL QUANTITY SEE SUMMARY OF QUANTITIES (Q-22)

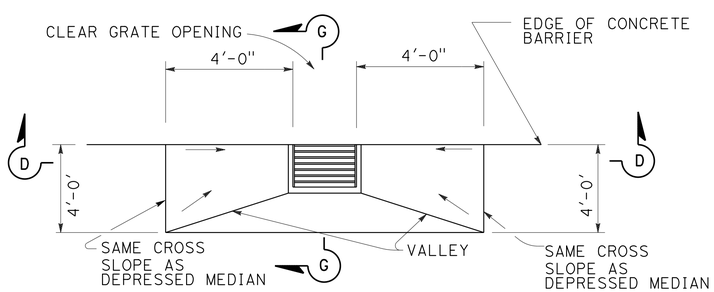

PLAN

INLETS IN GRADE SAG

(1) a, (1) d

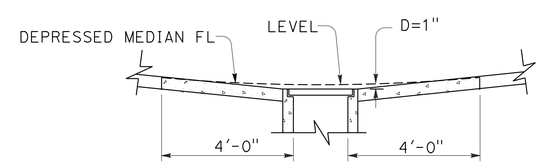

SECTION D-D

ABBREVIATIONS:

D: DEPRESSION AT FLOWLINE

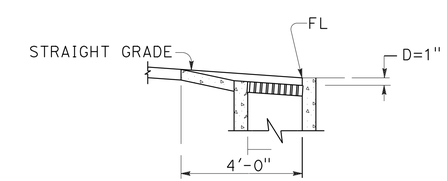

SECTION G-G

NOTE: SEE STANDARD PLAN D78A FOR DETAILS NOT SHOWN IN THIS PLAN.

DRAINAGE DETAILS AND QUANTITIES

NO SCALE

DD-1

STATE OF CALIFORNIA - DEPARTMENT OF TRANSPORTATION
Caltrans
03 - DESIGN

FUNCTIONAL SUPERVISOR: KEN KEATON
CALCULATED-DESIGNED BY: DAC LE
CHECKED BY: KRISHNA THAMILSERAN
REVISED BY
DATE REVISED

LAST REVISION 00-00-00
DATE PLOTTED => 07-APR-2015
TIME PLOTTED => 13:04

Dist	COUNTY	ROUTE	POST MILES TOTAL PROJECT	SHEET No.	TOTAL SHEETS
01	Hum	36, 96, 169, 211, 254, etc.	Var	54	103

Sheri M. Rodriguez 3-30-15
REGISTERED CIVIL ENGINEER DATE

3-30-15
PLANS APPROVAL DATE

REGISTERED PROFESSIONAL ENGINEER SHERI M. RODRIGUEZ No. C66861 Exp. 9-30-16 CIVIL STATE OF CALIFORNIA

THE STATE OF CALIFORNIA OR ITS OFFICERS OR AGENTS SHALL NOT BE RESPONSIBLE FOR THE ACCURACY OR COMPLETENESS OF SCANNED COPIES OF THIS PLAN SHEET.

NOTES:

1. EXACT SIGN LOCATION TO BE DETERMINED BY THE ENGINEER.
2. SIGN PANEL E TO BE PLACED ON SAME POST AS SIGN D.
3. SIGN PANELS L & M TO REPLACE SIGN PANELS J & K.
4. SEE SC SHEETS FOR PLACEMENT OF SIGNS J, K, L & M.

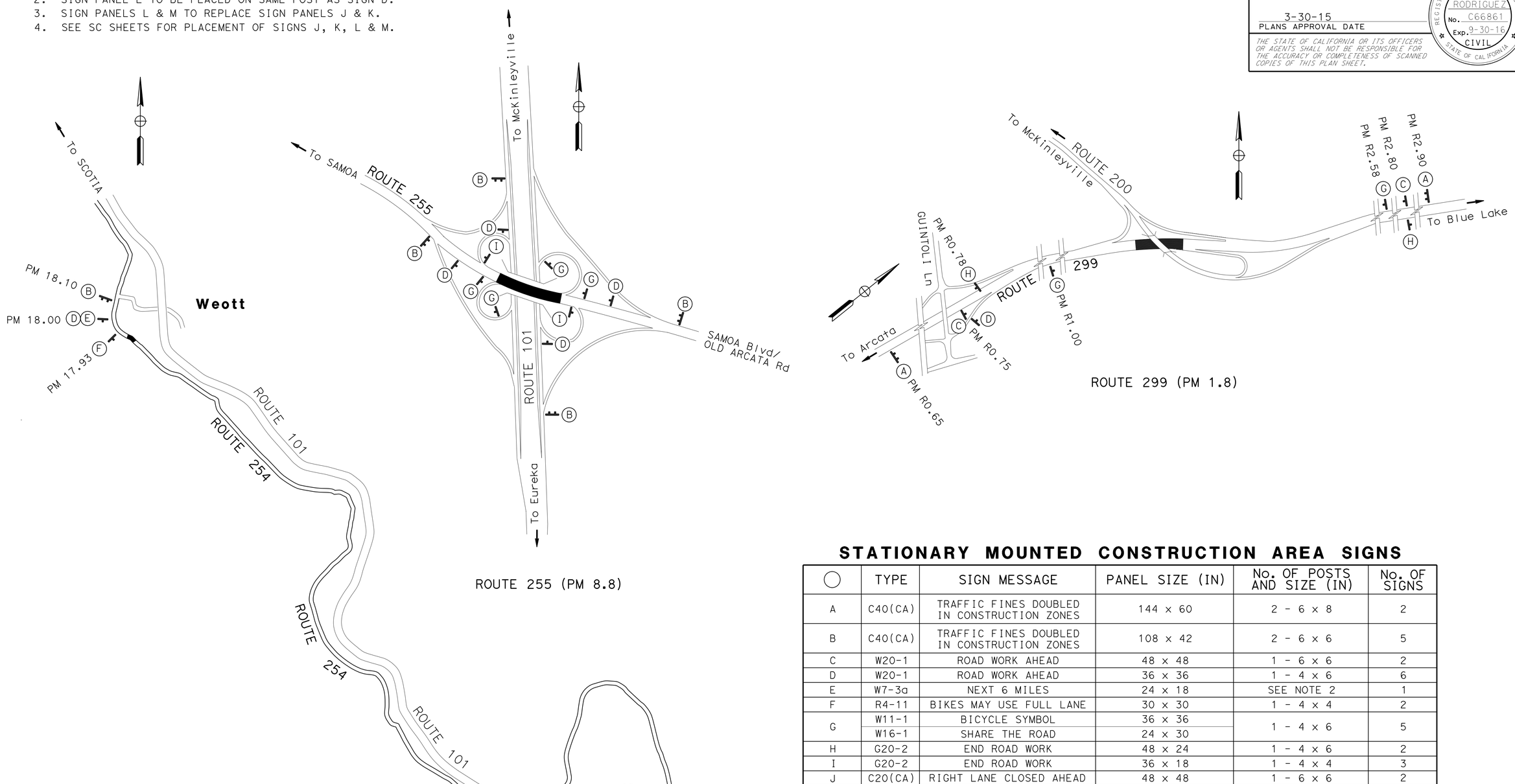

STATIONARY MOUNTED CONSTRUCTION AREA SIGNS

◯	TYPE	SIGN MESSAGE	PANEL SIZE (IN)	No. OF POSTS AND SIZE (IN)	No. OF SIGNS
A	C40(CA)	TRAFFIC FINES DOUBLED IN CONSTRUCTION ZONES	144 x 60	2 - 6 x 8	2
B	C40(CA)	TRAFFIC FINES DOUBLED IN CONSTRUCTION ZONES	108 x 42	2 - 6 x 6	5
C	W20-1	ROAD WORK AHEAD	48 x 48	1 - 6 x 6	2
D	W20-1	ROAD WORK AHEAD	36 x 36	1 - 4 x 6	6
E	W7-3a	NEXT 6 MILES	24 x 18	SEE NOTE 2	1
F	R4-11	BIKES MAY USE FULL LANE	30 x 30	1 - 4 x 4	2
G	W11-1	BICYCLE SYMBOL	36 x 36	1 - 4 x 6	5
	W16-1	SHARE THE ROAD	24 x 30		
H	G20-2	END ROAD WORK	48 x 24	1 - 4 x 6	2
I	G20-2	END ROAD WORK	36 x 18	1 - 4 x 4	3
J	C20(CA)	RIGHT LANE CLOSED AHEAD	48 x 48	1 - 6 x 6	2
K	W4-2R	(RIGHT) LANE ENDS SYMBOL	48 x 48	1 - 6 x 6	2
L	C20(CA)	LEFT LANE CLOSED AHEAD	48 x 48	SEE NOTE 3	2
M	W4-2L	(LEFT) LANE ENDS SYMBOL	48 x 48	SEE NOTE 3	2

APPROVED FOR CONSTRUCTION AREA SIGN WORK ONLY

CONSTRUCTION AREA SIGNS

NO SCALE

CS-1

STATE OF CALIFORNIA - DEPARTMENT OF TRANSPORTATION
Caltrans® TRAFFIC OPERATIONS

FUNCTIONAL SUPERVISOR: TROY A. ARSENEAU
CALCULATED-DESIGNED BY: SHERI M. RODRIGUEZ
CHECKED BY: KRISHNA THAMILSERAN
REVISED BY
DATE REVISED

LAST REVISION 07-17-14
DATE PLOTTED => 07-APR-2015
TIME PLOTTED => 13:05

Dist	COUNTY	ROUTE	POST MILES TOTAL PROJECT	SHEET No.	TOTAL SHEETS
01	Hum	36, 96, 169, 211, 254, etc.	Var	55	103

Sheri M. Rodriguez 3-30-15
REGISTERED CIVIL ENGINEER DATE

3-30-15
PLANS APPROVAL DATE

REGISTERED PROFESSIONAL ENGINEER SHERI M. RODRIGUEZ No. C66861 Exp. 9-30-16 CIVIL STATE OF CALIFORNIA

THE STATE OF CALIFORNIA OR ITS OFFICERS OR AGENTS SHALL NOT BE RESPONSIBLE FOR THE ACCURACY OR COMPLETENESS OF SCANNED COPIES OF THIS PLAN SHEET.

NOTE:

STAGES 1 & 2 MAY BE CONSTRUCTED CONCURRENTLY.

LEGEND

- Temp RAILING (TYPE K)
- ALTERNATIVE Temp CRASH CUSHION
- TRAFFIC PLASTIC DRUM
- FLASHING ARROW BOARD

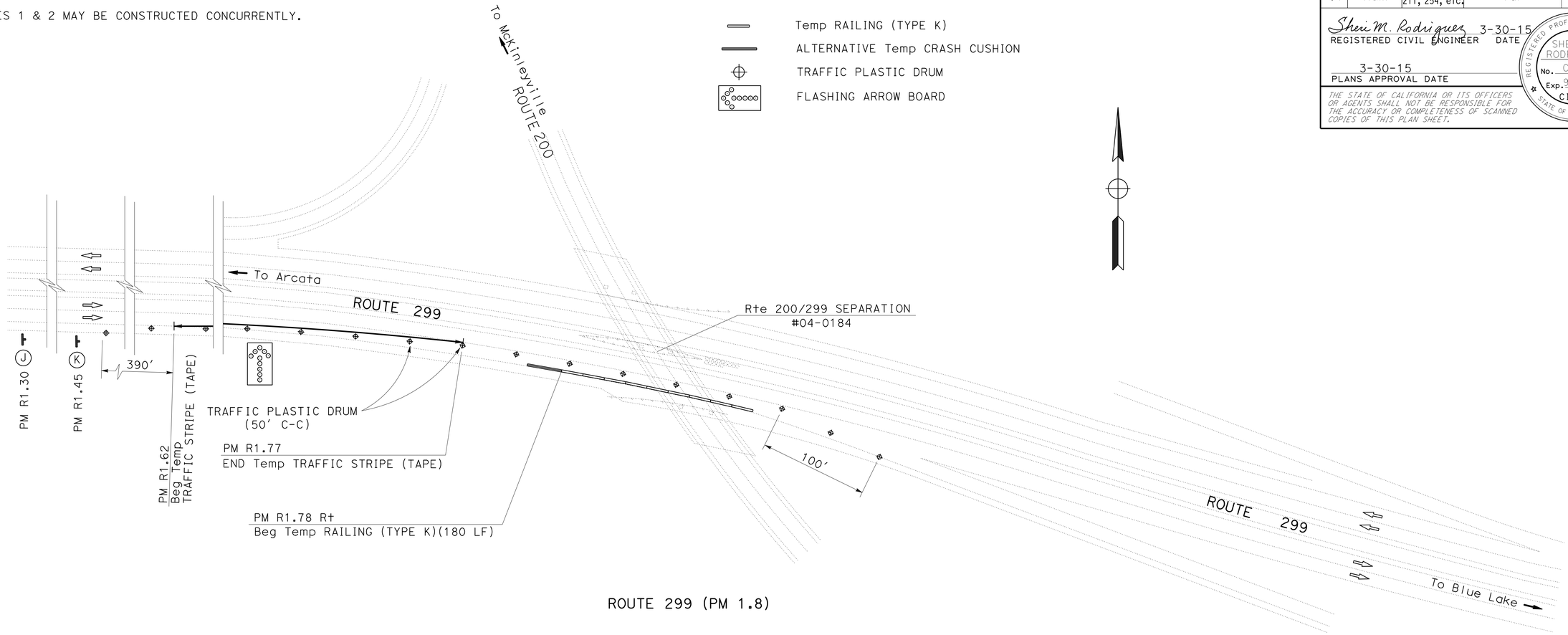

ROUTE 299 (PM 1.8)

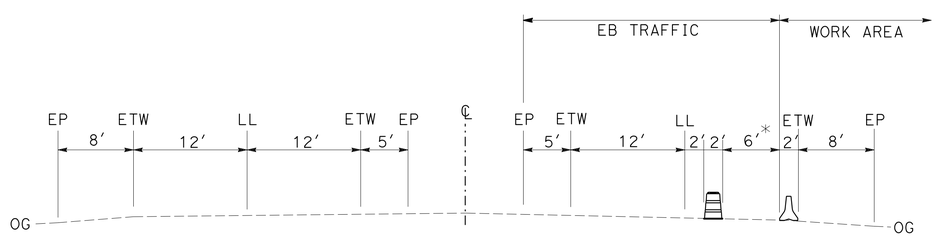

* 6' Min FOR BICYCLE ACCESS THROUGH WORK AREA

TYPICAL SECTION

STAGE 1

STAGE CONSTRUCTION AND TRAFFIC HANDLING PLAN

SCALE: 1" = 50'

SC-1

APPROVED FOR STAGE CONSTRUCTION AND TRAFFIC HANDLING WORK ONLY

STATE OF CALIFORNIA - DEPARTMENT OF TRANSPORTATION
Caltrans® **TRAFFIC OPERATIONS**

FUNCTIONAL SUPERVISOR: TROY A. ARSENEAU
CALCULATED-DESIGNED BY: SHERI M. RODRIGUEZ
CHECKED BY: KRISHNA THAMILSERAN
REVISED BY
DATE REVISED

LAST REVISION 07-17-14
DATE PLOTTED => 07-APR-2015
TIME PLOTTED => 13:05

Dist	COUNTY	ROUTE	POST MILES TOTAL PROJECT	SHEET No.	TOTAL SHEETS
01	Hum	36, 96, 169, 211, 254, etc.	Var	56	103

Sheri M. Rodriguez 3-30-15
REGISTERED CIVIL ENGINEER DATE

3-30-15
PLANS APPROVAL DATE

REGISTERED PROFESSIONAL ENGINEER SHERI M. RODRIGUEZ No. C66861 Exp. 9-30-16 CIVIL STATE OF CALIFORNIA

THE STATE OF CALIFORNIA OR ITS OFFICERS OR AGENTS SHALL NOT BE RESPONSIBLE FOR THE ACCURACY OR COMPLETENESS OF SCANNED COPIES OF THIS PLAN SHEET.

NOTE:

SIGNS (J) & (K), FROM STAGE 1, TO REMAIN COVERED IN PLACE FOR STAGE 3.

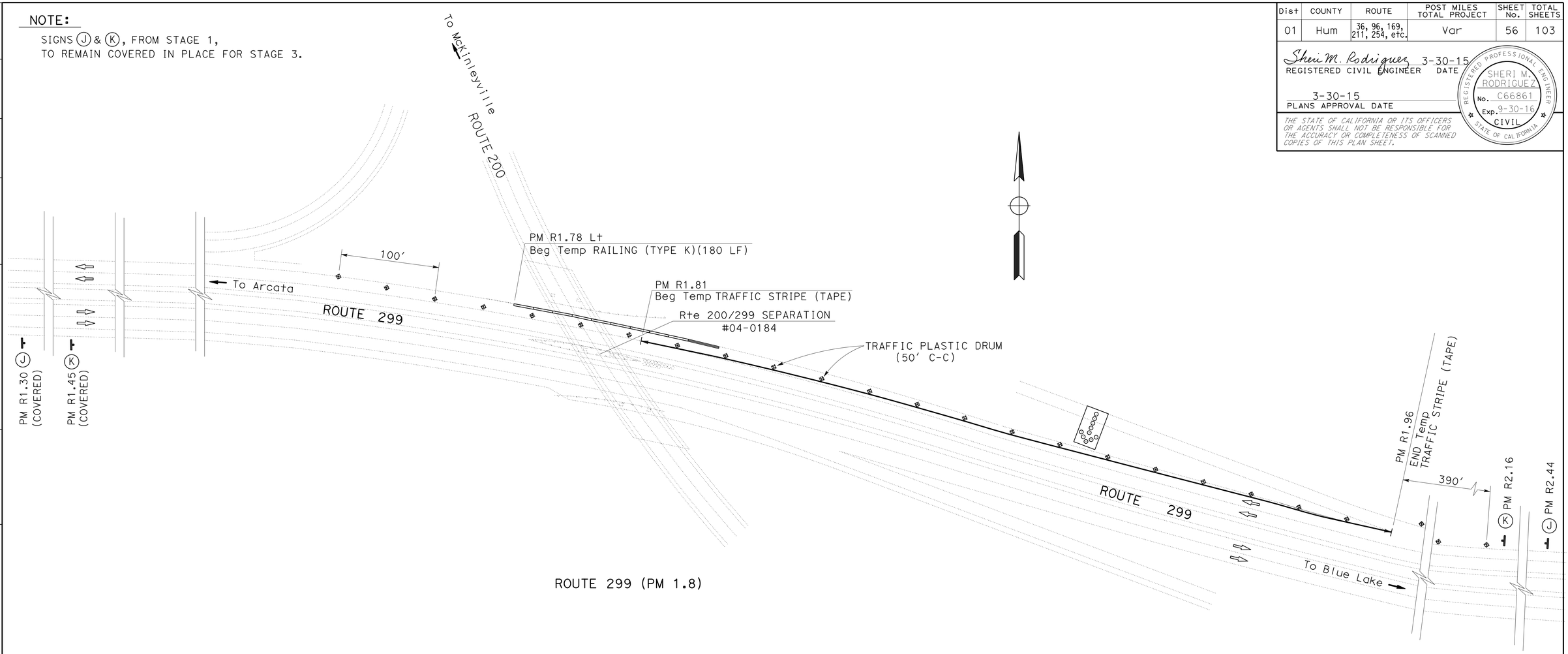

ROUTE 299 (PM 1.8)

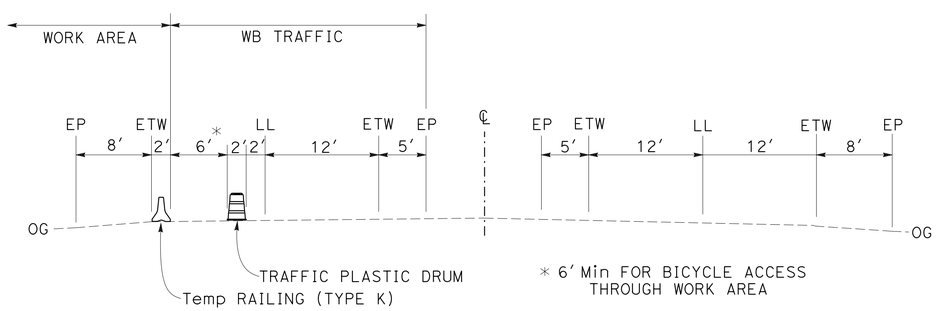

TYPICAL SECTION

STAGE 2

STAGE CONSTRUCTION AND TRAFFIC HANDLING PLAN

SCALE: 1" = 50'

APPROVED FOR STAGE CONSTRUCTION AND TRAFFIC HANDLING WORK ONLY

SC-2

STATE OF CALIFORNIA - DEPARTMENT OF TRANSPORTATION
Caltrans® TRAFFIC OPERATIONS

FUNCTIONAL SUPERVISOR: TROY A. ARSENEAU
CALCULATED-DESIGNED BY: SHERI M. RODRIGUEZ
CHECKED BY: KRISHNA THAMILSERAN
REVISED BY
DATE REVISED

LAST REVISION 07-17-14
DATE PLOTTED => 07-APR-2015
TIME PLOTTED => 13:05

Dist	COUNTY	ROUTE	POST MILES TOTAL PROJECT	SHEET No.	TOTAL SHEETS
01	Hum	36, 96, 169, 211, 254, etc.	Var	57	103

Sheri M. Rodriguez 3-30-15
REGISTERED CIVIL ENGINEER DATE

3-30-15
PLANS APPROVAL DATE

REGISTERED PROFESSIONAL ENGINEER SHERI M. RODRIGUEZ No. C66861 Exp. 9-30-16 CIVIL STATE OF CALIFORNIA

THE STATE OF CALIFORNIA OR ITS OFFICERS OR AGENTS SHALL NOT BE RESPONSIBLE FOR THE ACCURACY OR COMPLETENESS OF SCANNED COPIES OF THIS PLAN SHEET.

NOTES:

1. SIGN PANELS (L) & (M) TO BE PLACED ON SAME POSTS AS SIGNS (J) & (K) FROM STAGES 1 & 2.
2. RELOCATE FLASHING ARROW BOARDS FROM STAGES 1 & 2.

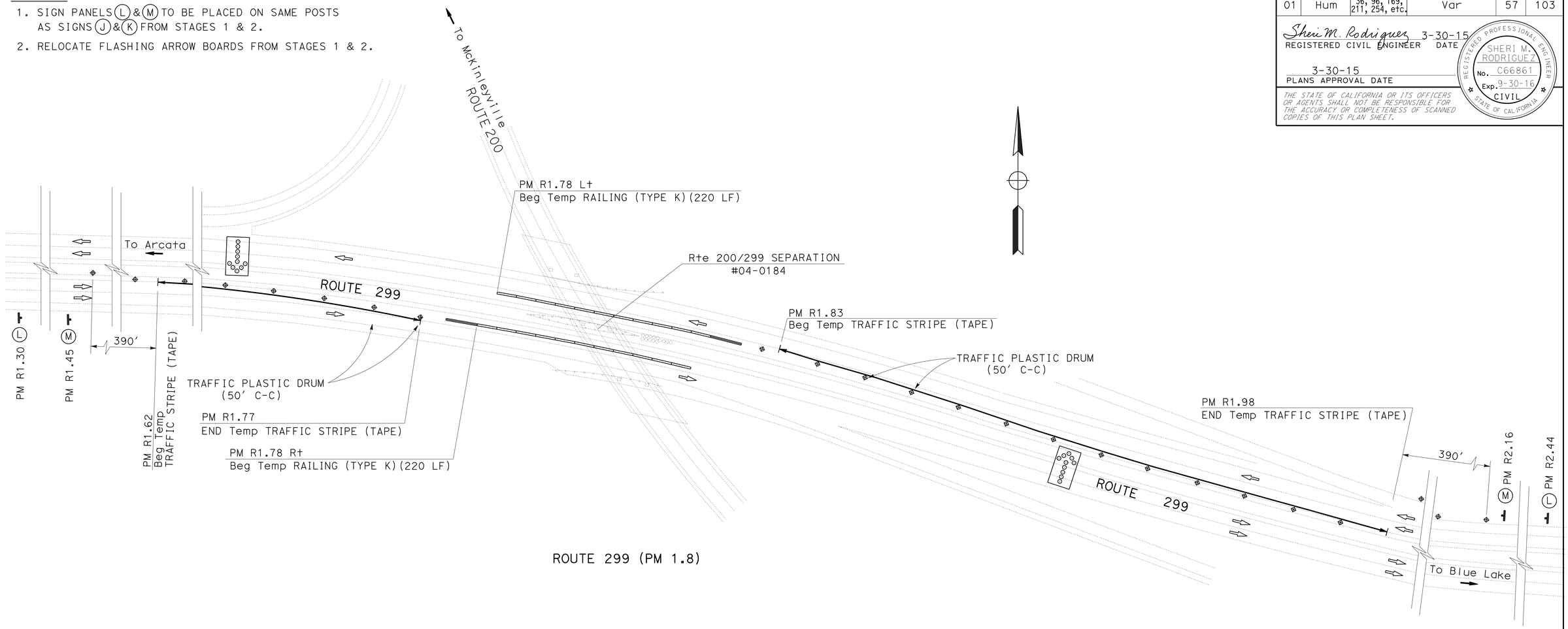

ROUTE 299 (PM 1.8)

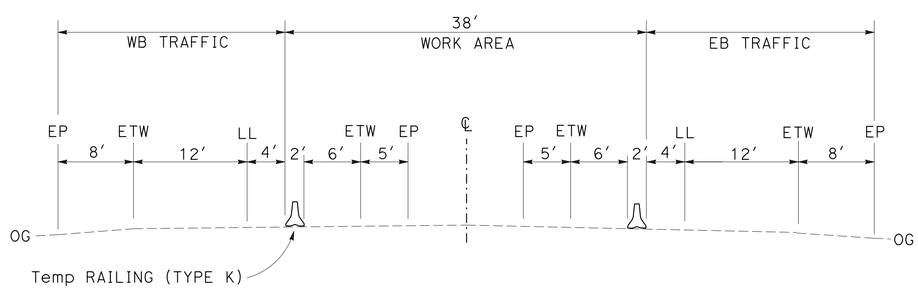

TYPICAL SECTION

STAGE 3

STAGE CONSTRUCTION AND TRAFFIC HANDLING PLAN

SCALE: 1" = 50'

APPROVED FOR STAGE CONSTRUCTION AND TRAFFIC HANDLING WORK ONLY

SC-3

STATE OF CALIFORNIA - DEPARTMENT OF TRANSPORTATION
Caltrans® **TRAFFIC OPERATIONS**

FUNCTIONAL SUPERVISOR: TROY A. ARSENEAU
CALCULATED-DESIGNED BY: SHERI M. RODRIGUEZ
CHECKED BY: KRISHNA THAMILSERAN
REVISED BY
DATE REVISED

LAST REVISION 07-17-14
DATE PLOTTED => 07-APR-2015
TIME PLOTTED => 13:05

Dist	COUNTY	ROUTE	POST MILES TOTAL PROJECT	SHEET No.	TOTAL SHEETS
01	Hum	36, 96, 169, 211, 254, etc.	Var	58	103

Sheri M. Rodriguez 3-5-15
REGISTERED CIVIL ENGINEER DATE

3-30-15
PLANS APPROVAL DATE

REGISTERED PROFESSIONAL ENGINEER SHERI M. RODRIGUEZ No. C66861 Exp. 9-30-16 CIVIL STATE OF CALIFORNIA

THE STATE OF CALIFORNIA OR ITS OFFICERS OR AGENTS SHALL NOT BE RESPONSIBLE FOR THE ACCURACY OR COMPLETENESS OF SCANNED COPIES OF THIS PLAN SHEET.

NOTES:

1. CALIFORNIA CODES ARE DESIGNATED BY (CA). OTHERWISE, FEDERAL (MUTCD) CODES ARE SHOWN.
2. ALL SIGNS SHALL HAVE A BLACK LEGEND ON FLUORESCENT ORANGE BACKGROUND AND SHALL BE EQUIPPED WITH AT LEAST TWO 16" x 16" ORANGE FLAGS FOR DAYTIME CLOSURE OR FLASHING BEACONS FOR LANE CLOSURE DURING HOURS OF DARKNESS.
3. ALL CONES USED FOR LANE CLOSURES DURING THE HOURS OF DARKNESS SHALL BE FITTED WITH RETROREFLECTIVE BANDS OR SLEEVES.
4. WHEN A PILOT CAR IS USED, PLACE A C37 (CA) SIGN AT ALL INTERSECTIONS WITHIN TRAFFIC CONTROL AREA. WHERE VEHICULAR TRAFFIC CAN NOT EFFECTIVELY SELF-REGULATE, AT LEAST ONE FLAGGER SHALL BE USED AT EACH INTERSECTION WITHIN THE TRAFFIC CONTROL AREA.
5. FLAGGER SHOULD STAND IN A CONSPICUOUS PLACE, FACING TRAFFIC AT ALL TIMES, BE VISIBLE TO APPROACHING TRAFFIC AS WELL AS APPROACHING VEHICLES AFTER THE FIRST VEHICLE HAS STOPPED.
6. ADDITIONAL ADVANCE FLAGGERS ARE REQUIRED.
7. WHEN FLAGGER IS NOT VISIBLE FROM THIS LOCATION PLACE A C29 (CA) SIGN BELOW THE C9A (CA) SIGN.

LEGEND

- TRAFFIC CONE
- TEMPORARY SIGN
- DIRECTION OF TRAVEL
- PORTABLE FLASHING BEACON
- FLAGGER

SIGN PANEL SIZE (MINIMUM)

- A — 48" x 48" - SPEED OF 45 mph OR MORE; 36" x 36" - SPEED LESS THAN 45 mph
- B — 30" x 30"
- C — UNUSED
- D — UNUSED
- E — 20" x 7"

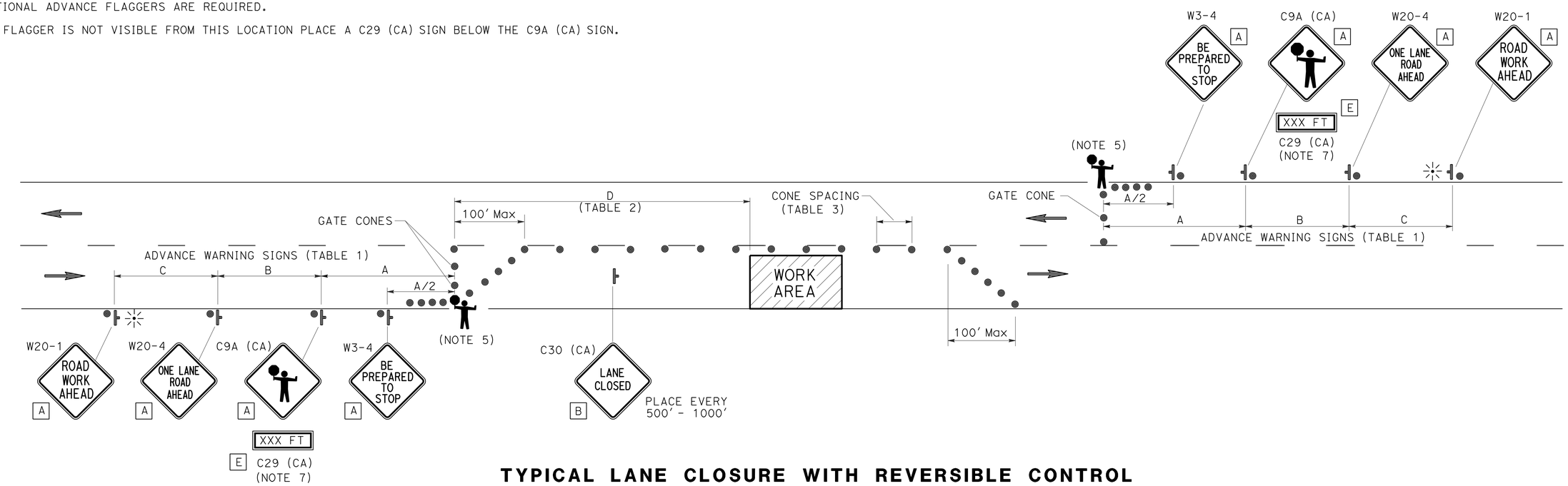

TYPICAL LANE CLOSURE WITH REVERSIBLE CONTROL

TABLE 1

ADVANCE WARNING SIGN SPACING

ROAD TYPE	Min A	Min B	Min C
	ft		
URBAN (25 mph OR LESS)	100	100	100
URBAN (30 mph TO 40 mph)	250	250	250
URBAN (MORE THAN 40 mph)	350	350	350
RURAL	500	500	500
EXPRESSWAY / FREEWAY	1000	1500	2640

TABLE 2

BUFFER SPACE

APPROACH SPEED	Min D	DOWNGRADE Min D		
		-3%*	-6%*	-9%*
mph	ft			
25 & BELOW	155	158	165	173
30	200	205	215	227
35	250	257	271	287
40	305	315	333	354
45	360	378	400	427
50	425	446	474	507
55	495	520	553	593
60	570	598	638	686
65	645	682	728	785

* USE ON SUSTAINED DOWNGRADE STEEPER THAN -3 PERCENT AND LONGER THAN 1 MILE.

TABLE 3

Max CONE SPACING

POSTED SPEED	TAPER	TANGENT	CONFLICT*
mph	ft		
20	20	40	10
25	25	50	12
30	30	60	15
35	35	70	17
40	40	80	20
45	45	90	22
50	50	100	25
55	55	110	27
60	60	120	30
65	65	130	32

* USE WHERE THERE IS A CONFLICT BETWEEN EXISTING PAVEMENT MARKINGS AND CHANNELIZERS.

TRAFFIC HANDLING PLAN

NO SCALE

TH-1

APPROVED FOR TRAFFIC HANDLING WORK ONLY

REVISED BY | DATE REVISED
SHERI M. RODRIGUEZ | TROY A. ARSENEAU
CALCULATED-DESIGNED BY | CHECKED BY
FUNCTIONAL SUPERVISOR: RICHARD MULLEN

STATE OF CALIFORNIA - DEPARTMENT OF TRANSPORTATION
Caltrans® TRAFFIC OPERATIONS

P:\proj5\01\46392\drafting\0112000274md001.dgn

LAST REVISION 00-00-00 | DATE PLOTTED => 07-APR-2015 | TIME PLOTTED => 13:05

Dist	COUNTY	ROUTE	POST MILES TOTAL PROJECT	SHEET No.	TOTAL SHEETS
01	Hum	36, 96, 169, 211, 254, etc.	Var	59	103

Sheri M. Rodriguez 3-30-15
REGISTERED CIVIL ENGINEER DATE

3-30-15
PLANS APPROVAL DATE

REGISTERED PROFESSIONAL ENGINEER
SHERI M. RODRIGUEZ
No. C66861
Exp. 9-30-16
CIVIL
STATE OF CALIFORNIA

THE STATE OF CALIFORNIA OR ITS OFFICERS OR AGENTS SHALL NOT BE RESPONSIBLE FOR THE ACCURACY OR COMPLETENESS OF SCANNED COPIES OF THIS PLAN SHEET.

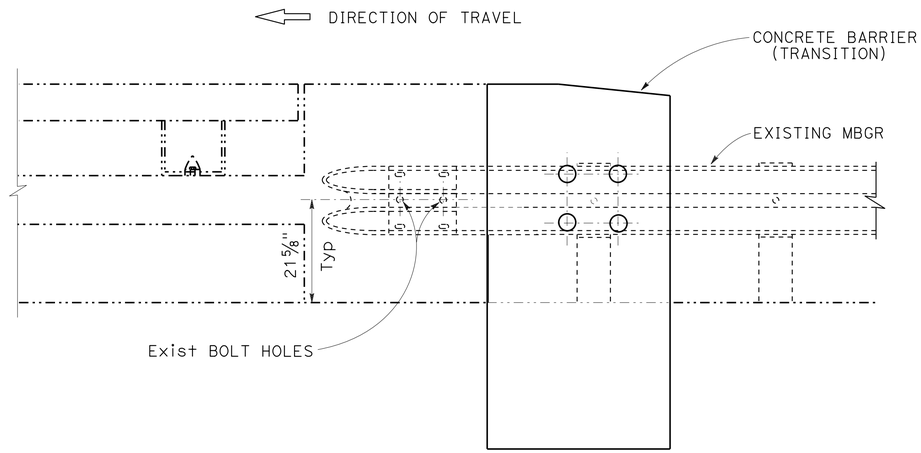

ELEVATION

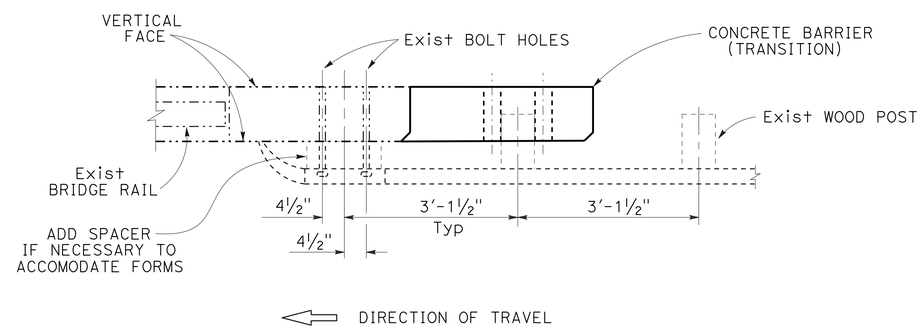

PLAN

TEMPORARY TRAFFIC PROTECTION DETAILS

FOR ANCHOR BLOCK CONSTRUCTION ON TYPE 1, 9, 25, & 28 BARRIER RAILINGS.

APPROVED FOR TRAFFIC HANDLING WORK ONLY

TRAFFIC HANDLING DETAILS

NO SCALE

THD-1

STATE OF CALIFORNIA - DEPARTMENT OF TRANSPORTATION
Caltrans® TRAFFIC OPERATIONS

FUNCTIONAL SUPERVISOR: TROY A. ARSENEAU
CALCULATED-DESIGNED BY: SHERI M. RODRIGUEZ
CHECKED BY: KRISHNA THAMILSERAN
REVISED BY
DATE REVISED

LAST REVISION 11-02-14 | DATE PLOTTED => 07-APR-2015 | TIME PLOTTED => 13:05

Dist	COUNTY	ROUTE	POST MILES TOTAL PROJECT	SHEET No.	TOTAL SHEETS
01	Hum	36, 96, 169, 211, 254, etc.	Var	60	103

Sheri M. Rodriguez 3-30-15
REGISTERED CIVIL ENGINEER DATE

3-30-15
PLANS APPROVAL DATE

REGISTERED PROFESSIONAL ENGINEER SHERI M. RODRIGUEZ No. C66861 Exp. 9-30-16 CIVIL STATE OF CALIFORNIA

THE STATE OF CALIFORNIA OR ITS OFFICERS OR AGENTS SHALL NOT BE RESPONSIBLE FOR THE ACCURACY OR COMPLETENESS OF SCANNED COPIES OF THIS PLAN SHEET.

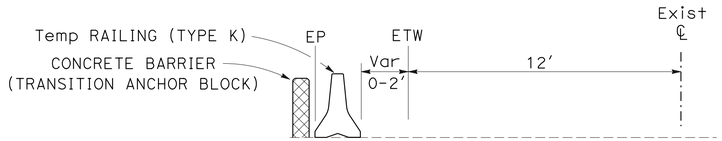

SECTION A-A

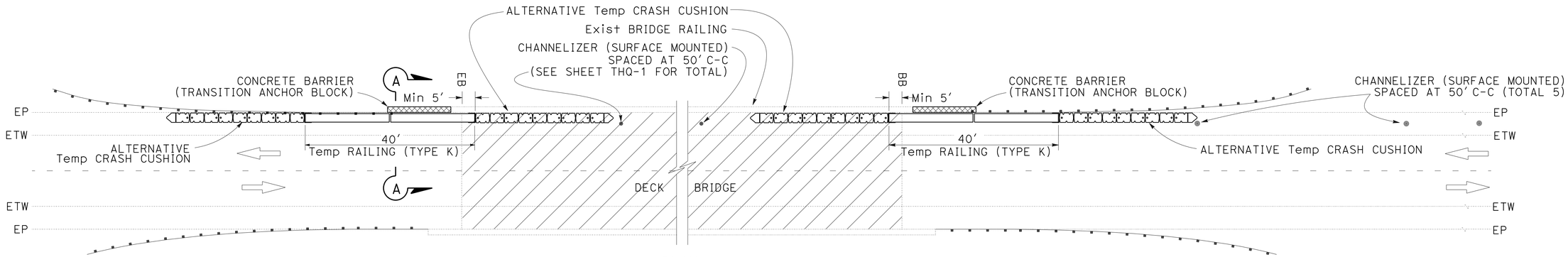

PLAN

TWO-LANE BRIDGE

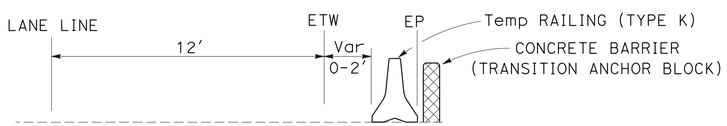

SECTION B-B

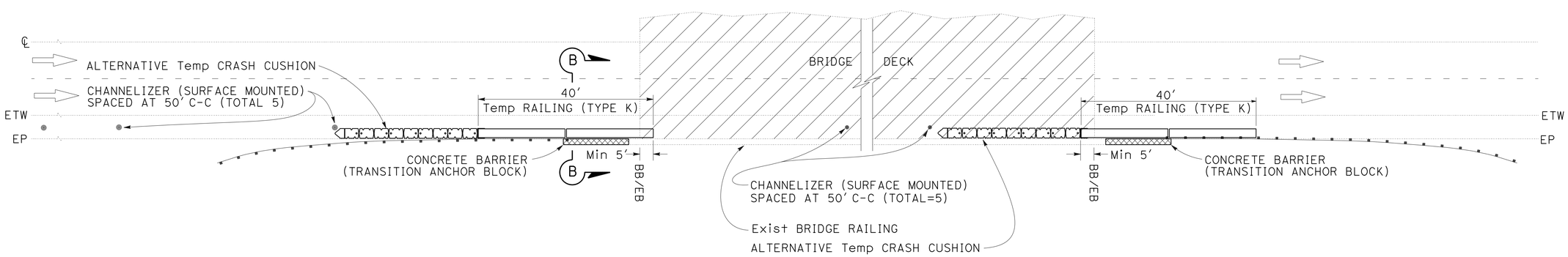

PLAN

FOUR-LANE BRIDGE

TEMPORARY TRAFFIC PROTECTION DETAILS

FOR ANCHOR BLOCK CONSTRUCTION ON TYPE 2 & 27 BARRIER RAILINGS

TRAFFIC HANDLING DETAILS

NO SCALE

APPROVED FOR TRAFFIC HANDLING WORK ONLY

THD-2

REVISED BY | DATE REVISED
SHERI M. RODRIGUEZ | KRISHNA THAMILSERAN
CALCULATED-DESIGNED BY | CHECKED BY
FUNCTIONAL SUPERVISOR
TROY A. ARSENEAU

STATE OF CALIFORNIA - DEPARTMENT OF TRANSPORTATION
Caltrans TRAFFIC OPERATIONS

LAST REVISION 11-02-14 | DATE PLOTTED => 07-APR-2015 | TIME PLOTTED => 13:05

Dist	COUNTY	ROUTE	POST MILES TOTAL PROJECT	SHEET No.	TOTAL SHEETS
01	Hum	36, 96, 169, 211, 254, etc.	Var	61	103

Sheri M. Rodriguez 3-30-15
REGISTERED CIVIL ENGINEER DATE

3-30-15
PLANS APPROVAL DATE

REGISTERED PROFESSIONAL ENGINEER
SHERI M. RODRIGUEZ
No. C66861
Exp. 9-30-16
CIVIL
STATE OF CALIFORNIA

THE STATE OF CALIFORNIA OR ITS OFFICERS OR AGENTS SHALL NOT BE RESPONSIBLE FOR THE ACCURACY OR COMPLETENESS OF SCANNED COPIES OF THIS PLAN SHEET.

TEMPORARY PAVEMENT DELINEATION

ROUTE	LOCATION		L+/R+/ Med	DETAIL	TEMPORARY TRAFFIC STRIPE (TAPE)
	FROM	TO			LF
299	R1.62		R+	27B	780
299	R1.62	R1.77	R+	27B	780
299	R1.81	R1.96	L+	27B	780
299	R1.83	R1.98	L+	27B	780
				TOTAL	3120

TEMPORARY TRAFFIC CONTROL DEVICES

ROUTE	LOCATION		L+/R+/ Med	TEMPORARY RAILING (TYPE K)	ALTERNATIVE TEMPORARY CRASH CUSHION	CHANNELIZER (SURFACE-MOUNTED)	TRAFFIC PLASTIC DRUM	FLASHING ARROW SIGN
	FROM	TO		LF	EA	EA	EA	EA
254	12.63	12.74	L+	80	4	10		
254	17.75	17.84	L+	80	4	8		
255	8.72	8.84	R+	80	2	10		
255	8.72	8.84	L+	80	2	10		
299	R1.55	R1.84	R+	180	1		31	1
299	R1.75	R2.03	L+	180	1		30	1
299	R1.77	R1.83	Med	440	2		49	
			TOTAL	1120	16	38	110	2

TRAFFIC HANDLING QUANTITIES
THQ-1

STATE OF CALIFORNIA - DEPARTMENT OF TRANSPORTATION
Caltrans® TRAFFIC OPERATIONS

FUNCTIONAL SUPERVISOR: TROY A. ARSENEAU
CALCULATED-DESIGNED BY: SHERI M. RODRIGUEZ
CHECKED BY: KRISHNA THAMILSERAN
REVISED BY
DATE REVISED

LAST REVISION 07-17-14
DATE PLOTTED => 07-APR-2015
TIME PLOTTED => 13:05

Dist	COUNTY	ROUTE	POST MILES TOTAL PROJECT	SHEET No.	TOTAL SHEETS
01	Hum	36, 96, 169, 211, 254, etc.	Var	62	103

T. Krishnakumary 3-30-15
REGISTERED CIVIL ENGINEER DATE

3-30-15
PLANS APPROVAL DATE

REGISTERED PROFESSIONAL ENGINEER
KRISHNAKUMARY THAMILSERAN
No. C79630
Exp. 9/30/16
CIVIL
STATE OF CALIFORNIA

THE STATE OF CALIFORNIA OR ITS OFFICERS OR AGENTS SHALL NOT BE RESPONSIBLE FOR THE ACCURACY OR COMPLETENESS OF SCANNED COPIES OF THIS PLAN SHEET.

METAL BEAM GUARD RAILING

Rte	Loc	POSTMILE FROM	POSTMILE TO	DIRECTION	STRUCTURE/ LOCATION	BRIDGE APPROACH/DEPARTURE/QUADRANT	EXISTING LENGTH	REMOVE GUARDRAIL	RECONSTRUCT GUARDRAIL (7' STEEL POST)	RECONSTRUCT GUARDRAIL (WOOD POST)	RECONSTRUCT GUARDRAIL (STEEL POST)	FURNISH RAIL ELEMENT	ADJUST GUARDRAIL	MBGR (STEEL POST)	MBGR (WOOD POST)	MBGR (SPECIAL)	MBGR (7' STEEL POST)	TRANSITION RAILING (TYPE WB)	CRASH CUSHION (TYPE CAT) BACKUP	CRASH CUSHION (TYPE CAT)	END CAP (TYPE TC)	END ANCHOR ASSEMBLY (TYPE SFT)	(N) BURIED POST ANCHOR	ALTERNATIVE IN-LINE TERMINAL SYSTEM	ALTERNATIVE FLARED TERMINAL SYSTEM	REMOVE CRASH CUSHION	ALTERNATIVE CRASH CUSHION	TREATED WOOD WASTE	(N) LAYOUT TYPE	COMMENTS
							LF	LF	LF	LF	LF	EA	LF	LF	LF	LF	LF	EA	EA	EA	EA	EA	EA	EA	EA	EA	EA	LB		
36	1	1.60	1.62	EB			100.0	75.0			25.0														2			1,911	11E	
36	2	1.60	1.63	WB			150.0	75.0			75.0														2			2,867	11E	
36	3	13.48	13.49	WB	VAN DUZEN Riv Br	APPROACH	75.0	75.0						25.0				1			1			1				1,911	12B	(E) Conc BRIDGE BARRIER TYPE 25, ADD 25' MBGR TO AVOID BLOCKING OVERSIDEDRAIN.
36	4	13.48	13.52	EB		DEPARTURE	175.0	175.0						112.5				1			1				1			2,867	12BB	(E) Conc BRIDGE BARRIER TYPE 25
36	5	15.75	16.21	EB			2,412.5	75.0			2112.5					225									2			37,267	11E	
36	6	16.93	16.94	WB	GRIZZLY Cr Br	DEPARTURE	62.5	62.5										1			1				1			956	12BB	
36	7	16.93	16.94	EB		APPROACH	62.5	62.5										1			1				1			956	SEE Det	SEE CONSTRUCTION DETAIL (C-33) FOR BARRIER DETAIL.
36	8	16.96	16.97	WB		APPROACH	62.5	62.5										1			1				1			956	12B	
36	9	16.96	16.97	EB		DEPARTURE	62.5	62.5										1			1				1			956	SEE Det	SEE CONSTRUCTION DETAIL (C-33) FOR BARRIER DETAIL.
36	10	17.88	17.91	WB			162.5	75.0			87.5														2			2,867	11E	
36	11	17.91	17.94	WB	VAN DUZEN Riv Br	DEPARTURE	100.0	100.0						37.5				1			1				1			1,911	12BB	(E) Conc BRIDGE BARRIER TYPE 25
36	12	17.93	17.94	EB		APPROACH	62.5	62.5										1			1				1			956	12B	(E) Conc BRIDGE BARRIER TYPE 25
36	13	18.02	18.03	WB		APPROACH	62.5	62.5										1			1				1			956	12B	(E) Conc BRIDGE BARRIER TYPE 25
36	14	18.02	18.07	EB		DEPARTURE	250.0	250.0						187.5				1			1				1			3,622	12BB	(E) Conc BRIDGE BARRIER TYPE 25
						SUBTOTAL	-	1275.0	-	-	2300.0	-	-	362.5	-	225	-	10.0	-	-	10	-	-	1	17.0	-	-	60,959		

(N) - NOT A SEPARATE PAY ITEM, FOR INFORMATION ONLY

SUMMARY OF QUANTITIES

Q-1

STATE OF CALIFORNIA - DEPARTMENT OF TRANSPORTATION
Caltrans® 03 - DESIGN

FUNCTIONAL SUPERVISOR: KEN KEATON
CALCULATED-DESIGNED BY: KRISHNA THAMILSERAN
CHECKED BY: GARY DUGHI
REVISED BY / DATE REVISED

LAST REVISION 00-00-00
DATE PLOTTED => 07-APR-2015
TIME PLOTTED => 13:05

Dist	COUNTY	ROUTE	POST MILES TOTAL PROJECT	SHEET No.	TOTAL SHEETS
01	Hum	36, 96, 169, 211, 254, etc.	Var	63	103

T. Krishnakumary 3-30-15
REGISTERED CIVIL ENGINEER DATE

3-30-15
PLANS APPROVAL DATE

REGISTERED PROFESSIONAL ENGINEER
KRISHNAKUMARY THAMILSERAN
No. C79630
Exp. 9/30/16
CIVIL
STATE OF CALIFORNIA

THE STATE OF CALIFORNIA OR ITS OFFICERS OR AGENTS SHALL NOT BE RESPONSIBLE FOR THE ACCURACY OR COMPLETENESS OF SCANNED COPIES OF THIS PLAN SHEET.

METAL BEAM GUARD RAILING

Rte	Loc	POSTMILE FROM	POSTMILE TO	DIRECTION	STRUCTURE /LOCATION	BRIDGE APPROACH/DEPARTURE/QUADRANT	EXISTING LENGTH	REMOVE GUARDRAIL	RECONSTRUCT GUARDRAIL (7' STEEL POST)	RECONSTRUCT GUARDRAIL (WOOD POST)	RECONSTRUCT GUARDRAIL (STEEL POST)	FURNISH RAIL ELEMENT	ADJUST GUARDRAIL	MBGR (STEEL POST)	MBGR (WOOD POST)	MBGR (SPECIAL)	MBGR (7' STEEL POST)	TRANSITION RAILING (TYPE WB)	CRASH CUSHION (TYPE CAT) BACKUP	CRASH CUSHION (TYPE CAT)	END CAP (TYPE TC)	END ANCHOR ASSEMBLY (TYPE SFT)	(N) BURIED POST ANCHOR (N)	ALTERNATIVE IN-LINE TERMINAL SYSTEM	ALTERNATIVE FLARED TERMINAL SYSTEM	REMOVE CRASH CUSHION	ALTERNATIVE CRASH CUSHION	TREATED WOOD WASTE	(N) LAYOUT TYPE	COMMENTS
							LF	LF	LF	LF	LF	EA	LF	LF	LF	LF	LF	EA	EA	EA	EA	EA	EA	EA	EA	EA	EA	LB		
36	15	20.16	20.21	EB	VAN DUZEN Riv Br	APPROACH	262.5	262.5							200.0			1			1				1			4,778	12B	(E) Conc BRIDGE BARRIER TYPE 1.
36	16	20.19	20.21	WB		DEPARTURE	62.5	62.5							25.0			1			1				1			956	12BB	(E) Conc BRIDGE BARRIER TYPE 1, ADD 25' MBGR TO AVOID BLOCKING OVERSIDEDRAIN.
36	17	23.90	23.91	EB	VAN DUZEN Riv Br	DEPARTURE	62.5	62.5										1			1				1			956	12BB	(E) Conc BRIDGE BARRIER TYPE 25
36	18	32.47	32.50	EB			200.0			37.5													1					956	11E	RECONSTRUCT NEAR APPROACH END.
36	19	34.26	34.41	EB			762.5			37.5																		956	11E	REPLACE 6 NON STANDARD POSTS AND BLOCKS
36	20	35.59	35.67	WB			400.0	75.0			325.0														2			6,689	11E	
36	21	40.44	40.45	EB	VAN DUZEN Riv Br	APPROACH	50.0	50.0										1			1				1			956	12B	(E) Conc BRIDGE BARRIER TYPE 25
36	22	40.44	40.45	WB		DEPARTURE	50.0	50.0						25.0				1			1		1					956	12BB	(E) Conc BRIDGE BARRIER TYPE 25
36	23	40.51	40.52	WB		APPROACH	50.0	50.0						25.0				1			1		1					956	12B	(E) Conc BRIDGE BARRIER TYPE 25
36	24	40.52	40.53	EB		DEPARTURE	62.5	62.5										1			1				1			956	12BB	(E) Conc BRIDGE BARRIER TYPE 25
36	25	43.02	43.11	EB			750.0	37.5			437.5														1			7644	11E	RECONSTRUCT MBGR WITHIN R/W, LEAVE EXIST MBGR AS IT IS IN THE PRIVATE PROPERTY. SEE Const DETAIL C-31
36	26	43.12	43.46	EB			1,997.5	37.5			1,700.0														1			26756	11E	RECONSTRUCT MBGR WITHIN R/W, LEAVE EXIST MBGR AS IT IS IN THE PRIVATE PROPERTY. SEE Const DETAIL C-31
36	27	44.08	44.52	EB			2,450.0	75.0			2,375.0														2			38,222	11E	NEST MBGR AT OVERSIDE DRAIN.
36	28	44.60	44.90	EB			1,700.0	75.0			1,625.0														2			26,756	11E	NEST MBGR AT OVERSIDE DRAIN.
						SUBTOTAL	-	900.0	-	75.0	6,462.5	-	-	50.0	225.0	-	-	7	-	-	7	-	3	-	13.0		-	118,493		

(N) - NOT A SEPARATE PAY ITEM, FOR INFORMATION ONLY

SUMMARY OF QUANTITIES

Q-2

STATE OF CALIFORNIA - DEPARTMENT OF TRANSPORTATION
Caltrans® 03 - DESIGN

FUNCTIONAL SUPERVISOR: KEN KEATON
CALCULATED-DESIGNED BY: KRISHNA THAMILSERAN
CHECKED BY: GARY DUGHI
REVISED BY
DATE REVISED

LAST REVISION 00-00-00
DATE PLOTTED => 07-APR-2015
TIME PLOTTED => 13:05

Dist	COUNTY	ROUTE	POST MILES TOTAL PROJECT	SHEET No.	TOTAL SHEETS
01	Hum	36, 96, 169, 211, 254, etc.	Var	64	103

T. Krishnakumary 3-30-15
REGISTERED CIVIL ENGINEER DATE

3-30-15
PLANS APPROVAL DATE

REGISTERED PROFESSIONAL ENGINEER KRISHNAKUMARY THAMILSERAN No. C79630 Exp. 9/30/16 CIVIL STATE OF CALIFORNIA

THE STATE OF CALIFORNIA OR ITS OFFICERS OR AGENTS SHALL NOT BE RESPONSIBLE FOR THE ACCURACY OR COMPLETENESS OF SCANNED COPIES OF THIS PLAN SHEET.

METAL BEAM GUARD RAILING

Rte	Loc	POSTMILE FROM	POSTMILE TO	DIRECTION	STRUCTURE /LOCATION	BRIDGE APPROACH/DEPARTURE/QUADRANT	EXISTING LENGTH	REMOVE GUARDRAIL	RECONSTRUCT GUARDRAIL (7' STEEL POST)	RECONSTRUCT GUARDRAIL (WOOD POST)	RECONSTRUCT GUARDRAIL (STEEL POST)	FURNISH RAIL ELEMENT	ADJUST GUARDRAIL	MBGR (STEEL POST)	MBGR (WOOD POST)	MBGR (SPECIAL)	MBGR (7' STEEL POST)	TRANSITION RAILING (TYPE WB)	CRASH CUSHION (TYPE CAT) BACKUP	CRASH CUSHION (TYPE CAT)	END CAP (TYPE TC)	END ANCHOR ASSEMBLY (TYPE SFT)	(N) BURIED POST ANCHOR	ALTERNATIVE IN-LINE TERMINAL SYSTEM	ALTERNATIVE FLARED TERMINAL SYSTEM	REMOVE CRASH CUSHION	ALTERNATIVE CRASH CUSHION	TREATED WOOD WASTE	(N) LAYOUT TYPE	COMMENTS
							LF	LF	LF	LF	LF	EA	LF	LF	LF	LF	LF	EA	EA	EA	EA	EA	EA	EA	EA	EA	EA	LB		
36	29	45.14	45.36	EB			1,137.5	75.0			1,062.5														2			18,156	11E	NEST MBGR AT OVERSIDE DRAIN.
36	30	45.60	45.65	EB			950.0	75.0			875.0														2			15,289	11E	
96	1	3.75	3.89	EB			750.0	37.5					712.5		12.5										1			956	11E	ADD 12.5' TO COVER UTILITY POLE .
96	2	3.93	3.98	EB			262.5		75.0				112.5															1,911	11E	
96	3	4.30	4.37	EB			375.0	37.5					300.0		12.5										1			956	11E	ADD 12.5' TO COVER UTILITY POLE .
96	4	5.03	5.07	EB			225.0						150.0																11E	
96	5	5.31	5.35	EB			212.5						137.5																11E	
96	6	5.37	5.40	EB			175.0						100.0																11E	
96	7	7.06	7.38	EB			1,700.0		25.0				1,600.0															956	16E	FIXED OBJECT IS UTILITY POLE.
96	8	7.42	7.62	EB			1,037.5		300.0	100.0		1	562.5															6,689	16E	FIXED OBJECT IS UTILITY POLE.
96	9	7.75	7.78	EB			212.5						140.0																11E	
96	10	7.80	7.89	EB			437.5					1	362.5																11E	
96	11	8.14	8.23	EB		APPROACH	412.5	412.5						350.0				1			1				1			6,689	12B	(E) Conc BARRIER TYPE 25,
96	12	9.31	9.33	EB			125.0						50.0																16E	FIXED OBJECT IS HEAD WALL.
						SUBTOTAL	-	637.5	400.0	100.0	1,937.5	2	4,227.5	350.0	25.0	-	-	1	-	-	1	-	-	-	7	-	-	51,602		

(N) - NOT A SEPARATE PAY ITEM, FOR INFORMATION ONLY

SUMMARY OF QUANTITIES

Q-3

STATE OF CALIFORNIA - DEPARTMENT OF TRANSPORTATION
Caltrans® 03 - DESIGN

FUNCTIONAL SUPERVISOR: KEN KEATON
CALCULATED-DESIGNED BY: KRISHNA THAMILSERAN
CHECKED BY: GARY DUGHI
REVISED BY
DATE REVISED

LAST REVISION 00-00-00
DATE PLOTTED => 07-APR-2015
TIME PLOTTED => 13:05

Dist	COUNTY	ROUTE	POST MILES TOTAL PROJECT	SHEET No.	TOTAL SHEETS
01	Hum	36, 96, 169, 211, 254, etc.	Var	65	103

T. Krishnakumary 3-30-15
REGISTERED CIVIL ENGINEER DATE

3-30-15
PLANS APPROVAL DATE

REGISTERED PROFESSIONAL ENGINEER KRISHNAKUMARY THAMILSERAN No. C79630 Exp. 9/30/16 CIVIL STATE OF CALIFORNIA

THE STATE OF CALIFORNIA OR ITS OFFICERS OR AGENTS SHALL NOT BE RESPONSIBLE FOR THE ACCURACY OR COMPLETENESS OF SCANNED COPIES OF THIS PLAN SHEET.

METAL BEAM GUARD RAILING

Rte	Loc	POSTMILE FROM	POSTMILE TO	DIRECTION	STRUCTURE /LOCATION	BRIDGE APPROACH/DEPARTURE/QUADRANT	EXISTING LENGTH	REMOVE GUARDRAIL	RECONSTRUCT GUARDRAIL (7' STEEL POST)	RECONSTRUCT GUARDRAIL (WOOD POST)	RECONSTRUCT GUARDRAIL (STEEL POST)	FURNISH RAIL ELEMENT	ADJUST GUARDRAIL	MBGR (STEEL POST)	MBGR (WOOD POST)	MBGR (SPECIAL)	MBGR (7' STEEL POST)	TRANSITION RAILING (TYPE WB)	CRASH CUSHION (TYPE CAT) BACKUP	CRASH CUSHION (TYPE CAT)	END CAP (TYPE TC)	END ANCHOR ASSEMBLY (TYPE SFT)	(N) BURIED POST ANCHOR	ALTERNATIVE IN-LINE TERMINAL SYSTEM	ALTERNATIVE FLARED TERMINAL SYSTEM	REMOVE CRASH CUSHION	ALTERNATIVE CRASH CUSHION	TREATED WOOD WASTE	(N) LAYOUT TYPE	COMMENTS
							LF	LF	LF	LF	LF	EA	LF	LF	LF	LF	LF	EA	EA	EA	EA	EA	EA	EA	EA	EA	EA	EA	LB		
96	13	9.32	9.35	WB			100.0						25.0																16E	FIXED OBJECT IS HEADWALL.
96	14	10.18	10.20	WB			125.0						50.0																16E	FIXED OBJECT IS HEADWALL.
96	15	10.18	10.20	EB			100.0						25.0																16E	FIXED OBJECT IS HEADWALL.
96	16	10.37	10.42	EB			225.0						150.0																11E	
96	17	10.54	10.57	EB			125.0						50.0																11E	
96	18	10.58	10.62	EB			200.0						125.0																11E	
96	19	10.64	10.70	EB			337.5			50.0			212.5															956	11E	FIXED OBJECT IS UTILITY POLE.
96	20	13.25	13.26	WB	HOSTLER Cr Br	DEPARTURE	75.0	75.0										1			1			1				1,911	12AA	(E) Conc BRIDGE BARRIER TYPE 25
96	21	13.25	13.26	EB		APPROACH	62.5	62.5										1			1				1			956	12B	(E) Conc BRIDGE BARRIER TYPE 25
96	22	13.28	13.29	WB		APPROACH	62.5	62.5										1			1				1			956	12B	(E) Conc BRIDGE BARRIER TYPE 25
96	23	13.28	13.34	EB		DEPARTURE	275.0	275.0						212.5				1			1				1			4,778	12BB	(E) Conc BRIDGE BARRIER TYPE 25
96	24	13.34	13.41	EB			300.0						225.0																11E	
96	25	14.53	14.54	EB	MILL Cr Br	APPROACH	62.5	62.5										1			1				1			956	12B	(E) Conc BRIDGE BARRIER TYPE 25
96	26	14.53	14.54	WB		DEPARTURE	62.5	62.5										1			1				1			956	12BB	(E) Conc BRIDGE BARRIER TYPE 25
					SUBTOTAL			600.0	-	50.0	-	-	862.5	212.5	-	-	-	6	-	-	6	-	-	1	5	-	-	11,469		

(N) - NOT A SEPARATE PAY ITEM, FOR INFORMATION ONLY

SUMMARY OF QUANTITIES

Q-4

STATE OF CALIFORNIA - DEPARTMENT OF TRANSPORTATION
Caltrans® 03 - DESIGN

FUNCTIONAL SUPERVISOR: KEN KEATON
CALCULATED-DESIGNED BY: KRISHNA THAMILSERAN
CHECKED BY: GARY DUGHI
REVISED BY / DATE REVISED

LAST REVISION 00-00-00
DATE PLOTTED => 07-APR-2015
TIME PLOTTED => 13:05

Dist	COUNTY	ROUTE	POST MILES TOTAL PROJECT	SHEET No.	TOTAL SHEETS
01	Hum	36, 96, 169, 211, 254, etc.	Var	66	103

T. Krishnakumary 3-30-15
REGISTERED CIVIL ENGINEER DATE

3-30-15
PLANS APPROVAL DATE

REGISTERED PROFESSIONAL ENGINEER KRISHNAKUMARY THAMILSERAN No. C79630 Exp. 9/30/16 CIVIL STATE OF CALIFORNIA

THE STATE OF CALIFORNIA OR ITS OFFICERS OR AGENTS SHALL NOT BE RESPONSIBLE FOR THE ACCURACY OR COMPLETENESS OF SCANNED COPIES OF THIS PLAN SHEET.

METAL BEAM GUARD RAILING

Rte	Loc	POSTMILE FROM	POSTMILE TO	DIRECTION	STRUCTURE /LOCATION	BRIDGE APPROACH/DEPARTURE/QUADRANT	EXISTING LENGTH	REMOVE GUARDRAIL	RECONSTRUCT GUARDRAIL (7' STEEL POST)	RECONSTRUCT GUARDRAIL (WOOD POST)	RECONSTRUCT GUARDRAIL (STEEL POST)	FURNISH RAIL ELEMENT	ADJUST GUARDRAIL	MBGR (STEEL POST)	MBGR (WOOD POST)	MBGR (SPECIAL)	MBGR (7' STEEL POST)	TRANSITION RAILING (TYPE WB)	CRASH CUSHION (TYPE CAT) BACKUP	CRASH CUSHION (TYPE CAT)	END CAP (TYPE TC)	END ANCHOR ASSEMBLY (TYPE SFT)	(N) BURIED POST ANCHOR	ALTERNATIVE IN-LINE TERMINAL SYSTEM	ALTERNATIVE FLARED TERMINAL SYSTEM	REMOVE CRASH CUSHION	ALTERNATIVE CRASH CUSHION	TREATED WOOD WASTE	(N) LAYOUT TYPE	COMMENTS
							LF	LF	LF	LF	LF	EA	LF	LF	LF	LF	LF	EA	EA	EA	EA	EA	EA	EA	EA	EA	EA	LB		
96	27	14.58	14.59	EB	Mill Cr Br	DEPARTURE	62.5	62.5										1			1				1			956	12B	(E) Conc BRIDGE BARRIER TYPE 25
96	28	14.58	14.59	WB		APPROACH	62.5	62.5										1			1				1			956	12BB	(E) Conc BRIDGE BARRIER TYPE 25
96	29	18.83	18.86	EB			150.0	75.0																	2			1911	11E	
96	30	19.06	19.10	WB			200.0	75.0			125.0			12.5											2			3,822	11E	ADD 12.5' TO COVER UTILITY POLE .
96	31	19.26	19.29	WB			175.0	75.0	100.0																2			2,867	16E	FIXED OBJECT IS UTILITY POLE. MBGR IS ATTACHED TO THE OUTSIDE OF WOODEN CRIP.
96	32	19.77	19.88	WB			600.0	75.0	100.0		425.0														2			9,556	16E	FIXED OBJECT IS UTILITY POLE.
96	33	20.97	20.99	WB			137.5	75.0			62.5			12.5											2			2,867	11E	ADD 12.5' TO COVER UTILITY POLE .
96	34	21.13	21.16	EB			150.0	75.0			75.0														2			2,867	11E	
96	35	23.40	23.47	EB			362.5	75.0			287.5														2			5,733	11E	
96	36	23.91	23.98	EB			350.0	75.0	275.0																2			5,733	11E	
96	37	24.06	24.13	EB			387.5	75.0	312.5																2			6,689	11E	
96	38	24.14	24.19	EB			225.0						150.0																11E	
96	39	24.78	24.83	EB			262.5	75.0	187.5																2			4,778	11E	
96	40	24.85	24.98	EB			225.0	50.0	175.0														2					3,622	11F	
						SUBTOTAL	-	925.0	1150.0	-	975.0	-	150.0	25.0	-	-	-	2	-	-	2	-	2	-	22	-	-	52,357		

(N) - NOT A SEPARATE PAY ITEM, FOR INFORMATION ONLY

SUMMARY OF QUANTITIES

Q-5

STATE OF CALIFORNIA - DEPARTMENT OF TRANSPORTATION
Caltrans® 03 - DESIGN

FUNCTIONAL SUPERVISOR: KEN KEATON
CALCULATED-DESIGNED BY: KRISHNA THAMILSERAN
CHECKED BY: GARY DUGHI
REVISED BY
DATE REVISED

LAST REVISION 00-00-00
DATE PLOTTED => 07-APR-2015
TIME PLOTTED => 13:05

Dist	COUNTY	ROUTE	POST MILES TOTAL PROJECT	SHEET No.	TOTAL SHEETS
01	Hum	36, 96, 169, 211, 254, etc.	Var	67	103

T. Krishnakumary 3-30-15
REGISTERED CIVIL ENGINEER DATE

3-30-15
PLANS APPROVAL DATE

REGISTERED PROFESSIONAL ENGINEER KRISHNAKUMARY THAMILSERAN No. C79630 Exp. 9/30/16 CIVIL STATE OF CALIFORNIA

THE STATE OF CALIFORNIA OR ITS OFFICERS OR AGENTS SHALL NOT BE RESPONSIBLE FOR THE ACCURACY OR COMPLETENESS OF SCANNED COPIES OF THIS PLAN SHEET.

METAL BEAM GUARD RAILING

Rte	Loc	POSTMILE FROM	POSTMILE TO	DIRECTION	STRUCTURE /LOCATION	BRIDGE APPROACH/DEPARTURE/QUADRANT	EXISTING LENGTH	REMOVE GUARDRAIL	RECONSTRUCT GUARDRAIL (7' STEEL POST)	RECONSTRUCT GUARDRAIL (WOOD POST)	RECONSTRUCT GUARDRAIL (STEEL POST)	FURNISH RAIL ELEMENT	ADJUST GUARDRAIL	MBGR (STEEL POST)	MBGR (WOOD POST)	MBGR (SPECIAL)	MBGR (7' STEEL POST)	TRANSITION RAILING (TYPE WB)	CRASH CUSHION (TYPE CAT) BACKUP	CRASH CUSHION (TYPE CAT)	END CAP (TYPE TC)	END ANCHOR ASSEMBLY (TYPE SFT)	(N) BURIED POST ANCHOR	ALTERNATIVE IN-LINE TERMINAL SYSTEM	ALTERNATIVE FLARED TERMINAL SYSTEM	REMOVE CRASH CUSHION	ALTERNATIVE CRASH CUSHION	TREATED WOOD WASTE	(N) LAYOUT TYPE	COMMENTS
							LF	LF	LF	LF	LF	EA	LF	LF	LF	LF	LF	EA	EA	EA	EA	EA	EA	EA	EA	EA	EA	LB		
96	41	24.94	25.08	EB			700.0	75.0	625.0																2			11,467	11E	
96	42	25.16	25.24	EB			425.0	75.0	350.0																2			6,689	11E	
96	43	25.29	25.35	EB			537.5	75.0	462.5																2			8,600	16E	FIXED OBJECT IS UTILITY POLE
96	44	26.42	26.52	EB			500.0	75.0	425.0																2			7,644	11E	
96	45	26.53	26.68	EB			850.0	75.0	775.0																2			13,378	11E	
96	46	27.21	27.35	EB			775.0	75.0	700.0																2			12,422	11E	
96	47	29.28	29.34	EB			312.5	75.0	237.5																2			4,778	11E	
96	48	29.48	29.53	EB			262.5	75.0	187.5																2			4,778	11E	
96	49	29.56	29.61	EB			237.5	75.0	162.5																2			3,822	11E	
96	50	29.61	29.66	EB			250.0	75.0	175.0																2			3,822	11E	
96	51	30.10	30.28	EB			1,000.0	87.5	912.5														1		1			15,289	11H	
96	52	31.13	31.19	EB			400.0						368.5																	
96	53	31.24	31.34	EB			550.0						487.0																	
96	54	31.39	31.64	EB			1,250.0	75.0	1,175.0																2			19,111	11E	
						SUBTOTAL	-	912.5	6,187.5	-	- -	-	855.5	-	-	-	-	-	-	-	-	-	1	-	23	-	-	111,800		

(N) - NOT A SEPARATE PAY ITEM, FOR INFORMATION ONLY

SUMMARY OF QUANTITIES

Q-6

STATE OF CALIFORNIA - DEPARTMENT OF TRANSPORTATION
Caltrans® 03 - DESIGN

FUNCTIONAL SUPERVISOR: KEN KEATON
CALCULATED-DESIGNED BY: KRISHNA THAMILSERAN
CHECKED BY: GARY DUGHI
REVISED BY
DATE REVISED

LAST REVISION 00-00-00
DATE PLOTTED => 07-APR-2015
TIME PLOTTED => 13:05

Dist	COUNTY	ROUTE	POST MILES TOTAL PROJECT	SHEET No.	TOTAL SHEETS
01	Hum	36, 96, 169, 211, 254, etc.	Var	68	103

T. Krishnakumary 3-30-15
REGISTERED CIVIL ENGINEER DATE

3-30-15
PLANS APPROVAL DATE

REGISTERED PROFESSIONAL ENGINEER
KRISHNAKUMARY THAMILSERAN
No. C79630
Exp. 9/30/16
CIVIL
STATE OF CALIFORNIA

THE STATE OF CALIFORNIA OR ITS OFFICERS OR AGENTS SHALL NOT BE RESPONSIBLE FOR THE ACCURACY OR COMPLETENESS OF SCANNED COPIES OF THIS PLAN SHEET.

METAL BEAM GUARD RAILING

Rte	Loc	POSTMILE FROM	POSTMILE TO	DIRECTION	STRUCTURE /LOCATION	BRIDGE APPROACH/DEPARTURE/QUADRANT	EXISTING LENGTH	REMOVE GUARDRAIL	RECONSTRUCT GUARDRAIL (7' STEEL POST)	RECONSTRUCT GUARDRAIL (WOOD POST)	RECONSTRUCT GUARDRAIL (STEEL POST)	FURNISH RAIL ELEMENT	ADJUST GUARDRAIL	MBGR (STEEL POST)	MBGR (WOOD POST)	MBGR (SPECIAL)	MBGR (7' STEEL POST)	TRANSITION RAILING (TYPE WB)	CRASH CUSHION (TYPE CAT) BACKUP	CRASH CUSHION (TYPE CAT)	END CAP (TYPE TC)	END ANCHOR ASSEMBLY (TYPE SFT)	(N) BURIED POST ANCHOR	ALTERNATIVE IN-LINE TERMINAL SYSTEM	ALTERNATIVE FLARED TERMINAL SYSTEM	REMOVE CRASH CUSHION	ALTERNATIVE CRASH CUSHION	TREATED WOOD WASTE	(N) LAYOUT TYPE	COMMENTS
							LF	LF	LF	LF	LF	EA	LF	LF	LF	LF	LF	EA	EA	EA	EA	EA	EA	EA	EA	EA	EA	LB		
96	55	31.68	32.02	EB			1,637.5	75.0	1,562.5																2			25,800	11E	
96	56	31.68	31.73	WB			262.5		262.5														2					4,778	11F	
96	57	32.07	32.14	EB			387.5	75.0	312.5																2			6,687	11E	
96	58	32.30	32.39	EB			450.0	75.0	375.0			2													2			7,644	11E	
96	59	32.47	32.49	EB			137.5	75.0	50.0		12.5														2			2,867	11E	15' MBGR (SLOPE RETAINING WALL), SEE CONSTRUCTION DETAIL C-39 AND SUMMARY OF QUANTITY Q-23 FOR QUANTITY.
96	60	33.17	33.31	EB			712.5	75.0	637.5																2			11,467	11E	
96	61	33.21	33.27	WB			312.5	37.5	275.0														1		1			4,778	11L	
96	62	33.42	33.53	EB			587.5	75.0	512.5																2			9,556	11E	
96	63	33.88	34.02	EB			650.0	75.0	575.0																2			10,511	11E	
96	64	33.91	33.98	WB			375.0	87.5	287.5															1	1			5,733	11J	
96	65	34.05	34.13	EB			475.0	75.0	400.0																2			7,644	11E	
96	66	35.00	35.06	EB			337.5	75.0	262.5																2			5,733	11E	
96	67	35.09	35.14	EB			225.0	75.0	150.0																2			3,622	11E	
96	68	35.37	35.40	EB			162.5	75.0	87.5																2			2,867	11E	
						SUBTOTAL	-	950.0	5750.0	-	12.5	2	-	-	-	-	-	-	-	-	-	-	3	1	24	-	-	109,687		

(N) - NOT A SEPARATE PAY ITEM, FOR INFORMATION ONLY

SUMMARY OF QUANTITIES

Q-7

STATE OF CALIFORNIA - DEPARTMENT OF TRANSPORTATION
Caltrans
03 - DESIGN

FUNCTIONAL SUPERVISOR: KEN KEATON
CALCULATED-DESIGNED BY: KRISHNA THAMILSERAN
CHECKED BY: GARY DUGHI
REVISED BY
DATE REVISED

LAST REVISION 00-00-00
DATE PLOTTED => 07-APR-2015
TIME PLOTTED => 13:05

Dist	COUNTY	ROUTE	POST MILES TOTAL PROJECT	SHEET No.	TOTAL SHEETS
01	Hum	36, 96, 169, 211, 254, etc.	Var	69	103

T. Krishnakumary 3-30-15
REGISTERED CIVIL ENGINEER DATE

3-30-15
PLANS APPROVAL DATE

REGISTERED PROFESSIONAL ENGINEER KRISHNAKUMARY THAMILSERAN No. C79630 Exp. 9/30/16 CIVIL STATE OF CALIFORNIA

THE STATE OF CALIFORNIA OR ITS OFFICERS OR AGENTS SHALL NOT BE RESPONSIBLE FOR THE ACCURACY OR COMPLETENESS OF SCANNED COPIES OF THIS PLAN SHEET.

METAL BEAM GUARD RAILING

Rte	Loc	POSTMILE FROM	POSTMILE TO	DIRECTION	STRUCTURE /LOCATION	BRIDGE APPROACH/DEPARTURE/QUADRANT	EXISTING LENGTH	REMOVE GUARDRAIL	RECONSTRUCT GUARDRAIL (7' POST)	RECONSTRUCT GUARDRAIL (WOOD POST)	RECONSTRUCT GUARDRAIL (STEEL POST)	FURNISH RAIL ELEMENT	ADJUST GUARDRAIL	MBGR (STEEL POST)	MBGR (WOOD POST)	MBGR (SPECIAL)	MBGR (7' STEEL POST)	TRANSITION RAILING (TYPE WB)	CRASH CUSHION (TYPE CAT) BACKUP	CRASH CUSHION (TYPE CAT)	END CAP (TYPE TC)	END ANCHOR ASSEMBLY (TYPE SFT)	(N) BURIED POST ANCHOR	ALTERNATIVE IN-LINE TERMINAL SYSTEM	ALTERNATIVE FLARED TERMINAL SYSTEM	REMOVE CRASH CUSHION	ALTERNATIVE CRASH CUSHION	TREATED WOOD WASTE	(N) LAYOUT TYPE	COMMENTS
							LF	LF	LF	LF	LF	EA	LF	LF	LF	LF	LF	EA	EA	EA	EA	EA	EA	EA	EA	EA	EA	LB		
96	69	35.60	35.64	EB			200.0	75.0	125.0																2			3,822	11E	
96	70	35.67	35.89	EB			1,012.5	75.0	937.5																2			16,244	11E	
96	71	36.32	36.37	EB			275.0	75.0	200.0																2			4,778	11E	
96	72	36.33	36.38	WB			262.5	37.5	225.0														1		1			4,778	11L	
96	73	36.53	36.57	EB			237.5	75.0	162.5																2			3,822	11E	
96	74	39.49	39.50	EB	PEARCH Cr Br	APPROACH	62.5	62.5										1			1				1			956	12B	(E) BRIDGE BARRIER TYPE 9-11, REPLACE ANCHOR BLOCK, SEE CONSTRUCTION DETAIL
96	75	39.49	39.50	WB		DEPARTURE	62.5	62.5										1			1				1			956	12BB	(E) BRIDGE BARRIER TYPE 9-11, REPLACE ANCHOR BLOCK, SEE CONSTRUCTION DETAIL
96	76	39.55	39.56	EB		DEPARTURE	62.5	62.5										1			1				1			956	12BB	(E) BRIDGE BARRIER TYPE 9-11, REPLACE ANCHOR BLOCK, SEE CONSTRUCTION DETAIL
96	77	39.55	39.56	WB		APPROACH	62.5	62.5										1			1				1			956	12B	(E) BRIDGE BARRIER TYPE 9-11, REPLACE ANCHOR BLOCK, SEE CONSTRUCTION DETAIL
96	78	40.76	40.82	WB			162.5	75.0			87.5														2			2,867	11E	
96	79	41.70	41.72	WB			100.0	75.0			25.0			12.5											2			1,911	11E	
96	80	41.84	41.92	WB			387.5	75.0	37.5		275.0			12.5											2			6,687	11E	52.5' MBGR (SLOPE RETAINING WALL), SEE CONSTRUCTION DETAIL C-39 AND SUMMARY OF QUANTITY Q-23 FOR QUANTITY.
96	81	42.69	42.73	WB			175.0	75.0					100.0												2			3,872	11E	
96	82	42.83	42.85	WB			87.5	75.0	12.5								12.5								2			1,911	11E	
						SUBTOTAL	-	962.5	1,700	-	387.5	-	100.0	25.0	-	-	12.5	4.0	-	-	4	-	1	-	23.0	-	-	54,516		

(N) - NOT A SEPARATE PAY ITEM, FOR INFORMATION ONLY

SUMMARY OF QUANTITIES

Q-8

STATE OF CALIFORNIA - DEPARTMENT OF TRANSPORTATION
03 - DESIGN
FUNCTIONAL SUPERVISOR: KEN KEATON
CALCULATED-DESIGNED BY: KRISHNA THAMILSERAN
CHECKED BY: GARY DUGHI
REVISED BY / DATE REVISED

LAST REVISION 00-00-00
DATE PLOTTED => 07-APR-2015
TIME PLOTTED => 13:05

Dist	COUNTY	ROUTE	POST MILES TOTAL PROJECT	SHEET No.	TOTAL SHEETS
01	Hum	36, 96, 169, 211, 254, etc.	Var	70	103

T. Krishnakumary 3-30-15
REGISTERED CIVIL ENGINEER DATE

3-30-15
PLANS APPROVAL DATE

REGISTERED PROFESSIONAL ENGINEER KRISHNAKUMARY THAMILSERAN No. C79630 Exp. 9/30/16 CIVIL STATE OF CALIFORNIA

THE STATE OF CALIFORNIA OR ITS OFFICERS OR AGENTS SHALL NOT BE RESPONSIBLE FOR THE ACCURACY OR COMPLETENESS OF SCANNED COPIES OF THIS PLAN SHEET.

METAL BEAM GUARD RAILING

Rte	Loc	POSTMILE FROM	POSTMILE TO	DIRECTION	STRUCTURE /LOCATION	BRIDGE APPROACH/DEPARTURE/QUADRANT	EXISTING LENGTH	REMOVE GUARDRAIL	RECONSTRUCT GUARDRAIL (7' STEEL POST)	RECONSTRUCT GUARDRAIL (WOOD POST)	RECONSTRUCT GUARDRAIL (STEEL POST)	FURNISH RAIL ELEMENT	ADJUST GUARDRAIL	MBGR (STEEL POST)	MBGR (WOOD POST)	MBGR (SPECIAL)	MBGR (7' STEEL POST)	TRANSITION RAILING (TYPE WB)	CRASH CUSHION (TYPE CAT) BACKUP	CRASH CUSHION (TYPE CAT)	END CAP (TYPE TC)	END ANCHOR ASSEMBLY (TYPE SFT)	(N) BURIED POST ANCHOR	ALTERNATIVE IN-LINE TERMINAL SYSTEM	ALTERNATIVE FLARED TERMINAL SYSTEM	REMOVE CRASH CUSHION	ALTERNATIVE CRASH CUSHION	TREATED WOOD WASTE	(N) LAYOUT TYPE	COMMENTS
							LF	LF	LF	LF	LF	EA	LF	LF	LF	LF	LF	EA	EA	EA	EA	EA	EA	EA	EA	EA	EA	LB		
96	83	43.38	43.51	WB			687.5	75.0			612.5														2			10,511	11E	
96	84	43.53	43.60	WB			387.5	75.0			312.5														2			6,687	11E	
96	85	44.28	44.29	WB		DEPARTURE	62.5	62.5										1			1				1			956	12B	RETAINING WALL - BARRIER TYPE 736
96	86	44.35	44.36	WB		APPROACH	62.5	62.5										1			1				1			956	12BB	RETAINING WALL - BARRIER TYPE 736
169	1	25.80	25.81	WB	COON Cr Br	DEPARTURE	87.5	87.5						62.5				1			1		1					1,911	12CC	Conc BARRIER TYPE 25
169	2	25.80	25.81	EB		APPROACH	112.5	112.5						50.0				1			1				1			1,911	12B	Conc BARRIER TYPE 25
169	3	25.86	25.87	WB		APPROACH	87.5	87.5						62.5				1			1		1					1,911	12C	Conc BARRIER TYPE 25
169	4	26.98	27.01	EB	MINERS Cr Br	APPROACH	62.5	62.5										1			1				1			956	12BB	Conc BARRIER TYPE 25
169	5	27.00	27.01	WB		DEPARTURE	62.5	62.5						37.5				1			1		1					956	12C	Conc BARRIER TYPE 25
169	6	27.02	27.03	EB		DEPARTURE	62.5	62.5										1			1				1			956	12B	Conc BARRIER TYPE 25
169	7	27.02	27.03	WB		APPROACH	62.5	62.5						37.5				1			1		1					956	12CC	Conc BARRIER TYPE 25
169	8	29.82	29.83	EB	ROCK CHUTE Cr	APPROACH	25.0	25.0																			1	956		Conc BARRIER TYPE 25, SEE CONSTRUCTION DETAIL C-31
169	9	29.82	29.83	WB		DEPARTURE	62.5	62.5						37.5				1			1		1					956	12CC	Conc BARRIER TYPE 25
169	10	29.84	29.85	EB		DEPARTURE	62.5	62.5										1			1			1				956		Conc BARRIER TYPE 25
						SUBTOTAL	-	962.5	-	-	925.0	-	-	287.5	-	-	-	11.0	-	-	11	-	5	1	9	-	1	31,535		

(N) - NOT A SEPARATE PAY ITEM, FOR INFORMATION ONLY

SUMMARY OF QUANTITIES

Q-9

STATE OF CALIFORNIA - DEPARTMENT OF TRANSPORTATION
Caltrans® 03 - DESIGN

FUNCTIONAL SUPERVISOR: KEN KEATON
CALCULATED-DESIGNED BY: KRISHNA THAMILSERAN
CHECKED BY: GARY DUGHI
REVISED BY
DATE REVISED

LAST REVISION 00-00-00
DATE PLOTTED => 07-APR-2015
TIME PLOTTED => 13:05

Dist	COUNTY	ROUTE	POST MILES TOTAL PROJECT	SHEET No.	TOTAL SHEETS
01	Hum	36, 96, 169, 211, 254, etc.	Var	71	103

T. Krishnakumary 3-30-15
REGISTERED CIVIL ENGINEER DATE

3-30-15
PLANS APPROVAL DATE

REGISTERED PROFESSIONAL ENGINEER
KRISHNAKUMARY THAMILSERAN
No. C79630
Exp. 9/30/16
CIVIL
STATE OF CALIFORNIA

THE STATE OF CALIFORNIA OR ITS OFFICERS OR AGENTS SHALL NOT BE RESPONSIBLE FOR THE ACCURACY OR COMPLETENESS OF SCANNED COPIES OF THIS PLAN SHEET.

METAL BEAM GUARD RAILING

Rte	Loc	POSTMILE FROM	POSTMILE TO	DIRECTION	STRUCTURE /LOCATION	BRIDGE APPROACH/DEPARTURE/QUADRANT	EXISTING LENGTH	REMOVE GUARDRAIL	RECONSTRUCT GUARDRAIL (7' STEEL POST)	RECONSTRUCT GUARDRAIL (WOOD POST)	RECONSTRUCT GUARDRAIL (STEEL POST)	FURNISH RAIL ELEMENT	ADJUST GUARDRAIL	MBGR (STEEL POST)	MBGR (WOOD POST)	MBGR (SPECIAL)	MBGR (7' STEEL POST)	TRANSITION RAILING (TYPE WB)	CRASH CUSHION (TYPE CAT) BACKUP	CRASH CUSHION (TYPE CAT)	END CAP (TYPE TC)	END ANCHOR ASSEMBLY (TYPE SFT)	(N) BURIED POST ANCHOR	ALTERNATIVE IN-LINE TERMINAL SYSTEM	ALTERNATIVE FLARED TERMINAL SYSTEM	REMOVE CRASH CUSHION	ALTERNATIVE CRASH CUSHION	TREATED WOOD WASTE	(N) LAYOUT TYPE	COMMENTS
							LF	LF	LF	LF	LF	EA	LF	LF	LF	LF	LF	EA	EA	EA	EA	EA	EA	EA	EA	EA	EA	LB		
169	11	29.84	29.85	WB		APPROACH	62.5	62.5										1			1			1				956	12A	Conc BARRIER TYPE 25
169	12	33.60	33.65	EB			250.0	87.5	50.0															1	1			3,622	11H	30.0' MBGR (SLOPE RETAINING WALL), SEE CONSTRUCTION DETAIL C-39 AND SUMMARY OF QUANTITY Q-23 FOR QUANTITY.
211	1	74.62	74.64	SB	SALT Cr OVERFLOW	DEPARTURE	50.0	50.0										1			1				1			956	12BB	Conc BARRIER TYPE 1
211	2	74.63	74.64	NB		APPROACH	50.0	50.0										1			1				1			956	12B	Conc BARRIER TYPE 1
211	3	74.67	74.68	NB		DEPARTURE	50.0	50.0										1			1				1			956	12BB	Conc BARRIER TYPE 1
211	4	74.67	74.68	SB		APPROACH	50.0	50.0										1			1				1			956	12B	Conc BARRIER TYPE 1
211	5	76.29	76.30	NB	OLD Riv	APPROACH	50.0	50.0										1			1				1			956	12B	Conc BARRIER TYPE 1
211	6	76.29	76.30	SB		DEPARTURE	50.0	50.0										1			1				1			956	12BB	Conc BARRIER TYPE 1
211	7	76.34	76.35	NB		DEPARTURE	50.0	50.0										1			1				1			956	12BB	Conc BARRIER TYPE 1
211	8	76.34	76.35	SB		APPROACH	50.0	50.0										1			1				1			956	12B	Conc BARRIER TYPE 1
211	9	76.45	76.46	NB	OLD Riv	APPROACH	50.0	50.0										1			1				1			956	12B	Conc BARRIER TYPE 1
211	10	76.45	76.46	SB		DEPARTURE	50.0	50.0										1			1				1			956	12BB	Conc BARRIER TYPE 1
211	11	76.50	76.51	NB		DEPARTURE	50.0	50.0										1			1				1			956	12BB	Conc BARRIER TYPE 1
211	12	76.50	76.51	SB		APPROACH	50.0	50.0										1			1				1			956	12B	Conc BARRIER TYPE 1
						SUBTOTAL	-	750.0	50.0	-	-	-	-	-	-		-	13	-	-	13	-	-	2	13	-	-	16,050		

(N) - NOT A SEPARATE PAY ITEM, FOR INFORMATION ONLY

SUMMARY OF QUANTITIES

Q-10

STATE OF CALIFORNIA - DEPARTMENT OF TRANSPORTATION
Caltrans 03 - DESIGN

FUNCTIONAL SUPERVISOR: KEN KEATON
CALCULATED-DESIGNED BY: KRISHNA THAMILSERAN
CHECKED BY: GARY DUGHI
REVISED BY
DATE REVISED

LAST REVISION 00-00-00
DATE PLOTTED => 07-APR-2015
TIME PLOTTED => 13:05

Dist	COUNTY	ROUTE	POST MILES TOTAL PROJECT	SHEET No.	TOTAL SHEETS
01	Hum	36, 96, 169, 211, 254, etc.	Var	72	103

T. Krishnakumary 3-30-15
REGISTERED CIVIL ENGINEER DATE

3-30-15
PLANS APPROVAL DATE

REGISTERED PROFESSIONAL ENGINEER KRISHNAKUMARY THAMILSERAN No. C79630 Exp. 9/30/16 CIVIL STATE OF CALIFORNIA

THE STATE OF CALIFORNIA OR ITS OFFICERS OR AGENTS SHALL NOT BE RESPONSIBLE FOR THE ACCURACY OR COMPLETENESS OF SCANNED COPIES OF THIS PLAN SHEET.

METAL BEAM GUARD RAILING

Rte	Loc	POSTMILE FROM	POSTMILE TO	DIRECTION	STRUCTURE /LOCATION	BRIDGE APPROACH/DEPARTURE/QUADRANT	EXISTING LENGTH	REMOVE GUARDRAIL	RECONSTRUCT GUARDRAIL (7' STEEL POST)	RECONSTRUCT GUARDRAIL (WOOD POST)	RECONSTRUCT GUARDRAIL (STEEL POST)	FURNISH RAIL ELEMENT	ADJUST GUARDRAIL	MBGR (STEEL POST)	MBGR (WOOD POST)	MBGR (SPECIAL)	MBGR (7' STEEL POST)	TRANSITION RAILING (TYPE WB)	CRASH CUSHION (TYPE CAT) BACKUP	CRASH CUSHION (TYPE CAT)	END CAP (TYPE TC)	END ANCHOR ASSEMBLY (TYPE SFT)	(N) BURIED POST ANCHOR	ALTERNATIVE IN-LINE TERMINAL SYSTEM	ALTERNATIVE FLARED TERMINAL SYSTEM	REMOVE CRASH CUSHION	ALTERNATIVE CRASH CUSHION	TREATED WOOD WASTE	(N) LAYOUT TYPE	COMMENTS
							LF	LF	LF	LF	LF	EA	LF	LF	LF	LF	LF	EA	EA	EA	EA	EA	EA	EA	EA	EA	EA	LB		
211	13	78.56	78.57	NB			25.0	25.0																				956		REMOVE RAILROAD EQUIPMENTS, SEE CONSTRUCTION DETAIL C-40.
211	14	78.56	78.58	SB			62.5	62.5																				956		REMOVE RAILROAD EQUIPMENTS, SEE CONSTRUCTION DETAIL C-40.
211	15	79.13	79.19	NB			218.5	37.5			181.0												1		1			3,822	11L	
211	16	79.13	79.19	SB			287.5	87.5			200.0													1	1			4,778	16J	FIXED OBJECT BRIDGE PILLERS. NEST AT OVERSIDE DRAIN.
254	1	3.08	3.11	NB			125.0	75.0			50.0														2			1,911	16E	FIXED OBJECT IS TREE.
254	2	3.17	3.18	NB			62.5	62.5						25.0											2			956	11E	
254	3	3.21	3.28	NB			362.5	87.5			275.0													1	1			5,773	11J	
254	4	4.80	4.83	SB			175.0	75.0			100.0														2			2,867	11E	
254	5	8.30	8.34	SB			250.0	75.0			175.0														2			3,622	11E	
254	6	9.54	9.57	SB			275.0	75.0			200.0														2			4,778	11E	
254	7	11.83	11.84	SB	MYERS FLAT	DEPARTURE	62.5	62.5										1			1				1			956	12BB	(E) Conc BRIDGE BARRIER TYPE 25
254	8	11.88	11.90	SB	MYERS FLAT	APPROACH	62.5	62.5										1			1				1			956	12B	(E) Conc BRIDGE BARRIER TYPE 25
254	9	12.31	12.35	NB			200.0	75.0			125.0														2			3,822	11E	
254	10	12.31	12.35	SB			200.0	75.0			125.0														2			3,822	11E	
						SUBTOTAL	-	937.5	-	-	1,431.0	-	-	25.0	-	-		2	-	-	2	-	1	2	19	-	-	39,975		

(N) - NOT A SEPARATE PAY ITEM, FOR INFORMATION ONLY

SUMMARY OF QUANTITIES

Q-11

STATE OF CALIFORNIA - DEPARTMENT OF TRANSPORTATION
Caltrans® 03 - DESIGN

FUNCTIONAL SUPERVISOR: KEN KEATON
CALCULATED-DESIGNED BY: KRISHNA THAMILSERAN
CHECKED BY: GARY DUGHI
REVISED BY
DATE REVISED

LAST REVISION 00-00-00
DATE PLOTTED => 07-APR-2015
TIME PLOTTED => 13:05

Dist	COUNTY	ROUTE	POST MILES TOTAL PROJECT	SHEET No.	TOTAL SHEETS
01	Hum	36, 96, 169, 211, 254, etc.	Var	73	103

T. Krishnakumary 3-30-15
REGISTERED CIVIL ENGINEER DATE

3-30-15
PLANS APPROVAL DATE

REGISTERED PROFESSIONAL ENGINEER KRISHNAKUMARY THAMILSERAN No. C79630 Exp. 9/30/16 CIVIL STATE OF CALIFORNIA

THE STATE OF CALIFORNIA OR ITS OFFICERS OR AGENTS SHALL NOT BE RESPONSIBLE FOR THE ACCURACY OR COMPLETENESS OF SCANNED COPIES OF THIS PLAN SHEET.

METAL BEAM GUARD RAILING

Rte	Loc	POSTMILE FROM	POSTMILE TO	DIRECTION	STRUCTURE/ LOCATION	BRIDGE APPROACH/DEPARTURE/QUADRANT	EXISTING LENGTH	REMOVE GUARDRAIL	RECONSTRUCT GUARDRAIL (7' STEEL POST)	RECONSTRUCT GUARDRAIL (WOOD POST)	RECONSTRUCT GUARDRAIL (STEEL POST)	FURNISH RAIL ELEMENT	ADJUST GUARDRAIL	MBGR (STEEL POST)	MBGR (WOOD POST)	MBGR (SPECIAL)	MBGR (7' STEEL POST)	TRANSITION RAILING (TYPE WB)	CRASH CUSHION (TYPE CAT) BACKUP	CRASH CUSHION (TYPE CAT)	END CAP (TYPE TC)	END ANCHOR ASSEMBLY (TYPE SFT)	(N) BURIED POST ANCHOR	ALTERNATIVE IN-LINE TERMINAL SYSTEM	ALTERNATIVE FLARED TERMINAL SYSTEM	REMOVE CRASH CUSHION	ALTERNATIVE CRASH CUSHION	TREATED WOOD WASTE	(N) LAYOUT TYPE	COMMENTS
							LF	LF	LF	LF	LF	EA	LF	LF	LF	LF	LF	EA	EA	EA	EA	EA	EA	EA	EA	EA	EA	LB		
254	11	12.65	12.66	SB		DEPARTURE	75.0	75.0										1			1			1				1,911	12AA	(E) Conc BRIDGE BARRIER TYPE 27
254	12	12.72	12.73	SB		APPROACH	75.0	75.0										1			1			1				1,911	12A	(E) Conc BRIDGE BARRIER TYPE 27
254	13	17.78	17.85	SB		DEPARTURE	350.0	350.0						287.5				1			1				1			5,773	12BB	(E) Conc BRIDGE BARRIER TYPE 27
254	14	17.82	17.83	SB		APPROACH	62.5	62.5										1			1				1			956	12B	(E) Conc BRIDGE BARRIER TYPE 27
254	15	21.13	21.23	NB			550.0	75.0			475.0														2			8,600	11E	
254	16	42.42	42.62	NB			1,087.5	75.0			1,012.5	2													2			17,200	11E	
254	17	46.50	46.53	NB			175.0	75.0			100.0														2			2,867	16E	FIXED OBJECT BRIDGE PILLERS
254	18	46.50	46.53	SB			175.0	75.0			100.0														2			2,867	16E	FIXED OBJECT BRIDGE PILLERS
255	1	0.55	0.56	NB	EUREKA I Br	DEPARTURE	62.5	62.5										1			1				1			956	12BB	(E) Conc BRIDGE BARRIER TYPE 9, REMOVE EXISTING ANCHOR BLOCK AND CONSTRUCT ANCHOR BLOCK TO THE CURRENT STANDARD.
255	2	0.55	0.56	SB		APPROACH	62.5	62.5										1			1				1			956	12B	(E) Conc BRIDGE BARRIER TYPE 9, REMOVE EXISTING ANCHOR BLOCK AND CONSTRUCT ANCHOR BLOCK TO THE CURRENT STANDARD.
255	3	0.66	0.67	NB	MIDDLE CI Br	APPROACH	62.5	62.5										1			1				1			956	12B	(E) Conc BRIDGE BARRIER TYPE 9, REMOVE EXISTING ANCHOR BLOCK AND CONSTRUCT ANCHOR BLOCK TO THE CURRENT STANDARD
255	4	0.66	0.67	SB		DEPARTURE	62.5	62.5										1			1				1			956	12BB	(E) Conc BRIDGE BARRIER TYPE 9, REMOVE EXISTING ANCHOR BLOCK AND CONSTRUCT ANCHOR BLOCK TO THE CURRENT STANDARD
255	5	0.88	0.89	NB		DEPARTURE	62.5	62.5										1			1				1			956	12BB	(E) Conc BRIDGE BARRIER TYPE 9, REMOVE EXISTING ANCHOR BLOCK AND CONSTRUCT ANCHOR BLOCK TO THE CURRENT STANDARD
255	6	0.88	0.89	SB		APPROACH	62.5	62.5										1			1				1			956	12B	(E) Conc BRIDGE BARRIER TYPE 9, REMOVE EXISTING ANCHOR BLOCK AND CONSTRUCT ANCHOR BLOCK TO THE CURRENT STANDARD
						SUBTOTAL	-	1237.5	-	-	1,687.5	2	-	287.5	-	-	-	10	-	-	10			2	16	-	-	47,821		

(N) - NOT A SEPARATE PAY ITEM, FOR INFORMATION ONLY

SUMMARY OF QUANTITIES

Q-12

STATE OF CALIFORNIA - DEPARTMENT OF TRANSPORTATION
Caltrans 03 - DESIGN

FUNCTIONAL SUPERVISOR: KEN KEATON
CALCULATED-DESIGNED BY: KRISHNA THAMILSERAN
CHECKED BY: GARY DUGHI
REVISED BY
DATE REVISED

LAST REVISION 00-00-00
DATE PLOTTED => 07-APR-2015
TIME PLOTTED => 13:05

Dist	COUNTY	ROUTE	POST MILES TOTAL PROJECT	SHEET No.	TOTAL SHEETS
01	Hum	36, 96, 169, 211, 254, etc.	Var	74	103

REGISTERED CIVIL ENGINEER 3-30-15 DATE

3-30-15
PLANS APPROVAL DATE

REGISTERED PROFESSIONAL ENGINEER KRISHNAKUMARY THAMILSERAN No. C79630 Exp. 9/30/16 CIVIL STATE OF CALIFORNIA

THE STATE OF CALIFORNIA OR ITS OFFICERS OR AGENTS SHALL NOT BE RESPONSIBLE FOR THE ACCURACY OR COMPLETENESS OF SCANNED COPIES OF THIS PLAN SHEET.

METAL BEAM GUARD RAILING

Rte	Loc	POSTMILE FROM	POSTMILE TO	DIRECTION	STRUCTURE /LOCATION	BRIDGE APPROACH/DEPARTURE/QUADRANT	EXISTING LENGTH	REMOVE GUARDRAIL	RECONSTRUCT GUARDRAIL (7' STEEL POST)	RECONSTRUCT GUARDRAIL (WOOD POST)	RECONSTRUCT GUARDRAIL (STEEL POST)	FURNISH RAIL ELEMENT	ADJUST GUARDRAIL	MBGR (STEEL POST)	MBGR (WOOD POST)	MBGR (SPECIAL)	MBGR (7' STEEL POST)	TRANSITION RAILING (TYPE WB)	CRASH CUSHION (TYPE CAT) BACKUP	CRASH CUSHION (TYPE CAT)	END CAP (TYPE TC)	END ANCHOR ASSEMBLY (TYPE SFT)	(N) BURIED POST ANCHOR	ALTERNATIVE IN-LINE TERMINAL SYSTEM	ALTERNATIVE FLARED TERMINAL SYSTEM	REMOVE CRASH CUSHION	ALTERNATIVE CRASH CUSHION	TREATED WOOD WASTE	(N) LAYOUT TYPE	COMMENTS
							LF	LF	LF	LF	LF	EA	LF	LF	LF	LF	LF	EA	EA	EA	EA	EA	EA	EA	EA	EA	EA	LB		
255	7	1.36	1.37	NB	SAMOA Chnl Br	APPROACH	62.5	62.5										1			1				1			956	12B	(E) Conc BRIDGE BARRIER TYPE 9, REMOVE EXISTING ANCHOR BLOCK AND CONSTRUCT ANCHOR BLOCK TO THE CURRENT STANDARD
255	8	1.36	1.37	SB		DEPARTURE	62.5	62.5										1			1				1			956	12BB	(E) Conc BRIDGE BARRIER TYPE 9, REMOVE EXISTING ANCHOR BLOCK AND CONSTRUCT ANCHOR BLOCK TO THE CURRENT STANDARD
255	9	1.84	1.85	NB		DEPARTURE	62.5	62.5										1			1				1			956	12BB	(E) Conc BRIDGE BARRIER TYPE 9, REMOVE EXISTING ANCHOR BLOCK AND CONSTRUCT ANCHOR BLOCK TO THE CURRENT STANDARD
255	10	1.84	1.85	SB		APPROACH	62.5	62.5										1			1				1			956	12B	(E) Conc BRIDGE BARRIER TYPE 9, REMOVE EXISTING ANCHOR BLOCK AND CONSTRUCT ANCHOR BLOCK TO THE CURRENT STANDARD
255	11	3.25	3.48	NB			1,200.0						1,125.0																11E	
255	12	4.87	4.88	NB			87.5	87.5																				1,911	11E	REMOVE RAILROAD EQUIPMENTS, SEE CONSTRUCTION DETAIL C-40.
255	13	4.89	4.90	SB			87.5	87.5																				1,911	11E	REMOVE RAILROAD EQUIPMENTS, SEE CONSTRUCTION DETAIL C-40.
255	14	5.11	5.13	NB	MAD Riv SLOUGH	APPROACH	125.0	125.0						62.5				1			1				1			1,911	12B	(E) Conc BRIDGE BARRIER TYPE 25
255	15	5.12	5.13	SB		DEPARTURE	62.5	62.5										1			1				1			956	12BB	(E) Conc BRIDGE BARRIER TYPE 25
255	16	5.22	5.23	NB		DEPARTURE	62.5	62.5										1			1				1			956	12BB	(E) Conc BRIDGE BARRIER TYPE 25
255	17	5.22	5.23	SB		APPROACH	62.5	62.5										1			1				1			956	12B	(E) Conc BRIDGE BARRIER TYPE 25
255	18	5.25	5.27	NB			125.0						50.0																11E	
255	19	7.75	7.76	NB	MCDANIEL SLOUGH	APPROACH	62.5	62.5										1			1				1			956	12B	(E) Conc BRIDGE BARRIER TYPE 1
255	20	7.77	7.78	SB		DEPARTURE	62.5	62.5										1			1				1			956	12BB	(E) Conc BRIDGE BARRIER TYPE 1
255	21	8.27		MED																						1				
						SUBTOTAL	-	862.5	-	-	-	-	1,175.0	62.5	-	-	-	10	-	-	10	-	-	-	10	1	-	14,337	-	

(N) - NOT A SEPARATE PAY ITEM, FOR INFORMATION ONLY

SUMMARY OF QUANTITIES

Q-13

STATE OF CALIFORNIA - DEPARTMENT OF TRANSPORTATION
Caltrans® 03 - DESIGN

FUNCTIONAL SUPERVISOR: KEN KEATON
CALCULATED-DESIGNED BY: GARY DUGHI
CHECKED BY: KRISHNA THAMILSERAN
REVISED BY
DATE REVISED

LAST REVISION 00-00-00
DATE PLOTTED => 07-APR-2015
TIME PLOTTED => 13:05

Dist	COUNTY	ROUTE	POST MILES TOTAL PROJECT	SHEET No.	TOTAL SHEETS
01	Hum	36, 96, 169, 211, 254, etc.	Var	75	103

T. Krishnakumary 3-30-15
REGISTERED CIVIL ENGINEER DATE

3-30-15
PLANS APPROVAL DATE

REGISTERED PROFESSIONAL ENGINEER KRISHNAKUMARY THAMILSERAN No. C79630 Exp. 9/30/16 CIVIL STATE OF CALIFORNIA

THE STATE OF CALIFORNIA OR ITS OFFICERS OR AGENTS SHALL NOT BE RESPONSIBLE FOR THE ACCURACY OR COMPLETENESS OF SCANNED COPIES OF THIS PLAN SHEET.

METAL BEAM GUARD RAILING

Rte	Loc	POSTMILE FROM	POSTMILE TO	DIRECTION	STRUCTURE /LOCATION	BRIDGE APPROACH/DEPARTURE/QUADRANT	EXISTING LENGTH	REMOVE GUARDRAIL	RECONSTRUCT GUARDRAIL (7' STEEL POST)	RECONSTRUCT GUARDRAIL (WOOD POST)	RECONSTRUCT GUARDRAIL (STEEL POST)	FURNISH RAIL ELEMENT	ADJUST GUARDRAIL	MBGR (STEEL POST)	MBGR (WOOD POST)	MBGR (SPECIAL)	MBGR (7' STEEL POST)	TRANSITION RAILING (TYPE WB)	CRASH CUSHION (TYPE CAT) BACKUP	CRASH CUSHION (TYPE CAT)	END CAP (TYPE TC)	END ANCHOR ASSEMBLY (TYPE SFT)	(N) BURIED POST ANCHOR	ALTERNATIVE IN-LINE TERMINAL SYSTEM	ALTERNATIVE FLARED TERMINAL SYSTEM	REMOVE CRASH CUSHION	ALTERNATIVE CRASH CUSHION	TREATED WOOD WASTE	(N) LAYOUT TYPE	COMMENTS
							LF	LF	LF	LF	LF	EA	LF	LF	LF	LF	LF	EA	EA	EA	EA	EA	EA	EA	EA	EA	EA	LB		
255	22	8.27	8.29	NB			75.0	75.0																				956	11B	REMOVE RAILROAD EQUIPMENTS, SEE CONSTRUCTION DETAIL C-40.
255	23	8.29		Med																						1				
255	24	8.75	8.77	NB	RTE 255/101	APPROACH	87.5	87.5						25.0				1			1				1			1,911	12B	(E) Conc BRIDGE BARRIER TYPE 2
255	25	8.75	8.77	SB		DEPARTURE	62.5	62.5						62.5								1						956		
255	26	8.81	8.82	NB		DEPARTURE	137.5	137.5						125.0								2						2,867		
255	27	8.81	8.86	SB			500.0	75.0			425.0														2			7,644	11E	RAMP
255	28	8.81	8.83	SB		APPROACH	87.5	87.5						25.0				1			1				1			1,911		(E) Conc BRIDGE BARRIER TYPE 2
255	29	9.03	9.08	NB			375.0	75.0			300.0														2			5,733	11E	RAMP
299	1	1.65	1.66	WB		APPROACH	125.0	125.0						62.5				1			1				1			1,911		(E) Conc BRIDGE BARRIER TYPE 1. TMS ELEMENT BEHIND THE GUARDRAIL.
299	2	1.78	1.81	Med			137.5	137.5											1	1							1	2,867		
299	3	1.80	1.81	EB			112.5	112.5										1			1				1			1,911		
299	4	1.80	1.81	WB			125.0	125.0										1			1		1					1,911		
299	5	4.01	4.04	EB		APPROACH		250.0						187.5				1			1				1			3,622		(E) Conc BRIDGE BARRIER TYPE 1
299	6	42.97	42.98	EB	TRINITY Riv	APPROACH		62.5										1			1				1			956	12BB	(E) Conc BRIDGE BARRIER TYPE 25
299	7	42.97	42.98	WB	TRINITY Riv	DEPARTURE		62.5										1			1				1			956	12B	(E) Conc BRIDGE BARRIER TYPE 25, MODIFY DIKE FOR OVERSIDE DRAIN.
						SUBTOTAL	-	1,475.0	-	-	725.0	-	-	487.5	-	-	-	8	1	1	8	3	1	-	11	1	1	36,112		

(N) - NOT A SEPARATE PAY ITEM, FOR INFORMATION ONLY

SUMMARY OF QUANTITIES

Q-14

STATE OF CALIFORNIA - DEPARTMENT OF TRANSPORTATION
Caltrans® 03 - DESIGN

FUNCTIONAL SUPERVISOR: KEN KEATON
CALCULATED-DESIGNED BY: GARY DUGHI
CHECKED BY: KRISHNA THAMILSERAN
REVISED BY / DATE REVISED

LAST REVISION 00-00-00
DATE PLOTTED => 07-APR-2015
TIME PLOTTED => 13:05

Dist	COUNTY	ROUTE	POST MILES TOTAL PROJECT	SHEET No.	TOTAL SHEETS
01	Hum	36, 96, 169, 211, 254, etc.	Var	76	103

REGISTERED CIVIL ENGINEER 3-30-15 DATE

3-30-15
PLANS APPROVAL DATE

REGISTERED PROFESSIONAL ENGINEER KRISHNAKUMARY THAMILSERAN No. C79630 Exp. 9/30/16 CIVIL STATE OF CALIFORNIA

THE STATE OF CALIFORNIA OR ITS OFFICERS OR AGENTS SHALL NOT BE RESPONSIBLE FOR THE ACCURACY OR COMPLETENESS OF SCANNED COPIES OF THIS PLAN SHEET.

METAL BEAM GUARD RAILING

	REMOVE GUARDRAIL	RECONSTRUCT GUARDRAIL (7' STEEL POST)	RECONSTRUCT GUARDRAIL (WOOD POST)	RECONSTUCT GUARDRAIL (STEEL POST)	FURNISH RAIL ELEMENT	ADJUST GUARDRAIL	MBGR (STEEL POST)	MBGR (WOOD POST)	MBGR (SPECIAL)	MBGR (7' STEEL POST)	TRANSITION RAILING (TYPE WB)	CRASH CUSHION (TYPE CAT) BACKUP	CRASH CUSHION (TYPE CAT)	END CAP (TYPE TC)	END ANCHOR ASSEMBLY (TYPE SFT)	(N) BURIED POST ANCHOR	ALTERNATIVE IN-LINE TERMINAL SYSTEM	ALTERNATIVE FLARED TERMINAL SYSTEM	REMOVE CRASH CUSHION	ALTERNATIVE CRASH CUSHION	TREATED WOOD WASTE
	LF	LF	LF	LF	EA	LF	LF	LF	LF	LF	EA	EA	EA	EA	EA	EA	EA	EA	EA	EA	LB
SUBTOTAL SHEET Q-1	1,275.0			2,300.0			362.5		225.0		10			10			1	17			60,959
SUBTOTAL SHEET Q-2	900.0		75.0	6,462.5			50.0	225.0			7			7		3		13			118,493
SUBTOTAL SHEET Q-3	637.5	400.0	100.0	1,937.5	2	4,227.5	350.0	25.0			1			1				7			51,602
SUBTOTAL SHEET Q-4	600.0		50.0			862.5	212.5				6			6			1	5			11,469
SUBTOTAL SHEET Q-5	925.0	1,150.0		975.0		150.0	25.0				2			2		2		22			52,357
SUBTOTAL SHEET Q-6	912.5	6,187.5				855.5										1		23			111,800
SUBTOTAL SHEET Q-7	950.0	5,750.0		12.5	2											3	1	24			109,687
SUBTOTAL SHEET Q-8	962.5	1,700.0		387.5		100.0	25.0			12.5	4			4		1		23			54,516
SUBTOTAL SHEET Q-9	962.5			925.0			287.5				11			11		5	1	9		1	31,535
SUBTOTAL SHEET Q-10	750.0	50.0		112.5							13			13			2	13			16,050
SUBTOTAL SHEET Q-11	937.5			1,431.0			25.0				2			2		1	2	19			39,975
SUBTOTAL SHEET Q-12	1,237.5			1,687.5	2		287.5				10			10			2	16			47,821
SUBTOTAL SHEET Q-13	862.5					1,175.0	62.5				10			10				10	1		14,337
SUBTOTAL SHEET Q-14	1,475.0			725.0			487.5				8	1	1	8	3	1		11	1	1	36,112
TOTAL	13,387.50	15,237.5	225.0	16,956.0	6	7,370.5	2175.0	250.0	225.0	12.5	84	1	1	84	3	17	10	212	2	2	756,713

(N) - NOT A SEPARATE PAY ITEM, FOR INFORMATION ONLY

SUMMARY OF QUANTITIES

Q-15

STATE OF CALIFORNIA - DEPARTMENT OF TRANSPORTATION
Caltrans® 03 - DESIGN

FUNCTIONAL SUPERVISOR: KEN KEATON
CALCULATED-DESIGNED BY: KRISHNA THAMILSERAN
CHECKED BY: GARY DUGHI
REVISED BY
DATE REVISED

LAST REVISION 00-00-00
DATE PLOTTED => 07-APR-2015
TIME PLOTTED => 13:05

Dist	COUNTY	ROUTE	POST MILES TOTAL PROJECT	SHEET No.	TOTAL SHEETS
01	Hum	36, 96, 169, 211, 254, etc.	Var	77	103

T. Krishnakumary 3-30-15
REGISTERED CIVIL ENGINEER DATE

3-30-15
PLANS APPROVAL DATE

REGISTERED PROFESSIONAL ENGINEER KRISHNAKUMARY THAMILSERAN No. C79630 Exp. 9/30/16 CIVIL STATE OF CALIFORNIA

THE STATE OF CALIFORNIA OR ITS OFFICERS OR AGENTS SHALL NOT BE RESPONSIBLE FOR THE ACCURACY OR COMPLETENESS OF SCANNED COPIES OF THIS PLAN SHEET.

ROADWAY QUANTITIES

Rte	Loc	POSTMILE FROM	POSTMILE TO	DIRECTION	VEGETATION CONTROL (MINOR CONCRETE)	VEGETATION CONTROL (ASPHALT COMPOSITE)	VEGETATION CONTROL (WEED MAT)	CONCRETE BARRIER (TYPE 60C)	CONCRETE BARRIER (TYPE 60F)	CONCRETE BARRIER (TYPE 60)	GUARD RAILING DELINEATOR	RESET MARKER	OBJECT MARKER (TYPE P)	REMOVE AC DIKE	PLACE HMA DIKE (TYPE F)	PLACE HMA DIKE (TYPE A)	PLACE HMA DIKE (TYPE C)	HMA (TYPE A)	PLACE HMA (MISC AREA)	MINOR HOT MIX ASPHALT	CLASS 2 AGGREGATE BASE	ROADWAY EXCAVATION	COMMENTS
					SQYD	SQYD	SQYD	LF	LF	LF	EA	EA	EA	LF	LF	LF	LF	TON	SQYD	TON	CY	CY	
36	1	1.60	1.62	EB							2			150	25		125			1.3			
36	2	1.60	1.63	WB							2												
36	3	13.48	13.49	WB							2		1	125	125					1.7			
36	4	13.48	13.52	EB							3												
36	5	15.75	16.21	EB							27	2											
36	6	16.93	16.94	WB							2												
36	7	16.93	16.94	EB						24	2		1										
36	8	16.96	16.97	WB							2		1										
36	9	16.96	16.97	EB						24	2												
36	10	17.88	17.91	WB							2	1											
36	11	17.91	17.94	WB							2	1											
36	12	17.93	17.94	EB							2	1	1	62.5			62.5			0.5			
36	13	18.02	18.06	WB							2	1	1	91	25		62.5			0.8			
36	14	18.02	18.07	EB							4	1											
36	15	20.16	20.21	EB							3		1										
36	16	20.19	20.21	WB							1			91	25		62.5			0.8			
36	17	23.90	23.91	EB							1			20	20					0.2			
36	18	32.47	32.50	EB							2	2											
36	19	34.26	34.41	EB							5												
36	20	35.59	35.67	WB							3												
36	21	40.44	40.45	EB							2	1	1										
36	22	40.44	40.45	WB							2												
36	23	40.51	40.52	WB							2		1	20		20				0.3			
36	24	40.52	40.53	EB							2												
36	25	43.02	43.11	EB							5	1											
36	26	43.12	43.46	EB							20			1700	1700					22.4			
36	27	44.08	44.52	EB							29			1200	1200					15.8			
36	28	44.60	44.90	EB							16			1158	1158					15.3			
36	29	45.14	45.36	EB							7			682	682					9.0			
36	30	45.60	45.65	EB							8												
96	1	3.75	3.89	EB							16												
96	2	3.93	3.98	EB							4	1											
96	3	4.30	4.37	EB							8												
96	4	5.03	5.07	EB							4												
96	5	5.31	5.35	EB							3												
96	6	5.37	5.40	EB							2												
SUBTOTAL					-	-	-	-	-	48.0	201.0	12	8	5,299.5	4,960.0	20.0	312.5	-	-	68.1	-	-	

STATE OF CALIFORNIA - DEPARTMENT OF TRANSPORTATION
Caltrans® 03 - DESIGN

FUNCTIONAL SUPERVISOR: KEN KEATON
CALCULATED-DESIGNED BY: KRISHNA THAMILSERAN
CHECKED BY: DAC LE
REVISED BY
DATE REVISED

LAST REVISION 00-00-00
DATE PLOTTED => 07-APR-2015
TIME PLOTTED => 13:05

SUMMARY OF QUANTITIES
Q-16

Dist	COUNTY	ROUTE	POST MILES TOTAL PROJECT	SHEET No.	TOTAL SHEETS
01	Hum	36, 96, 169, 211, 254, etc.	Var	78	103

T. Krishnakumary 3-30-15
REGISTERED CIVIL ENGINEER DATE

3-30-15
PLANS APPROVAL DATE

REGISTERED PROFESSIONAL ENGINEER KRISHNAKUMARY THAMILSERAN No. C79630 Exp. 9/30/16 CIVIL STATE OF CALIFORNIA

THE STATE OF CALIFORNIA OR ITS OFFICERS OR AGENTS SHALL NOT BE RESPONSIBLE FOR THE ACCURACY OR COMPLETENESS OF SCANNED COPIES OF THIS PLAN SHEET.

ROADWAY QUANTITIES

Rte	Loc	POSTMILE FROM	POSTMILE TO	DIRECTION	VEGETATION CONTROL (MINOR CONCRETE) SQYD	VEGETATION CONTROL (ASPHALT COMPOSITE) SQYD	VEGETATION CONTROL (WEED MAT) SQYD	CONCRETE BARRIER (TYPE 60C) LF	CONCRETE BARRIER (TYPE 60F) LF	CONCRETE BARRIER (TYPE 60) LF	GUARD RAILING DELINEATOR EA	RESET MARKER EA	OBJECT MARKER (TYPE P) EA	REMOVE AC DIKE LF	PLACE HMA DIKE (TYPE F) LF	PLACE HMA DIKE (TYPE A) LF	PLACE HMA DIKE (TYPE C) LF	HMA (TYPE A) TON	PLACE HMA (MISC AREA) SQYD	MINOR HOT MIX ASPHALT TON	CLASS 2 AGGREGATE BASE CY	ROADWAY EXCAVATION CY	COMMENTS
96	7	7.06	7.38	EB							20												
96	8	7.42	7.62	EB							19												
96	9	7.75	7.78	EB							1												
96	10	7.80	7.89	EB							9												
96	11	8.14	8.23	EB							10		1										
96	12	9.31	9.33	EB							1												
96	13	9.32	9.35	WB							1												
96	14	10.18	10.20	WB							1												
96	15	10.18	10.20	EB							1												
96	16	10.37	10.42	EB							3												
96	17	10.54	10.57	EB							3												
96	18	10.58	10.62	EB							3	1											
96	19	10.64	10.70	EB							2												
96	20	13.25	13.26	WB							2			103.5	25.0		75.0			0.6			
96	21	13.25	13.26	EB							2		1										
96	22	13.28	13.29	WB							2		1	62.5	25.0		37.5			0.6			
96	23	13.28	13.34	EB							4												
96	24	13.34	13.41	EB							5												
96	25	14.53	14.54	EB							2		1	91.0	25.0		62.5			0.8			
96	26	14.53	14.54	WB							2												
96	27	14.58	14.59	EB							2			91.0	25.0		62.5			0.8			
96	28	14.58	14.59	WB							2		1										
96	29	18.83	18.86	EB							5												
96	30	19.06	19.10	WB							6												
96	31	19.26	19.29	WB							5												
96	32	19.77	19.88	WB							13												
96	33	20.97	20.99	WB			147.0				4												NOA - DUST CONTROL
96	34	21.13	21.16	EB			147.0				4												NOA - DUST CONTROL
96	35	23.40	23.47	EB							5												
96	36	23.91	23.98	EB							2												
96	37	24.06	24.13	EB							5			230.0	192.5		25.0			2.7			
96	38	24.14	24.19	EB							2												
96	39	24.78	24.83	EB							5												
96	40	24.85	24.98	EB							4												
96	41	24.94	25.08	EB							8			256.0	256.0					3.4			
96	42	25.16	25.24	EB							7			215.0	215.0					2.8			
SUBTOTAL					-	-	294.0	-	-	-	172	1	5	1,049.0	763.5	-	262.5	-	-	11.7	-	-	

SUMMARY OF QUANTITIES

Q-17

STATE OF CALIFORNIA - DEPARTMENT OF TRANSPORTATION
Caltrans®
03 - DESIGN

FUNCTIONAL SUPERVISOR: KEN KEATON
CALCULATED-DESIGNED BY: KRISHNA THAMILSERAN
CHECKED BY: DAC LE
REVISED BY
DATE REVISED

LAST REVISION 00-00-00
DATE PLOTTED => 07-APR-2015
TIME PLOTTED => 13:05

Dist	COUNTY	ROUTE	POST MILES TOTAL PROJECT	SHEET No.	TOTAL SHEETS
01	Hum	36, 96, 169, 211, 254, etc.	Var	79	103

T. Krishnakumary 3-30-15
REGISTERED CIVIL ENGINEER DATE

3-30-15
PLANS APPROVAL DATE

REGISTERED PROFESSIONAL ENGINEER
KRISHNAKUMARY THAMILSERAN
No. C79630
Exp. 9/30/16
CIVIL
STATE OF CALIFORNIA

THE STATE OF CALIFORNIA OR ITS OFFICERS OR AGENTS SHALL NOT BE RESPONSIBLE FOR THE ACCURACY OR COMPLETENESS OF SCANNED COPIES OF THIS PLAN SHEET.

ROADWAY QUANTITIES

Rte	Loc	POSTMILE FROM	POSTMILE TO	DIRECTION	VEGETATION CONTROL (MINOR CONCRETE) SQYD	VEGETATION CONTROL (ASPHALT COMPOSITE) SQYD	VEGETATION CONTROL (WEED MAT) SQYD	CONCRETE BARRIER (TYPE 60C) LF	CONCRETE BARRIER (TYPE 60F) LF	CONCRETE BARRIER (TYPE 60) LF	GUARD RAILING DELINEATOR EA	RESET MARKER EA	OBJECT MARKER (TYPE P) EA	REMOVE AC DIKE LF	PLACE HMA DIKE (TYPE F) LF	PLACE HMA DIKE (TYPE A) LF	PLACE HMA DIKE (TYPE C) LF	HMA (TYPE A) TON	PLACE HMA (MISC AREA) SQYD	MINOR HOT MIX ASPHALT TON	CLASS 2 AGGREGATE BASE CY	ROADWAY EXCAVATION CY	COMMENTS
96	43	25.29	25.35	EB							6												
96	44	26.42	26.52	EB							6	2											
96	45	26.53	26.68	EB							9	1											
96	46	27.21	27.35	EB							11												
96	47	29.28	29.34	EB			325.0				2	1											NOA - DUST CONTROL
96	48	29.48	29.53	EB			232.0				2	1											NOA - DUST CONTROL
96	49	29.56	29.61	EB			212.0				3												NOA - DUST CONTROL
96	50	29.61	29.66	EB			222.0				3												NOA - DUST CONTROL
96	51	30.10	30.28	EB							8												
96	52	31.13	31.19	EB							7												
96	53	31.24	31.34	EB							7												
96	54	31.29	31.64	EB							15			800	800					10.6			
96	55	31.68	32.02	EB							10	2		470		445	25			12.2			
96	56	31.68	31.73	EB							3												
96	57	32.07	32.14	EB							1			320	320					4.2			
96	58	32.30	32.39	EB							5												
96	59	32.47	32.49	EB							2												
96	60	33.17	33.31	EB							11			620	620					8.2			
96	61	33.21	33.27	EB							4												
96	62	33.42	33.53	EB							8			495	495					6.5			
96	63	33.88	34.02	EB							9			565	565					7.5			
96	64	33.91	33.98	EB							4												
96	65	34.05	34.13	EB							5			283	233		50			3.5			
96	66	35.00	35.06	EB							2												
96	67	35.09	35.14	EB							4												
96	68	35.37	35.40	EB							2												
96	69	35.60	35.64	EB							2												
96	70	35.67	35.89	EB							8												
96	71	36.32	36.37	EB							3												
96	72	36.33	36.38	WB							3												
96	73	36.53	36.57	EB							3												
96	74	39.49	39.50	EB							2	1	1										
96	75	39.49	39.50	WB							2												
96	76	39.55	39.56	EB							2												
96	77	39.55	39.56	WB							2		1										
96	78	40.76	40.82	WB							3	1											
SUBTOTAL					-	-	991.0	-	-	-	178	9	2	3,553.0	3,033.0	445.0	75.0	-	-	52.7	-	-	

SUMMARY OF QUANTITIES

Q-18

STATE OF CALIFORNIA - DEPARTMENT OF TRANSPORTATION
Caltrans®
03 - DESIGN

FUNCTIONAL SUPERVISOR: KEN KEATON
CALCULATED-DESIGNED BY: KRISHNA THAMILSERAN
CHECKED BY: DCA LE
REVISED BY
DATE REVISED

LAST REVISION 00-00-00
DATE PLOTTED => 07-APR-2015
TIME PLOTTED => 13:05

Dist	COUNTY	ROUTE	POST MILES TOTAL PROJECT	SHEET No.	TOTAL SHEETS
01	Hum	36, 96, 169, 211, 254, etc.	Var	80	103

T. Krishnakumary 3-30-15
REGISTERED CIVIL ENGINEER DATE

3-30-15
PLANS APPROVAL DATE

REGISTERED PROFESSIONAL ENGINEER KRISHNAKUMARY THAMILSERAN No. C79630 Exp. 9/30/16 CIVIL STATE OF CALIFORNIA

THE STATE OF CALIFORNIA OR ITS OFFICERS OR AGENTS SHALL NOT BE RESPONSIBLE FOR THE ACCURACY OR COMPLETENESS OF SCANNED COPIES OF THIS PLAN SHEET.

ROADWAY QUANTITIES

Rte	Loc	POSTMILE FROM	POSTMILE TO	DIRECTION	VEGETATION CONTROL (MINOR CONCRETE)	VEGETATION CONTROL (ASPHALT COMPOSITE)	VEGETATION CONTROL (WEED MAT)	CONCRETE BARRIER (TYPE 60C)	CONCRETE BARRIER (TYPE 60F)	CONCRETE BARRIER (TYPE 60)	GUARD RAILING DELINEATOR	RESET MARKER	OBJECT MARKER (TYPE P)	REMOVE AC DIKE	PLACE HMA DIKE (TYPE F)	PLACE HMA DIKE (TYPE A)	PLACE HMA DIKE (TYPE C)	HMA (TYPE A)	PLACE HMA (MISC AREA)	MINOR HOT MIX ASPHALT	CLASS 2 AGGREGATE BASE	ROADWAY EXCAVATION	COMMENTS
					SQYD	SQYD	SQYD	LF	LF	LF	EA	EA	EA	LF	LF	LF	LF	TON	SQYD	TON	CY	CY	
96	79	41.70	41.72	WB							1	1											
96	80	41.84	41.92	WB							3	1											
96	81	42.69	42.73	WB							2	1											
96	82	42.83	42.85	WB							1												
96	83	43.38	43.51	WB							5	2		495.0	495					6.5			
96	84	43.53	43.60	WB							3	1											
96	85	44.28	44.29	WB										8.3		8.3		1.0	3.2	0.1	0.4	0.7	SEE CONSTRUCTION DETAIL C-31
96	86	44.35	44.36	WB			64.3				1		1										NOA - DUST CONTROL
169	1	25.80	25.81	WB			65.6				2												NOA - DUST CONTROL
169	2	25.80	25.81	EB			101.8				4		1	75.0	75					1.0			NOA - DUST CONTROL
169	3	25.86	25.87	WB			65.6				1												NOA - DUST CONTROL
169	4	26.98	27.01	EB			64.3				1	1	1										NOA - DUST CONTROL
169	5	27.00	27.01	WB			46.9				1												NOA - DUST CONTROL
169	6	27.02	27.03	EB			64.3				1			50.0	50					0.7			NOA - DUST CONTROL
169	7	27.02	27.03	WB			46.9				1		1										NOA - DUST CONTROL
169	8	29.82	29.83	EB									1					2.6			1.9		NOA - DUST CONTROL, SEE Const DETAIL C-31
169	9	29.82	29.83	WB			46.9				1												NOA - DUST CONTROL
169	10	29.84	29.85	EB			66.3				1												NOA - DUST CONTROL
169	11	29.84	29.85	WB			64.3				1		1										NOA - DUST CONTROL
169	12	33.60	33.65	EB							1										10.0		MBGR (SLOPE RETAINING WALL), SEE C-39
211	1	74.62	74.64	SB			64.3				1												
211	2	74.63	74.64	NB			64.3				1		1										
211	3	74.67	74.68	NB			64.3				1												
211	4	74.67	74.68	SB			64.3				1		1										
211	5	76.29	76.30	NB			64.3				1		1										
211	6	76.29	76.30	SB			64.3				1												
211	7	76.34	76.35	NB			64.3				1												
211	8	76.34	76.35	SB			64.3				1		1										
211	9	76.45	76.46	NB			64.3				1		1										
211	10	76.45	76.46	SB			64.3				1												
211	11	76.50	76.51	NB			64.3				1												
211	12	76.50	76.51	SB			64.3				1		1										
211	13	78.56	78.57	NB																			
211	14	78.58	78.59	SB																			
211	15	79.13	79.19	NB			186.0				3												
211	16	79.13	79.19	SB			243.0				3			265.0	190.0		75.0			3.1			
SUBTOTAL					-	-	1897.8	-	-	-	49	7	12	893.3	810.0	8.3	75.0	3.6	3.2	11.4	12.3	0.7	

SUMMARY OF QUANTITIES

Q-19

STATE OF CALIFORNIA - DEPARTMENT OF TRANSPORTATION
Caltrans® 03 - DESIGN

FUNCTIONAL SUPERVISOR: KEN KEATON
CALCULATED-DESIGNED BY: KRISHNA THAMILSERAN
CHECKED BY: DAC LE
REVISED BY / DATE REVISED

LAST REVISION 00-00-00 DATE PLOTTED => 07-APR-2015 TIME PLOTTED => 13:05

Dist	COUNTY	ROUTE	POST MILES TOTAL PROJECT	SHEET No.	TOTAL SHEETS
01	Hum	36, 96, 169, 211, 254, etc.	Var	81	103

T. Krishnakumary 3-30-15
REGISTERED CIVIL ENGINEER DATE

3-30-15
PLANS APPROVAL DATE

REGISTERED PROFESSIONAL ENGINEER
KRISHNAKUMARY THAMILSERAN
No. C79630
Exp. 9/30/16
CIVIL
STATE OF CALIFORNIA

THE STATE OF CALIFORNIA OR ITS OFFICERS OR AGENTS SHALL NOT BE RESPONSIBLE FOR THE ACCURACY OR COMPLETENESS OF SCANNED COPIES OF THIS PLAN SHEET.

ROADWAY QUANTITIES

Rte	Loc	POSTMILE FROM	POSTMILE TO	DIRECTION	VEGETATION CONTROL (MINOR CONCRETE) SQYD	VEGETATION CONTROL (ASPHALT COMPOSITE) SQYD	VEGETATION CONTROL (WEED MAT) SQYD	CONCRETE BARRIER (TYPE 60C) LF	CONCRETE BARRIER (TYPE 60F) LF	CONCRETE BARRIER (TYPE 60) LF	GUARD RAILING DELINEATOR EA	RESET MARKER EA	OBJECT MARKER (TYPE P) EA	REMOVE AC DIKE LF	PLACE HMA DIKE (TYPE F) LF	PLACE HMA DIKE (TYPE A) LF	PLACE HMA DIKE (TYPE C) LF	HMA (TYPE A) TON	PLACE HMA (MISC AREA) SQYD	MINOR HOT MIX ASPHALT TON	CLASS 2 AGGREGATE BASE CY	ROADWAY EXCAVATION CY	COMMENTS
254	1	3.08	3.11	NB		128.6					1												
254	2	3.17	3.18	NB		110.0					1												
254	3	3.21	3.28	NB		299.0					5												
254	4	4.80	4.83	SB			185.0				2												
254	5	8.30	8.34	SB		222.0					1												
254	6	9.54	9.57	SB		241.0					6												
254	7	11.83	11.84	SB			64.3				1			91	25		62.5			0.8			
254	8	11.88	11.90	SB			64.3				1			91	25		62.5			0.8			
254	9	12.31	12.35	NB		185.0					3												
254	10	12.31	12.35	SB		185.0					3	1											
254	11	12.65	12.66	SB	66.0						1												
254	12	12.72	12.73	SB	66.0						1												
254	13	17.78	17.85	SB			280.0				6	1											
254	14	17.82	17.83	SB			64.0				1												
254	15	21.13	21.23	NB	447.0						6												
254	16	42.42	42.62	NB	850.0						5			1087.5	1012.5		75			13.9			
254	17	46.50	46.53	NB	166.0						2												
254	18	46.50	46.53	SB	166.0						2												
255	1	0.55	0.56	NB			64.3				1												
255	2	0.55	0.56	SB			64.3				1		1										
255	3	0.66	0.67	NB			64.3				1		1	91	25		62.5			0.8			
255	4	0.66	0.67	SB			64.3				1			91	25		62.5			0.8			
255	5	0.88	0.89	NB			64.3				1												
255	6	0.88	0.89	SB			64.3				1		1	91	25		62.5			0.8			
255	7	1.36	1.37	NB			64.3				1		1	75	12.5		62.5			0.6			
255	8	1.36	1.37	SB			64.3				1			75	12.5		62.5			0.6			
255	9	1.84	1.85	NB			64.3				1			75	12.5		62.5			0.6			
255	10	1.84	1.85	SB			64.3				1		1	75	12.5		62.5			0.6			
255	11	3.25	3.48	NB							7												
255	12	4.87	4.88	NB																			
255	13	4.89	4.90	SB																			
255	14	5.11	5.13	NB			92.0				1		1	57	57					0.8			
255	15	5.13	5.12	SB			64.3				1												
255	16	5.22	5.23	NB			64.3				1												
255	17	5.22	5.23	SB			64.3				1		1										
255	18	5.25	5.27	NB							1												
SUBTOTAL					1761.0	1370.6	1585.5	-	-	-	70	2	7	1,899.5	1,244.5	-	637.5	-	-	21.1	-	-	

SUMMARY OF QUANTITIES

Q-20

STATE OF CALIFORNIA - DEPARTMENT OF TRANSPORTATION
Caltrans®
03 - DESIGN

FUNCTIONAL SUPERVISOR: KEN KEATON
CALCULATED-DESIGNED BY: KRISHNA THAMILSERAN
CHECKED BY: DAC LE
REVISED BY
DATE REVISED

LAST REVISION 00-00-00
DATE PLOTTED => 07-APR-2015
TIME PLOTTED => 13:05

Dist	COUNTY	ROUTE	POST MILES TOTAL PROJECT	SHEET No.	TOTAL SHEETS
01	Hum	36, 96, 169, 211, 254, etc.	Var	82	103

T. Krishnakumary 3-30-15
REGISTERED CIVIL ENGINEER DATE

3-30-15
PLANS APPROVAL DATE

REGISTERED PROFESSIONAL ENGINEER
KRISHNAKUMARY THAMILSERAN
No. C79630
Exp. 9/30/16
CIVIL
STATE OF CALIFORNIA

THE STATE OF CALIFORNIA OR ITS OFFICERS OR AGENTS SHALL NOT BE RESPONSIBLE FOR THE ACCURACY OR COMPLETENESS OF SCANNED COPIES OF THIS PLAN SHEET.

ROADWAY QUANTITIES

Rte	Loc	POSTMILE FROM	POSTMILE TO	DIRECTION	VEGETATION CONTROL (MINOR CONCRETE)	VEGETATION CONTROL (ASPHALT COMPOSITE)	VEGETATION CONTROL (WEED MAT)	CONCRETE BARRIER (TYPE 60C)	CONCRETE BARRIER (TYPE 60F)	CONCRETE BARRIER (TYPE 60)	GUARD RAILING DELINEATOR	RESET MARKER	OBJECT MARKER (TYPE P)	REMOVE AC DIKE	PLACE HMA DIKE (TYPE F)	PLACE HMA DIKE (TYPE A)	PLACE HMA DIKE (TYPE C)	HMA (TYPE A)	PLACE HMA (MISC AREA)	MINOR HOT MIX ASPHALT	CLASS 2 AGGREGATE BASE	ROADWAY EXCAVATION	COMMENTS
					SQYD	SQYD	SQYD	LF	LF	LF	EA	EA	EA	LF	LF	LF	LF	TON	SQYD	TON	CY	CY	
255	19	7.75	7.76	NB			64.3				1		1										
255	20	7.77	7.78	SB			64.3				1												
255	21	8.27		MED																			
255	22	8.27	8.29	NB																			
255	23	8.29		MED																			
255	24	8.75	8.77	NB			83.0				2		1										
255	25	8.75	8.77	SB			64.0				1		1										
255	26	8.81	8.82	NB			103.0				2												
255	27	8.81	8.86	SB			410.0				17			550	425		125			7.0			
255	28	8.83	8.81	SB			83.0				2												
255	29	9.03	9.08	NB			316.0				16		1	425	300		125			5.0			
299	1	1.65	1.66	WB							2												
299	2	1.78	1.81	Med				25	146.6		2		1					88.0			137.4	176.1	MEDIAN PAVING AND GRADING
299	3	1.80	1.81	EB							1				25		22	2.0		0.5		6.0	PAVED AC DITCH
299	4	1.80	1.81	WB							1							12.0				0.6	
299	5	4.01	4.04	EB							1												
299	6	42.97	42.98	EB							1		1										
299	7	42.98	42.97	WB							1		1	91	25		62.5			0.8			
SUBTOTAL							1187.6	25	146.6		51		6	1,066.0	775.0		334.5	102.0		13.3	137.4	182.7	
Tot FROM Sht Q-16										48.0	201	12	8	5,299.5	4,960.0	20.0	312.5			68.1			
Tot FROM Sht Q-17							294.0				172	1	5	1,049.0	763.5		262.5			11.7			
Tot FROM Sht Q-18							991.0				178	9	2	3,553.0	3,033.0	445.0	75.0			52.7			
Tot FROM Sht Q-19							1897.8				49	7	12	893.3	810.0	8.3	75.0	3.6	3.2	11.4	12.3	0.7	
Tot FROM Sht Q-20					1,761.0	1,370.6	1585.5				70	2	7	1,899.5	1,244.5		637.5			21.1			
Tot FROM Sht Q-21							1187.6	25	146.6		51		6	1,066.0	775.0		334.5	102.0		13.3	137.4	182.7	
TOTAL					1,761.0	1,370.6	5,955.9	25	146.6	48.0	721	31	40	13,760.3	11,586.0	473.3	1697.0	105.6	3.2	178.3	149.7	183.4	

SUMMARY OF QUANTITIES
Q-21

STATE OF CALIFORNIA - DEPARTMENT OF TRANSPORTATION
Caltrans
03 - DESIGN

FUNCTIONAL SUPERVISOR: KEN KEATON
CALCULATED-DESIGNED BY: GARY DUGHI
CHECKED BY: KRISHNA THAMILSERAN
REVISED BY
DATE REVISED

LAST REVISION 00-00-00
DATE PLOTTED => 07-APR-2015
TIME PLOTTED => 13:05

Dist	COUNTY	ROUTE	POST MILES TOTAL PROJECT	SHEET No.	TOTAL SHEETS
01	Hum	36, 96, 169, 211, 254, etc.	Var	83	103

T. Krishnakumary 3-30-15
REGISTERED CIVIL ENGINEER DATE

3-30-15
PLANS APPROVAL DATE

REGISTERED PROFESSIONAL ENGINEER KRISHNAKUMARY THAMILSERAN No. C79630 Exp. 9/30/16 CIVIL STATE OF CALIFORNIA

THE STATE OF CALIFORNIA OR ITS OFFICERS OR AGENTS SHALL NOT BE RESPONSIBLE FOR THE ACCURACY OR COMPLETENESS OF SCANNED COPIES OF THIS PLAN SHEET.

CONCRETE QUANTITIES

Rte	BEGIN PM	END PM	DIRECTION	BRIDGE/ STRUCTURE NAME	BARRIER TYPE	MINOR CONCRETE (MINOR STRUCTURE)	REMOVE CONCRETE	NOTES
						CY	CY	
36	13.48	13.49	W	VAN DUZEN Riv Br	25	0.66		ANCHOR BLOCK
36	13.48	13.52	E	VAN DUZEN Riv Br	25	0.66		ANCHOR BLOCK
36	16.93	16.94	W	GRIZZLY Cr Br	25	0.66		ANCHOR BLOCK
36	16.96	16.97	W	GRIZZLY Cr Br	25	0.66		ANCHOR BLOCK
36	17.91	17.94	W	VAN DUZEN Riv Br	25	0.66		ANCHOR BLOCK
36	17.93	17.94	E	VAN DUZEN Riv Br	25	0.66		ANCHOR BLOCK
36	18.02	18.03	W	VAN DUZEN Riv Br	25	0.66		ANCHOR BLOCK
36	18.02	18.07	E	VAN DUZEN Riv Br	25	0.66		ANCHOR BLOCK
36	20.16	20.21	E	VAN DUZEN Riv Br	1	0.65		ANCHOR BLOCK
36	20.19	20.21	W	VAN DUZEN Riv Br	1	0.65		ANCHOR BLOCK
36	23.90	23.91	E	VAN DUZEN Riv Br	28	0.66		ANCHOR BLOCK
36	40.44	40.45	E	VAN DUZEN Riv Br	25	0.66		ANCHOR BLOCK
36	40.44	40.45	W	VAN DUZEN Riv Br	25	0.66		ANCHOR BLOCK
36	40.51	40.52	W	VAN DUZEN Riv Br	25	0.66		ANCHOR BLOCK
36	40.52	40.53	E	VAN DUZEN Riv Br	25	0.66		ANCHOR BLOCK
96	8.14	8.23	E		25	0.66		ANCHOR BLOCK
96	13.25	13.26	W	HOSTLER Cr Br	25	0.66		ANCHOR BLOCK
96	13.25	13.26	E	HOSTLER Cr Br	25	0.66		ANCHOR BLOCK
96	13.28	13.29	W	HOSTLER Cr Br	25	0.66		ANCHOR BLOCK
96	13.28	13.34	E	HOSTLER Cr Br	25	0.66		ANCHOR BLOCK
96	14.53	14.54	E	MILL Cr Br	25	0.66		ANCHOR BLOCK
96	14.53	14.54	W	MILL Cr Br	25	0.66		ANCHOR BLOCK
96	14.58	14.59	E	MILL Cr Br	25	0.66		ANCHOR BLOCK
96	14.58	14.59	W	MILL Cr Br	25	0.66		ANCHOR BLOCK
96	39.49	39.50	W	PEARCH Cr Br	9-11	0.67		ANCHOR BLOCK
96	39.49	39.50	E	PEARCH Cr Br	9-11	0.67		ANCHOR BLOCK
96	39.55	39.56	E	PEARCH Cr Br	9-11	0.67		ANCHOR BLOCK
96	39.55	39.56	W	PEARCH Cr Br	9-11	0.67		ANCHOR BLOCK
96	44.28	44.29	W		736	0.65		ANCHOR BLOCK
96	44.35	44.36	W		736	0.65		ANCHOR BLOCK
169	25.80	25.81	W	COON Cr Br	25	0.66		ANCHOR BLOCK
169	25.80	25.81	E	COON Cr Br	25	0.66		ANCHOR BLOCK
169	25.86	25.87	W	COON Cr Br	25	0.66		ANCHOR BLOCK
169	26.98	27.01	E	MINERS Cr Br	25	0.66		ANCHOR BLOCK
169	27.00	27.01	W	MINERS Cr Br	25	0.66		ANCHOR BLOCK
169	27.02	27.03	E	MINERS Cr Br	25	0.66		ANCHOR BLOCK
169	27.02	27.03	W	MINERS Cr Br	25	0.66		ANCHOR BLOCK
169	29.82	29.83	E	ROCK CHUTE Cr Br	25	0.66		ANCHOR BLOCK
169	29.82	29.83	W	ROCK CHUTE Cr Br	25	0.66		ANCHOR BLOCK
169	29.84	29.85	E	ROCK CHUTE Cr Br	25	0.66		ANCHOR BLOCK
169	29.84	29.85	W	ROCK CHUTE Cr Br	25	0.66		ANCHOR BLOCK
211	74.62	74.64	S	SALT CREEK Cr	1	0.65		ANCHOR BLOCK
211	74.63	74.64	N	SALT CREEK Cr	1	0.65		ANCHOR BLOCK
211	74.67	74.68	N	SALT CREEK Cr	1	0.65		ANCHOR BLOCK

Rte	BEGIN PM	END PM	DIRECTION	BRIDGE/ STRUCTURE NAME	BARRIER TYPE	MINOR CONCRETE (MINOR STRUCTURE)	REMOVE CONCRETE	NOTES
						CY	CY	
211	74.67	74.68	S	SALT CREEK Cr Br	1	0.65		ANCHOR BLOCK
211	76.29	76.30	N	OLD Riv Br	1	0.65		ANCHOR BLOCK
211	76.29	76.30	S	OLD Riv Br	1	0.65		ANCHOR BLOCK
211	76.34	76.35	N	OLD Riv Br	1	0.65		ANCHOR BLOCK
211	76.34	76.35	S	OLD Riv Br	1	0.65		ANCHOR BLOCK
211	76.45	76.46	N	OLD Riv Br	1	0.65		ANCHOR BLOCK
211	76.45	76.46	S	OLD Riv Br	1	0.65		ANCHOR BLOCK
211	76.50	76.51	N	OLD Riv Br	1	0.65		ANCHOR BLOCK
211	76.50	76.51	S	OLD Riv Br	1	0.65		ANCHOR BLOCK
254	11.83	11.84	S		25	0.66		ANCHOR BLOCK
254	11.88	11.90	S		25	0.66		ANCHOR BLOCK
254	12.65	12.66	S		27(Mod)	1.14		ANCHOR BLOCK
254	12.72	12.73	S		27(Mod)	1.14		ANCHOR BLOCK
254	17.78	17.85	S		27	1.14		ANCHOR BLOCK
254	17.82	17.83	S		27	1.14		ANCHOR BLOCK
255	0.55	0.56	N	EUREKA CHANNEL Br	9	0.67	0.39	ANCHOR BLOCK
255	0.55	0.56	S	EUREKA CHANNEL Br	9	0.67	0.39	ANCHOR BLOCK
255	0.66	0.67	N	MIDDLE CHANNEL Br	9	0.67	0.39	ANCHOR BLOCK
255	0.66	0.67	S	MIDDLE CHANNEL Br	9	0.67	0.39	ANCHOR BLOCK
255	0.88	0.89	N	MIDDLE CHANNEL Br	9	0.67	0.39	ANCHOR BLOCK
255	0.88	0.89	S	MIDDLE CHANNEL Br	9	0.67	0.39	ANCHOR BLOCK
255	1.36	1.37	N	SAMOA CHANNEL Br	9	0.67	0.39	ANCHOR BLOCK
255	1.36	1.37	S	SAMOA CHANNEL Br	9	0.67	0.39	ANCHOR BLOCK
255	1.84	1.85	N	SAMOA CHANNEL Br	9	0.67	0.39	ANCHOR BLOCK
255	1.84	1.85	S	SAMOA CHANNEL Br	9	0.67	0.39	ANCHOR BLOCK
255	5.11	5.13	N	MAD Riv SLOUGH	25	0.66		ANCHOR BLOCK
255	5.12	5.13	S	MAD Riv SLOUGH	25	0.66		ANCHOR BLOCK
255	5.22	5.23	N	MAD Riv SLOUGH	25	0.66		ANCHOR BLOCK
255	5.22	5.23	S	MAD Riv SLOUGH	25	0.66		ANCHOR BLOCK
255	7.75	7.76	N	MCDANIEL SLOUGH	1	0.65		ANCHOR BLOCK
255	7.77	7.78	S	MCDANIEL SLOUGH	1	0.65		ANCHOR BLOCK
255	8.75	8.77	N	RTE 255/101 Sep	2	3.03		ANCHOR BLOCK
255	8.81	8.83	S	RTE 255/101 Sep	2	3.03		ANCHOR BLOCK
299	1.65	1.66	W		1	0.65		ANCHOR BLOCK
299	1.80	1.81	E	RTE 200/299 Sep	SEE Const Det	18.72		BARRIER
299	1.80	1.81	W	RTE 200/299 Sep	SEE Const Det	20.34		BARRIER
299	4.01	4.04	E		1	0.65		ANCHOR BLOCK
299	42.97	42.98	E	TRINITY Riv Br	25	0.66		ANCHOR BLOCK
299	42.97	42.98	W	TRINITY Riv Br	25	0.66		ANCHOR BLOCK
TOTAL QUANTITES FROM DRAINAGE						5.80		Culv COLLARS
					TOTAL	104.92	3.90	

SUMMARY OF QUANTITIES

Q-22

STATE OF CALIFORNIA - DEPARTMENT OF TRANSPORTATION
Caltrans 03 - DESIGN
FUNCTIONAL SUPERVISOR: KEN KEATON
CALCULATED-DESIGNED BY: KRISHNA THAMILSERAN
CHECKED BY: DAC LE
REVISED BY
DATE REVISED

LAST REVISION 00-00-00
DATE PLOTTED => 07-APR-2015
TIME PLOTTED => 13:05

Dist	COUNTY	ROUTE	POST MILES TOTAL PROJECT	SHEET No.	TOTAL SHEETS
01	Hum	36, 96, 169, 211, 254, etc.	Var	84	103

T. Krishnakumary 3-30-15
REGISTERED CIVIL ENGINEER DATE

3-30-15
PLANS APPROVAL DATE

REGISTERED PROFESSIONAL ENGINEER KRISHNAKUMARY THAMILSERAN No. C79630 Exp. 9/30/16 CIVIL STATE OF CALIFORNIA

THE STATE OF CALIFORNIA OR ITS OFFICERS OR AGENTS SHALL NOT BE RESPONSIBLE FOR THE ACCURACY OR COMPLETENESS OF SCANNED COPIES OF THIS PLAN SHEET.

TEMPORARY DRAINAGE INLET PROTECTION

ROUTE	LOCATION		DIRECTION	TEMPORARY DRAINAGE INLET PROTECTION
	Beg PM	END PM		EA
36	1.60	1.62	EB	2
36	13.48	13.49	WB	1
36	20.19	20.21	WB	1
36	43.12	43.46	EB	5
36	44.08	44.52	EB	5
36	44.60	44.90	EB	3
36	45.14	45.36	EB	3
96	13.25	13.26	WB	1
96	14.53	14.54	EB	1
96	24.94	25.08	EB	1
96	25.16	25.24	EB	1
96	31.24	31.34	EB	1
96	31.39	31.64	EB	3
96	31.68	32.02	EB	1
96	33.17	33.31	EB	1
96	33.42	33.53	EB	1
96	33.88	34.02	EB	1
96	44.28	44.29	WB	1
255	0.88	0.89	SB	1
255	1.36	1.37	NB	1
255	1.36	1.37	SB	1
255	1.84	1.85	NB	1
255	1.84	1.85	SB	1
255	5.11	5.13	NB	1
299	1.78	1.81	MEDIAN	1
299	1.80	1.81	EB	1
299	1.80	1.81	WB	1
299	42.97	42.98	WB	1
			TOTAL	43

TEMPORARY FIBER ROLL (6 INCH)

ROUTE	LOCATION	DIRECTION	LENGTH
			LF
36	PM 15.75 TO 16.21	EB	2429
96	PM 32.47 TO 32.50	EB	159
96	PM 41.84 TO 41.92	WB	423
169	PM 33.60 to 33.65	EB	264
299	"A1" 7+52.97	EB & WB DI	40
		TOTAL	3315

TEMPORARY FENCE (TYPE ESA)

ROUTE	LOCATION	DIRECTION	LENGTH	(N) NEAREST WETLAND
			LF	LF
211	PM 74.65	NB	35	3
211	PM 74.65	SB	40	3+
211	PM 74.67	NB	40	12
211	PM 74.67	SB	30	3
211	PM 76.34	NB	35	15+
211	PM 76.46	NB	60	10+
211	PM 76.50	NB	45	8+
255	PM 3.25 - 3.48	NB	1250	4 TO 15
255	PM 4.87	NB	100	10
255	PM 4.89	SB	80	20
255	PM 5.25 - 5.27	NB	70	10 TO 15
255	PM 7.74	SB	100	6
		TOTAL	1885	

(N) - NOT A SEPARATE PAY ITEM, FOR INFORMATION ONLY

TEMPORARY MULCH

ROUTE	LOCATION	DIRECTION	LENGTH
			SQYD
ALL	AS NECESSARY	ALL	112
		TOTAL	112

REMOVE RAILROAD SIGNAL EQUIPMENT (N)

ROUTE	LOCATION	DIRECTION	DESCRIPTION
211	PM 78.56	NB	SEE CONSTRUCTION DETAIL C-40
211	PM 78.58	SB	SEE CONSTRUCTION DETAIL C-40
255	PM 4.87	NB	SEE CONSTRUCTION DETAIL C-40
255	PM 4.89	SB	SEE CONSTRUCTION DETAIL C-40
255	PM 8.27	NB & SB	SEE CONSTRUCTION DETAIL C-40

(N) - NOT A SEPARATE PAY ITEM, FOR INFORMATION ONLY

TEMPORARY GRAVEL BAG BERM

ROUTE	LOCATION	DIRECTION	LENGTH
			LF
ALL	AS NECESSARY	ALL	2363
		TOTAL	2363

MBGR (SLOPE RETAINING WALL)

ROUTE	LOCATION	DIRECTION	LENGTH
			LF
96	PM 32.47 TO 32.49	EB	15.0
96	PM 41.84 TO 41.92	WB	52.5
169	PM 33.60 TO 33.65	EB	30.0
		TOTAL	97.5

SUMMARY OF QUANTITIES

Q-23

REVISED BY | DATE REVISED
GARY DUGHI | KRISHNA THAMILSERAN
CALCULATED-DESIGNED BY | CHECKED BY
FUNCTIONAL SUPERVISOR | KEN KEATON
STATE OF CALIFORNIA - DEPARTMENT OF TRANSPORTATION
Caltrans
03 - DESIGN

LAST REVISION 00-00-00 | DATE PLOTTED => 07-APR-2015 | TIME PLOTTED => 13:05

Dist	COUNTY	ROUTE	POST MILES TOTAL PROJECT	SHEET No.	TOTAL SHEETS
01	Hum	36, 96, 169, 211, 254, etc.	Var	85	103

Laura Lazzarotto
LICENSED LANDSCAPE ARCHITECT

3-30-15
PLANS APPROVAL DATE

LICENSED LANDSCAPE ARCHITECT
Laura Lazzarotto
Signature
8-31-15
Renewal Date
11-24-14
Date
STATE OF CALIFORNIA

THE STATE OF CALIFORNIA OR ITS OFFICERS OR AGENTS SHALL NOT BE RESPONSIBLE FOR THE ACCURACY OR COMPLETENESS OF SCANNED COPIES OF THIS PLAN SHEET.

NOTE:

FOR ACCURATE RIGHT OF WAY DATA, CONTACT
RIGHT OF WAY ENGINEERING AT THE DISTRICT OFFICE.

EROSION CONTROL TYPE 1

SEQUENCE	ITEM	MATERIAL		APPLICATION RATE
		DESCRIPTION	TYPE	
STEP 1	WOOD MULCH	WOOD MULCH	WALK-ON BARK	406 CY/ACRE

EROSION CONTROL QUANTITIES

STATION		DESCRIPTION	WOOD MULCH (CY)
FROM	TO		
"A" 6+00.00	"A1" 6+87.50	EC TYPE 1	12.54
"A" 8+83.15	"A1" 8+91.12	EC TYPE 1	1.55
		TOTAL	14.09

EC TYPE 1

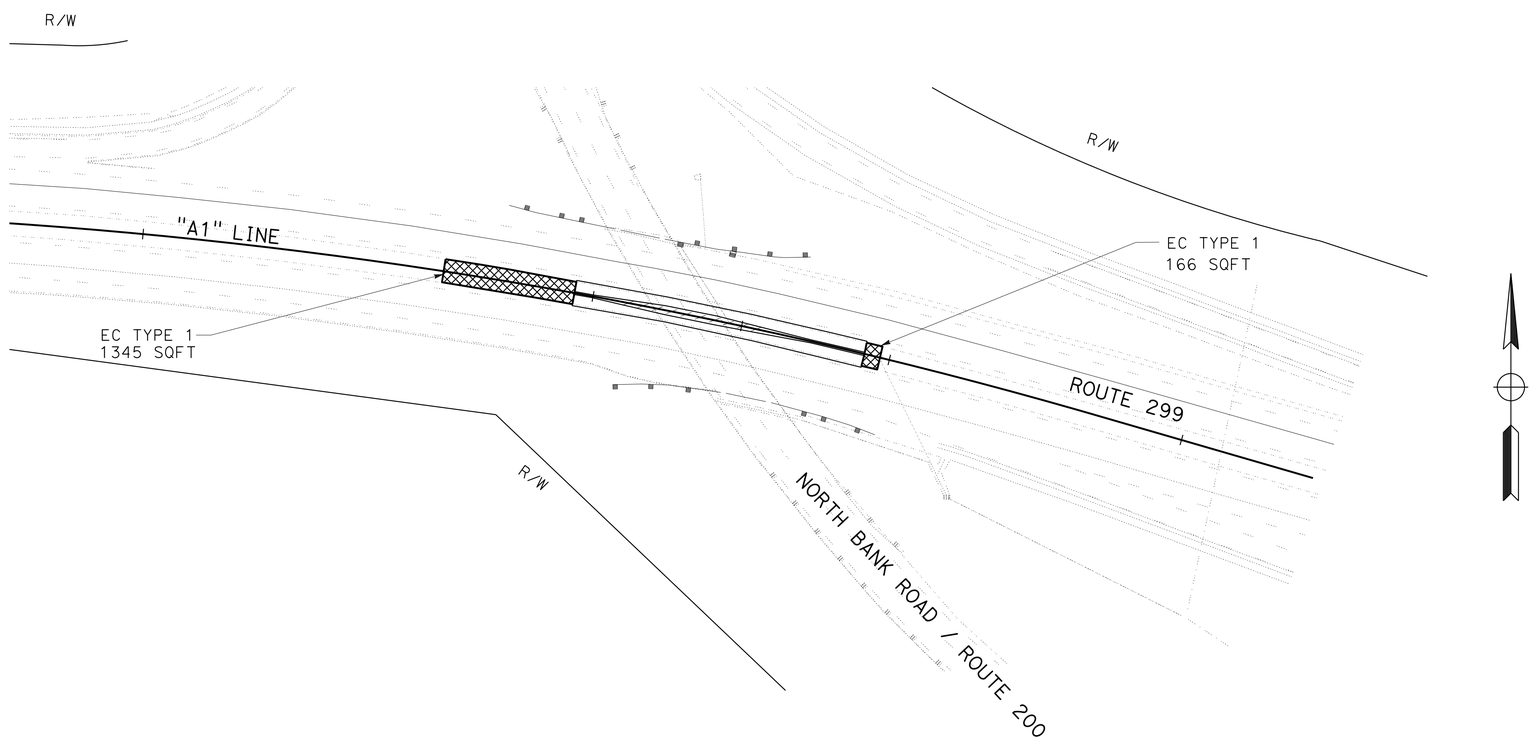

EROSION CONTROL PLAN AND EROSION CONTROL QUANTITIES

SCALE: = 1" = 50'

EC-1

APPROVED FOR LANDSCAPE WORK ONLY

REVISED BY	L.LAZZAROTTO
DATE REVISED	11/05/2014
LAURA LAZZAROTTO	KRISHNA THAMILSERAN
CALCULATED-DESIGNED BY	
CHECKED BY	
SENIOR LANDSCAPE ARCHITECT	RON FLORY

STATE OF CALIFORNIA - DEPARTMENT OF TRANSPORTATION
Caltrans
LANDSCAPE

P:\proj5\01\46392\drafting\01120002741e001.dgn

LAST REVISION 11-20-14
DATE PLOTTED => 07-APR-2015
TIME PLOTTED => 13:05

M

Maint	MAINTENANCE
Max	MAXIMUM
MB	METAL BEAM
MBB	METAL BEAM BARRIER
MBGR	METAL BEAM GUARD RAILING
Med	MEDIAN
MGS	MIDWEST GUARDRAIL SYSTEM
MH	MANHOLE
Min	MINIMUM
Misc	MISCELLANEOUS
Misc I & S	MISCELLANEOUS IRON AND STEEL
Mkr	MARKER
Mod	MODIFIED,
	MODIFY
Mon	MONUMENT
MP	METAL PLATE
MPGR	METAL PLATE GUARD RAILING
MR	MOVEMENT RATING
MSE	MECHANICALLY STABILIZED EMBANKMENT
Mt	MOUNTAIN, MOUNT
Mtl	MATERIAL
MVP	MAINTENANCE VEHICLE PULLOUT

N

N	NORTH
NB	NORTHBOUND
No.	NUMBER (MUST HAVE PERIOD)
Nos.	NUMBERS (MUST HAVE PERIOD)
NPS	NOMINAL PIPE SIZE
NS	NEAR SIDE
NSP	NEW STANDARD PLAN
NTS	NOT TO SCALE

O

Oblr	OBLITERATE
OC	OVERCROSSING
OD	OUTSIDE DIAMETER
OF	OUTSIDE FACE
OG	ORIGINAL GROUND
OGAC	OPEN GRADED ASPHALT CONCRETE
OGFC	OPEN GRADED FRICTION COURSE
OH	OVERHEAD
OHWM	ORDINARY HIGH WATER MARK
O-O	OUT TO OUT
Opp	OPPOSITE
OSD	OVERSIDE DRAIN

P

p	PAGE
PAP	PERFORATED ALUMINUM PIPE
PB	PULL BOX
PC	POINT OF CURVATURE,
	PRECAST
PCC	POINT OF COMPOUND CURVE,
	PORTLAND CEMENT CONCRETE
PCMS	PORTABLE CHANGEABLE MESSAGE SIGN
PCP	PERFORATED CONCRETE PIPE,
	PRESTRESSED CONCRETE PIPE
PCVC	POINT OF COMPOUND VERTICAL CURVE
PEC	PERMIT TO ENTER AND CONSTRUCT
Ped	PEDESTRIAN
Ped OC	PEDESTRIAN OVERCROSSING
Ped UC	PEDESTRIAN UNDERCROSSING
Perm Mtl	PERMEABLE MATERIAL

P continued

PG	PROFILE GRADE
PI	POINT OF INTERSECTION
PJP	PARTIAL JOINT PENETRATION
Pkwy	PARKWAY
ℙ,PL	PLATE
P/L	PROPERTY LINE
PM	POST MILE,
	TIME FROM NOON TO MIDNIGHT
PN	PAVING NOTCH
POC	POINT OF HORIZONTAL CURVE
POT	POINT OF TANGENT
POVC	POINT OF VERTICAL CURVE
PP	PIPE PILE,
	PLASTIC PIPE,
	POWER POLE
PPL	PREFORMED PERMEABLE LINER
PPP	PERFORATED PLASTIC PIPE
PRC	POINT OF REVERSE CURVE
PRF	PAVEMENT REINFORCING FABRIC
PRVC	POINT OF REVERSE VERTICAL CURVE
PS&E	PLANS, SPECIFICATIONS AND ESTIMATES
PS, P/S	PRESTRESSED
PSP	PERFORATED STEEL PIPE
PT	POINT OF TANGENCY
PVC	POLYVINYL CHLORIDE
Pvmt	PAVEMENT

Q

Qty	QUANTITY

R

R	RADIUS
R & D	REMOVE AND DISPOSE
R & S	REMOVE AND SALVAGE
R/C	RATE OF CHANGE
RCA	REINFORCED CONCRETE ARCH
RCB	REINFORCED CONCRETE BOX
RCP	REINFORCED CONCRETE PIPE
RCPA	REINFORCED CONCRETE PIPE ARCH
Rd	ROAD
Reinf	REINFORCED,
	REINFORCEMENT,
	REINFORCING
Rel	RELOCATE
Repl	REPLACEMENT
Ret	RETAINING
Rev	REVISED, REVISION
Rdwy	ROADWAY
RHMA	RUBBERIZED HOT MIX ASPHALT
Riv	RIVER
RM	ROAD-MIXED
RP	RADIUS POINT,
	REFERENCE POINT
RR	RAILROAD
RSP	ROCK SLOPE PROTECTION,
	REVISED STANDARD PLAN
Rt	RIGHT
Rte	ROUTE
RW	REDWOOD,
	RETAINING WALL
R/W	RIGHT OF WAY
Rwy	RAILWAY

S

S	SOUTH,
	SUPPLEMENT
SAE	STRUCTURE APPROACH EMBANKMENT
Salv	SALVAGE
SAPP	STRUCTURAL ALUMINUM PLATE PIPE
SB	SOUTHBOUND
SC	SAND CUSHION
SCSP	SLOTTED CORRUGATED STEEL PIPE
SD	STORM DRAIN
Sec	SECOND,
	SECTION
Sep	SEPARATION
SG	SUBGRADE
Shld	SHOULDER
Sht	SHEET
Sim	SIMILAR
℄	STATION LINE
SM	SELECTED MATERIAL
Spec	SPECIAL,
	SPECIFICATIONS
SPP	SLOTTED PLASTIC PIPE
SS	SLOPE STAKE
SSBM	STRAP AND SADDLE BRACKET METHOD
SSD	STRUCTURAL SECTION DRAIN
SSPA	STRUCTURAL STEEL PLATE ARCH
SSPP	STRUCTURAL STEEL PLATE PIPE
SSPPA	STRUCTURAL STEEL PLATE PIPE ARCH
SSRP	STEEL SPIRAL RIB PIPE
St	STREET
Sta	STATION
STBB	SINGLE THRIE BEAM BARRIER
Std	STANDARD
Str	STRUCTURE
Surf	SURFACING
SW	SIDEWALK,
	SOUND WALL
Swr	SEWER
Sym	SYMMETRICAL
S4S	SURFACE 4 SIDES

T

T	SEMI-TANGENT
Tan	TANGENT
TBB	THRIE BEAM BARRIER
Tbr	TIMBER
TC	TOP OF CURB
TCB	TRAFFIC CONTROL BOX
TCE	TEMPORARY CONSTRUCTION EASEMENT
Tel	TELEPHONE
Temp	TEMPORARY
TG	TOP OF GRADE
Tot	TOTAL
TP	TELEPHONE POLE
TPB	TREATED PERMEABLE BASE
TPM	TREATED PERMEABLE MATERIAL
Trans	TRANSITION

T continued

TS	TRANSVERSE,
	TRAFFIC SIGNAL,
	TUBULAR STEEL
Typ	TYPICAL

U

UC	UNDERCROSSING
UD	UNDERDRAIN
UG	UNDERGROUND
UON	UNLESS OTHERWISE NOTED
UP	UNDERPASS

V

V	VALVE,
	DESIGN SPEED
Var	VARIABLE,
	VARIES
VC	VERTICAL CURVE
VCP	VITRIFIED CLAY PIPE
Vert	VERTICAL
Via	VIADUCT
Vol	VOLUME

W

W	WEST,
	WIDTH
WB	WESTBOUND
WH	WEEP HOLE
WM	WIRE MESH
WS	WATER SURFACE
WSP	WELDED STEEL PIPE
Wt	WEIGHT
WV	WATER VALVE
WW	WINGWALL
WWLOL	WINGWALL LAYOUT LINE

X

X Sec	CROSS SECTION
Xing	CROSSING

Y

Yr	YEAR
Yrs	YEARS

Dist	COUNTY	ROUTE	POST MILES TOTAL PROJECT	SHEET No.	TOTAL SHEETS
01	Hum	36, 96, 169, 211, 254, etc.	Var	86	103

Grace M. Tsushima
REGISTERED CIVIL ENGINEER

July 19, 2013
PLANS APPROVAL DATE

REGISTERED PROFESSIONAL ENGINEER
Grace M. Tsushima
No. C49814
Exp. 9-30-14
CIVIL
STATE OF CALIFORNIA

THE STATE OF CALIFORNIA OR ITS OFFICERS OR AGENTS SHALL NOT BE RESPONSIBLE FOR THE ACCURACY OR COMPLETENESS OF SCANNED COPIES OF THIS PLAN SHEET.

TO ACCOMPANY PLANS DATED 3-30-15

UNIT OF MEASUREMENT SYMBOLS:

Some of the symbols used in the project plan quantity tables and in the Bid Item List are:

TABLE A

SYMBOL USED	DEFINITIONS
ACRE	ACRE
CF	CUBIC FOOT
CY	CUBIC YARD
EA	EACH
GAL	GALLON
LB	POUND
LF	LINEAR FOOT
SQFT	SQUARE FOOT
SQYD	SQUARE YARD
STA	100 FEET
TAB	TABLET
TON	2,000 POUNDS

Some of the symbols used in the plans other than in the project plan quantity tables are:

TABLE B

SYMBOL USED	DEFINITIONS
ksi	KIPS PER SQUARE INCH
ksf	KIPS PER SQUARE FOOT
psi	POUNDS PER SQUARE INCH
psf	POUNDS PER SQUARE FOOT
lb/ft^3, pcf	POUNDS PER CUBIC FOOT
tsf	TONS PER SQUARE FOOT
mph, MPH *	MILES PER HOUR
ø	NOMINAL DIAMETER
oz	OUNCE
lb	POUND
kip	1,000 POUNDS
cal	CALORIE
ft	FOOT OR FEET
gal	GALLON

* For use on a sign panel only

STATE OF CALIFORNIA
DEPARTMENT OF TRANSPORTATION

ABBREVIATIONS (SHEET 2 OF 2)

NO SCALE

RSP A10B DATED JULY 19, 2013 SUPERSEDES STANDARD PLAN A10B DATED MAY 20, 2011 - PAGE 2 OF THE STANDARD PLANS BOOK DATED 2010.

REVISED STANDARD PLAN RSP A10B

2010 REVISED STANDARD PLAN RSP A10B

6-7-13

Dist	COUNTY	ROUTE	POST MILES TOTAL PROJECT	SHEET No.	TOTAL SHEETS
01	Hum	36, 96, 169, 211, 254, etc.	Var	87	103

Randell D. Hiatt
REGISTERED CIVIL ENGINEER

July 19, 2013
PLANS APPROVAL DATE

REGISTERED PROFESSIONAL ENGINEER
Randell D. Hiatt
No. C50200
Exp. 6-30-15
CIVIL
STATE OF CALIFORNIA

THE STATE OF CALIFORNIA OR ITS OFFICERS OR AGENTS SHALL NOT BE RESPONSIBLE FOR THE ACCURACY OR COMPLETENESS OF SCANNED COPIES OF THIS PLAN SHEET.

TO ACCOMPANY PLANS DATED 3-30-15

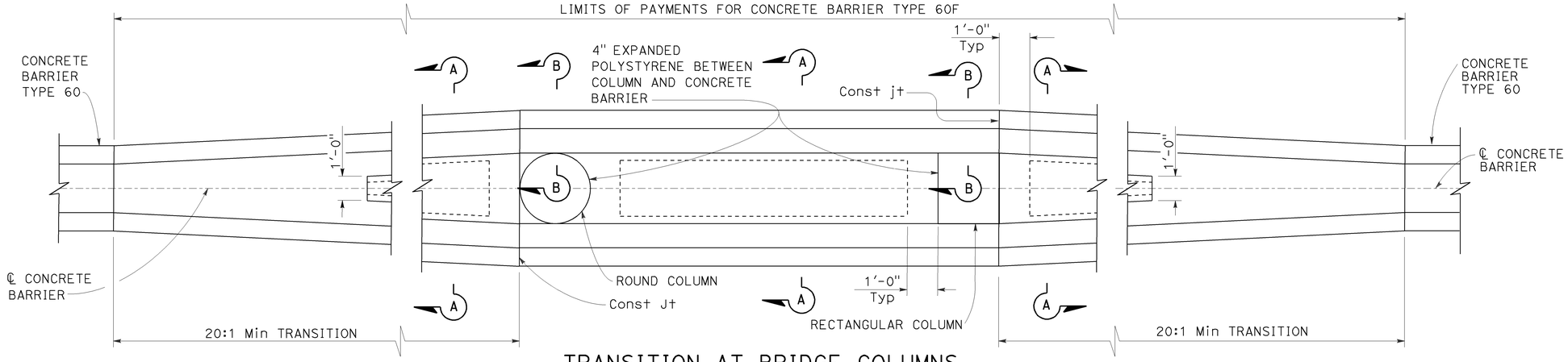

TRANSITION AT BRIDGE COLUMNS

Concrete Barrier Type 60F
See Note 7

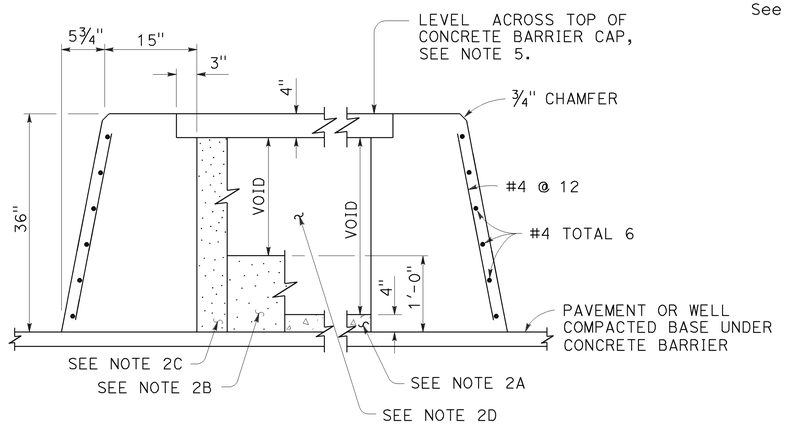

SECTION A-A

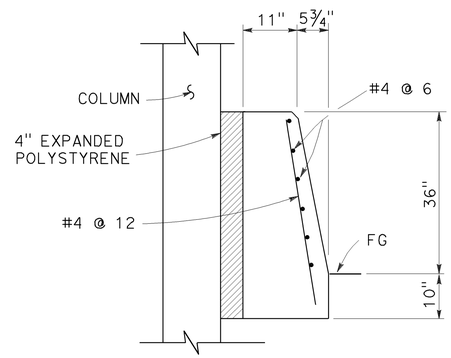

SECTION B-B

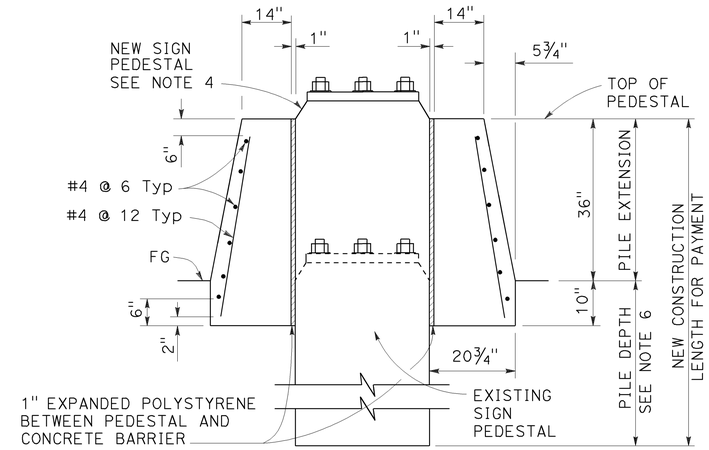

SECTION C-C

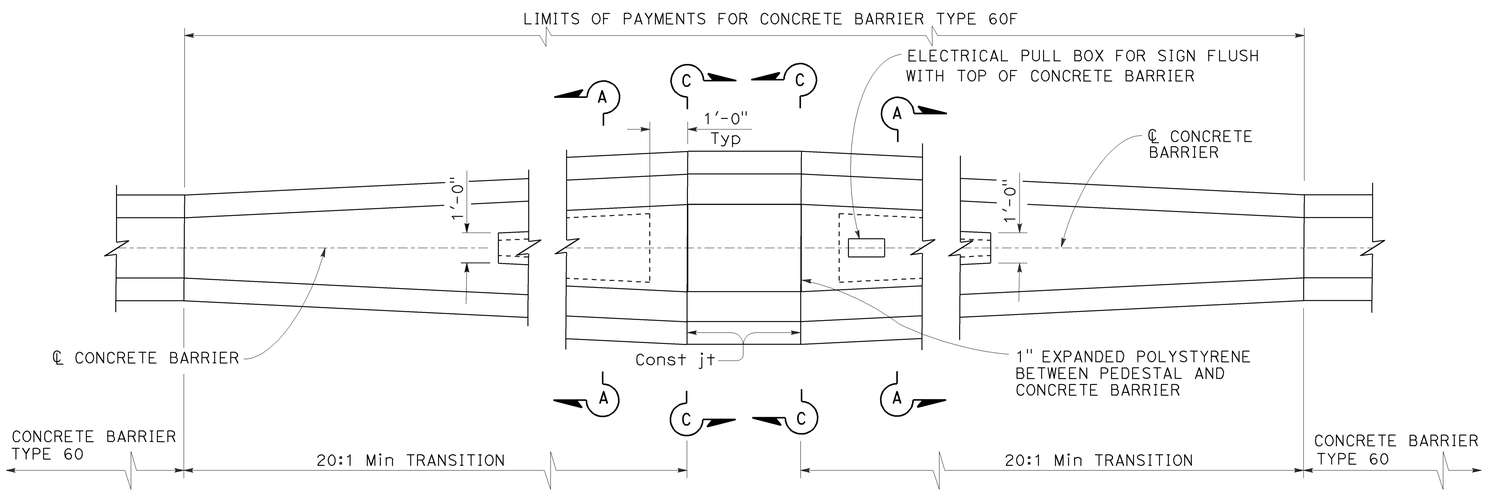

TRANSITION AT SIGN PEDESTAL

Concrete Barrier Type 60F
See Note 7

NOTES:

1. See Standard Plan A76A for Concrete Barrier Type 60.
2. Contractor options for fill between concrete barrier walls:
   A. Place 4" PCC at base between concrete barrier walls.
   B. Place 1'-0" of granular material at base between walls.
   C. Place granular material from base to bottom of 4" cap.
   D. Monolithic concrete with foam blockouts is not permitted.
3. Reinforcing steel shall extend continuous through construction joints.
4. See "Overhead Sign" plans for sign pedestal elevations on new construction.
5. Adjust height of concrete barrier wall on low side of offset or superelevated roadways to provide level grade across top of concrete barrier cap.
6. See Overhead Signs Standard Plan Pile Foundation Tables.
7. All locations with limited shoulder width available for barrier, see Standard Plan A76F for use of Concrette Barrier Type 60GE.

STATE OF CALIFORNIA
DEPARTMENT OF TRANSPORTATION

CONCRETE BARRIER TYPE 60F

NO SCALE

RSP A76C DATED JULY 19, 2013 SUPERSEDES STANDARD PLAN A76C DATED MAY 20, 2011 - PAGE 36 OF THE STANDARD PLANS BOOK DATED 2010.

REVISED STANDARD PLAN RSP A76C

2010 REVISED STANDARD PLAN RSP A76C

Dist	COUNTY	ROUTE	POST MILES TOTAL PROJECT	SHEET No.	TOTAL SHEETS
01	Hum	36, 96, 169, 211, 254, etc.	Var	88	103

Randell D. Hiatt
REGISTERED CIVIL ENGINEER

July 19, 2013
PLANS APPROVAL DATE

REGISTERED PROFESSIONAL ENGINEER
Randell D. Hiatt
No. C50200
Exp. 6-30-15
CIVIL
STATE OF CALIFORNIA

THE STATE OF CALIFORNIA OR ITS OFFICERS OR AGENTS SHALL NOT BE RESPONSIBLE FOR THE ACCURACY OR COMPLETENESS OF SCANNED COPIES OF THIS PLAN SHEET.

TO ACCOMPANY PLANS DATED 3-30-15

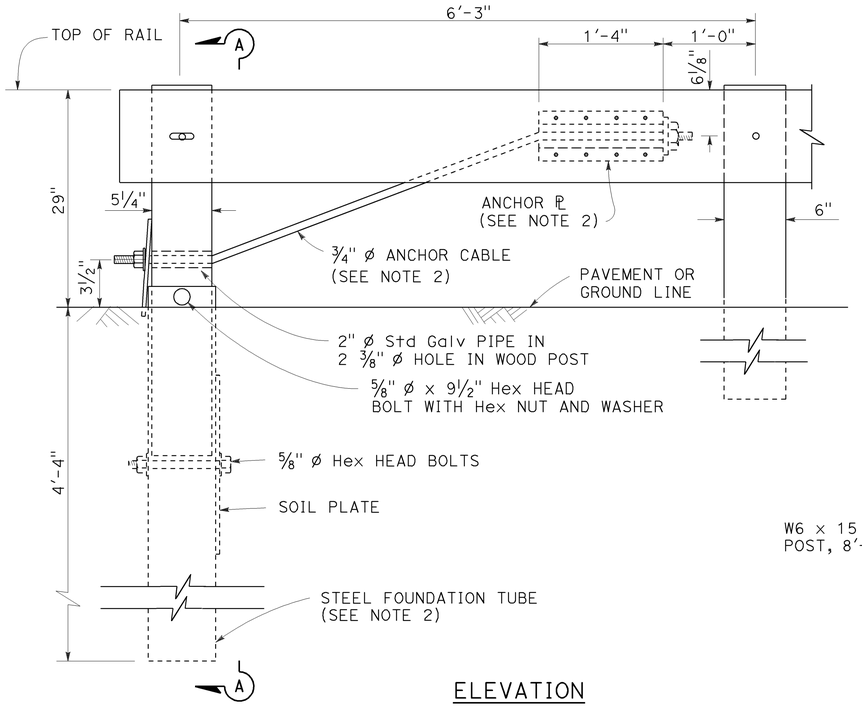

ELEVATION
END ANCHOR
ASSEMBLY (TYPE SFT)

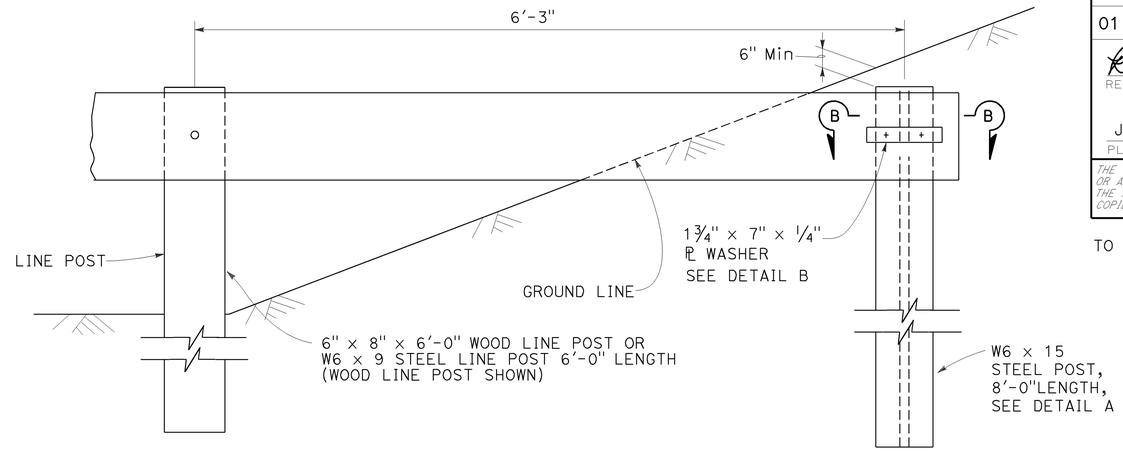

BURIED POST END ANCHOR

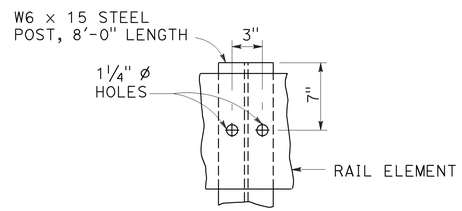

DETAIL A

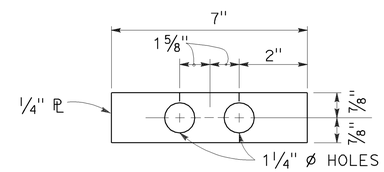

DETAIL B

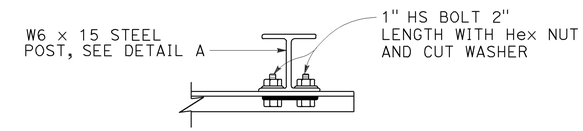

SECTION B-B

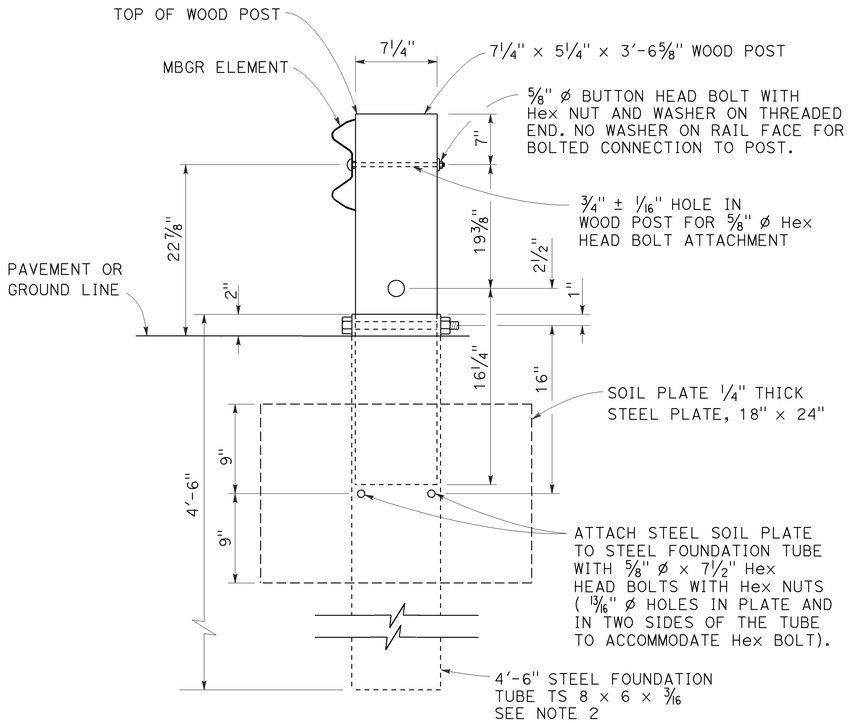

SECTION A-A

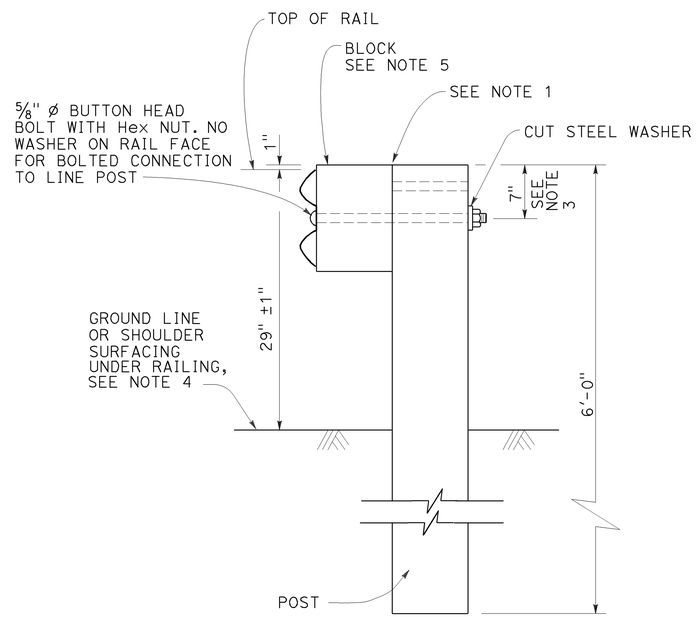

TYPICAL LINE
POST INSTALLATION

NOTES:

1. For wood post and wood block, toenail with 2-16d Galv nails in top of block. For steel post and notched wood or plastic block, notched face of block faces steel post.
2. A 6'-0" Length steel foundation tube, TS 8 x 6 x 3/16, without a soil plate, may be furnished and installed in place of the 4'-6" length steel foundation tube and soil plate shown, Minimum embadment of the 6'-0" length tube shall be 5'-9". A 5/8" ø Hex head bolt and nut shall be installed in the hole in the 6'-0" length tube to keep the wood post from dropping into the tube.
3. To connect railing to 27" terminal system end treatment, transition the top of railing height at a ratio of 120:1 to terminal system end treatment height plus one 12'-6" standard railing section at the transitioned height for a horizontal connection to the end treatment.
4. Install posts in soil.
5. See Revised Standard Plans RSP A77N1 and RSP A77N2 for details.
6. Holes excavation in the slope to construct the buried post end anchor shall be backfilled with selected earth, placed in layers approximately 1'-0" thick. Each layer shall be moistened and thoroughly compacted.

STATE OF CALIFORNIA
DEPARTMENT OF TRANSPORTATION

METAL BEAM GUARD RAILING RECONSTRUCT INSTALLATION

NO SCALE

RSP A77L3 DATED JULY 19, 2013 SUPPLEMENTS THE STANDARD PLANS BOOK DATED 2010.

REVISED STANDARD PLAN RSP A77L3

2010 REVISED STANDARD PLAN RSP A77L3

7-16-13

Dist	COUNTY	ROUTE	POST MILES TOTAL PROJECT	SHEET No.	TOTAL SHEETS
01	Hum	36, 96, 169, 211, 254, etc.	Var	89	103

Randell D. Hiatt
REGISTERED CIVIL ENGINEER

July 19, 2013
PLANS APPROVAL DATE

REGISTERED PROFESSIONAL ENGINEER
Randell D. Hiatt
No. C50200
Exp. 6-30-15
CIVIL
STATE OF CALIFORNIA

THE STATE OF CALIFORNIA OR ITS OFFICERS OR AGENTS SHALL NOT BE RESPONSIBLE FOR THE ACCURACY OR COMPLETENESS OF SCANNED COPIES OF THIS PLAN SHEET.

TO ACCOMPANY PLANS DATED 3-30-15

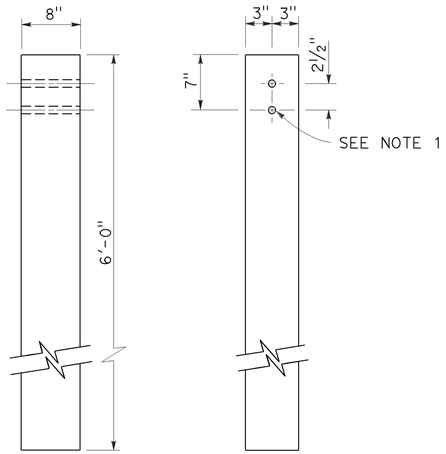

SIDE FRONT

6" x 8" WOOD POST
See Note 3

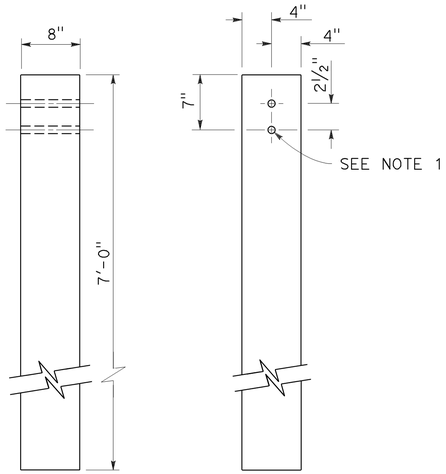

SIDE FRONT

8" x 8" WOOD POST
See Note 4

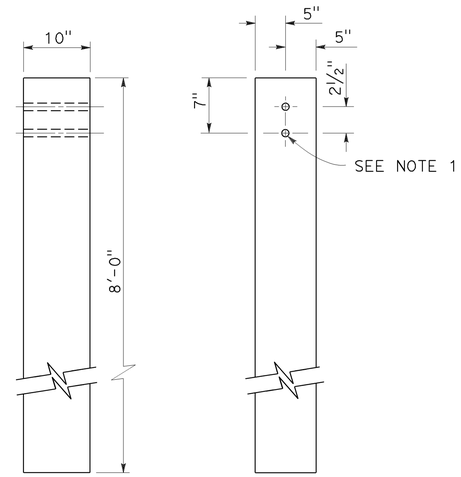

SIDE FRONT

10" x 10" WOOD POST
See Note 5

NOTES:

1. All holes in wood posts and blocks shall be ¾" Dia ± 1/16".
2. Dimensions shown for wood post are nominal.
3. This post and block combination used for standard line post sections of MGS.
4. This post and 8" x 12" block combination used for line post sections of MGS on narrow roadways.
5. This post and 8" x 12" block combination is typically used where strengthened line post sections of MGS are warranted to shield fixed objects.
6. See Revised Standard Plan RSP A77L3 for use of 6" x 8" and 8" x 8" wood blocks.

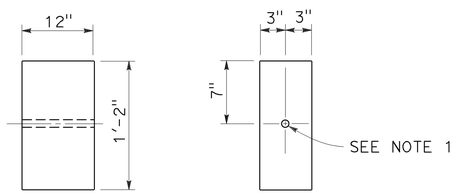

SIDE FRONT

6" x 12" WOOD BLOCK
See Note 3

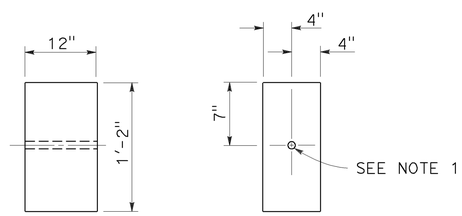

SIDE FRONT

8" x 12" WOOD BLOCK

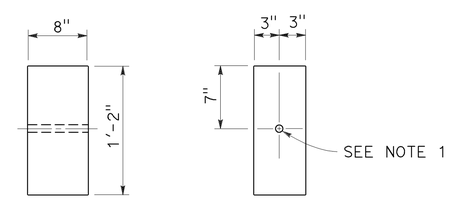

SIDE FRONT

6" x 8" WOOD BLOCK
Only for use with metal beam guard rail see Note 6

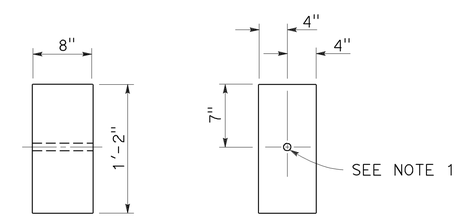

SIDE FRONT

8" x 8" WOOD BLOCK
Only for use with metal beam guard rail see Note 6

STATE OF CALIFORNIA
DEPARTMENT OF TRANSPORTATION

MIDWEST GUARDRAIL SYSTEM WOOD POST AND WOOD BLOCK DETAILS

NO SCALE

RSP A77N1 DATED JULY 19, 2013 SUPPLEMENTS THE STANDARD PLANS BOOK DATED 2010.

REVISED STANDARD PLAN RSP A77N1

2010 REVISED STANDARD PLAN RSP A77N1

7-3-13

Dist	COUNTY	ROUTE	POST MILES TOTAL PROJECT	SHEET No.	TOTAL SHEETS
01	Hum	36, 96, 169, 211, 254, etc.	Var	90	103

Randell D. Hiatt
REGISTERED CIVIL ENGINEER

November 15, 2013
PLANS APPROVAL DATE

REGISTERED PROFESSIONAL ENGINEER
Randell D. Hiatt
No. C50200
Exp. 6-30-15
CIVIL
STATE OF CALIFORNIA

THE STATE OF CALIFORNIA OR ITS OFFICERS OR AGENTS SHALL NOT BE RESPONSIBLE FOR THE ACCURACY OR COMPLETENESS OF SCANNED COPIES OF THIS PLAN SHEET.

TO ACCOMPANY PLANS DATED 3-30-15

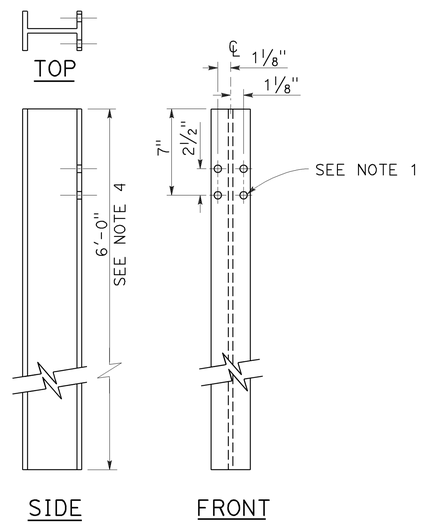

W6 x 9 OR W6 x 8.5
STEEL POST
See Note 4

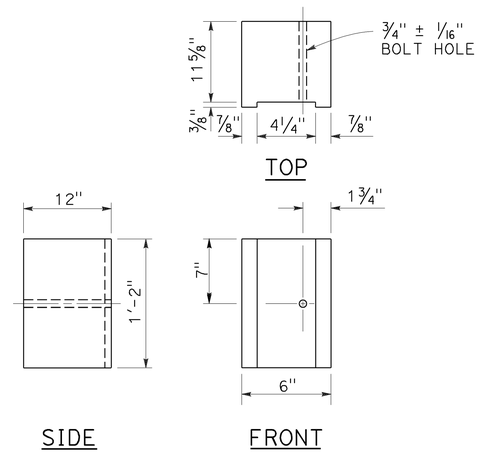

6" x 12"
NOTCHED WOOD BLOCK
See Notes 2 and 3

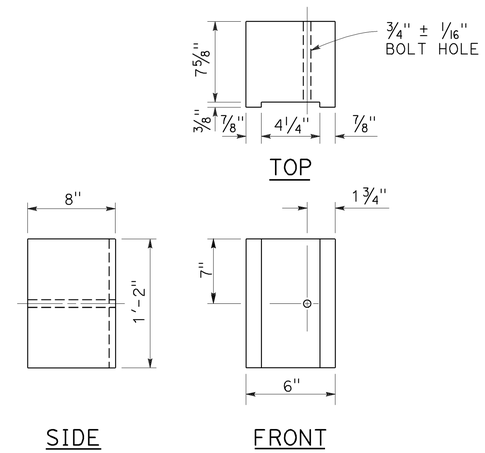

6" x 8"
NOTCHED WOOD BLOCK
Only for use with metal beam guard railing. See Note 5

NOTES:

1. All holes in steel post shall be 13/16" Dia maximum.
2. Dimensions shown for wood block are nominal.
3. Notched face of block faces steel post.
4. 6'-0" length posts to be used for typical roadway installation. See Revised Standard Plan RSP A77N3.
5. See Revised Standard Plan RSP A77L3 for use of 6" x 8" and 8" x 8" notched wood blocks.
6. This post and 8" x 12" block combination to be used for line post sections of MGS on narrow roadways and where strengthened line post sections of MGS are warranted to shield fixed objects.

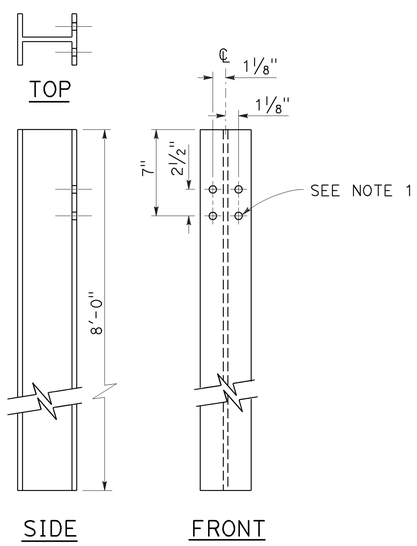

W6 x 15
STEEL POST
See Note 6

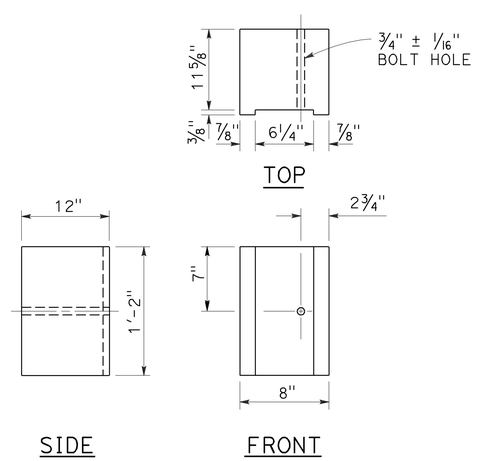

8" x 12"
NOTCHED WOOD BLOCK
See Notes 2 and 3

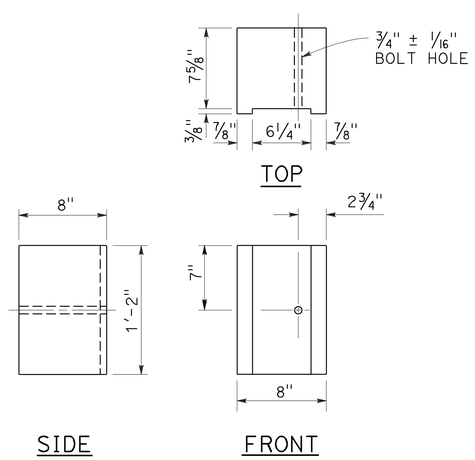

8" x 8"
NOTCHED WOOD BLOCK
Only for use with metal beam guard railing. See Note 5

STATE OF CALIFORNIA
DEPARTMENT OF TRANSPORTATION

MIDWEST GUARDRAIL SYSTEM STEEL POST AND NOTCHED WOOD BLOCK DETAILS

NO SCALE

RSP A77N2 DATED NOVEMBER 15, 2013 SUPERSEDES RSP A77N2
DATED JULY 19, 2013 THAT SUPPLEMENTS THE STANDARD PLANS BOOK DATED 2010.

REVISED STANDARD PLAN RSP A77N2

2010 REVISED STANDARD PLAN RSP A77N2

10-29-13

Dist	COUNTY	ROUTE	POST MILES TOTAL PROJECT	SHEET No.	TOTAL SHEETS
01	Hum	36, 96, 169, 211, 254, etc.	Var	91	103

Randell D. Hiatt
REGISTERED CIVIL ENGINEER

July 19, 2013
PLANS APPROVAL DATE

REGISTERED PROFESSIONAL ENGINEER
Randell D. Hiatt
No. C50200
Exp. 6-30-15
CIVIL
STATE OF CALIFORNIA

THE STATE OF CALIFORNIA OR ITS OFFICERS OR AGENTS SHALL NOT BE RESPONSIBLE FOR THE ACCURACY OR COMPLETENESS OF SCANNED COPIES OF THIS PLAN SHEET.

TO ACCOMPANY PLANS DATED 3-30-15

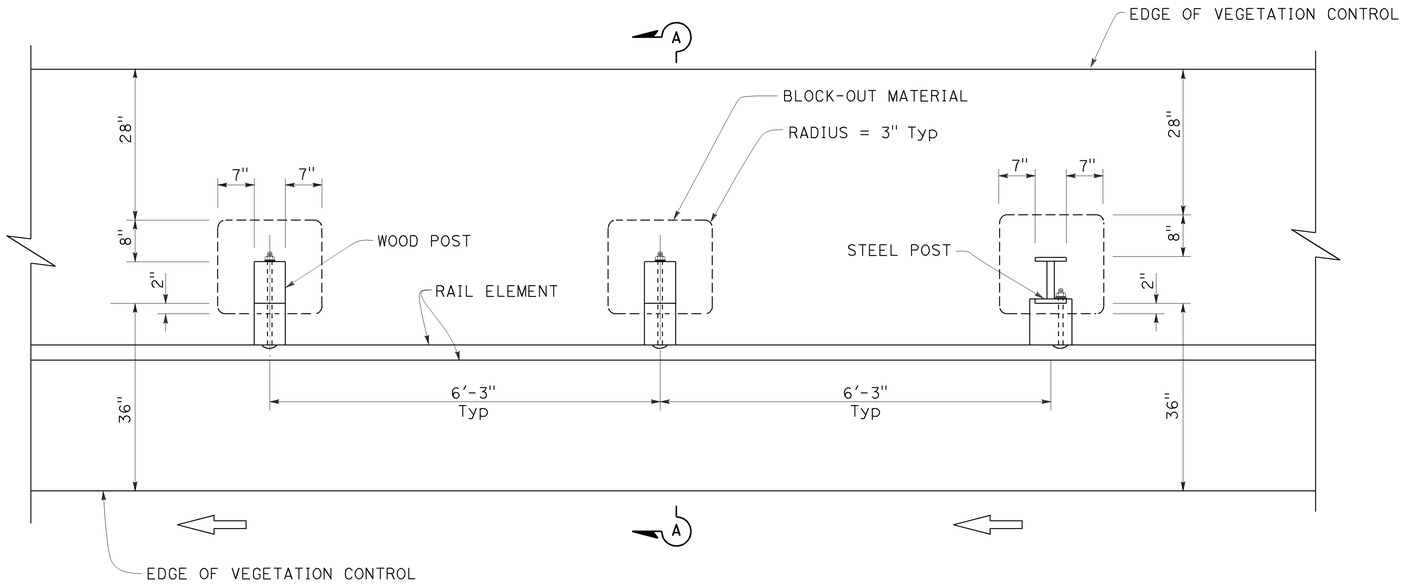

PLAN

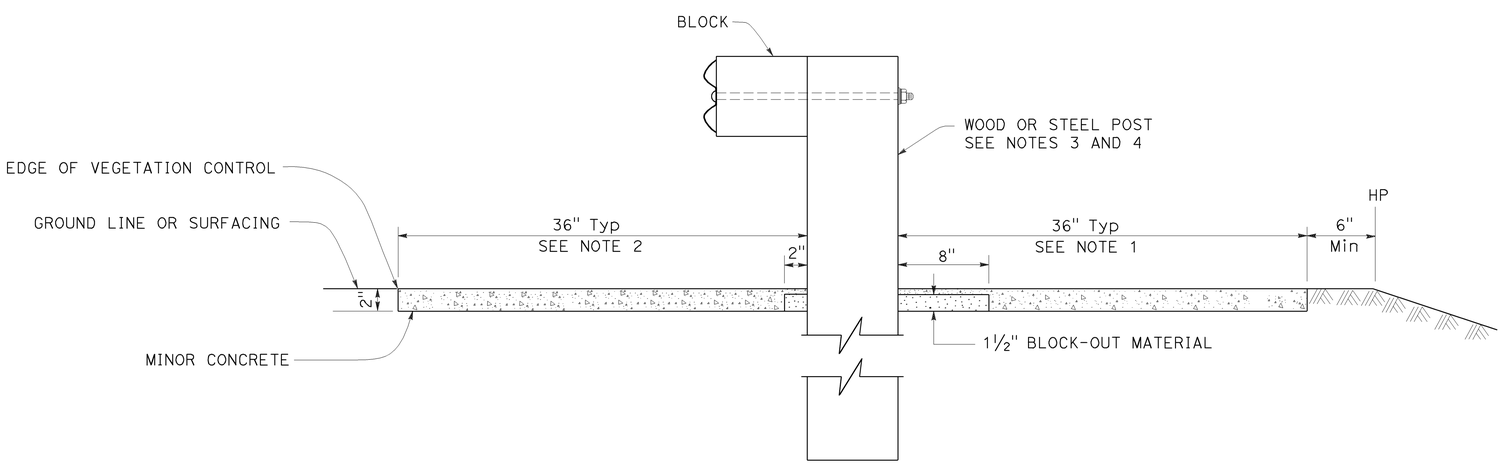

SECTION A-A

NOTES:

1. Where the distance between back of post and hinge point is less than 42", construct vegetation control to 6" from hinge point while maintaining the 8" block-out at back of post. If the 8" block-out at back of post can not be maintained, construct vegetation control flush with the back edge of post.
2. Where dike is constructed under railing, construct vegetation control to back edge of dike. Where paved shoulder is constructed within 36" in front of the post, construct vegetation control to the edge of paved shoulder.
3. For wood post sizes, see Revised Standard Plan RSP A77N1.
4. For steel post sizes, see Revised Standard Plan RSP A77N2.
5. For details not shown, see Revised Standard Plans RSP A77L1 and RSP A77L2.

STATE OF CALIFORNIA
DEPARTMENT OF TRANSPORTATION

MIDWEST GUARDRAIL SYSTEM TYPICAL VEGETATION CONTROL STANDARD RAILING SECTION

NO SCALE

RSP A77N5 DATED JULY 19, 2013 SUPPLEMENTS THE STANDARD PLANS BOOK DATED 2010.

REVISED STANDARD PLAN RSP A77N5

2010 REVISED STANDARD PLAN RSP A77N5

7-3-13

Dist	COUNTY	ROUTE	POST MILES TOTAL PROJECT	SHEET No.	TOTAL SHEETS
01	Hum	36, 96, 169, 211, 254, etc.	Var	92	103

Randell D. Hiatt
REGISTERED CIVIL ENGINEER

July 19, 2013
PLANS APPROVAL DATE

REGISTERED PROFESSIONAL ENGINEER
Randell D. Hiatt
No. C50200
Exp. 6-30-15
CIVIL
STATE OF CALIFORNIA

THE STATE OF CALIFORNIA OR ITS OFFICERS OR AGENTS SHALL NOT BE RESPONSIBLE FOR THE ACCURACY OR COMPLETENESS OF SCANNED COPIES OF THIS PLAN SHEET.

TO ACCOMPANY PLANS DATED 3-30-15

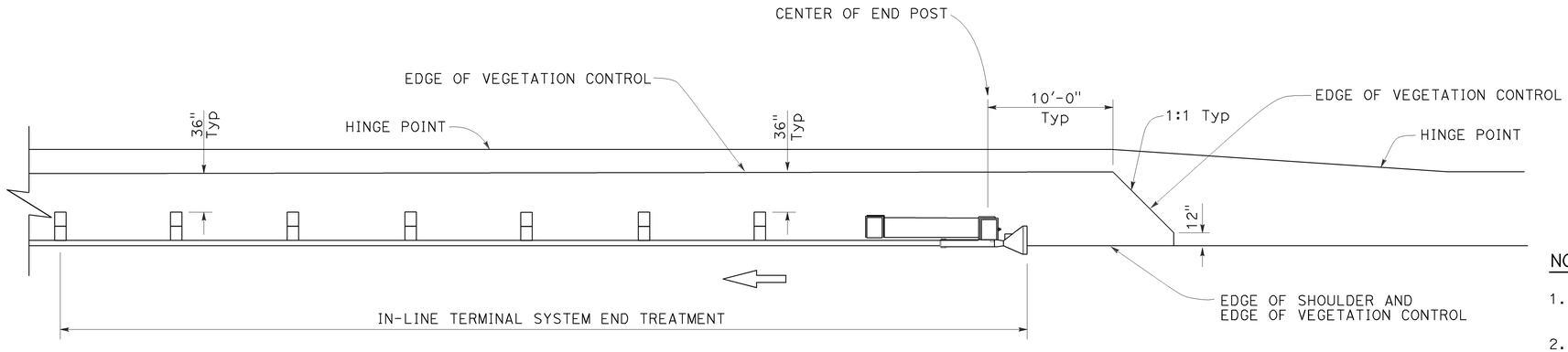

PLAN

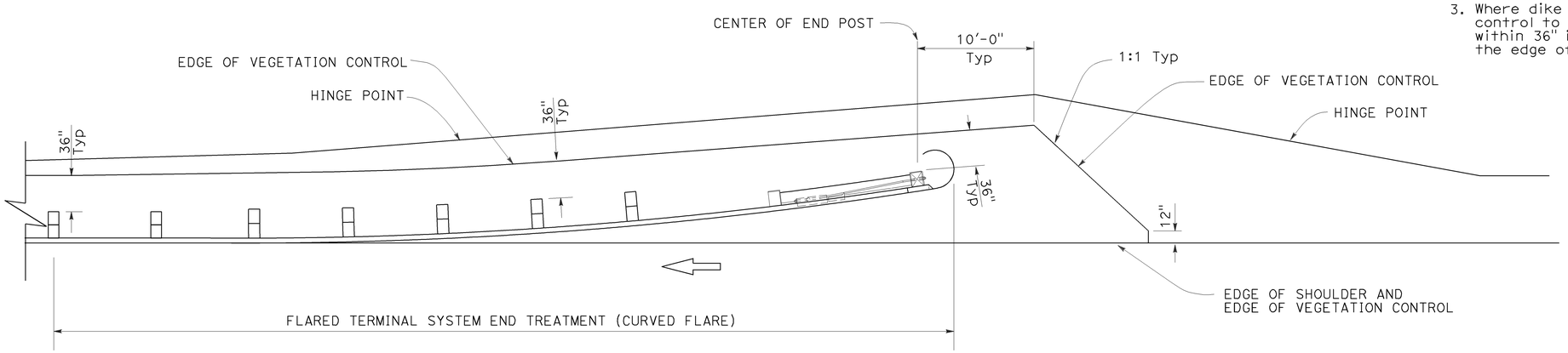

PLAN

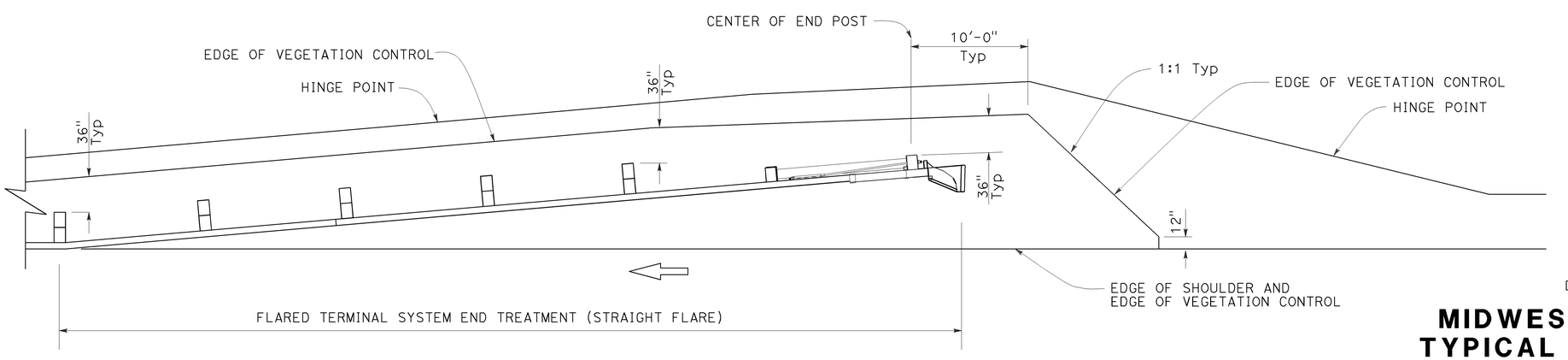

PLAN

NOTES:

1. See Revised Standard Plan RSP A77N5 for additional vegetation control details.
2. Where the distance between back of post and hinge point is less than 42", construct vegetation control to 6" from hinge point while maintaining the 8" block-out at back of post. If the 8" block-out at back of post can not be maintained, construct vegetation control flush with the back edge of post.
3. Where dike is constructed under railing, construct vegetation control to back edge of dike. Where paved shoulder is constructed within 36" in front of the post, construct vegetation control to the edge of paved shoulder.

STATE OF CALIFORNIA
DEPARTMENT OF TRANSPORTATION

MIDWEST GUARDRAIL SYSTEM TYPICAL VEGETATION CONTROL FOR TERMINAL SYSTEM END TREATMENTS

NO SCALE

RSP A77N6 DATED JULY 19, 2013 SUPPLEMENTS THE STANDARD PLANS BOOK DATED 2010.

REVISED STANDARD PLAN RSP A77N6

2010 REVISED STANDARD PLAN RSP A77N6

6-12-13

Dist	COUNTY	ROUTE	POST MILES TOTAL PROJECT	SHEET No.	TOTAL SHEETS
01	Hum	36, 96, 169, 211, 254, etc.	Var	93	103

Randell D. Hiatt
REGISTERED CIVIL ENGINEER

July 19, 2013
PLANS APPROVAL DATE

REGISTERED PROFESSIONAL ENGINEER
Randell D. Hiatt
No. C50200
Exp. 6-30-15
CIVIL
STATE OF CALIFORNIA

THE STATE OF CALIFORNIA OR ITS OFFICERS OR AGENTS SHALL NOT BE RESPONSIBLE FOR THE ACCURACY OR COMPLETENESS OF SCANNED COPIES OF THIS PLAN SHEET.

TO ACCOMPANY PLANS DATED 3-30-15

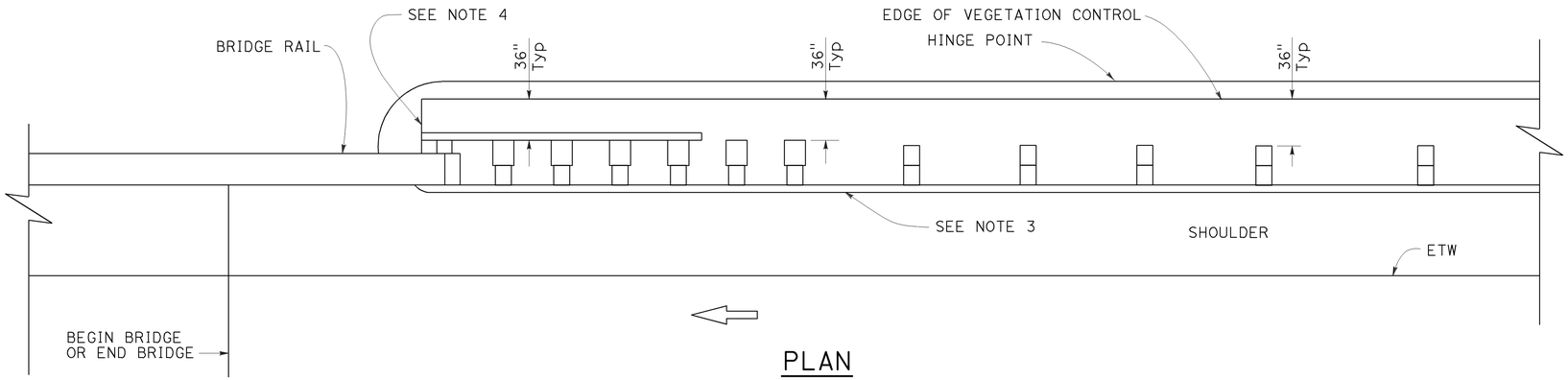

PLAN

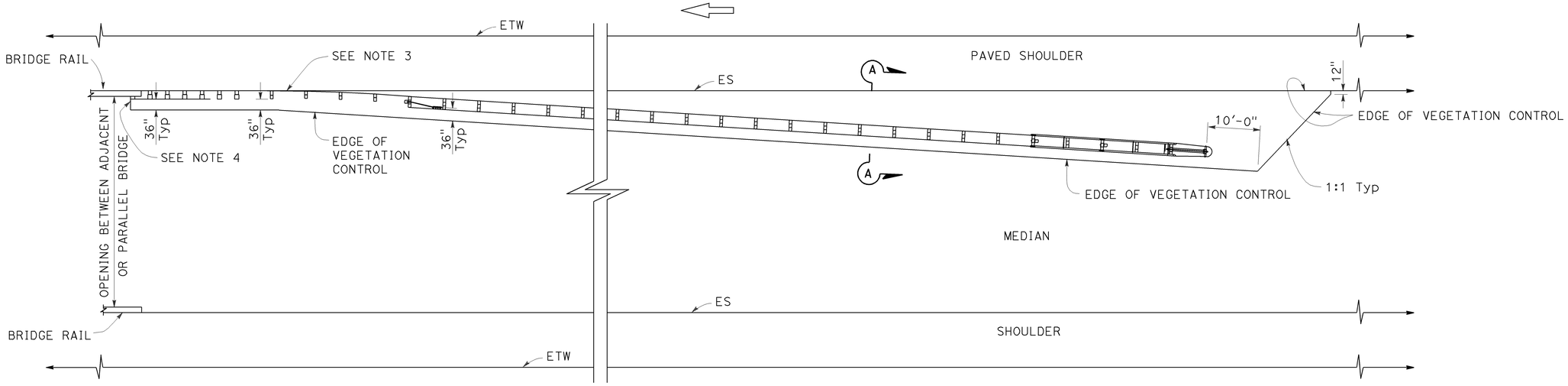

PLAN

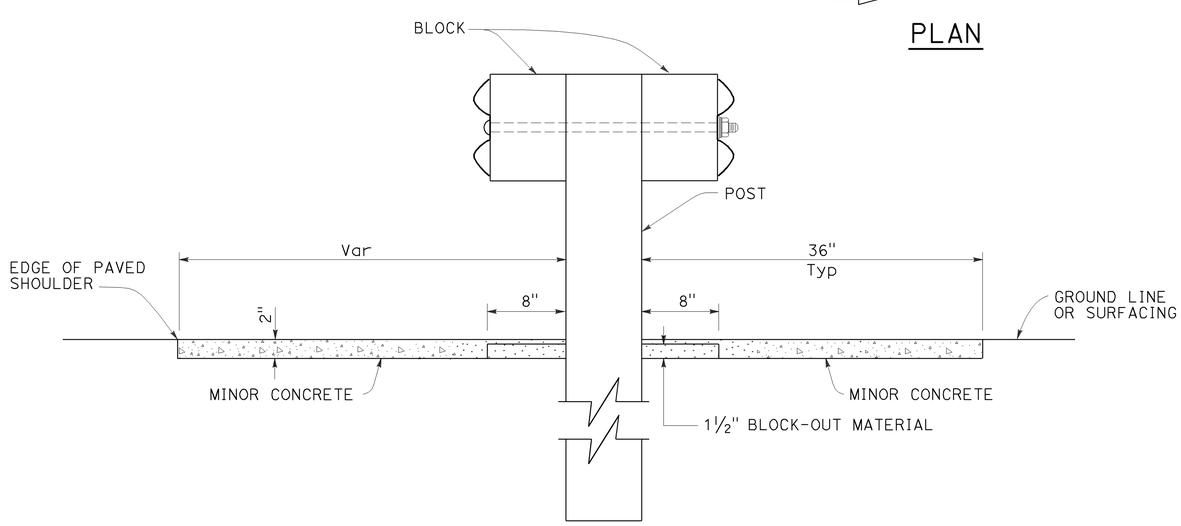

SECTION A-A

NOTES:

1. See Revised Standard Plan RSP A77N5 for additional vegetation control details.
2. Where the distance between back of post and hinge point is less than 42", construct vegetation control to 6" from hinge point while maintaining the 8" block-out at back of post. If the 8" block-out at back of post can not be maintained, construct vegetation control flush with the back edge of post.
3. Where dike is constructed under railing, construct vegetation control to back edge of dike. Where paved shoulder is constructed within 36" in front of the post, construct vegetation control to the edge of paved shoulder.
4. End vegetation control at end of backside rail element.

STATE OF CALIFORNIA
DEPARTMENT OF TRANSPORTATION

MIDWEST GUARDRAIL SYSTEM TYPICAL VEGETATION CONTROL AT STRUCTURE APPROACH

NO SCALE

RSP A77N7 DATED JULY 19, 2013 SUPPLEMENTS THE STANDARD PLANS BOOK DATED 2010.

REVISED STANDARD PLAN RSP A77N7

2010 REVISED STANDARD PLAN RSP A77N7

6-12-13

Dist	COUNTY	ROUTE	POST MILES TOTAL PROJECT	SHEET No.	TOTAL SHEETS
01	Hum	36, 96, 169, 211, 254, etc.	Var	94	103

Randell D. Hiatt
REGISTERED CIVIL ENGINEER

July 19, 2013
PLANS APPROVAL DATE

REGISTERED PROFESSIONAL ENGINEER
Randell D. Hiatt
No. C50200
Exp. 6-30-15
CIVIL
STATE OF CALIFORNIA

THE STATE OF CALIFORNIA OR ITS OFFICERS OR AGENTS SHALL NOT BE RESPONSIBLE FOR THE ACCURACY OR COMPLETENESS OF SCANNED COPIES OF THIS PLAN SHEET.

TO ACCOMPANY PLANS DATED 3-30-15

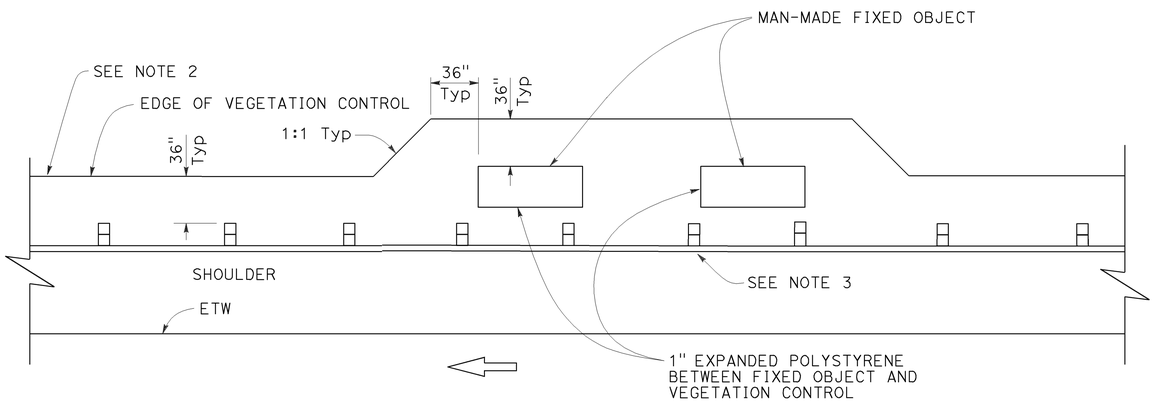

PLAN

Fixed object(s) on shoulder

NOTES:

1. See Revised Standard Plan RSP A77N5 for additional vegetation control details.
2. Where the distance between back of post and hinge point is less than 42", construct vegetation control to 6" from hinge point while maintaining the 8" block-out at back of post. If the 8" block-out at back of post can not be maintained, construct vegetation control flush with the back edge of post.
3. Where dike is constructed under railing, construct vegetation control to back edge of dike. Where paved shoulder is constructed within 36" in front of the post, construct vegetation control to the edge of paved shoulder.

STATE OF CALIFORNIA
DEPARTMENT OF TRANSPORTATION

MIDWEST GUARDRAIL SYSTEM TYPICAL VEGETATION CONTROL AT FIXED OBJECT

NO SCALE

RSP A77N8 DATED JULY 19, 2013 SUPPLEMENTS THE STANDARD PLANS BOOK DATED 2010.

REVISED STANDARD PLAN RSP A77N8

2010 REVISED STANDARD PLAN RSP A77N8

Dist	COUNTY	ROUTE	POST MILES TOTAL PROJECT	SHEET No.	TOTAL SHEETS
01	Hum	36, 96, 169, 211, 254, etc.	Var	95	103

REGISTERED CIVIL ENGINEER

July 19, 2013
PLANS APPROVAL DATE

REGISTERED PROFESSIONAL ENGINEER
Michael Janzen
No. 44788
Exp. 03-31-14
CIVIL
STATE OF CALIFORNIA

THE STATE OF CALIFORNIA OR ITS OFFICERS OR AGENTS SHALL NOT BE RESPONSIBLE FOR THE ACCURACY OR COMPLETENESS OF SCANNED COPIES OF THIS PLAN SHEET.

TO ACCOMPANY PLANS DATED 3-30-15

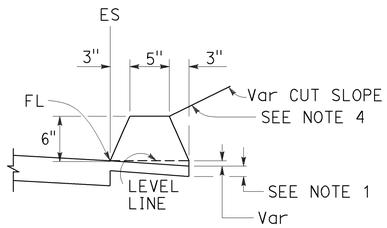

TYPE A
See Note 3

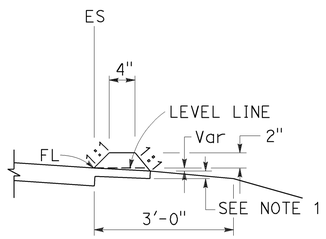

TYPE C

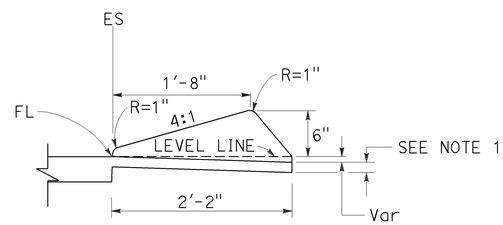

TYPE D

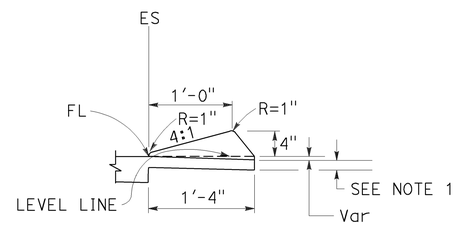

TYPE E

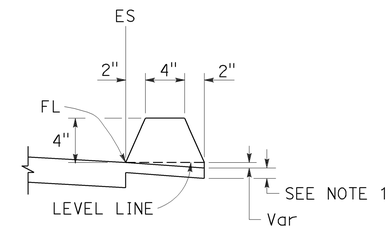

TYPE F
See Note 5

DIKES

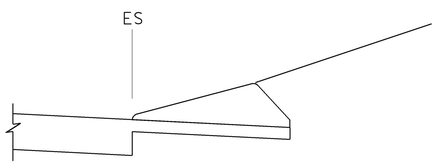

CASE C-1
Cut Slope

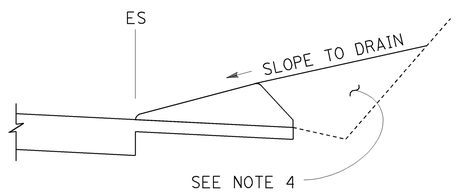

CASE C-2
Cut Slope

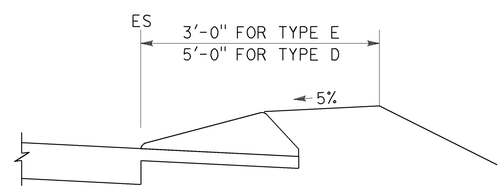

CASE F

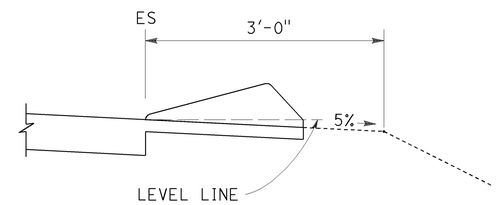

CASE R
See Note 2

TYPE D AND E BACKFILL DETAILS

NOTES:

1. For HMA shoulders only, extend top layer of HMA placed on the shoulder under dike with no joint at the ES. For projects with OGFC shoulders, do not extend OGFC under dike. See project plans for modified dike detail.
2. Case R applies to retrofit only projects where restrictive conditions do not provide enough width for Case F backfill.
3. Type A dike only to be used where restrictive slope conditions do not provide enough width to use Type D or Type E dike.
4. Fill and compact with excavated material to top of dike.
5. Use Type F dike, where dike is required with guard railing installations. See Revised Standard Plan RSP A77N4 for dike positioning details.

DIKE QUANTITIES

TYPE	CUBIC YARDS PER LINEAR FOOT
A	0.0135
C	0.0038
D	0.0293
E	0.0130
F	0.0066

Quantities based on 5% cross slope.

STATE OF CALIFORNIA
DEPARTMENT OF TRANSPORTATION

HOT MIX ASPHALT DIKES

NO SCALE

RSP A87B DATED JULY 19, 2013 SUPERSEDES STANDARD PLAN A87B
DATED MAY 20, 2011 - PAGE 120 OF THE STANDARD PLANS BOOK DATED 2010.

REVISED STANDARD PLAN RSP A87B

2010 REVISED STANDARD PLAN RSP A87B

6-27-13

TO ACCOMPANY PLANS DATED 3-30-15

Dist	COUNTY	ROUTE	POST MILES TOTAL PROJECT	SHEET No.	TOTAL SHEETS
01	Hum	36, 96, 169, 211, 254, etc.	Var	96	103

Glenn DeCou
REGISTERED CIVIL ENGINEER

October 19, 2012
PLANS APPROVAL DATE

REGISTERED PROFESSIONAL ENGINEER Glenn DeCou No. C34547 Exp. 9-30-13 CIVIL STATE OF CALIFORNIA

THE STATE OF CALIFORNIA OR ITS OFFICERS OR AGENTS SHALL NOT BE RESPONSIBLE FOR THE ACCURACY OR COMPLETENESS OF SCANNED COPIES OF THIS PLAN SHEET.

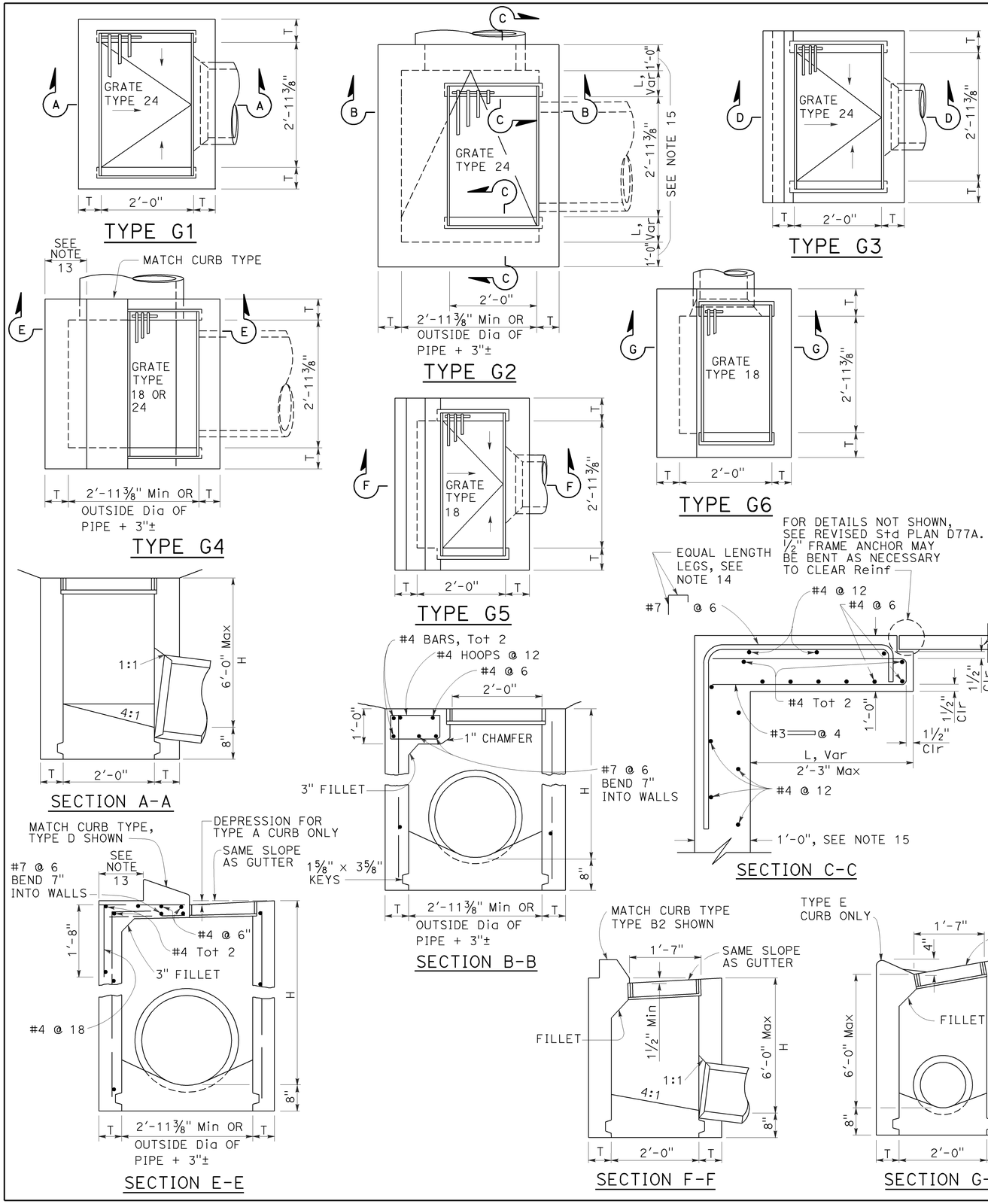

NOTES:

1. "H" is the difference in elevation between the outlet pipe flow line and the normal gutter grade line undepressed.
2. For "T" wall thickness, see Table A below.
3. Wall reinforcing not required when "H" is 8'-0" or less and the unsupported width or length is 7'-0" or less. Walls exceeding these limits shall be reinforced with #4 bars @ 1'-6" ± centers placed 1½" clear to inside of box unless otherwise shown.
4. Inlet bottom reinforcing not required. See Standard Plan D74C for alternative reinforced bottom and alternative half round bottom.
5. Steps-None required where "H" is less than 2'-6". Where "H" is 2'-6" or more, install steps with lowest rung 1'-0" above the floor and highest rung not more than 6" below top of inlet. The distance between steps shall not exceed 1'-0" and shall be uniform throughout the length of the wall. Place steps in the wall without an opening. Steps inserts may be substituted for the bar steps. Step inserts shall comply with State Industrial Safety requirements. See Standard Plan D74C for step details.
6. Details shown apply to both metal and concrete pipe.
7. Pipe(s) can be placed in any wall.
8. Curb section shall match adjacent curb.
9. Basin floors shall have wood trowel finish and a minimum slope of 12:3 from all directions toward outlet pipe.
10. Set inlet so that grate bars are parallel to direction of principal surface flow.
11. See Revised Standard Plans D77A and D77B for grate and frame details and weights of miscellaneous iron and steel.
12. See Standard Plan D78A for gutter depression details.
13. This dimenison will vary with different grates, curbs types, box width and wall thickness.
14. Bar may be rotated as necessary to clear opening. Where "L" is 6" or less, bar may be omitted.
15. Where "L" is 6" or less, wall thickness shall be as shown in Table A.
16. Cast-in-place inlets to be formed around all pipes/stubs intersecting the inlet, and concrete poured in one continuous operation. Precast inlets shall have mortared connections conforming to details for Type GCP Inlet shown on Standard Plan D75B. See Standard Specifications for mortar composition.

TABLE A

CONCRETE QUANTITIES				
TYPE	H=3'-0" TO 8'-0" (T=6")		H=8'-1" TO 20'-0" (T=8")	
	H=3'-0" (CY)	ADDITIONAL PCC PER FOOT (CY)	H=8'-1" (CY)	ADDITIONAL PCC PER FOOT (CY)
G-1	0.95	0.220	See Note A	SEE NOTE A
G-2*	1.31	0.255	3.50	0.357
G-3	1.03	0.220	See Note A	SEE NOTE A
G-4* (TYPE 24)	1.27	0.255	3.48	0.357
G-4* (TYPE 18)	1.30	0.255	3.50	0.357
G-5	1.02	0.220	SEE NOTE A	SEE NOTE A
G-6	1.04	0.220	SEE NOTE A	SEE NOTE A

TABLE BASED ON 8" FLOOR SLAB. NO DEDUCTIONS ARE TO BE MADE TO THESE QUANTITIES BECAUSE OF PIPE OPENINGS, DIFFERENT FLOOR ALTERNATIVES OR DIFFERENT CURB TYPES. * QUANTITIES FOR TYPE G-2 AND G-4 INLETS BASED ON THE MINIMUM INTERIOR DIMENSIONS.

NOTE A:

Maximum allowable height 6'-0".

STATE OF CALIFORNIA
DEPARTMENT OF TRANSPORTATION

DRAINAGE INLETS

NO SCALE

RSP D73 DATED OCTOBER 19, 2012 SUPERSEDES STANDARD PLAN D73 DATED MAY 20, 2011 - PAGE 156 OF THE STANDARD PLANS BOOK DATED 2010.

REVISED STANDARD PLAN RSP D73

2010 REVISED STANDARD PLAN RSP D73

7-19-12

Dist	COUNTY	ROUTE	POST MILES TOTAL PROJECT	SHEET No.	TOTAL SHEETS
01	Hum	36, 96, 169, 211, 254, etc.	Var	97	103

Raymond Don Tsztoo
REGISTERED CIVIL ENGINEER

April 19, 2013
PLANS APPROVAL DATE

REGISTERED PROFESSIONAL ENGINEER Raymond Don Tsztoo No. C37332 Exp. 6-30-14 CIVIL STATE OF CALIFORNIA

THE STATE OF CALIFORNIA OR ITS OFFICERS OR AGENTS SHALL NOT BE RESPONSIBLE FOR THE ACCURACY OR COMPLETENESS OF SCANNED COPIES OF THIS PLAN SHEET.

TO ACCOMPANY PLANS DATED 3-30-15

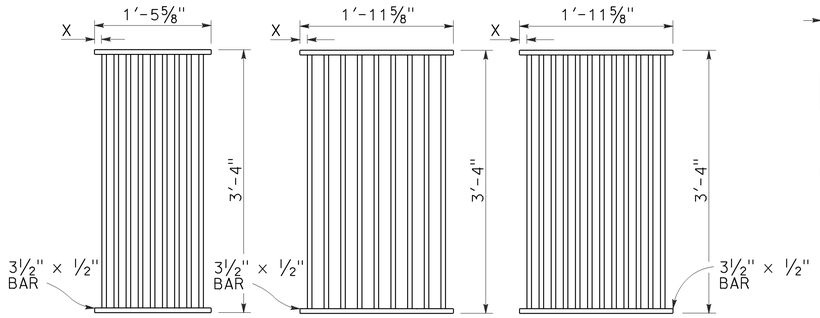

TYPE 18-9
1⅜″ Clear spacing. Use within the roadbed on highways where bicycles and pedestrians are excluded.

TYPE 24-9
2″ Clear spacing. Use in locations off the roadbed on all types of highways.

TYPE 24-12
1⅜″ Clear spacing. Use within the roadbed on highways where bicycles and pedestrians are excluded.

RECTANGULAR GRATE DETAILS
(See table below)

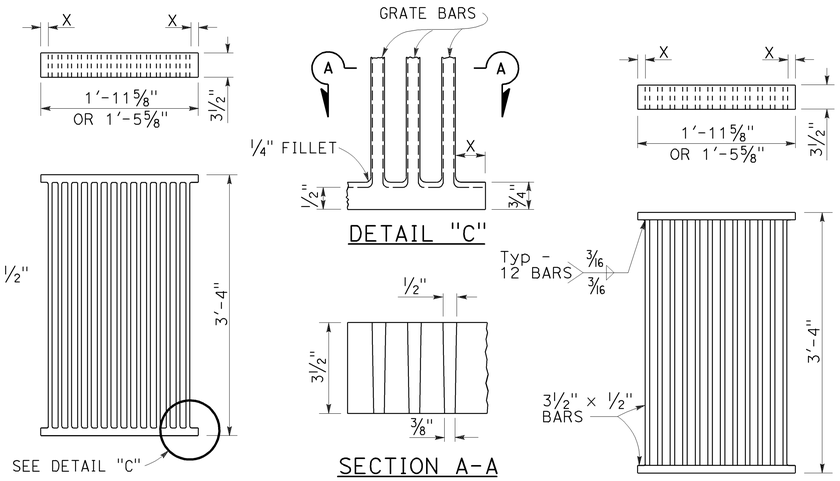

ALTERNATIVE CAST DUCTILE IRON GRATE OR CAST CARBON STEEL GRATE

ALTERNATIVE WELDED GRATE

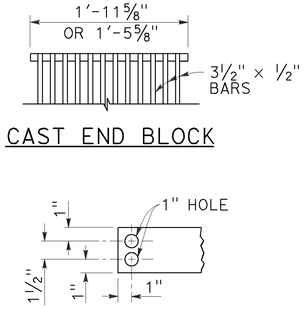

CAST END BLOCK

END OF BAR

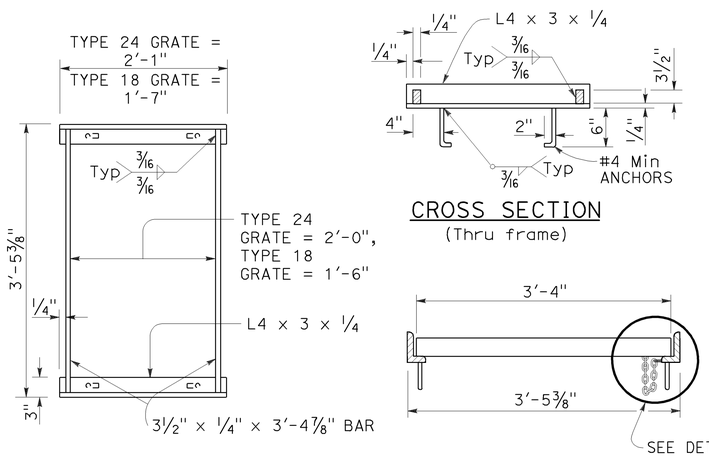

TYPICAL FRAME

CROSS SECTION
(Thru frame)

LONGITUDINAL SECTION
(Thru frame and grate)

RECTANGULAR FRAME DETAILS
(For all rectangular grates)

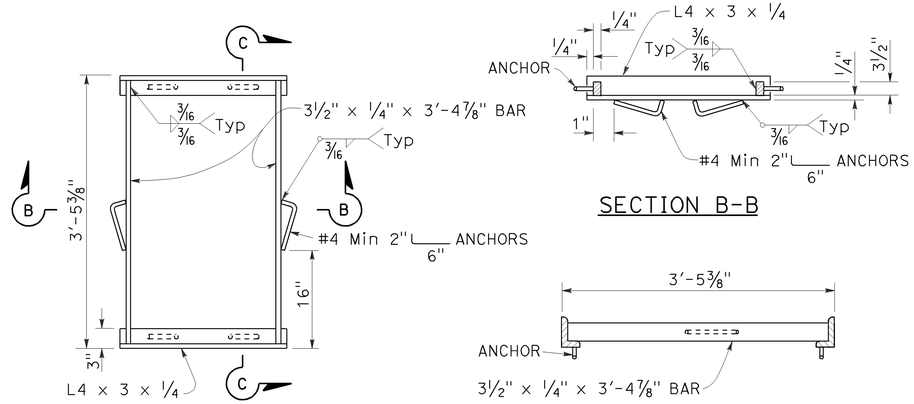

TYPICAL FRAME

SECTION B-B

SECTION C-C

ALTERNATIVE ANCHOR FOR RECTANGULAR FRAME
(For details not shown, See Rectangular Frame Details)

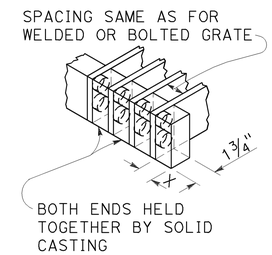

ALTERNATIVE CAST DUCTILE IRON OR CAST CARBON STEEL END BLOCK GRATE

NOTES:

1. Grate type numbers refer to approximate width of grate in inches and number of bars, respectively.
2. Contractor has the option of using cast ductile iron, cast carbon steel, welded, bolted, or cast end block grate.
3. Rounded top of bars optional on all grates.
4. Pipe inlets with a grate shall be placed so that bars parallel direction of principle surface flow.
5. Complete joint penetration butt welds may be substituted for the fillet welds on all anchors.
6. Standard square, hexagon, round or equivalent headed anchors may be substituted for the right angle hooks on the anchors shown on this plan.
7. Grate and frame weights are based on welded grates (weights of face angles, steps, protection bars, etc. are not included).
8. Connect chain to grate and frame only at locations shown on the plans. When chain is required, do not use cast ductile iron grates.

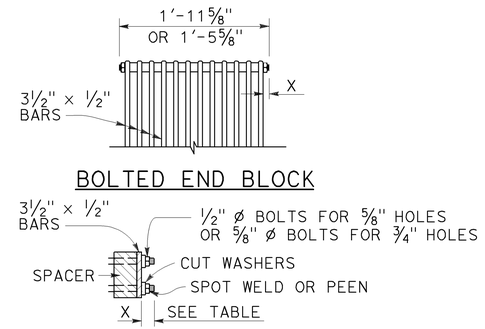

ALTERNATIVE BOLTED GRATE

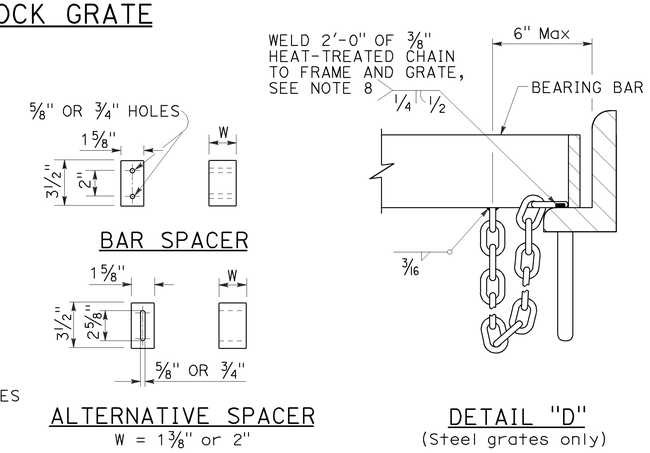

GRATE BAR SPACING TABLE

TYPE	No. OF BARS	CLEAR BAR SPACING	X
18-9	9	1⅜″	1 1/16″
24-9	9	2″	1 9/16″
24-12	12	1⅜″	1¼″

INLET TYPE	COVER TYPE	WEIGHT LB
OS	PLATE	174
OL-7	PLATE	170
OL-10	PLATE	170
OL-14	PLATE	170
OL-21	PLATE	170
OCP	PLATE	112
OCPI	PLATE	112
OCPI	REDWOOD	42
OMP	PLATE	177
OMPI	PLATE	177

INLET TYPE	GRATE TYPE	No. OF GRATES	WEIGHT LB
GDO	24-12	2	634
GOL-7	24-12	1	326
GOL-10	24-12	1	326
GO,G1,G2,G3,G4 (TYPE 24)	24-9	1	263
	24-12	1	326
G4 (TYPE 18),G5,G6	18-9	1	249
GT1	18-9	2	498
GT2	18-9	2	498
GT3	24-12	2	652
GT4	24-12	2	652
TRASH RACK			22
GRATE CHAIN			3

BASIS FOR Misc IRON & STEEL FINAL PAY WEIGHTS FOR DRAINAGE INLETS
(See Note 7)

STATE OF CALIFORNIA
DEPARTMENT OF TRANSPORTATION

GRATE DETAILS No. 1

NO SCALE

RSP D77A DATED APRIL 19, 2013 SUPERSEDES RSP D77A DATED JULY 20, 2012 AND STANDARD PLAN D77A DATED MAY 20, 2011 - PAGE 164 OF THE STANDARD PLANS BOOK DATED 2010.

REVISED STANDARD PLAN RSP D77A

2010 REVISED STANDARD PLAN RSP D77A

4-4-13

Dist	COUNTY	ROUTE	POST MILES TOTAL PROJECT	SHEET No.	TOTAL SHEETS
01	Hum	36, 96, 169, 211, 254, etc.	Var	98	103

Raymond Don Tsztoo
REGISTERED CIVIL ENGINEER

April 19, 2013
PLANS APPROVAL DATE

REGISTERED PROFESSIONAL ENGINEER Raymond Don Tsztoo No. C37332 Exp. 6-30-14 CIVIL STATE OF CALIFORNIA

THE STATE OF CALIFORNIA OR ITS OFFICERS OR AGENTS SHALL NOT BE RESPONSIBLE FOR THE ACCURACY OR COMPLETENESS OF SCANNED COPIES OF THIS PLAN SHEET.

TO ACCOMPANY PLANS DATED 3-30-15

2010 REVISED STANDARD PLAN RSP D77B

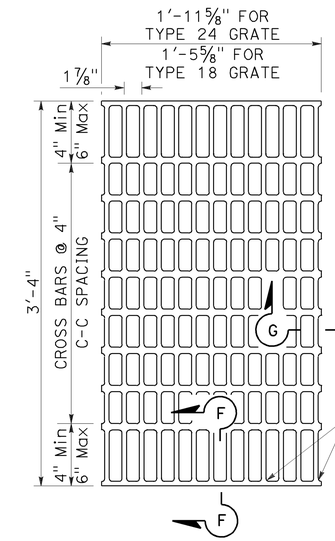

NOTES:

Bearing bars to be 3½" × ¼" bars on 1⅞" centers.

⅜"± ø Cross bars may be fillet welded, resistance welded or electroforged to bearing bars.

Weight of Type 24 grate = 141 LBS.

Weight of Type 18 grate = 107 LBS. (Type 24 grate shown).

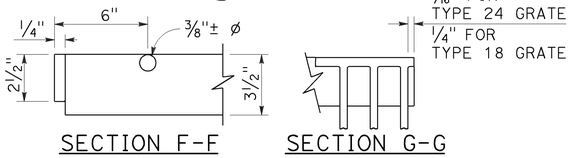

SECTION F-F SECTION G-G

TYPE 18-10 AND 24-13 GRATE

(Welded Steel)

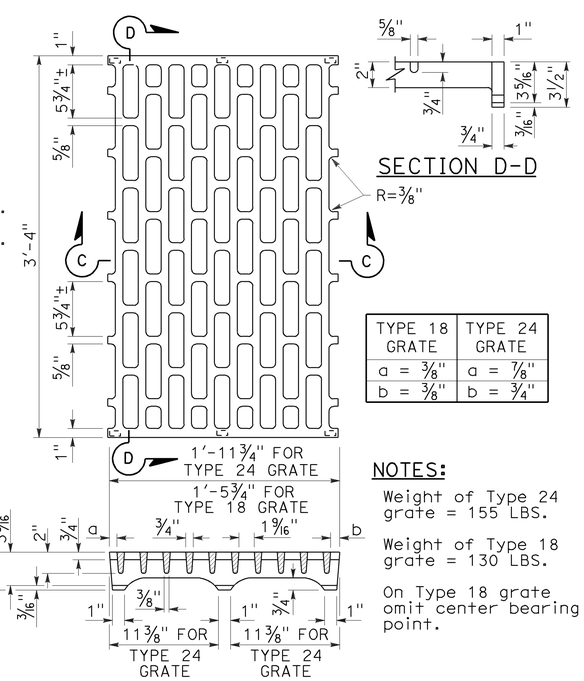

TYPE 18 GRATE	TYPE 24 GRATE
a = ⅜"	a = ⅞"
b = ⅜"	b = ¾"

NOTES:

Weight of Type 24 grate = 155 LBS.

Weight of Type 18 grate = 130 LBS.

On Type 18 grate omit center bearing point.

SECTION C-C

TYPE 18-8C AND 24-10C GRATE

(Cast ductile iron)

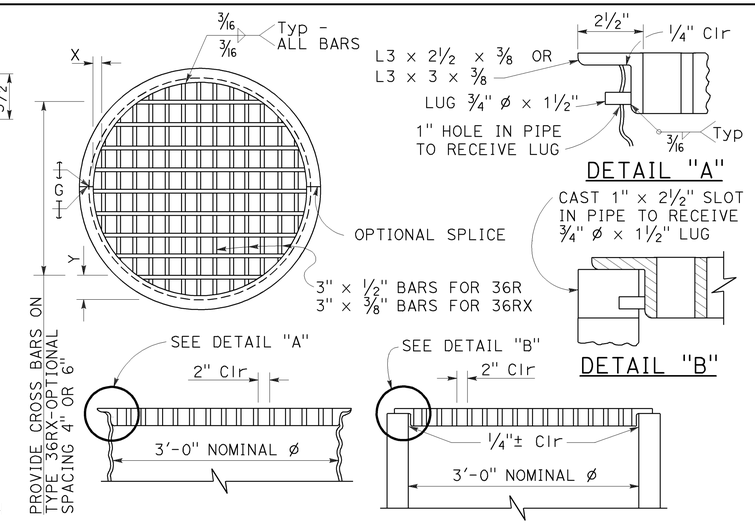

DETAIL "A"

DETAIL "B"

TYPE 36R AND 36RX GRATE DETAILS

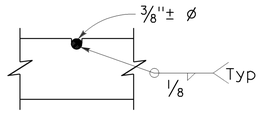

⅜"± ø Cross bars may be fillet welded, resistance welded or electroforged to bearing bars.

CROSS BAR DETAIL TYPE 36RX GRATE (WELDED STEEL)

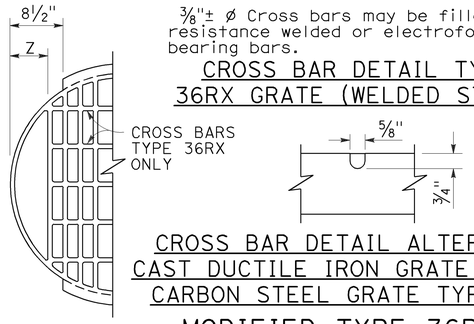

CROSS BAR DETAIL ALTERNATIVE CAST DUCTILE IRON GRATE OR CAST CARBON STEEL GRATE TYPE 36RX

MODIFIED TYPE 36R AND 36RX GRATE FOR ODI INLET

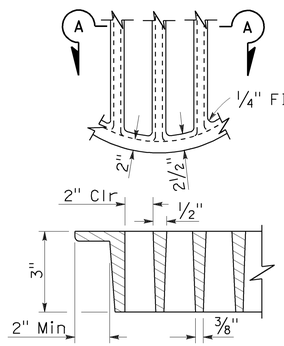

SECTION A-A

ALTERNATIVE CAST DUCTILE IRON GRATE OR CAST CARBON STEEL GRATE TYPE 36R AND 36RX

BASIS FOR Misc IRON AND STEEL FINAL PAY WEIGHTS FOR DRAINAGE INLETS

INLET TYPE	GRATE TYPE	No. OF GRATES	WEIGHT LB
GDO (SEE NOTE 4)	24-10C	2	391
	24-10S	2	456
	24-12X	2	473
	24-13	2	374
GO,GOL,G1,G2, G3,G4 (TYPE 24)	24-10C	1	202
	24-10S	1	229
	24-12X	1	239
	24-13	1	188
G4 (TYPE 18) G5,G6	18-8S	1	187
	18-9X	1	187
	18-10	1	149
GT1,GT2	18-8S	2	374
	18-9X	2	374
	18-10	2	298
GT3,GT4	24-10C	2	404
	24-10S	2	458
	24-12X	2	478
	24-13	2	376
ODI	36RX (Mod)	1	196
GMP,GCP,GCPI	36RX	1	215
ODI	36R (Mod)	1	220
GMP,GCP,GCPI	36R	1	236
TRASH RACK			22
GRATE CHAIN			3

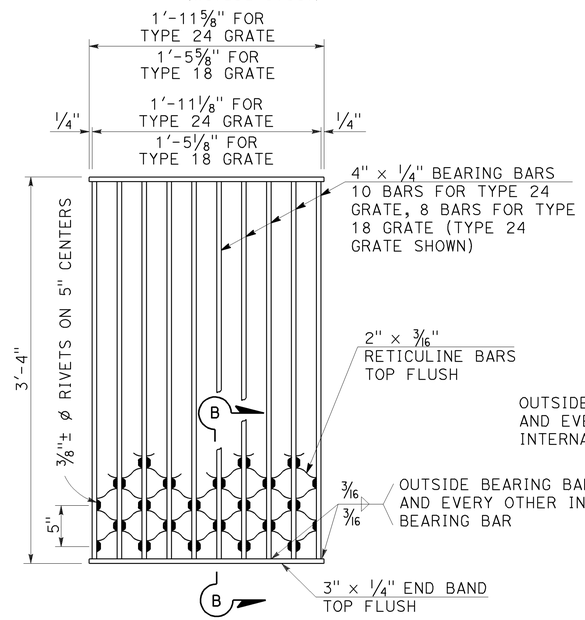

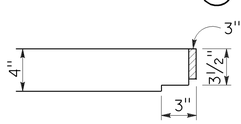

NOTES:

Weight of Type 24 grate = 182 LBS.
Weight of Type 18 grate = 145 LBS.

SECTION B-B

TYPE 18-8S AND 24-10S GRATE

(Welded Steel) Reticuline type

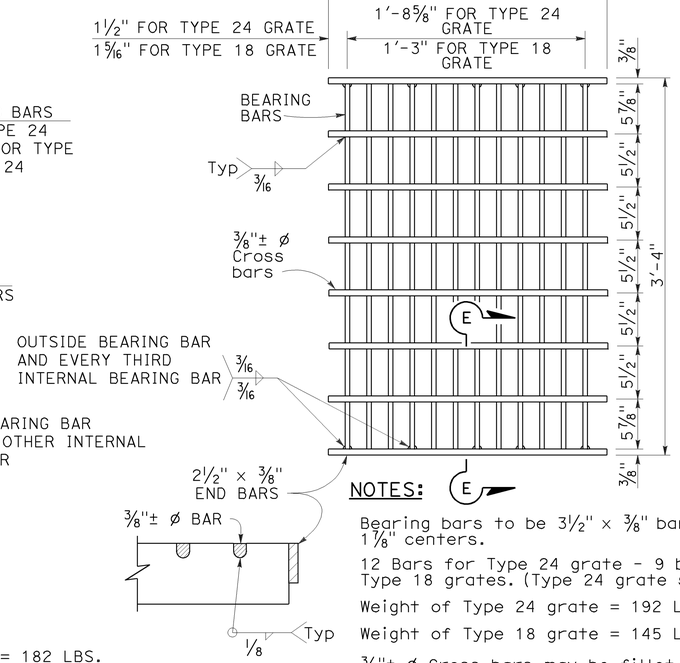

NOTES:

Bearing bars to be 3½" × ⅜" bars on 1⅞" centers.

12 Bars for Type 24 grate - 9 bars for Type 18 grates. (Type 24 grate shown).

Weight of Type 24 grate = 192 LBS.

Weight of Type 18 grate = 145 LBS.

⅜"± ø Cross bars may be fillet welded, resistance welded or electroforged to bearing bars.

SECTION E-E

TYPE 18-9X AND 24-12X GRATE

(Welded Steel)

NOTES:

1. When alternative grates are allowed - Final pay based on alternative with the lesser weight.
2. Use frame shown on Standard Plan D74A, D74B or RSP D77A as appropriate.
3. When Type 24-10S, 24-12X or 24-13 grates are used with GDO Inlets, a ¼" × 3½" × 3'-4⅞" steel bar shall be welded across the center of inlet frame to separate the individual grates.
4. See Revised Standard Plan RSP D77A for connecting chain to welded grate and frame. When chain is required, do not use cast ductile iron grate.

GRATE BAR SPACING TABLE

TYPE	No. OF BARS	CLEAR BAR SPACING	X	Y 4" SPACING	Y 6" SPACING	Z
36R	13	2"	2⅛"	-	-	-
36RX (STEEL)	15	2"	9/16"	3¾"	5¾"	-
36RX (CAST)	13	2"	2⅛"	3¾"	5¾"	-
36R Mod	12	2"	2⅛"	-	-	5"
36RX Mod (STEEL)	13	2"	9/16"	3¾"	5¾"	5 11/16"
36RX Mod (CAST)	12	2"	2⅛"	3¾"	5¾"	5"

STATE OF CALIFORNIA
DEPARTMENT OF TRANSPORTATION

GRATE DETAILS No. 2

NO SCALE

RSP D77B DATED APRIL 19, 2013 SUPERSEDES RSP D77B DATED JULY 20, 2012 AND STANDARD PLAN D77B DATED MAY 20, 2011 - PAGE 165 OF THE STANDARD PLANS BOOK DATED 2010.

REVISED STANDARD PLAN RSP D77B

4-4-13

Dist	COUNTY	ROUTE	POST MILES TOTAL PROJECT	SHEET No.	TOTAL SHEETS
01	Hum	36, 96, 169, 211, 254, etc.	Var	99	103

LICENSED LANDSCAPE ARCHITECT

July 19, 2013
PLANS APPROVAL DATE

THE STATE OF CALIFORNIA OR ITS OFFICERS OR AGENTS SHALL NOT BE RESPONSIBLE FOR THE ACCURACY OR COMPLETENESS OF SCANNED COPIES OF THIS PLAN SHEET.

LICENSED LANDSCAPE ARCHITECT — Gregory A. Balzer — 2576 — 02-28-15 Renewal Date — 7-19-13 Date — STATE OF CALIFORNIA

TO ACCOMPANY PLANS DATED 3-30-15

A

AB	AGGREGATE BASE
ABS	ACRYLONITRILE-BUTADIENE-STYRENE
AC	ASPHALT CONCRETE
ACC	ARMOR-CLAD CONDUCTORS
Adj	ADJACENT/ADJUSTABLE
AIC	AUXILIARY IRRIGATION CONTROLLER
Alt	ALTERNATIVE
AMEND	AMENDMENT
ARV	AIR RELEASE VALVE
AUTO	AUTOMATIC
AUX	AUXILIARY
AVB	ATMOSPHERIC VACUUM BREAKER

B

B&B	BALLED AND BURLAPPED
B/B	BRASS/BRONZE
B/B/PL	BRASS/BRONZE/PLASTIC
B/PL	BRASS/PLASTIC
BFM	BONDED FIBER MATRIX
Bit Ctd	BITUMINOUS COATED
BP	BOOSTER PUMP
BPA	BACKFLOW PREVENTER ASSEMBLY
BPE	BACKFLOW PREVENTER ENCLOSURE
BV	BALL VALVE

C

C	CONDUIT
CAP	CORRUGATED ALUMINUM PIPE
CARV	COMBINATION AIR RELEASE VALVE
CB	COUPLING BAND
CCA	CAM COUPLER ASSEMBLY
CEC	CONTROLLER ENCLOSURE CABINET
CHDPE	CORRUGATED HIGH DENSITY POLYETHYLENE
CL	CHAIN LINK
CNC	CONTROL AND NEUTRAL CONDUCTORS
Conc	CONCRETE
CP	COPPER PIPE
CS	COMPOST SOCK
CSP	CORRUGATED STEEL PIPE
CST	CENTER STRIP
CV	CHECK VALVE

D

Dia	DIAMETER
DIP	DUCTILE IRON PIPE
DIT	DRIP IRRIGATION TUBING
DG	DECOMPOSED GRANITE
DN	DIAMETER NOMINAL
DVA	DRIP VALVE ASSEMBLY

E

EC	EROSION CONTROL
ECTC	EROSION CONTROL TECHNOLOGY COUNCIL
Elect	ELECTRIC/ELECTRICAL
Elev	ELEVATION
ELL	ELBOW
ENCL	ENCLOSURE
EP	EDGE OF PAVEMENT
ES	EDGE OF SHOULDER
EST	END STRIP
ESTB	ESTABLISHMENT
ETW	EDGE OF TRAVELED WAY

F

F	FULL CIRCLE
F/P	FULL/PART CIRCLE
FCV	FLOW CONTROL VALVE
FERT	FERTILIZER
FG	FINISHED GRADE
FH	FLEXIBLE HOSE
FIPT	FEMALE IRON PIPE THREAD
FIS	FERTILIZER INJECTOR SYSTEM
FL	FLOW LINE
FR	FIBER ROLL
FS	FLOW SENSOR
FSC	FLOW SENSOR CABLE
FV	FLUSH VALVE

G

Galv	GALVANIZED
GARV	GARDEN VALVE
GARVA	GARDEN VALVE ASSEMBLY
GM	GRAVEL MULCH
GPH	GALLONS PER HOUR
GPM	GALLONS PER MINUTE
GSP	GALVANIZED STEEL PIPE
GV	GATE VALVE

H

H	HALF CIRCLE
HDPE	HIGH DENSITY POLYETHYLENE
HP	HORSEPOWER/HINGE POINT
HPL	HIGH PRESSURE LINE
Hwy	HIGHWAY

I

IC	IRRIGATION CONTROLLER
ICC	IRRIGATION CONTROLLER(S) IN CONTROLLER ENCLOSURE CABINET
ID	INSIDE DIAMETER
IFS	IRRIGATION FILTRATION SYSTEM
IPS	IRON PIPE SIZE
IPT	IRON PIPE THREAD
Irr	IRRIGATION

L

L	LENGTH

M

Max	MAXIMUM
MBGR	METAL BEAM GUARD RAILING
MCV	MANUAL CONTROL VALVE
MIC	MASTER IRRIGATION CONTROLLER
Min	MINIMUM
MIPT	MALE IRON PIPE THREAD
Misc	MISCELLANEOUS
Mtl	MATERIAL
MVP	MAINTENANCE VEHICLE PULLOUT

N

NCN	NO COMMON NAME
NL	NOZZLE LINE
No.	NUMBER
NPT	NATIONAL PIPE THREAD

O

O/C	ON CENTER
OD	OUTSIDE DIAMETER
OL	OVERLAP

P

P	PART CIRCLE
PB	PULL BOX
PCC	PORTLAND CEMENT CONCRETE
PE	POLYETHYLENE
Pkt	PACKET
PL	PLASTIC
PLS	PURE LIVE SEED
PLT	PLANT/PLANTING
PLT ESTB	PLANT ESTABLISHMENT
PM	POST MILE
PR	PRESSURE RATED
PRLV	PRESSURE RELIEF VALVE
PRV	PRESSURE REGULATING VALVE
PVC	POLYVINYL CHLORIDE
Pvmt	PAVEMENT

Q

Q	QUARTER CIRCLE
QCV	QUICK COUPLING VALVE

R

R	RADIUS
RCP	REINFORCED CONCRETE PIPE
RCV	REMOTE CONTROL VALVE
RCVM	REMOTE CONTROL VALVE (MASTER)
RCVMF	REMOTE CONTROL VALVE (MASTER) W/FLOW SENSOR
RCVP	REMOTE CONTROL VALVE W/PRESSURE REGULATOR
RCW	RECYCLED WATER
RECP	ROLLED EROSION CONTROL PRODUCT
REQ	REQUIRED
RICS	REMOTE IRRIGATION CONTROL SYSTEM
R/W	RIGHT OF WAY

S

S	SLIP
SCH	SCHEDULE
SF	STATE-FURNISHED
Shld	SHOULDER
Sq	SQUARE
SST	SIDE STRIP
Sta	STATION
Std	STANDARD
SW	SIDEWALK/SOUND WALL

T

T	THIRD CIRCLE/THREAD
TLS	TRUCK LOADING STANDPIPE
TQ	THREE QUARTER CIRCLE
TRM	TURF REINFORCEMENT MAT
TT	TWO-THIRDS CIRCLE
TWSA	TREE WELL SPRINKLER ASSEMBLY
Typ	TYPICAL

U

UG	UNDERGROUND

W

W	WIDTH
W/	WITH
WM	WATER METER
WS	WYE STRAINER
WSA	WYE STRAINER ASSEMBLY
WSP	WELDED STEEL PIPE
WWM	WELDED WIRE MESH

NOTE:
For additional abbreviations, see Standard Plans A10A and A10B.

STATE OF CALIFORNIA
DEPARTMENT OF TRANSPORTATION

LANDSCAPE AND EROSION CONTROL ABBREVIATIONS

NO SCALE

RSP H1 DATED JULY 19, 2013 SUPERSEDES STANDARD PLAN H1 DATED MAY 20, 2011 - PAGE 218 OF THE STANDARD PLANS BOOK DATED 2010.

REVISED STANDARD PLAN RSP H1

2010 REVISED STANDARD PLAN RSP H1

6-28-13

Dist	COUNTY	ROUTE	POST MILES TOTAL PROJECT	SHEET No.	TOTAL SHEETS
01	Hum	36, 96, 169, 211, 254, etc.	Var	100	103

REGISTERED CIVIL ENGINEER

July 19, 2013
PLANS APPROVAL DATE

REGISTERED PROFESSIONAL ENGINEER
Gurinderpal Bhullar
No. C48815
Exp. 9-30-14
CIVIL
STATE OF CALIFORNIA

THE STATE OF CALIFORNIA OR ITS OFFICERS OR AGENTS SHALL NOT BE RESPONSIBLE FOR THE ACCURACY OR COMPLETENESS OF SCANNED COPIES OF THIS PLAN SHEET.

TO ACCOMPANY PLANS DATED 3-30-15

2010 REVISED STANDARD PLAN RSP T9

TABLE 1

TAPER LENGTH CRITERIA AND CHANNELIZING DEVICE SPACING

SPEED (S)	MINIMUM TAPER LENGTH * FOR WIDTH OF OFFSET 12 FEET (W)				MAXIMUM CHANNELIZING DEVICE SPACING		
					X	Y	Z **
	TANGENT 2L	MERGING L	SHIFTING L/2	SHOULDER L/3	TAPER	TANGENT	CONFLICT
mph	ft	ft	ft	ft	ft	ft	ft
20	160	80	40	27	20	40	10
25	250	125	63	42	25	50	12
30	360	180	90	60	30	60	15
35	490	245	123	82	35	70	17
40	640	320	160	107	40	80	20
45	1080	540	270	180	45	90	22
50	1200	600	300	200	50	100	25
55	1320	660	330	220	55	110	27
60	1440	720	360	240	60	120	30
65	1560	780	390	260	65	130	32
70	1680	840	420	280	70	140	35

* - For other offsets, use the following merging taper length formula for L:
For speed of 40 mph or less, $L = WS^2/60$
For speed of 45 mph or more, $L = WS$

Where: L = Taper length in feet
W = Width of offset in feet
S = Posted speed limit, off-peak 85th-percentile speed prior to work starting, or the anticipated operating speed in mph

** - Use for taper and tangent sections where there are no pavement markings or where there is a conflict between existing pavement markings and channelizers (CA).

TABLE 2

LONGITUDINAL BUFFER SPACE AND FLAGGER STATION SPACING

SPEED *	Min D **	DOWNGRADE Min D ***		
		-3%	-6%	-9%
mph	ft	ft	ft	ft
20	115	116	120	126
25	155	158	165	173
30	200	205	215	227
35	250	257	271	287
40	305	315	333	354
45	360	378	400	427
50	425	446	474	507
55	495	520	553	593
60	570	598	638	686
65	645	682	728	785
70	730	771	825	891

* - Speed is posted speed limit, off-peak 85th-percentile speed prior to work starting, or the anticipated operating speed in mph

** - Longitudinal buffer space or flagger station spacing

*** - Use on sustained downgrade steeper than -3 percent and longer than 1 mile.

TABLE 3

ADVANCE WARNING SIGN SPACING

ROAD TYPE	DISTANCE BETWEEN SIGNS *		
	A	B	C
	ft	ft	ft
URBAN - 25 mph OR LESS	100	100	100
URBAN - MORE THAN 25 mph TO 40 mph	250	250	250
URBAN - MORE THAN 40 mph	350	350	350
RURAL	500	500	500
EXPRESSWAY / FREEWAY	1000	1500	2640

* - The distances are approximate, are intended for guidance purposes only, and should be applied with engineering judgment. These distances should be adjusted by the Engineer for field conditions, if necessary, by increasing or decreasing the recommmended distances.

STATE OF CALIFORNIA
DEPARTMENT OF TRANSPORTATION

TRAFFIC CONTROL SYSTEM TABLES FOR LANE AND RAMP CLOSURES

NO SCALE

RSP T9 DATED JULY 19, 2013 SUPERSEDES RSP T9 DATED APRIL 19, 2013 THAT SUPPLEMENTS THE STANDARD PLANS BOOK DATED 2010.

REVISED STANDARD PLAN RSP T9

Dist	COUNTY	ROUTE	POST MILES TOTAL PROJECT	SHEET No.	TOTAL SHEETS
01	Hum	36, 96, 169, 211, 254, etc.	Var	101	103

REGISTERED CIVIL ENGINEER

April 19, 2013
PLANS APPROVAL DATE

REGISTERED PROFESSIONAL ENGINEER Gurinderpal Bhullar No. C48815 Exp. 9-30-14 CIVIL STATE OF CALIFORNIA

THE STATE OF CALIFORNIA OR ITS OFFICERS OR AGENTS SHALL NOT BE RESPONSIBLE FOR THE ACCURACY OR COMPLETENESS OF SCANNED COPIES OF THIS PLAN SHEET.

TO ACCOMPANY PLANS DATED 3-30-15

NOTES:

See Revised Standard Plan RSP T9 for tables.

Use cone spacing X for taper segment, Y for tangent segment or Z for conflict situations, as approriate, per Table 1, unless X, Y, or Z cone spacing is shown on this sheet.

Unless otherwise specified in the special provisions, all temporary warning signs shall have black legend on fluorescent orange background.

California codes are designated by (CA). Otherwise, Federal (MUTCD) codes are shown.

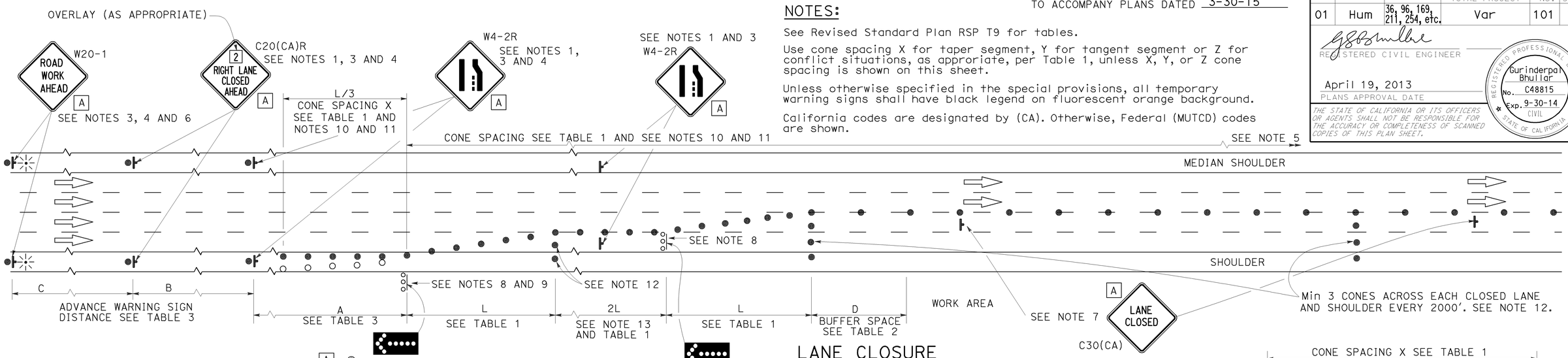

LANE CLOSURE

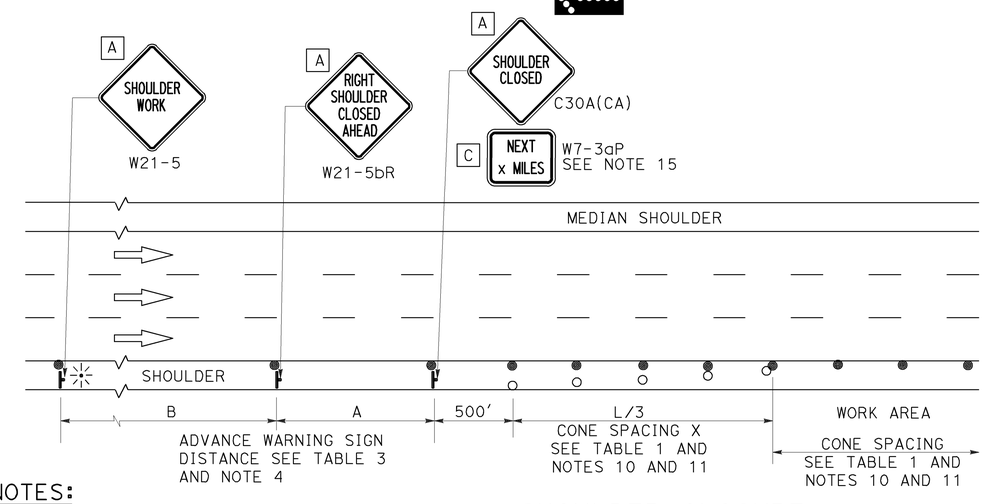

SHOULDER CLOSURE

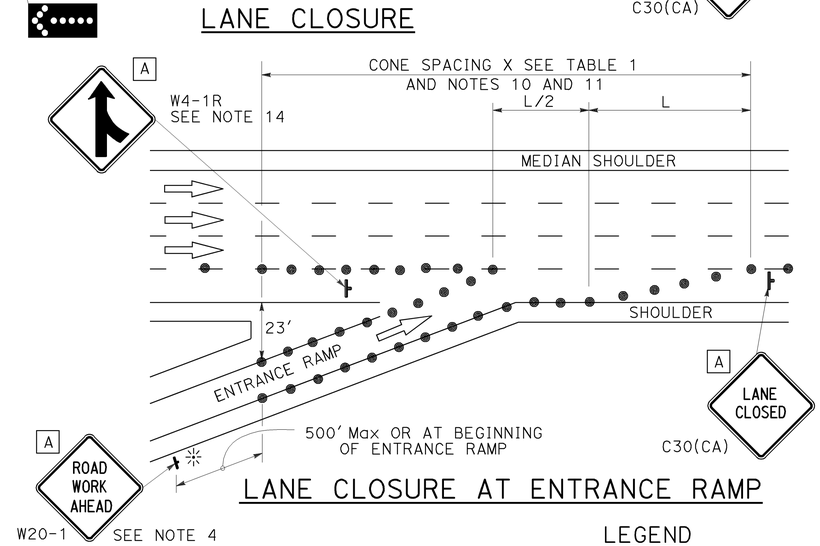

LANE CLOSURE AT ENTRANCE RAMP

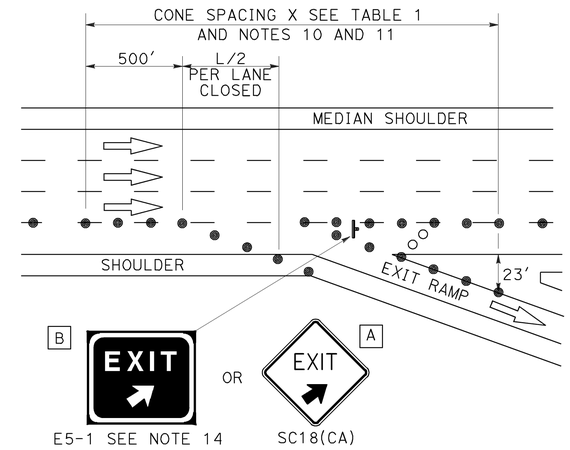

LANE CLOSURE AT EXIT RAMP

NOTES:

1. Median lane closures shall conform to the details as shown except that C20(CA)L and W4-2L signs shall be used.
2. At least one person shall be assigned to provide full time maintenance of traffic control devices for lane closures.
3. Duplicate sign installations are not required:
   a) On opposite shoulder if at least one-half of the available lanes remain open to traffic.
   b) In the median if the width of the median shoulder is less than 8' and the outside lanes are to be closed.
4. Each advance warning sign on each side of the roadway shall be equipped with at least two flags for daytime closure. Each flag shall be at least 16" x 16" in size and shall be orange or fluorescent red-orange in color. Flashing beacons shall be placed at the locations indicated for lane closure during hours of darkness.
5. A G20-2 "END ROAD WORK" sign, with minimum size of 48" x 24" as appropriate, shall be placed at the end of the lane closure unless the end of work area is obvious or ends within a larger project's limits.
6. If the W20-1 sign would follow within 2000' of a stationary W20-1 or G20-1 "ROAD WORK NEXT _____ MILES", use a C20(CA) sign for the first advance warning sign.
7. Place a C30(CA) sign every 2000' throughout length of lane closure.
8. One flashing arrow sign for each lane closed. The flashing arrow signs shall be Type I.
9. A minimum 1500' of sight distance shall be provided where possible for vehicles approaching the first flashing arrow sign. Lane closures shall not begin at top of crest vertical curve or on a horizontal curve.
10. All cones used for lane closures during the hours of darkness shall be fitted with retroreflective bands (or sleeves) as specified in the specifications.
11. Portable delineators, placed at one-half the spacing indicated for traffic cones may be used instead of cones for daytime closures only.
12. Unless otherwise specified in the special provisions, a minimum of 3 cones shall be placed transversely across each closed lane and shoulder at each location where a taper across a traffic lane ends and every 2000' as shown on the "Lane Closure" detail. Two Type II barricades may be used instead of the 3 cones. The transverse alignment of the cones or barricades on the closed shoulder may be shifted from the transverse alignment to provide access to the work.
13. Unless otherwise specified in the special provisions, the 2L tangent shown along lane lines shall be used between the L tapers required for each closed traffic lane.
14. Unless otherwise specified in the special provisions, the E5-1 or SC18(CA) and W4-1 signs shall be used as shown.
15. A W7-3aP "NEXT____ MILES" plaque must be used if theshoulder closure extends beyond the distance that can be perceived by road users.

LEGEND

- TRAFFIC CONE
- TRAFFIC CONE (OPTIONAL TAPER)
- TEMPORARY TRAFFIC CONTROL SIGN
- FLASHING ARROW SIGN (FAS)
- FAS SUPPORT OR TRAILER
- PORTABLE FLASHING BEACON

SIGN PANEL SIZE (Min)

A	48" x 48"
B	72" x 60"
C	36" x 30"

STATE OF CALIFORNIA
DEPARTMENT OF TRANSPORTATION

TRAFFIC CONTROL SYSTEM FOR LANE CLOSURE ON FREEWAYS AND EXPRESSWAYS

NO SCALE

RSP T10 DATED APRIL 19, 2013 SUPERSEDES STANDARD PLAN T10 DATED MAY 20, 2011 - PAGE 237 OF THE STANDARD PLANS BOOK DATED 2010.

REVISED STANDARD PLAN RSP T10

2010 REVISED STANDARD PLAN RSP T10

12-18-12

Dist	COUNTY	ROUTE	POST MILES TOTAL PROJECT	SHEET No.	TOTAL SHEETS
01	Hum	36, 96, 169, 211, 254, etc.	Var	102	103

REGISTERED CIVIL ENGINEER

April 19, 2013
PLANS APPROVAL DATE

REGISTERED PROFESSIONAL ENGINEER Gurinderpal Bhullar No. C48815 Exp. 9-30-14 CIVIL STATE OF CALIFORNIA

THE STATE OF CALIFORNIA OR ITS OFFICERS OR AGENTS SHALL NOT BE RESPONSIBLE FOR THE ACCURACY OR COMPLETENESS OF SCANNED COPIES OF THIS PLAN SHEET.

TO ACCOMPANY PLANS DATED 3-30-15

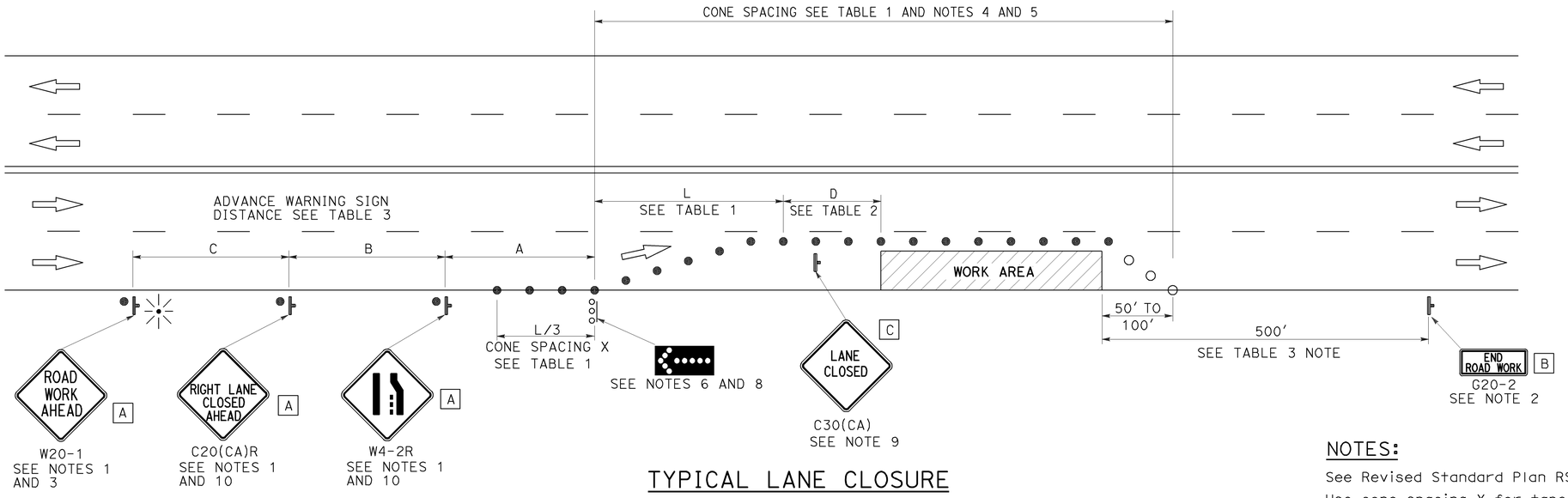

TYPICAL LANE CLOSURE

NOTES:

See Revised Standard Plan RSP T9 for tables.

Use cone spacing X for taper segment, Y for tangent segment or Z for conflict situations, as approriate, per Table 1, unless X, Y, or Z cone spacing is shown on this sheet.

Unless otherwise specified in the special provisions, all temporary warning signs shall have black legend on fluorescent orange background.

California codes are designated by (CA). Otherwise, Federal (MUTCD) codes are shown.

LEGEND

- ● TRAFFIC CONE
- ○ TRAFFIC CONE (OPTIONAL TAPER)
- TEMPORARY TRAFFIC CONTROL SIGN
- FLASHING ARROW SIGN (FAS)
- FAS SUPPORT OR TRAILER
- PORTABLE FLASHING BEACON

SIGN PANEL SIZE (Min)

A	48" × 48"
B	36" × 18"
C	30" × 30"

NOTES:

1. Each advance warning sign shall be equipped with at least two flags for daytime closure. Each flag shall be at least 16" x 16" in size and shall be orange or fluorescent red-orange in color. Flashing beacons shall be placed at the locations indicated for lane closure during hours of darkness.
2. A G20-2 "END ROAD WORK" sign, as appropriate, shall be placed at the end of the lane closure unless the end of work area is obvious, or ends within a larger project's limits.
3. If the W20-1 sign would follow within 2000' of a stationary W20-1 or G20-1 "ROAD WORK NEXT _____ MILES", use a C20(CA) sign for the first advance warning sign.
4. All cones used for lane closures during the hours of darkness shall be fitted with retroreflective bands (or sleeves) as specified in the specifications.
5. Portable delineators, placed at one-half the spacing indicated for traffic cones, may be used instead of cones for daytime closures only.
6. Flashing arrow sign shall be either Type I or Type II.
7. For approach speeds over 50 mph, use the "Traffic Control System for Lane Closure On Freeways And Expressways" plan for lane closure details and requirements.
8. A minimum 1500' of sight distance shall be provided where possible for vehicles approaching the first flashing arrow sign. Lane closures shall not begin at the top of crest vertical curve or on a horizontal curve.
9. Place a C30(CA) sign every 2000' throughout length of lane closure.
10. Median lane closures shall conform to the details as shown except that C20(CA)L and W4-2L signs shall be used.
11. At least one person shall be assigned to provide full time maintenance of traffic control devices for lane closure unless, otherwise directed by the Engineer.

STATE OF CALIFORNIA
DEPARTMENT OF TRANSPORTATION

TRAFFIC CONTROL SYSTEM FOR LANE CLOSURE ON MULTILANE CONVENTIONAL HIGHWAYS

NO SCALE

RSP T11 DATED APRIL 19, 2013 SUPERSEDES STANDARD PLAN T11 DATED MAY 20, 2011 - PAGE 239 OF THE STANDARD PLANS BOOK DATED 2010.

REVISED STANDARD PLAN RSP T11

2010 REVISED STANDARD PLAN RSP T11

4-2-13

Dist	COUNTY	ROUTE	POST MILES TOTAL PROJECT	SHEET No.	TOTAL SHEETS
01	Hum	36, 96, 169, 211, 254, etc.	Var	103	103

REGISTERED CIVIL ENGINEER

April 19, 2013
PLANS APPROVAL DATE

REGISTERED PROFESSIONAL ENGINEER Gurinderpal Bhullar No. C48815 Exp. 9-30-14 CIVIL STATE OF CALIFORNIA

THE STATE OF CALIFORNIA OR ITS OFFICERS OR AGENTS SHALL NOT BE RESPONSIBLE FOR THE ACCURACY OR COMPLETENESS OF SCANNED COPIES OF THIS PLAN SHEET.

TO ACCOMPANY PLANS DATED 3-30-15

TYPICAL RAMP CLOSURES

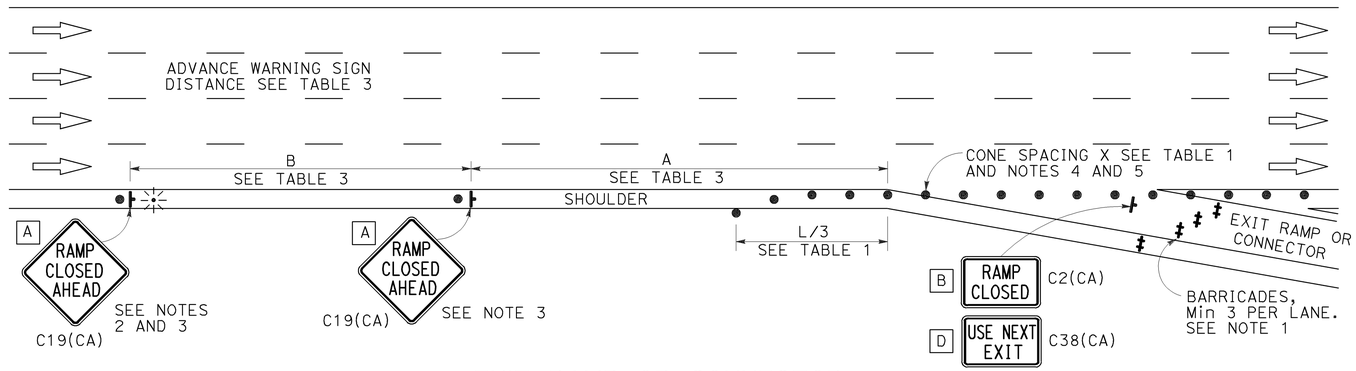

EXIT RAMP OR CONNECTOR

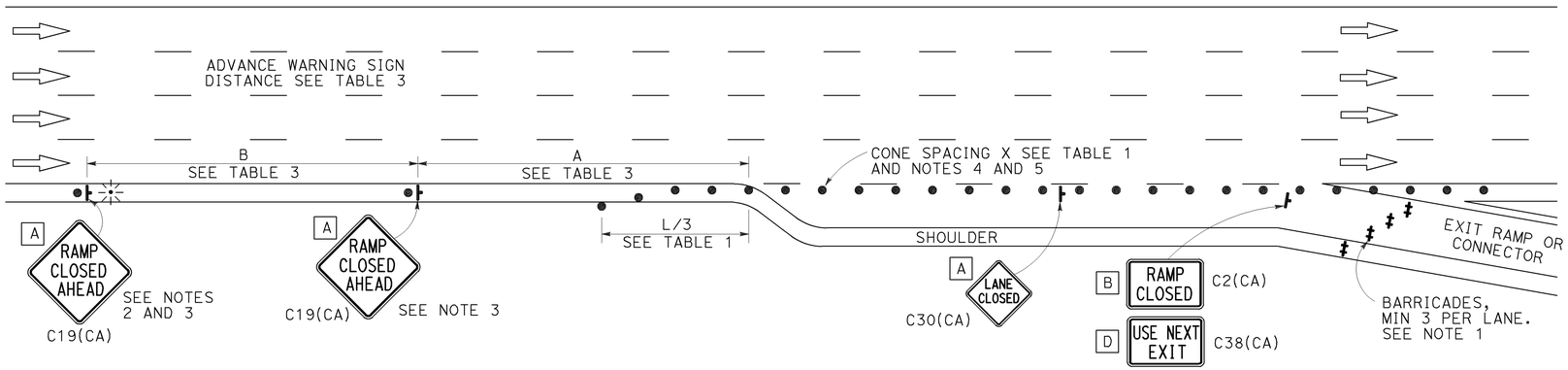

EXIT RAMP OR CONNECTOR WITH ADDITIONAL LANE

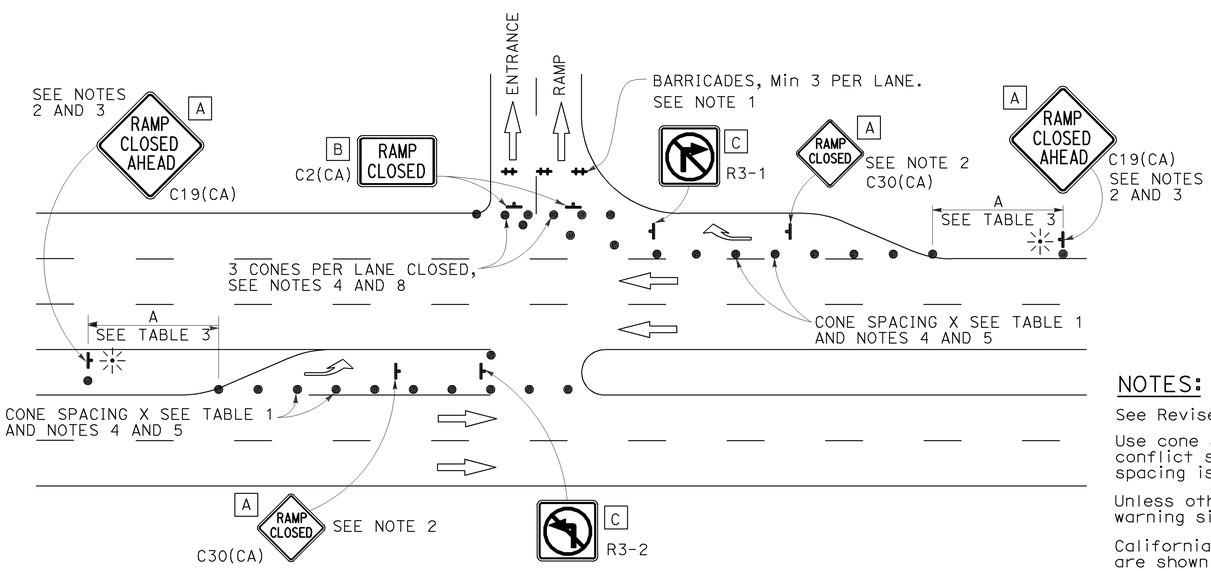

ENTRANCE RAMP WITH TURNING POCKETS

SIGN PANEL SIZE (Min)

- A 48" × 48"
- B 48" × 30"
- C 36" × 36"
- D 48" × 36"

LEGEND

- TRAFFIC CONE
- TEMPORARY TRAFFIC CONTROL SIGN
- BARRICADES
- PORTABLE FLASHING BEACON

NOTES:

1. Barricades shall be Type I, II, or III for closures lasting one week or less and Type III for closures lasting longer than one week.
2. In addition to placing the C19(CA) "RAMP CLOSED AHEAD" and C30(CA) "RAMP CLOSED" signs, black on orange overlay plates with the word "CLOSED" may be mounted, as directed by the Engineer, on all guide signs that refer to the closed ramp. The letter size on the overlay shall be the same as the guide sign.
3. Each advance C19(CA) "RAMP CLOSED AHEAD" sign shall be equipped with at least two flags for daytime closure. Each flag shall be at least 16" × 16" in size and shall be orange or fluorescent red-orange in color. A flashing beacon shall be placed on top of the first C19(CA) sign during hours of darkness.
4. All cones used for ramp closures during the hours of darkness shall be fitted with retroreflective bands (or sleeves) as specified in the specifications.
5. Portable delineators, placed at one-half the spacing indicated for traffic cones, may be used instead of cones for daytime ramp closures only.
6. At least one person shall be assigned to provide full time maintenance of traffic control devices, unless otherwise directed by the Engineer.
7. The existing "EXIT" signs shall be covered during ramp closures.
8. A minimum of 3 cones shall be placed transversely across each closed lane and shoulder.

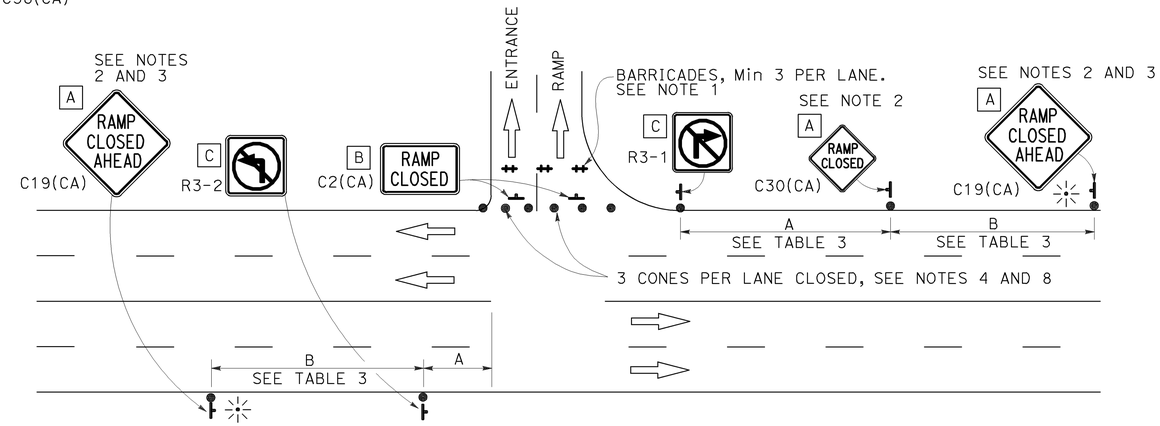

ENTRANCE RAMP WITHOUT TURNING POCKETS

NOTES:

See Revised Standard Plan RSP T9 for tables.

Use cone spacing X for taper segment, Y for tangent segment or Z for conflict situations, as approriate, per Table 1, unless X, Y, or Z cone spacing is shown on this sheet.

Unless otherwise specified in the special provisions, all temporary warning signs shall have black legend on fluorescent orange background.

California codes are designated by (CA). Otherwise, Federal (MUTCD) codes are shown.

STATE OF CALIFORNIA
DEPARTMENT OF TRANSPORTATION

TRAFFIC CONTROL SYSTEM FOR RAMP CLOSURE

NO SCALE

RSP T14 DATED APRIL 19, 2013 SUPERSEDES STANDARD PLAN T14 DATED MAY 20, 2011 - PAGE 242 OF THE STANDARD PLANS BOOK DATED 2010.

REVISED STANDARD PLAN RSP T14

2010 REVISED STANDARD PLAN RSP T14

12-18-12