DIST	COUNTY	ROUTE	KILOMETER POST TOTAL PROJECT	SHEET No	TOTAL SHEETS
01	Men	101	R69.4/R78.9	901	939

REGISTERED CIVIL ENGINEER 9-15-11 DATE

1-23-12
PLANS APPROVAL DATE

REGISTERED PROFESSIONAL ENGINEER M. Friedheim No. 57968 Exp. 6-30-12 CIVIL STATE OF CALIFORNIA

The State of California or its officers or agents shall not be responsible for the accuracy or completeness of electronic copies of this plan sheet.

NOTES:

1. For shear key and bearing pad details see "Abutment Details No. 1" sheet
2. For wingwall details see "Abutment Details No. 2" sheet

Legend:

Indicates vertical piles

Indicates battered piles

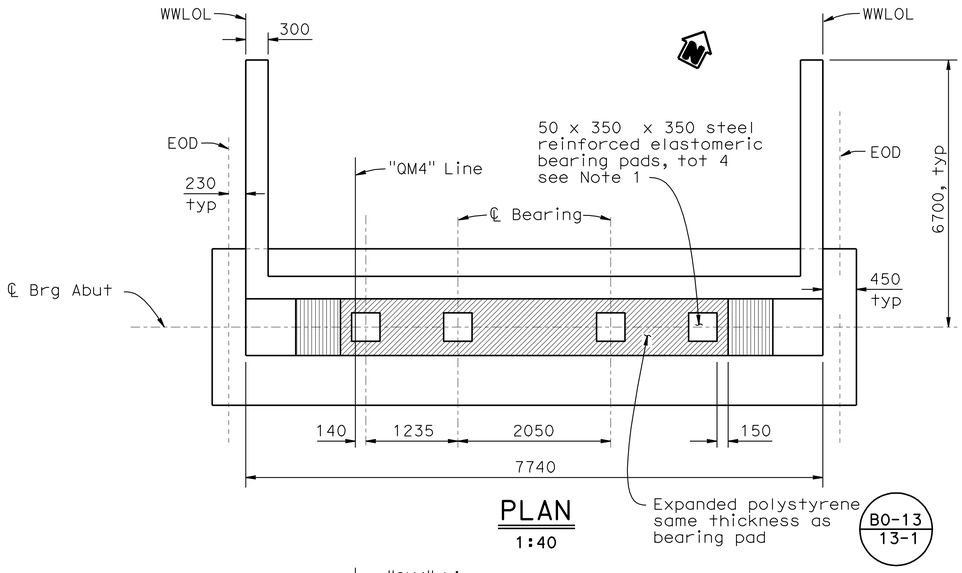

PLAN
1:40

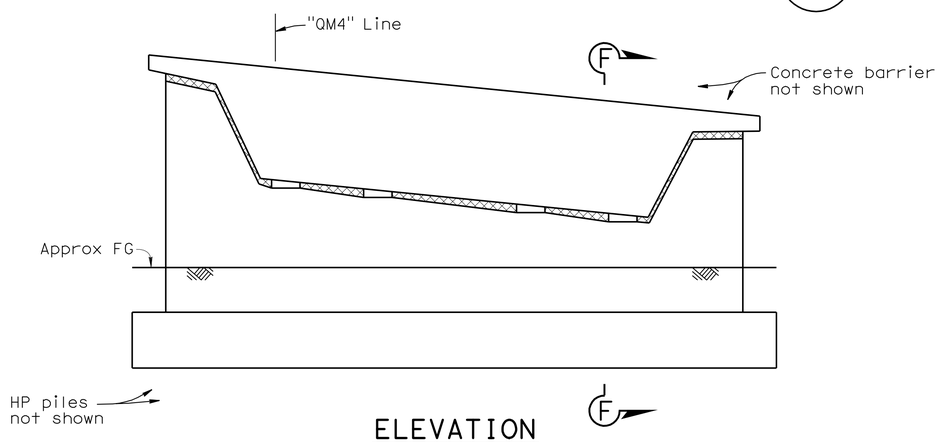

ELEVATION
1:40

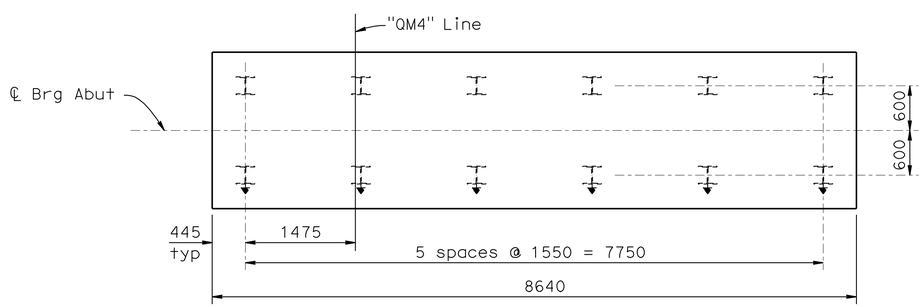

PILE LAYOUT
1:40

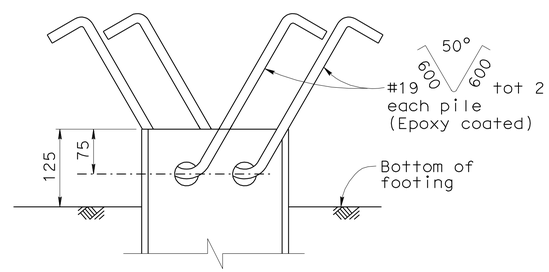

ELEVATION

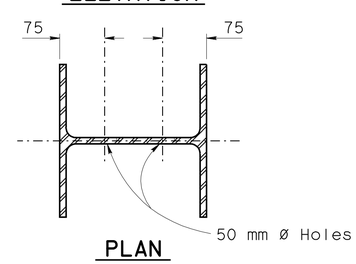

PLAN

STEEL PILE ANCHOR DETAIL
No Scale

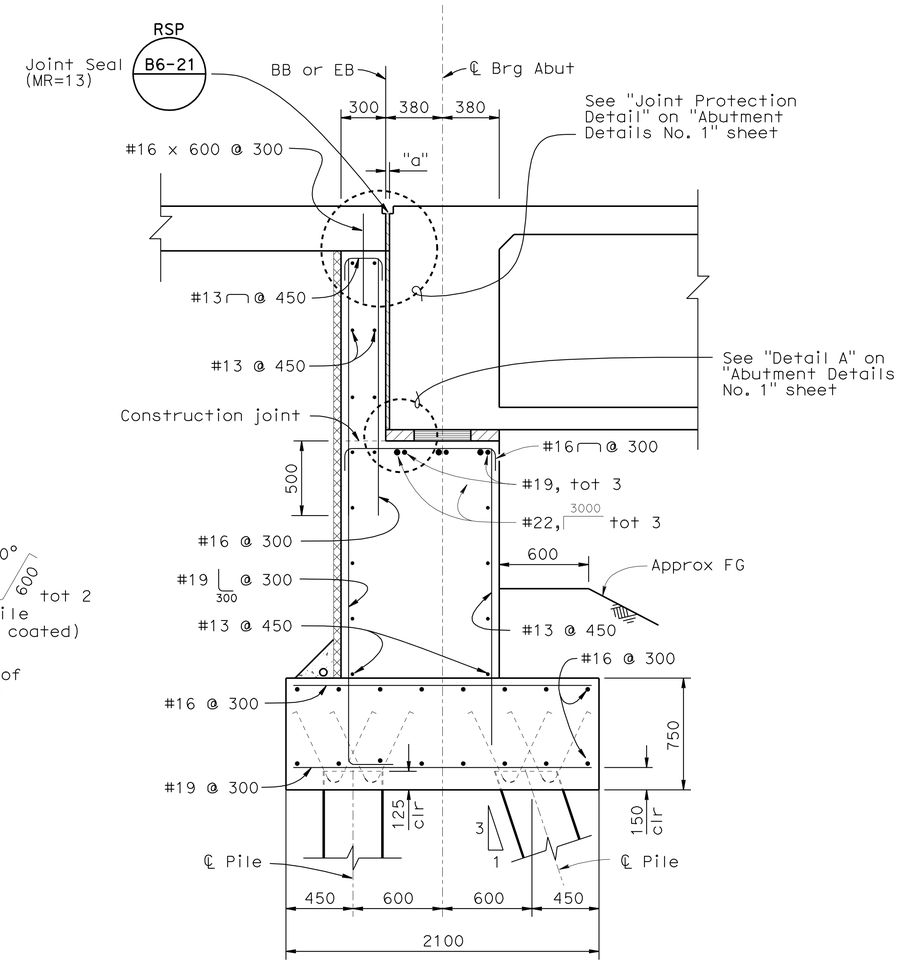

SECTION F-F
1:20

DESIGN	BY K. Selventhiran	CHECKED M. Jimenez	
DETAILS	BY J. Yang	CHECKED M. Jimenez	
QUANTITIES	BY M. Khalaf	CHECKED A. Ahmed	

STATE OF CALIFORNIA
DEPARTMENT OF TRANSPORTATION

DIVISION OF ENGINEERING SERVICES
STRUCTURE DESIGN
DESIGN BRANCH 2

BRIDGE NO. 10-0174S
KILOMETER POST R77.701

WILLITS BYPASS
UPP CREEK (NB ON-RAMP)
ABUTMENT LAYOUT

ALL DIMENSIONS ARE IN MILLIMETERS UNLESS OTHERWISE SHOWN

ORIGINAL SCALE IN MILLIMETERS FOR REDUCED PLANS 0 10 20 30 40 50 60 70 80 90 100

CU 01
EA 262001

DISREGARD PRINTS BEARING EARLIER REVISION DATES

REVISION DATES: 10-24-08 10-29-08 12-05-08 1-27-09 3-02-09 3-11-09 4-14-09 7-15-09 12-21-09

SHEET 4 OF 14

FILE => 10-0174s_faa1o01.dgn

STRUCTURES DESIGN DETAIL SHEET (METRIC) (REV.03-17-04)

USERNAME => s114326 DATE PLOTTED => 28-JAN-2012 TIME PLOTTED => 08:52

DIST	COUNTY	ROUTE	KILOMETER POST TOTAL PROJECT	SHEET No	TOTAL SHEETS
01	Men	101	R69.4/R78.9	902	939

REGISTERED CIVIL ENGINEER 9-15-11 DATE

1-23-12
PLANS APPROVAL DATE

REGISTERED PROFESSIONAL ENGINEER M. Friedheim No. 57968 Exp. 6-30-12 CIVIL STATE OF CALIFORNIA

The State of California or its officers or agents shall not be responsible for the accuracy or completeness of electronic copies of this plan sheet.

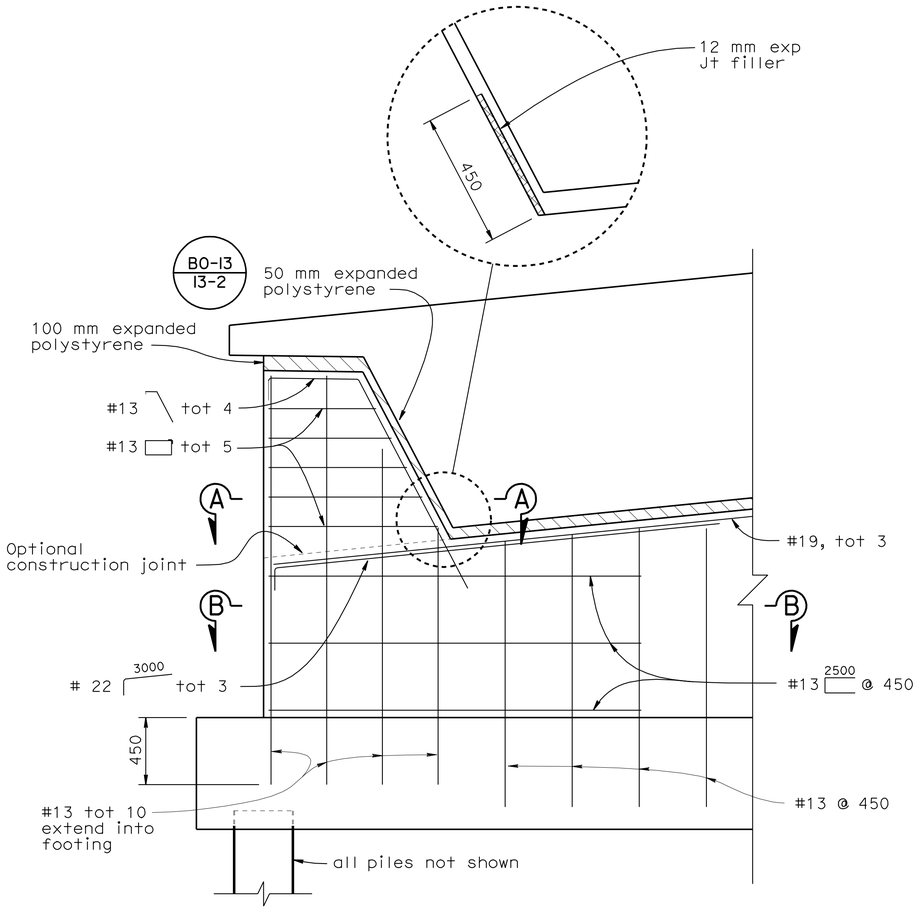

EXTERNAL KEY ELEVATION

1:20

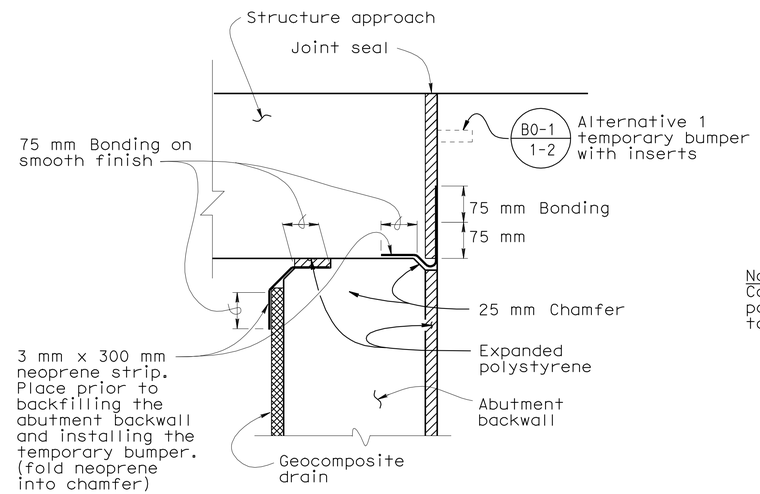

JOINT PROTECTION DETAIL

No Scale

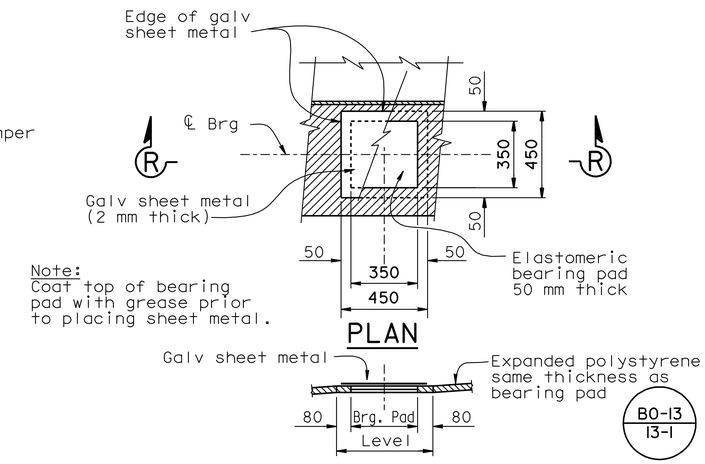

SECTION R-R
BEARING PAD DETAIL

No Scale
Details typical at all bearing pads

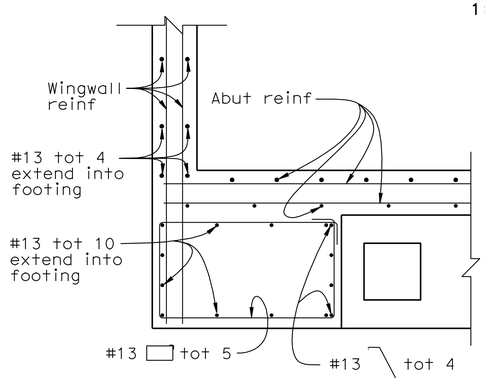

SECTION A-A

1:20

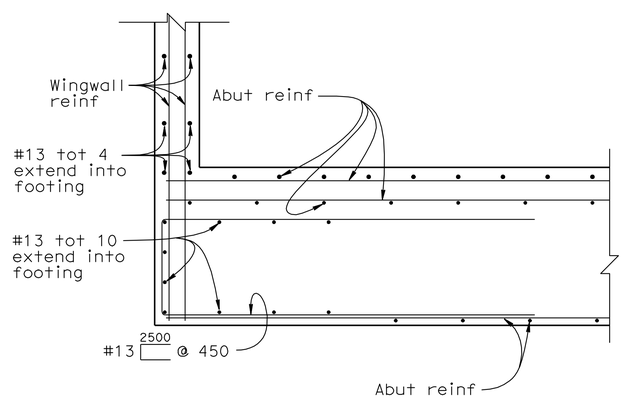

SECTION B-B

1:20

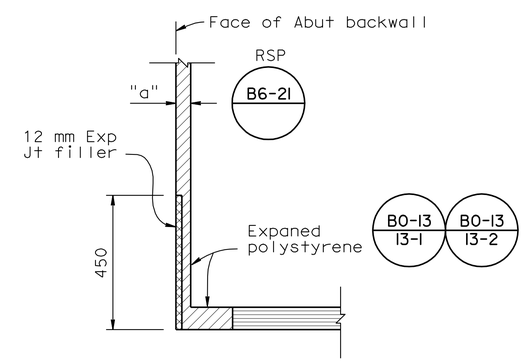

DETAIL "A"

No Scale

DESIGN	BY K. Selventhiran	CHECKED M. Jimenez	
DETAILS	BY J. Yang	CHECKED M. Jimenez	
QUANTITIES	BY M. Khalaf	CHECKED A. Ahmed	

STATE OF CALIFORNIA
DEPARTMENT OF TRANSPORTATION

DIVISION OF ENGINEERING SERVICES
STRUCTURE DESIGN
DESIGN BRANCH 2

BRIDGE NO. 10-0174S
KILOMETER POST R77.701

WILLITS BYPASS
UPP CREEK (NB ON-RAMP)
ABUTMENT DETAILS NO. 1

Caltrans Metric

ALL DIMENSIONS ARE IN MILLIMETERS UNLESS OTHERWISE SHOWN

ORIGINAL SCALE IN MILLIMETERS FOR REDUCED PLANS 0 10 20 30 40 50 60 70 80 90 100

CU 01
EA 262001

DISREGARD PRINTS BEARING EARLIER REVISION DATES

REVISION DATES 10-24-08 12-09-08

SHEET 5 OF 14

FILE => 10-0174s_fadt01.dgn

STRUCTURES DESIGN DETAIL SHEET (METRIC) (REV.03-17-04)

USERNAME => s114326 DATE PLOTTED => 28-JAN-2012 TIME PLOTTED => 08:52

DIST	COUNTY	ROUTE	KILOMETER POST TOTAL PROJECT	SHEET No	TOTAL SHEETS
01	Men	101	R69.4/R78.9	903	939

REGISTERED CIVIL ENGINEER 9-15-11 DATE

1-23-12
PLANS APPROVAL DATE

REGISTERED PROFESSIONAL ENGINEER M. Friedheim No. 57968 Exp. 6-30-12 CIVIL STATE OF CALIFORNIA

The State of California or its officers or agents shall not be responsible for the accuracy or completeness of electronic copies of this plan sheet.

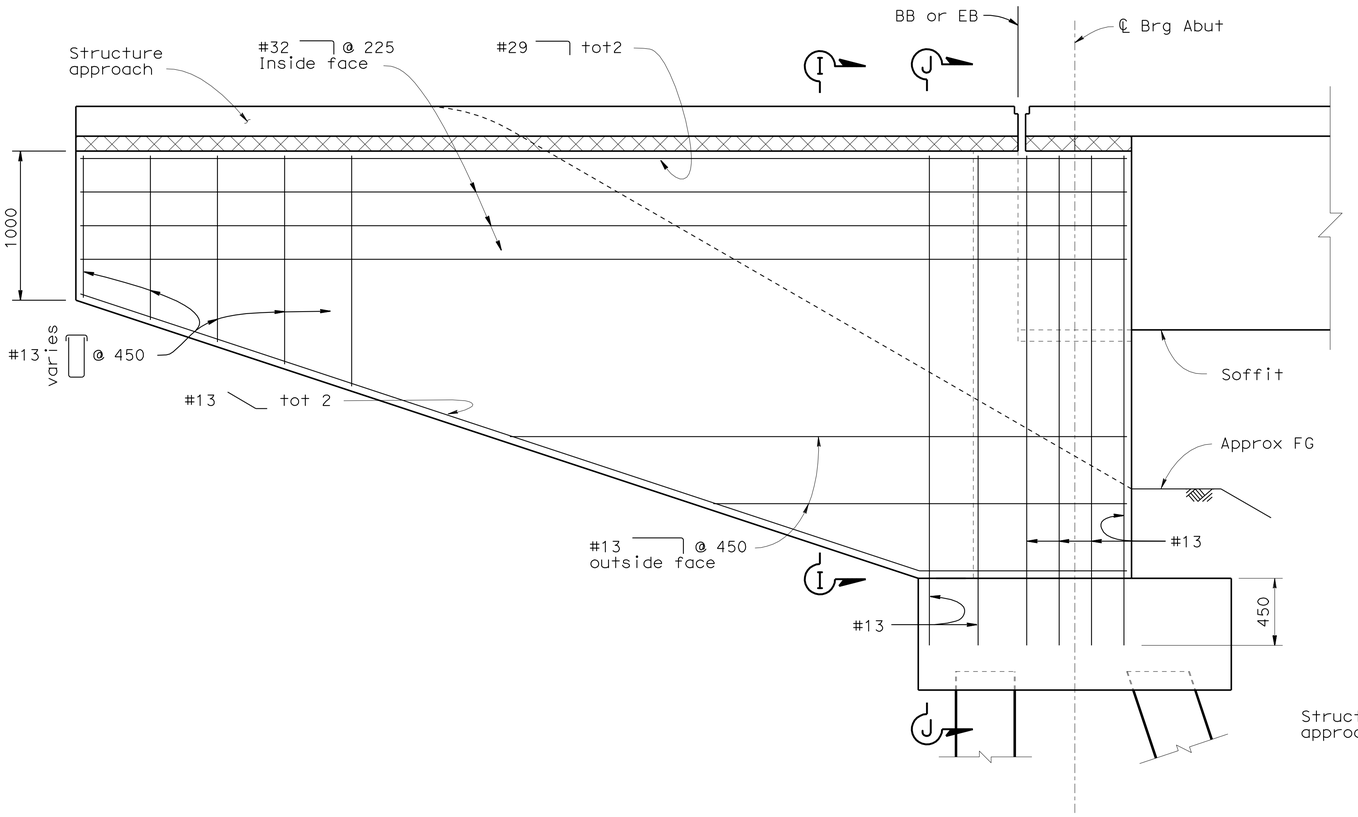

ABUTMENT WINGWALL ELEVATION
1:20

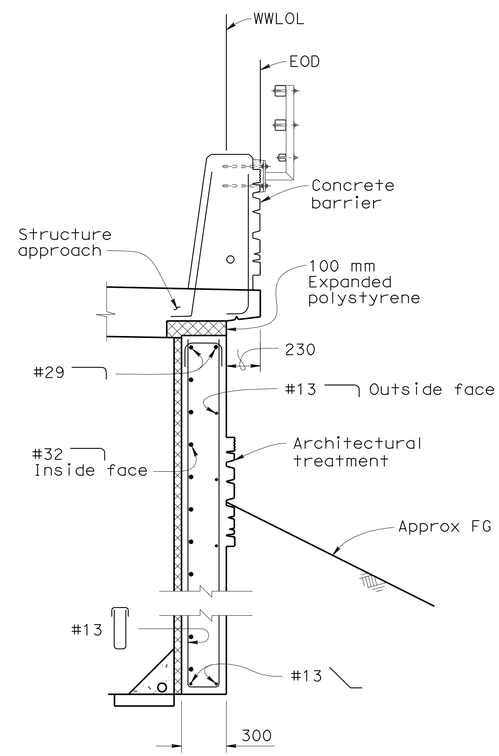

SECTION I-I
1:20

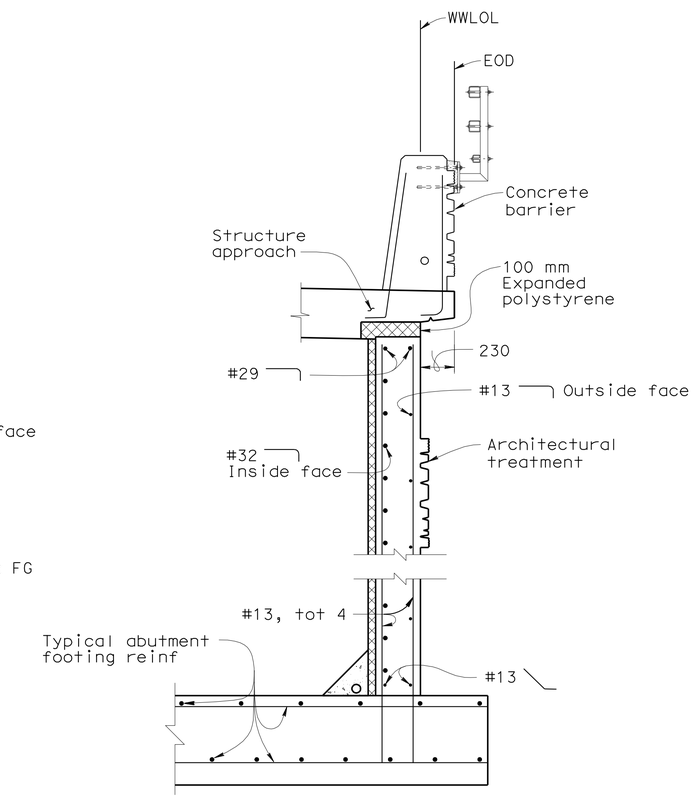

SECTION J-J
1:20

DESIGN	BY K. Selventhiran	CHECKED M. Jimenez	
DETAILS	BY J. Yang	CHECKED M. Jimenez	
QUANTITIES	BY M. Khalaf	CHECKED A. Ahmed	

STATE OF CALIFORNIA
DEPARTMENT OF TRANSPORTATION

DIVISION OF ENGINEERING SERVICES
STRUCTURE DESIGN
DESIGN BRANCH 2

BRIDGE NO. 10-0174S
KILOMETER POST R77.701

WILLITS BYPASS
UPP CREEK (NB ON-RAMP)
ABUTMENT DETAILS NO. 2

Caltrans Metric

ALL DIMENSIONS ARE IN MILLIMETERS UNLESS OTHERWISE SHOWN

ORIGINAL SCALE IN MILLIMETERS FOR REDUCED PLANS 0 10 20 30 40 50 60 70 80 90 100

CU 01
EA 262001

DISREGARD PRINTS BEARING EARLIER REVISION DATES

REVISION DATES: 10-29-08 1-27-09 3-03-09 8-20-09

SHEET 6 OF 14

FILE => 10-0174s_fadt02.dgn

STRUCTURES DESIGN DETAIL SHEET (METRIC) (REV.03-17-04)

USERNAME => s114926 DATE PLOTTED => 28-JAN-2012 TIME PLOTTED => 08:52

DIST	COUNTY	ROUTE	KILOMETER POST TOTAL PROJECT	SHEET No	TOTAL SHEETS
01	Men	101	R69.4/R78.9	904	939

REGISTERED CIVIL ENGINEER 9-15-11 DATE

1-23-12
PLANS APPROVAL DATE

REGISTERED PROFESSIONAL ENGINEER M. Friedheim No. 57968 Exp. 6-30-12 CIVIL STATE OF CALIFORNIA

The State of California or its officers or agents shall not be responsible for the accuracy or completeness of electronic copies of this plan sheet.

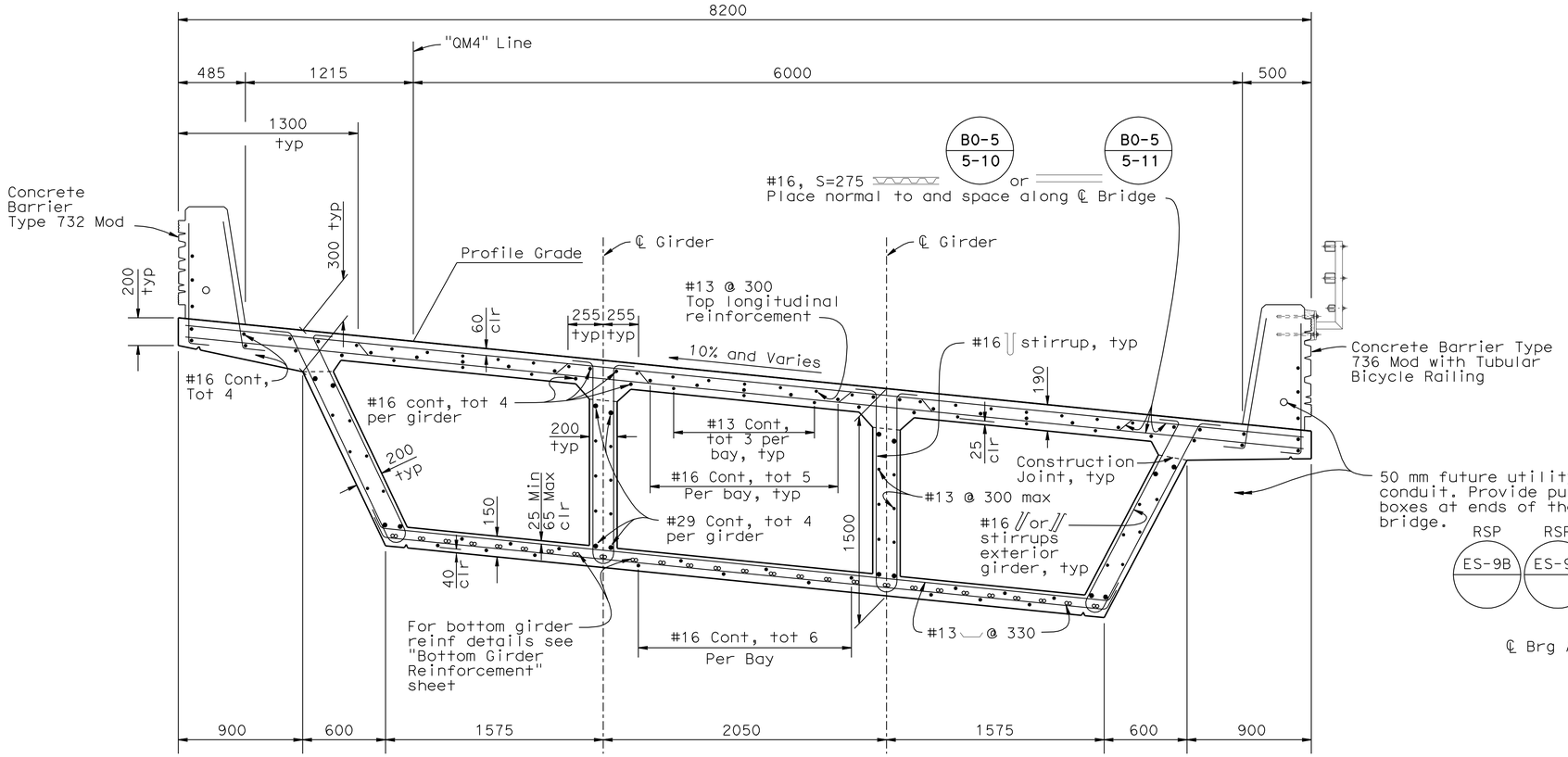

TYPICAL SECTION
1:20

B0-5 B7-1 B11-55 B11-56

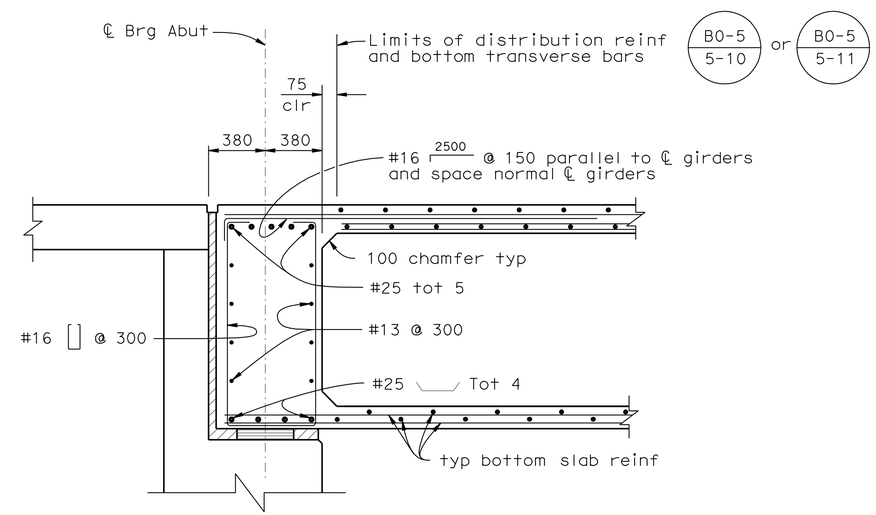

END DIAPHRAGM SECTION
1:20

DESIGN	BY K. Selventhiran	CHECKED M. Jimenez	
DETAILS	BY J. Yang	CHECKED M. Jimenez	
QUANTITIES	BY M. Khalaf	CHECKED A. Ahmed	

STATE OF CALIFORNIA
DEPARTMENT OF TRANSPORTATION

DIVISION OF ENGINEERING SERVICES
STRUCTURE DESIGN
DESIGN BRANCH 2

BRIDGE NO. 10-0174S
KILOMETER POST R77.701

CU 01
EA 262001

DISREGARD PRINTS BEARING EARLIER REVISION DATES

REVISION DATES: 10-16-08 10-24-08 12-09-08 01-12-09 1-23-09 3-03-09

SHEET 7 OF 14

WILLITS BYPASS
UPP CREEK (NB ON-RAMP)
TYPICAL SECTION

ALL DIMENSIONS ARE IN MILLIMETERS UNLESS OTHERWISE SHOWN

ORIGINAL SCALE IN MILLIMETERS FOR REDUCED PLANS 0 10 20 30 40 50 60 70 80 90 100

FILE => 10-0174s_kts01.dgn

STRUCTURES DESIGN DETAIL SHEET (METRIC) (REV.03-17-04)

USERNAME => s114926 DATE PLOTTED => 28-JAN-2012 TIME PLOTTED => 08:52

DIST	COUNTY	ROUTE	KILOMETER POST TOTAL PROJECT	SHEET No	TOTAL SHEETS
01	Men	101	R69.4/R78.9	905	939

REGISTERED CIVIL ENGINEER 9-15-11 DATE

1-23-12
PLANS APPROVAL DATE

REGISTERED PROFESSIONAL ENGINEER M. Friedheim No. 57968 Exp. 6-30-12 CIVIL STATE OF CALIFORNIA

The State of California or its officers or agents shall not be responsible for the accuracy or completeness of electronic copies of this plan sheet.

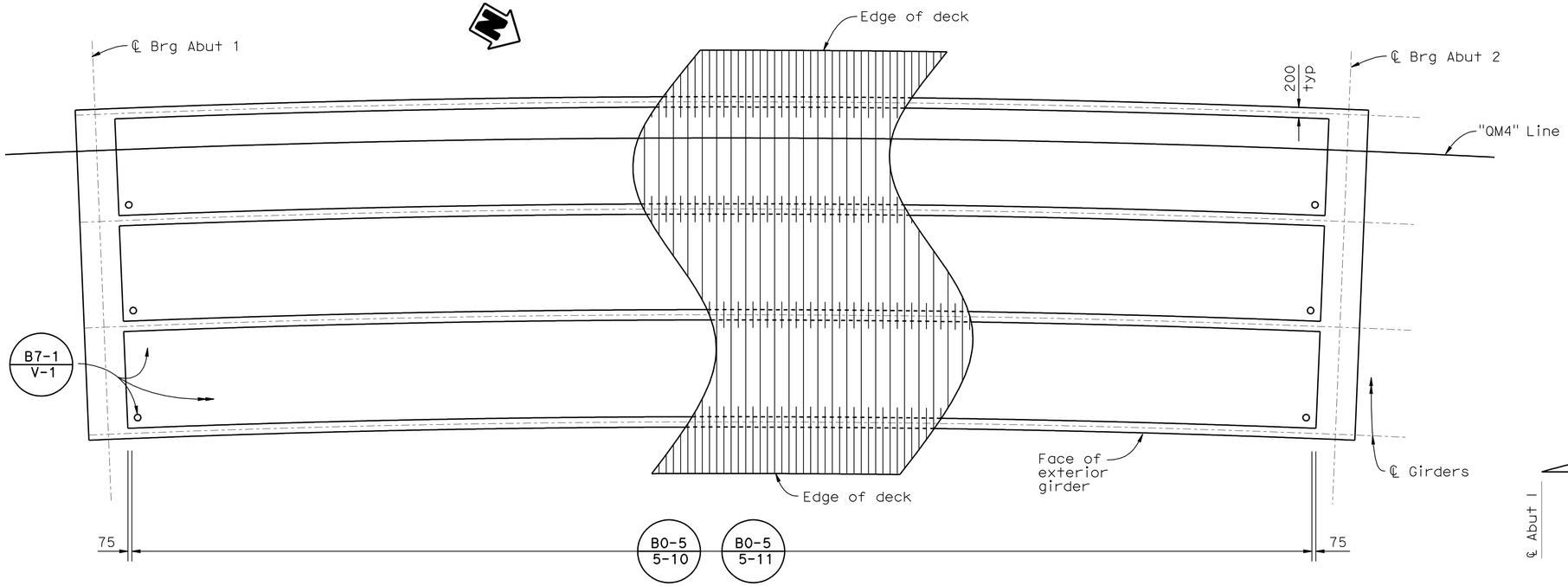

GIRDER LAYOUT

1:50

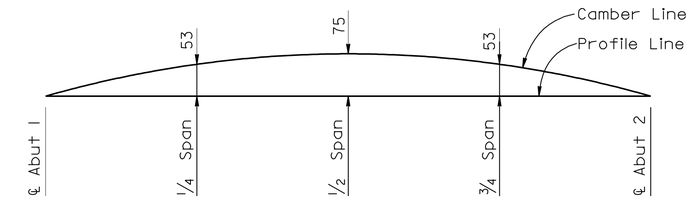

CAMBER DIAGRAM

No Scale

(Does not include allowance for falsework settlement)

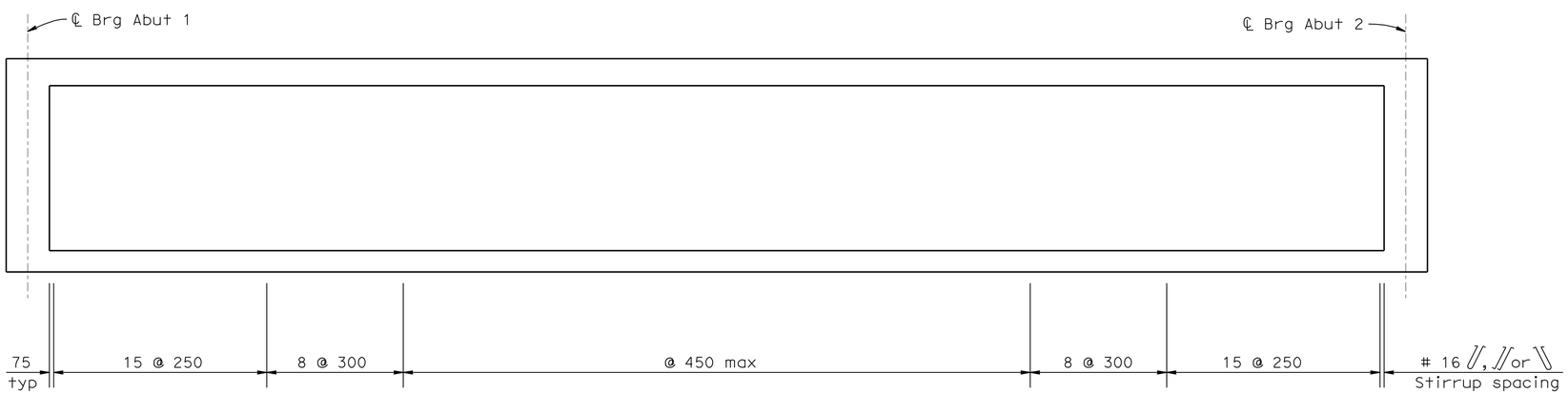

LONGITUDINAL SECTION

NO SCALE

Caltrans Metric

ALL DIMENSIONS ARE IN MILLIMETERS UNLESS OTHERWISE SHOWN

ORIGINAL SCALE IN MILLIMETERS FOR REDUCED PLANS 0 10 20 30 40 50 60 70 80 90 100

	BY	CHECKED
DESIGN	K. Selventhiran	M. Jimenez
DETAILS	J. Yang	M. Jimenez
QUANTITIES	M. Khalaf	A. Ahmed

STATE OF CALIFORNIA
DEPARTMENT OF TRANSPORTATION

DIVISION OF ENGINEERING SERVICES
STRUCTURE DESIGN
DESIGN BRANCH 2

CU 01
EA 262001

BRIDGE NO. 10-0174S
KILOMETER POST R77.701

WILLITS BYPASS
UPP CREEK (NB ON-RAMP)
GIRDER LAYOUT

DISREGARD PRINTS BEARING EARLIER REVISION DATES

REVISION DATES: 10-21-08 10-21-08 08-10-09

SHEET 8 OF 14

FILE => 10-0174s_lglo01.dgn

STRUCTURES DESIGN DETAIL SHEET (METRIC) (REV.03-17-04)

USERNAME => s114926 DATE PLOTTED => 28-JAN-2012 TIME PLOTTED => 08:52

DIST	COUNTY	ROUTE	KILOMETER POST TOTAL PROJECT	SHEET No	TOTAL SHEETS
01	Men	101	R69.4/R78.9	906	939

REGISTERED CIVIL ENGINEER 9-15-11 DATE

1-23-12
PLANS APPROVAL DATE

REGISTERED PROFESSIONAL ENGINEER M. Friedheim No. 57968 Exp. 6-30-12 CIVIL STATE OF CALIFORNIA

The State of California or its officers or agents shall not be responsible for the accuracy or completeness of electronic copies of this plan sheet.

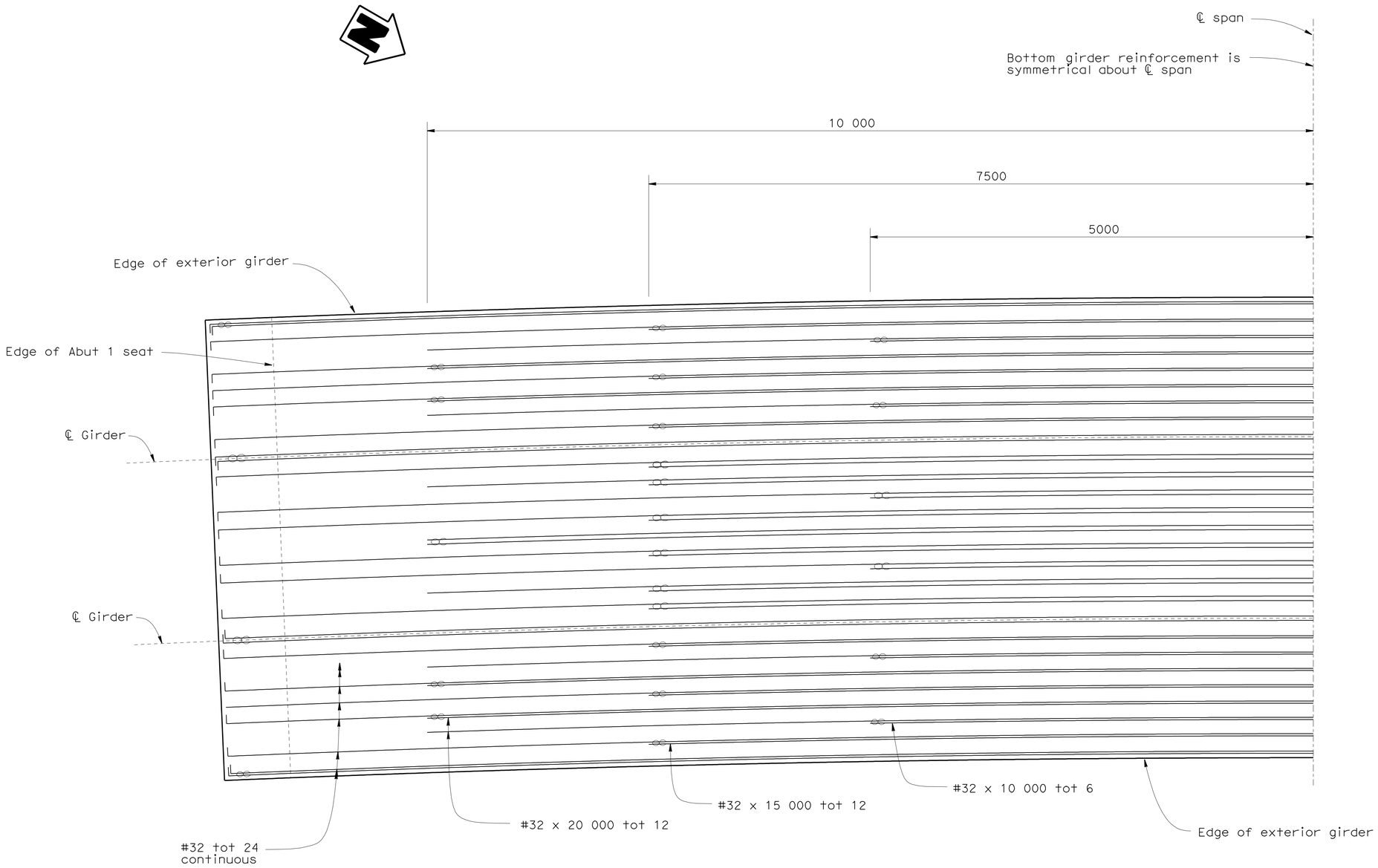

BOTTOM GIRDER REINFORCEMENT

1:25

Notes:

1. Continuous #32 bars shall be extended into abutment end diaphragms and terminate with a hook.
2. Distribution bars are not shown.
3. No splices are allowed in cut-off bars. Splices in continuous bars shall be service level splices and shall not be located within 7.0 m of each side of ℄ Span.

WILLITS BYPASS

UPP CREEK (NB ON-RAMP)

BOTTOM GIRDER REINFORCEMENT

Caltrans Metric

	BY	CHECKED
DESIGN	K. Selventhiran	M. Jimenez
DETAILS	J. Yang	M. Jimenez
QUANTITIES	M. Khalaf	A. Ahmed

STATE OF CALIFORNIA
DEPARTMENT OF TRANSPORTATION

DIVISION OF ENGINEERING SERVICES
STRUCTURE DESIGN
DESIGN BRANCH 2

BRIDGE NO. 10-0174S
KILOMETER POST R77.701

CU 01
EA 262001

ALL DIMENSIONS ARE IN MILLIMETERS UNLESS OTHERWISE SHOWN

ORIGINAL SCALE IN MILLIMETERS FOR REDUCED PLANS 0 10 20 30 40 50 60 70 80 90 100

DISREGARD PRINTS BEARING EARLIER REVISION DATES 10-30-08 12-09-08 8-20-09

REVISION DATES

SHEET 9 OF 14

FILE => 10-0174s_ogbot01.dgn

STRUCTURES DESIGN DETAIL SHEET (METRIC) (REV.03-17-04)

USERNAME => s114926 DATE PLOTTED => 28-JAN-2012 TIME PLOTTED => 08:52

DIST	COUNTY	ROUTE	KILOMETER POST TOTAL PROJECT	SHEET No	TOTAL SHEETS
01	Men	101	R69.4/R78.9	907	939

REGISTERED CIVIL ENGINEER 9-15-11 DATE

1-23-12
PLANS APPROVAL DATE

REGISTERED PROFESSIONAL ENGINEER M. Friedheim No. 57968 Exp. 6-30-12 CIVIL STATE OF CALIFORNIA

The State of California or its officers or agents shall not be responsible for the accuracy or completeness of electronic copies of this plan sheet.

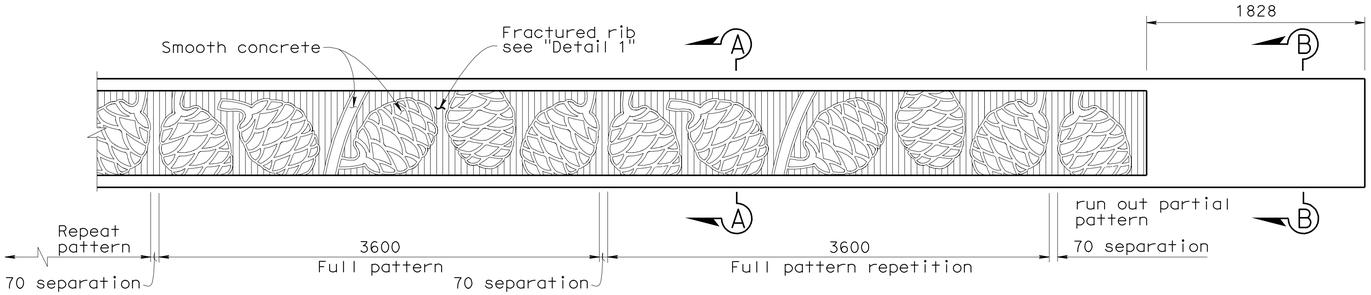

TYPE 736 BARRIER PARTIAL ELEVATION

1:25

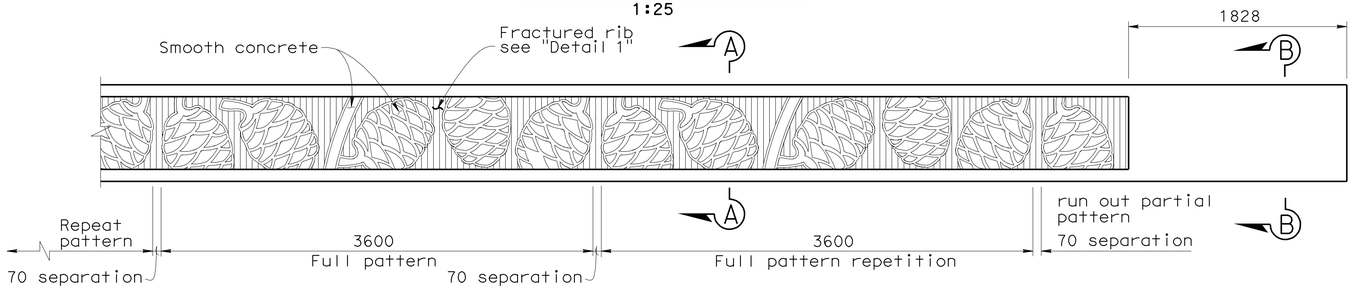

TYPE 732 BARRIER PARTIAL ELEVATION

1:25

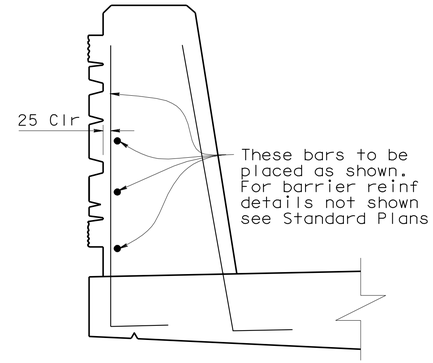

BARRIER REINFORCEMENT MODIFICATION

1:10

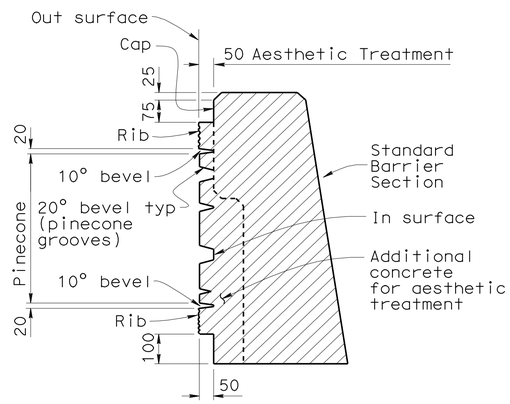

SECTION A-A

1:10

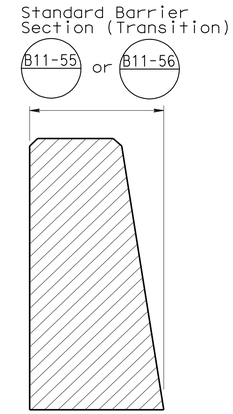

SECTION B-B

1:10

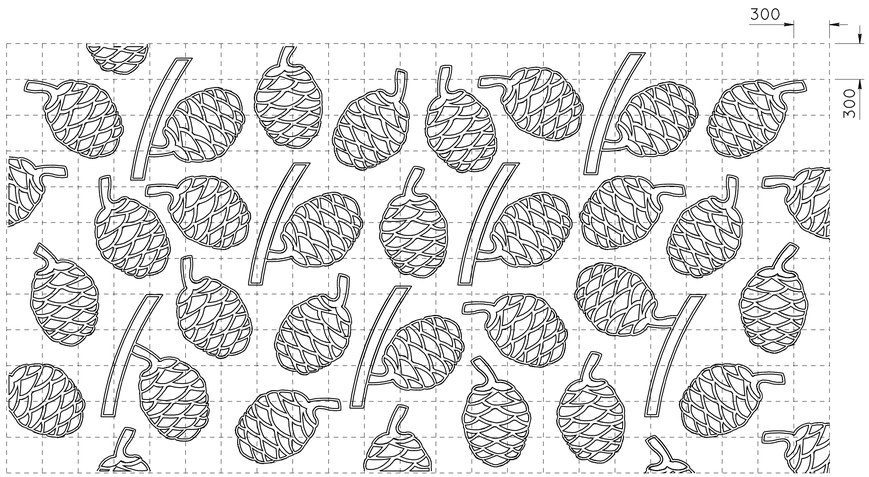

300 mm grid for reference only

RANDOM PINECONE PATTERN FOR WING WALLS

1:25

NOTE: Place random pinecone pattern on Fractured Rib Background
Fractured rib to be at same angle/alignment as abutment wall.
Relief similar to Barrier Section A-A

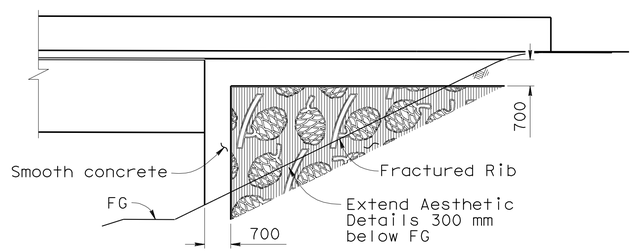

TYPICAL WINGWALL AESTHETIC TREATMENT

DETAIL D

1:80

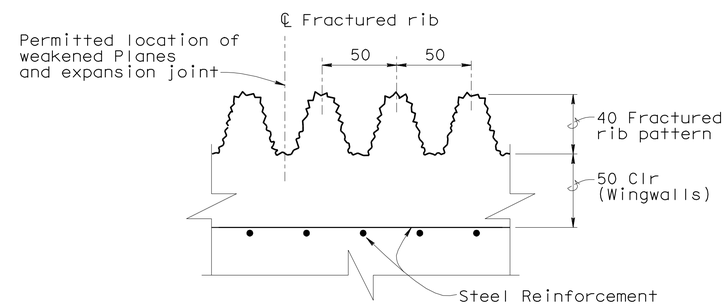

TYPICAL FRACTURED RIB TEXTURE

DETAIL 1

1:2

Caltrans Metric

	BY	CHECKED
DESIGN	M. Moore	M. Jimenez
DETAILS	C. Figuerres	M. Jimenez
QUANTITIES	M. Khalaf	A. Ahmed

STATE OF CALIFORNIA DEPARTMENT OF TRANSPORTATION

DIVISION OF ENGINEERING SERVICES STRUCTURE DESIGN DESIGN BRANCH 2

BRIDGE NO. 10-0174S
KILOMETER POST R77.701

WILLITS BYPASS
UPP CREEK (NB ON-RAMP)
AESTHETIC DETAILS

ALL DIMENSIONS ARE IN MILLIMETERS UNLESS OTHERWISE SHOWN

ORIGINAL SCALE IN MILLIMETERS FOR REDUCED PLANS 0 10 20 30 40 50 60 70 80 90 100

CU 01
EA 262001

DISREGARD PRINTS BEARING EARLIER REVISION DATES

REVISION DATES

SHEET 10 OF 14

FILE => 10-0174s_xsfradet1.dgn

STRUCTURES DESIGN DETAIL SHEET (METRIC) (REV.03-17-04)

USERNAME => s114926 DATE PLOTTED => 28-JAN-2012 TIME PLOTTED => 08:52

DIST.	COUNTY	ROUTE	KILOMETER POST TOTAL PROJECT	SHEET NO.	TOTAL SHEETS
01	Men	101	R69.4/R78.9	908	939

Caltrans Metric

REGISTERED ENGINEER - CIVIL 9-15-11

1-23-12
PLANS APPROVAL DATE

REGISTERED PROFESSIONAL ENGINEER M. Friedheim No. 57968 Exp. 6-30-12 CIVIL STATE OF CALIFORNIA

The State of California or its officers or agents shall not be responsible for the accuracy or completeness of electronic copies of this plan sheet.

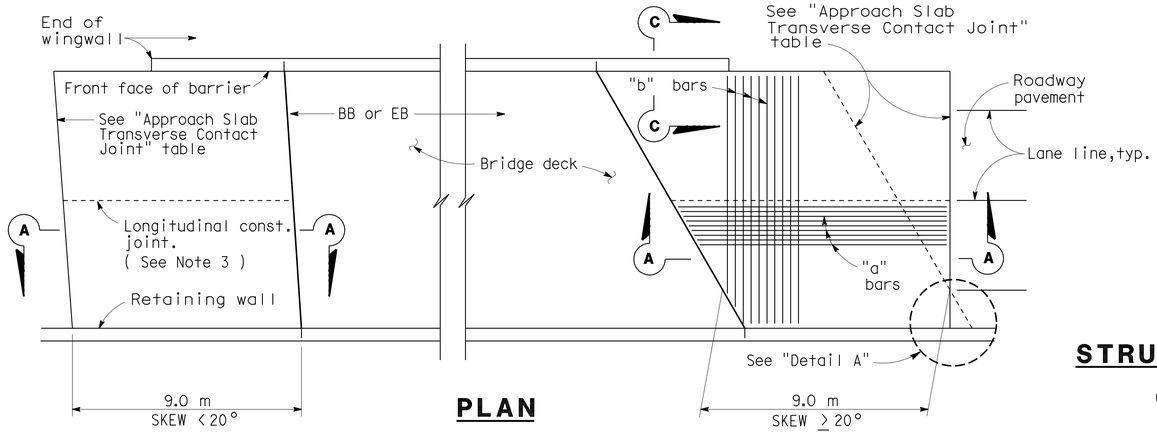

PLAN

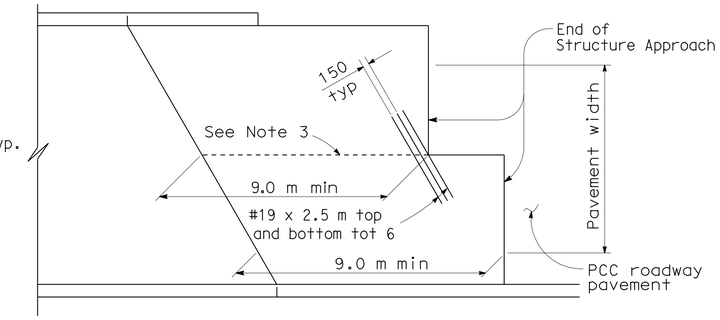

STRUCTURE APPROACH - END STAGGER DETAIL

APPROACH SLAB TRANSVERSE CONTACT JOINT		
APPROACH SKEW	WITH AC ROADWAY PAVEMENT	WITH PCC ROADWAY PAVEMENT
< 20°	Parallel to face of paving notch	Parallel to face of paving notch
20°- 45°	Parallel to face of P N use (Detail A)	Stagger lines 7.2 m to 10.8 m apart.
> 45°	Parallel to face of P N use (Detail A)	Stagger at each lane line.

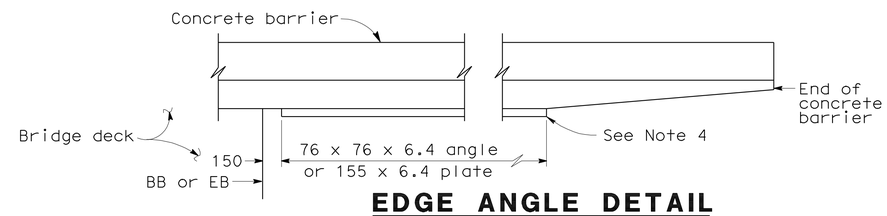

EDGE ANGLE DETAIL

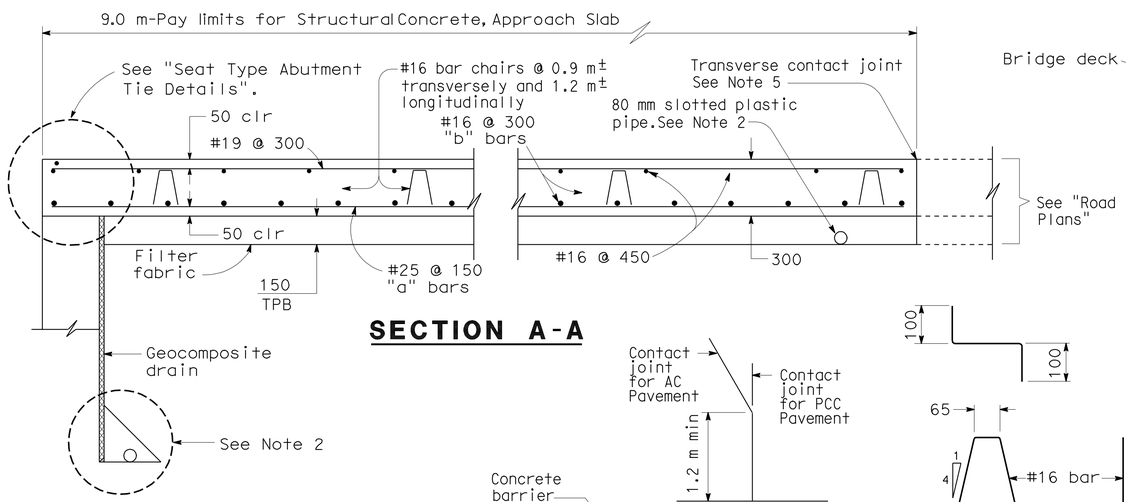

SECTION A-A

DETAIL A

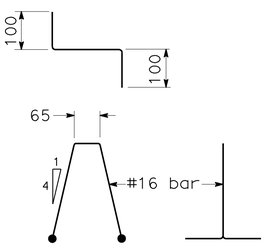

BAR CHAIR DETAIL

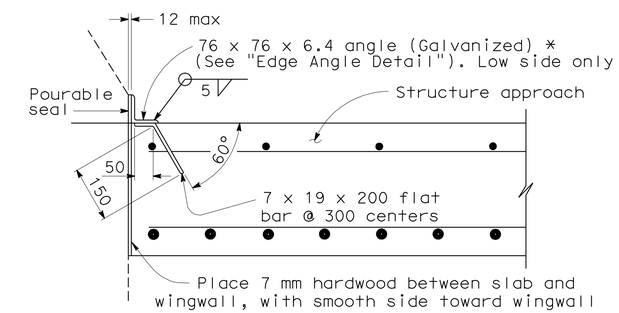

*(TO BE USED WITH TYPE 25 OR TYPE 27 CONCRETE BARRIER)

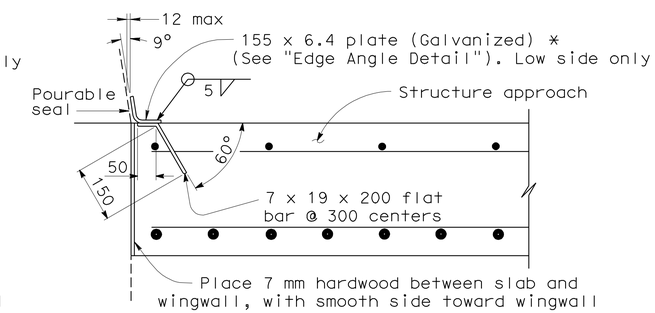

*(TO BE USED WITH TYPE 732 OR TYPE 736 CONCRETE BARRIER)

DETAIL B

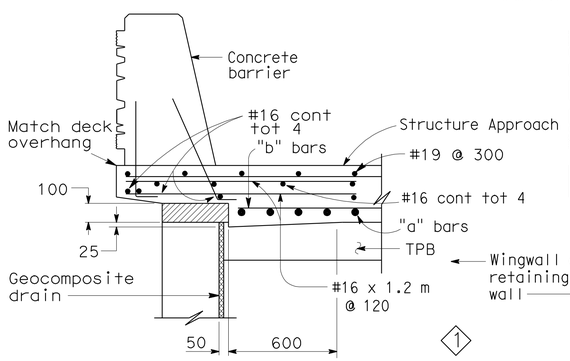

TYPE E-1

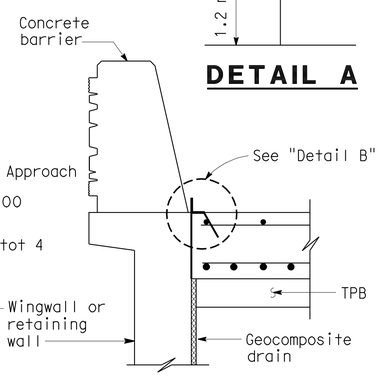

TYPE E-2

SECTION C-C

(Type E-1 to be used,unless otherwise shown on plans)

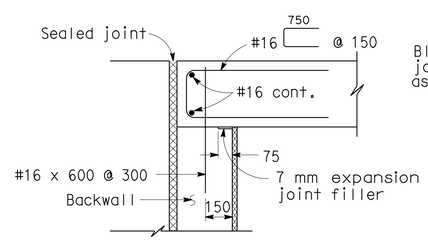

MR ≤ 50 mm

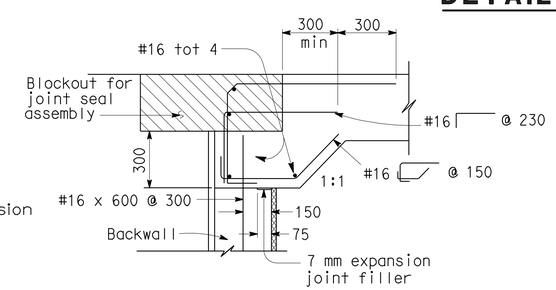

MR > 50 mm

SEAT TYPE ABUTMENT TIE DETAILS (SEE NOTE 1)

NOTES:

1. For details not shown,see Structure Plans. For MR ≤ 50 mm,adjust bar reinforcement to clear a sawcut for sealed joint,when required.
2. For drainage details,see "Structure Approach Drainage Details" sheet.
3. Longitudinal construction joints,when permitted by the Engineer, shall be located on lane lines.
4. End angle or plate at beginning of barrier transition, end of wingwall or end of structure approach as applicable.
5. For transverse contact joint with new PCC paving, refer to Standard Plan P30.
6. At the contractor's option, approach slab transverse reinforcement may be placed parallel to paving notch. Spacing of transverse reinforcement is measured along ℄ roadway.

Remove all polystyrene.

SPECIAL DETAILS
NO SCALE
ALL DIMENSIONS ARE IN MILLIMETERS UNLESS OTHERWISE SHOWN

1 Modified barrier

STANDARD DRAWING				
RELEASE DATE REVISED	DESIGN	BY M. TRAFFALIS	CHECKED E. THORKILDSEN	RELEASED BY
FILE NO. xs3-120	DETAILS	BY R. YEE	CHECKED E. THORKILDSEN	OFFICE CHIEF
	SUBMITTED	BY M. HA	DRAWING DATE 4/98	

DS OSD 2147A (METRIC) (REV. 2/25/97)

ORIGINAL SCALE IN MILLIMETERS FOR REDUCED PLANS 0 10 20 30 40 50 60 70 80 90 100

STATE OF CALIFORNIA
DEPARTMENT OF TRANSPORTATION

DIVISION OF ENGINEERING SERVICES
STRUCTURE DESIGN
DESIGN BRANCH 2

CU 01
EA 262001

BRIDGE NO. 10-0174S
KILOMETER POST R77.701

DISREGARD PRINTS BEARING EARLIER REVISION DATES

REVISION DATES (PRELIMINARY STAGE ONLY) 8-15-08 1-27-09

SHEET 11 OF 14

WILLITS BYPASS

UPP CREEK (NB ON-RAMP)

STRUCTURE APPROACH TYPE N(9S)

USERNAME => s114926

10-0174s_xsfsatn9s.dgn

DATE PLOTTED => 28-JAN-2012 TIME PLOTTED => 08:53

DIST.	COUNTY	ROUTE	KILOMETER POST TOTAL PROJECT	SHEET NO.	TOTAL SHEETS
01	Men	101	R69.4/R78.9	909	939

Caltrans Metric

9-15-11
REGISTERED ENGINEER - CIVIL

1-23-12
PLANS APPROVAL DATE

REGISTERED PROFESSIONAL ENGINEER M. Friedheim No. 57968 Exp. 6-30-12 CIVIL STATE OF CALIFORNIA

The State of California or its officers or agents shall not be responsible for the accuracy or completeness of electronic copies of this plan sheet.

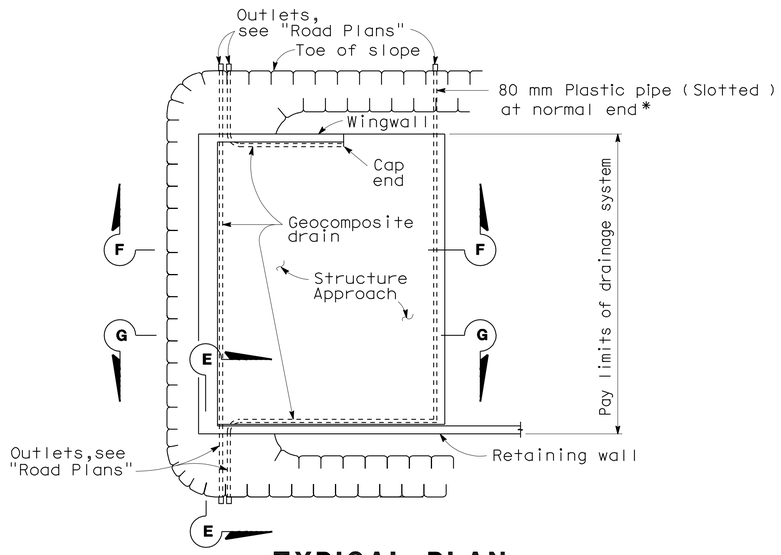

TYPICAL PLAN

*For pipe layout at staggered end, see "Detail B".

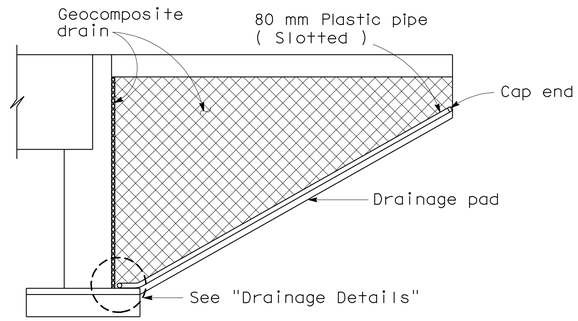

CANTILEVER WINGWALL SECTION F-F

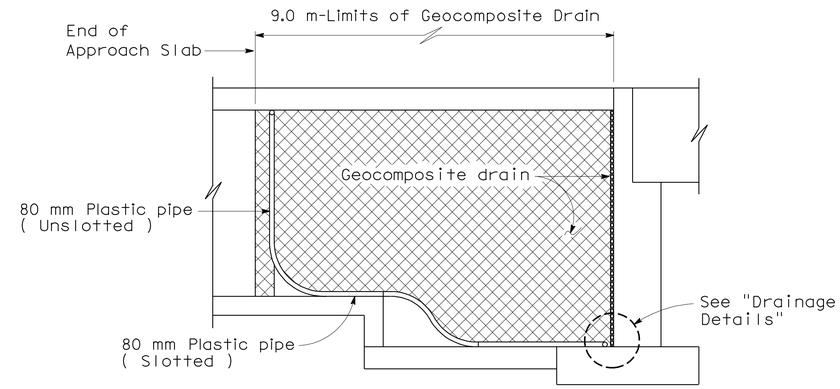

RETAINING WALL WINGWALL SECTION G-G

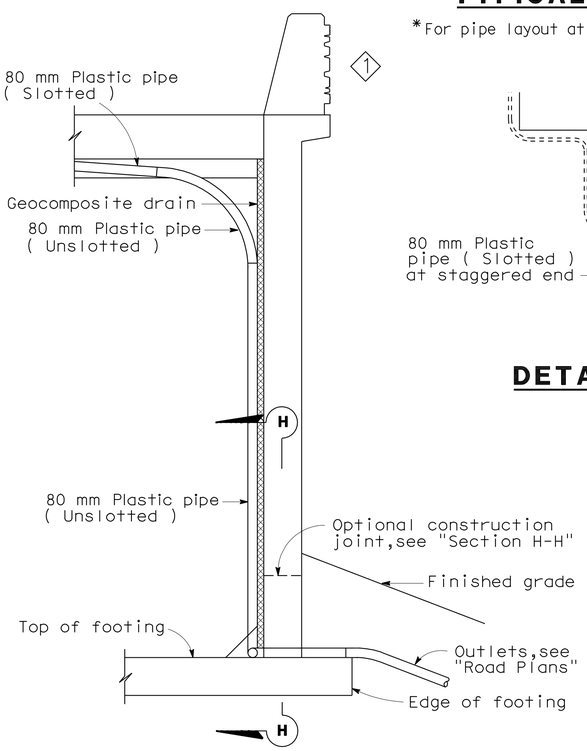

SECTION E-E

NOTE: Bends and junctions in 80 mm plastic pipe are 750 mm radius min.

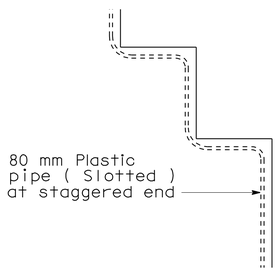

DETAIL B

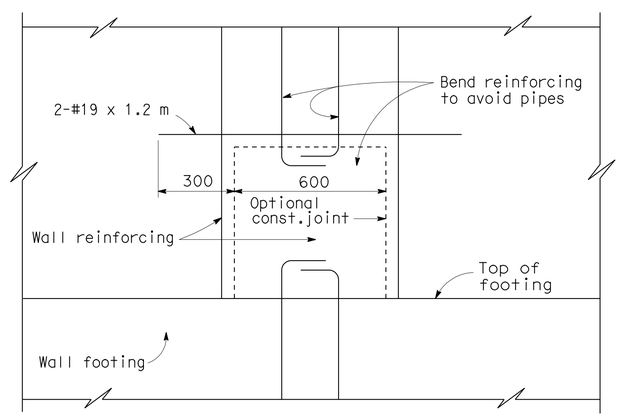

SECTION H-H

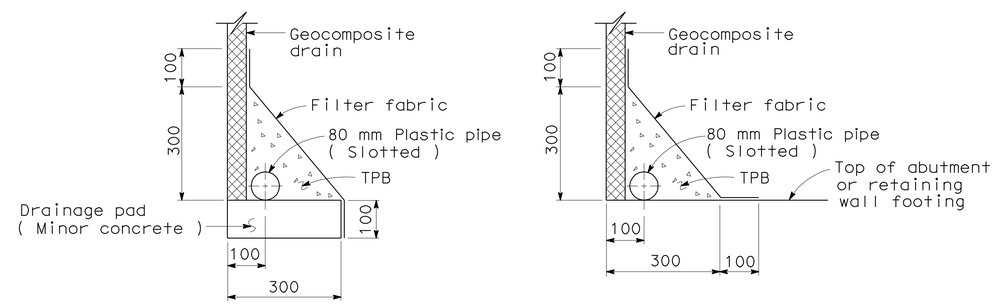

WITHOUT FOOTING

WITH FOOTING

DRAINAGE DETAILS

SPECIAL DETAILS
NO SCALE
ALL DIMENSIONS ARE IN MILLIMETERS UNLESS OTHERWISE SHOWN

STANDARD DRAWING

RELEASE DATE	REVISED	DESIGN	BY M. TRAFFALIS	CHECKED E. THORKILDSEN	RELEASED BY
FILE NO.	xs3-110	DETAILS	BY R. YEE	CHECKED E. THORKILDSEN	OFFICE CHIEF
		SUBMITTED	BY M. HA	DRAWING DATE 4/98	

1 Modified barrier

STATE OF CALIFORNIA
DEPARTMENT OF TRANSPORTATION

DIVISION OF ENGINEERING SERVICES
STRUCTURE DESIGN
DESIGN BRANCH 2

BRIDGE NO. 10-0174S
KILOMETER POST R77.701

WILLITS BYPASS
UPP CREEK (NB ON-RAMP)
STRUCTURE APPROACH DRAINAGE DETAILS

DS OSD 2147A (METRIC) (REV. 2/25/97)

ORIGINAL SCALE IN MILLIMETERS FOR REDUCED PLANS 0 10 20 30 40 50 60 70 80 90 100

CU 01
EA 262001

DISREGARD PRINTS BEARING EARLIER REVISION DATES

REVISION DATES (PRELIMINARY STAGE ONLY) 8-13-08 1-27-09

SHEET 12 OF 14

USERNAME => s114926

10-0174s_xsftsadd.dgn

DATE PLOTTED => 28-JAN-2012 TIME PLOTTED => 08:53

DIST.	COUNTY	ROUTE	KILOMETER POST TOTAL PROJECT	SHEET NO.	TOTAL SHEETS
01	Men	101	R69.4/R78.9	910	939

Caltrans Metric

REGISTERED ENGINEER - CIVIL 9-15-11

PLANS APPROVAL DATE 1-23-12

REGISTERED PROFESSIONAL ENGINEER M. Friedheim No. 57968 Exp. 6-30-12 CIVIL STATE OF CALIFORNIA

The State of California or its officers or agents shall not be responsible for the accuracy or completeness of electronic copies of this plan sheet.

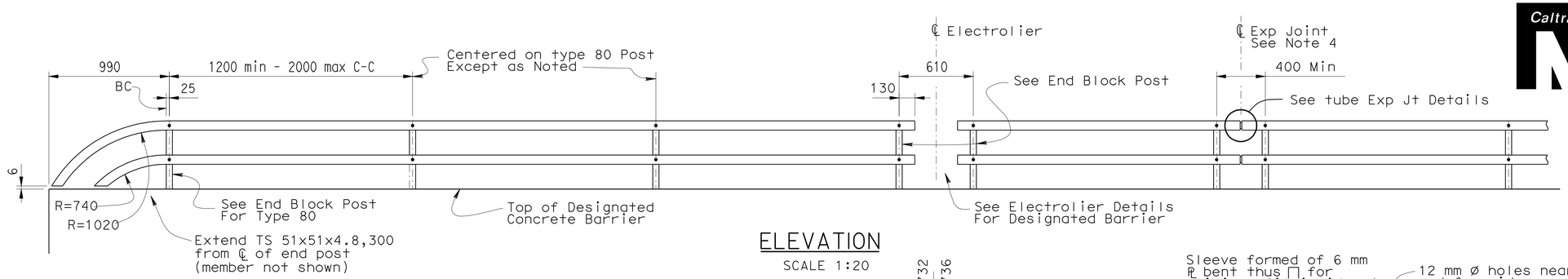

ELEVATION
SCALE 1:20

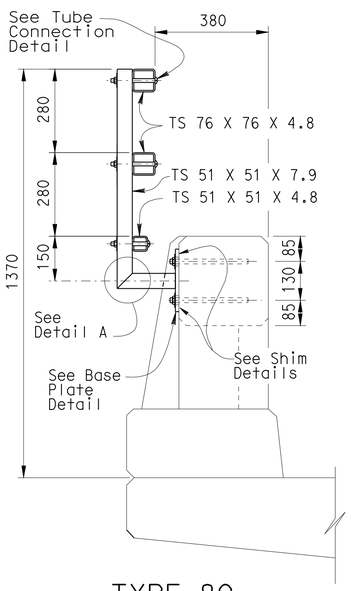

TYPE 80
END BLOCK POST
SCALE 1:10

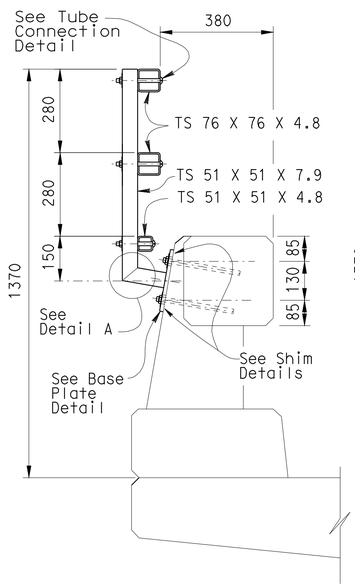

TYPE 80
SCALE 1:10

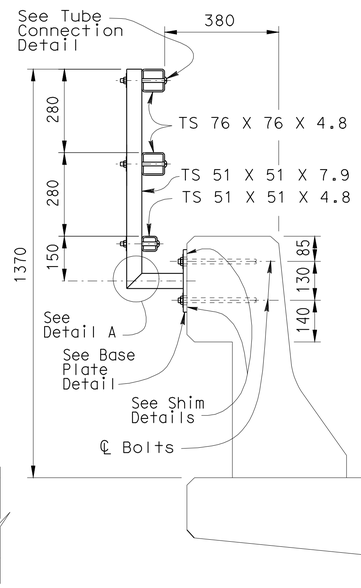

TYPE 25
SCALE 1:10

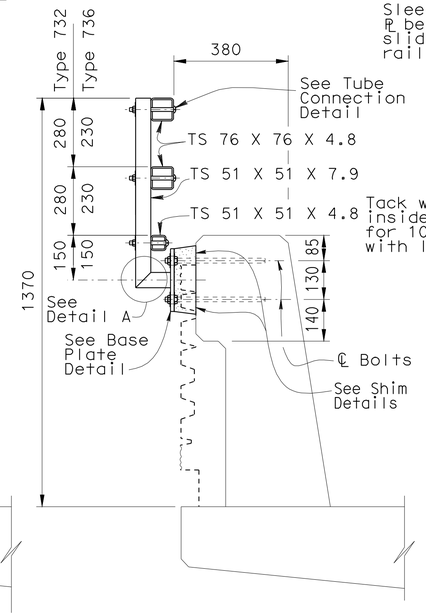

TYPE 732 OR 736 ①
NO SCALE

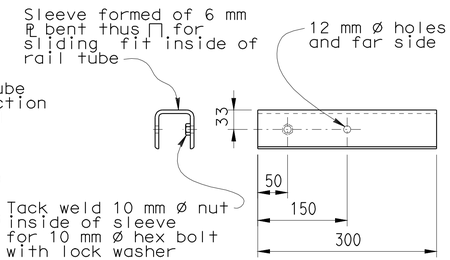

SLEEVE DETAIL
SCALE 1:5

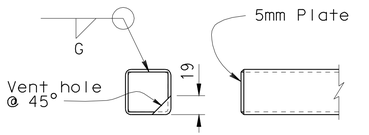

RAIL CAP DETAIL
SCALE 1:5

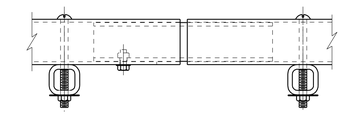

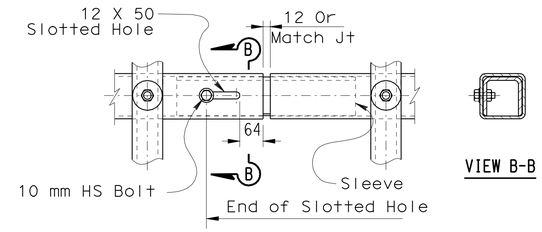

TUBE EXPANSION JOINT DETAILS
SCALE 1:5

VIEW B-B

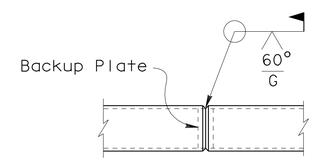

WELDED SPLICE DETAIL
SCALE 1:5

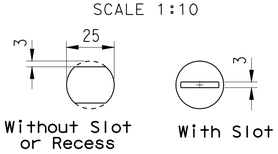

VIEW C-C
SCALE 1:1

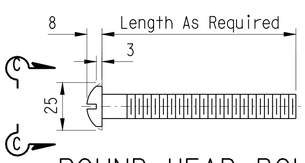

ROUND HEAD BOLT DETAIL
SCALE 1:1

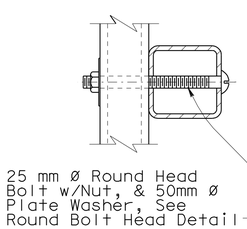

TUBE CONNECTION DETAIL
SCALE 1:2.5

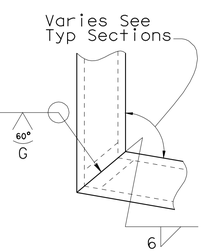

DETAIL A
SCALE 1:2.5

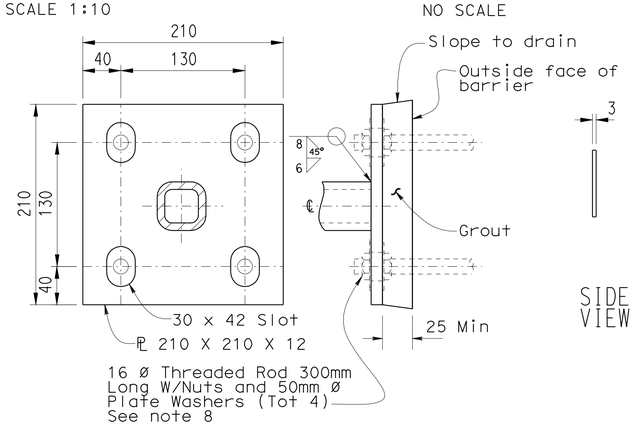

BASE PLATE DETAIL ②
SCALE 1:2.5

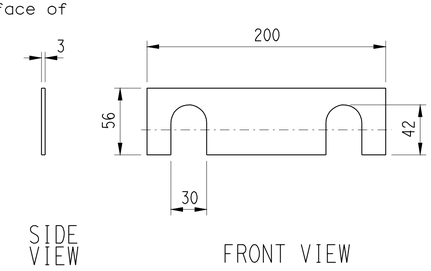

SHIM DETAILS
NO SCALE

NOTES:

1. Galvanize rail assembly after fabrication.
2. Post shall be normal to railing.
3. Rail tubes shall be shop bent or fabricated to fit horizontal curve when radius is less than 300 m.
4. Tube splices shall be located in the tubes spanning deck or wall joints. Increase joint width in tubes to match expansion joint width and increase sleeve length correspondingly.
5. Top rail tube shall be continuous over not less than two posts except a short post spacing is permitted near deck or wall joints, electroliers, or other rail discontinuities as noted.
6. For details and reinforcement not shown see Standard Plans.
7. See project plans for limits of tubular bicycle railing.
8. CIP threaded rods may alternatively be installed using a drill and bond method with epoxy cartridges after forming and pouring barrier concrete. Plates to be placed against level surface.

SPECIAL DETAILS

ALL DIMENSIONS ARE IN MILLIMETERS UNLESS OTHERWISE SHOWN

RELEASE DATE	REVISED	DESIGN	BY TILLAT SATTER	CHECKED NEELIMA PATIL	RELEASED BY
FILE NO.	XS16-500	DETAILS	BY H.NGUYEN	CHECKED TILLAT SATTER	OFFICE CHIEF
		SUBMITTED	BY	DRAWING DATE 08/06	

① Barrier modified
② Plate details modified

STATE OF CALIFORNIA
DEPARTMENT OF TRANSPORTATION

DIVISION OF ENGINEERING SERVICES

BRIDGE NO. 10-0174S
KILOMETER POST R77.701

WILLITS BYPASS
UPP CREEK (NB ON-RAMP)
TUBULAR BICYCLE RAILING

DS OSD 2|39M (METRIC) (REV. 3/5/97)

ORIGINAL SCALE IN MILLIMETERS FOR REDUCED PLANS 0 10 20 30 40 50 60 70 80 90 100

CU 01
EA 262001

DISREGARD PRINTS BEARING EARLIER REVISION DATES

REVISION DATES (PRELIMINARY STAGE ONLY) 8-15-08 1-29-09 7-02-09

SHEET 13 OF 14

USERNAME => s114926 FILE => 10-0174s_xsfutub.dgn

USERNAME => s114926 DATE PLOTTED => 28-JAN-2012 TIME PLOTTED => 08:53

VI=I

DIST	COUNTY	ROUTE	KILOMETER POST TOTAL PROJECT	SHEET No	TOTAL SHEETS
01	Men	101	R69.4/R78.9	911	939

CERTIFIED ENGINEERING GEOLOGIST 5-19-09 DATE

REGISTERED GEOLOGIST Reid Buell No. 1481 Exp. 4-30-11 CERTIFIED ENGINEERING GEOLOGIST STATE OF CALIFORNIA

1-23-12
PLANS APPROVAL DATE

The State of California or its officers or agents shall not be responsible for the accuracy or completeness of electronic copies of this plan sheet.

BENCH MARK

SURVEY CONTROL

SEWER (PRHV4750)
Fnd 2-1/4" BRASS DISK
159.985 m Lt.℄ Rte 101
Sta. 163+10.608
N 695,463.301
E 1,884,392.708
Elev = 411.192

MEN-101-48.1 (PRHV5046)
Fnd AL.CAP IN CONC. W/STEEL
188.980 m Lt.℄ Rte 101
Sta. 178+98.282
N 696,420.729
E 1,883,104.414
Elev = 409.954

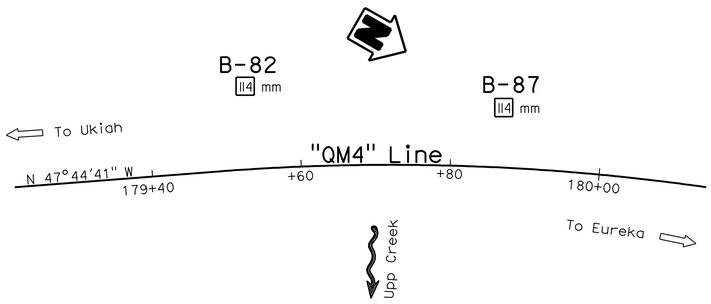

PLAN
1:400

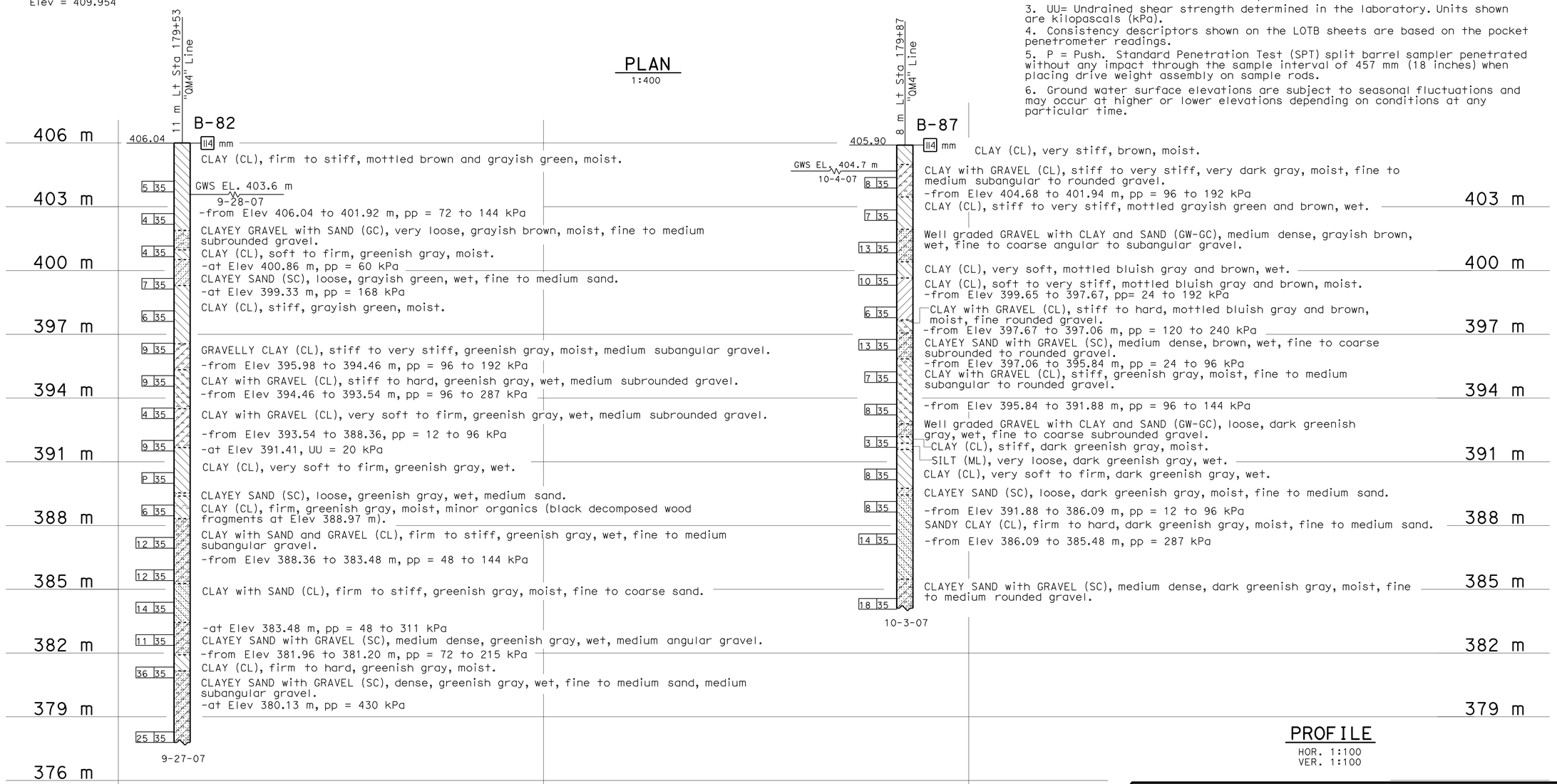

PROFILE
HOR. 1:100
VER. 1:100

Notes:

1. Standard Penetration Tests (SPT) performed in Borings B-82 and B-87 were advanced using a 63.5 kg Longyear Automatic Hammer.
2. pp= Unconfined compressive strength determined in the field by "Pocket Penetrometer." Units shown are kilopascals (kPa).
3. UU= Undrained shear strength determined in the laboratory. Units shown are kilopascals (kPa).
4. Consistency descriptors shown on the LOTB sheets are based on the pocket penetrometer readings.
5. P = Push. Standard Penetration Test (SPT) split barrel sampler penetrated without any impact through the sample interval of 457 mm (18 inches) when placing drive weight assembly on sample rods.
6. Ground water surface elevations are subject to seasonal fluctuations and may occur at higher or lower elevations depending on conditions at any particular time.

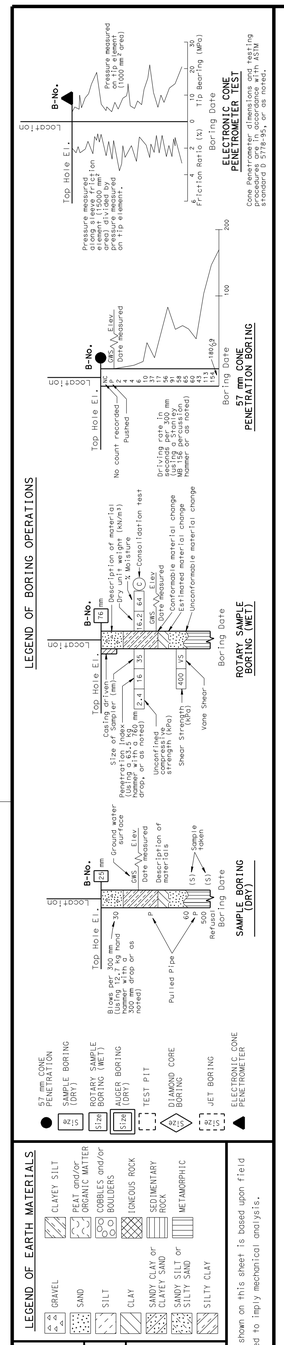

OGS CIVIL LOG OF TEST BORINGS SHEET (METRIC) (REV. 4/04)

Caltrans Metric

ENGINEERING SERVICES	GEOTECHNICAL SERVICES
DRAWN BY	W. Tang 4/09
CHECKED BY	

FIELD INVESTIGATION BY: T. Alderman

STATE OF CALIFORNIA DEPARTMENT OF TRANSPORTATION

DIVISION OF ENGINEERING SERVICES STRUCTURE DESIGN DESIGN BRANCH 2

BRIDGE NO. 10-0174S
KILOMETER POST R77.701

WILLITS BYPASS
UPP CREEK (NB ON-RAMP)
LOG OF TEST BORINGS

ALL DIMENSIONS ARE IN METERS UNLESS OTHERWISE SHOWN

ORIGINAL SCALE IN MILLIMETERS FOR REDUCED PLANS 0 10 20 30 40 50 60 70 80 90 100

CU 01
EA 262001

DISREGARD PRINTS BEARING EARLIER REVISION DATES

REVISION DATES (PRELIMINARY STAGE ONLY) 04-28-09 05-14-09 05-18-09

SHEET 14 OF 14

FILE => 10-0174s_ytlotb.dgn

USERNAME => s114926 DATE PLOTTED => 28-JAN-2012 TIME PLOTTED => 08:54

DIST	COUNTY	ROUTE	KILOMETER POST TOTAL PROJECT	SHEET No	TOTAL SHEETS
01	Men	101	R69.4/R78.9	912	939

REGISTERED CIVIL ENGINEER 9-15-11 DATE

1-23-12
PLANS APPROVAL DATE

REGISTERED PROFESSIONAL ENGINEER M. Friedheim No. 57968 Exp. 06-30-12 CIVIL STATE OF CALIFORNIA

The State of California or its officers or agents shall not be responsible for the accuracy or completeness of electronic copies of this plan sheet.

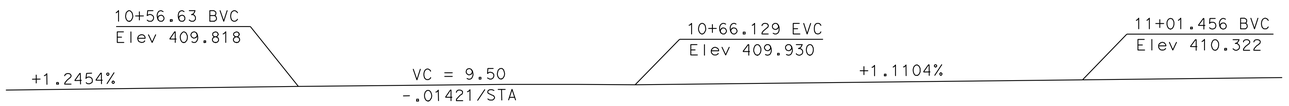

PROFILE GRADE

No Scale

Notes:

1. Concrete Barrier Type 736 Mod with Tubular Bicycle Railing
2. Concrete Barrier Type 26 Mod with Tubular Bicycle Railing
3. Paint "Upp Creek Bridge"
4. Paint bridge number and year constructed
5. See "Aesthetic Details" sheet
6. Structure Approach Type EQ(3)

Indicates direction of flow in Creek

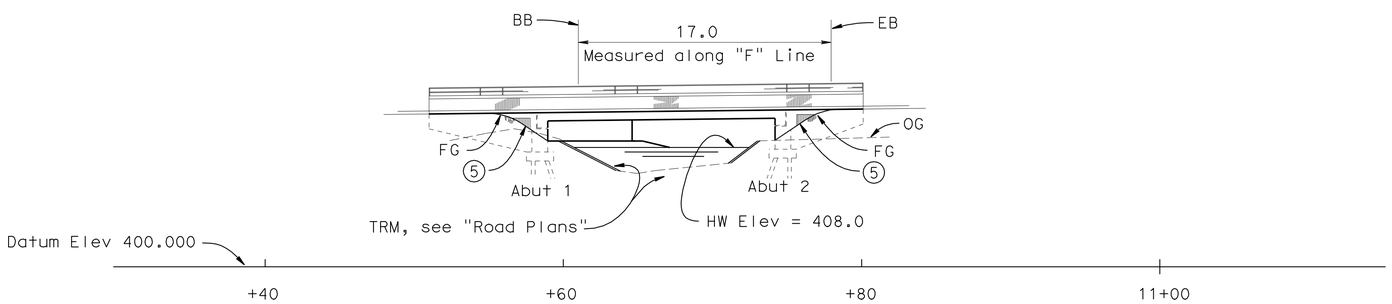

ELEVATION

1:200

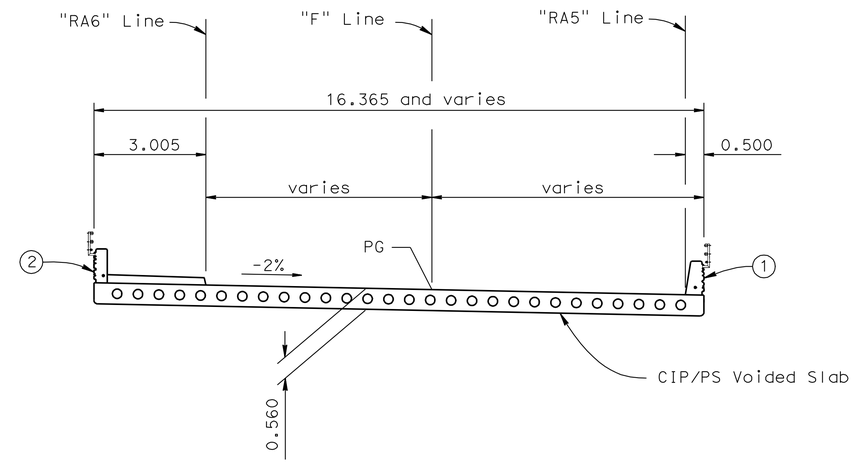

TYPICAL SECTION

1:80

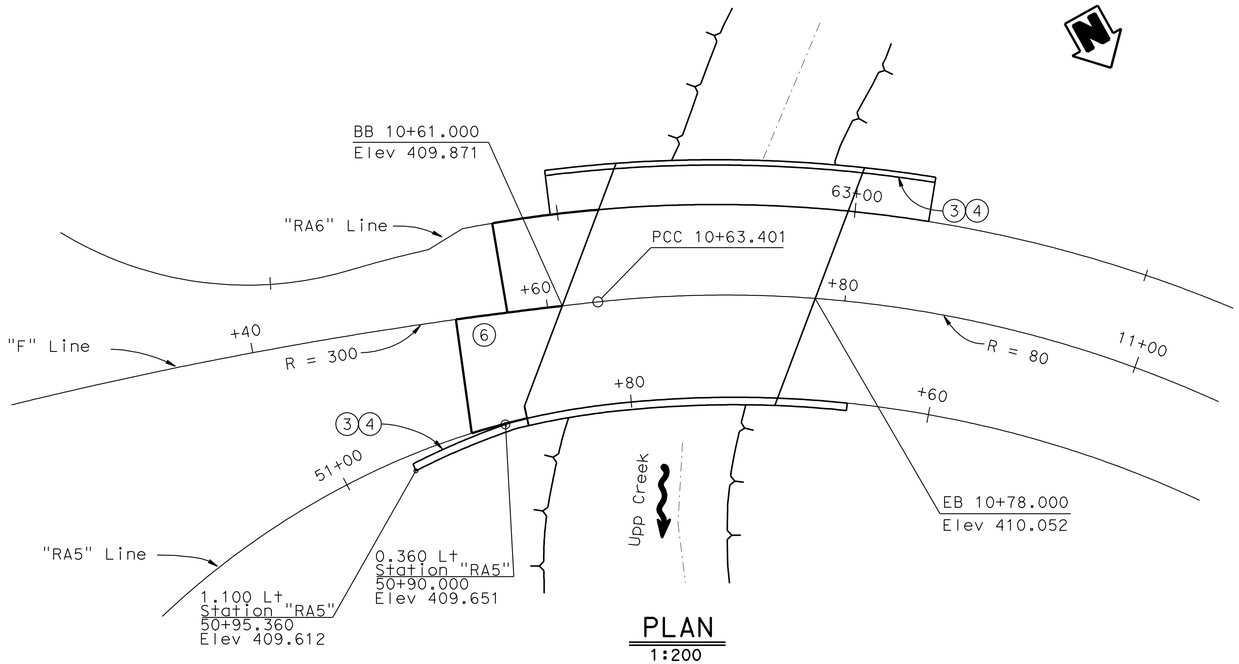

PLAN

1:200

CURVE DATA "RA6" LINE				
Station	R	Δ	T	L
62+73.557 to 62+82.188	85.100	05°48′40.2"	4.319	8.631
62+82.188 to 63+32.387	90.000	31°57′28.8"	25.771	50.200

CURVE DATA "F" LINE				
Station	R	Δ	T	L
10+00.000 to 10+63.401	300.000	12°06′31.3"	31.819	63.401
10+63.401 to 11+51.072	80.000	62°47′21.4"	48.822	87.670

CURVE DATA "RA5" LINE				
Station	R	Δ	T	L
50+00.000 to 50+81.582	74.000	63°09′59.7"	45.495	81.582
50+81.582 to 50+98.601	50.000	19°30′07.6"	8.593	17.019

UPP CREEK BRIDGE QUANTITIES 10-0305

STRUCTURE EXCAVATION (BRIDGE)	120	m^3
STRUCTURE BACKFILL (BRIDGE)	78	m^3
PERVIOUS BACKFILL MATERIAL	4	m^3
FURNISH STEEL PILING (HP 250 X 85)	321	m
DRIVE STEEL PILE (HP 250 X 85)	22	EA
PRESTRESSING CAST-IN-PLACE CONCRETE	LUMP SUM	
STRUCTURAL CONCRETE, BRIDGE FOOTING	42	m^3
STRUCTURAL CONCRETE, BRIDGE	205	m^3
STRUCTURAL CONCRETE, APPROACH SLAB TYPE EQ(3)	16	m^3
ARCHITECTURAL TEXTURE	5	m^2
JOINT SEAL (MR 13 MM)	36	m
BAR REINFORCING STEEL (BRIDGE)	25 150	kg
TUBULAR BICYCLE RAILING (MODIFIED)	54	m
CONCRETE BARRIER (TYPE 26 MODIFIED)	27	m
CONCRETE BARRIER (TYPE 736 MODIFIED)	27	m

Note: For General Notes, Index to Plans, Standard Plans and Pile data Table, see "Deck Contours" sheet.

Caltrans Metric

DESIGN ENGINEER

	BY	CHECKED			
DESIGN	T. Bui	G. Schuster	LOAD FACTOR DESIGN	LIVE LOADING: HS20-44 AND ALTERNATIVE AND PERMIT DESIGN LOAD	
DETAILS	J. Yang	G. Schuster	LAYOUT	T. Bui	G. Schuster
QUANTITIES	M. Jimenez	M. Schott	SPECIFICATIONS	I. Huang	PLANS AND SPECS COMPARED I. Huang

ALL DIMENSIONS ARE IN METERS UNLESS OTHERWISE SHOWN

ORIGINAL SCALE IN MILLIMETERS FOR REDUCED PLANS 0 10 20 30 40 50 60 70 80 90 100

STATE OF CALIFORNIA DEPARTMENT OF TRANSPORTATION

DIVISION OF ENGINEERING SERVICES STRUCTURE DESIGN

DESIGN BRANCH 2

CU 01
EA 262001

BRIDGE NO. 10-0305
KILOMETER POST R77.595

WILLITS BYPASS
UPP CREEK BRIDGE
GENERAL PLAN

DISREGARD PRINTS BEARING EARLIER REVISION DATES

REVISION DATES 11-24-08 12-05-08 12-22-08 01-13-09 1-28-09 4-06-09 4-30-09 5-14-09 12-21-09

SHEET 1 OF 13

FILE => 10-0305_magp01.dgn

STRUCTURES DESIGN GENERAL PLAN SHEET (METRIC) (REV.03-17-04)

USERNAME => s114926 DATE PLOTTED => 28-JAN-2012 TIME PLOTTED => 08:54

DIST	COUNTY	ROUTE	KILOMETER POST TOTAL PROJECT	SHEET No	TOTAL SHEETS
01	Men	101	R69.4/R78.9	913	939

REGISTERED CIVIL ENGINEER 9-15-11 DATE

1-23-12
PLANS APPROVAL DATE

REGISTERED PROFESSIONAL ENGINEER M. Friedheim No. 57968 Exp. 6-30-12 CIVIL STATE OF CALIFORNIA

The State of California or its officers or agents shall not be responsible for the accuracy or completeness of electronic copies of this plan sheet.

NOTES:

1. x = 2.5 m interval measured along station line
2. Contours do not include camber
3. Contour interval = 0.05 m

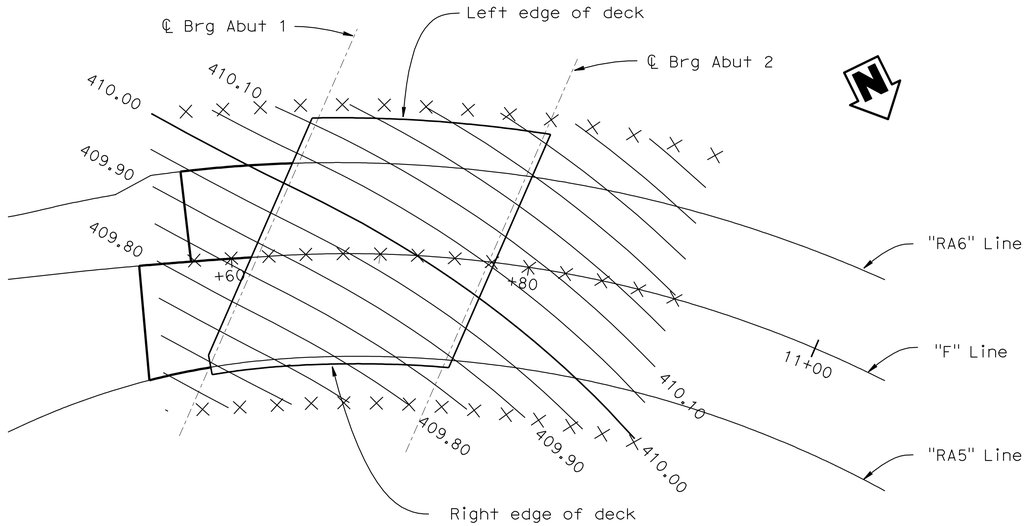

DECK CONTOURS

1:200

INDEX TO PLANS

1. GENERAL PLAN
2. DECK CONTOURS
3. FOUNDATION PLAN
4. ABUTMENT 1 LAYOUT
5. ABUTMENT 2 LAYOUT
6. ABUTMENT DETAILS NO. 1
7. ABUTMENT DETAILS NO. 2
8. TYPICAL SECTION
9. VOID LAYOUT
10 AESTHETIC DETAILS
11. TUBULAR BICYCLE RAILING
12. STRUCTURE APPROACH TYPE EQ(3)
13. LOG OF TEST BORING No. 1 of 1

STANDARD PLANS DATED JULY 2004

A10A	ACRONYMS AND ABBREVIATIONS (A-L)
A10B	ACRONYMS AND ABBREVIATIONS (M-Z)
A10C	SYMBOLS (SHEET 1 OF 2)
A10D	SYMBOLS (SHEET 2 OF 2)
A62C	LIMITS OF PAYMENT FOR EXCAVATION AND BACKFILL-BRIDGE
B0-1	BRIDGE DETAILS
B0-3	BRIDGE DETAILS
B0-5	BRIDGE DETAILS
B0-13	BRIDGE DETAILS
RSP B6-21	JOINT SEALS (MAXIMUM MOVEMENT RATING = 50 mm)
RSP B8-5	CAST-IN-PLACE PRESTRESSED GIRDER DETAILS
B11-54	CONCRETE BARRIER TYPE 26
B11-56	CONCRETE BARRIER TYPE 736
RSP ES-9B	ELECTRICAL SYSTEMS (ELECTRICAL DETAILS STRUCTURE INSTALLATIONS)
RSP ES-9C	ELECTRICAL SYSTEMS (ELECTRICAL DETAILS STRUCTURE INSTALLATIONS)

Standard Plan sheet number

Detail number

GENERAL NOTES (LOAD FACTOR DESIGN)

DESIGN: Bridge Design Specifications - April 2000 (LFD) (1996 AASHTO with interims and revisions by Caltrans).
Project Specific Design Criteria - March 2009.

SEISMIC DESIGN: Caltrans SDC Version 1.4 - June 2006

DEAD LOAD: Includes 1675 Pa for future wearing surface.
Includes 1460 N/m for future utilities.

LIVE LOAD: HS20-44 and alternative and permit design load.

SEISMIC LOADING: Modified Caltrans Seismic Design Criteria for Soil Profile Type D, PBA = 0.7 g. See Response Spectrum below.

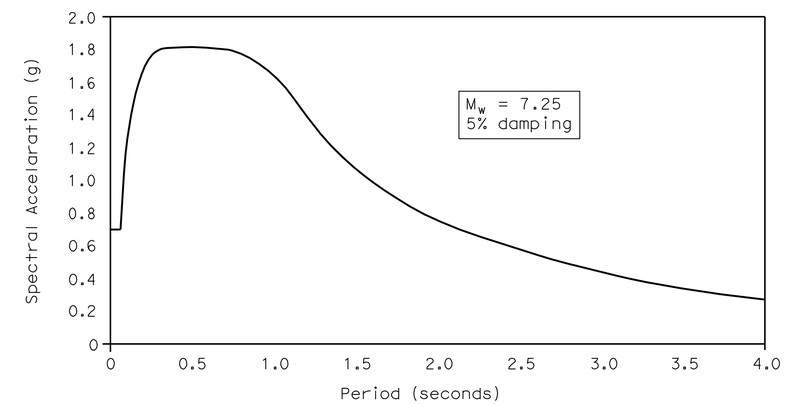

REINFORCED CONCRETE:
fy = 420 MPa
f'c = 25 MPa (See concrete strength and type limits for exceptions)

Transverse Deck Slab (working stress design)
fs = 140 MPa
f'c = 8 MPa
n = 10

PRESTRESSED CONCRETE: See Prestressing Notes on "Void Layout" sheet

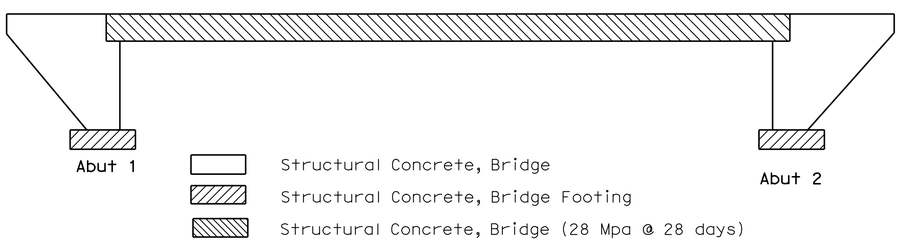

CONCRETE STRENGTH AND TYPE LIMITS

No Scale

PILE DATA TABLE

Location	Pile Type	Nominal Resistance Compression kN	Nominal Resistance Tension kN	Design Tip Elevations (m)	Specified Pile Tip Elevations (m)
Abut 1	HP 250 x 85	1250	0	393.0 (1)	393.0
Abut 2	HP 250 x 85	1250	0	393.0 (1)	393.0

Note: Design Pile Tip Elevation is controlled by the following demands:
(1) Compression (2) Scour potential exists to Elevation 405.6 m

Caltrans Metric

ALL DIMENSIONS ARE IN METERS UNLESS OTHERWISE SHOWN

ORIGINAL SCALE IN MILLIMETERS FOR REDUCED PLANS 0 10 20 30 40 50 60 70 80 90 100

	BY	CHECKED
DESIGN	T. Bui	G. Schuster
DETAILS	J. Yang	G. Schuster
QUANTITIES	M. Jimenez	M. Schott

STATE OF CALIFORNIA
DEPARTMENT OF TRANSPORTATION

DIVISION OF ENGINEERING SERVICES
STRUCTURE DESIGN
DESIGN BRANCH 2

CU 01
EA 262001

BRIDGE NO. 10-0305
KILOMETER POST R77.595

WILLITS BYPASS
UPP CREEK BRIDGE
DECK CONTOURS

DISREGARD PRINTS BEARING EARLIER REVISION DATES

REVISION DATES: 11-25-08 01-15-09 1-20-09 2-13-09 3-13-09 5-14-09 7-14-09 12-21-09

SHEET 2 OF 13

STRUCTURES DESIGN DETAIL SHEET (METRIC) (REV.03-17-04)

FILE => 10-0305_mddc01.dgn

USERNAME => s114326 DATE PLOTTED => 28-JAN-2012 TIME PLOTTED => 08:54

DIST	COUNTY	ROUTE	KILOMETER POST TOTAL PROJECT	SHEET No	TOTAL SHEETS
01	Men	101	R69.4/R78.9	914	939

Caltrans Metric

REGISTERED CIVIL ENGINEER 9-15-11 DATE

1-23-12
PLANS APPROVAL DATE

REGISTERED PROFESSIONAL ENGINEER M. Friedheim No. 57968 Exp. 06-30-12 CIVIL STATE OF CALIFORNIA

The State of California or its officers or agents shall not be responsible for the accuracy or completeness of electronic copies of this plan sheet.

CURVE DATA

No.	R	Δ	T	L
A	300.000	12°06'31"	31.819	63.401
B	80.000	62°47'21"	48.822	87.670

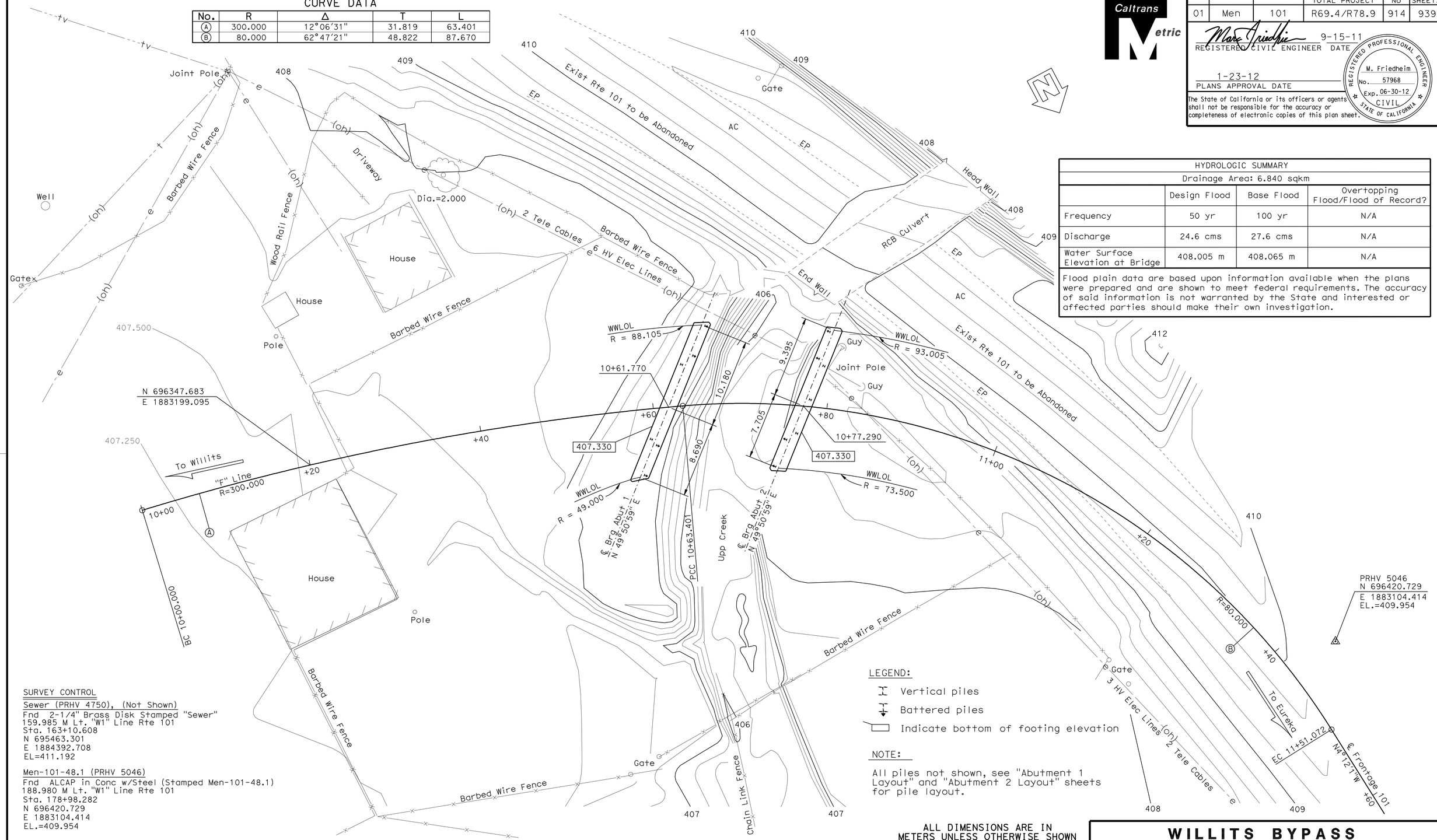

HYDROLOGIC SUMMARY

Drainage Area: 6.840 sqkm

	Design Flood	Base Flood	Overtopping Flood/Flood of Record?
Frequency	50 yr	100 yr	N/A
Discharge	24.6 cms	27.6 cms	N/A
Water Surface Elevation at Bridge	408.005 m	408.065 m	N/A

Flood plain data are based upon information available when the plans were prepared and are shown to meet federal requirements. The accuracy of said information is not warranted by the State and interested or affected parties should make their own investigation.

SURVEY CONTROL

Sewer (PRHV 4750), (Not Shown)
Fnd 2-1/4" Brass Disk Stamped "Sewer"
159.985 M Lt. "W1" Line Rte 101
Sta. 163+10.608
N 695463.301
E 1884392.708
EL=411.192

Men-101-48.1 (PRHV 5046)
Fnd ALCAP in Conc w/Steel (Stamped Men-101-48.1)
188.980 M Lt. "W1" Line Rte 101
Sta. 178+98.282
N 696420.729
E 1883104.414
EL.=409.954

LEGEND:

- Vertical piles
- Battered piles
- Indicate bottom of footing elevation

NOTE:

All piles not shown, see "Abutment 1 Layout" and "Abutment 2 Layout" sheets for pile layout.

ALL DIMENSIONS ARE IN METERS UNLESS OTHERWISE SHOWN

WILLITS BYPASS
UPP CREEK BRIDGE
FOUNDATION PLAN

PRELIMINARY INVESTIGATION SECTION

SCALE 1=200	VERT. DATUM NGVD29	PHOTOGRAMMETRY AS OF:		
	HORZ. DATUM NAD83 (1991.35)	SURVEYED	BY Tom Gillett 01/2009	CHECKED BY Jimmy Pallares 01/09
ALIGNMENT TIES Dist. Traverse Sheet		DRAFTED	BY Sharon Zheng 01/2009	CHECKED BY T. Zolnikova 01/09

	BY	CHECKED
DESIGN	T. Bui	G. Schuster
DETAILS	J. Yang	G. Schuster
QUANTITIES	M. Jimenez	M. Schott

STATE OF CALIFORNIA
DEPARTMENT OF TRANSPORTATION

DIVISION OF ENGINEERING SERVICES
STRUCTURE DESIGN
DESIGN BRANCH 2

BRIDGE NO. 10-0305
KILOMETER POST R77.595

CU 01
EA 262001

DISREGARD PRINTS BEARING EARLIER REVISION DATES

REVISION DATES (PRELIMINARY STAGE ONLY): 02/06/09 02/11/09 03/04/09 04/08/09 05/05/09 05/19/09 12-21-09

SHEET 3 OF 13

STRUCTURES FOUNDATION PLAN SHEET (METRIC) (REV.10-27-05)

ORIGINAL SCALE IN MILLIMETERS FOR REDUCED PLANS 0 10 20 30 40 50 60 70 80 90 100

FILE => 10-0305_mefdp101.dgn

USERNAME => s14926 DATE PLOTTED => 28-JAN-2012 TIME PLOTTED => 08:55

DIST	COUNTY	ROUTE	KILOMETER POST TOTAL PROJECT	SHEET No	TOTAL SHEETS
01	Men	101	R69.4/R78.9	915	939

REGISTERED CIVIL ENGINEER 9-15-11 DATE

1-23-12
PLANS APPROVAL DATE

REGISTERED PROFESSIONAL ENGINEER M. Friedheim No. 57968 Exp. 6-30-12 CIVIL STATE OF CALIFORNIA

The State of California or its officers or agents shall not be responsible for the accuracy or completeness of electronic copies of this plan sheet.

NOTES:

1. For Views B-B and C-C, see "Abutment Details No. 1" sheet
2. For Bearing Pad, Backwall Base Detail, and Steel HP Pile Detail, see "Abutment Details No. 2" sheet

LEGEND:

Denotes Vertical Pile

Denotes Battered Pile

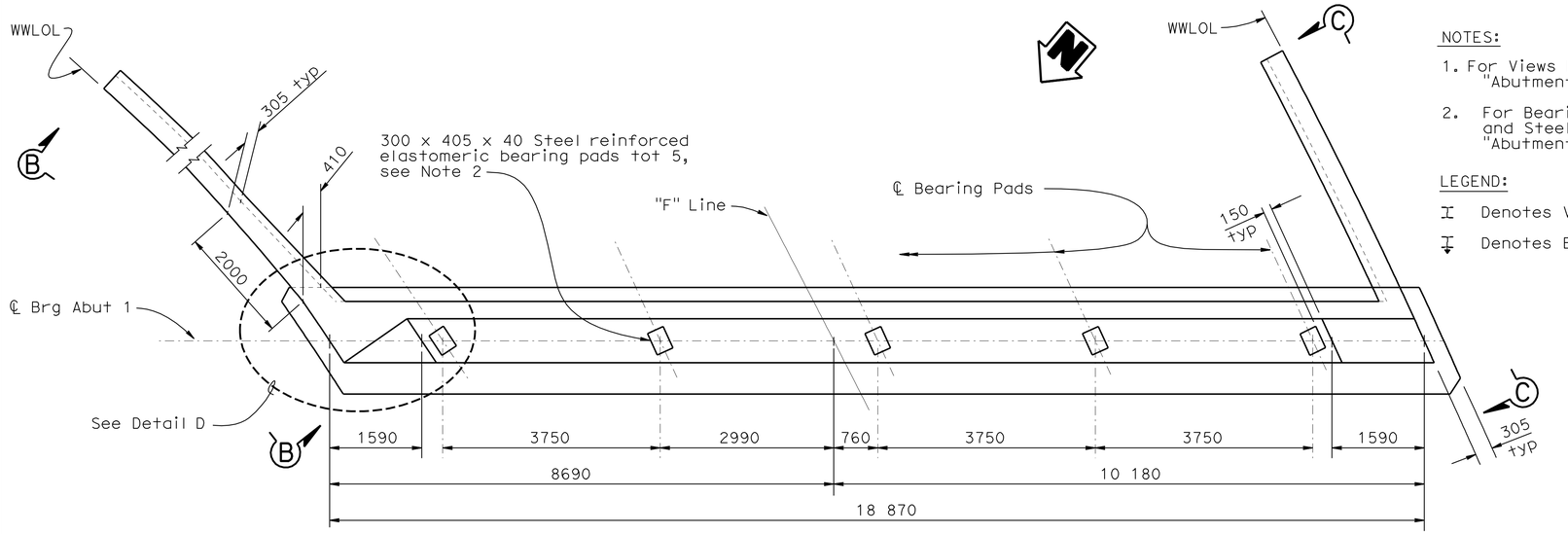

PLAN
1:50

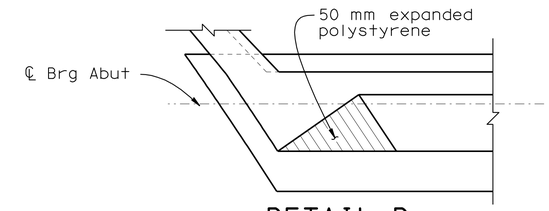

DETAIL D
1:40

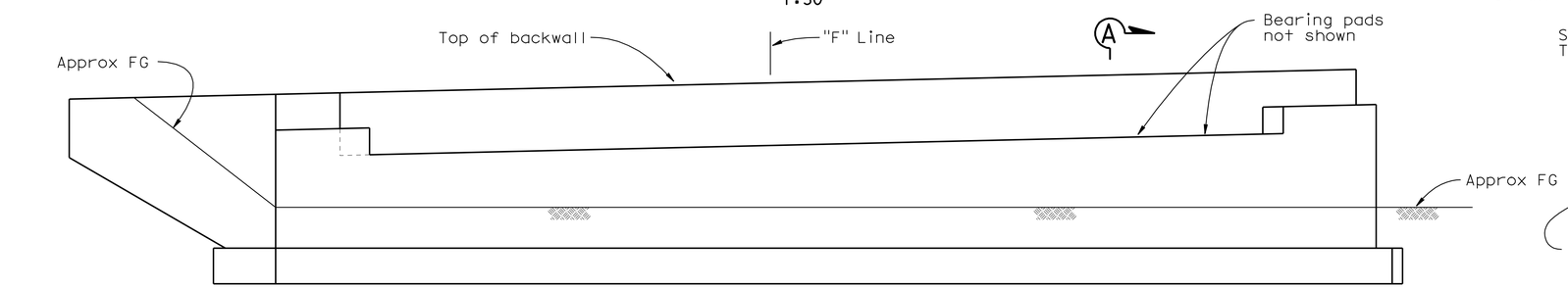

ELEVATION
1:50

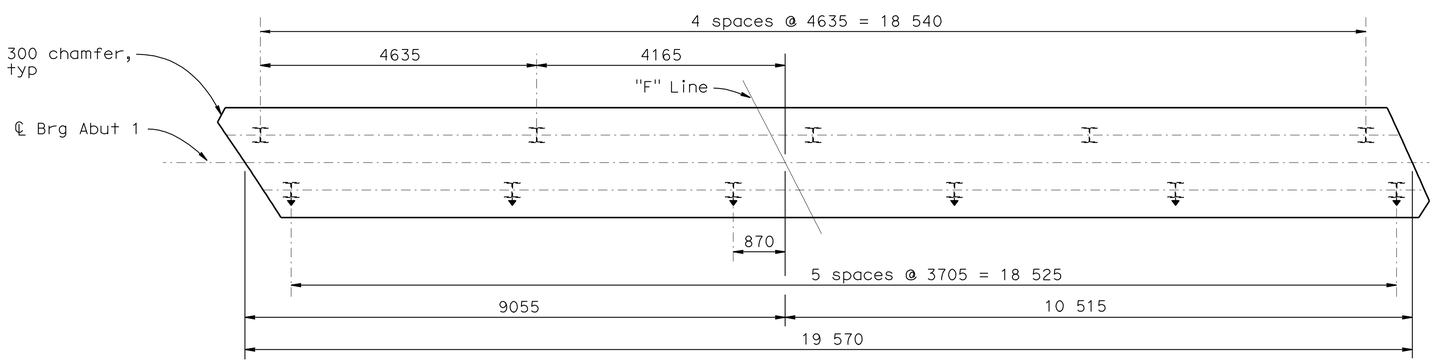

PILE LAYOUT
1:50

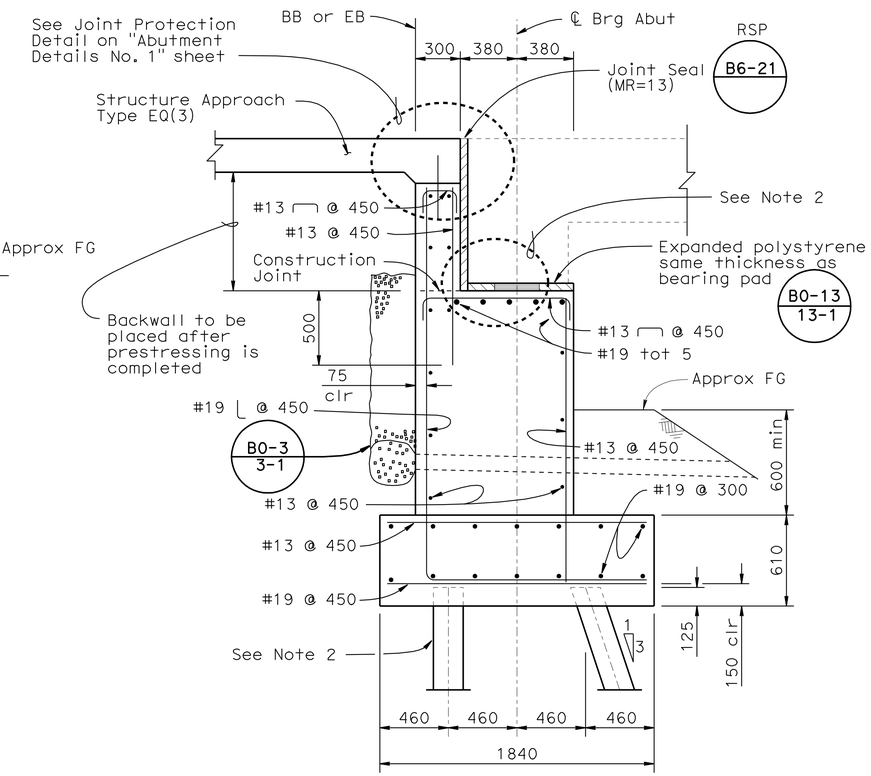

SECTION A-A
1:20

DESIGN	BY T. Bui	CHECKED G. Schuster	
DETAILS	BY J. Yang	CHECKED G. Schuster	
QUANTITIES	BY M. Jimenez	CHECKED M. Schott	

STATE OF CALIFORNIA
DEPARTMENT OF TRANSPORTATION

DIVISION OF ENGINEERING SERVICES
STRUCTURE DESIGN
DESIGN BRANCH 2

BRIDGE NO. 10-0305
KILOMETER POST R77.595

WILLITS BYPASS
UPP CREEK BRIDGE
ABUTMENT 1 LAYOUT

ALL DIMENSIONS ARE IN MILLIMETERS UNLESS OTHERWISE SHOWN

ORIGINAL SCALE IN MILLIMETERS FOR REDUCED PLANS 0 10 20 30 40 50 60 70 80 90 100

CU 01
EA 262001

DISREGARD PRINTS BEARING EARLIER REVISION DATES

REVISION DATES: 12-02-08 12-15-08 01-15-09 1-29-09 3-04-09 4-06-09 5-05-09 5-14-09 12-21-09

SHEET 4 OF 13

FILE => 10-0305_mfaa1o01.dgn

STRUCTURES DESIGN DETAIL SHEET (METRIC) (REV.03-17-04)

USERNAME => s114926 DATE PLOTTED => 28-JAN-2012 TIME PLOTTED => 08:55

DIST	COUNTY	ROUTE	KILOMETER POST TOTAL PROJECT	SHEET No	TOTAL SHEETS
01	Men	101	R69.4/R78.9	916	939

REGISTERED CIVIL ENGINEER 9-15-11 DATE

1-23-12
PLANS APPROVAL DATE

REGISTERED PROFESSIONAL ENGINEER M. Friedheim No. 57968 Exp. 6-30-12 CIVIL STATE OF CALIFORNIA

The State of California or its officers or agents shall not be responsible for the accuracy or completeness of electronic copies of this plan sheet.

NOTES:

1. For Views B-B and C-C, see "Abutment Details No. 1" sheet
2. For Bearing Pad, Backwall Base Detail, and Steel HP Pile Detail, see "Abutment Details No. 2" sheet.

LEGEND:

Denotes Vertical Pile

Denotes Battered Pile

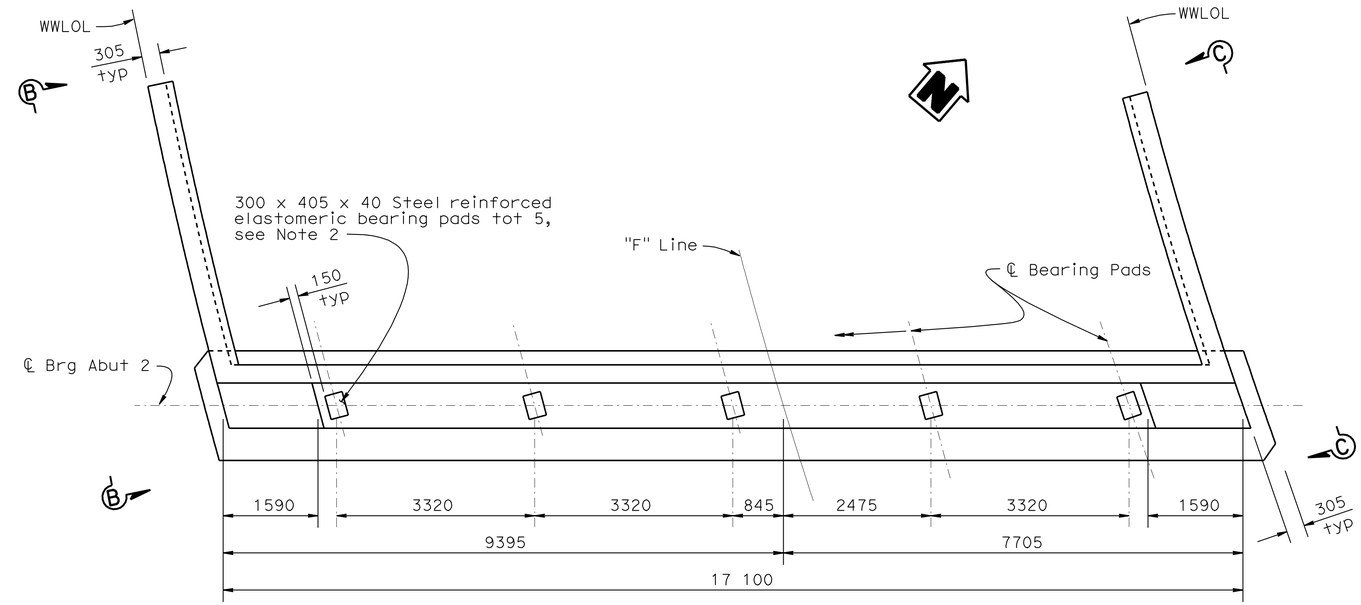

PLAN
1:50

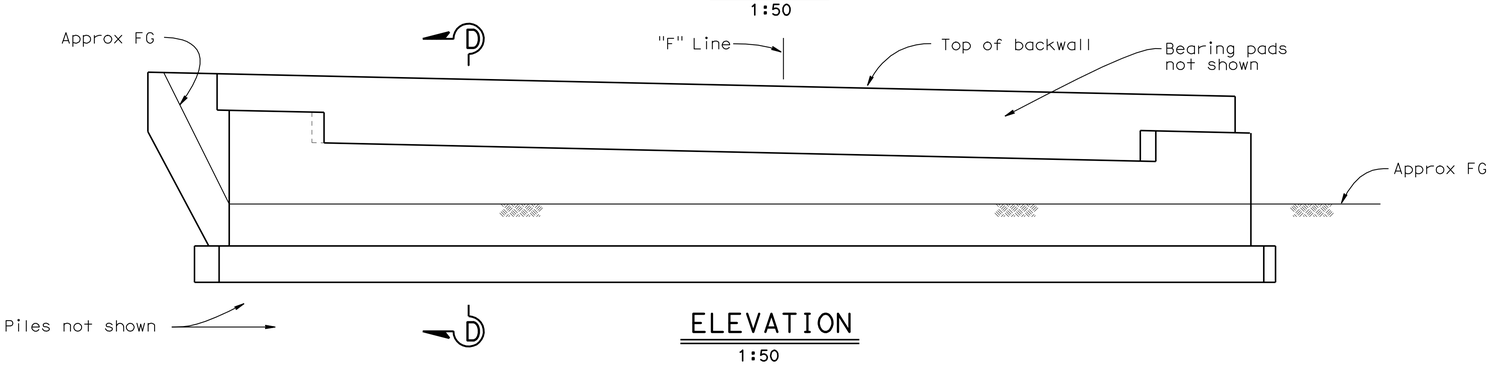

ELEVATION
1:50

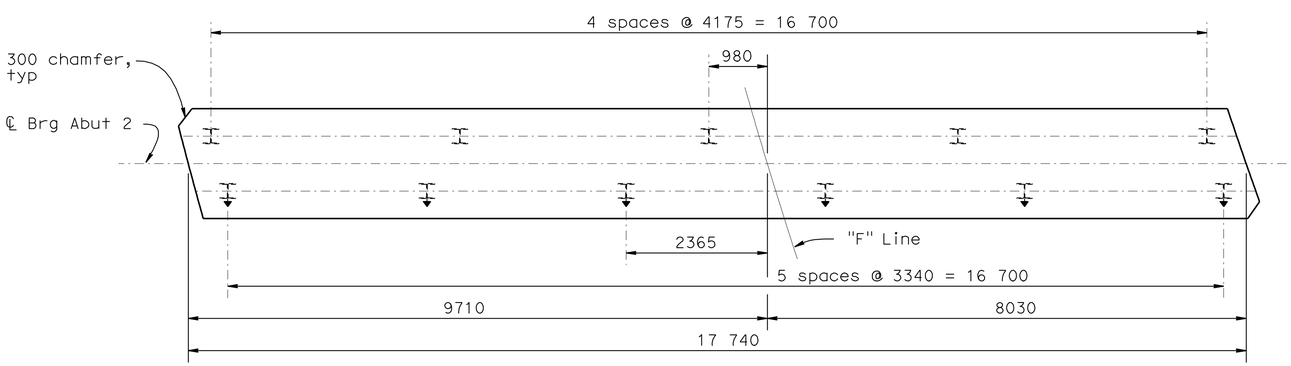

PILE LAYOUT
1:50

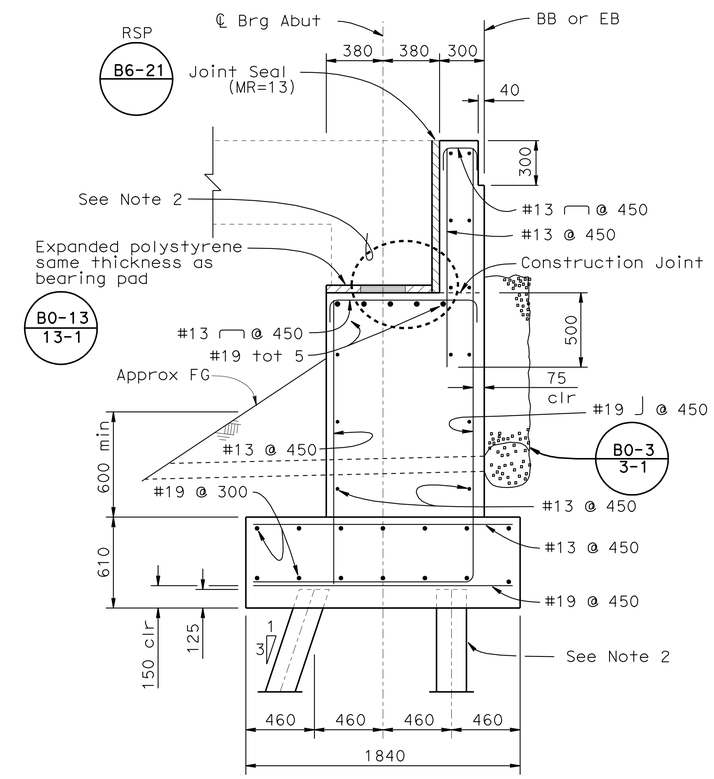

SECTION D-D
1:20

DESIGN	BY T. Bui	CHECKED G. Schuster	
DETAILS	BY J. Yang	CHECKED G. Schuster	
QUANTITIES	BY M. Jimenez	CHECKED M. Schott	

STATE OF CALIFORNIA
DEPARTMENT OF TRANSPORTATION

DIVISION OF ENGINEERING SERVICES
STRUCTURE DESIGN
DESIGN BRANCH 2

BRIDGE NO. 10-0305
KILOMETER POST R77.595

WILLITS BYPASS
UPP CREEK BRIDGE
ABUTMENT 2 LAYOUT

ALL DIMENSIONS ARE IN MILLIMETERS UNLESS OTHERWISE SHOWN

ORIGINAL SCALE IN MILLIMETERS FOR REDUCED PLANS 0 10 20 30 40 50 60 70 80 90 100

CU 01
EA 262001

DISREGARD PRINTS BEARING EARLIER REVISION DATES

REVISION DATES: 01-15-09 1-28-09 3-05-09 5-05-09 5-14-09 12-21-09

SHEET 5 OF 13

FILE => 10-0305_mfaa1o02.dgn

STRUCTURES DESIGN DETAIL SHEET (METRIC) (REV.03-17-04)

USERNAME => s114926 DATE PLOTTED => 28-JAN-2012 TIME PLOTTED => 08:55

DIST	COUNTY	ROUTE	KILOMETER POST TOTAL PROJECT	SHEET No	TOTAL SHEETS
01	Men	101	R69.4/R78.9	917	939

REGISTERED CIVIL ENGINEER 9-15-11 DATE

1-23-12
PLANS APPROVAL DATE

REGISTERED PROFESSIONAL ENGINEER M. Friedheim No. 57968 Exp. 6-30-12 CIVIL STATE OF CALIFORNIA

The State of California or its officers or agents shall not be responsible for the accuracy or completeness of electronic copies of this plan sheet.

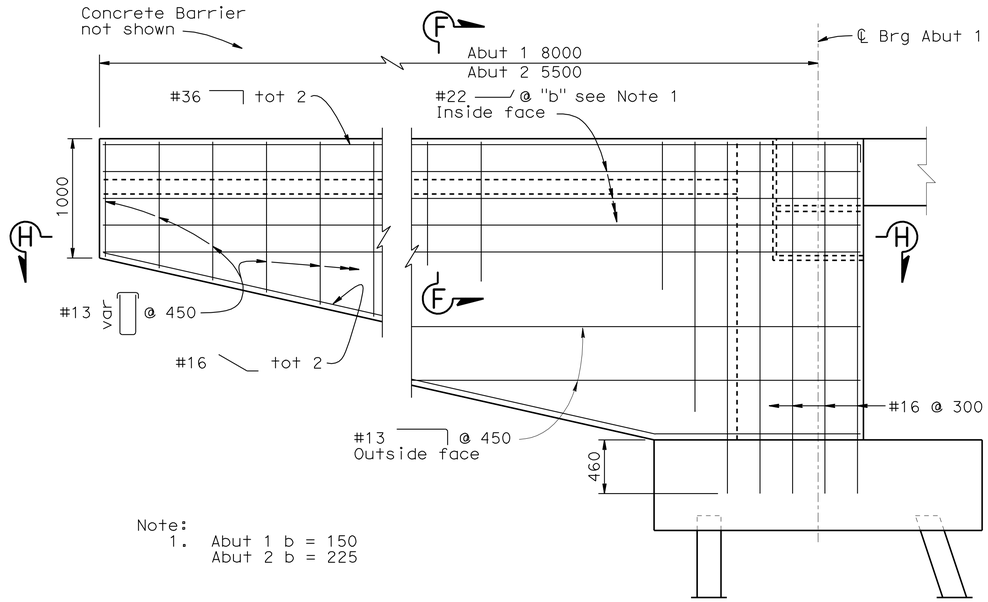

VIEW B-B (WINGWALL ELEVATION)

1:25

Abutment 1 shown

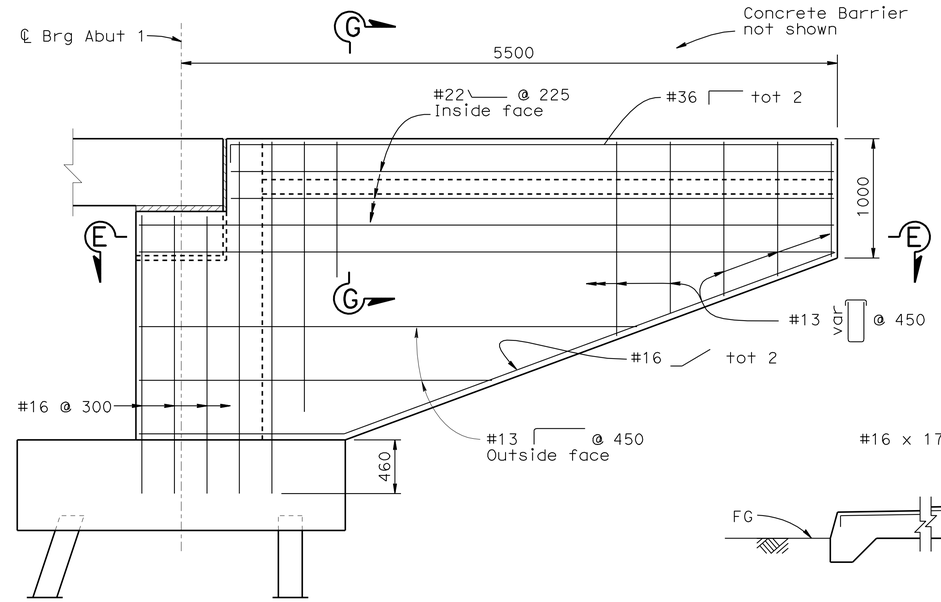

VIEW C-C (WINGWALL ELEVATION)

1:25

Abutment 1 shown, Abutment 2 similar

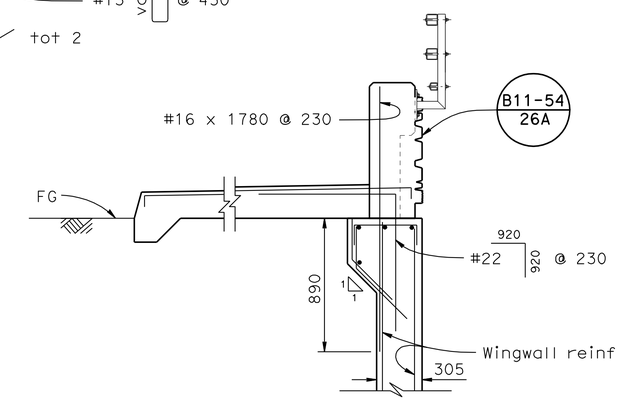

SECTION G-G

1:20

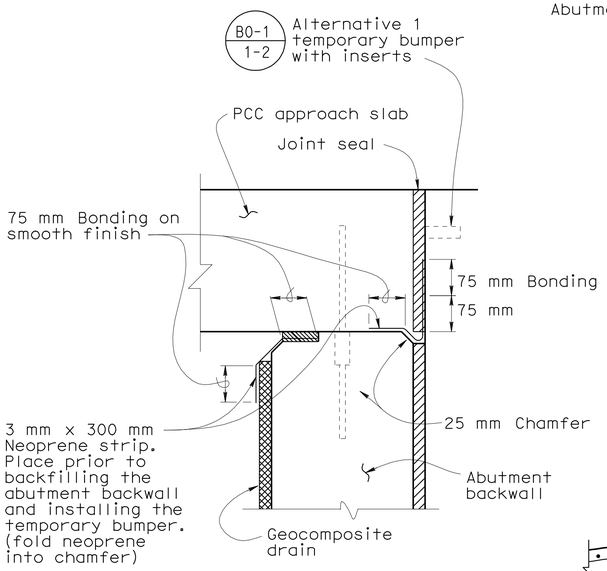

JOINT PROTECTION DETAIL

No Scale

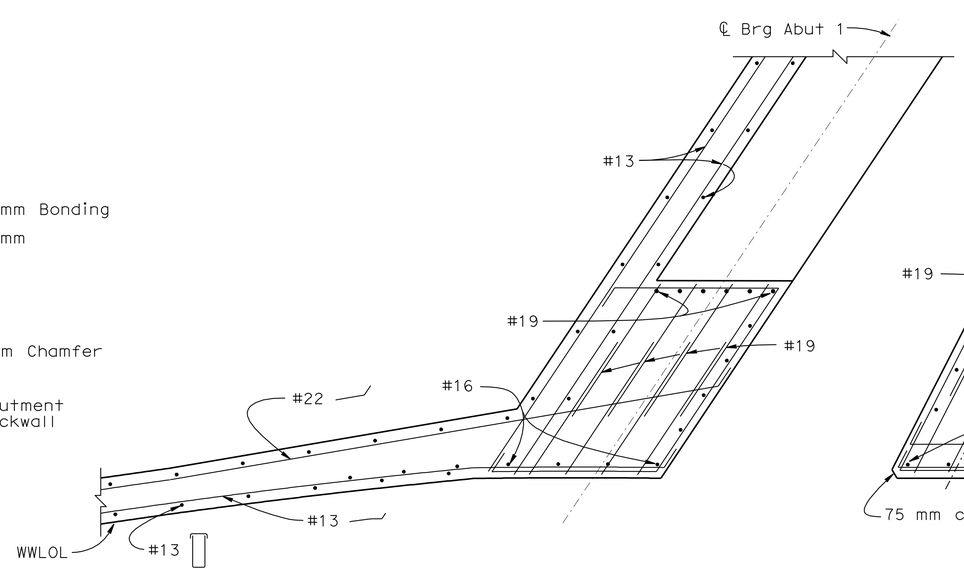

SECTION H-H

1:20

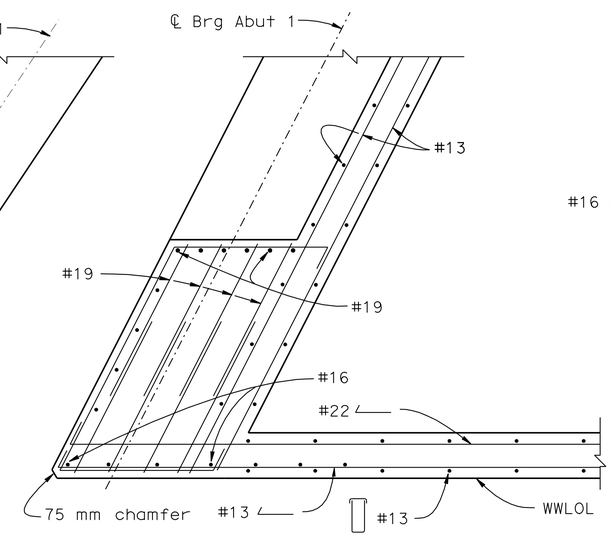

SECTION E-E

1:20

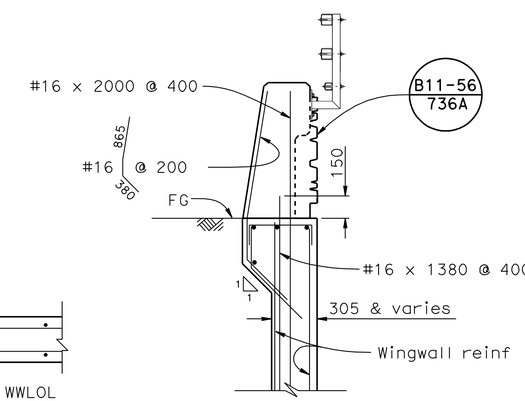

SECTION F-F

1:20

DESIGN	BY T. Bui	CHECKED G. Schuster	
DETAILS	BY J. Yang	CHECKED G. Schuster	
QUANTITIES	BY M. Jimenez	CHECKED M. Schott	

STATE OF CALIFORNIA
DEPARTMENT OF TRANSPORTATION

DIVISION OF ENGINEERING SERVICES
STRUCTURE DESIGN
DESIGN BRANCH 2

BRIDGE NO. 10-0305
KILOMETER POST R77.595

WILLITS BYPASS
UPP CREEK BRIDGE
ABUTMENT DETAILS NO. 1

ALL DIMENSIONS ARE IN MILLIMETERS UNLESS OTHERWISE SHOWN

ORIGINAL SCALE IN MILLIMETERS FOR REDUCED PLANS 0 10 20 30 40 50 60 70 80 90 100

CU 01
EA 262001

DISREGARD PRINTS BEARING EARLIER REVISION DATES

REVISION DATES: 12-03-08 12-15-08 01-06-09 1-20-09 3-11-09 4-06-09 5-05-09 5-14-09 12-21-09

SHEET 6 OF 13

FILE => 10-0305_mfadt01.dgn

STRUCTURES DESIGN DETAIL SHEET (METRIC) (REV.03-17-04)

USERNAME => s114926 DATE PLOTTED => 28-JAN-2012 TIME PLOTTED => 08:55

DIST	COUNTY	ROUTE	KILOMETER POST TOTAL PROJECT	SHEET No	TOTAL SHEETS
01	Men	101	R69.4/R78.9	918	939

REGISTERED CIVIL ENGINEER 9-15-11 DATE

1-23-12
PLANS APPROVAL DATE

REGISTERED PROFESSIONAL ENGINEER M. Friedheim No. 57968 Exp. 6-30-12 CIVIL STATE OF CALIFORNIA

The State of California or its officers or agents shall not be responsible for the accuracy or completeness of electronic copies of this plan sheet.

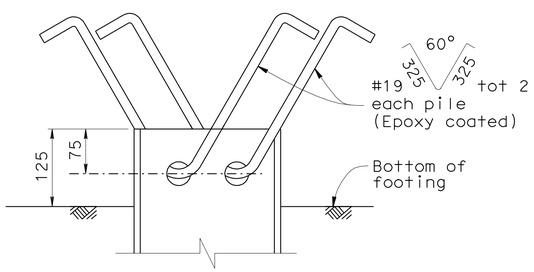

ELEVATION

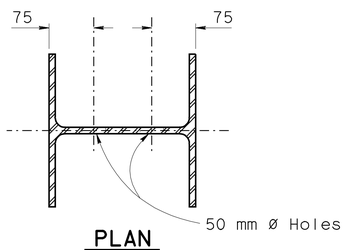

PLAN

STEEL PILE ANCHOR DETAIL

No Scale

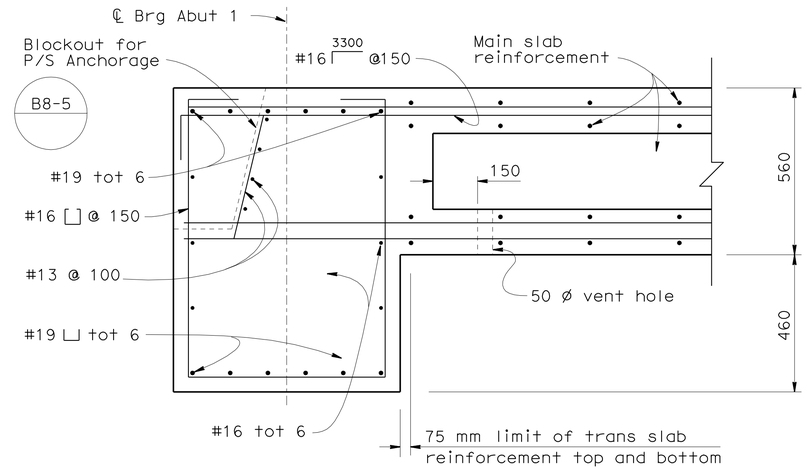

END DIAPHRAGM

1:10

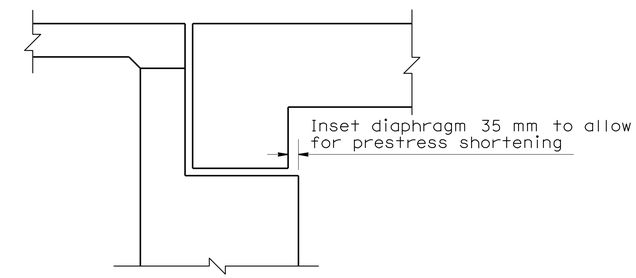

DIAPHRAGM OFFSET

No Scale

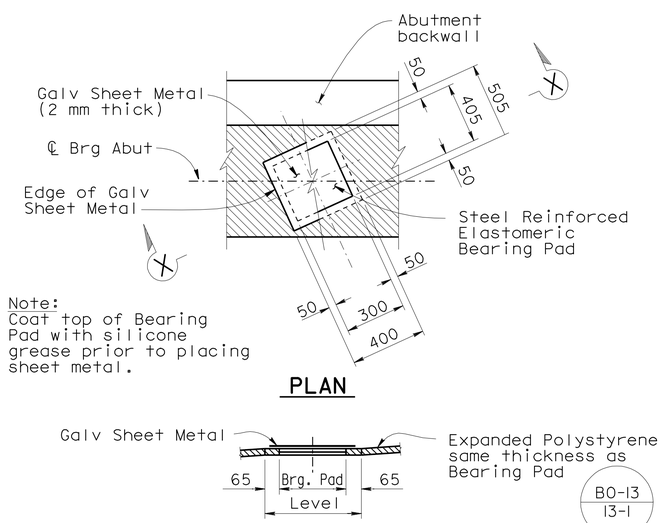

PLAN

SECTION X-X
BEARING PAD DETAIL

No Scale

Details typical at all bearing pads

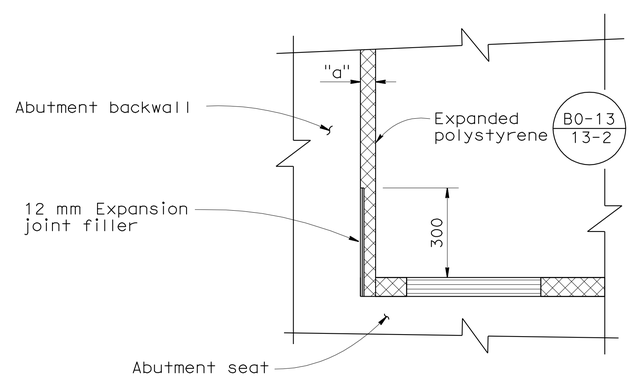

BACKWALL BASE DETAIL

NO SCALE

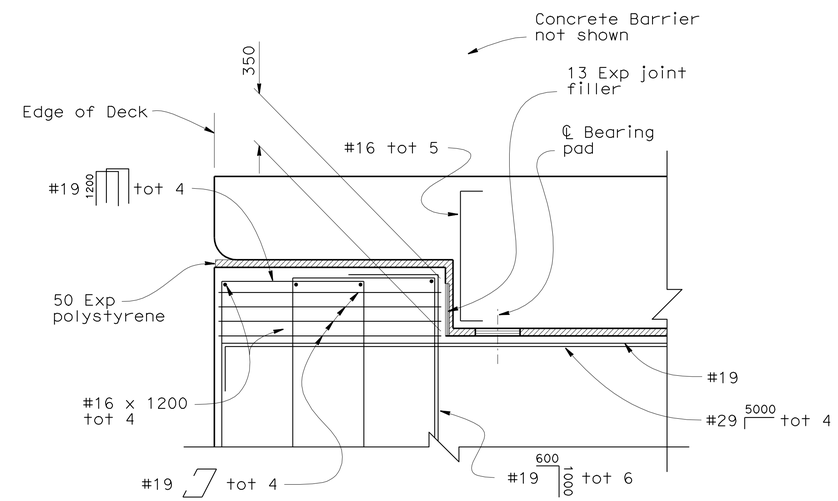

EXTERIOR SHEAR KEY

1:20

DESIGN	BY T. Bui	CHECKED G. Schuster	
DETAILS	BY J. Yang	CHECKED G. Schuster	
QUANTITIES	BY M. Jimenez	CHECKED M. Schott	

STATE OF CALIFORNIA
DEPARTMENT OF TRANSPORTATION

DIVISION OF ENGINEERING SERVICES
STRUCTURE DESIGN
DESIGN BRANCH 2

BRIDGE NO. 10-0305
KILOMETER POST R77.595

WILLITS BYPASS
UPP CREEK BRIDGE
ABUTMENT DETAILS NO. 2

ALL DIMENSIONS ARE IN MILLIMETERS UNLESS OTHERWISE SHOWN

ORIGINAL SCALE IN MILLIMETERS FOR REDUCED PLANS 0 10 20 30 40 50 60 70 80 90 100

CU 01
EA 262001

DISREGARD PRINTS BEARING EARLIER REVISION DATES

REVISION DATES: 1-26-09 3-11-09 5-14-09 12-21-09

SHEET 7 OF 13

FILE => 10-0305_mfadt02.dgn

STRUCTURES DESIGN DETAIL SHEET (METRIC) (REV.03-17-04)

USERNAME => s114926 DATE PLOTTED => 28-JAN-2012 TIME PLOTTED => 08:55

DIST	COUNTY	ROUTE	KILOMETER POST TOTAL PROJECT	SHEET No	TOTAL SHEETS
01	Men	101	R69.4/R78.9	919	939

REGISTERED CIVIL ENGINEER 9-15-11 DATE

1-23-12
PLANS APPROVAL DATE

REGISTERED PROFESSIONAL ENGINEER M. Friedheim No. 57968 Exp. 6-30-12 CIVIL STATE OF CALIFORNIA

The State of California or its officers or agents shall not be responsible for the accuracy or completeness of electronic copies of this plan sheet.

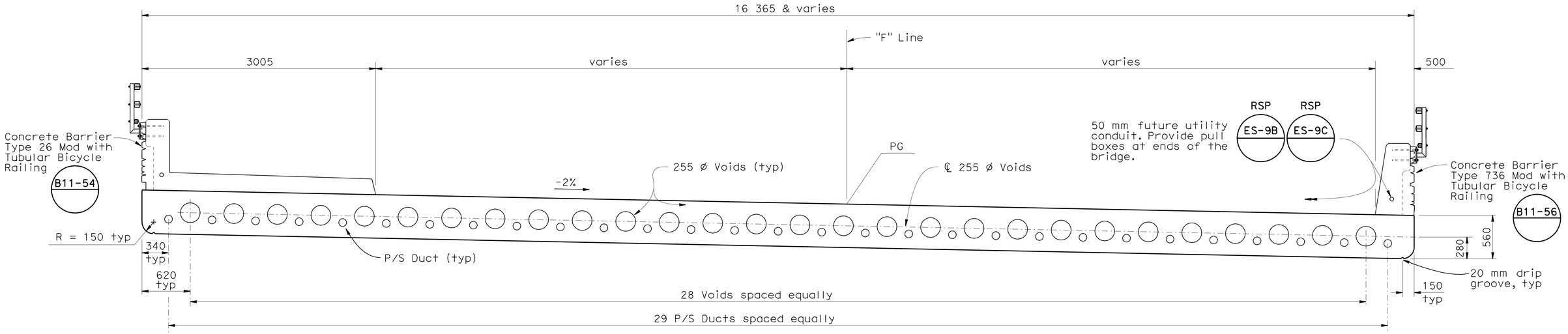

TYPICAL SECTION

1:25

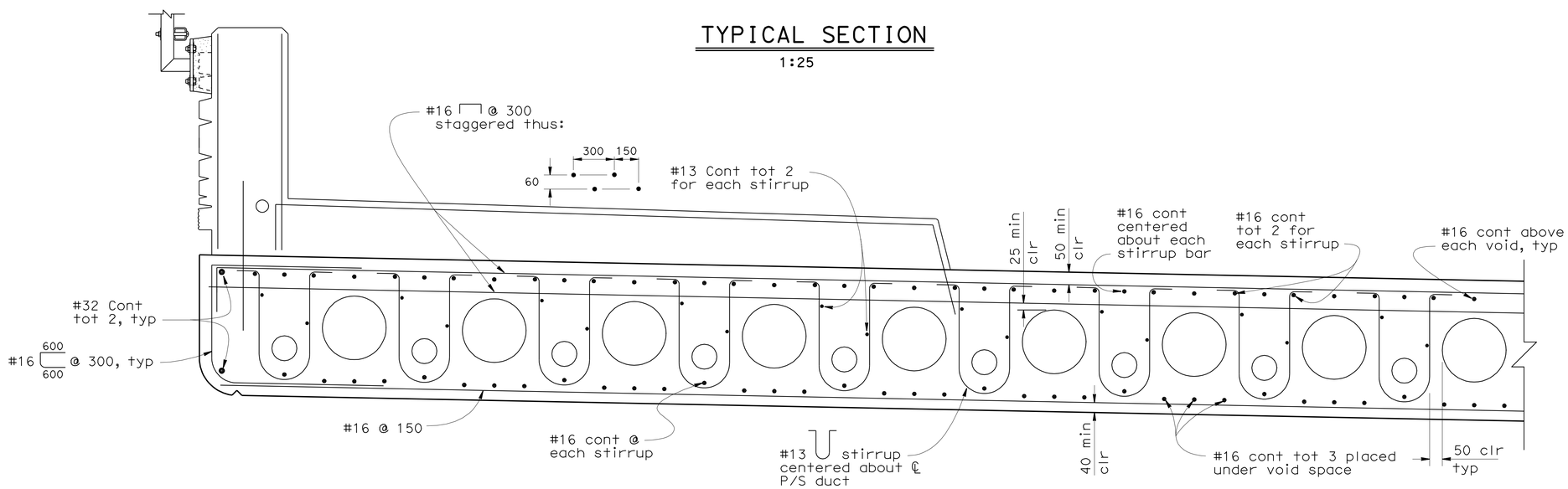

PART TYPICAL SECTION

B8-5

1:10

DESIGN	BY T. Bui	CHECKED G. Schuster	
DETAILS	BY J. Yang	CHECKED G. Schuster	
QUANTITIES	BY M. Jimenez	CHECKED M. Schott	

STATE OF CALIFORNIA
DEPARTMENT OF TRANSPORTATION

DIVISION OF ENGINEERING SERVICES
STRUCTURE DESIGN
DESIGN BRANCH 2

BRIDGE NO. 10-0305
KILOMETER POST R77.595

WILLITS BYPASS
UPP CREEK BRIDGE
TYPICAL SECTION

Caltrans Metric

ALL DIMENSIONS ARE IN MILLIMETERS UNLESS OTHERWISE SHOWN

ORIGINAL SCALE IN MILLIMETERS FOR REDUCED PLANS 0 10 20 30 40 50 60 70 80 90 100

CU 01
EA 262001

DISREGARD PRINTS BEARING EARLIER REVISION DATES

REVISION DATES: 11-19-08, 3-06-09, 4-08-09, 5-14-09, 12-21-09

SHEET 8 OF 13

FILE => 10-0305_mktsd01.dgn

STRUCTURES DESIGN DETAIL SHEET (METRIC) (REV.03-17-04)

USERNAME => s114926 DATE PLOTTED => 28-JAN-2012 TIME PLOTTED => 08:56

DIST	COUNTY	ROUTE	KILOMETER POST TOTAL PROJECT	SHEET No	TOTAL SHEETS
01	Men	101	R69.4/R78.9	920	939

REGISTERED CIVIL ENGINEER 9-15-11 DATE

1-23-12
PLANS APPROVAL DATE

REGISTERED PROFESSIONAL ENGINEER M. Friedheim No. 57968 Exp. 6-30-12 CIVIL STATE OF CALIFORNIA

The State of California or its officers or agents shall not be responsible for the accuracy or completeness of electronic copies of this plan sheet.

NOTES:

1. Extend alternate top bars 450 mm into diaphragm. Stop remaining transverse reinforcement 75 mm from face of diaphragm
2. For reinforcement information, see "Typical Section" sheet

⊠ Indicates point of no movement

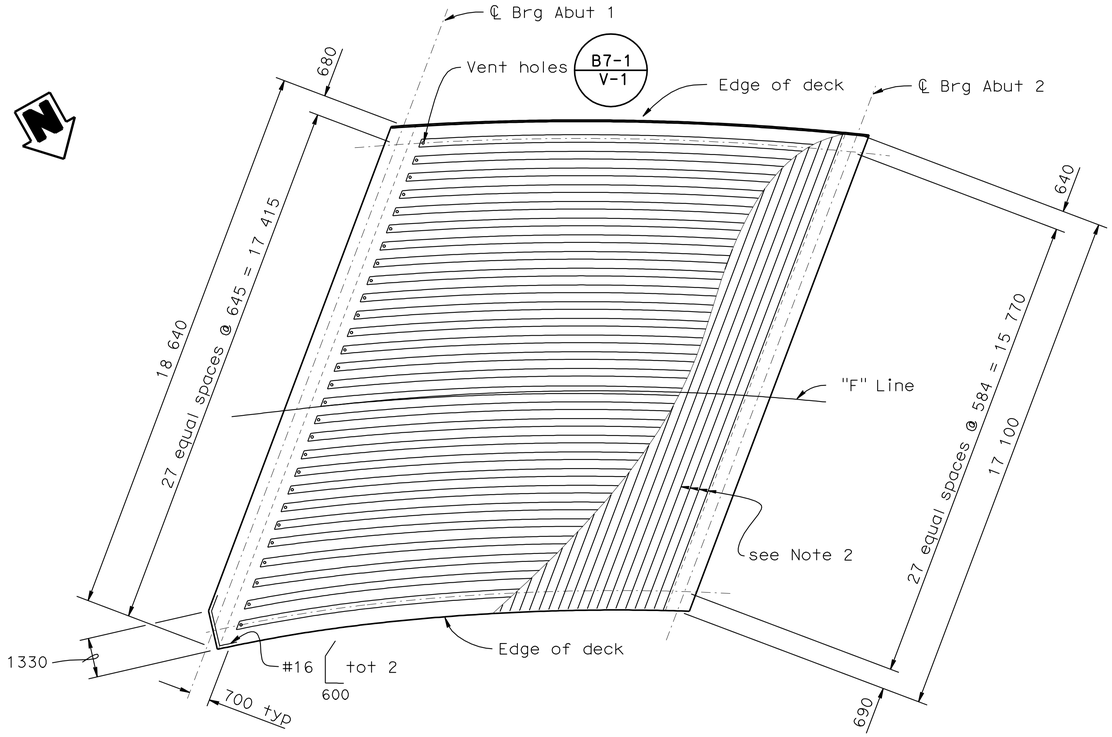

VOID LAYOUT

1:100

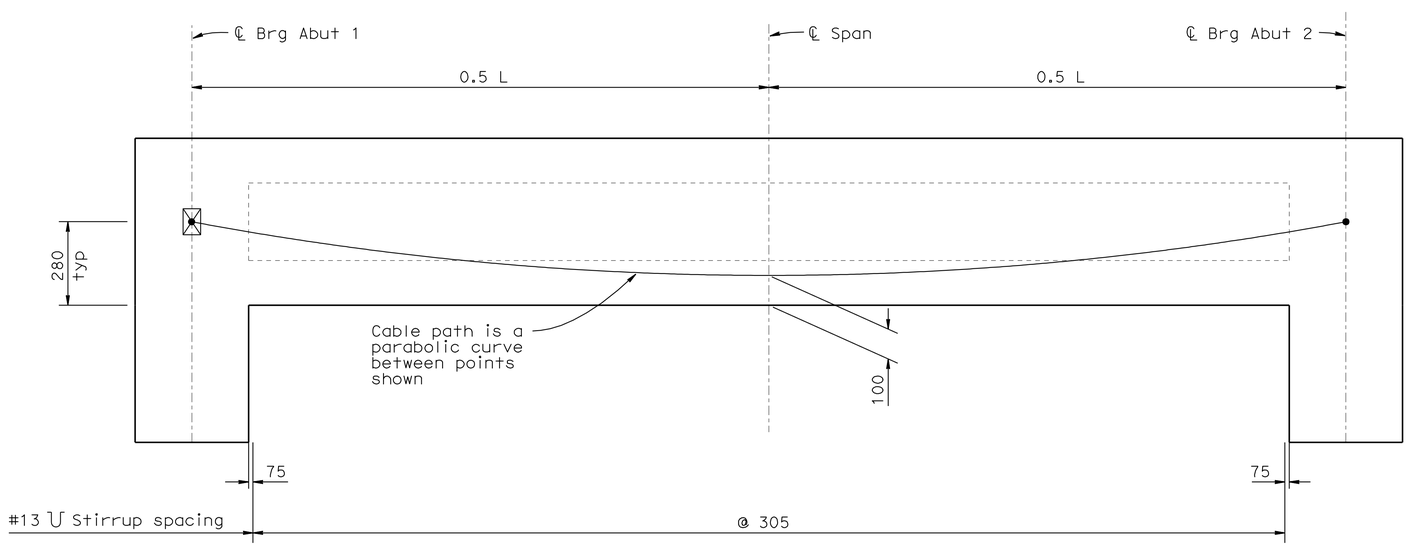

LONGITUDINAL SECTION

No Scale

PRESTRESSING NOTES

Design based on 1860 MPa Low Relaxation Strand:

P_{jack} = 52 400 kN

Anchor Set = 10 mm

Total Number of Ducts = 29

Concrete: f'_c = 28 MPa @ 28 days

f'_{ci} = 25 MPa @ time of stressing

Prestress: μ = 0.15

K = 0.000656/m

Long term losses = 140 MPa

Contractor shall submit elongation calculations based on initial stress at

⊠ = 0.978 times jacking stress.

One end stressing shall be performed from either end.

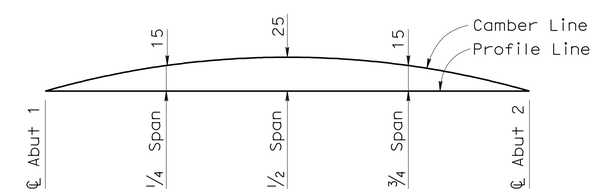

Camber values shown do not include allowance for falsework settlement

CAMBER DIAGRAM

No Scale

DESIGN	BY T. Bui	CHECKED G. Schuster	
DETAILS	BY J. Yang	CHECKED G. Schuster	
QUANTITIES	BY M. Jimenez	CHECKED M. Schott	

STATE OF CALIFORNIA
DEPARTMENT OF TRANSPORTATION

DIVISION OF ENGINEERING SERVICES
STRUCTURE DESIGN
DESIGN BRANCH 2

BRIDGE NO. 10-0305
KILOMETER POST R77.595

WILLITS BYPASS
UPP CREEK BRIDGE
VOID LAYOUT

ALL DIMENSIONS ARE IN MILLIMETERS UNLESS OTHERWISE SHOWN

ORIGINAL SCALE IN MILLIMETERS FOR REDUCED PLANS 0 10 20 30 40 50 60 70 80 90 100

CU 01
EA 262001

DISREGARD PRINTS BEARING EARLIER REVISION DATES

REVISION DATES: 11-20-08 01-15-09 3-16-09 5-14-09 12-21-09

SHEET 9 OF 13

FILE => 10-0305_mlvlo01.dgn

STRUCTURES DESIGN DETAIL SHEET (METRIC) (REV.03-17-04)

USERNAME => s114640 DATE PLOTTED => 28-JAN-2012 TIME PLOTTED => 08:17

DIST	COUNTY	ROUTE	KILOMETER POST TOTAL PROJECT	SHEET No	TOTAL SHEETS
01	Men	101	R69.4/R78.9	921	939

REGISTERED CIVIL ENGINEER 9-15-11 DATE

1-23-12
PLANS APPROVAL DATE

REGISTERED PROFESSIONAL ENGINEER Marc Friedheim No. 57968 Exp. 06-30-12 CIVIL STATE OF CALIFORNIA

The State of California or its officers or agents shall not be responsible for the accuracy or completeness of electronic copies of this plan sheet.

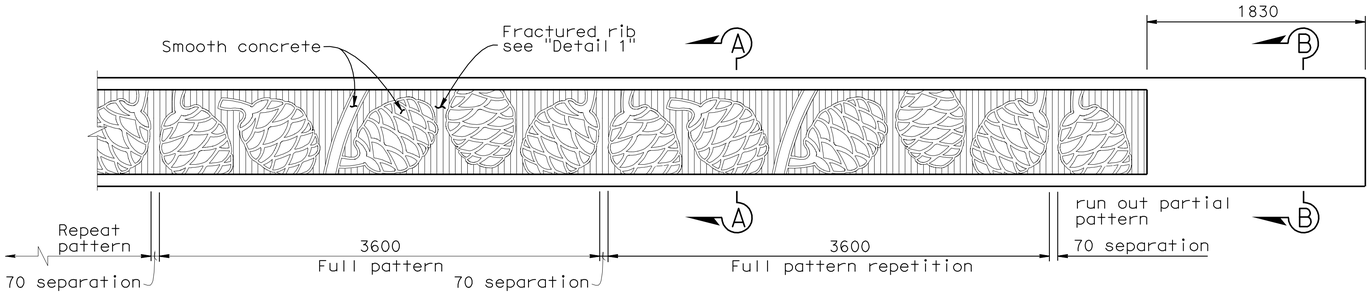

TYPE 736 BARRIER SHOWN TYPE 26 BARRIER SIMILAR

PARTIAL ELEVATION

1:25

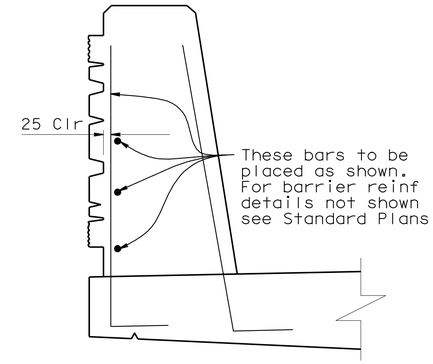

TYPE 736 BARRIER REINFORCEMENT MODIFICATION

1:10

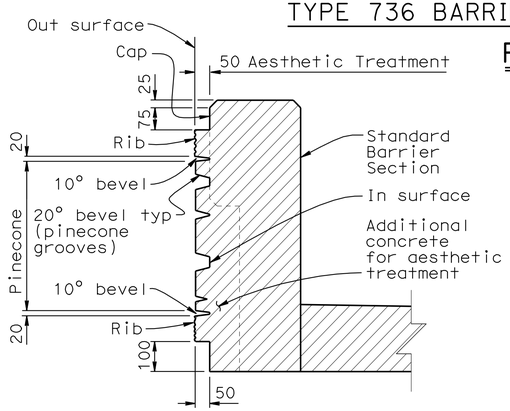

TYPE 26 BARRIER DETAIL

SECTION A-A

1:10

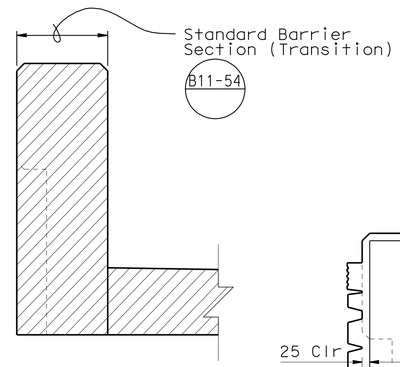

TYPE 26 BARRIER DETAIL

SECTION B-B

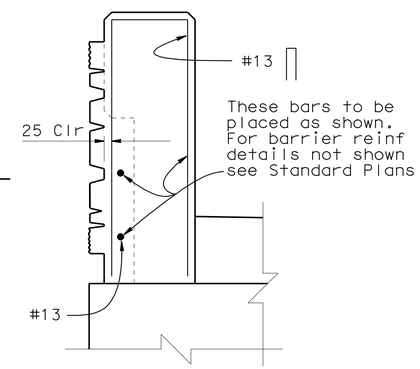

TYPE 26 BARRIER REINFORCEMENT MODIFICATION

1:10

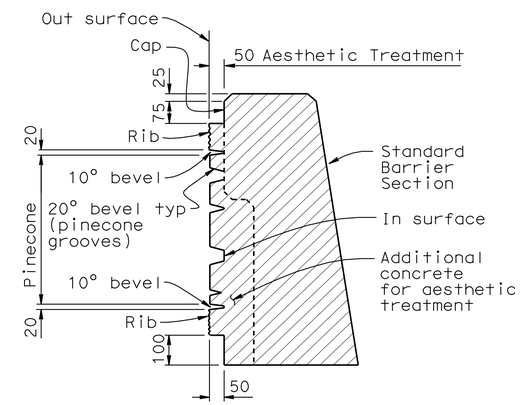

TYPE 736 BARRIER DETAIL

SECTION A-A

1:10

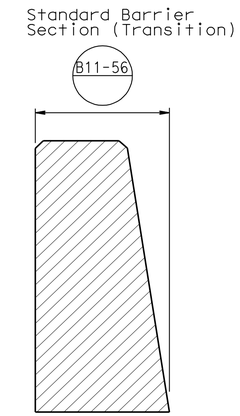

TYPE 736 BARRIER DETAIL

SECTION B-B

1:10

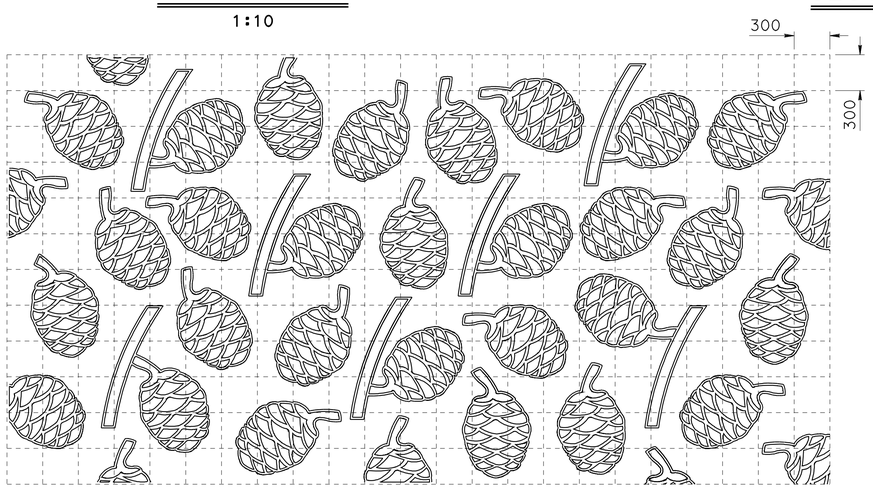

300 mm grid for reference only

RANDOM PINECONE PATTERN FOR WING WALLS

1:25

NOTE: Place random pinecone pattern on Fractured Rib Background
Fractured rib to be at same angle/alignment as abutment wall.
Relief similar to Barrier Section A-A

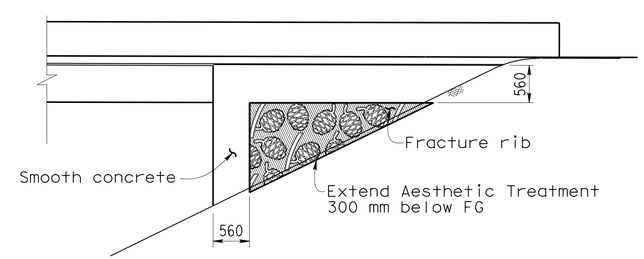

TYPICAL WINGWALL AESTHETIC TREATMENT

No Scale

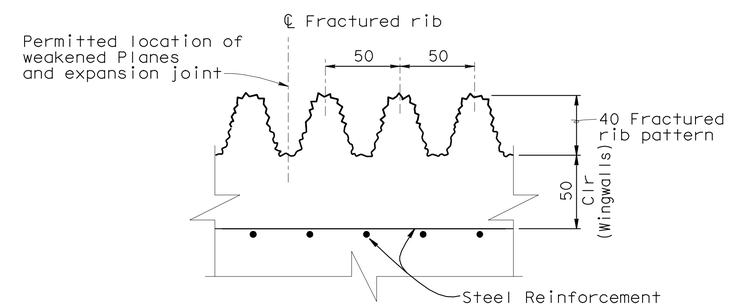

TYPICAL FRACTURED RIB TEXTURE

DETAIL 1

1:2

DESIGN	BY T. Bui	CHECKED G. Schuster	
DETAILS	BY L. Wang/J. Yang	CHECKED G. Schuster	
QUANTITIES	BY M. Jimenez	CHECKED M. Schott	

STATE OF CALIFORNIA
DEPARTMENT OF TRANSPORTATION

DIVISION OF ENGINEERING SERVICES
STRUCTURE DESIGN
DESIGN BRANCH 2

BRIDGE NO. 10-0305
KILOMETER POST R77.595

WILLITS BYPASS
UPP CREEK BRIDGE
AESTHETIC DETAILS

ALL DIMENSIONS ARE IN MILLIMETERS UNLESS OTHERWISE SHOWN

ORIGINAL SCALE IN MILLIMETERS FOR REDUCED PLANS 0 10 20 30 40 50 60 70 80 90 100

CU 01
EA 262001

DISREGARD PRINTS BEARING EARLIER REVISION DATES

REVISION DATES: 1-28-09 4-03-09 5-14-09 12-21-09

SHEET 10 OF 13

FILE => 10-0305_mxsfadet1.dgn

STRUCTURES DESIGN DETAIL SHEET (METRIC) (REV.03-17-04)

USERNAME => s114640 DATE PLOTTED => 28-JAN-2012 TIME PLOTTED => 08:18

DIST.	COUNTY	ROUTE	KILOMETER POST TOTAL PROJECT	SHEET NO.	TOTAL SHEETS
01	Men	101	R69.4/R78.9	922	939

Caltrans Metric

REGISTERED ENGINEER - CIVIL 9-15-11

1-23-12
PLANS APPROVAL DATE

REGISTERED PROFESSIONAL ENGINEER M. Friedheim No. 57968 Exp. 6-30-12 CIVIL STATE OF CALIFORNIA

The State of California or its officers or agents shall not be responsible for the accuracy or completeness of electronic copies of this plan sheet.

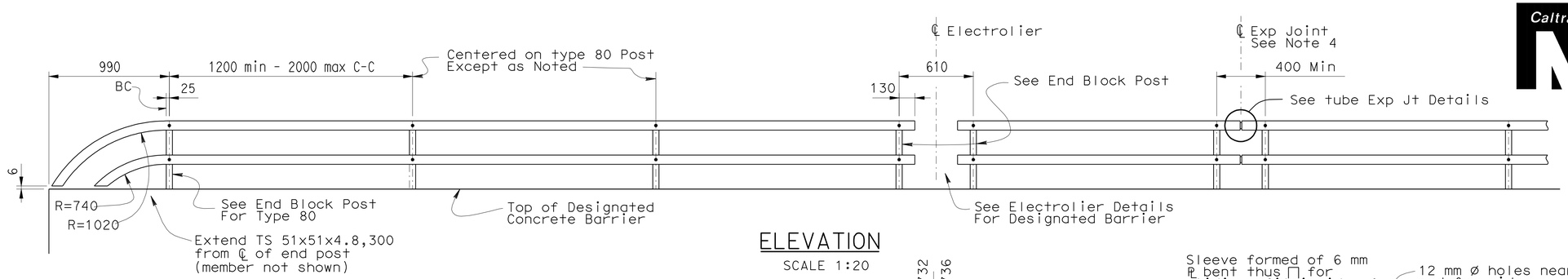

ELEVATION
SCALE 1:20

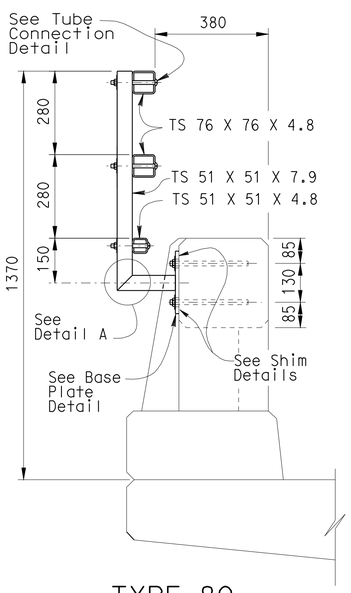

TYPE 80
END BLOCK POST
SCALE 1:10

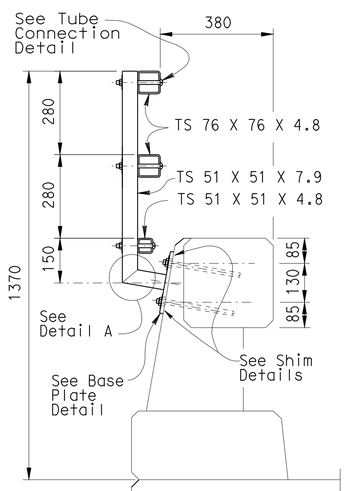

TYPE 80
SCALE 1:10

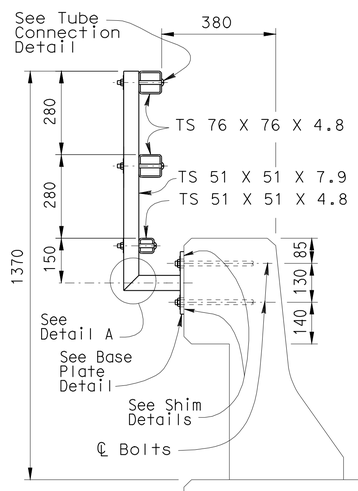

TYPE 25
SCALE 1:10

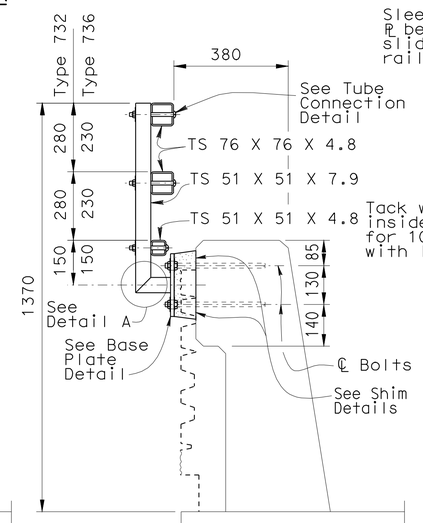

TYPE 732 OR 736 ◇1
NO SCALE

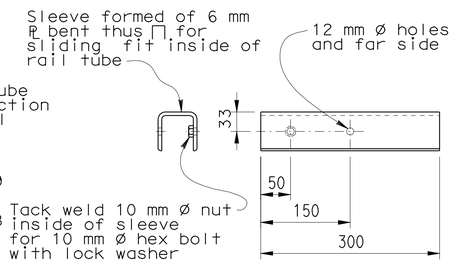

SLEEVE DETAIL
SCALE 1:5

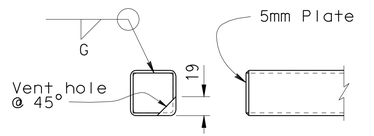

RAIL CAP DETAIL
SCALE 1:5

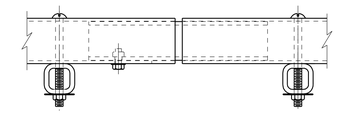

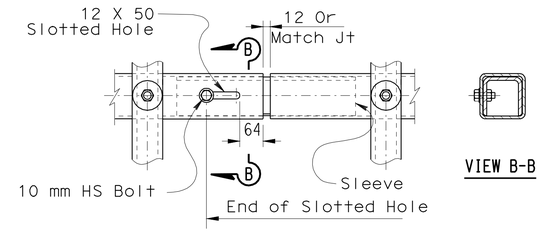

VIEW B-B

TUBE EXPANSION JOINT DETAILS
SCALE 1:5

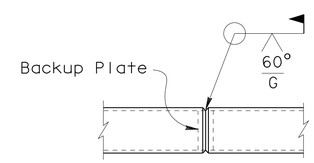

WELDED SPLICE DETAIL
SCALE 1:5

NOTES:

1. Galvanize rail assembly after fabrication.
2. Post shall be normal to railing.
3. Rail tubes shall be shop bent or fabricated to fit horizontal curve when radius is less than 300 m.
4. Tube splices shall be located in the tubes spanning deck or wall joints. Increase joint width in tubes to match expansion joint width and increase sleeve length correspondingly.
5. Top rail tube shall be continuous over not less than two posts except a short post spacing is permitted near deck or wall joints, electroliers, or other rail discontinuities as noted.
6. For details and reinforcement not shown see Standard Plans.
7. See project plans for limits of tubular bicycle railing.
8. CIP threaded rods may alternatively be installed using a drill and bond method with epoxy cartridges after forming and pouring barrier concrete. Plates to be placed against level surface.

SPECIAL DETAILS

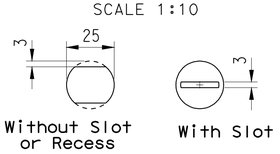

VIEW C-C
SCALE 1:1

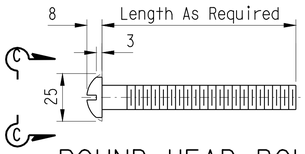

ROUND HEAD BOLT DETAIL
SCALE 1:1

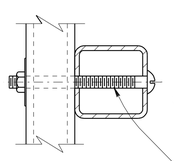

25 mm ø Round Head Bolt w/Nut, & 50mm ø Plate Washer, See Round Bolt Head Detail

TUBE CONNECTION DETAIL
SCALE 1:2.5

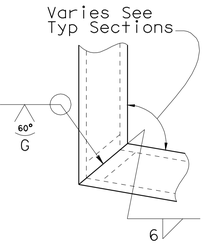

DETAIL A
SCALE 1:2.5

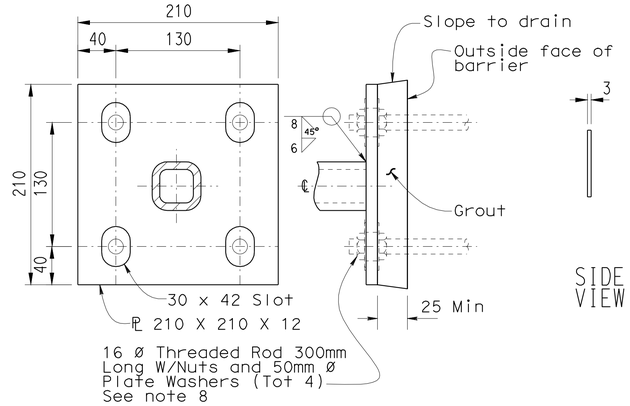

BASE PLATE DETAIL ◇2
SCALE 1:2.5

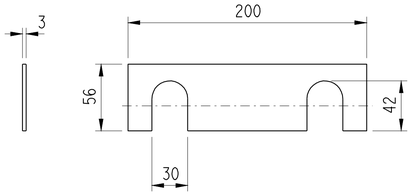

SHIM DETAILS
NO SCALE

ALL DIMENSIONS ARE IN MILLIMETERS UNLESS OTHERWISE SHOWN

◇1 Barrier modified
◇2 Plate details modified

RELEASE DATE	REVISED	DESIGN	BY TILLAT SATTER	CHECKED NEELIMA PATIL	RELEASED BY
FILE NO.	XS16-500	DETAILS	BY H.NGUYEN	CHECKED TILLAT SATTER	OFFICE CHIEF
		SUBMITTED	BY	DRAWING DATE 08/06	

STATE OF CALIFORNIA
DEPARTMENT OF TRANSPORTATION

DIVISION OF ENGINEERING SERVICES
STRUCTURE DESIGN
DESIGN BRANCH 2

BRIDGE NO. 10-0305
KILOMETER POST R77.595

WILLITS BYPASS
UPP CREEK BRIDGE
TUBULAR BICYCLE RAILING

DS OSD 2I39M (METRIC) (REV. 3/5/97)

ORIGINAL SCALE IN MILLIMETERS FOR REDUCED PLANS 0 10 20 30 40 50 60 70 80 90 100

CU 01
EA 262001

DISREGARD PRINTS BEARING EARLIER REVISION DATES

REVISION DATES (PRELIMINARY STAGE ONLY) 8-15-08 1-29-09 3-12-09 5-14-09 12-21-09

SHEET 11 OF 13

USERNAME => s114640 FILE => 10-0305_mxsfutub.dgn

USERNAME => s114640 DATE PLOTTED => 28-JAN-2012 TIME PLOTTED => 08:18

VI=I

DIST.	COUNTY	ROUTE	KILOMETER POST TOTAL PROJECT	SHEET NO.	TOTAL SHEETS
01	Men	101	R69.4/R78.9	923	939

Caltrans Metric

M. Friedheim 9-15-11
REGISTERED ENGINEER - CIVIL

1-23-12
PLANS APPROVAL DATE

REGISTERED PROFESSIONAL ENGINEER M. Friedheim No. 57968 Exp. 6-30-12 CIVIL STATE OF CALIFORNIA

The State of California or its officers or agents shall not be responsible for the accuracy or completeness of electronic copies of this plan sheet.

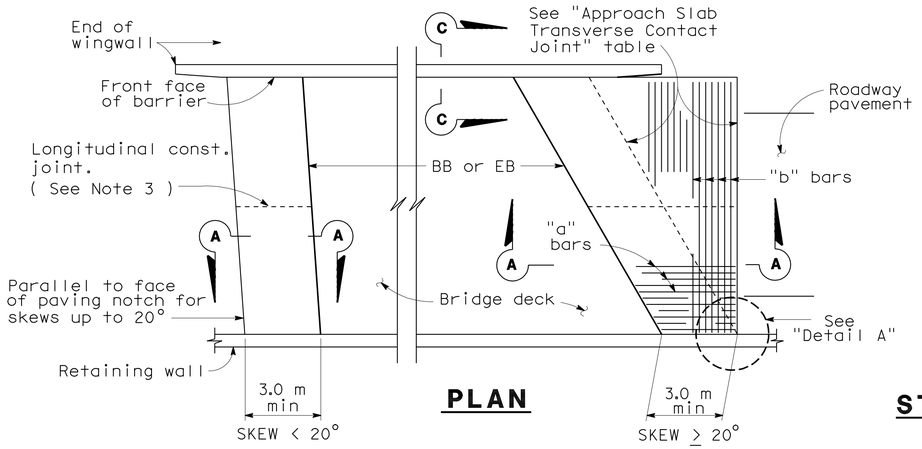

PLAN

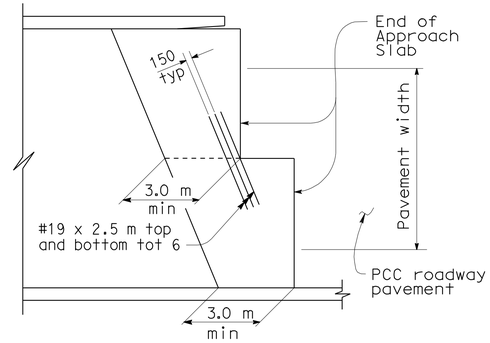

STRUCTURE APPROACH - END STAGGER DETAIL

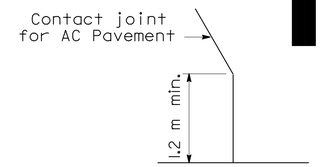

DETAIL A

APPROACH SLAB TRANSVERSE CONTACT JOINT		
STRUCTURE SKEW	AC APPROACH PAVEMENT	PCC APPROACH PAVEMENT
< 20°	Parallel to face of paving notch	Parallel to face of paving notch
20°- 45°	Parallel to face of P N use (Detail A)	Stagger lines 7.2 m to 10.8 m apart
> 45°	Parallel to face of P N use (Detail A)	Stagger at each lane line

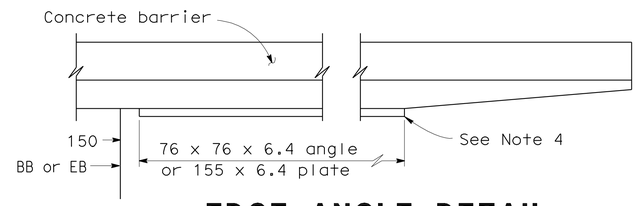

EDGE ANGLE DETAIL

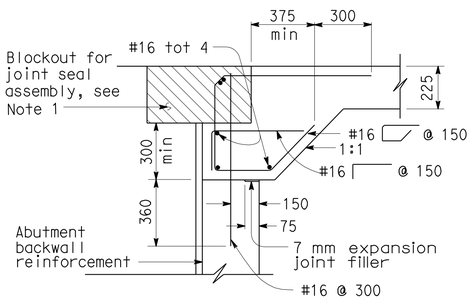

MR > 50 mm

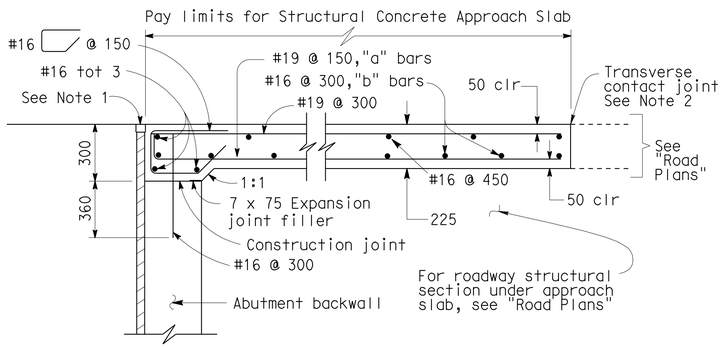

MR ≤ 50 mm

SEAT TYPE ABUTMENT
SECTION A-A

Note: Seat Type Abutment shown,for Diaphragm Type Abutment,see "Abutment Tie Details".

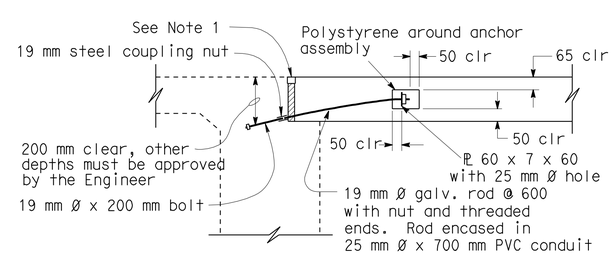

225 mm PAVING NOTCH

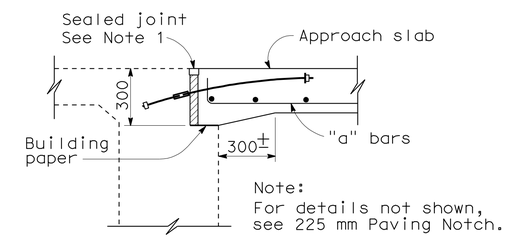

300 mm PAVING NOTCH

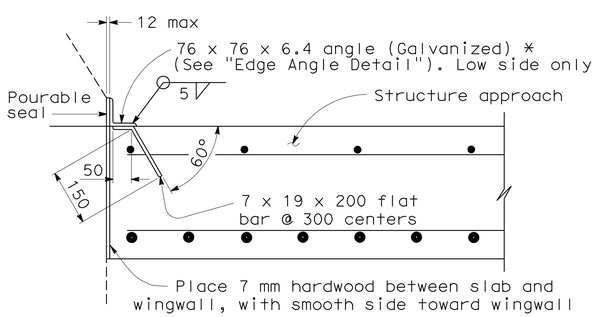

***(TO BE USED WITH TYPE 25 OR TYPE 27 CONCRETE BARRIER)**

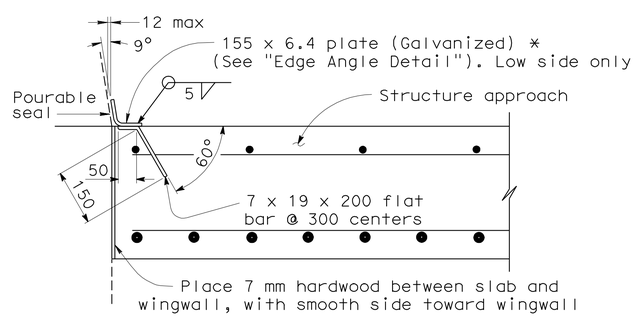

***(TO BE USED WITH TYPE 732 OR TYPE 736 CONCRETE BARRIER)**

DETAIL B

DIAPHRAGM TYPE ABUTMENT
ABUTMENT TIE DETAILS

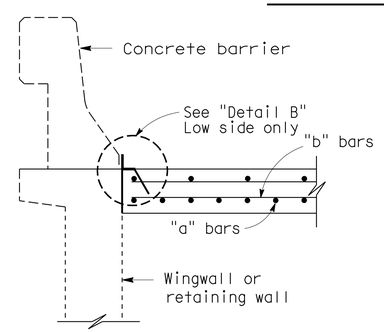

SECTION C-C

NOTES:

1. For details not noted or shown, see Structure Plans. Adjust bar reinforcement to clear a sawcut for sealed joint,when required.
2. For transverse contact joint with new PCC paving, refer to Standard Plan P10.
3. Longitudinal construction joints,when permitted by the Engineer,shall be located on lane lines.
4. End angle or plate at beginning of barrier transition, end of wing wall or end of structure approach as applicable.
5. At the contractor's option,approach slab transverse reinforcement may be placed parallel to paving notch. Spacing of transverse reinforcement is measured along ℄ roadway.
6. For drainage details,see Structure Plans.

ALL DIMENSIONS ARE IN MILLIMETERS UNLESS OTHERWISE SHOWN

NO SCALE

STANDARD DRAWING

RELEASE DATE 3/14/05	DESIGN BY M. TRAFFALIS	CHECKED E. THORKILDSEN	RELEASED BY	
FILE NO. xs3-150	DETAILS BY R. YEE	CHECKED E. THORKILDSEN		
	SUBMITTED BY M. HA	DRAWING DATE 6/93	OFFICE CHIEF	

STATE OF CALIFORNIA DEPARTMENT OF TRANSPORTATION

DIVISION OF ENGINEERING SERVICES STRUCTURE DESIGN
DESIGN BRANCH 2

BRIDGE NO. 10-0305
KILOMETER POST R77.595

WILLITS BYPASS
UPP CREEK BRIDGE
STRUCTURE APPROACH TYPE EQ(3)

DS OSD 2147A (METRIC) (REV. 2/25/97)

ORIGINAL SCALE IN MILLIMETERS FOR REDUCED PLANS 0 10 20 30 40 50 60 70 80 90 100

CU 01
EA 262001

DISREGARD PRINTS BEARING EARLIER REVISION DATES 12-21-09

REVISION DATES (PRELIMINARY STAGE ONLY)

SHEET 12 OF 13

USERNAME => s114640

10-0305_mxsstrapp01.dgn

DATE PLOTTED => 28-JAN-2012 TIME PLOTTED => 08:18

DIST	COUNTY	ROUTE	KILOMETER POST TOTAL PROJECT	SHEET No	TOTAL SHEETS
01	Men	101	R69.4/R78.9	924	939

CERTIFIED ENGINEERING GEOLOGIST 5-19-09 DATE

REGISTERED GEOLOGIST Reid Buell No. 1481 Exp. 4-30-11 CERTIFIED ENGINEERING GEOLOGIST STATE OF CALIFORNIA

1-23-12
PLANS APPROVAL DATE

The State of California or its officers or agents shall not be responsible for the accuracy or completeness of electronic copies of this plan sheet.

BENCH MARK

SURVEY CONTROL

Sewer (PRHV 4750), (Not Shown)
Fnd 2-1/4" Brass Disk Stamped "Sewer"
159.985 m Lt. "W1" Line Rte 101
Sta. 163+10.608
N 695463.301
E 1884392.708
Elev= 411.192

Men-101-48.1 (PRHV 5046)
Fnd ALCAP in Conc w/Steel (Stamped Men-101-48.1)
188.980 m Lt. "W1" Line Rte 101
Sta. 178+98.282
N 696420.729
E 1883104.414
Elev=409.954

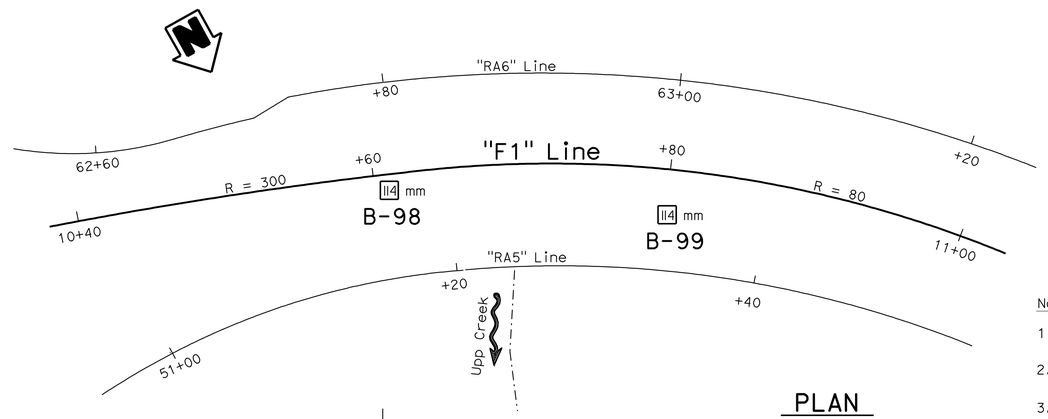

PLAN
1:200

Notes:

1. Standard Penetration Tests (SPT) performed in Borings B-98 and B-99 were advanced using a 63.5 kg Longyear Automatic Hammer.
2. pp= Unconfined commpressive strength determined in the field by "Pocket Penetrometer." Units shown are kilopascals (kPa).
3. Consistency descriptors shown on the LOTB sheets are based on the pocket penetrometer readings.
4. Groundwater surface elevations are subject to seasonal fluctuations and may occur at higher or lower elevations depending on conditions at any particular time.

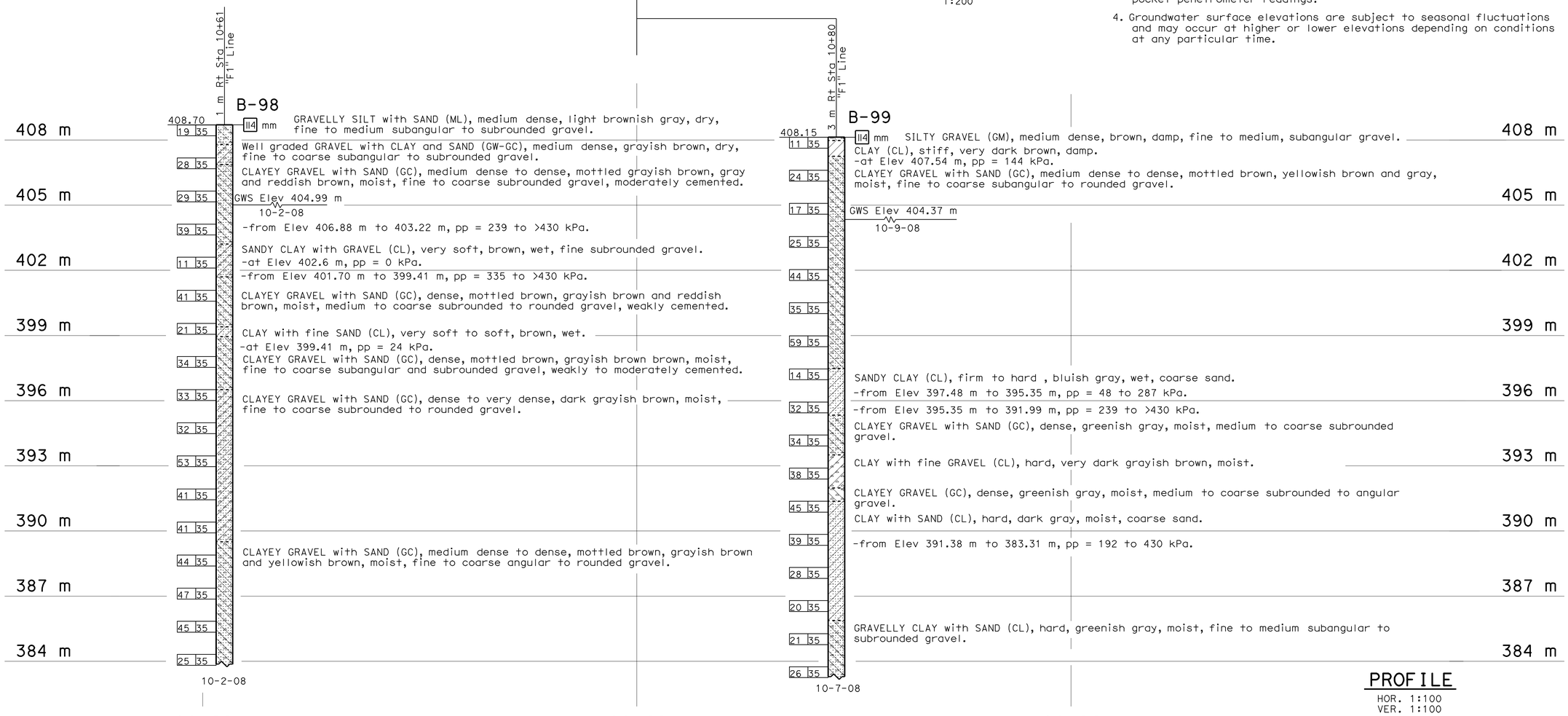

PROFILE
HOR. 1:100
VER. 1:100

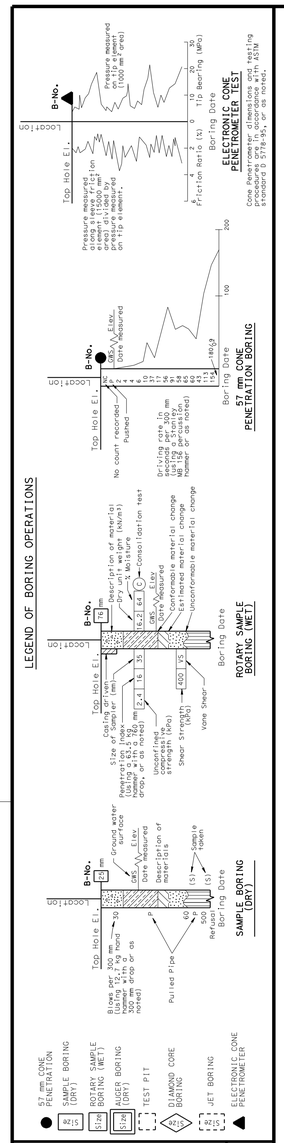

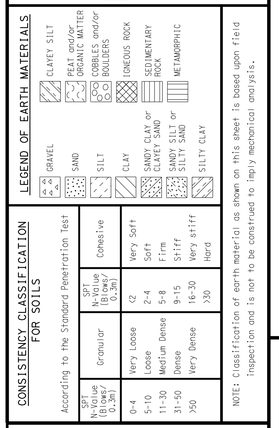

CONSISTENCY CLASSIFICATION FOR SOILS

According to the Standard Penetration Test			According to the Standard Penetration Test	
SPT N-Value (Blows/0.3m)	Granular		SPT N-Value (Blows/0.3m)	Cohesive
0-4	Very Loose		<2	Very Soft
5-10	Loose		2-4	Soft
11-30	Medium Dense		5-8	Firm
31-50	Dense		9-15	Stiff
>50	Very Dense		16-30	Very stiff
			>30	Hard

NOTE: Classification of earth material as shown on this sheet is based upon field inspection and is not to be construed to imply mechanical analysis.

OGS CIVIL LOG OF TEST BORINGS SHEET (METRIC) (REV. 4/04)

Caltrans Metric

ENGINEERING SERVICES	GEOTECHNICAL SERVICES
DRAWN BY	W. Tang 4/09
CHECKED BY	

FIELD INVESTIGATION BY: T. Alderman

STATE OF CALIFORNIA DEPARTMENT OF TRANSPORTATION

DIVISION OF ENGINEERING SERVICES STRUCTURE DESIGN
DESIGN BRANCH 2

BRIDGE NO. 10-0305
KILOMETER POST R77.595

WILLITS BYPASS
UPP CREEK BRIDGE
LOG OF TEST BORINGS

ALL DIMENSIONS ARE IN METERS UNLESS OTHERWISE SHOWN

ORIGINAL SCALE IN MILLIMETERS FOR REDUCED PLANS 0 10 20 30 40 50 60 70 80 90 100

CU 01
EA 262001

DISREGARD PRINTS BEARING EARLIER REVISION DATES

REVISION DATES (PRELIMINARY STAGE ONLY) 04-23-09 05-11-09 05-18-09 12-21-09

SHEET 13 OF 13

FILE => 10-0305_mylotb.dgn

USERNAME => s114640 DATE PLOTTED => 28-JAN-2012 TIME PLOTTED => 08:18

DIST	COUNTY	ROUTE	KILOMETER POST TOTAL PROJECT	SHEET No	TOTAL SHEETS
01	Men	101	R69.4/R78.9	925	939

REGISTERED CIVIL ENGINEER 9-15-11 DATE

1-23-12
PLANS APPROVAL DATE

REGISTERED PROFESSIONAL ENGINEER M. Friedheim No. 57968 Exp. 6-30-12 CIVIL STATE OF CALIFORNIA

The State of California or its officers or agents shall not be responsible for the accuracy or completeness of electronic copies of this plan sheet.

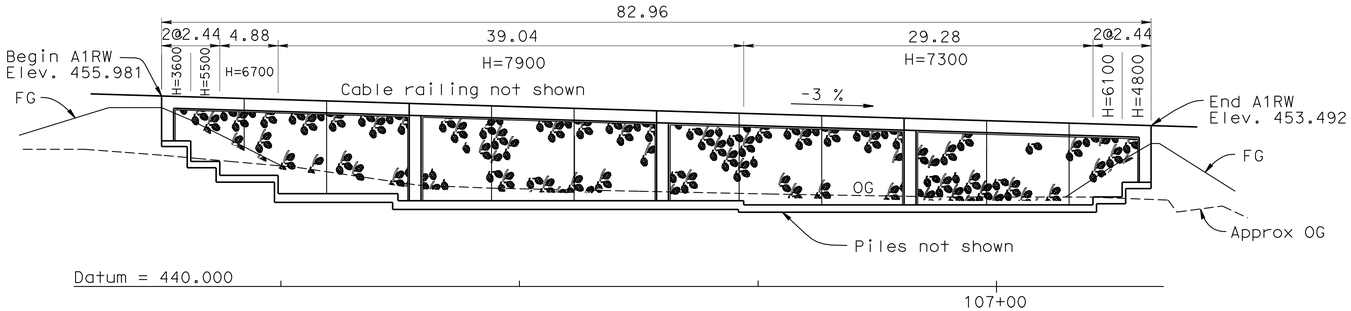

ELEVATION

Scale 1:250

B0-3 B3-1 B3-8 B3-9 B11-47

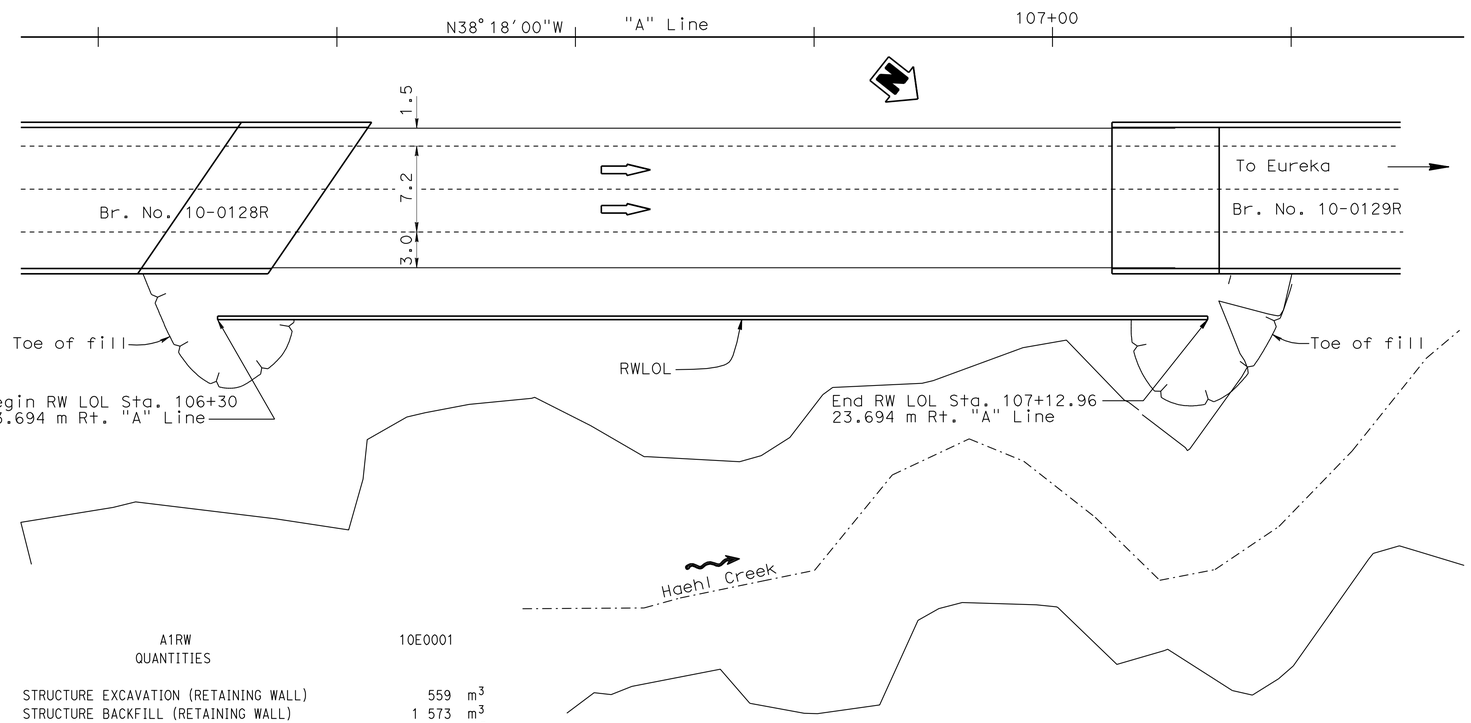

PLAN

Scale 1:250

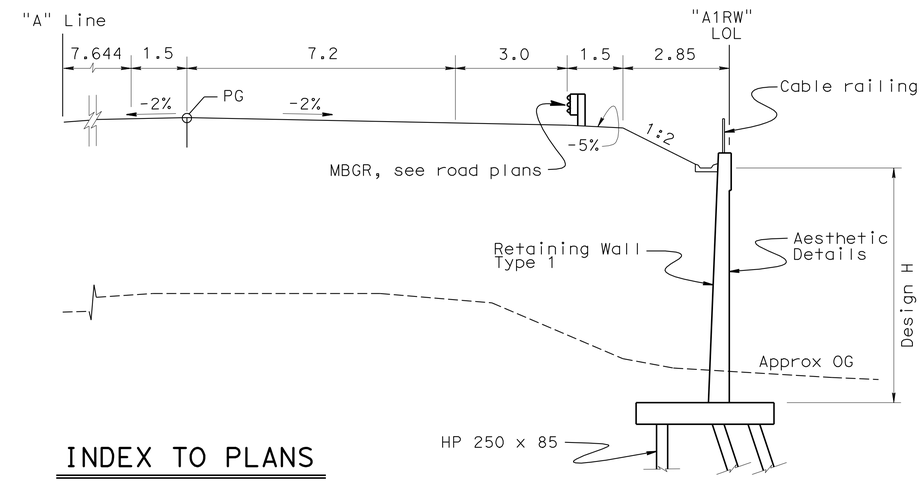

TYPICAL SECTION

Scale 1:80

INDEX TO PLANS

1. General Plan
2. Foundation Plan
3. Pile Layout
4. Aesthetic Details
5. Log of Test Borings 1 of 3
6. Log of Test Borings 2 of 3
7. Log of Test Borings 3 of 3

STANDARD PLANS DATED JULY 2004

A62B	LIMITS OF PAYMENT FOR EXCAVATION AND BACKFILL BRIDGE SURCHARGE AND WALL
B0-3	BRIDGE DETAILS
B3-1	RETAINING WALL TYPE 1 H=1200 THROUGH 9100 mm
B3-8	RETAINING WALL DETAILS No.1
B3-9	RETAINING WALL DETAILS No.2
B11-47	CABLE RAILING

Standard Plan sheet number

Detail number

NOTES:

1. For General Notes, see Standard Plan B3-8.
2. For Pile Data Table, see "Pile Layout" sheet.

A1RW 10E0001
QUANTITIES

STRUCTURE EXCAVATION (RETAINING WALL)	559	m^3
STRUCTURE BACKFILL (RETAINING WALL)	1 573	m^3
PERVIOUS BACKFILL MATERIAL (RETAINING WALL)	119	m^3
FURNISH STEEL PILING (HP 250 X 85)	3 117	m
DRIVE STEEL PILE (HP 250 X 85)	175	EA
STRUCTURAL CONCRETE, RETAINING WALL	526	m^3
ARCHITECTURAL TEXTURE	424	m^2
BAR REINFORCING STEEL (RETAINING WALL)	52 462	kg
MINOR CONCRETE (GUTTER)	7	m^3
CABLE RAILING	83	m

Caltrans Metric

DESIGN ENGINEER

	BY	CHECKED			
DESIGN	M. Friedheim	M. Abdi	LOAD FACTOR DESIGN	LIVE LOADING: HS20-44 AND ALTERNATIVE AND PERMIT DESIGN LOAD	
DETAILS	J. Klovach/J. Yang	M. Abdi	LAYOUT	M. Friedheim	M. Abdi
QUANTITIES	M. Friedheim	R. Odell	SPECIFICATIONS	I. Huang	I. Huang

ALL DIMENSIONS ARE IN METERS UNLESS OTHERWISE SHOWN

ORIGINAL SCALE IN MILLIMETERS FOR REDUCED PLANS 0 10 20 30 40 50 60 70 80 90 100

STATE OF CALIFORNIA
DEPARTMENT OF TRANSPORTATION

DIVISION OF ENGINEERING SERVICES
STRUCTURE DESIGN
DESIGN BRANCH 2

CU 01
EA 262001

BRIDGE NO. 10E0001
KILOMETER POST R70.460

WILLITS BYPASS
A1RW
GENERAL PLAN

DISREGARD PRINTS BEARING EARLIER REVISION DATES

REVISION DATES: 5-07-04 9-14-04 9-29-04 10-06-04 9-12-05 2-28-06 10-12-06 7-01-09 4-21-10 4-26-10

SHEET 1 OF 7

STRUCTURES DESIGN GENERAL PLAN SHEET (METRIC) (REV.03-17-04)

FILE => 10e-0001_nagp.dgn

USERNAME => s114640 DATE PLOTTED => 28-JAN-2012 TIME PLOTTED => 08:18

DIST	COUNTY	ROUTE	KILOMETER POST TOTAL PROJECT	SHEET No	TOTAL SHEETS
01	Men	101	R69.4/R78.9	926	939

Caltrans Metric

REGISTERED CIVIL ENGINEER 9-15-11 DATE

1-23-12
PLANS APPROVAL DATE

REGISTERED PROFESSIONAL ENGINEER M. Friedheim No. 57968 Exp. 6-30-12 CIVIL STATE OF CALIFORNIA

The State of California or its officers or agents shall not be responsible for the accuracy or completeness of electronic copies of this plan sheet.

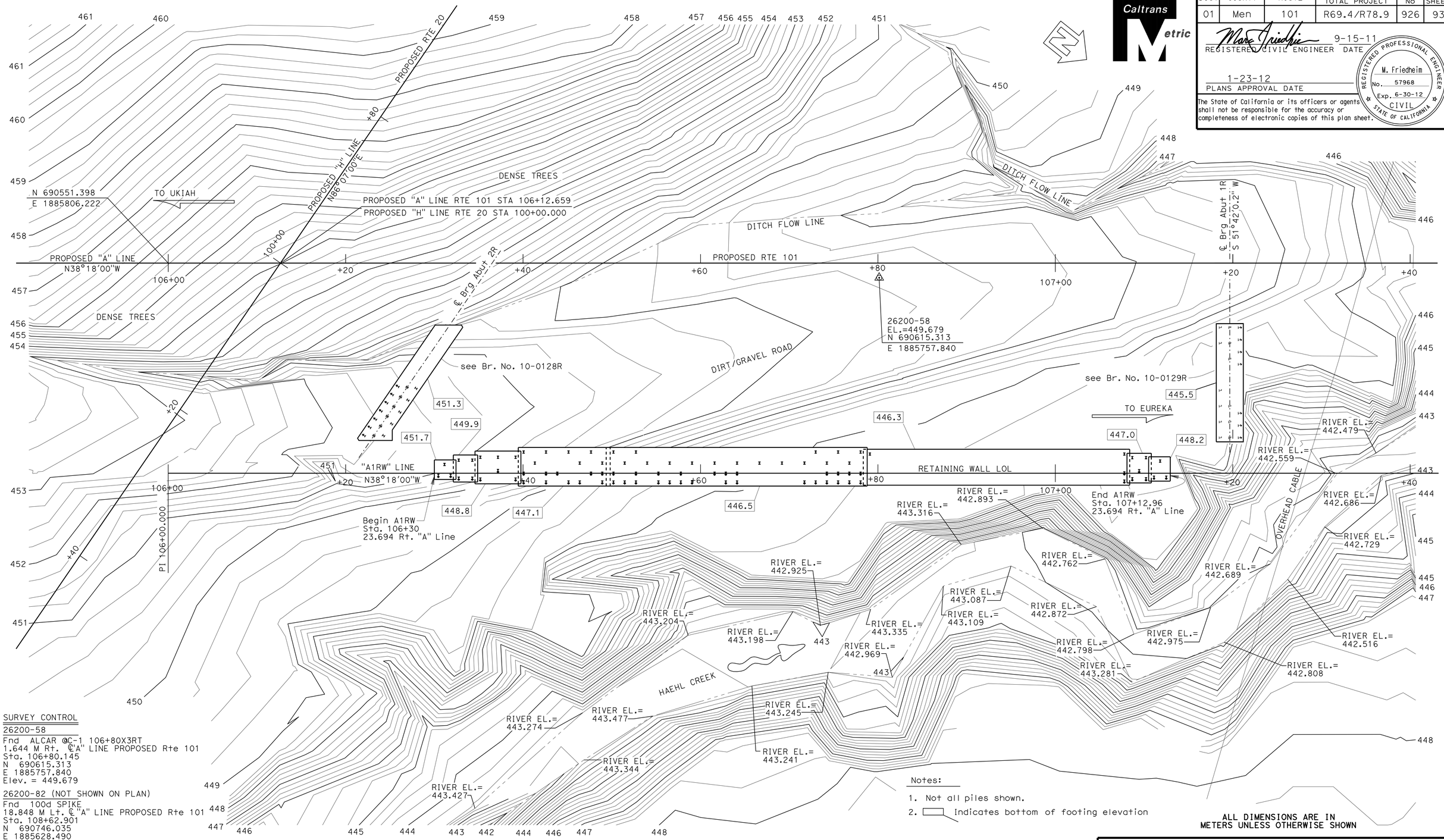

SURVEY CONTROL

26200-58
Fnd ALCAR @C-1 106+80X3RT
1.644 M Rt. ℄"A" LINE PROPOSED Rte 101
Sta. 106+80.145
N 690615.313
E 1885757.840
Elev. = 449.679

26200-82 (NOT SHOWN ON PLAN)
Fnd 100d SPIKE
18.848 M Lt. ℄"A" LINE PROPOSED Rte 101
Sta. 108+62.901
N 690746.035
E 1885628.490
Elev. = 449.041

Notes:

1. Not all piles shown.
2. ▭ Indicates bottom of footing elevation

ALL DIMENSIONS ARE IN METERS UNLESS OTHERWISE SHOWN

WILLITS BYPASS
A1RW
FOUNDATION PLAN

PRELIMINARY INVESTIGATION SECTION

SCALE	VERT. DATUM NGVD29	PHOTOGRAMMETRY AS OF:			
1:200	HORZ. DATUM NAD83 (1991.35)	SURVEYED	BY DISTRICT/T.GILLETT	DRAFTED	BY T.ZOLNIKOVA 04/2004
ALIGNMENT TIES DIST.TRAVERSE SHEET		FIELD CHECKED	BY	CHECKED	BY F.BANDA 04/2004

	BY	CHECKED
DESIGN	M. Friedheim	M. Abdi
DETAILS	J. Klovach	M. Abdi
QUANTITIES	M. Friedheim	R. Odell

STATE OF CALIFORNIA
DEPARTMENT OF TRANSPORTATION

DIVISION OF STRUCTURES
STRUCTURE DESIGN 2

CU 01
EA 262001

BRIDGE NO. 10E0001
KILOMETER POST R70.460

STRUCTURES FOUNDATION PLAN SHEET (METRIC) (REV.12-1-01)

ORIGINAL SCALE IN MILLIMETERS FOR REDUCED PLANS 0 10 20 30 40 50 60 70 80 90 100

DISREGARD PRINTS BEARING EARLIER REVISION DATES

REVISION DATES (PRELIMINARY STAGE ONLY): 05-15-04 09-24-04 1-24-06 2-28-06 7-01-09 4-23-10

SHEET 2 OF 7

FILE => 10e-0001_nefp.dgn

USERNAME => s114640 DATE PLOTTED => 28-JAN-2012 TIME PLOTTED => 08:18

DIST	COUNTY	ROUTE	KILOMETER POST TOTAL PROJECT	SHEET No	TOTAL SHEETS
01	Men	101	R69.4/R78.9	927	939

REGISTERED CIVIL ENGINEER 9-15-11 DATE

1-23-12
PLANS APPROVAL DATE

REGISTERED PROFESSIONAL ENGINEER M. Friedheim No. 57968 Exp. 6-30-12 CIVIL STATE OF CALIFORNIA

The State of California or its officers or agents shall not be responsible for the accuracy or completeness of electronic copies of this plan sheet.

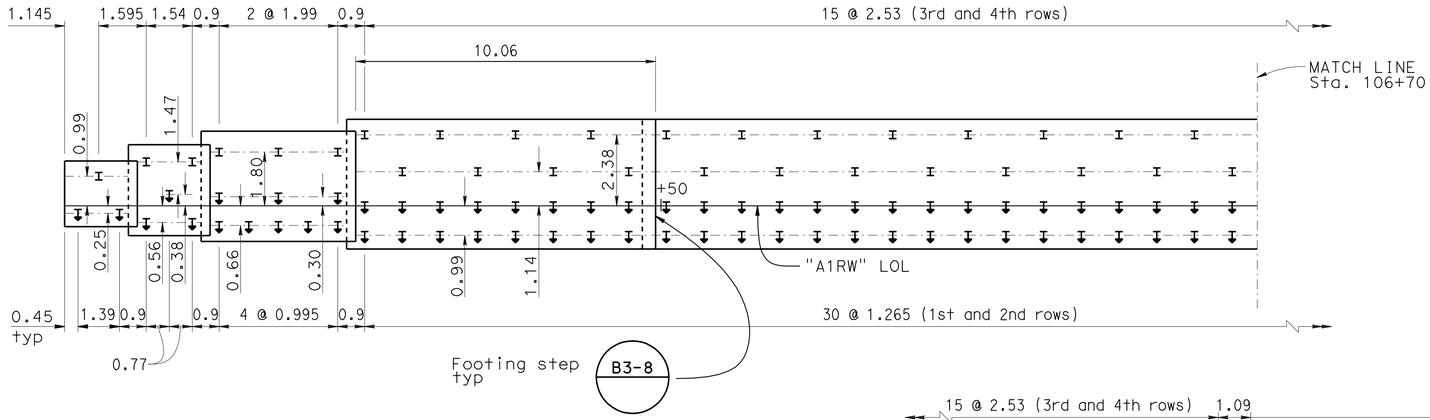

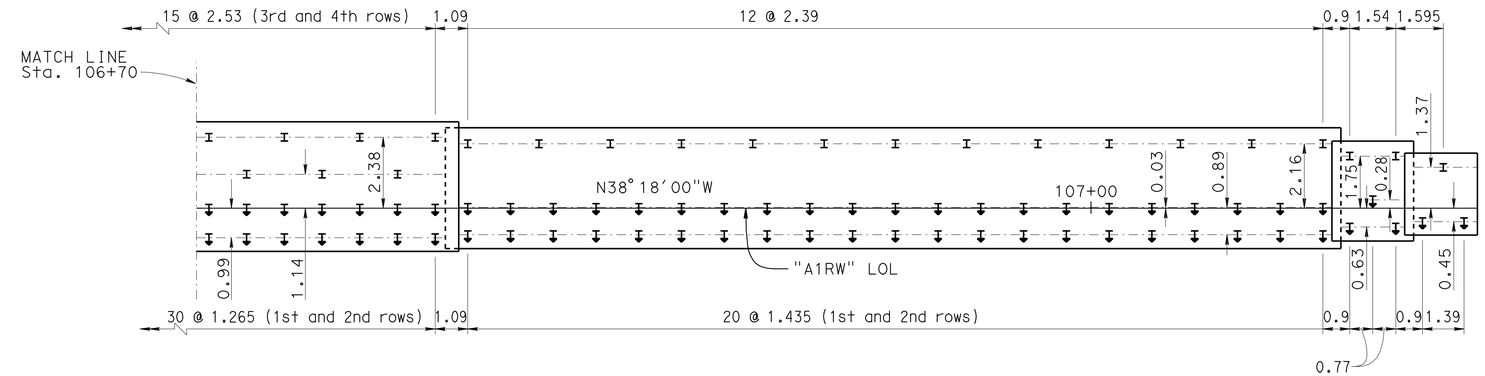

PILE LAYOUT
1:100

(Dimensions are in meters)

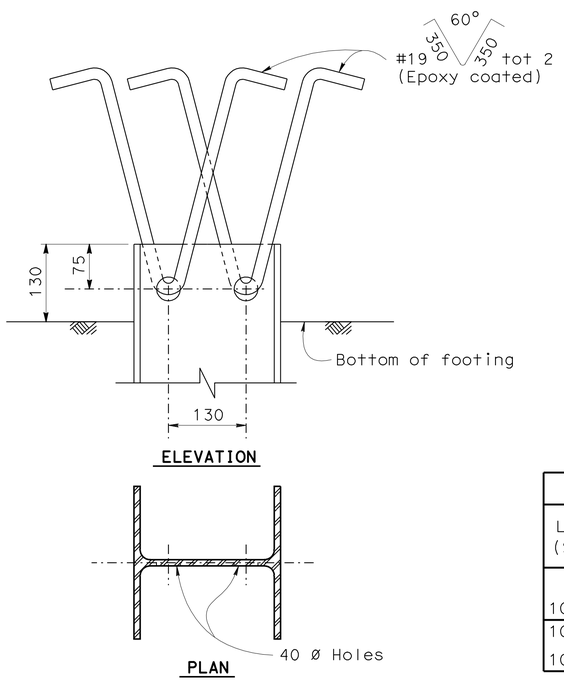

STEEL PILE ANCHOR
1:5

PILE DATA TABLE					
Location (Station)	Pile Type	Nominal Resistance		Design Tip Elevation	Specified Tip Elevation
		Compression	Tension		
106+30 to 106+39.76	HP 250 x 85	800 KN	0 KN	432.8 (1,2)	432.8
106+39.76 to 107+12.96	HP 250 x 85	800 KN	0 KN	429.5 (1,2)	429.5

Design tip elevation is controlled by the following demands:
(1) Compression
(2) Scour potential

LEGEND

↑ Indicates battered pile (3:1)

I Indicates vertical pile

Caltrans Metric

	BY	CHECKED
DESIGN	M. Friedheim	M. Abdi
DETAILS	J. Klovach/J. Yang	M. Abdi
QUANTITIES	M. Friedheim	R. Odell

STATE OF CALIFORNIA
DEPARTMENT OF TRANSPORTATION

DIVISION OF ENGINEERING SERVICES
STRUCTURE DESIGN
DESIGN BRANCH 2

BRIDGE NO. 10E0001
KILOMETER POST R70.460

WILLITS BYPASS
A1RW
PILE LAYOUT

ALL DIMENSIONS ARE IN MILLIMETERS UNLESS OTHERWISE SHOWN

ORIGINAL SCALE IN MILLIMETERS FOR REDUCED PLANS 0 10 20 30 40 50 60 70 80 90 100

CU 01
EA 262001

DISREGARD PRINTS BEARING EARLIER REVISION DATES

REVISION DATES: 5-11-04 9-14-04 9-28-04 9-19-05 2-28-06 4-23-10

SHEET 3 OF 7

FILE => 10e-0001_npilyt.dgn

STRUCTURES DESIGN DETAIL SHEET (METRIC) (REV.03-17-04)

USERNAME => s114640 DATE PLOTTED => 28-JAN-2012 TIME PLOTTED => 08:18

DIST	COUNTY	ROUTE	KILOMETER POST TOTAL PROJECT	SHEET No	TOTAL SHEETS
01	Men	101	R69.4/R78.9	928	939

REGISTERED CIVIL ENGINEER 9-15-11 DATE

1-23-12
PLANS APPROVAL DATE

REGISTERED PROFESSIONAL ENGINEER M. Friedheim No. 57968 Exp. 6-30-12 CIVIL STATE OF CALIFORNIA

The State of California or its officers or agents shall not be responsible for the accuracy or completeness of electronic copies of this plan sheet.

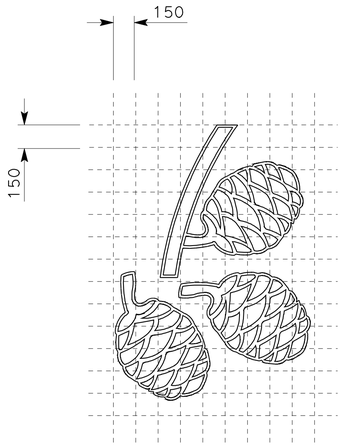

150mm GRID

1:20

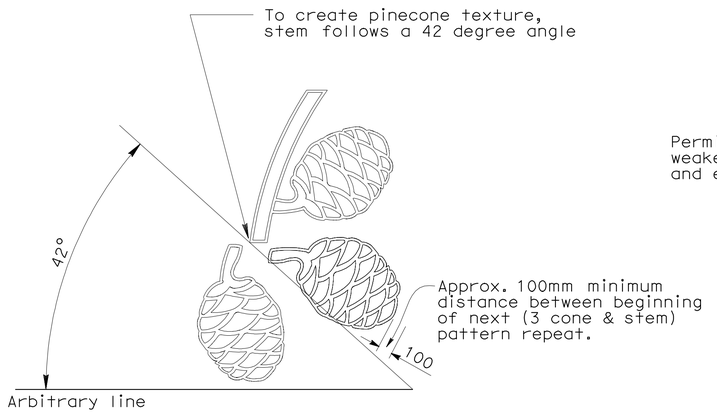

THREE CONE & STEM

no scale

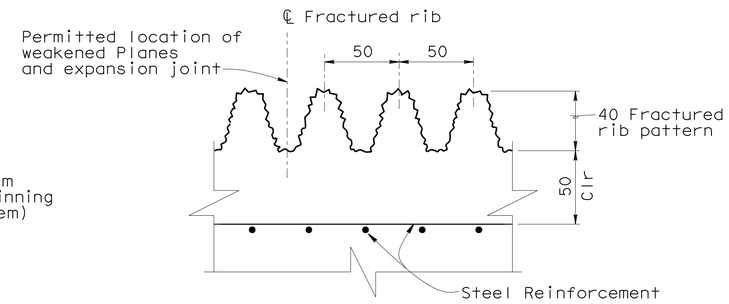

TYPICAL FRACTURED RIB TEXTURE DETAIL

no scale

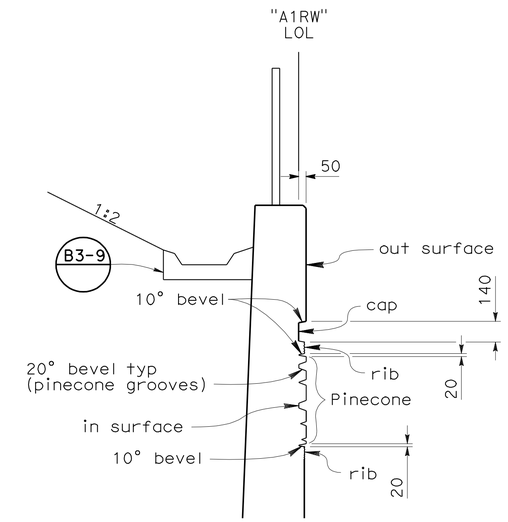

SECTION AT WALL TOP

no scale

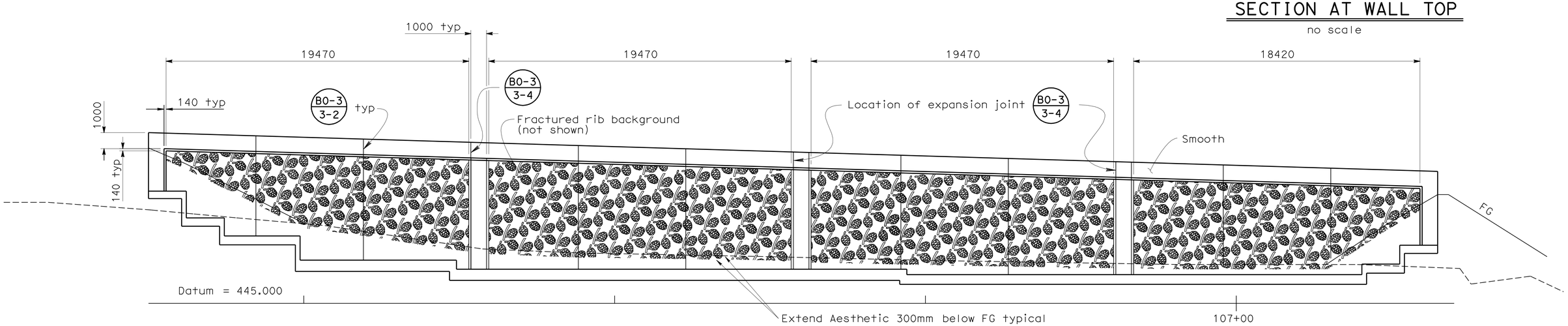

ELEVATION

1:125

DESIGN	BY M. Friedheim	CHECKED M. Abdi	
DETAILS	BY S. Evans/J. Yang	CHECKED M. Abdi	
QUANTITIES	BY M. Friedheim	CHECKED R. Odell	

STATE OF CALIFORNIA
DEPARTMENT OF TRANSPORTATION

DIVISION OF ENGINEERING SERVICES
STRUCTURE DESIGN
DESIGN BRANCH 2

BRIDGE NO. 10E0001
KILOMETER POST R70.460

WILLITS BYPASS
A1RW
AESTHETIC DETAILS

ALL DIMENSIONS ARE IN MILLIMETERS UNLESS OTHERWISE SHOWN

ORIGINAL SCALE IN MILLIMETERS FOR REDUCED PLANS 0 10 20 30 40 50 60 70 80 90 100

CU 01
EA 262001

DISREGARD PRINTS BEARING EARLIER REVISION DATES 1-24-09 4-23-10

REVISION DATES

SHEET 4 OF 7

FILE => 10e-0001_nretainingwall.dgn

STRUCTURES DESIGN DETAIL SHEET (METRIC) (REV.03-17-04)

USERNAME => s124436 DATE PLOTTED => 28-JAN-2012 TIME PLOTTED => 08:27

DIST	COUNTY	ROUTE	KILOMETER POST TOTAL PROJECT	SHEET No	TOTAL SHEETS
01	Men	101	R69.4/R78.9	929	939

CERTIFIED ENGINEERING GEOLOGIST 11-17-09 DATE

1-23-12
PLANS APPROVAL DATE

REGISTERED GEOLOGIST — Reid Buell No. 1481 Exp. 4-30-11 — CERTIFIED ENGINEERING GEOLOGIST — STATE OF CALIFORNIA

The State of California or its officers or agents shall not be responsible for the accuracy or completeness of electronic copies of this plan sheet.

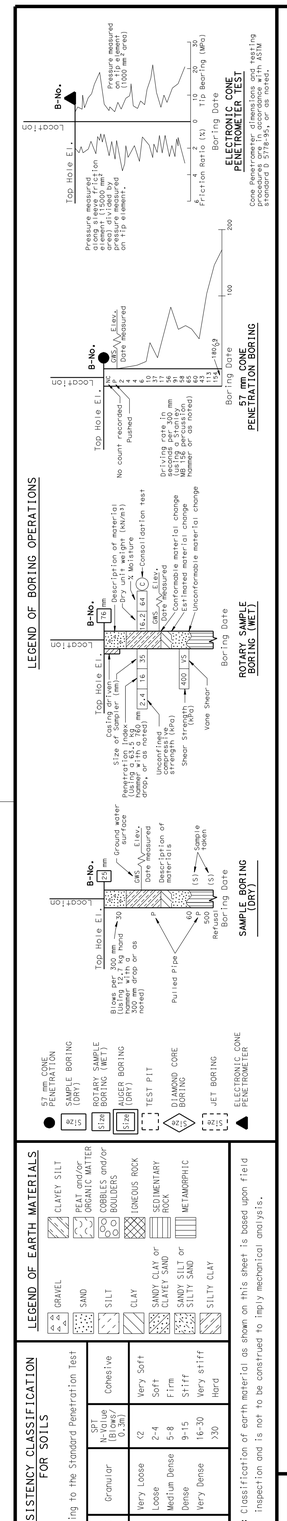

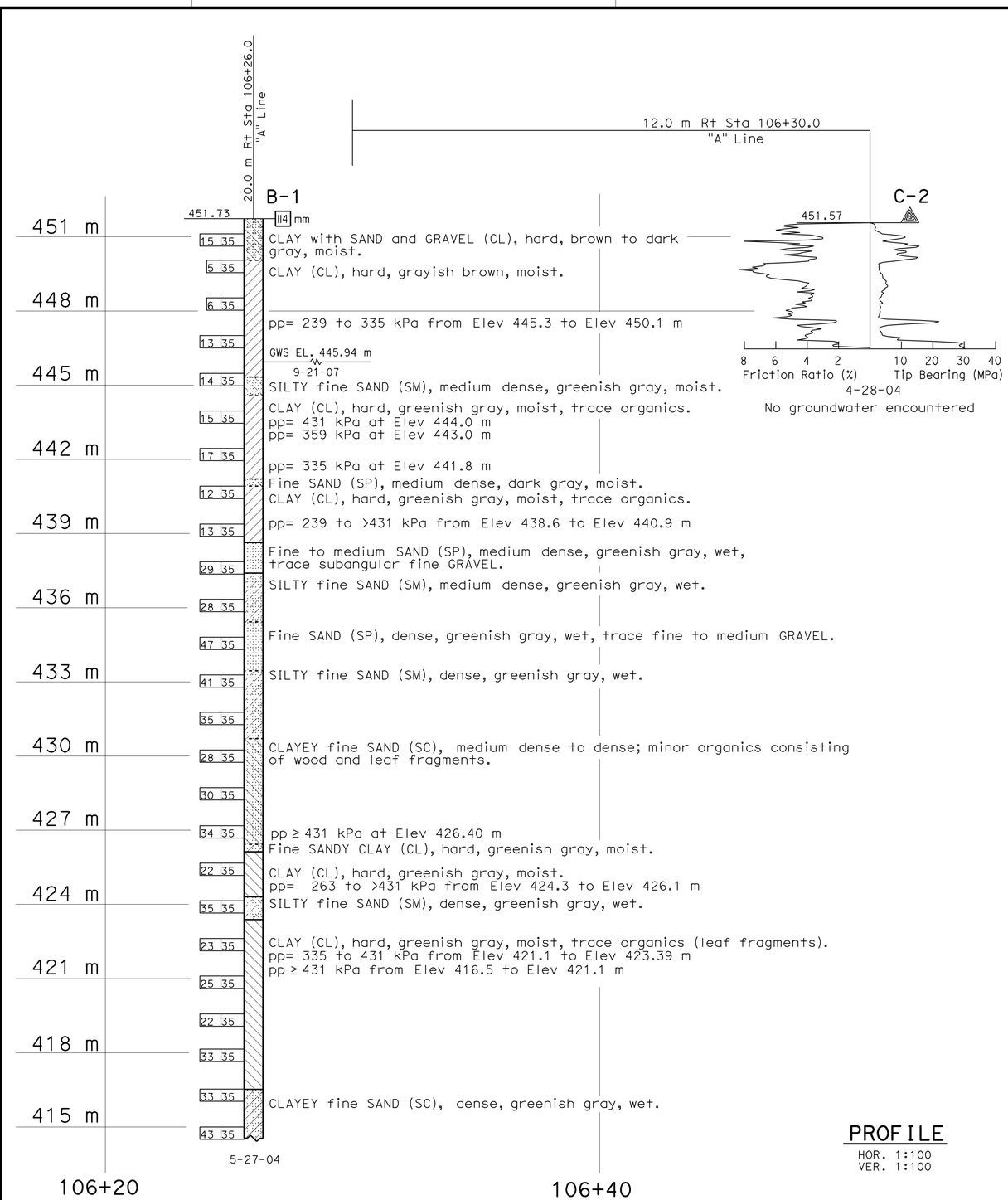

PROFILE
HOR. 1:100
VER. 1:100

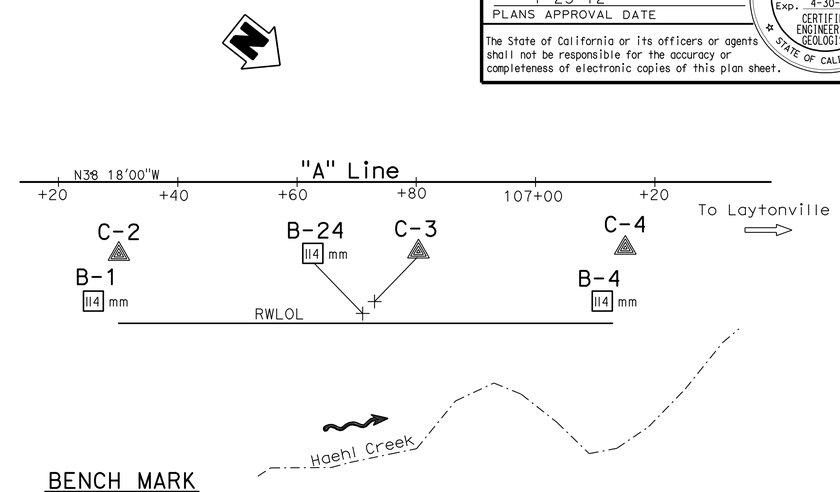

PLAN
1:500

BENCH MARK

SURVEY CONTROL

26200-58
Fnd ALCAR at C-1 106+80X3RT
1.644 m Rt ℄ "A" LINE
Sta 106+80.145
N 690615.313
E 1885757.840
Elev = 449.679 m

26200-82
Fnd 100d SPIKE
18.848 m Lt ℄ "A" LINE
Sta 108+62.901
N 690746.035
E 1885628.490
Elev = 449.041 m

NOTES:

1. Standard Penetration Tests (SPT) performed in Borings B-1, B-4, and B-24 were advanced using a 63.5 kg CME Automatic Hammer.
2. pp = Unconfined compressive strength determined in the field by "Pocket Penetrometer." Units shown are kilopascals (kPa).
3. UU = Undrained shear strength determined in the laboratory by Unconsolidated-Undrained Triaxial Test. Units shown are kilopascals (kPa).
4. qu = Unconfined compressive strength determined in the laboratory. Units shown are kilopascals (kPa).
5. Consistency descriptors shown on the LOTB sheets are based on the pocket penetrometer readings.
6. Ground water surface elevations are subject to seasonal fluctuations and may occur at higher or lower elevations depending on conditions at any particular time.

Caltrans Metric

ENGINEERING SERVICES	GEOTECHNICAL SERVICES
DRAWN BY	I.G-Remmen 5/09
CHECKED BY	T. Alderman

FIELD INVESTIGATION BY: T. Alderman

STATE OF CALIFORNIA DEPARTMENT OF TRANSPORTATION

DIVISION OF ENGINEERING SERVICES STRUCTURE DESIGN — DESIGN BRANCH 2

BRIDGE NO. 10E0001
KILOMETER POST R70.460

WILLITS BYPASS
A1RW
LOG OF TEST BORINGS 1 OF 3

ALL DIMENSIONS ARE IN METERS UNLESS OTHERWISE SHOWN

ORIGINAL SCALE IN MILLIMETERS FOR REDUCED PLANS 0 10 20 30 40 50 60 70 80 90 100

CU 01
EA 262001

DISREGARD PRINTS BEARING EARLIER REVISION DATES

REVISION DATES (PRELIMINARY STAGE ONLY) 05-14-09 11-16-09

SHEET 5 OF 7

OGS CIVIL LOG OF TEST BORINGS SHEET (METRIC) (REV. 4/04)

FILE => 10e-0001_nslotb01.dgn

USERNAME => s124196 DATE PLOTTED => 28-JAN-2012 TIME PLOTTED => 08:28

DIST	COUNTY	ROUTE	KILOMETER POST TOTAL PROJECT	SHEET No	TOTAL SHEETS
01	Men	101	R69.4/R78.9	930	939

CERTIFIED ENGINEERING GEOLOGIST — 11-17-09 DATE

REGISTERED GEOLOGIST — Reid Buell — No. 1481 — Exp. 4-30-11 — CERTIFIED ENGINEERING GEOLOGIST — STATE OF CALIFORNIA

1-23-12
PLANS APPROVAL DATE

The State of California or its officers or agents shall not be responsible for the accuracy or completeness of electronic copies of this plan sheet.

FOR PLAN VIEW, SEE
"LOG OF TEST BORINGS" 1 OF 3

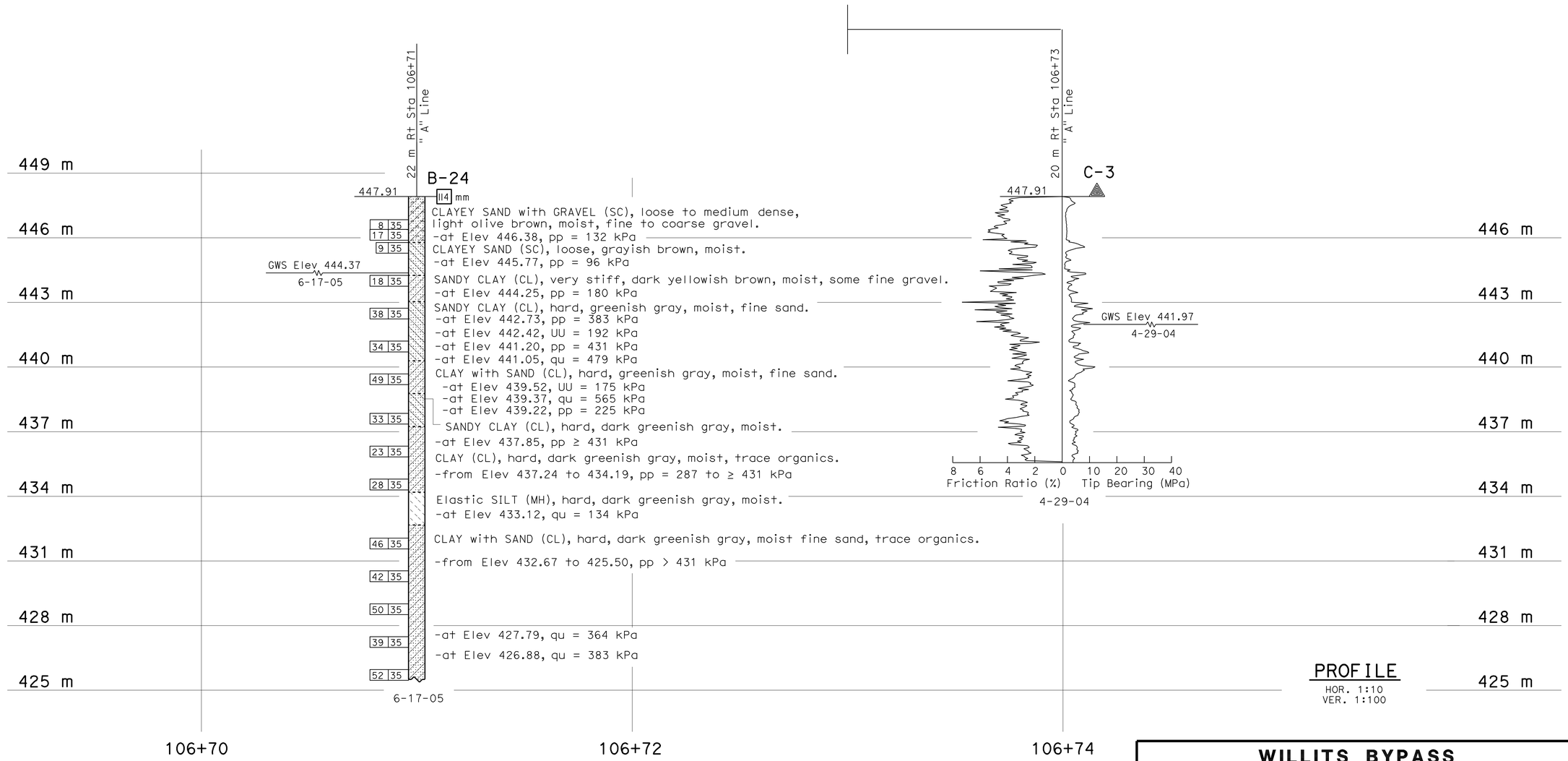

PROFILE
HOR. 1:10
VER. 1:100

LEGEND OF BORING OPERATIONS

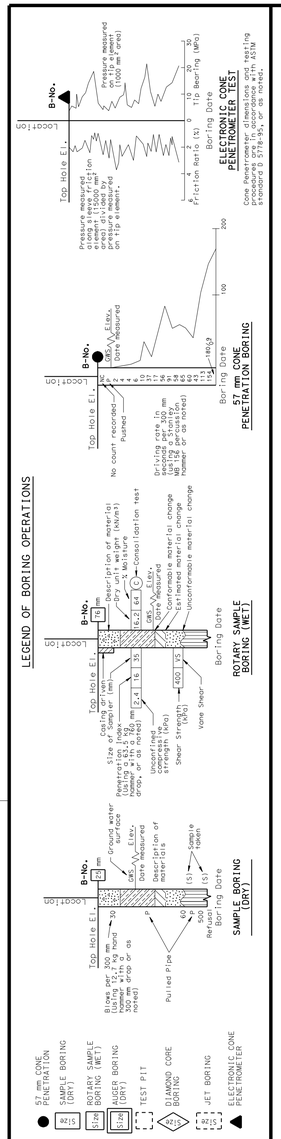

LEGEND OF EARTH MATERIALS

CONSISTENCY CLASSIFICATION FOR SOILS

According to the Standard Penetration Test

SPT N-Value (Blows/0.3m)	Granular	SPT N-Value (Blows/0.3m)	Cohesive
0-4	Very Loose	<2	Very Soft
5-10	Loose	2-4	Soft
11-30	Medium Dense	5-8	Firm
31-50	Dense	9-15	Stiff
>50	Very Dense	16-30	Very stiff
		>30	Hard

NOTE: Classification of earth material as shown on this sheet is based upon field inspection and is not to be construed to imply mechanical analysis.

OGS CIVIL LOG OF TEST BORINGS SHEET (METRIC) (REV. 4/04)

Caltrans Metric

ENGINEERING SERVICES	GEOTECHNICAL SERVICES
DRAWN BY	I.G-Remmen 4/09
CHECKED BY	T. Alderman

FIELD INVESTIGATION BY: T. Alderman

STATE OF CALIFORNIA DEPARTMENT OF TRANSPORTATION

DIVISION OF ENGINEERING SERVICES STRUCTURE DESIGN
DESIGN BRANCH 2

BRIDGE NO. 10E0001
KILOMETER POST R70.460

WILLITS BYPASS
A1RW
LOG OF TEST BORINGS 2 OF 3

ALL DIMENSIONS ARE IN METERS UNLESS OTHERWISE SHOWN

ORIGINAL SCALE IN MILLIMETERS FOR REDUCED PLANS 0 10 20 30 40 50 60 70 80 90 100

CU 01
EA 262001

DISREGARD PRINTS BEARING EARLIER REVISION DATES

REVISION DATES (PRELIMINARY STAGE ONLY) 05-14-09 11-16-09

SHEET 6 OF 7

FILE => 10e-0001_nslotb02.dgn

USERNAME => s124496 DATE PLOTTED => 28-JAN-2012 TIME PLOTTED => 08:29

DIST	COUNTY	ROUTE	KILOMETER POST TOTAL PROJECT	SHEET No	TOTAL SHEETS
01	Men	101	R69.4/R78.9	931	939

CERTIFIED ENGINEERING GEOLOGIST 11-17-09 DATE

REGISTERED GEOLOGIST Reid Buell No. 1481 Exp. 4-30-11 CERTIFIED ENGINEERING GEOLOGIST STATE OF CALIFORNIA

1-23-12
PLANS APPROVAL DATE

The State of California or its officers or agents shall not be responsible for the accuracy or completeness of electronic copies of this plan sheet.

FOR PLAN VIEW, SEE
"LOG OF TEST BORINGS" 1 OF 3

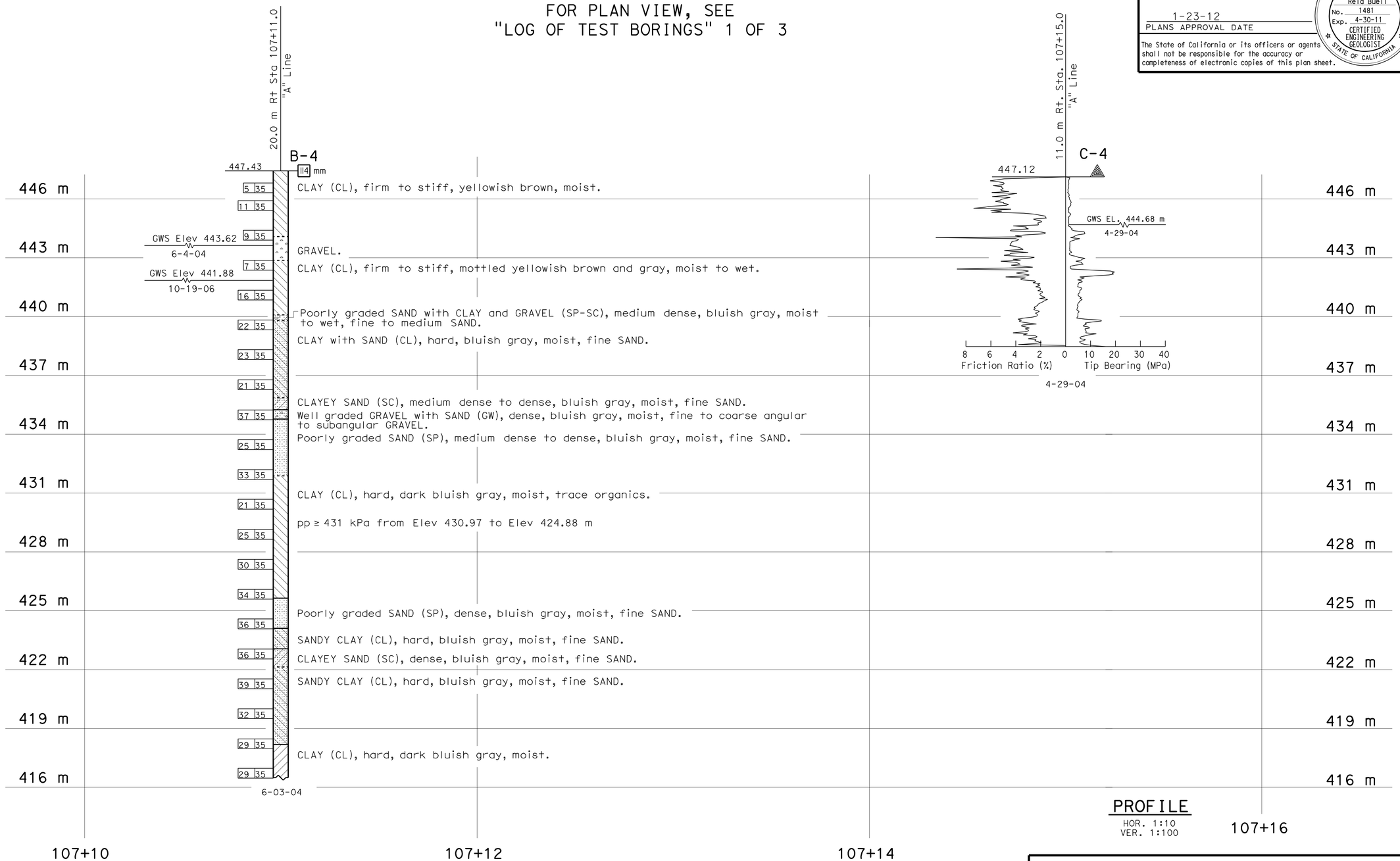

PROFILE
HOR. 1:10
VER. 1:100

LEGEND OF BORING OPERATIONS

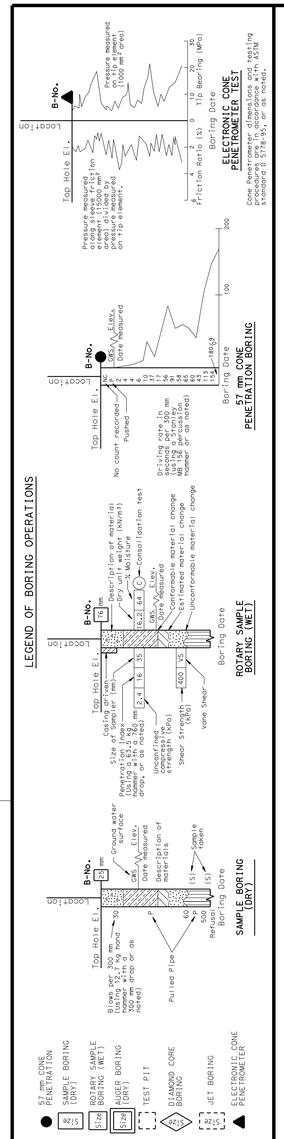

LEGEND OF EARTH MATERIALS

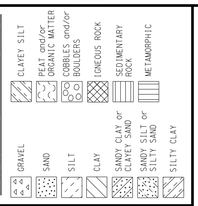

CONSISTENCY CLASSIFICATION FOR SOILS

According to the Standard Penetration Test

SPT N-Value (Blows/0.3m)	Granular	SPT N-Value (Blows/0.3m)	Cohesive
0-4	Very Loose	<2	Very Soft
5-10	Loose	2-4	Soft
11-30	Medium Dense	5-8	Firm
31-50	Dense	9-15	Stiff
>50	Very Dense	16-30	Very stiff
		>30	Hard

NOTE: Classification of earth material as shown on this sheet is based upon field inspection and is not to be construed to imply mechanical analysis.

OGS CIVIL LOG OF TEST BORINGS SHEET (METRIC) (REV. 4/04)

Caltrans Metric

ENGINEERING SERVICES	GEOTECHNICAL SERVICES
DRAWN BY	I.G-Remmen 4/09
CHECKED BY	T. Alderman

FIELD INVESTIGATION BY: T. Alderman

STATE OF CALIFORNIA DEPARTMENT OF TRANSPORTATION

DIVISION OF ENGINEERING SERVICES STRUCTURE DESIGN
DESIGN BRANCH 2

BRIDGE NO. 10E0001
KILOMETER POST R70.460

ALL DIMENSIONS ARE IN METERS UNLESS OTHERWISE SHOWN

ORIGINAL SCALE IN MILLIMETERS FOR REDUCED PLANS 0 10 20 30 40 50 60 70 80 90 100

CU 01
EA 262001

DISREGARD PRINTS BEARING EARLIER REVISION DATES

REVISION DATES (PRELIMINARY STAGE ONLY) 05-14-09 11-16-09

SHEET 7 OF 7

WILLITS BYPASS
A1RW
LOG OF TEST BORINGS 3 OF 3

FILE => 10e-0001_nslotb03.dgn

USERNAME => s124496 DATE PLOTTED => 28-JAN-2012 TIME PLOTTED => 08:29

DIST	COUNTY	ROUTE	KILOMETER POST TOTAL PROJECT	SHEET No	TOTAL SHEETS
01	Men	101	R69.4/R78.9	932	939

REGISTERED CIVIL ENGINEER 9-15-11 DATE

1-23-12
PLANS APPROVAL DATE

REGISTERED PROFESSIONAL ENGINEER M. Friedheim No. 57968 Exp. 6-30-12 CIVIL STATE OF CALIFORNIA

The State of California or its officers or agents shall not be responsible for the accuracy or completeness of electronic copies of this plan sheet.

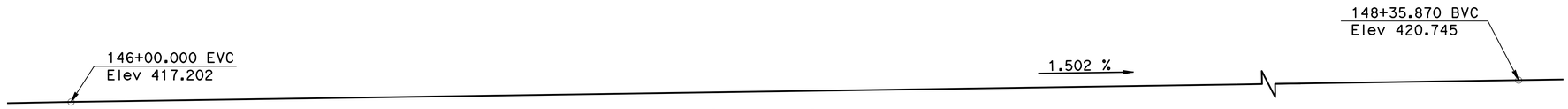

PROFILE GRADE
NO SCALE

BAECHTEL CREEK RETAINING WALL 10E0009
QUANTITIES

STRUCTURE EXCAVATION (RETAINING WALL)	804	m^3
STRUCTURE BACKFILL (RETAINING WALL)	975	m^3
PERVIOUS BACKFILL MATERIAL (RETAINING WALL)	115	m^3
FURNISH STEEL PILING (HP 250 X 62)	2 770	m
DRIVE STEEL PILE (HP 250 X 62)	108	EA
STRUCTURAL CONCRETE, RETAINING WALL	427	m^3
ARCHITECTURAL TEXTURE	386	m^2
BAR REINFORCING STEEL (RETAINING WALL)	37 600	kg
TUBULAR BICYCLE RAILING (MODIFIED)	110	m
CONCRETE BARRIER (TYPE 736A MOD)	110	m

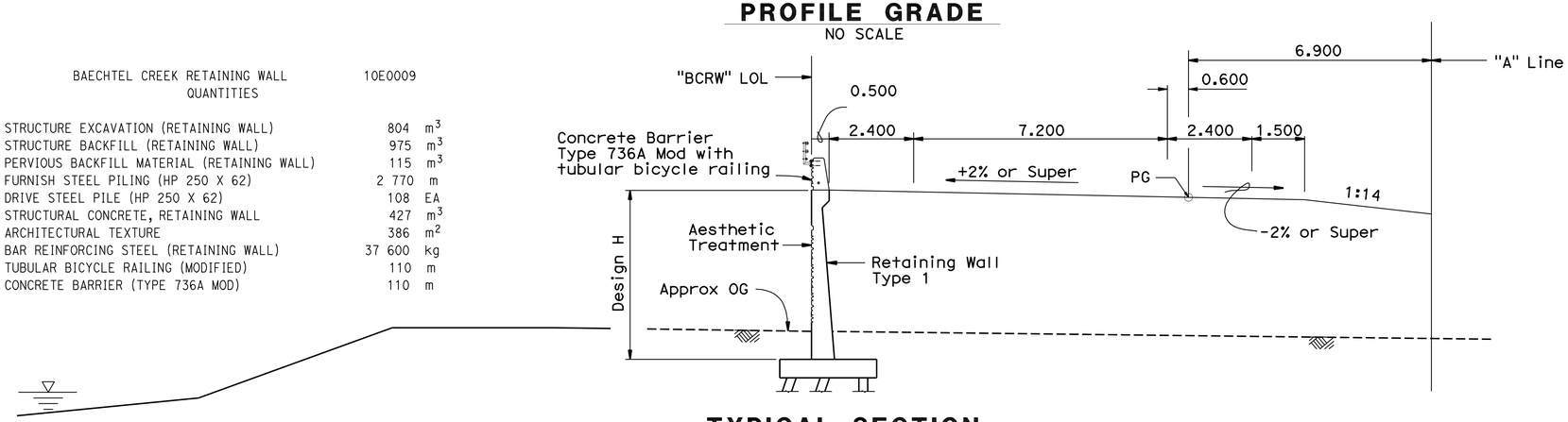

TYPICAL SECTION
1:80

INDEX TO PLANS

SHEET NO.	TITLE
1	GENERAL PLAN
2	FOUNDATION PLAN
3	PILE LAYOUT
4	WALL AESTHETIC DETAILS NO. 1
5	WALL AESTHETIC DETAILS NO. 2
6	BARRIER AESTHETIC DETAILS
7	TUBULAR BICYCLE RAILING
8	LOG OF TEST BORINGS

STANDARD PLANS DATED JULY 2004

A10A	ABBREVIATION
A10B	SYMBOLS
A62B	LIMITS OF PAYMENT FOR EXCAVATION AND BACKFILL - BRIDGE SURCHARGE AND WALL
B0-3	BRIDGE DETAILS
B3-1	RETAINING WALL TYPE 1 H = 1200 THROUGH 9100 mm
B3-8	RETAINING WALL DETAILS NO 1.
B11-56	CONCRETE BARRIER TYPE 736
RSP ES-9B	ELECTRICAL SYSTEMS (ELECTRICAL DETAILS STRUCTURE INSTALLATIONS)
RSP ES-9C	ELECTRICAL SYSTEMS (ELECTRICAL DETAILS STRUCTURE INSTALLATIONS)

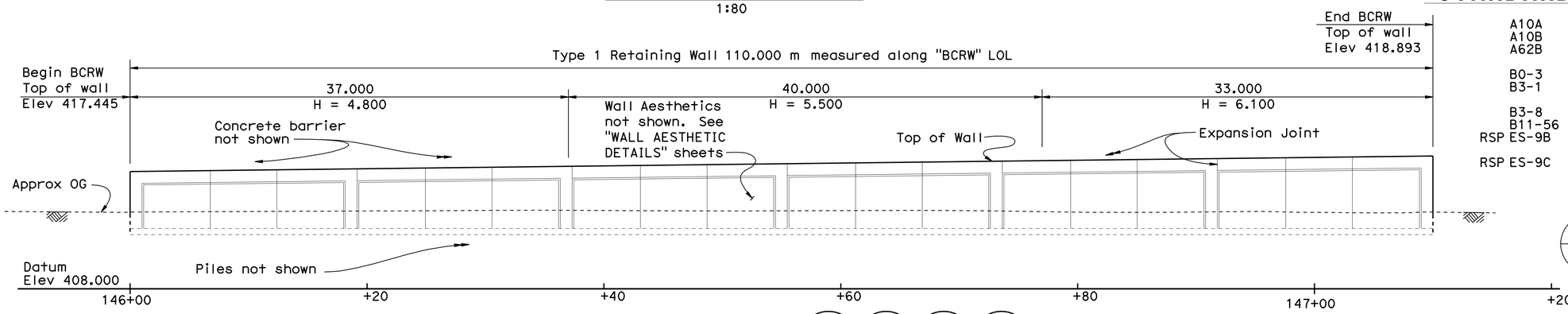

ELEVATION
1:200

B0-3 B3-1 B3-8 B11-56

STANDARD PLAN SHEET NO.

DETAIL NO.

NOTES:

1. For General Notes, see STANDARD PLAN B3-8.
2. For Pile Data Table, see "PILE LAYOUT" sheet.
3. For TOP OF WALL ELEVATION TABLE see "Barrier Aesthetic Details" sheet.

Indicates approx. ordinary high water

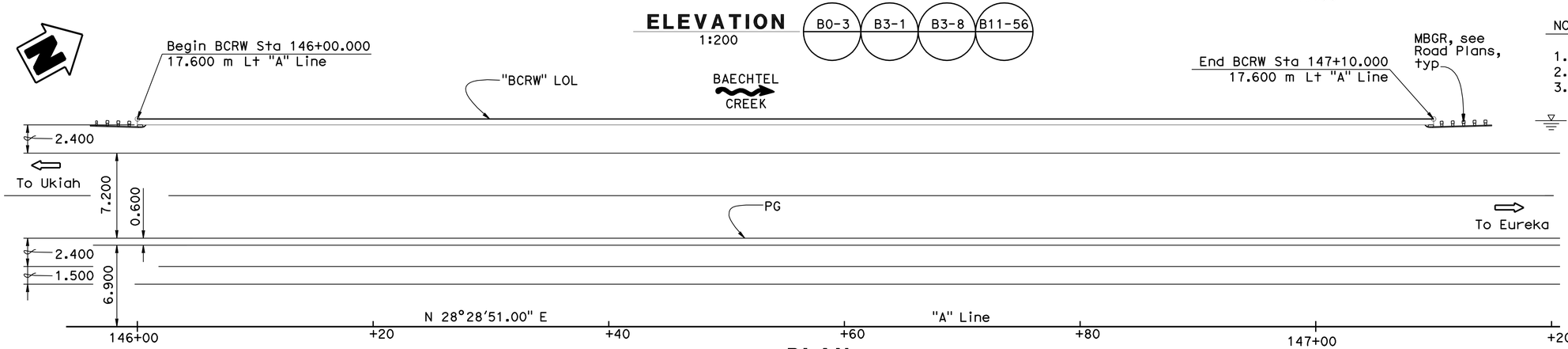

PLAN
1:200

DESIGN	BY J. Lee	CHECKED R. Odell	LOAD FACTOR DESIGN	LIVE LOADING: HS20-44 AND ALTERNATIVE AND PERMIT DESIGN LOAD	
DETAILS	BY Lily Wang	CHECKED R. Odell	LAYOUT	BY J. Lee	CHECKED R. Odell
QUANTITIES	BY R. Odell	CHECKED R. Macala	SPECIFICATIONS	BY I. Huang	PLANS AND SPECS COMPARED I. Huang

Caltrans Metric

DESIGN ENGINEER

ALL DIMENSIONS ARE IN METERS UNLESS OTHERWISE SHOWN

ORIGINAL SCALE IN MILLIMETERS FOR REDUCED PLANS 0 10 20 30 40 50 60 70 80 90 100

STATE OF CALIFORNIA
DEPARTMENT OF TRANSPORTATION

DIVISION OF ENGINEERING SERVICES
STRUCTURE DESIGN
DESIGN BRANCH 2

CU 01
EA 262001

BRIDGE NO. 10E0009
KILOMETER POST R74.430

WILLITS BYPASS
BAECHTEL CREEK RETAINING WALL
GENERAL PLAN

DISREGARD PRINTS BEARING EARLIER REVISION DATES

REVISION DATES 10-12-06 11-13-06 11-28-06 03-05-07 10-31-08 11-05-08 07-01-09

SHEET 1 OF 8

FILE => 10e-0009_pagp.dgn

STRUCTURES DESIGN GENERAL PLAN SHEET (METRIC) (REV.07-24-06)

USERNAME => s124496 DATE PLOTTED => 28-JAN-2012 TIME PLOTTED => 08:29

DIST	COUNTY	ROUTE	KILOMETER POST TOTAL PROJECT	SHEET No	TOTAL SHEETS
01	Men	101	R69.4/R78.9	933	939

Caltrans Metric

REGISTERED CIVIL ENGINEER 9-15-11 DATE

1-23-12
PLANS APPROVAL DATE

REGISTERED PROFESSIONAL ENGINEER M. Friedheim No. 57968 Exp. 06-30-12 CIVIL STATE OF CALIFORNIA

The State of California or its officers or agents shall not be responsible for the accuracy or completeness of electronic copies of this plan sheet.

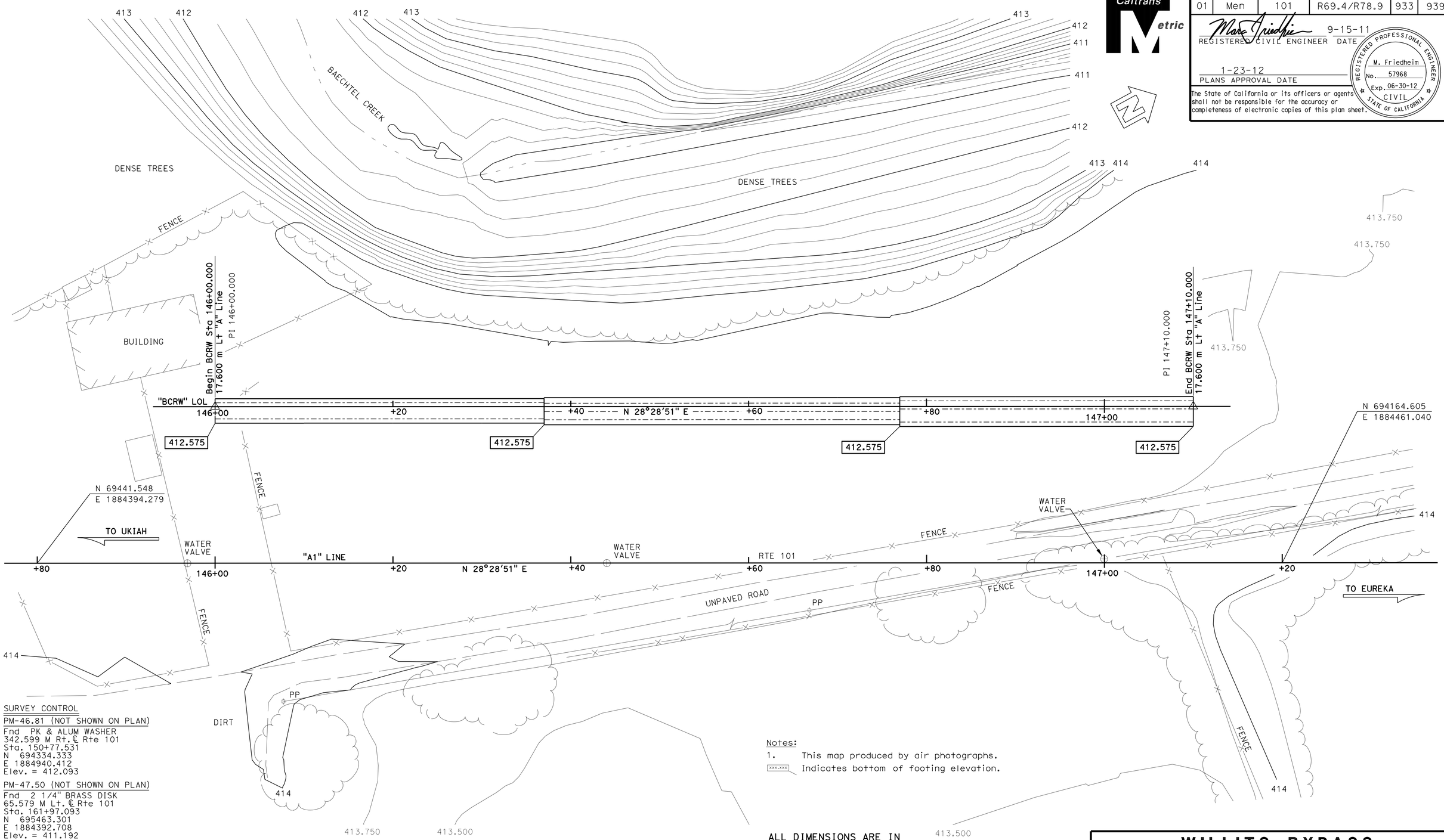

SURVEY CONTROL

PM-46.81 (NOT SHOWN ON PLAN)
Fnd PK & ALUM WASHER
342.599 M Rt. ℄ Rte 101
Sta. 150+77.531
N 694334.333
E 1884940.412
Elev. = 412.093

PM-47.50 (NOT SHOWN ON PLAN)
Fnd 2 1/4" BRASS DISK
65.579 M Lt. ℄ Rte 101
Sta. 161+97.093
N 695463.301
E 1884392.708
Elev. = 411.192

Notes:
1. This map produced by air photographs.
XXX.XXX Indicates bottom of footing elevation.

ALL DIMENSIONS ARE IN METERS UNLESS OTHERWISE SHOWN

PRELIMINARY INVESTIGATION SECTION

SCALE	VERT. DATUM NGVD29	PHOTOGRAMMETRY AS OF:			
1:200	HORZ. DATUM NAD83 (1991.35)	SURVEYED	BY DISTRICT/T.GILLETT	CHECKED BY E.LOPEZ	01/2007
ALIGNMENT TIES DIST TRAVERSE SHEET		DRAFTED	BY T.ZOLNIKOVA 01/2007	CHECKED BY T.GILLETT	01/2007

	BY	CHECKED
DESIGN	J. Lee	R. Odell
DETAILS	Lily Wang	R. Odell
QUANTITIES	R. Odell	R. Macala

STATE OF CALIFORNIA
DEPARTMENT OF TRANSPORTATION

DIVISION OF ENGINEERING SERVICES
STRUCTURE DESIGN
DESIGN BRANCH 2

BRIDGE NO. 10E0009
KILOMETER POST R74.430

WILLITS BYPASS
BAECHTEL CREEK RETAINING WALL
FOUNDATION PLAN

STRUCTURES FOUNDATION PLAN SHEET (METRIC) (REV.10-27-05)

ORIGINAL SCALE IN MILLIMETERS FOR REDUCED PLANS 0 10 20 30 40 50 60 70 80 90 100

CU 01
EA 262001

DISREGARD PRINTS BEARING EARLIER REVISION DATES

REVISION DATES (PRELIMINARY STAGE ONLY) 01-31-07 10-30-08

SHEET 2 OF 8

FILE => 10e-0009_pefp1.dgn

USERNAME => s124496 DATE PLOTTED => 28-JAN-2012 TIME PLOTTED => 08:30

DIST	COUNTY	ROUTE	KILOMETER POST TOTAL PROJECT	SHEET No	TOTAL SHEETS
01	Men	101	R69.4/R78.9	934	939

REGISTERED CIVIL ENGINEER 9-15-11 DATE

1-23-12
PLANS APPROVAL DATE

REGISTERED PROFESSIONAL ENGINEER M. Friedheim No. 57968 Exp. 6-30-12 CIVIL STATE OF CALIFORNIA

The State of California or its officers or agents shall not be responsible for the accuracy or completeness of electronic copies of this plan sheet.

PILE DATA TABLE					
Location	Pile Type	Nominal Resistance		Design Tip Elevation	Specified Tip Elevation
		Compression	Tension		
All Locations	HP 360 X 132	800 KN	0 KN	396.5 (1) 388.0 (2)	388.0

(1) Design tip elevation controlled by compression
(2) Design tip elevation controlled by downdrag

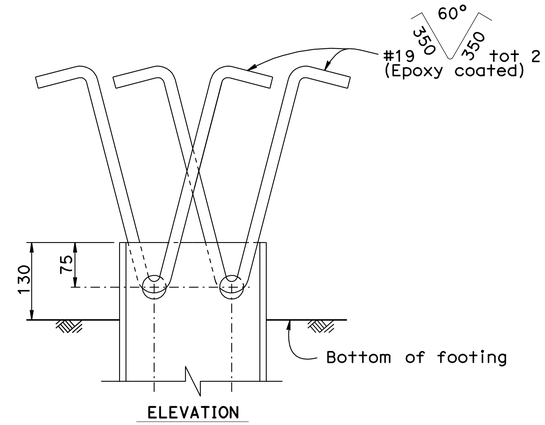

ELEVATION

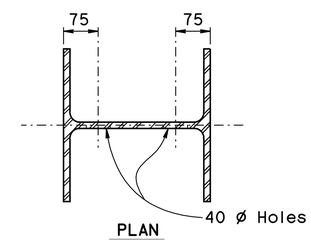

PLAN

STEEL PILE ANCHOR
1:5

LEGEND

Indicates battered pile (3:1)

Indicates vertical pile

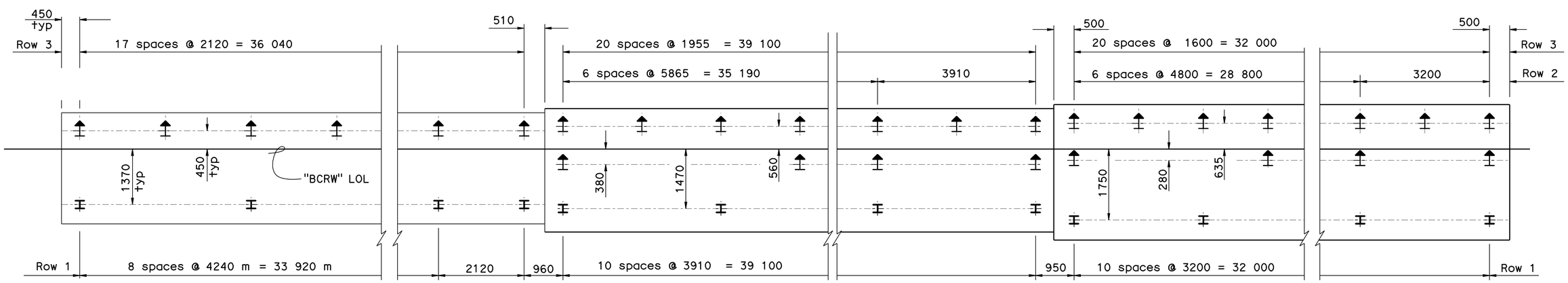

PILE LAYOUT
1:50

DESIGN	BY J. Lee	CHECKED R. Odell	
DETAILS	BY Lily Wang	CHECKED R. Odell	
QUANTITIES	BY R. Odell	CHECKED R. Macala	

STATE OF CALIFORNIA
DEPARTMENT OF TRANSPORTATION

DIVISION OF ENGINEERING SERVICES
STRUCTURE DESIGN
DESIGN BRANCH 2

BRIDGE NO. 10E0009
KILOMETER POST R74.430

WILLITS BYPASS
BAECHTEL CREEK RETAINING WALL
PILE LAYOUT

ALL DIMENSIONS ARE IN MILLIMETERS UNLESS OTHERWISE SHOWN

ORIGINAL SCALE IN MILLIMETERS FOR REDUCED PLANS 0 10 20 30 40 50 60 70 80 90 100

CU 01
EA 262001

DISREGARD PRINTS BEARING EARLIER REVISION DATES

REVISION DATES: 10-18-06 11-15-06 11-28-06 03-05-07 10-30-08 07-01-09 07-14-09 12-08-09

SHEET 3 OF 8

FILE => 10e-0009_pplo.dgn

STRUCTURES DESIGN DETAIL SHEET (METRIC) (REV.03-17-04)

USERNAME => s124936 DATE PLOTTED => 28-JAN-2012 TIME PLOTTED => 08:30

DIST	COUNTY	ROUTE	KILOMETER POST TOTAL PROJECT	SHEET No	TOTAL SHEETS
01	Men	101	R69.4/R78.9	935	939

REGISTERED CIVIL ENGINEER 9-15-11 DATE

1-23-12
PLANS APPROVAL DATE

REGISTERED PROFESSIONAL ENGINEER M. Friedheim No. 57968 Exp. 06-30-12 CIVIL STATE OF CALIFORNIA

The State of California or its officers or agents shall not be responsible for the accuracy or completeness of electronic copies of this plan sheet.

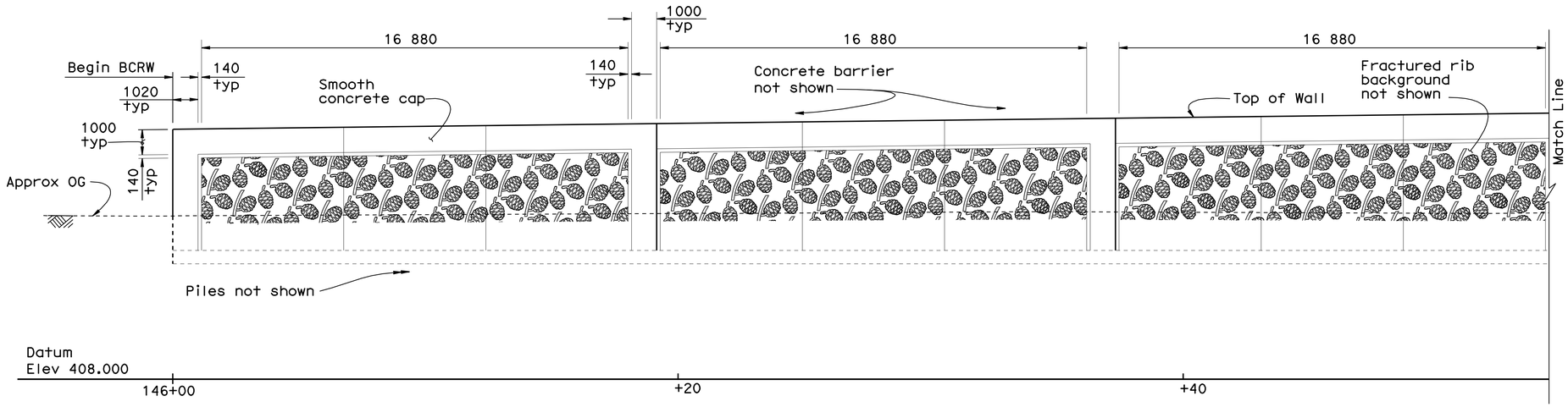

ELEVATION
1:100

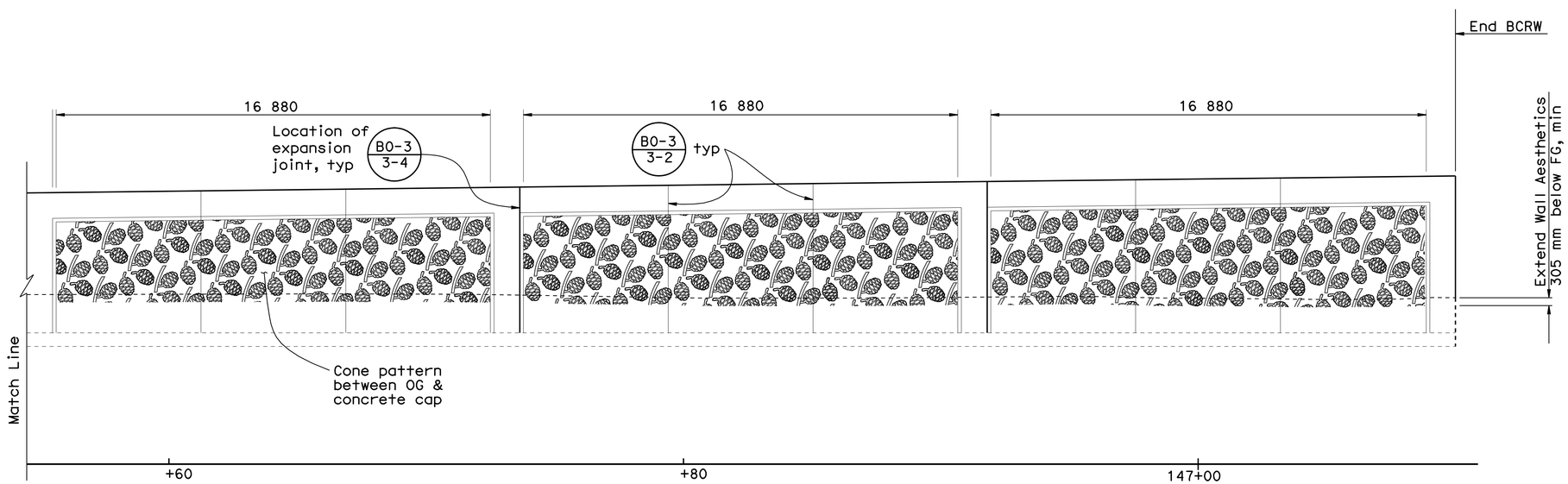

ELEVATION
1:100

DESIGN	BY J. Lee	CHECKED R. Odell	
DETAILS	BY Lily Wang	CHECKED R. Odell	
QUANTITIES	BY R. Odell	CHECKED R. Macala	

STATE OF CALIFORNIA
DEPARTMENT OF TRANSPORTATION

DIVISION OF ENGINEERING SERVICES
STRUCTURE DESIGN
DESIGN BRANCH 2

BRIDGE NO. 10E0009
KILOMETER POST R74.430

CU 01
EA 262001

ALL DIMENSIONS ARE IN MILLIMETERS UNLESS OTHERWISE SHOWN

ORIGINAL SCALE IN MILLIMETERS FOR REDUCED PLANS 0 10 20 30 40 50 60 70 80 90 100

DISREGARD PRINTS BEARING EARLIER REVISION DATES

REVISION DATES: 10-25-06, 11-15-06, 11-28-06, 03-09-07, 10-30-08

SHEET 4 OF 8

WILLITS BYPASS
BAECHTEL CREEK RETAINING WALL
WALL AESTHETIC DETAILS NO.1

FILE => 10e-0009_puadt01.dgn

STRUCTURES DESIGN DETAIL SHEET (METRIC) (REV.03-17-04)

USERNAME => s124436 DATE PLOTTED => 28-JAN-2012 TIME PLOTTED => 08:30

DIST	COUNTY	ROUTE	KILOMETER POST TOTAL PROJECT	SHEET No	TOTAL SHEETS
01	Men	101	R69.4/R78.9	936	939

REGISTERED CIVIL ENGINEER 9-15-11 DATE

1-23-12
PLANS APPROVAL DATE

REGISTERED PROFESSIONAL ENGINEER M. Friedheim No. 57968 Exp. 06-30-12 CIVIL STATE OF CALIFORNIA

The State of California or its officers or agents shall not be responsible for the accuracy or completeness of electronic copies of this plan sheet.

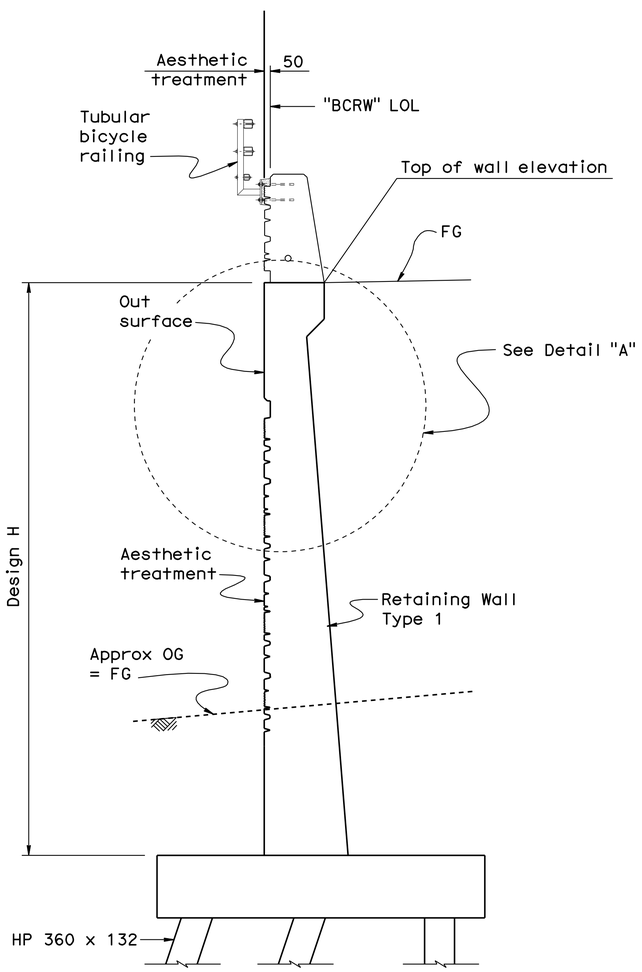

TYPICAL SECTION
1:25

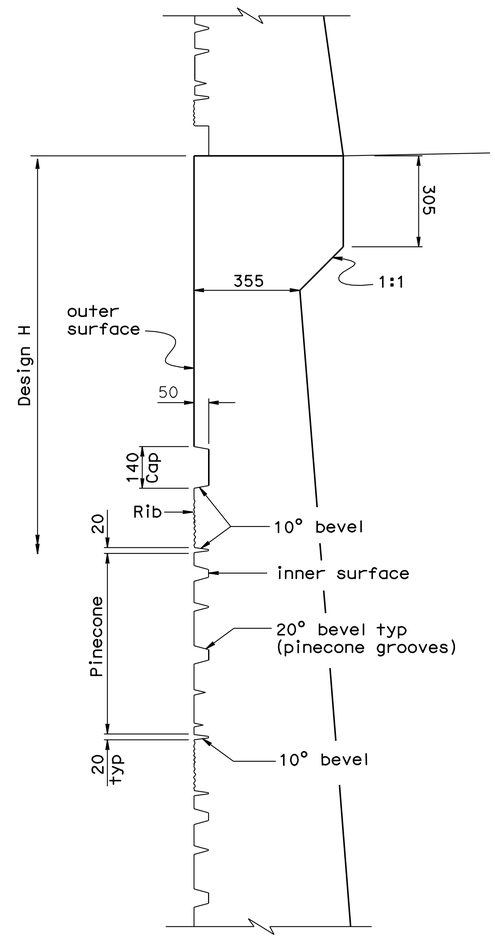

DETAIL "A"
1:10

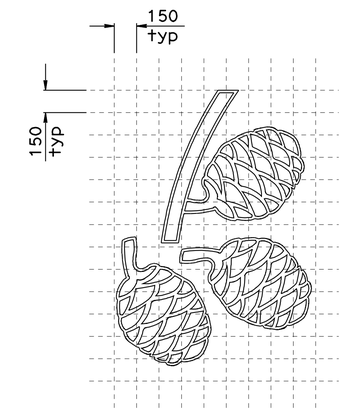

150 mm GRID
1:20

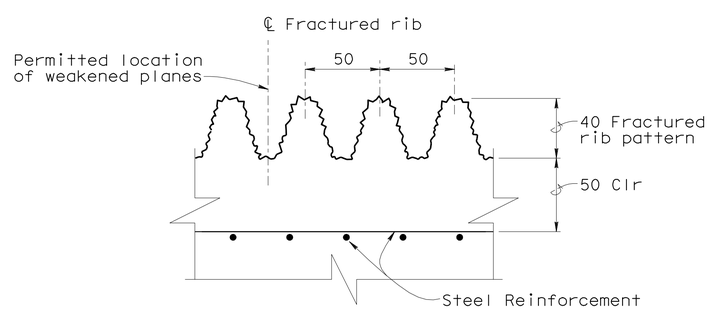

TYPICAL FRACTURED RIB TEXTURE
1:2

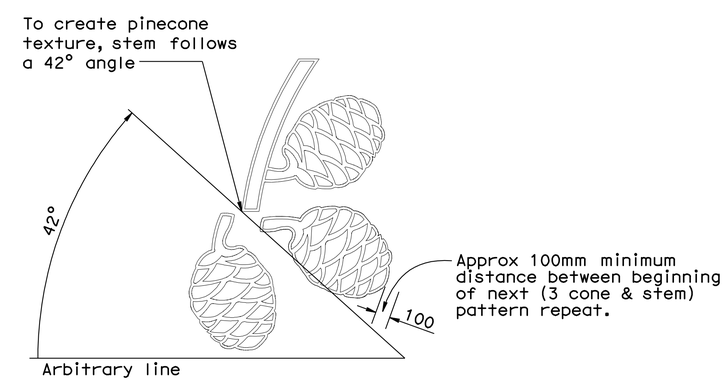

THREE CONE & STEM
NO SCALE

Caltrans Metric

DESIGN	BY J. Lee	CHECKED R. Odell	
DETAILS	BY Lily Wang	CHECKED R. Odell	
QUANTITIES	BY R. Odell	CHECKED R. Macala	

STATE OF CALIFORNIA
DEPARTMENT OF TRANSPORTATION

DIVISION OF ENGINEERING SERVICES
STRUCTURE DESIGN
DESIGN BRANCH 2

BRIDGE NO. 10E0009
KILOMETER POST R74.430

WILLITS BYPASS
BAECHTEL CREEK RETAINING WALL
WALL AESTHETIC DETAILS NO.2

ALL DIMENSIONS ARE IN MILLIMETERS UNLESS OTHERWISE SHOWN

ORIGINAL SCALE IN MILLIMETERS FOR REDUCED PLANS 0 10 20 30 40 50 60 70 80 90 100

CU 01
EA 262001

DISREGARD PRINTS BEARING EARLIER REVISION DATES

REVISION DATES: 11-01-06 11-28-06 10-30-08 1-26-09 12-08-09

SHEET 5 OF 8

FILE => 10e-0009_puadt02.dgn

STRUCTURES DESIGN DETAIL SHEET (METRIC) (REV.03-17-04)

USERNAME => s124496 DATE PLOTTED => 28-JAN-2012 TIME PLOTTED => 08:31

DIST	COUNTY	ROUTE	KILOMETER POST TOTAL PROJECT	SHEET No	TOTAL SHEETS
01	Men	101	R69.4/R78.9	937	939

REGISTERED CIVIL ENGINEER 9-15-11 DATE

1-23-12
PLANS APPROVAL DATE

REGISTERED PROFESSIONAL ENGINEER M. Friedheim No. 57968 Exp. 06-30-12 CIVIL STATE OF CALIFORNIA

The State of California or its officers or agents shall not be responsible for the accuracy or completeness of electronic copies of this plan sheet.

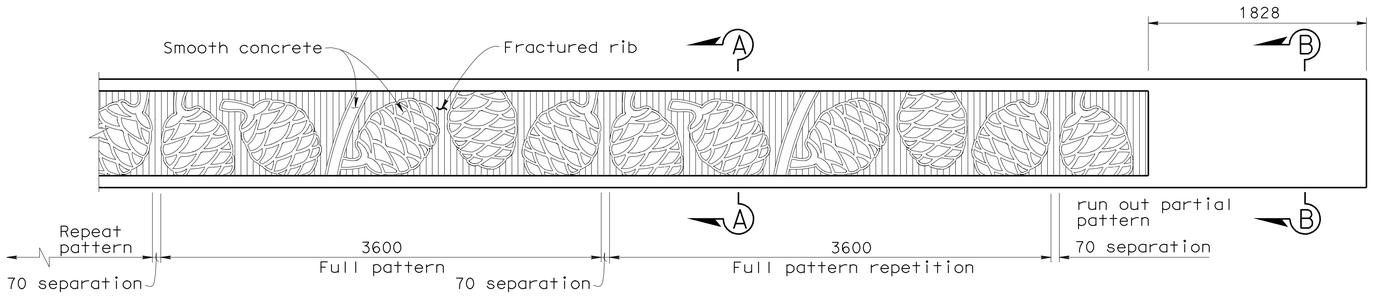

TYPE 736A MOD BARRIER
PARTIAL ELEVATION
1:25

TOP OF WALL ELEVATION TABLE	
STATION	ELEVATION
14+600	417.445
14+610	417.577
14+620	417.708
14+630	417.840
14+640	417.972
14+650	418.103
14+660	418.235
14+670	418.366
14+680	418.498
14+690	418.629
14+700	418.761
14+710	418.893

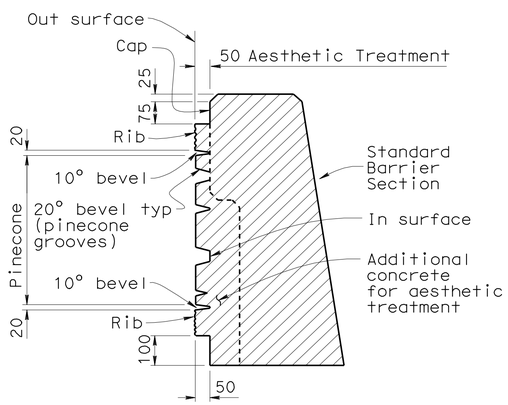

SECTION A-A
1:10

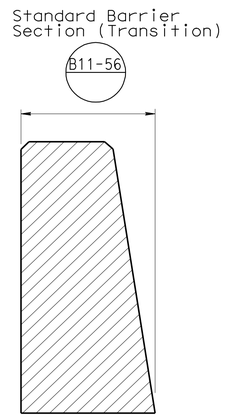

SECTION B-B
1:10

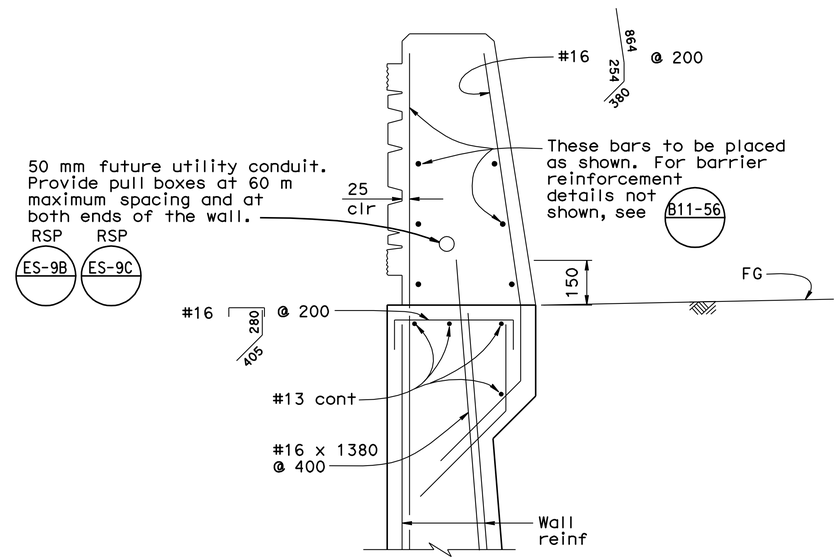

BARRIER REINFORCEMENT MODIFICATION
1:10

DESIGN	BY J. Lee/V. Moore	CHECKED M. Friedheim	
DETAILS	BY Lily Wang	CHECKED M. Friedheim	
QUANTITIES	BY R. Odell	CHECKED R. Macala	

STATE OF CALIFORNIA
DEPARTMENT OF TRANSPORTATION

DIVISION OF ENGINEERING SERVICES
STRUCTURE DESIGN
DESIGN BRANCH 2

CU 01
EA 262001

BRIDGE NO. 10E0009
KILOMETER POST R74.430

WILLITS BYPASS
BAECHTEL CREEK RETAINING WALL
BARRIER AESTHETIC DETAILS

Caltrans Metric

ALL DIMENSIONS ARE IN MILLIMETERS UNLESS OTHERWISE SHOWN

ORIGINAL SCALE IN MILLIMETERS FOR REDUCED PLANS 0 10 20 30 40 50 60 70 80 90 100

DISREGARD PRINTS BEARING EARLIER REVISION DATES

REVISION DATES: 11-02-06 11-02-06 11-28-06 11-30-06 03-05-07 10-31-08 11-05-08 1-26-09 7-01-09

SHEET 6 OF 8

FILE => 10e-0009_pvbadt01.dgn

STRUCTURES DESIGN DETAIL SHEET (METRIC) (REV.03-17-04)

USERNAME => s124496 DATE PLOTTED => 28-JAN-2012 TIME PLOTTED => 08:32

DIST.	COUNTY	ROUTE	KILOMETER POST TOTAL PROJECT	SHEET NO.	TOTAL SHEETS
01	Men	101	R69.4/R78.9	938	939

Caltrans Metric

REGISTERED ENGINEER - CIVIL 9-15-11

PLANS APPROVAL DATE 1-23-12

REGISTERED PROFESSIONAL ENGINEER M. Friedheim No. 57968 Exp. 6-30-12 CIVIL STATE OF CALIFORNIA

The State of California or its officers or agents shall not be responsible for the accuracy or completeness of electronic copies of this plan sheet.

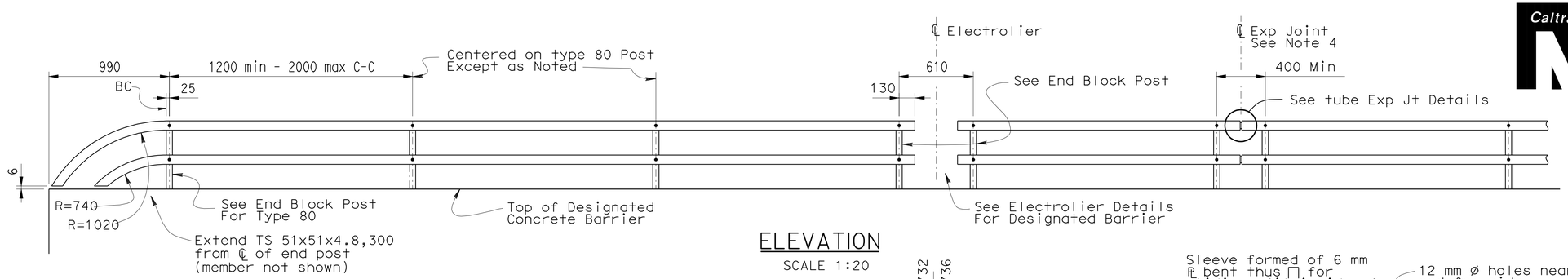

ELEVATION
SCALE 1:20

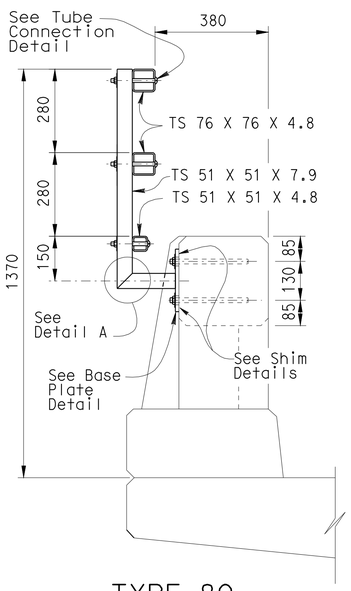

TYPE 80
END BLOCK POST
SCALE 1:10

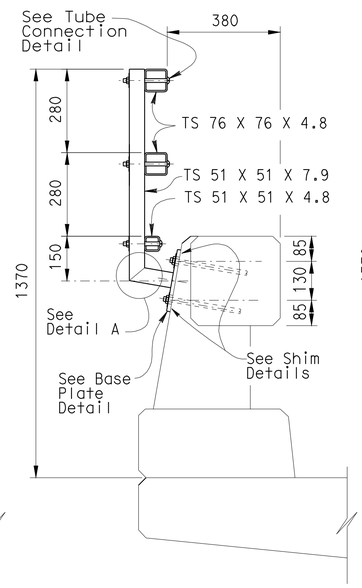

TYPE 80
SCALE 1:10

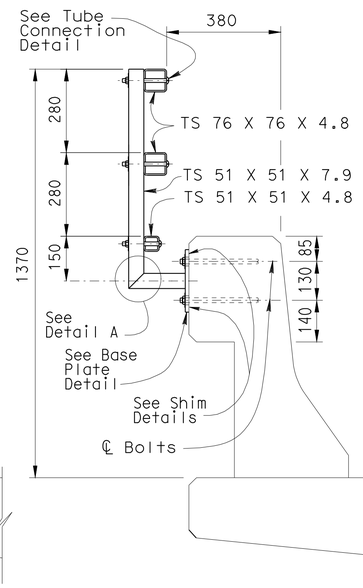

TYPE 25
SCALE 1:10

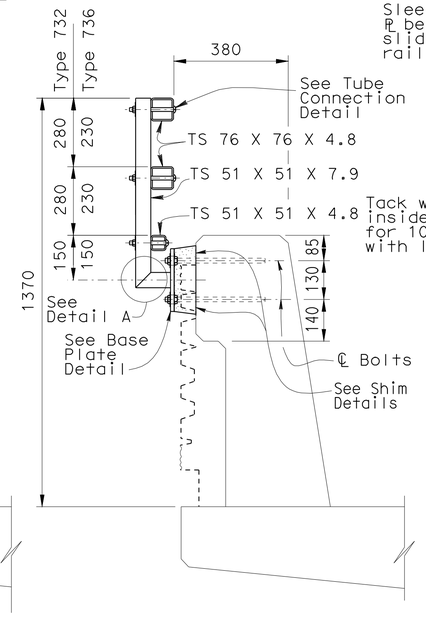

TYPE 732 OR 736 ◇1
NO SCALE

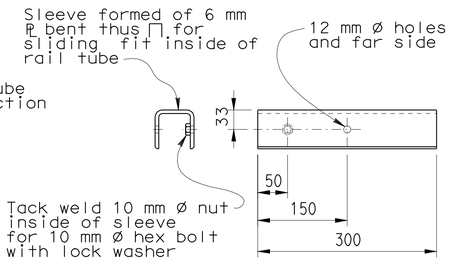

SLEEVE DETAIL
SCALE 1:5

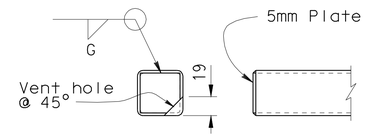

RAIL CAP DETAIL
SCALE 1:5

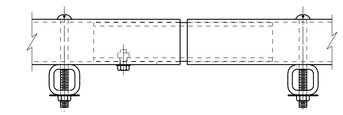

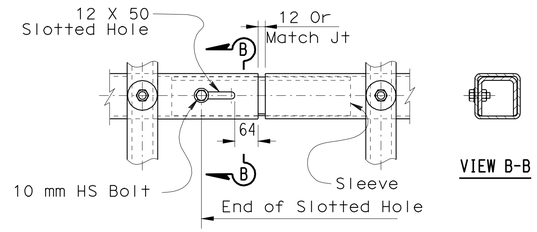

TUBE EXPANSION JOINT DETAILS
SCALE 1:5

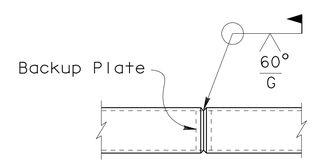

WELDED SPLICE DETAIL
SCALE 1:5

NOTES:

1. Galvanize rail assembly after fabrication.
2. Post shall be normal to railing.
3. Rail tubes shall be shop bent or fabricated to fit horizontal curve when radius is less than 300 m.
4. Tube splices shall be located in the tubes spanning deck or wall joints. Increase joint width in tubes to match expansion joint width and increase sleeve length correspondingly.
5. Top rail tube shall be continuous over not less than two posts except a short post spacing is permitted near deck or wall joints, electroliers, or other rail discontinuities as noted.
6. For details and reinforcement not shown see Standard Plans.
7. See project plans for limits of tubular bicycle railing.
8. CIP threaded rods may alternatively be installed using a drill and bond method with epoxy cartridges after forming and pouring barrier concrete. Plates to be placed against level surface.

SPECIAL DETAILS

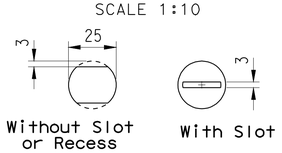

VIEW C-C
SCALE 1:1

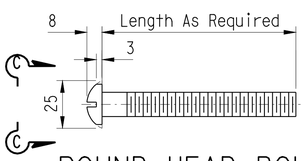

ROUND HEAD BOLT DETAIL
SCALE 1:1

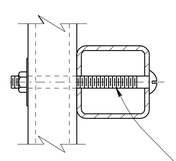

TUBE CONNECTION DETAIL
SCALE 1:2.5

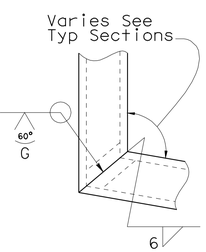

DETAIL A
SCALE 1:2.5

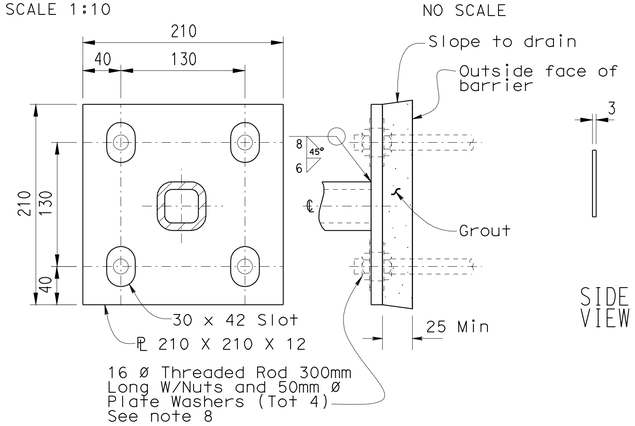

BASE PLATE DETAIL ◇2
SCALE 1:2.5

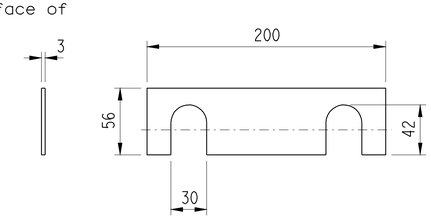

SHIM DETAILS
NO SCALE

RELEASE DATE	REVISED	DESIGN	BY TILLAT SATTER	CHECKED NEELIMA PATIL	RELEASED BY
FILE NO.	XS16-500	DETAILS	BY H.NGUYEN	CHECKED TILLAT SATTER	OFFICE CHIEF
		SUBMITTED	BY	DRAWING DATE 08/06	

◇1 Barrier modified
◇2 Plate details modified

STATE OF CALIFORNIA
DEPARTMENT OF TRANSPORTATION

DIVISION OF ENGINEERING SERVICES

BRIDGE NO. 10E0009
KILOMETER POST R74.430

WILLITS BYPASS
BAECHTEL CREEK RETAINING WALL
TUBULAR BICYCLE RAILING

DS OSD 2139M (METRIC) (REV. 3/5/97)

ORIGINAL SCALE IN MILLIMETERS FOR REDUCED PLANS 0 10 20 30 40 50 60 70 80 90 100

CU 01
EA 262001

DISREGARD PRINTS BEARING EARLIER REVISION DATES

REVISION DATES (PRELIMINARY STAGE ONLY) 4-30-08 10-31-08 1-26-09 7-06-09 7-15-09 12-08-09

SHEET 7 OF 8

USERNAME => s124496

FILE => 10e-0009_pvtub_br.dgn

USERNAME => s124496 DATE PLOTTED => 28-JAN-2012 TIME PLOTTED => 08:32

OGS CIVIL LOG OF TEST BORINGS SHEET (METRIC) (REV. 4/04)

CONSISTENCY CLASSIFICATION FOR SOILS

According to the Standard Penetration Test

SPT N-Value (Blows/ 0.3m)	Granular	SPT N-Value (Blows/ 0.3m)	Cohesive
0-4	Very Loose	<2	Very Soft
5-10	Loose	2-4	Soft
11-30	Medium Dense	5-8	Firm
31-50	Dense	9-15	Stiff
>50	Very Dense	16-30	Very stiff
		>30	Hard

NOTE: Classification of earth material as shown on this sheet is based upon field inspection and is not to be construed to imply mechanical analysis.

LEGEND OF EARTH MATERIALS

GRAVEL, SAND, SILT, CLAY, SANDY CLAY or CLAYEY SAND, SANDY SILT or SILTY SAND, SILTY CLAY, CLAYEY SILT, PEAT and/or ORGANIC MATTER, COBBLES and/or BOULDERS, IGNEOUS ROCK, SEDIMENTARY ROCK, METAMORPHIC

LEGEND OF BORING OPERATIONS

57 mm CONE PENETRATION; SAMPLE BORING (DRY); ROTARY SAMPLE BORING (WET); AUGER BORING (DRY); TEST PIT; DIAMOND CORE BORING; JET BORING; ELECTRONIC CONE PENETROMETER

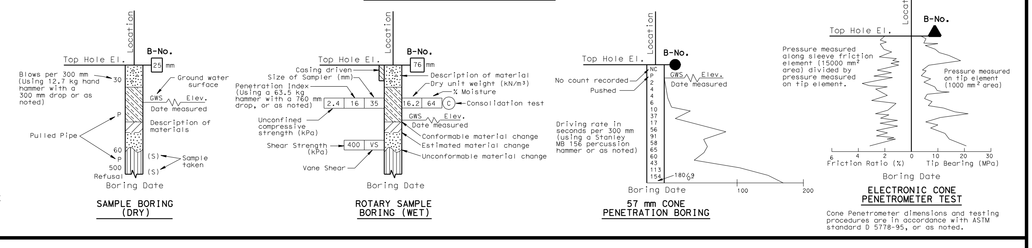

Cone Penetrometer dimensions and testing procedures are in accordance with ASTM standard D 5778-95, or as noted.

Caltrans Metric

ENGINEERING SERVICES | GEOTECHNICAL SERVICES

DRAWN BY F. Nguyen 12/08

CHECKED BY

ALL DIMENSIONS ARE IN METERS UNLESS OTHERWISE SHOWN

FIELD INVESTIGATION BY: T. Alderman

ORIGINAL SCALE IN MILLIMETERS FOR REDUCED PLANS 0 10 20 30 40 50 60 70 80 90 100

STATE OF CALIFORNIA
DEPARTMENT OF TRANSPORTATION

DIVISION OF ENGINEERING SERVICES
STRUCTURE DESIGN
DESIGN BRANCH 2

CU 01
EA 262001

BRIDGE NO. 10E0009
KILOMETER POST R74.430

DISREGARD PRINTS BEARING EARLIER REVISION DATES

REVISION DATES (PRELIMINARY STAGE ONLY)

SHEET 8 OF 8

BAECHTEL CREEK RETAINING WALL

LOG OF TEST BORINGS

WILLITS BYPASS

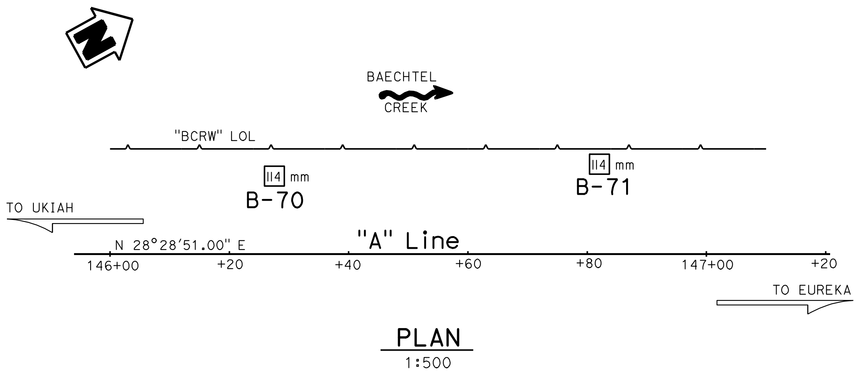

PLAN

1:500

BENCH MARK

SURVEY CONTROL

PM-46.81

Fnd PK & ALUM WASHER
342.599 m Rt ℄ Rte 101
Sta 150+77.531
N 694334.333
E 1884940.412
Elev = 412.093

Notes:

1. Standard Penetration Tests (SPT) performed in Borings B-70 and B-71 were advanced using a 63.5 kg Diedrich Automatic Hammer.
2. pp= Unconfined commpressive strength determined in the field by "Pocket Penetrometer." Units shown are kilopascals (kPa).
3. Consistency descriptors shown on the LOTB sheets are based on the pocket penetrometer readings.
4. UU = Undrained shear strength determined in the laboratory by Unconsolidated-Undrained Triaxial Test. Units shown are kilopascals (kPa).
5. Ground water surface Elevations are subject to seasonal fluctuations and may occur at higher or lower Elevations depending on conditions at time of construction.

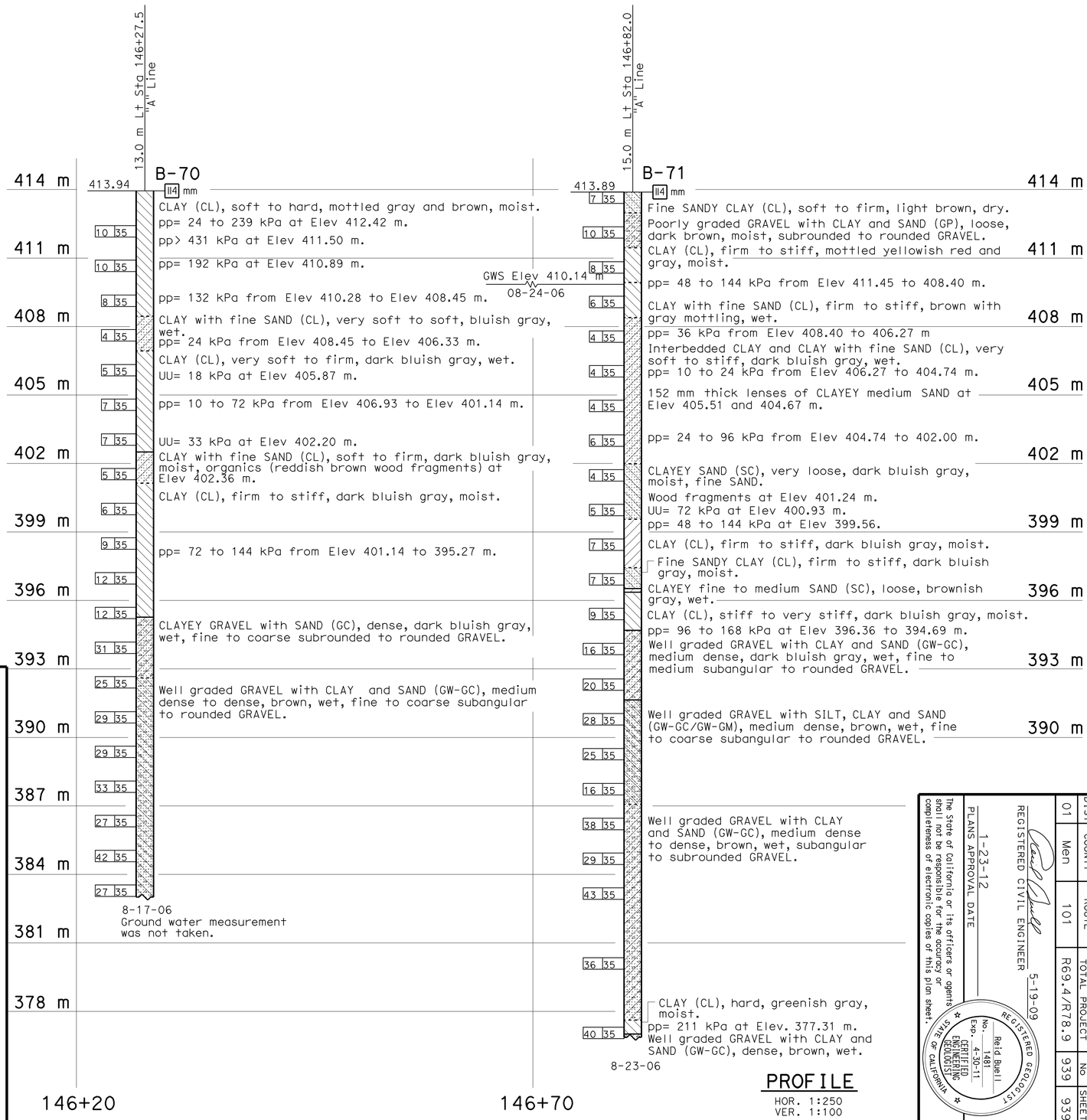

PROFILE

HOR. 1:250
VER. 1:100

REGISTERED CIVIL ENGINEER 5-19-09

PLANS APPROVAL DATE 1-23-12

REGISTERED GEOLOGIST — Reid Buell No. 1481 Exp. 4-30-11 — CERTIFIED ENGINEERING GEOLOGIST — STATE OF CALIFORNIA

The State of California or its officers or agents shall not be responsible for the accuracy or completeness of electronic copies of this plan sheet.

DIST	COUNTY	ROUTE	KILOMETER POST TOTAL PROJECT	SHEET NO	TOTAL SHEETS
01	Men	101	R69.4/R78.9	939	939