Dist	COUNTY	ROUTE	POST MILES TOTAL PROJECT	SHEET No.	TOTAL SHEETS
01	Hum	36	22.8/27.7	1	46

STATE OF CALIFORNIA

DEPARTMENT OF TRANSPORTATION

ACSTP-ER-19B6(004)E

PROJECT PLANS FOR CONSTRUCTION ON

STATE HIGHWAY

IN HUMBOLDT COUNTY NEAR BRIDGEVILLE AT VARIOUS LOCATIONS FROM 1.1 MILES WEST TO 3.7 MILES EAST OF VAN DUZEN RIVER BRIDGE

TO BE SUPPLEMENTED BY STANDARD PLANS DATED 2010

INDEX OF PLANS

SHEET No.	DESCRIPTION
1	TITLE AND LOCATION MAP
2-4	TYPICAL CROSS SECTIONS
5-7	LAYOUTS
8-10	PROFILE AND SUPERELEVATION DIAGRAM
11-14	CONSTRUCTION DETAILS
15-22	DRAINAGE PROFILES, DETAILS AND QUANTITIES
23	CONSTRUCTION AREA SIGNS
24	TRAFFIC HANDLING PLAN
25-28	PAVEMENT DELINEATION PLANS AND QUANTITIES
29-30	SUMMARY OF QUANTITIES
31-34	EROSION CONTROL PLAN, LEGEND AND QUANTITIES
35-46	REVISED STANDARD PLANS

THE STANDARD PLANS LIST APPLICABLE TO THIS CONTRACT IS INCLUDED IN THE NOTICE TO BIDDERS AND SPECIAL PROVISIONS BOOK.

LOCATION MAP

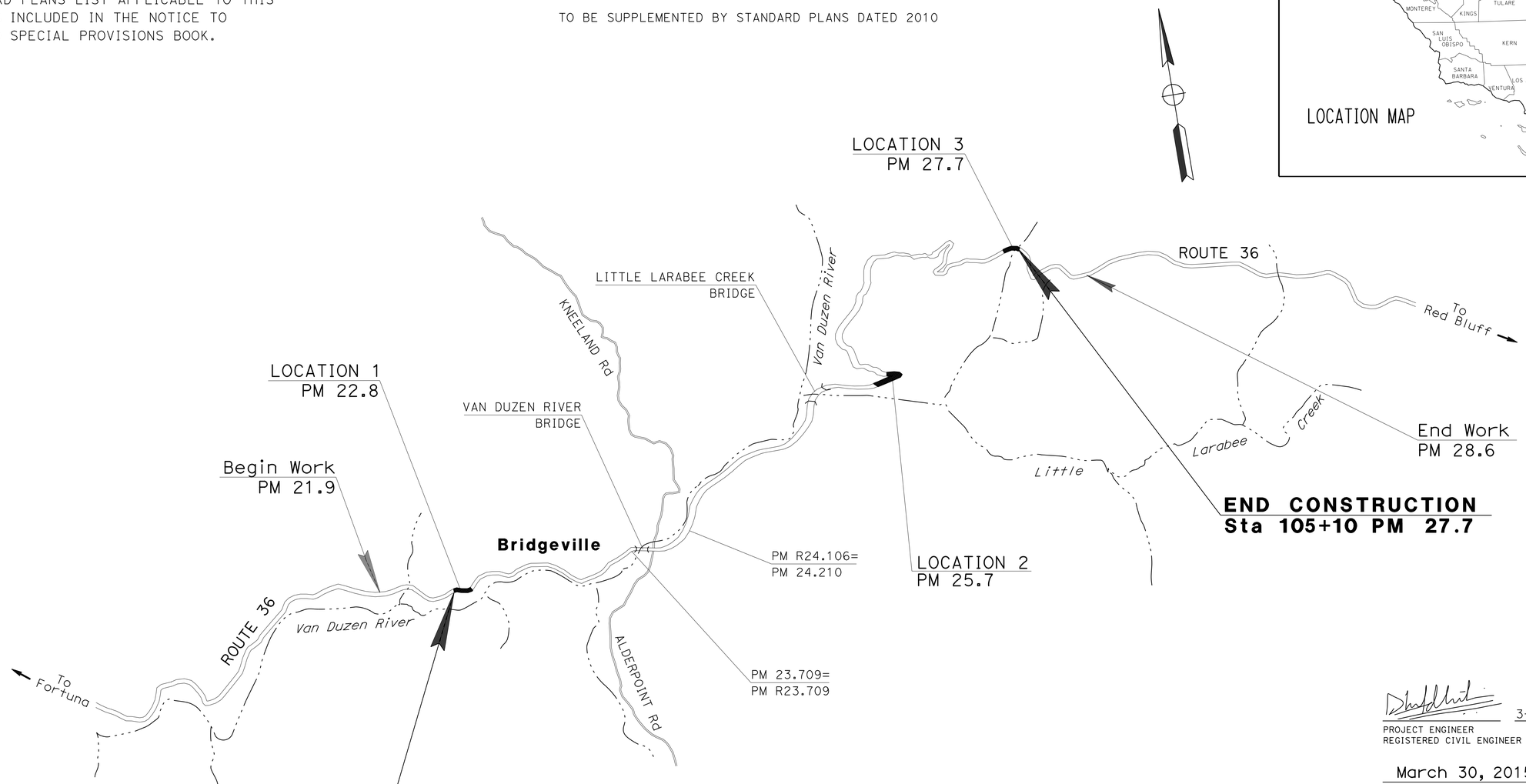

NO SCALE

THE CONTRACTOR SHALL POSSESS THE CLASS (OR CLASSES) OF LICENSE AS SPECIFIED IN THE "NOTICE TO BIDDERS."

PROJECT MANAGER: TALITHA HODGSON

DESIGN MANAGER: DEANN SPANGLER

PROJECT ENGINEER REGISTERED CIVIL ENGINEER — DATE 3-30-15

REGISTERED PROFESSIONAL ENGINEER — DINESH ADHIKARI — No. 76808 — Exp. 12-31-16 — CIVIL — STATE OF CALIFORNIA

March 30, 2015

PLANS APPROVAL DATE

THE STATE OF CALIFORNIA OR ITS OFFICERS OR AGENTS SHALL NOT BE RESPONSIBLE FOR THE ACCURACY OR COMPLETENESS OF SCANNED COPIES OF THIS PLAN SHEET.

CONTRACT No.	01-0B3404
PROJECT ID	0112000118

LAST REVISION 03-18-15 — DATE PLOTTED => 12-MAY-2015 — TIME PLOTTED => 14:45

Dist	COUNTY	ROUTE	POST MILES TOTAL PROJECT	SHEET No.	TOTAL SHEETS
01	Hum	36	22.8/27.7	2	46

REGISTERED CIVIL ENGINEER 3-30-15 DATE

3-30-15
PLANS APPROVAL DATE

REGISTERED PROFESSIONAL ENGINEER DINESH ADHIKARI No. 76808 Exp. 12-31-16 CIVIL STATE OF CALIFORNIA

THE STATE OF CALIFORNIA OR ITS OFFICERS OR AGENTS SHALL NOT BE RESPONSIBLE FOR THE ACCURACY OR COMPLETENESS OF SCANNED COPIES OF THIS PLAN SHEET.

NOTES:

1. DIMENSIONS OF THE PAVEMENT STRUCTURES (STRUCTURAL SECTIONS) ARE SUBJECT TO TOLERANCES SPECIFIED IN THE STANDARD SPECIFICATIONS.
2. SUPERELEVATION AS SHOWN OR AS DIRECTED BY THE ENGINEER.
3. THE EXISTING AC THICKNESS ON RIGHT LANE FROM "A1" 103+00 TO 104+50 VARIES FROM 0.75′ TO 3.0′.
4. FOR SAFETY EDGE AND SHOULDER BACKING DETAILS, SEE CONSTRUCTION DETAILS SHEET C-3.
5. EXISTING UTILITY FACILITIES HAVE NOT BEEN PLOTTED ON THESE PLANS.
6. FOR HMA DIKE TO BE REMOVED AND TYPE OF HMA DIKE PLACED, SEE SUMMARY OF QUANTITIES FOR LOCATIONS.
7. PROFILE GRADE IS AT TOP OF HMA-A.
8. FOR OVERSIDE DRAINS DETAILS, SEE CONSTRUCTION DETAIL SHEET C-1.

STRUCTURAL SECTIONS

S-1
- 0.50′ HMA (TYPE A)
- 1.15′ CLASS 2 AB

EXISTING STRUCTURAL SECTIONS

E-1
- 0.75′ HMA (TYPE A)
- 0.50′ AGGREGATE BASE

ABBREVIATIONS:

LL	LANE LINE

DESIGN DESIGNATION

ADT (2014)	1,460	D	60 %
ADT (2034)	1,740	T	6.0 %
DHV	380	V	55 mph
ESAL	619,000	TI_{20}	8.5

PAVEMENT CLIMATE REGION

LOW MOUNTAIN

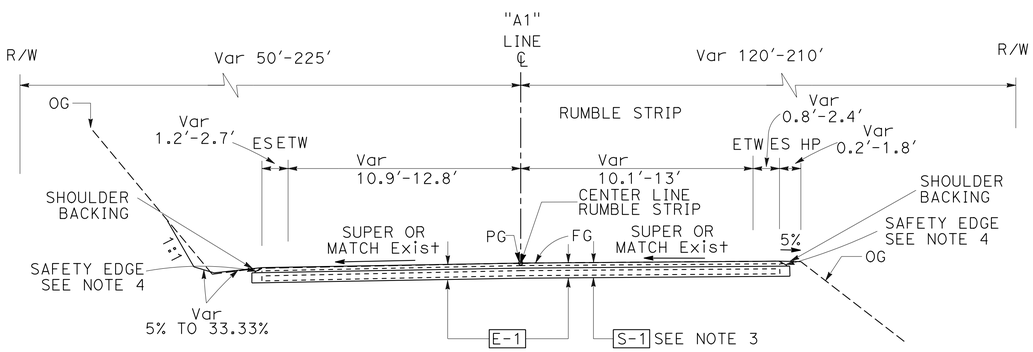

Sta "A1" 101+50 TO 105+00

LOCATION 1

TYPICAL CROSS SECTIONS

NO SCALE

X-1

STATE OF CALIFORNIA - DEPARTMENT OF TRANSPORTATION
Caltrans
NR DIVISION OF ENGINEERING

FUNCTIONAL SUPERVISOR: DEANN SPANGLER
CALCULATED-DESIGNED BY: DINESH ADHIKARI
CHECKED BY: GARY DEKENS
REVISED BY
DATE REVISED

LAST REVISION 03-18-15
DATE PLOTTED => 16-APR-2015
TIME PLOTTED => 14:45

Dist	COUNTY	ROUTE	POST MILES TOTAL PROJECT	SHEET No.	TOTAL SHEETS
01	Hum	36	22.8/27.7	3	46

REGISTERED CIVIL ENGINEER 3-30-15 DATE

3-30-15
PLANS APPROVAL DATE

REGISTERED PROFESSIONAL ENGINEER DINESH ADHIKARI No. 76808 Exp. 12-31-16 CIVIL STATE OF CALIFORNIA

THE STATE OF CALIFORNIA OR ITS OFFICERS OR AGENTS SHALL NOT BE RESPONSIBLE FOR THE ACCURACY OR COMPLETENESS OF SCANNED COPIES OF THIS PLAN SHEET.

STRUCTURAL SECTIONS

S-1 — 0.50' HMA (TYPE A)
1.15' CLASS 2 AB

EXISTING STRUCTURAL SECTIONS

E-2 — 0.78' HMA (TYPE A)
1.23' AGGREGATE BASE

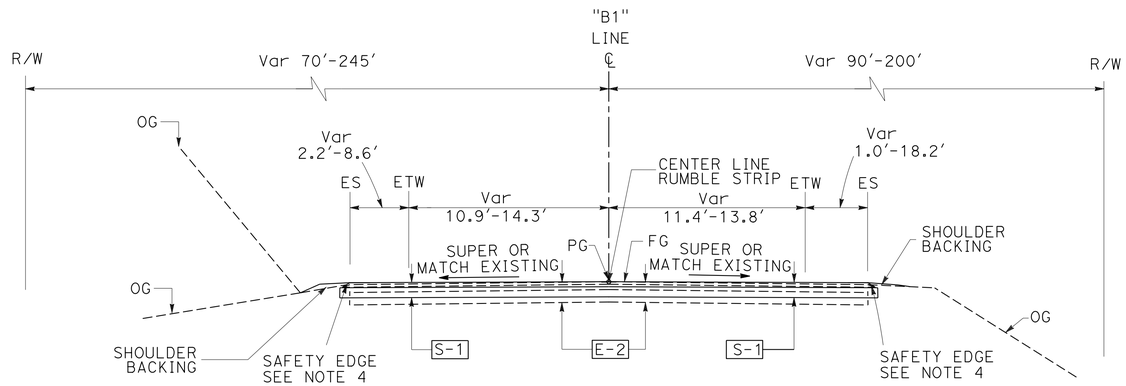

Sta "B1" 110+50 TO 114+06

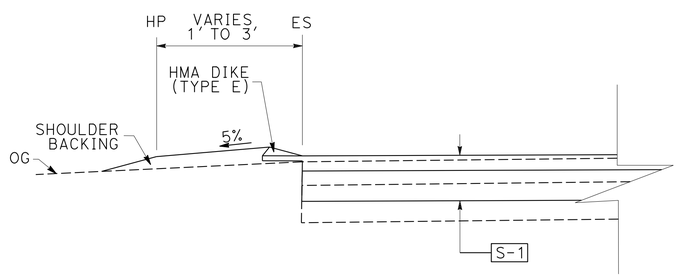

Sta "B1" 112+95 TO 114+06

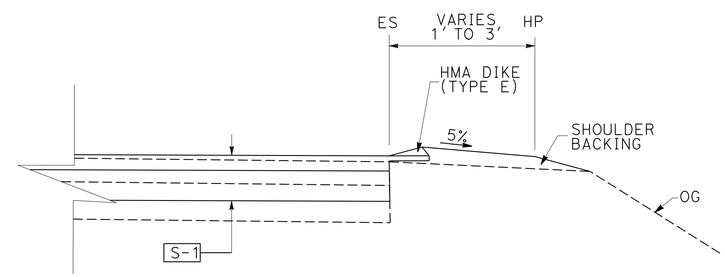

Sta "B1" 111+34 TO 112+95

LOCATION 2

TYPICAL CROSS SECTIONS

NO SCALE

X-2

STATE OF CALIFORNIA - DEPARTMENT OF TRANSPORTATION
Caltrans
NR DIVISION OF ENGINEERING

FUNCTIONAL SUPERVISOR: DEANN SPANGLER
CALCULATED-DESIGNED BY: DINESH ADHIKARI
CHECKED BY: GARY DEKENS
REVISED BY
DATE REVISED

LAST REVISION 03-18-15
DATE PLOTTED => 23-APR-2015
TIME PLOTTED => 15:14

Dist	COUNTY	ROUTE	POST MILES TOTAL PROJECT	SHEET No.	TOTAL SHEETS
01	Hum	36	22.8/27.7	4	46

REGISTERED CIVIL ENGINEER 3-30-15 DATE

3-30-15
PLANS APPROVAL DATE

REGISTERED PROFESSIONAL ENGINEER DINESH ADHIKARI No. 76808 Exp. 12-31-16 CIVIL STATE OF CALIFORNIA

THE STATE OF CALIFORNIA OR ITS OFFICERS OR AGENTS SHALL NOT BE RESPONSIBLE FOR THE ACCURACY OR COMPLETENESS OF SCANNED COPIES OF THIS PLAN SHEET.

STRUCTURAL SECTIONS

S-2
- 0.15′ OGFC
- 0.50′ HMA (TYPE A)
- 1.15′ CLASS 2 AB

EXISTING STRUCTURAL SECTIONS

E-3
- 0.06′ OGAC
- 0.34′ HMA (TYPE A)
- 0.50′ AGGREGATE BASE

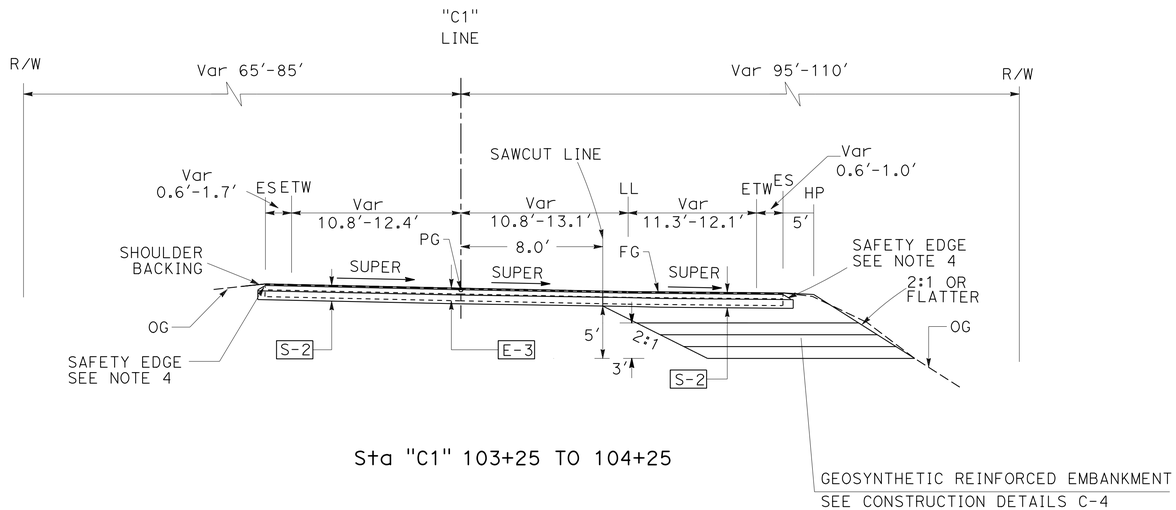

Sta "C1" 103+25 TO 104+25

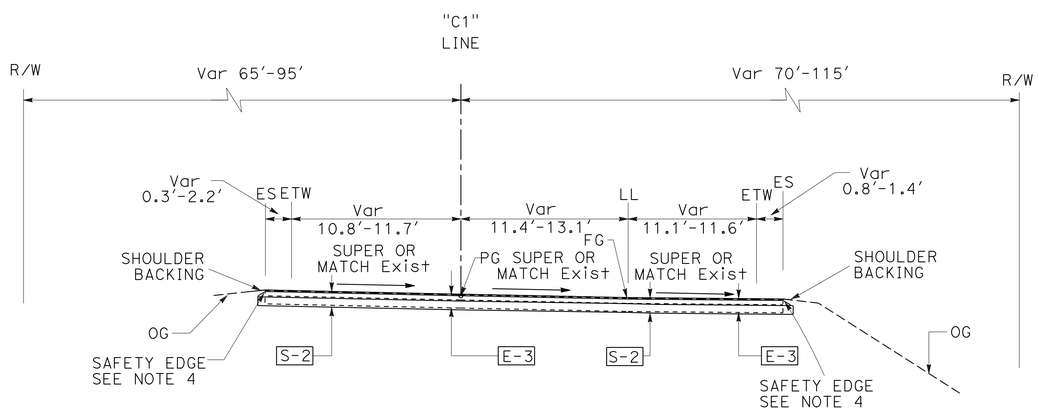

Sta "C1" 102+90 TO 103+25
Sta "C1" 104+25 TO 104+50

LOCATION 3

TYPICAL CROSS SECTIONS

NO SCALE

X-3

STATE OF CALIFORNIA - DEPARTMENT OF TRANSPORTATION
Caltrans
NR DIVISION OF ENGINEERING

FUNCTIONAL SUPERVISOR: DEANN SPANGLER
CALCULATED-DESIGNED BY: DINESH ADHIKARI
CHECKED BY: GARY DEKENS
REVISED BY
DATE REVISED

LAST REVISION 03-18-15
DATE PLOTTED => 16-APR-2015
TIME PLOTTED => 14:45

Dist	COUNTY	ROUTE	POST MILES TOTAL PROJECT	SHEET No.	TOTAL SHEETS
01	Hum	36	22.8/27.7	5	46

REGISTERED CIVIL ENGINEER 3-30-15 DATE

3-30-15
PLANS APPROVAL DATE

REGISTERED PROFESSIONAL ENGINEER DINESH ADHIKARI No. 76808 Exp. 12-31-16 CIVIL STATE OF CALIFORNIA

THE STATE OF CALIFORNIA OR ITS OFFICERS OR AGENTS SHALL NOT BE RESPONSIBLE FOR THE ACCURACY OR COMPLETENESS OF SCANNED COPIES OF THIS PLAN SHEET.

NOTES:

1. FOR ACCURATE RIGHT OF WAY DATA, CONTACT RIGHT OF WAY ENGINEERING AT THE DISTRICT OFFICE.
2. FOR PAVEMENT TRANSITION DETAILS, SEE CONSTRUCTION DETAIL SHEET C-4.

CURVE DATA				
Curve #	R	Δ	T	L
1	255.79′	036°35′29″	84.57′	163.36′
2	182.45′	070°31′55″	129.02′	224.60′

LEGEND

GEOSYNTHETIC REINFORCED EMBANKMENT

ABBREVIATIONS:

SDR STANDARD DIMENSION RATIO
SFES STEEL FLARED END SECTION

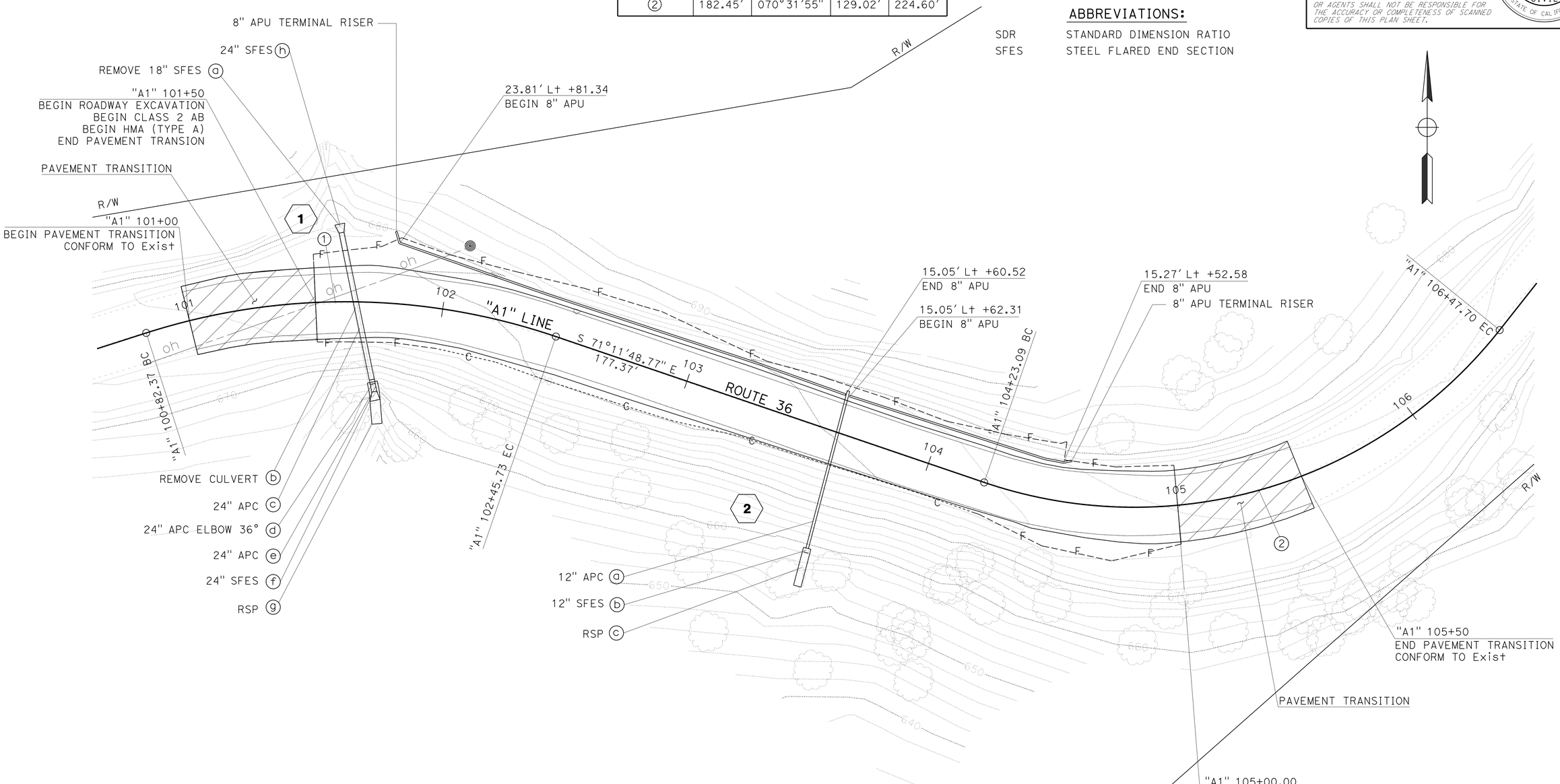

LOCATION 1

LAYOUT
SCALE 1"=20′

L-1

STATE OF CALIFORNIA - DEPARTMENT OF TRANSPORTATION
Caltrans® NR DIVISION OF ENGINEERING

FUNCTIONAL SUPERVISOR: DEANN SPANGLER
CALCULATED-DESIGNED BY: DINESH ADHIKARI
CHECKED BY: GARY DEKENS
REVISED BY / DATE REVISED

LAST REVISION 03-18-15
DATE PLOTTED => 16-APR-2015
TIME PLOTTED => 14:45

Dist	COUNTY	ROUTE	POST MILES TOTAL PROJECT	SHEET No.	TOTAL SHEETS
01	Hum	36	22.8/27.7	6	46

REGISTERED CIVIL ENGINEER 3-30-15 DATE

3-30-15
PLANS APPROVAL DATE

REGISTERED PROFESSIONAL ENGINEER DINESH ADHIKARI No. 76808 Exp. 12-31-16 CIVIL STATE OF CALIFORNIA

THE STATE OF CALIFORNIA OR ITS OFFICERS OR AGENTS SHALL NOT BE RESPONSIBLE FOR THE ACCURACY OR COMPLETENESS OF SCANNED COPIES OF THIS PLAN SHEET.

NOTES:

1. FOR ACCURATE RIGHT OF WAY DATA, CONTACT RIGHT OF WAY ENGINEERING AT THE DISTRICT OFFICE.
2. FOR PAVED DRIVEWAY DETAILS, SEE CONSTRUCTION DETAIL SHEET C-2.
3. ALIGNMENT OF DRAINAGE SYSTEM 4 AS SHOWN OR DIRECTED BY THE ENGINEER.

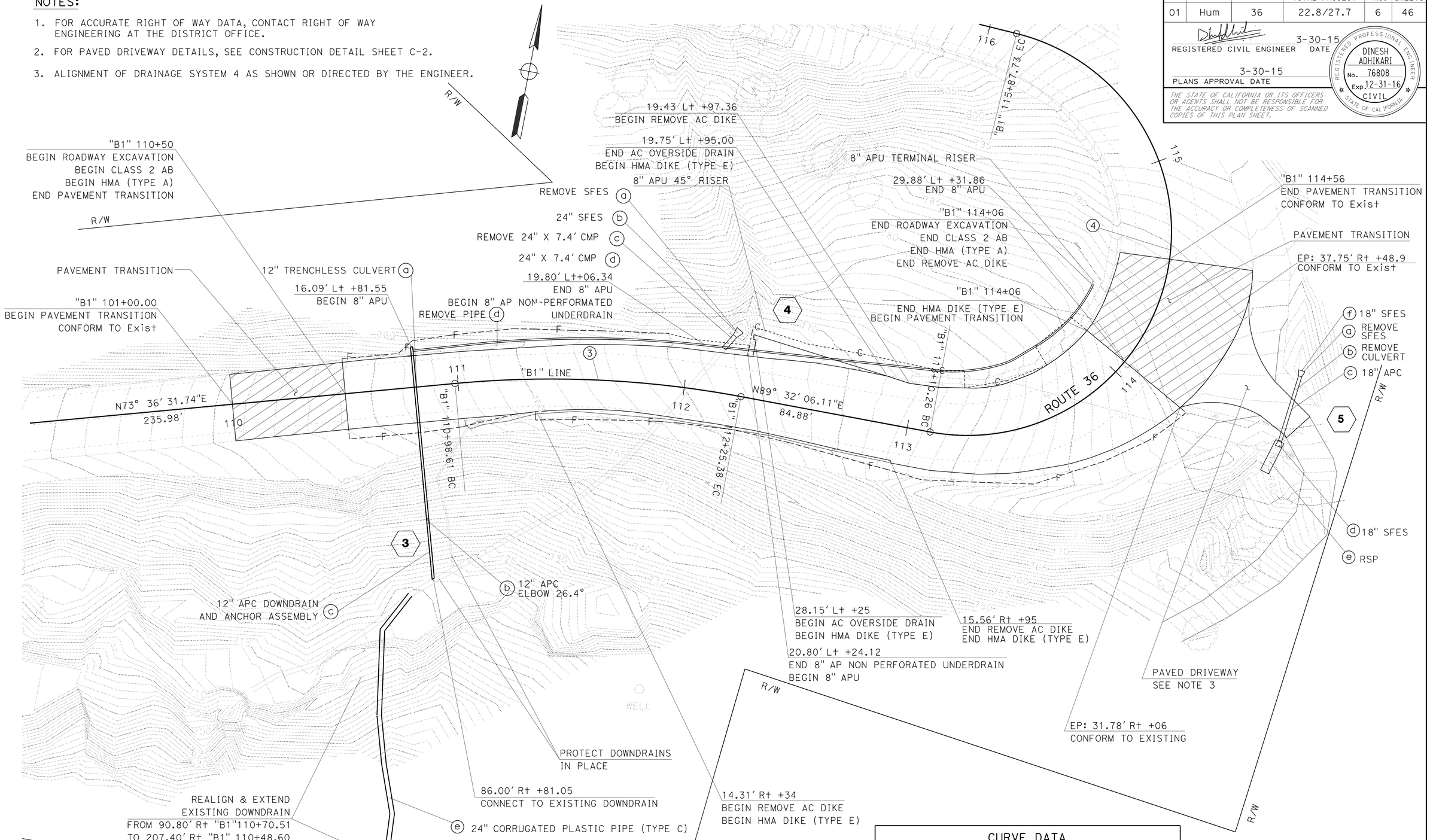

LOCATION 2

CURVE DATA				
Curve #	R	Δ	T	L
3	456.06'	015°55'34"	63.80'	126.77'
4	90.00'	176°39'10"	3080.09'	277.47'

LAYOUT

SCALE 1"=20'

L-2

REVISED BY | DATE REVISED
DINESH ADHIKARI | GARY DEKENS
CALCULATED-DESIGNED BY | CHECKED BY
FUNCTIONAL SUPERVISOR
DEANN SPANGLER

STATE OF CALIFORNIA - DEPARTMENT OF TRANSPORTATION
Caltrans
NR DIVISION OF ENGINEERING

LAST REVISION 03-18-15 | DATE PLOTTED => 16-APR-2015 | TIME PLOTTED => 14:45

Dist	COUNTY	ROUTE	POST MILES TOTAL PROJECT	SHEET No.	TOTAL SHEETS
01	Hum	36	22.8/27.7	7	46

REGISTERED CIVIL ENGINEER 3-30-15 DATE

3-30-15
PLANS APPROVAL DATE

REGISTERED PROFESSIONAL ENGINEER DINESH ADHIKARI No. 76808 Exp. 12-31-16 CIVIL STATE OF CALIFORNIA

THE STATE OF CALIFORNIA OR ITS OFFICERS OR AGENTS SHALL NOT BE RESPONSIBLE FOR THE ACCURACY OR COMPLETENESS OF SCANNED COPIES OF THIS PLAN SHEET.

NOTES:

1. FOR ACCURATE RIGHT OF WAY DATA, CONTACT RIGHT OF WAY ENGINEERING AT THE DISTRICT OFFICE.
2. TEMPORARY FENCE (TYPE ESA) TO BE PLACED AT THE DIRECTION OF THE ENGINEER.

CURVE DATA

Curve #	R	Δ	T	L
⑤	3303.00′	002°10′06″	62.51′	125.01′
⑥	338.45′	070°26′31″	238.93′	416.10′

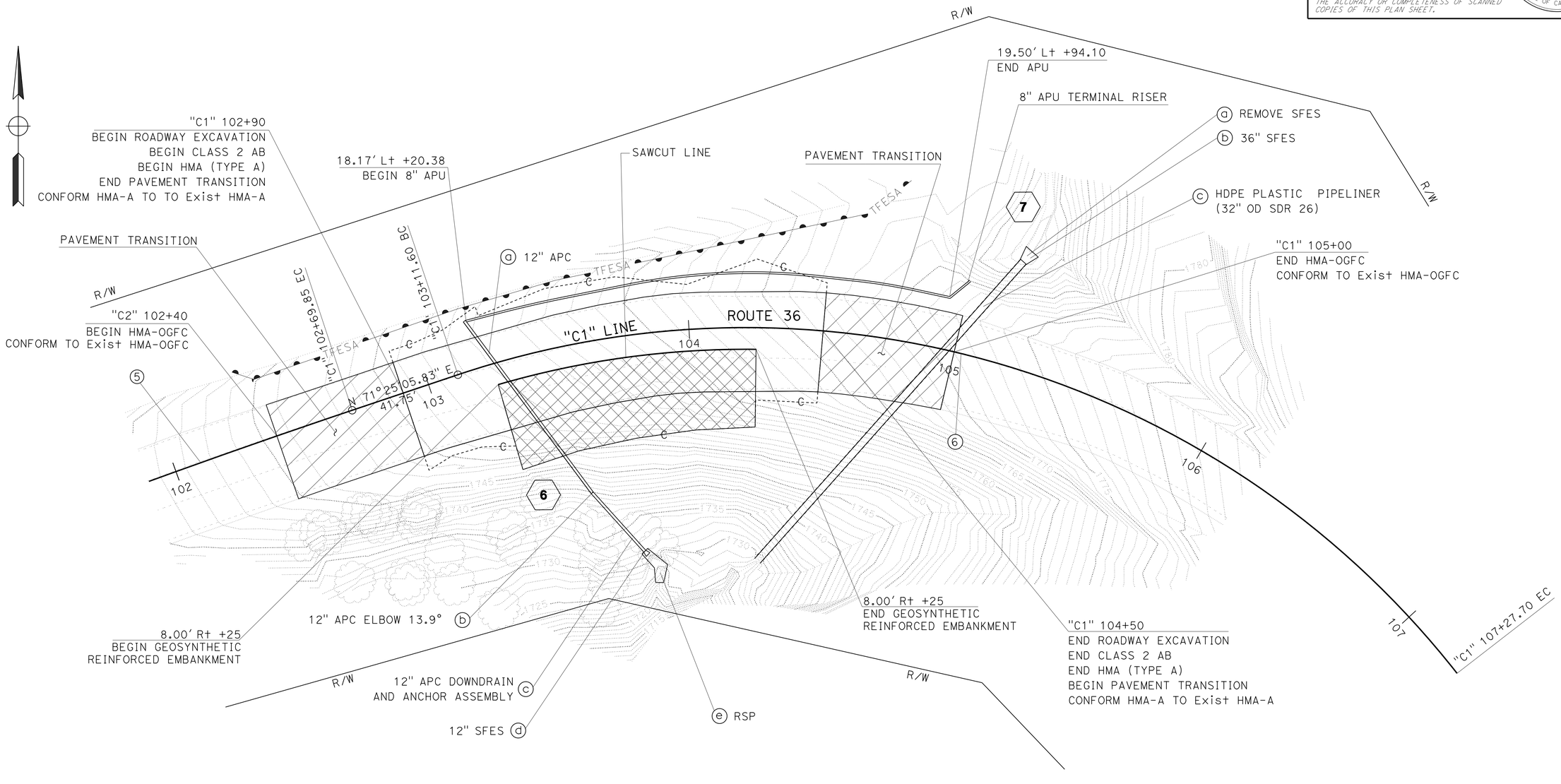

LOCATION 3

LAYOUT

SCALE 1"=20′

L-3

STATE OF CALIFORNIA - DEPARTMENT OF TRANSPORTATION
Caltrans
NR DIVISION OF ENGINEERING

FUNCTIONAL SUPERVISOR: DEANN SPANGLER
CALCULATED-DESIGNED BY: DINESH ADHIKARI
CHECKED BY: GARY DEKENS
REVISED BY
DATE REVISED

LAST REVISION 03-18-15
DATE PLOTTED => 16-APR-2015
TIME PLOTTED => 14:45

Dist	COUNTY	ROUTE	POST MILES TOTAL PROJECT	SHEET No.	TOTAL SHEETS
01	Hum	36	22.8/27.7	8	46

REGISTERED CIVIL ENGINEER DATE 3-30-15

PLANS APPROVAL DATE 3-30-15

REGISTERED PROFESSIONAL ENGINEER DINESH ADHIKARI No. 76808 Exp. 12-31-16 CIVIL STATE OF CALIFORNIA

THE STATE OF CALIFORNIA OR ITS OFFICERS OR AGENTS SHALL NOT BE RESPONSIBLE FOR THE ACCURACY OR COMPLETENESS OF SCANNED COPIES OF THIS PLAN SHEET.

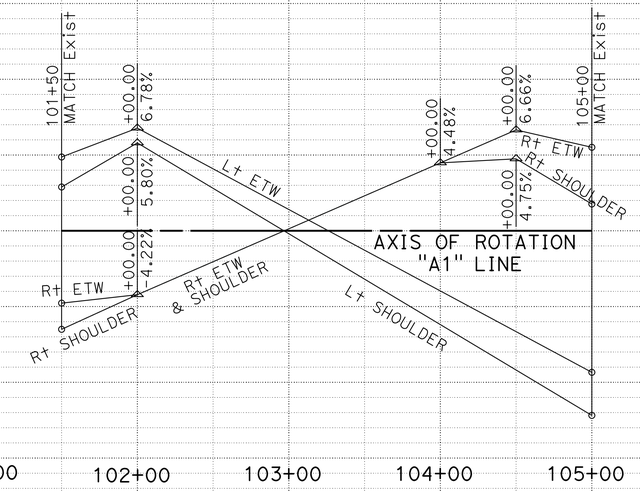

SUPERELEVATION DIAGRAM

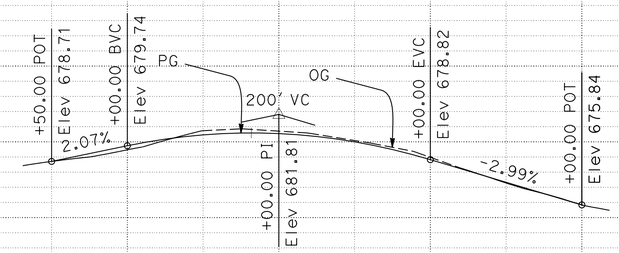

PROFILE

"A1" LINE

LOCATION 1

PROFILE AND SUPERELEVATION DIAGRAM

SCALE: Horiz 1" = 50'
Vert 1" = 5'

PS-1

STATION		101+00	102+00	103+00	104+00	105+00	TOTAL
CY	Exc	606.93					
	Emb	0.00					

STATE OF CALIFORNIA - DEPARTMENT OF TRANSPORTATION
Caltrans
NR DIVISION OF ENGINEERING

FUNCTIONAL SUPERVISOR: DEANN SPANGLER

CALCULATED-DESIGNED BY: DINESH ADHIKARI
CHECKED BY: GARY DEKENS

REVISED BY / DATE REVISED

LAST REVISION 03-18-15 | DATE PLOTTED => 16-APR-2015 | TIME PLOTTED => 14:45

Dist	COUNTY	ROUTE	POST MILES TOTAL PROJECT	SHEET No.	TOTAL SHEETS
01	Hum	36	22.8/27.7	9	46

REGISTERED CIVIL ENGINEER DATE 3-30-15

PLANS APPROVAL DATE 3-30-15

REGISTERED PROFESSIONAL ENGINEER DINESH ADHIKARI No. 76808 Exp. 12-31-16 CIVIL STATE OF CALIFORNIA

THE STATE OF CALIFORNIA OR ITS OFFICERS OR AGENTS SHALL NOT BE RESPONSIBLE FOR THE ACCURACY OR COMPLETENESS OF SCANNED COPIES OF THIS PLAN SHEET.

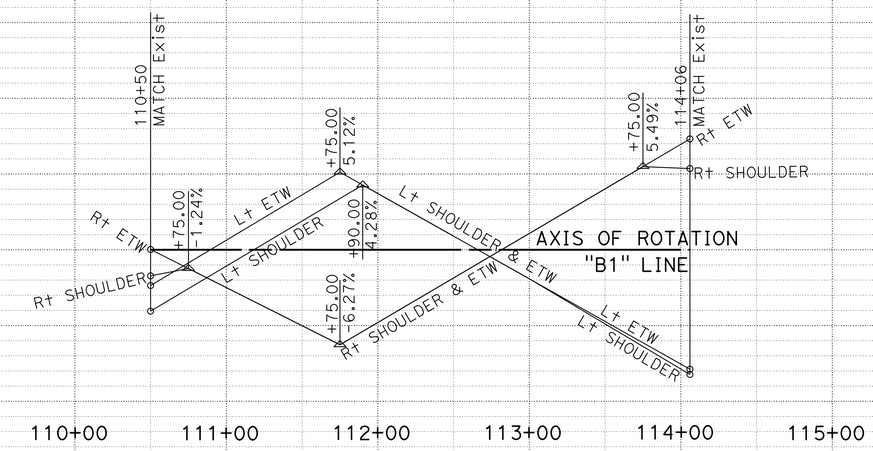

SUPERELEVATION DIAGRAM

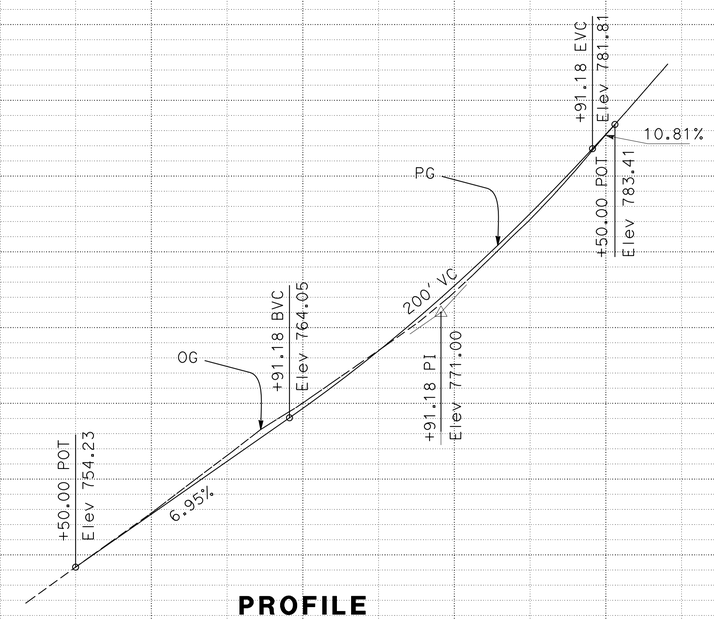

PROFILE

"B1" LINE

LOCATION 2

PROFILE AND SUPERELEVATION DIAGRAM

SCALE: Horiz 1" = 50'
Vert 1" = 5'

PS-2

STATION		110+00	111+00	112+00	113+00	114+00	115+00	TOTAL
CY	Exc		774.89					
	Emb		0.00					

STATE OF CALIFORNIA - DEPARTMENT OF TRANSPORTATION
Caltrans
NR DIVISION OF ENGINEERING

FUNCTIONAL SUPERVISOR: DEANN SPANGLER

CALCULATED-DESIGNED BY: DINESH ADHIKARI
CHECKED BY: GARY DEKENS

REVISED BY
DATE REVISED

LAST REVISION 03-18-15
DATE PLOTTED => 16-APR-2015
TIME PLOTTED => 14:45

Dist	COUNTY	ROUTE	POST MILES TOTAL PROJECT	SHEET No.	TOTAL SHEETS
01	Hum	36	22.8/27.7	10	46

REGISTERED CIVIL ENGINEER DATE 3-30-15

3-30-15
PLANS APPROVAL DATE

REGISTERED PROFESSIONAL ENGINEER
DINESH ADHIKARI
No. 76808
Exp. 12-31-16
CIVIL
STATE OF CALIFORNIA

THE STATE OF CALIFORNIA OR ITS OFFICERS OR AGENTS SHALL NOT BE RESPONSIBLE FOR THE ACCURACY OR COMPLETENESS OF SCANNED COPIES OF THIS PLAN SHEET.

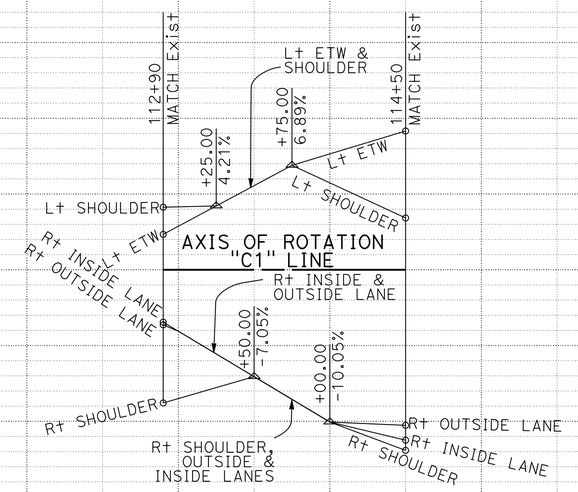

SUPERELEVATION DIAGRAM

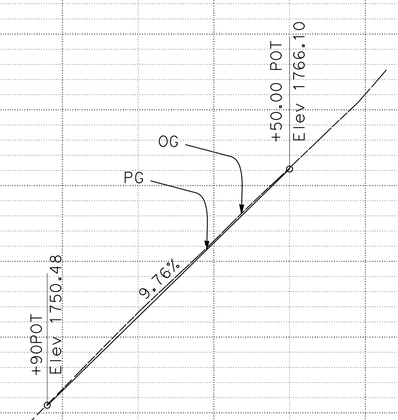

PROFILE

"C1" LINE

LOCATION 3

PROFILE AND SUPERELEVATION DIAGRAM

SCALE: Horiz 1" = 50'
Vert 1" = 5'

PS-3

STATION	112+00	113+00	114+00	115+00	116+00	TOTAL
CY Exc		759.75				
CY Emb		330.62				

STATE OF CALIFORNIA - DEPARTMENT OF TRANSPORTATION
Caltrans
NR DIVISION OF ENGINEERING

FUNCTIONAL SUPERVISOR: DEANN SPANGLER
CALCULATED-DESIGNED BY: DINESH ADHIKARI
CHECKED BY: GARY DEKENS
REVISED BY
DATE REVISED

LAST REVISION 03-18-15
DATE PLOTTED => 16-APR-2015
TIME PLOTTED => 14:45

Dist	COUNTY	ROUTE	POST MILES TOTAL PROJECT	SHEET No.	TOTAL SHEETS
01	Hum	36	22.8/27.7	11	46

REGISTERED CIVIL ENGINEER 3-30-15 DATE

3-30-15
PLANS APPROVAL DATE

REGISTERED PROFESSIONAL ENGINEER DINESH ADHIKARI No. 76808 Exp. 12-31-16 CIVIL STATE OF CALIFORNIA

THE STATE OF CALIFORNIA OR ITS OFFICERS OR AGENTS SHALL NOT BE RESPONSIBLE FOR THE ACCURACY OR COMPLETENESS OF SCANNED COPIES OF THIS PLAN SHEET.

STRUCTURAL SECTIONS

S-1 — 0.50′ HMA (TYPE A)
1.15′ CLASS 2 AB

EXISTING STRUCTURAL SECTIONS

E-2 — 0.78′ HMA (TYPE A)
1.23′ AGGREGATE BASE

ABBREVIATIONS:

CMP	CORRUGATED METAL PIPE
FL	FLOW LINE
HMAOD	HOT MIX ASPHALT OVERSIDE DRAIN

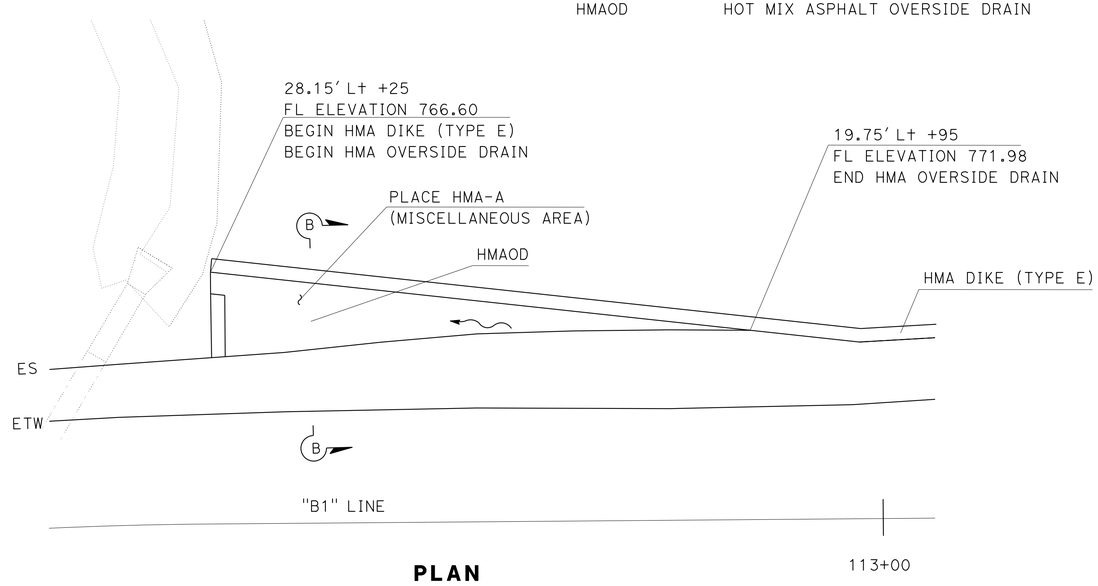

PLAN

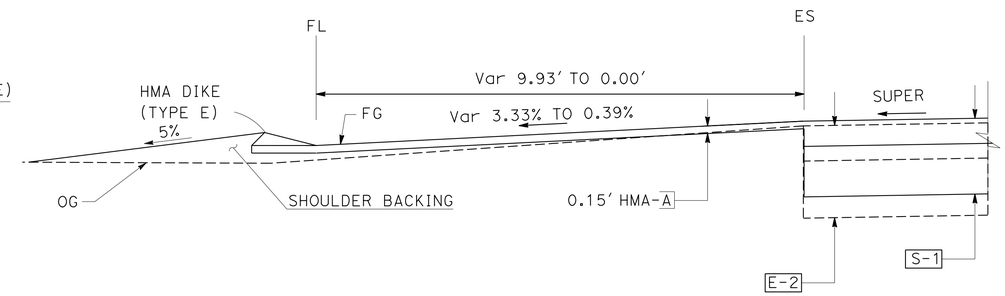

SECTION B-B

AC OVERSIDE DRAIN AT Sta 112+25
LOCATION 2

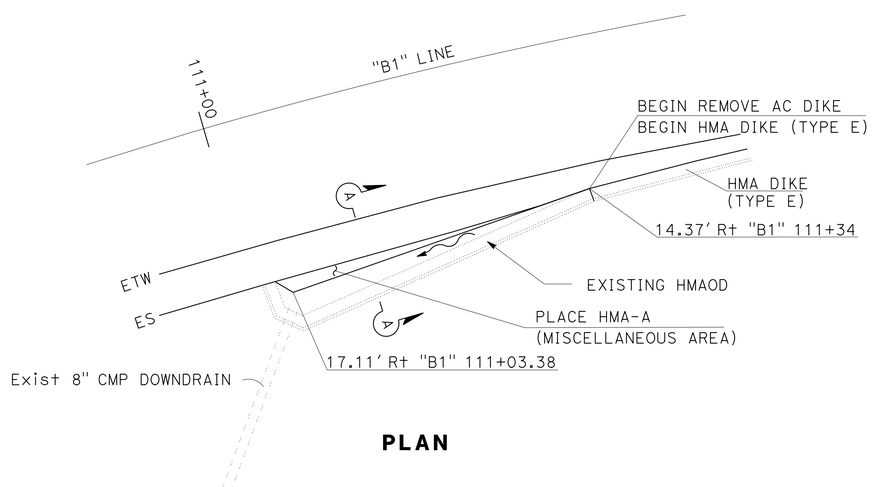

PLAN

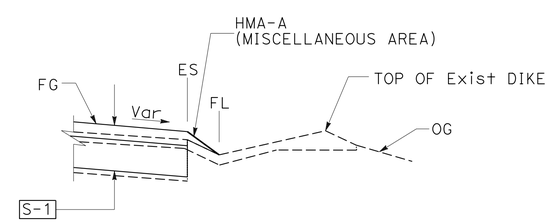

SECTION A-A

AC OVERSIDE DRAIN AT Sta "B1" 111+03
LOCATION 2

CONSTRUCTION DETAILS

NO SCALE

C-1

STATE OF CALIFORNIA - DEPARTMENT OF TRANSPORTATION
Caltrans
NR DIVISION OF ENGINEERING

FUNCTIONAL SUPERVISOR: DEANN SPANGLER

CALCULATED-DESIGNED BY: DINESH ADHIKARI
CHECKED BY: GARY DEKENS

REVISED BY | DATE REVISED

LAST REVISION 03-18-15 | DATE PLOTTED => 16-APR-2015 | TIME PLOTTED => 14:45

Dist	COUNTY	ROUTE	POST MILES TOTAL PROJECT	SHEET No.	TOTAL SHEETS
01	Hum	36	22.8/27.7	12	46

REGISTERED CIVIL ENGINEER 3-30-15 DATE

3-30-15
PLANS APPROVAL DATE

REGISTERED PROFESSIONAL ENGINEER DINESH ADHIKARI No. 76808 Exp. 12-31-16 CIVIL STATE OF CALIFORNIA

THE STATE OF CALIFORNIA OR ITS OFFICERS OR AGENTS SHALL NOT BE RESPONSIBLE FOR THE ACCURACY OR COMPLETENESS OF SCANNED COPIES OF THIS PLAN SHEET.

NOTES:

1. FOR STRUCTURAL SECTION INFORMATION, SEE TYPICAL CROSS SECTION SHEETS.

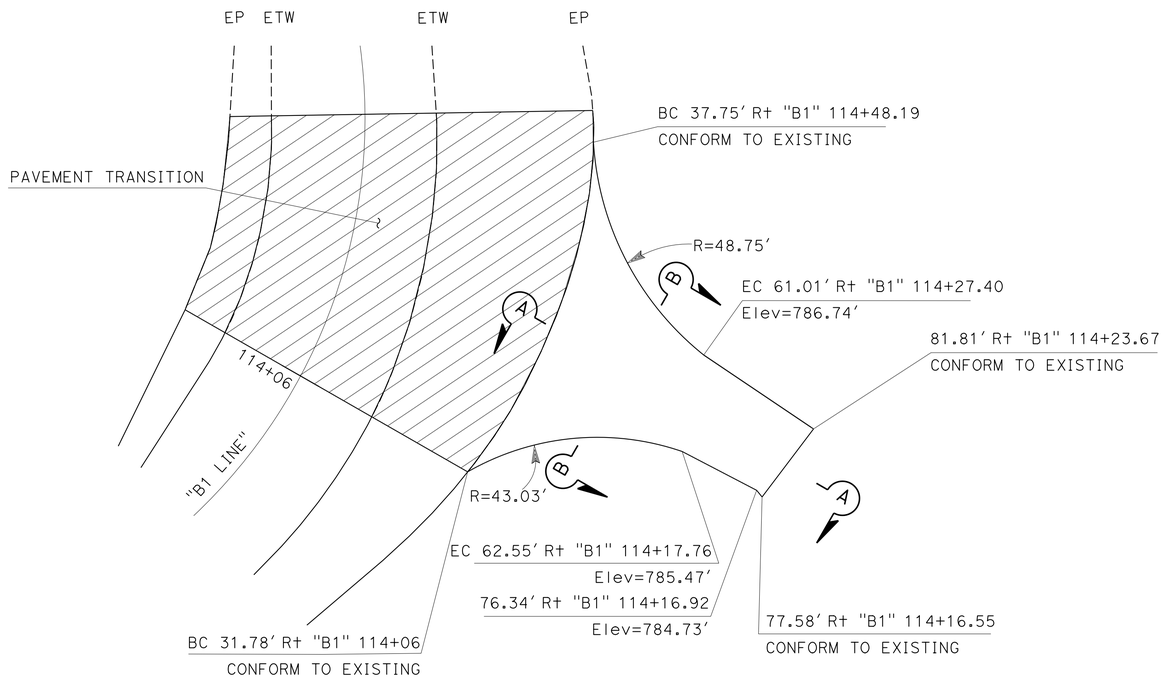

PLAN

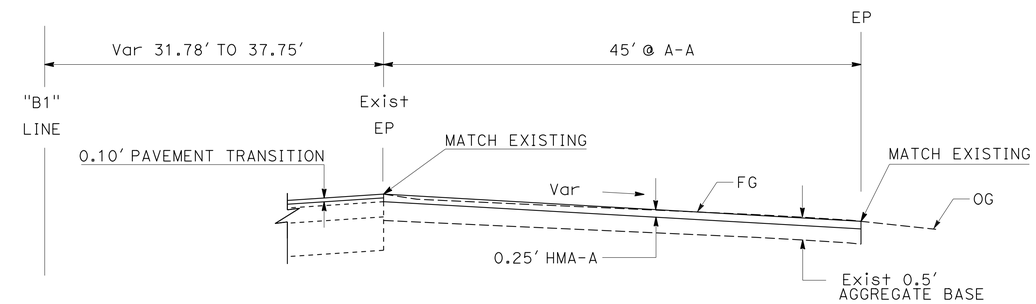

SECTION A-A

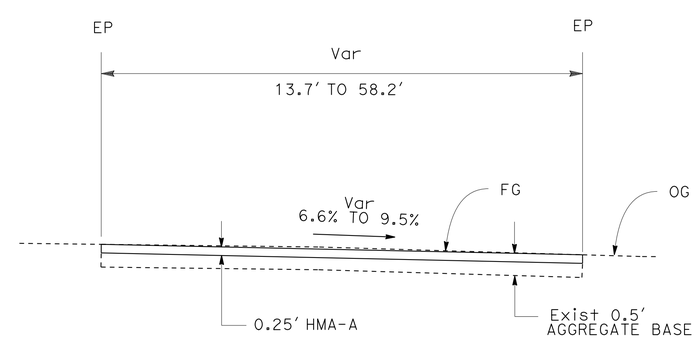

SECTION B-B

PAVED DRIVEWAY LOCATION 2

CONSTRUCTION DETAILS

NO SCALE

C-2

STATE OF CALIFORNIA - DEPARTMENT OF TRANSPORTATION
Caltrans
NR DIVISION OF ENGINEERING

FUNCTIONAL SUPERVISOR: DEANN SPANGLER
CALCULATED-DESIGNED BY: DINESH ADHIKARI
CHECKED BY: GARY DEKENS
REVISED BY
DATE REVISED

LAST REVISION 03-18-15 | DATE PLOTTED => 16-APR-2015 | TIME PLOTTED => 14:45

Dist	COUNTY	ROUTE	POST MILES TOTAL PROJECT	SHEET No.	TOTAL SHEETS
01	Hum	36	22.8/27.7	13	46

REGISTERED CIVIL ENGINEER 3-30-15 DATE

3-30-15
PLANS APPROVAL DATE

REGISTERED PROFESSIONAL ENGINEER DINESH ADHIKARI No. 76808 Exp. 12-31-16 CIVIL STATE OF CALIFORNIA

THE STATE OF CALIFORNIA OR ITS OFFICERS OR AGENTS SHALL NOT BE RESPONSIBLE FOR THE ACCURACY OR COMPLETENESS OF SCANNED COPIES OF THIS PLAN SHEET.

NOTES:

1. DO NOT PLACE SAFETY EDGE WHERE DISTANCE FROM EDGE OF SHOULDER TO EXISTING HINGE POINT IS 1′ OR LESS.
2. DO NOT PLACE SAFETY EDGE AT LOCATIONS WITH DIKE. FOR MORE INFORMATION, SEE RSP P74.
3. FOR DETAILS NOT SHOWN, SEE REVISED Std PLANS P74, P75, P76.
4. FOR STRUCTURAL SECTION INFORMATION, SEE TYPICAL CROSS SECTION SHEETS.

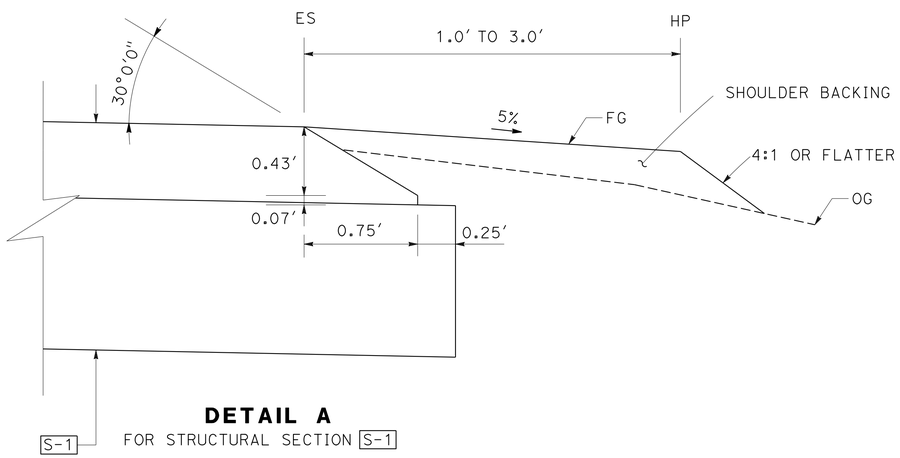

DETAIL A
FOR STRUCTURAL SECTION S-1

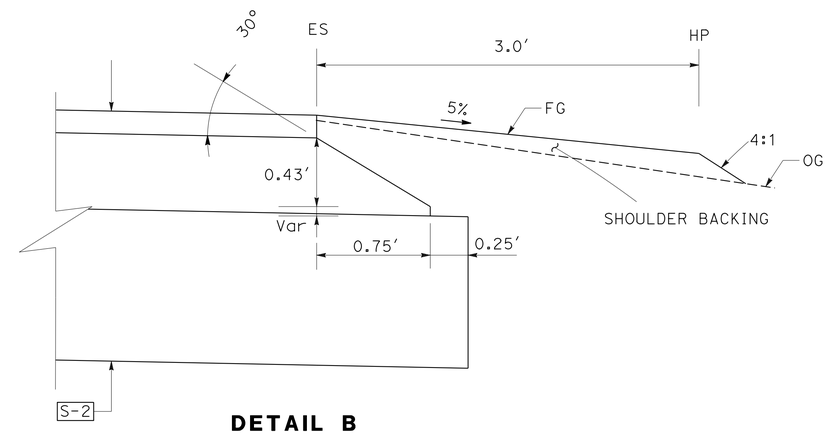

DETAIL B
FOR STRUCTURAL SECTION S-2

SAFETY EDGE AND SHOULDER BACKING DETAILS

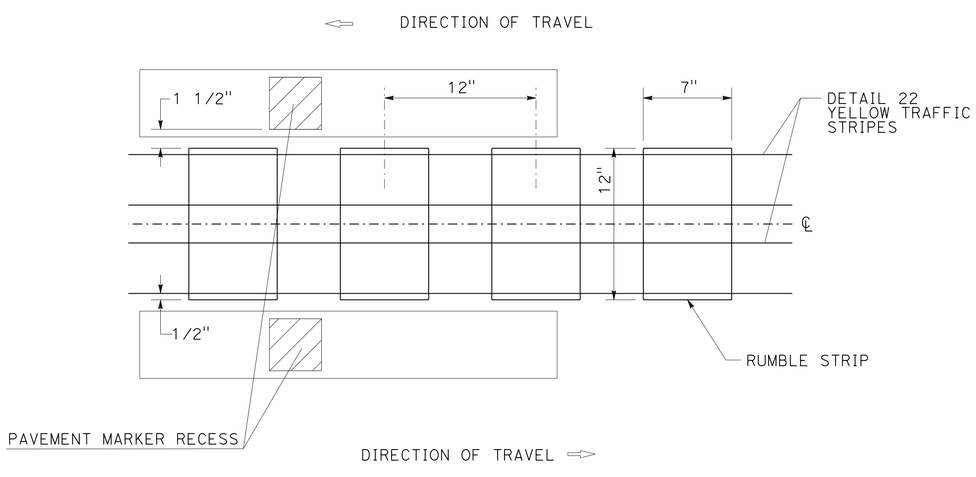

PLAN

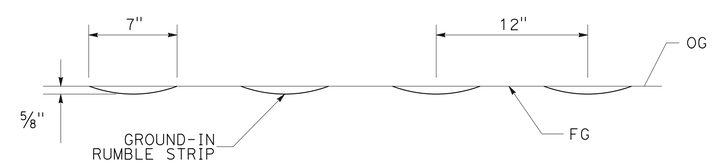

ELEVATION

CENTERLINE RUMBLE STRIP (HMA, GROUND-IN INDENTATIONS) DETAILS

CONSTRUCTION DETAILS

NO SCALE

C-3

STATE OF CALIFORNIA - DEPARTMENT OF TRANSPORTATION
Caltrans
NR DIVISION OF ENGINEERING

FUNCTIONAL SUPERVISOR: DEANN SPANGLER
CALCULATED-DESIGNED BY: DINESH ADHIKARI
CHECKED BY: GARY DEKENS
REVISED BY
DATE REVISED

LAST REVISION 03-18-15
DATE PLOTTED => 16-APR-2015
TIME PLOTTED => 14:45

Dist	COUNTY	ROUTE	POST MILES TOTAL PROJECT	SHEET No.	TOTAL SHEETS
01	Hum	36	22.8/27.7	14	46

REGISTERED CIVIL ENGINEER DATE 3-30-15

PLANS APPROVAL DATE 3-30-15

REGISTERED PROFESSIONAL ENGINEER DINESH ADHIKARI No. 76808 Exp. 12-31-16 CIVIL STATE OF CALIFORNIA

THE STATE OF CALIFORNIA OR ITS OFFICERS OR AGENTS SHALL NOT BE RESPONSIBLE FOR THE ACCURACY OR COMPLETENESS OF SCANNED COPIES OF THIS PLAN SHEET.

NOTES:

1. FOR STRUCTURAL SECTION INFORMATION, SEE TYPICAL CROSS SECTION SHEETS.

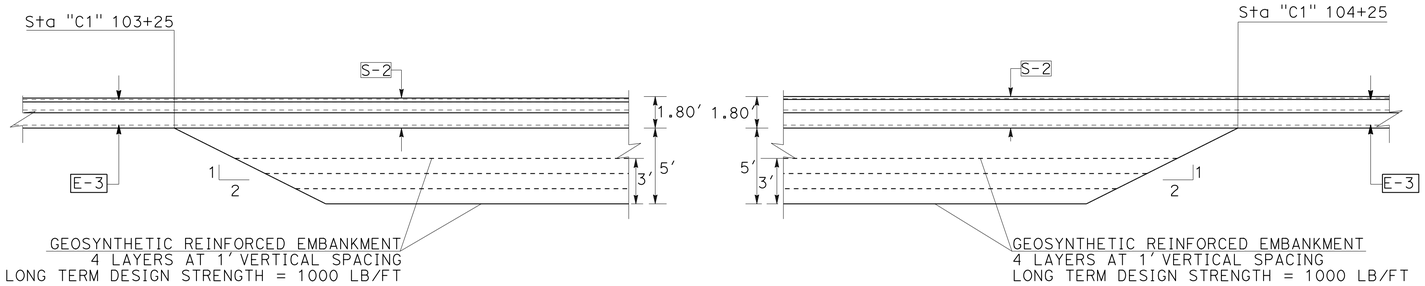

LONGITUTIDAL ELEVATION

ROADWAY EXCAVATION AND GEOSYNTHETIC REINFORCED EMBANKMENT LOCATION 3

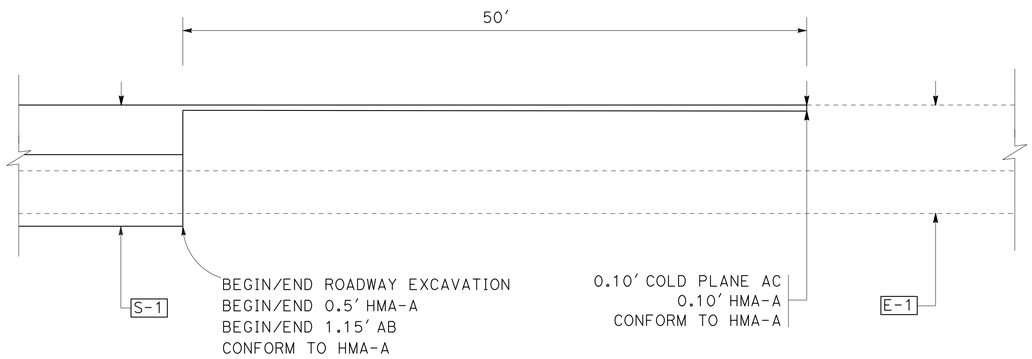

ELEVATION LOCATION 1

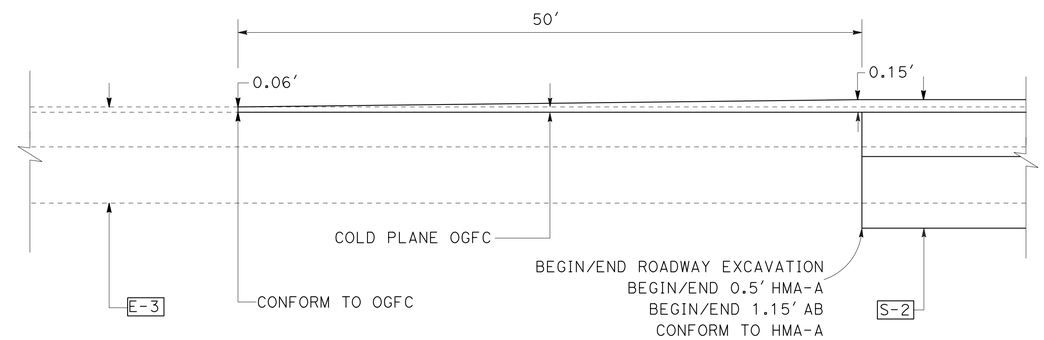

ELEVATION LOCATION 3

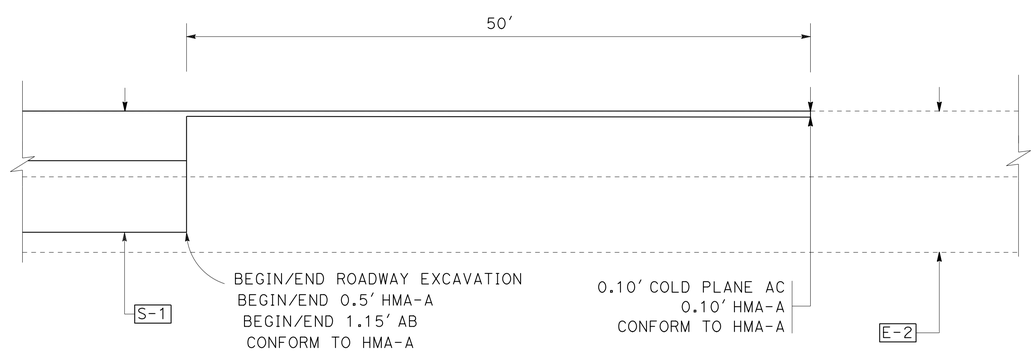

ELEVATION LOCATION 2

PAVEMENT TRANSITION DETAIL

CONSTRUCTION DETAILS

NO SCALE

C-4

STATE OF CALIFORNIA - DEPARTMENT OF TRANSPORTATION
NR DIVISION OF ENGINEERING
Caltrans

FUNCTIONAL SUPERVISOR: DEANN SPANGLER
CALCULATED-DESIGNED BY: DINESH ADHIKARI
CHECKED BY: GARY DEKENS
REVISED BY
DATE REVISED

LAST REVISION 03-18-15
DATE PLOTTED => 16-APR-2015
TIME PLOTTED => 14:45

Dist	COUNTY	ROUTE	POST MILES TOTAL PROJECT	SHEET No.	TOTAL SHEETS
01	Hum	36	22.8/27.7	15	46

REGISTERED CIVIL ENGINEER 3-30-15 DATE

3-30-15
PLANS APPROVAL DATE

REGISTERED PROFESSIONAL ENGINEER DINESH ADHIKARI No. 76808 Exp. 12-31-16 CIVIL STATE OF CALIFORNIA

THE STATE OF CALIFORNIA OR ITS OFFICERS OR AGENTS SHALL NOT BE RESPONSIBLE FOR THE ACCURACY OR COMPLETENESS OF SCANNED COPIES OF THIS PLAN SHEET.

NOTE:

1. ALL CROSS SECTIONS SHOWN ALONG FLOWLINE

ABBREVIATIONS

SDR = STANDARD DIMENSTION RATIO

SFES = STEEL FLARED END SECTION

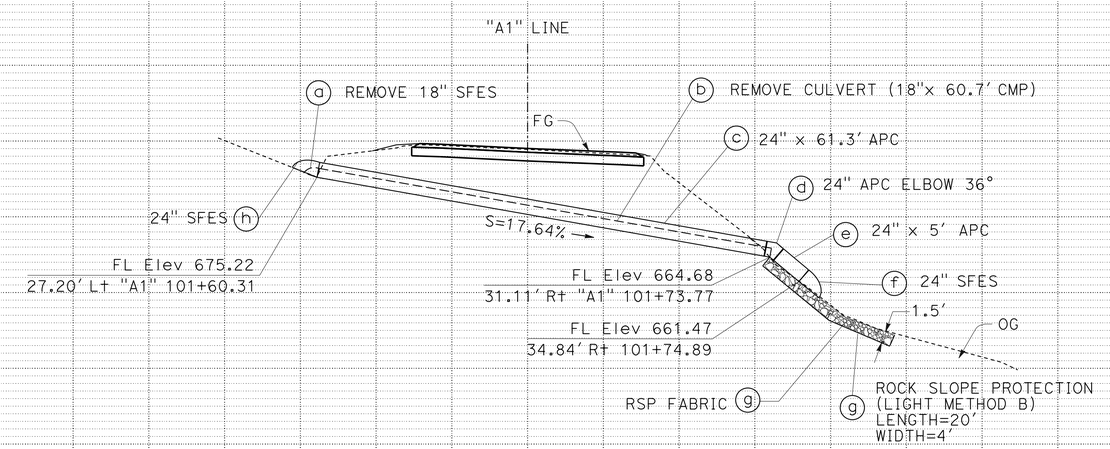

DRAINAGE SYSTEM (1)

"A1" 101+65.80

12.63° SKEW

LEGEND

ROCK SLOPE PROTECTION (RSP)

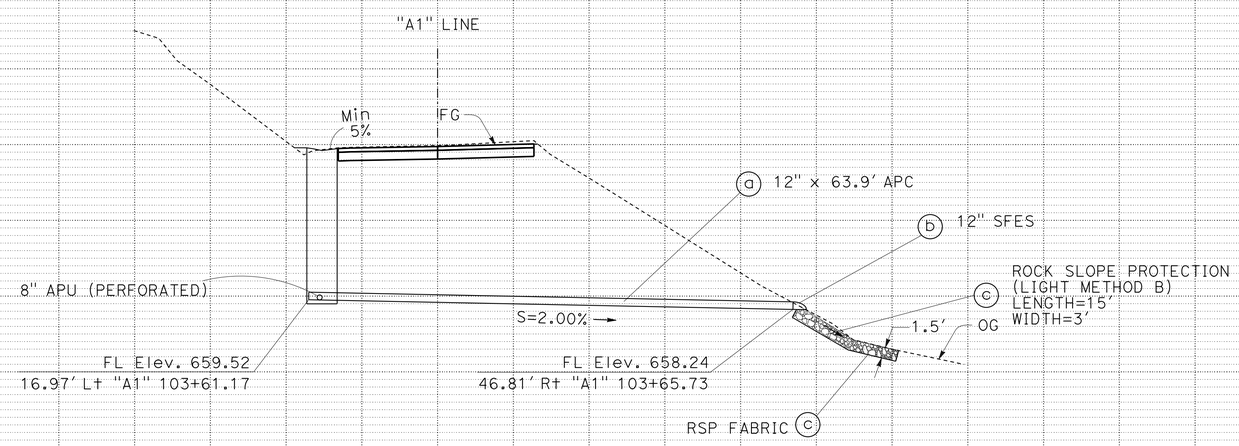

DRAINAGE SYSTEM (2)

"A1" 103+62.38

4.26° SKEW

DRAINAGE PROFILES

SCALE: Horiz 1" = 10'
Vert 1" = 10'

DP-1

REVISED BY | DATE REVISED

DINESH ADHIKARI | ALIREZA KANGARLOW

CALCULATED-DESIGNED BY | CHECKED BY

FUNCTIONAL SUPERVISOR: DEANN SPANGLER

STATE OF CALIFORNIA - DEPARTMENT OF TRANSPORTATION

Caltrans

NR DIVISION OF ENGINEERING

LAST REVISION 03-18-15 | DATE PLOTTED => 16-APR-2015 | TIME PLOTTED => 14:45

Dist	COUNTY	ROUTE	POST MILES TOTAL PROJECT	SHEET No.	TOTAL SHEETS
01	Hum	36	22.8/27.7	16	46

REGISTERED CIVIL ENGINEER DATE 3-30-15

PLANS APPROVAL DATE 3-30-15

REGISTERED PROFESSIONAL ENGINEER DINESH ADHIKARI No. 76808 Exp. 12-31-16 CIVIL STATE OF CALIFORNIA

THE STATE OF CALIFORNIA OR ITS OFFICERS OR AGENTS SHALL NOT BE RESPONSIBLE FOR THE ACCURACY OR COMPLETENESS OF SCANNED COPIES OF THIS PLAN SHEET.

NOTES:

1. PROFILE OF DRAINAGE SYSTEM 4 AS SHOWN OR DIRECTED BY THE ENGINEER

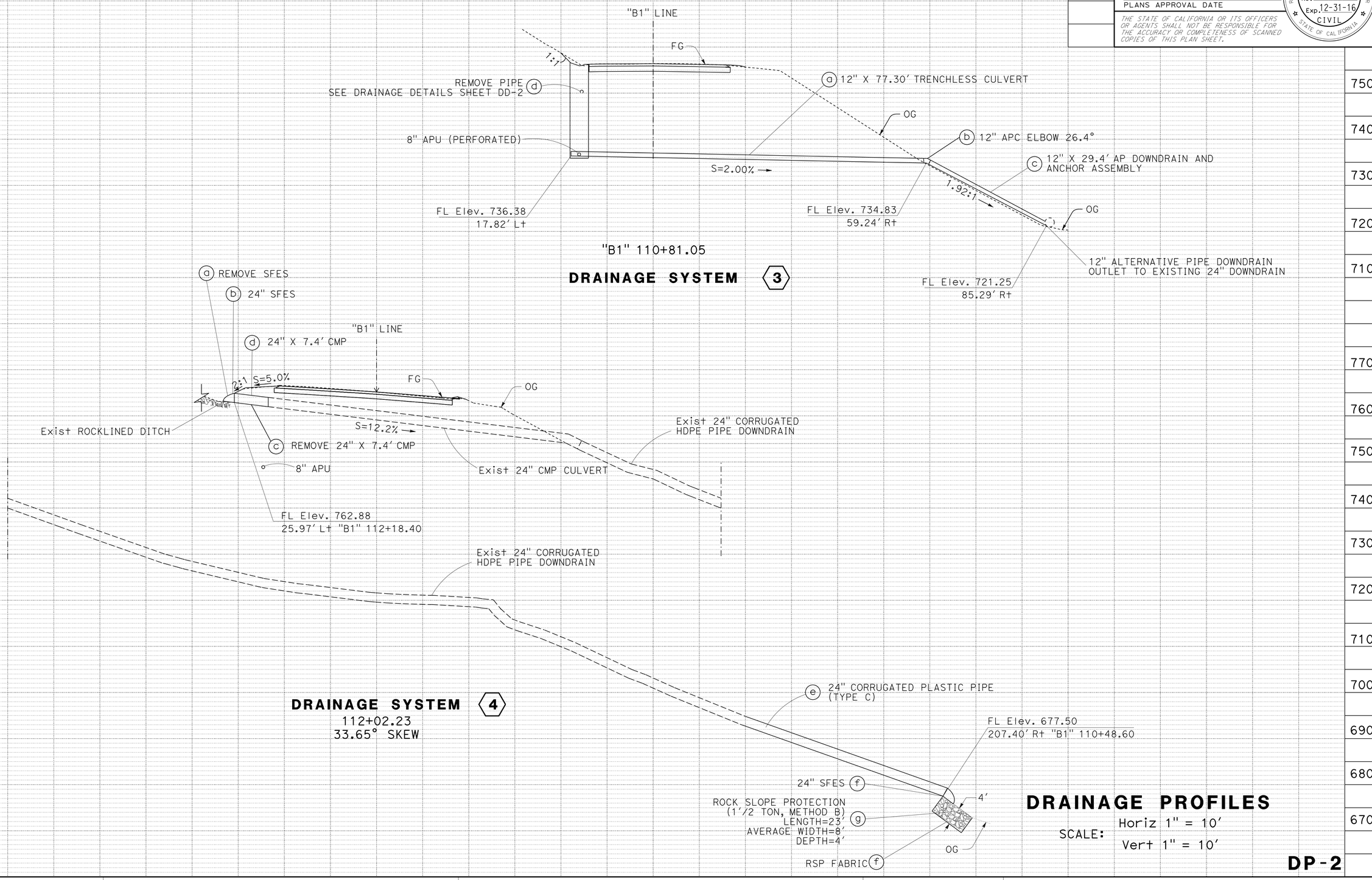

DRAINAGE PROFILES

SCALE: Horiz 1" = 10'
Vert 1" = 10'

DP-2

REVISED BY | DATE REVISED

DINESH ADHIKARI | ALIREZA KANGARLOW

CALCULATED-DESIGNED BY | CHECKED BY

FUNCTIONAL SUPERVISOR: DEANN SPANGLER

STATE OF CALIFORNIA - DEPARTMENT OF TRANSPORTATION
NR DIVISION OF ENGINEERING
Caltrans

LAST REVISION 03-18-15 | DATE PLOTTED => 16-APR-2015 | TIME PLOTTED => 14:45

Dist	COUNTY	ROUTE	POST MILES TOTAL PROJECT	SHEET No.	TOTAL SHEETS
01	Hum	36	22.8/27.7	17	46

REGISTERED CIVIL ENGINEER 3-30-15 DATE

3-30-15
PLANS APPROVAL DATE

REGISTERED PROFESSIONAL ENGINEER
DINESH ADHIKARI
No. 76808
Exp. 12-31-16
CIVIL
STATE OF CALIFORNIA

THE STATE OF CALIFORNIA OR ITS OFFICERS OR AGENTS SHALL NOT BE RESPONSIBLE FOR THE ACCURACY OR COMPLETENESS OF SCANNED COPIES OF THIS PLAN SHEET.

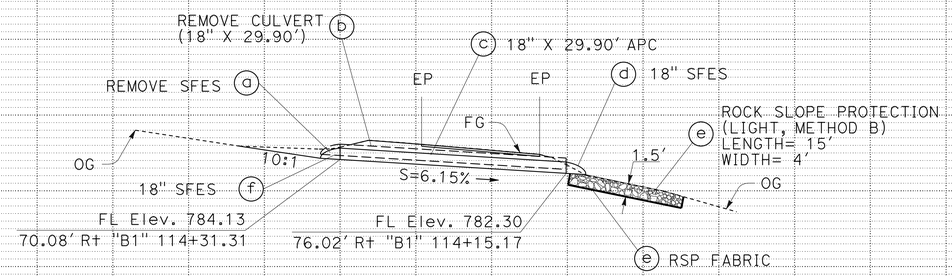

DRAINAGE SYSTEM 5

76.02' Rt "B1" 114+15.17 TO
70.08' Rt "B1' 114+31.31

DRAINAGE PROFILES

SCALE: Horiz 1" = 10'
Vert 1" = 10'

DP-3

STATE OF CALIFORNIA - DEPARTMENT OF TRANSPORTATION
Caltrans
NR DIVISION OF ENGINEERING

FUNCTIONAL SUPERVISOR: DEANN SPANGLER

CALCULATED-DESIGNED BY: DINESH ADHIKARI
CHECKED BY: ALIREZA KANGARLOW

REVISED BY
DATE REVISED

LAST REVISION 03-18-15
DATE PLOTTED => 16-APR-2015
TIME PLOTTED => 14:45

Dist	COUNTY	ROUTE	POST MILES TOTAL PROJECT	SHEET No.	TOTAL SHEETS
01	Hum	36	22.8/27.7	18	46

REGISTERED CIVIL ENGINEER DATE 3-30-15

3-30-15
PLANS APPROVAL DATE

REGISTERED PROFESSIONAL ENGINEER DINESH ADHIKARI No. 76808 Exp. 12-31-16 CIVIL STATE OF CALIFORNIA

THE STATE OF CALIFORNIA OR ITS OFFICERS OR AGENTS SHALL NOT BE RESPONSIBLE FOR THE ACCURACY OR COMPLETENESS OF SCANNED COPIES OF THIS PLAN SHEET.

NOTE:

ALL CROSS SECTIONS SHOWN ALONG FLOWLINE

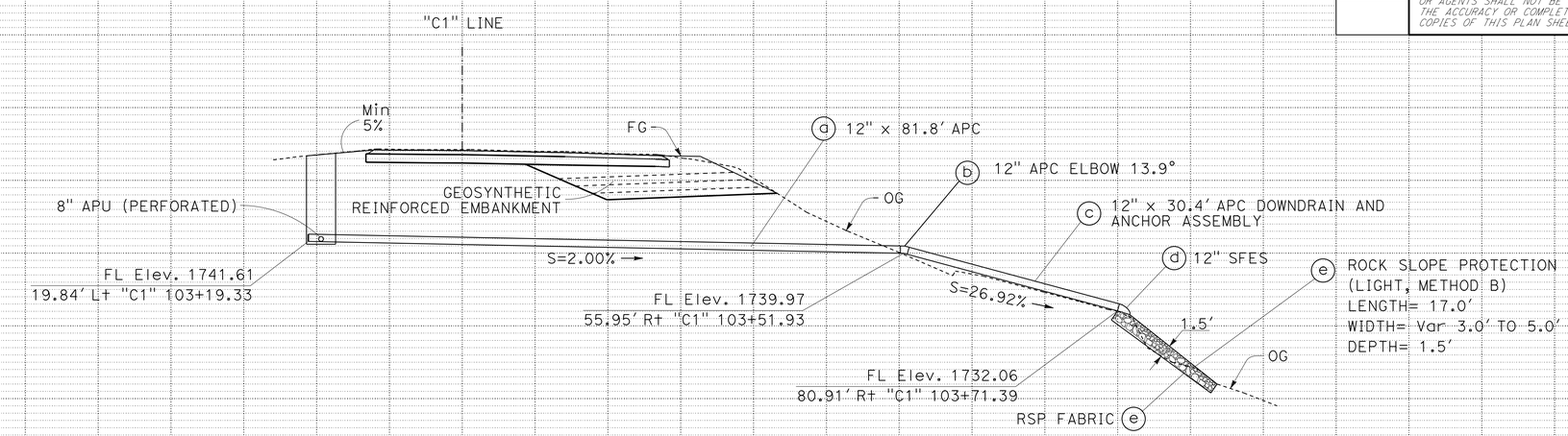

DRAINAGE SYSTEM 6

"C1" 103+26.34
20.60° SKEW

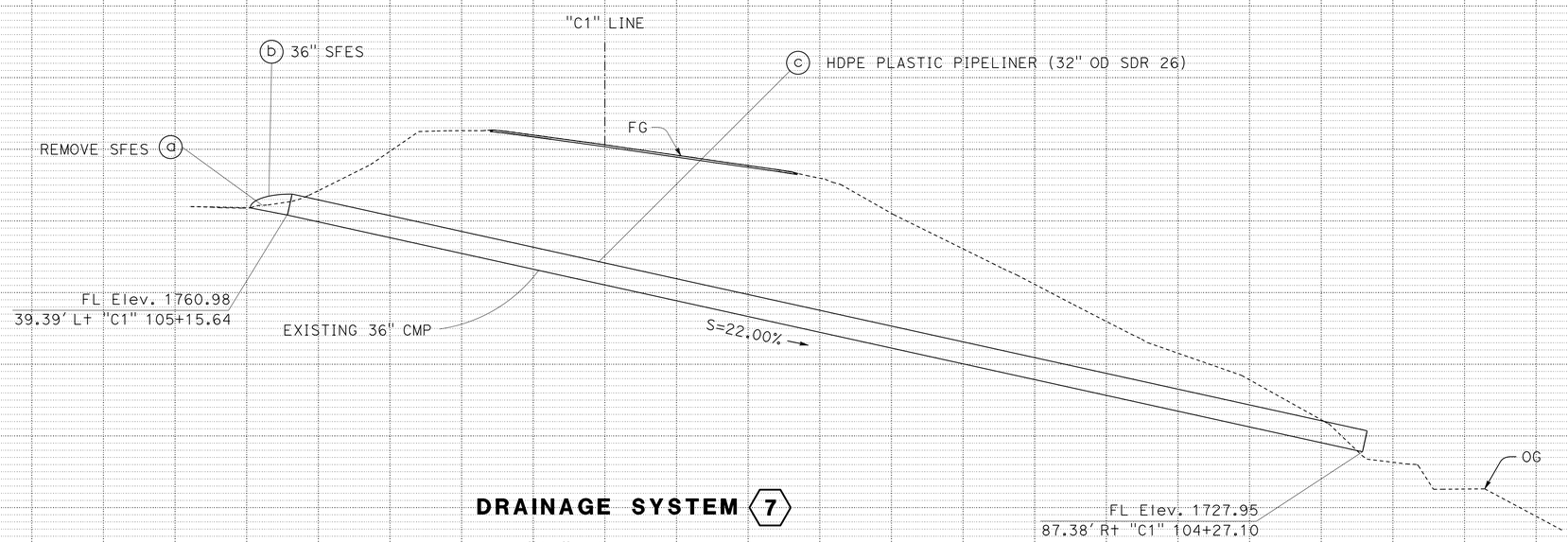

DRAINAGE SYSTEM 7

"C1" 104+96.46
28.88° SKEW

DRAINAGE PROFILES

SCALE: Horiz 1" = 10'
Vert 1" = 10'

DP-4

REVISED BY | DATE REVISED
DINESH ADHIKARI | ALIREZA KANGARLOW
CALCULATED-DESIGNED BY | CHECKED BY
FUNCTIONAL SUPERVISOR: DEANN SPANGLER

STATE OF CALIFORNIA - DEPARTMENT OF TRANSPORTATION
Caltrans
NR DIVISION OF ENGINEERING

LAST REVISION 03-18-15 | DATE PLOTTED => 16-APR-2015 | TIME PLOTTED => 14:45

Dist	COUNTY	ROUTE	POST MILES TOTAL PROJECT	SHEET No.	TOTAL SHEETS
01	Hum	36	22.8/27.7	19	46

REGISTERED CIVIL ENGINEER 3-30-15 DATE

3-30-15
PLANS APPROVAL DATE

REGISTERED PROFESSIONAL ENGINEER DINESH ADHIKARI No. 76808 Exp. 12-31-16 CIVIL STATE OF CALIFORNIA

THE STATE OF CALIFORNIA OR ITS OFFICERS OR AGENTS SHALL NOT BE RESPONSIBLE FOR THE ACCURACY OR COMPLETENESS OF SCANNED COPIES OF THIS PLAN SHEET.

8" APU

STATION TO STATION		OFFSET (LEFT)	D	SLOPE	REMARKS
"A1" 101+81.34	"A1" 102+37.22	Var 23.81′ TO 14.73′	Var 09.83′ TO 15.11′	5.00%	PERFORATED APU
"A1" 101+37.22	"A1" 103+25.27	Var 14.73′ TO 15.52′	Var 15.11′ TO 18.72′	5.00%	PERFORATED APU
"A1" 103+25.27	"A1" 103+60.52	Var 15.52′ TO 15.05′	Var 18.72′ TO 19.96′	5.00%	PERFORATED APU
"A1" 103+62.31	"A1" 104+44.35	Var 15.05′ TO 15.27′	Var 19.88′ TO 13.04′	5.00%	PERFORATED APU
"A1" 104+44.35	"A1" 104+52.58	Var 15.27′ TO 15.27′	Var 13.04′ TO 12.21′	5.00%	PERFORATED APU
"B1" 110+81.55	"B1" 112+06.34	Var 16.09′ TO 19.80′	Var 19.83′ TO 17.93′	8.78%	PERFORATED APU
"B1" 112+06.34	"B1" 112+24.12	Var 19.80′ TO 20.80′	Var 17.93′ TO 17.49′	8.78%	NON-PERFORATED APU
"B1" 112+24.12	"B1" 114+31.86	Var 20.80′ TO 29.88′	Var 17.49′ TO 20.00′	8.78%	PERFORATED APU
"C1" 103+20.38	"C1" 104+94.10	Var 18.17′ TO 19.50′	Var 12.01′ TO 11.99′	9.63%	PERFORATED APU

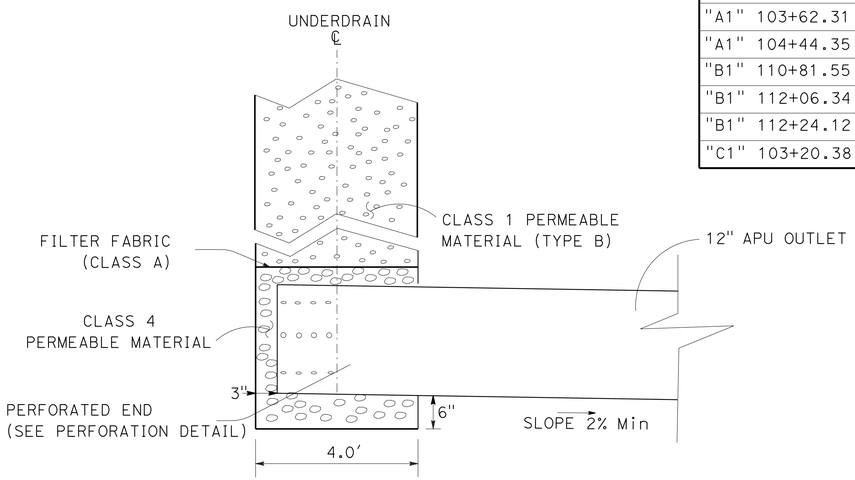

UNDERDRAIN OUTLET DETAIL

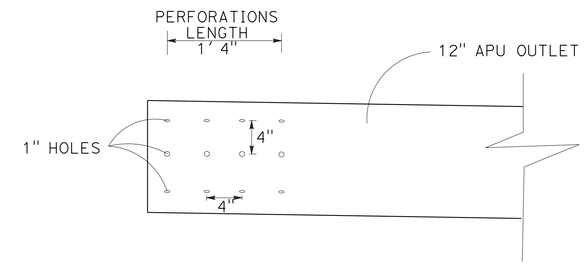

PERFORATION DETAIL

12" APU OUTLETS

STATION	OFFSET	FL ELEVATION
"A1" 103+60.52	15.05′ LT(SEE L-1)	659.47′
"A1" 103+62.31	15.05′ LT(SEE L-1)	659.46′
"B1" 110+81.55	16.09′ LT(SEE L-2)	736.38′
"C1" 103+20.38	18.17′ LT(SEE L-3)	1741.62′

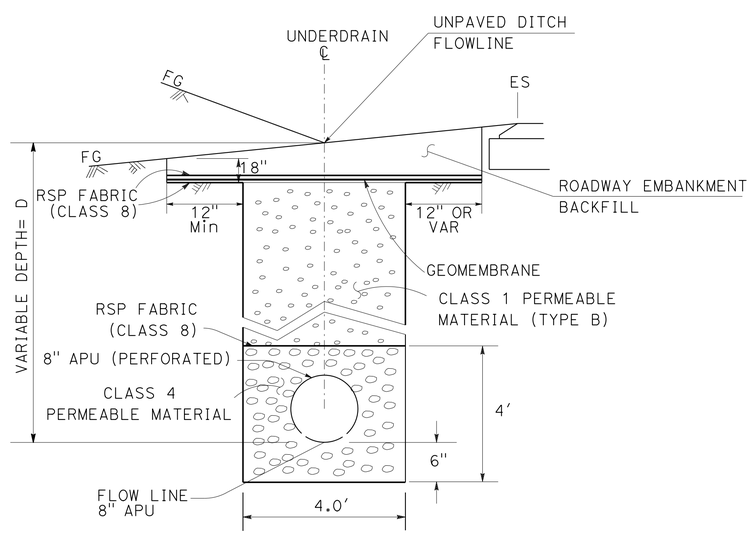

FROM "A1" 101+81.34 TO 103+60.52
FROM "A1" 103+62.31 TO 104+52.58
FROM "B1" 101+81.55 TO 112+06.34
FROM "B1" 112+24.12 TO 114+31.86
FROM "C1" 103+20.38 TO 104+94.10

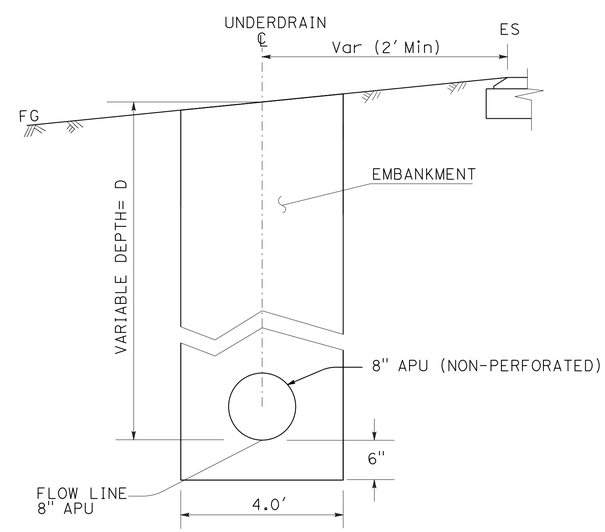

FROM "B1" 112+06.34 TO 112+24.12

8" AP UNDERDRAIN INSTALLATION (UNDER UNPAVED DITCH & SHOULDER)

DRAINAGE DETAILS

NO SCALE

DD-1

STATE OF CALIFORNIA - DEPARTMENT OF TRANSPORTATION
Caltrans®
NR DIVISION OF ENGINEERING

FUNCTIONAL SUPERVISOR: DEANN SPANGLER
CALCULATED-DESIGNED BY: DINESH ADHIKARI
CHECKED BY: GARY DEKENS
REVISED BY
DATE REVISED

LAST REVISION 03-18-15
DATE PLOTTED => 16-APR-2015
TIME PLOTTED => 14:45

Dist	COUNTY	ROUTE	POST MILES TOTAL PROJECT	SHEET No.	TOTAL SHEETS
01	Hum	36	22.8/27.7	20	46

REGISTERED CIVIL ENGINEER 3-30-15 DATE

PLANS APPROVAL DATE 3-30-15

REGISTERED PROFESSIONAL ENGINEER DINESH ADHIKARI No. 76808 Exp. 12-31-16 CIVIL STATE OF CALIFORNIA

THE STATE OF CALIFORNIA OR ITS OFFICERS OR AGENTS SHALL NOT BE RESPONSIBLE FOR THE ACCURACY OR COMPLETENESS OF SCANNED COPIES OF THIS PLAN SHEET.

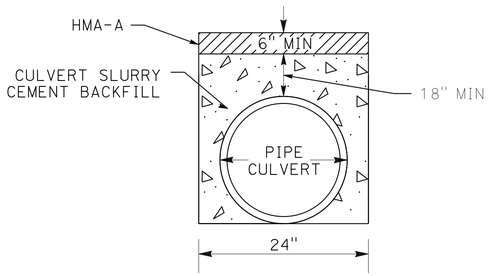

TRENCH EXCAVATION & BACKFILL DETAIL

DRAINAGE SYSTEM 1, 2, 3 AND 6

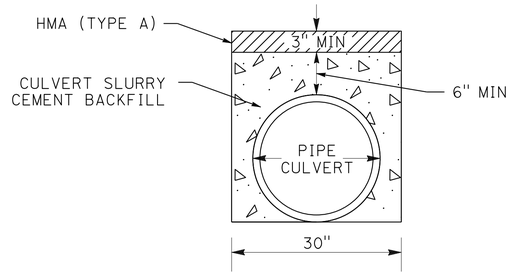

TRENCH EXCAVATION & BACKFILL DETAIL

DRAINAGE SYSTEM 5

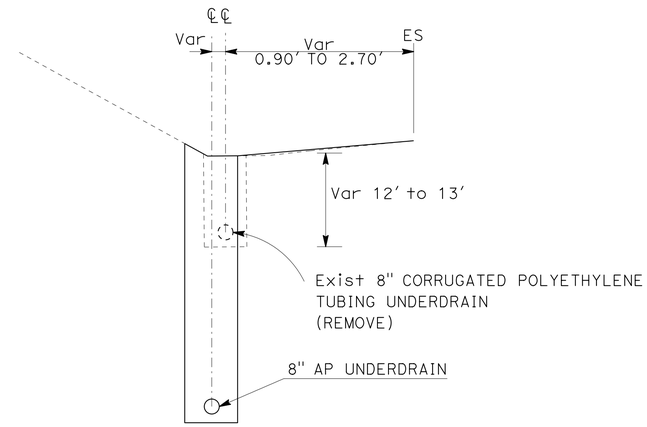

REMOVE PIPE

("B1" 110+80 Lt TO "B" 111+90 Lt)

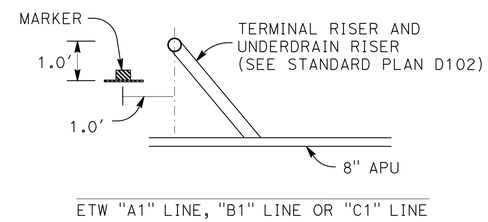

PLAN

UNDERDRAIN MARKER LOCATIONS

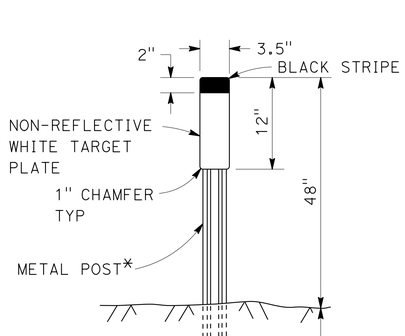

* SEE STANDARD PLAN A73B FOR METAL POST DETAILS

CULVERT MARKER

SEE SUMMARY OF QUANTITIES FOR CULVERT MARKER LOCATION

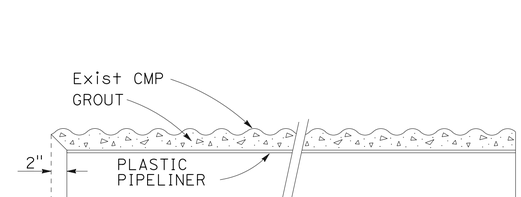

HDPE PLASTIC PIPE LINER

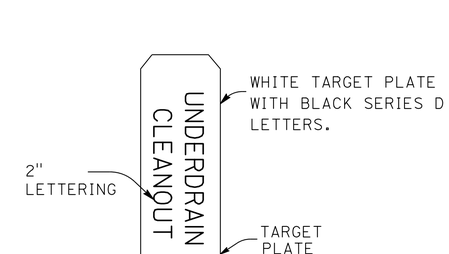

UNDERDRAIN MARKER

(FOR DETAILS NOT SHOWN SEE STANDARD PLAN A73B)

DRAINAGE DETAILS

NO SCALE

DD-2

STATE OF CALIFORNIA - DEPARTMENT OF TRANSPORTATION

Caltrans® NR DIVISION OF ENGINEERING

FUNCTIONAL SUPERVISOR: DEANN SPANGLER

CALCULATED-DESIGNED BY: DINESH ADHIKARI

CHECKED BY: GARY DEKENS

REVISED BY

DATE REVISED

LAST REVISION 03-18-15

DATE PLOTTED => 16-APR-2015

TIME PLOTTED => 14:45

Dist	COUNTY	ROUTE	POST MILES TOTAL PROJECT	SHEET No.	TOTAL SHEETS
01	Hum	36	22.8/27.7	21	46

REGISTERED CIVIL ENGINEER 3-30-15 DATE

3-30-15
PLANS APPROVAL DATE

REGISTERED PROFESSIONAL ENGINEER DINESH ADHIKARI No. 76808 Exp. 12-31-16 CIVIL STATE OF CALIFORNIA

THE STATE OF CALIFORNIA OR ITS OFFICERS OR AGENTS SHALL NOT BE RESPONSIBLE FOR THE ACCURACY OR COMPLETENESS OF SCANNED COPIES OF THIS PLAN SHEET.

NOTES:

1. FOR LENGTH, WIDTH AND THICKNESS OF RSP, SEE DRAINAGE PROFILES.
2. ALL DIMENSIONS ARE IN FEET UNLESS OTHERWISE SHOWN

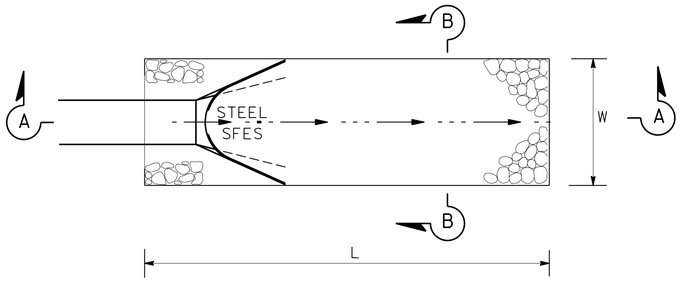

PLAN

ROCK SLOPE PROTECTION WITH SFES

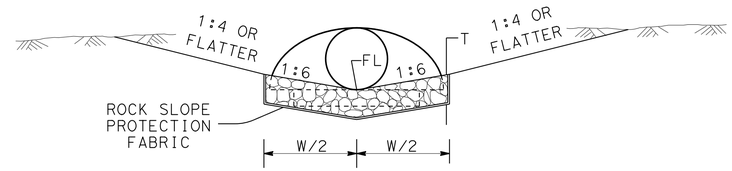

SECTION B-B

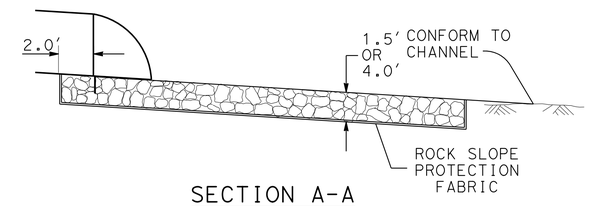

SECTION A-A

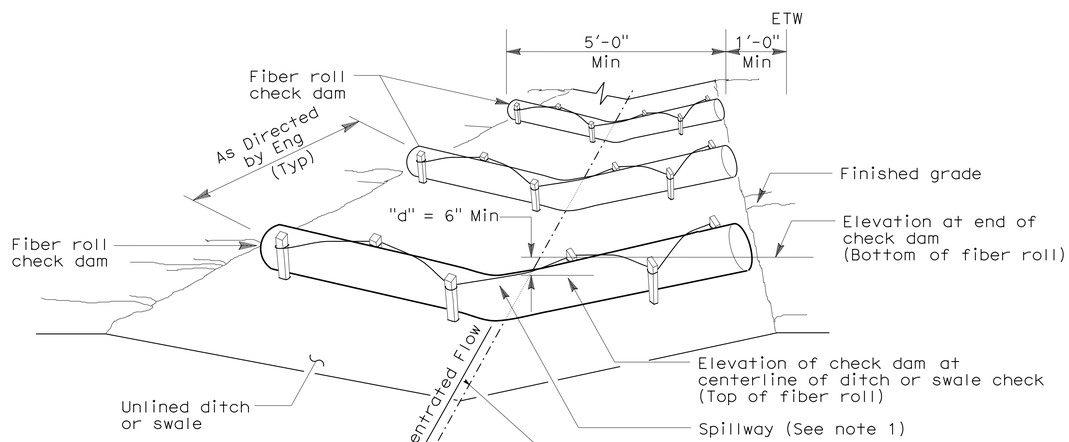

PERSPECTIVE

TEMPORARY CHECK DAM (TYPE 1)

(Total of 3 check dams shown)

(FOR DETAILS NOT SHOWN SEE STANDARD PLAN T57)

DRAINAGE DETAILS

NO SCALE

DD-3

STATE OF CALIFORNIA - DEPARTMENT OF TRANSPORTATION
Caltrans
NR DIVISION OF ENGINEERING

FUNCTIONAL SUPERVISOR: DEANN SPANGLER
CALCULATED-DESIGNED BY: DINESH ADHIKARI
CHECKED BY: GARY DEKENS
REVISED BY
DATE REVISED

LAST REVISION 03-18-15 | DATE PLOTTED => 16-APR-2015 | TIME PLOTTED => 14:45

Dist	COUNTY	ROUTE	POST MILES TOTAL PROJECT	SHEET No.	TOTAL SHEETS
01	Hum	36	22.8/27.7	22	46

REGISTERED CIVIL ENGINEER 3-30-15 DATE

3-30-15
PLANS APPROVAL DATE

REGISTERED PROFESSIONAL ENGINEER DINESH ADHIKARI No. 76808 Exp. 12-31-16 CIVIL STATE OF CALIFORNIA

THE STATE OF CALIFORNIA OR ITS OFFICERS OR AGENTS SHALL NOT BE RESPONSIBLE FOR THE ACCURACY OR COMPLETENESS OF SCANNED COPIES OF THIS PLAN SHEET.

NOTES:
1. (N) NOT A SEPARATE PAY ITEM FOR INFORMATION ONLY.

APC ALLOWABLE PIPE MATERIAL

DESCRIPTION	TYPE		
	GALVANIZED, CORRUGATED STEEL PIPE (CSP, Galv) 0.168" THICK (8 GAGE)	PLASTIC PIPE TYPE S • (HDPE)	REINFORCED CONCRETE PIPE + (RCP)
24" APC	ALLOWABLE	ALLOWABLE	ALLOWABLE
LOCATION 1	YES	YES	YES
LOCATION 2	YES	YES	YES*
LOCATION 3	YES	YES	YES*

• TYPE S = SMOOTH INTERIOR; CAN NOT BE USED AS TAPERED INLET OR DOWNDRAIN
+ MUST UTILIZE TYPE II MODIFIED OR TYPE IP MODIFIED CEMENT
* THE MAXIMUM WATER-TO-CEMENT RATIO SHALL BE 0.45

	LAYOUT SHEET No.	DRAINAGE PROFILE SHEET No.	DRAINAGE SYSTEM No.	DRAINAGE UNIT	REMOVE PIPE (LF)	REMOVE CULVERT (EA)	REMOVE FLARED END SECTION (EA)	12" TRENCHLESS CULVERT (LF)	12" ALTERNATIVE PIPE CULVERT (LF)	18" ALTERNATIVE PIPE CULVERT (LF)	24" CORRUGATED PLASTIC PIPE (TYPE C) (LF)	24" ALTERNATIVE PIPE CULVERT (LF)	12" STEEL FLARED END SECTION (EA)	18" STEEL FLARED END SECTION (EA)	24" STEEL FLARED END SECTION (EA)	36" STEEL FLARED END SECTION (EA)	RSP (LIGHT, METHOD B) (CY)	RSP FABRIC (CLASS 8) (SQYD)	RSP (1/2 T, METHOD B) (SQYD)	12" ALTERNATIVE PIPE DOWNDRAIN (LF)	12" ANCHOR ASSEMBLY (EA)	24" CORRUGATED STEEL PIPE (0.079" THICK) (LF)	HDPE PLASTIC PIPELINER (32" OD SDR 26) (LF)	LAYOUT PLAN SHEET No.	DRAINAGE PROFILE SHEET No.	DRAINAGE SYSTEM No.	DRAINAGE UNIT	DESCRIPTION
LOCATION 1	L-1	DP-1	1	a			1																	L-1	DP-1	1	a	REMOVE 18" STEEL FES
			1	b		1																				1	b	REMOVE CULVERT (18" x 60.7' CMP)
			1	c								61.3														1	c	24" X 61.3' APC
			1	d								5.0														1	d	24" APC ELBOW 36 deg
			1	e								5.0														1	e	24" X 5.0' APC
			1	f											1											1	f	24" SFES
			1	g													4.5	18								1	g	RSP (LIGHT, METHOD B) (20' X 4' X 1.5')
			1	h											1											1	h	24" SFES
			2	a					63.9																	2	a	12" X 63.9' APC
			2	b									1													2	b	12" SFES
			2	c													2.5	12								2	c	RSP (LIGHT, METHOD B) (15' X 3' X 1.5')
LOCATION 2	L-2	DP-2	3	a				77.3																L-2	DP-2	3	a	12" TRENCHLESS CULVERT
			3	b					5.0																	3	b	12" APC ELBOW 26.4 deg
			3	c																29.4	2					3	c	12" AP DOWNDRAIN AND ANCHOR ASSEMBLY
			3	d	120																					3	d	REMOVE PIPE
			4	a			1																			4	a	REMOVE SFES
			4	b											1											4	b	24" SFES
			4	c		1																				4	c	REMOVE 24" X 7.4' CMP
			4	d																		7.4				4	d	24" X 7.4' CMP
			4	e							46															4	e	24" CORRUGATED PLASTIC PIPE (TYPE C)
			4	f											1											4	f	24" SFES
			4	g														41	27							4	g	RSP (1/2T, METHOD B) (23' X 8' X 4')
			5	a			1																			5	a	REMOVE SFES
			5	b		1																				5	b	REMOVE CULVERT (12" X 29.9')
			5	c						29.9																5	c	18" X 29.9' APC
			5	d										1												5	d	18" SFES
			5	e													3.3	14								5	e	RSP (LIGHT, METHOD B) (15' X 4' X 1.5')
			5	f										1												5	f	18" SFES
LOCATION 3	L-3	DP-3	6	a					81.8															L-3	DP-3	6	a	12" X 81.8" APC
			6	b					5.0																	6	b	12" APC ELBOW 13.9 deg
			6	c																30.4	2					6	c	12" APC DOWNDRAIN AND ANCHOR ASSEMBLY
			6	d									1													6	d	12" SFES
			6	e													3.8	15.6								6	e	RSP (LIGHT, METHOD B) (17' X 4' X 1.5')
			7	a			1																			7	a	REMOVE SFES
			7	b												1										7	b	36" SFES
			7	c																			153.7			7	c	32" X 153.7" HDPE SLIPLINER
				TOTAL	120	3	4	77.3	155.7	29.9	46	71.3	2	2	4	1	14.1	100.6	27	59.8	4	7.4	153.7					

DRAINAGE QUANTITIES
DQ-1

STATE OF CALIFORNIA - DEPARTMENT OF TRANSPORTATION
Caltrans
NR DIVISION OF ENGINEERING

FUNCTIONAL SUPERVISOR: DEANN SPANGLER
CALCULATED-DESIGNED BY: DINESH ADHIKARI
CHECKED BY: GARY DEKENS
REVISED BY
DATE REVISED

LAST REVISION 03-18-15
DATE PLOTTED => 16-APR-2015
TIME PLOTTED => 14:45

Dist	COUNTY	ROUTE	POST MILES TOTAL PROJECT	SHEET No.	TOTAL SHEETS
01	Hum	36	22.8/27.7	23	46

REGISTERED CIVIL ENGINEER 3-30-15 DATE

3-30-15
PLANS APPROVAL DATE

REGISTERED PROFESSIONAL ENGINEER DINESH ADHIKARI No. 76808 Exp. 12-31-16 CIVIL STATE OF CALIFORNIA

THE STATE OF CALIFORNIA OR ITS OFFICERS OR AGENTS SHALL NOT BE RESPONSIBLE FOR THE ACCURACY OR COMPLETENESS OF SCANNED COPIES OF THIS PLAN SHEET.

STATIONARY MOUNTED CONSTRUCTION AREA SIGNS

SIGN No. (X)	SIGN CODE MUTCD	PANEL SIZE	SIGN MESSAGE	NUMBER OF POSTS AND SIZE	NUMBER OF SIGNS
A	C40(CA)	108" x 42"	TRAFFIC FINES DOUBLED IN CONSTRUCTION ZONES	2 - 6" x 6"	6
B	W20-1	36" x 36"	ROAD WORK AHEAD	1 - 4" x 6"	6
C	W11-1 W16-1	36" x 36" 24" x 30"	BICYCLE SYMBOL SHARE THE ROAD	1 - 4" x 6"	6
D	G20-2	36" x 18"	END ROAD WORK	1 - 4" x 4"	6

NOTES:

1. EXACT LOCATION AND POSITION OF SIGNS WILL BE DETERMINED BY THE ENGINEER.
2. EXISTING UTILITY FACILITIES HAVE NOT BEEN PLOTTED ON THESE PLANS.

LEGEND:

(X) CONSTRUCTION AREA SIGN LETTER

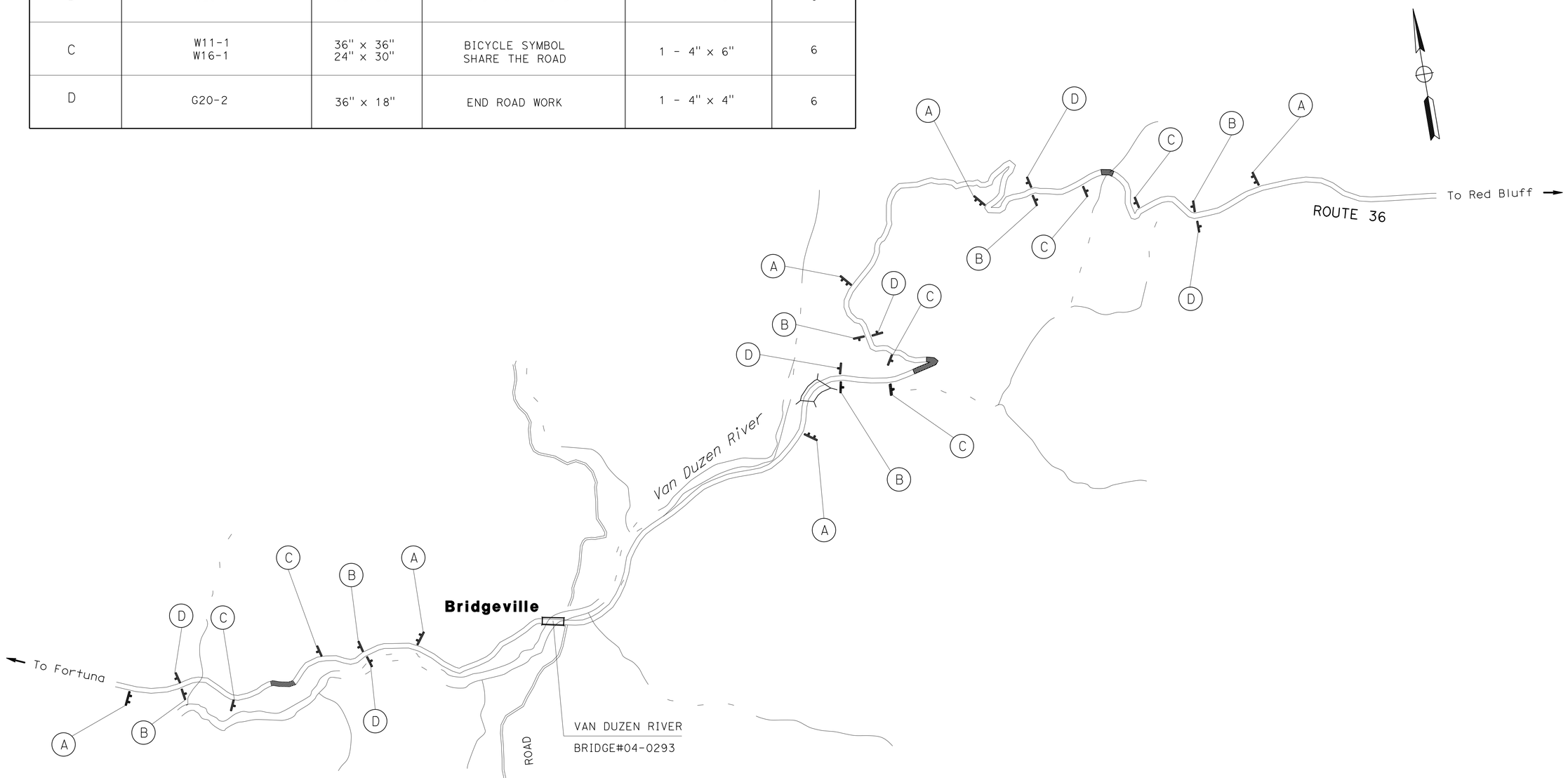

APPROVED FOR CONSTRUCTION AREA SIGN WORK ONLY

CONSTRUCTION AREA SIGNS

NO SCALE

CS-1

STATE OF CALIFORNIA - DEPARTMENT OF TRANSPORTATION
Caltrans
NR DIVISION OF ENGINEERING

FUNCTIONAL SUPERVISOR: DEANN SPANGLER
CALCULATED-DESIGNED BY: DINESH ADHIKARI
CHECKED BY: GARY DEKENS
REVISED BY
DATE REVISED

LAST REVISION 03-18-15
DATE PLOTTED => 16-APR-2015
TIME PLOTTED => 14:45

Dist	COUNTY	ROUTE	POST MILES TOTAL PROJECT	SHEET No.	TOTAL SHEETS
01	Hum	36	22.8/27.7	24	46

Sheri M. Rodriguez 3-30-15
REGISTERED CIVIL ENGINEER DATE

3-30-15
PLANS APPROVAL DATE

REGISTERED PROFESSIONAL ENGINEER SHERI M. RODRIGUEZ No. C66861 Exp. 9-30-16 CIVIL STATE OF CALIFORNIA

THE STATE OF CALIFORNIA OR ITS OFFICERS OR AGENTS SHALL NOT BE RESPONSIBLE FOR THE ACCURACY OR COMPLETENESS OF SCANNED COPIES OF THIS PLAN SHEET.

NOTES:

1. CALIFORNIA CODES ARE DESIGNATED BY (CA). OTHERWISE, FEDERAL (MUTCD) CODES ARE SHOWN.
2. ALL SIGNS SHALL HAVE A BLACK LEGEND ON FLUORESCENT ORANGE BACKGROUND AND SHALL BE EQUIPPED WITH AT LEAST TWO 16" x 16" ORANGE FLAGS FOR DAYTIME CLOSURE OR FLASHING BEACONS FOR LANE CLOSURE DURING HOURS OF DARKNESS.
3. ALL CONES USED FOR LANE CLOSURES DURING THE HOURS OF DARKNESS SHALL BE FITTED WITH RETROREFLECTIVE BANDS OR SLEEVES.
4. WHEN A PILOT CAR IS USED, PLACE A C37 (CA) SIGN AT ALL INTERSECTIONS WITHIN TRAFFIC CONTROL AREA. WHERE VEHICULAR TRAFFIC CAN NOT EFFECTIVELY SELF-REGULATE, AT LEAST ONE FLAGGER SHALL BE USED AT EACH INTERSECTION WITHIN THE TRAFFIC CONTROL AREA.
5. FLAGGER SHOULD STAND IN A CONSPICUOUS PLACE, FACING TRAFFIC AT ALL TIMES, BE VISIBLE TO APPROACHING TRAFFIC AS WELL AS APPROACHING VEHICLES AFTER THE FIRST VEHICLE HAS STOPPED.
6. ADDITIONAL ADVANCE FLAGGERS ARE REQUIRED.
7. WHEN FLAGGER IS NOT VISIBLE FROM THIS LOCATION PLACE A C29 (CA) SIGN BELOW THE C9A (CA) SIGN.

LEGEND

- TRAFFIC CONE
- TEMPORARY SIGN
- DIRECTION OF TRAVEL
- PORTABLE FLASHING BEACON
- FLAGGER

SIGN PANEL SIZE (MINIMUM)

A	48" x 48" - SPEED OF 45 mph OR MORE 36" x 36" - SPEED LESS THAN 45 mph
B	30" x 30"
C	UNUSED
D	UNUSED
E	20" x 7"

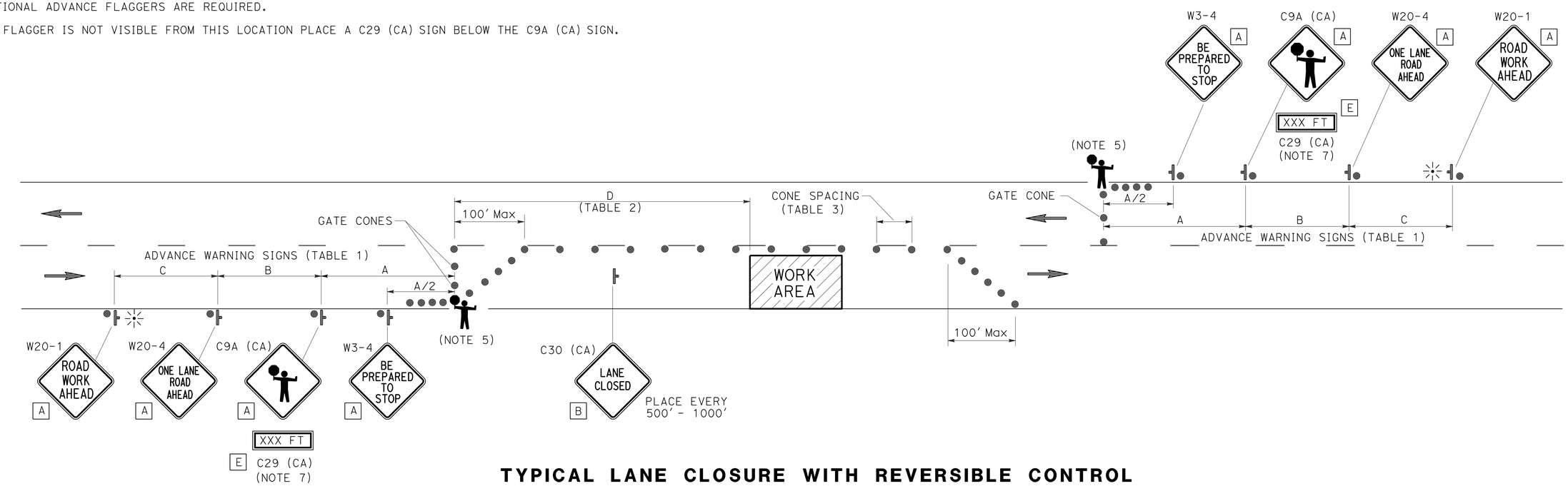

TYPICAL LANE CLOSURE WITH REVERSIBLE CONTROL

TABLE 1

ADVANCE WARNING SIGN SPACING

ROAD TYPE	Min A	Min B	Min C
	ft		
URBAN (25 mph OR LESS)	100	100	100
URBAN (30 mph TO 40 mph)	250	250	250
URBAN (MORE THAN 40 mph)	350	350	350
RURAL	500	500	500
EXPRESSWAY / FREEWAY	1000	1500	2640

TABLE 2

BUFFER SPACE

APPROACH SPEED	Min D	DOWNGRADE Min D		
		-3%*	-6%*	-9%*
mph	ft			
25 & BELOW	155	158	165	173
30	200	205	215	227
35	250	257	271	287
40	305	315	333	354
45	360	378	400	427
50	425	446	474	507
55	495	520	553	593
60	570	598	638	686
65	645	682	728	785

* USE ON SUSTAINED DOWNGRADE STEEPER THAN -3 PERCENT AND LONGER THAN 1 MILE.

TABLE 3

Max CONE SPACING

POSTED SPEED	TAPER	TANGENT	CONFLICT*
mph	ft		
20	20	40	10
25	25	50	12
30	30	60	15
35	35	70	17
40	40	80	20
45	45	90	22
50	50	100	25
55	55	110	27
60	60	120	30
65	65	130	32

* USE WHERE THERE IS A CONFLICT BETWEEN EXISTING PAVEMENT MARKINGS AND CHANNELIZERS.

TRAFFIC HANDLING PLAN

NO SCALE

APPROVED FOR TRAFFIC HANDLING WORK ONLY

TH-1

REVISED BY | DATE REVISED
SHERI M. RODRIGUEZ | TROY A. ARSENEAU
CALCULATED-DESIGNED BY | CHECKED BY
FUNCTIONAL SUPERVISOR: RICHARD MULLEN

STATE OF CALIFORNIA - DEPARTMENT OF TRANSPORTATION
Caltrans® TRAFFIC OPERATIONS

P:\proj5\01\0b340\drafting\0112000118ma001.dgn

LAST REVISION 00-00-00 | DATE PLOTTED => 16-APR-2015 | TIME PLOTTED => 14:45

Dist	COUNTY	ROUTE	POST MILES TOTAL PROJECT	SHEET No.	TOTAL SHEETS
01	Hum	36	22.8/27.7	25	46

REGISTERED CIVIL ENGINEER DATE 3-30-15

PLANS APPROVAL DATE 3-30-15

REGISTERED PROFESSIONAL ENGINEER DINESH ADHIKARI No. 76808 Exp. 12-31-16 CIVIL STATE OF CALIFORNIA

THE STATE OF CALIFORNIA OR ITS OFFICERS OR AGENTS SHALL NOT BE RESPONSIBLE FOR THE ACCURACY OR COMPLETENESS OF SCANNED COPIES OF THIS PLAN SHEET.

NOTES:

1. EXISTING UTILITY FACILITIES HAVE NOT BEEN PLOTTED ON THESE PLANS.
2. FOR ACCURATE RIGHT OF WAY DATA, CONTACT RIGHT OF WAY ENGINEERING AT THE DISTRICT OFFICE.

LEGEND

LIMIT OF STRIPING PATTERN

No. PAVEMENT DELINEATION DETAIL NUMBER

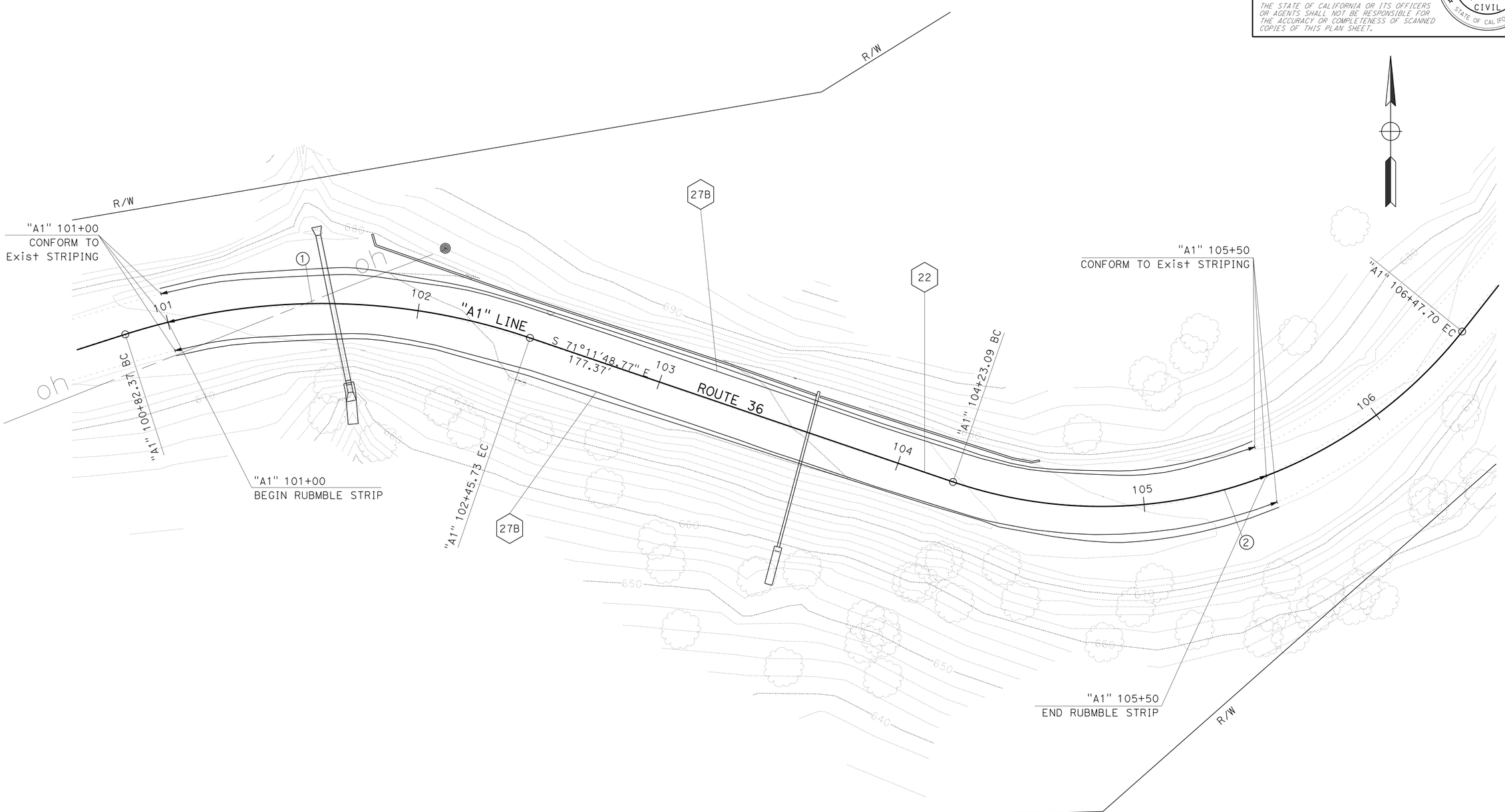

LOCATION 1

PAVEMENT DELINEATION PLAN

SCALE 1"=20'

PD-1

STATE OF CALIFORNIA - DEPARTMENT OF TRANSPORTATION

Caltrans

NR DIVISION OF ENGINEERING

FUNCTIONAL SUPERVISOR: DEANN SPANGLER

CALCULATED-DESIGNED BY: DINESH ADHIKARI

CHECKED BY: GARY DEKENS

REVISED BY

DATE REVISED

LAST REVISION 03-18-15

DATE PLOTTED => 16-APR-2015

TIME PLOTTED => 14:45

Dist	COUNTY	ROUTE	POST MILES TOTAL PROJECT	SHEET No.	TOTAL SHEETS
01	Hum	36	22.8/27.7	26	46

REGISTERED CIVIL ENGINEER DATE 3-30-15

3-30-15
PLANS APPROVAL DATE

REGISTERED PROFESSIONAL ENGINEER DINESH ADHIKARI No. 76808 Exp. 12-31-16 CIVIL STATE OF CALIFORNIA

THE STATE OF CALIFORNIA OR ITS OFFICERS OR AGENTS SHALL NOT BE RESPONSIBLE FOR THE ACCURACY OR COMPLETENESS OF SCANNED COPIES OF THIS PLAN SHEET.

NOTES:

1. EXISTING UTILITY FACILITIES HAVE NOT BEEN PLOTTED ON THESE PLANS.
2. FOR ACCURATE RIGHT OF WAY DATA, CONTACT RIGHT OF WAY ENGINEERING AT THE DISTRICT OFFICE.

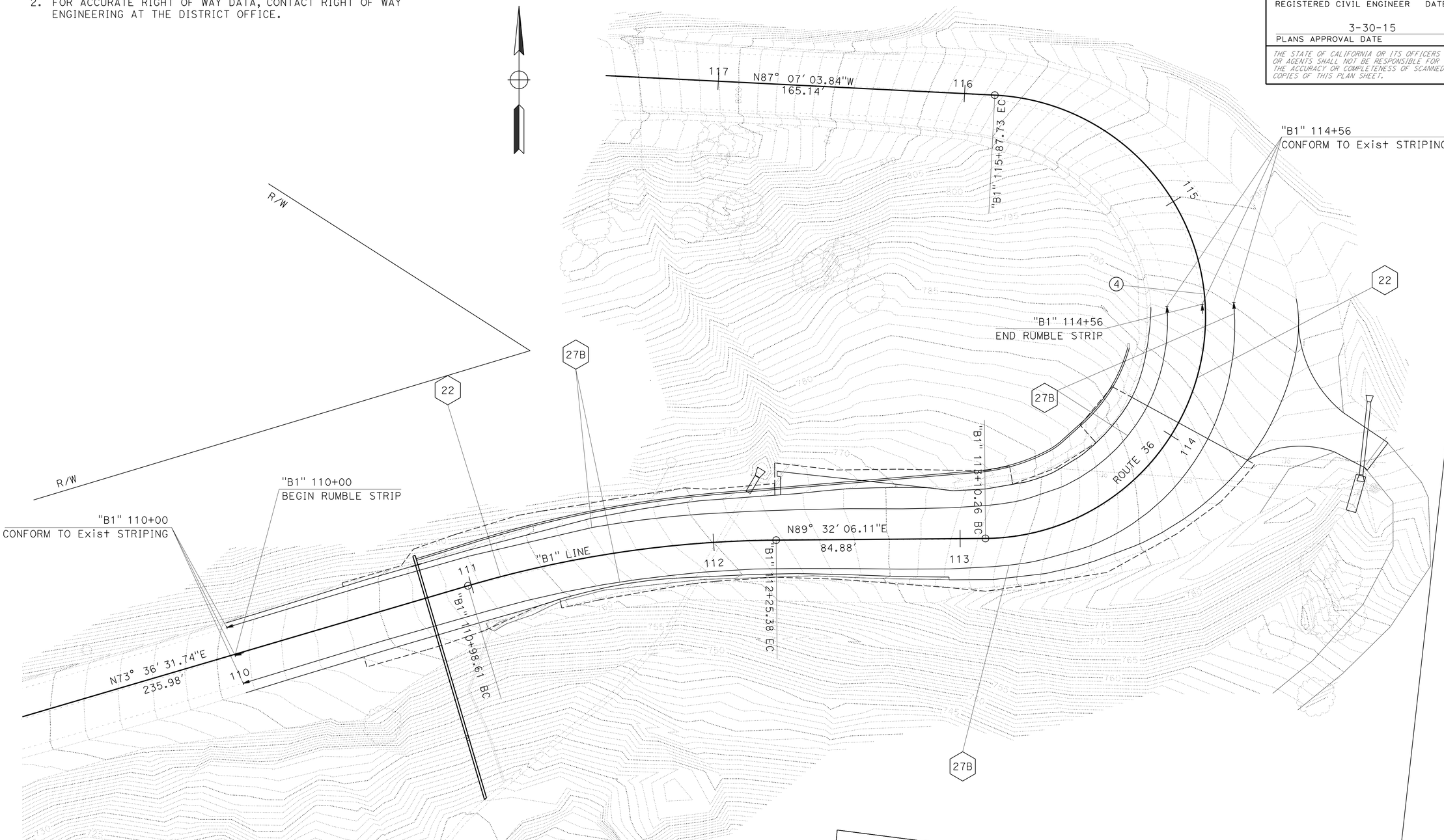

LOCATION 2
PLAN

PAVEMENT DELINEATION PLAN

SCALE 1"=20'

PD-2

STATE OF CALIFORNIA - DEPARTMENT OF TRANSPORTATION
Caltrans
NR DIVISION OF ENGINEERING

FUNCTIONAL SUPERVISOR: DEANN SPANGLER
CALCULATED-DESIGNED BY: DINESH ADHIKARI
CHECKED BY: GARY DEKENS
REVISED BY
DATE REVISED

LAST REVISION 03-18-15
DATE PLOTTED => 16-APR-2015
TIME PLOTTED => 14:45

Dist	COUNTY	ROUTE	POST MILES TOTAL PROJECT	SHEET No.	TOTAL SHEETS
01	Hum	36	22.8/27.7	27	46

REGISTERED CIVIL ENGINEER DATE 3-30-15

PLANS APPROVAL DATE 3-30-15

REGISTERED PROFESSIONAL ENGINEER DINESH ADHIKARI No. 76808 Exp. 12-31-16 CIVIL STATE OF CALIFORNIA

THE STATE OF CALIFORNIA OR ITS OFFICERS OR AGENTS SHALL NOT BE RESPONSIBLE FOR THE ACCURACY OR COMPLETENESS OF SCANNED COPIES OF THIS PLAN SHEET.

NOTES:

1. EXISTING UTILITY FACILITIES HAVE NOT BEEN PLOTTED ON THESE PLANS.
2. FOR ACCURATE RIGHT OF WAY DATA, CONTACT RIGHT OF WAY ENGINEERING AT THE DISTRICT OFFICE.
2. TEMPORARY FENCE (TYPE ESA) TO BE PLACED AT THE DIRECTION OF CALTRANS ENVIRONMENTAL

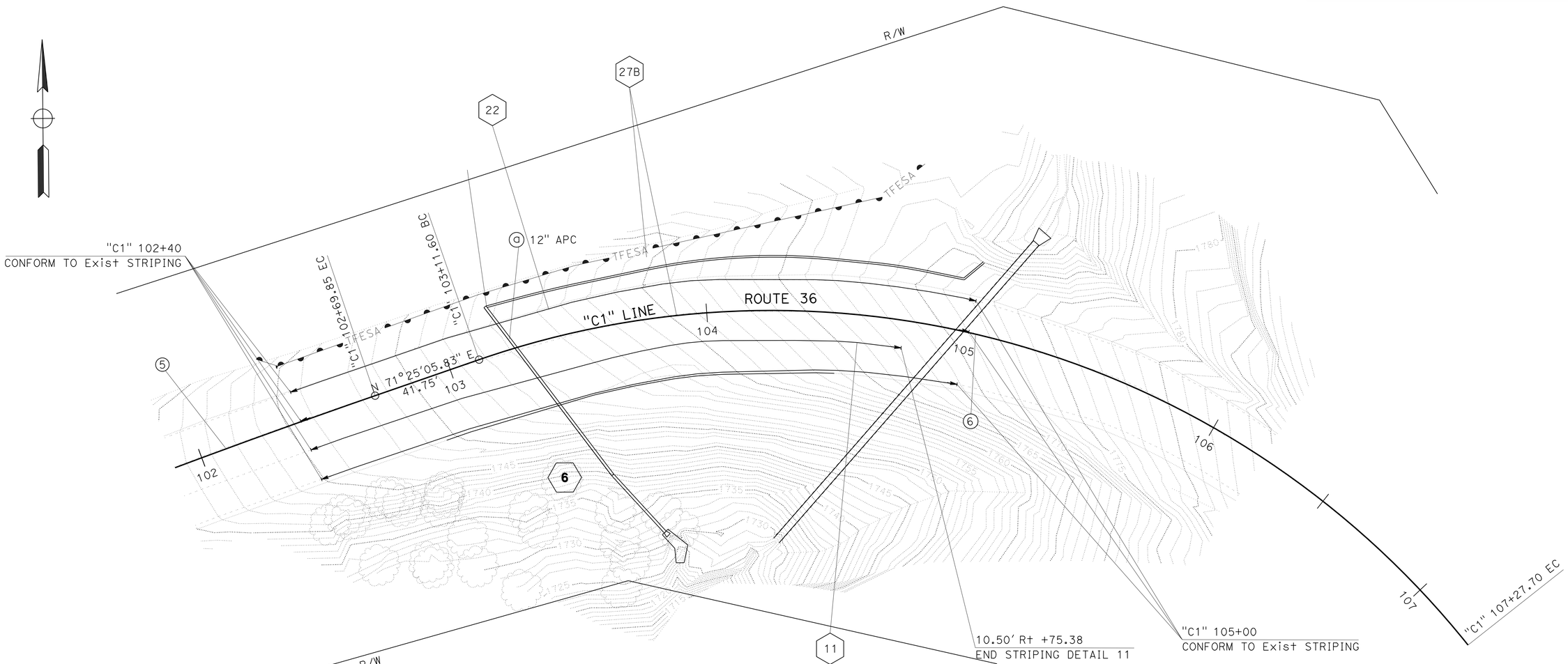

PAVEMENT DELINEATION PLAN

SCALE 1"=20'

LOCATION 3
PLAN

PD-3

STATE OF CALIFORNIA - DEPARTMENT OF TRANSPORTATION
Caltrans
NR DIVISION OF ENGINEERING

FUNCTIONAL SUPERVISOR: DEANN SPANGLER
CALCULATED-DESIGNED BY: DINESH ADHIKARI
CHECKED BY: GARY DEKENS
REVISED BY / DATE REVISED

LAST REVISION 03-18-15 | DATE PLOTTED => 16-APR-2015 | TIME PLOTTED => 14:45

Dist	COUNTY	ROUTE	POST MILES TOTAL PROJECT	SHEET No.	TOTAL SHEETS
01	Hum	36	22.8/27.7	28	46

REGISTERED CIVIL ENGINEER DATE 3-30-15

PLANS APPROVAL DATE 3-30-15

REGISTERED PROFESSIONAL ENGINEER DINESH ADHIKARI No. 76808 Exp. 12-31-16 CIVIL STATE OF CALIFORNIA

THE STATE OF CALIFORNIA OR ITS OFFICERS OR AGENTS SHALL NOT BE RESPONSIBLE FOR THE ACCURACY OR COMPLETENESS OF SCANNED COPIES OF THIS PLAN SHEET.

PAVEMENT DELINEATION QUANTITIES

SHEET NUMBER	LOCATION	STATION	4" THERMOPLASTIC TRAFFIC STRIPE				PAVEMENT MARKER (RETROREFLECTIVE - RECESSED)	
			DETAIL 27B		DETAIL 22	DETAIL 11		
			EB (LF)	WB (LF)	(LF) *	EB (LF)	DETAIL NUMBER	TYPE D (EA)
PD-1	1	"A1" 101+00.00 TO 105+50.00	450	450	900	0	22	39
PD-2	2	"B1" 110+00.00 TO 114+56.00	475	440	920	0	22	40
PD-3	3	"C1" 102+40.00 TO 105+00.00	250	270	520	230	22	23
		SUBTOTAL	1175	1160	2340	230		102
		TOTAL	4905					102

* MULTIPLIED BY 2 FOR DOUBLE YELLOW STRIPE TOTAL.

THERMOPLASTIC PAVEMENT MARKING

LOCATION	STA	DESCRIPTION	No.	SQFT
3	"C1" 102+75	TYPE VI ARROW	1 @ 42 SQFT	42
			TOTAL	42

RUMBLE STRIP

LOCATION	DETAIL NUMBER	STA
1	22	4.5
2	22	4.6
TOTAL		9.1

STATE OF CALIFORNIA - DEPARTMENT OF TRANSPORTATION

Caltrans

NR DIVISION OF ENGINEERING

FUNCTIONAL SUPERVISOR: DEANN SPANGLER

CALCULATED-DESIGNED BY: DINESH ADHIKARI

CHECKED BY: GARY DEKENS

REVISED BY

DATE REVISED

PAVEMENT DELINEATION QUANTITIES

PDQ-1

LAST REVISION 03-18-15

DATE PLOTTED => 16-APR-2015

TIME PLOTTED => 14:45

Dist	COUNTY	ROUTE	POST MILES TOTAL PROJECT	SHEET No.	TOTAL SHEETS
01	Hum	36	22.8/27.7	29	46

REGISTERED CIVIL ENGINEER 3-30-15 DATE

3-30-15
PLANS APPROVAL DATE

REGISTERED PROFESSIONAL ENGINEER DINESH ADHIKARI No. 76808 Exp. 12-31-16 CIVIL STATE OF CALIFORNIA

THE STATE OF CALIFORNIA OR ITS OFFICERS OR AGENTS SHALL NOT BE RESPONSIBLE FOR THE ACCURACY OR COMPLETENESS OF SCANNED COPIES OF THIS PLAN SHEET.

NOTES:

1. (N) NOT A SEPARATE PAY ITEM, FOR INFORMATION ONLY.
2. CONTOUR GRADING AS SHOWN ON EROSION CONTROL SHEET EC-2 OR AS DIRECTED BY THE ENGINEER.

EARTHWORK SUMMARY

STATION TO STATION		ROADWAY EXCAVATION (CY)	ROADWAY EMBANKMENT (N) (CY)	REMARKS
"A1" 101+50	"A1" 105+00	606	0	
"B1" 110+50	"B1" 114+06	787	0	
R+ "B1" 109+00	R+"B1" 111+00	96	169	TEMPORARY ACCESS & WORK BENCH
R+ "B1" 109+80	R+"B1" 109+97	4	10	CONTOUR GRADING
"C1" 102+90	"C1" 104+50	727	318	
	TOTAL	2220	521	

COLD PLANE AC PAVEMENT

STATION TO STATION	SQYD
"A1" 101+00 TO 101+50	153
"A1" 105+00 TO 105+50	155
"B1" 110+00 TO 110+50	164
"B1" 114+06 TO 114+56	337
"C1" 102+40 TO 102+90	206
"C1" 104+50 TO 105+00	207
TOTAL	1222

ROADWAY QUANTITIES SUMMARY

STATION TO STATION		CLASS 2 AGGREGATE BASE (CY)	HOT MIX ASPHALT (TYPE A) (TON)	HOT MIX ASPHALT (OGFC) (TON)	REMARKS
"A1" 101+50	"A1" 105+00	410	385		
"B1" 110+50	"B1" 114+06	534	510		
"C1" 102+90	"C1" 104+50	263	247	49	
R+ "B1" 114+06	R+ "B1" 114+48		64		PRIVATE ROAD DRIVEWAY
HMA DIKE			8		
PLACE HMA (Misc AREA)			7		
PAVEMENT TRANSITION			60	31	
	TOTAL	1207	1281	80	

GEOSYNTHETIC REINFORCED EMBANKMENT

STATION TO STATION		R+ /L+	GEOSYNTHETIC REINFORCED EMBANKMENT (N) (CY)	GEOSYNTHETIC REINFORCEMENT (SQYD)
"C1" 103+25	104+25	R+	331	803
	TOTAL		331	803

GEOSYNTHETIC REINFORCEMENT QUANTITY INCLUDES GEOSYNTHETIC REINFORCEMENT FABRIC, EMBANKMENT MATERIAL AND PLACEMENT.
SEE SPECIAL PROVISIONS.

PLACE HMA (MISCELLANEOUS AREA)

LOCATION	STATION FROM	STATION TO	R+ /L+	SQYD	REMARKS
2	"B1"111+03	111+34	R+	8	OVERSIDE DRAIN
2	"B1"112+26	112+95	L+	56	OVERSIDE DRAIN
		TOTAL		64	

TACK COAT

STATION LIMITS	L+/R+	(N) AREA (SQYD)	VOLUME (TON)	DESCRIPTION
"A1" 101+00 TO 101+50		153	0.04	PAVEMENT TRANSITION
"A1" 105+00 TO 105+50		155	0.04	PAVEMENT TRANSITION
"B1" 110+00 TO 110+50		164	0.05	PAVEMENT TRANSITION
"B1" 114+06 TO 114+56		337	0.10	PAVEMENT TRANSITION
"C1" 102+40 TO 102+90		206	0.06	PAVEMENT TRANSITION
"C1" 104+50 TO 105+00		207	0.06	PAVEMENT TRANSITION
"B1" 111+03 TO 111+34	R+	8	0.01	OVERSIDE DRAIN
"B1" 112+26 TO 112+95	L+	56	0.02	OVERSIDE DRAIN
	TOTAL	1286	0.38	

TEMPORARY CHECK DAM
50 LF

TEMPORARY DRAINAGE INLET PROTECTION
3 EACH

TEMPORARY SILT FENCE
300 LF

TEMPORARY GRAVEL BAG BERM
383 EACH

TEMPORARY FIBER ROLL
135 LF

SUMMARY OF QUANTITIES

Q-1

REVISED BY | DATE REVISED
DINESH ADHIKARI | GARY DEKENS
CALCULATED-DESIGNED BY | CHECKED BY
FUNCTIONAL SUPERVISOR | DEANN SPANGLER

STATE OF CALIFORNIA - DEPARTMENT OF TRANSPORTATION
Caltrans
NR DIVISION OF ENGINEERING

LAST REVISION 03-18-15 | DATE PLOTTED => 16-APR-2015 | TIME PLOTTED => 14:45

Dist	COUNTY	ROUTE	POST MILES TOTAL PROJECT	SHEET No.	TOTAL SHEETS
01	Hum	36	22.8/27.7	30	46

REGISTERED CIVIL ENGINEER DATE 3-30-15

PLANS APPROVAL DATE 3-30-15

REGISTERED PROFESSIONAL ENGINEER DINESH ADHIKARI No. 76808 Exp. 12-31-16 CIVIL STATE OF CALIFORNIA

THE STATE OF CALIFORNIA OR ITS OFFICERS OR AGENTS SHALL NOT BE RESPONSIBLE FOR THE ACCURACY OR COMPLETENESS OF SCANNED COPIES OF THIS PLAN SHEET.

NOTES:

1. (N) NOT A SEPARATE PAY ITEM, FOR INFORMATION ONLY.

8" ALTERNATIVE PIPE UNDERDRAIN

STATION TO STATION		8" APU	GEOMEMBRANE (WATER BARRIER) (N)	RSP FABRIC (N)
		LF	SQYD	SQYD
L+ "A1" 101+81.34	L+ "A1" 103+60.52	185	123	329
L+ "A1" 103+62.31	L+ "A1" 104+52.58	88	58	156
L+ "B1" 110+81.55	L+ "B1" 114+31.86	316	198	530
L+ "C1" 103+20.38	L+ "C1" 104+94.10	184	123	219
SUBTOTAL		773	502	1234
8" APU RISERS		100		
TOTAL		873	502	1234

SHOULDER BACKING

LOCATION	TON
L+/R+ "A1" 101+50 TO 105+00	24
L+/R+ "B1" 110+50 TO 114+06	27
L+/R+ "C1" 102+90 TO 104+50	13
TOTAL	64

UNDERDRAIN MARKER

STATION	R/L	EA
"A1" 101+80	L+	1
"A1" 104+53	L+	1
"B1" 112+25	L+	1
"B1" 114+32	L+	1
"C1" 105+00	L+	1
TOTAL		5

MARKER (CULVERT)

DRAINAGE SYSTEM	L+/R+	STATION	EA
2	L+/R+	"A1" 103+60	2
3	L+	"B1" 110+80	1
4	R+	"B1" 114+48	1
5	L+/R+	"C1" 103+20	2
TOTAL			6

8" APU RISERS

STATION	DESCRIPTION	LF
L+ "A1" 101+81.34	TERMINAL RISER	15
L+ "A1" 104+52.58	TERMINAL RISER	15
L+ "B1" 112+24.12	45° RISER	30
L+ "B1" 114+31.86	TERMINAL RISER	25
L+ "C1" 104+94.10	TERMINAL RISER	15
TOTAL		100*

* : QUANTITY INCLUDED IN 8" APU TOTAL.

TEMPORARY FENCE (TYPE ESA)

L+ "C1"102+30 TO 104+70	270 LF

HMA DIKE

LOCATION	PLACE HMA DIKE (TYPE E) STATION FROM	TO	R/L	LF	REMOVE AC DIKE LF
2	"B1"111+34	112+95	R	161	161
2	"B1"112+25	114+06	L	166	97
TOTAL				327	258

SUMMARY OF QUANTITIES

Q-2

STATE OF CALIFORNIA - DEPARTMENT OF TRANSPORTATION

Caltrans NR DIVISION OF ENGINEERING

FUNCTIONAL SUPERVISOR: DEANN SPANGLER

CALCULATED-DESIGNED BY: DINESH ADHIKARI

CHECKED BY: GARY DEKENS

REVISED BY / DATE REVISED

LAST REVISION 03-18-15 | DATE PLOTTED => 16-APR-2015 | TIME PLOTTED => 14:45

Dist	COUNTY	ROUTE	POST MILES TOTAL PROJECT	SHEET No.	TOTAL SHEETS
01	Hum	36	22.8/27.7	31	46

Laura Lazzarotto
LICENSED LANDSCAPE ARCHITECT

3-30-15
PLANS APPROVAL DATE

LICENSED LANDSCAPE ARCHITECT
Laura Lazzarotto
Signature
8-31-15
Renewal Date
3-30-15
Date
STATE OF CALIFORNIA

THE STATE OF CALIFORNIA OR ITS OFFICERS OR AGENTS SHALL NOT BE RESPONSIBLE FOR THE ACCURACY OR COMPLETENESS OF SCANNED COPIES OF THIS PLAN SHEET.

LEGEND

EROSION CONTROL TYPE 1

EROSION CONTROL TYPE 2

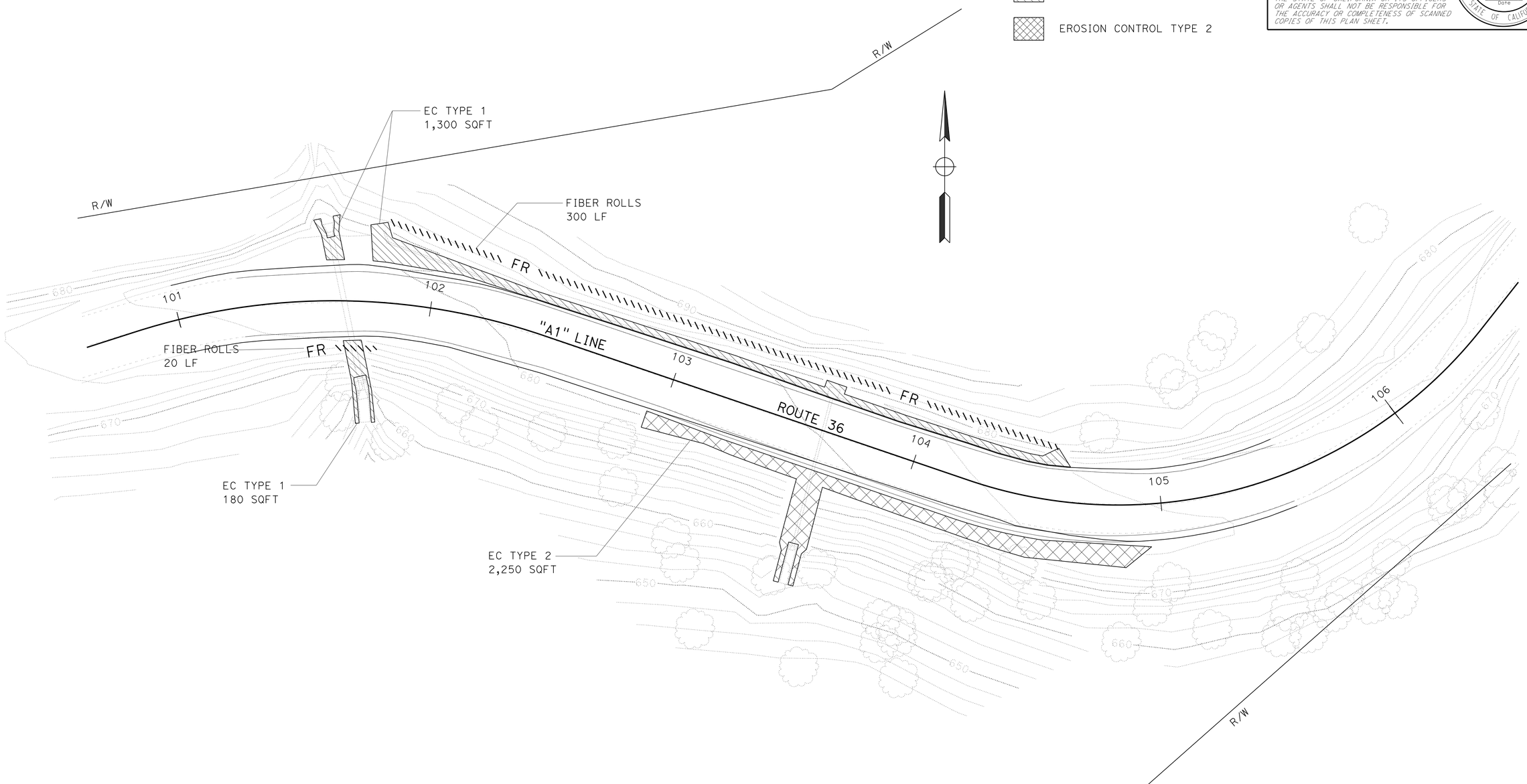

LOCATION 1
"A1" LINE

EROSION CONTROL PLAN

SCALE: 1" = 20'

THIS PLAN ACCURATE FOR EROSION CONTROL ONLY

EC-1

STATE OF CALIFORNIA - DEPARTMENT OF TRANSPORTATION
Caltrans
LANDSCAPE

SENIOR LANDSCAPE ARCHITECT: RON FLORY
CALCULATED-DESIGNED BY: LAURA LAZZAROTTO
CHECKED BY: RON FLORY
REVISED BY
DATE REVISED

LAST REVISION 03-18-15
DATE PLOTTED => 16-APR-2015
TIME PLOTTED => 14:45

Dist	COUNTY	ROUTE	POST MILES TOTAL PROJECT	SHEET No.	TOTAL SHEETS
01	Hum	36	22.8/27.7	32	46

Laura Lazzarotto
LICENSED LANDSCAPE ARCHITECT

3-30-15
PLANS APPROVAL DATE

LICENSED LANDSCAPE ARCHITECT
Laura Lazzarotto
Signature
8-31-05
Renewal Date
3-30-15
Date
STATE OF CALIFORNIA

THE STATE OF CALIFORNIA OR ITS OFFICERS OR AGENTS SHALL NOT BE RESPONSIBLE FOR THE ACCURACY OR COMPLETENESS OF SCANNED COPIES OF THIS PLAN SHEET.

NOTES:

1. EXISTING UTILITY FACILITIES HAVE NOT BEEN PLOTTED ON THESE PLANS.
2. FOR ACCURATE RIGHT OF WAY DATA, CONTACT RIGHT OF WAY ENGINEERING AT THE DISTRICT OFFICE.

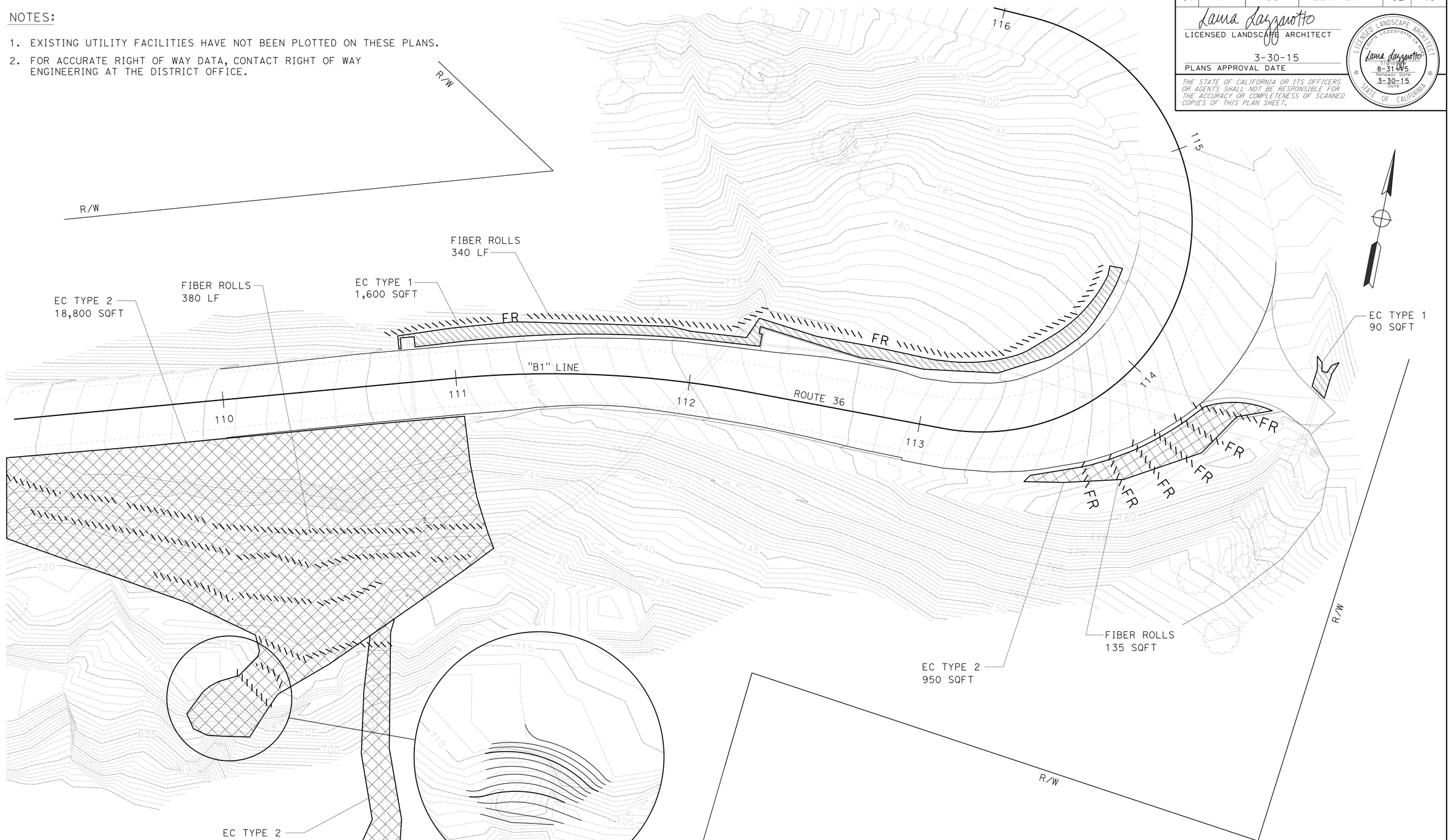

CONTOUR GRADING PLAN
SCALE: 1" = 10'

LOCATION 2
"B1" LINE

EROSION CONTROL PLAN

SCALE: 1" = 20'

EC-2

APPROVED FOR LANDSCAPE WORK ONLY

STATE OF CALIFORNIA - DEPARTMENT OF TRANSPORTATION
LANDSCAPE ARCHITECTURE

SENIOR LANDSCAPE ARCHITECT: RON FLORY
CALCULATED-DESIGNED BY: LAURA LAZZAROTTO
CHECKED BY: RON FLORY
REVISED BY
DATE REVISED

P:\proj5\01\0b340\drafting\01120001181te002.dgn

LAST REVISION 03-18-15
DATE PLOTTED => 16-APR-2015
TIME PLOTTED => 15:48

Dist	COUNTY	ROUTE	POST MILES TOTAL PROJECT	SHEET No.	TOTAL SHEETS
01	Hum	36	22.8/27.7	33	46

Laura Lazzarotto
LICENSED LANDSCAPE ARCHITECT

3-30-15
PLANS APPROVAL DATE

LICENSED LANDSCAPE ARCHITECT
Laura Lazzarotto
Signature
8-31-15
Renewal Date
3-30-15
Date
STATE OF CALIFORNIA

THE STATE OF CALIFORNIA OR ITS OFFICERS OR AGENTS SHALL NOT BE RESPONSIBLE FOR THE ACCURACY OR COMPLETENESS OF SCANNED COPIES OF THIS PLAN SHEET.

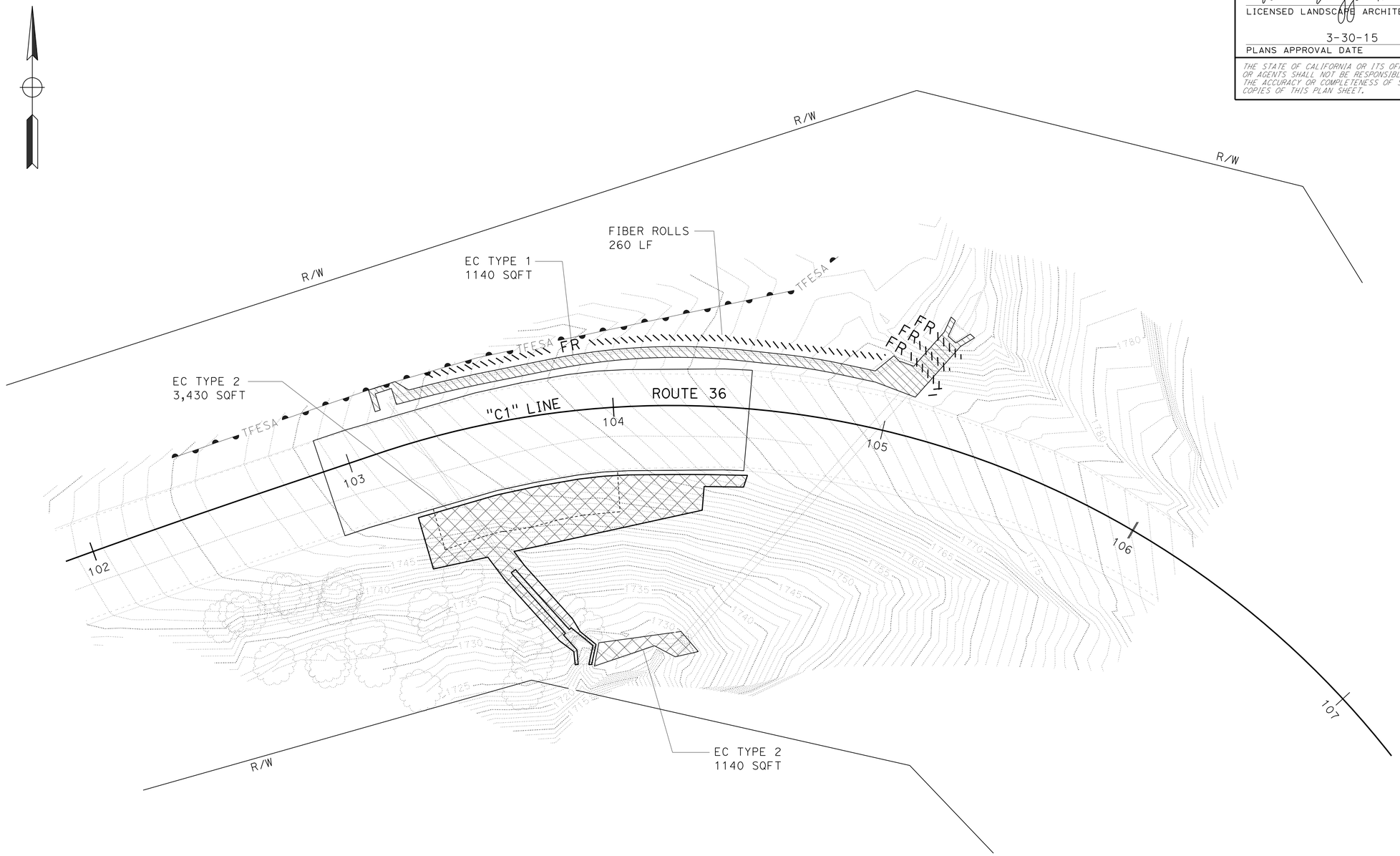

LOCATION #3
"C1" LINE

THIS PLAN ACCURATE FOR EROSION CONTROL ONLY

EROSION CONTROL PLAN

SCALE: 1" = 20'

EC-3

STATE OF CALIFORNIA - DEPARTMENT OF TRANSPORTATION
Caltrans®
LANDSCAPE

SENIOR LANDSCAPE ARCHITECT: RON FLORY
CALCULATED-DESIGNED BY: LAURA LAZZAROTTO
CHECKED BY: RON FLORY
REVISED BY
DATE REVISED

LAST REVISION 03-18-15
DATE PLOTTED => 16-APR-2015
TIME PLOTTED => 14:45

Dist	COUNTY	ROUTE	POST MILES TOTAL PROJECT	SHEET No.	TOTAL SHEETS
01	Hum	36	22.8/27.7	34	46

Laura Lazzarotto
LICENSED LANDSCAPE ARCHITECT
3-30-15
PLANS APPROVAL DATE

LICENSED LANDSCAPE ARCHITECT Laura Lazzarotto STATE OF CALIFORNIA Signature 8-31-15 Renewal Date 3-30-15 Date

THE STATE OF CALIFORNIA OR ITS OFFICERS OR AGENTS SHALL NOT BE RESPONSIBLE FOR THE ACCURACY OR COMPLETENESS OF SCANNED COPIES OF THIS PLAN SHEET.

EROSION CONTROL QUANTITIES

PLAN SHEET	LOCATION	EROSION CONTROL TYPE	FIBER ROLLS	HYDROSEED	STRAW	HYDROMULCH	WOOD MULCH	PURE LIVE SEED	FIBER	TACKIFIER	STRAW	AREA
			LF	SQFT	SQFT	SQFT	CY	LBS			TON	SQFT
								(N)			(N)	(N)
EC-1	PM 22.8	TYPE 1	320				13.8					1,480
		TYPE 2		2,250	2,250	2,250		7.6	124.0	7.2	0.2	2,250
EC-2	PM 25.7	TYPE 1	855				15.7					1,690
		TYPE 2		21,860	21,860	21,860		74.3	1,204.4	70.3	1.5	21,860
EC-3	PM 27.6	TYPE 1	260				10.6					1,140
		TYPE 2		4,570	4,570	4,570		15.5	251.8	14.7	0.3	4,570
		TOTAL	1435	28,680	28,680	28,680	40.1	97.4	1,580.2	92.2	2.0	32,990

NOTE: (N) DENOTES NON PAY ITEM. (FOR INFORMATION ONLY)

LEGEND

EC TYPE 1

EC TYPE 2

FIBER ROLLS

SEQUENCE	ITEM	MATERIAL		REMARKS
		DESCRIPTION	TYPE	
FIBER ROLLS MUST BE INSTALLED BEFORE EROSION CONTROL	FIBER ROLLS	FIBER ROLL	TYPE B 8" TO 10" Dia	TYPE 1 FIBER ROLL INSTALLATION

EROSION CONTROL TYPE 1

SEQUENCE	ITEM	MATERIAL		APPLICATION RATE
		DESCRIPTION	TYPE	
STEP 1	WOOD MULCH	BARK	WALK-ON BARK	405 CY/ACRE

EROSION CONTROL TYPE 2

SEQUENCE	ITEM	MATERIAL		APPLICATION RATE	REMARKS
		DESCRIPTION	TYPE		
STEP 1	HYDROSEED	SEED	MIX 1	145 LB/ACRE	
		FIBER	WOOD	1200 LB/ACRE	
STEP 2	STRAW	STRAW	WHEAT &/OR BARLEY	3 TON/ACRE	
STEP 3	HYDROMULCH	FIBER	WOOD	1200 LB/ACRE	
		TACKIFIER	PSYLLIUM	140 LB/ACRE	

SEED MIX 1

SEED	BOTANICAL NAME (COMMON NAME)	PERCENT GERMINATION (MINIMUM)	POUNDS PURE LIVE SEED PER ACRE (SLOPE MEASUREMENT)
MIX 1	BROMUS CARINATUS[1] (CALIFORNIA BROME)	45	35
	FESTUCA IDAHOENSIS[1] (IDAHO FESCUE)	55	15
	LOTUS PURSHINANUS[1] (PURSHING'S LOTUS)	40	15
	HORDEUM VULGARE (COMMON BARLEY)	75	80

[1]SEED PRODUCED IN CALIFORNIA ONLY.

EROSION CONTROL LEGEND AND EROSION CONTROL QUANTITIES

ECQ-1

REVISED BY | DATE REVISED
LAURA LAZZAROTTO | RON FLORY
CALCULATED-DESIGNED BY | CHECKED BY
SENIOR LANDSCAPE ARCHITECT | RON FLORY
STATE OF CALIFORNIA - DEPARTMENT OF TRANSPORTATION
Caltrans® LANDSCAPE

LAST REVISION 03-18-15 | DATE PLOTTED => 16-APR-2015 TIME PLOTTED => 14:45

M

Maint	MAINTENANCE
Max	MAXIMUM
MB	METAL BEAM
MBB	METAL BEAM BARRIER
MBGR	METAL BEAM GUARD RAILING
Med	MEDIAN
MGS	MIDWEST GUARDRAIL SYSTEM
MH	MANHOLE
Min	MINIMUM
Misc	MISCELLANEOUS
Misc I & S	MISCELLANEOUS IRON AND STEEL
Mkr	MARKER
Mod	MODIFIED,
	MODIFY
Mon	MONUMENT
MP	METAL PLATE
MPGR	METAL PLATE GUARD RAILING
MR	MOVEMENT RATING
MSE	MECHANICALLY STABILIZED EMBANKMENT
Mt	MOUNTAIN, MOUNT
Mtl	MATERIAL
MVP	MAINTENANCE VEHICLE PULLOUT

N

N	NORTH
NB	NORTHBOUND
No.	NUMBER (MUST HAVE PERIOD)
Nos.	NUMBERS (MUST HAVE PERIOD)
NPS	NOMINAL PIPE SIZE
NS	NEAR SIDE
NSP	NEW STANDARD PLAN
NTS	NOT TO SCALE

O

Oblr	OBLITERATE
OC	OVERCROSSING
OD	OUTSIDE DIAMETER
OF	OUTSIDE FACE
OG	ORIGINAL GROUND
OGAC	OPEN GRADED ASPHALT CONCRETE
OGFC	OPEN GRADED FRICTION COURSE
OH	OVERHEAD
OHWM	ORDINARY HIGH WATER MARK
O-O	OUT TO OUT
Opp	OPPOSITE
OSD	OVERSIDE DRAIN

P

P	PAGE
PAP	PERFORATED ALUMINUM PIPE
PB	PULL BOX
PC	POINT OF CURVATURE,
	PRECAST
PCC	POINT OF COMPOUND CURVE,
	PORTLAND CEMENT CONCRETE
PCMS	PORTABLE CHANGEABLE MESSAGE SIGN
PCP	PERFORATED CONCRETE PIPE,
	PRESTRESSED CONCRETE PIPE
PCVC	POINT OF COMPOUND VERTICAL CURVE
PEC	PERMIT TO ENTER AND CONSTRUCT
Ped	PEDESTRIAN
Ped OC	PEDESTRIAN OVERCROSSING
Ped UC	PEDESTRIAN UNDERCROSSING
Perm Mtl	PERMEABLE MATERIAL

P continued

PG	PROFILE GRADE
PI	POINT OF INTERSECTION
PJP	PARTIAL JOINT PENETRATION
Pkwy	PARKWAY
ℙ,PL	PLATE
P/L	PROPERTY LINE
PM	POST MILE,
	TIME FROM NOON TO MIDNIGHT
PN	PAVING NOTCH
POC	POINT OF HORIZONTAL CURVE
POT	POINT OF TANGENT
POVC	POINT OF VERTICAL CURVE
PP	PIPE PILE,
	PLASTIC PIPE,
	POWER POLE
PPL	PREFORMED PERMEABLE LINER
PPP	PERFORATED PLASTIC PIPE
PRC	POINT OF REVERSE CURVE
PRF	PAVEMENT REINFORCING FABRIC
PRVC	POINT OF REVERSE VERTICAL CURVE
PS&E	PLANS, SPECIFICATIONS AND ESTIMATES
PS, P/S	PRESTRESSED
PSP	PERFORATED STEEL PIPE
PT	POINT OF TANGENCY
PVC	POLYVINYL CHLORIDE
Pvmt	PAVEMENT

Q

Qty	QUANTITY

R

R	RADIUS
R & D	REMOVE AND DISPOSE
R & S	REMOVE AND SALVAGE
R/C	RATE OF CHANGE
RCA	REINFORCED CONCRETE ARCH
RCB	REINFORCED CONCRETE BOX
RCP	REINFORCED CONCRETE PIPE
RCPA	REINFORCED CONCRETE PIPE ARCH
Rd	ROAD
Reinf	REINFORCED,
	REINFORCEMENT,
	REINFORCING
Rel	RELOCATE
Repl	REPLACEMENT
Ret	RETAINING
Rev	REVISED, REVISION
Rdwy	ROADWAY
RHMA	RUBBERIZED HOT MIX ASPHALT
Riv	RIVER
RM	ROAD-MIXED
RP	RADIUS POINT,
	REFERENCE POINT
RR	RAILROAD
RSP	ROCK SLOPE PROTECTION,
	REVISED STANDARD PLAN
Rt	RIGHT
Rte	ROUTE
RW	REDWOOD,
	RETAINING WALL
R/W	RIGHT OF WAY
Rwy	RAILWAY

S

S	SOUTH,
	SUPPLEMENT
SAE	STRUCTURE APPROACH EMBANKMENT
Salv	SALVAGE
SAPP	STRUCTURAL ALUMINUM PLATE PIPE
SB	SOUTHBOUND
SC	SAND CUSHION
SCSP	SLOTTED CORRUGATED STEEL PIPE
SD	STORM DRAIN
Sec	SECOND,
	SECTION
Sep	SEPARATION
SG	SUBGRADE
Shld	SHOULDER
Sht	SHEET
Sim	SIMILAR
℄	STATION LINE
SM	SELECTED MATERIAL
Spec	SPECIAL,
	SPECIFICATIONS
SPP	SLOTTED PLASTIC PIPE
SS	SLOPE STAKE
SSBM	STRAP AND SADDLE BRACKET METHOD
SSD	STRUCTURAL SECTION DRAIN
SSPA	STRUCTURAL STEEL PLATE ARCH
SSPP	STRUCTURAL STEEL PLATE PIPE
SSPPA	STRUCTURAL STEEL PLATE PIPE ARCH
SSRP	STEEL SPIRAL RIB PIPE
St	STREET
Sta	STATION
STBB	SINGLE THRIE BEAM BARRIER
Std	STANDARD
Str	STRUCTURE
Surf	SURFACING
SW	SIDEWALK,
	SOUND WALL
Swr	SEWER
Sym	SYMMETRICAL
S4S	SURFACE 4 SIDES

T

T	SEMI-TANGENT
Tan	TANGENT
TBB	THRIE BEAM BARRIER
Tbr	TIMBER
TC	TOP OF CURB
TCB	TRAFFIC CONTROL BOX
TCE	TEMPORARY CONSTRUCTION EASEMENT
Tel	TELEPHONE
Temp	TEMPORARY
TG	TOP OF GRADE
Tot	TOTAL
TP	TELEPHONE POLE
TPB	TREATED PERMEABLE BASE
TPM	TREATED PERMEABLE MATERIAL
Trans	TRANSITION

T continued

TS	TRANSVERSE,
	TRAFFIC SIGNAL,
	TUBULAR STEEL
Typ	TYPICAL

U

UC	UNDERCROSSING
UD	UNDERDRAIN
UG	UNDERGROUND
UON	UNLESS OTHERWISE NOTED
UP	UNDERPASS

V

V	VALVE,
	DESIGN SPEED
Var	VARIABLE,
	VARIES
VC	VERTICAL CURVE
VCP	VITRIFIED CLAY PIPE
Vert	VERTICAL
Via	VIADUCT
Vol	VOLUME

W

W	WEST,
	WIDTH
WB	WESTBOUND
WH	WEEP HOLE
WM	WIRE MESH
WS	WATER SURFACE
WSP	WELDED STEEL PIPE
Wt	WEIGHT
WV	WATER VALVE
WW	WINGWALL
WWLOL	WINGWALL LAYOUT LINE

X

X Sec	CROSS SECTION
Xing	CROSSING

Y

Yr	YEAR
Yrs	YEARS

Dist	COUNTY	ROUTE	POST MILES TOTAL PROJECT	SHEET No.	TOTAL SHEETS
01	Hum	36	22.8/27.7	35	46

Grace M. Tsushima
REGISTERED CIVIL ENGINEER

July 19, 2013
PLANS APPROVAL DATE

REGISTERED PROFESSIONAL ENGINEER
Grace M. Tsushima
No. C49814
Exp. 9-30-14
CIVIL
STATE OF CALIFORNIA

THE STATE OF CALIFORNIA OR ITS OFFICERS OR AGENTS SHALL NOT BE RESPONSIBLE FOR THE ACCURACY OR COMPLETENESS OF SCANNED COPIES OF THIS PLAN SHEET.

TO ACCOMPANY PLANS DATED 3-30-15

UNIT OF MEASUREMENT SYMBOLS:

Some of the symbols used in the project plan quantity tables and in the Bid Item List are:

TABLE A

SYMBOL USED	DEFINITIONS
ACRE	ACRE
CF	CUBIC FOOT
CY	CUBIC YARD
EA	EACH
GAL	GALLON
LB	POUND
LF	LINEAR FOOT
SQFT	SQUARE FOOT
SQYD	SQUARE YARD
STA	100 FEET
TAB	TABLET
TON	2,000 POUNDS

Some of the symbols used in the plans other than in the project plan quantity tables are:

TABLE B

SYMBOL USED	DEFINITIONS
ksi	KIPS PER SQUARE INCH
ksf	KIPS PER SQUARE FOOT
psi	POUNDS PER SQUARE INCH
psf	POUNDS PER SQUARE FOOT
lb/ft^3, pcf	POUNDS PER CUBIC FOOT
tsf	TONS PER SQUARE FOOT
mph, MPH *	MILES PER HOUR
ø	NOMINAL DIAMETER
oz	OUNCE
lb	POUND
kip	1,000 POUNDS
cal	CALORIE
ft	FOOT OR FEET
gal	GALLON

* For use on a sign panel only

STATE OF CALIFORNIA
DEPARTMENT OF TRANSPORTATION

ABBREVIATIONS (SHEET 2 OF 2)

NO SCALE

RSP A10B DATED JULY 19, 2013 SUPERSEDES STANDARD PLAN A10B DATED MAY 20, 2011 - PAGE 2 OF THE STANDARD PLANS BOOK DATED 2010.

REVISED STANDARD PLAN RSP A10B

2010 REVISED STANDARD PLAN RSP A10B

6-7-13

Dist	COUNTY	ROUTE	POST MILES TOTAL PROJECT	SHEET No.	TOTAL SHEETS
01	Hum	36	22.8/27.7	36	46

REGISTERED CIVIL ENGINEER

April 20, 2012
PLANS APPROVAL DATE

REGISTERED PROFESSIONAL ENGINEER
Roberta L. McLaughlin
No. C40375
Exp. 3-31-13
CIVIL
STATE OF CALIFORNIA

THE STATE OF CALIFORNIA OR ITS OFFICERS OR AGENTS SHALL NOT BE RESPONSIBLE FOR THE ACCURACY OR COMPLETENESS OF SCANNED COPIES OF THIS PLAN SHEET.

TO ACCOMPANY PLANS DATED 3-30-15

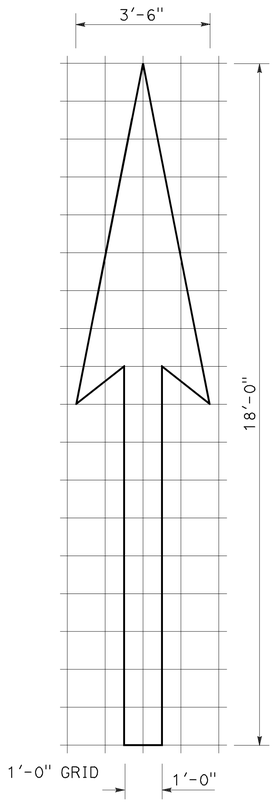

A=25 ft^2

TYPE I 18'-0" ARROW

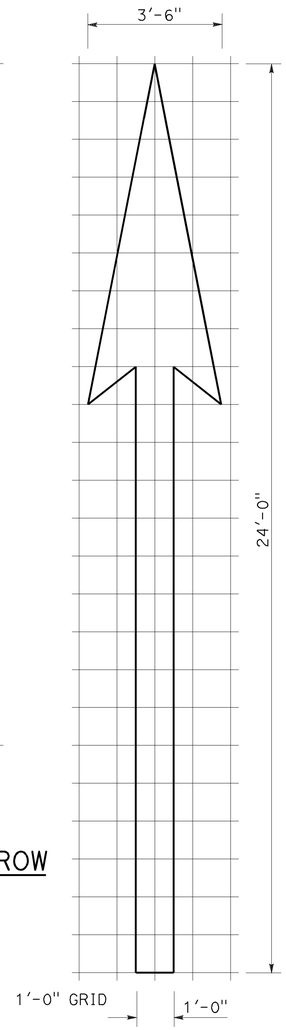

A=31 ft^2

TYPE I 24'-0" ARROW

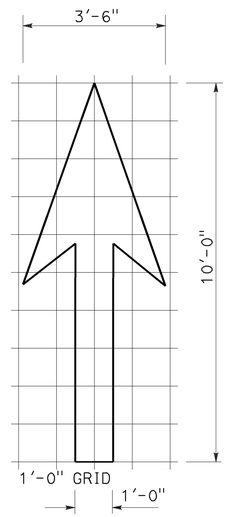

A=14 ft^2

TYPE I 10'-0" ARROW

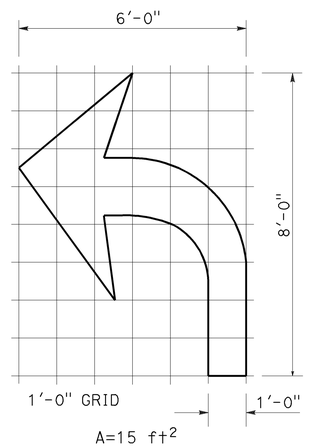

A=15 ft^2

TYPE IV (L) ARROW

(For Type IV (R) arrow, use mirror image)

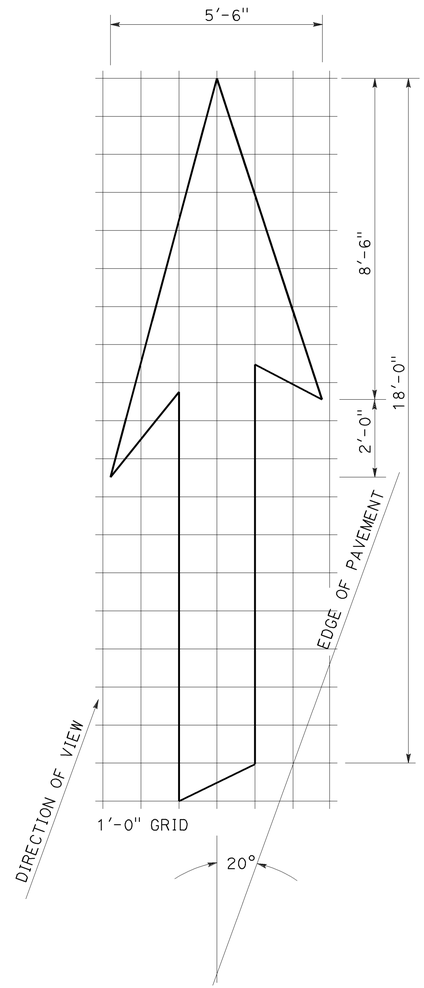

A=42 ft^2

TYPE VI ARROW

Right lane drop arrow
(For left lane, use mirror image)

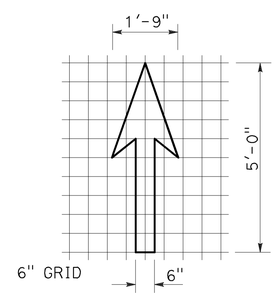

A=3.5 ft^2

BIKE LANE ARROW

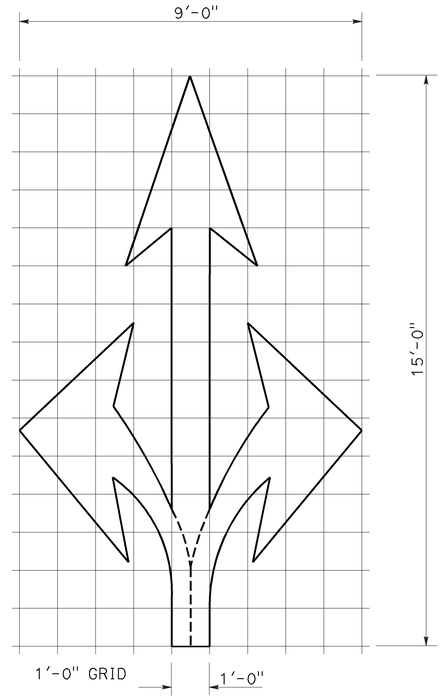

A=36 ft^2

TYPE VIII ARROW

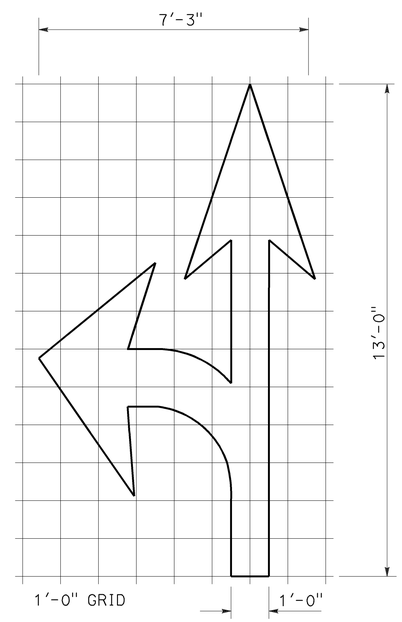

A=27 ft^2

TYPE VII (L) ARROW

(For Type VII (R) arrow, use mirror image)

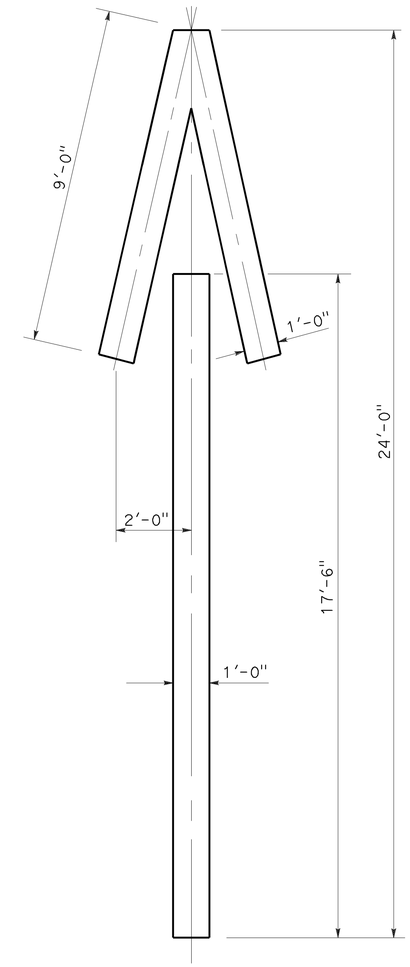

A=33 ft^2

TYPE V ARROW

NOTE:
Minor variations in dimensions may be accepted by the Engineer.

STATE OF CALIFORNIA
DEPARTMENT OF TRANSPORTATION

PAVEMENT MARKINGS ARROWS

NO SCALE

RSP A24A DATED APRIL 20, 2012 SUPERSEDES STANDARD PLAN A24A DATED MAY 20, 2011 - PAGE 13 OF THE STANDARD PLANS BOOK DATED 2010.

REVISED STANDARD PLAN RSP A24A

2010 REVISED STANDARD PLAN RSP A24A

3-14-12

Dist	COUNTY	ROUTE	POST MILES TOTAL PROJECT	SHEET No.	TOTAL SHEETS
01	Hum	36	22.8/27.7	37	46

REGISTERED CIVIL ENGINEER

July 18, 2014
PLANS APPROVAL DATE

REGISTERED PROFESSIONAL ENGINEER Carl M. Duan No. C59976 Exp. 6-30-16 CIVIL STATE OF CALIFORNIA

THE STATE OF CALIFORNIA OR ITS OFFICERS OR AGENTS SHALL NOT BE RESPONSIBLE FOR THE ACCURACY OR COMPLETENESS OF SCANNED COPIES OF THIS PLAN SHEET.

TO ACCOMPANY PLANS DATED 3-30-15

2010 REVISED STANDARD PLAN RSP A62DA

DESIGN NOTES:

Design: AASHTO LRFD Bridge Design Specifications, 4th edition with California Amendments. ACPA DESIGN DATA 1, October 2007. INDIRECT DESIGN METHOD

Soil: w Fe = 162 pcf Installation Type 1
w Fe = 168 pcf Installation Types 2 & 3
w = Unit weight of soil (pcf)
Fe = Soil-structure interaction factor

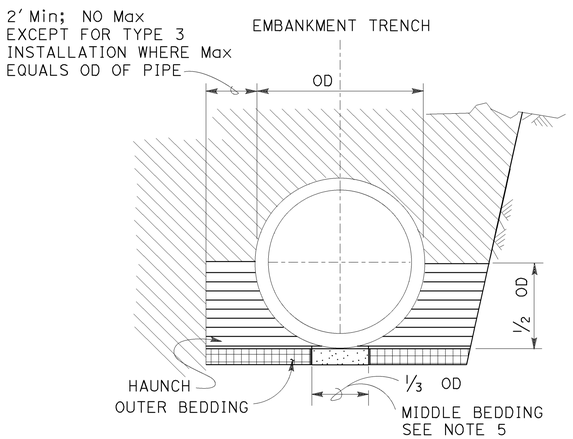

BACKFILL

LEGEND:

- ROADWAY EMBANKMENT
- STRUCTURE BACKFILL (CULVERT) FOR HAUNCH SEE NOTE 6
- STRUCTURE BACKFILL (CULVERT) FOR OUTER BEDDING SEE NOTE 6
- LOOSE BACKFILL
- STRUCTURE EXCAVATION (CULVERT)

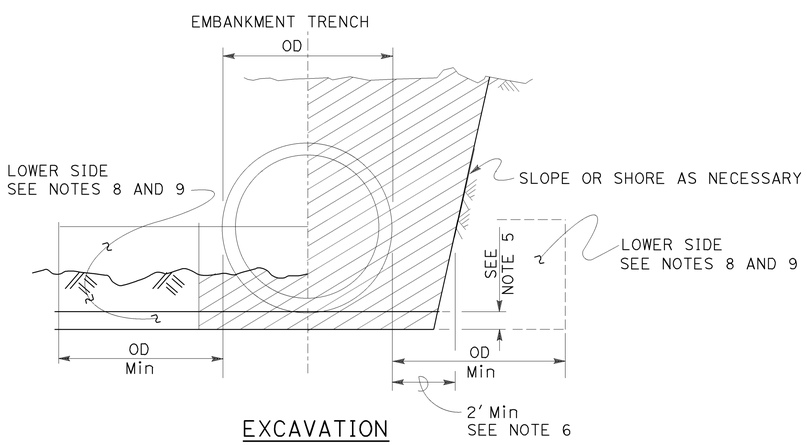

EXCAVATION

INSTALLATION TYPE 1:

The haunch and outer bedding shall be compacted to a minimum 90 percent relative compaction. In addition, the minimum sand equivalent in these areas shall be 30 and the maximum percentage passing the No. 200 sieve size shall be 12.

INSTALLATION TYPE 2:

The haunch and outer bedding shall be compacted to a minimum 90 percent relative compaction. In addition, the minimum sand equivalent in these areas shall be 25.

INSTALLATION TYPE 3:

The haunch and outer bedding shall be compacted to a minimum 85 percent relative compaction. 90 percent relative compaction will be required where the fill over the pipe is less than 4′-0″ or ½ OD. In addition, the minimum sand equivalent in these areas shall be 25 and the material shall not contain rocks, broken concrete, or other solid material exceeding 3″ in greatest dimension.

INSTALLATION TYPE 1

MINIMUM CLASS AND D-LOAD	COVER	
	60″ Dia AND SMALLER	OVER 60″ Dia TO 120″ Dia Max
CLASS II 1000D	14.9′	12.9′
CLASS III 1350D	15.0′ - 21.9′	13.0′ - 18.9′
CLASS III SPECIAL 1700D	22.0′ - 27.9′	19.0′ - 24.9′
CLASS IV 2000D	28.0′ - 32.9′	25.0′ - 29.9′
CLASS IV SPECIAL 2500D	33.0′ - 41.9′	30.0′ - 38.9′
CLASS V 3000D	42.0′ - 49.9′	39.0′ - 46.9′
CLASS V SPECIAL 3600D	50.0′ - 60.0′	47.0′ - 58.0′

INSTALLATION TYPE 2

MINIMUM CLASS AND D-LOAD	COVER	
	60″ Dia AND SMALLER	OVER 60″ Dia TO 120″ Dia Max
CLASS II 1000D	11.9′	9.9′
CLASS III 1350D	12.0′ - 15.9′	10.0′ - 14.9′
CLASS III SPECIAL 1700D	16.0′ - 20.9′	15.0′ - 19.9′
CLASS IV 2000D	21.0′ - 24.9′	20.0′ - 23.9′
CLASS IV SPECIAL 2500D	25.0′ - 31.9′	24.0′ - 30.9′
CLASS V 3000D	32.0′ - 37.9′	31.0′ - 37.9′
CLASS V SPECIAL 3600D	38.0′ - 46.0′	38.0′ - 46.0′

INSTALLATION TYPE 3

MINIMUM CLASS AND D-LOAD	COVER	
	60″ Dia AND SMALLER	OVER 60″ Dia TO 120″ Dia Max
CLASS II 1000D	8.9′	5.9′
CLASS III 1350D	9.0′ - 11.9′	6.0′ - 10.9′
CLASS III SPECIAL 1700D	12.0′ - 15.9′	11.0′ - 13.9′
CLASS IV 2000D	16.0′ - 18.9′	14.0′ - 17.9′
CLASS IV SPECIAL 2500D	19.0′ - 24.9′	18.0′ - 22.9′
CLASS V 3000D	25.0′ - 29.9′	23.0′ - 28.9′
CLASS V SPECIAL 3600D	30.0′ - 36.0′	29.0′ - 35.0′

NOTES:

1. Unless otherwise shown on the plans or specified in the special provision, the Contractor shall have the option of selecting the class of RCP and the type of installation to be used, provided the height of cover does not exceed the value shown for the RCP selected.
   Example: 24″ RCP culvert with maximum cover of 24′-0″ the options are:
   a) Class III Special or stronger with Installation Type 1.
   b) Class IV or stronger with Installation Type 2.
   c) Class IV Special or stronger with Installation Type 3.
   Cover is defined as the maximum vertical distance from top of the pipe to finished grade within the length of any given culvert.
2. The class of RCP and Installation Type selected shall be the same throughout the length of any given culvert.
3. The "length of any culvert" is defined as the culvert between:
   a) Successive drainage structure (inlets, junction boxes, headwalls, etc.).
   b) A drainage structure and the inlet or outlet end of the culvert.
   c) The inlet and outlet end of the culvert when there are no intervening drainage structures.
4. Oval and arch shaped RCP shall not be used.
5. Bedding depth: 1/25 OD Min, not less than 3″.
6. Slurry cement backfill may be substituted for backfill in the outer bedding and haunch areas. If slurry is used, the outer and middle beddings shall be omitted. Prior to installation, the soil under the middle ⅓ of the outside diameter of the pipe shall be softened by scarifying or other means to a minimum depth of 1/25 OD, but not less than 3″. Where slurry cement backfill is used, clear distance to trench wall may be reduced as set forth in the Standard Specifications.
7. Backfill shall be placed full width of excavation except where dimensions are shown for backfill width or thickness. Dimensions shown are minimum.
8. Lower side shall be suitable material as determined by the Engineer. Otherwise it shall be considered unsuitable as set forth in of the Standard Specifications. See Note 9.
9. Where the pipe is placed in a trench, if the trench walls are sloped at 5 vertical to 1 horizontal or steeper for at least 90 percent of the trench height or up to not less than 12″ from the grading plane, the firmness of the soil in the lower side need not be considered.
10. Non-reinforced precast concrete pipe sizes 3′-0″ or smaller may be placed under installation Types 1, 2 or 3.

STATE OF CALIFORNIA
DEPARTMENT OF TRANSPORTATION

EXCAVATION AND BACKFILL CONCRETE PIPE CULVERTS INDIRECT DESIGN METHOD

NO SCALE

RSP A62DA DATED JULY 18, 2014 SUPERSEDES STANDARD PLAN A62DA DATED MAY 20, 2011 - PAGE 24 OF THE STANDARD PLANS BOOK DATED 2010.

REVISED STANDARD PLAN RSP A62DA

Dist	COUNTY	ROUTE	POST MILES TOTAL PROJECT	SHEET No.	TOTAL SHEETS
01	Hum	36	22.8/27.7	38	46

REGISTERED CIVIL ENGINEER

July 19, 2013
PLANS APPROVAL DATE

REGISTERED PROFESSIONAL ENGINEER
Michael Janzen
No. 44788
Exp. 03-31-14
CIVIL
STATE OF CALIFORNIA

THE STATE OF CALIFORNIA OR ITS OFFICERS OR AGENTS SHALL NOT BE RESPONSIBLE FOR THE ACCURACY OR COMPLETENESS OF SCANNED COPIES OF THIS PLAN SHEET.

TO ACCOMPANY PLANS DATED 3-30-15

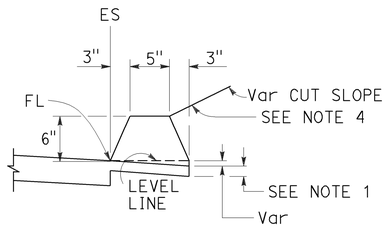

TYPE A
See Note 3

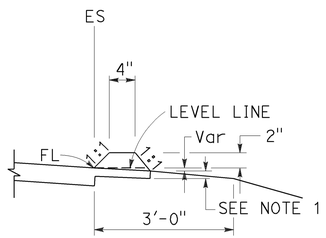

TYPE C

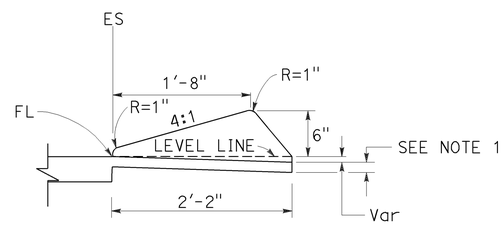

TYPE D

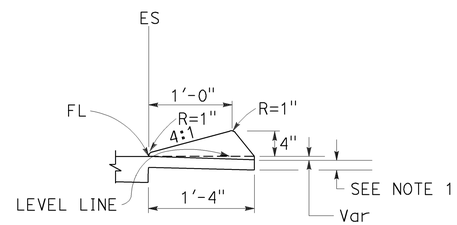

TYPE E

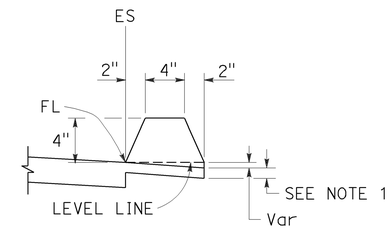

TYPE F
See Note 5

DIKES

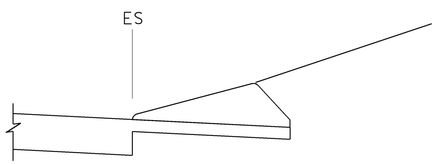

CASE C-1
Cut Slope

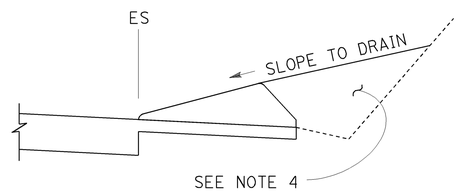

CASE C-2
Cut Slope

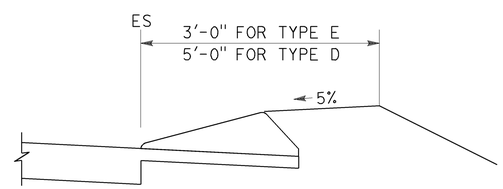

CASE F

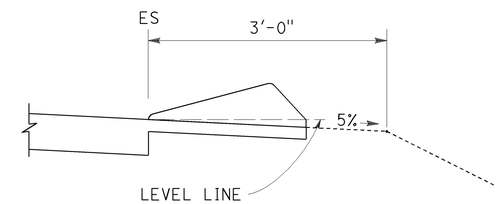

CASE R
See Note 2

TYPE D AND E BACKFILL DETAILS

NOTES:

1. For HMA shoulders only, extend top layer of HMA placed on the shoulder under dike with no joint at the ES. For projects with OGFC shoulders, do not extend OGFC under dike. See project plans for modified dike detail.
2. Case R applies to retrofit only projects where restrictive conditions do not provide enough width for Case F backfill.
3. Type A dike only to be used where restrictive slope conditions do not provide enough width to use Type D or Type E dike.
4. Fill and compact with excavated material to top of dike.
5. Use Type F dike, where dike is required with guard railing installations. See Revised Standard Plan RSP A77N4 for dike positioning details.

DIKE QUANTITIES

TYPE	CUBIC YARDS PER LINEAR FOOT
A	0.0135
C	0.0038
D	0.0293
E	0.0130
F	0.0066

Quantities based on 5% cross slope.

STATE OF CALIFORNIA
DEPARTMENT OF TRANSPORTATION

HOT MIX ASPHALT DIKES

NO SCALE

RSP A87B DATED JULY 19, 2013 SUPERSEDES STANDARD PLAN A87B DATED MAY 20, 2011 - PAGE 120 OF THE STANDARD PLANS BOOK DATED 2010.

REVISED STANDARD PLAN RSP A87B

2010 REVISED STANDARD PLAN RSP A87B

6-27-13

DIST	COUNTY	ROUTE	POST MILES TOTAL PROJECT	SHEET No.	TOTAL SHEETS
01	Hum	36	22.8/27.7	39	46

REGISTERED CIVIL ENGINEER

November 15, 2013
PLANS APPROVAL DATE

REGISTERED PROFESSIONAL ENGINEER
Cornelis M. Hakim
No. C55610
Exp. 12-31-14
CIVIL
STATE OF CALIFORNIA

THE STATE OF CALIFORNIA OR ITS OFFICERS OR AGENTS SHALL NOT BE RESPONSIBLE FOR THE ACCURACY OR COMPLETENESS OF SCANNED COPIES OF THIS PLAN SHEET.

TO ACCOMPANY PLANS DATED 3-30-15

2010 REVISED STANDARD PLAN RSP P74

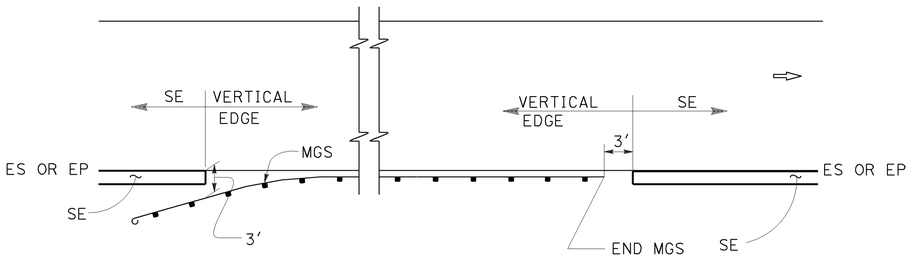

MGS

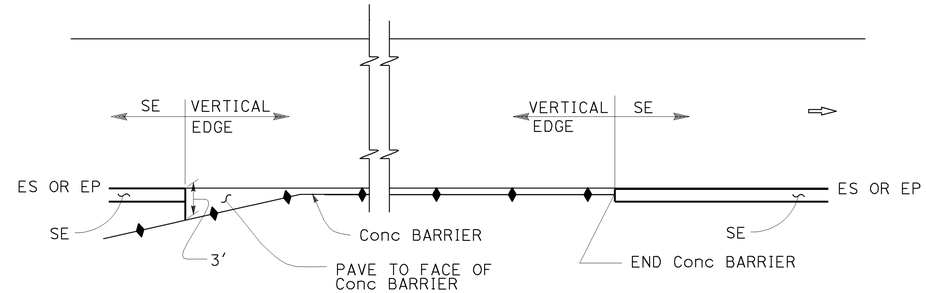

CONCRETE BARRIER

ABBREVIATIONS:

SE SAFETY EDGE

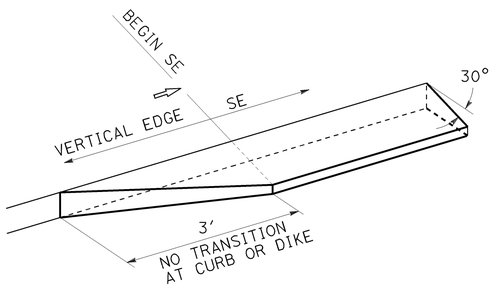

TRANSITION DETAIL FOR CONCRETE ONLY

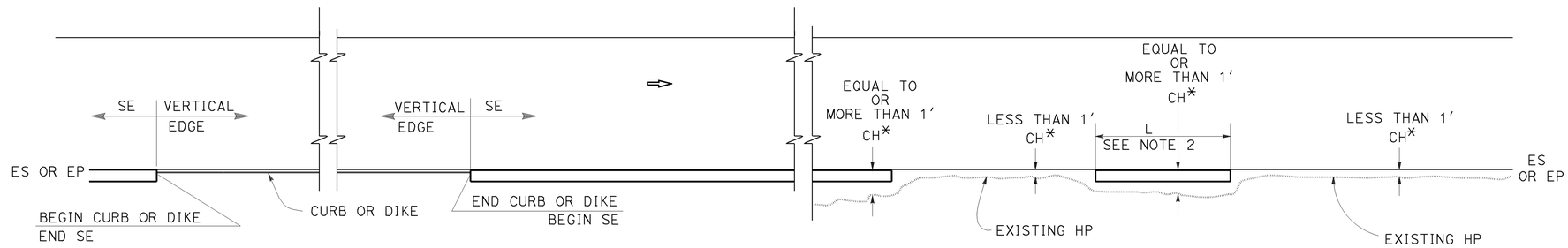

CURB OR DIKE

NARROW SIDE SLOPE

* CH = Distance from ES or EP to existing HP.

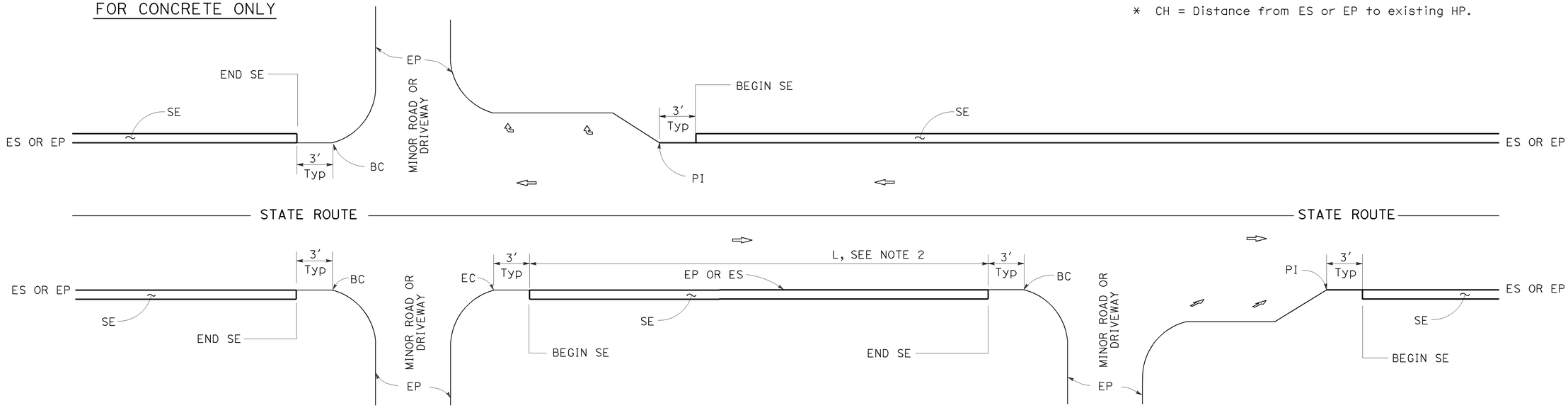

INTERSECTION

MINOR ROADWAY OR DRIVEWAY

DRIVEWAY AND INTERSECTION

NOTES:

1. For details not shown, see Revised Standard Plans RSP P75 and RSP P76.
2. Safety edge is optional when L is less than 30′.

STATE OF CALIFORNIA
DEPARTMENT OF TRANSPORTATION

PAVEMENT EDGE TREATMENTS

NO SCALE

RSP P74 DATED NOVEMBER 15, 2013 SUPERSEDES RSP P74 DATED JANUARY 20, 2012 THAT SUPPLEMENTS THE STANDARD PLANS BOOK DATED 2010.

REVISED STANDARD PLAN RSP P74

10-11-13

DIST	COUNTY	ROUTE	POST MILES TOTAL PROJECT	SHEET No.	TOTAL SHEETS
01	Hum	36	22.8/27.7	40	46

REGISTERED CIVIL ENGINEER

November 15, 2013
PLANS APPROVAL DATE

REGISTERED PROFESSIONAL ENGINEER Cornelis M. Hakim No. C55610 Exp. 12-31-14 CIVIL STATE OF CALIFORNIA

THE STATE OF CALIFORNIA OR ITS OFFICERS OR AGENTS SHALL NOT BE RESPONSIBLE FOR THE ACCURACY OR COMPLETENESS OF SCANNED COPIES OF THIS PLAN SHEET.

TO ACCOMPANY PLANS DATED 3-30-15

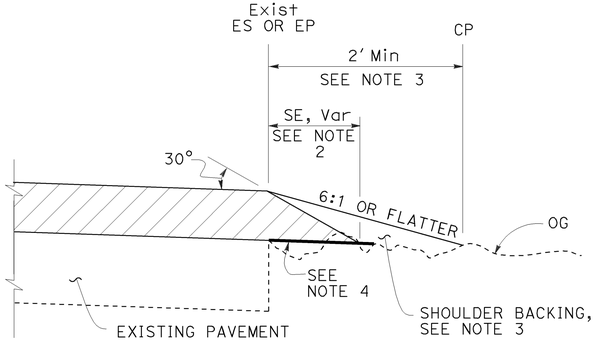

CASE A
Safety Edge

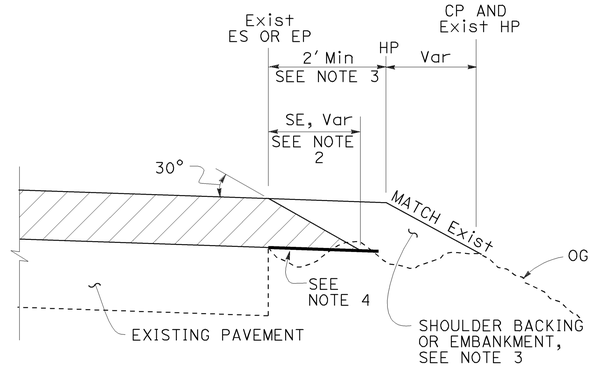

CASE B
Safety Edge

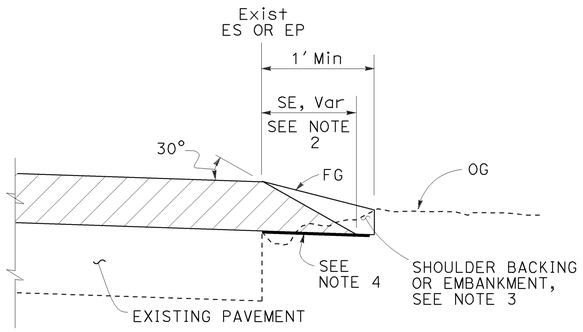

CASE C
Safety Edge

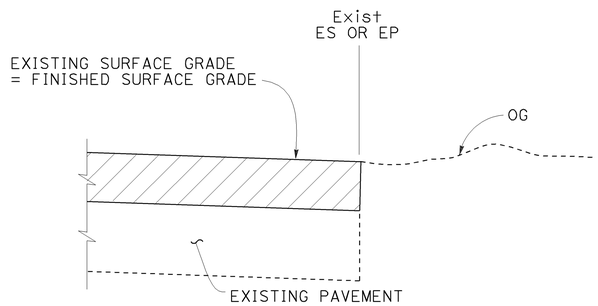

CASE D
Vertical Edge

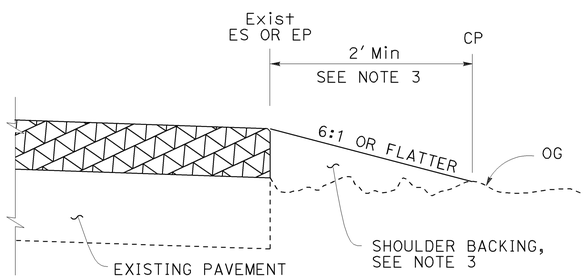

CASE E
Vertical Edge

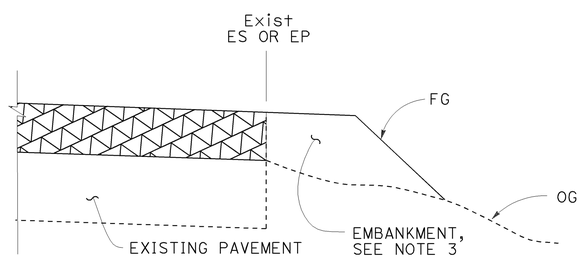

CASE F
Vertical Edge
* See Table A and Revised Std Plan RSP P74

LEGEND:

- HMA OVERLAY
- HMA OR CONCRETE OVERLAY
- CONCRETE OVERLAY

ABBREVIATIONS:

SE SAFETY EDGE
TT TOTAL THICKNESS OF SE

TABLE A
EDGE TREATMENT FOR VARIOUS OVERLAY THICKNESS AND CONDITIONS

	OVERLAY THICKNESS	
FIELD CONDITION	LESS THAN 0.15′	0.15′ OR MORE
Exist SLOPE 6:1 OR FLATTER	CASE E	CASE A
Exist SLOPE 3:1 TO 6:1	CASE E	CASE B
Exist SLOPE STEEPER THAN 3:1	CASE F	CASE F
CUT SECTION (REPLACE, COLD PLANE, MILL PAVEMENT)	CASE D	CASE C

ADDITIONAL HMA OR CONCRETE QUANTITIES FOR SE/SIDE/MILE

TYPICAL CROSS SECTION	TT	TOTAL ADDITIONAL MATERIAL FOR SE/SIDE/MILE		
		HMA (TON)	CONCRETE (CY)*	CONCRETE (CY)**
TT	0.15′	NA	NA	NA
	0.20′	13.7	NA	NA
	0.30′	30.9	NA	NA
	0.40′	54.9	NA	NA
	0.45′	69.4	NA	NA
TT 0.43′	0.50′	84.2	NA	NA
	0.60′	113.9	NA	NA
	0.70′	143.6	70.9	94.2
	0.80′	173.3	85.6	112.2
	0.90′	203.0	100.3	130.2
	1.00′	232.7	114.9	148.2
	1.10′	262.4	129.6	166.2
	1.20′	292.1	144.3	184.2

* For Detail "A"
** For Optional Detail "A"

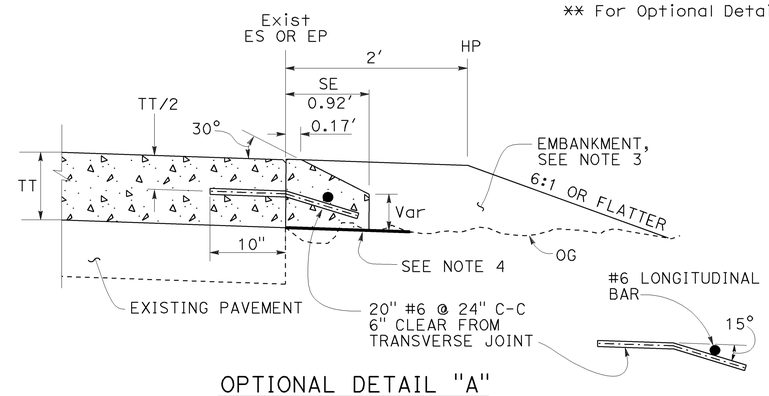

OPTIONAL DETAIL "A"
For concrete overlay
See Note 5

NOTES:

1. For limits of safety edge and vertical edge treatments, see Revised Standard Plan RSP P74.
2. Details shown for HMA overlay thickness less than 0.43′. See Detail "A" for HMA overlay thickness more than 0.43′ or concrete overlay.
3. For locations and limits of shoulder backing or embankment see project plans.
4. Grade existing ground to place safety edge. 1′ minimum width
5. Safety edge transverse joint must match overlay transverse joint. End of #6 longitudinal bar must be 2" ±½" clear from transverse joint.
6. Safety edge is not needed in the area of MGS, barrier, right turn lane and acceleration lane. See Revised Standard Plan RSP P74.

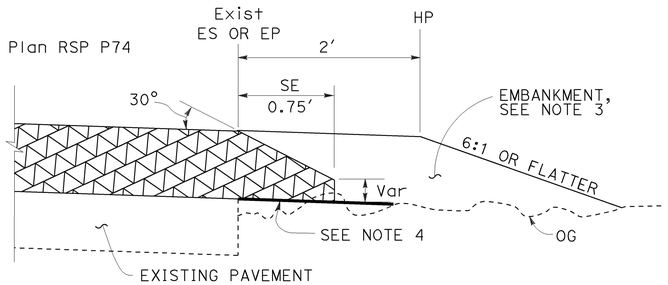

DETAIL "A"
For HMA overlay thickness more than 0.43′ or concrete overlay

STATE OF CALIFORNIA
DEPARTMENT OF TRANSPORTATION

PAVEMENT EDGE TREATMENTS-OVERLAYS

NO SCALE

RSP P75 DATED NOVEMBER 15, 2013 SUPERSEDES RSP P75 DATED JANUARY 20, 2012 THAT SUPPLEMENTS THE STANDARD PLANS BOOK DATED 2010.

REVISED STANDARD PLAN RSP P75

2010 REVISED STANDARD PLAN RSP P75

10-4-13

DIST	COUNTY	ROUTE	POST MILES TOTAL PROJECT	SHEET No.	TOTAL SHEETS
01	Hum	36	22.8/27.7	41	46

REGISTERED CIVIL ENGINEER

November 15, 2013
PLANS APPROVAL DATE

REGISTERED PROFESSIONAL ENGINEER
Cornelis M. Hakim
No. C55610
Exp. 12-31-14
CIVIL
STATE OF CALIFORNIA

THE STATE OF CALIFORNIA OR ITS OFFICERS OR AGENTS SHALL NOT BE RESPONSIBLE FOR THE ACCURACY OR COMPLETENESS OF SCANNED COPIES OF THIS PLAN SHEET.

TO ACCOMPANY PLANS DATED 3-30-15

LEGEND:

- HMA PAVEMENT
- HMA OR CONCRETE PAVEMENT
- CONCRETE PAVEMENT

ABBREVIATIONS:

SE SAFETY EDGE
TT TOTAL THICKNESS OF SE
HW HINGE WIDTH, DISTANCE FROM ES OR EP TO HP

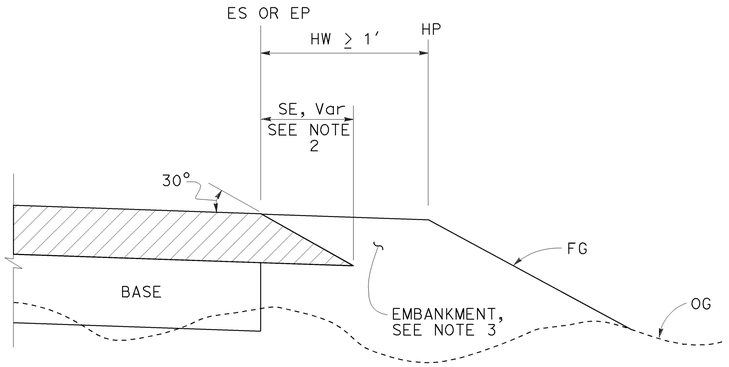

CASE K
Safety Edge - Fill Section, HW ≥ 1′

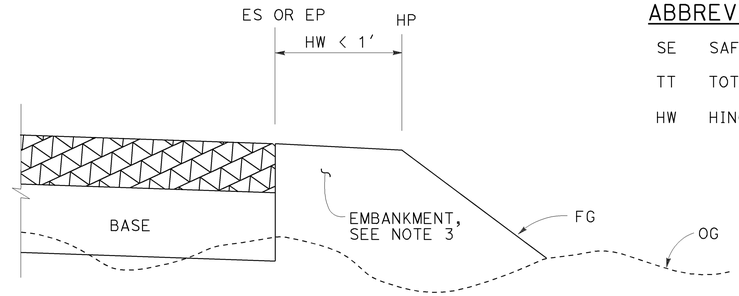

CASE L
Vertical Edge - Fill Section, HW < 1′

FILL SECTION

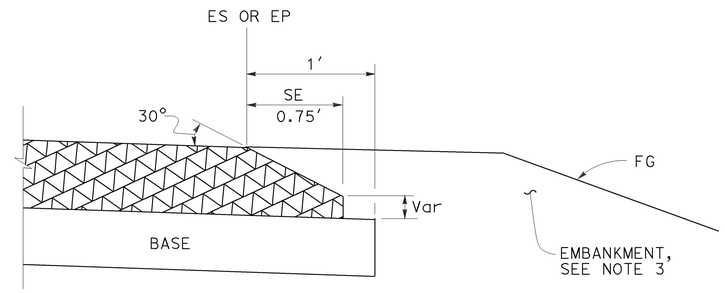

DETAIL "B"
For HMA pavement thickness more than 0.43′ or concrete pavement

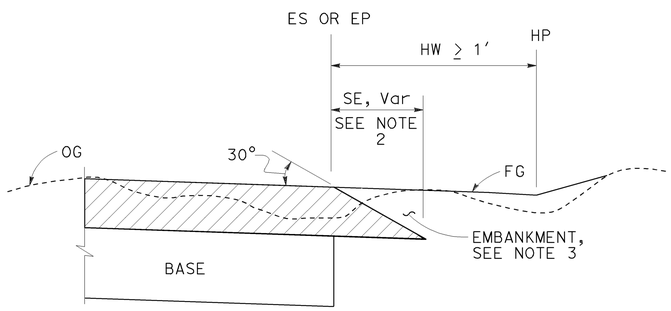

CASE M
Safety Edge - Cut Section, HW ≥ 1′

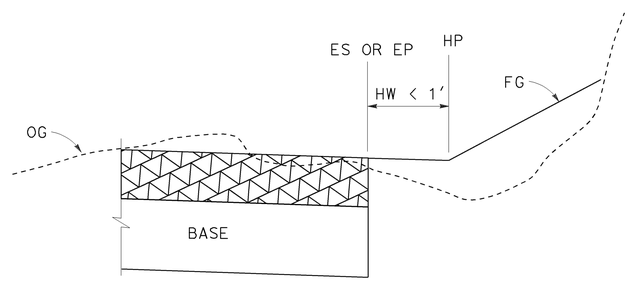

CASE N
Vertical Edge - Cut Section, HW < 1′

CUT SECTION

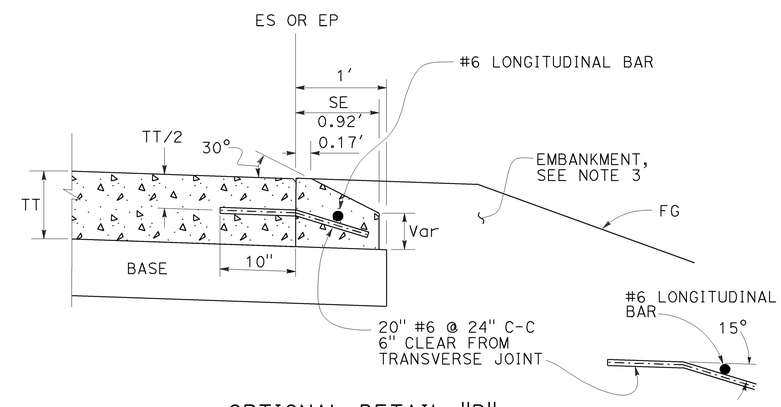

OPTIONAL DETAIL "B"
For concrete pavement
See Note 4

NOTES:

1. For limits of safety edge and vertical edge treatments, see Revised Standard Plan RSP P74
2. Details shown for HMA pavement thickness less than 0.43′. See Detail "B" for HMA pavement thickness more than 0.43′ or concrete pavement.
3. For locations and limits of embankment see project plans.
4. Safety edge transverse joint must match pavement transverse joint. End of #6 longitudinal bar must be 2" ±½" clear from transverse joint.
5. Safety edge is not needed in the area of MGS, barrier, right turn lane and acceleration lane. See Revised Standard Plan RSP P74.

STATE OF CALIFORNIA
DEPARTMENT OF TRANSPORTATION

PAVEMENT EDGE TREATMENTS-NEW CONSTRUCTION

NO SCALE

RSP P76 DATED NOVEMBER 15, 2013 SUPERSEDES RSP P76 DATED JANUARY 20, 2012 THAT SUPPLEMENTS THE STANDARD PLANS BOOK DATED 2010.

REVISED STANDARD PLAN RSP P76

2010 REVISED STANDARD PLAN RSP P76

10-4-13

Dist	COUNTY	ROUTE	POST MILES TOTAL PROJECT	SHEET No.	TOTAL SHEETS
01	Hum	36	22.8/27.7	42	46

LICENSED LANDSCAPE ARCHITECT

July 19, 2013
PLANS APPROVAL DATE

THE STATE OF CALIFORNIA OR ITS OFFICERS OR AGENTS SHALL NOT BE RESPONSIBLE FOR THE ACCURACY OR COMPLETENESS OF SCANNED COPIES OF THIS PLAN SHEET.

LICENSED LANDSCAPE ARCHITECT — Gregory A. Balzer — 2516 — 02-28-15 Renewal Date — 7-19-13 Date — STATE OF CALIFORNIA

TO ACCOMPANY PLANS DATED 3-30-15

A

AB	AGGREGATE BASE
ABS	ACRYLONITRILE-BUTADIENE-STYRENE
AC	ASPHALT CONCRETE
ACC	ARMOR-CLAD CONDUCTORS
Adj	ADJACENT/ADJUSTABLE
AIC	AUXILIARY IRRIGATION CONTROLLER
Alt	ALTERNATIVE
AMEND	AMENDMENT
ARV	AIR RELEASE VALVE
AUTO	AUTOMATIC
AUX	AUXILIARY
AVB	ATMOSPHERIC VACUUM BREAKER

B

B&B	BALLED AND BURLAPPED
B/B	BRASS/BRONZE
B/B/PL	BRASS/BRONZE/PLASTIC
B/PL	BRASS/PLASTIC
BFM	BONDED FIBER MATRIX
Bit Ctd	BITUMINOUS COATED
BP	BOOSTER PUMP
BPA	BACKFLOW PREVENTER ASSEMBLY
BPE	BACKFLOW PREVENTER ENCLOSURE
BV	BALL VALVE

C

C	CONDUIT
CAP	CORRUGATED ALUMINUM PIPE
CARV	COMBINATION AIR RELEASE VALVE
CB	COUPLING BAND
CCA	CAM COUPLER ASSEMBLY
CEC	CONTROLLER ENCLOSURE CABINET
CHDPE	CORRUGATED HIGH DENSITY POLYETHYLENE
CL	CHAIN LINK
CNC	CONTROL AND NEUTRAL CONDUCTORS
Conc	CONCRETE
CP	COPPER PIPE
CS	COMPOST SOCK
CSP	CORRUGATED STEEL PIPE
CST	CENTER STRIP
CV	CHECK VALVE

D

Dia	DIAMETER
DIP	DUCTILE IRON PIPE
DIT	DRIP IRRIGATION TUBING
DG	DECOMPOSED GRANITE
DN	DIAMETER NOMINAL
DVA	DRIP VALVE ASSEMBLY

E

EC	EROSION CONTROL
ECTC	EROSION CONTROL TECHNOLOGY COUNCIL
Elect	ELECTRIC/ELECTRICAL
Elev	ELEVATION
ELL	ELBOW
ENCL	ENCLOSURE
EP	EDGE OF PAVEMENT
ES	EDGE OF SHOULDER
EST	END STRIP
ESTB	ESTABLISHMENT
ETW	EDGE OF TRAVELED WAY

F

F	FULL CIRCLE
F/P	FULL/PART CIRCLE
FCV	FLOW CONTROL VALVE
FERT	FERTILIZER
FG	FINISHED GRADE
FH	FLEXIBLE HOSE
FIPT	FEMALE IRON PIPE THREAD
FIS	FERTILIZER INJECTOR SYSTEM
FL	FLOW LINE
FR	FIBER ROLL
FS	FLOW SENSOR
FSC	FLOW SENSOR CABLE
FV	FLUSH VALVE

G

Galv	GALVANIZED
GARV	GARDEN VALVE
GARVA	GARDEN VALVE ASSEMBLY
GM	GRAVEL MULCH
GPH	GALLONS PER HOUR
GPM	GALLONS PER MINUTE
GSP	GALVANIZED STEEL PIPE
GV	GATE VALVE

H

H	HALF CIRCLE
HDPE	HIGH DENSITY POLYETHYLENE
HP	HORSEPOWER/HINGE POINT
HPL	HIGH PRESSURE LINE
Hwy	HIGHWAY

I

IC	IRRIGATION CONTROLLER
ICC	IRRIGATION CONTROLLER(S) IN CONTROLLER ENCLOSURE CABINET
ID	INSIDE DIAMETER
IFS	IRRIGATION FILTRATION SYSTEM
IPS	IRON PIPE SIZE
IPT	IRON PIPE THREAD
Irr	IRRIGATION

L

L	LENGTH

M

Max	MAXIMUM
MBGR	METAL BEAM GUARD RAILING
MCV	MANUAL CONTROL VALVE
MIC	MASTER IRRIGATION CONTROLLER
Min	MINIMUM
MIPT	MALE IRON PIPE THREAD
Misc	MISCELLANEOUS
Mtl	MATERIAL
MVP	MAINTENANCE VEHICLE PULLOUT

N

NCN	NO COMMON NAME
NL	NOZZLE LINE
No.	NUMBER
NPT	NATIONAL PIPE THREAD

O

O/C	ON CENTER
OD	OUTSIDE DIAMETER
OL	OVERLAP

P

P	PART CIRCLE
PB	PULL BOX
PCC	PORTLAND CEMENT CONCRETE
PE	POLYETHYLENE
Pkt	PACKET
PL	PLASTIC
PLS	PURE LIVE SEED
PLT	PLANT/PLANTING
PLT ESTB	PLANT ESTABLISHMENT
PM	POST MILE
PR	PRESSURE RATED
PRLV	PRESSURE RELIEF VALVE
PRV	PRESSURE REGULATING VALVE
PVC	POLYVINYL CHLORIDE
Pvmt	PAVEMENT

Q

Q	QUARTER CIRCLE
QCV	QUICK COUPLING VALVE

R

R	RADIUS
RCP	REINFORCED CONCRETE PIPE
RCV	REMOTE CONTROL VALVE
RCVM	REMOTE CONTROL VALVE (MASTER)
RCVMF	REMOTE CONTROL VALVE (MASTER) W/FLOW SENSOR
RCVP	REMOTE CONTROL VALVE W/PRESSURE REGULATOR
RCW	RECYCLED WATER
RECP	ROLLED EROSION CONTROL PRODUCT
REQ	REQUIRED
RICS	REMOTE IRRIGATION CONTROL SYSTEM
R/W	RIGHT OF WAY

S

S	SLIP
SCH	SCHEDULE
SF	STATE-FURNISHED
Shld	SHOULDER
Sq	SQUARE
SST	SIDE STRIP
Sta	STATION
Std	STANDARD
SW	SIDEWALK/SOUND WALL

T

T	THIRD CIRCLE/THREAD
TLS	TRUCK LOADING STANDPIPE
TQ	THREE QUARTER CIRCLE
TRM	TURF REINFORCEMENT MAT
TT	TWO-THIRDS CIRCLE
TWSA	TREE WELL SPRINKLER ASSEMBLY
Typ	TYPICAL

U

UG	UNDERGROUND

W

W	WIDTH
W/	WITH
WM	WATER METER
WS	WYE STRAINER
WSA	WYE STRAINER ASSEMBLY
WSP	WELDED STEEL PIPE
WWM	WELDED WIRE MESH

NOTE:

For additional abbreviations, see Standard Plans A10A and A10B.

STATE OF CALIFORNIA
DEPARTMENT OF TRANSPORTATION

LANDSCAPE AND EROSION CONTROL ABBREVIATIONS

NO SCALE

RSP H1 DATED JULY 19, 2013 SUPERSEDES STANDARD PLAN H1 DATED MAY 20, 2011 - PAGE 218 OF THE STANDARD PLANS BOOK DATED 2010.

REVISED STANDARD PLAN RSP H1

2010 REVISED STANDARD PLAN RSP H1

6-28-13

Dist	COUNTY	ROUTE	POST MILES TOTAL PROJECT	SHEET No.	TOTAL SHEETS
01	Hum	36	22.8/27.7	43	46

Gregory A. Balzer
LICENSED LANDSCAPE ARCHITECT

November 15, 2013
PLANS APPROVAL DATE

LICENSED LANDSCAPE ARCHITECT
Gregory A. Balzer 2576
Signature
2-28-15
Renewal Date
11-15-13
Date
STATE OF CALIFORNIA

THE STATE OF CALIFORNIA OR ITS OFFICERS OR AGENTS SHALL NOT BE RESPONSIBLE FOR THE ACCURACY OR COMPLETENESS OF SCANNED COPIES OF THIS PLAN SHEET.

TO ACCOMPANY PLANS DATED 3-30-15

EXISTING	NEW	ITEM DESCRIPTION
		WATER METER (WM)
		BACKFLOW PREVENTER ASSEMBLY (BPA)
		BACKFLOW PREVENTER ENCLOSURE (BPE)
		BOOSTER PUMP (BP)
		TRUCK LOADING STANDPIPE (TLS)
	FS	FLOW SENSOR (FS)
		MASTER IRRIGATION CONTROLLER (MIC)
		AUXILIARY IRRIGATION CONTROLLER (AIC)
		IRRIGATION CONTROLLER (IC) IRRIGATION CONTROLLER (IC) (BATTERY) IRRIGATION CONTROLLER (IC) (SOLAR) IRRIGATION CONTROLLER (IC) (TWO WIRE) IRRIGATION CONTROLLER(S) IN CONTROLLER ENCLOSURE CABINET (ICC)
acc	ACC	ARMOR-CLAD CONDUCTORS (ACC)
cnc	CNC	CONTROL AND NEUTRAL CONDUCTORS (CNC)
		IRRIGATION CONDUIT
		EXTEND IRRIGATION CONDUIT
dip	DIP	DUCTILE IRON PIPE (SUPPLY LINE) (MAIN) (DIP)
		GALVANIZED STEEL PIPE (SUPPLY LINE) (MAIN) (GSP)
		GALVANIZED STEEL PIPE (SUPPLY LINE) (LATERAL) (GSP)
		PLASTIC PIPE (SUPPLY LINE) (MAIN)
		PLASTIC PIPE (SUPPLY LINE) (LATERAL)
cp	CP	COPPER PIPE (SUPPLY LINE)
dit	DIT	DRIP IRRIGATION TUBING
		REMOTE CONTROL VALVE (RCV) REMOTE CONTROL VALVE (MASTER) (RCVM) REMOTE CONTROL VALVE (MASTER) W/FLOW METER (RCVMF)
P	P	REMOTE CONTROL VALVE W/PRESSURE REGULATOR (RCVP)
		EXISTING MANUAL CONTROL VALVE (MCV)
		DRIP VALVE ASSEMBLY (DVA)
		WYE STRAINER ASSEMBLY (WSA)

EXISTING	NEW	ITEM DESCRIPTION
		GATE VALVE (GV)
		BALL VALVE (BV)
		QUICK COUPLING VALVE (QCV)
		CAM COUPLER ASSEMBLY (CCA)
		GARDEN VALVE ASSEMBLY (GARVA)
		PRESSURE REGULATING VALVE (PRV)
		PRESSURE RELIEF VALVE (PRLV)
		FLOW CONTROL VALVE (FCV)
		COMBINATION AIR RELEASE VALVE (CARV)
		CHECK VALVE (CV)
		FLUSH VALVE (FV)
		EXISTING NOZZLE LINE W/TURNING UNION
		EXISTING IRRIGATION SYSTEM
		EXISTING IRRIGATION SYSTEM TO BE REMOVED
		CHAIN LINK GATE
		QUICK COUPLING VALVE W/SPRINKLER PROTECTOR
3	3	SPRINKLER W/SPRINKLER PROTECTOR
	C	CONNECT TO EXISTING SYSTEM
		CAP
		CAP EXISTING
	\\\FR\\\	FIBER ROLL
	\\\CS\\\	COMPOST SOCK

RCV SIZE
IRRIGATION CONTROLLER
CONTROLLER STATION
VALVE IN PARALLEL (IF APPLICABLE)
GPM
QUANTITY OF SPRINKLERS (WHEN SHOWN)

* 2½"-A-2b-40-60

VALVE CODE

* VALVE CODES FOR EXISTING VALVES ARE SHOWN IN A DASHED ENCLOSURE.

STATE OF CALIFORNIA
DEPARTMENT OF TRANSPORTATION

LANDSCAPE AND EROSION CONTROL SYMBOLS

NO SCALE

RSP H2 DATED NOVEMBER 15, 2013 SUPERSEDES RSP H2 DATED JULY 19, 2013 AND STANDARD PLAN H2 DATED MAY 20, 2011 - PAGE 219 OF THE STANDARD PLANS BOOK DATED 2010.

REVISED STANDARD PLAN RSP H2

2010 REVISED STANDARD PLAN RSP H2

10-9-13

Dist	COUNTY	ROUTE	POST MILES TOTAL PROJECT	SHEET No.	TOTAL SHEETS
01	Hum	36	22.8/27.7	44	46

REGISTERED CIVIL ENGINEER

July 19, 2013
PLANS APPROVAL DATE

REGISTERED PROFESSIONAL ENGINEER
Gurinderpal Bhullar
No. C48815
Exp. 9-30-14
CIVIL
STATE OF CALIFORNIA

THE STATE OF CALIFORNIA OR ITS OFFICERS OR AGENTS SHALL NOT BE RESPONSIBLE FOR THE ACCURACY OR COMPLETENESS OF SCANNED COPIES OF THIS PLAN SHEET.

TO ACCOMPANY PLANS DATED 3-30-15

2010 REVISED STANDARD PLAN RSP T9

TABLE 1

TAPER LENGTH CRITERIA AND CHANNELIZING DEVICE SPACING

SPEED (S)	MINIMUM TAPER LENGTH * FOR WIDTH OF OFFSET 12 FEET (W)				MAXIMUM CHANNELIZING DEVICE SPACING		
					X	Y	Z **
	TANGENT 2L	MERGING L	SHIFTING L/2	SHOULDER L/3	TAPER	TANGENT	CONFLICT
mph	ft	ft	ft	ft	ft	ft	ft
20	160	80	40	27	20	40	10
25	250	125	63	42	25	50	12
30	360	180	90	60	30	60	15
35	490	245	123	82	35	70	17
40	640	320	160	107	40	80	20
45	1080	540	270	180	45	90	22
50	1200	600	300	200	50	100	25
55	1320	660	330	220	55	110	27
60	1440	720	360	240	60	120	30
65	1560	780	390	260	65	130	32
70	1680	840	420	280	70	140	35

* - For other offsets, use the following merging taper length formula for L:
For speed of 40 mph or less, $L = WS^2/60$
For speed of 45 mph or more, $L = WS$

Where: L = Taper length in feet
W = Width of offset in feet
S = Posted speed limit, off-peak 85th-percentile speed prior to work starting, or the anticipated operating speed in mph

** - Use for taper and tangent sections where there are no pavement markings or where there is a conflict between existing pavement markings and channelizers (CA).

TABLE 2

LONGITUDINAL BUFFER SPACE AND FLAGGER STATION SPACING

SPEED *	Min D **	DOWNGRADE Min D ***		
		-3%	-6%	-9%
mph	ft	ft	ft	ft
20	115	116	120	126
25	155	158	165	173
30	200	205	215	227
35	250	257	271	287
40	305	315	333	354
45	360	378	400	427
50	425	446	474	507
55	495	520	553	593
60	570	598	638	686
65	645	682	728	785
70	730	771	825	891

* - Speed is posted speed limit, off-peak 85th-percentile speed prior to work starting, or the anticipated operating speed in mph

** - Longitudinal buffer space or flagger station spacing

*** - Use on sustained downgrade steeper than -3 percent and longer than 1 mile.

TABLE 3

ADVANCE WARNING SIGN SPACING

ROAD TYPE	DISTANCE BETWEEN SIGNS *		
	A	B	C
	ft	ft	ft
URBAN - 25 mph OR LESS	100	100	100
URBAN - MORE THAN 25 mph TO 40 mph	250	250	250
URBAN - MORE THAN 40 mph	350	350	350
RURAL	500	500	500
EXPRESSWAY / FREEWAY	1000	1500	2640

* - The distances are approximate, are intended for guidance purposes only, and should be applied with engineering judgment. These distances should be adjusted by the Engineer for field conditions, if necessary, by increasing or decreasing the recommmended distances.

STATE OF CALIFORNIA
DEPARTMENT OF TRANSPORTATION

TRAFFIC CONTROL SYSTEM TABLES FOR LANE AND RAMP CLOSURES

NO SCALE

RSP T9 DATED JULY 19, 2013 SUPERSEDES RSP T9 DATED APRIL 19, 2013 THAT SUPPLEMENTS THE STANDARD PLANS BOOK DATED 2010.

REVISED STANDARD PLAN RSP T9

TO ACCOMPANY PLANS DATED 3-30-15

Dist	COUNTY	ROUTE	POST MILES TOTAL PROJECT	SHEET No.	TOTAL SHEETS
01	Hum	36	22.8/27.7	45	46

REGISTERED CIVIL ENGINEER

April 19, 2013
PLANS APPROVAL DATE

REGISTERED PROFESSIONAL ENGINEER Gurinderpal Bhullar No. C48815 Exp. 9-30-14 CIVIL STATE OF CALIFORNIA

THE STATE OF CALIFORNIA OR ITS OFFICERS OR AGENTS SHALL NOT BE RESPONSIBLE FOR THE ACCURACY OR COMPLETENESS OF SCANNED COPIES OF THIS PLAN SHEET.

NOTES:

See Revised Standard Plan RSP T9 for tables.

Use cone spacing X for taper segment, Y for tangent segment or Z for conflict situations, as approriate, per Table 1, unless X, Y, or Z cone spacing is shown on this sheet.

Unless otherwise specified in the special provisions, all temporary warning signs shall have black legend on fluorescent orange background.

California codes are designated by (CA). Otherwise, Federal (MUTCD) codes are shown.

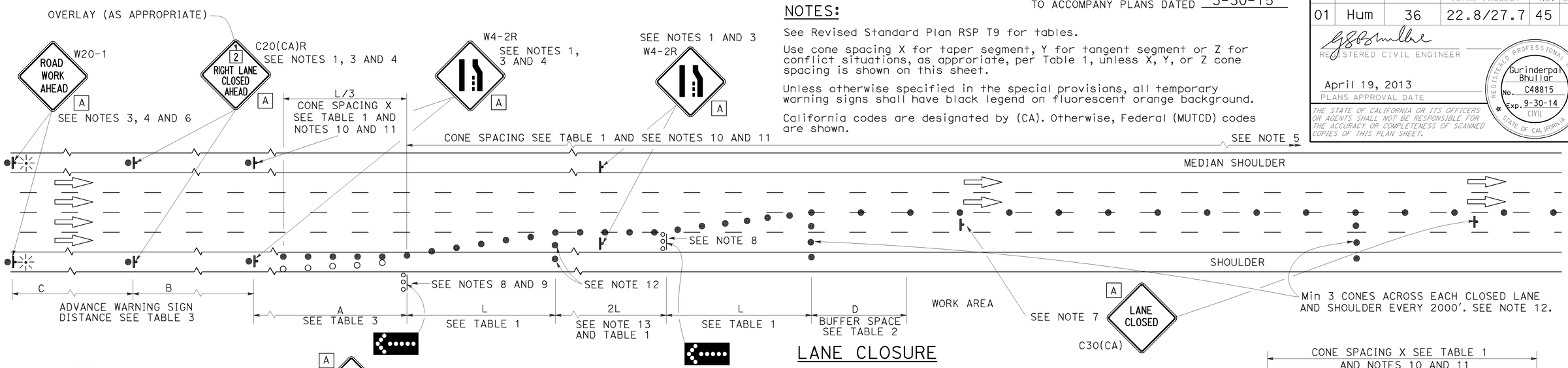

LANE CLOSURE

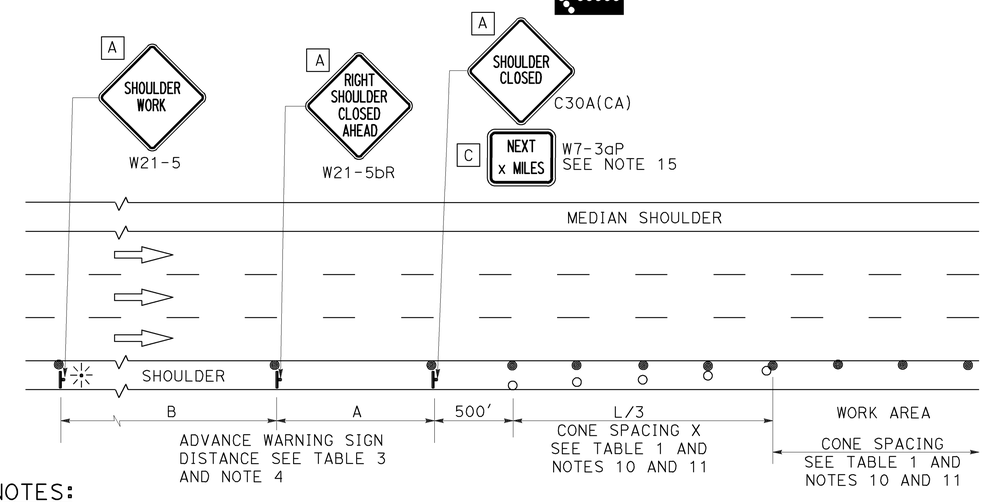

SHOULDER CLOSURE

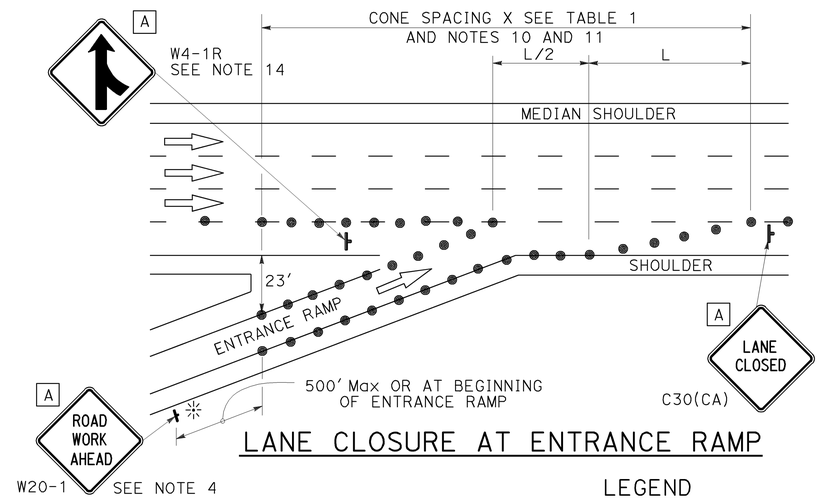

LANE CLOSURE AT ENTRANCE RAMP

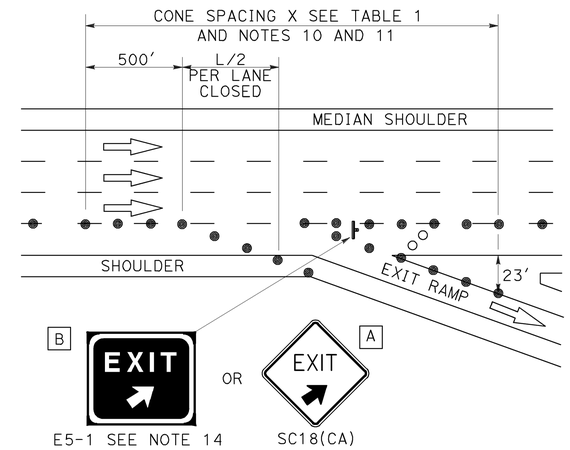

LANE CLOSURE AT EXIT RAMP

NOTES:

1. Median lane closures shall conform to the details as shown except that C20(CA)L and W4-2L signs shall be used.
2. At least one person shall be assigned to provide full time maintenance of traffic control devices for lane closures.
3. Duplicate sign installations are not required:
   a) On opposite shoulder if at least one-half of the available lanes remain open to traffic.
   b) In the median if the width of the median shoulder is less than 8' and the outside lanes are to be closed.
4. Each advance warning sign on each side of the roadway shall be equipped with at least two flags for daytime closure. Each flag shall be at least 16" x 16" in size and shall be orange or fluorescent red-orange in color. Flashing beacons shall be placed at the locations indicated for lane closure during hours of darkness.
5. A G20-2 "END ROAD WORK" sign, with minimum size of 48" x 24" as appropriate, shall be placed at the end of the lane closure unless the end of work area is obvious or ends within a larger project's limits.
6. If the W20-1 sign would follow within 2000' of a stationary W20-1 or G20-1 "ROAD WORK NEXT _____ MILES", use a C20(CA) sign for the first advance warning sign.
7. Place a C30(CA) sign every 2000' throughout length of lane closure.
8. One flashing arrow sign for each lane closed. The flashing arrow signs shall be Type I.
9. A minimum 1500' of sight distance shall be provided where possible for vehicles approaching the first flashing arrow sign. Lane closures shall not begin at top of crest vertical curve or on a horizontal curve.
10. All cones used for lane closures during the hours of darkness shall be fitted with retroreflective bands (or sleeves) as specified in the specifications.
11. Portable delineators, placed at one-half the spacing indicated for traffic cones may be used instead of cones for daytime closures only.
12. Unless otherwise specified in the special provisions, a minimum of 3 cones shall be placed transversely across each closed lane and shoulder at each location where a taper across a traffic lane ends and every 2000' as shown on the "Lane Closure" detail. Two Type II barricades may be used instead of the 3 cones. The transverse alignment of the cones or barricades on the closed shoulder may be shifted from the transverse alignment to provide access to the work.
13. Unless otherwise specified in the special provisions, the 2L tangent shown along lane lines shall be used between the L tapers required for each closed traffic lane.
14. Unless otherwise specified in the special provisions, the E5-1 or SC18(CA) and W4-1 signs shall be used as shown.
15. A W7-3aP "NEXT____ MILES" plaque must be used if theshoulder closure extends beyond the distance that can be perceived by road users.

LEGEND

- TRAFFIC CONE
- TRAFFIC CONE (OPTIONAL TAPER)
- TEMPORARY TRAFFIC CONTROL SIGN
- FLASHING ARROW SIGN (FAS)
- FAS SUPPORT OR TRAILER
- PORTABLE FLASHING BEACON

SIGN PANEL SIZE (Min)

A	48" x 48"
B	72" x 60"
C	36" x 30"

STATE OF CALIFORNIA
DEPARTMENT OF TRANSPORTATION

TRAFFIC CONTROL SYSTEM FOR LANE CLOSURE ON FREEWAYS AND EXPRESSWAYS

NO SCALE

RSP T10 DATED APRIL 19, 2013 SUPERSEDES STANDARD PLAN T10 DATED MAY 20, 2011 - PAGE 237 OF THE STANDARD PLANS BOOK DATED 2010.

REVISED STANDARD PLAN RSP T10

2010 REVISED STANDARD PLAN RSP T10

12-18-12

Dist	COUNTY	ROUTE	POST MILES TOTAL PROJECT	SHEET No.	TOTAL SHEETS
01	Hum	36	22.8/27.7	46	46

REGISTERED CIVIL ENGINEER

April 19, 2013
PLANS APPROVAL DATE

REGISTERED PROFESSIONAL ENGINEER Gurinderpal Bhullar No. C48815 Exp. 9-30-14 CIVIL STATE OF CALIFORNIA

THE STATE OF CALIFORNIA OR ITS OFFICERS OR AGENTS SHALL NOT BE RESPONSIBLE FOR THE ACCURACY OR COMPLETENESS OF SCANNED COPIES OF THIS PLAN SHEET.

TO ACCOMPANY PLANS DATED 3-30-15

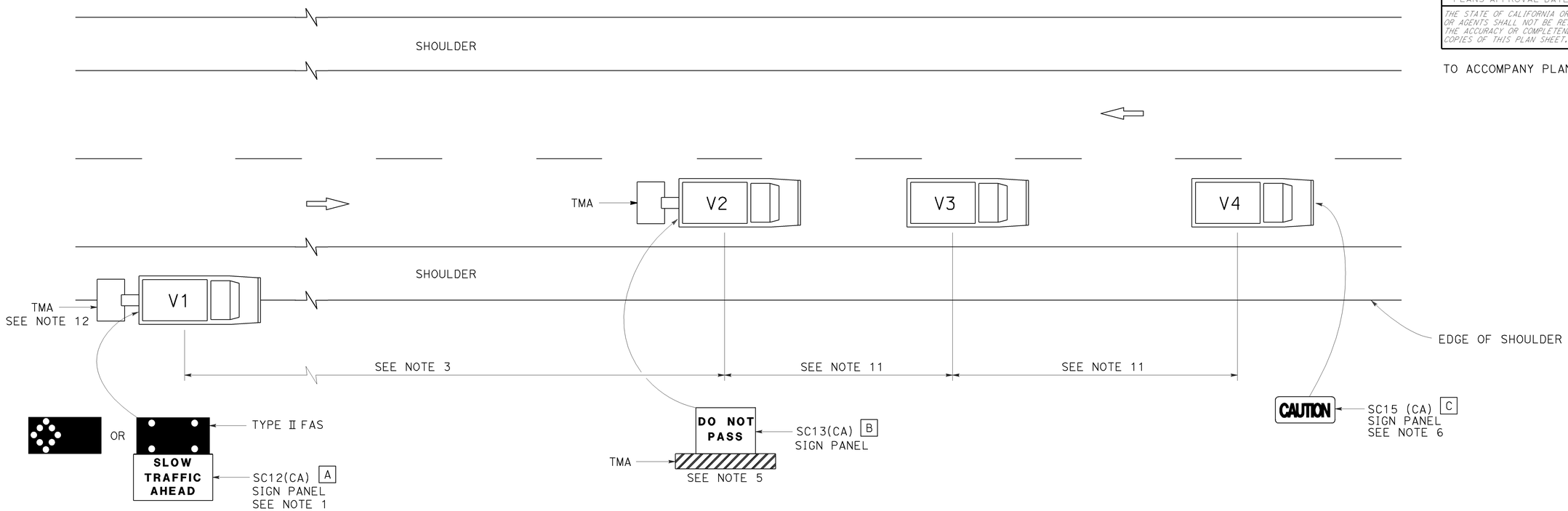

LEGEND

V1	SIGN VEHICLE
V2	SHADOW VEHICLE
V3	WORK/APPLICATION VEHICLE
V4	SIGN VEHICLE
TMA	TRUCK-MOUNTED ATTENUATOR
	FLASHING ARROW SIGN (FAS) IN FLASHING CAUTION MODE
	FLASHING ARROW SIGN (FAS) IN ALTERNATING DIAMOND CAUTION

SIGN PANEL SIZE (Min)

A	72" x 42"
B	54" x 42"
C	54" x 24"

NOTES:

1. Either a changeable message sign or a SC12(CA) "SLOW TRAFFIC AHEAD" sign shall be mounted on the rear of sign vehicle V1. The changeable message sign shall be sequenced to show the "CAUTION" message first, follow by the "SLOW TRAFFIC AHEAD" message. A Type II flashing arrow sign may be used with the SC12(CA) sign panel.
2. Sign vehicle V1 should be positioned where highly visible when shoulders are not available.
3. If traffic queues develop, sign vehicle V1 should be positioned upstream from the end of queue.
4. Vehicle-mounted sign panels shall have Type III or above retroreflective sheeting, black on white, or black on fluorescent orange, with 6" minimum series D letters per Caltrans sign specifications.
5. Shadow vehicle shall be equipped with a truck-mounted attenuator. The sign panel shown shall be mounted on the rear of shadow vehicle V2. The message "LANE CLOSED" may be used in place of the "DO NOT PASS" message.
6. The sign panel shown shall be mounted on the front of sign vehicle V4, facing opposing traffic.
7. All vehicles shall be equipped with flashing or rotating amber lights.
8. Sign vehicle V4 will not be required when the work and vehicles V2 and V3 are 2′ or more from the centerline of the highway during the work or application operations.
9. All vehicles used for lane closures shall be equipped with two-way radios and the vehicle operators shall maintain communication during the work or application operation.
10. This plan shall not be used where workers would be on foot in the work area. Use a stationary type lane closure (Revised Standard Plan T13) for this condition.
11. Minimize spacing between vehicles V2 and V3 and vehicles V3 and V4 to deter road users from driving in between them.
12. If sign vehicle V1 encroaches into the traffic lane due to insufficient shoulder width, sign vehicle V1 shall be equipped with a truck-mounted attenuator. Sign vehicle V1 shall stay as close to the edge of shoulder as practicable.

STATE OF CALIFORNIA
DEPARTMENT OF TRANSPORTATION

TRAFFIC CONTROL SYSTEM FOR MOVING LANE CLOSURE ON TWO LANE HIGHWAYS

NO SCALE

RSP T17 DATED APRIL 19, 2013 SUPERSEDES STANDARD PLAN T17
DATED MAY 20, 2011 - PAGE 245 OF THE STANDARD PLANS BOOK DATED 2010.

REVISED STANDARD PLAN RSP T17

2010 REVISED STANDARD PLAN RSP T17

12-18-12