CALTRANS TYPICAL 1-1/2" PIEZOMETER INSTALLATION WITH FLUSH MOUNT WELL MONUMENT

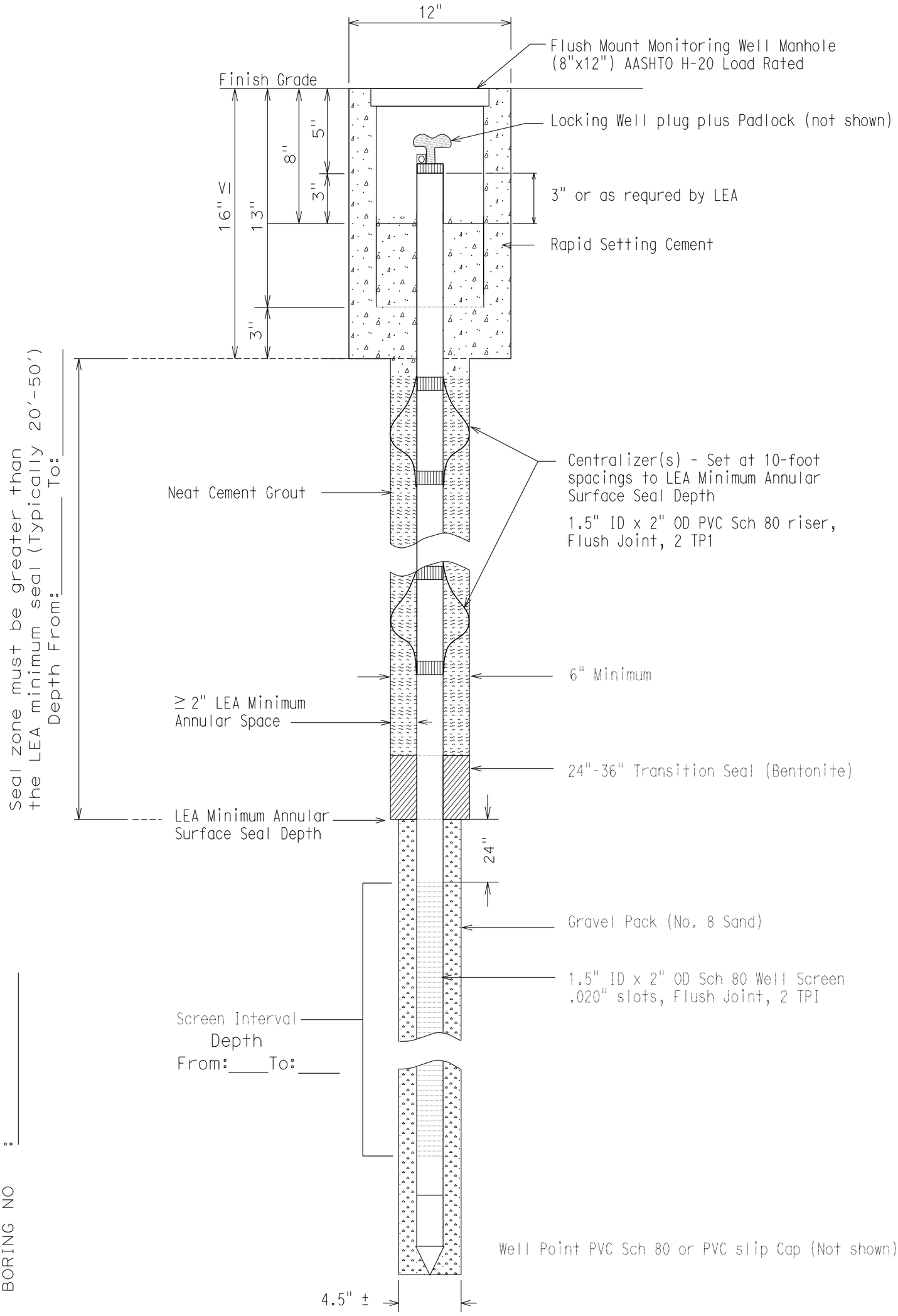

PROJECT NAME: _____
PROJECT ID : _____
BORING NO : _____

DS-SP-01

NOT TO SCALE

REVISION DATE: 5-27-16

CALTRANS TYPICAL 1-1/2" PIEZOMETER INSTALLATION W/LOCKING "STOVEPIPE" WELL MONUMENT

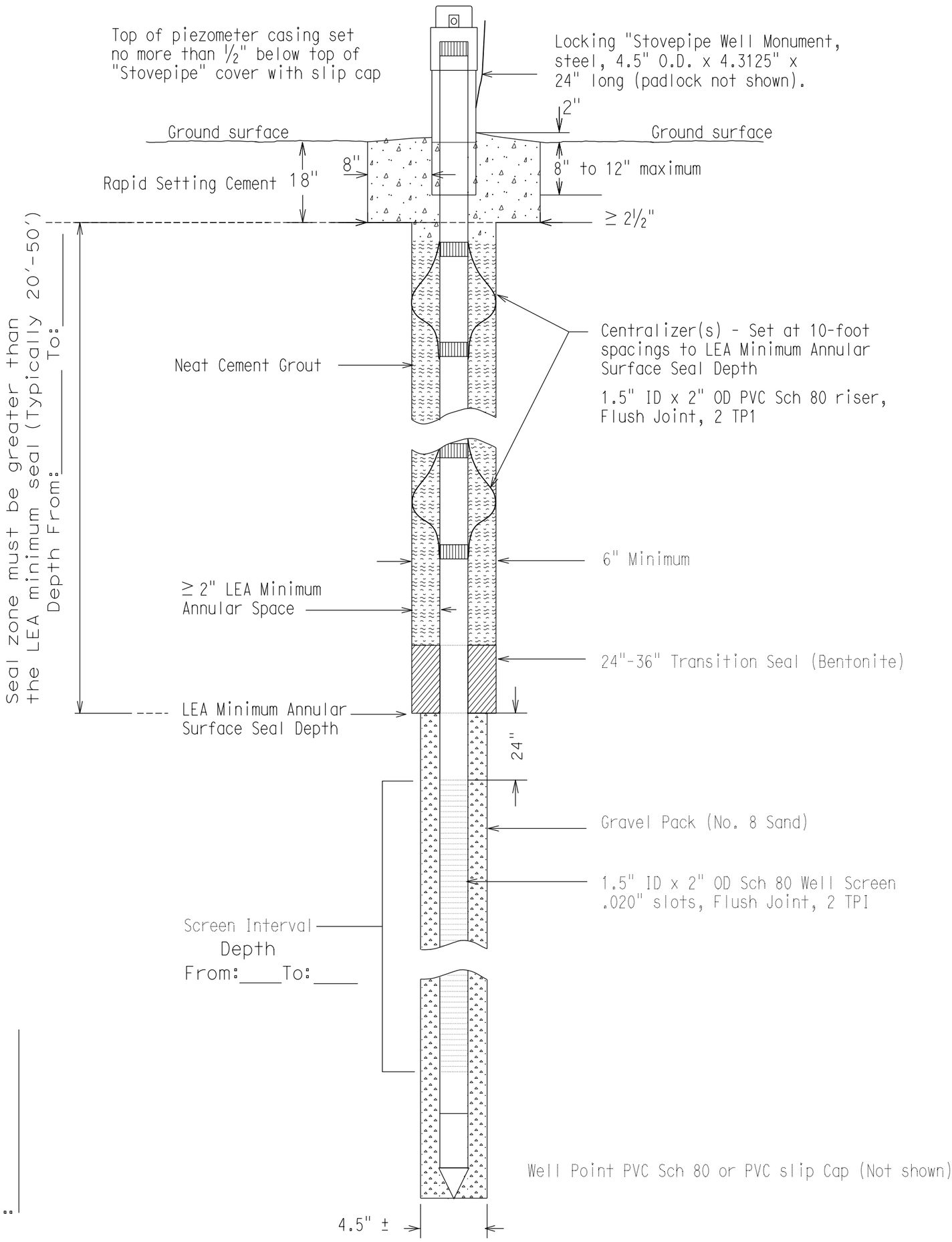

NOT TO SCALE

PROJECT NAME: _____
PROJECT ID : _____
BORING NO : _____

DS-SP-02

REVISION DATE: 5-27-16

CALTRANS TYPICAL 2.75" SLOPE INCLINOMETER (SI)/PIEZOMETER INSTALLATION W/LOCKING "STOVEPIPE" WELL MONUMENT

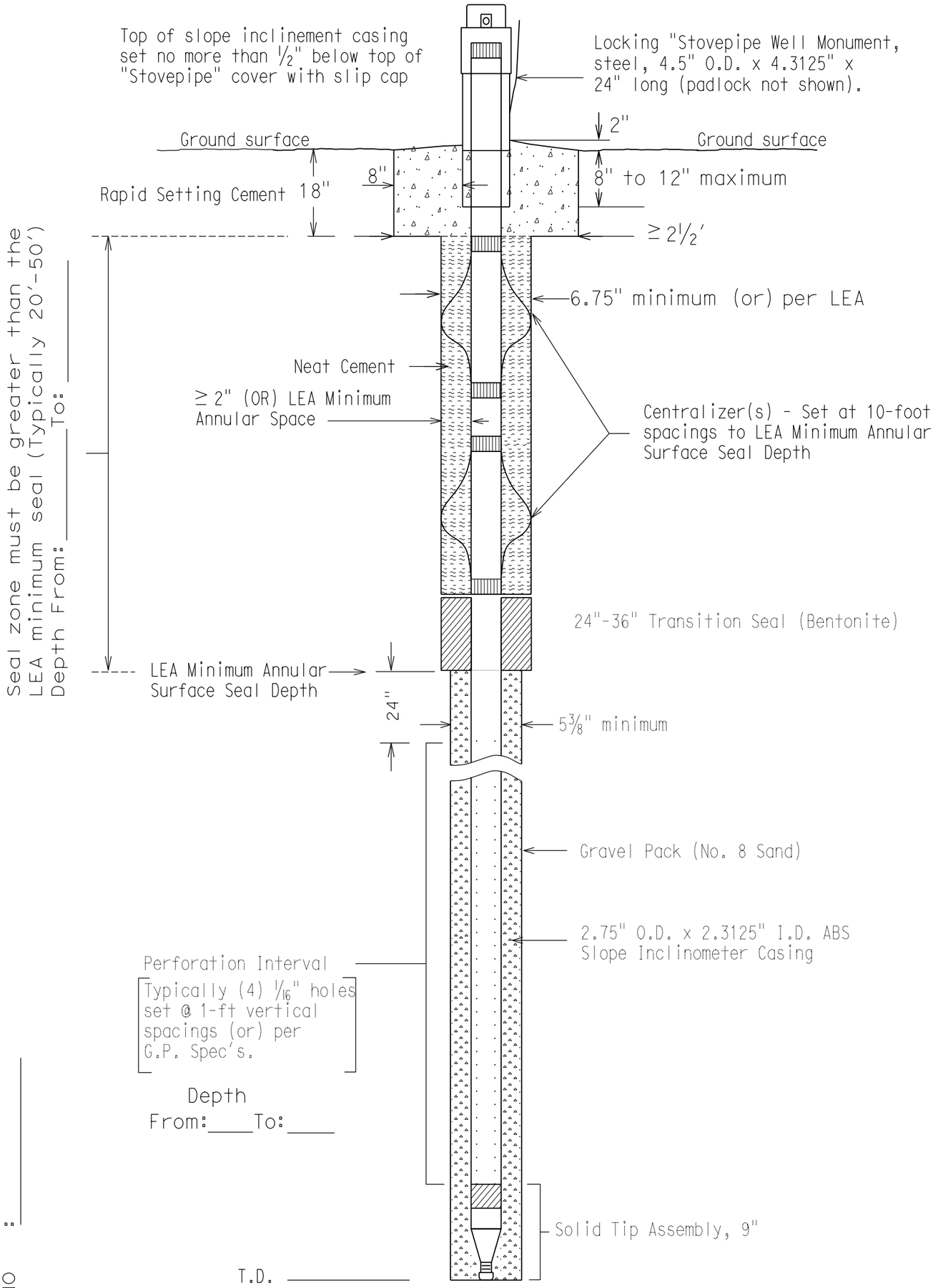

PROJECT NAME: _____
PROJECT ID : _____
BORING NO : _____

NOT TO SCALE

DS-SP-03

REVISION DATE: 5-27-16

CALTRANS TYPICAL 2.75" SLOPE INCLINOMETER (SI)/PIEZOMETER INSTALLATION W/FLUSH MOUNT WELL MONUMENT

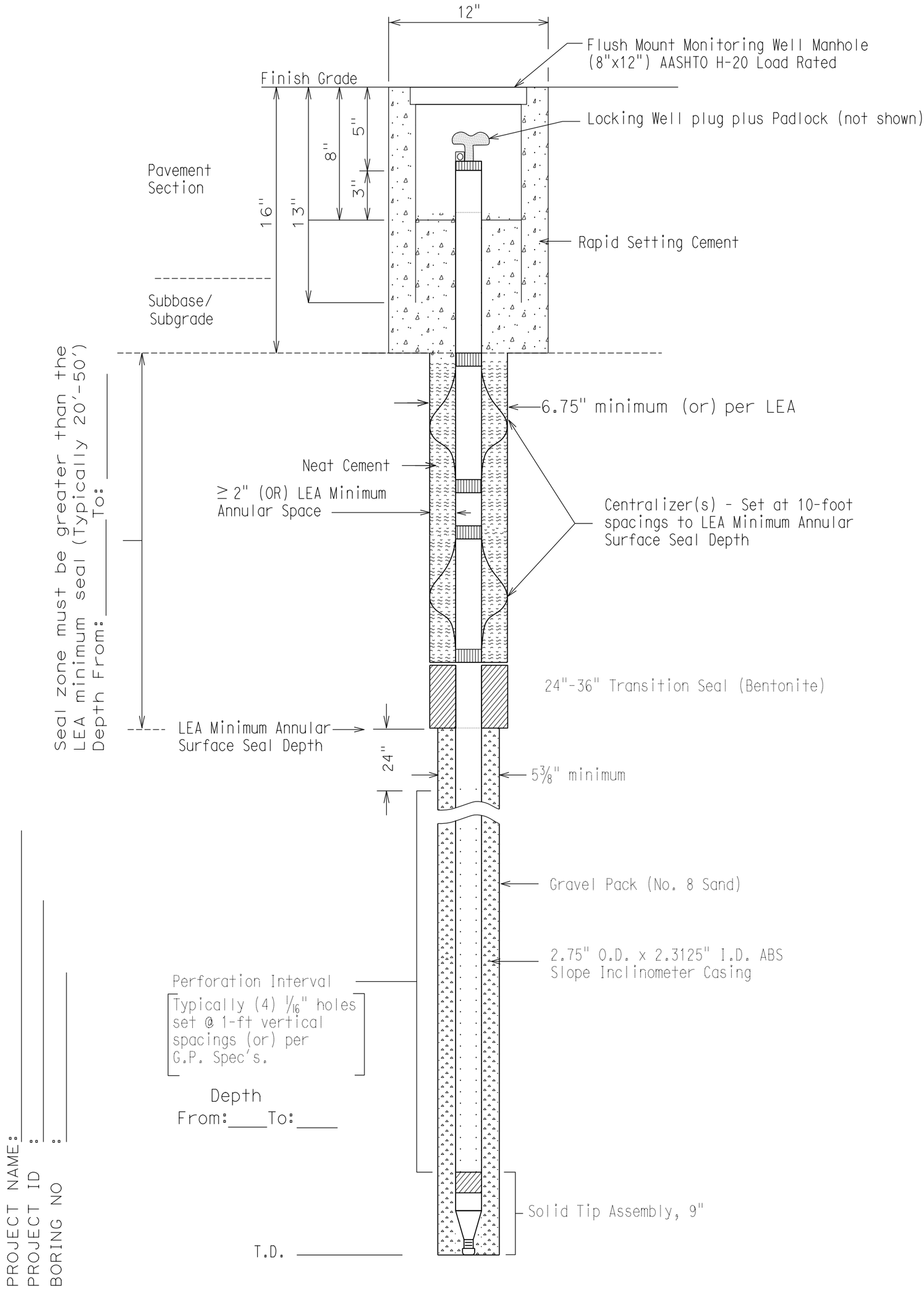

NOT TO SCALE

DS-SP-04

REVISION DATE: 5-27-16

CALTRANS TYPICAL 2.75" SLOPE INCLINOMETER (SI) INSTALLATION W/LOCKING "STOVEPIPE" WELL MONUMENT

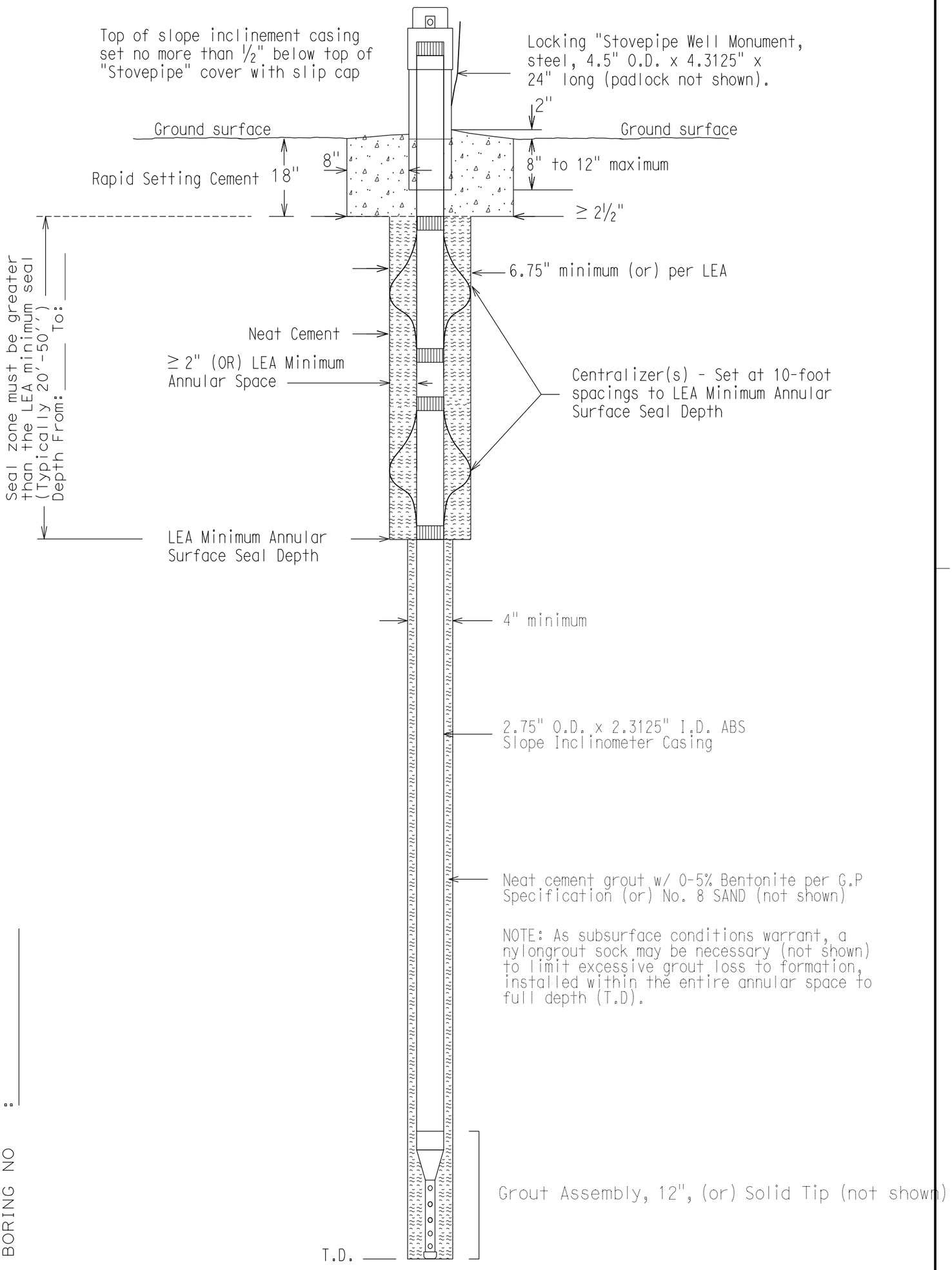

NOT TO SCALE

PROJECT NAME: _____
PROJECT ID : _____
BORING NO : _____

DS-SP-05

REVISION DATE: 5-27-16

CALTRANS TYPICAL 2.75" SLOPE INCLINOMETER (SI) INSTALLATION W/FLUSH MOUNT WELL MONUMENT

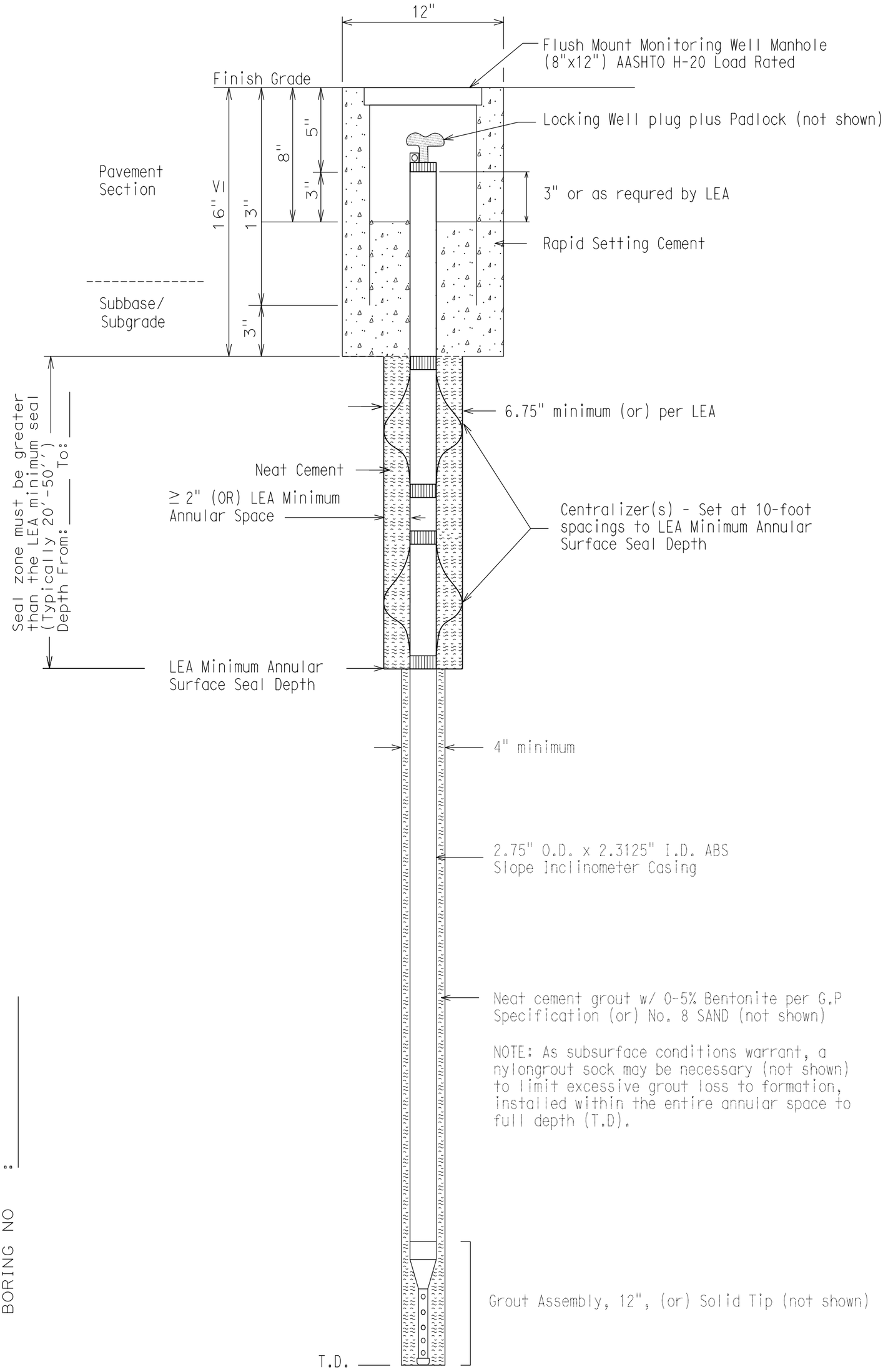

PROJECT NAME: _____
PROJECT ID : _____
BORING NO : _____

NOT TO SCALE

DS-SP-06

REVISION DATE: 5-27-16

CALTRANS Typical 3.0" GEOPHYSICAL CASING INSTALLATION W/LOCKING "STOVEPIPE" WELL MONUMENT

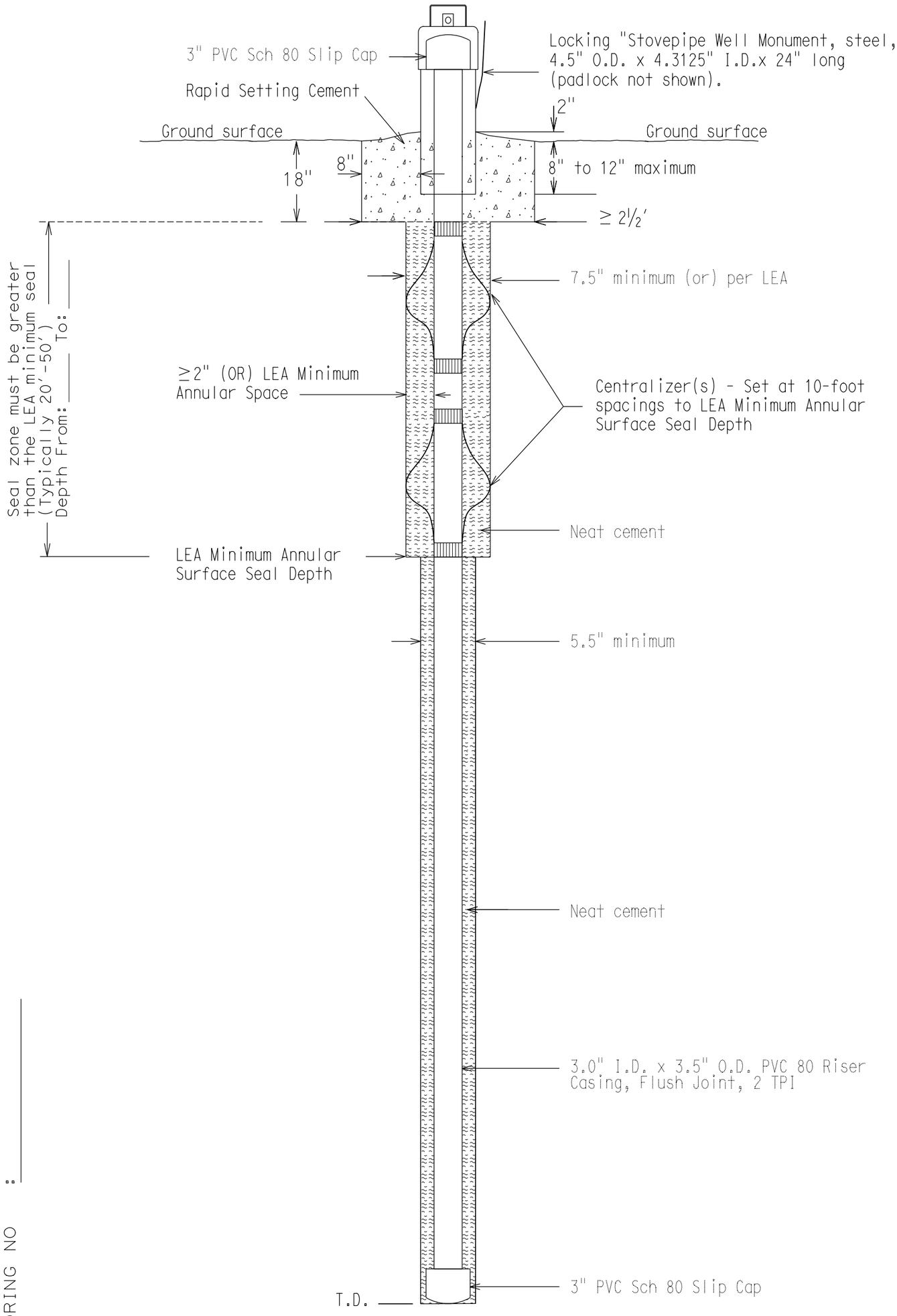

PROJECT NAME: _____
PROJECT ID : _____
BORING NO : _____

NOT TO SCALE

DS-SP-07

REVISION DATE: 5-27-16

CALTRANS TYPICAL 3.0" GEOPHYSICAL CASING INSTALLATION W/FLUSH MOUNT WELL MONUMENT

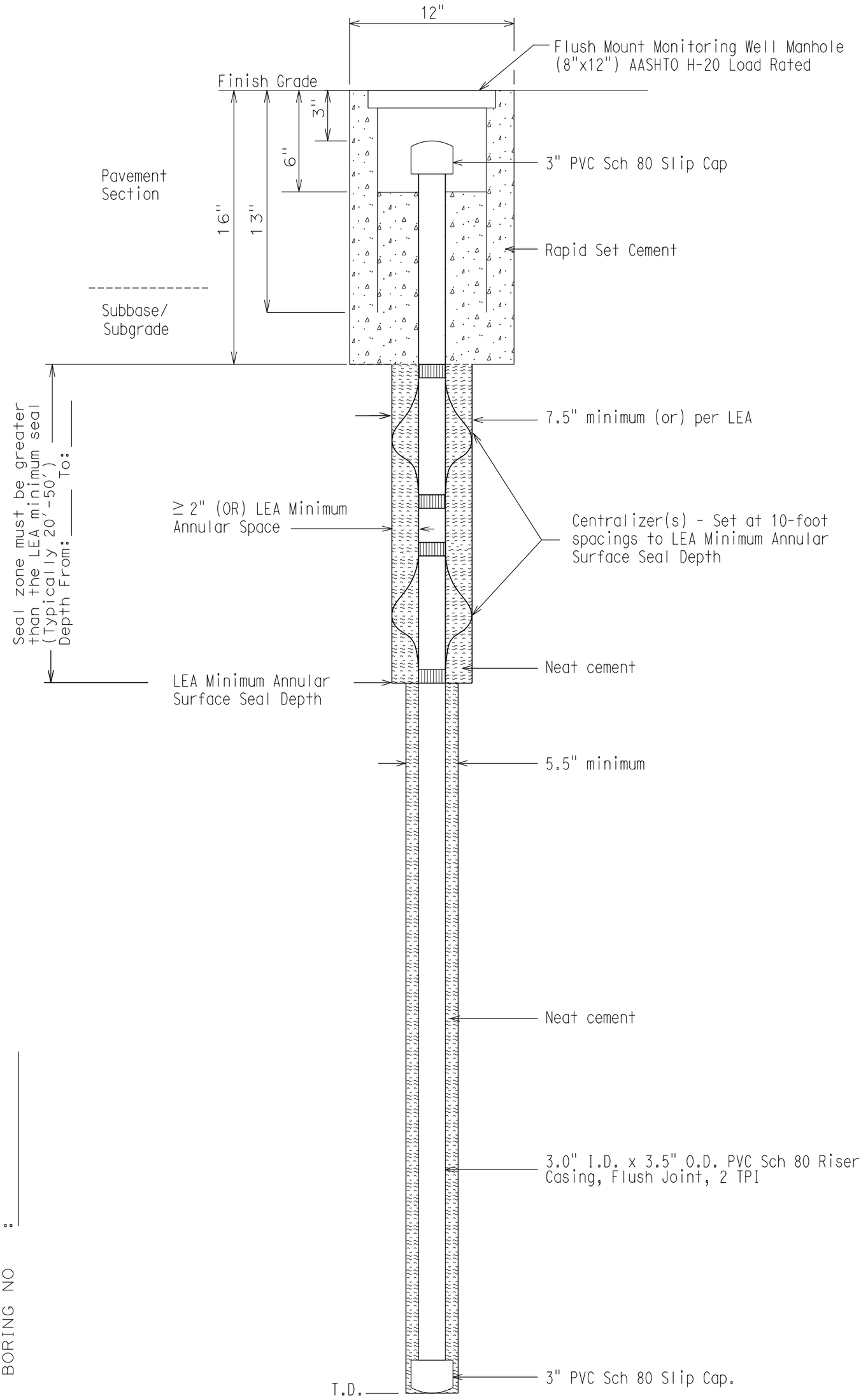

PROJECT NAME: _____
PROJECT ID : _____
BORING NO : _____

DS-SP-08

NOT TO SCALE

REVISION DATE: 5-27-16