SEISMIC RESPONSE AND CAPACITY EVALUATION OF SACRIFICIAL EXTERIOR SHEAR KEYS OF BRIDGE ABUTMENTS

Azadeh Bozorgzadeh
Ph.D Candidate in Structural Engineering
University of California, San Diego
San Diego, California

Dr. Sami Megally
Project Engineer
PBS&J, Inc
San Diego California

Dr. José I. Restrepo
Associate Professor of Structural Engineering
Department of Structural Engineering
University of California, San Diego
San Diego, California

Dr. Scott A. Ashford
Associate Professor of Geotechnical Engineering
Department of Structural Engineering
University of California, San Diego
San Diego, California

ABSTRACT
The observed damage on bridge abutments and abutment piles after 1994 Northridge earthquake required a revision on the role and design of shear keys. Experimental research was conducted to investigate the seismic behavior of exterior shear keys that are designed in accordance to current guidelines. Experimental work was also performed on shear keys designed to act as a structural fuse in a bridge system that protect abutment piles from failure in a strong earthquake. In this paper, we discuss the results of the experimental program and development of a simple analytical model for capacity evaluation of exterior shear keys.
Keywords: abutments, bridges, experimental testing, sacrificial elements, shear keys.

INTRODUCTION
Exterior shear keys are used in bridge abutments to support bridge superstructures transversely, as depicted in Fig. 1. However, it has been recognized that to protect abutment piles from severe damage under earthquake induced transverse forces, shear keys must be designed as a locking

mechanism to limit the magnitude of transverse force that can be transmitted into the abutment. Thus, shear keys should perform as structural fuses to control damage in seismic events. Damage to abutments under a major seismic event is admissible provided that any abutment damage is repairable and there is no damage to the piles (Caltrans 1993a). Therefore, transfer of seismic forces to the abutments is controlled by design of sacrificial shear keys such that the capacity of the shear keys does not exceed the smaller of 30% of the dead load vertical reaction at the abutment or 75% of the total shear capacity of the piles plus one of the wing walls (Caltrans 1993b).

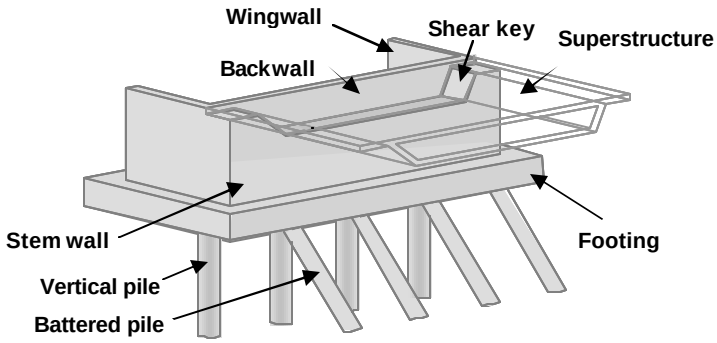

Fig. 1. Schematic of exterior shear keys in bridge abutments, (after Megally et al. 2001).

Based on the observed earthquake damage, it is clear that the seismic design of shear keys needs to be revised. In most cases large diagonal cracks on abutment walls caused costly repairs or even abutment destruction. Shear sliding failure of a shear key localizes damage to the shear key and thus will provide a relatively easy post-earthquake repair. Fig 2 shows exterior shear key and abutment wall damage during the 1994 Northridge earthquake. As it can be seen in this figure, partial damage was observed in the shear key, however, severe damage occurred in the abutment stem wall. In order to obtain a better understanding of the behavior of exterior shear keys, a research program was conducted at the University of California, San Diego, funded by the California Department of Transportation (Caltrans). Ten 2/5-scale shear keys were tested during the program. Based on these experiments, it seemed appropriate to reevaluate the validity of the design equation to estimate capacity of sacrificial shear keys and of the general design philosophy. A new capacity evaluation equation is proposed based on Strut-and-Tie model at failure mode.

Fig. 2. Abutment damage on South I-5/East SR-14, 1994 Northridge Earthquake, (Priestley et al. 1994).

EXPERIMENTAL WORK

This section provides a general description of test units, test setup, and describes the failure modes and general response of test units.

General Description of Test Units

The objectives of the experimental program on exterior shear keys were: (1) to provide data for the development of an analytical model that could be used to estimate the shear strength of a shear key accurately, and (2) to present construction details which allow shear keys to perform as sacrificial elements. The ten test units representing examples of the exterior shear keys in bridge abutments were built and tested in displacement control. All five test series, each including two shear key test units, were built on the same foundation support with the details provided by Caltrans. Details for the amount of reinforcement and types of construction joint are shown in Table 1. In Table 1, A_{vf} is the total area of vertical bars crossing the shear key-abutment stem wall and A_{sh} represents the total area of abutment horizontal reinforcing bars which transfer the shear force to the stem wall. Several variables were considered in this experimental program such as the type of construction joints between the abutment stem wall and the shear key if any, varying the amount and configuration of the vertical reinforcement crossing the abutment stem wall-shear key interface, and different amounts and configuration of the horizontal reinforcement in the stem wall.

Table 1. Test matrix of the five exterior shear key test series.

Test Series	Unit	A_{vf} (in^2)	A_{sh} (in^2)	Tie Reinforcement	Construction Joint
I	1A	4.18	0.55	Hanger bars	None
	1B	3.85	0.55	Hanger bars	None
II	2A	2.64	0.66	Hanger bars	Smooth
	2B	5.58	1.32	Hanger bars	None
III	3A	2.48	2.48	Headed bars	Smooth
	3B	2.48	2.48	Headed bars	Smooth
IV	4A	4.51	1.60	Hanger bars	None
	4B	2.64	1.60	Hanger bars	Rough
V	5A	0.80	2.80	Headed bars	Foam*
	5B	0.80	2.80	Headed bars	Smooth

*Foam with a center 8”by 8” cut out was placed at the interface of shear key-abutment stem wall

The shear key capacity model and proposed capacity equation are based on test series V. Details of the construction and reinforcement of this test series are presented here. Fig. 3 shows the elevation and reinforcement details of exterior shear key units 5A and 5B. Test units 5A and 5B had a reduced amount of shear key vertical reinforcement, A_{vf}. In test unit 5A, the foam with a center 8” by 8” cut out was used on the shear interface between the shear key and the wall. There was a rough construction joint between the shear key and the wall at the location of the hole and a smooth construction joint between the foam and the wall. All shear key vertical reinforcement bars were lumped at one location in the rough construction joint. Test unit 5B had a smooth construction joint between the shear key and wall. A bond breaker was applied at the interface to

create a weak plane of failure. All shear key vertical reinforcement bars were lumped at one location near the centerline of the shear key (Four #4 bars).

Test Set-up

The test setup was designed to simulate the exterior shear key that interacts with the superstructure in a bridge during a seismic event. The abutment wall was post-tensioned to the laboratory strong floor. All test specimens were designed at a 2/5-scale with respect to a prototype abutment design provided by Caltrans. Each test unit was loaded by two 220 kip hydraulic actuators with a strong wall reaction (see Fig. 4). The actuators were connected to a loading arm which applied the lateral force to the test unit. A hold-down frame was used to prevent any upward movement of the loading arm. A gap between the loading arm and each test unit was filled with 1 inch expanded polystyrene.

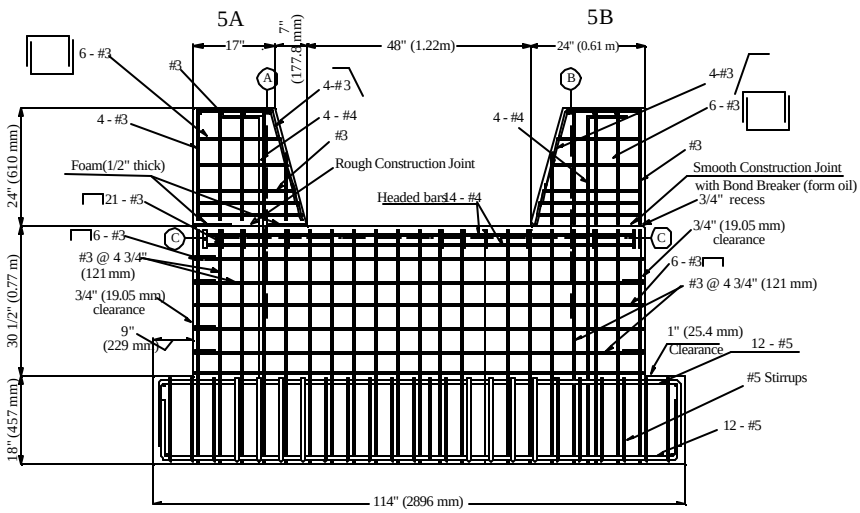

Fig. 3. Elevation view of the reinforcement layout for test series V.

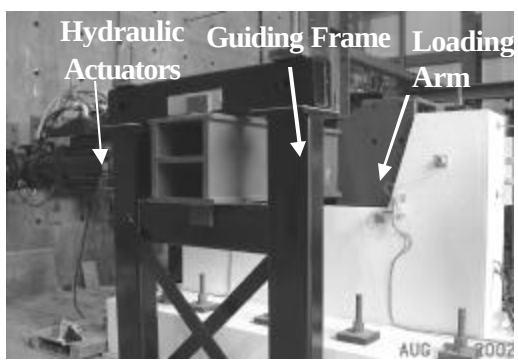

Fig. 4. Overall test setup of exterior shear key.

Test Observations

Test units 1A, 1B, 2A, 4A, and 4B had very similar modes of failure. In these units the major crack initiated at the inner side of the shear key at the shear key-abutment stem wall interface and propagated diagonally to the toe of the stem wall as the test continued. The applied force was transferred through the diagonal crack. This crack widened due to insufficient amount of ties.

The shear strength of these units was much higher than what was estimated by a shear friction model (Caltrans 1993a). Since shear keys are considered as structural fuses, a strength higher than expected is not desirable. Failure of these units occurred in a diagonal strut in the abutment stem wall. No sliding of the shear keys at the interface of shear key-abutment stem wall occurred during these tests. Fig. 5 illustrates the test units 4A and 4B at failure. The observed crack pattern in test unit 4B, with rough construction joint, was similar to shear key test unit 4A which was built monolithically with the abutment stem wall.

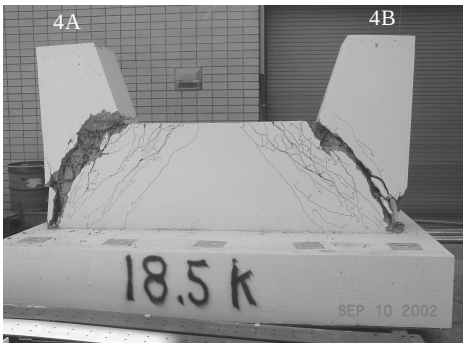

Fig. 5. Shear keys 4A and 4B, typical diagonal shear failure.

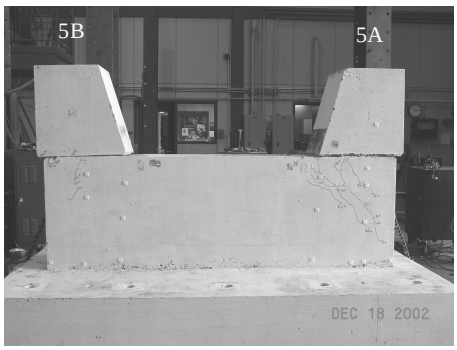

Fig. 6. Shear keys 5A and 5B, showing a sliding shear failure**.**

The formation of diagonal cracks in the abutment stem wall of test units 3A and 3B was prevented by applying a prestress force to the stem wall. The failure mode in these two test units was shear sliding at the interface of the shear key-abutment stem wall followed by rupture of the vertical shear key reinforcement. Thus, test units 3A and 3B performed as structural fuses with a desirable sliding shear failure. In unit 5A, sliding shear was observed after the peak force was reached. The shear strength of this unit was two times greater than predicted with a conventional shear friction model (Walraven, J. 1987; Mattock, A. H 1972). Diagonal cracks formed in the abutment stem wall, however, the maximum width of the cracks were approximately 0.012 inches during the test. Fig. 6 shows clearly that test unit 5A performed as a sacrificial element by shear sliding failure and prevented damage to the abutment stem wall. Test unit 5B achieved a shear sliding failure at the expected load. Only a very small crack was observed on the abutment stem wall with the width of less than 0.004 inches (Fig. 6). Failure of both test units 5A and 5B occurred when vertical reinforcement of the shear key ruptured.

The lateral force versus displacement measured at top of the shear key test series IV and V is plotted in Figs. 7 and 8, respectively. Failure of the shear key test series IV occurred in the stem wall rather than at the interface of the shear key-abutment stem wall by shear sliding as intended. Fig. 8 shows the force-displacement response of shear keys 5A and 5B. The response of shear key 5A shows an initially high stiffness. After reaching the maximum strength, steep softening occurred in the response of this unit due to the breakage of the bond in concrete at the construction joint. As testing continued in both test units, a gradual increase in capacity was observed, as a result of kinking of shear key vertical reinforcement. At a higher displacement, the shear key vertical reinforcement ruptured followed by failure of the shear key. Shear key 5B performed as a sacrificial element by sliding between the shear key-abutment stem wall at the predicted capacity. Fig. 8 shows that the capacity dropped off at approximately 80 kips as the shear key vertical reinforcement reached the yield point.

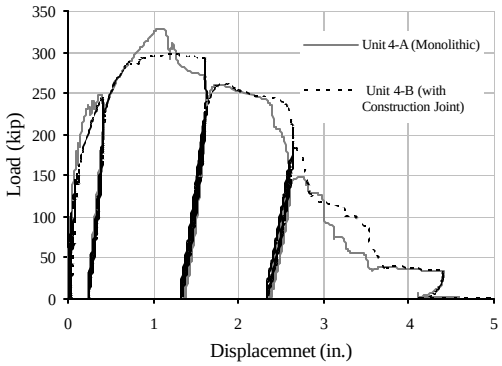

Fig. 7. Lateral force-lateral displacement response of exterior shear key units 4A & 4B.

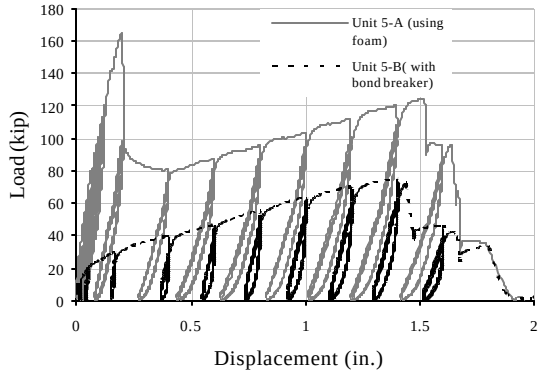

Fig. 8. Lateral force-lateral displacement response of exterior shear key units 5A & 5B.

EVALUATION OF THE CAPACITY OF SACRIFICIAL EXTERIOR SHEAR KEYS

Based on these test results, it seemed appropriate to develop a simple model that can be used in the design of sacrificial shear keys. A mechanism model was developed for shear key 5B because this shear key performed as a sacrificial element with sliding shear failure at the expected load. Fig. 9 shows a schematic model, which is based on that proposed by Crisafulli et al. (2002). The model took into account the deformed shape of reinforcement of the shear key at failure. In order to measure the angle of kinked vertical bars, fractured vertical bars were removed from inside the shear key and stem wall. Fig. 10 shows one of the kinked vertical bars after assembling the two fractured pieces.

By satisfying force equilibrium equations for this mechanism model, V_n, the nominal capacity of shear key is given as:

$$V_n = \frac{m_f \cos a + \sin a}{1 - m_f \tan b} A_{vf} f_{su} \qquad (1)$$

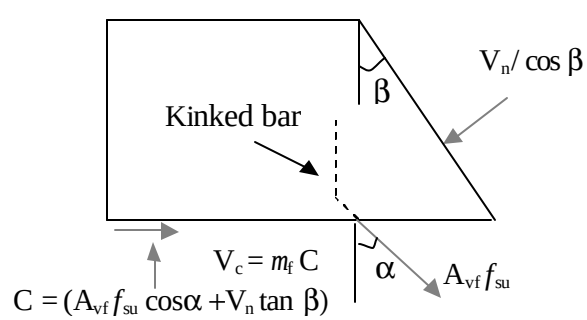

Fig. 9. Mechanism model of exterior shear key in shear sliding failure.

Fig. 10. Fractured vertical bar from unit 5B.

where α is the angle of kinking of the vertical bars with respect to the vertical axis; β is the angle of inclined face of shear key with respect to the vertical axis (see Fig. 9); μ_f is a kinematic coefficient of friction of concrete; and f_{su} is an ultimate tensile strength of the vertical reinforcement. Due to the kinematics of the sliding shear key, the vertical bars which connect the

shear key to the stem wall must kink. Experimental tests indicate the average kink angle, α, to be 37° at failure (Fig. 10). By back-calculating the tensile force of vertical reinforcement and kink angle, α, from displacement data (measured during the test in unit 5B) and substituting in Eq. (1), the value of μ_f for concrete with smooth finishing was determined to be 0.36. A smooth construction joint should be considered at the interface of the shear key-abutment stem wall, to effectively create a weaker plane at the shear key-abutment stem wall interface and enable occurrence of sliding shear failure at the interface. In shear key 5B, the ultimate tensile strength of the vertical reinforcement (#4 bars) was 103.9 ksi and the total area of vertical bars crossing the shear key-abutment stem wall was 0.8 in^2. The angle of inclined face of the shear key, β, in all shear key units was equal to 16.3°. By substituting values of these variables in Eq. (1), the nominal shear force capacity of unit 5B is equal to 82.5 kips which is 8% greater than the shear force measured in the experiment for shear key 5B.

Capacity design to protect the abutment system requires evaluation of shear overstrength capacity, V_o. Overstrength evaluation can be obtained from Eq. (1) by considering the uncertainty and variability of the independent variables, using a Monte-Carlo simulation. Independent variables in Eq. (1) are α (the angle of kinked vertical bars with respect to vertical axis), m_f (the kinematic coefficient of friction for concrete with smooth finishing), and f_{su} (ultimate tensile strength of vertical reinforcement). In lieu of large experimental database the independent variables were assumed to follow a truncated normal distribution as described in Table 2. Since there is only limited available test data for variables μ_f and α, the mean, upper, and lower values for these variables were assumed based on the limited data.

Table 2. Summary of Statistic Analysis for Variables m_f, α, and $f_{su} / \bar{f}_y$.

Variable	Mean	COV*	Extreme Value	
			Upper	Lower
m_f	0.36	6.8%	0.40	0.32
α	37°	4.9%	40°	34°
$f_{su} / \bar{f}_y$	1.55	5.9%	1.70	1.40

*COV= Coefficient of Variation

However, there are some available test data for yield strength of steel, f_y, which have been done at University of California, San Diego. Based on these data, it is assumed that the mean value for yield strength of steel (Grade 60), $\bar{f}_y$, is equal to 64.8 ksi. Fig. 11 shows the frequency distribution of (V_n / A_{vf}) as evaluated by using Eq. (1) for a number of randomly generated values of the independent variables. This distribution can be assumed as normally distributed with a mean value (V_n / A_{vf}) = 95.95 ksi and a standard deviation equal to 7.214 ksi. Therefore overstrength shear key capacity can be calculated as:

$$V_o = f_o \overline{V_n} = \frac{f_o\left(\bar{m}_f \cos \bar{a} + \sin \bar{a}\right) A_{vf} \left(\frac{\bar{f}_{su}}{\bar{f}_y} \right) \bar{f}_y}{1 - \bar{m}_f \tan b} \qquad (2)$$

For 95% confidence, the value of ϕ_o is equal to 1.13. Therefore:

$$V_o = \frac{(1.13)\left((0.36)\cos 37^\circ + \sin 37^\circ\right)A_{vf}\,(1.55)\,\bar{f}_y}{(1-(0.36)\tan 16.3^\circ)} \tag{3}$$

Ratio of mean value for yield strength of steel (Grade 60) to the specified yield strength results in:

$$\frac{\bar{f}_y}{f_y} = 1.08 \tag{4}$$

where f_y is the specified yield strength (f_y = 60 ksi for Grade 60 steel). Hence, by substituting Eq. (4) into Eq. (3) and rounding up gives results in the following equation for design:

$$V_o = 1.88\,A_{vf}\,f_y \tag{5}$$

However, the capacity of a shear key shall not exceed the smallest of 30% of the dead load vertical reaction at the abutment or 75% of the total shear capacity of the piles, V_{piles}, plus one of the wingwalls, $V_{onewingwall}$ (Caltrans 1003b). Therefore:

$$V_o \le \min(\,0.3W_a, 0.75V_{piles} + V_{onewingwall}\,) \tag{6}$$

By substituting Eq. (5) into Eq. (6) and solving for A_{vf}:

$$A_{vf} \le \frac{\min(\,0.3W_a, 0.75V_{piles} + V_{onewingwall}\,)}{1.88\,f_y} \tag{7}$$

The horizontal reinforcement in the stem wall below the shear key must be designed to carry the overstrength force, V_o, elastically. Thus, the area of reinforcement, A_{sh}, required in this region is equal to:

$$A_{sh} = \frac{1}{f}\frac{V_o}{f_y} \tag{8}$$

where ϕ, the strength reduction factor, is equal to 1.0. Accuracy of the developed model in predicting the capacity of shear keys is obtained by comparing analytical and experimental results. Table 3 shows the experimental capacity of exterior shear key test unit 5B (V_{test}), the load carrying capacity according to the current Caltrans Specification (V_{Calt}), and estimated capacity based on the proposed model (V_{Calc}). According to the current Caltrans Bridge Design Specification (Caltrans 1993a), the shear strength of shear keys can be estimated by a shear friction model as follows:

$$V_{n,C} = m(A_{vf}\,f_{yf}\,) \le 0.2\,f_c' A_c \tag{9}$$

In Eq. (9) μ is the coefficient of friction, A_{vf} is the area of vertical reinforcement crossing the shear key-abutment stem wall, and f_y is the specified yield strength of reinforcement. Table 3

shows the capacity of shear key unit 5B using Eq. (9) with μ=0.6. Comparison of V_{test} and V_{calt} reveals Caltrans current shear key capacity equation underestimate the capacity.

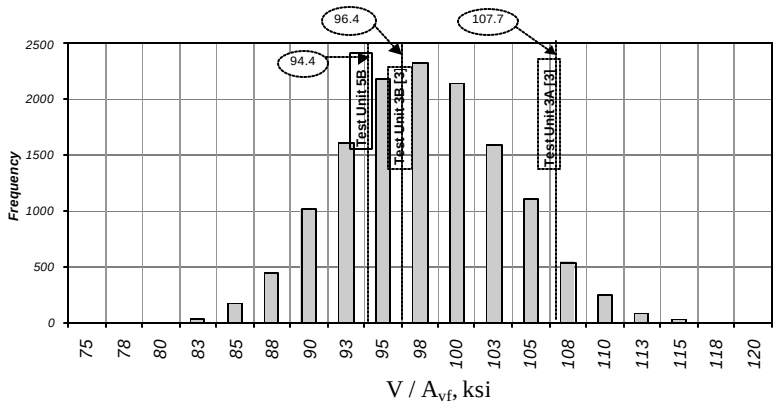

Fig. 11. Frequency Distribution of V / A_{vf} Obtained from a Monte-Carlo Simulation.

Table 3. Comparison between experimental shear key capacity and Caltrans current model and proposed model.

Test Unit	V_{test} (kips)	V_{Calt} (kips)	V_{Calc} (kips)
5B	80.0	28.8	90.24

CONCLUSIONS

1. The shear friction model used by Caltrans underestimates shear key capacity which may lead to damage of abutment walls or supporting piles.
2. A model for evaluation of capacity and behavior of shear keys under lateral force was developed based on Strut-and-Tie models. The model took into account the deformed shape of the shear key to evaluate the accuracy of the developed model in predicting shear key capacity. Experimental results from tests were compared with the analytical results. The study concludes that the developed model for capacity evaluation of exterior shear keys outperforms the current friction model.
3. Based on results of experimental work, several recommendations are proposed for construction details of sacrificial exterior shear keys:
   (i) A smooth construction joint should be considered at the interface of the shear key-abutment stem wall, to effectively create a weak plane at the shear key-abutment stem wall interface.
   (ii) Shear key vertical reinforcement bars should be the only reinforcement connecting the shear key to the abutment stem wall. Temperature and shrinkage reinforcement should be provided as standard design in the shear key and abutment wall.
   (iii) Headed reinforcing bars or standard hanger bars can be used to carry the tension force in the stem wall arising from the force transmitted by the shear key. This reinforcement should be placed in the stem wall as close as possible to the shear key. If headed bars are provided, the bars should be as long as possible; minimum concrete cover should be maintained at the ends of the headed bars. If hanger bars are used,

minimum length should be provided from the intersection of the lowest layer of the hanger bars and the shear key vertical reinforcement.

ACKNOWLEDGMENT

The California Department of Transportation (Caltrans) is gratefully acknowledged for financially support (Contract #59A0337) of the experimental research on sacrificial exterior shear keys which were conducted at the Charles Lee Powell Structural Research Laboratory at the University of California, San Diego.

REFERENCES

1. Caltrans. (1993a), *Bridge Design Specifications*.
2. Caltrans. (1993b), *Bridge Memo to Designers Manual*, Section 5.
3. Crisafulli, F. J., Restrepo, J. I., Park, R. (2002). "Seismic design of lightly reinforced precast concrete rectangular wall panels." *PCI Journal*, 47(4), July-August, 104-121.
4. Mattock, A. H., Hawkins, N. M. (1972). "Research on shear transfer in reinforced concrete." *PCI Journal*, 17(2), March-April, 55-75.
5. Megally, S. H., Silva, P. F., and Seible, F. (2001). "Seismic response of sacrificial shear keys in bridge abutments." *Structural Systems Research Report SSRP-2001/23*, Department of Structural Engineering, University of California San Diego, La Jolla, CA, May.
6. Priestley, M.J.N., Seible, F., Uang, C.-M. (1994). "The Northridge earthquake of January 17, 1994: damage analysis of selected freeway bridges." *Structural Systems Research Report SSRP-94/06*, Department of Structural Engineering, University of California San Diego, La Jolla, CA.
7. Walraven, J. C., Frénay, J., Pruijssers, A. (1987). "Influence of concrete strength and load history on the shear friction capacity of concrete members." *PCI Journal*, January-February, 66-83.

.

.