Use of Fiber Reinforced Polymer Decks as Replacement Units for Deteriorated Approach Slabs

Y. H. Chai and Y. T. Chen
Dept of Civil & Environmental Engineering, University of California, Davis

Jim Gutierrez and Saad El-Azazy
California Department of Transportation, Sacramento, California

Hans Strandgaard
CH2M HILL, Sacramento, California

Chris Dumlao
Specialist for FRP Applications, Pleasanton, California

ABSTRACT

Approach slabs are frequently used to mitigate the approach fill settlement by providing a smooth transition between the roadway and bridge deck. The traditional approach relies on cast-in-place reinforced concrete slabs with dowel anchorage into the abutment for seat-type abutments or ties into the superstructure for diaphragm-type abutments. Maintenance of bridges however often requires repair or replacement of approach slabs due to damage from traffic, washout of fill material under the slab. This paper describes an investigation of the feasibility of using prefabricated fiber-reinforced polymer (FRP) deck sections as replacement for damaged approach slabs.

Keywords – Approach slabs, FRP decks, differential settlement and bridge maintenance

INTRODUCTION

Consolidation of underlying natural foundation soil, compressive deformation of fill materials and erosion of the approach embankment often result in significant differential settlement between the bridge structure and approach pavement. The differential settlement, commonly called 'the bump at the end of the bridge', affects about 150,000 bridges in the US with an estimated mitigating cost of at least $100 million per year (Briaud et al 1997). The settlement leads to an uneven road surface and deteriorates the ride comfort of the traveling public. Approach slabs are commonly used to mitigate the uneven surface by enabling a smoother transition between the roadway and bridge deck. The approach slab also serves to reduce the dynamic loads imposed by heavy trucks on the bridge.

Current construction of approach slabs often rely on the use of cast-in-place reinforced concrete slabs with dowel anchorage into the abutment or threaded rod and nut system into the bridge deck. Although there is currently no uniform design of approach slabs across the US,

unsatisfactory performance of approach slabs has nonetheless been reported in many states (White et al 2005, Nassif et al 2002, Hoppe 1999). Factors contributing to unsatisfactory performance of approach slabs include (i) time-dependent consolidation of the natural soil under the embankment and/or fill material due to inadequate compaction, (ii) poor drainage behind the bridge abutment resulting in erosion of the fill material and void formation under the approach slab, (iii) longitudinal and vertical translation as well as rotation of the abutment causing localized damage at the connection of the approach slab. Distress in the approach slab often manifests itself in the form of transverse and longitudinal cracks, which tend to decrease the service life of the approach slab and increase the maintenance/repair costs of the structure. In a recent survey in New Jersey, cracking of 18 in thick approach slabs was noted on a number of bridges including some that were newly constructed. Traverse cracks sometimes extending full width of the approach slab were most commonly observed. Some of these cracks occurred as close as 8 ft from the abutment while other cracks occurred closer to the roadway pavement. Attempts to improve the approach slab design by increasing slab thickness, addition of reinforcement and higher concrete strength were generally unsuccessful in mitigating the approach cracking (Nassif et al 2002). Similar approach slab cracking has been reported for a number of bridges during a recent inspection in Iowa (White et al 2005).

Damaged approach slabs often require total replacement of the slab by a new concrete slab of similar details. Nearly $8 million was expended on replacement or retrofit of approach slabs in California in 2004 (Caltrans Contract Cost Data 2004). The current procedure relies on in-situ construction of a new concrete slab. Although the actual procedure for replacement of approach slabs varies somewhat depending on the traffic volume and available manpower and equipment, a typical scenario involves closure of one or two adjacent lanes at any given time for the replacement work. Lane closure is often scheduled for the evening during weekends to minimize the disruption to normal traffic. Damaged slabs are saw-cut or broken into large pieces and then removed by cranes. Voids formed by erosion or settlement are filled and the subgrade surface is re-leveled before the installation of slab reinforcement in the form of a prefabricated reinforcement cage. Concrete with rapid strength gain characteristics are used to speed up the construction. Although the ideal window for lane closure is between 6 to 8 hours, an actual approach slab replacement may take longer than the ideal window. For example, assuming that 4 hours are needed for removal of the damaged slab, preparation of subgrade surface and installation of reinforcement cage and 1 hour is needed for placing of concrete for two lanes of 30 ft long approach slab, the ideal 6 to 8 hours window leaves about 1 to 3 hours for the concrete to gain sufficient strength for the traffic. Although the replacement operation is achievable within the 6 to 8 hours window, the process nonetheless requires very thorough planning and coordination as well as careful and expensive nighttime batching of the concrete.

Although the conventional procedure is to replace a damaged approach slab by an in-situ reinforced concrete slab of similar details, other replacement options exist such as precast concrete slabs or prefabricated fiber reinforced polymer (FRP) decks. In this project, the feasibility of FRP decks as replacement units for damaged approach slabs is investigated. An advantage of the FRP replacement method is that the prefabricated decks can be installed relatively quickly resulting in shorter closure time and safer working condition. The weight of FRP decks for approach slab application is expected to be in the range of 20 to 25 lb/ft^2, which is significantly lower than the 150 lb/ft^2 expected of a 12 in thick reinforced concrete slab. The

lower weight of the FRP approach slab will also result in smaller fill settlement. Other benefits of the FRP deck include high durability and good resistance against freeze-thaw cycles and avoidance of reinforcement corrosion. In adapting the FRP deck to approach slab, however, special attentions need to be paid to the constraints imposed by the existing bridge geometry and site conditions. While in-situ placement of concrete in the conventional procedure requires minimum re-leveling of the subgrade, the use of prefabricated FRP decks requires more stringent control on surface preparation in order to provide uniform bearing of the FRP decks. Bridge geometry such as super-elevation, cross-slope, horizontal curvature and profile grade also presents special challenges for smooth transition of the approach embankment to the bridge deck. Details that facilitate rapid field installation will be developed for the connection between FRP approach slab and abutment. The project was recently initiated at the time of writing this paper. Progress made in the selection of FRP decks and initial preparation and design of the experimental test setup are described.

CURRENT APPROACH SLAB DETAILS AND REPLACEMENT PROCEDURE

Since the objective of the project is to study the feasibility of replacing damaged approach slabs by FRP decks, it is instructive to examine the current details for approach slabs in California. Figure 1 shows a typical approach slab for a short span bridge with a seat-type abutment. The length of the approach slab is 30 ft and the thickness is 12 in. Currently different plan configurations are used for approach slabs in California depending on the skew angle of the bridge. For small skew angle i.e. less than 20 degrees, the approach slab is connected to the PCC pavement with the joint parallel to the skew as shown by the left figure in Figure 1(a). For bridges with skew angle greater than 20 degrees, a ‘stepped’ configuration is adopted as shown in the right figure of Figure 1(a). In this case, the approach slab is connected to the PCC pavement with edges perpendicular to the bridge axis. The steps in the approach slab also necessitate the use of corner reinforcement, which in this case consists of 6#6 bars in the top and bottom region of the slab, in order to mitigate potential corner cracking in the slab.

Approach slabs in California are also constructed with restraint from relative displacement at the abutment by anchoring the approach slab to the backwall with dowels consisting of #5 bars at 12 in c/c in seat-type abutments or with ¾ in diameter threaded rods at 24 in c/c in diaphragm abutments. Transfer of traffic load to the subgrade is facilitated primarily by bending of the approach slab in the longitudinal direction. The current reinforcement for approach slabs is about 1.4% steel area ratio in the longitudinal direction and about 0.36% steel area ratio in the transverse direction. The bottom reinforcement in the longitudinal direction is provided by #8 bars at 6 in c/c whereas the top reinforcement is provided by #6 bars at 12 in c/c, as shown in Figure 1(b). The top reinforcement in this case corresponds to 28% of the bottom reinforcement. In the transverse direction, the top reinforcement is provided by #5 bars at 18 in c/c whereas the bottom transverse reinforcement is provided by #5 bars at 12 in c/c. The top reinforcement is about 67% of the bottom reinforcement in the transverse direction.

An important detail that is known to affect the service performance of an approach slab is the provision of a properly sealed joint that prevent water seepage into the subgrade. Water infiltration leads to erosion and loss of strength of the supporting soil under the approach slab and eventual loss of contact between the approach slab and the subgrade. Since 1996, Caltrans

has used an approach slab detail that cantilevers over the wingwall of the abutment but without direct bearing on the wingwall, as shown in Figure 1(c). In this case, the approach slab extends beyond the outside face of the wingwall and is separated from the wingwall by 4 in thick polystyrene. The approach slab is also slightly thickened near the wingwall, as seen by the taper of 1 in over 2 ft length. Note that additional reinforcement is added to the cantilever portion of the approach slab. Water infiltration into the joint is also drained vertically down the face of the wingwall facilitated by a layer of geocomposite drain. A similar drain is provided on the face of the backwall of the abutment. In the replacement of approach slabs by FRP decks, the joint between the approach slab and abutment must also be properly sealed so that the fill material is protected from water infiltration and erosion.

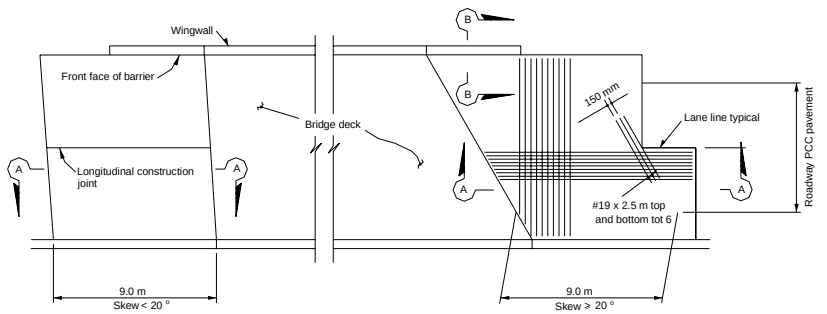

(a) PLAN

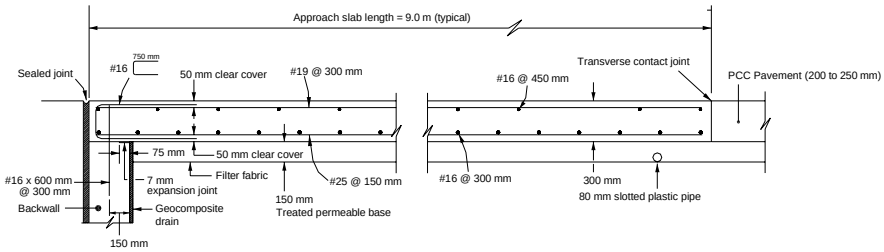

(b) SECTION A-A

(Seat-type abutment with movement rating ⩽ 50 mm)

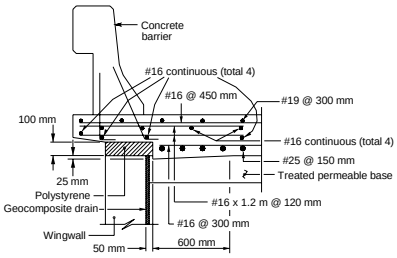

(c) SECTION B-B (Type E-1)

Figure 1 – Typical approach slab details in California

SCOPE OF RESEARCH

The feasibility of FRP decks as replacement units for damaged approach slabs and their expected service performance will be investigated through careful design and selection of FRP deck units, development of reliable connection details as well as experimental verification of their strength, stiffness and adaptability to existing bridge geometry. Types of damage as commonly observed for approach slabs in California will be cataloged and characterized, and factors contributing to their damage are to be identified. Specifications for FRP replacement will be made on the basis of experimental results and observed field performance of approach slabs.

Materials currently used for FRP decks generally fall on the low end of the composite material costs making these deck units cost effective for civil infrastructures. During this initial phase of the project, vendors for some of the commercially available FRP decks have been contacted but specific FRP decks have not been selected for testing. The design of FRP decks as replacement units for damaged approach slabs will be guided by analysis of the soil-slab system. Methodology and guidelines developed for replacement is also applicable to new approach slab construction. Criteria for design include the stiffness and strength as well as fatigue and durability of the FRP units. Reinforced concrete and FRP composite approach slabs will be modeled as beam-on-elastic-Winkler-foundation and wheel loads reflecting the current design truck in California will be applied to the approach slab. The stiffness of the soil spring will be varied to bracket the range of stiffness expected of the subgrade material. An influence line approach will be taken to create a bending moment envelope for comparison between the two systems. Since a beam supported on Winkler foundation constitutes a statically indeterminate system, the bending moment distribution varies depending on the stiffnesses of the reinforced concrete and FRP composite slabs. Based on the ratio of the bending moment demand in the two systems, the required flexural capacity of the FRP composite slab may be estimated as:

$$M_{composite}^{capacity} = \frac{M_{composite}^{demand}}{M_{concrete}^{demand}} M_{concrete}^{capacity} \tag{1}$$

where $M_{composite}^{capacity}$ and $M_{concrete}^{capacity}$ are the flexural capacities of the FRP and concrete slabs respectively, and $M_{composite}^{demand}$ and $M_{concrete}^{demand}$ are the bending moment demands in the FRP and concrete slabs as determined from the beam-on-elastic-foundation analysis. The selected FRP decks will be checked against the required strength in Eq. 1. Part of the study will also investigate the connection of the FRP replacement-slab to an existing PCC pavement. Because of the low unit weight of the FRP slab, the dynamic response of the slab under traffic load may become increasingly important. Attention will be paid to the connection of the FRP decks to PCC pavement.

A total of eight specimens, as shown in Table 1, will be tested in this project. These tests are divided into two categories: (i) FRP-to-abutment-backwall connection tests and (ii) full-size constructability tests. Four specimens will be tested for the connection between the FRP deck and abutment backwall. Variables include the type of anchors (bolts, bent steel or FRP bars), spacing of anchors, and type and thickness of the FRP deck to match the original concrete slab. Figure 2 shows the test setup for the connection details. The slab will be tested in a simply-supported condition to simulate the possible void underneath the approach slab as a result of

water infiltration or settlement. Loading on the connection will be simulated by a vertical wheel load in combination with horizontal tension representing the braking force of an AASHTO truck.

Four full-scale specimens will also be tested to demonstrate the constructability of FRP approach slabs in the field. Both concrete and composite slabs will be tested so that comparison can be made between the two systems. The adaptability of FRP composite decks to cross-slope, super-elevation skew and curvature of the bridge will be investigated. Emphasis will be placed on ensuring a smooth transition from the approach slab to the superstructure. Figure 3 shows the plan and elevation of an approach slab assembly for the constructability test. The approach slab will be 12 ft wide corresponding to a full width traffic lane and 30 ft long, which is the typical approach slab length in California. Two 6 ft wide FRP panels will be connected together during the constructability test in the field to form the 12 ft wide specimen. Joint details will be developed in conjunction with FRP vendors so that the adjacent FRP panels can be rapidly connected in the field during actual replacement. It should be noted that the low unit weight of the FRP deck means that 12 ft wide panels can be installed as a single unit in the field. The use of two 6 ft wide panels in this project is to demonstrate the feasibility of providing quick connection for the longitudinal joint without resulting in excessively large panel for testing. The FRP approach slab will also be prefabricated with a thin wearing surface and will be bearing on 6 in thick treated permeable base and 18 in thick compacted fill. Simulated wheel loads will be applied to the approach slab using a hydraulic actuator. The location for maximum load effects will be determined from the analysis of typical approach slab configurations. Slab response shall be monitored for strains and deflections, and loading shall be monotonically applied until failure. Distress in the form of delamination, debonding or cracking shall be noted at various stages of the loading.

Table 1 – Test matrix

Type of tests	Number of tests	Test variables
Connection details	4 - FRP connection to backwall of abutment	• FRP type and thickness • Anchor types (bolts versus bent rebars • anchor spacing
Field constructability tests	• One concrete 'as-built' approach slab • Three FRP composite slabs – type to be directed by Caltrans. Possible decks include Duraspan by Martin Marietta, Infradecks by InfraComp, Prodeck by Bedford Plastics etc.	• Cross-slope • Super-elevation • Skew • Plan curvature of bridge

SUMMARY

Approach slabs are frequently used to mitigate the approach fill settlement by providing a smooth transition between the roadway and bridge deck. The traditional approach relies on cast-in-place reinforced concrete slabs with dowel anchorage into the abutment backwall for seat-type

abutment or threaded rod and nut system into the superstructure for diaphragm-type abutments. Maintenance of bridges however often requires repair or replacement of approach slabs due to damage from heavy traffic, washout or settlement of fill material under the slab or environmental loads. The research outlined in this paper investigates the feasibility of using prefabricated fiber-reinforced polymer (FRP) deck sections as replacement units for damaged approach slabs. The investigation focuses on (i) characterization of damage types and failure modes as observed for approach slabs in California, (ii) design of FRP replacement units and development of connection details for anchoring the replacement slab to the abutment backwall and PCC pavement, (iii) proof-testing of connection details, (iv) testing of an 'as-built' concrete slab and FRP replacement slabs for comparison of strength and stiffness characteristics, and (v) development of preliminary design guidelines and standard details for FRP approach slabs.

Four specimens will be tested to validate the connection details between the FRP slab and abutment backwall while another four specimens will be tested for constructability in the field. Parameters in the connection detail tests include bolts and bent rebars for anchoring the slab into the backwall, spacing of bolts or bent rebars, and type and thickness of the FRP composite slab to match the strength and stiffness of the existing concrete slab. The adaptability of FRP composite deck to the geometry of the bridge e.g. cross-slope, super-elevation and skew to ensure smooth transition to the bridge superstructure will be investigated. Constructability specimens will be tested with the concrete slab supported on a layer of treated permeable base and compacted fill material to simulate the subgrade condition in an actual approach slab. Simulated wheel loads will be applied to the approach slab monotonically until failure. Research findings shall include an assessment of the performance data, characterization of potential failure modes and serviceability problems related to the use of prefabricated FRP deck sections as approach slabs. Critical details, damage types, and accumulated damage thresholds for each type of replacement candidates will carefully be cataloged. Performance index of approach slabs shall include strength, failure modes and deflections. Other information includes technical literature as well as unpublished experiences of engineers and fabricators.

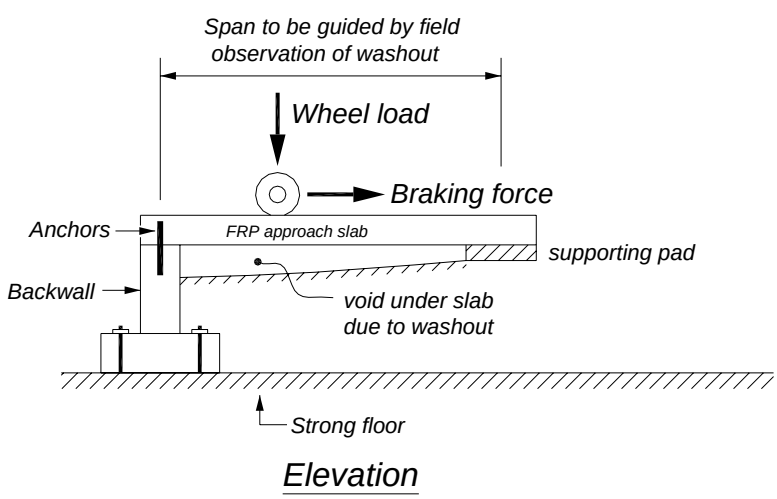

Figure 2 – Test setup for connection between the FRP slab and abutment backwall

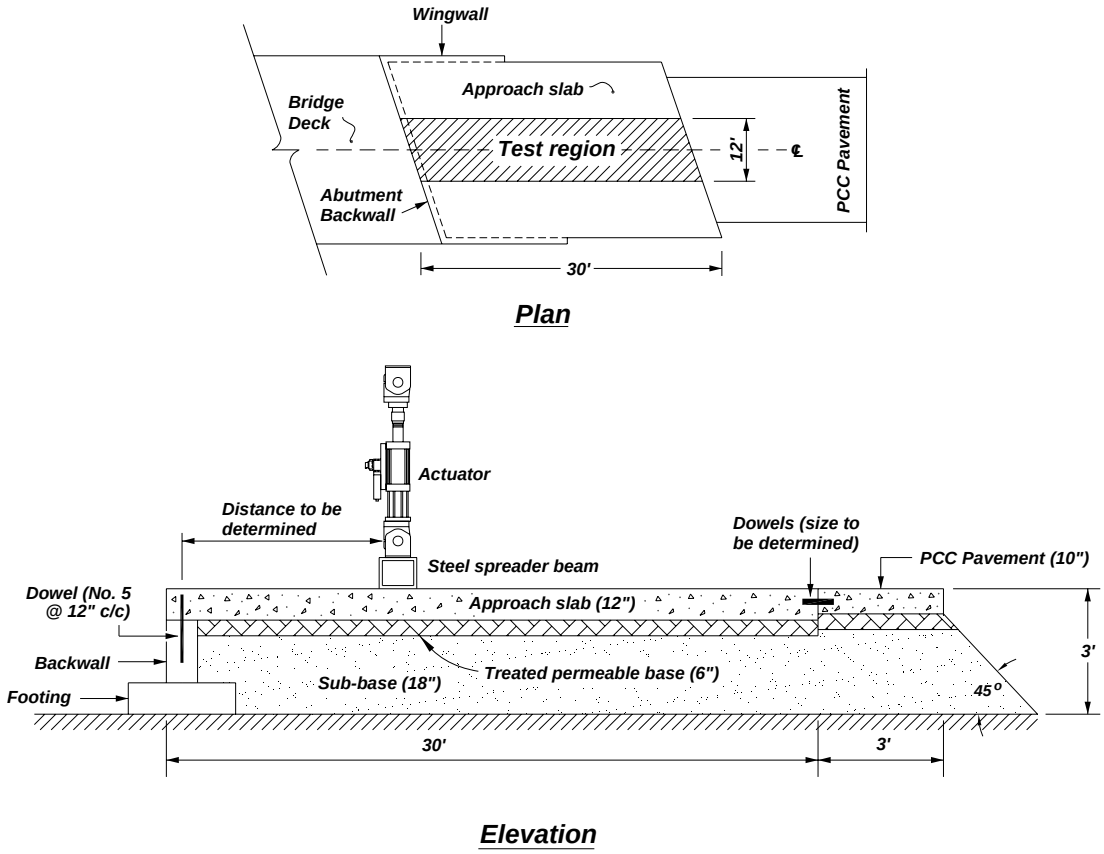

Figure 3 – Test setup for full-scale constructability of composite approach slabs

REFERENCES

1. Briaud, J. L., James, R. W. and Hoffman, S. B. "Settlement of Bridge Approaches", National Academic Press, Washington D. C., 1997, 75 pp.
2. Caltrans Contract Cost Data 2004 – can be downloaded at http://www.dot.ca.gov/hq/esc/oe/awards/2004CCDB/2004ccdb.pdf
3. Hoppe, E. J. "Guidelines for the Use, Design and Construction of Bridge Approach Slabs", Final Report No. VTRC 00-04, Virgina Transportation Research Council, Charlottesville, Virginia, November 1999, 39 pp.
4. Nassif, H., Abu-Amra, T. and Shah, N. "Finite Element Modeling of Bridge Approach and Transition Slabs", Final Report FHWA-NJ-2002-007, Dept of Civil & Environmental Engineering, Rutgers University, Piscataway, New Jersey, September 2002, 69 pp.
5. White, D. J., Sritharan, S., Suleiman, M, Mekkawy, M. and Chetlur, S. "Identification of the Best Practices for Design, Construction, and Repair of Bridge Approaches", Iowa DOT Project Report TR-481, Center for Transportation Research and Education, Iowa State University, January 2005, 349 pp.