Seismic Design Issues in Bridge Columns with Interlocking Spirals

Juan Correal
Arcon Structural Engineers, Inc. Rancho Sta. Margarita, CA.
M. Saiid Saiidi
University of Nevada, Reno, Reno NV
David H. Sanders
University of Nevada, Reno, Reno NV
Saad El-Azazy
California Department of Transportation, Sacramento CA

INTRODUCTION

The current seismic design philosophy is based on ductility capacity of the structural members. The confinement provided by the transversal steel has an important role in improving the ductility capacity and the strength of reinforced concrete members. Confinement reinforcement in bridge columns usually consists of spirals in columns with circular shape and ties in columns with square or rectangular cross sections. Past experience has shown that circular spirals confine concrete much more effectively than rectangular or square hoops. In addition, circular spirals are often easier to construct and require fewer amounts of transverse steel than tied columns. Thus, interlocking spirals have been used as transverse reinforcement in bridge columns, especially in large rectangular cross sections that would normally be detailed as tied columns.

The California Department of Transportation (Caltrans) Bridge Design Specifications (BDS)[1] and Seismic Design Criteria Version (SDC)[2] are the only codes in the United States that include provisions for the design of columns with interlocking spirals. Due to a lack of research on interlocking spirals, the provisions are driven mainly by those of single spirals and constructability considerations. Previous studies[3,4,5] have being conducted on the effect of several design parameters, including a comparison between interlocking spirals and ties, horizontal spacing between centers of the spirals (d_i), quantity of transverse reinforcement, variation of the axial load ratios, appropriate size and spacing of longitudinal bars in the interlocking region, variation in flexural detailing, and cross section shape. Those studies concluded that the performance of interlocking spirals was satisfactory and the flexural and shear capacities can be conservatively calculated using current procedures. Nevertheless, none of previous studies addressed the Caltrans upper limit on spiral spacing in detail and none used dynamic testing.

The objective of the research discussed in this article was to study the seismic performance of bridge columns with double interlocking spirals using the shake table simulations. The experimental results were used to determine if increasing of the distance between the centers of the spirals, di, affect the overall performance of the columns when they are subjected to different levels of average shear stress in function of $\sqrt{f'c}$. A further objective was to verify if the adding

of horizontal cross ties connecting the hoops can improve the overall performance of the column with di of 1.5 times the radius of spirals, R.

EXPERIMENTAL PROGRAM

Large-Scale Models

The level of shear stress was determined by the shear index. The average shear stress was calculated as the maximum measured shear force divided by 0.8 times the gross area. The shear index is found by dividing the average shear stress by $0.083\sqrt{f'c}$ [MPa] or $\sqrt{f'c}$ [psi]. Two 1/4 scale columns with low level of average shear stress (shear index of 3) and four 1/5 scale columns with high level of average shear stress (shear index of 7) were constructed and designed using the SDC [1]. A target displacement ductility (μ_c) of 5 was selected. The distance between the centers of adjacent spirals, d_i, (1.0 and 1.5 times the radius of spirals, R) was the principal variable studied in the first four specimens. The spiral spacing in these columns is the lower and upper limit in Caltrans BDS[2]. One of the remaining specimens had a di of 1.25 times R and the other one had a di of 1.5 times R with horizontal cross ties connecting the hoops. The cross ties were the same bar size as the spirals and spacing of 2.0 times the spacing of the spirals based on a design recommendation from Reference 6. The overall dimensions of the columns are shown in Figure 1. The specified concrete compressive strength of the columns was 34.5 Mpa (5000 psi) and the reinforcement was grade 60.

Test Setup and Loading Procedure

The test setup for single curvature and double curvature columns is shown in Figure 2. The test setup in single curvature was used in the specimens with low average shear stress (ISL1.0, ISL1.5) whereas the test setup in double curvature was used in the specimen with high average shear stress (ISH1.0, ISH1.25, ISH1.5 and ISH1.5T). The axial load of $0.1f'_cA_g$ was imposed through a steel spreader beam by prestressed bars to hydraulic jacks. The lateral load was applied through the inertial mass system off the table for better stability. Strain gages were used to measure the strains in the longitudinal and transverse steel. A series of curvature measurement instruments were installed in the plastic hinge zone. Displacement transducers forming panels were placed along the height of the column, in the test in double curvature, for measuring shear deformations. Load cells were used to measure both the axial and lateral forces. An additional measurement of the lateral force was taken by an accelerometer. Displacement transducers measured the lateral displacements of the columns.

Force and displacement capacity was calculated based on the plastic moment capacity of the columns from the M-ϕ analysis. The idealized elasto-plastic force and displacement was used to perform a nonlinear response history analysis of the columns. The Sylmar record of the Northridge (0.606 g PGA), California 1994 earthquake, was selected as the input motion based on its high displacement ductility demand. The test loading procedure is shown in Table I. A time compression factor was applied to the original Sylmar record (30 seconds) in order to account for the scale factor of the models and adjustment due to inertia mass in specimens. Intermittent free vibration tests were conducted to measure the changes in frequency and damping ratio of the columns.

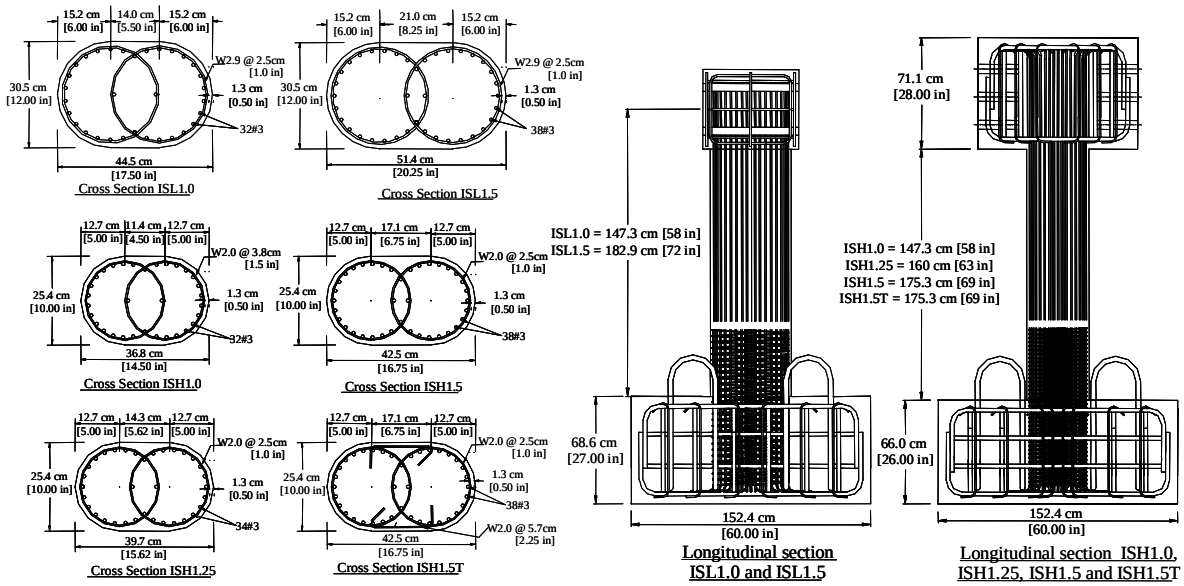

FIGURE 1. TEST SPECIMENS DIMENSIONS

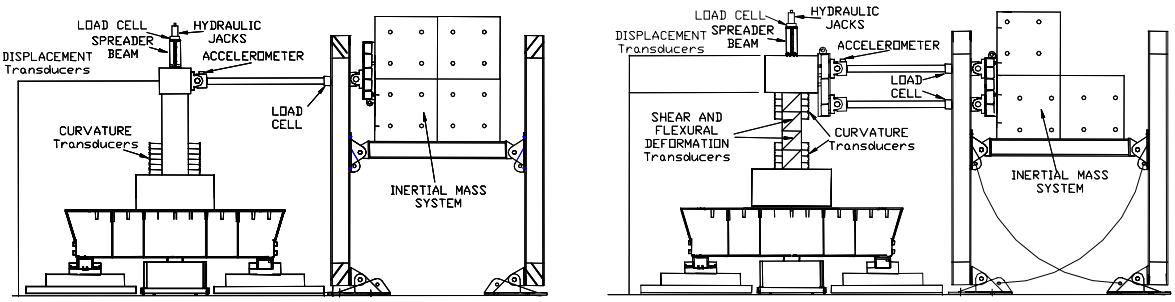

FIGURE 2. SINGLE CURVATURE AND DOUBLE CURVATURE TEST SETUP

OBSERVED PERFORMANCE

Low Average Shear Stress Columns: ISL1.0 AND ISL1.5

Flexural cracks were observed in specimen ISL1.0 during the first three runs and in specimen ISL1.5 during the first six runs. First spalling and shear cracks were formed in specimen ISL1.0 at 0.5xSylmar and specimen ISL1.5 at 1.25xSylmar. Shear cracks were located in the interlocking region near to the lower portion of the column. Considerable spalling, as well as propagation of flexural and shear cracks was observed after 1.25xSylmar in specimen ISL1.0. At 1.5xSylmar and 1.75xSlymar spirals were visible in specimens ISL1.0 and ISL1.5, respectively. There was no visible core damage. Longitudinal bars were exposed after 1.75xSylmar in specimen ISL1.0. Specimens ISL1.0 and ISL1.5 (Figure 3) failed during 2.0xSylmar (1.21g PGA) and 2.125xSylmar (1.29g PGA), respectively. The failure in both columns was due to fracturing of the spirals and buckling of the longitudinal bars.

TABLE I. LOADING PROCEDURE

	ISL1.0		ISL1.5		ISH1.0		ISH1.25		ISH1.5		ISH1.5T	
	Time compression factor											
	0.51		0.50		0.49		0.46		0.5		0.45	
Run No	[g]	[x slymar]	[g]	[x slymar]	[g]	[x slymar]	[g]	[x slymar]	[g]	[x slymar]	[g]	[x slymar]
1	0.06	0.1	0.06	0.1	0.06	0.1	0.06	0.1	0.06	0.1	0.06	0.1
2	0.12	0.2	0.12	0.2	0.12	0.2	0.12	0.2	0.12	0.2	0.12	0.2
3	0.18	0.3	0.24	0.4	0.24	0.4	0.30	0.5	0.24	0.4	0.24	0.4
4	0.30	0.5	0.36	0.6	0.30	0.5	0.45	0.75	0.36	0.6	0.36	0.6
5	0.45	0.75	0.48	0.8	0.45	0.75	0.61	1	0.45	0.75	0.45	0.75
6	0.61	1	0.61	1	0.61	1	0.76	1.25	0.61	1	0.61	1
7	0.76	1.25	0.76	1.25	0.76	1.25	0.91	1.5	0.76	1.25	0.76	1.25
8	0.91	1.5	0.91	1.5	0.91	1.5	1.06	1.75	0.91	1.5	0.91	1.5
9	1.06	1.75	1.06	1.75	1.06	1.75	1.21	2	1.06	1.75	1.06	1.75
10	1.21	2	1.21	2	1.21	2	1.29	2.125	1.21	2	1.21	2
11			1.29	2.125			1.36	2.25	1.29	2.125	1.29	2.125
12							1.44	2.375	1.36	2.25	1.36	2.25
13									1.44	2.375	1.44	2.375
14											1.52	2.5
15											1.59	2.625

High Average Shear Stress Columns: ISH1.0, ISH1.25, ISH1.5 and ISH1.5T

During the first three runs, flexural cracks were observed in all specimens. A vertical crack located in the interlocking region along the height of the columns was visible at 0.4xSlymar (0.24g PGA) in specimen ISH1.5. First shear cracks, located in the interlocking region, were formed in the specimens ISH1.0 and ISH1.5 at 0.5xSylmar and 0.6xSylmar, respectively. For specimens ISH1.25 and ISH1.5T shear cracks appeared at 0.75xSylmar. Localized small vertical cracks were observed in specimen ISH1.5T at 1.0xSylmar. After 1.0xSylmar, first spalling was observed in specimens ISH1.0 and ISH1.5, whereas in specimens ISH1.25 and ISH1.5T, first spalling was observed at 1.25xSylmar. The spirals were visible at 1.75xSylmar in specimen ISH.125. Exposure of the longitudinal bar was observed at 1.75xSylmar in specimen ISH1.0, at 2.25xSylmar in specimen ISH1.25, at 1.5xSylmar in specimen ISH1.5 and at 2.0xSylmar in specimen ISH1.5T. The specimens ISH1.0 and ISH.125 (Figure 4a) failed in shear during 2.0xSylmar (1.21g PGA) at the bottom and 2.375xSylmar (1.44g PGA) at the top, respectively. Damage in the core was observed in specimens ISH1.5 and ISH1.5T after 2.125xSylmar. Buckling of the longitudinal bars was visible after 2.25xSylmar for specimen ISH1.5 and after 2.375xSylmar for specimen ISH1.5T. Specimen ISH1.5 and ISH.5T (Figure 4b) failed during 2.375xSylmar and 2.625xSylmar, respectively. Failure in specimen ISH1.5 was due to fracturing of the spirals and buckling of the longitudinal bars whereas in specimen ISH1.5T, it was due to fracturing of the spirals and one of the longitudinal bars.

MEASURED PERFORMANCE

Low Average Shear Stress Columns: ISL1.0 AND ISL1.5

The measured hysteretic curves, for specimens ISL1.0 and ISL1.5, is shown in Figure 5. The maximum force reached in the specimen ISL1.0 was 169 kN (38 Kips) whereas in ISL1.5 was 180 kN (40 Kips). Specimens ISL1.0 and ISL1.5 had a maximum displacement of 161 mm (6.34 in) and 216 mm (8.52 in), respectively. The envelope curve and idealized elasto-plastic model are plotted in Figure 5 for specimen ISL1.0 and ISL1.5. Based on the elasto-plastic model

ductility displacement capacity of 9.5 and 10.4 was achieved for the specimens ISL1.0 and ISL1.5, respectively. In addition, similar stiffnesses of 9634 N/mm (55 Kips/in) for ISL1.0 and 9282 N/mm (53 Kips/in) for ISL1.5 were calculated from the elasto-plastic model.

High Average Shear Stress Columns: ISH1.0, ISH1.25, ISH1.5 and ISH1.5T

Figure 6 shows the measured hysteretic curves and the envelope curves with idealized elasto-plastic models, for specimens ISH1.0, ISH1.25, ISH1.5 and ISH1.5T. The maximum force recorded in specimen ISH1.0 was 241 kN (54.25 Kips) and the maximum force for ISH1.25 was 251 kN (56.47 Kips). For specimens ISH1.5 and ISH1.5T the maximum force was 247 kN (55.56 Kips) and 251 kN (56.48 Kips), respectively. Maximum displacements of 108 mm (4.24 in), 105 mm (4.15 in), 128 mm (5.05 in) and 101 mm (4.0 in) were achieved in specimens ISH1.0, ISH1.25, ISH1.5 and ISH1.5T, respectively.

(a) ISL1.0 (b) ISL1.5

FIGURE 3. LOW SHEAR SPECIMENS AFTER COLLAPSE.

(a) ISH1.25 (b) ISH1.5T

FIGURE 4. HIGH SHEAR SPECIMENS AFTER COLLAPSE.

According to the elasto-plastic models, ductility displacement capacities of 4.7, 5.0, 4.0 and 3.8 were achieved for the specimens ISH1.0, ISH1.25, ISH1.5 and ISH1.5T, respectively. Furthermore, stiffnesses of 10808 N/mm (62 Kips/in), 10972 N/mm (63 Kips/in), 6949 N/mm (40 Kips/in) and 8810 N/mm (50 Kips/mm) for specimens ISH1.0, ISH1.25, ISH1.5 and ISH1.5T were calculated from the elasto-plastic model.

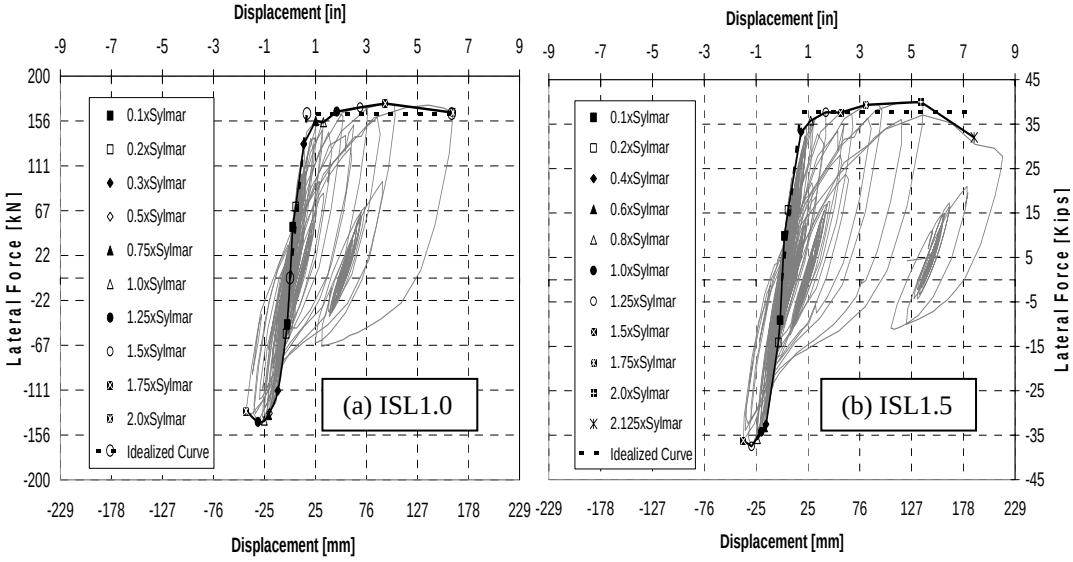

FIGURE 5. HYSTERETIC CURVE AND ENVELOPE LOW SHEAR SPECIMENS

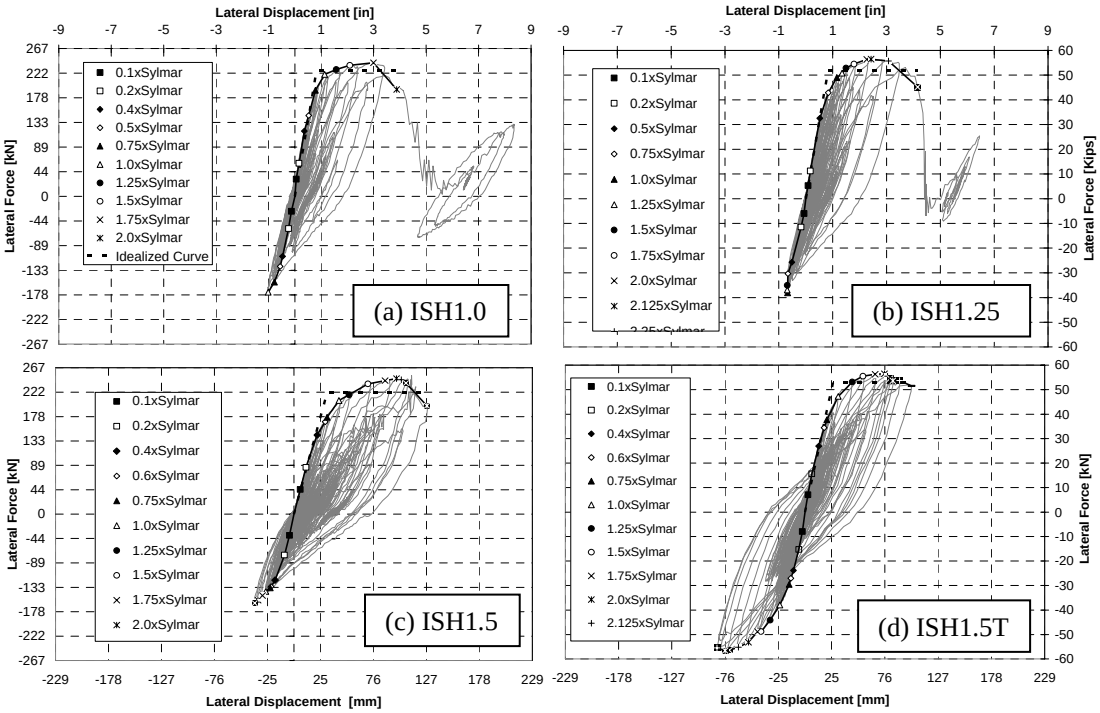

FIGURE 6. HYSTERETIC CURVE AND ENVELOPE HIGH SHEAR SPECIMENS.

DESIGN RECOMMENDATION FOR CROSS TIES

Vertical cracks located in the interlocking region were observed in the specimen with high shear and d_i of 1.5R at about 58 % of the maximum force. Three methods were studied, in the Reference[6], to provide background for to the design of horizontal cross ties[6] which reduce and delay vertical cracks. The first method was based on the shear reinforcement capacity defined in SDC[1], taking into account the component of the spiral tension force at the middepth of the column section in the direction of the shear force. The second method was based on the equilibrium of the horizontal spiral force at the middepth of the column section. In these two methods a column with d_i of 1.0R was taken as the reference point for design the cross ties for columns with d_i > 1.0R, based on the satisfactory seismic performance of columns with d_i of 1.0R. The shear–friction concept was the third method used to find the area of cross ties needed in the interlocking region to resist the vertical shear at middepth of the section. Based on the comparison of the three methods presented in Reference[6], the individual cross tie bars should be of the same size as the spiral reinforcement with a maximum spacing of 2 times the spacing of the spirals. Horizontal ties should be detailed as 135° hook in one end and 90° hook in the other. Table II summarizes the design recommendation for cross ties based on the level of the shear stress (shear index).

TABLE II. DESIGN RECOMMENDATION FOR CROSS TIES

Shear Index	di	Cross Ties
<3	1.0R-1.5R	No
3 to 7	1.0R-1.25R	No
	>1.25R	Yes
7>	1.0R-1.5R	Yes

CONCLUSIONS

Based on the interpretation of the experimental results presented in this article the following conclusions were made for bridge columns with double interlocking spirals:

1. The seismic performance of columns with distance between the centers of the spirals d_i of 1.0R and 1.5R subjected to low shear was similar and satisfactory with displacement ductility capacity near to 10. The strength degradation was slightly larger when d_i was 1.5R. However, this degradation was after the displacement ductility reached 7.4, which exceeded the target design displacement ductility of 5.

2. The larger distance between the centers of the spirals did not lead to excessive shear cracking or a reduction of the shear capacity, when the column is subjected to low level of shear forces. The Caltrans provision of allowing the distance to reach 1.5R is satisfactory at that low level of average shear forces.

3. The seismic performance of columns with d_i of 1.0R and 1.25R subjected to high shear was similar. Even though the columns failed in shear/flexure mode, they were ductile and achieved the design displacement ductility capacity of 5.

4. Vertical cracks were observed in the column with high shear and d_i of 1.5R under small earthquakes. The addition of horizontal cross ties connecting the interlocking hoops not only reduced and delayed vertical cracks in the interlocking region but also reduced the strength degradation.

5. Specimens with high shear and d_i of 1.5R achieved displacement ductility capacities of about 4 but exceeded the minimum specified displacement ductility capacity of 3, according to SDC[1].

6. Considerable reduction of displacement ductility capacities was obtained in the columns subjected to high average shear stress, compared to columns subjected to low average shear stress.

ACKNOWLEDGEMENT
The research presented in this paper was sponsored by the California Department of Transportation. However, the opinions and conclusions reported in this paper are those of the authors only and do not necessarily reflect the views of the sponsor.

REFERENCES

1. California Department of Transportation, "Bridge Design Specifications", Engineering Service Center, Earthquake Engineering Branch, California, July 2000.

2. California Department of Transportation, "Seismic Design Criteria Version 1.2", Engineering Service Center, Earthquake Engineering Branch, California, December 2001.

3. Tanaka, H., and Park, R., "Seismic Design and Behavior of Reinforced Concrete Columns with Interlocking Spirals", *ACI Structural Journal*, Vol. 90, No 2, March-April 1993, pp. 192-203.

4. Buckingham, G.C., "Seismic Performance of Bridge Columns with Interlocking Spirals Reinforcement", M.S. Thesis, Washington State University, Pullman, Washington, 1992, 146 pp.

5. Benzoni, G., Priestley, M.J.N., and Seible, F., "Seismic Shear Strength of Columns with Interlocking Spiral Reinforcement", 12th World Conference on Earthquake Engineering, Auckland, New Zealand, 2000, 8 pp.

6. Correal, J., Saiidi, M., and Sanders, D., "Seismic Performance of RC Bridge Columns Reinforced with Two Interlocking Spirals," Center for Civil Engineering Earthquake Research, Department of Civil Engineering, University of Nevada, Reno, Nevada, Report No. CCEER-04-6, August 2004.