RESEARCH NOTES

August 2010

Caltrans

Seismic Design of Telescopic Pipe-Pin Connections in Concrete Bridges

***RESULTS:* A comprehensive study of the seismic performance of pipe-pin two-way column hinges was recently completed at the University of Nevada, Reno with Caltrans funding. The objectives were to investigate seismic performance of current details of pipe-pin hinges, propose any enhancements, and to develop a design method that reflects the actual limit states of the hinge. This project was comprised of extensive experimental and analytical studies. A rational design method was proposed along with several suggestions to enhance the seismic performance of these hinges. The design method was verified trough shake table testing of a two-column pier that demonstrated the reliability of the method and the proposed modifications.** **Project Website: http:/wolfweb.unr.edu/homepage/saiidi/caltrans/pipepins.html**

Why We Pursued This Research

Flexural hinges of various types have been used in reinforced concrete bridges since the beginning of the last century. The present trend towards using structural hinges in construction of new concrete bridges necessitates the advent of new cost effective, practical and reliable details. This task becomes even more challenging for concrete structures in seismically active regions.

Flexural hinges are intended to eliminate moment transfer between the connected members, while allowing for transfer of shear and axial force. A properly designed hinge, in addition to being sufficiently flexible to allow for rotation, should be capable of withstanding compressive forces and shear, be economical to construct, and should require minimum maintenance.

Telescopic pipe-pin hinges were recently devised by Caltrans bridge designers to act as two-way hinges at the top of columns. These details completely eliminate moment transfer at top of the column by preventing the development of any tensile stresses at the hinge section (Fig. 1).

Figure 1- Pipe-pin Hinge in SFOBB Approach Spans

A concrete filled steel pipe that extends into a steel can serves as the shear pin (Fig. 2). The can is embedded into an integral cap beam. A gap between the steel pipe and the can enables the pipe rotate inside the can. Vertical loads from the superstructure are transferred through a thin circular concrete bearing area around the steel pipe (hinge throat, Fig. 1). A major portion of the lateral force is transferred via mechanical engagement of the pipe and the can. The friction on the hinge throat also contributes to the lateral load transfer.

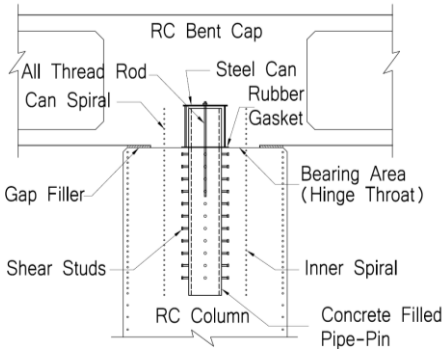

Figure 2- Pipe-pin Hinge Detail

Current design codes do not provide specific provisions for this type of hinges. In the absence of research data, the current design method is only based on the pure shear capacity of steel pipe section. This may lead to inefficiency in detailing or neglecting other possible limit states. The primary objectives of this research were: 1) to investigate seismic performance of the existing detail of pipe-pin hinges and propose any necessary modifications and 2) to develop a reliable design method for pipe-pin hinges that reflects their actual limit states.

What We Did

The experimental component of the study included four sets of tests (Fig. 3): (1) a quasi static test of a large-scale hinged cantilever column to understand the overall performance of the hinge [Ref 1], (2) static tests on six push-off specimens to evaluate the

bearing strength of concrete against steel pipes [Ref. 2], (3) static tests on six pure shear pipe specimens to determine the yield and ultimate shear capacities [Ref. 2], and (4) shake table test of a large-scale, two-column bridge pier model utilizing pipe-pin hinges to verify the new design method under earthquake excitations [Ref. 3].

The analytical studies consisted of (1) nonlinear finite element modeling using ABAQUS for an extensive study to identify important parameters for consideration in the design guidelines, and (2) development of a macro model for pipe-pin hinges for utilization in the OpenSees modeling of the pier. The experimental and analytical results led to refinement of the current details and development of a practical method to analyze or design pipe pins.

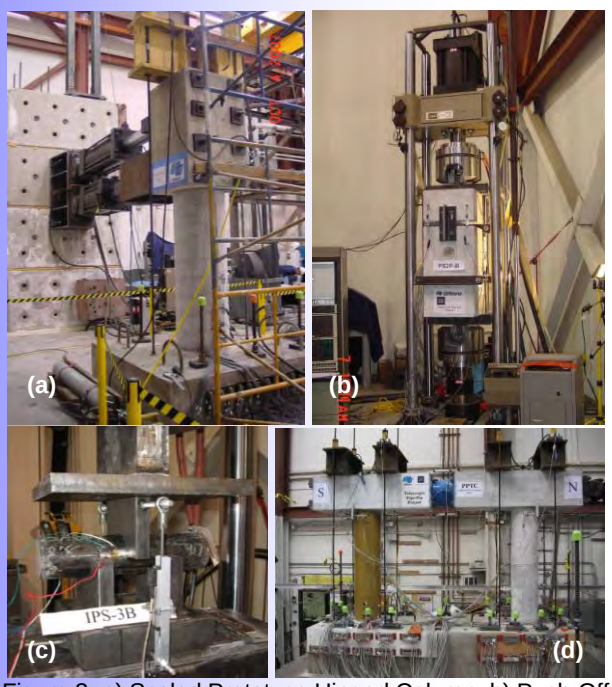

Figure 3- a) Scaled Prototype Hinged Column, b) Push-Off Specimens, c) Pure Shear Test, and d) Shake Table Test of the Two-Column Bent

Research Results

The tests on the first three sets of specimens showed that the lateral failure mechanism in pipe-pin connections is typically controlled by the diagonal tension failure of concrete in the column combined with flexural yielding of the steel pipe (Figure 4). This finding showed that the assumed pure shear behavior in the current design needs to be revisited, although pure shear failure mode should be considered as a possible limit state. Another possible mode is the bearing failure of the concrete adjacent to the pipe.

It was learned that the column spiral contributes significantly to the capacity of pipe pin connections and should be designed specifically for the pipe-pin joint.

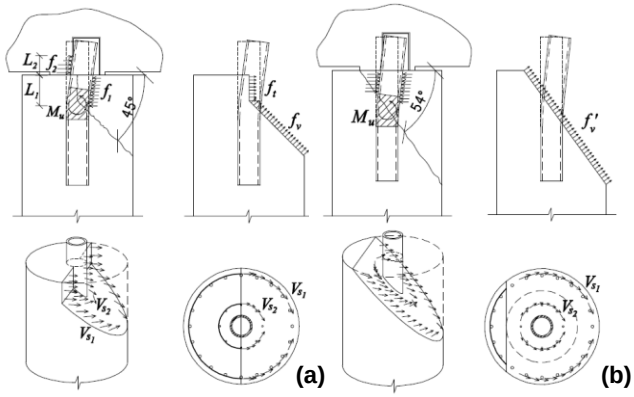

Figure 4- a) Cracking Mechanism without Axial Load, b) Cracking Mechanism under Large Axial Load

The recommended detailing refinements based on the analytical and experimental studies included the removal of the pipe studs in the column, specification of a pipe embedment length to diameter ratio of 4.5 in the column, and a protruded pipe length of 1.2 times the pipe diameter.

The experiments confirmed that pipe-pin two-way hinges perform as moment-free connections, which make them a more attractive detail than distributed bars hinges in which some level of moment transfer is inevitable. Large relative rotations could be accommodated in pipe-pin hinges without impairing their performance. The hinge could tolerate a maximum rotation of 0.08 radians while the pin behaved as a capacity-protected element.

The shake table experiments confirmed that the proposed design method is reliable and safe. The maximum measured strains in the steel pipe and the spirals were well below the yield strains. This means that pipe pins can be designed to remain elastic, whereas concrete hinges with distributed bars yield before performing as a hinge.

Because of their simple design and excellent performance, pipe-pin hinges were used in accelerated bridge construction (ABC) of a 4-span bridge model at UNR recently and proved their viability for ABC under strong earthquakes.

Reference

1. Doyle, K. A., and Saiidi, M., [2008] "Seismic response of telescopic pipe pin connections." *Report No. CCEER-08-01*, Center for Civil Eng. Earthquake Research, Dept. of Civil Eng., UNR.

2. Zaghi, A. E., and Saiidi M., [2010] "Bearing and Shear Failure of Pipe-Pin Hinges Subjected to Earthquakes," ASCE, *J. of Bridge Engr.*

3. Zaghi, A. E., and Saiidi M., [2009] "Seismic Design of Pipe-Pin Connections in Concrete Bridges," Report No. CCEER-10-01, Center for Civil Eng. Earthquake Research, Dept. of Civil Eng., UNR.