DEPARTMENT OF TRANSPORTATION
DIVISION OF ENGINEERING SERVICES
Transportation Laboratory
5900 Folsom Boulevard
Sacramento, California 95819 - 4612

METHOD OF TEST FOR THERMOPLASTIC TRAFFIC LINE MATERIAL

CAUTION: Prior to handling test materials, performing equipment setups, and/or conducting this method, testers are required to read **SAFETY AND HEALTH** in Section C of this method. It is the responsibility of the user of this method to consult and use departmental safety and health practices and determine the applicability of regulatory limitations before any testing is performed.

A. SCOPE

This test method is divided into the following parts:

1. Sample Preparation
2. Melting Procedure
3. Binder Content
4. Glass Bead Content and Grading
5. Specific Gravity
6. Ring and Ball Softening Point
7. Tensile Bond Strength
8. Viscosity
9. Impact Resistance
10. Yellow Colors and Daytime Luminance Factor (Yellow Thermoplastic)
11. Yellowness Index and Daytime Luminance Factor (White Thermoplastic)
12. Hardness
13. Color Stability after Accelerated Weathering
14. Abrasion Test

B. REFERENCES

California Test 660 — Evaluating Color by Means of Chromaticity Coordinates
ASTM D 2794 — Resistance of Organic Coatings to the Effects of Rapid Deformation (Impact)
ASTM D 36 — Softening Point of Bitumen (Ring-and-Ball Apparatus)
ASTM E 313 — Calculating Yellowness and Whiteness Indices from Instrumentally Measured Color Coordinates
ASTM G 155 — Operating Xenon ARC Light Apparatus for Exposure of Non-Metallic Materials
Caltrans Laboratory Safety Manual

PART 1. SAMPLE PREPARATION

Thermoplastic traffic line material typically is manufactured as a granular type mixture and packaged in a plastic bag that is melted with the material. It occasionally is produced in a pre-melted block form.

1A. APPARATUS

1. Scale, 100 lb capacity, capable of weighing to 0.1 lb.
2. Top-loading balance, at least 200 g capacity, capable of weighing to 0.01 g.
3. Sample splitter with 2 in. wide slots and top hopper to hold a 50 lb bag of thermoplastic.

1B. PROCEDURE

Sample preparation, granular type.

1. Determine the weight of bag plus the thermoplastic material.
2. Empty the contents of the bag into the splitter box. Mix the material and break up all large lumps.
3. Weigh the empty bag.
4. Split the sample with the splitter to yield a 6000-g sample of the granular thermoplastic.
5. Calculate the weight of bag material to be added to the granular thermoplastic using the following ratio:
6. Weigh out the calculated amount of bag and cut it up into small pieces. Mix this material into the previously weighed sample of granular thermoplastic.

$$\frac{\text{Weight of Thermoplastic, g}}{\text{Weight of bag, g}} = \frac{\text{Weight of Sample, g}}{X}$$

X = calculated weight in grams of bag to be added to the granular thermoplastic sample when it is melted.

Sample preparation, block type:

1. Break up plastic block into small pieces to yield a sample of 6000 g.

PART 2 MELTING PROCEDURE

2A. APPARATUS

1. A disposable heating vessel can be made using a 6 ½ in. diameter by 7 ½ in. high-unlined metal 1-gallon paint can. The can will fit into the Glass-Col Model 100DDH098BC heating mantle.
2. Temperature indicator controller, Omega Engineering Model 4001 JF or equivalent.
3. Thermocouple, iron constantan, Omega Engineering No. T36-ICSS-116G-12 or equivalent.
4. An air-powered variable speed mixer, Lightnin Model 30 with two Lightnin A310 stainless steel impellers has been found to be satisfactory. The top impeller should be 2 ½ in. in diameter, and the bottom should be 3 3/4 in. in diameter. The two impellers are mounted on a 12 in. long by 5/16 in. diameter shaft. The top impeller should be about 3 in. above the bottom impeller.
   Another air-powered variable speed mixer that has been found to be satisfactory is the Cole Parmer Model #04685-00 stirrer. This mixer can be fitted with a 3/8 in. Jacobs drill chuck (Cole Parmer Model #H-04423-00) to hold the stirrer shaft.
5. Aluminum lid to cover top of the container used for melting the thermoplastic. It should have a slot to clear the air motor agitator shaft and thermocouple.

6. Stainless steel ladle with pouring spout, 30 and 60 mL capacities.
7. Tachometer to measure shaft speed of mixer.

2B. PROCEDURE

1. Set up apparatus as shown in Figure 1. Wire the Glas-Col mantle power cord to the temperature indicator-controller according to manufacturer's instructions. Mount the controller-indicator in a panel, which can be wall mounted to keep the unit away from heat, dirt, and vibration. When unit is ready for operation, make a test melt in order to set the proportional band and other adjustments to give a controlled temperature of 218 ± 1°C.
2. Charge about one-half of prepared 6000 g sample into container to be used for melting sample and place into the Glas-Col mantle, attach the stirring shaft and thermocouple. Turn on power to the heating mantle and controller. Note time of startup. As the thermoplastic melts down, add the remainder of the 6000 g sample. Start the variable speed air agitator when plastic has softened sufficiently to mix. Continue mixing and heating until the temperature of the melt reaches 218°C and the melt is homogeneous. This should take about one hour from startup. Note that certain specifications of thermoplastic are melted and tested at 190°C.
3. At this time, using the 60 mL stainless steel ladle, remove enough of the hot melt to fill a 6 in. diameter paint can lid. This sample is allowed to cool and will be used for the glass bead and binder tests. At this point, samples are also cast for the ring and ball and specific gravity tests.
4. Set the speed of the mixer shaft at 800 RPM with a suitable tachometer. Continue stirring and heating at 218°C for a total time of 4 hrs from start of meltdown or as otherwise stated in specification. Keep the aluminum cover over the melted thermoplastic during the extended heating period.
5. At the end of the 4 hr extended heating period, samples for the remainder of the tests are taken. The samples are taken while stirring and heating. The molten material should be allowed to cool before removing the can from the heating mantle and disposing of it. Remove the impellor shaft before allowing the thermoplastic to cool.

PART 3. BINDER CONTENT

3A. APPARATUS

1. Porcelain crucible, 40 mL capacity
2. Diagonal cutter
3. Analytical balance
4. Desiccator
5. Muffle furnace capable of maintaining 450°C

3B. PROCEDURE

1. With diagonal cutters, cut the cooled sample on the can lid from initial meltdown into small pieces.
2. Weigh the porcelain crucible and fill it with about 20 g of thermoplastic.
3. Determine the exact weight of thermoplastic and crucible.
4. Place the crucible in the muffle furnace and set controls for 450°C. Heat for 3 hr, remove crucible, cool in the desiccator. Weigh crucible with ashed contents.
5. Calculation:

$$\text{Binder, \%} = \frac{A - B}{A - C} \times 100$$

Where:

A = Mass of the crucible and thermoplastic, g
B = Mass of the crucible and ash, g
C = Mass of the crucible, g

6. Save the crucible and ash for the glass bead determination.

PART 4. GLASS BEAD CONTENT AND GRADING

4A APPARATUS

1. Beakers, 600 and 400 mL capacities
2. Hot plate – stirrer
3. Teflon – coated stirring bar
4. Toluene , acetone or other suitable solvent
5. Air-circulation oven maintained at 100ºC
6. Analytical balance
7. Concentrated hydrochloric acid, reagent grade
8. A standard No. 100 sieve
9. Diagonal cutters

4B PROCEDURE

For the glass-bead content only – no grading analysis.

1. Weigh the 400 mL beaker to the nearest 0.01 g.
2. Place the crucible and ashed contents from the binder determination into the bottom of beaker.
3. Add concentrated hydrochloric acid slowly until effervescence ceases.
4. Rinse the crucible into the beaker and remove the clean crucible.
5. Dilute the sample with hot water to 300 mL. Let the sample settle for about 15 min.
6. Carefully decant all insoluble material making sure the beads remain on the bottom of the beaker.
7. Wash and decant about 3 or 4 more times or until only the beads remain in the beaker and the supernatant liquid is clear.
8. Wash the beads once with acetone, let settle and decant. After the acetone has evaporated, place the beaker in an oven at 100ºC until the beads are completely dry.
9. Remove the beaker from the oven and let cool, and determine weight of beads, to the nearest 0.01 g in the 400 mL beaker, D.
10. Calculation:

$$\text{Glass beads, \%} = \frac{D}{A - C} \times 100$$

A = Mass of the crucible and thermoplastic, g
C = Mass of the crucible, g
D = Mass of dried, glass beads, g.

11. Examine the beads under a 20-power microscope. If acid insoluble materials other than the beads are present, pour the bead sample through a standard No. 100 sieve. If the insolubles pass through the sieve, then collect and weigh the contents. Subtract the weight of the insolubles from the glass bead weight and correct the percentage of glass beads reported. If any portion of the insoluble material is retained on the No. 100 sieve, then the sample is rejected.

For glass bead grading analysis:

1. With the diagonal cutters, cut the cooled sample on the can lid from the initial meltdown into small pieces.
2. Weigh the 600 mL beaker and fill it with about 100 g of the thermoplastic sample.
3. Determine the exact weight of the thermoplastic, A, in g.
4. Add about 400 mL of toluene or other suitable solvent and place the stirring bar in beaker. This and the following steps should be done in an exhaust hood.
5. Heat and stir for 1 hr; do not boil the toluene. Keep the temperature about 65ºC by adjusting the hot plate controls.
6. Remove beaker from hot plate, let settle for about 15 min, then decant the insoluble material and dissolved binder.
7. Repeat the solvent extraction, settle, and decant operations.
8. Wash and decant residue two times with about 200 mL of acetone.
9. Add about 100 mL of water and, with stirring, carefully add concentrated hydrochloric acid to the residue until all reaction has ceased. Remove stirring bar.
10. Dilute to about 500 mL with hot water, let it settle 15 min. Carefully decant the insoluble material making sure the beads remain on the bottom.
11. Repeat the water dilution, settle, and decant operations until the supernatant liquid is clear.
12. Wash the beads with about 200 mL of acetone, settle, and decant. After the acetone has evaporated, dry the beaker in a 100ºC oven. Cool and weigh dried glass beads.
13. Calculation:

$$\text{Glass beads, \%} = \frac{D}{A} \times 100$$

A = initial weight of thermoplastic, g
D = weight of dried glass beads, g

14. Examine the beads under the microscope, as done in Section 4B, Paragraph 11 above, and separate the insolubles, if necessary.
15. Run a gradation analysis on the beads using the appropriate sieves. Report percent passing through each sieve size.

PART 5 SPECIFIC GRAVITY

5A APPARATUS

1. Vacuum oven capable of maintaining 60ºC and a vacuum of 30 in. of mercury
2. Analytical balance
3. Glass beaker, 600 mL capacity
4. Metal stand for beaker to clear weighing pan.
5. Aluminum disposable weighing dish, 2 ½ in. wide and ½ in. deep.
6. Fine wire about 6 in. long.

7. A steel rod with the following dimensions; 2 3/4 in. in diameter and 3 in. in length can be used as a heat source to keep the specific gravity sample molten while it is being de-aerated. Preheat this rod to 218°C in an oven for 1 hr prior to use.

5B PROCEDURE

1. From the initial meltdown, cast a sample about ¼ in. in depth into the bottom of the aluminum dish.
2. Immediately place the dish on top of the hot steel rod and place them both into the vacuum oven. Start the vacuum pump.
3. Sample will rise under vacuum. Control the air bleed valve to keep sample from overflowing dish.
4. Continue adjusting air bleed, and when vacuum reaches about 30 in. of mercury and puffing has subsided, vent the oven and remove dish from oven.
5. When cool, strip off aluminum, trim sides to remove uneven edges. Bore a small hole near one edge of the sample to accommodate the fine wire.
6. Weigh the sample in air.
7. Place beaker stand over balance pan and make sure it does not touch balance pan.
8. Position the 600 mL beaker full of distilled water on the beaker stand so that it does not touch the balance arms.
9. Suspend the sample by the fine wire and attach other end of wire to the top of the balance arm. Sample should not touch sides of beaker and should be completely immersed in the water.
10. Record the sample weight in the water.
11. Calculation:

$$\text{Specific gravity} = \frac{A}{A - W}$$

A = Weight in air, g
W = Weight in water, g

PART 6 RING AND BALL SOFTENING POINT

6A APPARATUS

ASTM Designation: D 36, Ring and Ball Apparatus.

6B PROCEDURE

From the initial meltdown, cast a sample into the ring, allow to cool, and run the test according to ASTM Designation: D 36.

NOTE: Tests on Parts 7 through 14 are performed on the thermoplastic at the termination of the 4 hr heating and stirring period.

PART 7 TENSILE BOND STRENGTH

7A APPARATUS

1. Concrete bricks 7 by 3 ½ by 2 in., made from the following formula:

   - 7.9 kg of portland cement
   - 3.5 kg of water

- 17 kg of aggregate, saturated surface-dry. (Use commercial quality PCC aggregate, with a maximum size of 3/8 in.)
- 17 kg of sand, saturated surface-dry.

2. Steel screed box with 0.125-in. opening as shown in Figure 2. Some thermoplastic specifications require a screed box with a 0.0630 in. opening. This is not shown in the figure.
3. Steel die for cutting 2 in. diameter sample as shown in Figure 3.
4. Steel blade spatula with wooden handle and an approximately 3 in. wide blade.
5. A round solid aluminum bar, 2 in. in diameter and 1 ¾ in. high. The bar is drilled and tapped to receive a hook for connection to the testing press. The bonding surface must be abrasive blasted prior to use.
6. A suitable testing machine must have a capacity of 2000 lb force, or greater, to pull the thermoplastic sample in tension. The sample is tested at a separation rate of 0.2 in./min.
7. An oven able to maintain 218 ± 1°C.
8. An epoxy adhesive.

7B PROCEDURE

1. Condition the screed box in the 218°C oven at least 30 min before test.
2. Abrasive blast the 7 by 3 ½ in. face of a concrete brick.
3. Remove the screed box from oven and place on one end of the concrete brick.
4. With the 60 mL stainless steel ladle, remove a sample from the hot melt and quickly pour into the screed box and draw down a film lengthwise down the middle of the brick.
5. Immediately, place the 2 in. diameter die in the middle of the thermoplastic film and hold firmly with one hand while scraping off the surrounding hot plastic with the steel spatula from the surface of the brick. Be sure to remove all plastic cleanly from the edges of the die then remove the die. Lightly sand the surface of the resulting thermoplastic test surface with 240-grit sandpaper to form a better bonding surface.
6. Bond the 2 in. aluminum bar to the 2 in. diameter test surface with epoxy adhesive. Remove any excess adhesive.
7. Let the epoxy cure overnight.
8. Using a suitable holding jig, thread a hook into the threaded aluminum bar that has been bonded to the thermoplastic specimen. Pull the thermoplastic from the brick using a testing machine operated at a separation rate of 0.2 in./min. Record the load at break in pounds.
9. Calculation:

$$\text{Tensile Bond Strength, psi} = \frac{\text{Load, lbs}}{3.14}$$

PART 8 VISCOSITY

8A APPARATUS

1. Brookfield Thermosel viscometer and accessories.
2. Stainless steel SC4-27 spindle.
3. Horizontal strip chart recorder.
4. An oven maintained at 218°C ± 1°C.

8B PROCEDURE

1. Approximately 30 min before testing turn on Thermosel unit and set the temperature to that in the specification. Condition the SC4-27 spindle and stainless steel sample chamber in the oven.
2. Check the Thermosel for the correct temperature.
3. Remove the sample chamber from the oven and place it in a sample holder.
4. With a ladle, sample the melted thermoplastic and carefully fill the sample chamber to ½ volume.
5. With the extracting tool, position the sample chamber in the Thermosel well and carefully rotate the chamber until it drops and locks into place.
6. Remove the SC4-27 spindle from the oven and attach it to the coupling link on the viscometer.
7. Lower the spindle into the sample chamber and make alignments according to manufacturer's instructions.
8. Place the insulating cap on the sample chamber. Start the viscometer and set the speed to 20 RPM. Start the strip recorder.
9. Initial readings are always high. When the digital readout has stabilized, note the reading and convert the readout to poise. The recorder readily shows the point where the viscosity readout has stabilized. If a recorder is not used, then the digital readout must be watched until stable.

PART 9 IMPACT RESISTANCE

9A APPARATUS

1. Suitable falling ball apparatus as described in ASTM Designation: D 2794. The indentor has a point 0.625 in. in diameter and a 2 lb mass.
2. Steel screed box, as used in bond strength, shown in Figure 2.

9B PROCEDURE

1. Draw down the specified thickness of thermoplastic on concrete brick, as described in Part 7. Let it cool overnight.
2. Place a concrete brick with the thermoplastic film face up on the impact base, positioning the brick so that the impactor will hit the plastic sample in the middle.
3. Raise the 2 lb mass to a height of 25 in., release the mass to impact on the sample.
4. Observe the impact area for any cracks or loss of bond. Do not run more than one impact test on each brick.

PART 10 YELLOW COLOR AND DAYTIME LUMINANCE FACTOR (YELLOW THERMOPLASTIC)

10A APPARATUS

1. Apparatus described in accordance with California Test 660. A BYK-Gardner “Color-Guide” Spectrophotometer has been found to be satisfactory.
2. CIE chromaticity diagram as described in accordance with California Test 660, with the plot of the 4 (x, y) pairs from the specification plotted on the diagram.
3. Aluminum disposable weighing dish.

10B PROCEDURE

1. With the 60 mL ladle, fill the aluminum dish to the top with the molten thermoplastic.
2. Allow the dish to cool and strip the aluminum from the sample.

3. Test in accordance with California Test 660.
4. Reserve sample for the hardness test, Part 12.

PART 11 YELLOWNESS INDEX AND DAYTIME LUMINENCE FACTOR (WHITE THERMOPLASTIC)

11A APPARATUS

1. Apparatus described in Part 10.

11B PROCEDURE

1. With the 60 mL ladle, fill the aluminum dish with the molten thermoplastic.
2. Allow the dish to cool and strip the aluminum from the sample.
3. Determine the yellowness index and daytime luminance factor, Y (%), in accordance with ASTM Designation: E 313.
4. Reserve sample for the hardness test, Part 12.

PART 12 HARDNESS

12A APPARATUS

1. Shore Durometer Hardness Tester, Type A-2, with attached lead weights so that total weight of unit is 2000 g.
2. Forced draft oven capable of maintaining 46.1 ± 1°C.
3. Circulating water bath maintained at 46.1 ± 1°C.
4. Stopwatch.

12B PROCEDURE

1. Use the sample prepared in Part 10 or Part 11 of this method.
2. Place the sample in the water bath and condition at 46.1°C for 3 hr.
3. At the same time, place the durometer in the oven.
4. After 3 hr, remove sample from the water bath and place the durometer on top and immediately start the stop- watch when the indenter makes contact.
5. After 15 seconds contact, read the durometer. Return the sample to the water bath for ½ hr and repeat the durometer reading.
6. Report the average of 3 readings made on the sample.

PART 13 COLOR STABILITY AFTER ACCELERATED WEATHERING

13A APPARATUS

1. Aluminum panels 6 in. x 3 in.
2. Two inch wide duct tape and ½ in. wide masking tape.
3. BYK-Gardner "Color-Guide" Spectrophotometer, as described in Part 10.

13B PROCEDURE

1. Dip the aluminum panel into the molten thermoplastic.
2. While hot, trim off the excess thermoplastic from the back and edges of the aluminum panel.
3. When cool, wrap the edges, top and bottom of the plastic sample with duct tape to keep the sample from sticking to the test frame. Lap the edges of the thermoplastic, no more than ¼ in., with the duct tape.

4. For white thermoplastic, measure the yellowness index as described in Part 11.
5. For yellow thermoplastic, measure the Y, x, and y values, as described in Part 10.
6. Expose the sample for 500 hr in the accelerated weathering tester.
7. Remove samples from accelerated weathering tester and make the same measurements as made initially for the respective colors.

PART 14 ABRASION TEST

14A APPARATUS

1. The abrasion apparatus must be constructed from ¾ in. plywood and lined with steel sheeting. Inside dimensions are 12 in. x 12 in. x 12 in. with blasting nozzle, glass bead container, air pressure regulator, and filter. The bottom of the unit must have a removable drawer to catch the expended glass beads. The thermoplastic sample is held in position by metal clips and positioned as shown in the diagrams. The top of the unit must have a hinged window to permit viewing, placing, and removal of the sample. This apparatus is shown in Figures 4 and 5.
2. Glass beads, 100% passing the number 25 sieve and 100% retained on number 30 sieve.
3. Steel sample mold, 4.5 in. x 4.5 in. x ½ in., as shown in Figure 6.
4. Steel base plate, 5 in. x 5 in. 1/8 in., as shown in Figure 6.
5. Mold release.
6. Balance, a 500 g or greater capacity capable of weighing items to 0.01 g.
7. Clean, dry air supply capable of delivering at least 40 psi.
8. A vacuum cleaner to exhaust bead and dust particles.

14B PROCEDURE

1. Spray the steel sample mold with a release agent and place concentrically on the 5 in. x 5 in. steel base plate.
2. With the 60 mL ladle, remove enough hot thermoplastic to fill the sample mold.
3. When cool, loosen the mold screws and remove the mold.
4. Weigh the base plate and molded thermoplastic.
5. Weigh 400 g of the glass beads and fill the bead container in the glass bead abrasion apparatus.
6. Position the thermoplastic sample as shown in the diagram so that the blaster hits one corner of the sample. Use the spring clips to keep the sample in place.
7. Close the hinged window, turn on the air supply, set the regulator at 22 psi, observe level of beads in glass bead container to see if they are flowing into the blast nozzle. Check the air pressure frequently to be sure the regulator remains at 22 psi.
8. Turn on the vacuum cleaner while operating the abrasive apparatus. The vacuum cleaner is not required, but helps keep the surrounding area much cleaner.
9. When the bead container is empty, close the air valve, turn off the vacuum cleaner and remove the sample.
10. Brush off any loose dust from the sample and reweigh the sample, record the weight loss in g.
11. Place the sample back in the blasting cabinet and rotate it approximately 90 degrees from the original position so that a fresh corner may be blasted.
12. Repeat the blasting and weighing process until all four corners have been blasted.
13. Average the weight loss of the four corners. The maximum deviation among the four corners should be 0.5 g.
14. Do not blast down to the base metal on the base plate. If the sample blasts through the thermoplastic to the base metal before the bead supply is exhausted, blast enough of one corner so that base metal does not show through, then stop

blasting, remove sample, and rotate approximately 90 degrees to expose a fresh surface and continue blasting until beads have been used.

C. SAFETY AND HEALTH

Due to the high temperatures of the molten thermoplastic, full eye/face protection and suitable insulated gloves are mandatory when handling the molten material. Arms should be fully covered by sleeves or gloves. If thermoplastic burns do occur, immediately flush the affected area with cold water. Be aware of the location of safety showers and cold water taps near the testing area.

Melting and pouring of thermoplastic should be done in an exhaust hood or other well ventilated area.

Prior to handling, testing or disposing of any sample, testers are required to read the Caltrans Laboratory Safety Manual. This manual contains information on; general safety principles, standard operating procedures, protective apparel, disposal of materials and how to handle spills, accidents, emergencies, etc. Users of this method do so at their own risk

Caltrans Laboratory Safety Manual is available at:

http://www.dot.ca.gov/hq/esc/ctms/pdf/lab_safety_manual.pdf

End of Text
(California Test 423 contains 17 pages)

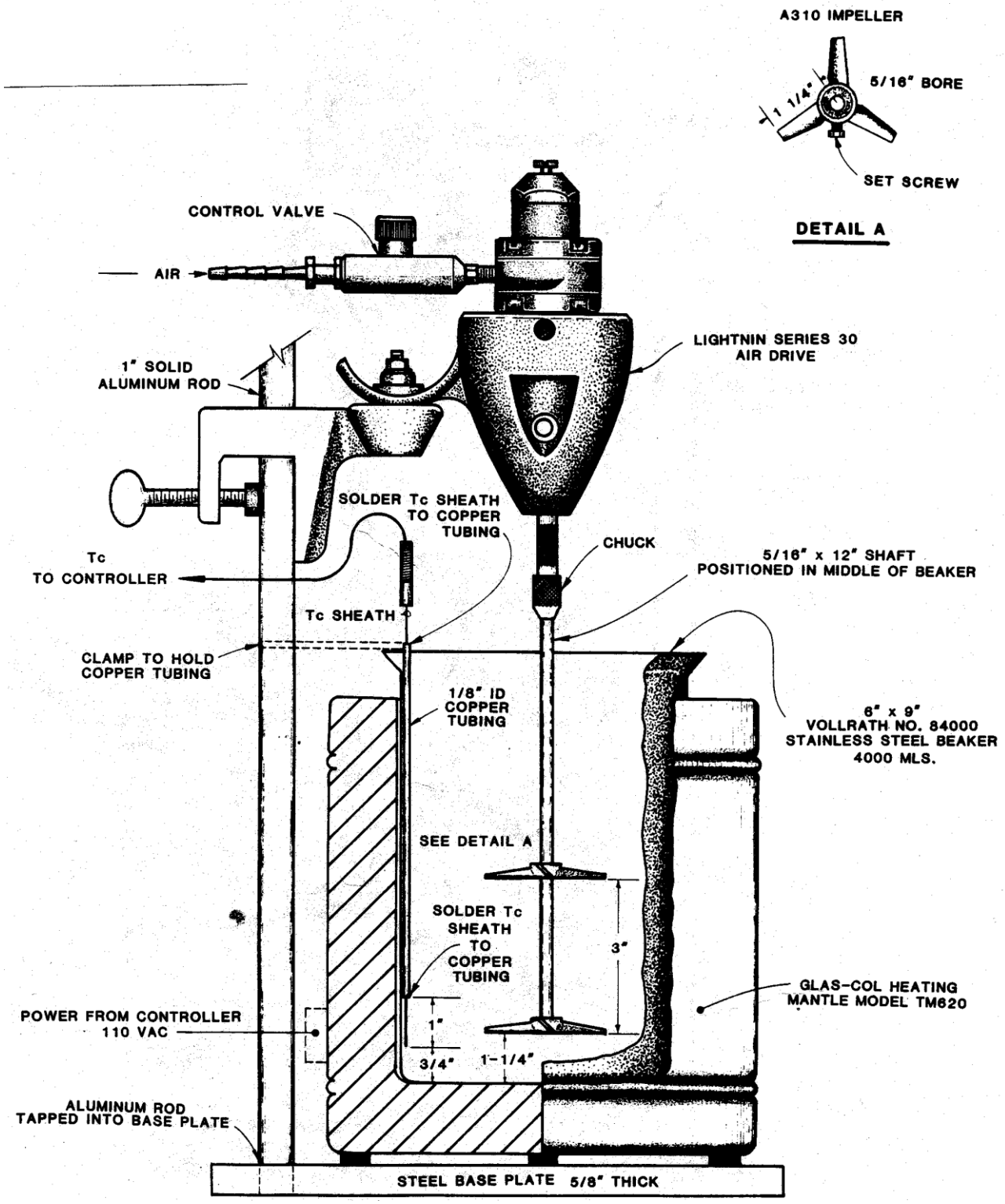

FIGURE 1. THEROMOPLASTIC MELTER APPARATUS

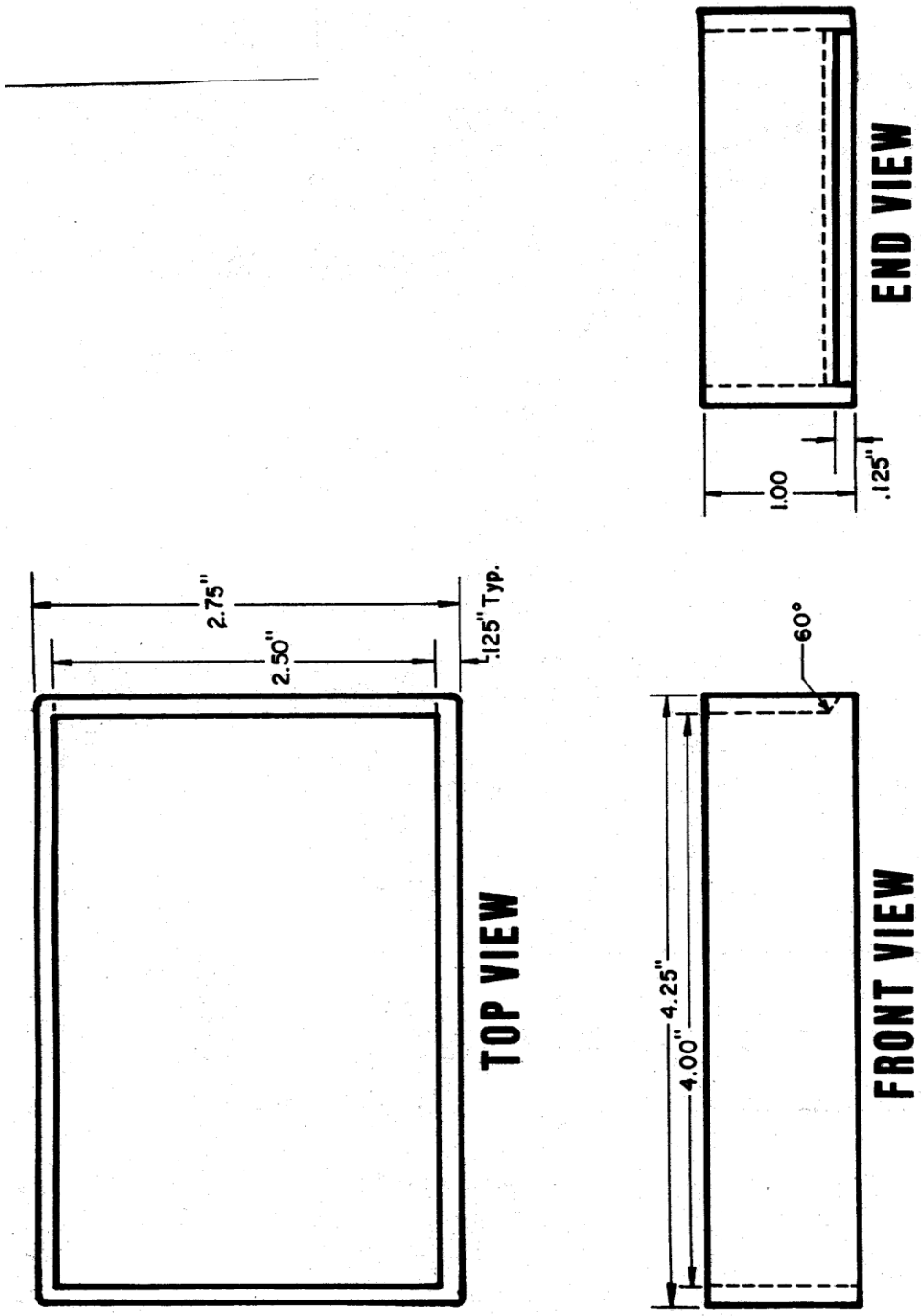

FIGURE 2. SCREED BOX

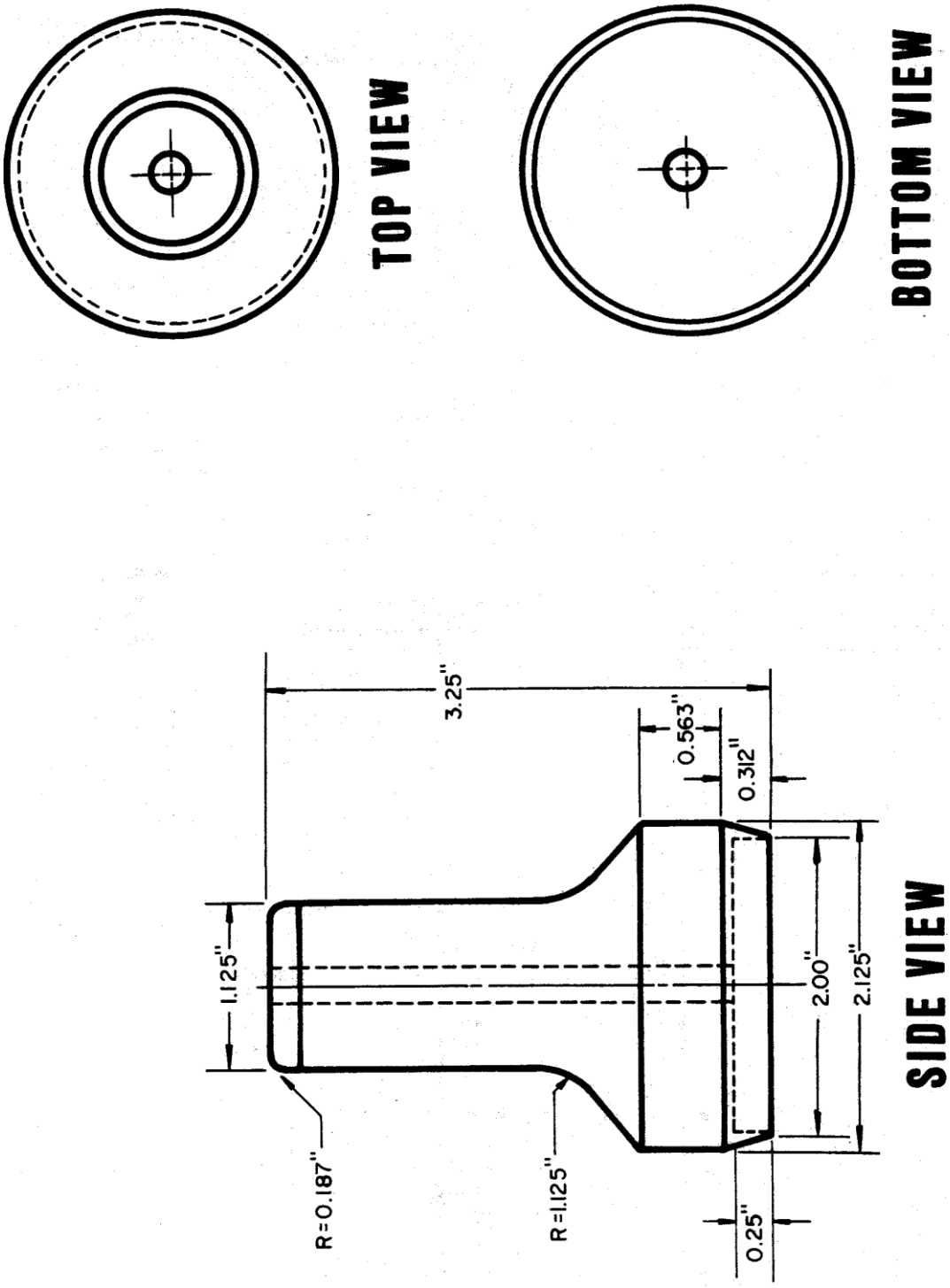

FIGURE 3. 2 INCH DIE

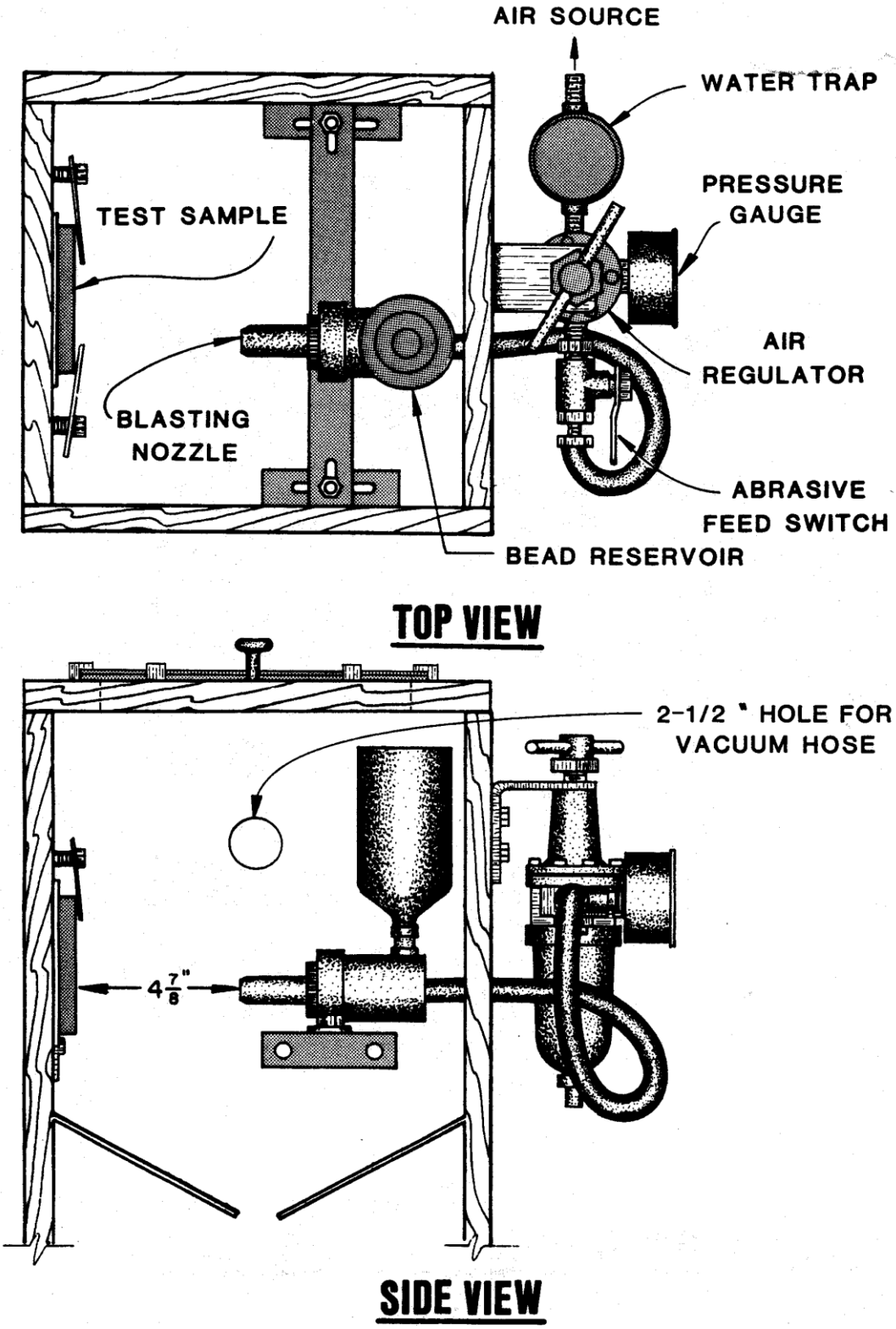

FIGURE 4. GLASS BEAD ABRASION APPARATUS (SIDE AND TOP VIEWS)

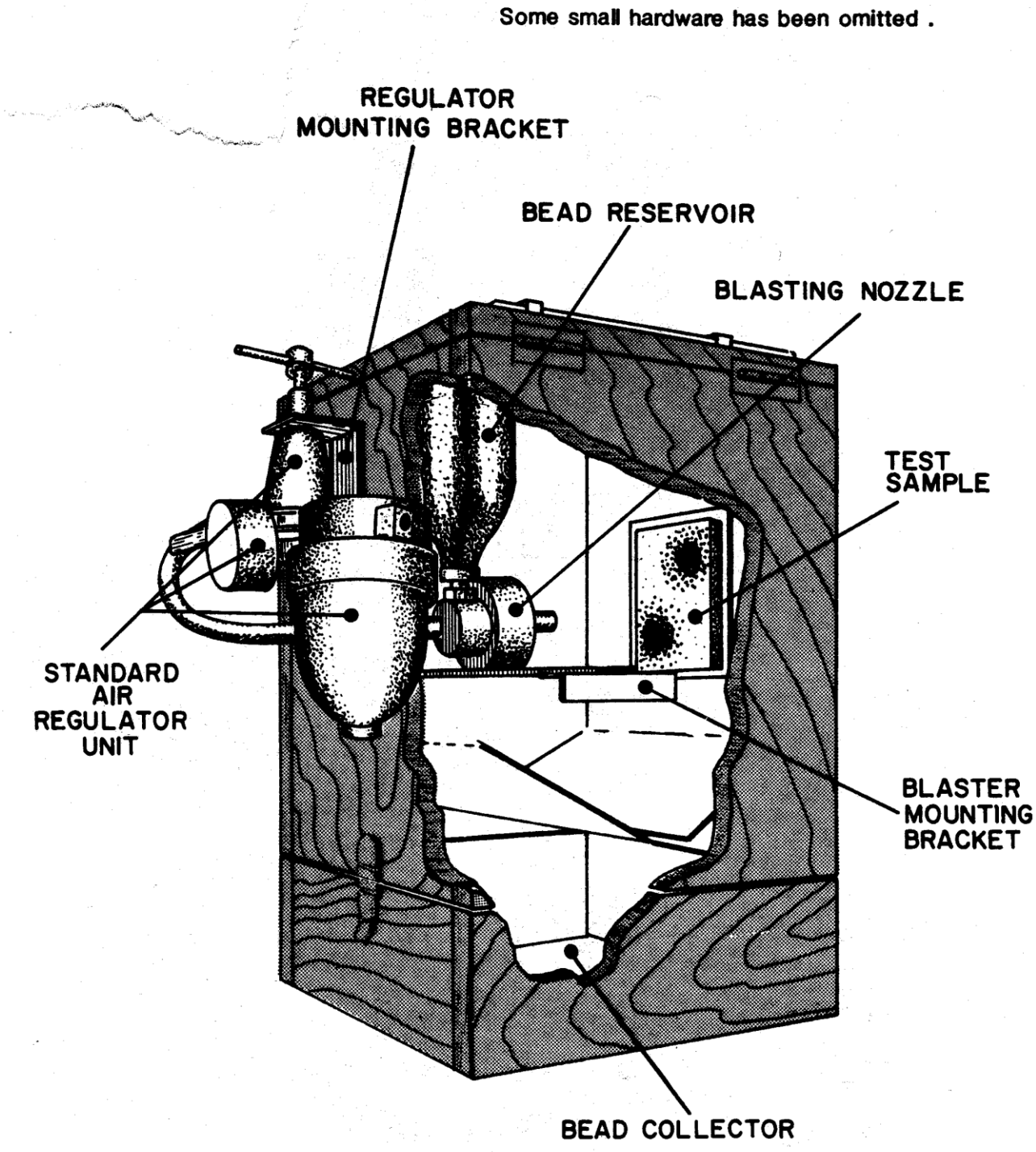

FIGURE 5. GLASS BEAD ABRASION APPARATUS

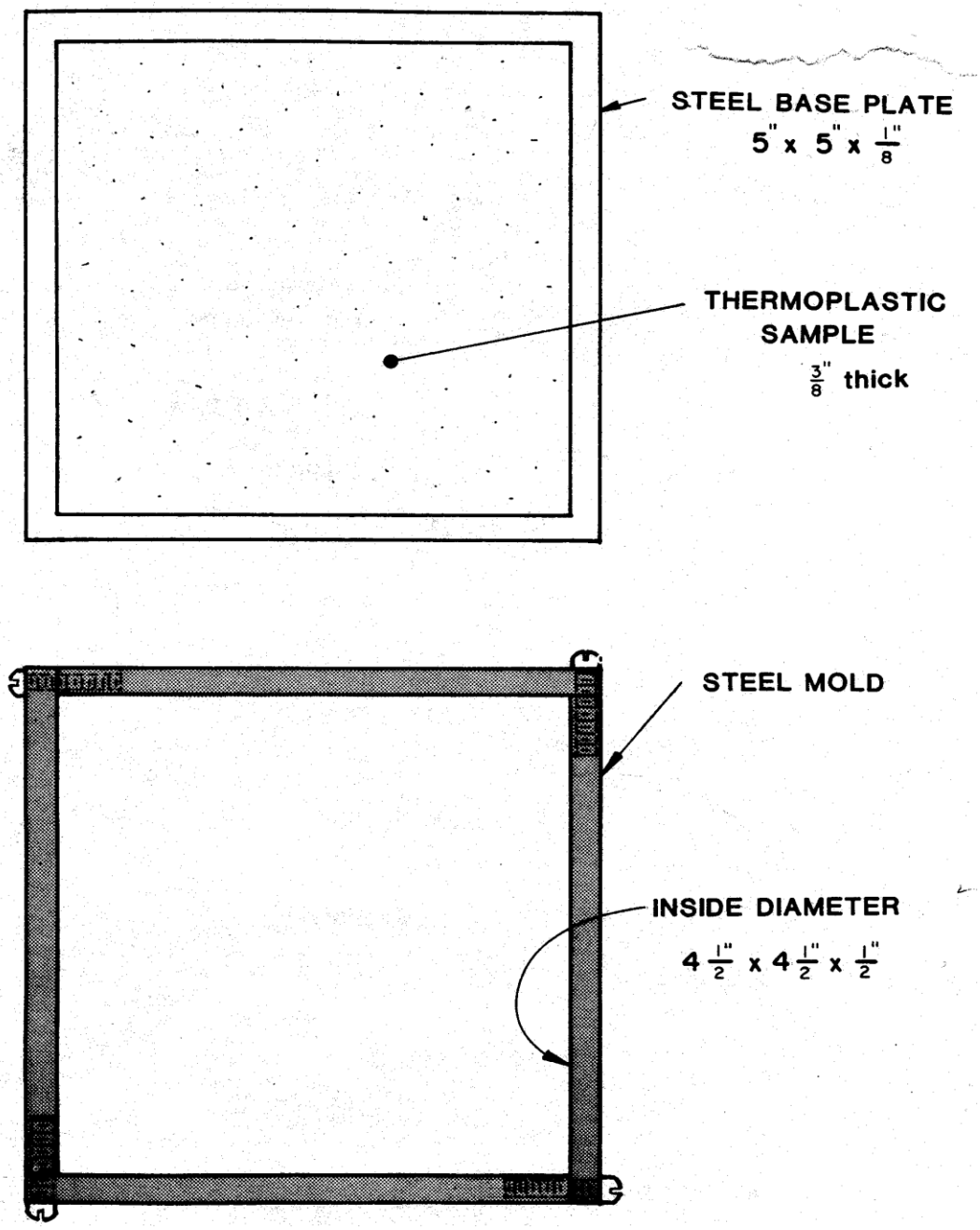

FIGURE 6. ABRASION TEST SAMPLE DETAILS