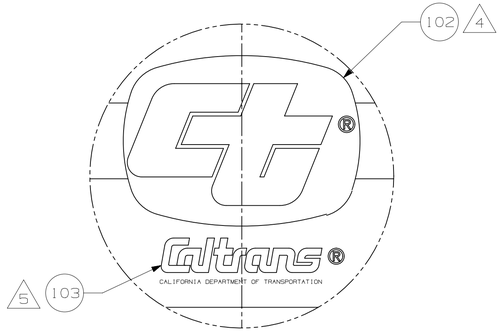

DETAIL A
SCALE 1:4

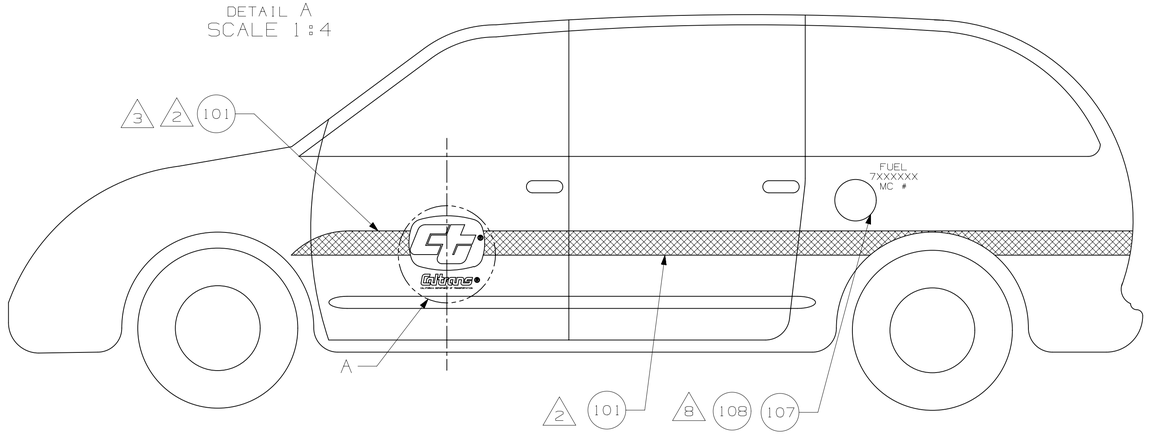

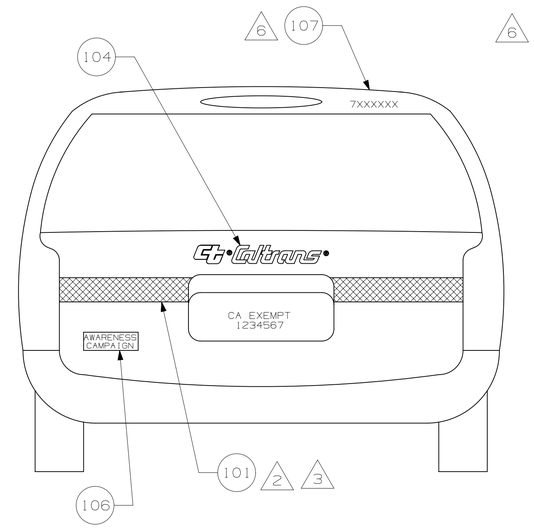

DELIVERY/CARGO MINI VAN

BILL OF MATERIALS

	ITEM	QTY	DESCRIPTION	MF'R #/ CT DWG #	CT STK #
2 3	101	AS REQ'D	DECAL, REFLECTIVE SHEET, ORANGE, 5" WIDE	MATERIAL PER SPECIFICATION	053-4813
4	102	2	DECAL, 'CT' DOOR, WHITE REFLECTIVE, 9" X 12"	03-D004-01	053-4760
5	103	2	DECAL, 'CALTRANS' BLACK SCRIPT, 2.5"	03-D005-01	053-4763
	104	1	DECAL, 'CT CALTRANS' ORANGE SCRIPT, 4"	03-D014-01	053-4801
	105				
	106	1	APPROVED PUBLIC AWARENESS CAMPAIGN BUMPER STICKER	-	*
6 7	107	1	EQ. ID # & MC # DECALS - SPECIAL ORDER	-	053-4892
7	108	1	APPROPRIATE FUEL TYPE DECAL: 'UNLEADED FUEL ONLY' 'E-85 OR GASOLINE'	-	053-1510 053-4990

NOTES:

1 ALL DELINEATION WILL BE IN COMPLIANCE WITH CALTRANS EQUIPMENT QUALITY STANDARDS. GO TO www.dot.ca.gov/hq/eqsc AND CLCK ON THE LINK "EQUIPMENT QUALITY STANDARDS" THEN "FLEET IDENTIFICATION"

2 STRIPING APPLICATION: ALL STICKERS, LABELS AND STRIPING SHALL BE LEVEL, STRAIGHT, BUBBLE-FREE AND DEBRIS-FREE. NO SPLICING OF TAPE OR STRIPING SHALL BE ACCEPTABLE. ALL EDGES ON STRIPING SHALL BE TRIMMED 1/8-3/8 INCH FROM THE EDGES OF DOORS, PANELS, FENDERS, LIGHTS, EMBLEMS, ETC. ORANGE REFLECTIVE SHEETS (ITEM 101) AND STRIPING SHALL BE TRIMMED TO MATCH BODY CONTOURS AND CREASES WHEN IT WILL NOT LAY HORIZONTAL. ANY REFLECTIVE TYPE OF STRIPE OR STICKER SHALL NOT BE PULLED FROM THE VEHICLE AND REAPPLIED DURING APPLICATION, SINCE THE REFLECTIVE MATERIAL WILL BE COMPROMISED.

3 PLACE LOWER EDGE OF ITEM 101 APPROXIMATELY 1/2 WAY BETWEEN THE BOTTOM OF THE WINDOW AND THE BOTTOM OF DOOR. MAKE ADJUSTMENT SLIGHTLY AS REQUIRED TO CLEAR FENDER CUTOUTS AND OTHER FEATURES TO IMPROVE EASE OF INSTALLATION. ITEM 101 POSITION MAY BE ADJUSTED SLIGHTY TO ALIGN WITH BODY STRIPE IF POSSIBLE

4 ITEM 102: LOCATE SUCH THAT THE LOGO IS CENTERED ON THE VERTICAL CENTERLINE OF THE DOOR AND ON THE STRIPE (ITEM 101). STRIPE 101 TO BE TRIMMED TO MATCH EDGES OF ITEM 102

5 ITEM 103 TO BE LOCATED BELOW THE "CT" LOGO AND ALONG THE VERTICAL CENTERLINE OF THE DOOR.

6 SEVEN-DIGIT EQUIPMENT IDENTIFICATION NUMBER (EQ. ID #) ALWAYS STARTS WITH A "7" AND SHALL BE AFFIXED TO THE REAR OF THE VEHICLE IN THE UPPER RIGHT CORNER.

7 THE FOLLOWING DECAL GROUP SHALL BE PLACED DIRECTLY ABOVE OR NEXT TO EACH FUEL FILLER IN ORDER FROM TOP TO BOTTOM: FUEL TYPE, EQ. ID, MC#

REV		DESCRIPTION	BY
I	JUNE 2015	UPDATE TO DECALS W/HIGH REFLECTIVITY	J Payne
F	July 2014	UPDATE PER 7-18-14 MEMO	J Payne
E	05/09	REMOVED 'CLEAN AIR' DECAL #105	ORTEGA
D	12/08	ADDED NOTES, NEW BOM, AND DETAIL VIEWS A & B	MCGAUGH
C	03/05	ADDED ITEM 105	SPARTZ
B	11/04	DELETED COMMUTER VAN	JJ
A	04/03	ADDED "CONE ZONE" DECAL CT#: 053-4829 PER HODEL EMAIL 4/15/03	MATSUO

NEXT ASSEMBLY
X

TOLERANCE-UNLESS OTHERWISE SPECIFIED
DECIMAL ± ×
FRACTIONAL ± ×
ANGULAR ± ×
DRILLED HOLES + ×
REAMED HOLES ± ×

STATE OF CALIFORNIA
DEPARTMENT OF TRANSPORTATION
DIVISION OF EQUIPMENT

MINI VAN & VAN DELINEATION

SCALE ×	DATE 11 Apr 02	I-00150-DE
DRAWN J Payne	DESIGNED ×	
CHECKED	APPROVED	SHEET 1 OF 1 SHEETS