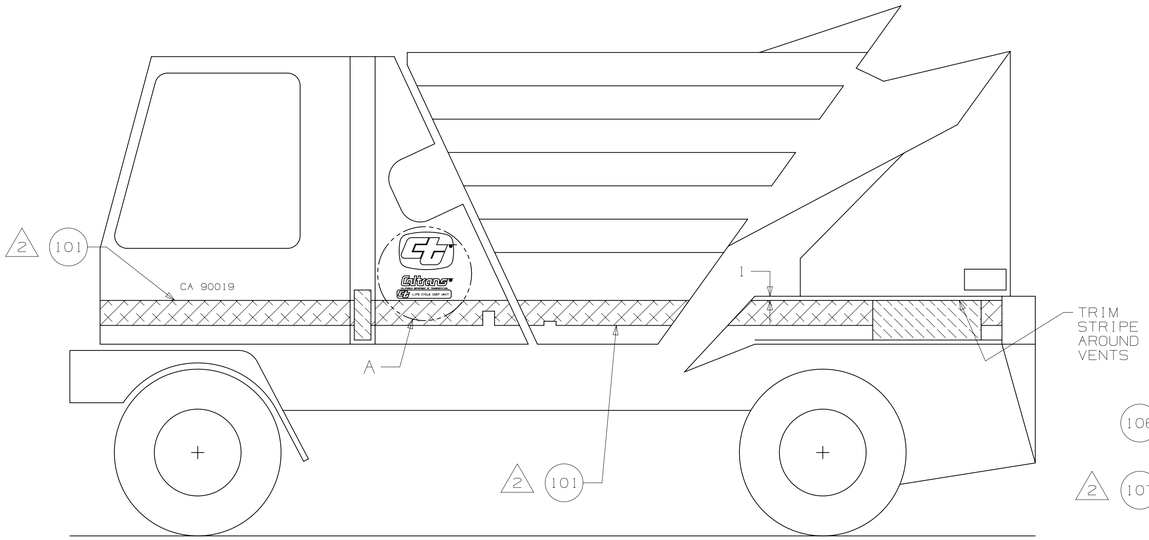

DRIVER SIDE VIEW

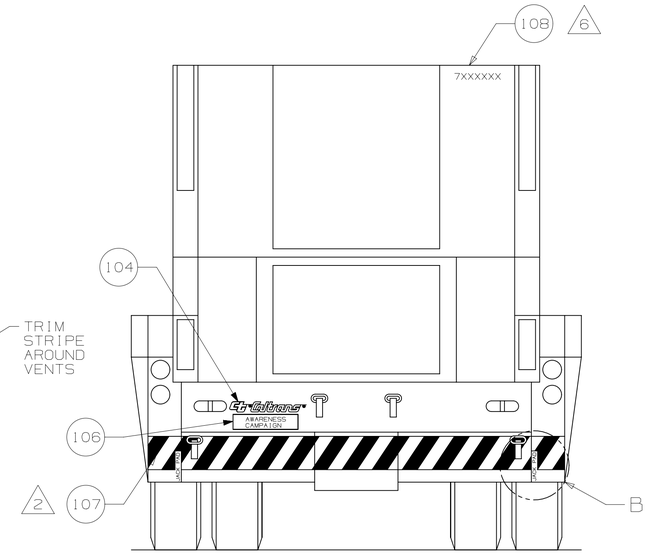

REAR VIEW

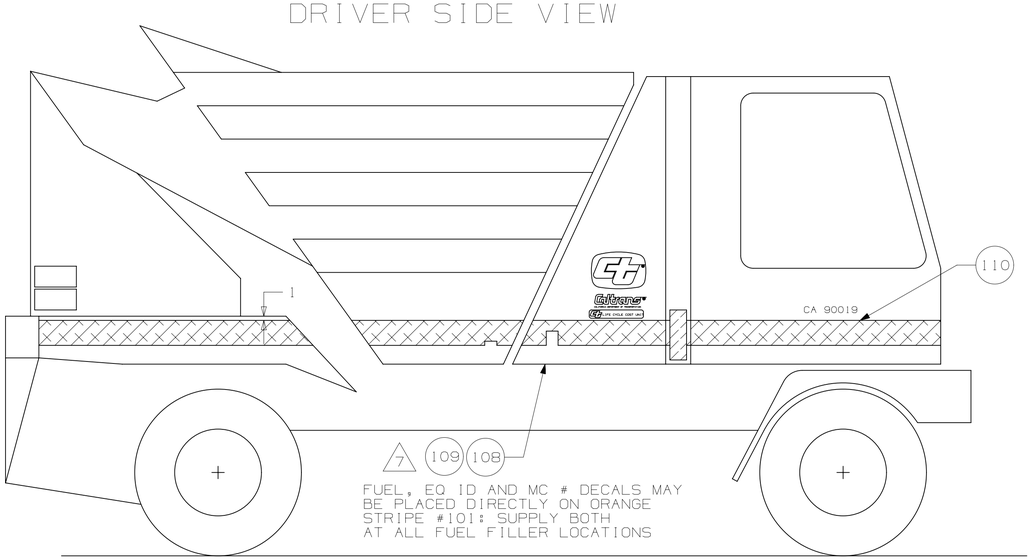

PASSENGER SIDE VIEW

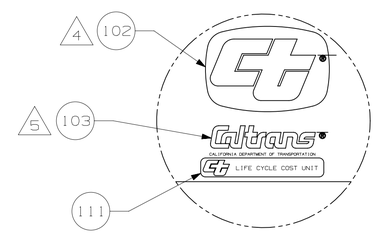

DETAIL A

ITEM 101

ITEM 102

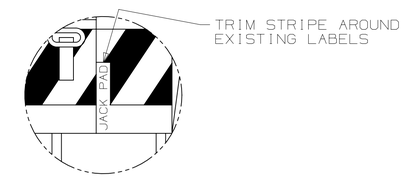

DETAIL B

BILL OF MATERIALS

	ITEM	QTY	DESCRIPTION	CT DWG # / MF'R #	CT STK #
2 3	101	AS REQD	DECAL, ORANGE REFLECTIVE SHEET, 5" WIDE	MATERIAL PER SPECIFICATION	053-4813
4	102	2	DECAL, 'CT' WHITE REFLECTIVE, 9" X 12"	03-D004-01	053-4760
5	103	2	DECAL, 'CALTRANS' BLACK SCRIPT, 2½"	03-D005-01	053-4763
	104	1	DECAL 'CT CALTRANS' ORANGE SCRIP, 3"	03-D014-01	053-4802
	105				
	106	1	APPROVED PUBLIC AWARENESS CAMPAIGN BUMPER STICKER	-	*
2	107	1	STRIPING, ORANGE/WHITE DIAG., REFLECTIVE, 8" × 8'	MATERIAL PER SPECIFICATION	053-2047
6 7	108	1	EQ ID # & MC #- SPECIAL ORDER	-	053-4892
7	109	1	APPROPRIATE FUEL TYPE DECAL: 'UNLEADED FUEL ONLY' 'E-85 OR GASOLINE' 'DIESEL ONLY'	-	053-1510 053-4990 053-1511
	110	2	DECAL 'CA 90019'		053-2362
	111	1	DECAL, LIFE CYCLE (#2 OF 9)	X	053-2459

NOTES:

1 ALL DELINEATION WILL BE IN COMPLIANCE WITH CALTRANS EQUIPMENT QUALITY STANDARDS. GO TO www.dot.ca.gov/hq/eqsc AND CLCK ON THE LINK "EQUIPMENT QUALITY STANDARDS" THEN "FLEET IDENTIFICATION"

2 STRIPING APPLICATION: ALL STICKERS, LABELS AND STRIPING SHALL BE LEVEL, STRAIGHT, BUBBLE-FREE AND DEBRIS-FREE. NO SPLICING OF TAPE OR STRIPING SHALL BE ACCEPTABLE. ALL EDGES ON STRIPING SHALL BE TRIMMED 1/8-3/8 INCH FROM THE EDGES OF DOORS, PANELS, FENDERS, LIGHTS, EMBLEMS, ETC. ORANGE REFLECTIVE SHEETS (ITEM 101) AND STRIPING (ITEM 107) SHALL BE TRIMMED TO MATCH BODY CONTOURS AND CREASES WHEN IT WILL NOT LAY HORIZONTAL. ANY REFLECTIVE TYPE OF STRIPE OR STICKER SHALL NOT BE PULLED FROM THE VEHICLE AND REAPPLIED DURING APPLICATION, SINCE THE REFLECTIVE MATERIAL WILL BE COMPROMISED.

3 PLACE LOWER EDGE OF ITEM 101 APPROXIMATELY 1/2 WAY BETWEEN THE BOTTOM OF THE WINDOW AND THE BOTTOM OF DOOR. MAKE ADJUSTMENT SLIGHTLY AS REQUIRED TO CLEAR FENDER CUTOUTS AND OTHER FEATURES TO IMPROVE EASE OF INSTALLATION. ITEM 101 POSITION MAY BE ADJUSTED SLIGHTY TO ALIGN WITH BODY STRIPE IF POSSIBLE

4 ITEM 102: LOCATE SUCH THAT THE LOGO IS CENTERED ON THE STRIPE (ITEM 101). STRIPE 101 TO BE TRIMMED TO MATCH EDGES OF ITEM 102 AS NEEDED

5 ITEM 103 TO BE LOCATED BELOW THE "CT" LOGO AND ALONG THE VERTICAL CENTERLINE.

6 SEVEN-DIGIT EQUIPMENT IDENTIFICATION NUMBER (EQ. ID #) ALWAYS STARTS WITH A "7" AND SHALL BE AFFIXED TO THE REAR OF THE VEHICLE IN THE UPPER RIGHT CORNER.

7 THE FOLLOWING DECAL GROUP SHALL BE PLACED DIRECTLY ABOVE OR NEXT TO EACH FUEL FILLER IN ORDER FROM TOP TO BOTTOM: FUEL TYPE, EQ. ID, MC#

REV	DATE	DESCRIPTION	BY
G	June 2015	UPDATE TO DECALS W/HIGH REFLECTIVITY	J Payne
F	July 2014	UPDATED PER 7-18-14 MEMO	J Payne
E	Sep 2012	ITEM 104 CT STK # WAS 053-4762 ITEM 105 QTY WAS 2. ADDED FUEL & MC NOTE	J Payne
D	08/11	UPDATED NOTE 2; VIEW C WAS J	SPARTZ
C	09/09	ADDED ITEMS 111,112 & VIEW J	ORTEGA
B	02/06	DRAWING STANDARDIZATION UPDATE; UPDATED MFR'S NAME (WAS JOHNSTON)	SPARTZ
A	03/04	ADD ITEMS 107, 108, & 109	MATSUO

NEXT ASSEMBLY

TOLERANCE-UNLESS OTHERWISE SPECIFIED
DECIMAL ±
FRACTIONAL ±
ANGULAR ±
DRILLED HOLES +
REAMED HOLES ±

STATE OF CALIFORNIA
DEPARTMENT OF TRANSPORTATION

DIVISION OF EQUIPMENT

SWEEPER, HIGH DUMP,
4 CY, DIESEL - DELINEATION

SCALE NONE	DATE 02/01	I-56808a-DE	
DRAWN MATSUO	DESIGNED		
CHECKED	APPROVED	SHEET 1 OF 1 SHEETS	