SURVEY VAN

SIDE INTERIOR VIEW

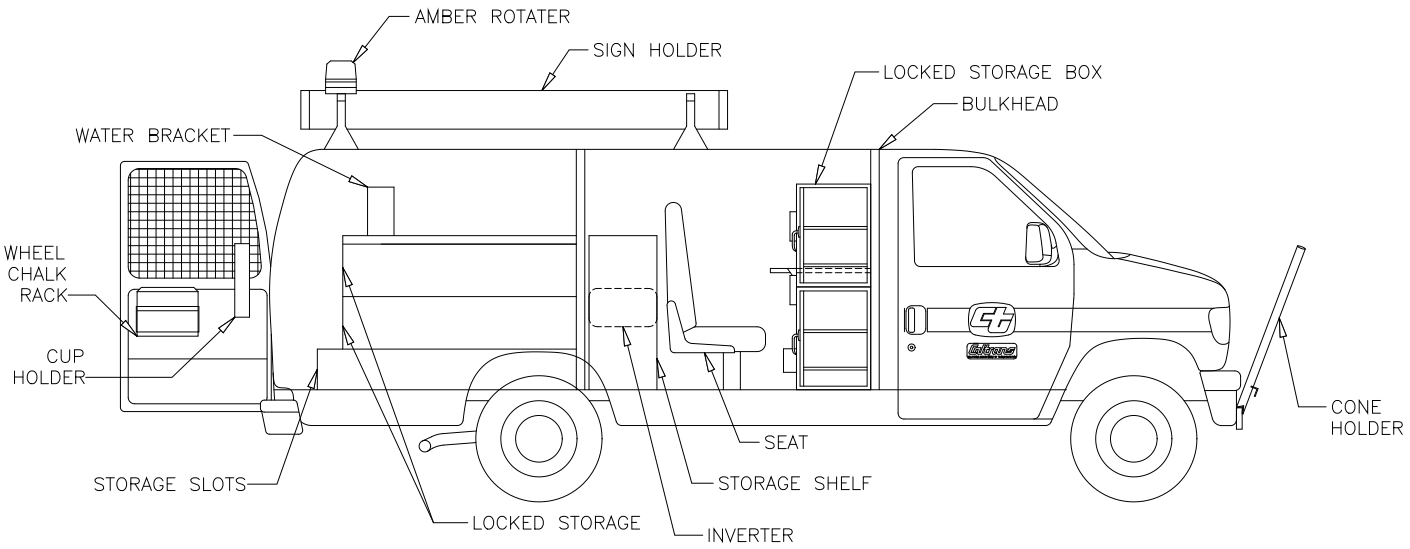

SURVEY VAN

PLAN INTERIOR VIEW

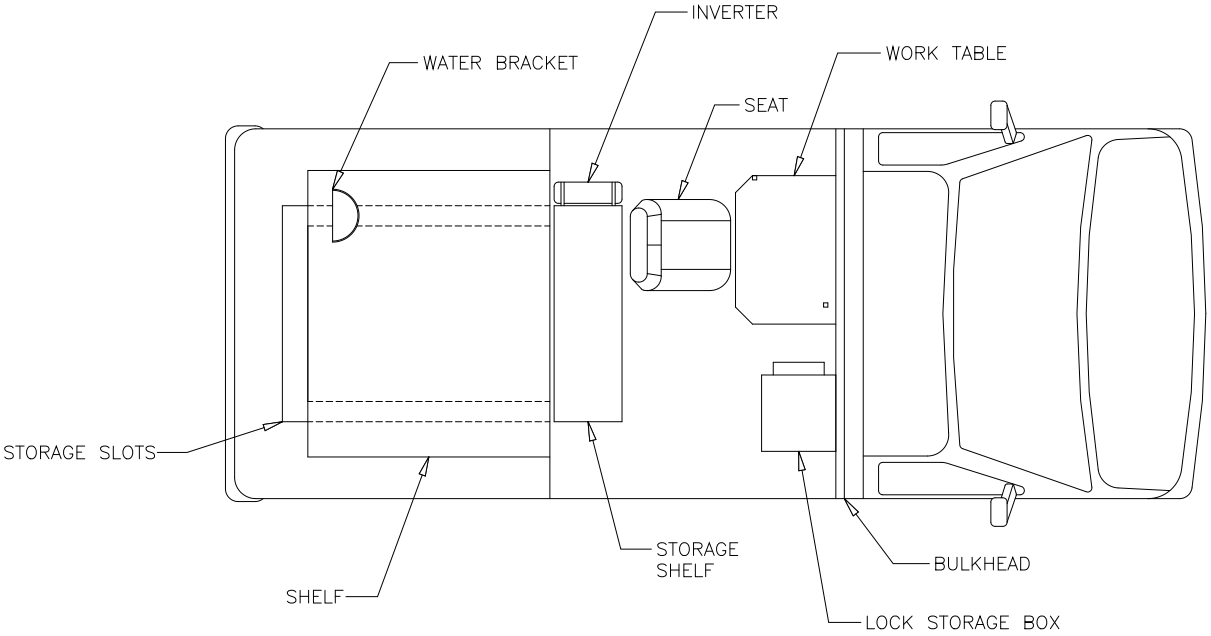

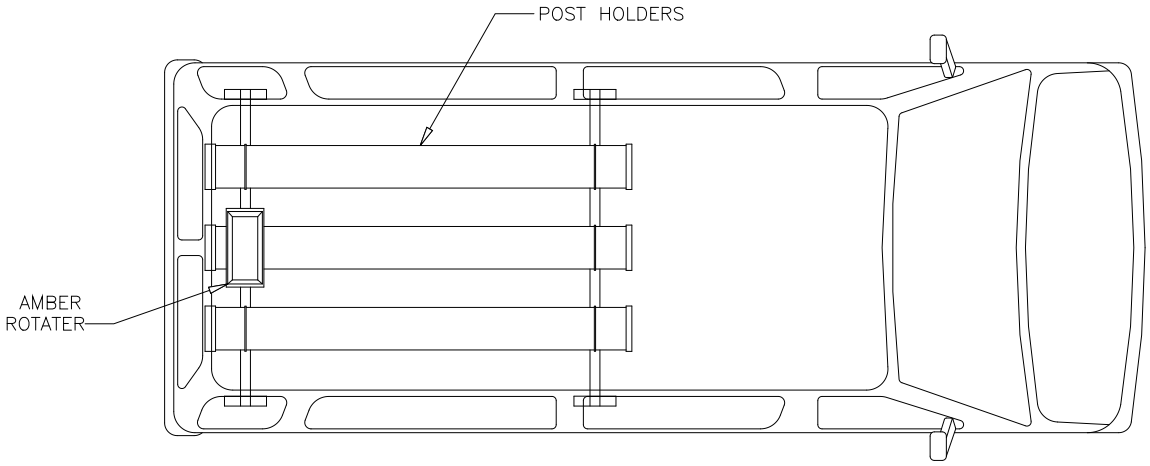
POST HOLDERS
AMBER
ROTATER

SURVEY VAN
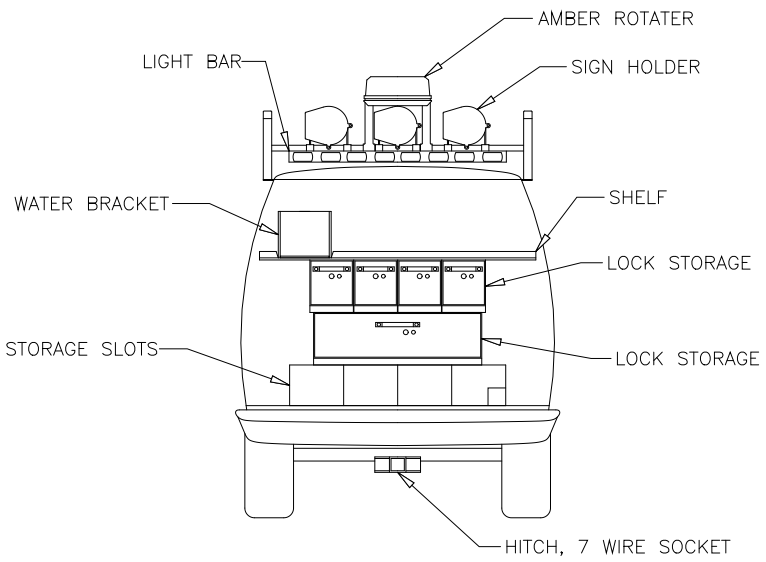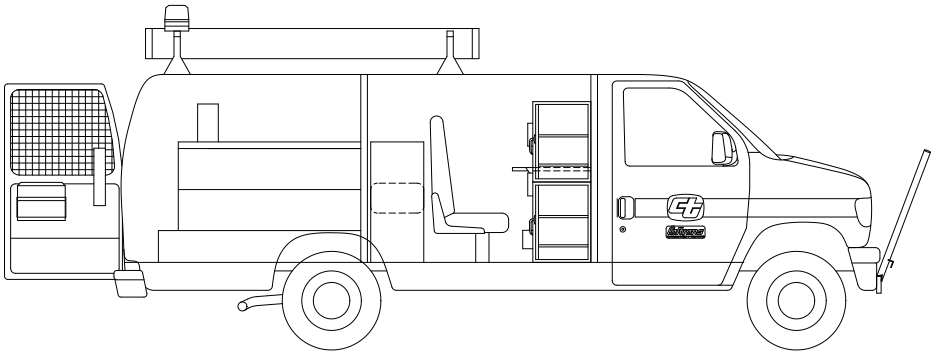
REAR INTERIOR VIEW