ACIM-0053(019)138E

DIST	COUNTY	ROUTE	KILOMETER POST TOTAL PROJECT	SHEET No	TOTAL SHEETS
07	LA	5	36.0	1	23

STATE OF CALIFORNIA
DEPARTMENT OF TRANSPORTATION

PROJECT PLANS FOR CONSTRUCTION
ADJACENT TO STATE HIGHWAY
IN LOS ANGELES COUNTY
IN LOS ANGELES
AT METRO MAINTENANCE STATION

To be supplemented by Standard Plans dated July, 1999

INDEX OF SHEETS

Sheet No.	Description
1	Title and Location Map
2-7	Drainage Plans, Profiles, Details and Quantities
8	Revised Standard Plans

STRUCTURE PLANS

9	General Plan Metro Pilot Storm Water Facility
10-15	Structural Details
16-18	Log of Test Borings
19-20	Mechanical Details
21-23	Electrical Work

THE STANDARD PLANS LIST APPLICABLE TO THIS CONTRACT IS INCLUDED IN THE NOTICE TO CONTRACTORS AND SPECIAL PROVISIONS BOOK.

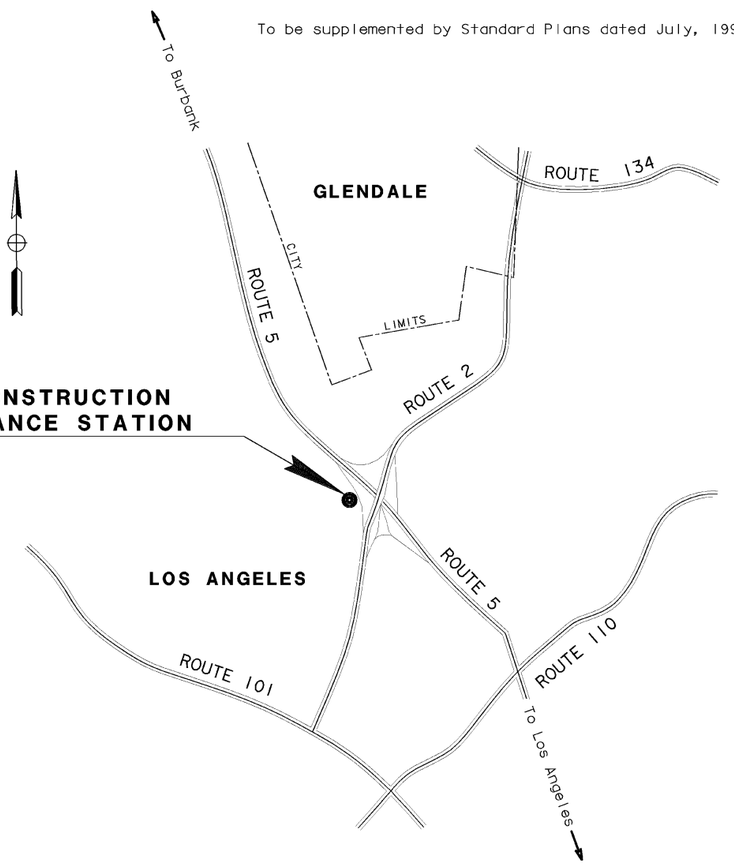

LOCATION OF CONSTRUCTION
METRO MAINTENANCE STATION
KP 36.0
PM 22.5

NO SCALE

LOCATION MAP

The State of California or its officers or agents shall not be responsible for the accuracy or completeness of electronic copies of this plan sheet.

Caltrans now has a web site! To get to the web site, go to: http://www.dot.ca.gov

Caltrans Metric

AS-ADVERTISED

Douglas B Robison 9-25-00
Project Eng'neer Date
Regis-ered Civ'l Eng'neer

REGISTERED PROFESSIONAL ENGINEER DOUGLAS B. ROBISON No. 37109 Exp. 06-30-04 CIVIL STATE OF CALIFORNIA

January 8, 2001
Plans Approval Date

BROWN AND CALDWELL
16735 VON KARMAN
IRVINE, CA 92606

Contract No. **07-200004**

PROJECT ENGINEER: DOUG ROBISON
DESIGN OVERSIGHT APPROVAL — PRINTED NAME: REFUGIO DOMINGUEZ — SIGNATURE — REGISTRATION NO.: 50820 — DATE: 09/30/01

Approved as to Impact on State facilities and conformance with applicable state standards and practices and that technical oversight was performed as described in the California Department of Transportation A & E Consultant Service Manual.

The Contractor shall possess the Class (or Classes) of license as specified in the ''Notice to Contractors''.

LAST REVISION 00-00-00 — DATE PLOTTED => 08-FEB-2001 TIME PLOTTED => 12:51

FORM DC-OE-93-PF (REV. 3/88)

FOR REDUCED PLANS ORIGINAL SCALE IS IN MILLIMETERS 0 20 40 60 80

USERNAME => trclew
DGN FILE -> 27801TITLE

CU 07279 EA 200001

NOTE:
FOR COMPLETE R/W AND ACCURATE ACCESS DATA, SEE R/W RECORD MAPS AT DISTRICT OFFICE.

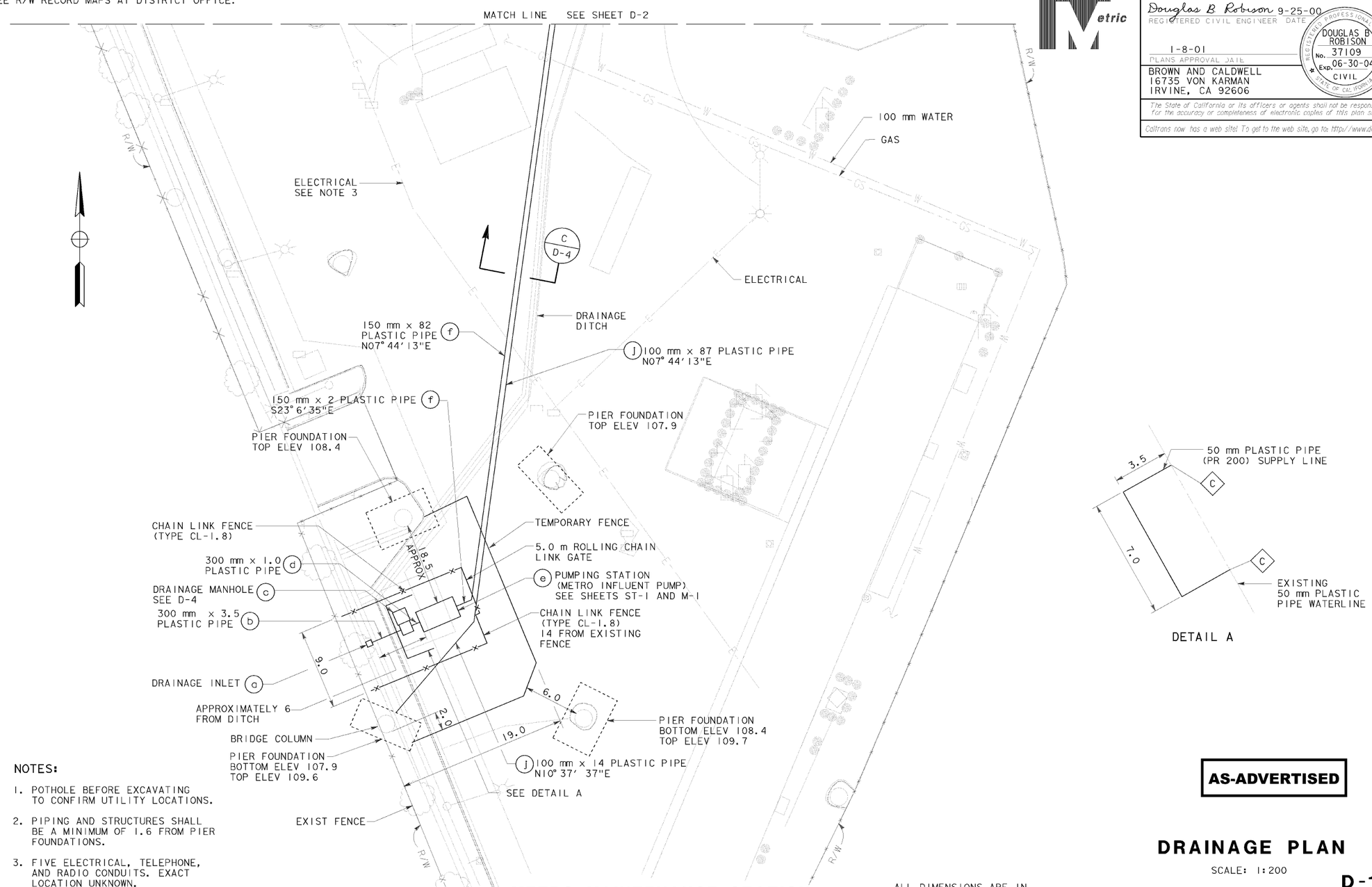

NOTES:

1. POTHOLE BEFORE EXCAVATING TO CONFIRM UTILITY LOCATIONS.
2. PIPING AND STRUCTURES SHALL BE A MINIMUM OF 1.6 FROM PIER FOUNDATIONS.
3. FIVE ELECTRICAL, TELEPHONE, AND RADIO CONDUITS. EXACT LOCATION UNKNOWN.

METRO MAINTENANCE STATION

ALL DIMENSIONS ARE IN METERS UNLESS OTHERWISE SHOWN

DIST	COUNTY	ROUTE	KILOMETER POST TOTAL PROJECT	SHEET NO.	TOTAL SHEETS
07	LA	5	36.0	2	23

Douglas B Robison 9-25-00
REGISTERED CIVIL ENGINEER DATE

1-8-01
PLANS APPROVAL DATE

BROWN AND CALDWELL
16735 VON KARMAN
IRVINE, CA 92606

REGISTERED PROFESSIONAL ENGINEER DOUGLAS B ROBISON No. 37109 Exp. 06-30-04 CIVIL STATE OF CALIFORNIA

The State of California or its officers or agents shall not be responsible for the accuracy or completeness of electronic copies of this plan sheet.

Caltrans now has a web site! To get to the web site, go to: http://www.dot.ca.gov

AS-ADVERTISED

DRAINAGE PLAN

SCALE: 1:200

D-1

STATE OF CALIFORNIA - DEPARTMENT OF TRANSPORTATION
Caltrans PROJECT DEVELOPMENT

DESIGN OVERSIGHT: REFUGIO DOMINGUEZ

CALCULATED/ DESIGNED BY	DBR	DATE 6/00	REVISED BY	DBR
CHECKED BY	RMF	6/00	DATE REVISED	8/00

LAST REVISION 00-00-00 DATE PLOTTED => 08-FEB-2001 TIME PLOTTED => 12:5

FOR REDUCED PLANS ORIGINAL SCALE IN MILLIMETERS 0 20 40 60 80

USERNAME => tclew
DGN FILE => 720000101.dgn

CU 07279 | EA 200001

DIST	COUNTY	ROUTE	KILOMETER POST TOTAL PROJECT	SHEET NO.	TOTAL SHEETS
07	LA	5	36.0	3	23

Douglas B. Robison 9-25-00
REGISTERED CIVIL ENGINEER DATE

1-8-01
PLANS APPROVAL DATE

REGISTERED PROFESSIONAL ENGINEER
DOUGLAS B. ROBISON
No. 37109
Exp. 06-30-04
CIVIL
STATE OF CALIFORNIA

BROWN AND CALDWELL
16735 VON KARMAN
IRVINE, CA 92606

The State of California or its officers or agents shall not be responsible for the accuracy or completeness of electronic copies of this plan sheet.

Caltrans now has a web site! To get to the web site, go to: http://www.dot.ca.gov

Caltrans Metric

NOTE:
FOR COMPLETE R/W AND ACCURATE ACCESS DATA, SEE R/W RECORD MAPS AT DISTRICT OFFICE.

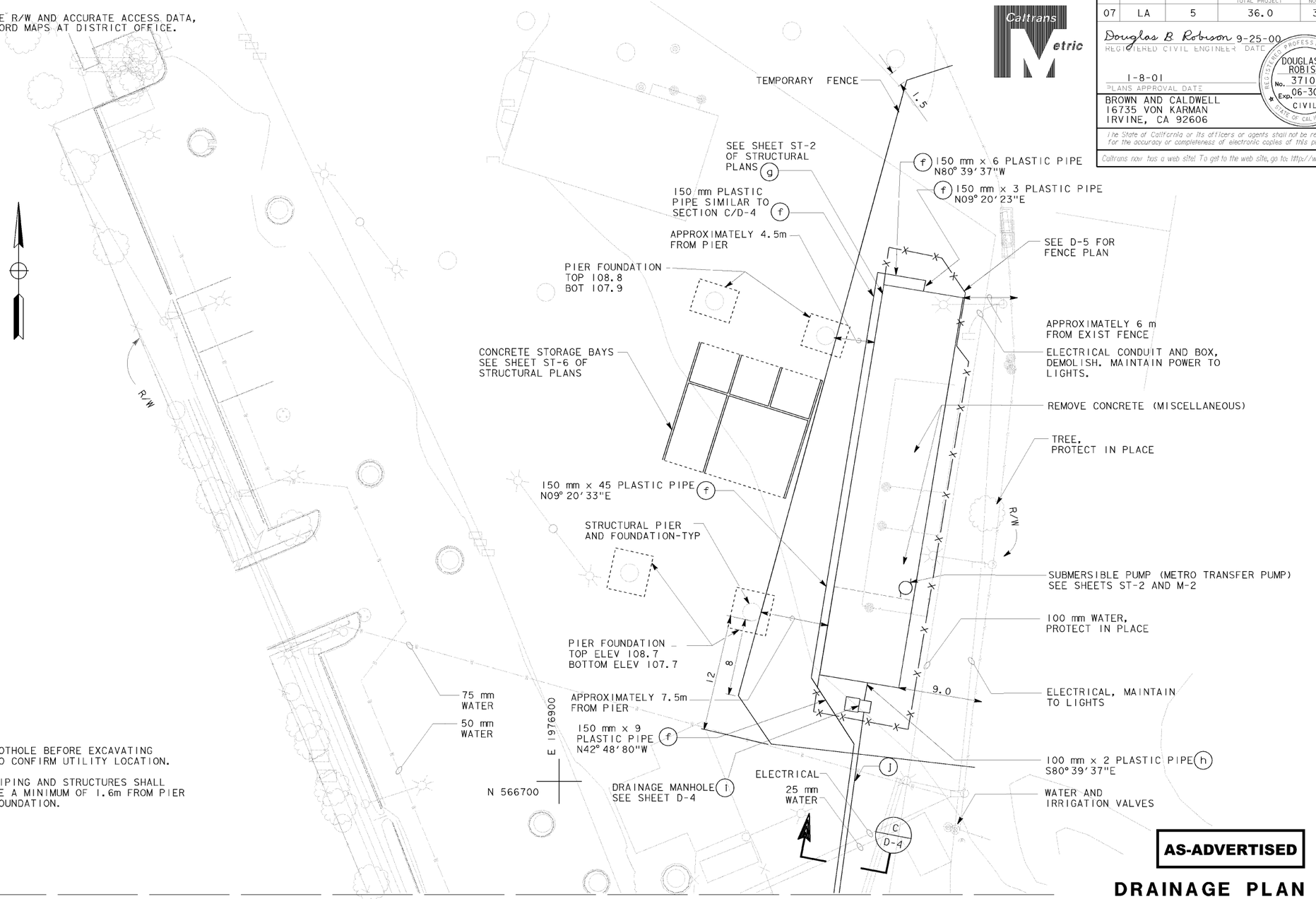

NOTE:

1. POTHOLE BEFORE EXCAVATING TO CONFIRM UTILITY LOCATION.
2. PIPING AND STRUCTURES SHALL BE A MINIMUM OF 1.6m FROM PIER FOUNDATION.

ALL DIMENSIONS ARE IN METERS UNLESS OTHERWISE SHOWN

AS-ADVERTISED

DRAINAGE PLAN

SCALE: 1:200

D-2

STATE OF CALIFORNIA - DEPARTMENT OF TRANSPORTATION
Caltrans PROJECT DEVELOPMENT

DESIGN OVERSIGHT
REFUGIO DOMINGUEZ

CALCULATED/ DESIGNED BY	DBR	DATE 6/00	REVISED BY	DBR
CHECKED BY	RMF	6/00	DATE REVISED	8/00

FOR REDUCED PLANS 0 20 40 60 80

USERNAME => trclew

CU 07279 EA 200001

LAST REVISION 00-00-00 DATE PLOTTED => 08-FEB-2001

DIST	COUNTY	ROUTE	KILOMETER POST TOTAL PROJECT	SHEET NO.	TOTAL SHEETS
07	LA	5	36.0	4	23

Douglas B Robison 9-25-00
REGISTERED CIVIL ENGINEER DATE

1-8-01
PLANS APPROVAL DATE

REGISTERED PROFESSIONAL ENGINEER
DOUGLAS B ROBISON
No. 37109
Exp. 06-30-04
CIVIL
STATE OF CALIFORNIA

BROWN AND CALDWELL
16735 VON KARMAN
IRVINE, CA 92606

The State of California or its officers or agents shall not be responsible for the accuracy or completeness of electronic copies of this plan sheet.

Caltrans now has a web site! To get to the web site, go to: http://www.dot.ca.gov

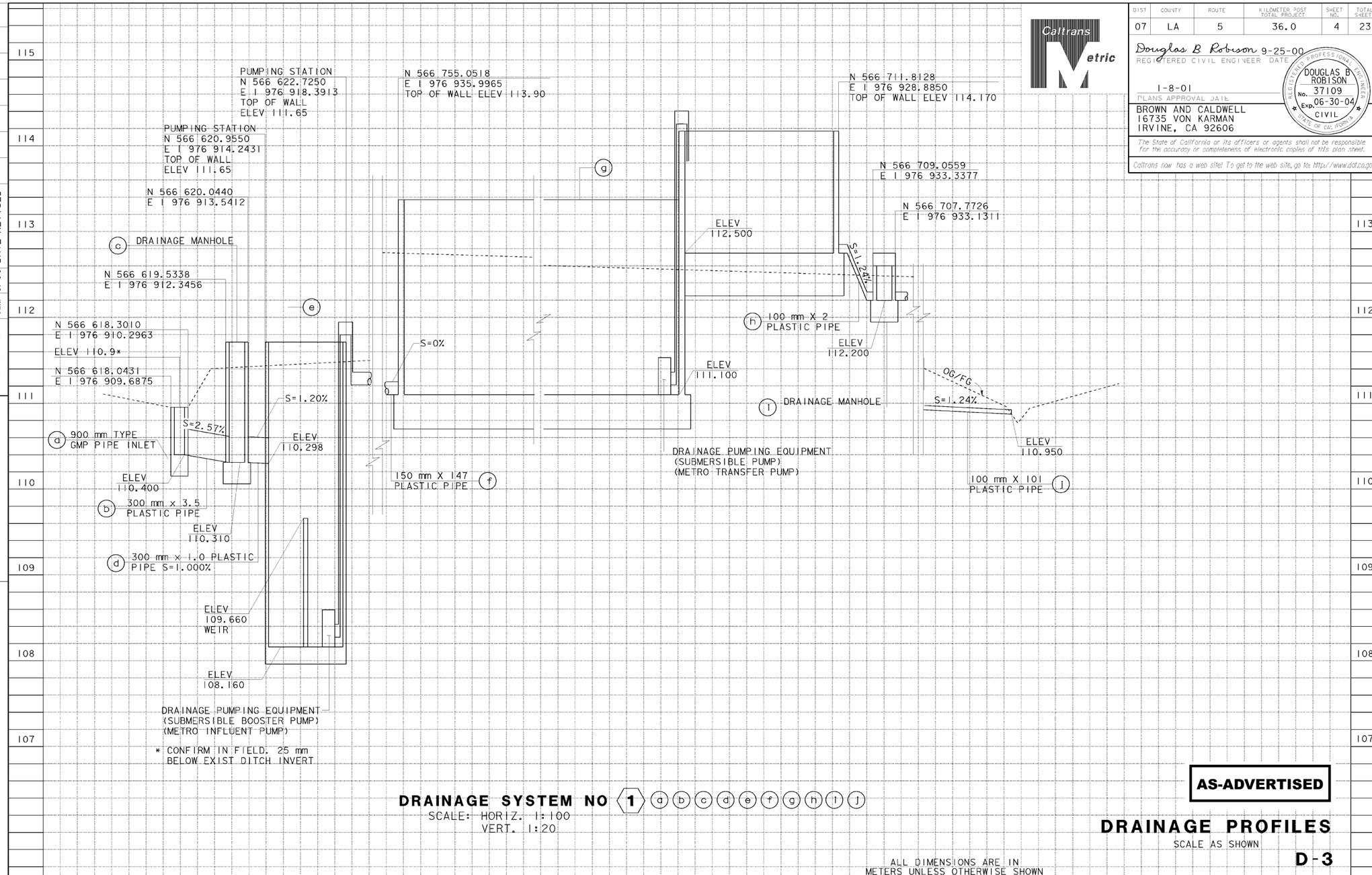

DRAINAGE SYSTEM NO 1 (d) (b) (c) (d) (e) (f) (g) (h) (i) (j)
SCALE: HORIZ. 1:100
VERT. 1:20

ALL DIMENSIONS ARE IN
METERS UNLESS OTHERWISE SHOWN

AS-ADVERTISED

DRAINAGE PROFILES

SCALE AS SHOWN

D-3

Station	
m^3	Exc
	Emb

STATE OF CALIFORNIA - DEPARTMENT OF TRANSPORTATION
Caltrans PROJECT DEVELOPMENT

DESIGN OVERSIGHT
REFUGIO DOMINGUEZ

CALCULATED/ DESIGNED BY	DATE 6/00	REVISED BY	DATE REVISED	DBR
DBR	6/00	RMF	6/00	8/00
CHECKED BY				

LAST REVISION 00-00-00
DATE PLOTTED => 08-FEB-2001
TIME PLOTTED => 12:15

FOR REDUCED PLANS
ORIGINAL SCALE IN MILLIMETERS 0 20 40 60 80

USERNAME => t-clew
DGN FILE -> 720000103.dgn

CU 07279 | EA 200001

DIST	COUNTY	ROUTE	KILOMETER POST TOTAL PROJECT	SHEET NO.	TOTAL SHEETS
07	LA	5	36.0	5	23

Douglas B Robison 9-25-00
REGISTERED CIVIL ENGINEER DATE

1-8-01
PLANS APPROVAL DATE

REGISTERED PROFESSIONAL ENGINEER
DOUGLAS B ROBISON
No. 37109
Exp. 06-30-04
CIVIL
STATE OF CALIFORNIA

BROWN AND CALDWELL
16735 VON KARMAN
IRVINE, CA 92606

The State of California or its officers or agents shall not be responsible for the accuracy or completeness of electronic copies of this plan sheet.

Caltrans now has a web site! To get to the web site, go to: http://www.dot.ca.gov

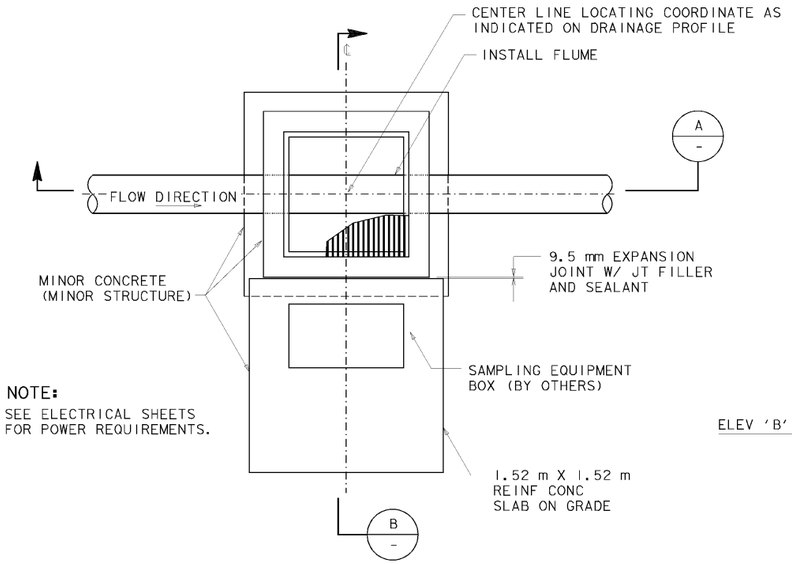

NOTE:
SEE ELECTRICAL SHEETS FOR POWER REQUIREMENTS.

DRAINAGE MANHOLE PLAN
DRAINAGE SYSTEM NO 1 (c)(i)
SCALE 1:20

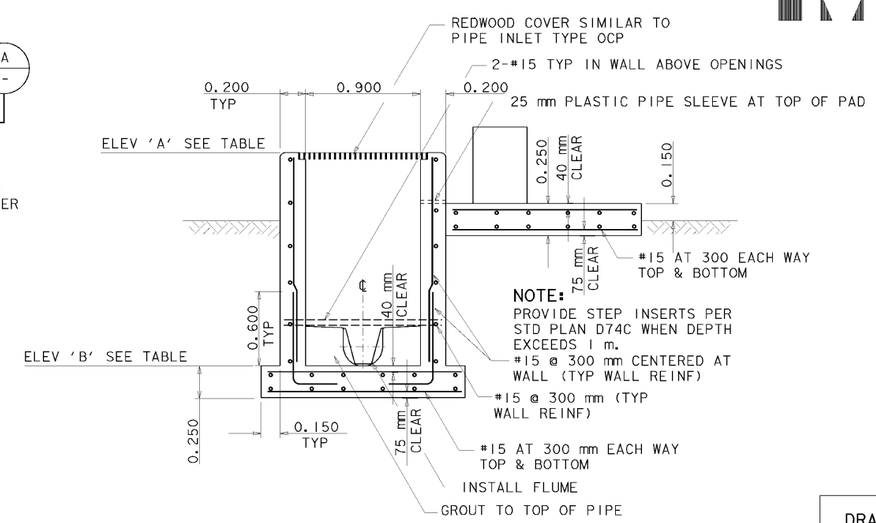

NOTE:
PROVIDE STEP INSERTS PER STD PLAN D74C WHEN DEPTH EXCEEDS 1 m.

SECTION (B / -)
SCALE 1:20

NOTE:
SEE NOTE C2 ON SHEET ST-5 FOR CONCRETE COVER OVER REINFORCING BARS.

DRAINAGE UNIT	ELEVATION 'A'	ELEVATION 'B'
(c)	111.750*	110.310
(i)	112.800*	112.200

* VERIFY-PLACE 0.5 m ABOVE EXISTING GRADE

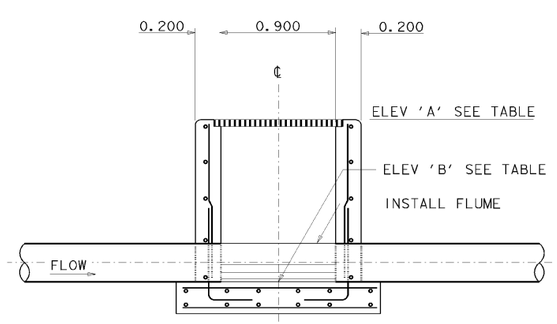

SECTION (A / -)
SCALE 1:20

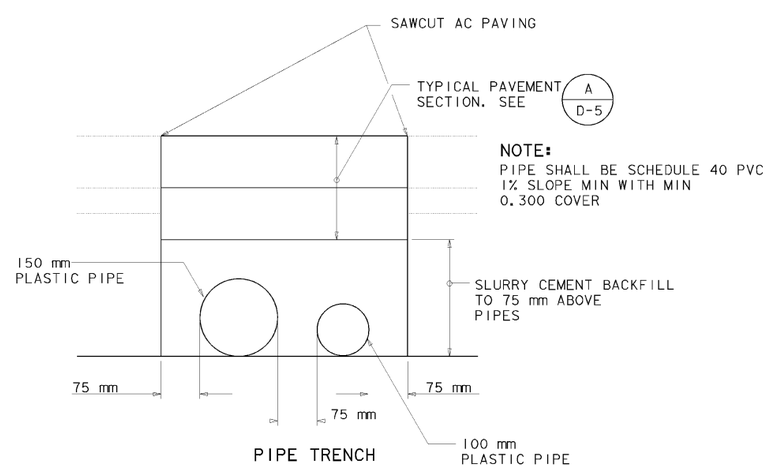

NOTE:
PIPE SHALL BE SCHEDULE 40 PVC
1% SLOPE MIN WITH MIN
0.300 COVER

PIPE TRENCH

SECTION (C D-1 / C D-2)
SCALE 1:20

ALL DIMENSIONS ARE IN METERS UNLESS OTHERWISE SHOWN

AS-ADVERTISED

DRAINAGE DETAILS
SCALE AS SHOWN
D-4

STATE OF CALIFORNIA - DEPARTMENT OF TRANSPORTATION
Caltrans PROJECT DEVELOPMENT

DESIGN OVERSIGHT
REFUGIO DOMINGUEZ

CALCULATED/ DESIGNED BY	DATE	REVISED BY	DATE
DBR	6/00	DBR	8/00
CHECKED BY		DATE REVISED	
RMF	6/00		

FOR REDUCED PLANS ORIGINAL SCALE IN MILLIMETERS 0 20 40 60 80

USERNAME => t-clew
DGN FILE -> 720000104.dgn

CU 07279 | EA 200001

LAST REVISION 00-00-00
DATE PLOTTED => 08-FEB-2001
TIME PLOTTED => 12:15

DIST	COUNTY	ROUTE	KILOMETER POST TOTAL PROJECT	SHEET NO.	TOTAL SHEETS
07	LA	5	36.0	6	23

Douglas B Robison 9-25-00
REGISTERED CIVIL ENGINEER DATE

1-8-01
PLANS APPROVAL DATE

REGISTERED PROFESSIONAL ENGINEER
DOUGLAS B ROBISON
No. 37109
Exp. 06-30-04
CIVIL
STATE OF CALIFORNIA

BROWN AND CALDWELL
16735 VON KARMAN
IRVINE, CA 92606

The State of California or its officers or agents shall not be responsible for the accuracy or completeness of electronic copies of this plan sheet.

Caltrans now has a web site! To get to the web site, go to: http://www.dot.ca.gov

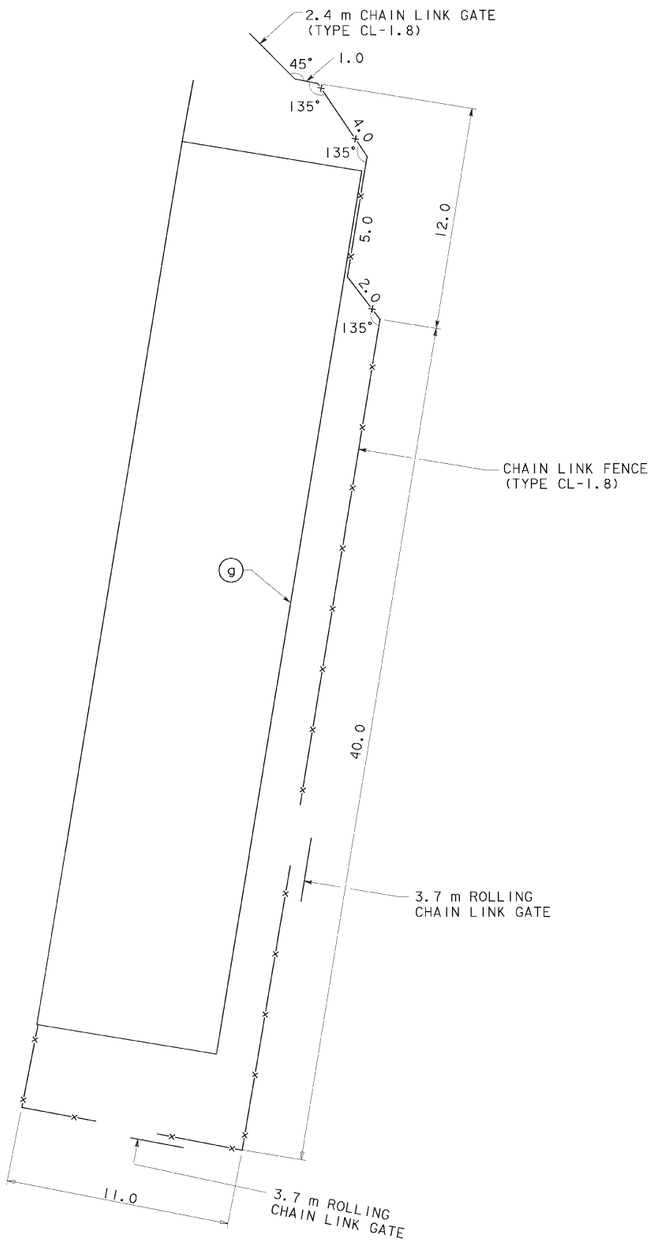

FENCE PLAN

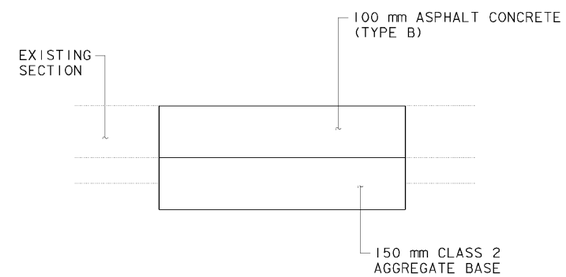

TYPICAL PAVEMENT

SECTION A/-
SCALE: 1:20

ALL DIMENSIONS ARE IN METERS UNLESS OTHERWISE SHOWN

AS-ADVERTISED

DRAINAGE DETAILS

SCALE AS SHOWN

D-5

STATE OF CALIFORNIA - DEPARTMENT OF TRANSPORTATION
Caltrans PROJECT DEVELOPMENT

DESIGN OVERSIGHT
REFUGIO DOMINGUEZ

CALCULATED/ DESIGNED BY	DBR	DATE 6/00	REVISED BY	DBR
CHECKED BY	RMF	6/00	DATE REVISED	8/00

LAST REVISION 00-00-00
DATE PLOTTED => 08-FEB-2001
TIME PLOTTED => 12:55

FOR REDUCED PLANS
ORIGINAL SCALE IN MILLIMETERS 0 20 40 60 80

USERNAME => t-clew
DGN FILE -> 720000105.dgn

CU 07279 | EA 200001

DIST	COUNTY	ROUTE	KILOMETER POST TOTAL PROJECT	SHEET NO.	TOTAL SHEETS
07	LA	5	36.0	7	23

Douglas B Robison 9-25-00
REGISTERED CIVIL ENGINEER DATE

1-8-01
PLANS APPROVAL DATE

REGISTERED PROFESSIONAL ENGINEER
DOUGLAS B ROBISON
No. 37109
Exp. 06-30-04
CIVIL
STATE OF CALIFORNIA

BROWN AND CALDWELL
16735 VON KARMAN
IRVINE, CA 92606

The State of California or its officers or agents shall not be responsible for the accuracy or completeness of electronic copies of this plan sheet.

Caltrans now has a web site! To get to the web site, go to: http://www.dot.ca.gov

ROADWAY QUANTITIES

LOCATION OF CONSTRUCTION	ASPHALT CONCRETE (TYPE B)	CLASS 2 AGGREGATE BASE	TEMPORARY FENCE	CHAIN LINK FENCE (TYPE CL-0.75 VINYL CLAD)	CHAIN LINK FENCE (TYPE CL-1.1 VINYL CLAD)	CHAIN LINK FENCE (TYPE CL-1.8)	2.1 CHAIN LINK GATE (TYPE-CL1.1)	2.4 m CHAIN LINK GATE (TYPE CL-1.8)	ROLLING CHAIN LINK GATE
	TONNE	m3	m	m	m	m	EA	EA	EA
METRO MAINTENANCE STATION	44	28	150	44	9	158	2	1	3

DRAINAGE QUANTITIES

DRAINAGE SYSTEM NO	DRAINAGE UNIT	MINOR CONCRETE (MINOR STRUCTURE)	MISCELLANEOUS IRON AND STEEL	INSTALL FLUME	DRAINAGE INLET	REDWOOD COVER (N)	150 mm PLASTIC PIPE	100 mm PLASTIC PIPE	300 mm PLASTIC PIPE (N)	HEIGHT OF INLET "H"	DRAINAGE PLAN SHEET NO	DRAINAGE SYSTEM NO	DRAINAGE UNIT	DESCRIPTION
		m3	kg	EA	EA	EA	m	m	m	m				
1	a	0.2	107		1					0.50	D-1	1	a	900 mm TYPE GMP
	b								3.50		D-1		b	300 mm PLASTIC PIPE (INCL WITH 1c)
	c	2.7		1		1				1.44	D-1		c	DRAINAGE MANHOLE WITH PAD
	d								1		D-1		d	300 mm PLASTIC PIPE (INCL WITH 1c)
	f						147				D-1		f	150 mm PLASTIC PIPE
	h							2			D-2		h	100 mm PLASTIC PIPE
	1	1.8		1		1				0.60	D-2		1	DRAINAGE MANHOLE WITH PAD
	j							101			D-1		j	100 mm PLASTIC PIPE
SHEET	TOTAL	4.7	107	2	1	2	147	103	4.50					

(N) - NOT A SEPARATE PAY ITEM, FOR INFORMATION ONLY

AS-ADVERTISED

DRAINAGE AND ROADWAY QUANTITIES

D-6

STATE OF CALIFORNIA - DEPARTMENT OF TRANSPORTATION
Caltrans PROJECT DEVELOPMENT

DESIGN OVERSIGHT
REFUGIO DOMINGUEZ

CALCULATED/DESIGNED BY	DBR	DATE 6/00	REVISED BY	DBR
CHECKED BY	RMF	6/00	DATE REVISED	8/00

LAST REVISION 00-00-00 | DATE PLOTTED => 08-FEB-2001 | TIME PLOTTED => 12:50

FOR REDUCED PLANS
ORIGINAL SCALE IN MILLIMETERS 0 20 40 60 80

USERNAME => t-clew
DGN FILE -> 7200001106.dgn

CU 07279 | EA 200001

DIST	COUNTY	ROUTE	KILOMETER POST TOTAL PROJECT	SHEET NO.	TOTAL SHEETS
07	LA	5	36.0	8	23

REGISTERED CIVIL ENGINEER

October 26, 2000
PLANS APPROVAL DATE

REGISTERED PROFESSIONAL ENGINEER
Roy A. Peterson
No. C47715
Exp. 12-31-03
CIVIL
STATE OF CALIFORNIA

The State of California or its officers or agents shall not be responsible for the accuracy or completeness of electronic copies of this plan sheet.

To accompany plans dated 1-8-01

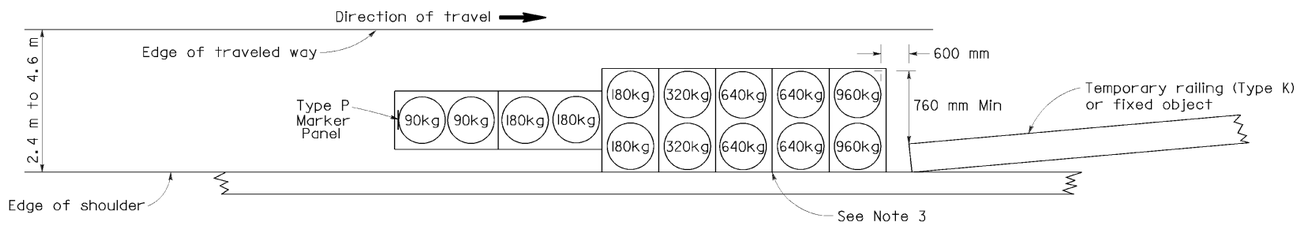

ARRAY 'TSI4'
Approach speed 100 km/h or less
See Note 9

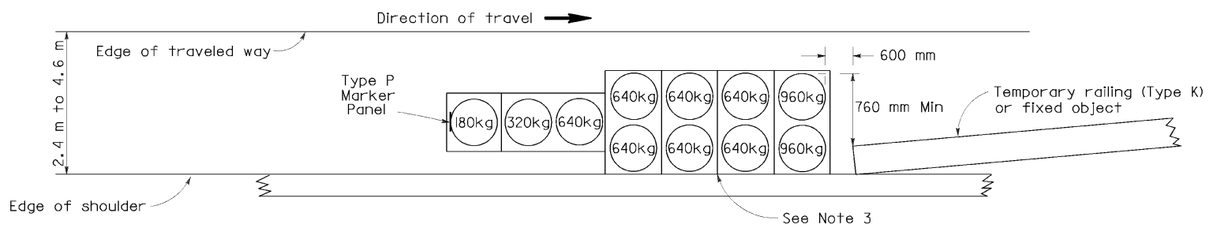

ARRAY 'TSI1'
Approach speed 70 km/h or less
See Note 9

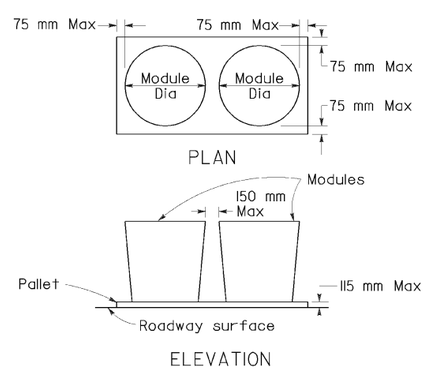

CRASH CUSHION PALLET DETAIL

NOTES

1. (XXX) Indicates sand filled module location and mass of sand in kilograms for each module. Module spacing is based on the greater diameter of the module.
2. All sand masses are nominal.
3. The temporary crash cushion arrays shown on this plan shall be used only in locations where there will be traffic on one side of the temporary crash cushion array.
4. If the fixed object or approach end of the temporary railing is less than 4.60 meters from the edge of traveled way, a temporary crash cushion is required.
5. Temporary crash cushion arrays shall not encroach on the traveled way.
6. Arrays for median shoulders shall conform to details shown on this plan for outside shoulders.
7. Place the Type P marker panel so that the bottom of the panel rest upon the pallet and faces traffic.
8. Refer to Standard Plan A73B for marker details.
9. For shoulder widths less than 2.4 m, appropriate approved crash cushion protection, other than sand filled modules, shall be provided at fixed objects and at approach ends of temporary railing. The specific type of crash cushion shall be as shown on the project plans or as specified in the Special Provisions, or if not shown on the project plans or specified in the Special Provisions, shall be as approved by the Engineer.
10. Approach speeds indicated conform to NCHRP 350 Report criteria.

AS-ADVERTISED

STATE OF CALIFORNIA
DEPARTMENT OF TRANSPORTATION

TEMPORARY CRASH CUSHION, SAND FILLED (SHOULDER INSTALLATIONS)

NO SCALE

ALL DIMENSIONS ARE IN MILLIMETERS UNLESS OTHERWISE SHOWN

RSP T2 DATED OCTOBER 26, 2000 SUPERSEDES STANDARD PLAN T2 DATED JULY 1, 1999-PAGE 157 OF THE STANDARD PLANS BOOK DATED JULY 1999.

REVISED STANDARD PLAN RSP T2

DIST.	COUNTY	ROUTE	KILOMETER POST TOTAL PROJECT	SHEET NO.	TOTAL SHEETS
07	LA	5	36.0	9	23

Caltrans Metric

Douglas B. Robison 8/1/00
REGISTERED ENGINEER - CIVIL

1-8-01
PLANS APPROVAL DATE

REGISTERED PROFESSIONAL ENGINEER DOUGLAS B. ROBISON No. 37109 Exp. 06-30-04 CIVIL STATE OF CALIFORNIA

The State of California or its officers or agents shall not be responsible for the accuracy or completeness of electronic copies of this plan sheet.

Caltrans now has a web site! To get to the web site, go to: http://www.dot.ca.gov

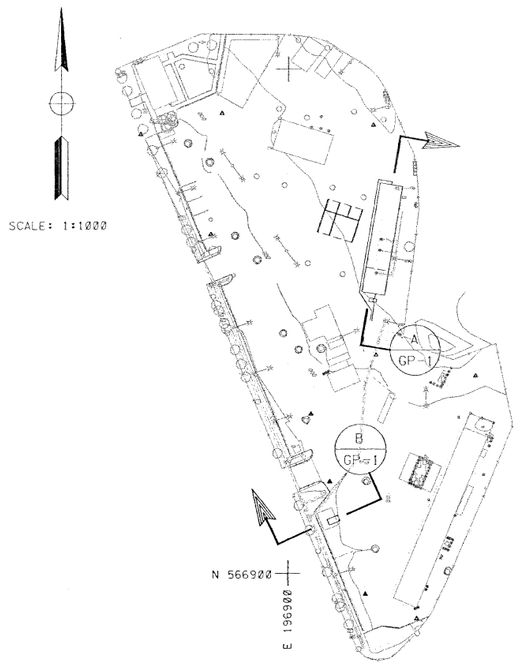

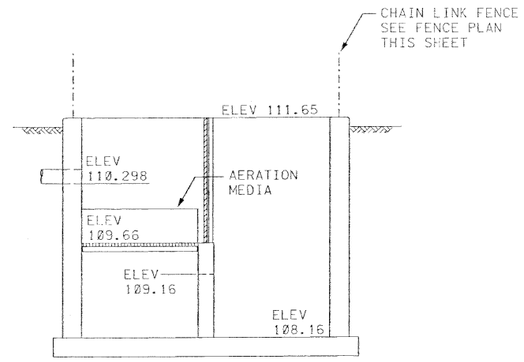

SECTION A / GP-1
SCALE: 1:20

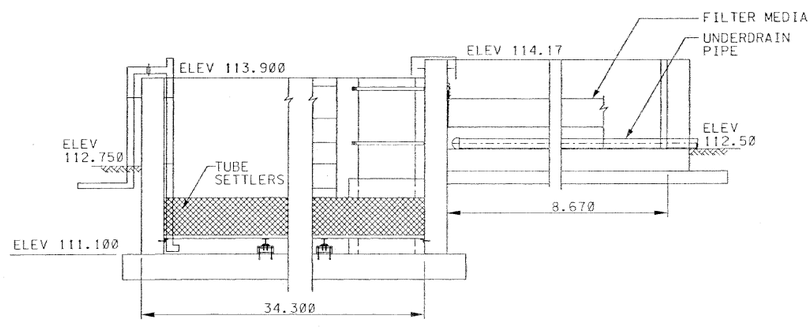

SECTION B / GP-1
SCALE: 1:40

INDEX OF SHEETS

SHEET NO.		DESCRIPTION
1	GP	GENERAL PLAN
		STRUCTURAL
2	ST-1	STRUCTURAL DETAILS
3	ST-2	STRUCTURAL DETAILS
4	ST-3	STRUCTURAL DETAILS
5	ST-4	STRUCTURAL DETAILS
6	ST-5	STRUCTURAL DETAILS
7	ST-6	STRUCTURAL DETAILS
8	ST-7	LOG OF TEST BORINGS
9	ST-8	LOG OF TEST BORINGS
10	ST-9	LOG OF TEST BORINGS
		MECHANICAL
11	M-1	MECHANICAL DETAILS
12	M-2	MECHANICAL DETAILS
		ELECTRICAL
13	E-1	ELECTRICAL PLAN
14	E-2	ELECTRICAL PLAN
15	E-3	ELECTRICAL LEGEND, NOTES AND DETAILS

STANDARD PLANS DATED JULY 1999

A85	CHAIN LINK FENCE
B3-9	RETAINING WALL DETAILS NO. 2

ABBREVIATIONS

CONT	CONTINUE
DET	DETAIL
ELEV	ELEVATION
JT	JOINT
MAX	MAXIMUM
m	METERS
mm	MILLIMETERS
NO	NUMBER
REINF	REINFORCED
R/W	RIGHT OF WAY

AS-ADVERTISED

LEGEND

(h)	ROADWAY DRAINAGE UNIT (SEE SHEET D-6)
(1)	NOTES. SEE UPPER LEFT CORNER OF SHEET.

QUANTITIES

STRUCTURE EXCAVATION (BRIDGE)	880	m3
STRUCTURE BACKFILL (BRIDGE)	190	m3
STRUCTURAL CONCRETE, BRIDGE	322	m3
BAR REINFORCING STEEL (BRIDGE)	31,630	kg
900 MM PLASTIC PIPE RISER	2.8	m
DRAINAGE PUMPING EQUIPMENT	LUMP SUM	
PUMPING PLANT METAL WORK	423	kg
ELECTRICAL WORK	LUMP SUM	

EQUIPMENT SCHEDULE

PUMP	FLOW, m^3/hr	TOTAL DYNAMIC HEAD, m	KILOWATT, MAXIMUM	MOTOR SPEED, MAXIMUM	VOLTAGE/ PHASE	DISCHARGE DIAMETER, mm
INFLUENT PUMP	90.8 113.6 136.3	9.1 8.2 7.0	5.6	1800	208/3	150
TRANSFER PUMP	13.6 17.3 20.4	4.9 4.6 3.7	0.4	1800	120/1	38

GP-1

ALL DIMENSIONS ARE IN METERS UNLESS OTHERWISE SHOWN

Patricia McCauley
DESIGN OVERSIGHT
8-23-00
SIGN OFF DATE

	BY	CHECKED		BY	CHECKED
DESIGN	DBR	RMF			
DETAILS	DBR	RMF	LAYOUT	DBR	RMF
QUANTITIES	EQ	RN	SPECIFICATIONS	DBR	PLANS AND SPECS COMPARED DBR

PREPARED FOR THE
STATE OF CALIFORNIA
DEPARTMENT OF TRANSPORTATION

CU 07274
EA 200004

BRIDGE NO. N/A
KILOMETER POST 36.0

METRO PILOT STORM WATER FACILITY
GENERAL PLAN

DISREGARD PRINTS BEARING EARLIER REVISION DATES

REVISION DATES (PRELIMINARY STAGE ONLY): 3/00 6/00 8/00 8/14/00

SHEET 1 OF 15

US DOT 2147A (METRIC) (REV. 2/25/97)

ORIGINAL SCALE IN MILLIMETERS FOR REDUCED PLANS 0 10 20 30 40 50 60 70 80 90 100

GeneralPlan-01of15.tif

DIST.	COUNTY	ROUTE	KILOMETER POST TOTAL PROJECT	SHEET NO.	TOTAL SHEETS
07	LA	5	36.0	10	23

Caltrans Metric

Douglas B. Robison 8/1/00
REGISTERED ENGINEER - CIVIL

1-8-01
PLANS APPROVAL DATE

REGISTERED PROFESSIONAL ENGINEER DOUGLAS B. ROBISON No. 37109 Exp. 06-30-04 CIVIL STATE OF CALIFORNIA

The State of California or its officers or agents shall not be responsible for the accuracy or completeness of electronic copies of this plan sheet.

Caltrans now has a web site! To get to the web site, go to: http://www.dot.ca.gov

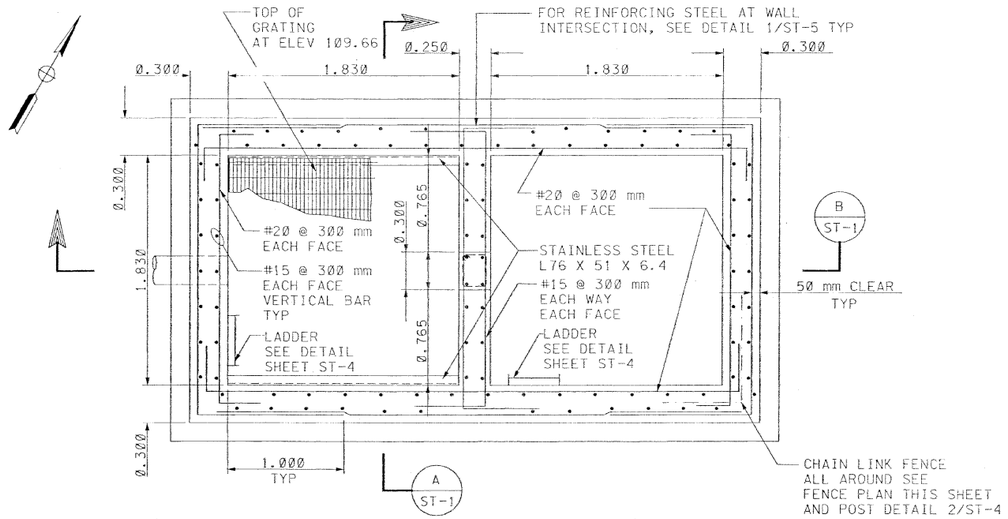

METRO PUMPING STATION PLAN AT ELEV 109.00

DRAINAGE SYSTEM NO 1 (e)

SCALE: 1:20

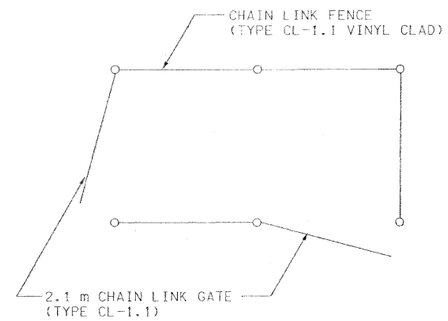

PUMPING STATION FENCE PLAN

NO SCALE

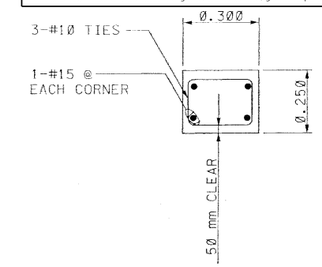

SECTION (C / ST-1)

SCALE: 1:10

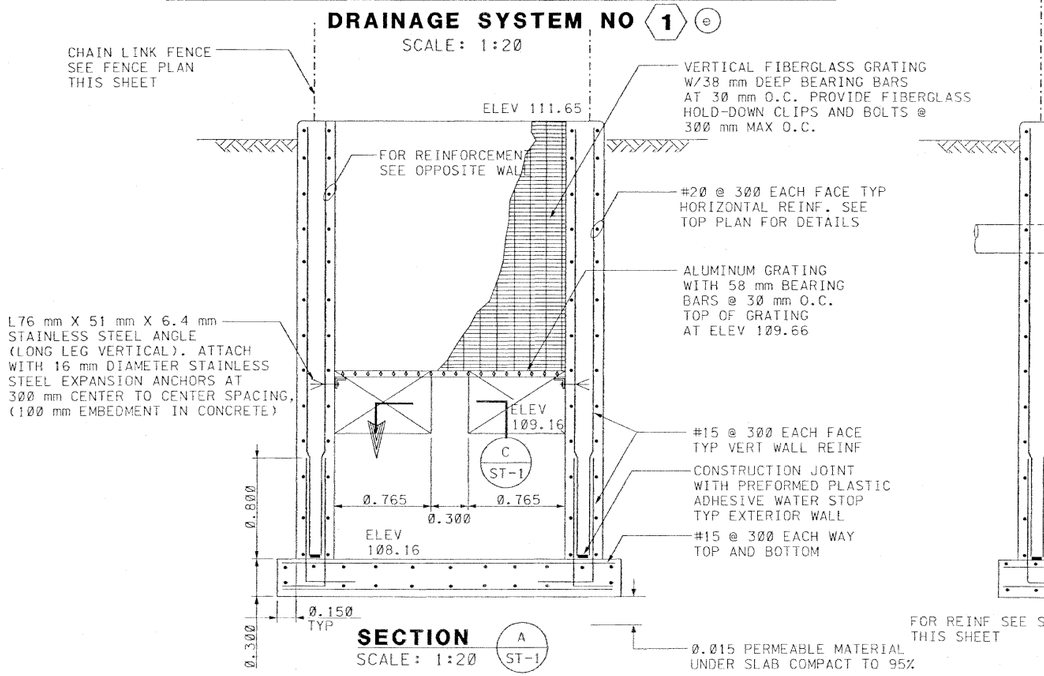

SECTION (A / ST-1)

SCALE: 1:20

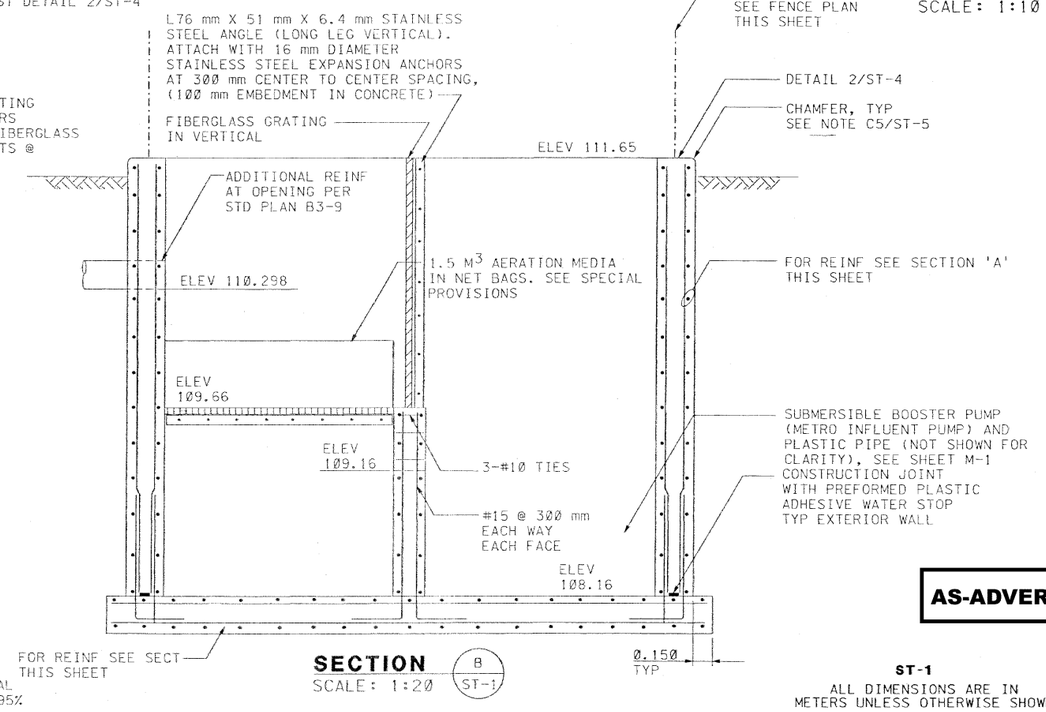

SECTION (B / ST-1)

SCALE: 1:20

AS-ADVERTISED

ST-1

ALL DIMENSIONS ARE IN METERS UNLESS OTHERWISE SHOWN

Patricia M Cauley
DESIGN OVERSIGHT
8-23-00
SIGN OFF DATE

	BY	CHECKED
DESIGN	EQ	RN
DETAILS	EQ	RN
QUANTITIES	EQ	RN

PREPARED FOR THE STATE OF CALIFORNIA DEPARTMENT OF TRANSPORTATION

BRIDGE NO. N/A
KILOMETER POST 36.0

METRO PILOT STORM WATER FACILITY

STRUCTURAL DETAILS

DS DSD 2147A (METRIC) (REV. 2/25/97)

ORIGINAL SCALE IN MILLIMETERS FOR REDUCED PLANS 0 10 20 30 40 50 60 70 80 90 100

CU 07274
EA 200004

DISREGARD PRINTS BEARING EARLIER REVISION DATES

REVISION DATES (PRELIMINARY STAGE ONLY): 3/00 6/00 8/00 8/14/00

SHEET 2 OF 15

StructuralDetails-02of15.tif

DIST.	COUNTY	ROUTE	KILOMETER POST TOTAL PROJECT	SHEET NO.	TOTAL SHEETS
07	LA	5	36.0	11	23

Douglas B. Robison 8/1/00
REGISTERED ENGINEER - CIVIL
1-8-01
PLANS APPROVAL DATE
REGISTERED PROFESSIONAL ENGINEER DOUGLAS B. ROBISON No. 37129 Exp. 06-30-04 CIVIL STATE OF CALIFORNIA
The State of California or its officers or agents shall not be responsible for the accuracy or completeness of electronic copies of this plan sheet.
Caltrans now has a web site! To get to the web site, go to: http://www.dot.ca.gov

Caltrans Metric

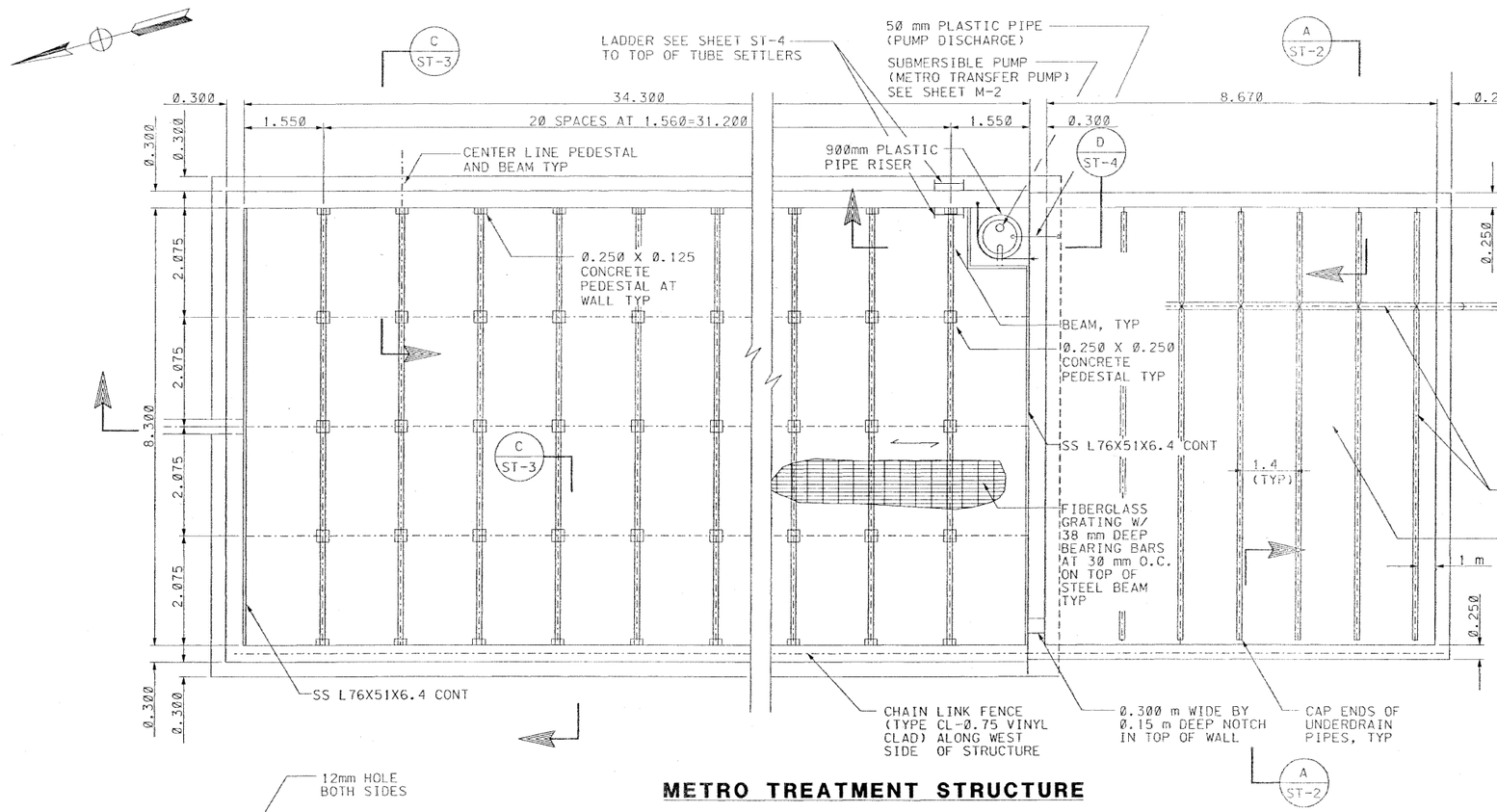

METRO TREATMENT STRUCTURE

DRAINAGE SYSTEM NO 1 (9)
SCALE: NONE

AS-ADVERTISED

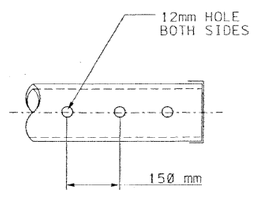

PERFORATED UNDERDRAIN PIPE DETAIL

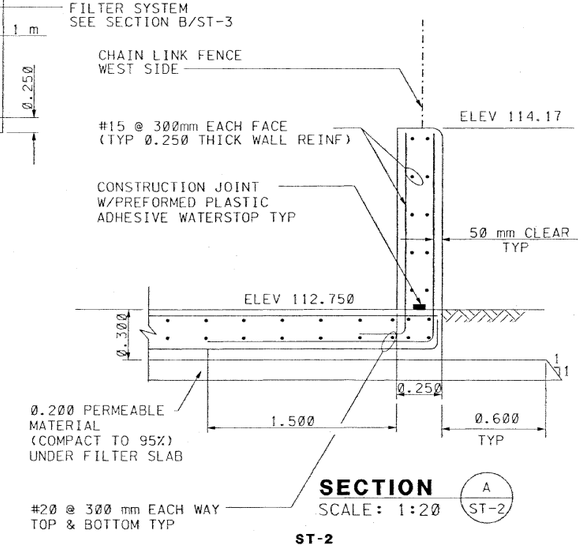

SECTION A ST-2
SCALE: 1:20

ST-2

ALL DIMENSIONS ARE IN METERS UNLESS OTHERWISE SHOWN

Patricia McCauley DESIGN OVERSIGHT 8-23-00 SIGN OFF DATE	DESIGN	BY EQ	CHECKED RN	
	DETAILS	BY EQ	CHECKED RN	
	QUANTITIES	BY EQ	CHECKED RN	

PREPARED FOR THE STATE OF CALIFORNIA DEPARTMENT OF TRANSPORTATION

BRIDGE NO. N/A
KILOMETER POST 36.0

METRO PILOT STORM WATER FACILITY

STRUCTURAL DETAILS

DS OSD 2147A (METRIC) (REV. 2/25/97)

ORIGINAL SCALE IN MILLIMETERS FOR REDUCED PLANS 0 10 20 30 40 50 60 70 80 90 100

CU 07274
EA 200004

DISREGARD PRINTS BEARING EARLIER REVISION DATES

REVISION DATES (PRELIMINARY STAGE ONLY) 5/00 6/00 8/00 8/14/00

SHEET 3 OF 15

StructuralDetails-03of15.tif

DIST.	COUNTY	ROUTE	KILOMETER POST TOTAL PROJECT	SHEET NO.	TOTAL SHEETS
07	LA	5	36.0	12	23

Caltrans Metric

Douglas B. Robison 8/1/00
REGISTERED ENGINEER - CIVIL

1-8-01
PLANS APPROVAL DATE

REGISTERED PROFESSIONAL ENGINEER DOUGLAS B. ROBISON No. 37129 Exp. 06-30-04 CIVIL STATE OF CALIFORNIA

The State of California or its officers or agents shall not be responsible for the accuracy or completeness of electronic copies of this plan sheet.

Caltrans now has a web site! To get to the web site, go to: http://www.dot.ca.gov

NOTES:

1. PLACE FILTER FABRIC TOP AND BOTTOM OF FILTER MEDIA. BRING FABRIC UP 400 mm ABOVE TOP OF MEDIA. ADHEAR TO WALL WITH APPROVED SEALANT. FOLD AND/OR CUT FILTER FABRIC AT CORNERS TO ACHIVE TIGHT FIT AGAINST WALLS. OVERLAP FABRIC 450 mm. PLACE CMU BLOCKS EVERY 1.9 m ALONG WALLS AND OVERLAP AREAS.
2. PROVIDE OIL ABSORBING BOOMS ABOVE TUBE SETTLERS.

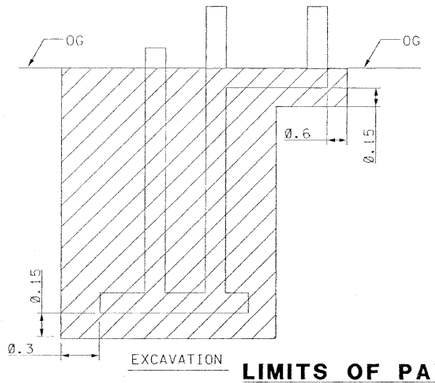

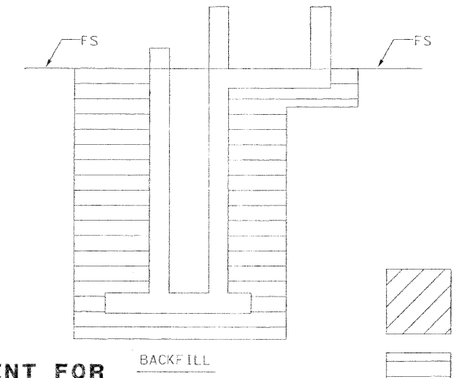

LEGEND:

STRUCTURE EXCAVATION (BRIDGE)

STRUCTURE BACKFILL (BRIDGE)

LIMITS OF PAYMENT FOR STRUCTURE EXCAVATION (BRIDGE) AND STRUCTURE BACKFILL (BRIDGE)

DETAIL 1 VAR
SCALE: NONE

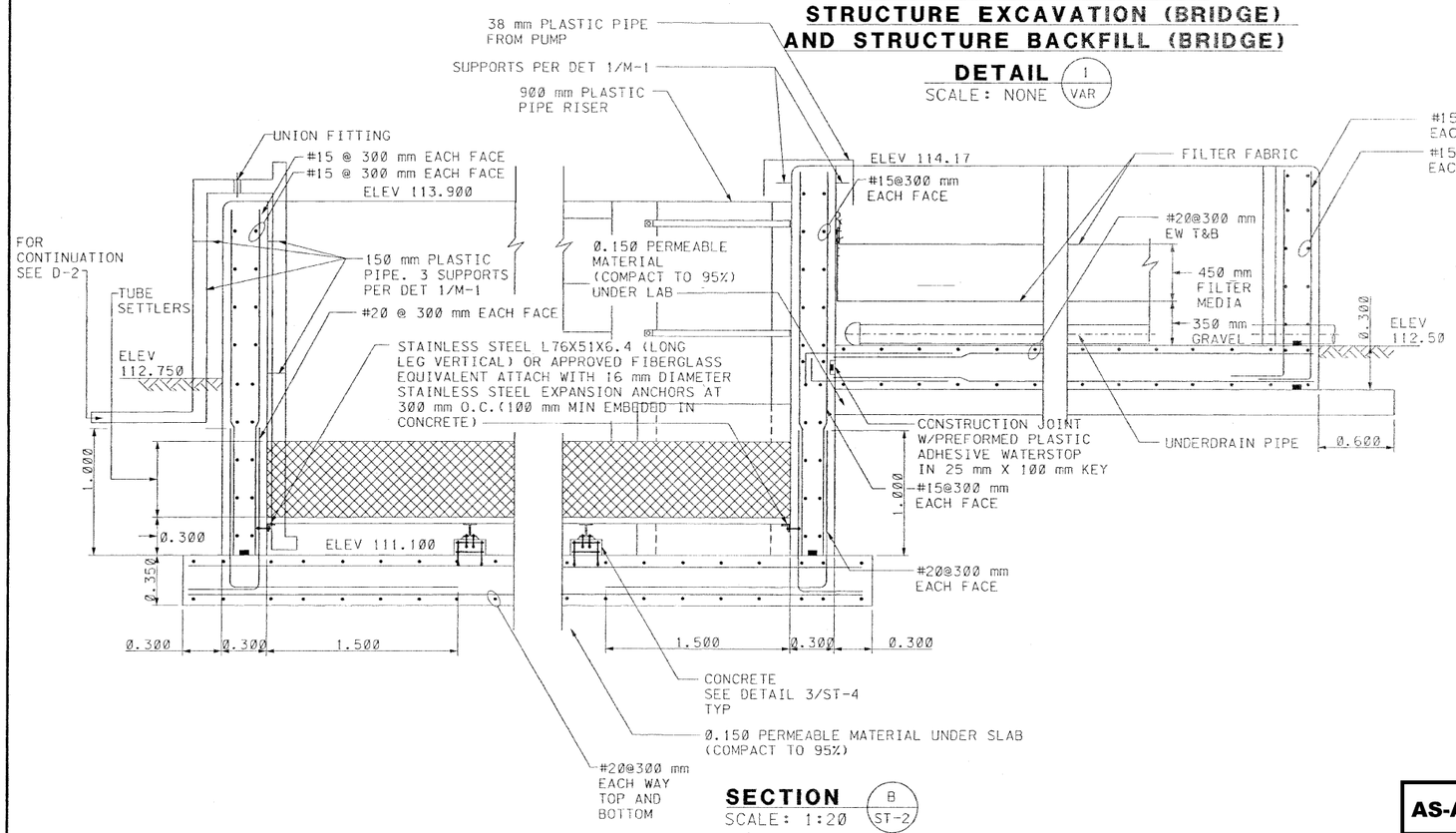

SECTION B ST-2
SCALE: 1:20

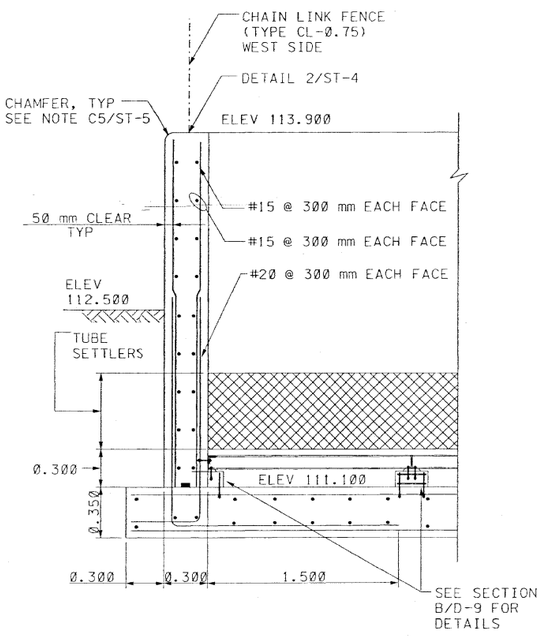

SECTION C ST-2
SCALE: 1:20

AS-ADVERTISED

ST-3
ALL DIMENSIONS ARE IN METERS UNLESS OTHERWISE SHOWN

Patricia McCauley
DESIGN OVERSIGHT
8-23-00
SIGN OFF DATE

	BY	CHECKED
DESIGN	EQ	RN
DETAILS	EQ	RN
QUANTITIES	EQ	RN

PREPARED FOR THE STATE OF CALIFORNIA DEPARTMENT OF TRANSPORTATION

BRIDGE NO. N/A
KILOMETER POST 36.0

METRO PILOT STORM WATER FACILITY

STRUCTURAL DETAILS

CU 07274
EA 200004

DS OSD 2147A (METRIC) (REV. 2/25/97)

ORIGINAL SCALE IN MILLIMETERS FOR REDUCED PLANS 0 10 20 30 40 50 60 70 80 90 100

DISREGARD PRINTS BEARING EARLIER REVISION DATES

REVISION DATES (PRELIMINARY STAGE ONLY) 3/00 6/00 8/00 9/14/00

SHEET 4 OF 15

StructuralDetails-04of15.tif

DIST.	COUNTY	ROUTE	KILOMETER POST TOTAL PROJECT	SHEET NO.	TOTAL SHEETS
07	LA	5	36.0	13	23

Caltrans Metric

Douglas B. Robison 8/1/00
REGISTERED ENGINEER - CIVIL

1-8-01
PLANS APPROVAL DATE

REGISTERED PROFESSIONAL ENGINEER DOUGLAS B. ROBISON No. 37109 Exp. 06-30-04 CIVIL STATE OF CALIFORNIA

The State of California or its officers or agents shall not be responsible for the accuracy or completeness of electronic copies of this plan sheet.

Caltrans now has a web site! To get to the web site, go to: http://www.dot.ca.gov

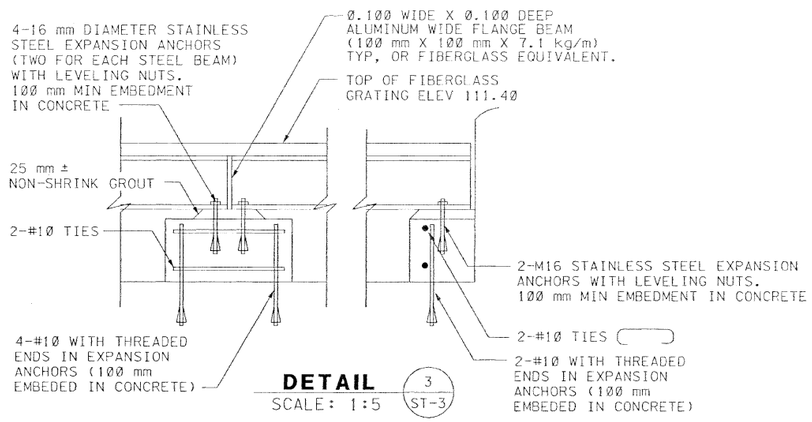

DETAIL 3 / ST-3
SCALE: 1:5

LADDER SCHEDULE

LOCATION	TOP OF WALL ELEVATION	FLOOR OF PLATFORM ELEVATION
PUMPING STATION, NORTH SIDE	111.65	109.66
PUMPING STATION, SOUTH SIDE	111.65	108.16
TREATMENT STRUCTURE (INSIDE)	113.90	111.90
TREATMENT STRUCTURE (OUTSIDE)	113.90	112.75

AS-ADVERTISED

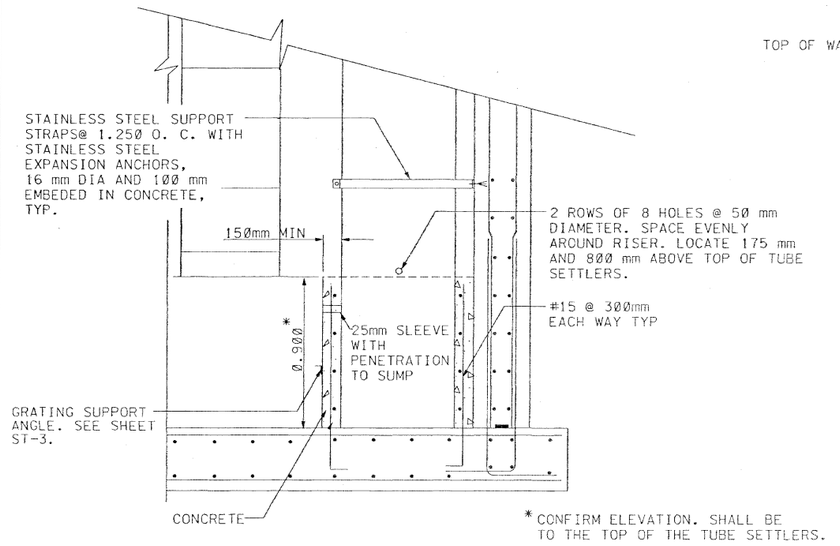

*CONFIRM ELEVATION. SHALL BE TO THE TOP OF THE TUBE SETTLERS.

SECTION D / ST-2
SCALE: 1:4

NOTE:
TUBE SETTLERS AND SUPPORT NOT SHOWN FOR CLARITY.

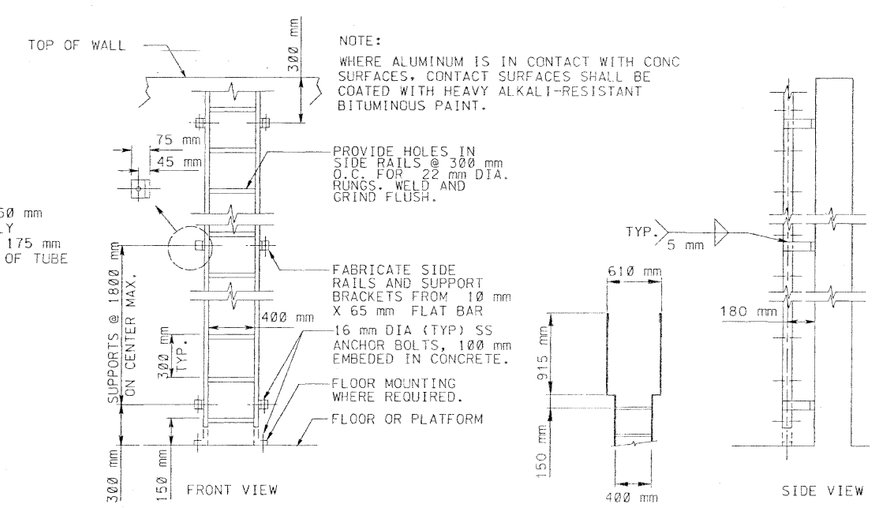

NOTE:
WHERE ALUMINUM IS IN CONTACT WITH CONC SURFACES, CONTACT SURFACES SHALL BE COATED WITH HEAVY ALKALI-RESISTANT BITUMINOUS PAINT.

DETAIL 1 / VAR
SCALE: NONE

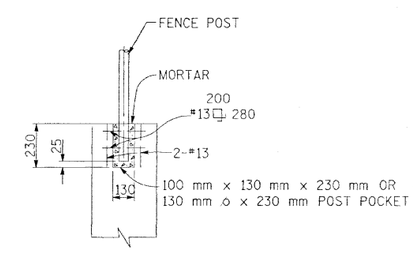

POST DETAIL
DETAIL 2 / VAR
SCALE: NONE

ST-4

ALL DIMENSIONS ARE IN METERS UNLESS OTHERWISE SHOWN

Patricia McCauley
DESIGN OVERSIGHT
8-23-00
SIGN OFF DATE

	BY	CHECKED
DESIGN	EQ	RN
DETAILS	EQ	RN
QUANTITIES	EQ	RN

PREPARED FOR THE STATE OF CALIFORNIA DEPARTMENT OF TRANSPORTATION

BRIDGE NO. N/A
KILOMETER POST 36.0

METRO PILOT STORM WATER FACILITY
STRUCTURAL DETAILS

CS OSD 2147A (METRIC) (REV. 2/25/97)

ORIGINAL SCALE IN MILLIMETERS FOR REDUCED PLANS 0 10 20 30 40 50 60 70 80 90 100

CU 07274
EA 200004

DISREGARD PRINTS BEARING EARLIER REVISION DATES

REVISION DATES (PRELIMINARY STAGE ONLY): 3/00 6/00 8/00 8/14/00

SHEET 5 OF 15

StructuralDetails-05of15.tif

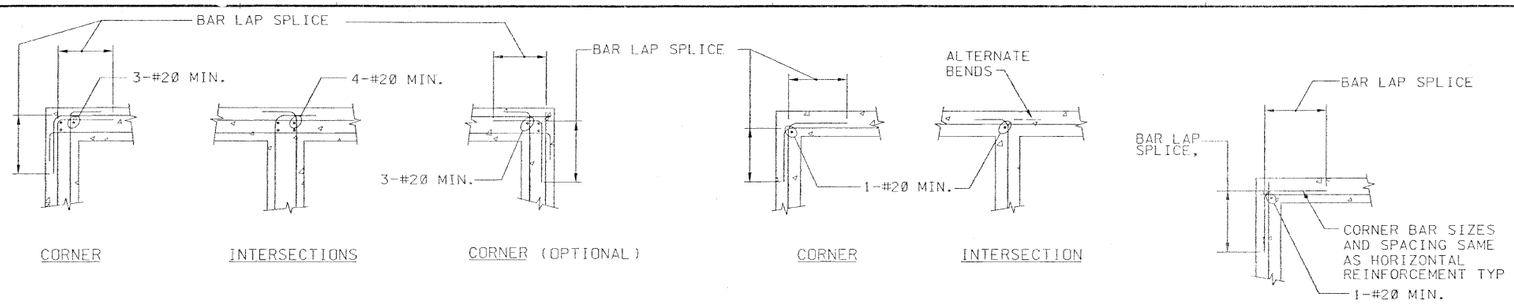

DIST.	COUNTY	ROUTE	KILOMETER POST TOTAL PROJECT	SHEET NO.	TOTAL SHEETS
07	LA	5	36.0	14	23

Douglas B. Robison 8/1/00
REGISTERED ENGINEER - CIVIL

1-8-01
PLANS APPROVAL DATE

REGISTERED PROFESSIONAL ENGINEER DOUGLAS B. ROBISON No. 37109 Exp. 06-30-04 CIVIL STATE OF CALIFORNIA

The State of California or its officers or agents shall not be responsible for the accuracy or completeness of electronic copies of this plan sheet.

Caltrans now has a web site! To get to the web site, go to: http://www.dot.ca.gov

NOTES :

1. ALL 90° BENDS SHALL BE STANDARD HOOKS PER ACI 315 UNLESS OTHERWISE SPECIFIED.
2. SEE OTHER DETAILS AND NOTES FOR SIZE AND SPACING OF REINFORCING.
3. LAP AND HOOK FOOTING BARS AT CORNERS AND INTERSECTIONS SAME AS FOR WALLS EXCEPT THAT ADDED VERTICAL AT CORNERS AND INTERSECTIONS ARE NOT REQUIRED.

REINFORCING STEEL AT WALL INTERSECTIONS

DETAIL 1 VAR

SCALE: NO SCALE

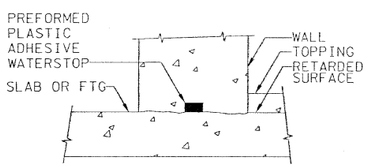

TYPICAL JOINT W/ PLASTIC ADHESIVE WATERSTOP

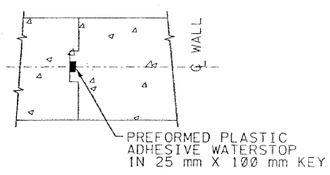

TYPICAL KEY W/ PLASTIC WATERSTOP

VERTICAL CONSTRUCTION JOINTS IN WALLS

TYPICAL CONSTRUCTION JOINTS

DETAIL 2 VAR

SCALE: NO SCALE

GENERAL

G1 SCOPE
THE GENERAL NOTES AND TYPICAL DETAILS ARE GENERAL AND APPLY TO THE ENTIRE PROJECT EXCEPT WHERE THERE ARE SPECIFIC INDICATIONS TO THE CONTRARY.

G2 CONSTRUCTION LOADS
STRUCTURES HAVE BEEN DESIGNED FOR OPERATIONAL LOADS ON COMPLETED STRUCTURES. STRUCTURES SHALL BE PROTECTED BY BRACING AND SHORING WHEREVER EXCESSIVE CONSTRUCTION LOADS MAY OCCUR DURING CONSTRUCTION.

G3 DRAINAGE SURFACES
SLOPE DRAINAGE SURFACES UNIFORMLY TO DRAIN. SLOPE SHALL BE 6mm (2 PERCENT) EXCEPT WHERE NOTED OTHERWISE ON THE PLANS.

CONCRETE

C1 DESIGN STRESSES
A. CONCRETE f'c =28 MPa ULTIMATE COMPRESSIVE STRESS AT 28 DAYS.

C2 CONCRETE COVER
CONCRETE COVER FOR REINFORCING BARS SHALL BE 50mm FOR FORMED SURFACES UNLESS SPECIFICALLY NOTED OTHERWISE. FOOTINGS AND FOUNDATION MATS CAST ON GROUND SHALL BE 75mm.

C3 EXTRA ACCESSORY BARS
IN ADDITION TO NORMAL ACCESSORIES USED TO HOLD REINFORCING STEEL FIRMLY IN POSITION, EXTRA ACCESSORY BARS SHALL BE USED AS FOLLOWS:
A. IN SLABS #15 RAISER BARS AT 90mm O/C MAXIMUM TO SUPPORT TOP REINFORCING STEEL.
B. IN WALLS WITH TWO CURTAINS #10 U OR Z SHAPE SPACERS AT 1800mm O/C EW.

C4 SLOPING SLABS
MONOLITHIC SLABS WITH TOPS THAT ARE SLOPED SHALL HAVE BOTTOMS SLOPED THE SAME AMOUNT, MAINTAINING A UNIFORM SLAB THICKNESS, UNLESS OTHERWISE SHOWN.

C5 CHAMFERS
EXPOSED CONCRETE CORNERS AND EDGES SHALL HAVE 20 mm CHAMFERS. REENTRANT CORNERS SHALL NOT HAVE FILLETS.

STEEL

ST1 ENCASED STEEL
STEEL COMPLETELY ENCASED IN CONCRETE SHALL NOT BE GALVANIZED OR PAINTED AND SHALL HAVE A CLEAN SURFACE FOR BONDING TO CONCRETE.

ALUMINUM

A1 ALUMINUM IN CONTACT WITH CONCRETE

WHERE ALUMINUM IS IN CONTACT WITH CONCRETE OR MASONRY SURFACES, CONTACT SURFACES SHALL BE COATED WITH HEAVY ALKALI - RESISTANT BITUMINOUS PAINT.

AS-ADVERTISED

ST-5

ALL DIMENSIONS ARE IN METERS UNLESS OTHERWISE SHOWN

Patricia McCauley
DESIGN OVERSIGHT
8-23-00
SIGN OFF DATE

DESIGN	BY EQ	CHECKED RN	
DETAILS	BY EQ	CHECKED RN	
QUANTITIES	BY EQ	CHECKED RN	

PREPARED FOR THE STATE OF CALIFORNIA DEPARTMENT OF TRANSPORTATION

BRIDGE NO. N/A
KILOMETER POST 36.0

METRO PILOT STORM WATER FACILITY

STRUCTURAL DETAILS

DS OSD 2147A (METRIC) (REV. 2/25/97)

ORIGINAL SCALE IN MILLIMETERS FOR REDUCED PLANS 0 10 20 30 40 50 60 70 80 90 100

CU 07274
EA 200004

DISREGARD PRINTS BEARING EARLIER REVISION DATES → 3/00 6/00 8/00 8/14/00

REVISION DATES (PRELIMINARY STAGE ONLY)

SHEET 6 OF 15

StructuralDetails-06of15.tif

NOTE:

FOR COMPLETE R/W DATA AND ACCURATE ACCESS DATA, SEE R/W RECORD MAPS AT DISTRICT OFFICE.

NOTES:

(1) DISTANCE FROM STORAGE BAYS TO PIER FOOTING SHALL BE MINIMUM OF 1.6 m.

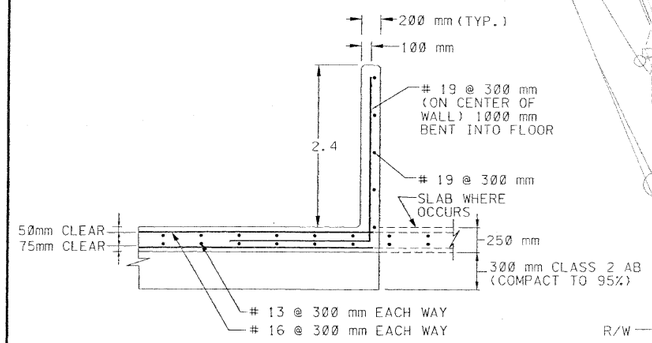

SECTION A-A

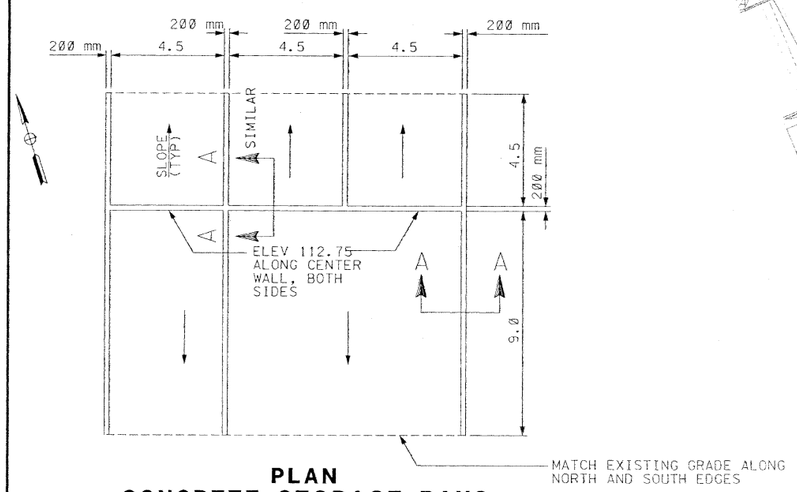

PLAN
CONCRETE STORAGE BAYS

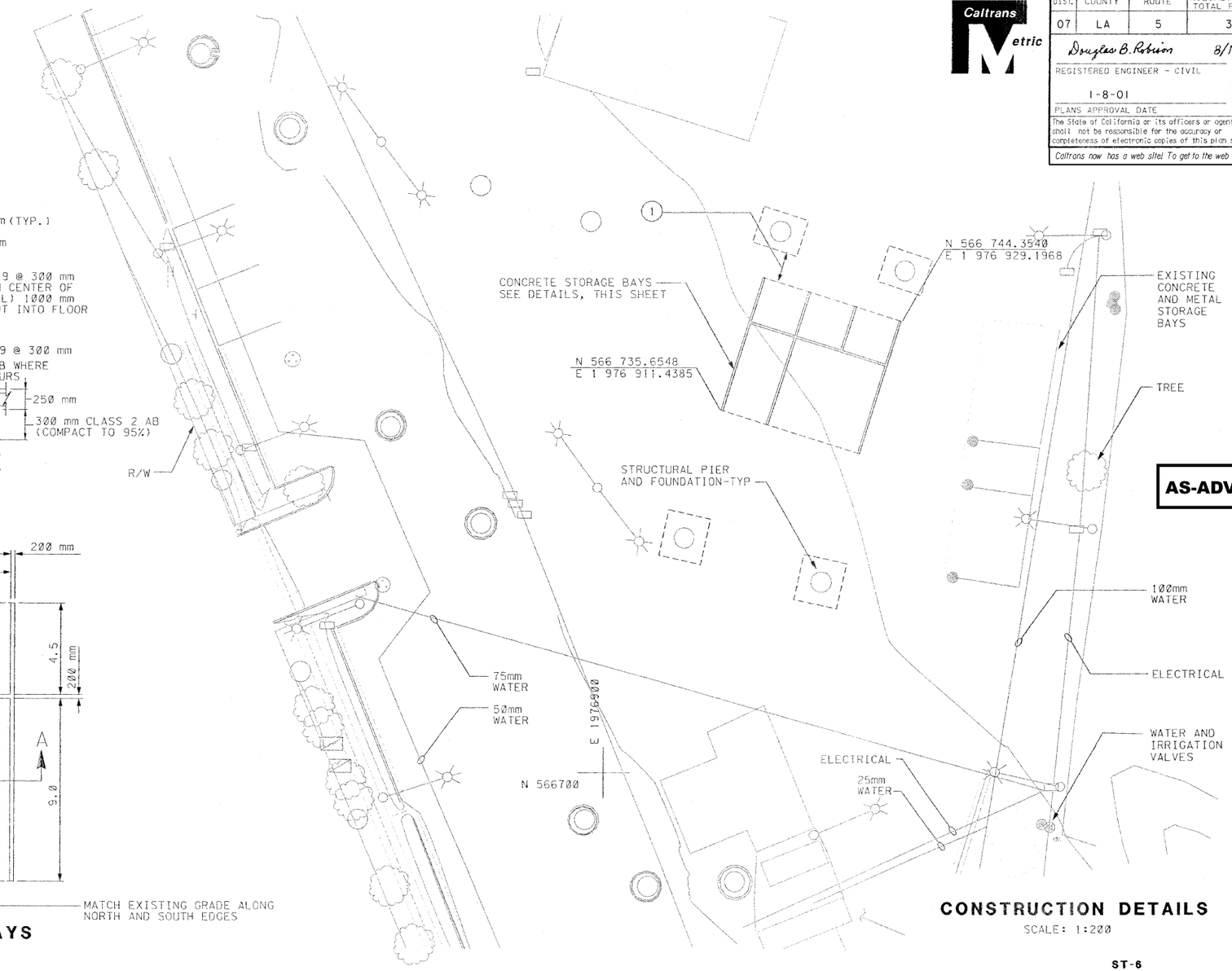

CONSTRUCTION DETAILS
SCALE: 1:200

AS-ADVERTISED

DIST.	COUNTY	ROUTE	KILOMETER POST TOTAL PROJECT	SHEET NO.	TOTAL SHEETS
07	LA	5	36.0	15	23

Douglas B. Robison 8/1/00
REGISTERED ENGINEER - CIVIL

1-8-01
PLANS APPROVAL DATE

REGISTERED PROFESSIONAL ENGINEER DOUGLAS B. ROBISON No. 37109 Exp. 06-30-04 CIVIL STATE OF CALIFORNIA

The State of California or its officers or agents shall not be responsible for the accuracy or completeness of electronic copies of this plan sheet.

Caltrans now has a web site! To get to the web site, go to: http://www.dot.ca.gov

ST-6

ALL DIMENSIONS ARE IN METERS UNLESS OTHERWISE SHOWN

Patricia McCauley
DESIGN OVERSIGHT
8-23-00
SIGN OFF DATE

	BY	CHECKED
DESIGN	EQ	RN
DETAILS	EQ	RN
QUANTITIES	EQ	RN

PREPARED FOR THE STATE OF CALIFORNIA DEPARTMENT OF TRANSPORTATION

CU 07274
EA 200004

BRIDGE NO. N/A
KILOMETER POST 36.0

METRO PILOT STORM WATER FACILITY

STRUCTURAL DETAILS

DS DSD 214/A (METRIC) (REV. 2/25/97)

ORIGINAL SCALE IN MILLIMETERS FOR REDUCED PLANS 0 10 20 30 40 50 60 70 80 90 100

DISREGARD PRINTS BEARING EARLIER REVISION DATES

REVISION DATES (PRELIMINARY STAGE ONLY) 3/00 6/00 3/00 6/14/00

SHEET 7 OF 15

StructuralDetails-07of15.tif

DIST	COUNTY	ROUTE	KILOMETER POST TOTAL PROJECT	SHEET NO.	TOTAL SHEETS
07	LA	5	36.0	16	23

Caltrans Metric

Douglas B. Robison 8/1/00
REGISTERED ENGINEER - CIVIL

1-8-01
PLANS APPROVAL DATE

REGISTERED PROFESSIONAL ENGINEER DOUGLAS B. ROBISON No. 37129 Exp. 06-30-01 CIVIL STATE OF CALIFORNIA

GROUP DELTA CONSULTANTS
TORRANCE CA 90501

The State of California or its officers or agents shall not be responsible for the accuracy or completeness of electronic copies of this plan sheet.

Caltrans now has a web site! To get to the web site, go to: http://www.dot.ca.gov

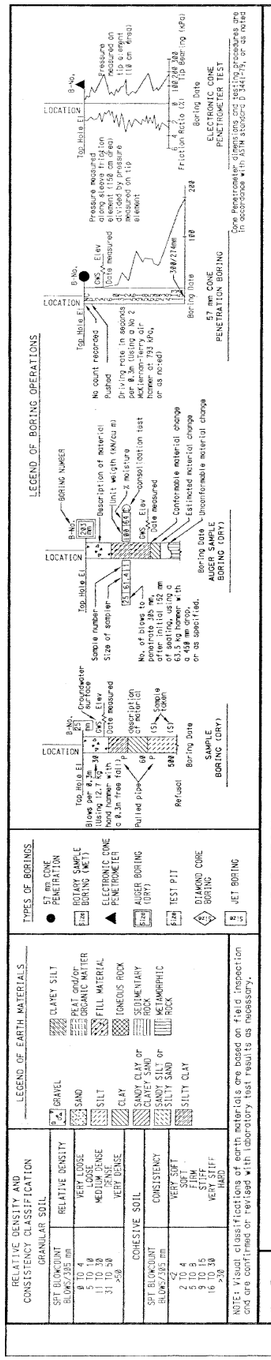

Laboratory Testing

- (DS) Direct Shear
- (SS) Soluble Sulfate
- (SC) Soluble Chloride
- (R) R- Value
- (C) Consolidation Test
- (E) Expansion Test
- (EL) Electrical Resistivity
- N. S. R. = No sample recovery
- OVM580B Gas Readings
- MC Modified California Sampler
- SPT Standard Penetration Sampler

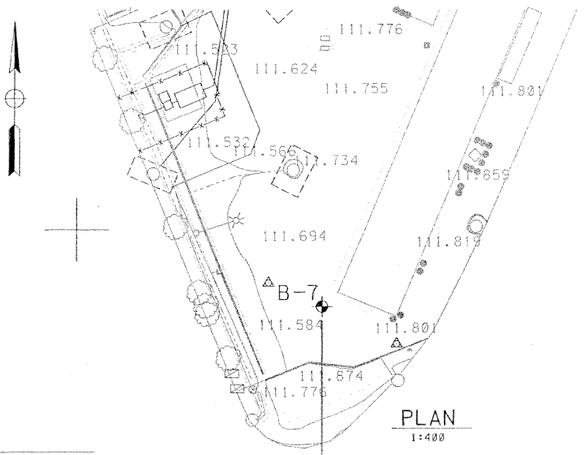

PLAN
1:400

NOTES:

SAMPLERS: RELATIVLY UNDISTURBED SAMPLES WERE OBTAINED BY DRIVING A 63 mm I.D. BY 76 mm O.D. MODIFIED CALIFORNIA (MC) SPLIT BARREL SAMPLER. TWELVE 25 mm WIDE BY 610 I.D. BRASS RINGS WERE INSERTED INTO THE SPLIT BARREL. THE SAMPLER TIP WAS 61 mm I.D. BY 76 mm O.D. AND 76 mm LONG. STANDARD PENETRATIO TEST (SPT) WERE CONDUCTED BY DRIVING A 35 mm I.D. BY 50 mm O.D. SPLIT BARREL SAMPLER 45 mm.

HAMMER: THE SAMPLES WERE DRIVEN WITH A HYDROLIC HAMMER THAT IS EQUIVALENT TO A 63.5 kg HAMMER FREE FALLING 0.76 METERS PER ASTM D-1586.

SURVEYING SITE CONTROL: CONCRETE NAIL IN AC IN MIDDLE OF YARD. COORDINATE N566,686.618 E1,976,934.386 ELEV 112.163

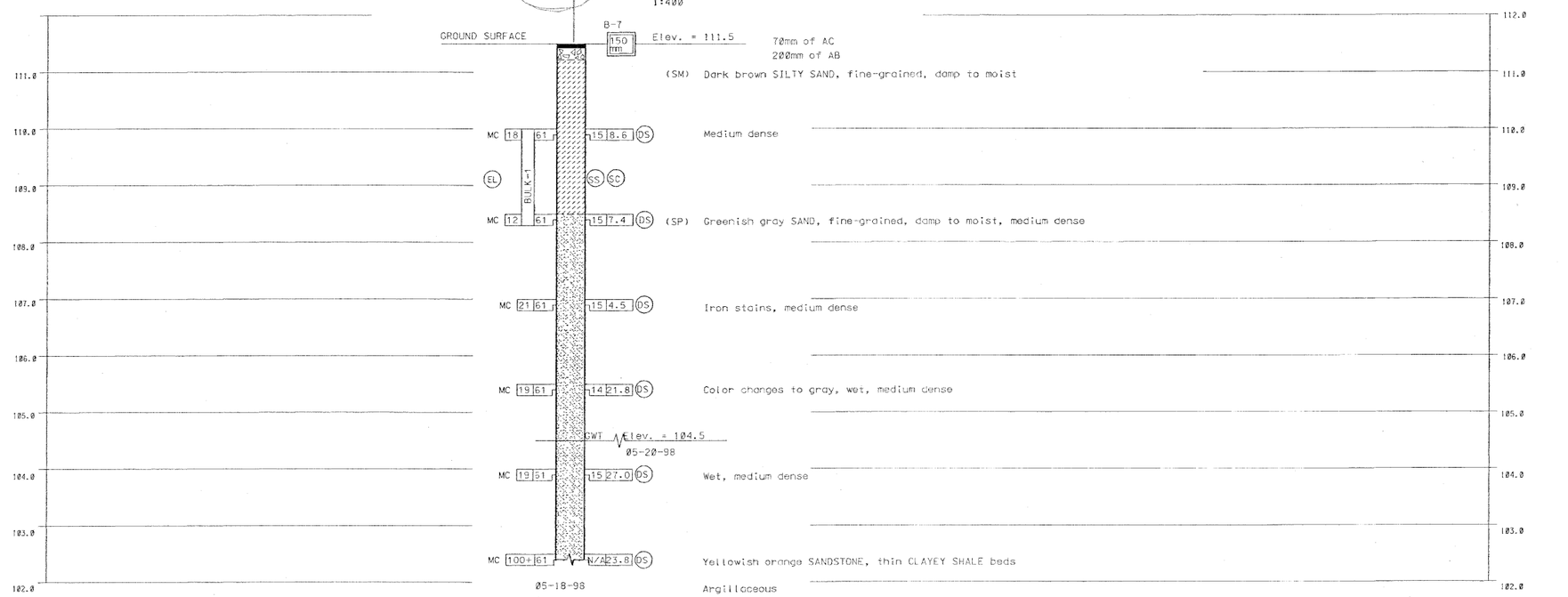

PROFILE
VER. 1:40

ST-7

AS-ADVERTISED

METERS
ALL DIMENSIONS ARE IN METERS UNLESS OTHERWISE SHOWN

Patricia McCauley
DESIGN OVERSIGHT
8-23-00
SIGN OFF DATE

DESIGN	By NGHI NGHIEM
CHECKED	By S H KOLTHOFF

FIELD INVESTIGATION BY: STEVEN H KOLTHOFF CEG1965

PREPARED FOR THE STATE OF CALIFORNIA DEPARTMENT OF TRANSPORTATION

MICHAEL D READER
PROJECT ENGINEER
GE 2259

BRIDGE NO. N/A
KILOMETER POST 36.0

METRO PILOT STORM WATER FACILITY

LOG OF TEST BORINGS 1 OF 3

ORIGINAL SCALE IN MILLIMETERS FOR REDUCED PLANS 0 10 20 30 40 50 60 70 80 90 100

CU 07279
EA 200004

DISREGARD PRINTS BEARING EARLIER REVISION DATES → 3/00 5/00 8/00 8/14/00

REVISION DATES (PRELIMINARY STAGE ONLY)

SHEET 8 OF 15

Ltb01of03-08of15.tif

DIST	COUNTY	ROUTE	KILOMETER POST TOTAL PROJECT	SHEET NO.	TOTAL SHEETS
07	LA	5	36.0	17	23

Caltrans Metric

Douglas B. Robison 8/1/00
REGISTERED ENGINEER - CIVIL

1-8-01
PLANS APPROVAL DATE

REGISTERED PROFESSIONAL ENGINEER DOUGLAS B. ROBISON No. 37109 Exp. 06-30-04 CIVIL STATE OF CALIFORNIA

ALLWEST GEOSCIENCE
ANAHEIM, CA

The State of California or its officers or agents shall not be responsible for the accuracy or completeness of electronic copies of this plan sheet.

Caltrans now has a web site! To get to the web site, go to: http://www.dot.ca.gov

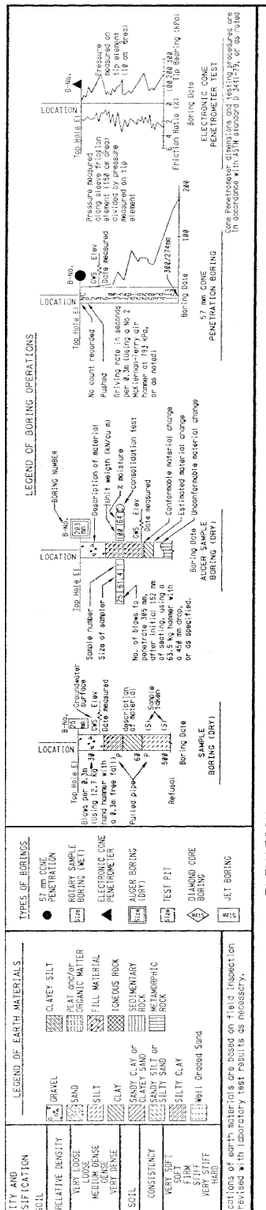

Laboratory Testing

- (DS) Direct Shear
- (SS) Soluble Sulfate
- (SC) Soluble Chloride
- (R) R- Value
- (C) Consolidation Test
- (E) Expansion Test

N. S. R. = No sample recovery

Field Testing

- OVM580B Gas Readings
- (SPT) Standard Penetration Test

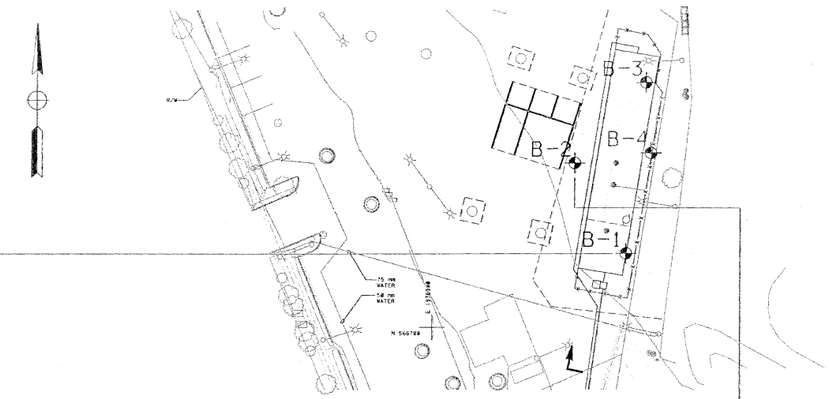

PLAN
1:400

NOTES:

SAMPLERS: SPT SAMPLER AND THIN WALL SAMPLER WITH 61.3 mm ID
SAMPLING METHOD: 63.5 kg DROP WEIGHT FALLING 762 mm
SURVEYING SITE CONTROL: CONCRETE NAIL IN AC IN MIDDLE OF YARD. COORDINATE N566,686.618 E1,976,934.386 ELEV 112.163

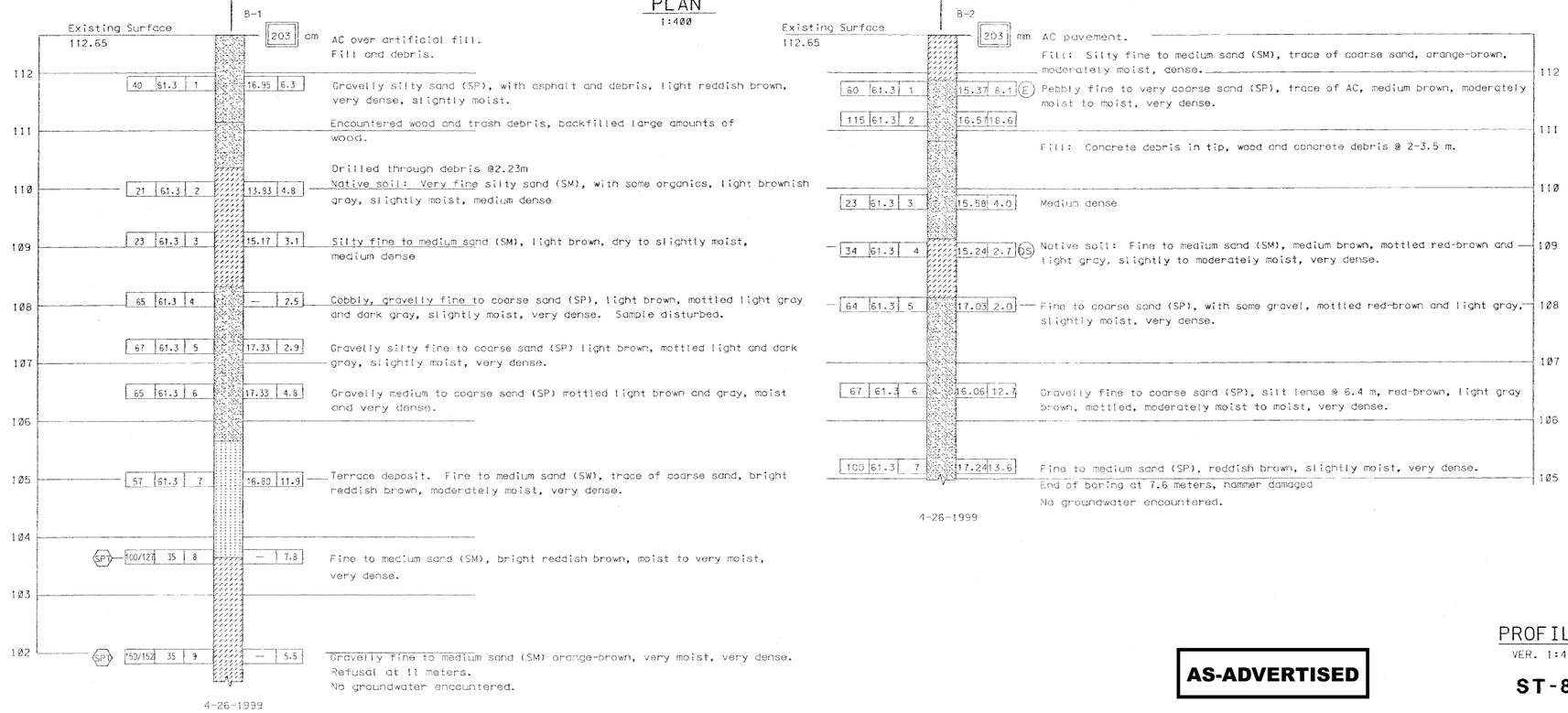

PROFILE
VER. 1:40

ST-8

AS-ADVERTISED

METERS
ALL DIMENSIONS ARE IN METERS UNLESS OTHERWISE SHOWN

Patricia McCauley
DESIGN OVERSIGHT
8-23-00
SIGN OFF DATE

	By	
DESIGN	C. COSCIA	
CHECKED	J. GERY	

FIELD INVESTIGATION BY: CHRISTOPHER COSCIA

PREPARED FOR THE STATE OF CALIFORNIA DEPARTMENT OF TRANSPORTATION

JOHN R GERY
PROJECT ENGINEER
GE 336 12/31/01

BRIDGE NO. N/A
KILOMETER POST 36.0

METRO PILOT STORM WATER FACILITY

LOG OF TEST BORINGS 2 OF 3

ORIGINAL SCALE IN MILLIMETERS FOR REDUCED PLANS 0 10 20 30 40 50 60 70 80 90 100

CU 07279
EA 200004

DISREGARD PRINTS BEARING EARLIER REVISION DATES → 3/00 5/00 8/00 8/14/00

REVISION DATES (PRELIMINARY STAGE ONLY)

SHEET 9 OF 15

Ltb02of03-09of15.tif

DIST	COUNTY	ROUTE	KILOMETER POST TOTAL PROJECT	SHEET NO.	TOTAL SHEETS
07	LA	5	36.0	18	23

Caltrans Metric

Douglas B. Robison 8/1/00
REGISTERED ENGINEER - CIVIL

1-8-01
PLANS APPROVAL DATE

ALLWEST GEOSCIENCE
ANAHEIM CA

REGISTERED PROFESSIONAL ENGINEER DOUGLAS B. ROBISON No. 37109 Exp. 06-30-04 CIVIL STATE OF CALIFORNIA

The State of California or its officers or agents shall not be responsible for the accuracy or completeness of electronic copies of this plan sheet.

Caltrans now has a web site! To get to the web site, go to: http://www.dot.ca.gov

Laboratory Testing

- (DS) Direct Shear
- (SS) Soluble Sulfate
- (SC) Soluble Chloride
- (R) R- Value
- (C) Consolidation Test
- (E) Expansion Test

N. S. R. = No sample recovery

(OVM580B) Gas Readings

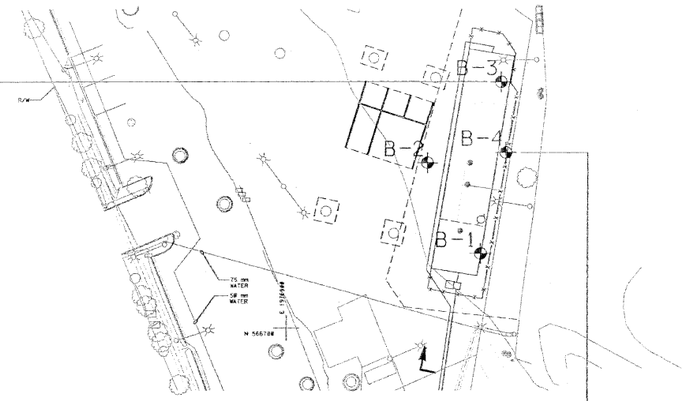

PLAN
1:400

NOTES:

SAMPLERS: STP SAMPLER AND THIN WALL SAMPLER WITH 61.3 mm ID
SAMPLING METHOD: 63.5 kg DROP WEIGHT FALLING 762 mm
SURVEYING SITE CONTROL: CONCRETE NAIL IN AC IN MIDDLE OF YARD. COORDINATE N566,686.618 E1,976,934.386 ELEV 112.163

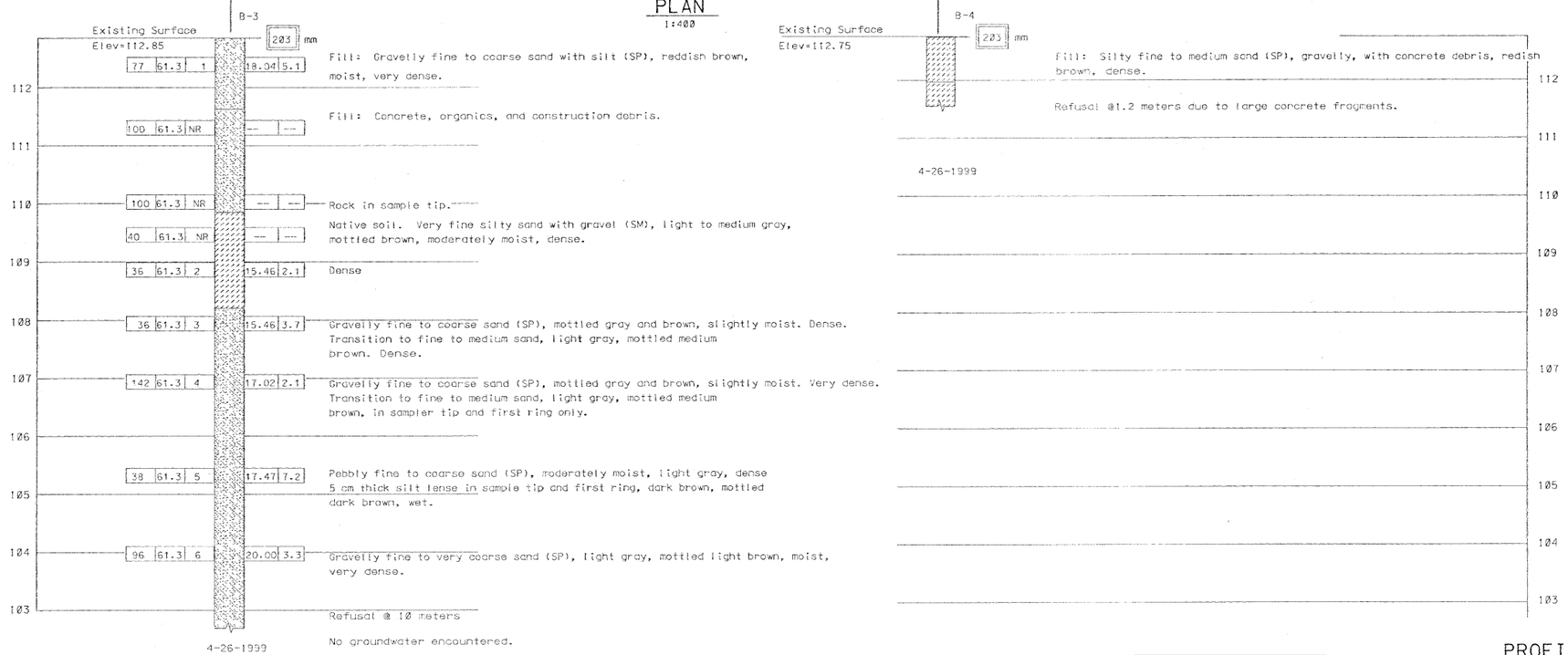

PROFILE
VER. 1:40

ST-9

AS-ADVERTISED

METERS
ALL DIMENSIONS ARE IN METERS UNLESS OTHERWISE SHOWN

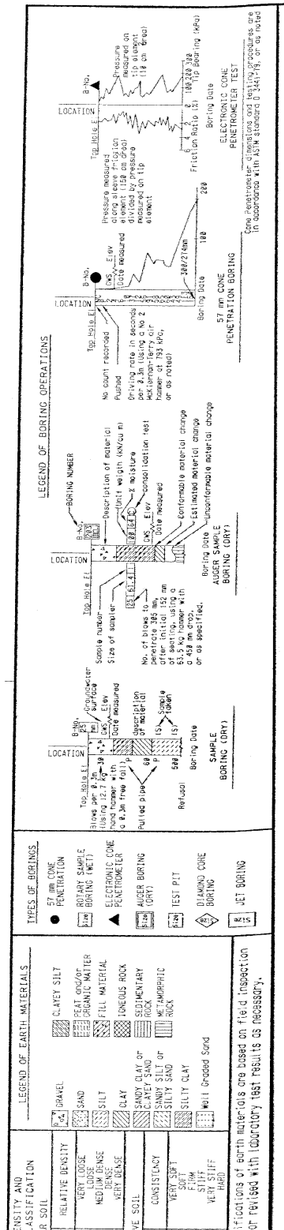

Patricia McCauley
DESIGN OVERSIGHT
8-23-00
SIGN OFF DATE

DESIGN By C. COSCIA
CHECKED By J. GERY

FIELD INVESTIGATION BY: CHRISTOPHER COSCIA

PREPARED FOR THE STATE OF CALIFORNIA DEPARTMENT OF TRANSPORTATION

JOHN R GERY
PROJECT ENGINEER GE 336 12/31/01

BRIDGE NO. N/A
KILOMETER POST 36.0

METRO PILOT STORM WATER FACILITY
LOG OF TEST BORINGS 3 OF 3

ORIGINAL SCALE IN MILLIMETERS FOR REDUCED PLANS 0 10 20 30 40 50 60 70 80 90 100

CU 07279
EA 200004
TFILE >> ABREQUEST

DISREGARD PRINTS BEARING EARLIER REVISION DATES

REVISION DATES (PRELIMINARY STAGE ONLY) 3/00 5/00 8/00 8/14/00

SHEET 10 OF 15

Ltb03of03-10of15.tif

DIST.	COUNTY	ROUTE	KILOMETER POST TOTAL PROJECT	SHEET NO.	TOTAL SHEETS
07	LA	5	36.0	19	23

Caltrans Metric

Douglas B. Robison 8/1/00
REGISTERED ENGINEER - CIVIL

1-8-01
PLANS APPROVAL DATE

REGISTERED PROFESSIONAL ENGINEER DOUGLAS B. ROBISON No. 37109 Exp. 06-30-04 CIVIL STATE OF CALIFORNIA

The State of California or its officers or agents shall not be responsible for the accuracy or completeness of electronic copies of this plan sheet.

Caltrans now has a web site! To get to the web site, go to: http://www.dot.ca.gov

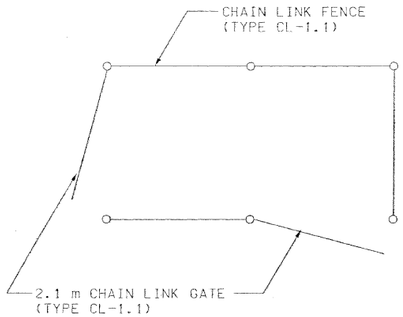

PUMPING STATION FENCE PLAN

NO SCALE

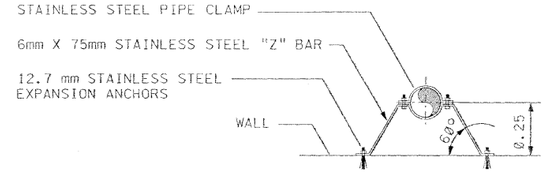

DETAIL 1/VAR
SCALE: 1:30

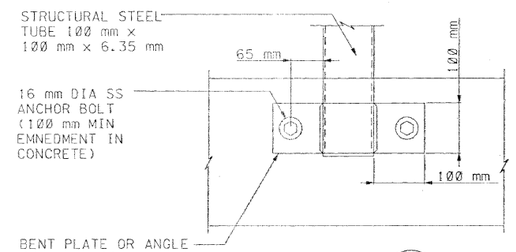

DETAIL 2/M-1
SCALE: 1:10

AS-ADVERTISED

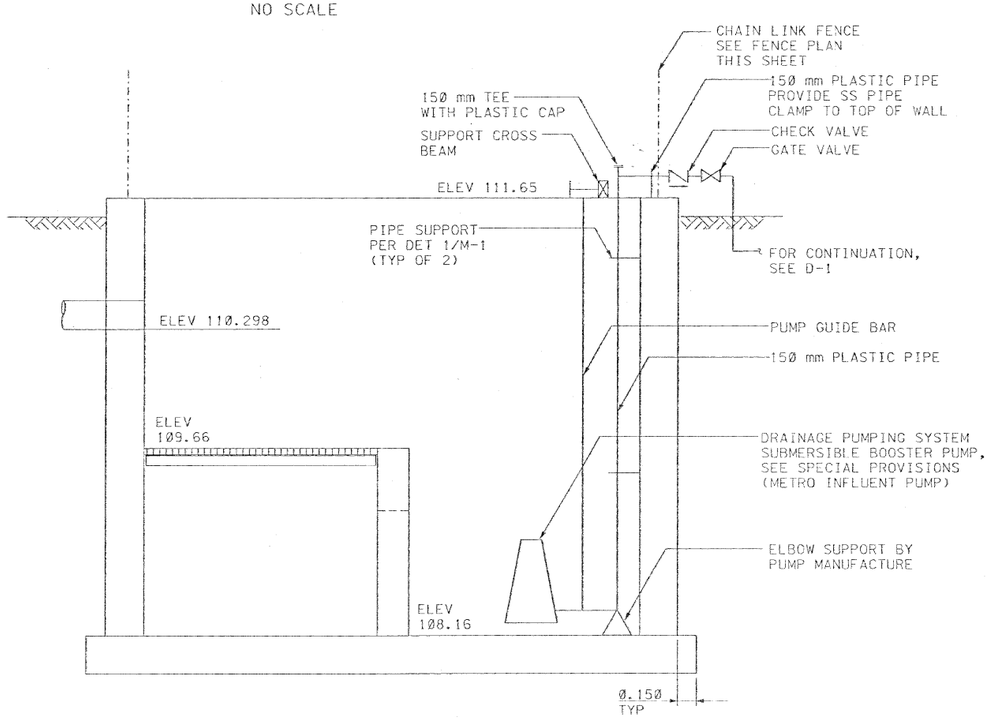

SECTION A/-
SCALE: 1:20

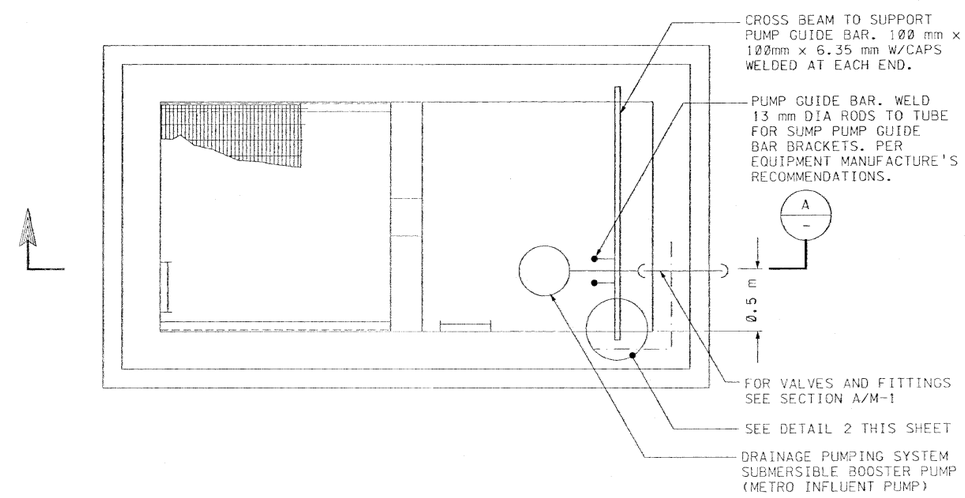

METRO PUMPING STATION TOP PLAN

DRAINAGE SYSTEM NO 1 e
SCALE: 1:20

M-1

ALL DIMENSIONS ARE IN
METERS UNLESS OTHERWISE SHOWN

Patricia McCauley
DESIGN OVERSIGHT
9-23-00
SIGN OFF DATE

DESIGN	BY DBR	CHECKED RMF	
DETAILS	BY DBR	CHECKED RMF	
QUANTITIES	BY DBR	CHECKED RMF	

PREPARED FOR THE
STATE OF CALIFORNIA
DEPARTMENT OF TRANSPORTATION

BRIDGE NO. N/A
KILOMETER POST 36.0

METRO PILOT STORM WATER FACILITY

MECHANICAL DETAILS

CU 07279
EA 200004

DS OSD 2147A (METRIC) (REV. 2/25/97)

ORIGINAL SCALE IN MILLIMETERS FOR REDUCED PLANS 0 10 20 30 40 50 60 70 80 90 100

DISREGARD PRINTS BEARING EARLIER REVISION DATES

REVISION DATES (PRELIMINARY STAGE ONLY) 3/00 6/00 8/00 8/14/00

SHEET 11 OF 15

MechanicalDetails-11of15.tif

DIST	COUNTY	ROUTE	KILOMETER POST TOTAL PROJECT	SHEET NO.	TOTAL SHEETS
07	LA	5	36.0	18	23

Caltrans Metric

Douglas B. Robison 8/1/00

REGISTERED ENGINEER - CIVIL

1-8-01

PLANS APPROVAL DATE

ALLWEST GEOSCIENCE

ANAHEIM CA

REGISTERED PROFESSIONAL ENGINEER DOUGLAS B. ROBISON No. 37109 Exp. 06-30-04 CIVIL STATE OF CALIFORNIA

The State of California or its officers or agents shall not be responsible for the accuracy or completeness of electronic copies of this plan sheet.

Caltrans now has a web site! To get to the web site, go to: http://www.dot.ca.gov

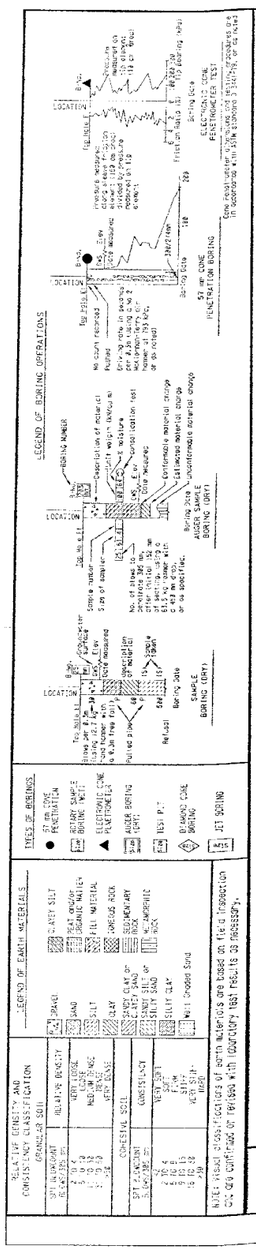

Laboratory Testing

- (DS) Direct Shear
- (SS) Soluble Sulfate
- (SC) Soluble Chloride
- (R) R- Value
- (C) Consolidation Test
- (E) Expansion Test

N. S. R. = No sample recovery

OVM5000 Gas Readings

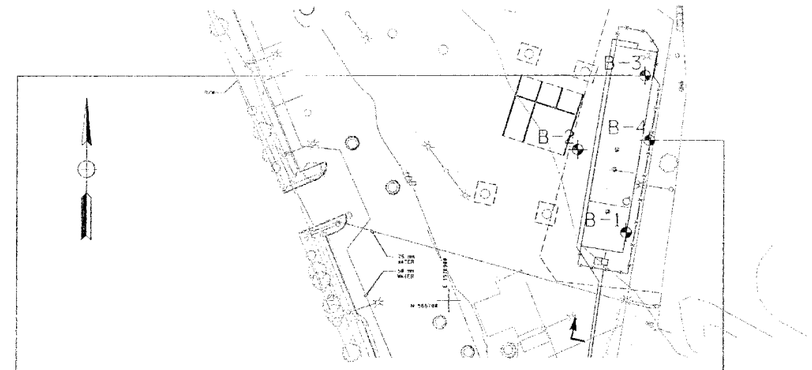

Fill: Gravelly fine to coarse sand with silt (SP), reddish brown, moist, very dense.

Fill: Concrete, organics, and construction debris.

Rock in sample tip.

Native soil. Very fine silty sand with gravel (SM), light to medium gray, mottled brown, moderately moist, dense.

Dense

Gravelly fine to coarse sand (SP), mottled gray and brown, slightly moist. Dense. Transition to fine to medium sand, light gray, mottled medium brown. Dense.

Gravelly fine to coarse sand (SP), mottled gray and brown, slightly moist. Very dense. Transition to fine to medium sand, light gray, mottled medium brown, in sampler tip and first ring only.

Pebbly fine to coarse sand (SP), moderately moist, light gray, dense 5 cm thick silt lense in sample tip and first ring, dark brown, mottled dark brown, wet.

Gravelly fine to very coarse sand (SP), light gray, mottled light brown, moist, very dense.

Refusal @ 10 meters

No groundwater encountered.

Fill: Silty fine to medium sand (SP), gravelly, with concrete debris, redish brown, dense.

Refusal @1.2 meters due to large concrete fragments.

NOTES:

SAMPLERS: STP SAMPLER AND THIN WALL SAMPLER WITH 61.3 mm ID
SAMPLING METHOD: 63.5 kg DROP WEIGHT FALLING 762 mm
SURVEYING SITE CONTROL: CONCRETE NAIL IN AC IN MIDDLE OF YARD. COORDINATE N566,686.618 E1,976,934.386 ELEV 112.163

AS-ADVERTISED

PROFILE
VER. 1:40

ST-9

METERS
ALL DIMENSIONS ARE IN METERS UNLESS OTHERWISE SHOWN

Patricia McCauley
DESIGN OVERSIGHT
8-23-00
SIGN OFF DATE

DESIGN By C. COSCIA
CHECKED By J. GERY

FIELD INVESTIGATION BY: CHRISTOPHER COSCIA

PREPARED FOR THE
STATE OF CALIFORNIA
DEPARTMENT OF TRANSPORTATION

JOHN R GERY
PROJECT ENGINEER
GE 336 12/31/01

ROUTE NO. N/A
KILOMETER POST 36.0

METRO PILOT STORM WATER FACILITY

LOG OF TEST BORINGS 3 OF 3

ORIGINAL SCALE IN MILLIMETERS FOR REDUCED PLANS 0 10 20 30 40 50 60 70 80 90 100

CU 07279
EA 200004

TITLE AS ADDRESS

DISREGARD PRINTS BEARING EARLIER REVISION DATES

REVISION DATES (PRELIMINARY STAGE ONLY) 5/00 5/20 8/20 2/14/00

SHEET 10 OF 15

LLb03of03-10of15.tif

DIST.	COUNTY	ROUTE	KILOMETER POST TOTAL PROJECT	SHEET NO.	TOTAL SHEETS
07	LA	5	36.0	20	23

Caltrans Metric

Douglas B. Robison 8/1/00
REGISTERED ENGINEER - CIVIL

1-8-01
PLANS APPROVAL DATE

REGISTERED PROFESSIONAL ENGINEER DOUGLAS B. ROBISON No. 37109 Exp. 06-30-04 CIVIL STATE OF CALIFORNIA

The State of California or its officers or agents shall not be responsible for the accuracy or completeness of electronic copies of this plan sheet.

Caltrans now has a web site! To get to the web site, go to: http://www.dot.ca.gov

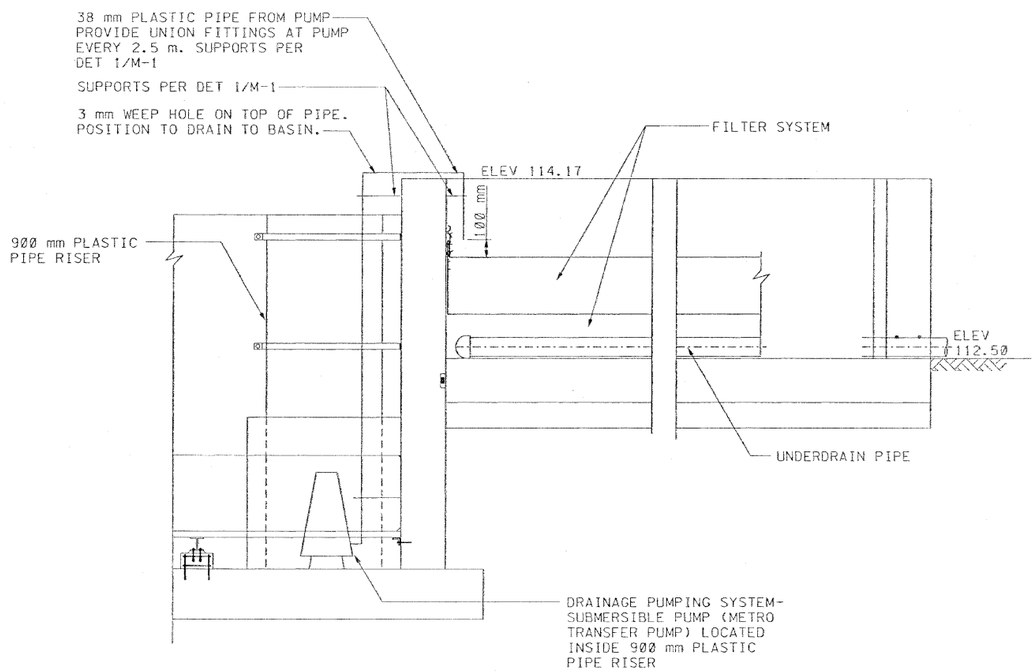

SECTION B / D-18
SCALE: 1:20

AS-ADVERTISED

M-2
ALL DIMENSIONS ARE IN METERS UNLESS OTHERWISE SHOWN

Patricia McCauley DESIGN OVERSIGHT 8-23-00 SIGN OFF DATE	DESIGN	BY DBR	CHECKED RMF	
	DETAILS	BY DBR	CHECKED RMF	
	QUANTITIES	BY DBR	CHECKED RMF	

PREPARED FOR THE STATE OF CALIFORNIA DEPARTMENT OF TRANSPORTATION

BRIDGE NO. N/A
KILOMETER POST 36.0

METRO PILOT STORM WATER FACILITY
MECHANICAL DETAILS

DS OSD 2147A (METRIC) (REV. 2/25/97)

ORIGINAL SCALE IN MILLIMETERS FOR REDUCED PLANS 0 10 20 30 40 50 60 70 80 90 100

CU 07274
EA 200004

DISREGARD PRINTS BEARING EARLIER REVISION DATES

REVISION DATES (PRELIMINARY STAGE ONLY) 1/00 6/00 8/08 8/14/00

SHEET 12 OF 15

MechanicalDetails-12of15.tif

DIST.	COUNTY	ROUTE	KILOMETER POST TOTAL PROJECT	SHEET NO.	TOTAL SHEETS
07	LA	5	36.0	21	23

Caltrans Metric

REGISTERED ENGINEER - CIVIL 8/1/00

1-8-01
PLANS APPROVAL DATE

REGISTERED PROFESSIONAL ENGINEER RAMESH L. JHURANI No. E 8121 Exp. 09-30-02 CIVIL STATE OF CALIFORNIA

The State of California or its officers or agents shall not be responsible for the accuracy or completeness of electronic copies of this plan sheet.

Caltrans now has a web site! To get to the web site, go to: http://www.dot.ca.gov

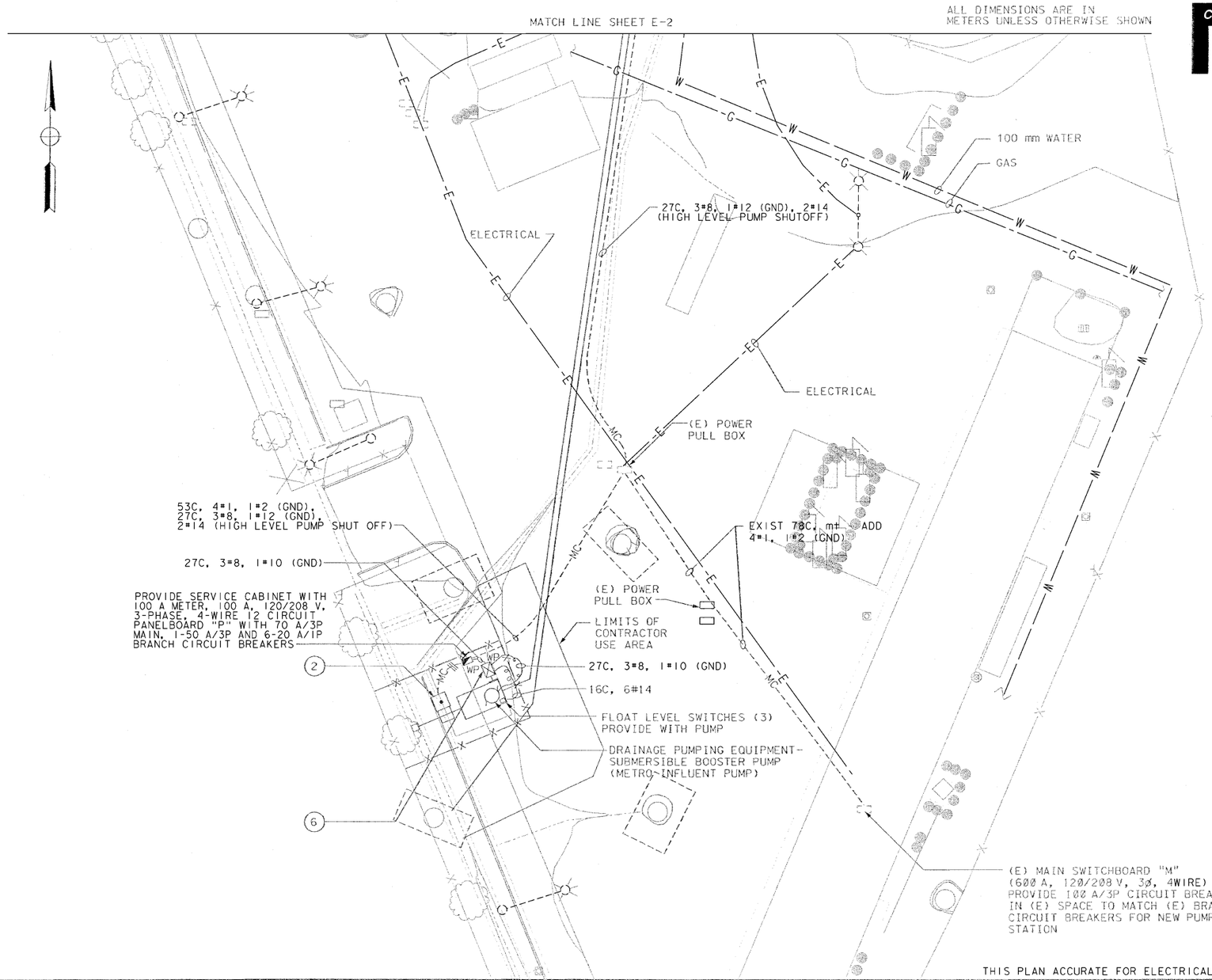

NOTES:

1. SEE DWG E-3 FOR LEGEND, NOTES AND DETAILS.
2. CONFIRM LOCATIONS WITH 'D' SERIES DRAWINGS.

ABBREVIATIONS:

MC METAL CONDUIT
GND GROUND
WP WEATHER PROOF

AS-ADVERTISED

SCALE 1:200

E-1

THIS PLAN ACCURATE FOR ELECTRICAL WORK ONLY.

Patricia McCauley
DESIGN OVERSIGHT
8-23-00
SIGN OFF DATE

DESIGN	BY RJ	CHECKED DR	
DETAILS	BY RJ	CHECKED DR	
QUANTITIES	BY RJ	CHECKED DR	

PREPARED FOR THE
STATE OF CALIFORNIA
DEPARTMENT OF TRANSPORTATION

BRIDGE NO. N/A
KILOMETER POST 36.0

METRO PILOT STORM WATER FACILITY
ELECTRICAL WORK

DS OSD 2147A (METRIC) (REV. 2/25/97)

ORIGINAL SCALE IN MILLIMETERS FOR REDUCED PLANS 0 10 20 30 40 50 60 70 80 90 100

CU 07274
EA 200004

DISPECARD PRINTS BEARING EARLIER REVISION DATES → 3/00 6/00 8/00 8/14/00

REVISION DATES (PRELIMINARY STAGE ONLY)

SHEET 13 OF 15

ElectricalPlan-13of15.tif

DIST.	COUNTY	ROUTE	KILOMETER POST TOTAL PROJECT	SHEET NO.	TOTAL SHEETS
07	LA	5	36.0	22	23

Caltrans Metric

REGISTERED ENGINEER - CIVIL 8/1/00

1-8-01
PLANS APPROVAL DATE

REGISTERED PROFESSIONAL ENGINEER RAMESH L. JHURANI No. E 8121 Exp. 09-30-02 CIVIL STATE OF CALIFORNIA

The State of California or its officers or agents shall not be responsible for the accuracy or completeness of electronic copies of this plan sheet.

Caltrans now has a web site! To get to the web site, go to: http://www.dot.ca.gov

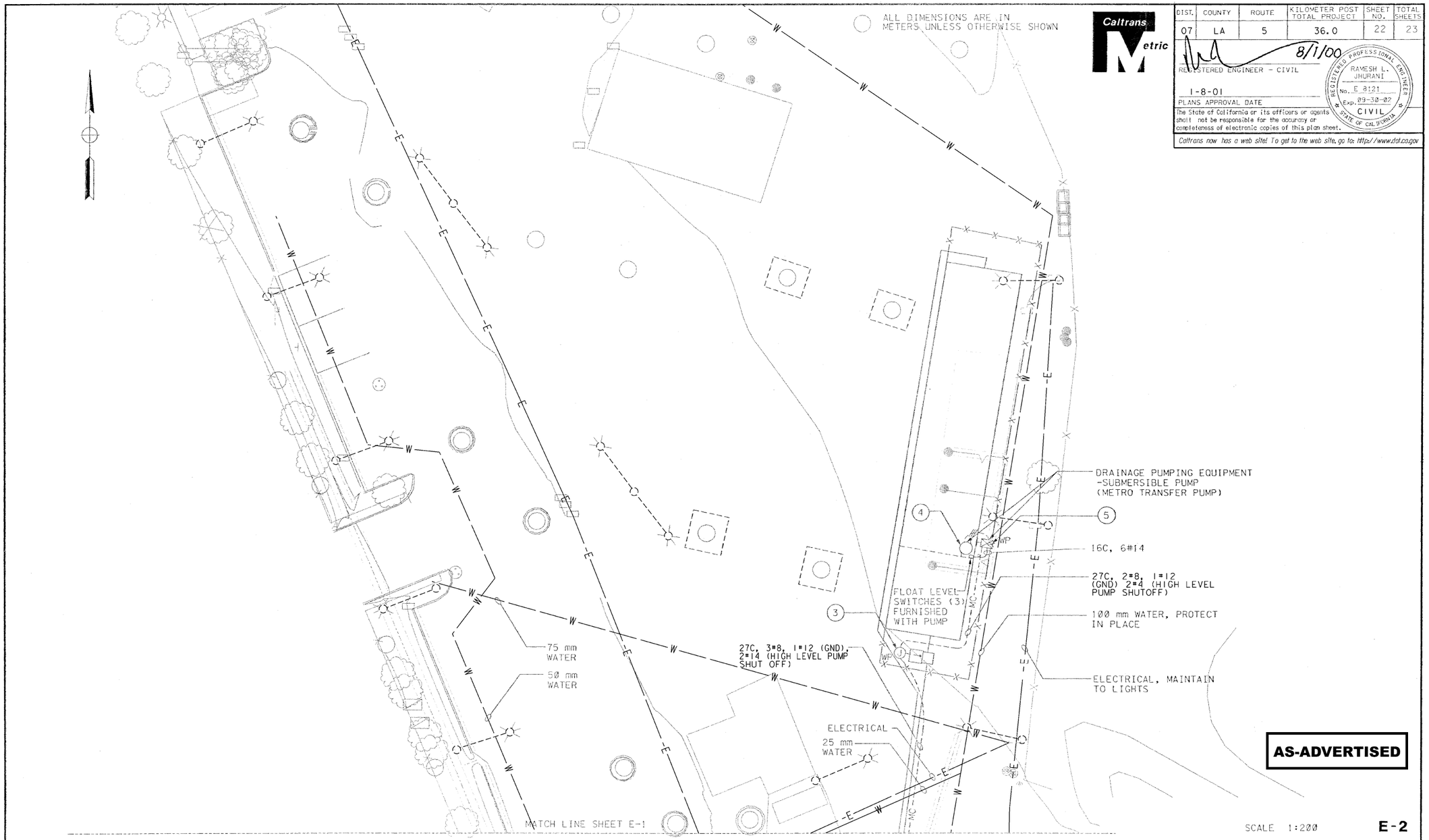

AS-ADVERTISED

SCALE 1:200

E-2

Patricia McCauley DESIGN OVERSIGHT 8-23-00 SIGN OFF DATE	DESIGN	BY RJ	CHECKED DR	
	DETAILS	BY RJ	CHECKED DR	
	QUANTITIES	BY RJ	CHECKED DR	

PREPARED FOR THE STATE OF CALIFORNIA DEPARTMENT OF TRANSPORTATION

BRIDGE NO. N/A
KILOMETER POST 36.0

METRO PILOT STORM WATER FACILITY
ELECTRICAL WORK

DS OSD 2147A (METRIC) (REV. 2/25/97)

ORIGINAL SCALE IN MILLIMETERS FOR REDUCED PLANS 0 10 20 30 40 50 60 70 80 90 100

CU 07274
EA 200004

DISREGARD PRINTS BEARING EARLIER REVISION DATES

REVISION DATES (PRELIMINARY STAGE ONLY) 1/00 6/00 8/00 8/14/00

SHEET 14 OF 15

ElectricalPlan-14of15.tif

ALL DIMENSIONS ARE IN METERS UNLESS OTHERWISE SHOWN

Caltrans Metric

DIST.	COUNTY	ROUTE	KILOMETER POST TOTAL PROJECT	SHEET NO.	TOTAL SHEETS
07	LA	5	36.0	23	23

8/1/00
REGISTERED ENGINEER - CIVIL

1-8-01
PLANS APPROVAL DATE

REGISTERED PROFESSIONAL ENGINEER RAMESH L. JHURANI No. E 8121 Exp. 09-30-02 CIVIL STATE OF CALIFORNIA

The State of California or its officers or agents shall not be responsible for the accuracy or completeness of electronic copies of this plan sheet.

Caltrans now has a web site! To get to the web site, go to: http://www.dot.ca.gov

LEGEND:

- STANCHION MOUNTED JUNCTION BOX, WEATHERPROOF
- STANCHION MOUNTED DUPLEX RECEPTACLE OUTLET, WEATHERPROOF
- EXISTING SWITCHBOARD/PANELBOARD AND CABINET
- (E) EXISTING ELECTRICAL EQUIPMENT
- CROSS LINES INDICATES NUMBER OF #12 AWG. NO CROSS LINES INDICATES 2#12 AWG, UNLESS OTHERWISE NOTED. ALL CONDUIT 16C UNLESS OTHERWISE NOTED
- P-1,3 HOMERUN TO PANELBOARD CIRCUIT NUMBERS 1 AND 3
- MC CONDUIT, METALLIC UNDERGROUND
- E EXISTING CONDUIT TO REMAIN
- STANCHION MOUNTED CONTROL PANEL WITH MOTOR STARTER FOR THE PUMP, WEATHERPROOF
- PUMP MOTOR WITH FLOAT SWITCHES
- 100 A / 3P THERMAL MAGNETIC BREAKER TRIP RATING AND NUMBER OF POLES INDICATED
- CONTROL PANEL WITH MOTOR STARTER. NEMA SIZE INDICATED
- (N) NEW ELECTRICAL EQUIPMENT
- H / A HAND-OFF-AUTOMATIC SELECTOR SWITCH

NOTES:

1. TYPE III-BF SERVICE EQUIPMENT ENCLOSURE WITH PROVISIONS FOR ONE 100 A METER, 100 A, 120/208 V, 3-PHASE, 4-WIRE 12-CIRCUIT PANELBOARD "P" WITH 70 A/3P MAIN, 1-50 A/3P, AND 6-20 A/1P BRANCH CIRCUIT BREAKERS
2. FOR CONNECTION OF INFLUENT/IN-FLOW SAMPLER AND FLOW METER
3. FOR CONNECTION OF EFFLUENT/OUT FLOW SAMPLER AND FLOW METER
4. PUMP MOTOR WITH FLOAT SWITCHES
5. CONTROL PANEL WITH NEMA SIZE 1, 120 V, 1-PHASE MOTOR STARTER WITH H-O-A (HAND-OFF-AUTOMATIC) SWITCH FOR FLOAT CONTROL
6. CONTROL PANEL WITH NEMA SIZE 2, 208 V, 3-PHASE MOTOR STARTER WITH H-O-A (HAND-OFF-AUTOMATIC) SWITCH FOR FLOAT CONTROL.

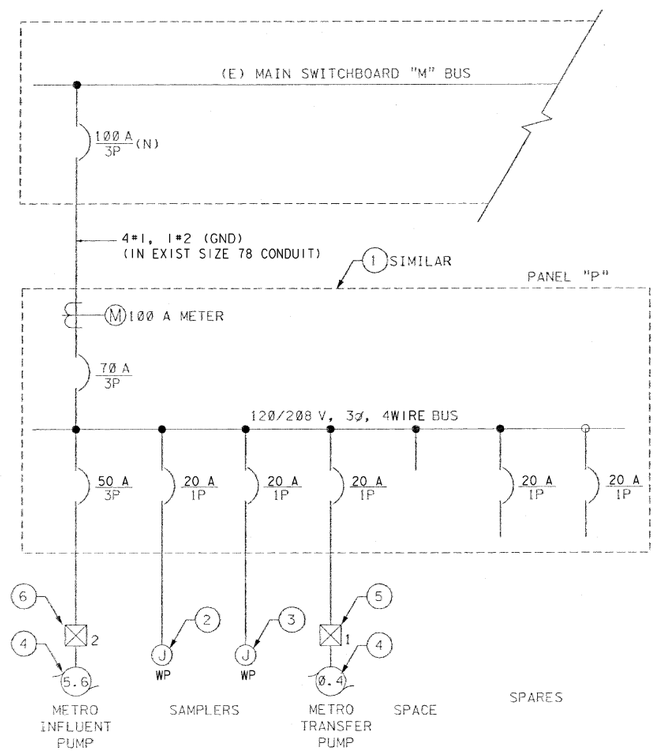

SINGLE LINE DIAGRAM

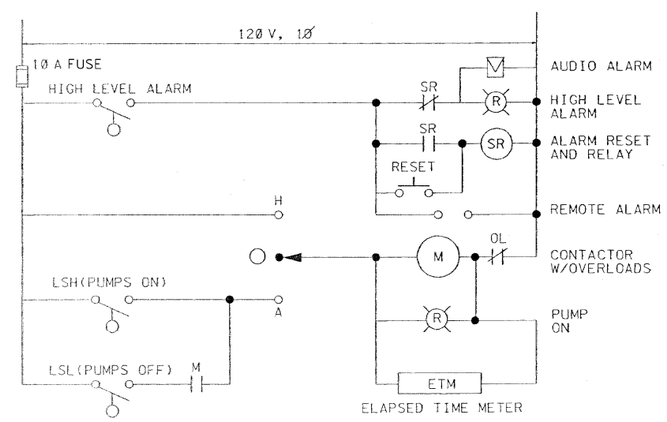

TYPICAL PUMP CONTROL SCHEMATIC

AS-ADVERTISED

E-3

Patricia M. Conley DESIGN OVERSIGHT 8-23-00 SIGN OFF DATE	DESIGN	BY RJ	CHECKED DR	
	DETAILS	BY RJ	CHECKED DR	
	QUANTITIES	BY RJ	CHECKED DR	

PREPARED FOR THE STATE OF CALIFORNIA DEPARTMENT OF TRANSPORTATION

BRIDGE NO. N/A
KILOMETER POST 36.0

METRO PILOT STORM WATER FACILITY
ELECTRICAL WORK

DS OSD 2147A (METRIC) (REV. 2/25/97)

ORIGINAL SCALE IN MILLIMETERS FOR REDUCED PLANS 0 10 20 30 40 50 60 70 80 90 100

CU 07274
EA 200004

DISREGARD PRINTS BEARING EARLIER REVISION DATES → 3/00 6/00 8/00

SHEET 15 OF 15

ElectricalPlan-15of15.tif