| DIST | COUNTY | ROUTE | KILOMETER POST TOTAL PROJECT | SHEET NO. | TOTAL SHEETS |
|---|---|---|---|---|---|
| 11 | SD | 5 | 70.7 | 1 | 41 |

INDEX OF SHEETS


| Sheet No. | Description |
|---|---|
| 1 | Title and Location Map |
| 2 | Typical Cross Sections |
| 3-4 | Layouts |
| 5 | Construction Details |
| 6-22 | Drainage Plans, Profiles, Detail and Quantities |
| 23-25 | Construction Area Signs |
| 26 | Summary of Quantities |
| 27-30 | Highway Planting |
| 31-36 | Revised Standard Plans |
| 37-41 | New Standard Plans |


STATE OF CALIFORNIA

# DEPARTMENT OF TRANSPORTATION

# PROJECT PLANS FOR CONSTRUCTION ADJACENT TO STATE HIGHWAY

## IN SAN DIEGO COUNTY IN ENCINITAS AT 0.3 km SOUTH OF LA COSTA AVENUE OVERCROSSING

To be supplemented by Standard Plans dated July, 1997

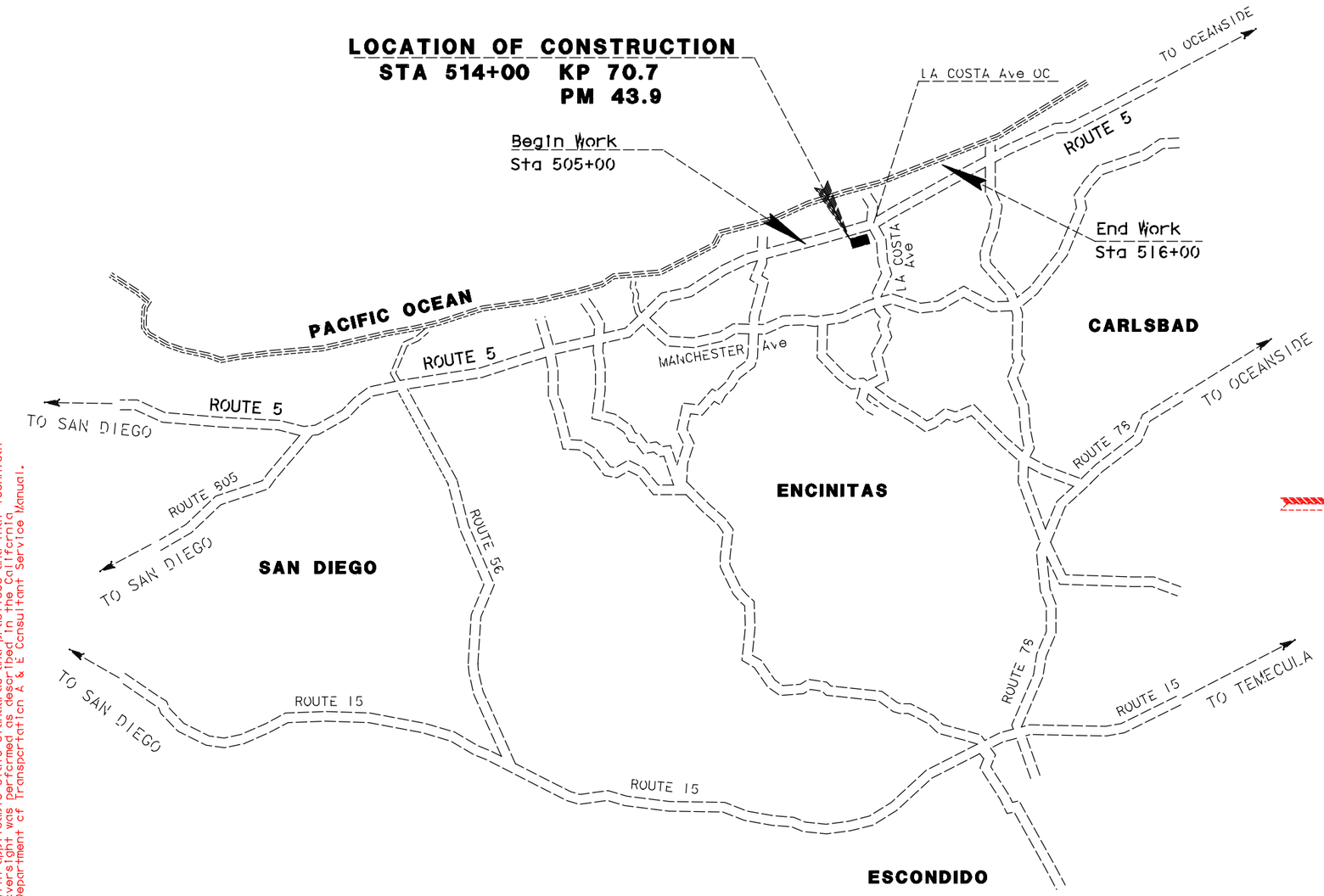

The State of California or its officers or agents shall not be responsible for the accuracy or completeness of electronic copies of this plan sheet.


Caltrans Metric

**AS-CONSTRUCTED PLANS**

The changes reflected in these AS-CONSTRUCTED PLANS were obtained by conducting a review of the site by RBF field surveyors in May of 2000. The field survey was limited to a review of the surface features and a review of the accessible invert elevations of drainage structures.

RBF is not responsible for the accuracy or completeness of electronic copies of this plan sheet.

Date of AS-CONSTRUCTED PLANS preparation: June 2000

Approved as to impact on State facilities and conformance with applicable State standards and practices and that technical oversight was performed as described in the California Department of Transportation A & E Consultant Service Manual.

| PROJECT ENGINEER | DESIGN OVERSIGHT APPROVAL | REGISTRATION NO. | DATE |
|---|---|---|---|
| A. M. WALKER | PRINTED NAME: CID TESRO<br>SIGNATURE | 47906 | 2-24-99 |

Project Engineer / Registered Civil Engineer — Date

REGISTERED PROFESSIONAL ENGINEER — A. M. WALKER — No. 57716 — Exp. 12-31-01 — CIVIL — STATE OF CALIFORNIA

February 26, 1999
Plans Approval Date

The Contractor shall possess the Class (or Classes) of license as specified in the "Notice to Contractors".

NO SCALE


ROBERT BEIN, WILLIAM FROST & ASSOCIATES
14725 ALTON PARKWAY
IRVINE, CA 92618


Contract No. 11-078404

LAST REVISION — DATE PLOTTED =>&DATE — 00-00-00 — TIME PLOTTED =>&TIME

&FILE& — &TIME& — &DATE&

FORM DC-OE-93-PF (REV. 3/93)

FOR REDUCED PLANS ORIGINAL SCALE IS IN MILLIMETERS 0 20 40 60 80

USERNAME =>&USER
DGN FILE =>&REQUEST

CU 11332 EA 078401

| DIST | COUNTY | ROUTE | KILOMETER POST TOTAL PROJECT | SHEET NO. | TOTAL SHEETS |
|---|---|---|---|---|---|
| 11 | SD | 5 | 70.7 | 2 | 41 |

REGISTERED CIVIL ENGINEER

2-26-99
PLANS APPROVAL DATE

The State of California or its officers or agents shall not be responsible for the accuracy or completeness of electronic copies of this plan sheet.

REGISTERED PROFESSIONAL ENGINEER — A. M. WALKER — No. 57716 — Exp. 12-31-01 — CIVIL — STATE OF CALIFORNIA

ROBERT BEIN, WILLIAM FROST & ASSOCIATES
14725 ALTON PARKWAY
IRVINE, CA 92618

NOTES:

1. DIMENSIONS OF THE STRUCTURAL SECTION ARE SUBJECT TO TOLERANCES SPECIFIED IN THE STANDARD SPECIFICATIONS.
2. SEE CONSTRUCTION DETAIL SHEET FOR POROUS PAVEMENT DETAILS.

"A"

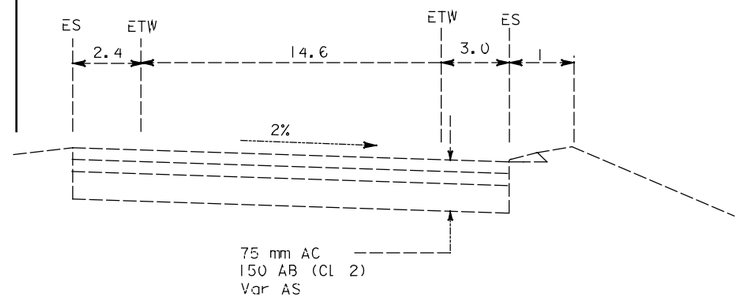


"LAC2"

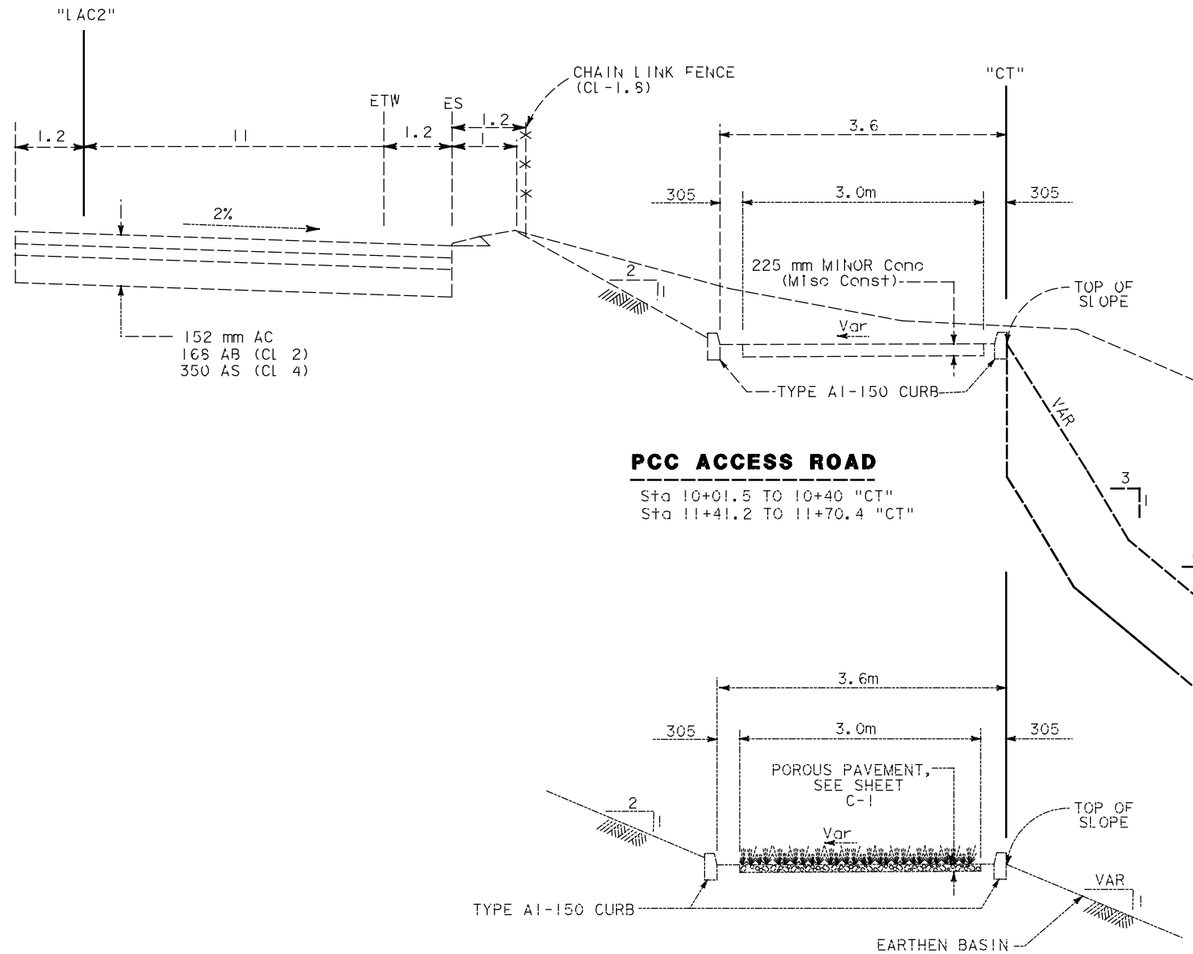


## PCC ACCESS ROAD

Sta 10+01.5 TO 10+40 "CT"
Sta 11+41.2 TO 11+70.4 "CT"




## VEGETATED ACCESS ROAD

Sta 10+40 TO 11+41.2 "CT"

## LEGEND

AC = ASPHALT CONCRETE (TYPE A)

**AS-CONSTRUCTED PLANS**

The changes reflected in these AS-CONSTRUCTED PLANS were obtained by conducting a review of the site by RBF field surveyors in May of 2000. The field survey was limited to a review of the surface features and a review of the accessible invert elevations of drainage structures.

RBF is not responsible for the accuracy or completeness of electronic copies of this plan sheet.

Date of AS-CONSTRUCTED PLANS preparation. June 2000

# TYPICAL CROSS SECTION

ALL DIMENSIONS ARE IN METERS UNLESS OTHERWISE SHOWN

NO SCALE

X-1

DESIGN OVERSIGHT — CID TESORO

NPDES

CALCULATED/DESIGNED BY — AMW — DATE 1/99
CHECKED BY — SMT — DATE 1/99
REVISED BY — DATE REVISED

DATE PLOTTED => $DATE
TIME PLOTTED => $TIME

$FILE$ $TIME$ $DATE$

FOR REDUCED PLANS
ORIGINAL SCALE IN MILLIMETERS 0 20 40 60 80

USERNAME => $USER
DGN FILE => $REQUEST

CU 11332 | EA 07840!

NOTE:

1. FOR COMPLETE RIGHT OF WAY AND ACCURATE ACCESS DATA , SEE RIGHT OF WAY RECORD MAPS AT DISTRICT OFFICE.

2. ELEVATIONS AS SHOWN HEREON ARE IN TERMS OF THE NORTH AMERICAN VERTICAL DATUM OF 1988 BASED LOCALLY UPON THE FOLLOWING BENCHMARKS.

| BENCHMARK | NAVD88 ELEV | SOURCE |
|---|---|---|
| TRAK | 151.604 | COUNTY OF ORANGE |
| DASH | 462.113 | NGS |
| F1415 | 75.015 | NGS |

3. THE ALIGNMENT INFORMATION SHOWN ON THESE PLANS WAS CONVERTED FROM AS-BUILT ALIGNMENT GEOMETRY AND STATIONS USING THE U.S. FOOT/METRIC RELATIONSHIP.

4. THE FOLLOWING GROUNDWATER LEVEL READINGS ARE AS FOLLOWS:

| | |
|---|---|
| 12/15/98 | 4.2 m |
| 1/20/99 | 4.19 m |

LEGEND

- MBGR
- PCC
- VEGETATED ACCESS

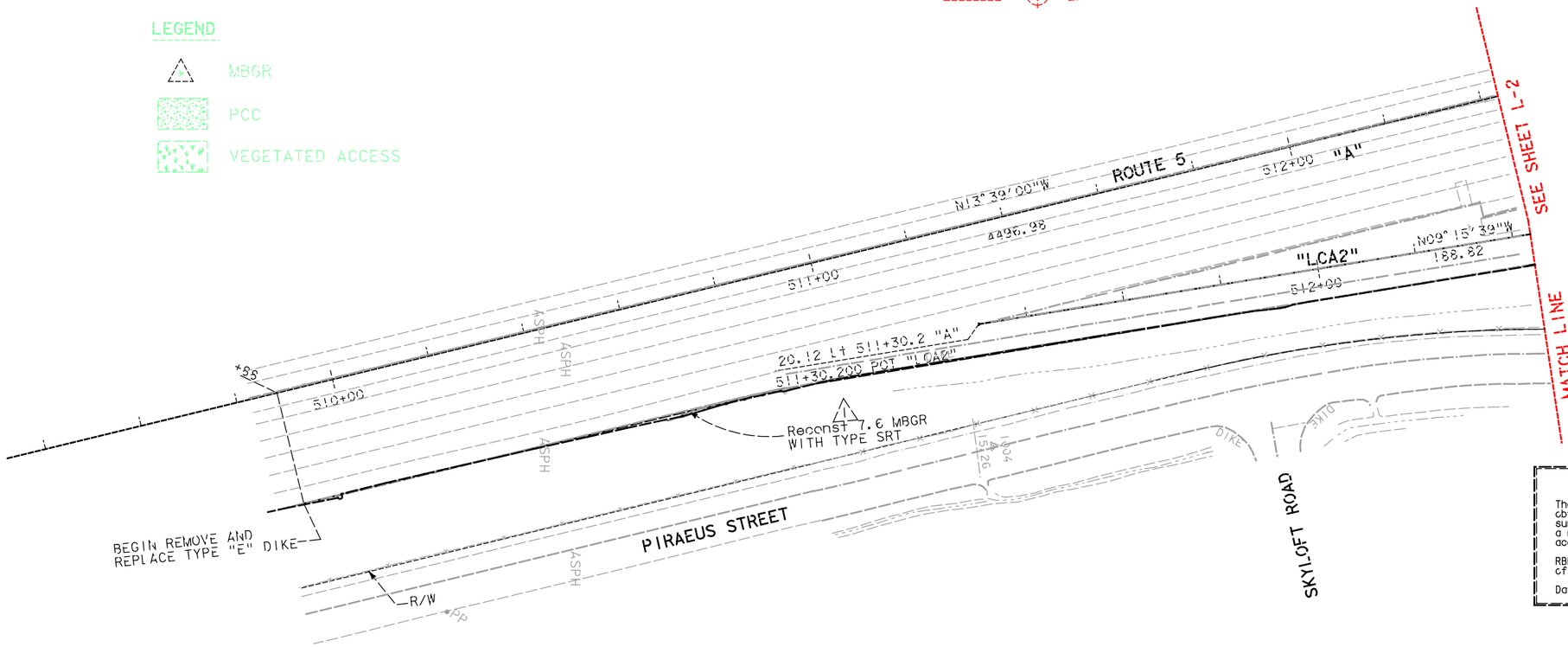


**AS-CONSTRUCTED PLANS**

The changes reflected in these AS-CONSTRUCTED PLANS were obtained by conducting a review of the site by RBF field surveyors in May of 2000. The field survey was limited to a review of the surface features and a review of the accessible invert elevations of drainage structures.

RBF is not responsible for the accuracy or completeness of electronic copies of this plan sheet.

Date of AS-CONSTRUCTED PLANS preparation. June 2000

ALL DIMENSIONS ARE IN METERS UNLESS OTHERWISE NOTED.

SCALE 1=500

**LAYOUT**

**L-1**

| DIST | COUNTY | ROUTE | KILOMETER POST TOTAL PROJECT | SHEET NO. | TOTAL SHEETS |
|---|---|---|---|---|---|
| 11 | SD | 5 | 70.7 | 3 | 41 |

REGISTERED CIVIL ENGINEER

2-26-99
PLANS APPROVAL DATE

REGISTERED PROFESSIONAL ENGINEER — A. M. WALKER — No. 57716 — Exp. 12-31-01 — CIVIL — STATE OF CALIFORNIA

The State of California or its officers or agents shall not be responsible for the accuracy or completeness of electronic copies of this plan sheet.


ROBERT BEIN, WILLIAM FROST & ASSOCIATES
14725 ALTON PARKWAY
IRVINE, CA 92618


| DATE | REVISED BY | DATE REVISED |
|---|---|---|
| 1/99 | AMW | 1/99 |

CALCULATED/DESIGNED BY
CHECKED BY SMT 1/99

DESIGN OVERSIGHT
CID TESORO

NPDES

Caltrans

$DATE$ $TIME$ $FILE$

DATE PLOTTED => $DATE
TIME PLOTTED => $TIME

FOR REDUCED PLANS ORIGINAL SCALE IN MILLIMETERS 0 20 40 60 80

USERNAME => $USER
DGN FILE => $REQUEST

CU 11332

EA 07840!

NOTE:

1. FOR COMPLETE RIGHT OF WAY AND ACCURATE ACCESS DATA, SEE RIGHT OF WAY RECORD MAPS AT DISTRICT OFFICE.

2. ELEVATIONS AS SHOWN HEREON ARE IN TERMS OF THE NORTH AMERICAN VERTICAL DATUM OF 1988 BASED LOCALLY UPON THE FOLLOWING BENCHMARKS.

| BENCHMARK | DATUM ELEV. | SOURCE |
|---|---|---|
| TBAR | 151.806 | COUNTY OF ORANGE |
| DASH | 302.113 | NGS |
| PIVOT | RELOC | NGS |

3. THE ALIGNMENT INFORMATION SHOWN ON THESE PLANS WAS CONVERTED FROM AS-BUILT ALIGNMENT GEOMETRY AND STATIONS USING THE U.S. FOOT/METRIC RELATIONSHIP.

Caltrans Metric

| DIST | COUNTY | ROUTE | KILOMETER POST TOTAL PROJECT | SHEET NO. | TOTAL SHEETS |
|---|---|---|---|---|---|
| 12 | ORA | 5 | 30.7 | 4 | 4 |

REGISTERED CIVIL ENGINEER

A. M. WALKER No. 57716 Exp. 12-31-01 CIVIL STATE OF CALIFORNIA

2-28-00
PLANS APPROVAL DATE

The State of California or the officers or agents thereof include the engineers in subordination of the exemption from liability for the safety of public streets

ROBERT BEIN, WILLIAM FROST & ASSOCIATES
14725 ALTON PARKWAY
IRVINE, CA 92618

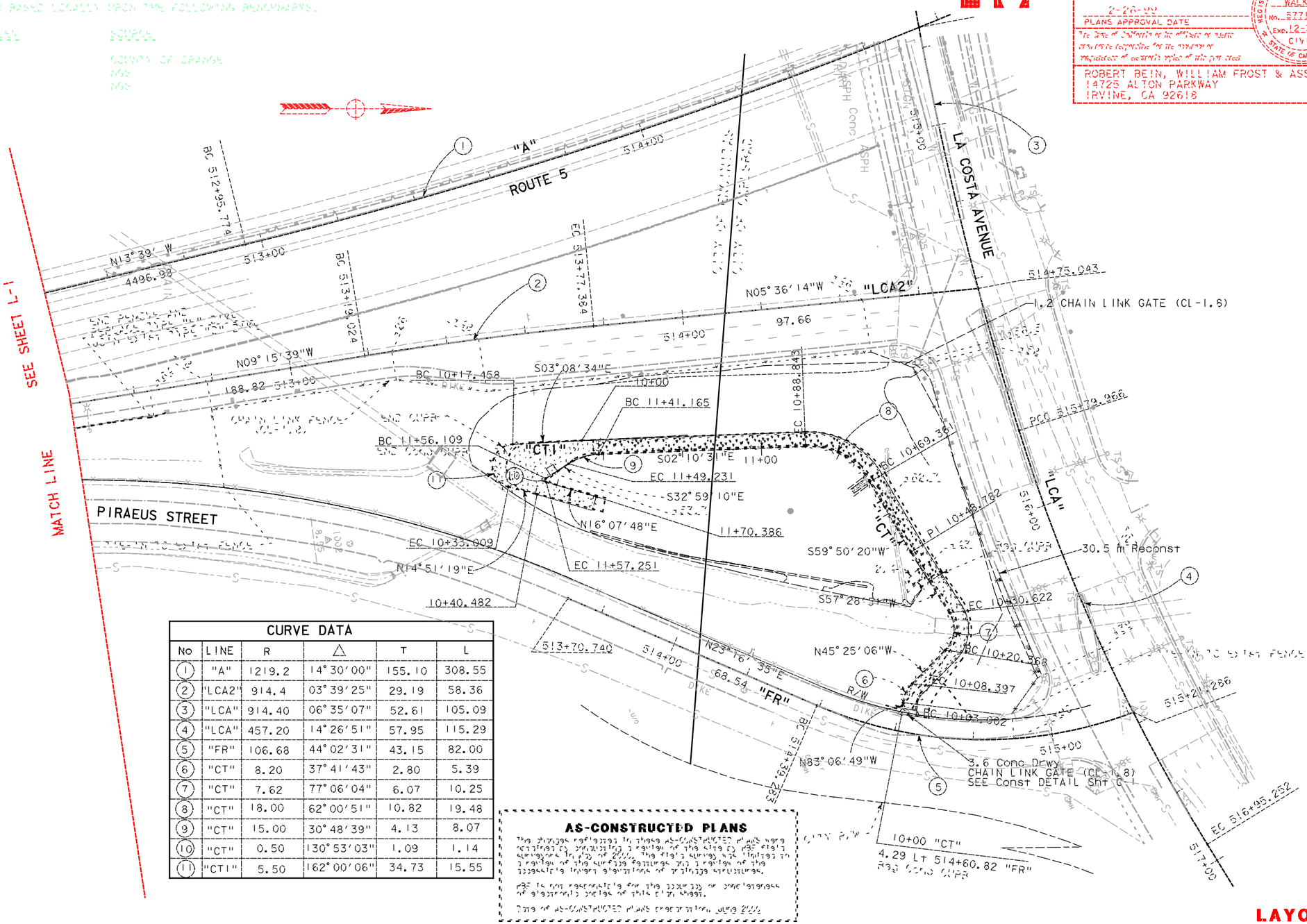


## CURVE DATA

| No | LINE | R | △ | T | L |
|---|---|---|---|---|---|
| (1) | "A" | 1219.2 | 14° 30' 00" | 155.10 | 308.55 |
| (2) | "LCA2" | 914.4 | 03° 39' 25" | 29.19 | 58.36 |
| (3) | "LCA" | 914.40 | 06° 35' 07" | 52.61 | 105.09 |
| (4) | "LCA" | 457.20 | 14° 26' 51" | 57.95 | 115.29 |
| (5) | "FR" | 106.68 | 44° 02' 31" | 43.15 | 82.00 |
| (6) | "CT" | 8.20 | 37° 41' 43" | 2.80 | 5.39 |
| (7) | "CT" | 7.62 | 77° 06' 04" | 6.07 | 10.25 |
| (8) | "CT" | 18.00 | 62° 00' 51" | 10.82 | 19.48 |
| (9) | "CT" | 15.00 | 30° 48' 39" | 4.13 | 8.07 |
| (10) | "CT" | 0.50 | 130° 53' 03" | 1.09 | 1.14 |
| (11) | "CT1" | 5.50 | 162° 00' 06" | 34.73 | 15.55 |

**AS-CONSTRUCTED PLANS**

This drawing reflects the as-constructed plans were obtained by annotating a reprint of the originally prepared drawing. The right of ownership is limited to a reprint of the original drawing and a reprint of the subsequently revised dimensions of existing structures.

RBF is not responsible for the accuracy or completeness of dimensions shown on this plan sheet.

Date of as-constructed plans preparation: June 2000

ALL DIMENSIONS ARE IN METERS UNLESS OTHERWISE NOTED.

# LAYOUT

L-2

SCALE 1:500

DESIGN OVERSIGHT
CID TESORO

NPDES

| DATES | TIMES | FILES |
|---|---|---|
| | | |

| | CALCULATED/ DESIGNED BY | DATE REVISED BY | DATE REVISED |
|---|---|---|---|
| CHECKED BY | SMT 1/99 | AMW 1/99 | |

FOR REDUCED PLANS ORIGINAL SCALE IN MILLIMETERS 0 20 40 60 80

USERNAME => $USER
DGN FILE => $DGNFILE

CU 11332 EA 07840!

DATE PLOTTED => $DATE
TIME PLOTTED => $TIME

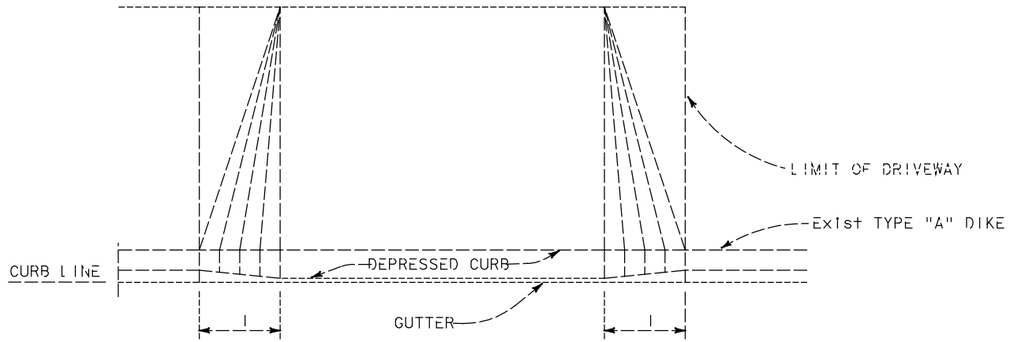


PLAN

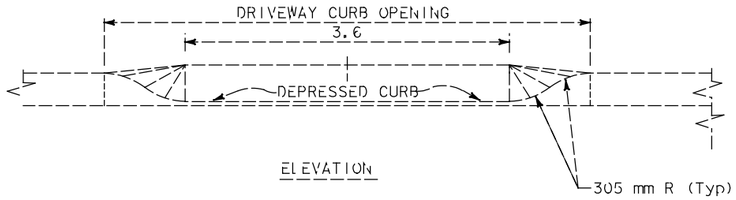


ELEVATION

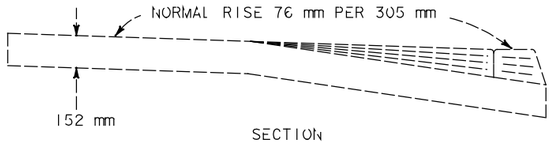


SECTION

## CONCRETE DRIVEWAY

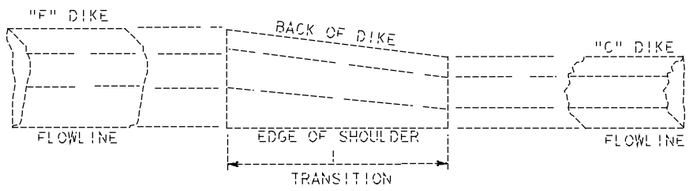


## F DIKE TO C DIKE TRANSITION

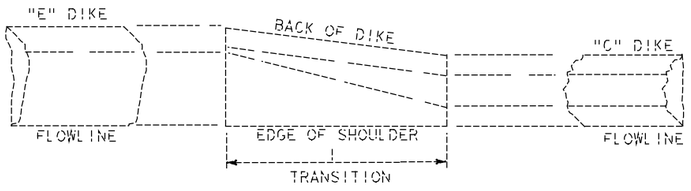


## E DIKE TO C DIKE TRANSITION

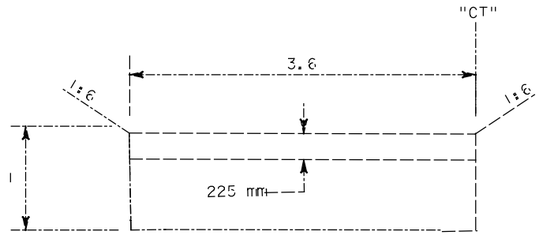


## CUTOFF WALL

Sta 11+70.4 "CT"

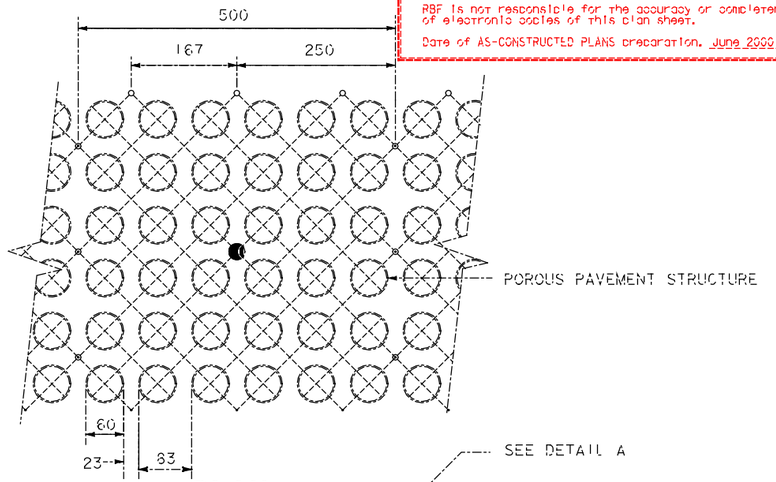


## PLAN

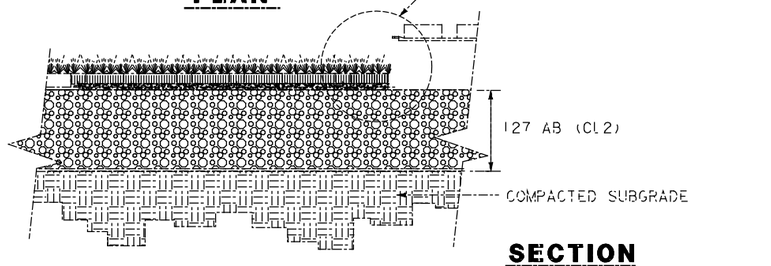


## SECTION

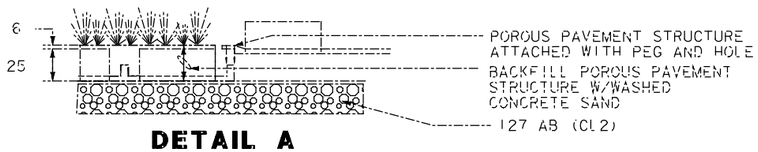


## DETAIL A

NOTE: SEE HIGHWAY PLANTING SHEETS FOR SPECIFIED VEGETATION.

## POROUS PAVEMENT DETAIL

**AS-CONSTRUCTED PLANS**

The changes reflected in these AS-CONSTRUCTED PLANS were obtained by conducting a review of the site by RBF field surveyors in May of 2000. The field survey was limited to a review of the surface features and a review of the accessible invert elevations of drainage structures.

RBF is not responsible for the accuracy or completeness of electronic copies of this plan sheet.

Date of AS-CONSTRUCTED PLANS preparation: June 2000

ALL DIMENSIONS ARE IN METERS UNLESS OTHERWISE SHOWN

| DIST | COUNTY | ROUTE | KILOMETER POST TOTAL PROJECT | SHEET NO. | TOTAL SHEETS |
|---|---|---|---|---|---|
| 11 | SD | 5 | 70.7 | 5 | 41 |

REGISTERED CIVIL ENGINEER

A. M. WALKER No. 57716 Exp. 12-31-01 CIVIL STATE OF CALIFORNIA

2-26-99
PLANS APPROVAL DATE

The State of California or its officers or agents shall not be responsible for the accuracy or completeness of electronic copies of this plan sheet

ROBERT BEIN, WILLIAM FROST & ASSOCIATES
14725 ALTON PARKWAY
IRVINE, CA 92618

**AS-CONSTRUCTED PLANS**

The changes reflected in these AS-CONSTRUCTED PLANS were obtained by conducting a review of the site by RBF field surveyors in May of 2000. The field survey was limited to a review of the surface features and a review of the accessible invert elevations of drainage structures.

RBF is not responsible for the accuracy or completeness of electronic copies of this plan sheet.

Date of AS-CONSTRUCTED PLANS preparation: June 2000

| DATE REVISED | BY | DATE REVISED | BY |
|---|---|---|---|
| | | | |
| | | | |
| 1/99 | AMW | 1/99 | SMT |

CALCULATED/DESIGNED BY
CHECKED BY

DESIGN OVERSIGHT
CID TESORO
NPDES
Caltrans

&FILE&
&TIME&
&DATE&

DATE PLOTTED => &DATE
TIME PLOTTED => &TIME

CONSTRUCTION DETAILS

NO SCALE

C-1

FOR REDUCED PLANS ORIGINAL SCALE IN MILLIMETERS 0 20 40 60 80

USERNAME => &USER
DGN FILE => &REQUEST

CU 11332

EA 07840!

| DIST | COUNTY | ROUTE | KILOMETER POST TOTAL PROJECT | SHEET NO | TOTAL SHEETS |
|---|---|---|---|---|---|
| 11 | SD | 5 | 70.7 | 6 | 41 |

ALL DIMENSIONS ARE IN METERS UNLESS OTHERWISE SHOWN

Caltrans Metric

REGISTERED CIVIL ENGINEER

2-26-99
PLANS APPROVAL DATE

REGISTERED PROFESSIONAL ENGINEER — A. M. WALKER — No. 57716 — Exp. 12-31-01 — CIVIL — STATE OF CALIFORNIA

The State of California or its officers or agents shall not be responsible for the accuracy or completeness of electronic copies of this plan sheet.

ROBERT BEIN, WILLIAM FROST & ASSOCIATES
14725 ALTON PARKWAY
IRVINE, CA 92618

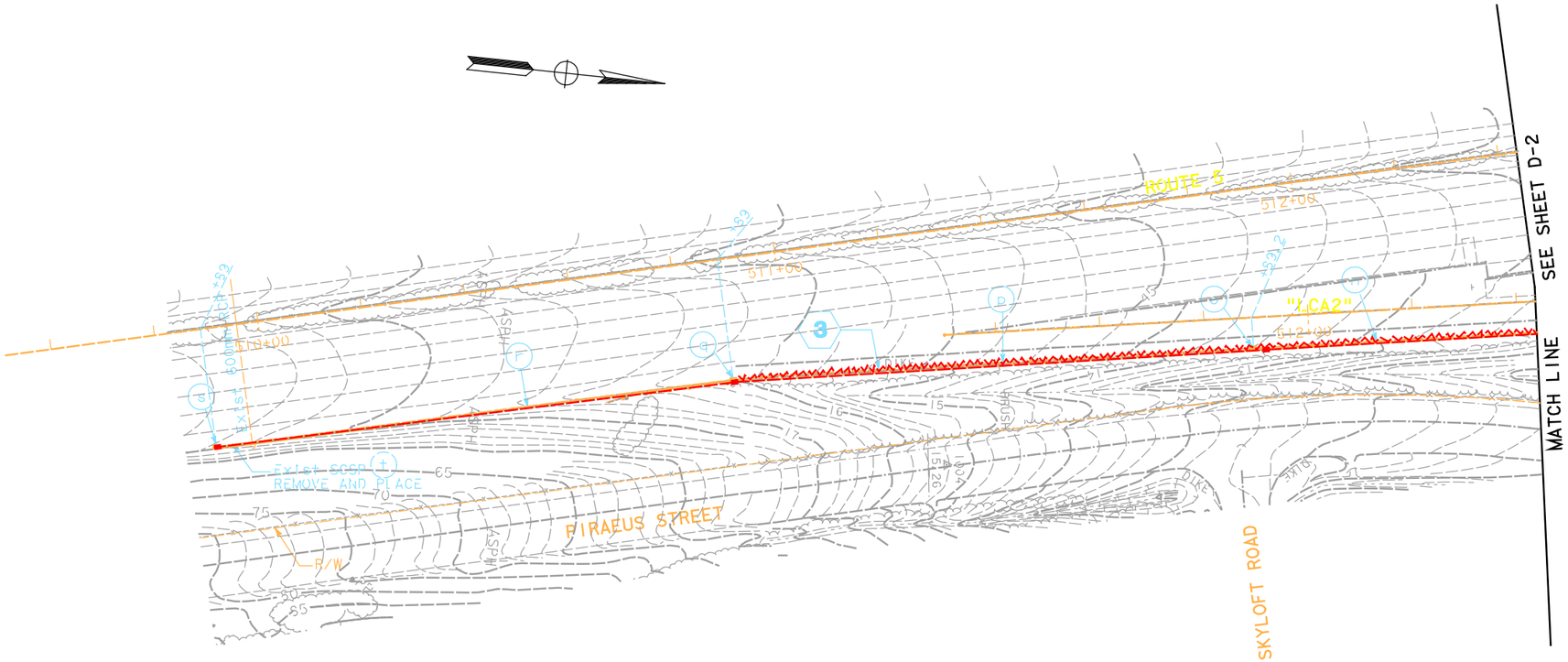


## ABBREVIATIONS

C - CUT
F - FILL
FS - FINISHED SURFACE
GB - GRADE BREAK
TP - TOP PLATE
WQM - WATER QUALITY MONITORING

## LEGEND

- DRAINAGE SYSTEM NO
- DRAINAGE UNIT
- ROCK SLOPE PROTECTION (RSP)
- DITCH OR SLOPE PAVING FLOWLINE, SLOPE OR GRADE TO DRAIN

**AS-CONSTRUCTED PLANS**

The changes reflected in these AS-CONSTRUCTED PLANS were obtained by conducting a review of the site by RBF field surveyors in May of 2000. The field survey was limited to a review of the surface features and a review of the accessible invert elevations of drainage structures.

RBF is not responsible for the accuracy or completeness of electronic copies of this plan sheet.

Date of AS-CONSTRUCTED PLANS preparation. June 2000

# CONTOUR GRADING AND DRAINAGE PLAN

SCALE: 1:500

D-1

| DATE | REVISED BY |
|---|---|
| 1/99 | DATE REVISED |

CALCULATED/DESIGNED BY: AMW
CHECKED BY: MC

DESIGN OVERSIGHT: CID TESORO

STATE OF CALIFORNIA - DEPARTMENT OF TRANSPORTATION
Caltrans
NPDES

&FILE&
&TIME&
&DATE&

FOR REDUCED PLANS ORIGINAL SCALE IS IN MILLIMETERS 0 20 40 60 80

USERNAME => &USER
DGN FILE => &REQUEST

CU 11332

EA 07840!

LAST REVISION DATE PLOTTED => &DATE
00-00-00 TIME PLOTTED => &TIME

| DIST | COUNTY | ROUTE | KILOMETER POST TOTAL PROJECT | SHEET NO | TOTAL SHEETS |
|---|---|---|---|---|---|
| 11 | SD | 5 | 70.7 | [illegible] | [illegible] |

REGISTERED CIVIL ENGINEER

2-26-99

PLANS APPROVAL DATE

The State of California or its officers or agents shall not be responsible for the accuracy or completeness of electronic copies of this plan sheet.

REGISTERED PROFESSIONAL ENGINEER
A.M. WALKER
NO. 57716
EXP. 12-31-01
CIVIL
STATE OF CALIFORNIA

ROBERT BEIN, WILLIAM FROST & ASSOCIATES
14725 ALTON PARKWAY
IRVINE, CA 92618

ALL DIMENSIONS ARE IN METERS UNLESS OTHERWISE SHOWN

Caltrans Metric

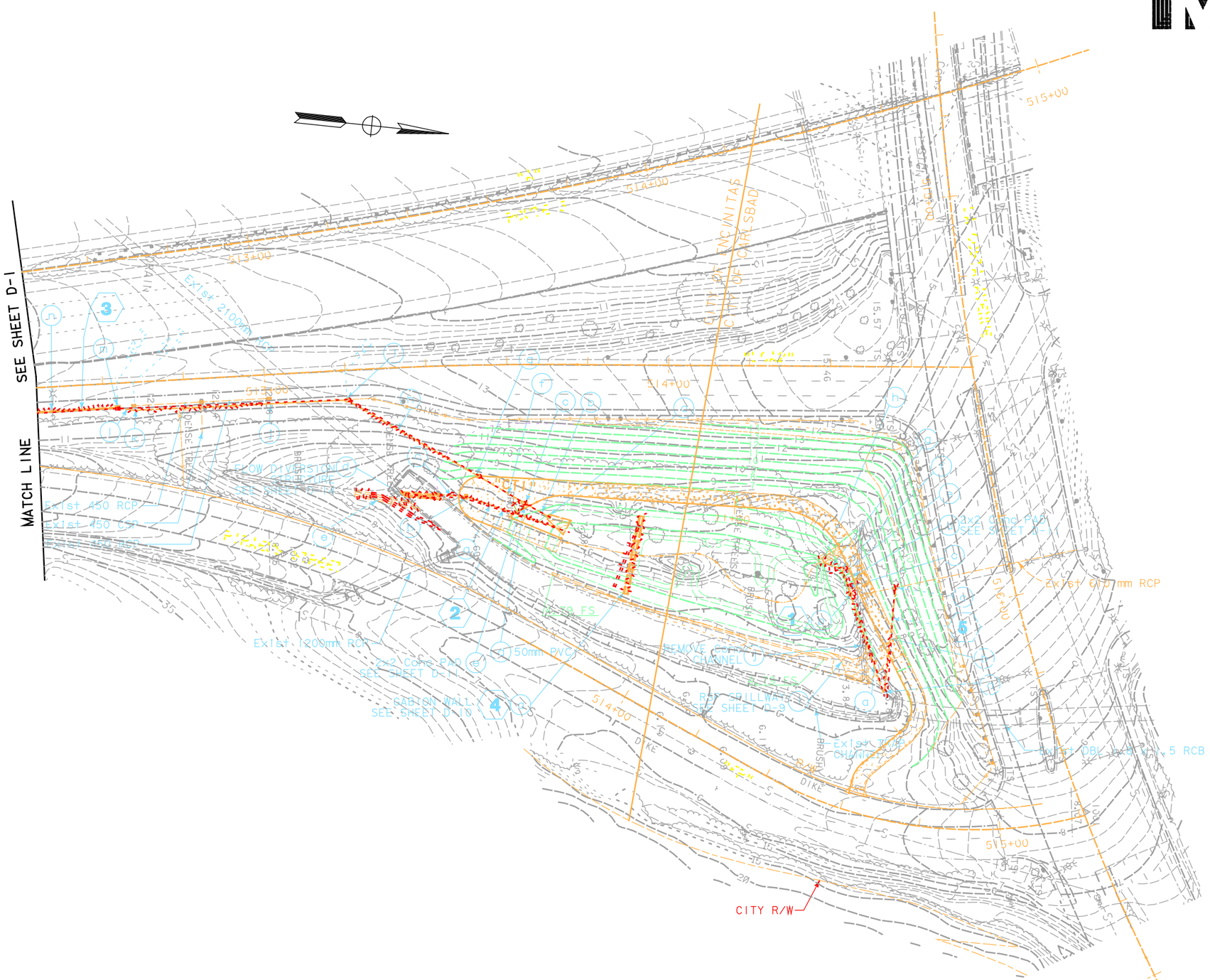


## AS-CONSTRUCTED PLANS

The changes reflected in these AS-CONSTRUCTED PLANS were obtained by conducting a review of the site by PBF field surveyors in May of 2000. The field survey was limited to a review of the surface features and a review of the accessible invert elevations of drainage structures.

PBF is not responsible for the accuracy or completeness of electronic copies of this plan sheet.

Date of AS-CONSTRUCTED PLANS preparation: June 2000

# CONTOUR GRADING AND DRAINAGE PLAN

SCALE: 1:500

D-2

| CALCULATED/ DESIGNED BY | DATE | REVISED BY |
|---|---|---|
| AMW | 1/99 | |
| CHECKED BY | DATE REVISED | |
| MC | 1/99 | |

DESIGN OVERSIGHT

CID TESORO

STATE OF CALIFORNIA - DEPARTMENT OF TRANSPORTATION

NPDES

Caltrans

$DATE$ $TIME$ $FILE$

LAST REVISION 00-00-00 DATE PLOTTED => $DATE TIME PLOTTED => $TIME

FOR REDUCED PLANS ORIGINAL SCALE IS IN MILLIMETERS 0 20 40 60 80

USERNAME => $USER
DGN FILE => $REQUEST

CU 11332

EA 078401

| DIST | COUNTY | ROUTE | KILOMETER POST TOTAL PROJECT | SHEET No | TOTAL SHEETS |
|---|---|---|---|---|---|
| 11 | SD | 5 | 70.7 | 8 | 41 |

REGISTERED CIVIL ENGINEER

2-26-99

PLANS APPROVAL DATE

The State of California or its officers or agents shall not be responsible for the accuracy or completeness of electronic copies of this plan sheet.

REGISTERED PROFESSIONAL ENGINEER A.M. WALKER No. 57716 Exp. 12-31-01 CIVIL STATE OF CALIFORNIA

ROBERT BEIN, WILLIAM FROST & ASSOCIATES
14725 ALTON PARKWAY
IRVINE, CA 92618

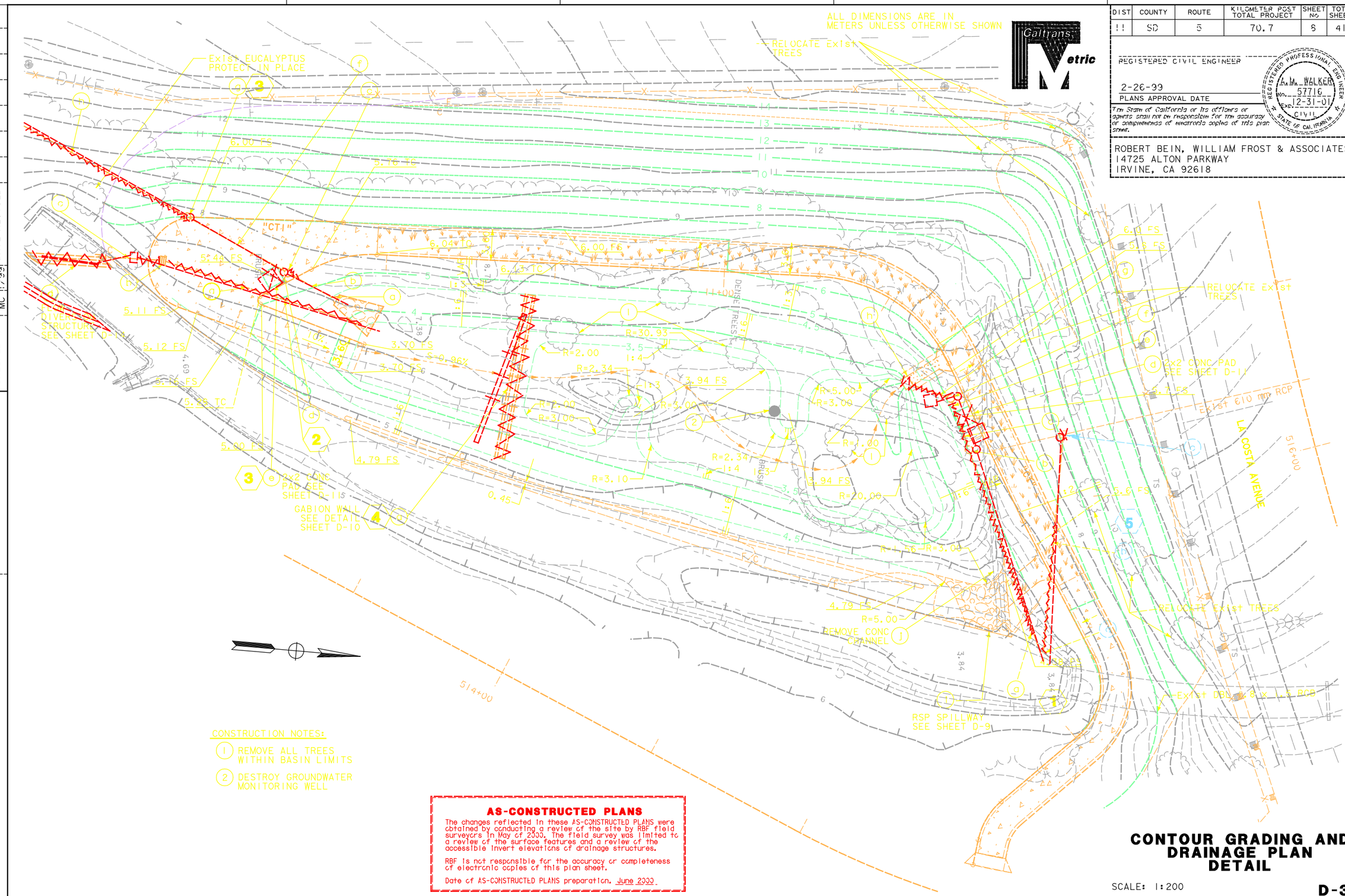


CONSTRUCTION NOTES:

1. REMOVE ALL TREES WITHIN BASIN LIMITS
2. DESTROY GROUNDWATER MONITORING WELL

**AS-CONSTRUCTED PLANS**

The changes reflected in these AS-CONSTRUCTED PLANS were obtained by conducting a review of the site by RBF field surveyors in May of 2000. The field survey was limited to a review of the surface features and a review of the accessible invert elevations of drainage structures.

RBF is not responsible for the accuracy or completeness of electronic copies of this plan sheet.

Date of AS-CONSTRUCTED PLANS preparation. June 2000

# CONTOUR GRADING AND DRAINAGE PLAN DETAIL

SCALE: 1:200

D-3

| CALCULATED/ DESIGNED BY | DATE | REVISED BY |
|---|---|---|
| AMW | 1/99 | |
| CHECKED BY | DATE REVISED | |
| MC | 1/99 | |

DESIGN OVERSIGHT

CID TESORO

STATE OF CALIFORNIA - DEPARTMENT OF TRANSPORTATION

NPDES

Caltrans

$DATE$ $TIME$ $FILE$

LAST REVISION 00-00-00 DATE PLOTTED => $DATE TIME PLOTTED => $TIME

FOR REDUCED PLANS ORIGINAL SCALE IS IN MILLIMETERS 0 20 40 60 80

USERNAME => $USER DGN FILE => $REQUEST

CU 11332

EA 078401

| DIST | COUNTY | ROUTE | KILOMETER POST TOTAL PROJECT | SHEET NO | TOTAL SHEETS |
|---|---|---|---|---|---|
| 11 | SD | 5 | [illegible] | 9 | 41 |

REGISTERED CIVIL ENGINEER

2-26-99
PLANS APPROVAL DATE

REGISTERED PROFESSIONAL ENGINEER — A.M. WALKER — No. 53716 — Exp. 12-31-01 — CIVIL — STATE OF CALIFORNIA

The State of California or its officers or agents shall not be responsible for the accuracy or completeness of electronic copies of this plan sheet.

ROBERT BEIN, WILLIAM FROST & ASSOCIATES
14725 ALTON PARKWAY
IRVINE, CA 92618

ALL DIMENSIONS ARE IN METERS UNLESS OTHERWISE SHOWN

Caltrans Metric

NOTE : CONTRACTOR SHALL VERIFY THE EXACT HORIZONTAL AND VERTICAL ALIGNMENT AT CONNECTION TO THE EXISTING TRAPEZOIDAL CHANNEL. CONTRACTOR SHALL NOTIFY THE ENGINEER OF ANY DISCREPANCY.

IDENTICAL

51.37°

2.93°

N602238.5518
E1902264.8814
RIM 5.843

N602241.3142
E1902270.9496
RIM 5.702

N602251.3749
E1902295.2218

N602241.3142
E1902270.9496
RIM 5.702

N602240.4177
E1902294.5264
RIM 5.021

N602236.0626
E 1902265.4676

N602235.1799
E1902260.8372
TP 4.505

OG

FG

BASIN

2.783 2.998
2.781 2.993

2.842 2.842
2.829 2.862

2.737 2.794
2.786

2.842 2.842
2.829 2.862

4.369

S=0.51% S=0.51% S=0.51%

2.986 2.961
2.912 2.887

EXIST TRAPEZOIDAL CHANNEL

EXIST CONC DITCH

14.272

4.020 4.040 4.007

TP 4.36

N602140.3926
E1902257.0132
TP 5.469

N602143.7478
E1902261.1206
TP 5.464

N602135.5785
E1902258.0088

N602169.6804
E1902263.1585

3.892 3.892
3.925 3.949

BASIN

S=0.25% S=0.25%

**DRAINAGE SYSTEM NO 2**

NOTE : CONTRACTOR SHALL VERIFY THE EXACT HORIZONTAL AND VERTICAL ALIGNMENT AT CONNECTION TO THE EXISTING TRAPEZOIDAL CHANNEL. CONTRACTOR SHALL NOTIFY THE ENGINEER OF ANY DISCREPANCY.

**DRAINAGE SYSTEM NO 1**

(d) 450mm x 24.5 APC W/CHANNEL TO PIPE JUNCTION STRUCTURE, SEE SHT D-13 AND 14
(b) WQM MH TYPE 'X' BASE, H=0.693, HD = 1.2, SEE SHT D-6
(c) 30mm PVC, SEE SHT D-2, 3, AND 11
(d) 2x2 CONC PAD, SEE SHT D-2,3, AND 11
(e) 450mm x 5.5 APC
(f) MOD INLET, H=2.2, SEE SHT D-11
(g) 450mm x 4.7 APC
(h) BASIN OUTLET STRUCTURE, H=1.52, W/CANAL GATE, SEE SHT D-15
(i) RSP SPILLWAY, SEE SHT D-9

(a) 1500mm x 24.5 APC W/CHANNEL TO PIPE JUNCTION STRUCTURE, SEE SHT D-13 AND 14
(b) 2100mm x 24.5 APC W/CHANNEL TO PIPE JUNCTION STRUCTURE, SEE SHT D-13 AND 14
(c) 1500mm x 6.4 APC W/PIPE TO CHANNEL JUNCTION STRUCTURE, SEE SHT D-13 AND 14
(d) FLOW-BY GRATE IN APPROACH, SEE SHT D-12, 13, AND 14
(e) CONCRETE LINED DITCH (L=137), SEE SHT D-13

"LCA"

OG

FG

8.335 8.335

"CT"

EXIST 610 mm RCP

(6.281) (6.774)

7.1°

N602251.0190
E1902268.5817

6.252 6.774

(6.281) (6.774)

N602252.7731
E1902295.4260

S=1.5%

EXIST TRAPEZOIDAL CHANNEL

2.685 2.794
2.786

**DRAINAGE SYSTEM NO 5**

NOTE : CONTRACTOR SHALL VERIFY THE EXACT HORIZONTAL AND VERTICAL ALIGNMENT AT CONNECTION TO THE EXISTING 600 mm RCP AND EXISTING TRAPEZOIDAL CHANNEL. CONTRACTOR SHALL NOTIFY THE ENGINEER OF ANY DISCREPANCY.

(a) CHANNEL TO PIPE JUNCTION STRUCTURE, SEE SHT D-13 AND 14
(b) 600 mm x 27 RCP
(c) TYPE X BASE, H=1.3, HD = 0.9, SEE SHT D-6

**AS-CONSTRUCTED PLANS**

The changes reflected in these AS-CONSTRUCTED PLANS were obtained by conducting a review of the site by RBF field surveyors in May of 2000. The field survey was limited to a review of the surface features and a review of the accessible invert elevations of drainage structures.

RBF is not responsible for the accuracy or completeness of subsequent copies of this plan sheet.

Date of AS-CONSTRUCTED PLANS preparation: June 2000

## DRAINAGE PROFILES

SCALE: HORIZ 1:500
VERT 1:100

**D-4**

| DATE | REVISED BY | DATE REVISED |
|---|---|---|
| AMW 1/99 | SMT 1/99 | |

CALCULATED/DESIGNED BY
CHECKED BY

DESIGN OVERSIGHT
CID TESORO
NPDES
STATE OF CALIFORNIA - DEPARTMENT OF TRANSPORTATION
Caltrans

&FILES
&TIMES
&DATES

Station
Exc
Emb

FOR REDUCED PLANS ORIGINAL SCALE IS IN MILLIMETERS 0 20 40 60 80

USERNAME => &USER
DGN FILE => &REQUEST

CU 11332

EA 07840!

LAST REVISION
DATE PLOTTED => &DATE
TIME PLOTTED => &TIME
00-00-00

ALL DIMENSIONS ARE IN METERS UNLESS OTHERWISE SHOWN

| DIST | COUNTY | ROUTE | KILOMETER POST TOTAL PROJECT | SHEET NO. | TOTAL SHEETS |
|---|---|---|---|---|---|
| 11 | SD | 5 | [illegible] | [illegible] | [illegible] |

REGISTERED CIVIL ENGINEER

2-26-99
PLANS APPROVAL DATE

The State of California or its officers or agents shall not be responsible for the accuracy or completeness of electronic copies of this plan sheet.

REGISTERED PROFESSIONAL ENGINEER — A.M. WALKER — No. 53716 — Exp. 12-31-01 — CIVIL — STATE OF CALIFORNIA

ROBERT BEIN, WILLIAM FROST & ASSOCIATES
14725 ALTON PARKWAY
IRVINE, CA 92618

N602488.4020
E1902255.9445
FL 17.309

2.03%

30

Q6

N602482.7334
E1902282.7843
FL 15.959

10.52°

N602092.3305
E1902260.3473
FL 13.344

N602055.6354
E1902244.3099
FL 12.150

46.659

(G) 5.701
EXIST 900mm RCP PROJECT IN PLACE

S=1.86%

14.516

14.001

12.325

12.100

10.911

10.742

S=2.29%

S=1.54%

IDENTICAL

N602055.6354
E1902244.3099
FL 12.150

32.82°

N602059.8267
E1902244.4066

10.00°

N602111.7276
E1902238.4223
RIM 12.300

N602145.8101
E1902235.5521
RIM 6.379

83.69°

IDENTICAL

10.746

10.727

9.747
EXIST 450 mm RCP PROTECT IN PLACE

S=0.50%

S=0.50%

Q6

F9

N602159.3243
E1902237.2440
RIM 5.589

N602163.7079
E1902235.6497

S=15.07%

4.735
4.526
4.396
4.396
4.335

S=1.00%

S=1.00%

Q6

F6

5.109
4.394
4.394

(a) FES W/RSP, SEE SHT D-9
(b) 450mm x 6.3 APC
(c) MOD MH, H=1.125, SEE SHEET D-11
(d) 50mm PVC, SEE SHT D-11.2, AND 11
(e) 2x2 CONC PAD, SEE SHT D-11.2, AND 11
(f) 450mm x 12.8 APC
(g) MOD INLET, H=1.200, SEE SHT D-11
(h) 450mm x 36.8 APC
(i) MOD INLET, H=2.350, SEE SHT D-11
(j) 450 mm x 52.1 APC
(k) CONCRETE COLLAR, SEE SHT D-12
(l) 450 mm x 31.7 APC
(m) GI INLET, H=1.404, W/GRATE COVER, SEE SHT D-12
(n) 450mm x 7.3 APC W/ MOD CONCRETE BACKFILL
(o) GI INLET, H=1.400 W/FLOW RESTRICTION PLATE, SEE SHT D-11
(p) 450mm x 100.1 APC W/ MOD CONCRETE BACKFILL
(q) GI INLET, H=1.368, W/FLOW RESTRICTION PLATE, SEE SHT D-11
(r) 450mm x 100.1 APC W/ MOD CONCRETE BACKFILL
(s) MOD G2 INLET, H= 0.65, W/FLOW RESTRICTION PLATE, SEE SHT D-11 AND 15
(t) 450mm RCP TO BE REMOVED

**DRAINAGE SYSTEM NO 3**

**AS-CONSTRUCTED PLANS**

This drawing represents the AS-CONSTRUCTED plans. Any changes or deletions to the original plans are shown. The following is a description of the changes: [illegible]

[illegible] is not responsible for the accuracy of any changes or deletions to the original plans.

Name and AS-CONSTRUCTED plans preparation date: [illegible]

## DRAINAGE PROFILES

SCALE: HORIZ 1:500
VERT 1:100

D-5

STATE OF CALIFORNIA - DEPARTMENT OF TRANSPORTATION
Caltrans
NPDES
CID TESORO
DESIGN OVERSIGHT

CALCULATED/DESIGNED BY AMW 1/99
CHECKED BY SMT 1/99
DATE REVISED BY

Station
Exs
Emc

FOR REDUCED PLANS ORIGINAL SCALE IS IN MILLIMETERS 0 20 40 60 80

USERNAME => $USER
DGN FILE => $REQUEST

CU 11332
EA 07840!

LAST REVISION => $DATE
00-00-00! DATE PLOTTED => $DATE
TIME PLOTTED => $TIME

$FILE$
$TIME$
$DATE$

ALL DIMENSIONS ARE IN MILLIMETERS UNLESS OTHERWISE SHOWN

Caltrans Metric

| DIST | COUNTY | ROUTE | KILOMETER POST TOTAL PROJECT | SHEET NO | TOTAL SHEETS |
|---|---|---|---|---|---|
| 11 | SD | 5 | 70.7 | 11 | 41 |

REGISTERED CIVIL ENGINEER

2-26-99
PLANS APPROVAL DATE

REGISTERED PROFESSIONAL ENGINEER — A.M. WALKER — No. 53716 — Exp. 12-31-01 — CIVIL — STATE OF CALIFORNIA

The State of California or its officers or agents shall not be responsible for the accuracy or completeness of electronic copies of this plan sheet.

ROBERT BEIN, WILLIAM FROST & ASSOCIATES
14725 ALTON PARKWAY
IRVINE, CA 92618

| $D_2$ | $H_b$ | L |
|---|---|---|
| 675 OR LESS | 0.9 m | 1.2 m |
| 750 TO 975 INCLUSIVE | 1.2 m | 1.2 m |

EXCEPTIONS TO BE NOTED ON PLANS.

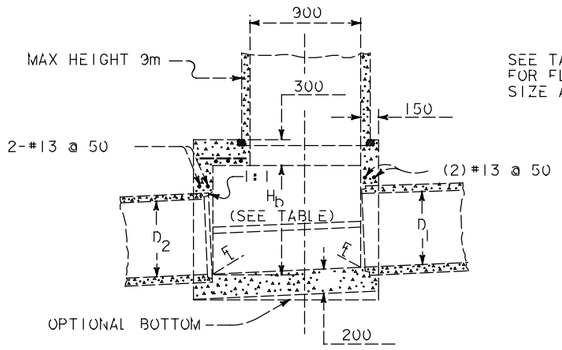


SECTION G-G

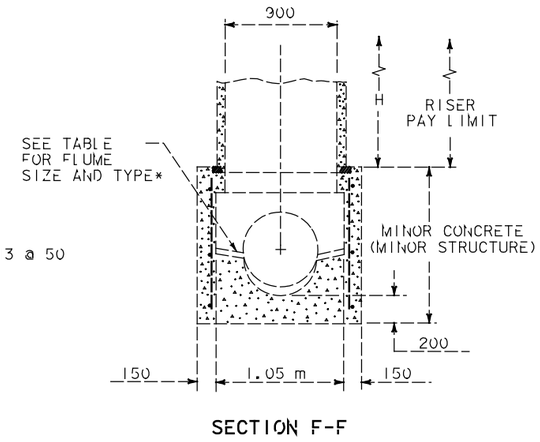


SECTION F-F

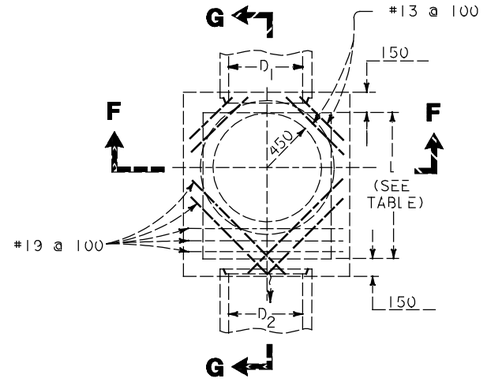


PLAN

FOR USE WHEN $D_2$ (OUTLET PIPE DIA) IS 975mm OR LESS

# STORM DRAIN & MANHOLE STRUCTURE (TYPE X BASE)

GENERAL NOTES:

1. RISERS MAY BE MADE UP OF 150mm , 200mm , 450mm , 600mm , OR 1200mm SECTIONS.
2. EACH RISER SHALL HAVE STEPS, AS DETAILED ON STANDARD PLAN D74C. THE LADDER SHALL BE SUSPENDED INTO BASE STRUCTURE.
3. ALL PRECAST COMPONENTS FOR UPPER PORTION TYPE MH SHALL BE REINFORCED WITH 6mm DIAMETER STEEL WOUND SPIRALLY @ 100mm CENTERS.
4. H AND Hb SHALL BE AS SHOWN ON PLANS.
5. REINFORCING STEEL SHALL BE #13 BARS @ 450mm CENTERS PLACED 40mm CLEAR TO INSIDE OF BOX UNLESS OTHERWISE SHOWN.
6. PIPE(S) MAY BE PLACED IN ANY WALL.
7. DESIGN UNIT STRESSES: $F_s$ = 140 MPa, n= 10, $F_c$ = 10 MPa.
8. CENTER OF RISER SHALL BE LOCATED OVER THE CENTERLINE OF MAIN STORM DRAIN.
9. THICKNESS OF DECK SHALL VARY WHEN NECESSARY TO PROVIDE LEVEL MANHOLE SEAT.
10. BOTTOMS SHALL HAVE A WOOD TROWEL FINISH.
11. UPPER PORTION OF MH WILL BE PAID FOR AS 900mm PRECAST CONCRETE PIPE RISER.
12. NO DEDUCTION IN STRUCTURE CONCRETE QUANTITIES WILL BE MADE FOR PIPE OPENINGS.

* INSTALLED AT WATER QUALITY MONITORING MANHOLE LOCATIONS ONLY.

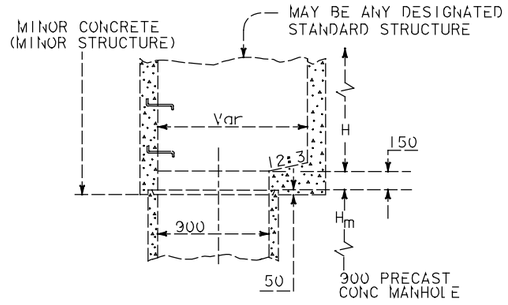


TYPICAL UPPER STRUCTURE AND MANHOLE JUNCTION

## UPPER STRUCTURE

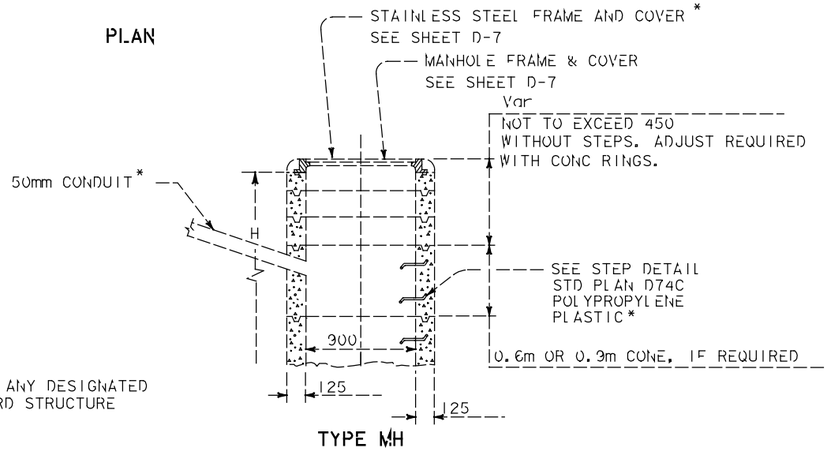


TYPE MH

FOR USE WITH EITHER TYPE X OR TYPE Y BASE STRUCTURES

## UPPER STRUCTURE

WATER QUALITY MONITORING MANHOLE LOCATIONS AND FLUME REQUIREMENT

| SYSTEM | UNIT | DESCRIPTION | FLUME |
|---|---|---|---|
| | | OUTFLOW | 450 PALMER BOWLUS |

**AS-CONSTRUCTED PLANS**

The changes reflected in these AS-CONSTRUCTED PLANS were obtained by conducting a review of the site by RBF field surveyors in May of 2000. The field survey was limited to a review of the surface features and a review of the accessible invert elevations of drainage structures.

RBF is not responsible for the accuracy or completeness of electronic copies of this plan sheet.

Date of AS-CONSTRUCTED PLANS preparation. June 2000

# DRAINAGE DETAILS

NO SCALE

D-6

STATE OF CALIFORNIA - DEPARTMENT OF TRANSPORTATION
Caltrans
NPDES
DESIGN OVERSIGHT
CID TESORO
CALCULATED/DESIGNED BY
CHECKED BY
DATE REVISED BY
1/99 AMW
1/99 SMT
DATE REVISED
&FILE$
&TIME$
&DATE$
LAST REVISION DATE PLOTTED => &DATE
00-00-00 TIME PLOTTED => &TIME

FOR REDUCED PLANS ORIGINAL SCALE IS IN MILLIMETERS 0 20 40 60 80

USERNAME => &USER
DGN FILE => &REQUEST

CU 11332 EA 07840!

ALL DIMENSIONS ARE IN MILLIMETERS UNLESS OTHERWISE SHOWN

| DIST | COUNTY | ROUTE | KILOMETER POST TOTAL PROJECT | SHEET NO | TOTAL SHEETS |
|---|---|---|---|---|---|
| 11 | SD | 05 | 70.7 | 12 | 41 |

REGISTERED CIVIL ENGINEER

2-26-99

PLANS APPROVAL DATE

The State of California or its officers or agents shall not be responsible for the accuracy or completeness of electronic copies of this plan sheet.

REGISTERED PROFESSIONAL ENGINEER A.M. WALKER No. 57716 Exp. 12-31-01 CIVIL STATE OF CALIFORNIA

ROBERT BEIN, WILLIAM FROST & ASSOCIATES
14725 ALTON PARKWAY
IRVINE, CA 92618

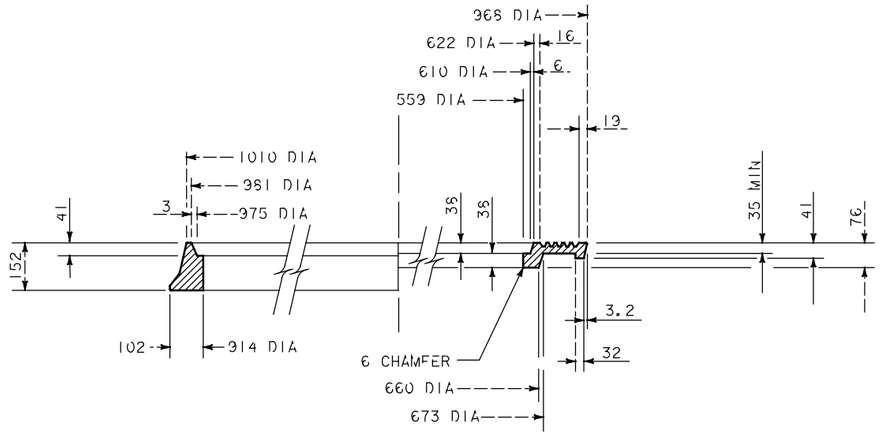


HALF SECTION FRAME AND COVER*

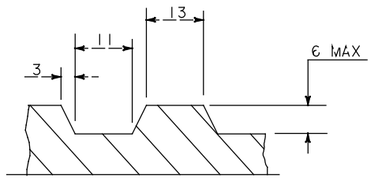


DETAIL A

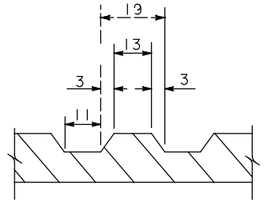


DETAIL B

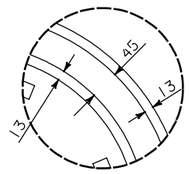


DETAIL C

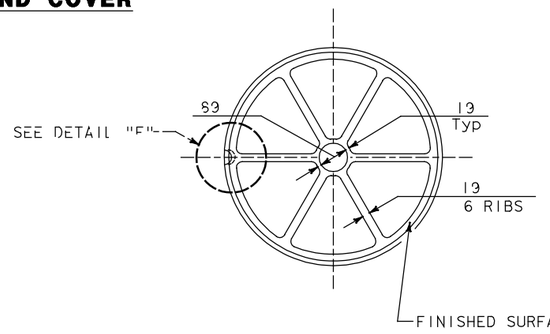


DETAIL E

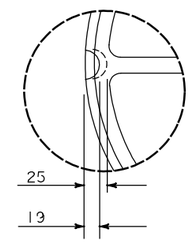


DETAIL F

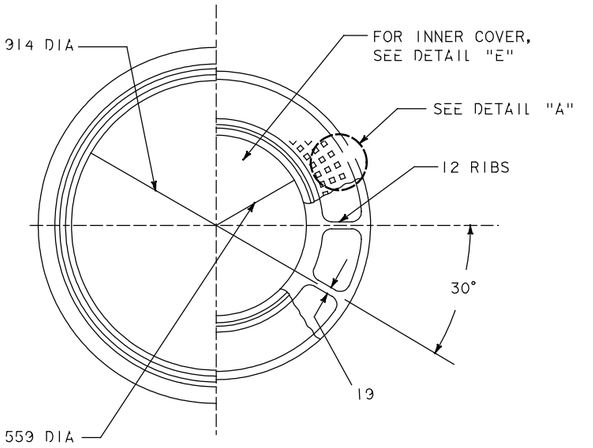


HALF PLAN FRAME AND COVER

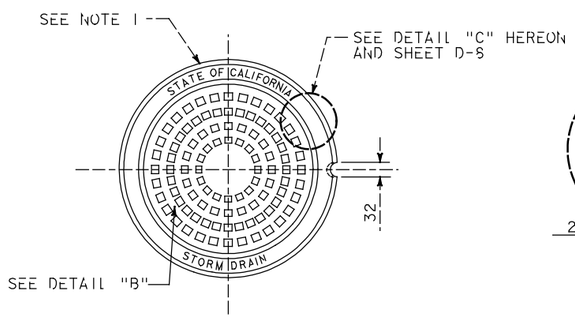


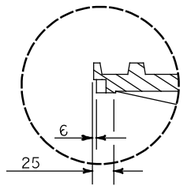


DETAIL D

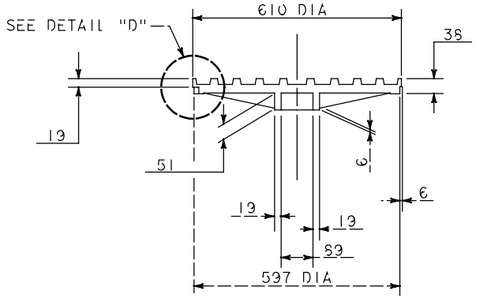


900MM MANHOLE FRAME AND TWO CONCENTRIC COVERS*

NOTE:

1. COVER SHALL BE MARKED "STATE OF CALIFORNIA" AND "STORM DRAIN" FOR FRAME AND COVER.

* STAINLESS STEEL AT WATER QUALITY MONITORING MH LOCATIONS SEE SHEET D-6.

**AS-CONSTRUCTED PLANS**

The changes reflected in these AS-CONSTRUCTED PLANS were obtained by conducting a review of the site by RBF field surveyors in May of 2000. The field survey was limited to a review of the surface features and a review of the accessible invert elevations of drainage structures.

RBF is not responsible for the accuracy or completeness of electronic copies of this plan sheet.

Date of AS-CONSTRUCTED PLANS preparation. June 2000

# DRAINAGE DETAILS

NO SCALE

D-7

| CALCULATED/DESIGNED BY | AMW | DATE 1/99 | REVISED BY |
|---|---|---|---|
| CHECKED BY | SMT | 1/99 | DATE REVISED |

DESIGN OVERSIGHT CID TESORO

STATE OF CALIFORNIA - DEPARTMENT OF TRANSPORTATION

NPDES

Caltrans

$DATE$ $TIME$ $FILE$

LAST REVISION 00-00-00 DATE PLOTTED => $DATE TIME PLOTTED => $TIME

FOR REDUCED PLANS ORIGINAL SCALE IS IN MILLIMETERS 0 20 40 60 80

USERNAME => $USER DGN FILE => $REQUEST

CU 11332

EA 078401

ALL DIMENSIONS ARE IN MILLIMETERS UNLESS OTHERWISE SHOWN

Caltrans Metric

| DIST | COUNTY | ROUTE | KILOMETER POST TOTAL PROJECT | SHEET NO | TOTAL SHEETS |
|---|---|---|---|---|---|
| 11 | SD | 05 | 70.7 | 13 | 41 |

REGISTERED CIVIL ENGINEER

2-26-99

PLANS APPROVAL DATE

REGISTERED PROFESSIONAL ENGINEER — A.M. WALKER — No. 53716 — Exp. 12-31-01 — CIVIL — STATE OF CALIFORNIA

The State of California or its officers or agents shall not be responsible for the accuracy or completeness of electronic copies of this plan sheet.

ROBERT BEIN, WILLIAM FROST & ASSOCIATES
14725 ALTON PARKWAY
IRVINE, CA 92618

**AS-CONSTRUCTED PLANS**

The changes reflected in these AS-CONSTRUCTED PLANS were obtained by conducting a review of the site by RBF field surveyors in May of 2000. The field survey was limited to a review of the surface features and a review of the accessible invert elevations of drainage structures.

RBF is not responsible for the accuracy or completeness of electronic copies of this plan sheet.

Date of AS-CONSTRUCTED PLANS preparation: June 2000




PLAN




DETAIL A




DETAIL B




DETAIL C




SECTION A-A

NOTES:

1. 15.9 mm X 20 UNC THREAD, 316 STAINLESS STEEL SOCKET HEAD CAP SCREW AND 38.1 mm O.D. X 17.5 mm I.D. X 2.0 mm THICK 316 STAINLESS STEEL WASHER
2. 6.3 mm NEOPRENE O-RING GASKET SHALL BE GLUED INTO MACHINED GROOVE (DETAIL "C"). GLUE SHALL MEET THE REQUIREMENTS OF MIL-M-81288
3. BOLTDOWN PATTERNS:
   A. BETWEEN INNER AND OUTER COVERS INSTALL TWO BOLTS AT 180°.
   B. BETWEEN OUTER COVER AND FRAME INSTALL FOUR BOLTS AT 90°.

* STAINLESS STEEL AT WATER QUALITY MONITORING MH LOCATIONS. SEE SHEET D-6.

MANHOLE COVER LOCK *

# DRAINAGE DETAILS

NO SCALE

D-8

DESIGN OVERSIGHT — CID TESORO

CALCULATED/DESIGNED BY — CHECKED BY — DATE — REVISED BY — DATE REVISED
AMW 1/99 — SMT 1/99

STATE OF CALIFORNIA - DEPARTMENT OF TRANSPORTATION — Caltrans — NPDES

&FILE$ &TIME$ &DATE$

LAST REVISION DATE PLOTTED => &DATE
00-00-00 TIME PLOTTED => &TIME

FOR REDUCED PLANS ORIGINAL SCALE IS IN MILLIMETERS 0 20 40 60 80

USERNAME => &USER
DGN FILE => &REQUEST

CU 11332 | EA 07840!

ALL DIMENSIONS ARE IN MILLIMETERS UNLESS OTHERWISE SHOWN

| DIST | COUNTY | ROUTE | KILOMETER POST TOTAL PROJECT | SHEET NO. | TOTAL SHEETS |
|---|---|---|---|---|---|
| 11 | SD | 05 | 70.7 | 14 | 41 |

REGISTERED CIVIL ENGINEER

2-26-99
PLANS APPROVAL DATE

The State of California or its officers or agents shall not be responsible for the accuracy or completeness of electronic copies of this plan sheet.

REGISTERED PROFESSIONAL ENGINEER — A.M. WALKER — No. 53716 — Exp. 12-31-01 — CIVIL — STATE OF CALIFORNIA

ROBERT BEIN, WILLIAM FROST & ASSOCIATES
14725 ALTON PARKWAY
IRVINE, CA 92618




## PLAN

NOTE:
RSP FABRIC TO BE PLACED UNDER ALL ROCK SLOPE PROTECTION PER FILTER FABRIC OVERLAP DETAIL.

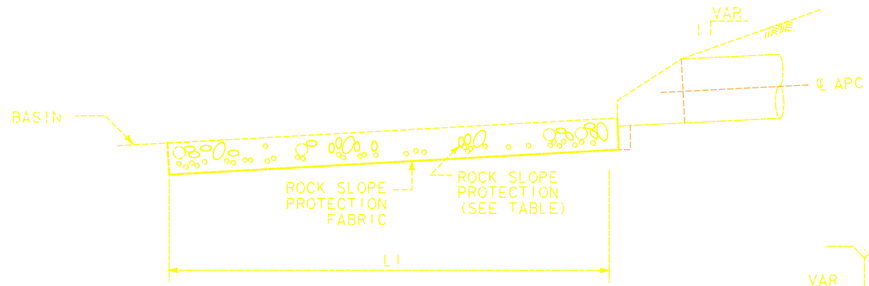


## SECTION B-B




## SECTION A-A




## SECTION C-C

| ROCK SLOPE PROTECTION (METHOD B) | | | | | | | |
|---|---|---|---|---|---|---|---|
| SYSTEM | UNIT | CULVERT DIAMETER | WIDTH "W1" | WIDTH "W2" | LENGTH "L1" | TYPE | (THICKNESS) "D" |
| 1 | 1 | SPILLWAY | SEE SHT D-3 | SEE SHT D-3 | SEE SHT D-3 | BACKING NO. 2 | 600 |
| 3 | a | 450 | 1.35m | 4.00m | 5.24m | BACKING NO. 2 | 600 |




## FILTER FABRIC OVERLAP

**AS-CONSTRUCTED PLANS**

The changes reflected in these AS-CONSTRUCTED PLANS were obtained by conducting a review of the site by RBF field surveyors in May of 2000. The field survey was limited to a review of the surface features and a review of the accessible invert elevations of drainage structures.

RBF is not responsible for the accuracy or completeness of electronic copies of this plan sheet.

Date of AS-CONSTRUCTED PLANS preparation: June 2000

# ROCK SLOPE PROTECTION

## DRAINAGE SYSTEM NO (1)(1)

# DRAINAGE DETAILS

NO SCALE

D-9

| CALCULATED/ DESIGNED BY | DATE | REVISED BY | DATE REVISED |
|---|---|---|---|
| AMW | 1/99 | | |
| CHECKED BY | DATE | REVISED BY | DATE REVISED |
| SMT | 1/99 | | |

DESIGN OVERSIGHT
TESORO
CID

STATE OF CALIFORNIA - DEPARTMENT OF TRANSPORTATION
Caltrans
NPDES

&FILE&
&TIME&
&DATE&

LAST REVISION DATE PLOTTED => &DATE
00-00-00 TIME PLOTTED => &TIME

FOR REDUCED PLANS ORIGINAL SCALE IS IN MILLIMETERS 0 20 40 60 80

USERNAME => &USER
DGN FILE => &REQUEST

CU 11332

EA 078401

ALL DIMENSIONS ARE IN MILLIMETERS UNLESS OTHERWISE SHOWN







SECTION A-A

GABION WALL

DRAINAGE SYSTEM NO 4 0

| DIST | COUNTY | ROUTE | KILOMETER POST TOTAL PROJECT | SHEET NO. | TOTAL SHEETS |
|---|---|---|---|---|---|
| 11 | SD | 5 | 70.7 | 15 | 41 |

REGISTERED CIVIL ENGINEER

2-26-99
PLANS APPROVAL DATE

REGISTERED PROFESSIONAL ENGINEER — A.M. WALKER — No. 53716 — Exp. 12-31-01 — CIVIL — STATE OF CALIFORNIA

The State of California or its officers or agents shall not be responsible for the accuracy or completeness of electronic copies of this plan sheet.

ROBERT BEIN, WILLIAM FROST & ASSOCIATES
14725 ALTON PARKWAY
IRVINE, CA 92618

**AS-CONSTRUCTED PLANS**

The changes reflected in these AS-CONSTRUCTED PLANS were obtained by conducting a review of the site by RBF field surveyors in May of 2000. The field survey was limited to a review of the surface features and a review of the accessible invert elevations of drainage structures.

RBF is not responsible for the accuracy or completeness of electronic copies of this plan sheet.

Date of AS-CONSTRUCTED PLANS preparation: June 2000

DRAINAGE DETAILS

NO SCALE

D-10

| CALCULATED/ DESIGNED BY | DATE | REVISED BY | DATE REVISED |
|---|---|---|---|
| AMW | 1/99 | | |
| CHECKED BY | DATE | | |
| SMT | 1/99 | | |

DESIGN OVERSIGHT
CID TESORO

Caltrans — STATE OF CALIFORNIA — DEPARTMENT OF TRANSPORTATION
NPDES

$DATE$ $TIME$ $FILE$

FOR REDUCED PLANS ORIGINAL SCALE IS IN MILLIMETERS 0 20 40 60 80

USERNAME => $USER
DGN FILE => $REQUEST

LAST REVISION DATE PLOTTED => $DATE
00-00-00 TIME PLOTTED => $TIME

CU 11332 EA 078401

ALL DIMENSIONS ARE IN MILLIMETERS UNLESS OTHERWISE SHOWN

| DIST | COUNTY | ROUTE | KILOMETER POST TOTAL PROJECT | SHEET NO. | TOTAL SHEETS |
|---|---|---|---|---|---|
| 11 | SD | 5 | 70.7 | 16 | 41 |

REGISTERED CIVIL ENGINEER

2-26-99
PLANS APPROVAL DATE

The State of California or its officers or agents shall not be responsible for the accuracy or completeness of electronic copies of this plan sheet.

R.M. WALKER
No. 53716
Exp. 12-31-01
CIVIL
REGISTERED PROFESSIONAL ENGINEER
STATE OF CALIFORNIA

ROBERT BEIN, WILLIAM FROST & ASSOCIATES
14725 ALTON PARKWAY
IRVINE, CA 92618

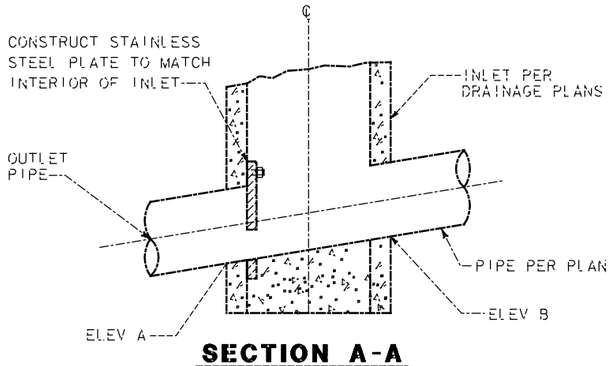


## SECTION A-A

| SYSTEM | UNIT | ELEV A (m) | ELEV B (m) | D | W | D |
|---|---|---|---|---|---|---|
| 3 | o | 12.100 | 12.325 | 250 | 600 | 300 |
| 3 | q | 14.591 | 14.816 | 300 | 600 | 275 |
| 3 | s | 16.659 | N/A | 300 | 600 | 280 |

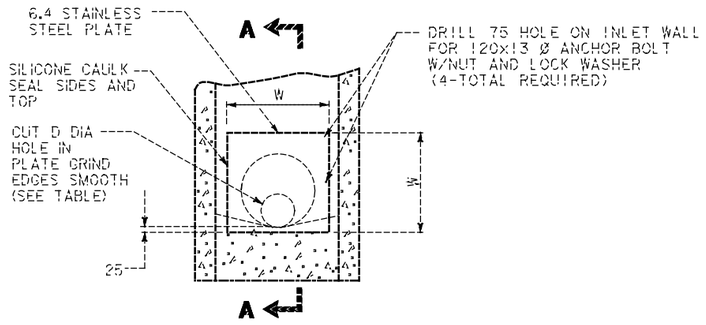


## FLOW RESTRICTION PLATE

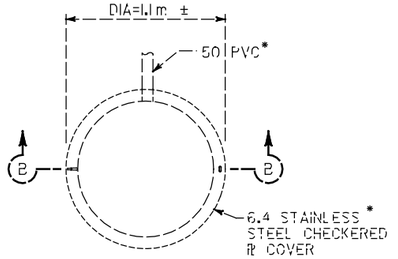


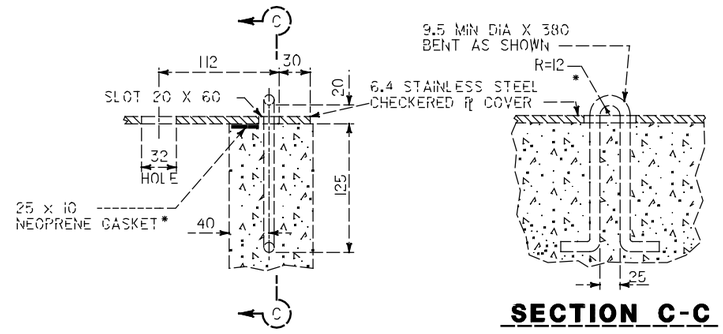


## DETAIL "B"

## SECTION C-C

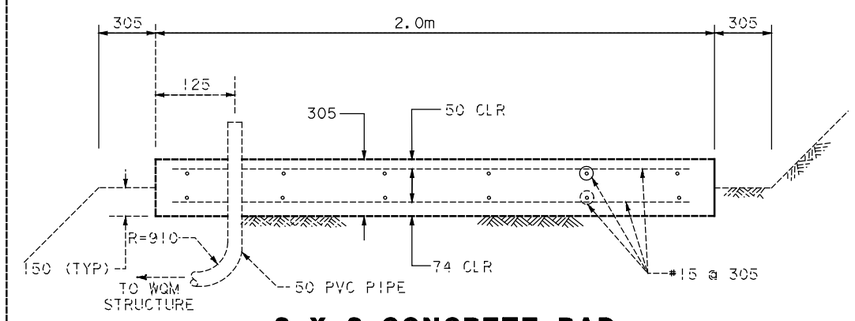


## 2 X 2 CONCRETE PAD

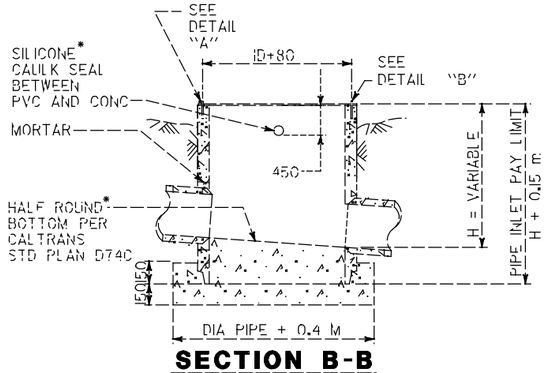


## SECTION B-B

WATER QUALITY MONITORING
MOD OCP INLET LOCATIONS

| SYSTEM | UNIT | DESCRIPTION |
|---|---|---|
| 3 | o | INFLOW |

NOTES

1. INSTALL POLYPROPYLENE STEPS PER STANDARD PLAN D74C.
2. SEE STANDARD PLANS D77A AND D77B FOR GRATE AND FRAME DETAILS AND WEIGHTS OF MISCELLANEOUS IRON AND STEEL.

* STAINLESS STEEL CHECKERED PLATE, NEOPRENE GASKET, HALF ROUND BOTTOM, AND 50mm PVC AT WATER QUALITY MONITORING LOCATIONS. SEE TABLE HEREON.

## MODIFIED OUTLET

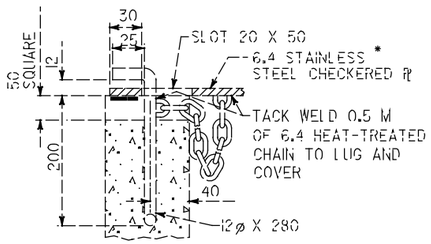


## DETAIL "A"

**AS-CONSTRUCTED PLANS**

The changes reflected in these AS-CONSTRUCTED PLANS were obtained by conducting a review of the site by RBF field surveyors in May of 2000. The field survey was limited to a review of the surface features and a review of the accessible invert elevations of drainage structures.

RBF is not responsible for the accuracy or completeness of electronic copies of this plan sheet.

Date of AS-CONSTRUCTED PLANS preparation: June 2000

# DRAINAGE DETAILS

NO SCALE

D-11

DESIGN OVERSIGHT — CID TESORO
CALCULATED/DESIGNED BY — AMW 1/99
CHECKED BY — SMT 1/99
DATE REVISED — DATE REVISED BY

STATE OF CALIFORNIA - DEPARTMENT OF TRANSPORTATION — NPDES — Caltrans

&FILE& &TIME& &DATE&

LAST REVISION DATE PLOTTED => &DATE
(00-00-00) TIME PLOTTED => &TIME

FOR REDUCED PLANS ORIGINAL SCALE IS IN MILLIMETERS 0 20 40 60 80

USERNAME => &USER
DGN FILE => &REQUEST

CU 11332 | EA 07840!

## MINOR CONCRETE (BACKFILL) DETAIL




SECTION A-A

| D | L | T |
|---|---|---|
| 300 | 300 | 125 |
| 450 | 300 | 135 |
| 600 | 300 | 150 |
| 750 | 300 | 200 |
| 900 | 450 | 200 |
| 1200 | 450 | 250 |
| 1300 | 450 | 250 |
| 1500 | 525 | 280 |
| 1650 | 525 | 280 |
| 1800 | 600 | 300 |




## CONCRETE COLLAR

NOTES (CONCRETE COLLAR)

1. WHERE PIPES OF DIFFERENT DIAMETER ARE JOIN WITH A CONCRETE COLLAR, D SHALL BE THE DIAMETER OF THE LARGER PIPE.
2. FOR PIPE SIZE NOT LISTED, USE NEXT SIZE LARGER.
3. OMIT REINFORCING ON PIPES 600mm AND LESS IN DIAMETER AND ON ALL PIPES WHERE ANGLE A IS LESS THAN 10°
4. REINFORCEMENT SHALL BE PLACED 40mm CLEAR FROM OUTSIDE DIAMETER OF PIPE.

ALL DIMENSIONS ARE IN MILLIMETERS UNLESS OTHERWISE SHOWN




## SECTION C-C

| STEEL SCHEDULE | | | |
|---|---|---|---|
| D (mm) | T (mm) | "A" | "B"-"C" |
| 300 | 115 | #10 @ 150 mm | #16 |
| 450 | 130 | | |
| 600 | 150 | | |
| 750 | 150 | | |
| 900 | 190 | | |
| 1050 | 200 | | |
| 1200 | 200 | #16 @ 150 mm | #19 |
| 1350 | 200 | | |
| 1500 | 250 | | |
| 1650 | 280 | | |
| 1800 | 280 | | |




PLAN

## CORNER CONNECTION

NOTES:

1. ROUND EDGE OF OUTLET TO 75 mm RADIUS.
2. REINFORCEMENT SHALL BE 40 mm CLEAR FROM THE FACE OF CONC.
3. IN CONNECTING TO AN EXIST STR BREAK OUT PORTIONS OF THE EXIST STR 150 mm OUTSIDE ITS INTERSECTION W/ THE NEW CONNECTION. BEND ENDS OF #10 BARS OVER CONNECTION OPENING AS REQUIRED.

## MONOLITHIC CATCH BASIN CONNECTION




PLAN

## GRATE COVER DETAIL




## SECTION C-C

**AS-CONSTRUCTED PLANS**

The changes reflected in these AS-CONSTRUCTED PLANS were obtained by conducting a review of the site by RBF field surveyors in May of 2000. The field survey was limited to a review of the surface features and a review of the accessible invert elevations of drainage structures.

RBF is not responsible for the accuracy or completeness of electronic copies of this plan sheet.

Date of AS-CONSTRUCTED PLANS preparation. June 2000

# DRAINAGE DETAILS

NO SCALE

D-12

| DIST | COUNTY | ROUTE | KILOMETER POST TOTAL PROJECT | SHEET NO | TOTAL SHEETS |
|---|---|---|---|---|---|
| 11 | SD | 5 | 70.7 | 17 | 41 |

REGISTERED CIVIL ENGINEER

2-26-99
PLANS APPROVAL DATE

REGISTERED PROFESSIONAL ENGINEER
A.M. WALKER
No. 53716
Exp. 12-31-01
CIVIL
STATE OF CALIFORNIA

The State of California or its officers or agents shall not be responsible for the accuracy or completeness of electronic copies of this plan sheet.

ROBERT BEIN, WILLIAM FROST & ASSOCIATES
14725 ALTON PARKWAY
IRVINE, CA 92618

| DATE | REVISED BY | DATE REVISED |
|---|---|---|
| CALCULATED/ DESIGNED BY | AMW 1/99 | |
| CHECKED BY | SMT 1/99 | |

DESIGN OVERSIGHT
CID TESORO

NPDES

STATE OF CALIFORNIA - DEPARTMENT OF TRANSPORTATION
Caltrans

#FILE$
#TIME$
#DATE$

LAST REVISION DATE PLOTTED => #DATE
00-00-00 TIME PLOTTED => #TIME

FOR REDUCED PLANS ORIGINAL SCALE IS IN MILLIMETERS 0 20 40 60 80

USERNAME => #USER
DGN FILE => #REQUEST

CU 11332

EA 07840!

PLAN

ALL DIMENSIONS ARE IN MILLIMETERS UNLESS OTHERWISE SHOWN

TABLE 1
(FOR DIMENSIONS AND BAR SIZES)

| D | T | A Bars |
|---|---|---|
| 450 | 150 | #13@150 O.C. |
| 610 | 150 | #13@150 O.C. |




SECTION A-A

TABLE 2

| SYSTEM NO | DIA | C | ELEV S (m) | ELEV R (m) | ANGLE A |
|---|---|---|---|---|---|
| 1 | 450 | 1480 | 2.794 | 2.786 | 13° 13' 45" |
| 5 | 610 | 2000 | 2.794 | 2.786 | 94° 53' |




SECTION B-B




SECTION C-C

JS NOTES:

1. VALUES FOR D, C, ELEV S, ELEV R, AND ANGLE A ARE TAKEN FROM THE PROJECT PLANS.
2. ALL STEEL REINFORCEMENT SHALL BE 40 CLR UNLESS OTHERWISE NOTED.
3. PLACE #13-460x300 BARS WITH SHORT LEG HORIZONTAL IN VERTICAL JS WALL, ROTATE LONGER LEGS INTO CENTER OF SLOPE PAVING.
4. REINFORCING STEEL SHALL BE PROVIDED IN ALL PORTIONS OF THE JS AS INDICATED IN THE DWGS, REGARDLESS OF BAR LENGTH MODIFICATIONS REQUIRED TO ACHIEVE PROPER CLEARANCES.

## CHANNEL TO PIPE JUNCTION STRUCTURE




## CONCRETE LINED DITCH

**AS-CONSTRUCTED PLANS**

The changes reflected in these AS-CONSTRUCTED PLANS were obtained by conducting a review of the site by RBF field surveyors in May of 2000. The field survey was limited to a review of the surface features and a review of the accessible invert elevations of drainage structures.

RBF is not responsible for the accuracy or completeness of electronic copies of this plan sheet.

Date of AS-CONSTRUCTED PLANS preparation: June 2000

# DRAINAGE DETAILS

NO SCALE

D-13

| DIST | COUNTY | ROUTE | KILOMETER POST TOTAL PROJECT | SHEET NO | TOTAL SHEETS |
|---|---|---|---|---|---|
| 11 | SD | 5 | 70.7 | 18 | 41 |

REGISTERED CIVIL ENGINEER

2-26-99
PLANS APPROVAL DATE

REGISTERED PROFESSIONAL ENGINEER — A. M. WALKER — No. 57716 — Exp. 12-31-01 — CIVIL — STATE OF CALIFORNIA

The State of California or its officers or agents shall not be responsible for the accuracy or completeness of electronic copies of this plan sheet.

ROBERT BEIN, WILLIAM FROST & ASSOCIATES
14725 ALTON PARKWAY
IRVINE, CA 92618

Caltrans Metric

STATE OF CALIFORNIA - DEPARTMENT OF TRANSPORTATION
Caltrans
NPDES
DESIGN OVERSIGHT
CID TESORO

| CALCULATED/ DESIGNED BY | DATE | REVISED BY | DATE REVISED |
|---|---|---|---|
| AMW | 1/99 | | |
| CHECKED BY | SMT | 1/99 | |

&FILE&
&TIME&
&DATE&

FOR REDUCED PLANS ORIGINAL SCALE IS IN MILLIMETERS 0 20 40 60 80

USERNAME => &USER
DGN FILE => &REQUEST

CU 11332 EA 078401

LAST REVISION DATE PLOTTED => &DATE
00-00-00 TIME PLOTTED => &TIME

ALL DIMENSIONS ARE IN MILLIMETERS UNLESS OTHERWISE SHOWN

| DIST | COUNTY | ROUTE | KILOMETER POST TOTAL PROJECT | SHEET NO | TOTAL SHEETS |
|---|---|---|---|---|---|
| 11 | SD | 5 | 70.7 | 19 | 41 |

REGISTERED CIVIL ENGINEER

2-26-99
PLANS APPROVAL DATE

The State of California or its officers or agents shall not be responsible for the accuracy or completeness of electronic copies of this plan sheet.

REGISTERED PROFESSIONAL ENGINEER — A.M. WALKER — No. 53716 — Exp. 12-31-01 — CIVIL — STATE OF CALIFORNIA

ROBERT BEIN, WILLIAM FROST & ASSOCIATES
14725 ALTON PARKWAY
IRVINE, CA 92618




PLAN




EXISTING CHANNEL

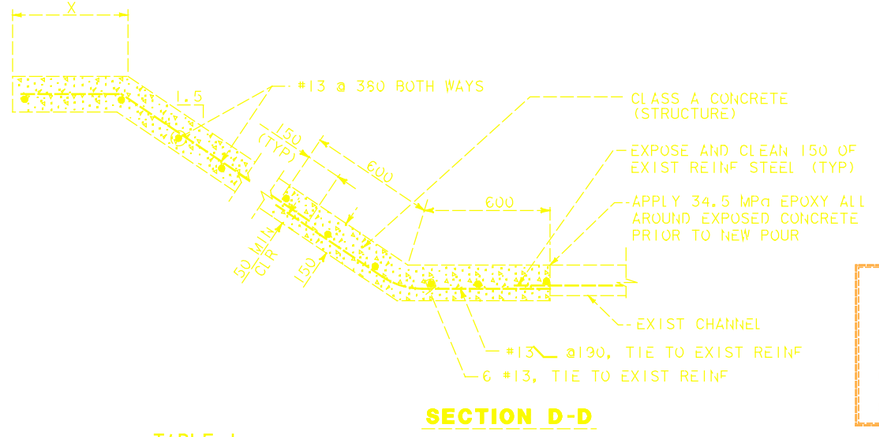


SECTION D-D




SECTION A-A

TABLE 1
(FOR DIMENSIONS AND BAR SIZES)

| D | T | A Bars |
|---|---|---|
| 150 | 150 | #13@150 O.C. |

TABLE 2

| SYSTEM NO | DIA | C | ELEV S (m) | ELEV R (m) | ANGLE A |
|---|---|---|---|---|---|
| 2 | 150 | 1175 | 4.010 | 4.007 | 30°00'00" |




SECTION B-B




SECTION C-C

PIPE TO CHANNEL JUNCTION STRUCTURE

JS NOTES:

1. VALUES FOR D, C, ELEV S, ELEV R, AND ANGLE A ARE TAKEN FROM THE PROJECT PLANS.
2. ALL STEEL REINFORCEMENT SHALL BE 40 CLR UNLESS OTHERWISE NOTED.
3. PLACE #13-460x300 BARS WITH SHORT LEG HORIZONTAL IN VERTICAL JS WALL, ROTATE LONGER LEGS INTO CENTER OF SLOPE PAVING.
4. REINFORCING STEEL SHALL BE PROVIDED IN ALL PORTIONS OF THE JS AS INDICATED IN THE DWGS, REGARDLESS OF BAR LENGTH MODIFICATIONS REQUIRED TO ACHIEVE PROPER CLEARANCES.

**AS-CONSTRUCTED PLANS**

The changes reflected in these AS-CONSTRUCTED PLANS were obtained by conducting a review of the site by RBF field surveyors in May of 2000. The field survey was limited to a review of the surface features and a review of the accessible invert elevations of drainage structures.

RBF is not responsible for the accuracy or completeness of electronic copies of this plan sheet.

Date of AS-CONSTRUCTED PLANS preparation: June 2000




MINOR CONCRETE FLOW DIVERSION STRUCTURES

# DRAINAGE DETAILS

NO SCALE

D-14

| CALCULATED/ DESIGNED BY | DATE | REVISED BY | DATE REVISED |
|---|---|---|---|
| AMW | 1/99 | | |
| CHECKED BY | DATE | | |
| SMT | 1/99 | | |

DESIGN OVERSIGHT — CID TESORO

STATE OF CALIFORNIA - DEPARTMENT OF TRANSPORTATION — NPDES — Caltrans

LAST REVISION DATE PLOTTED =>&DATE
00-00-00 TIME PLOTTED =>&TIME

&FILE$ &TIME$ &DATE$

FOR REDUCED PLANS ORIGINAL SCALE IS IN MILLIMETERS 0 20 40 60 80

USERNAME =>&USER
DGN FILE =>&REQUEST

CU 11332 | EA 07840!

ALL DIMENSIONS ARE IN MILLIMETERS UNLESS OTHERWISE SHOWN

| DIST | COUNTY | ROUTE | KILOMETER POST TOTAL PROJECT | SHEET NO | TOTAL SHEETS |
|---|---|---|---|---|---|
| 11 | SD | 5 | 70.7 | 20 | 41 |

REGISTERED CIVIL ENGINEER

2-26-99
PLANS APPROVAL DATE

The State of California or its officers or agents shall not be responsible for the accuracy or completeness of electronic copies of this plan sheet.

REGISTERED PROFESSIONAL ENGINEER A.M. WALKER No. 57716 Exp. 12-31-01 CIVIL STATE OF CALIFORNIA

ROBERT BEIN, WILLIAM FROST & ASSOCIATES
14725 ALTON PARKWAY
IRVINE, CA 92618

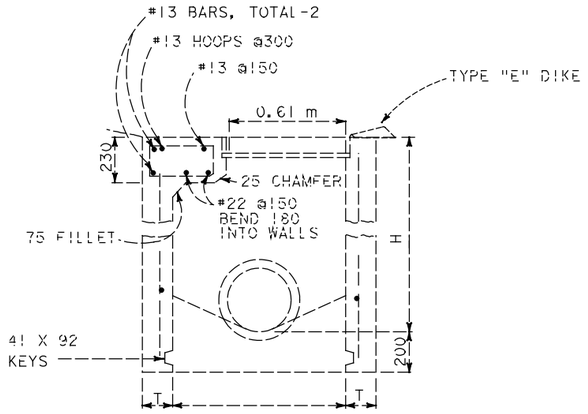


## SECTION B-B

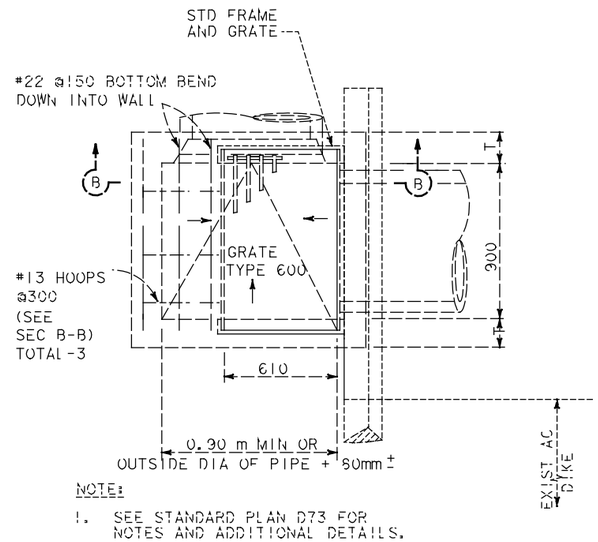


NOTE:

1. SEE STANDARD PLAN D73 FOR NOTES AND ADDITIONAL DETAILS.

## MODIFIED TYPE G2 INLET

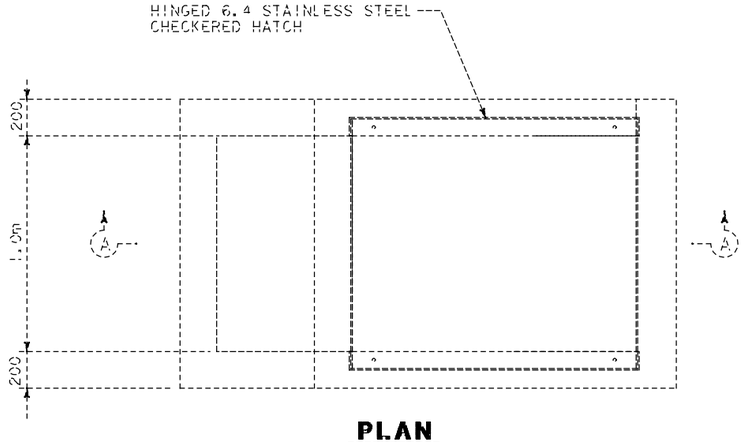


## PLAN

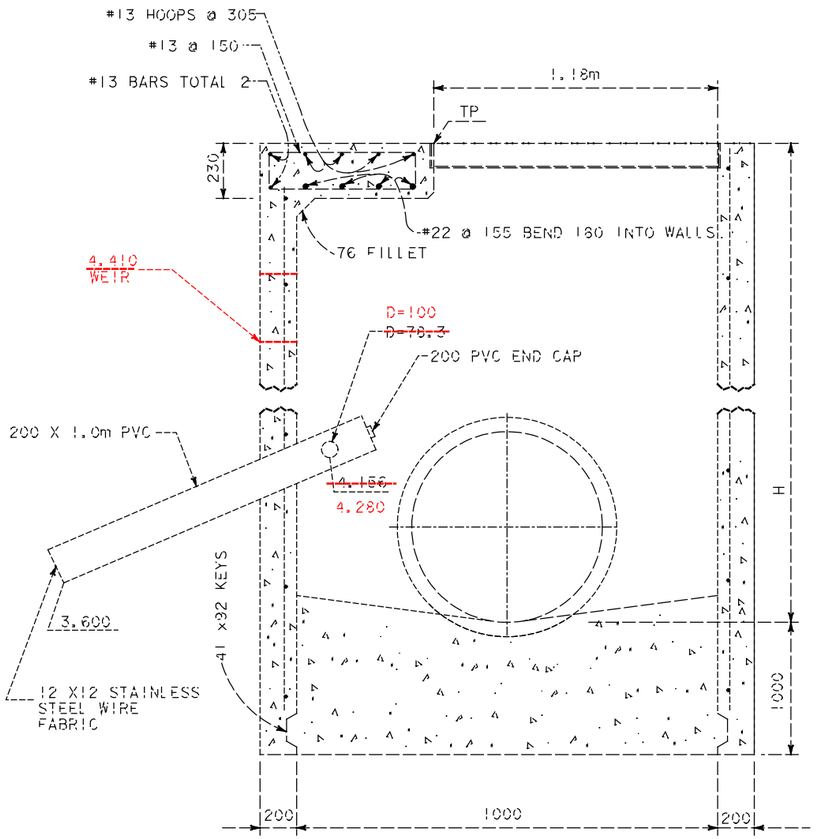


## SECTION A-A

## BASIN OUTLET STRUCTURE

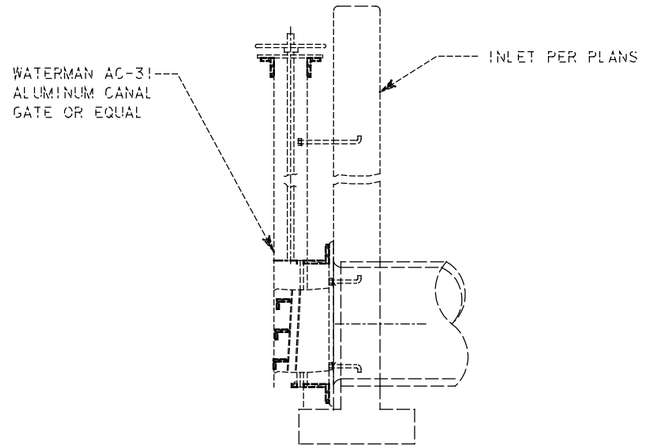


## CANAL GATE

**AS-CONSTRUCTED PLANS**

The changes reflected in these AS-CONSTRUCTED PLANS were obtained by conducting a review of the site by RBF field surveyors in May of 2000. The field survey was limited to a review of the surface features and a review of the accessible invert elevations of drainage structures.

RBF is not responsible for the accuracy or completeness of electronic copies of this plan sheet.

Date of AS-CONSTRUCTED PLANS preparation. June 2000

NOTES

1. STEPS - PROVIDE POLYPROPYLENE PLASTIC STEPS PER STD PLAN D74C. INSTALL ONE STEP 0.4m± ABOVE FLOOR. STEPS SHALL BE EVENLY SPACED @ 0.3m± INTERVALS FROM 0.4m± ABOVE FLOOR TO WITHIN 0.3m± OF THE TOP OF THE BOX. PLACE STEPS IN WALL WITHOUT PIPE OPENINGS.
2. REINFORCING STEEL IN WALLS SHALL BE #13 BARS @ 450± CENTERS PLACED 40 CLEAR TO INSIDE OF BOX.

# DRAINAGE DETAILS

NO SCALE

D-15

STATE OF CALIFORNIA - DEPARTMENT OF TRANSPORTATION
Caltrans
NPDES
DESIGN OVERSIGHT
CID TESORO
CALCULATED/DESIGNED BY AMW DATE 1/99
CHECKED BY SMT 1/99
REVISED BY
DATE REVISED

FOR REDUCED PLANS ORIGINAL SCALE IS IN MILLIMETERS 0 20 40 60 80

USERNAME => $USER
DGN FILE => $REQUEST

CU 11332

EA 078401

LAST REVISION 00-00-00
DATE PLOTTED => $DATE
TIME PLOTTED => $TIME

$DATE$ $TIME$ $FILE$

| DIST | COUNTY | ROUTE | KILOMETER POST TOTAL PROJECT | SHEET NO | TOTAL SHEETS |
|---|---|---|---|---|---|
| 11 | SD | 5 | 70.7 | 21 | 41 |

REGISTERED CIVIL ENGINEER

2-26-99
PLANS APPROVAL DATE

The State of California or its officers or agents shall not be responsible for the accuracy or completeness of electronic copies of this plan sheet.

REGISTERED PROFESSIONAL ENGINEER — A.M. WALKER — No. 53716 — Exp. 12-31-01 — CIVIL — STATE OF CALIFORNIA

ROBERT BEIN, WILLIAM FROST & ASSOCIATES
14725 ALTON PARKWAY
IRVINE, CA 92618

# APC ALLOWABLE PIPE MATERIAL AND PROTECTION

| DESIGNATION | RCP * | PLASTIC | |
|---|---|---|---|
| | SIZE | SIZE | TYPE |
| 450 mm APC | 450 mm | 450 mm | (S) |
| 600 mm APC | 600 mm | 600 mm | (S) |

* FOR MINIMUM ALLOWABLE CLASS OF RCP SEE CALTRANS STANDARD PLAN A62D.

## LEGEND AND ABBREVIATIONS

BKF - BACKFILL
FRP - FLOW RESTRICTION PLATE
GC - GRATE COVER
G1, G2 -CALTRANS INLET TYPE
OCP - INLET TYPE
S - STANDARD JOINT TYPE
(S) - SMOOTH INSIDE WALL
WQM - WATER QUALITY MONITORING
WTJ - WATERTIGHT JOINT
BSN - BASIN

| DRAINAGE SYSTEM NO | DRAINAGE UNIT | REMOVE CONCRETE (CHANNEL) (N) | M/NPDP CONCRETE (BACKFILL) | SLOPE PAVING (CONCRETE) | M/NPDP CONCRETE (M/NPDP STRUCTURE) | M/NPDP CONCRETE (MISC CONSTRUCTION) | MISC IRON AND STEEL | FRAMES, GRATES AND COVERS (N): CALTRANS 6009-9 | CHECKERED PLATE | CHECKERED PL (STAINLESS STEEL) | NM FRAME & COVER | MATCH PLATE | FES RCP: 450 mm | RSP: BACKING No. 2, METHOD B | RSP: FABRIC | GABION | PVC: 150 mm (N) | PVC: 150 mm | PVC: 200 mm (N) | APC: 450 mm | RCP: 900 mm PRECAST CONCRETE PIPE RISER | PIPE JOINT CLASSIFICATION | CANAL GATE (STAINLESS STEEL) | 450 mm PALMER ROBILUS FLUME | HEIGHT OF INLET "H" (N) | MAXIMUM COVER (N) | DESCRIPTION | LOCATION | DRAINAGE PLAN SHEET NO | DRAINAGE SYSTEM NO | DRAINAGE UNIT |
|---|---|---|---|---|---|---|---|---|---|---|---|---|---|---|---|---|---|---|---|---|---|---|---|---|---|---|---|---|---|---|---|
| | | CY | CY | CY | CY | CY | KG | EA | EA | EA | EA | EA | EA | SQ M | SQ M | CY | M | M | M | M | M | | EA | EA | M | M | | | | | |
| 1 | a | 5.8 | | 0.86 | 0.6 | | | | | | | | | | | | | | | 24.5 | | WTJ | | | | 1.6 | 450mm APC W/CHNL PIPE STR | N602250.9644/E1902294.3261 | 2 | 1 | a |
| | b | | | | 2.5 | | 300 | | | | 1 | | | | | | | | | | 0.67 | | | 1 | 2.2 | | WQM MH, HD=1.2 | N602240.4173/E1902271.0717 | | | b |
| | c | | | | | | | | | | | | | | | | 2.9 | | | | | WTJ | | | | 0.3 | 150 mm PVC | | | | c |
| | d | | | | 1.22 | | | | | | | | | | | | | | | | | | | | | | CONCRETE MONITORING PAD | | | | d |
| | e | | | | | | | | | | | | | | | | | | | 5.5 | | WTJ | | | | 1.6 | 450mm APC | | | | e |
| | f | | | | 0.26 | | 51 | | | | 1 | | | | | | | | | | 2.2 | | | | | | MOD INLET | N602237.7531/E1902265.1977 | | | f |
| | g | | | | | | | | | | | | | | | | | | | 4.7 | | WTJ | | | | 1.6 | 450mm APC | | | | g |
| | h | | | | 2.4 | | 200 | | | | | 1 | | | | | | | 1 | | | | 1 | | 1.5 | | BSN OUTLET STR W/CANAL GATE | N602233.1798/E1902264.0372 | | | h |
| | i | | | | | | | | | | | | | 21.9 | 36.4 | | | | | | | | | | | | RSP SPILLWAY | | | | i |
| | j | 43.6 | | | | | | | | | | | | | | | | | | | | | | | | | REMOVE CONCRETE CHANNEL | | | | j |
| 2 | a | | | | | | | | | | | | | | | | | 24.3 | | | | WTJ | | | | 1.4 | 150 mm PVC | | 2 | 2 | a |
| | b | | | | 1.0 | | 168 | | | 1 | | | | | | | | | | | | | 1 | | 1.5 | | GI INLET W/CANAL GATE | N602143.7433/E1902257.1296 | | | b |
| | c | 7.3 | | 1.1 | 0.2 | | | | | | | | | | | | | 6.4 | | | | WTJ | | | | 1.4 | 150 mm PVC W/PIPE CHNL STR | | | | c |
| | d | | | | 0.51 | | | | | | | | | | | | | | | | | | | | | | FLOW DIVERSION STR | | | | d |
| | e | | | | | 3.1 | | | | | | | | | | | | | | | | | | | | | CONCRETE LINED DITCH | | | | e |
| | | | | | | | | | | | | | | | | | | | | | | | | | | | | | 4 | a | |
| SHEET TOTAL | | 56.7 | | 2 | 8.69 | 3.1 | 668 | | | 1 | | 1 | 1 | 1 | | 21.9 | 36.4 | | 2.9 | 30.7 | 1 | 34.7 | | 2.87 | | | 2 | 1 | | | SHEET TOTAL | | | |

(N) NOT A SEPARATE PAY ITEM - FOR INFORMATION ONLY

## AS-CONSTRUCTED PLANS

The changes reflected in these AS-CONSTRUCTED PLANS were obtained by conducting a review of the site by RBF field surveyors in May of 2000. The field survey was limited to a review of the surface features and a review of the accessible invert elevations of drainage structures.

RBF is not responsible for the accuracy or completeness of electronic copies of this plan sheet.

Date of AS-CONSTRUCTED PLANS preparation: June 2000

# DRAINAGE QUANTITIES

D-16

CALCULATED/ DESIGNED BY: AMW 1/99 REVISED BY
CHECKED BY: SMT 1/99 DATE REVISED

DESIGN OVERSIGHT: CID TESORO

STATE OF CALIFORNIA - DEPARTMENT OF TRANSPORTATION
Caltrans
NPDES

&FILE$ &TIME$ &DATE$

LAST REVISION: DATE PLOTTED => &DATE
00-00-00 TIME PLOTTED => &TIME

FOR REDUCED PLANS ORIGINAL SCALE IS IN MILLIMETERS 0 20 40 60 80

USERNAME => &USER
DGN FILE => &REQUEST

CU 11332 EA 07840!

| DIST | COUNTY | ROUTE | KILOMETER POST TOTAL PROJECT | SHEET NO | TOTAL SHEETS |
|---|---|---|---|---|---|
| 11 | SD | 5 | 70.7 | 22 | 41 |

Caltrans Metric

REGISTERED CIVIL ENGINEER

2-26-99
PLANS APPROVAL DATE

REGISTERED PROFESSIONAL ENGINEER — A. M. WALKER — No. 53716 — EXP. 12-31-01 — CIVIL — STATE OF CALIFORNIA

The State of California or its officers or agents shall not be responsible for the accuracy or completeness of electronic copies of this plan sheet.

ROBERT BEIN, WILLIAM FROST & ASSOCIATES
14725 ALTON PARKWAY
IRVINE, CA 92618

**AS-CONSTRUCTED PLANS**

The changes reflected in these AS-CONSTRUCTED PLANS were obtained by conducting a review of the site by RBF field surveyors in May of 2000. The field survey was limited to a review of the surface features and a review of the accessible invert elevations of drainage structures.

RBF is not responsible for the accuracy or completeness of electronic copies of this plan sheet.

Date of AS-CONSTRUCTED PLANS preparation: June 2000

| | DRAINAGE SYSTEM NO | DRAINAGE UNIT | REMOVE CONCRETE (CHANNEL) (N) | M MINOR CONCRETE (BACKFILL) | SLOPE PAVING (CONCRETE) | M MINOR CONCRETE (MINOR STRUCTURE) | M MINOR CONCRETE (MISC CONSTRUCTION) | KG MISC IRON AND STEEL | FRAMES, GRATES AND COVERS (N): TYPE 600-S | CHECKERED PLATE | CHECKERED PL (STAINLESS STEEL) | NM FRAME & COVER | PATCH PLATE | FES RCP: 450 mm | RSP: BACKING No. 2, METHOD B | RSP: FABRIC | GABION | PVC: 150 mm (N) | PVC: 150 mm | PVC: 200 mm (N) | APC: 450 mm | RCP: 900 mm PRECAST CONCRETE PIPE RISER | RCP: 600 mm RCP | 450 mm SCSP (61T Coated, 1.63 mm THICK) | | | PIPE JOINT CLASSIFICATION | CANAL GATE (STAINLESS STEEL) | 450 mm FLUME | HEIGHT OF INLET "H" (N) | MAXIMUM COVER (N) | DESCRIPTION | LOCATION | DRAINAGE PLAN SHEET NO | DRAINAGE SYSTEM NO | DRAINAGE UNIT |
|---|---|---|---|---|---|---|---|---|---|---|---|---|---|---|---|---|---|---|---|---|---|---|---|---|---|---|---|---|---|---|---|---|---|---|---|
| | 3 | a | | | | | | | | | | | | 1 | 8.4 | 14 | | | | | | | | | | | | | | | | FES W/RSP | N602163.7079/E1902259.6497 | 1 | 3 | a |
| | | b | | | | | | | | | | | | | | | | | | | 6.3 | | | | | | WTJ | | | 0.7 | 450mm APC | | | | b |
| | | c | | | | 0.26 | | 51 | | | 1 | | | | | | | | | | | | 1.12 | | | | | | | 1.1 | | WQM Mod INLET | N602158.3243/E1902257.2440 | | | c |
| | | d | | | | | | | | | | | | | | | | | 1.1 | | | | | | | | WTJ | | | 0.3 | 150mm PVC | | | | d |
| | | e | | | | 1.22 | | | | | | | | | | | | | | | | | | | | | | | | | Conc MONITORING PAD | | | | e |
| | | f | | | | | | | | | | | | | | | | | | | 12.8 | | | | | | WTJ | | | 1.4 | 450mm APC | | | | f |
| | | g | | | | 0.26 | | 51 | | | 1 | | | | | | | | | | | | 1.85 | | | | | | | 1.8 | | Mod INLET | N602145.8101/E1902251.6521 | | | g |
| | | h | | | | | | | | | | | | | | | | | | | 36.8 | | | | | | WTJ | | | 2.4 | 450mm APC | | | | h |
| | | i | | | | 0.26 | | 51 | | | 1 | | | | | | | | | | | | 2.06 | | | | | | | 2.1 | | Mod INLET | N602111.7276/E1902236.4223 | | | i |
| | | j | | | | | | | | | | | | | | | | | | | 52.1 | | | | | | S | | | 1.6 | 450mm APC | | | | j |
| | | k | | | | | 0.28 | | | | | | | | | | | | | | | | | | | | | | | | Conc COLLAR (N) | N602059.8267/E1902244.4066 | | | k |
| | | l | | | | | | | | | | | | | | | | | | | 3.7 | | | | | | S | | | 0.9 | 450mm APC | | | | l |
| | | m | | | | 0.97 | | 168 | | | 1 | | | | | | | | | | | | | | | | | | | 1.40 | | GI INLET W/GC | N602055.6354/E1902244.3999 | | | m |
| | | n | | | | | | | | | | | | | | | | | | | 73.4 | | | | | | S | | | 0.9 | 450mm APC | | | | n |
| | | o | | | | 0.97 | | 144 | | | 1 | | | | | | | | | | | | | | | | | | | 1.40 | | GI INLET W/FRP | N601982.3363/E1902256.3473 | | | o |
| | | p | | | | | | | | | | | | | | | | | | | 99.1 | | | | | | S | | | 0.9 | 450mm APC | | | | p |
| | | q | | | | 0.95 | | 144 | | | 1 | | | | | | | | | | | | | | | | | | | 1.37 | | GI INLET W/FRP | N601883.7739/E1902272.7843 | | | q |
| | | r | | 21.6 | | | | | | | | | | | | | | | | | 99.1 | | | | | | S | | | 0.7 | 450mm APC W/Conc BKF | | | | r |
| | | s | | | | 0.69 | | 144 | | | 1 | | | | | | | | | | | | | | | | | | | 0.65 | | Mod G2 INLET W/FRP | N601786.4920/E1902295.9448 | | | s |
| | | t | | | | | | | | | | | | | | | | | | | | | | 7.3 | | | | | | | | | | t |
| | 4 | a | | | | | | | | | | | | | | | 17.3 | | | | 5.5 | | | | | | | | | | GABION WALL | | | | |
| | 5 | a | | 5.9 | | 0.9 | 0.7 | | | | | | | | | | | | | | | | | | | | | | | | CHANNEL PIPE STRUCTURE | | 2 | 5 | a |
| | | b | | | | | | | | | | | | | | | | | | | | | | 27 | | | WTJ | | | 2.0 | 610 mm APC | | | | b |
| | | c | | | | 1.5 | | 178 | | | 1 | | | | | | | | | | | | 0.4 | | | | | | | 1.3 | | X-BASE H=1.3, Hb=0.9 | | | | c |
| SHEET TOTAL | | | 5.9 | 21.6 | 0.9 | 7.78 | 0.28 | 931 | | | 4 | 1 | 3 | | 1 | 8.4 | 14 | 17.3 | 1.1 | | 388.8 | | 5.43 | 27 | 7.3 | | | | | | SHEET TOTAL | | | | |
| GRAND TOTAL | | | 62.6 | 21.6 | 2.9 | 16.47 | 3.32 | 1599 | | | 5 | 1 | 4 | 1 | 1 | 1 | 30.3 | 50.4 | 17.3 | 4 | 30.7 | 1 | 423.5 | | | 8.3 | 27 | 7.3 | | | | 2 | 1 | | | GRAND TOTAL | | | | |

(N) NOT A SEPARATE PAY ITEM - FOR INFORMATION ONLY

# DRAINAGE QUANTITIES

NO SCALE

D-17

STATE OF CALIFORNIA - DEPARTMENT OF TRANSPORTATION
Caltrans
NPDES
DESIGN OVERSIGHT
CID TESORO

| | DATE | REVISED BY |
|---|---|---|
| CALCULATED/DESIGNED BY | AMW 1/99 | |
| CHECKED BY | SMT 1/99 | DATE REVISED |

LAST REVISION DATE PLOTTED => &DATE
00-00-00 TIME PLOTTED => &TIME

&FILE&
&TIME&
&DATE&

FOR REDUCED PLANS ORIGINAL SCALE IS IN MILLIMETERS 0 20 40 60 80

USERNAME => &USER
DGN FILE => &REQUEST

CU 11332

EA 07840!

| DIST | COUNTY | ROUTE | KILOMETER POST TOTAL PROJECT | SHEET NO | TOTAL SHEETS |
|---|---|---|---|---|---|
| 11 | SD | 5 | 70.7 | 23 | 41 |

REGISTERED CIVIL ENGINEER

2-26-99
PLANS APPROVAL DATE

REGISTERED PROFESSIONAL ENGINEER — HILBERT W. DICKSON — No. 19417 — Exp. 9-30-01 — CIVIL — STATE OF CALIFORNIA

The State of California or its officers or agents shall not be responsible for the accuracy or completeness of electronic copies of this plan sheet.

ROBERT BEIN, WILLIAM FROST & ASSOCIATES
14725 ALTON PARKWAY
IRVINE, CA 92618

ALL DIMENSIONS ARE IN METERS UNLESS OTHERWISE SHOWN

Caltrans Metric

## LEGEND

- DIRECTION OF TRAFFIC
- TRAFFIC PLASTIC DRUM (TPD)
- TEMP RAILING (TYPE K) WITH SCUPPERS (STD PLAN T3)
- CONSTRUCTION AREA

## NOTES

[1] TEMP RAILING (TYPE K) WITH SCUPPERS AT EDGE OF STRIPING DETAIL 27B.

[2] CLOSURE OF FREEWAY RIGHT LANES ADJACENT TO THE SHOULDER OR CLOSURE OF OFF-RAMP SHALL BE IN ACCORDANCE WITH STANDARD PLANS T10 AND T14.

[3] CLOSE SHOULDER IN ACCORDANCE WITH STANDARD PLAN T10.




**SECTION A-A**
NO SCALE

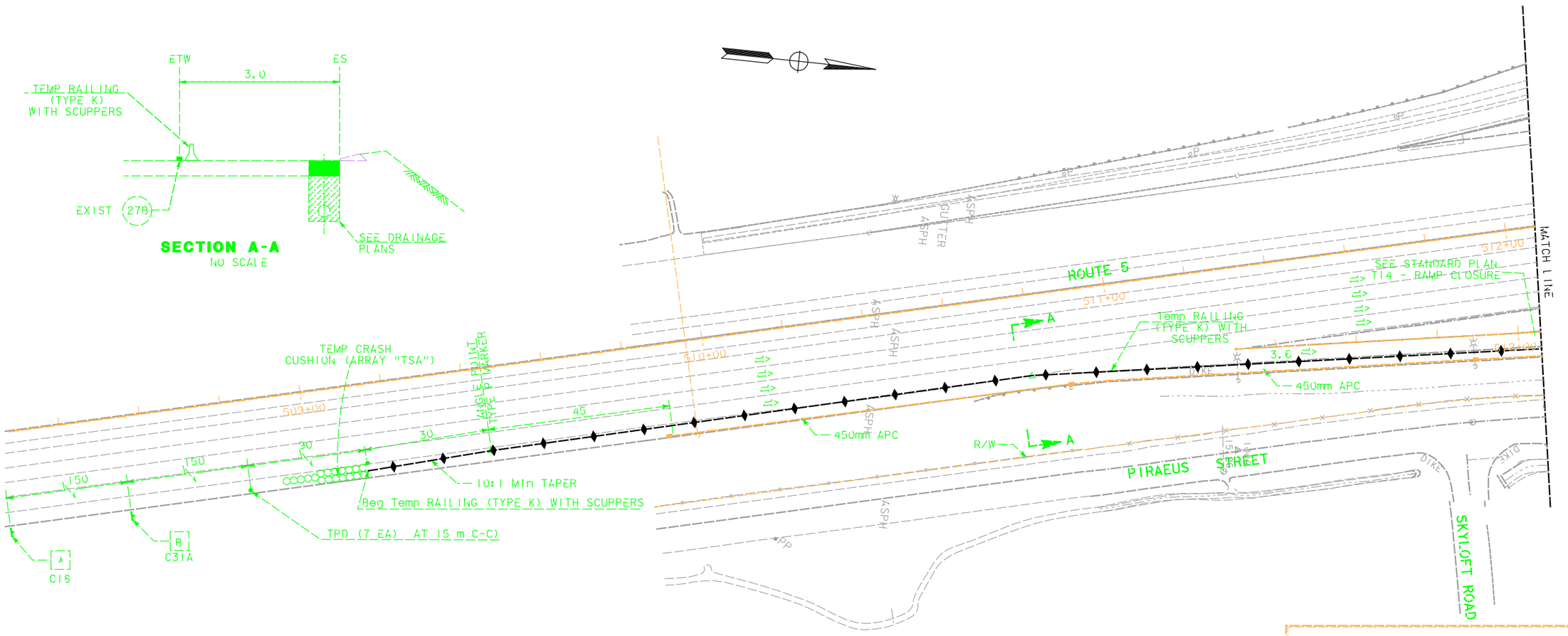


**AS-CONSTRUCTED PLANS**

The changes reflected in these AS-CONSTRUCTED PLANS were obtained by conducting a review of the site by RBF field surveyors in May of 2000. The field survey was limited to a review of the surface features and a review of the accessible invert elevations of drainage structures.

RBF is not responsible for the accuracy or completeness of electronic copies of this plan sheet.

Date of AS-CONSTRUCTED PLANS preparation. June 2000

# CONTRUCTION AREA SIGNS AND TRAFFIC HANDLING PLAN

SCALE: 1:500

**CS-1**

DESIGN OVERSIGHT — CID TESORO

STATE OF CALIFORNIA - DEPARTMENT OF TRANSPORTATION — NPDES — Caltrans

| DATE REVISED BY | DATE | CALCULATED/ DESIGNED BY | CHECKED BY |
|---|---|---|---|
| DATE REVISED | HWD 1/99 | HWD 1/99 | |

&FILE&
&TIME&
&DATE&

LAST REVISION 00-00-00 DATE PLOTTED => &DATE
TIME PLOTTED => &TIME

FOR REDUCED PLANS ORIGINAL SCALE IS IN MILLIMETERS 0 20 40 60 80

USERNAME => &USER
DGN FILE => &REQUEST

CU 11332

EA 078401

| DIST | COUNTY | ROUTE | KILOMETER POST TOTAL PROJECT | SHEET NO | TOTAL SHEETS |
|---|---|---|---|---|---|
| 11 | SD | 5 | 70.7 | 24 | 41 |

REGISTERED CIVIL ENGINEER

2-26-99
PLANS APPROVAL DATE

The State of California or its officers or agents shall not be responsible for the accuracy or completeness of electronic copies of this plan sheet.

REGISTERED PROFESSIONAL ENGINEER — HILBERT W. DICKSON — No. 19417 — Exp. 9-30-01 — CIVIL — STATE OF CALIFORNIA

ROBERT BEIN, WILLIAM FROST & ASSOCIATES
14725 ALTON PARKWAY
IRVINE, CA 92618

ALL DIMENSIONS ARE IN METERS UNLESS OTHERWISE SHOWN

Caltrans Metric

ETW — 1.2 — ES
TEMP RAILING (TYPE K) WITH SCUPPERS
CONST AREA
EXIST 27B

**SECTION B-B**
NO SCALE

CITY OF ENCINITAS
CITY OF CARLSBAD
LA COSTA AVENUE
MATCH LINE
Temp RAILING (TYPE K) WITH SCUPPERS
END Temp RAILING (TYPE K)
450 mm APC
SC-6
DIKE
"CT1"
PARK AND RIDE ENTRANCE
R/W
513+00
514+00
515+00
516+00
11+00
C18
C13
C15

**AS-CONSTRUCTED PLANS**

The changes reflected in these AS-CONSTRUCTED PLANS were obtained by conducting a review of the site by RBF field surveyors in May of 2000. The field survey was limited to a review of the surface features and a review of the accessible invert elevations of drainage structures.

RBF is not responsible for the accuracy or completeness of electronic copies of this plan sheet.

Date of AS-CONSTRUCTED PLANS preparation: June 2000

# CONSTRUCTION AREA SIGNS AND TRAFFIC HANDLING PLAN

SCALE: 1:500

**CS-2**

STATE OF CALIFORNIA - DEPARTMENT OF TRANSPORTATION
Caltrans
NPDES
DESIGN OVERSIGHT
CID TESORO

| | CALCULATED/ DESIGNED BY | CHECKED BY | DATE | REVISED BY | DATE REVISED |
|---|---|---|---|---|---|
| | HWD | HWD | 1/99 | | |

$FILE$
$TIME$
$DATE$

LAST REVISION
DATE PLOTTED => $DATE
00-00-00 TIME PLOTTED => $TIME

FOR REDUCED PLANS ORIGINAL SCALE IS IN MILLIMETERS 0 20 40 60 80

USERNAME => $USER
DGN FILE => $REQUEST

CU 11332

EA 07840!

| DIST | COUNTY | ROUTE | KILOMETER POST TOTAL PROJECT | SHEET No. | TOTAL SHEETS |
|---|---|---|---|---|---|
| 11 | SD | 5 | 70.7 | 25 | 41 |

REGISTERED CIVIL ENGINEER DATE

2-26-99
PLANS APPROVAL DATE

The State of California or its officers or agents shall not be responsible for the accuracy or completeness of electronic copies of this plan sheet.

REGISTERED PROFESSIONAL ENGINEER — W. J. DICKSON — No. — EXP. 3-31-01 — CIVIL — STATE OF CALIFORNIA

PCR/CPT BETH WILLIAM FROST & ASSOCIATES
12926 ALTON PARKWAY
IRVINE, CA 92618

## CONSTRUCTION AREA SIGNS

| SIGN | TYPE | PANEL SIZE mm X mm | NO. OF POST AND SIZE (mm) mm | LEGEND |
|---|---|---|---|---|
| A | C12 | 1219 X 1219 | 4-89 X 140 | 1 |
| B | C31 | 1219 X 1219 | PORTABLE | 1 |
| C | C12 | 1524 X 610 | 2-89 X 89 | 1 |
| D | SC6-1 | 1219 X 1524 | PORTABLE | 1 |
| | | | | |
| | | | | |
| | | | TOTAL = | 10 |

## TYPICAL PLACEMENT OF TRAFFIC PLASTIC DRUM

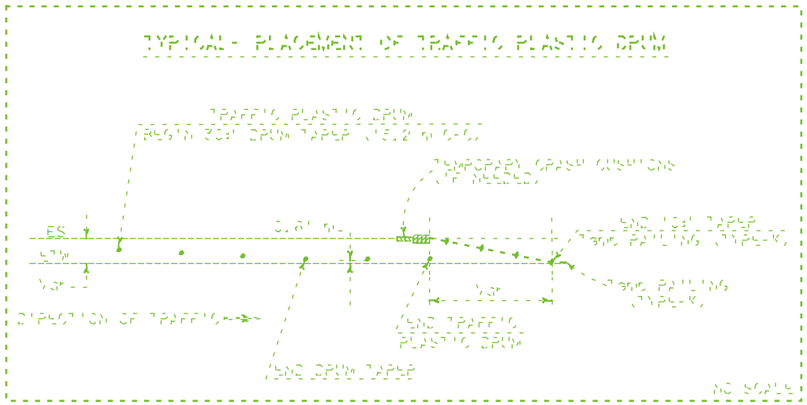


NO SCALE

## SUMMARY OF QUANTITIES

| ITEM | UNIT | TOTAL |
|---|---|---|
| TEMPORARY RAILING (TYPE K) | M | 5420.5 |
| TEMPORARY CRASH CUSHION MODULES | EA | 10 |
| TRAFFIC PLASTIC DRUM | EA | 7 |

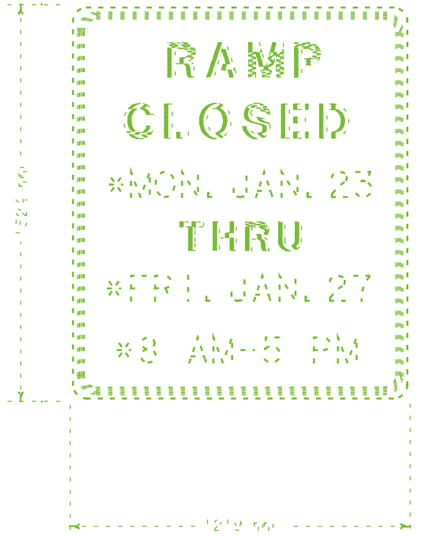


12'0 mm

SC6-4

*NOTE: Days, times and lanes will vary, especially when cleaning.

## AS-CONSTRUCTED PLANS

THE STRIKE OUT REFLECTED IN THESE AS-CONSTRUCTED PLANS WERE DETERMINED BY SUBTRACTING A REVISION OF THE CITY OF SAN DIEGO'S SURVEYORS INDEX OF 2000. THE CITY'S SURVEY WAS LIMITED TO A REVISION OF THE SURFACE FEATURES AND A REVISION OF THE SUBSURFACE UTILITY ELEVATIONS OF EXISTING STRUCTURES.

CBF IS NOT RESPONSIBLE FOR THE ACCURACY OR COMPLETENESS OF ELECTRONIC COPIES OF THIS PLAN SHEET.

DATE OF AS-CONSTRUCTED PLANS PREPARATION: JUNE 2000

# CONSTRUCTION AREA SIGN AND TRAFFIC HANDLING DETAILS AND QUANTITIES

CS-3

ALL DIMENSIONS ARE IN METERS UNLESS OTHERWISE SHOWN.

STATE OF CALIFORNIA - DEPARTMENT OF TRANSPORTATION
Caltrans
NPDES
DESIGN OVERSIGHT
CID TESORO

| DATE | REVISED BY | DATE REVISED |
|---|---|---|
| CALCULATED/ DESIGNED BY | | CHECKED BY |

PLOTTED
PLOTTED
PLOTTED

FOR REDUCED PLANS ORIGINAL SCALE IS IN MILLIMETERS 0 20 40 60 80

USERNAME => &USER
DGN FILE => &REQUEST

LAST REVISION DATE PLOTTED => &DATE
02-07-99 TIME PLOTTED => &TIME

EA 07840!

ALL DIMENSIONS ARE IN METERS UNLESS OTHERWISE SHOWN

Caltrans Metric

| DIST | COUNTY | ROUTE | KILOMETER POST TOTAL PROJECT | SHEET No | TOTAL SHEETS |
|---|---|---|---|---|---|
| 11 | SD | 5 | 70.7 | 26 | 41 |

REGISTERED CIVIL ENGINEER

2-26-99
PLANS APPROVAL DATE

REGISTERED PROFESSIONAL ENGINEER A.M. WALKER No. 53716 Exp. 12-31-01 CIVIL STATE OF CALIFORNIA

*The State of California or its officers or agents shall not be responsible for the accuracy or completeness of electronic copies of this plan sheet.*

ROBERT BEIN, WILLIAM FROST & ASSOCIATES
14725 ALTON PARKWAY
IRVINE, CA 92618

## ROADWAY ITEMS

| LOCATION & DESCRIPTION | ASPHALT Conc (TYPE A) | CLASS 2 AGGREGATE BASE | MINOR CONC (BACKFILL) | 1.2 m CHAIN LINK GATE (CL-1.8) | 3.7 m CHAIN LINK GATE (CL-1.8) | ROADWAY * EXCAVATION | ROADWAY EMBANKMENT (N) | BASIN LINING GEOMEMBRANE | BASIN LINING GEOTEXTILE | POUROUS PAVERS | MINOR CONCRETE (Misc Const) | CHAIN LINK FENCE (CL-1.8) | PLACE ASPHALT Conc DIKE |
|---|---|---|---|---|---|---|---|---|---|---|---|---|---|
| DESCRIPTION | TONNE | $m^3$ | $m^3$ | EA | EA | $m^3$ | $m^3$ | $m^2$ | $m^2$ | $m^2$ | $m^3$ | m | m |
| I-5/LA COSTA AVENUE | | | | 1 | 1 | 9298 | 15 | 840 | 840 | | | 307.1 | |
| DRIVEWAY | | | | | | | | | | | 1.1 | | |
| ACCESS ROAD | | 45 | | | | | | | | 330 | 96.2 | | |
| A1-150 CURB | | | | | | | | | | | 18 | | |
| BASIN OUTLET STRUCTURE PAD | | | | | | | | | | | 1.2 | | |
| ** TYPE "E" | 34.5 | | | | | | | | | | | | 276 |
| FROM DRAINAGE LIST | | | 21.6 | | | | | | | | 3.1 | | |
| STRUCTURAL SECTION | 90 | | 167 | | | | | | | | | | |
| | | | | | | | | | | | | | |
| TOTAL | 124.5 | 45 | 188.6 | 1 | 1 | 9298 | 15 | 1680 | | 330 | 119.6 | 307.1 | 276 |

(N) NOT A SEPARATE PAY ITEM
* INCLUDES BASIN OVEREXCAVATION
** INCLUDES TYPE "C" AND "F" DIKE AT MBGR

## METAL BEAM GUARD RAILING (WOOD POST)

| MBGR No. △ | SHEET No. | (N) FLARE TYPE | NEW MBGR OR RECON-STRUCT MBGR | EXISTING MBGR (AVAILABLE FOR Recon) [N] | EXISTING MBGR (TO BE RE-MOVED) (N) | CABLE ANCHOR ASSEMBLY (BREAKAWAY) TYPE A | CABLE ANCHOR ASSEMBLY (BREAKAWAY) TYPE B | TERMINAL SYSTEM (TYPE SRT) | REMOVE EXISTING TERMINAL SECTION [N] | REMOVE CABLE ANCHOR ASSEMBLY [N] |
|---|---|---|---|---|---|---|---|---|---|---|
| | | | m | m | m | EA | EA | EA | EA | EA |
| 1 | L-1 | | 7.6 | 19.1 | | | 1 | 1 | 1 | 2 |
| 2 | L-2 | | 30.5 | 15.2 | 11.4 | | 1 | | 1 | 3 |
| | | | | | | | | | | |
| TOTALS | | | NEW= 3.8<br>Recon= 34.3 | 34.3<br>[N] | REMOVE=11.4 | | 2 | 1 | 2<br>[N] | 5<br>[N] |

NOTES: (N) NOT A SEPARATE PAY ITEM. FOR INFORMATION ONLY.
Recon= RECONSTRUCT

(N) NOT A SEPARATE PAY ITEM. FOR INFORMATION ONLY.

### AS-CONSTRUCTED PLANS

The changes reflected in these AS-CONSTRUCTED PLANS were obtained by conducting a review of the site by RBF field surveyors in May of 2000. The field survey was limited to a review of the surface features and a review of the accessible invert elevations of drainage structures.

RBF is not responsible for the accuracy or completeness of electronic copies of this plan sheet.

Date of AS-CONSTRUCTED PLANS preparation. June 2000

# SUMMARY OF QUANTITIES

NO SCALE

Q-1

| CALCULATED/DESIGNED BY | AMW | DATE 1/99 | REVISED BY |
|---|---|---|---|
| CHECKED BY | MC | 1/99 | DATE REVISED |

DESIGN OVERSIGHT: CID TESORO

STATE OF CALIFORNIA - DEPARTMENT OF TRANSPORTATION
Caltrans NPDES

$DATE$ $TIME$ $FILE$

LAST REVISION 00-00-00 DATE PLOTTED => $DATE TIME PLOTTED => $TIME

FOR REDUCED PLANS ORIGINAL SCALE IS IN MILLIMETERS 0 20 40 60 80

USERNAME => $USER
DGN FILE => $REQUEST

CU 11332 EA 078401

| DIST | COUNTY | ROUTE | KILOMETER POST TOTAL PROJECT | SHEET NO. | TOTAL SHEETS |
|---|---|---|---|---|---|
| 11 | SD | 5 | 70.7 | 27 | 41 |

LICENSED LANDSCAPE ARCHITECT

2-26-99
PLANS APPROVAL DATE

The State of California or its officers or agents shall not be responsible for the accuracy or completeness of electronic copies of this plan sheet

**ABBREVIATIONS**

AMEND — amendment
B & B — balled and burlapped
DIA — diameter
EA — each
g — gram
kg — kilogram
m — meter
$m^2$ — square meter
$m^3$ — cubic meter
MAX — maximum
MIN — minimum
mm — millimeter
No — number
PLT ESTB — plant establishment
PVMT — pavement
R/W — right of way
SF — state furnished
TAB — tablet(s)
TRVD — traveled

# PLANT LIST AND PLANTING SPECIFICATIONS

| PLANT GROUP | PLANT No | SYMBOL | BOTANICAL NAME | COMMON NAME | SIZE | QUANTITY EACH | HOLE SIZE (mm) DIA | HOLE SIZE (mm) DEPTH | BASIN TYPE | IRON SULFATE ① | SOIL AMEND ① | COMMERCIAL FERTILIZER ① PLANTING | COMMERCIAL FERTILIZER ① PLT ESTB | MULCH ① | PLANTING LIMITS MINIMUM DISTANCE (m) FROM TRVD WAY | PVMT | FENCE | WALL | PAVED DITCH | EARTH DITCH | ON CENTER (m) | REMARKS |
|---|---|---|---|---|---|---|---|---|---|---|---|---|---|---|---|---|---|---|---|---|---|---|
| A | 1 | | BACCHARIS SALICIFOLIA | MULE FAT | No. 1 | 300 | ② | | 1 | - | - | - | - | - | - | - | - | - | - | - | .45 | ⑤ ⑥ STATE FURNISHED |
| | 2 | | FRANKENIA GRANDIFOLIA | HEATH | No. 1 | 225 | ② | | 1 | - | - | - | - | - | - | - | - | - | - | - | .45 | ⑤ ⑥ STATE FURNISHED |
| | 3 | | LIMONIUM CALIFORNICUM | COASTAL STATICE | No. 1 | 225 | ② | | 1 | - | - | - | - | - | - | - | - | - | - | - | .45 | ⑤ ⑥ STATE FURNISHED |
| | 4 | | ATRIPLEX LENTIFORMIS | COASTAL QUAIL BUSH | No. 1 | 19 | ② | | 1 | - | - | - | - | - | - | - | - | - | - | - | 1.8 | ⑤ ⑦ STATE FURNISHED |
| | 5 | | SALIX GOODINGII | BLACK WILLOW | No. 1 | 19 | ② | | 1 | - | - | - | - | - | - | - | - | - | - | - | 1.8 | ⑤ ⑦ STATE FURNISHED |
| | 6 | | SALIX LASIOLEPIS | ARROYO WILLOW | No. 1 | 19 | ② | | 1 | - | - | - | - | - | - | - | - | - | - | - | 1.8 | ⑤ ⑦ STATE FURNISHED |
| | 7 | | SAMBUCUS MEXICANUS | MEXICAN ELDERBERRY | No. 1 | 19 | ② | | 1 | - | - | - | - | - | - | - | - | - | - | - | 1.8 | ⑤ ⑦ STATE FURNISHED |
| | 8 | | SALIX GOODINGII | BLACK WILLOW | No. 1 | 41 | ② | | 1 | - | - | - | - | - | - | - | - | - | - | - | 1.8 | STATE FURNISHED |
| | 9 | | BACCHARIS PILULARIS | CHAPARRAL BROOM | No. 1 | 295 | ② | | 1 | - | - | - | - | - | - | - | - | - | - | - | 1.8 | ⑤ ⑧ STATE FURNISHED |
| | 10 | | HAPLOPAPPUS VENETUS | COAST GOLDENBRUSH | No. 1 | 295 | ② | | 1 | - | - | - | - | - | - | - | - | - | - | - | 1.8 | ⑤ ⑧ STATE FURNISHED |
| | 11 | | MIMULUS LONGIFLORUS | MONKEY FLOWER | No. 1 | 295 | ② | | 1 | - | - | - | - | - | - | - | - | - | - | - | 1.2 | ⑤ ⑧ STATE FURNISHED |
| F | 12 | | DISTICHIS SPICATA | SALT GRASS | IN FLAT | 2000 | ② | | - | - | - | - | - | - | - | 2 | 2 | 2 | 2 | 2 | 0.3 | STATE FURNISHED |
| | 13 | | DISTICHIS SPICATA | SALT GRASS | IN FLAT | 5000 | ② | | - | - | - | - | - | - | - | 2 | 2 | 2 | 2 | 2 | 0.3 | STATE FURNISHED |
| K | 14 | | PLATANUS RACEMOSA | WESTERN SYCAMORE | 600 BOX | 13 | 1 m | 650 | 1 | 460 g | 0,085$m^3$ | 8 TAB | 460 g | 0,05 $m^3$ | ④ | ④ | ④ | ④ | ④ | ④ | - | ⑤ TREE |
| | 15 | | POPULUS FREMONTII | FREMONTS POPULAR | 600 BOX | 20 | 1 m | 650 | 1 | 460 g | 0,085$m^3$ | 8 TAB | 460 g | 0,05 $m^3$ | ④ | ④ | ④ | ④ | ④ | ④ | - | ⑤ TREE |
| M | 16 | | SCIRPUS CALIFORNICUS | BULRUSH | LINER | 340 | ② | | 1 | - | - | - | - | - | - | - | - | - | - | - | .45 | ⑤ ⑨ STATE FURNISHED |
| | 17 | | SCIRPUS ROBUSTUS | BULRUSH | LINER | 340 | ② | | 1 | - | - | - | - | - | - | - | - | - | - | - | .45 | ⑤ ⑨ STATE FURNISHED |
| | 18 | | TYPHA LATIFOLIA | BROADLEAF CATTAIL | LINER | 340 | ② | | 1 | - | - | - | - | - | - | - | - | - | - | - | .45 | ⑤ ⑨ STATE FURNISHED |
| | 19 | | JUNCUS ACUTUS | RUSH | LINER | 225 | ② | | 1 | - | - | - | - | - | - | - | - | - | - | - | .45 | ⑤ ⑨ STATE FURNISHED |
| Y | 20 | A | PLATANUS RACEMOSA | WESTERN SYCAMORE | 750 BOX | 8 | 1.2 m | 750 | 1 | 460 g | 0,085$m^3$ | 8 TAB | 460 g | 0,05 $m^3$ | ④ | ④ | ④ | ④ | ④ | ④ | - | ⑤ TRANSPLANT |

**APPLICABLE WHEN CIRCLED:**

① - Quantities shown are "per plant" unless shown as $m^2$ application rates.
② - Sufficient to receive root ball.
③ - Does not apply to mulch areas.
④ - As shown on plans.
⑤ - See detail.
⑥ - Each random group shall include 7 BAC SAL, 5 FRA GRA, and 5 LIM CAL
⑦ - Each random group shall include 1 ATR LEN, 1 SAL GOO, 1 SAL LAS, and 1 SAM MEX.
⑧ - Each random group shall include 5 BAC PIL, 5 HAP VEN, and 5 MIM LON.
⑨ - Plant at lower edge of the specific planting area.

**NOTE:**
Underlined portions of botanical name indicate abbreviations used on Planting Plans.

**LEGEND**

SEED TYPE 1
SEED TYPE 1
SEED TYPE 2
HYDROSEED

**AS-CONSTRUCTED PLANS**

The changes reflected in these AS-CONSTRUCTED PLANS were obtained by conducting a review of the site by RBF field surveyors in May of 2000. The field survey was limited to a review of the surface features and a review of the accessible invert elevations of drainage structures.

RBF is not responsible for the accuracy or completeness of electronic copies of this plan sheet.

Date of AS-CONSTRUCTED PLANS preparation: June 2000

**PLANT LIST**

SCALE = 1:500

**HP-1**

EMILIO VIRAMONTES
LICENSED LANDSCAPE ARCHITECT
STATE OF CALIFORNIA

Caltrans — DEPARTMENT OF TRANSPORTATION — STATE OF CALIFORNIA
PROJECT LANDSCAPE ARCHITECT
CALCULATED/DESIGNED BY
CHECKED BY
REVISED BY
DATE REVISED
NPDES

LAST REVISION DATE PLOTTED => &DATE
TIME PLOTTED => &TIME

FOR REDUCED PLANS ORIGINAL SCALE IS IN MILLIMETERS 0 20 40 60 80
USERNAME => &USER
DGN FILE => &REQUEST

CU 11332 | EA 07840!

*****CONFIDENTIAL***** *****SENSITIVE***** *****USER*****
&DATE&TIME&FILE&

| DIST | COUNTY | ROUTE | KILOMETER POST TOTAL PROJECT | SHEET NO. | TOTAL SHEETS |
|---|---|---|---|---|---|
| 11 | SD | 5 | 70.7 | 28 | 41 |

LICENSED LANDSCAPE ARCHITECT

2-26-99

PLANS APPROVAL DATE

*The State of California or its officers or agents shall not be responsible for the accuracy or completeness of electronic copies of this plan sheet*

LICENSED LANDSCAPE ARCHITECT — EMILIO L VIRAMONTES No. 3534 — Signature — 10/30/00 Renewal Date — Date — STATE OF CALIFORNIA

Caltrans Metric

STATE OF CALIFORNIA - DEPARTMENT OF TRANSPORTATION

PROJECT LANDSCAPE ARCHITECT

**EMILIO VIRAMONTES**

**NPDES**

| CALCULATED/ DESIGNED BY | ELV | DATE 2-99 | REVISED BY |
|---|---|---|---|
| CHECKED BY | | | DATE REVISED |

**AS-CONSTRUCTED PLANS**

The changes reflected in these AS-CONSTRUCTED PLANS were obtained by conducting a review of the site by PBF field surveyors in May of 2000. The field survey was limited to a review of the surface features and a review of the accessible invert elevations of drainage structures.

PBF is not responsible for the accuracy or completeness of electronic copies of this plan sheet.

Date of AS-CONSTRUCTED PLANS preparation: June 2000

(ALL DIMENSIONS ARE SHOWN IN MILLIMETERS)

(THIS SHEET ACCURATE FOR IRRIGATION AND PLANTING WORK ONLY)

# PLANTING PLAN

## HP-2

SCALE = 1:200

LAST REVISION 02-19-99

FOR REDUCED PLANS ORIGINAL SCALE IS IN MILLIMETERS 0 20 40 60 80

CU 11332

EA 078401

| DIST | COUNTY | ROUTE | KILOMETER POST TOTAL PROJECT | SHEET NO. | TOTAL SHEETS |
|---|---|---|---|---|---|
| 11 | SD | 5 | 70.7 | 29 | 41 |

LICENSED LANDSCAPE ARCHITECT

2-26-99
PLANS APPROVAL DATE

*The State of California or its officers or agents shall not be responsible for the accuracy or completeness of electronic copies of this plan sheet*

LICENSED LANDSCAPE ARCHITECT
EMILIO L. VIRAMONTES No. 2434
Signature
10/30/00
Renewal Date
2-24-99
Date
STATE OF CALIFORNIA

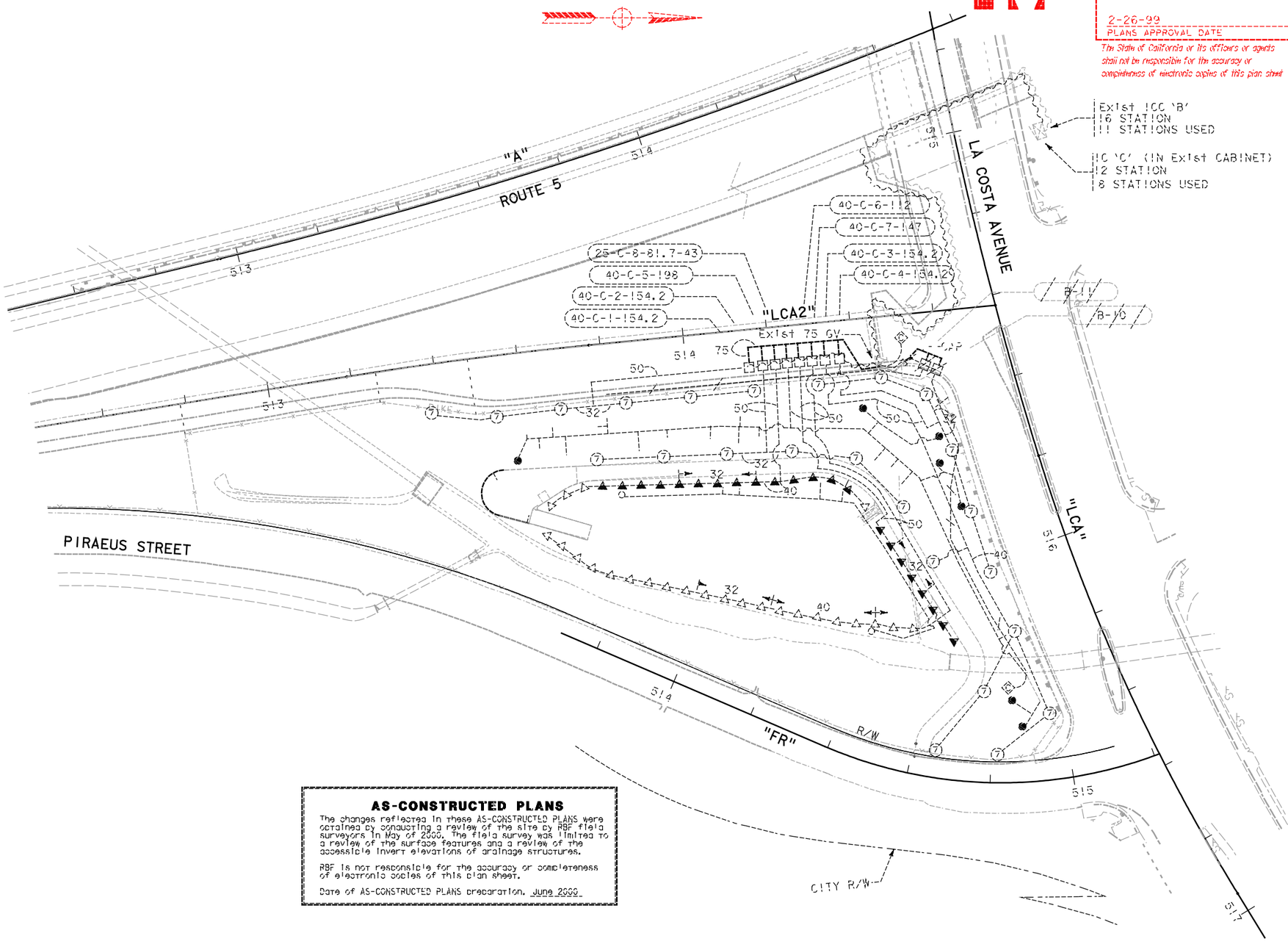


## AS-CONSTRUCTED PLANS

The changes reflected in these AS-CONSTRUCTED PLANS were obtained by conducting a review of the site by RBF field surveyors in May of 2000. The field survey was limited to a review of the surface features and a review of the accessible invert elevations of drainage structures.

RBF is not responsible for the accuracy or completeness of electronic copies of this plan sheet.

Date of AS-CONSTRUCTED PLANS preparation. June 2000

(ALL DIMENSIONS ARE SHOWN IN MILLIMETERS)
(THIS SHEET ACCURATE FOR IRRIGATION WORK ONLY)

# IRRIGATION PLAN

SCALE = 1:500

**HP-3**

| PROJECT LANDSCAPE ARCHITECT | CALCULATED/ DESIGNED BY | DATE | REVISED BY |
|---|---|---|---|
| EMILIO VIRAMONTES | ELV | 12-99 | |
| | CHECKED BY | | DATE REVISED |

STATE OF CALIFORNIA - DEPARTMENT OF TRANSPORTATION
NPDES
Caltrans

$DATE $TIME $FILE $USER $SYTIME $DGNSPEC

LAST REVISION 02-19-99 DATE PLOTTED => $DATE TIME PLOTTED => $TIME

FOR REDUCED PLANS ORIGINAL SCALE IS IN MILLIMETERS 0 20 40 60 80
USERNAME => $USER
DGN FILE => $REQUEST

CU 11332 | EA 078401

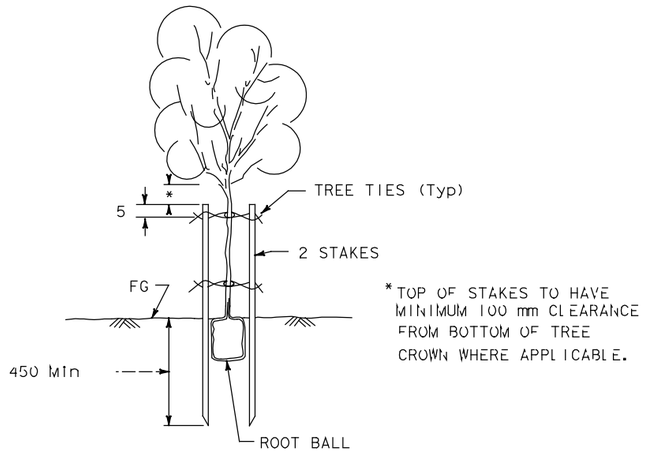


*TOP OF STAKES TO HAVE MINIMUM 100 mm CLEARANCE FROM BOTTOM OF TREE CROWN WHERE APPLICABLE.

SECTION

**MODIFIED TREE STAKING**

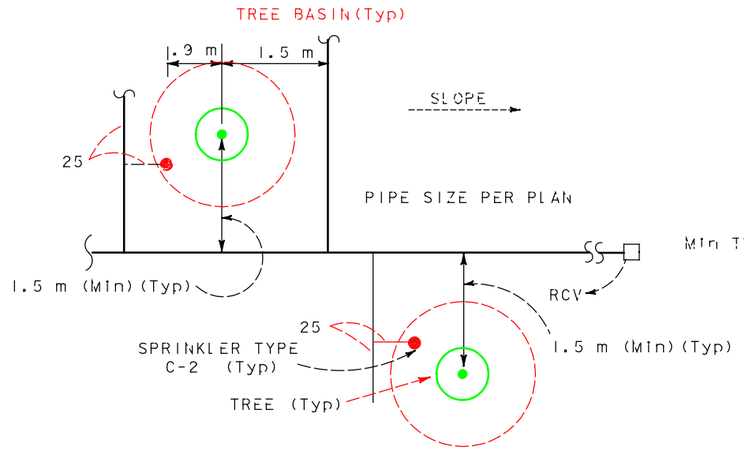


**TYPE C-2 MODIFIED (TREE) SPRINKLERS INSTALLATION**

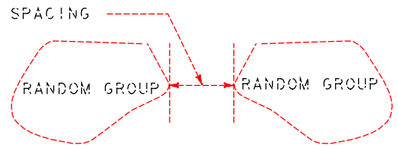


**RANDOM PLANTING DETAIL**

## SPRINKLER SCHEDULE

| SYMBOL | TYPE | DESCRIPTION | SPRAY PATTERN | OPERATING PRESSURE (KILOPASCAL) | PRESSURE COMPENSATING | PLUS / MINUS 5% DISCHARGE: LITERS PER SECOND L/s | LITERS PER MINUTE L/min | LITERS PER HOUR L/h | RADIUS (IN METERS)(m) | WIDTH x LENGTH (IN METERS)(m) | MATERIAL | NOZZLE SIZE IN MILLIMETERS (mm) | INLET CONNECTION (NPT) (DN IN MILLIMETERS)(mm) | POSITIVE-LOCKING ADJ ARC STOP | BACKSPLASH PREVENTER | DIFFUSER PIN | DISTANCE CONTROL FLAP | ADJ DISCHARGE | RISER MATERIAL: TYPE | RISER MATERIAL: PLASTIC | RISER MATERIAL: GALVANIZED | RISER SIZE (IPS) (IN MILLIMETERS)(mm) | RISER HEIGHT (IN MILLIMETERS)(mm) | SWING JOINT (TYPE) | RISER SUPPORT | SPRINKLER PROTECTOR (TYPE) | REMARKS |
|---|---|---|---|---|---|---|---|---|---|---|---|---|---|---|---|---|---|---|---|---|---|---|---|---|---|---|---|
| [7] | A-7 | GEAR DRIVEN | F | 345 | X | - | 25.7 | - | 14.6 | - | PL | - | 20 | - | - | - | - | - | II | X | - | 20 | 150 | II | - | - | (4) |
| (7) | A-7 | GEAR DRIVEN | P | 345 | X | - | 25.7 | - | 14.6 | - | PL | - | 20 | - | - | - | - | - | II | X | - | 20 | 150 | I | - | - | (4) |
| △ | B-1 | SHRUB SPRAY | Q H | 207 | - | - | 7.0 | - | 4.5 | - | PL | - | 15 | - | - | X | - | - | - | - | - | - | - | I | - | I | (7) |
| ▲ | B-1 | SHRUB SPRAY | F | 207 | - | - | 14.0 | - | 4.5 | - | PL | - | 15 | - | - | X | - | - | - | - | - | - | - | I | - | I | (7) |
| ● | C-2 | FLOOD BUBBLER | - | 207 | X | - | 1.9 | - | - | - | PL | - | 15 | - | - | - | - | - | II | X | - | 15 | 150 | III | - | - | (5)(6) |

X IN BOX DENOTES REQUIREMENT

**APPLICABLE WHEN CIRCLED BELOW:**

1 - See Special Provisions.
2 - If a pressure compensating device is specified, the discharge and radii shown reflect its use.
3 - Arc Stop shall be fitted with a nut and bolt.
(4) - Low angle nozzle.
(5) - Pressure compensating.
(6) - See detail.
(7) - Matched precipitation rate nozzles.

**ABBREVIATIONS**

ADJ ——adjustable
B/B ——brass/bronze
B/B/PL —brass/bronze/plastic
B/PL ——brass/plastic
CST ——center strip
DN ——diameter nominal
EST ——end strip
F ——— full circle
F/P ——full/part circle
H ——— half circle
IPS ——iron pipe size
kPa ——kilopascal
L/h ——liters per hour
L/min —liters per minute
L/s ——liters per second
m ———meters
mm ——millimeters
NPT ——national pipe thread
P ———part circle
PL ———plastic
Q ———quarter circle
SST ——side strip
T ———third circle
TQ ——three quarter circle
TT ——two thirds circle

LEGEND

—·— EXISTING IRRIGATION (NO WORK)
—·— EXISTING IRRIGATION TO BE REMOVED
42-T-10 —·— IRRIGATION VALVE TO BE REMOVED
A-5 —·— PROPOSED VALVE

VALVE SIZE
IRRIGATION CONTROLLER
CONTROLLER STATION
LITERS PER HOUR
NUMBER OF C-2 PER VALVE
25-U-8-165-25

**VALVE CODE**

IRRIGATION NOTE:

1. ALL PROPOSED LATERAL PIPE NOT LABELED SHALL BE 25 mm,

(ALL DIMENSIONS ARE SHOWN IN MILLIMETERS)

**AS-CONSTRUCTED PLANS**

The changes reflected in these AS-CONSTRUCTED PLANS were obtained by conducting a review of the site by RBF field surveyors in May of 2000. The field survey was limited to a review of the surface features and a review of the accessible invert elevations of drainage structures.

RBF is not responsible for the accuracy or completeness of electronic copies of this plan sheet.

Date of AS-CONSTRUCTED PLANS preparation, June 2000

# SPRINKLER SCHEDULE AND DETAILS

NO SCALE

**HP-4**

| DIST | COUNTY | ROUTE | KILOMETER POST TOTAL PROJECT | SHEET NO. | TOTAL SHEETS |
|---|---|---|---|---|---|
| 11 | SD | 5 | 70.7 | 30 | 41 |

Caltrans Metric

LICENSED LANDSCAPE ARCHITECT

2-26-99
PLANS APPROVAL DATE

LICENSED LANDSCAPE ARCHITECT — EMILIO V. VIRAMONTES No. 3574 — Signature 10/20/00 — Renewal Date 2-24-99 — Date — STATE OF CALIFORNIA

The State of California or its officers or agents shall not be responsible for the accuracy or completeness of electronic copies of this plan sheet

REVISED BY | DATE REVISED
DATE 2-99 | ELV
CALCULATED/ DESIGNED BY | CHECKED BY
PROJECT LANDSCAPE ARCHITECT — EMILIO VIRAMONTES
DEPARTMENT OF TRANSPORTATION — NPDES
STATE OF CALIFORNIA

$$$$$$$$$$DGNSPEC$$$$$$$$$$ $$$$$$SYTIME$$$$$$ $$$$$$USER$$$$$$
&DATE$ &TIME$ &FILE$

FOR REDUCED PLANS ORIGINAL SCALE IS IN MILLIMETERS 0 20 40 60 80

USERNAME => &USER
DGN FILE => &REQUEST

DATE PLOTTED => &DATE
TIME PLOTTED => &TIME

LAST REVISION 02-19-99

CU 11332 | EA 078401

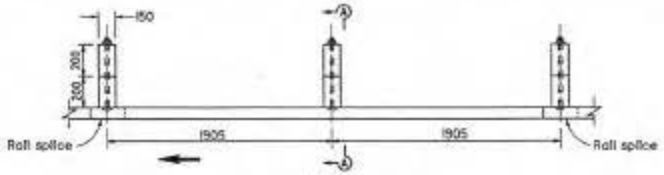


PLAN

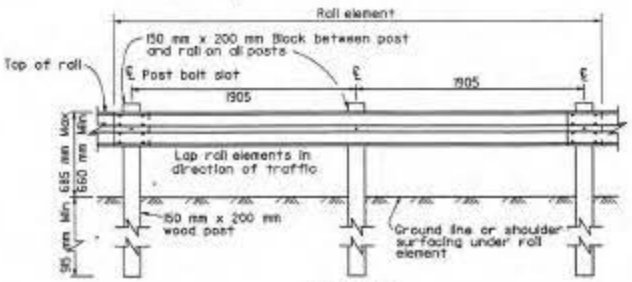


ELEVATION

## METAL BEAM GUARD RAILING WITH WOOD POST AND BLOCKS

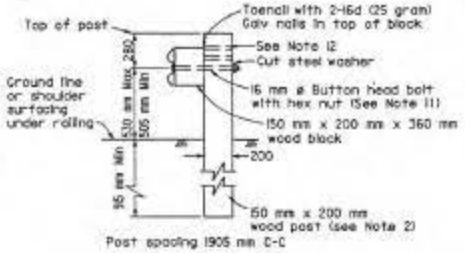


SECTION A-A

## TYPICAL WOOD LINE POST INSTALLATION

See Note 13

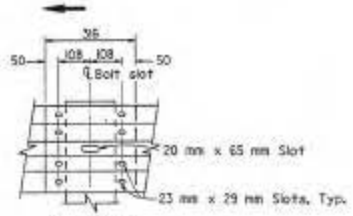


ELEVATION

## RAIL ELEMENT SPLICE DETAIL

16 mm ø x 35 mm button head oval shoulder bolts inserted into the 23 mm x 29 mm slots and bolted together with 16 mm ø x 35 mm recessed hex nuts. A total of 8 bolts and nuts are to be used at each rail splice connection. The ends of the rail elements are to be overlapped in the direction of traffic (see details). Where a terminal section or end section is to be attached to the end of a rail element, a total of 4 of the above described splice bolts and nuts are to be used.

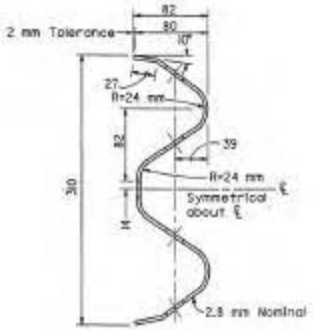


SECTION THRU RAIL ELEMENT

Caltrans Metric

| DIST | COUNTY | ROUTE | KILOMETER POST TOTAL PROJECT | SHEET NO. | TOTAL SHEETS |
|---|---|---|---|---|---|
| 11 | SD | S | 10.7 | 31 | 41 |

REGISTERED CIVIL ENGINEER

AUGUST 6, 1998
PLANS APPROVAL DATE

The State of California or its officers or agents shall not be responsible for the accuracy or completeness of electronic copies of this plan sheet.

REGISTERED PROFESSIONAL ENGINEER — CIVIL — Exp. 6-30-01 — STATE OF CALIFORNIA

To accompany plans dated 2-26-99

## NOTES

1. For details of standard hardware used to construct guard railing, see Revised Standard Plan RSP A77B.
2. For details of wood posts and blocks used to construct guard railing, see Revised Standard Plan RSP A77C.
3. Guard railing post spacing to be 1905 mm center to center, except as otherwise noted.
4. For guard railing typical layouts, see Revised Standard Plans RSP A77D and RSP A77E.
5. For embankment widening details to accommodate guard railing terminal system end treatments, see Revised Standard Plan RSP A77F.
6. For guard railing end anchor details, see Standard Plan A77I and Revised Standard Plan RSP A77G. For guard railing terminal systems, see Project Plans.
7. For guard railing connection details to bridge railing, retaining walls and abutments, see Revised Standard Plan RSP A77J.
8. For guard railing connection details to bridge sidewalks and curbs, see Revised Standard Plan RSP A77K.
9. For dike positioning with guard railing installations, see Revised Standard Plan RSP A77F.
10. Direction of traffic indicated by ⟶.
11. Where conditions require the bolt to be installed in the opposite direction from that shown in Section A-A or where a 16 mm threaded rod is required in place of the bolt, no more than 13 mm of thread to be exposed on the traffic side of the rail element.
12. Additional holes in wood post are required for potential adjustments of railing height.
13. For additional installation details, see New Standard Plan NSP A77FA.
14. For guard railing delineation details, see Revised Standard Plan RSP A77F.

STATE OF CALIFORNIA
DEPARTMENT OF TRANSPORTATION

# METAL BEAM GUARD RAILING WOOD POSTS AND WOOD BLOCKS

NO SCALE

ALL DIMENSIONS ARE IN MILLIMETERS UNLESS OTHERWISE SHOWN

RSP A77A DATED AUGUST 6, 1998 SUPERSEDES STANDARD PLAN A77A DATED JULY 1, 1997-PAGE 36 OF THE STANDARD PLANS BOOK DATED JULY 1997.

**REVISED STANDARD PLAN RSP A77A**

STD. PLAN RSP A77A

| DIST | COUNTY | ROUTE | KILOMETER POST TOTAL PROJECT | SHEET NO. | TOTAL SHEETS |
|---|---|---|---|---|---|
| 11 | SD | 5 | 70.7 | 32 | 41 |

REGISTERED CIVIL ENGINEER

August 6, 1998
PLANS APPROVAL DATE

The State of California or its officers or agents shall not be responsible for the accuracy or completeness of electronic copies of this plan sheet.

To accompany plans dated 2-26-99

NOTES

1. All holes in wood posts and blocks shall be 20 mm dia ± 1.6 mm.
2. Dimensions shown for wood post are nominal.

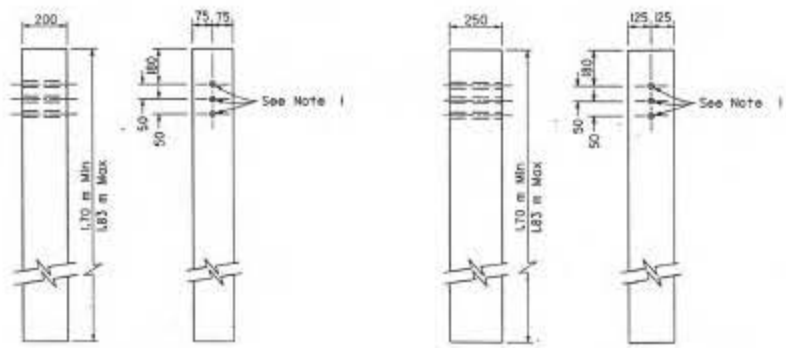


SIDE FRONT

150 mm x 200 mm
WOOD POST

SIDE FRONT

250 mm x 250 mm
WOOD POST

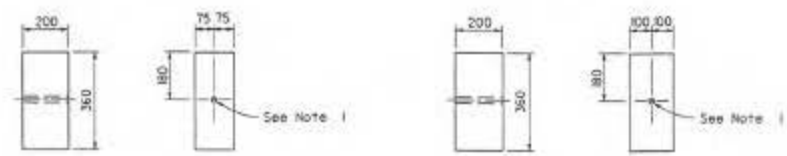


SIDE FRONT

150 mm x 200 mm
WOOD BLOCK

SIDE FRONT

200 mm x 200 mm
WOOD BLOCK

STATE OF CALIFORNIA
DEPARTMENT OF TRANSPORTATION

# METAL BEAM GUARD RAILING WOOD POSTS AND WOOD BLOCKS

NO SCALE

ALL DIMENSIONS ARE IN MILLIMETERS UNLESS OTHERWISE SHOWN

RSP A77C DATED AUGUST 6, 1998 SUPERSEDES RSP A77C DATED DECEMBER 4, 1997 AND STANDARD PLAN A77C DATED JULY 1, 1997-PAGE 38 OF THE STANDARD PLANS BOOK DATED JULY 1997.

**REVISED STANDARD PLAN RSP A77C**

STD. PLAN RSP A77C

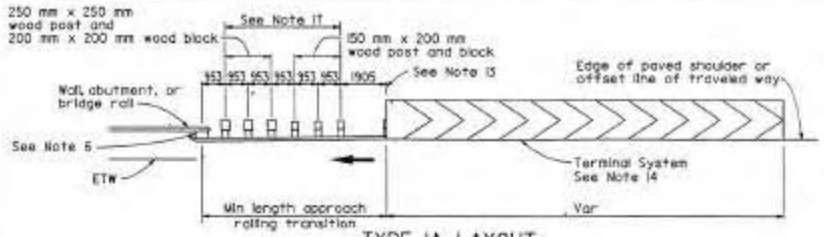


## TYPE 1A LAYOUT

(TYPICAL STRUCTURE APPROACH INSTALLATION)
See Note 10

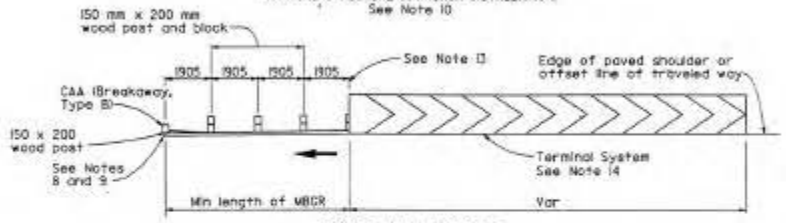


## TYPE 1B LAYOUT

(TYPICAL EMBANKMENT INSTALLATION)
See Note 10

## NOTES

1. Post, blocks and hardware to be used are shown on Revised Standard Plans RSP A77B and RSP A77C.
2. Guard rail post spacing to be 1905 mm center to center, except as otherwise noted.
3. Except as noted, posts shown are 150 mm x 200 mm wood.
4. Rail elements to be installed as shown on Revised Standard Plan RSP A77A.
5. Direction of traffic indicated by ⟶
6. For connection details see Revised Standard Plan RSP A77J or RSP A77K.
7. For cable anchor assembly (CAA) details, see Standard Plan A77I. Where a crash cushion is required as specified in Note 11 and the crash cushion attaches to the ends of the guard railing, the CAA and return section may not be required (see Project Plans).
8. For breakaway anchor details, see Standard Plan RSP A77G. Terminal Sections not to be installed on trailing end of guard railing constructed adjacent to one-way roadways.
9. On two-way roadways less than 18 m in width, a terminal system is to be used in place of the cable anchor assembly (breakaway, Type B) at the trailing end of guard railing for embankment installations.
10. For details of a terminal system typically used as a flared end treatment on Type 1A and Type 1B Layouts, see New Standard Plan NSP A77L. For details of terminal system typically used on Type 1A and Type 1B Layouts where site conditions will not accommodate a flared end treatment, see New Standard Plans NSP A77M and NSP A77N. For embankment widening details to accommodate terminal system end treatments, see Revised Standard RSP A77F.
11. A crash cushion is required for Type 3A layout, when the end of the guard railing is within 9.0 m of the edge of traveled way (ETA) of approaching traffic. For the type of crash cushion to be used, see Project Plans and the Special Provisions.
12. When width 'W' exceeds 3.8 m, to calculate the length of parabolic flare use 'L=3W' and round to nearest 3.8 m.
13. As site conditions dictate, additional 3.8 m lengths of guard railing with post spacing at 1905 mm may be required at the point shown.
14. For the type of terminal system to be used, see Project Plans and the Special Provisions.
15. The 10d or flatter flare is based on the edge of the paved shoulder or offset line of edge of traveled way. The length of guard railing within the 10d or flatter flare may be increased by 3.8 m lengths, as site conditions dictate.
16. For buried end anchor details, see Standard Plan A77I.
17. Use a flat plate washer on the rail face when attaching rail element to these posts.

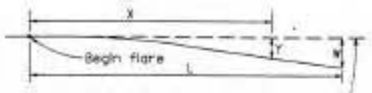


$Y = \frac{NX^2}{L^2}$

Y = Offset from base line
N = Maximum offset
X = Distance along base line
L = Length of flare

## PARABOLIC FLARE OFFSETS

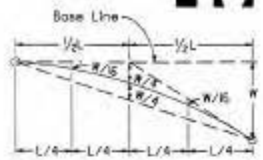


## TYPICAL PARABOLIC LAYOUT

Caltrans Metric

| DIST | COUNTY | ROUTE | KILOMETER POST TOTAL PROJECT | SHEET NO. | TOTAL SHEETS |
|---|---|---|---|---|---|
| 11 | SD | 5 | 70.7 | 33 | 41 |

REGISTERED CIVIL ENGINEER

AUGUST 6, 1998
PLANS APPROVAL DATE

The State of California or its officers or agents shall not be responsible for the accuracy or completeness of electronic copies of this plan sheet.

To accompany plans dated 2-26-99

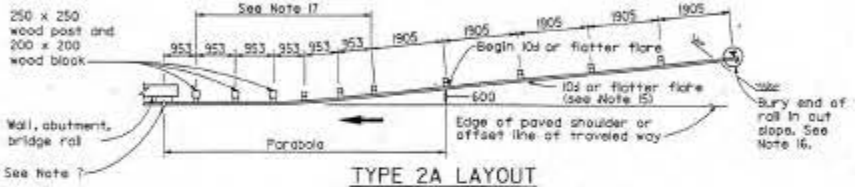


## TYPE 2A LAYOUT

(TYPICAL STRUCTURE APPROACH INSTALLATION)

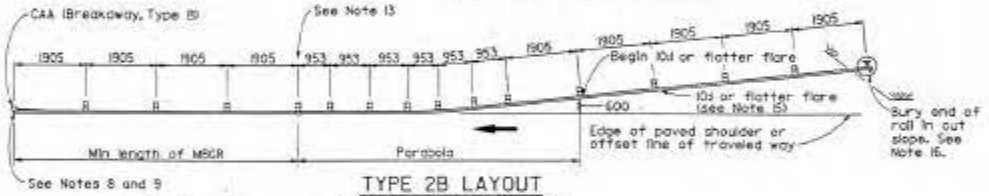


## TYPE 2B LAYOUT

(TYPICAL EMBANKMENT INSTALLATION)

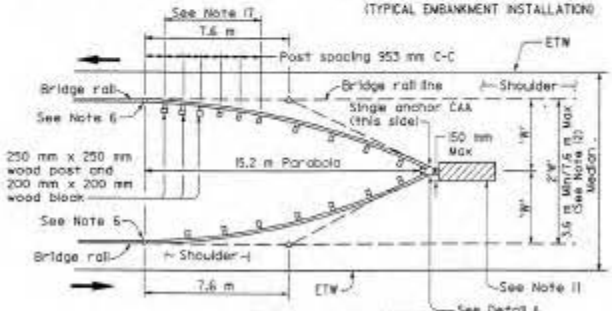


## TYPE 3A LAYOUT

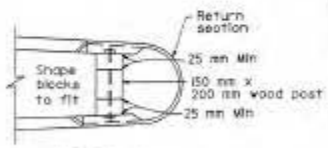


## DETAIL A

STATE OF CALIFORNIA
DEPARTMENT OF TRANSPORTATION

# GUARD RAILING TYPICAL LAYOUTS

NO SCALE

ALL DIMENSIONS ARE IN
MILLIMETERS UNLESS OTHERWISE SHOWN

RSP A77D DATED AUGUST 6, 1998 SUPERSEDES STANDARD PLAN A77D
DATED JULY 1, 1997-PAGE 39 OF THE STANDARD PLANS BOOK DATED JULY 1997.

**REVISED STANDARD PLAN RSP A77D**

STD. PLAN RSP A77D

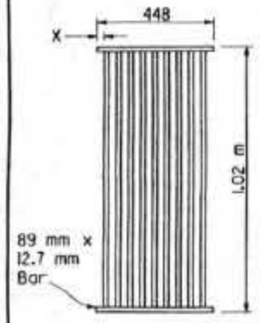


TYPE 450-9

35 mm Clear spacing. Use within the roadbed on highways where bicycles and pedestrians are excluded.

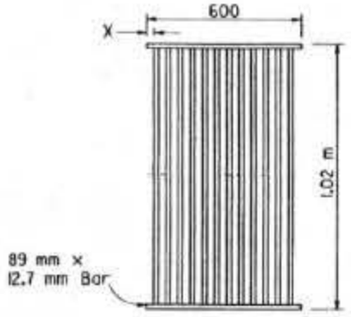


TYPE 600-9

51mm Clear spacing. Use in locations off the roadbed on all types of highways.

TYPE 600-12

35 mm Clear spacing. Use within the roadbed on highways where bicycles and pedestrians are excluded.

## RECTANGULAR GRATE DETAILS

(See table below)

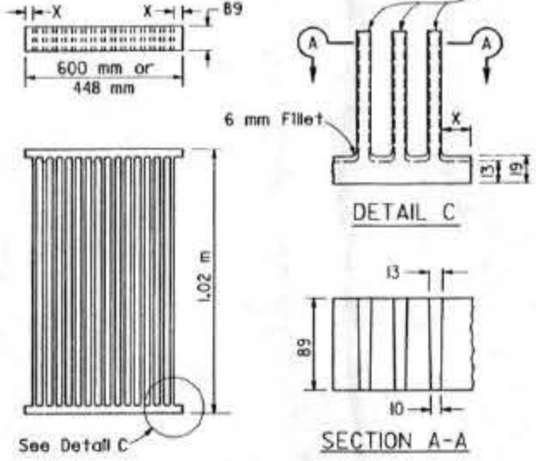


## ALTERNATIVE CAST NODULAR IRON GRATE OR CAST STEEL GRATE

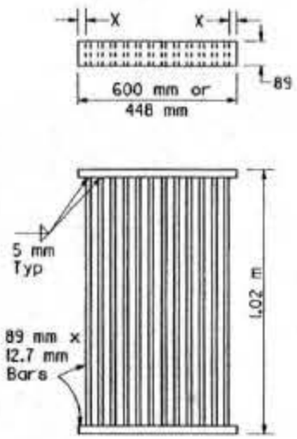


## ALTERNATIVE WELDED GRATE

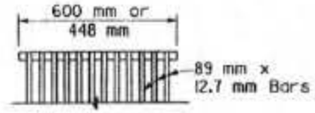


CAST END BLOCK

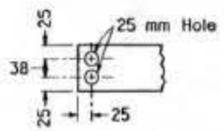


END OF BAR

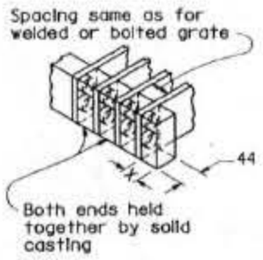


## ALTERNATIVE CAST NODULAR IRON OR CAST STEEL END BLOCK GRATE

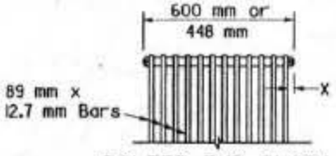


BOLTED END BLOCK

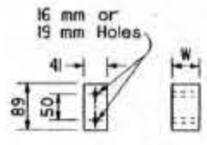


BAR SPACER

BOLTING DETAIL

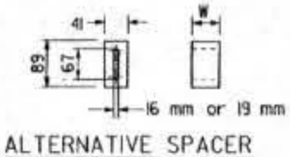


ALTERNATIVE SPACER

35 mm or 50 mm

## ALTERNATIVE BOLTED GRATE

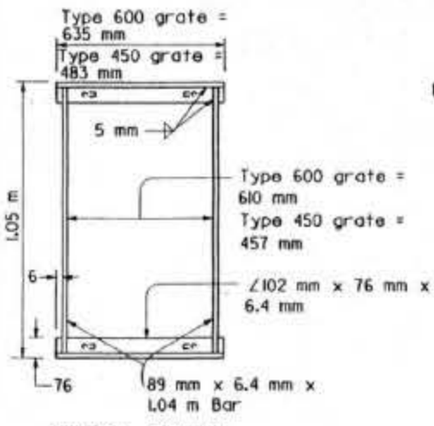


TYPICAL FRAME

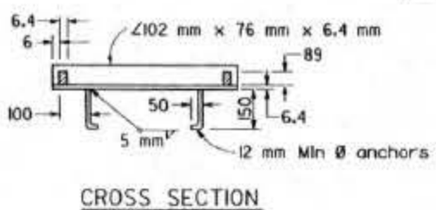


CROSS SECTION

(Thru frame)

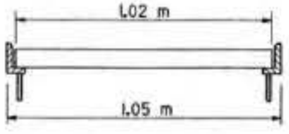


LONGITUDINAL SECTION

(Thru frame and grate)

## RECTANGULAR FRAME DETAILS

(For all rectangular grates)

GRATE BAR SPACING TABLE

| TYPE | NO. OF BARS | CLEAR BAR SPACING (mm) | X (mm) |
|---|---|---|---|
| 450-9 | 9 | 35 | 27 |
| 600-9 | 9 | 51 | 40 |
| 600-12 | 12 | 35 | 32 |

| INLET TYPE | COVER TYPE | MASS (kg) |
|---|---|---|
| OS | PLATE | 79 |
| OL-2.1 | PLATE | 77 |
| OL-3.0 | PLATE | 77 |
| OL-4.3 | PLATE | 77 |
| OL-6.4 | PLATE | 77 |
| OCP | PLATE | 51 |
| OCPI | PLATE | 51 |
| OCPI | REDWOOD | 19 |
| OMP | PLATE | 80 |
| OMPI | PLATE | 80 |

| INLET TYPE | GRATE TYPE | NO. OF GRATES | MASS (kg) |
|---|---|---|---|
| GDO | 600-12 | 2 | 288 |
| | | | |
| GOL-2.1 | 600-12 | 1 | 148 |
| | | | |
| GOL-3.0 | 600-12 | 1 | 148 |
| | | | |
| GO,G1,G2,G3,G4(TYPE 600) | 600-9 | 1 | 119 |
| | 600-12 | 1 | 148 |
| | | | |
| G4(TYPE 450),G5,G6 | 450-9 | 1 | 113 |
| GT-1 | 450-9 | 2 | 226 |
| GT-2 | 450-9 | 2 | 226 |
| GT-3 | 600-12 | 2 | 296 |
| | | | |
| GT-4 | 600-12 | 2 | 296 |
| | | | |
| TRASH RACK | | | 10 |

## BASIS FOR MISC IRON & STEEL FINAL PAY MASSES FOR DRAINAGE INLETS

(See General Notes, No 8)

Caltrans Metric

| DIST | COUNTY | ROUTE | KILOMETER POST TOTAL PROJECT | SHEET NO. | TOTAL SHEETS |
|---|---|---|---|---|---|
| 07 | LA | 5,605 | 7.5/10.9 | 23 | 26 |

REGISTERED CIVIL ENGINEER

December 4, 1997

PLANS APPROVAL DATE

Glenn DeCou C34547 Exp. 9-30-99 CIVIL STATE OF CALIFORNIA

The State of California or its officers or agents shall not be responsible for the accuracy or completeness of electronic copies of this plan sheet.

*To accompany plans dated* 7-13-98

## NOTES

1. Grate type numbers refer to approximate width of grate in millimeters and number of bars, respectively.
2. Contractor has the option of using cast nodular iron, cast steel, welded, bolted, or cast end block grate.
3. See Special Provisions for requirements pertaining to galvanizing or asphalt dipping of grates and frames.
4. Rounded top of bars optional on all grates.
5. Pipe inlets with a grate shall be placed so that bars parallel direction of principle surface flow.
6. Full penetration butt welds may be substituted for the fillet welds on all anchors.
7. Standard square, hexagon, round or equivalent headed anchors may be substituted for the right angle hooks on the anchors shown on this plan.
8. Grate and frame weights are based on welded grates (weights of face angles, steps, protection bars, etc. are not included).

STATE OF CALIFORNIA
DEPARTMENT OF TRANSPORTATION

# GRATE DETAILS

NO SCALE

ALL DIMENSIONS ARE IN MILLIMETERS UNLESS OTHERWISE SHOWN

RSP D77A DATED DECEMBER 4, 1997 SUPERSEDES STANDARD PLAN D77A DATED JULY 1, 1997-PAGE 82 OF THE STANDARD PLANS BOOK DATED JULY 1997.

**REVISED STANDARD PLAN RSP D77A**

| EXISTING | PROPOSED | ITEM DESCRIPTION |
|---|---|---|
| | | WATER METER (BY OTHERS) (WM) |
| | | BACKFLOW PREVENTER ASSEMBLY (BPA) |
| | | BACKFLOW PREVENTER ASSEMBLY IN ENCLOSURE (BPAE) |
| | | BACKFLOW PREVENTER ENCLOSURE (BPE) |
| | | BOOSTER PUMP (BP) |
| | | TRUCK LOADING STANDPIPE (TLS) |
| | | FLOW SENSOR (FS) |
| | | MASTER IRRIGATION CONTROLLER (MC) |
| | | AUXILIARY IRRIGATION CONTROLLER (AIC) |
| | | IRRIGATION CONTROLLER (IC)/ IRRIGATION CONTROLLER (IC) (BATTERY) |
| | | IRRIGATION CONTROLLER(S) IN CONTROLLER ENCLOSURE CABINET (ICC) |
| | | CONTROL AND NEUTRAL CONDUCTORS (CNC) |
| | | SPRINKLER CONTROL CONDUIT |
| | | CONDUIT (COND) |
| DIP | DIP | DUCTILE IRON PIPE (SUPPLY LINE) (MAIN) (DIP) |
| | | GALVANIZED STEEL PIPE (SUPPLY LINE) (MAIN) (GSP) |
| | | GALVANIZED STEEL PIPE (SUPPLY LINE) (LATERAL) (GSP) |
| | | PLASTIC PIPE (PR 200) (SUPPLY LINE) (MAIN) |
| | | PLASTIC PIPE (PR 200) (SUPPLY LINE) (LATERAL) |
| | | PLASTIC PIPE IRRIGATION LINE |
| | | REMOTE CONTROL VALVE (RCV) REMOTE CONTROL VALVE (MASTER) (RCVM) |
| | | MANUAL CONTROL VALVE (MCV) |
| | | VALVE ASSEMBLY UNIT (VAU) |
| | | WYE STRAINER (WS) |
| | | FILTER ASSEMBLY UNIT (FAU) |
| | | GATE VALVE (GV) |
| | | BALL VALVE (BV) |

| EXISTING | PROPOSED | ITEM DESCRIPTION |
|---|---|---|
| | | QUICK COUPLING VALVE (QCV) |
| | | PRESSURE REDUCING VALVE (PRV) |
| | | PRESSURE RELIEF VALVE (PRLV) |
| | | FLOW CONTROL VALVE (FCV) |
| | | COMBINATION AIR RELEASE VALVE (CARV) |
| | | CHECK VALVE (CV) |
| | | FLUSH VALVE (FV) |
| | | NOZZLE LINE W/TURNING UNION |
| | | IRRIGATION SYSTEM |
| | | IRRIGATION SYSTEM TO BE REMOVED |
| | | CHAIN LINK GATE |
| | | QUICK COUPLING VALVE W/SPRINKLER PROTECTOR |
| | | SPRINKLER W/SPRINKLER PROTECTOR |
| | | CONNECT TO EXISTING SYSTEM |
| | | CAP |
| | | CAP EXISTING |

VALVE CODE

- RCV SIZE (mm)
- IRRIGATION CONTROLLER
- CONTROLLER STATION
- VALVE IN PARALLEL (IF APPLICABLE)
- L/min
- QUANTITY OF TYPE C, D, OR E SPRINKLERS

* (63.5-A-2b-15L4, -60)

- MCV SIZE (mm)
- VALVE NUMBER
- L/min
- QUANTITY OF TYPE C, D, OR E SPRINKLERS

* 50.8-3-113.5, -50

* VALVE CODES FOR EXISTING VALVES ARE SHOWN IN A DASHED ENCLOSURE.

Caltrans Metric

| DIST | COUNTY | ROUTE | KILOMETER POST TOTAL PROJECT | SHEET NO. | TOTAL SHEETS |
|---|---|---|---|---|---|
| 11 | SD | 5 | 70.7 | 35 | 41 |

LICENSED LANDSCAPE ARCHITECT

December 4, 1997
PLANS APPROVAL DATE

The State of California or its officers or agents shall not be responsible for the accuracy or completeness of electronic copies of this plan sheet.

LICENSED LANDSCAPE ARCHITECT — STATE OF CALIFORNIA — 3-26-99

To accompany plans dated 2-26-99

STATE OF CALIFORNIA
DEPARTMENT OF TRANSPORTATION

# PLANTING AND IRRIGATION SYMBOLS

RSP H2 DATED DECEMBER 4, 1997 SUPERSEDES STANDARD PLAN H2 DATED JULY 1, 1997-PAGE 123 OF THE STANDARD PLANS BOOK DATED JULY 1997.

**REVISED STANDARD PLAN RSP H2**

STD. PLAN RSP H2

To accompany plans dated 2-26-99

Caltrans Metric

| DIST | COUNTY | ROUTE | KILOMETER POST TOTAL PROJECT | SHEET NO. | TOTAL SHEETS |
|---|---|---|---|---|---|
| 11 | SD | 5 | 70.7 | 37 | 41 |

REGISTERED CIVIL ENGINEER

August 6, 1998
PLANS APPROVAL DATE

The State of California or its officers or agents shall not be responsible for the accuracy or completeness of electronic copies of this sheet.

REGISTERED PROFESSIONAL ENGINEER — Ellis K. Ellis — No. C17826 — Exp. 9-30-01 — CIVIL — STATE OF CALIFORNIA

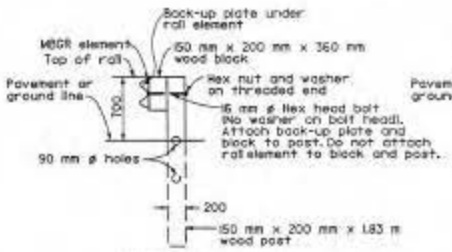


SECTION A-A

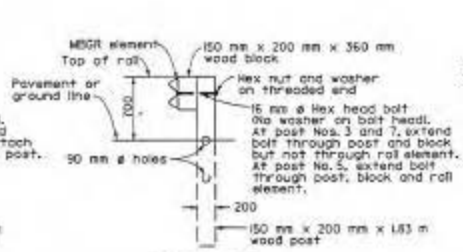


SECTION B-B

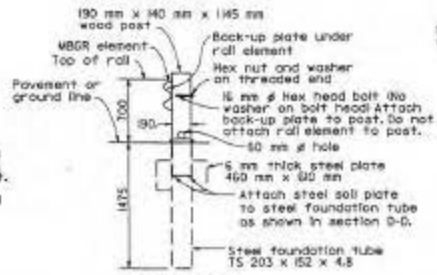


SECTION C-C

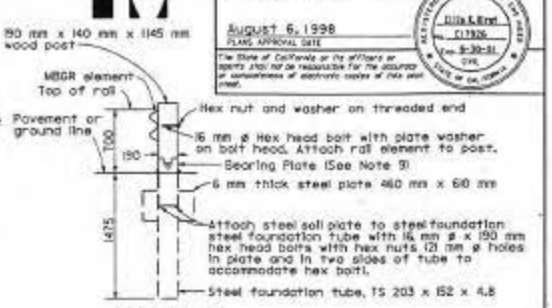


SECTION D-D

(Terminal Section not shown)

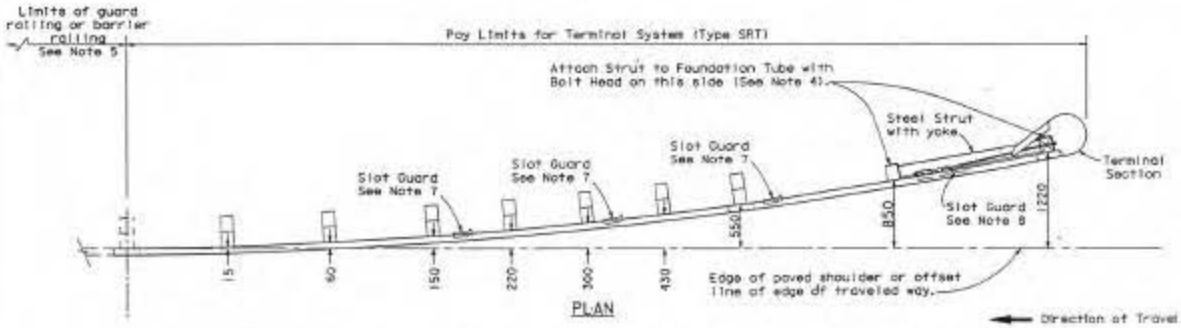


PLAN

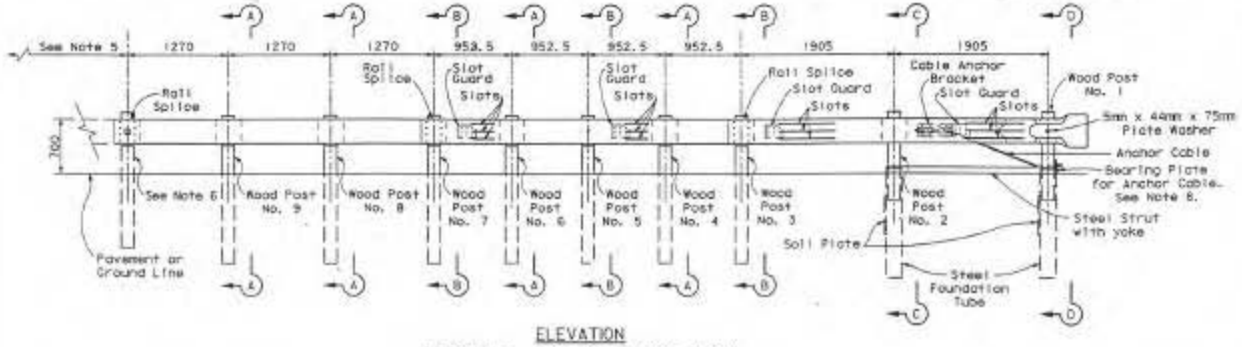


ELEVATION

TERMINAL SYSTEM (TYPE SRT)

See Note 9

NOTES:

1. For additional details of Terminal System (Type SRT), refer to the manufacturer's installation instructions.
2. The post offset dimensions are given to the center of the traffic face of the block, except at the first two posts, where the dimension is to the center of the traffic face of the post. Offset points are to be located by chord measurements at the back of the rail equal to the nominal post spacings shown. Posts are to be set approximately radial to the railing at each post location.
3. Do not attach rail elements to posts 2, 3, 4, 6, 7, 8 and 9.
4. Attach strut to Post Nos. 1 and 2 foundation tubes with 16 mm ø hex head bolts, washers and hex nuts. Bolts extend through the strut, steel foundation tube, and wood posts.
5. For the length and type of guard railing or barrier the terminal system is attached to, see the Project Plans. For minimum length of guard railing used with terminal system end treatments, see Revised Standard Plans RSP A77D and RSP A77E.
6. Attach rail element to this post and block. Payment for this post, block and hardware is included in payment for the type of railing or barrier the terminal system is attached to, not part of payment for Terminal System (Type SRT).
7. The deflector angle of the slot guard is to be positioned immediately downstream of the slots.
8. For bearing plate orientation, refer to the manufacturer's installation instructions.
9. Terminal system (Type SRT) is a flared end treatment for guard railing or barrier railing. See Type 1A and 1B Layouts on Revised Standard Plan RSP A77D and Type 8A Layout on Revised Standard Plan RSP A77E for typical use of this terminal system with guard railing. See Revised Standard Plan RSP A78E for typical use of this terminal system with single thrie beam barrier.

STATE OF CALIFORNIA
DEPARTMENT OF TRANSPORTATION

# GUARD RAILING AND BARRIER RAILING END TREATMENT

NO SCALE

ALL DIMENSIONS ARE IN MILLIMETERS UNLESS OTHERWISE SHOWN

NSP A77L DATED AUGUST 6, 1998 SUPPLEMENTS THE STANDARD PLANS BOOK DATED JULY 1997

**NEW STANDARD PLAN NSP A77L**

STD. PLAN NSP A77L

NOTES:

1. For additional details of Terminal System (Type ET), refer to the manufacturer's installation instructions.
2. Terminal System (Type ET) must be constructed so that the full length of the terminal system guard railing is in straight alignment. The Guard Rail Extruder head of the terminal system should not encroach upon the adjacent paved shoulder or lane. A traffic approach flare of 50d for the full length of Terminal System (Type ET) installation shall be used to keep the Guard Rail Extruder head from encroaching upon the adjacent paved shoulder or lane.
3. Slide Guard Rail Extruder over the end of the rail element and attach to Post No.1 with lag screws. Guard Rail Extruder attachment brackets have 3 holes in each bracket to provide tolerance adjustments. Use the holes in the bracket closest to center of Post No. 1. Drill 6 mm pilot holes to accommodate lag screws.
4. Attach strut to Post Nos. 1 and 2 foundation tubes with hex head bolts, washers and hex nuts. Bolts extend through the strut, steel foundation tube, and wood posts. Channelside of strut to face downward.
5. For length and type of guard railing or barrier the terminal system is attached to, see Project Plans. For minimum length of guard railing used with terminal system end treatments, see Revised Standard Plans RSP A77D and RSP A77E.
6. Attach rail element to this post and block. Payment for this post, block and hardware included in payment for the type of railing or barrier the terminal system is attached to, not part of the payment for Terminal System (Type ET).
7. Yellow retroreflective sheeting, as provided by Terminal System (Type ET) manufacturer, shall be adhered to the face of extruder head. The sheeting shall be consistent with the design pattern and colors of a Type P object marker panel.
8. Attach rail to Post No. 2 (no wood block) in same manner shown in section A-A. Do not bolt rail to Post No. 1, see Note 3.
9. Terminal System (Type ET) is an in-line end treatment for guard railing or barrier railing where site conditions will not accomodate use of a flared end treatment. Do not use Terminal System (Type ET) where extrusion of the rail on the back side of the installation would be in the path of pedestrian or vehicular traffic.

Caltrans Metric

| DIST | COUNTY | ROUTE | KILOMETER POST TOTAL PROJECT | SHEET NO. | TOTAL SHEETS |
|---|---|---|---|---|---|
| 11 | SD | 5 | 70.7 | 38 | 41 |

REGISTERED CIVIL ENGINEER

August 6, 1998
PLANS APPROVAL DATE

The State of California or its officers or agents shall not be responsible for the accuracy or completeness of electronic copies of this plan sheet.

To accompany plans dated 2-26-99

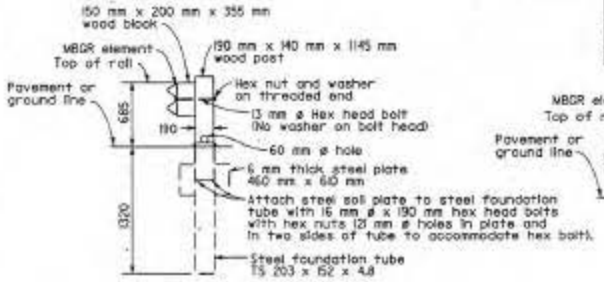


SECTION A-A

Soil plate and wood post attachment to steel foundation tube similar for Post Nos. 1, 2 and 4. Wood blocks not used with Post Nos.1 and 2. See Note 8.

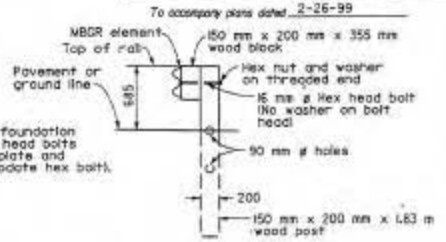


SECTION B-B

Post Nos. 5, 7 and 8 similar except rail elements are not attached to Post Nos. 5 and 7.

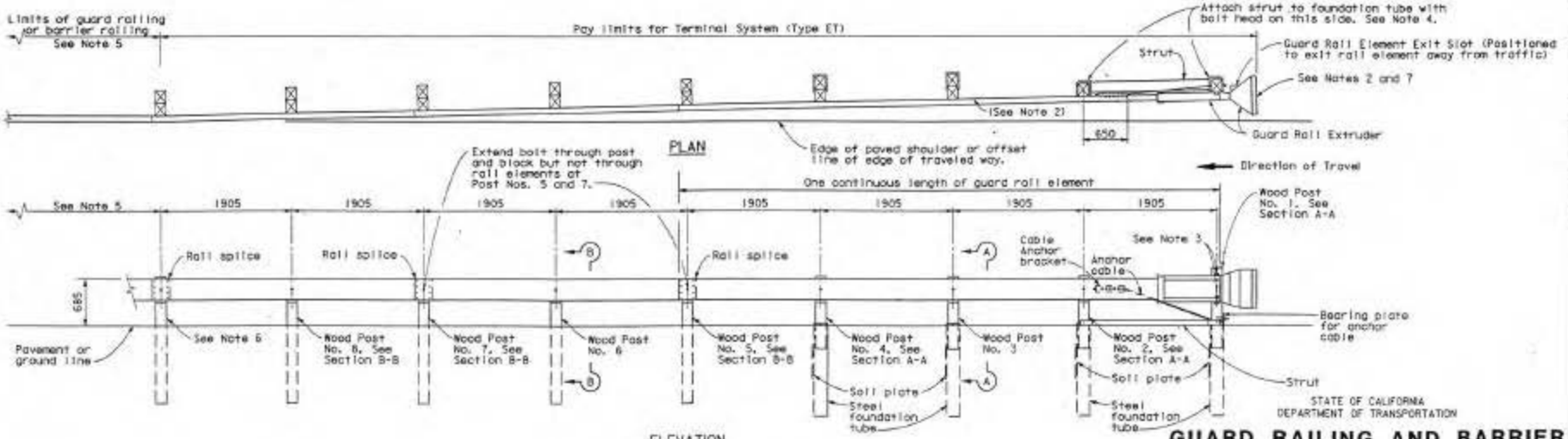


ELEVATION

TERMINAL SYSTEM (TYPE ET)

See Note 9

STATE OF CALIFORNIA
DEPARTMENT OF TRANSPORTATION

# GUARD RAILING AND BARRIER RAILING END TREATMENT

NO SCALE

ALL DIMENSIONS ARE IN MILLIMETERS UNLESS OTHERWISE SHOWN

NSP A77M DATED AUGUST 6, 1998 SUPPLEMENTS THE STANDARD PLANS BOOK DATED JULY 1997

**NEW STANDARD PLAN NSP A77M**

STD. PLAN NSP A77M

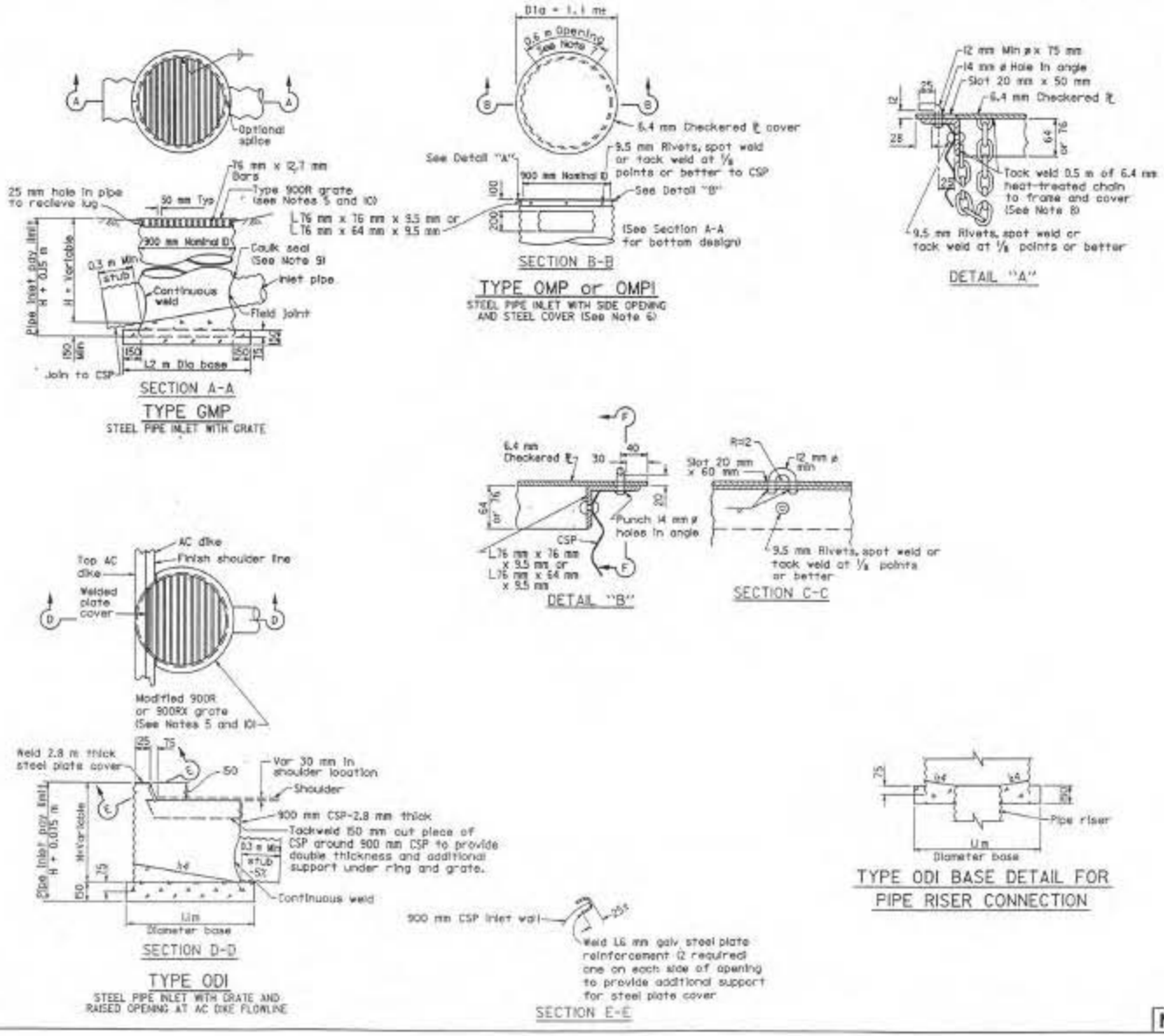


Caltrans Metric

| DIST | COUNTY | ROUTE | KILOMETER POST TOTAL PROJECT | SHEET NO. | TOTAL SHEETS |
|---|---|---|---|---|---|
| 11 | SD | 5 | 70.7 | 39 | 41 |

REGISTERED CIVIL ENGINEER

December 4, 1997
PLANS APPROVAL DATE

The State of California or its officers or agents shall not be responsible for the accuracy or completeness of electronic copies of this plan sheet.

To accompany plans dated 2-26-99

## NOTES

1. For Details of concrete pipe inlets, see New Standard Plan NSP D75B.
2. For details of ladder and steps and when ladder or steps are required, see Standard Plan NSP D75C.
3. Inlet pipes shall not protrude into basin.
4. Except for inlets used for junction boxes, basin floors shall have minimum slope of 1:4 from all directions toward outlet pipe, and a wood trowel finish.
5. See Standard Plans D77A and D77B for Grate and Frame Details and mass of Miscellaneous Iron and Steel.
6. Designation of Type OMPI pipe inlets on plans indicates trash racks are to be furnished and installed on all side openings. See New Standard Plan NSP D75C for trash rack details.
7. More than one side opening may be required. Location and number as ordered by the Engineer.
8. Chain to be provided when specified.
9. Caulk seal with pliable mixture of sand, portland cement, and emulsified asphalt (Mixture of 1 part portland cement, 3-5 parts sand, and 1½ parts SS1 emulsified asphalt.)
10. Place pipe so bars of grate will be parallel with main surface flow.

STATE OF CALIFORNIA
DEPARTMENT OF TRANSPORTATION

# PIPE INLETS

NO SCALE

ALL DIMENSIONS ARE IN MILLIMETERS UNLESS OTHERWISE SHOWN

NSP D75A, NSP D75B AND NSP D75C DATED DECEMBER 4, 1997 SUPERSEDES STANDARD PLANS D75 DATED JULY 1, 1997-PAGE 81 OF THE STANDARD PLANS BOOK DATED JULY 1997.

**NEW STANDARD PLAN NSP D75A**

STD. PLAN NSP D75A

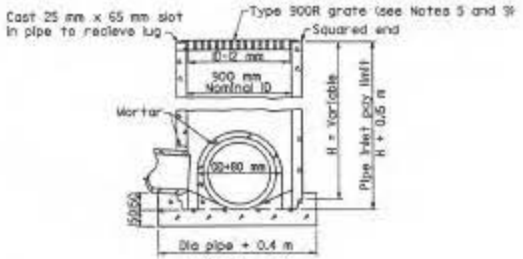


SECTION A-A

TYPE GCP

CONCRETE PIPE INLET WITH GRATE

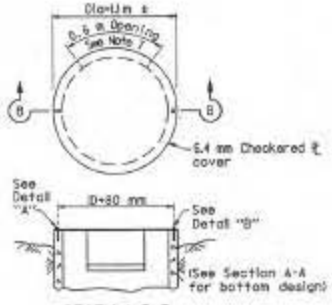


SECTION B-B

TYPE OCP or OCPI

CONCRETE PIPE INLET WITH STEEL COVER (See Note 6)

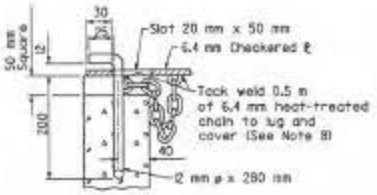


DETAIL "A"

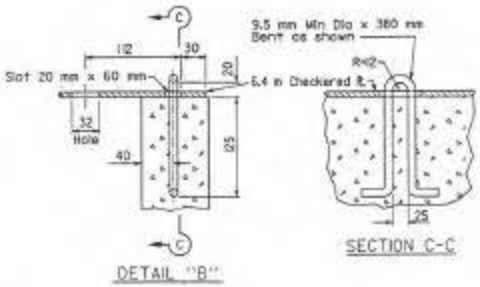


DETAIL "B"

SECTION C-C

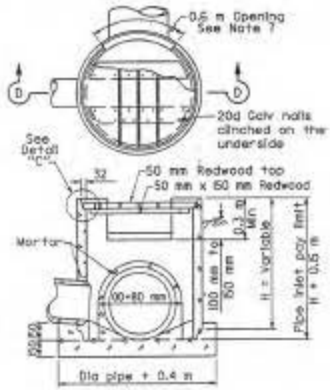


SECTION D-D

TYPE OCP or OCPI

CONCRETE PIPE INLET WITH REDWOOD COVER (See Notes 6 and 10)

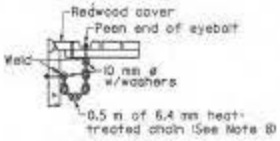


DETAIL "C"

Caltrans Metric

| DIST | COUNTY | ROUTE | KILOMETER POST TOTAL PROJECT | SHEET NO. | TOTAL SHEETS |
|---|---|---|---|---|---|
| 11 | SD | 5 | 70.7 | 40 | 41 |

REGISTERED CIVIL ENGINEER

December 4, 1997

PLANS APPROVAL DATE

Glenn DeCou C24547 Exp. 9-30-98 CIVIL STATE OF CALIFORNIA

The State of California or its officers or agents shall not be responsible for the accuracy or completeness of electronic copies of this plan sheet.

To accompany plans dated 2-26-99

## NOTES

1. For details of steel pipe inlets, see New Standard Plan NSP D75A.
2. For details of ladder and steps and when ladder or steps are required, see New Standard Plan NSP D75C.
3. Inlet pipes shall not protrude into basin.
4. Except for inlets used for junction boxes, basin floors shall have minimum slope of 1:4 from all directions toward outlet pipe, and a wood trowel finish.
5. See Standard Plans D77A and D77B for Grate and Frame Details and Weights of Miscellaneous Iron and Steel.
6. Designation of Type OCPI pipe inlets on plans indicates trash racks are to be furnished and installed on all side openings. See Standard Plan NSP D75C for Trash rack details.
7. More than one side opening may be required. Location and number as ordered by the Engineer. Opening may be cast in pipe.
8. Chain to be provided when specified.
9. Place pipe so bars of grate will be parallel with main surface flow.
10. Redwood covers not to be used where there is a possibility of wheelloads. Use Type GCP Inlet where there is a possibility of wheelloads.

STATE OF CALIFORNIA
DEPARTMENT OF TRANSPORTATION

# PIPE INLETS

NO SCALE

ALL DIMENSIONS ARE IN MILLIMETERS UNLESS OTHERWISE SHOWN

NSP D75A, NSP D75B AND NSP D75C DATED DECEMBER 4, 1997 SUPERSEDES STANDARD PLANS D75 DATED JULY 1, 1997-PAGE 81 OF THE STANDARD PLANS BOOK DATED JULY 1997.

**NEW STANDARD PLAN NSP D75B**

STD. PLAN NSP D75B

| DIST | COUNTY | ROUTE | KILOMETER POST TOTAL PROJECT | SHEET NO. | TOTAL SHEETS |
|---|---|---|---|---|---|
| 11 | SD | 5 | 70.7 | 41 | 41 |

Caltrans Metric

REGISTERED CIVIL ENGINEER

December 4, 1997
PLANS APPROVAL DATE

The State of California or its officers or agents shall not be responsible for the accuracy or completeness of electronic copies of this plan sheet.

REGISTERED PROFESSIONAL ENGINEER
Glenn DeCou
No. C34547
Exp. 9-30-99
CIVIL
STATE OF CALIFORNIA

To accompany plans dated 2-26-99

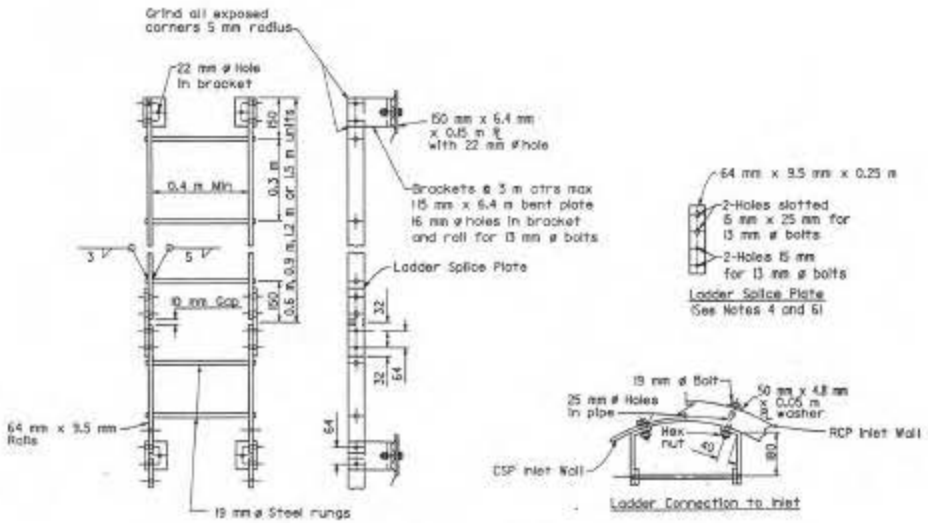


LADDER DETAILS
See Notes 1, 2, 3, 4 and 6

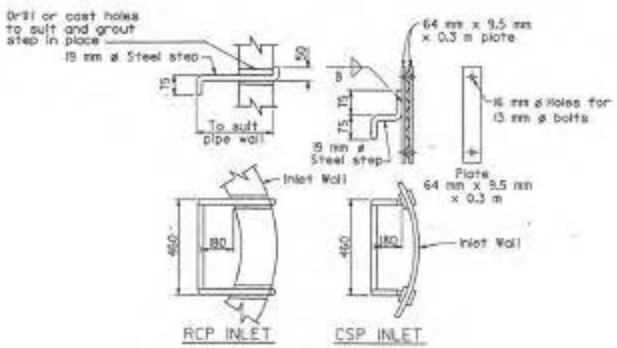


STEP DETAILS
(See Notes 1 and 6)

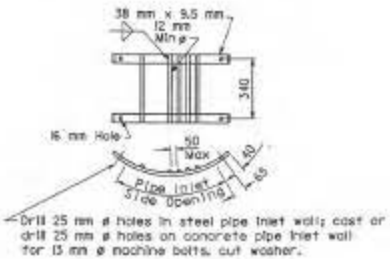


TRASH RACK DETAILS
(See Notes 5 and 6)

## NOTES

1. Ladders and Steps - None required where "H" dimension of pipe inlet is less than 0.75 m. Where "H" is 0.75 m or more, install steps or ladder with lowest rung not more than 0.3 m above the floor and highest rung not more than 0.3 m below top of inlet. The distance between steps or rungs shall not exceed 0.3 m and shall be uniform throughout the length of the wall. Place steps or ladder in the wall without an opening.
2. Ladder may be constructed in one length at contractor's option on RCP inlet.
3. On CSP inlet, connect ladder splice plate so joint can compress 10 mm.
4. Ladder splice plate to be connected with 13 mm ø bolts with double nuts.
5. Trash racks used on Type OCPI and OMPI inlets. Trash racks required for pumping installations.
6. All hardware to be galvanized after fabrication. See Standard Specifications or Special Provisions.

STATE OF CALIFORNIA
DEPARTMENT OF TRANSPORTATION

# PIPE INLETS LADDER, STEP AND TRASH RACK DETAILS

NO SCALE

ALL DIMENSIONS ARE IN MILLIMETERS UNLESS OTHERWISE SHOWN

NSP D75A, NSP D75B AND NSP D75C DATED DECEMBER 4, 1997
SUPERSEDES STANDARD PLANS D75 DATED JULY 1, 1997-PAGE 81
OF THE STANDARD PLANS BOOK DATED JULY 1997.

**NEW STANDARD PLAN NSP D75C**

STD. PLAN NSP D75C