DIST	COUNTY	ROUTE	KILOMETER POST TOTAL PROJECT	SHEET NO.	TOTAL SHEETS
11	SD	5, 15	Var	1	41

INDEX OF SHEETS

Sheet No.	
1	Title and Location Map
2-3	Standard Plans List
4-6	Key Map Plans
7-34	Drainage Plans
35-39	Traffic Handling Plans
40	Summary of Quantities
41	Revised Standard Plan

STATE OF CALIFORNIA

DEPARTMENT OF TRANSPORTATION

PROJECT PLANS FOR CONSTRUCTION ADJACENT TO

STATE HIGHWAY

IN SAN DIEGO COUNTY AT VARIOUS LOCATIONS

To be supplemented by Standard Plans dated July, 1997

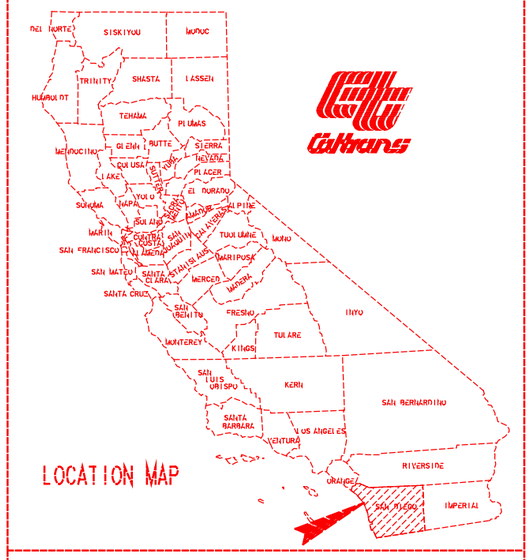

Caltrans

The State of California or its officers or agents shall not be responsible for the accuracy or completeness of electronic copies of this plan sheet.

Caltrans Metric

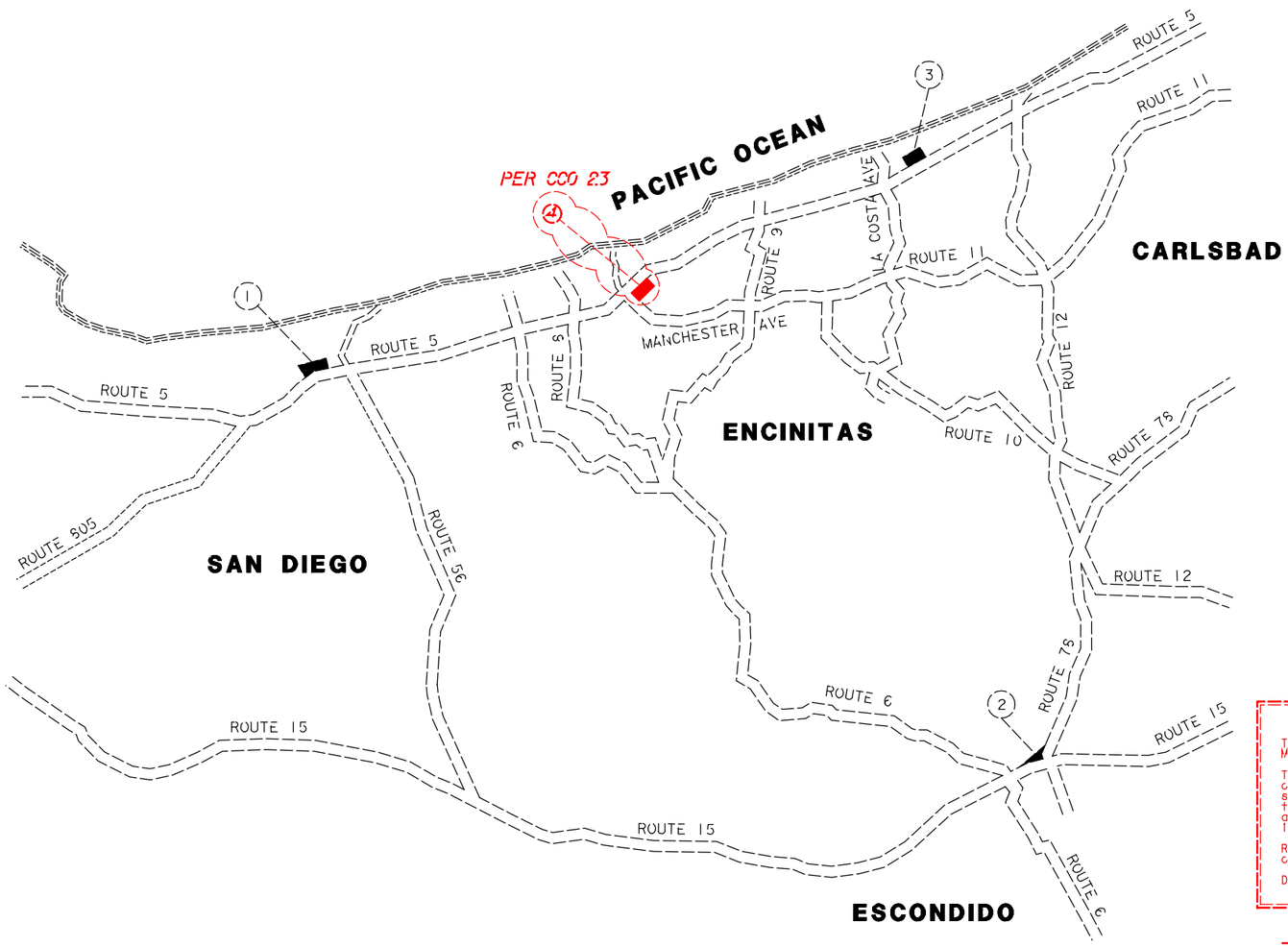

LOCATION OF CONSTRUCTION

LOC	ROUTE	KP	PM	DESCRIPTION
1	5/56	52.9	32.9	I-5/SR-56 JCT WS CONNECTOR
2	78/15	26.6	16.54	SR-78/I-15 JCT ES CONNECTOR
3	5	70.9	44.1	NORTH OF LA COSTA AVE SB EXIT RAMP
4	5	52.5	32.6	NB I-5 AT MANCHESTER AVE OFFRAMP

PER CCO 23

AS-CONSTRUCTED PLANS

The Caltrans AS-BUILT PLANS were compared to the Field Memorandums issued by RBF to the Resident Engineer.

The changes reflected in these AS-CONSTRUCTED PLANS were obtained by conducting a review of the site by RBF field surveyors in June of 2000. The field survey was limited to the discrepancies between the Caltrans AS-BUILT PLANS and RBF Field Memorandums and review of the accessible invert elevations of drainage structures.

RBF is not responsible for the accuracy or completeness of electronic copies of this plan sheet.

Date of AS-CONSTRUCTED PLANS preparation. June 2000

AS-BUILT PLANS
CONTRACT NO. 11-233504
DATE COMPLETED 6-30-99
RE: D. JUAREZ

Christian Herencia 05-11-98
Project Engineer Date
Registered Civil Engineer

REGISTERED PROFESSIONAL ENGINEER C. HERENCIA No. 54987 Exp. 06-30-00 CIVIL STATE OF CALIFORNIA

May 25, 1998
Plans Approval Date

LEGEND

RBF LIMITED SURVEY INFORMATION

INFORMATION NOT SHOWN BY CALTRANS

The Contractor shall possess the Class (or Classes) of license as specified in the "Notice to Contractors".

ALL DIMENSIONS ARE IN METERS UNLESS OTHERWISE SHOWN

Contract No. 11-233504

PROJECT ENGINEER	DESIGN OVERSIGHT APPROVAL	REGISTRATION NO.	DATE
MIKE CHESNEY	CHRISTIAN HERENCIA	RCE 54987	05/05/98

PRINTED NAME / SIGNATURE

$DATE$ $TIME$ $FILE$

LAST REVISION 05-09-98 DATE PLOTTED => $DATE TIME PLOTTED => $TIME

FORM DC-OE-93-PF (REV. 3/93)

FOR REDUCED PLANS ORIGINAL SCALE IS IN MILLIMETERS 0 20 40 60 80

USERNAME => $USER
DGN FILE => $REQUEST

CU 11332 EA 233501

DIST.	COUNTY	ROUTE	KILOMETER POST TOTAL PROJECT	SHEET NO.	TOTAL SHEETS
11	SD	5, 15	Var	2	41

The State of California or its officers or agents shall not be responsible for the accuracy or completeness of electronic copies of this plan sheet.

Caltrans Metric

To accompany plans dated 5-25-98

GENERAL ROAD WORK

MISCELLANEOUS

- ☐ A10A Abbreviations
- ☐ A10B Symbols
- ☐ A20A Pavement Markers and Traffic Lines, Typical Details
- ■ A20B Pavement Markers and Traffic Lines, Typical Details
- ☐ A20C Pavement Markers and Traffic Lines, Typical Details
- ☐ A20D Pavement Markers and Traffic Lines, Typical Details
- ☐ A24A Pavement Markings- Arrows
- ☐ A24B Pavement Markings- Arrows
- ☐ A24C Pavement Markings- Symbols and Numerals
- ☐ A24D Pavement Markings- Words
- ☐ A24E Pavement Markings- Words and Crosswalks
- ☐ A35A Portland Cement Concrete Paving Details
- ☐ A40 Rumble Strip Details
- ☐ A62A Excavation and Backfill- Miscellaneous Details
- ☐ A62B Limits of Payment for Excavation and Backfill Bridge- Surcharge and Wall
- ☐ A62C Limits of Payment for Excavation and Backfill- Bridge
- ☐ A62D Excavation and Backfill- Concrete Pipe Culverts
- ☐ A62E Excavation and Backfill- Cast-in-Place Reinforced Concrete Box and Arch Culverts
- ☐ A62F Excavation and Backfill- Metal and Plastic Culverts
- ☐ A73A Object Markers
- ■ A73B Markers
- ☐ A73C Delineators, Channelizers and Barricades
- ☐ A74 Survey Monuments
- ☐ A75A Concrete Barrier Type 50
- ☐ A75B Concrete Barrier Type 50E
- ☐ A75D Concrete Headlight Glare Screen
- ☐ ***RSP A76A CONCRETE BARRIER TYPE 60***
- ☐ A76B Concrete Barrier Type 60
- ☐ A76C Concrete Barrier Type 60E
- ☐ A76D Concrete Barrier Type 60G
- ☐ A76E Concrete Barrier Type 60G
- ☐ A76F Concrete Barrier Type 60GE
- ☐ ***RSP A76G CONCRETE BARRIER TYPE 60S***
- ☐ A76H Concrete Barrier Type 60S
- ☐ A76I Concrete Barrier Type 60SE
- ☐ A77A Metal Beam Guard Railing
- ☐ A77B Metal Beam Guard Railing- Standard Hardware
- ☐ ***RSP A77C METAL BEAM GUARD RAILING - POST AND BLOCKS***
- ☐ A77D Guard Railing Flares
- ☐ A77E Guard Railing Flares
- ☐ A77F Metal Beam Guard Railing- Miscellaneous Details
- ☐ A77G Guard Railing End Anchors (Breakaway)
- ☐ A77GA Anchor Assembly (Breakaway, Type M)-Hardware and Post Details
- ☐ A77H Guard Railing End Anchors- Breakaway Hardware
- ☐ A77I Barrier and Guard Railing End Anchors
- ☐ A77J Guard Railing Connections to Bridge Railings, Retaining Walls and Abutments
- ☐ A77K Guard Railing Connections to Bridge Sidewalks and Curbs
- ☐ A78A Thrie Beam Barrier
- ☐ A78B Thrie Beam Barrier
- ☐ A78C Thrie Beam Barrier- Standard Hardware
- ☐ A78D Thrie Beam Barrier- Miscellaneous Details
- ☐ A78E Thrie Beam Barrier- End Anchors
- ☐ A78F Thrie Beam Barrier Connections to Bridge Railing
- ☐ A78G Thrie Beam Barrier Connections to Bridge Curbs, Retaining Walls and Abutments
- ☐ A78H Thrie Beam Barrier Connections to Concrete Barrier Type 50
- ☐ A78I Thrie Beam Barrier Connections to Concrete Barrier Type 60
- ☐ A81 Crash Cushion, Sand Filled
- ☐ A83 Portable Scale Pad and Approach Slab Details
- ☐ A85 Chain Link Fence
- ☐ A86 Barbed Wire and Wire Mesh Fences
- ■ A87 Curbs, Dikes and Driveways
- ☐ A88 Curb Ramp Details
- ☐ A90 Accessible Parking

CRIB WALLS

- ☐ C7A Reinforced Concrete Crib Wall- Battered Wall- Types A,B and C
- ☐ C7B Reinforced Concrete Crib Wall- Battered Wall- Types D,E and F
- ☐ C7C Reinforced Concrete Crib Wall- Vertical Wall- Types A,B and C
- ☐ C7D Reinforced Concrete Crib Wall- Vertical Wall- Types D,E and F
- ☐ ***RSP C7E REINFORCED CONCRETE CRIB WALL- TYPES A,B,C,D,E AND F-HEADER AND STRECHER DETAILS***
- ☐ ***RSP C7F DESIGN DATA FOR REINFORCED CONCRETE CRIB WALL FOUNDATION PRESSURE- BATTERED WALL***
- ☐ ***RSP C7G REINFORCED CONCRETE CRIB WALL FOUNDATION PRESSURE- VERTICAL WALL***
- ☐ C8A Steel Crib Wall- Construction Details
- ☐ C8B Steel Crib Wall- Design Data
- ☐ ***RSP C8C STEEL CRIB WALL- DESIGN DATA***
- ☐ C9A Timber Crib Wall- Types A,B,C and D
- ☐ ***RSP C9B TIMBER CRIB WALL- TYPES A,B,C AND D-DESIGN DATA***

DRAINAGE

- ☐ D72 Drainage Inlets
- ■ D73 Drainage Inlets
- ☐ D74A Drainage Inlets
- ☐ D74B Drainage Inlets
- ■ D74C Drainage Inlet Details
- ***D75 IS DELETED AND REPLACED WITH NSP D75A, NSP D75B AND NSP D75C)***
- ■ ***RSP D77A Grate Details***
- ■ D77B Bicycle Proof Grate Details
- ☐ D77C Alternative Hinged Cover for Type OL and OS Inlets and Trash Rack for Type OCP Inlet
- ☐ D78 Gutter Depressions
- ☐ D79 Precast Reinforced Concrete Pipe- Direct Design Method
- ☐ D80 Cast-in-Place Reinforced Concrete Single Box Culvert
- ☐ D81 Cast-in-Place Reinforced Concrete Double Box Culvert
- ☐ D82 Cast-in-Place Reinforced Concrete Box Culvert Miscellaneous Details
- ☐ D84 Box Culvert Wingwalls- Types A,B and C
- ☐ ***RSP D85 BOX CULVERT WINGWALLS- TYPES D AND E***
- ☐ D86A Box Culvert Warped Wingwalls
- ☐ D86B Pipe Culvert Headwalls, Endwalls and Warped Wingwalls
- ☐ D86C Arch Culvert Headwalls, Endwalls and Warped Wingwalls
- ☐ D87A Overside Drains
- ■ D87B Overside Drains
- ☐ D87C Underdrains
- ☐ D88 Construction Loads on Culverts
- ☐ D88A Strut Details for Structural Steel Plate Pipes, Arches, and Vehicular Undercrossings
- ■ D89 Pipe Headwalls
- ☐ D90 Pipe Culvert Headwalls, Endwalls and Wingwalls-Types A,B and C
- ☐ D93A Pipe Riser Connections
- ☐ D93B Drainage Inlet Riser Connections
- ☐ D93C Pipe Riser with Debris Rack Cage
- ☐ D94A Metal and Plastic Flared End Sections
- ■ D94B Concrete Flared End Sections
- ☐ D95 Concrete Arch Culverts
- ☐ D97A Corrugated Metal Pipe Coupling Details No. 1- Annular Coupling Band Bar and Strap and Angle Connectors
- ☐ D97B Corrugated Metal Pipe Coupling Details No. 2- Hat Band Coupler and Flange Details
- ☐ D97C Corrugated Metal Pipe Coupling Details No. 3- Helical and Universal Couplers
- ☐ D97D Corrugated Metal Pipe Coupling Details No. 4- Hugger Coupling Bands
- ☐ D97E Corrugated Metal Pipe Coupling Details No. 5- Standard Joint
- ☐ D97F Corrugated Metal Pipe Coupling Details No. 6- Positive Joint
- ☐ D97G Corrugated Metal Pipe Coupling Details No. 7- Positive Joints and Downdrains
- ■ D97H Reinforced Concrete Pipe or Non-Reinforced Concrete Pipe Standard and Positive Joints
- ☐ D98A Slotted Corrugated Steel Pipe Drain Details
- ☐ D98B Slotted Corrugated Steel Pipe Drain Details
- ☐ D99A Structural Section Drainage System Details
- ☐ D99B Edge Drain Outlet and Vent Details
- ☐ D99C Edge Drain Cleanout and Vent Details
- ☐ D99D Cross Drain Interceptor Details

HIGHWAY PLANTING

- ☐ H1 Planting and Irrigation- Abbreviations
- ☐ ***RSP H2 PLANTING AND IRRIGATION- SYMBOLS***
- ☐ H3 Planting and Irrigation- Details
- ☐ H4 Planting and Irrigation- Details
- ☐ H5 Planting and Irrigation- Details
- ☐ H6 Planting and Irrigation- Details
- ☐ H7 Planting and Irrigation- Details
- ☐ H8 Planting and Irrigation- Details

TEMPORARY FACILITIES

- ■ T1 Temporary Crash Cushion, Sand Filled
- ■ T2 Temporary Crash Cushion, Sand Filled
- ■ T3 Temporary Railing (Type K)
- ☐ T4 Temporary Traffic Screen
- ☐ T5 Temporary Terminal Section (Type K)
- ☐ T7 Construction Project Funding Identification Signs
- ■ T10 Traffic Control System for Lane Closure on Freeways and Expressways
- ☐ T10A Traffic Control System for Lane and Complete Closures on Freeways and Expressways
- ■ T11 Traffic Control System for Lane Closure on Multilane Conventional Highways
- ☐ T12 Traffic Control System for Lane Closure on Multilane Conventional Highways
- ☐ T13 Traffic Control System for Lane Closure on Two Lane Conventional Highways
- ■ T14 Traffic Control System for Ramp Closures
- ☐ T15 Traffic Control System for Moving Lane Closure on Multilane Highways
- ☐ T16 Traffic Control System for Moving Lane Closure on Multilane Highways
- ☐ T17 Traffic Control System for Moving Lane Closure on Two Lane Highways

BRIDGE

- ☐ B0-1 Bridge Details
- ☐ B0-3 Bridge Details
- ☐ B0-5 Bridge Details
- ☐ B0-13 Bridge Details
- ☐ B2-3 400 mm Cast-in-Drilled-Hole Concrete Pile
- ☐ B2-5 Pile Details- Class 400 and Class 625
- ☐ B2-6 Pile Details- Class 400C and Class 625C
- ☐ B2-8 Pile Details- Class 900 and Class 900C
- ☐ B2-9 Load Test Pile Details (1)
- ☐ B2-10 Load Test Pile Details (2)
- ☐ B2-11 Load Test Pile Details (3)
- ☐ ***RSP B3-1 RETAINING WALL TYPE 1- H=1200 THROUGH 9100 mm***
- ☐ B3-2 Retaining Wall Type 1- H=9700 Through 10 900 mm
- ☐ ***RSP B3-3 RETAINING WALL- TYPE 1A***
- ☐ B3-4 Retaining Wall- Type 2
- ☐ B3-5 Counterfort Retaining Wall- Type 3
- ☐ B3-6 Counterfort Retaining Wall- Type 4
- ☐ ***RSP B3-7 RETAINING WALL- TYPE 5***
- ☐ ***RSP B3-8 RETAINING WALL DETAILS No.1***
- ☐ B3-9 Retaining Wall Details No. 2
- ☐ B3-11 Retaining Wall Type 6- 1829 mm Maximum
- ☐ B6-1 T-Beam Details
- ☐ B6-10 Utility Openings, T-Beam
- ☐ B6-21 Joint Seals (Maximum Movement Rating = 50 mm)
- ☐ B7-1 Box Girder Details
- ☐ B7-5 Deck Drains
- ☐ B7-6 Deck Drains- Type D-1 and D-2
- ☐ B7-10 Utility Opening- Box Girder
- ☐ B7-11 Utility Details
- ☐ B8-5 Cast-in-Place Prestressed Girder Details
- ☐ B11-7 Chain Link Railing
- ☐ B11-47 Cable Railing
- ☐ B11-51 Tubular Hand Railing
- ☐ B11-52 Chain Link Railing Type 7
- ☐ B11-53 Concrete Barrier Type 25
- ☐ B11-54 Concrete Barrier Type 26

AS-CONSTRUCTED PLANS

The Caltrans AS-BUILT PLANS were compared to the Field Memorandums issued by RBF to the Resident Engineer.

The changes reflected in these AS-CONSTRUCTED PLANS were obtained by conducting a review of the site by RBF field surveyors in June of 2000. The field survey was limited to the discrepancies between the Caltrans AS-BUILT PLANS and RBF Field Memorandums and review of the accessible invert elevations of drainage structures.

RBF is not responsible for the accuracy or completeness of electronic copies of this plan sheet.

Date of AS-CONSTRUCTED PLANS preparation. June 2000

AS-BUILT PLANS
CONTRACT NO. 11-233504
DATE COMPLETED 6-30-99
RE: D. JUAREZ

SHEET 1 OF 2

STANDARD PLANS LIST

(July, 1997 Edition)

REVISED DECEMBER 4, 1997

WEB SITE ADDRESS: http://www.dot.ca.gov/hq/esc/projplan/pplntro.htm

The Standard Plan sheets applicable to this contract include, but are not limited to those indicated by a marked box.
The Revised Standard Plans (RSP) and New Standard Plans (NSP) which apply to this contract are included as individual sheets of the project plans.

USERNAME => $USER
DGN FILE => $REQUEST

DATE PLOTTED => $DATE
TIME PLOTTED => $TIME

LAST REVISION 05-09-98

CONTRACT NO. 11-233504

DIST.	COUNTY	ROUTE	KILOMETER POST TOTAL PROJECT	SHEET NO.	TOTAL SHEETS
11	SD	5, 15	Var	3	41

Caltrans Metric

The State of California or its officers or agents shall not be responsible for the accuracy or completeness of electronic copies of this plan sheet.

To accompany plans dated 5-25-98

- ☐ B13-1 Slope Protection Details
- ☐ B14-1 Structural Steel Plate Vehicular Undercrossing
- ☐ B14-3 Communication and Sprinkler Control Conduit (Conduit less than size 103)
- ☐ B14-4 Water Supply Line (Bridge) (Pipe less than NPS 4)
- ☐ B14-5 Water Supply Line (Details) (Pipe less than NPS 4)

ROADSIDE SIGNS

- ■ RS1 Roadside Signs, Typical Installation Details No. 1
- ■ RS2 Roadside Signs, Wood Post, Typical Installation Details No. 2
- ☐ RS3 Roadside Signs, Laminated Wood Box Post, Typical Installation Details No. 3
- ■ RS4 Roadside Signs, Typical Installation Details No. 4

OVERHEAD SIGNS

OVERHEAD SIGNS-TRUSS

- ☐ S1 Overhead Signs- Truss, Instructions and Examples
- ☐ S2 Overhead Signs- Truss, Single Post Type, Post Types II thru VII
- ☐ S3 Overhead Signs- Truss, Two Post Type, Post Types I-S thru VII-S
- ☐ *RSP S4 OVERHEAD SIGNS-TRUSS, SINGLE POST TYPE, STRUCTURAL FRAME MEMBERS*
- ☐ S5 Overhead Signs- Truss, Two Post Type, Structural Frame Members
- ☐ S6 Overhead Signs- Truss, Structural Frame Details
- ☐ S7 Overhead Signs- Truss, Frame Juncture Details
- ☐ S8A Overhead Signs- Steel Frame Removable Sign Panel Frames
- ☐ S8B Overhead Signs- Removable Sign Panel Frames, Overhead Formed Panel Mounting Details
- ☐ S8C Overhead Signs- Truss, Sign Panel Mounting Details, Laminated Panel- Type A
- ☐ S8D Overhead Signs- Truss, Removable Sign Panel Frames 2.794 m and 3.048 m Sign Panels
- ☐ S9 Overhead Signs- Walkway Details No. 1
- ☐ S10 Overhead Signs- Walkway Details No. 2
- ☐ S11 Overhead Signs- Walkway Safety Railing Details
- ☐ S13 Overhead Signs- Truss Pile Foundation

OVERHEAD SIGNS-LIGHTWEIGHT

- ☐ S14A Overhead Signs- Lightweight Balanced-Single Steel Post Connection and Mounting Details
- ☐ S14B Overhead Signs- Lightweight Balanced-Single Steel Post Details
- ☐ S15 Overhead Signs- Lightweight, Type A, Connection Details
- ☐ S16 Overhead Signs- Lightweight, Type B, Connection Details
- ☐ S17 Overhead Signs- Lightweight, Type C, Connection Details
- ☐ S18A Overhead Signs- Lightweight, Sign Panel Mounting Details, Laminated Panel- Type A
- ☐ S18B Overhead Signs- Lightweight, Light Fixture Mounting Details
- ☐ S20A Overhead Signs- Lightweight Post Details
- ☐ S20B Overhead Signs- Lightweight Foundation Details

OVERHEAD SIGNS-BOX BEAM CLOSED TRUSS ALTERNATIVE

- ☐ S39 Overhead Signs- Box Beam Closed Truss, Foundation Details
- ☐ S40A Overhead Signs- Box Beam Closed Truss, Two Post Type Frame Members
- ☐ S40B Overhead Signs- Box Beam Closed Truss, Single and Two Post Type, General Frame Details
- ☐ S40C Overhead Signs- Box Beam Closed Truss, Ribbed Sheet Metal Details
- ☐ S40D Overhead Signs- Box Beam Closed Truss, Two Post Type, Frame Details
- ☐ S40E Overhead Signs- Box Beam Closed Truss, Two Post Type, Frame Juncture Details
- ☐ S40F Overhead Signs- Box Beam Closed Truss, Two Post Type, Post Details
- ☐ S40G Overhead Signs- Box Beam Closed Truss, Single Post Type, Frame Members
- ☐ S40H Overhead Signs- Box Beam Closed Truss, Single Post Cantilever, Frame Details
- ☐ S40I Overhead Signs- Box Beam Closed Truss, Single Post Cantilever, Frame Juncture Details
- ☐ S40J Overhead Signs- Box Beam Closed Truss, Single Post Cantilever, Post Details
- ☐ S40K Overhead Signs- Box Beam Closed Truss, Single Post Butterfly, Frame Details
- ☐ S40L Overhead Signs- Box Beam Closed Truss, Single Post Butterfly, Frame Juncture Details
- ☐ S40M Overhead Signs- Box Beam Closed Truss, Single Post Butterfly, Post Details

OVERHEAD SIGNS-TUBULAR

- ☐ S40N Overhead Signs- Tubular, Instructions and Examples
- ☐ S40P Overhead Signs- Tubular, Single Post Type, Layout and Pipe Selection
- ☐ S40Q Overhead Signs- Tubular, Two Post Type, Layout and Pipe Selection
- ☐ S40R Overhead Signs- Tubular, Structural Frame Details No. 1
- ☐ S40S Overhead Signs- Tubular, Structural Frame Details No. 2
- ☐ S40T Overhead Signs- Tubular, Foundation Details

SIGNALS, LIGHTING AND ELECTRICAL SYSTEMS

- ☐ ES-1A Signal, Lighting and Electrical Systems- Symbols and Abbreviations
- ☐ ES-1B Signal, Lighting and Electrical Systems- Symbols and Abbreviations
- ☐ ES-2A Signal, Lighting and Electrical Systems- Service Equipment
- ☐ ES-2B Signal, Lighting and Electrical Systems- Service Equipment
- ☐ ES-2C Signal, Lighting and Electrical Systems- Service Equipment Notes
- ☐ ES-2D Signal, Lighting and Electrical Systems- Service Equipment and Typical Wiring Diagram, Type A
- ☐ ES-2E Signal, Lighting and Electrical Systems- Service Equipment and Typical Wiring Diagram, Type B
- ☐ ES-2F Signal, Lighting and Electrical Systems- Service Equipment and Typical Wiring Diagram, Type C
- ☐ ES-3A Signal, Lighting and Electrical Systems- Signal Heads and Mountings
- ☐ ES-3B Signal, Lighting and Electrical Systems- Signal Heads and Mountings
- ☐ ES-3C Signal, Lighting and Electrical Systems- Signal Heads and Mountings
- ☐ ES-3D Signal, Lighting and Electrical Systems- Signal Heads and Mountings
- ☐ ES-3E Signal, Lighting and Electrical Systems- Signal Heads and Mountings
- ☐ ES-4A Signal, Lighting and Electrical Systems- Controller Cabinet Details
- ☐ ES-4B Signal, Lighting and Electrical Systems- Controller Cabinet Details
- ☐ ES-4C Signal, Lighting and Electrical Systems- Controller Cabinet Details
- ☐ ES-4D Irrigation Controller Enclosure Cabinet
- ☐ ES-5A Signal, Lighting and Electrical Systems- Detectors
- ☐ ES-5B Signal, Lighting and Electrical Systems- Detectors
- ☐ ES-5C Signal, Lighting and Electrical Systems- Detectors
- ☐ ES-5D Signal, Lighting and Electrical Systems- Detectors
- ☐ ES-5E Signal, Lighting and Electrical Systems- Detectors
- ☐ ES-5F Signal, Lighting and Electrical Systems- Pedestrian Barricades
- ☐ ES-6A Signal and Lighting Standards- Type I Standards and Equipment Numbering
- ☐ ES-6AA Signal Standards- Push Button Posts
- ☐ ES-6B Lighting Standards- Types 15, 21 and 22
- ☐ ES-6C Lighting Standards- 24.4 m to 48.8 m High Mast Light Pole, Foundation Details
- ☐ ES-6D Lighting Standards- Types 30 and 31
- ☐ ES-6DA Lighting Standards- Type 32
- ☐ ES-6E Lighting Standards- Types 30 and 31, Base Details
- ☐ ES-6F Lighting Standards- 10 Degree Type
- ☐ ES-6H Lighting Standards- 10 Degree Type, Details
- ☐ *RSP ES-6J SIGNAL AND LIGHTING STANDARDS- CASE 1 ARM LOADING, WIND VELOCITY = 113 km/h, ARM LENGTHS 4.6 m TO 9.1 m*
- ☐ ES-6K Signal and Lighting Standards- Case 2 Arm Loading, Wind Velocity = 113 km/h, Arm Lengths 6.1 m to 9.1 m
- ☐ ES-6L Signal and Lighting Standards- Case 3 Arm Loading, Wind Velocity = 113 km/h, Arm Lengths 4.6 m to 13.7 m
- ☐ ES-6M Signal and Lighting Standards- Case 4 Arm Loading, Wind Velocity = 113 km/h, Arm Lengths 7.6 m to 13.7 m
- ☐ ES-6MA Signal and Lighting Standards- Case 5 Arm Loading, Wind Velocity = 113 km/h, Arm Lengths 15.2 m to 16.8 m
- ☐ ES-6N Signal and Lighting Standards- Type 40-0-129
- ☐ ES-6O Signal and Lighting Standards- Case 1 Arm Loading, Wind Velocity = 129 km/h, Arm Lengths 7.6 m to 9.1 m
- ☐ ES-6P Signal and Lighting Standards- Case 2 Arm Loading, Wind Velocity = 129 km/h, Arm Lengths 6.1 m to 9.1 m
- ☐ ES-6Q Signal and Lighting Standards- Case 3 Arm Loading, Wind Velocity = 129 km/h, Arm Lengths 6.1 m to 13.7 m
- ☐ *RSP ES-6R SIGNAL AND LIGHTING STANDARDS- CASE 4 ARM LOADING, WIND VELOCITY = 129 km/h, ARM LENGTHS 7.6 m TO 13.7 m*
- ☐ ES-6RA Signal and Lighting Standards- Case 5 Arm Loading, Wind Velocity = 129 km/h, Arm Lengths 15.2 m to 16.8 m
- ☐ ES-6RB Signal and Lighting Standards- Case 5 Arm Loading, Wind Velocity = 129 km/h, Arm Lengths 18.2 m to 19.8 m
- ☐ ES-6S Signal and Lighting Standards- Details No. 1
- ☐ ES-6T Signal and Lighting Standards- Details No. 2
- ☐ ES-6TA Signal and Lighting Standards- Pole and Mast Arm Alternatives
- ☐ ES-6U Lighting Standards- Type 15 Slip Base Insert
- ☐ ES-6V Signal and Sign Standards- Type 33 Left Turn
- ☐ ES-7A Signal, Lighting and Electrical Systems- Electrical Details, Structure Installations
- ☐ ES-7B Signal, Lighting and Electrical Systems- Electrical Details, Structure Installations
- ☐ ES-7C Signal, Lighting and Electrical Systems- Electrical Details, Structure Installations
- ☐ ES-7D Signal, Lighting and Electrical Systems- Electrical Details, Structure Installations
- ☐ ES-7E Signal, Lighting and Electrical Systems- Electrical Details, Structure Installations
- ☐ ES-7F Signal, Lighting and Electrical Systems- Flush Soffit Luminaire Modification Details, Structure Installations
- ☐ ES-8 Signal, Lighting and Electrical Systems- Pull Box Details
- ☐ ES-9A Signal, Lighting and Electrical Systems- Cantilever Flashing Beacon, Types 9, 9A and 9B
- ☐ ES-9B Signal, Lighting and Electrical Systems- Cantilever Flashing Beacon, Types 9, 9A and 9B
- ☐ ES-10 Signal, Lighting and Electrical Systems- Isolux Diagrams
- ☐ ES-11 Signal, Lighting and Electrical Systems- Foundation Installations
- ☐ ES-12 Signal, Lighting and Electrical Systems- Pedestrian Undercrossing Fluorescent Lighting Fixture
- ☐ ES-13 Signal, Lighting and Electrical Systems- Splicing Details
- ☐ ES-14 Signal, Lighting and Electrical Systems- Wiring Details and Fuse Ratings
- ☐ ES-15 Signal, Lighting and Electrical Systems- Pedestrian Overcrossing Fluorescent Lighting Fixture
- ☐ ES-27A Signal, Lighting and Electrical Systems- Extinguishable Message Sign, 250 mm Letters
- ☐ ES-27B Signal, Lighting and Electrical Systems- Extinguishable Message Sign, 250 mm Letters
- ☐ ES-28 Signal, Lighting and Electrical Systems- Extinguishable Message Sign and Flashing Beacons

SIGN ILLUMINATION

- ☐ ES-29 Sign Illumination- Mercury Sign Illumination Equipment
- ☐ ES-30 Sign Illumination- 915 mm Fluorescent Sign Illumination Equipment
- ☐ ES-32A Sign Illumination- Sign Illumination Equipment
- ☐ ES-32B Sign Illumination- Sign Illumination Control
- ☐ ES-33 Sign Illumination- Internally Illuminated Street Name Sign

CLOSED CIRCUIT TELEVISION

- ☐ *RSP ES-34A CLOSED CIRCUIT TELEVISION- POLE DETAILS*
- ☐ ES-34B Closed Circuit Television- Pole Details- Overhead Sign Mounted

NEW STANDARD PLANS

- ☐ *NSP D75A PIPE INLETS*
- ☐ *NSP D75B PIPE INLETS*
- ☐ *NSP D75C PIPE INLETS- LADDER, STEP AND TRASH RACK DETAILS*

AS-CONSTRUCTED PLANS

The Caltrans AS-BUILT PLANS were compared to the Field Memorandums issued by RBF to the Resident Engineer.

The changes reflected in these AS-CONSTRUCTED PLANS were obtained by conducting a review of the site by RBF field surveyors in June of 2000. The field survey was limited to the discrepancies between the Caltrans AS-BUILT PLANS and RBF Field Memorandums and review of the accessible invert elevations of drainage structures.

RBF is not responsible for the accuracy or completeness of electronic copies of this plan sheet.

Date of AS-CONSTRUCTED PLANS preparation. June 2000

AS-BUILT PLANS
CONTRACT NO. 11-233504
DATE COMPLETED 6-30-99
RE: D. JUAREZ

SHEET 2 OF 2
STANDARD PLANS LIST
(July, 1997 Edition)
REVISED DECEMBER 4, 1997

DATE PLOTTED => $DATE
TIME PLOTTED => $TIME

LAST REVISION 05-09-98

WEB SITE ADDRESS: http://www.dot.ca.gov/hq/esc/projplan/ppintro.htm

The Standard Plan sheets applicable to this contract include, but are not limited to those indicated by a marked box.
The Revised Standard Plans (RSP) and New Standard Plans (NSP) which apply to this contract are included as individual sheets of the project plans.

USERNAME => $USER
DGN FILE => $REQUEST

CONTRACT NO. **11-233504**

DIST	COUNTY	ROUTE	KILOMETER POST TOTAL PROJECT	SHEET NO.	TOTAL SHEETS
11	SD	5, 15	Var	4	41

REGISTERED CIVIL ENGINEER

5-25-98
PLANS APPROVAL DATE

REGISTERED PROFESSIONAL ENGINEER
MIKE CHESNEY
No. 48913
Exp. 9-30-00
CIVIL
STATE OF CALIFORNIA

ROBERT BEIN, WILLIAM FROST & ASSOCIATES
14725 ALTON PARKWAY
IRVINE, CA 92618

The State of California or its officers or agents shall not be responsible for the accuracy or completeness of electronic copies of this plan sheet.

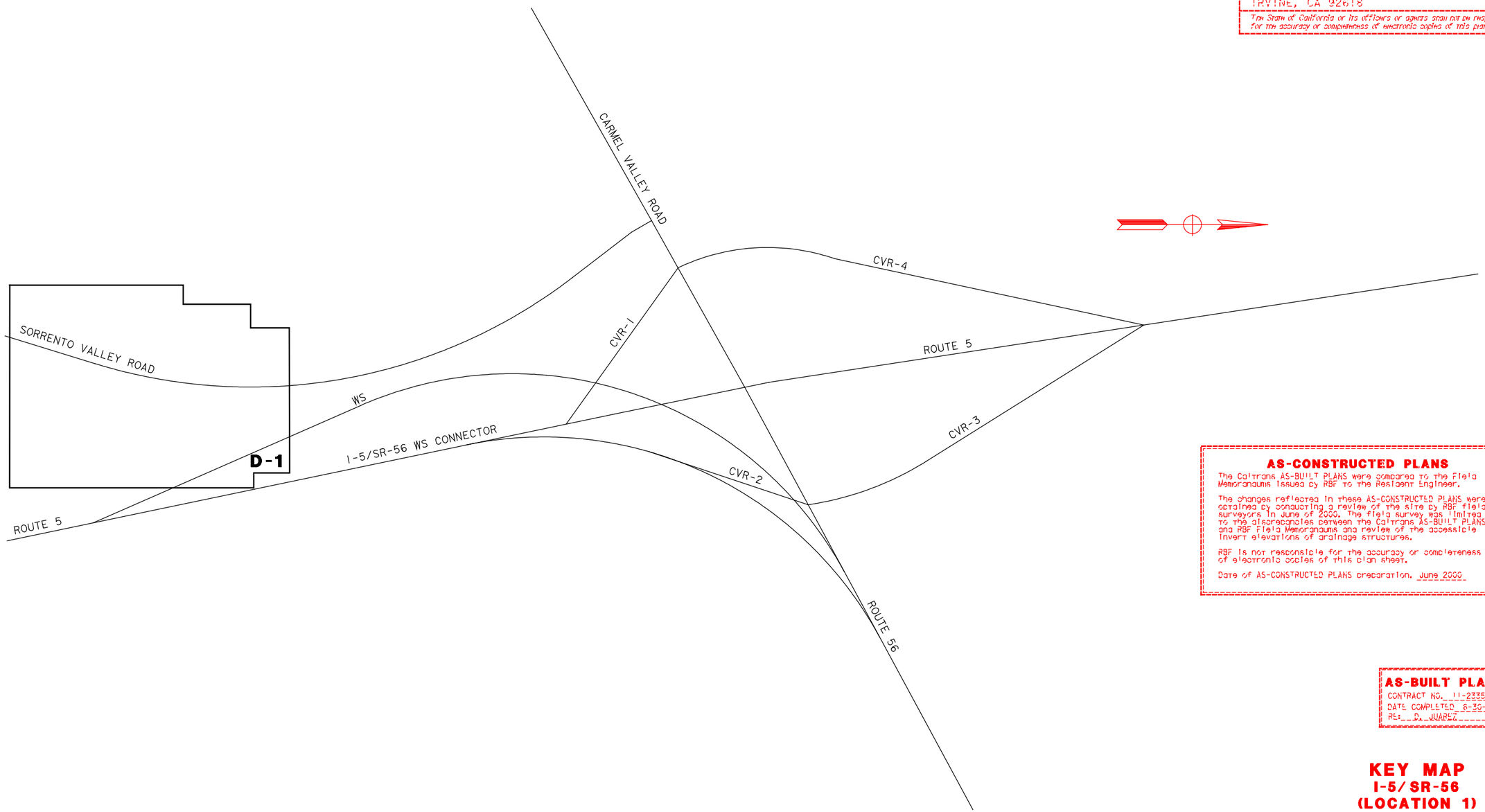

AS-CONSTRUCTED PLANS

The Caltrans AS-BUILT PLANS were compared to the Field Memorandums issued by RBF to the Resident Engineer.

The changes reflected in these AS-CONSTRUCTED PLANS were obtained by conducting a review of the site by RBF field surveyors in June of 2000. The field survey was limited to the discrepancies between the Caltrans AS-BUILT PLANS and RBF Field Memorandums and review of the accessible invert elevations of drainage structures.

RBF is not responsible for the accuracy or completeness of electronic copies of this plan sheet.

Date of AS-CONSTRUCTED PLANS preparation. June 2000

AS-BUILT PLANS
CONTRACT NO. 11-233504
DATE COMPLETED 6-30-99
RE: D. JUAREZ

KEY MAP
I-5/ SR-56
(LOCATION 1)

K-1

ALL DIMENSIONS ARE IN METERS UNLESS OTHERWISE SHOWN

NO SCALE

DATE	REVISED BY	DATE	REVISED BY
4/98			
4/98			

CALCULATED/ DESIGNED BY: NW
CHECKED BY: MC

DESIGN OVERSIGHT: CHRISTIAN HERENCIA

STATE OF CALIFORNIA - DEPARTMENT OF TRANSPORTATION
Caltrans
NPDES

&DATE& &TIME& &FILE&

LAST REVISION 05-09-98
DATE PLOTTED => &DATE
TIME PLOTTED => &TIME

FOR REDUCED PLANS ORIGINAL SCALE IN MILLIMETERS 0 20 40 60 80

USERNAME => &USER
DGN FILE => &REQUEST

CU 11332

EA 233501

DIST	COUNTY	ROUTE	KILOMETER POST TOTAL PROJECT	SHEET NO.	TOTAL SHEETS
11	SD	5,15			

REGISTERED CIVIL ENGINEER

5-25-98
PLANS APPROVAL DATE

REGISTERED PROFESSIONAL ENGINEER
MIKE CHESNEY
No. 48913
Exp. 9-30-00
CIVIL
STATE OF CALIFORNIA

ROBERT BEIN, WILLIAM FROST & ASSOCIATES
14725 ALTON PARKWAY
IRVINE, CA 92618

The State of California or its officers or agents shall not be responsible for the accuracy or completeness of electronic copies of this plan sheet.

AS-BUILT PLANS
CONTRACT NO. 11-233504
DATE COMPLETED 6-30-99
REV. D. JUAREZ

BASIS OF BEARING AND COORDINATES

BEARINGS AND COORDINATES AS SHOWN HEREON ARE IN TERMS OF THE CALIFORNIA COORDINATE SYSTEM OF 1983 (EPOCH 1995.50). ZONE 6, BASED LOCALLY UPON THE FOLLOWING CONTINUOUSLY OPEATING REFERENCE STATIONS AS PUBLISHED BY THE NATIONAL GEODETIC SURVEY.

STATION	NOTHING(Y)	EASTING(X)
MONP	580,447.284	1,983,875.610
S103	577,862.544	1,906,370.297
TRAK	662,024.000	1,855,858.672

BENCHMARK

ELEVATIONS AS SHOWN HEREON ARE IN TERMS OF THE NORTH AMERICAN VERTICAL DATUM OF 1988 BASED LOCALLY UPON THE FOLLOWING CALIFORNIA DEPARTMENT OF TRANSPORTATION CONTROL MONUMENT DATA.

BM 5-32.6 14.968 (NAVD88)

2" IP&DISC. FROM THE INTERSECTION W/CARMEL VALLEY RD., GO SOUTH ON SORRENTO VALLEY RD. 0.37 MILES TO FIRST HILL ON LEFT. FOLLOW DIRT RD. UPHILL APPROX. 90m TO MON. STAMPED "5-32.61987"

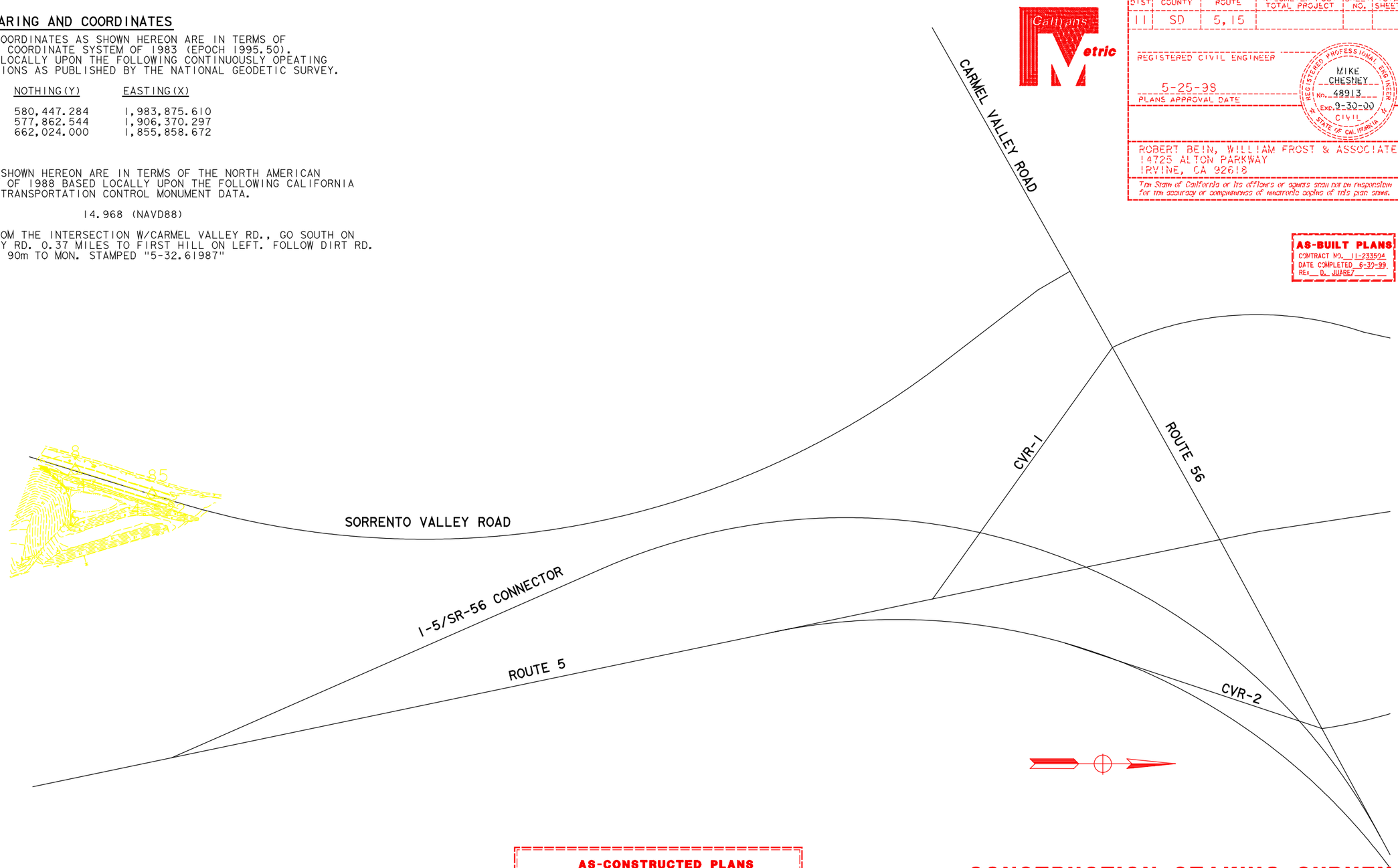

PROJECT CONTROL

STA NAME	NORTHING(Y) METERS	EASTING(X) METERS	EPOCH DATE	ELEVATION METERS	DESCRIPTION
7	584,870.563	1,907,294.045	1995.50	4.522	CONCRETE NAIL & TIN IN AC PVMT I-5 & HWY 56
8	584,810.064	1,907,275.119	1995.50	4.430	CONCRETE NAIL & TIN IN AC PVMT I-5 & HWY 56

AS-CONSTRUCTED PLANS

The Caltrans AS-BUILT PLANS were compared to the Field Memorandums issued by RBF to the Resident Engineer.

The changes reflected in these AS-CONSTRUCTED PLANS were obtained by conducting a review of the site by RBF field surveyors in June of 2000. The field survey was limited to the discrepancies between the Caltrans AS-BUILT PLANS and RBF Field Memorandums and review of the accessible invert elevations of drainage structures.

RBF is not responsible for the accuracy or completeness of electronic copies of this plan sheet.

Date of AS-CONSTRUCTED PLANS preparation. June 2000.

CONSTRUCTION STAKING SURVEY CONTROL DATA (LOCATION 1) I-5/SR-56

SCALE: 1:1500

CSS-1

DATE	REVISED BY	DATE	REVISED
4/98	GY	4/98	MC

CALCULATED/DESIGNED BY — CHECKED BY

DESIGN OVERSIGHT
CHRISTIAN HERENCIA

STATE OF CALIFORNIA - DEPARTMENT OF TRANSPORTATION
Caltrans

#DATES #TIMES #FILES

FOR REDUCED PLANS ORIGINAL SCALE IN MILLIMETERS 0 20 40 60 80

USERNAME => $$$$$$USER$$$$$$
DGN FILE => $$$$$$$$$$DGNSPEC$$$$$$$$$$

CU 11332 | EA 233501

HORIZONTAL CONTROL TABLE		
PNT	NORTHING	EASTING
1	584787.1768	1907335.2124
2	584799.5440	1907329.9072
3	584810.1737	1907293.5911
4	584815.2227	1907290.6534
5	584847.4131	1907300.3166
6	584863.4677	1907311.7378
7	584859.3704	1907314.6346
8	584851.2468	1907318.5374
9	584807.7474	1907331.0255
10	584801.7627	1907337.5295
11	584796.7557	1907340.0581
12	584792.8860	1907343.0351
13	584883.9715	1907323.7252
14	584874.6287	1907316.6105
15	584883.2752	1907321.3611
16	584893.7654	1907317.6041
17	584870.4880	1907310.5659

FOR COMPLETE R/W AND ACCURATE ACCESS DATA, SEE R/W RECORD MAPS AT DISTRICT OFFICE

AS-CONSTRUCTED PLANS

The Caltrans AS-BUILT PLANS were compared to the Field Memorandums Issued by RBF to the Resident Engineer.

The changes reflected in these AS-CONSTRUCTED PLANS were obtained by conducting a review of the site by RBF field surveyors in June of 2000. The field survey was limited to the discrepancies between the Caltrans AS-BUILT PLANS and RBF Field Memorandums and review of the accessible invert elevations of drainage structures.

RBF is not responsible for the accuracy or completeness of electronic copies of this plan sheet.

Date of AS-CONSTRUCTED PLANS preparation. June 2000

Caltrans Metric

DIST	COUNTY	ROUTE	KILOMETER POST TOTAL PROJECT	SHEET NO.	TOTAL SHEETS
11	SD	5,15	Var	7	41

REGISTERED CIVIL ENGINEER DATE

5-25-98

PLANS APPROVAL DATE

REGISTERED PROFESSIONAL ENGINEER MIKE CULLENEY No. 33019 EXP. 12-31-2000 CIVIL STATE OF CALIFORNIA

ROBERT BEIN, WILLIAM FROST & ASSOCIATES
14725 ALTON PARKWAY
IRVINE, CA 92618

The State of California or its officers or agents shall not be responsible for the accuracy or completeness of electronic copies of this plan sheet.

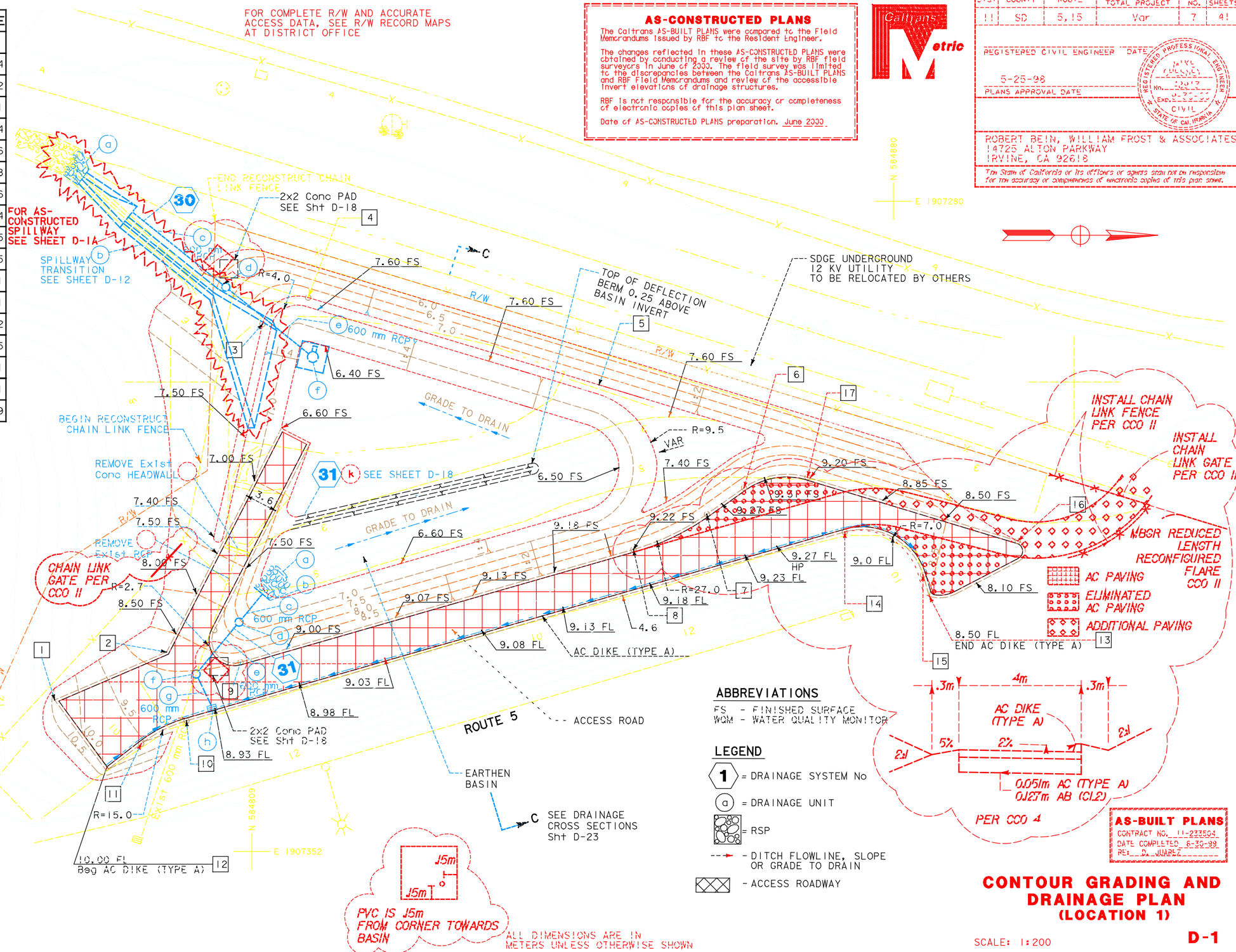

ABBREVIATIONS

FS - FINISHED SURFACE
WQM - WATER QUALITY MONITOR

LEGEND

1 = DRAINAGE SYSTEM No
a = DRAINAGE UNIT
= RSP
- DITCH FLOWLINE, SLOPE OR GRADE TO DRAIN
- ACCESS ROADWAY

AS-BUILT PLANS
CONTRACT NO. 11-233504
DATE COMPLETED 6-30-99
RE: D. JUAREZ

CONTOUR GRADING AND DRAINAGE PLAN (LOCATION 1)

SCALE: 1:200

D-1

ALL DIMENSIONS ARE IN METERS UNLESS OTHERWISE SHOWN

DATE	REVISED BY	DATE	REVISED BY
4/98		4/98	

CALCULATED/DESIGNED BY NYW
CHECKED BY MC
DESIGN OVERSIGHT CHRISTIAN HERENCIA
NPDES
STATE OF CALIFORNIA - DEPARTMENT OF TRANSPORTATION
Caltrans

FOR REDUCED PLANS ORIGINAL SCALE IN MILLIMETERS 0 20 40 60 80

USERNAME => $USER
DGN FILE => $REQUEST

CU 11332 EA 233501

LAST REVISION 05-09-98 DATE PLOTTED => $DATE TIME PLOTTED => $TIME

DIST	COUNTY	ROUTE	KILOMETER POST TOTAL PROJECT	SHEET NO.	TOTAL SHEETS
11	SD	5,15	Var	7	41

REGISTERED CIVIL ENGINEER DATE

5-25-98

PLANS APPROVAL DATE

REGISTERED PROFESSIONAL ENGINEER MIKE CUSSEY NO. 53019 EXP. 12-31-00 CIVIL STATE OF CALIFORNIA

ROBERT BEIN, WILLIAM FROST & ASSOCIATES
14725 ALTON PARKWAY
IRVINE, CA 92618

The State of California or its officers or agents shall not be responsible for the accuracy or completeness of electronic copies of this plan sheet.

AS-CONSTRUCTED PLANS

The Caltrans AS-BUILT PLANS were compared to the Field Memorandums issued by RBF to the Resident Engineer.

The changes reflected in these AS-CONSTRUCTED PLANS were obtained by conducting a review of the site by RBF field surveyors in June of 2000. The field survey was limited to the discrepancies between the Caltrans AS-BUILT PLANS and RBF Field Memorandums and review of the accessible invert elevations of drainage structures.

RBF is not responsible for the accuracy or completeness of electronic copies of this plan sheet.

Date of AS-CONSTRUCTED PLANS preparation. June 2000

Caltrans Metric

HORIZONTAL CONTROL TABLE		
PNT	NORTHING	EASTING
1	584787.1768	1907335.2124
2	584799.5440	1907329.9072
3	584810.1737	1907293.5911
4	584815.2227	1907290.6534
5	584847.4131	1907300.3166
6	584863.4677	1907311.7378
7	584859.3704	1907314.6346
8	584851.2468	1907318.5374
9	584807.7474	1907331.0255
10	584801.7627	1907337.5295
11	584796.7557	1907340.0581
12	584792.8860	1907343.0351
13	584883.9715	1907323.7252
14	584874.6287	1907316.6105
15	584883.2752	1907321.3611
16	584893.7654	1907317.6041
17	584870.4880	1907310.5659

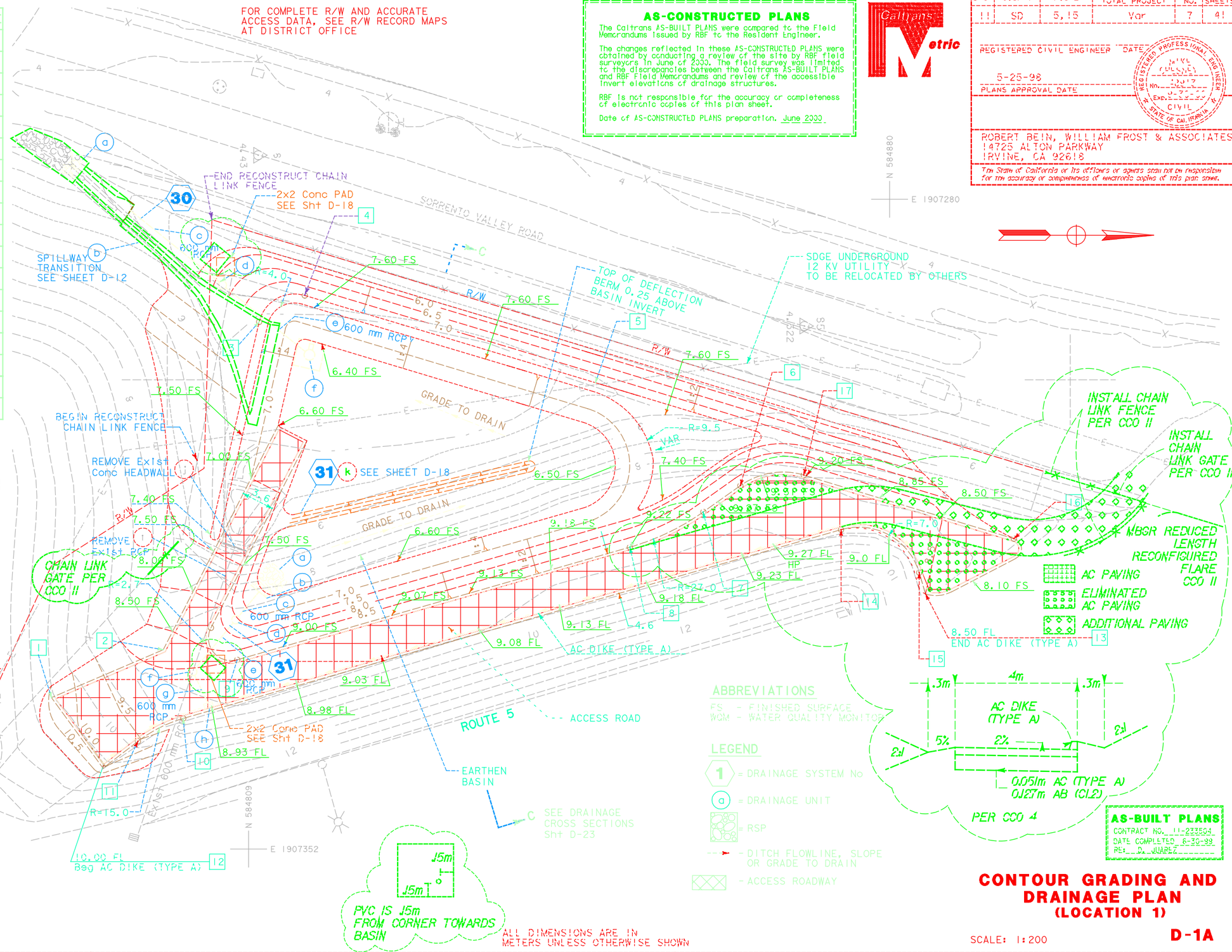

ABBREVIATIONS

FS - FINISHED SURFACE
WQM - WATER QUALITY MONITOR

LEGEND

1 = DRAINAGE SYSTEM No
a = DRAINAGE UNIT
= RSP
- DITCH FLOWLINE, SLOPE OR GRADE TO DRAIN
- ACCESS ROADWAY

ALL DIMENSIONS ARE IN METERS UNLESS OTHERWISE SHOWN

AS-BUILT PLANS

CONTRACT NO. 11-233504
DATE COMPLETED 8-30-99
RE: D. JUAREZ

CONTOUR GRADING AND DRAINAGE PLAN (LOCATION 1)

SCALE: 1:200

D-1A

DATE	REVISED BY	DATE	REVISED BY
4/98	NYW	4/98	MC

CALCULATED/DESIGNED BY NYW
CHECKED BY MC
DESIGN OVERSIGHT CHRISTIAN HERENCIA
NPDES
STATE OF CALIFORNIA - DEPARTMENT OF TRANSPORTATION
Caltrans
&DATE& &TIME& &FILE&

LAST REVISION 05-09-98 DATE PLOTTED => &DATE TIME PLOTTED => &TIME

FOR REDUCED PLANS ORIGINAL SCALE IN MILLIMETERS 0 20 40 60 80
USERNAME => &USER DGN FILE => &REQUEST
CU 11332
EA 233501

DIST	COUNTY	ROUTE	KILOMETER POST TOTAL PROJECT	SHEET NO.	TOTAL SHEETS
11	SD	5,15	[illegible]	13	41

REGISTERED CIVIL ENGINEER DATE

5-25-98
PLANS APPROVAL DATE

REGISTERED PROFESSIONAL ENGINEER
NO.
EXP.
CIVIL
STATE OF CALIFORNIA

ROBERT BEIN, WILLIAM FROST & ASSOCIATES
14725 ALTON PARKWAY
IRVINE, CA 92618

The State of California or its officers or agents shall not be responsible for the accuracy or completeness of electronic copies of this plan sheet.

Caltrans Metric

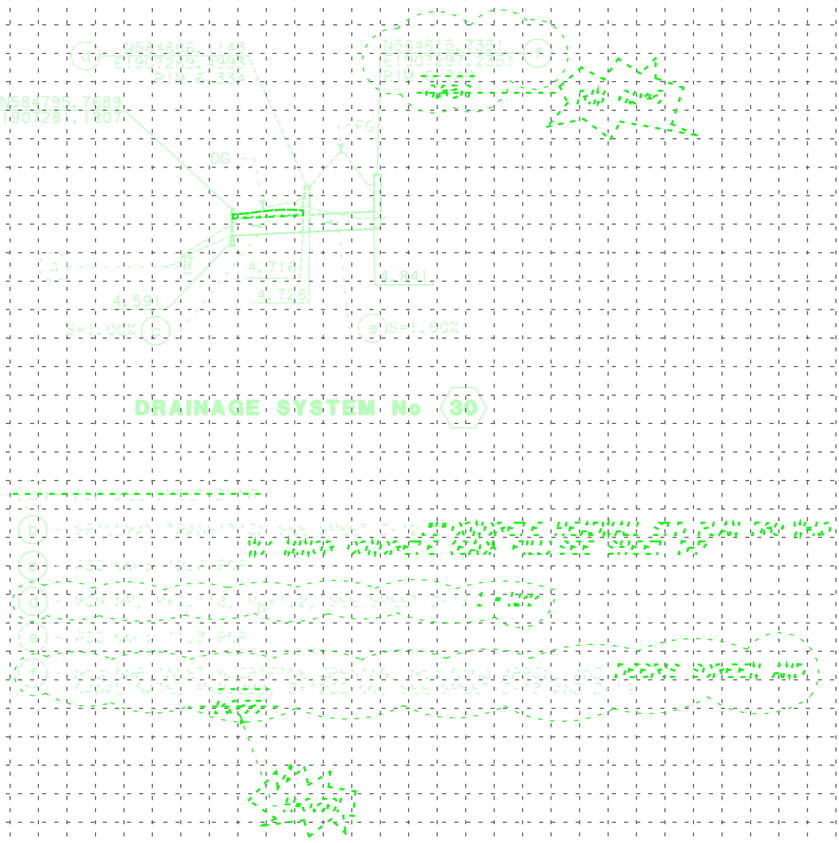

AS-CONSTRUCTED PLANS

THE CONTRACTOR AS-BUILT PLANS HERE CONTAINED FOR THE FIRST CONSTRUCTION ISSUED CONTRACT PLANS.

THE CHANGES REFLECTED IN THESE AS-CONSTRUCTED PLANS WERE REFLECTED CONSTRUCTING A REVISION OF THE SITE CONDITIONS. THE CONTRACTOR SHALL BE RESPONSIBLE FOR THE ACCURACY OF THE INFORMATION SHOWN ON THE AS-BUILT PLANS. THE CONTRACTOR SHALL ENSURE THAT THE AS-BUILT PLANS ARE THE ACCURATE AND TRUE REPRESENTATION OF THE CONDITIONS AS-BUILT. THE OWNER'S DEPARTMENT OF PUBLIC WORKS.

THE CONTRACTOR IS NOT RESPONSIBLE FOR THE ACCURACY OF THE CONTRACT PLANS OR ANY DEVIATIONS FROM THE ORIGINAL DESIGN.

THE AS-CONSTRUCTED PLANS DO NOT ALTER THE CONTRACT DOCUMENTS.

AS-BUILT PLANS

CONTRACT NO. [illegible]
DATE COMPLETED - [illegible]
[illegible]

STATE OF CALIFORNIA - DEPARTMENT OF TRANSPORTATION
Caltrans
NPDES
DESIGN OVERSIGHT
CHRISTIAN HERENCIA

	DATE	REVISED BY	DATE	REVISED
CALCULATED/DESIGNED BY	AMW	4/98		
CHECKED BY	SMT	4/98		

DRAINAGE PROFILES

SCALE: Horiz 1:500
Vert 1:100

D-7

Station
Exp
Emb

FOR REDUCED PLANS
ORIGINAL SCALE IN MILLIMETERS 0 20 40 60 80

USERNAME => BUSER
DGN FILE => SPECIALIST

CU 11332

EA 233501

DIST	COUNTY	ROUTE	KILOMETER POST TOTAL PROJECT	SHEET NO.	TOTAL SHEETS
11	SD	5, 15	VAR	14	41

REGISTERED CIVIL ENGINEER DATE

5-25-98
PLANS APPROVAL DATE

REGISTERED PROFESSIONAL ENGINEER
A.M. WALKER
No. 57716
Exp. 12-31-01
CIVIL
STATE OF CALIFORNIA

ROBERT BEIN, WILLIAM FROST & ASSOCIATES
14725 ALTON PARKWAY
IRVINE, CA 92618

The State of California or its officers or agents shall not be responsible for the accuracy or completeness of electronic copies of this plan sheet.

Caltrans Metric

CALCULATED/ DESIGNED BY	DATE	REVISED BY	DATE REVISED
AMW	4/98		
CHECKED BY			
SMT	4/98		

DESIGN OVERSIGHT
CHRISTIAN HERENCIA

STATE OF CALIFORNIA - DEPARTMENT OF TRANSPORTATION
NPDES

Caltrans

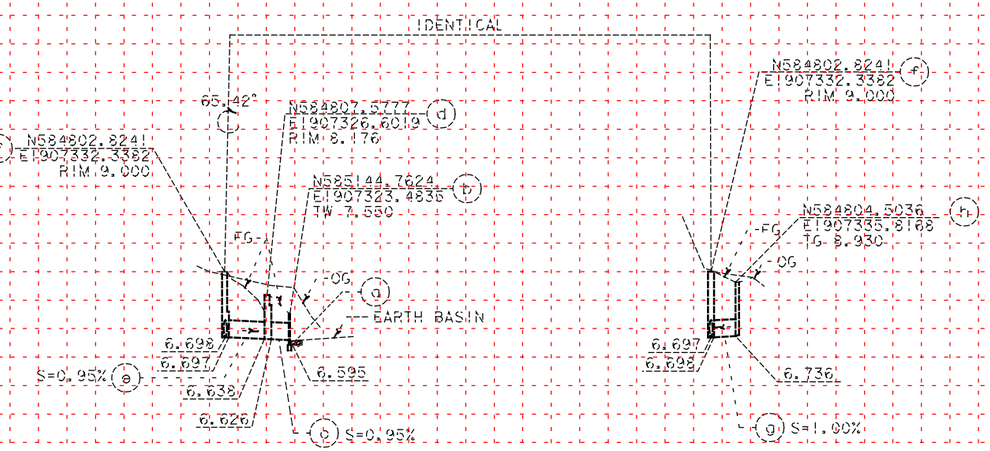

DRAINAGE SYSTEM No (31)

(a) - PCP SEE SHEET D-7
(b) - STRAIGHT 600mm HEADWALL SEE STD PLAN D89
(c) - 600 mm - 3.2% PCP
(d) - MSB MH, RECESSED, H_b=1.2, SEE SHEET D-15
(e) - 600 mm - 6.3% PCP
(f) - MH, H_b=1.22, SEE SHEET D-15 RECESSED MH
(g) - 600 mm - 3.2% PCP
(h) - GI INLET, H_b=2.125

ALL DIMENSIONS ARE IN METERS, UNLESS OTHERWISE SHOWN.

AS-CONSTRUCTED PLANS

THE ENTIRE AS-BUILT PLANS WERE PREPARED IN THE FIELD USING TRIMBLE TSC1 PDA AND TRIMBLE ENGINEERING SOFTWARE.

THE ORIGINAL REFLECTED IN THESE AS-CONSTRUCTED PLANS WERE ESTABLISHED BY PERFORMING A PORTION OF THE FIELD SURVEY PER FIELD SURVEYING PLANS DATED OF 2000. THE FIELD SURVEY WAS INITIATED ON THE 15 DECEMBER 2000 THE ENTIRE AS-BUILT PLANS WERE COMPLETED ON THE 22 DECEMBER 2000 BY FROM THE ENGINEERING PLANS INVERT ELEVATIONS OF DRAINAGE STRUCTURES.

THE AS CONSTRUCTED REPRESENTS THE ACCURACY OF DIMENSIONS OF ELEMENTS OF THE FIELD SURVEY.

THE AS-CONSTRUCTED PLANS CONSTITUTE, DURING 2000.

AS-BUILT PLANS

CONTRACT NO. 11-2332U4
DATE COMPLETED: 02-22-02
REL. CO. ADAMS

DRAINAGE PROFILES

SCALE: Horiz 1:500
Vert 1:100

D-8

Station
Exc
Emb

FOR REDUCED PLANS ORIGINAL SCALE IN MILLIMETERS 0 20 40 60 80

USERNAME = RUSER
DGN FILE = SPEC1551

CU 11332

EA 233501

DIST	COUNTY	ROUTE	KILOMETER POST TOTAL PROJECT	SHEET NO.	TOTAL SHEETS
11	SD	5,15	Var	18	41

REGISTERED CIVIL ENGINEER DATE

5-25-98
PLANS APPROVAL DATE

REGISTERED PROFESSIONAL ENGINEER A.M. WALKER No. 57716 Exp. 12-31-01 CIVIL STATE OF CALIFORNIA

ROBERT BEIN, WILLIAM FROST & ASSOCIATES
14725 ALTON PARKWAY
IRVINE, CA 92618

The State of California or its officers or agents shall not be responsible for the accuracy or completeness of electronic copies of this plan sheet.

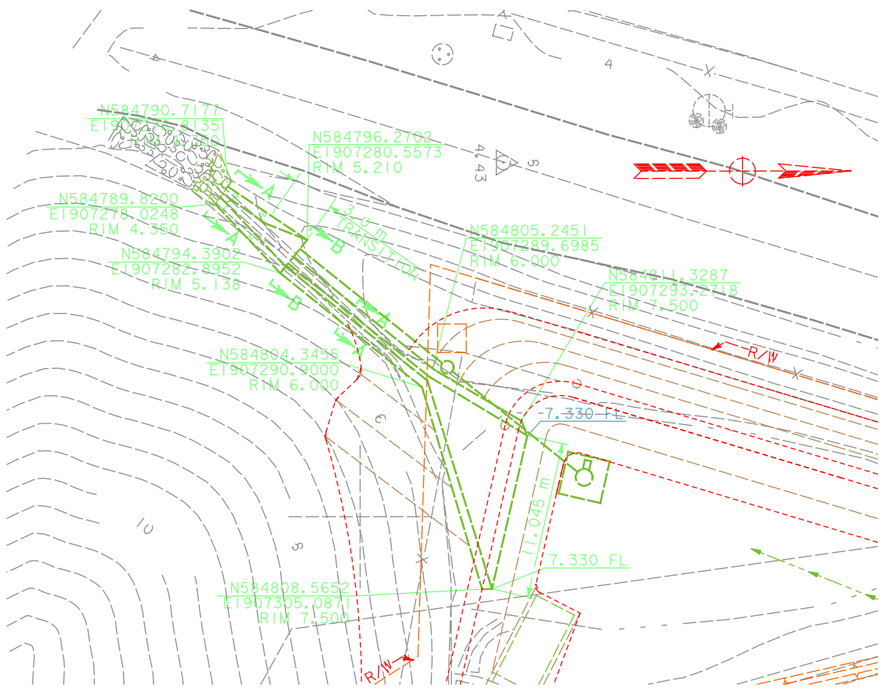

SPILLWAY TRANSITION

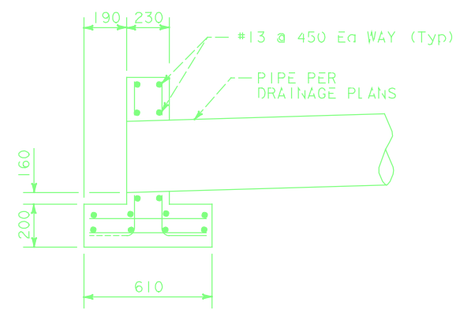

SECTION C-C

NOTE:

1. CONSTRUCT CUTOFF WALL AT THE BEGINNING AND END OF SPILLWAY TRANSITION.

LOCATION	H
BEGIN	1.0m
END	0.55m

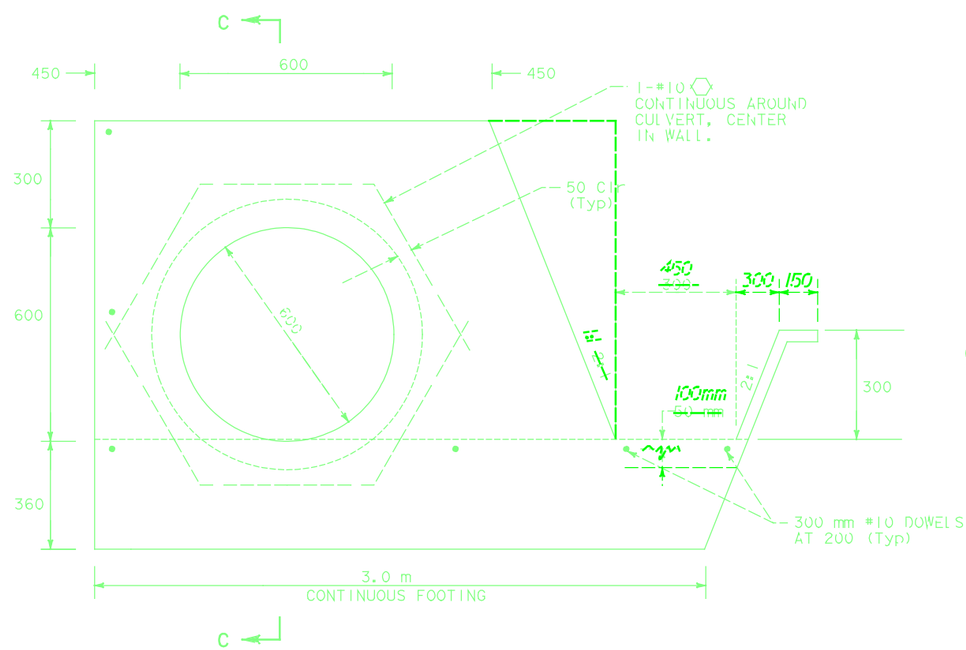

SECTION B-B

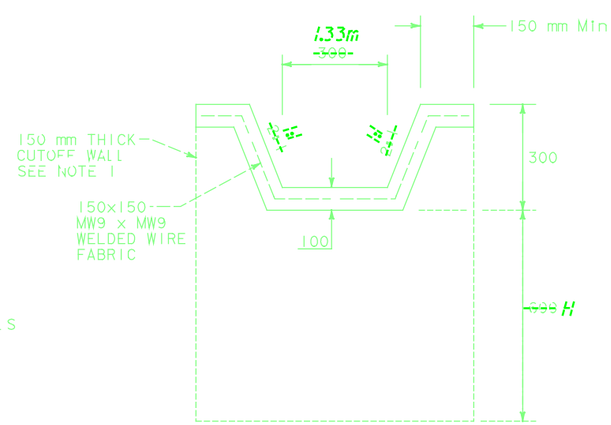

SECTION A-A

ALL DIMENSIONS ARE IN MILLIMETERS UNLESS OTHERWISE SHOWN

AS-CONSTRUCTED PLANS

The Caltrans AS-BUILT PLANS were compared to the Field Memorandums issued by RBF to the Resident Engineer.

The changes reflected in these AS-CONSTRUCTED PLANS were obtained by conducting a review of the site by RBF field surveyors in June of 2000. The field survey was limited to the discrepancies between the Caltrans AS-BUILT PLANS and RBF Field Memorandums and review of the accessible invert elevations of drainage structures.

RBF is not responsible for the accuracy or completeness of electronic copies of this plan sheet.

Date of AS-CONSTRUCTED PLANS preparation. June 2000

AS-BUILT PLANS
CONTRACT NO. 11-233504
DATE COMPLETED 6-30-99
RE: D. QUARTZ

DRAINAGE DETAILS

NO SCALE

D-12

STATE OF CALIFORNIA - DEPARTMENT OF TRANSPORTATION
Caltrans
NPDES
DESIGN OVERSIGHT
CHRISTIAN HERENCIA
CALCULATED/DESIGNED BY AMW DATE 4/98
CHECKED BY SMT 4/98
REVISED BY
DATE REVISED

$DATE$ $TIME$ $FILE$

FOR REDUCED PLANS ORIGINAL SCALE IN MILLIMETERS 0 20 40 60 80

USERNAME => $USER
DGN FILE => $REQUEST

CU 11332

EA 233501

LAST REVISION 05-09-98
DATE PLOTTED => $DATE
TIME PLOTTED => $TIME

DIST	COUNTY	ROUTE	KILOMETER POST TOTAL PROJECT	SHEET NO.	TOTAL SHEETS
11	SD	5,15	Var	19	41

REGISTERED CIVIL ENGINEER DATE

5-25-98
PLANS APPROVAL DATE

REGISTERED PROFESSIONAL ENGINEER A.M. WALKER No. 57716 Exp. 12-31-01 CIVIL STATE OF CALIFORNIA

ROBERT BEIN, WILLIAM FROST & ASSOCIATES
14725 ALTON PARKWAY
IRVINE, CA 92618

The State of California or its officers or agents shall not be responsible for the accuracy or completeness of electronic copies of this plan sheet.

AS-CONSTRUCTED PLANS

The Caltrans AS-BUILT PLANS were compared to the Field Memorandums issued by RBF to the Resident Engineer.

The changes reflected in these AS-CONSTRUCTED PLANS were obtained by conducting a review of the site by RBF field surveyors in June of 2000. The field survey was limited to the discrepancies between the Caltrans AS-BUILT PLANS and RBF Field Memorandums and review of the accessible invert elevations of drainage structures.

RBF is not responsible for the accuracy or completeness of electronic copies of this plan sheet.

Date of AS-CONSTRUCTED PLANS preparation. June 2000

Caltrans Metric

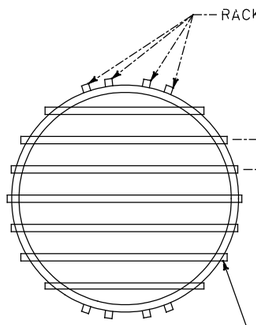

TOP BARS: TYPE SAME AS RACK EXCEPT USE 25 mm Ø BARS WHEN RACK BARS ARE 13 mm Ø

SPOT WELD TOP BARS TO END POSTS BOTH SIDES

TOP VIEW

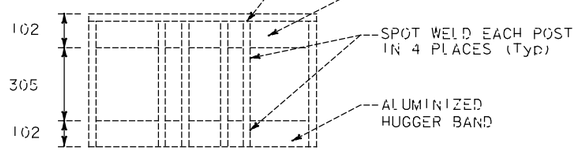

RACK: USE 50 mm STAINLESS STEEL PIPE, L50 mm x 50 mm x 5 mm, OR 13 mm Ø BARS (26 mm Ø ON TOP) (STAINLESS STEEL)

SIDE VIEW

DEBRIS RACK CAGE

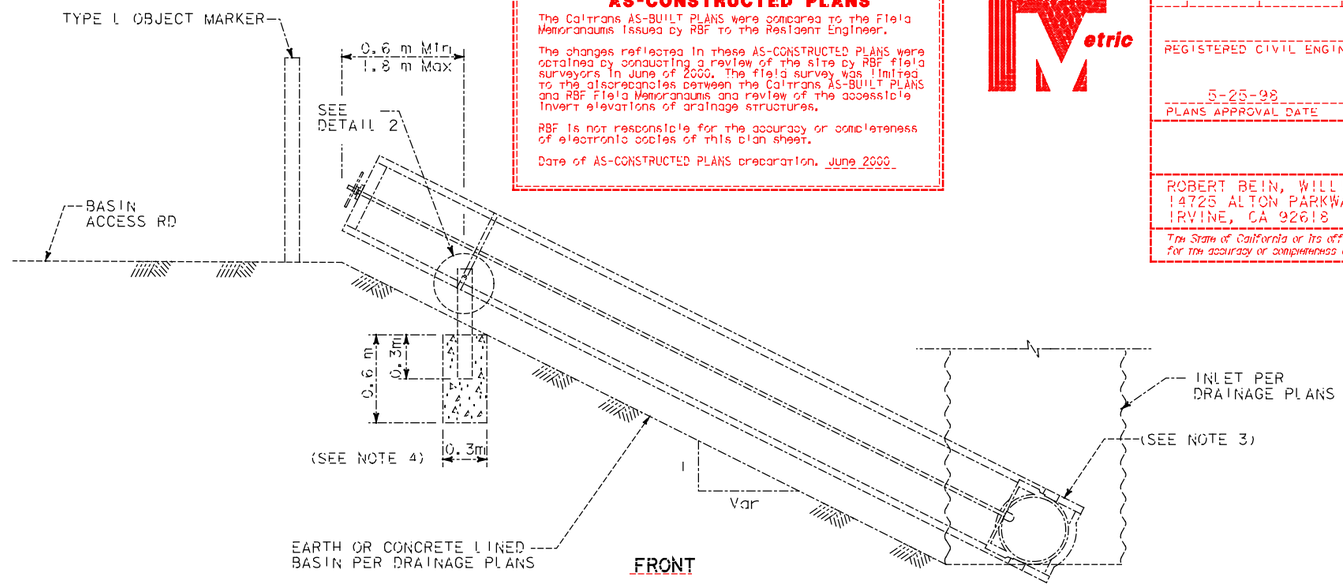

FRONT

CANAL GATE SECTION

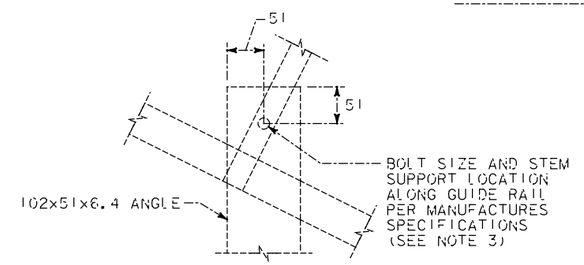

DETAIL 2

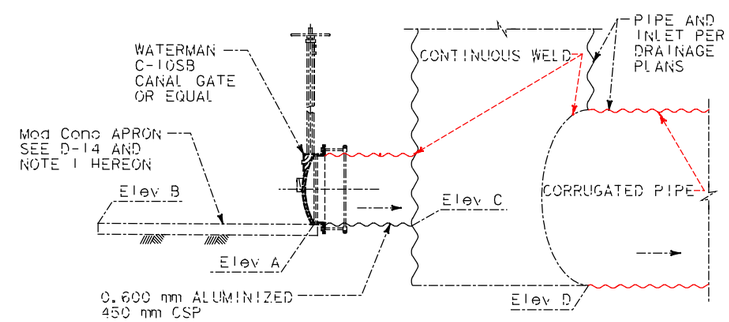

ELEVATION

NOTE:

1. FORM MODIFIED CONCRETE APRON ADJACENT TO THE CANAL GATE CONNECTION, AS NECESSARY, TO ACCOMODATE CANAL GATE HARDWARE.
2. ELEVATIONS PER DRAINAGE PLANS.
3. ALL HARDWARE AND FABRICATION MATERIAL SHALL BE STAINLESS STEEL.
4. SUPPORT FOOTING IS 0.3 m SQUARE.

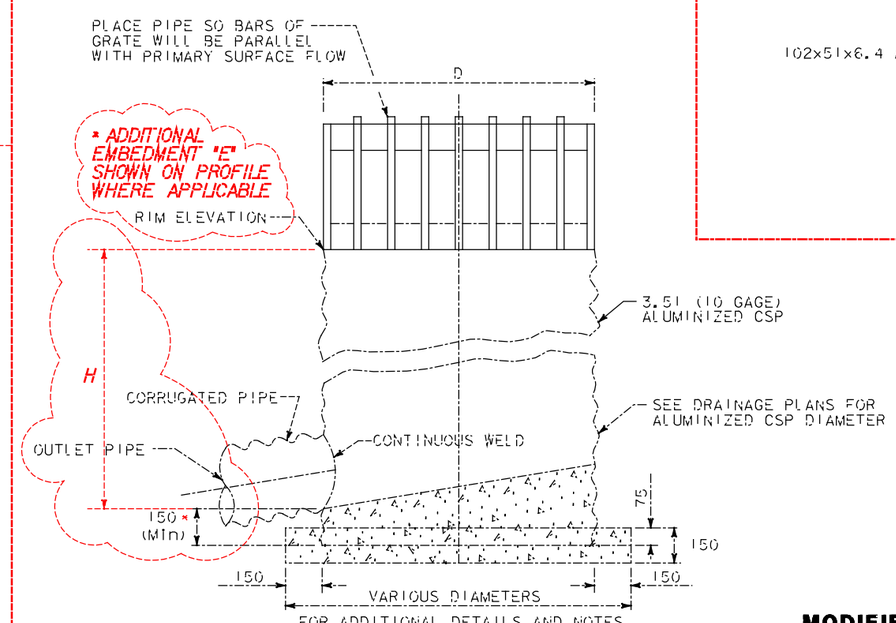

FOR ADDITIONAL DETAILS AND NOTES SEE STANDARD CALTRANS PLAN D75

SECTION A-A

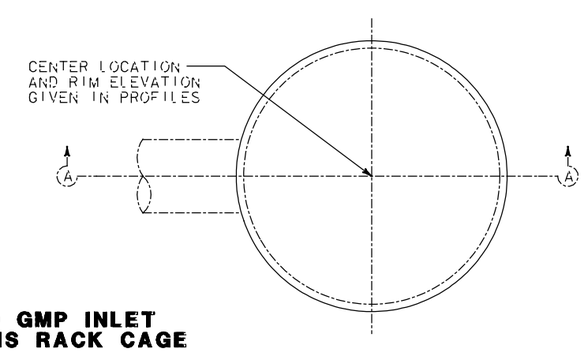

MODIFIED GMP INLET WITH DEBRIS RACK CAGE

ALL DIMENSIONS ARE IN METERS UNLESS OTHERWISE SHOWN

AS-BUILT PLANS
CONTRACT NO. 11-233504
DATE COMPLETED 6-30-99
RE: D. JUAREZ

DRAINAGE DETAILS

NO SCALE

D-13

DATE	REVISED BY	DATE REVISED
4/98	AMW	SMT 4/98

CALCULATED/DESIGNED BY | CHECKED BY

DESIGN OVERSIGHT: CHRISTIAN HERENCIA

STATE OF CALIFORNIA - DEPARTMENT OF TRANSPORTATION

NPDES

Caltrans

$FILE$ $TIME$ $DATE$

LAST REVISION 05-09-98 | DATE PLOTTED => $DATE | TIME PLOTTED => $TIME

FOR REDUCED PLANS ORIGINAL SCALE IN MILLIMETERS 0 20 40 60 80

USERNAME => $USER
DGN FILE => $REQUEST

CU 11332 | EA 233501

DIST	COUNTY	ROUTE	KILOMETER POST TOTAL PROJECT	SHEET NO.	TOTAL SHEETS
11	SD	5, 15	Var	20	41

REGISTERED CIVIL ENGINEER DATE

5-25-98

PLANS APPROVAL DATE

REGISTERED PROFESSIONAL ENGINEER A.M. WALKER No. 57716 Exp. 12-31-01 CIVIL STATE OF CALIFORNIA

ROBERT BEIN, WILLIAM FROST & ASSOCIATES
14725 ALTON PARKWAY
IRVINE, CA 92618

The State of California or its officers or agents shall not be responsible for the accuracy or completeness of electronic copies of this plan sheet.

AS-CONSTRUCTED PLANS

The Caltrans AS-BUILT PLANS were compared to the Field Memorandums issued by RBF to the Resident Engineer.

The changes reflected in these AS-CONSTRUCTED PLANS were obtained by conducting a review of the site by RBF field surveyors in June of 2000. The field survey was limited to the discrepancies between the Caltrans AS-BUILT PLANS and RBF Field Memorandums and review of the accessible invert elevations of drainage structures.

RBF is not responsible for the accuracy or completeness of electronic copies of this plan sheet.

Date of AS-CONSTRUCTED PLANS preparation. June 2000

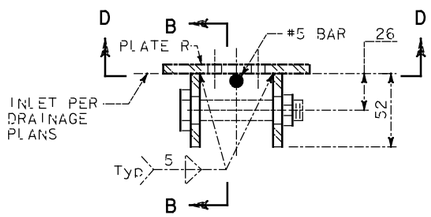

TRASH RACK FASTENER

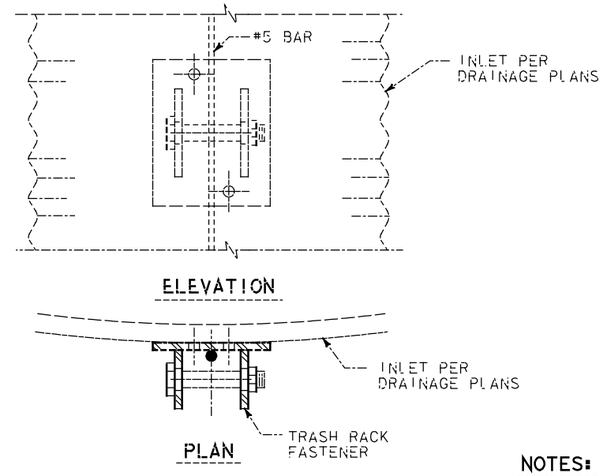

DETAIL 1

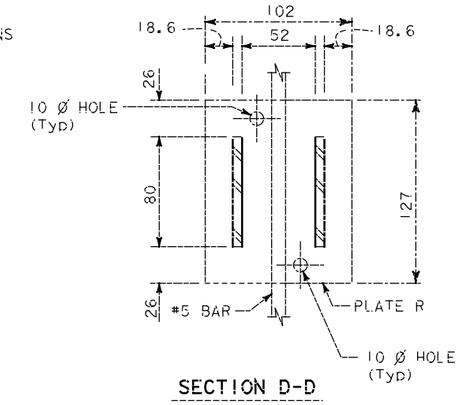

SECTION D-D

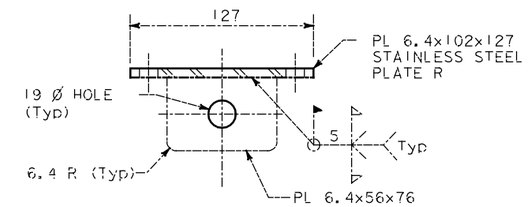

SECTION B-B

NOTES:

1. TRASH RACK FASTENERS SHALL BE BOLTED TO INLET AT LOCATIONS SHOWN.
2. ALL HARDWARE AND FABRICATION MATERIALS SHALL BE STAINLESS STEEL.
3. ALL BARS SHALL BE STAINLESS STEEL.

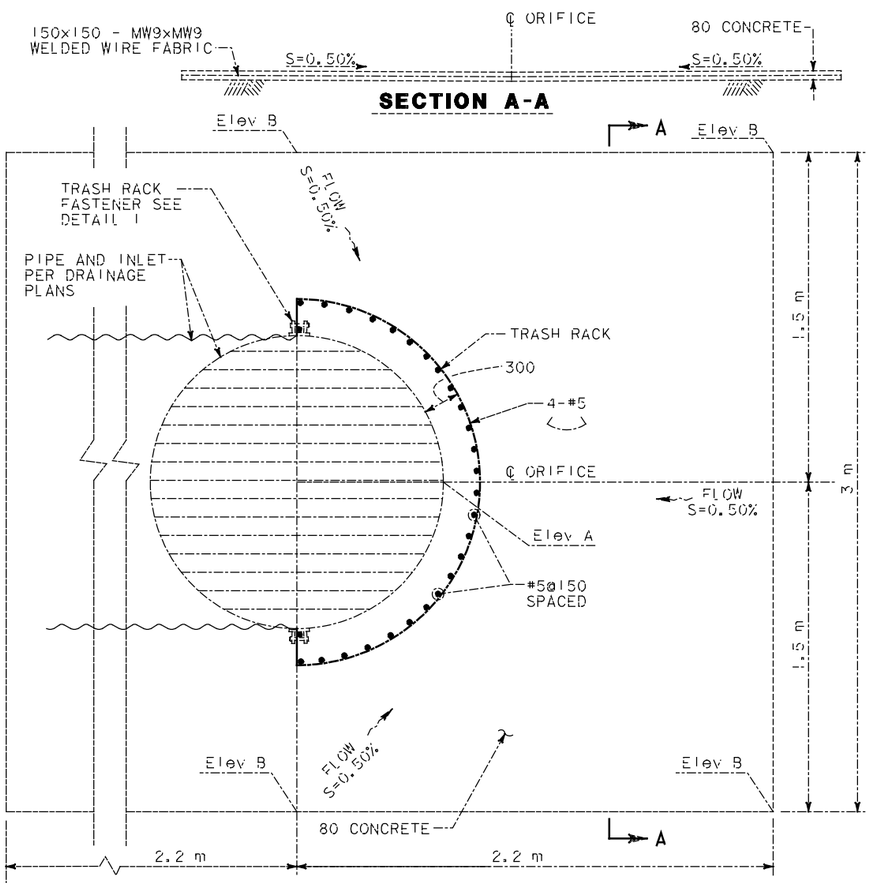

MODIFIED CONCRETE APRON

SHOWN WITH TRASH RACK PLAN

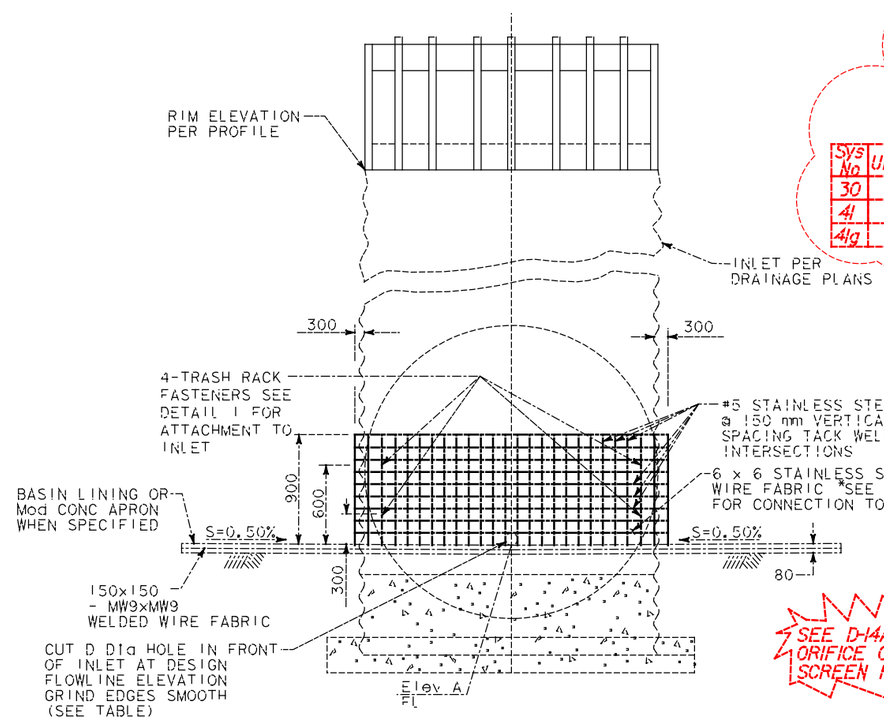

ORIFICE OPENING AND DEBRIS SCREEN FRAME

Sys No	UNIT	D (mm)	Elev A	Elev B
30	f	~~44.5~~	6.386	6.395
41	g	44.5	~~195.94~~	~~N/A~~

Sys No	UNIT	Riser D1(mm)	Riser Elev A	Apron Elev B	Riser D2(mm)	Riser Elev C	H m
30	f	30.18	6.386	6.395	13.97	6.836	0.5
41	g	38.85	~~196.4~~	~~196.41~~	26.65	~~197.42~~	~~1.15~~
41g		N/A	196.304	196.314	N/A	197.325	1.149

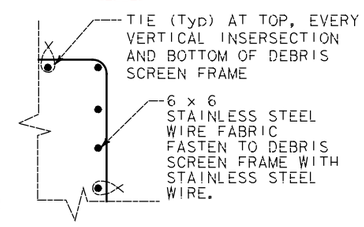

DETAIL 2

SEE D-14A FOR AS-CONSTRUCTED ORIFICE OPENING AND DEBRIS SCREEN FRAME

AS-BUILT PLANS
CONTRACT NO. 11-233504
DATE COMPLETED 6-30-99
RE: D. JUAREZ

ALL DIMENSIONS ARE IN MILLIMETERS UNLESS OTHERWISE SHOWN

DRAINAGE DETAILS

NO SCALE

D-14

DESIGN OVERSIGHT: CHRISTIAN HERENCIA

STATE OF CALIFORNIA - DEPARTMENT OF TRANSPORTATION

NPDES

Caltrans

DATE	REVISED BY	DATE	REVISED BY
4/98	AMW	4/98	SMT

CALCULATED/DESIGNED BY | CHECKED BY

LAST REVISION: 05-09-98 DATE PLOTTED => $DATE TIME PLOTTED => $TIME

FOR REDUCED PLANS ORIGINAL SCALE IN MILLIMETERS 0 20 40 60 80

USERNAME => $USER DGN FILE => $REQUEST

CU 11332 | EA 233501

DIST	COUNTY	ROUTE	KILOMETER POST TOTAL PROJECT	SHEET NO.	TOTAL SHEETS
11	SD	5,15	Var	20	41

REGISTERED CIVIL ENGINEER DATE

5-25-98
PLANS APPROVAL DATE

REGISTERED PROFESSIONAL ENGINEER
A.M. WALKER
No. 57716
Exp. 12-31-01
CIVIL
STATE OF CALIFORNIA

ROBERT BEIN, WILLIAM FROST & ASSOCIATES
14725 ALTON PARKWAY
IRVINE, CA 92618

The State of California or its officers or agents shall not be responsible for the accuracy or completeness of electronic copies of this plan sheet.

AS-CONSTRUCTED PLANS

The Caltrans AS-BUILT PLANS were compared to the Field Memorandums issued by RBF to the Resident Engineer.

The changes reflected in these AS-CONSTRUCTED PLANS were obtained by conducting a review of the site by RBF field surveyors in June of 2000. The field survey was limited to the discrepancies between the Caltrans AS-BUILT PLANS and RBF Field Memorandums and review of the accessible invert elevations of drainage structures.

RBF is not responsible for the accuracy or completeness of electronic copies of this plan sheet.

Date of AS-CONSTRUCTED PLANS preparation. June 2000

AVERAGE AVERAGE

Sys No	UNIT	Riser D1(mm)	Riser Elev A	Apron Elev B	Riser D2(mm)	Riser Elev C	H m
30	f	30	6.384	6.384	30	6.813	0.561
41	g	25	196.431	196.406	25	197.450	1.097

Sys No	UNIT	D(mm)	Elev A	Elev B
30	f	~~44.5~~	~~6.386~~	6.395
41	g	44.5	~~195.94~~	~~N/A~~

Sys No	UNIT	Riser D1(mm)	Riser Elev A	Apron Elev B	Riser D2(mm)	Riser Elev C	H m
30	f	30.18	6.386	6.395	13.97	6.836	0.5
41	g	38.85	~~196.4~~	~~196.41~~	26.65	~~197.42~~	~~1.15~~
41g		N/A	196.304	196.314	N/A	197.325	1.149

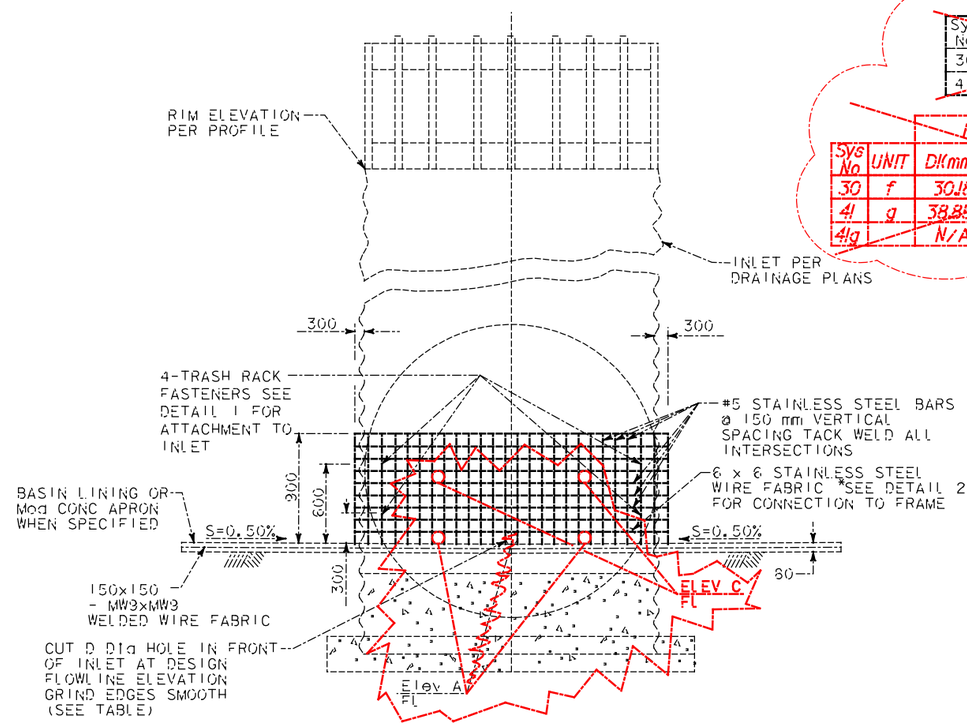

ORIFICE OPENING AND DEBRIS SCREEN FRAME

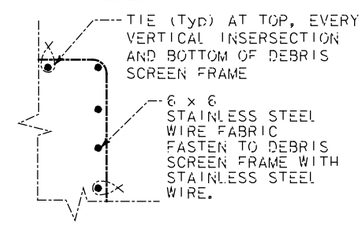

DETAIL 2

ALL DIMENSIONS ARE IN MILLIMETERS UNLESS OTHERWISE SHOWN

AS-BUILT PLANS
CONTRACT NO. 11-233504
DATE COMPLETED 6-30-99
RE: D. JUAREZ

DRAINAGE DETAILS

NO SCALE

D-14A

STATE OF CALIFORNIA - DEPARTMENT OF TRANSPORTATION
Caltrans
NPDES
DESIGN OVERSIGHT
CHRISTIAN HERENCIA
CALCULATED/DESIGNED BY AMW DATE 4/98
CHECKED BY SMT 4/98
REVISED BY
DATE REVISED

$DATE$ $TIME$ $FILE$

LAST REVISION 05-09-98
DATE PLOTTED => $DATE
TIME PLOTTED => $TIME

FOR REDUCED PLANS ORIGINAL SCALE IN MILLIMETERS 0 20 40 60 80
USERNAME => $USER
DGN FILE => $REQUEST
CU 11332
EA 233501

DIST	COUNTY	ROUTE	KILOMETER POST TOTAL PROJECT	SHEET NO.	TOTAL SHEETS
11	SD	5,15	Var	21	41

REGISTERED CIVIL ENGINEER DATE

5-25-98
PLANS APPROVAL DATE

REGISTERED PROFESSIONAL ENGINEER A.M. WALKER No. 57716 Exp. 12-31-01 CIVIL STATE OF CALIFORNIA

ROBERT BEIN, WILLIAM FROST & ASSOCIATES
14725 ALTON PARKWAY
IRVINE, CA 92618

The State of California or its officers or agents shall not be responsible for the accuracy or completeness of electronic copies of this plan sheet.

AS-CONSTRUCTED PLANS

The Caltrans AS-BUILT PLANS were compared to the Field Memorandums issued by RBF to the Resident Engineer.

The changes reflected in these AS-CONSTRUCTED PLANS were obtained by conducting a review of the site by RBF field surveyors in June of 2000. The field survey was limited to the discrepancies between the Caltrans AS-BUILT PLANS and RBF Field Memorandums and review of the accessible Invert elevations of drainage structures.

RBF is not responsible for the accuracy or completeness of electronic copies of this plan sheet.

Date of AS-CONSTRUCTED PLANS preparation. June 2000

D_2	H_b	L
675 mm OR LESS	0.9 m	1.2 m
750 mm TO 975 mm INCLUSIVE	1.2 m	1.2 m

EXCEPTIONS TO BE NOTED ON PLANS.

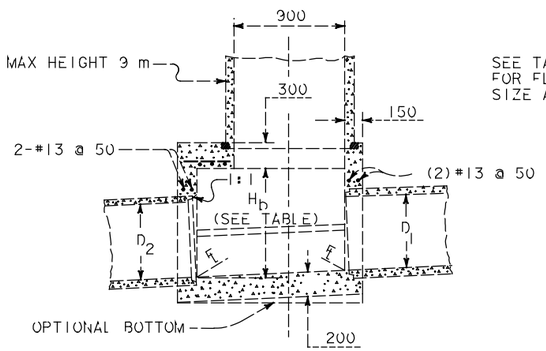

SECTION G-G

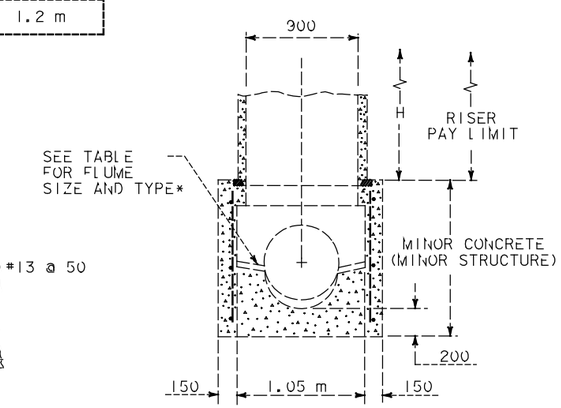

SECTION F-F

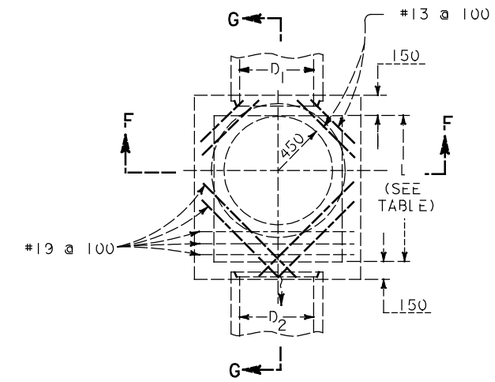

PLAN

FOR USE WHEN D_2 (OUTLET PIPE Dia) IS 975 mm OR LESS

STORM DRAIN & MANHOLE STRUCTURE (TYPE X BASE)

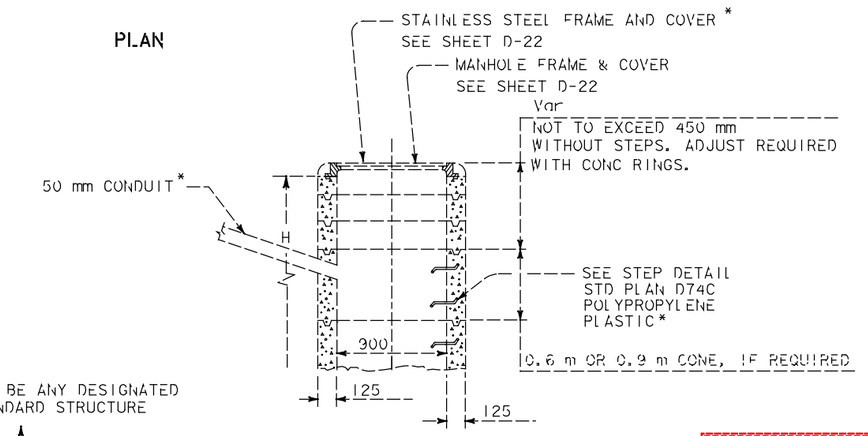

FOR USE WITH EITHER TYPE X OR TYPE Y BASE STRUCTURES

UPPER STRUCTURE

TYPE MH

AS-BUILT PLANS
CONTRACT NO. 11-233504
DATE COMPLETED 6-30-99
REV. D. JUAREZ

NOTES:

1. RISERS MAY BE MADE UP OF 150 mm, 200 mm, 450 mm, 600 mm, OR 1200 mm SECTIONS.
2. EACH RISER SHALL HAVE A LADDER, AS DETAILED ON STANDARD PLAN D74C. THE LADDER SHALL BE SUSPENDED INTO BASE STRUCTURE.
3. ALL PRECAST COMPONENTS FOR UPPER PORTION TYPE MH SHALL BE REINFORCED WITH 6 mm DIAMETER STEEL WOUND SPIRALLY @ 100 mm CENTERS.
4. H AND Hb SHALL BE AS SPECIFIED ON PLANS.
5. REINFORCING STEEL SHALL BE #13 BARS @ 450 mm CENTERS PLACED 40 mm CLEAR TO INSIDE OF BOX UNLESS OTHERWISE SHOWN.
6. PIPE(S) MAY BE PLACED IN ANY WALL.
7. DESIGN UNIT STRESSES: F_s = 140 MPa, n= 10, F_c = 10 MPa.
8. CENTER OF RISER SHALL BE LOCATED OVER THE CENTERLINE OF MAIN STORM DRAIN.
9. THICKNESS OF DECK SHALL VARY WHEN NECESSARY TO PROVIDE LEVEL MANHOLE SEAT.

* INSTALLED AT WATER QUALITY MONITORING MANHOLE LOCATIONS ONLY.

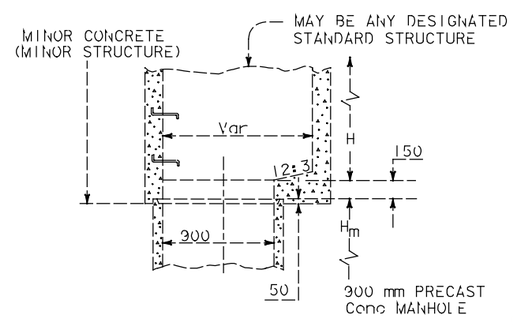

UPPER STRUCTURE

TYPICAL UPPER STRUCTURE AND MANHOLE JUNCTION

WATER QUALITY MONITORING MANHOLE LOCATIONS AND FLUME REQUIREMENT

L	SYSTEM	UNIT	DESCRIPTION	FLUME
1.22m	30	~~d~~	OUTFLOW	600 mm PALMER BOWLUS
	~~31~~	~~d~~	~~INFLOW~~	~~600 mm PALMER BOWLUS~~
	~~40~~	~~e~~	~~INFLOW~~	~~750 mm PALMER BOWLUS~~
1.52m	41	e	OUTFLOW	750 mm PALMER BOWLUS

ELIMINATE FLUME AT LOCATION SHOWN

STRUCTURES ARE WATER QUALITY MONITORING MANHOLES. FLUMES NOT REQUIRED AT THESE LOCATIONS.

ALL DIMENSIONS ARE IN MILLIMETERS UNLESS OTHERWISE SHOWN

NO SCALE

DRAINAGE DETAILS

D-15

STATE OF CALIFORNIA - DEPARTMENT OF TRANSPORTATION
Caltrans
NPDES
DESIGN OVERSIGHT CHRISTIAN HERENCIA
CALCULATED/DESIGNED BY AMW | DATE 4/98 | REVISED BY
CHECKED BY SMT | 4/98 | DATE REVISED

FOR REDUCED PLANS ORIGINAL SCALE IN MILLIMETERS 0 20 40 60 80
USERNAME => $USER
DGN FILE => $REQUEST
CU 11332
EA 233501
LAST REVISION 05-08-98 DATE PLOTTED => $DATE TIME PLOTTED => $TIME
$DATE $TIME $FILE

DIST	COUNTY	ROUTE	KILOMETER POST TOTAL PROJECT	SHEET NO.	TOTAL SHEETS
11	SD	5,15	Var	22	41

REGISTERED CIVIL ENGINEER DATE

5-25-98
PLANS APPROVAL DATE

REGISTERED PROFESSIONAL ENGINEER A. M. WALKER No. 57716 Exp. 12-31-01 CIVIL STATE OF CALIFORNIA

ROBERT BEIN, WILLIAM FROST & ASSOCIATES
14725 ALTON PARKWAY
IRVINE, CA 92618

The State of California or its officers or agents shall not be responsible for the accuracy or completeness of electronic copies of this plan sheet.

Caltrans Metric

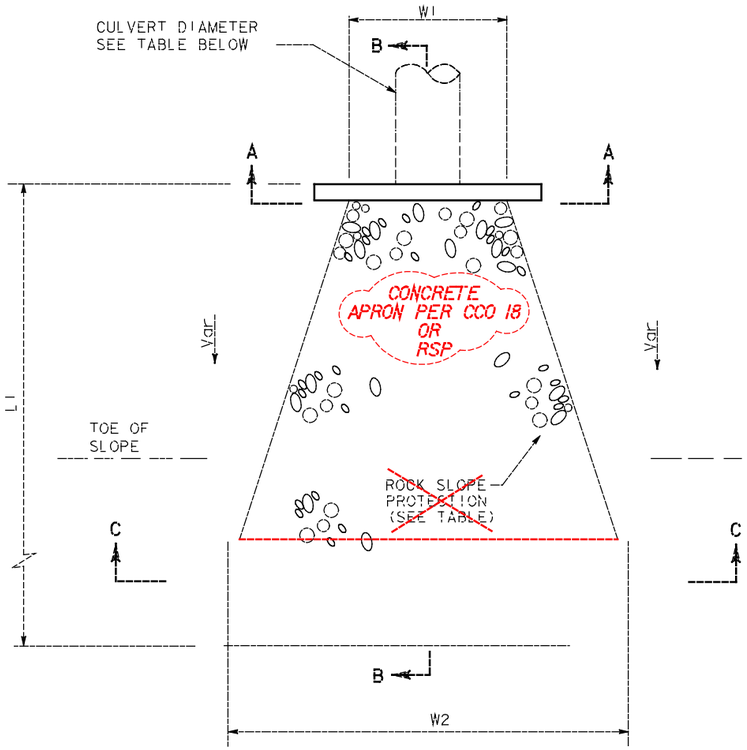

PLAN

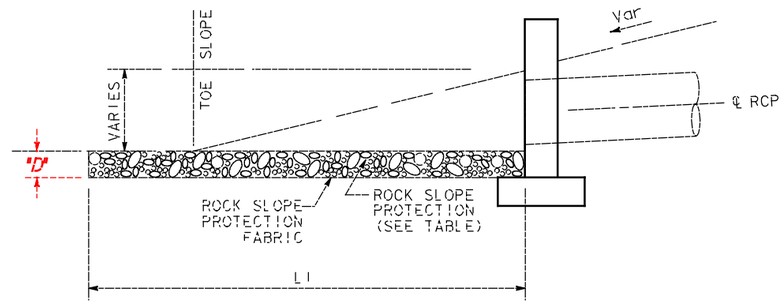

SECTION B-B

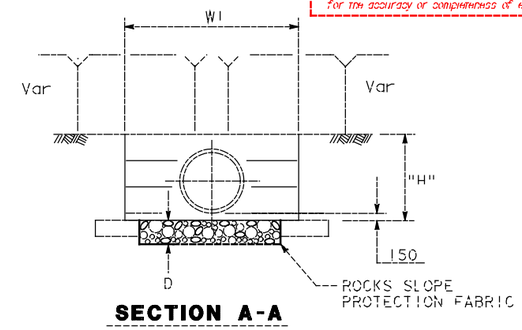

SECTION A-A

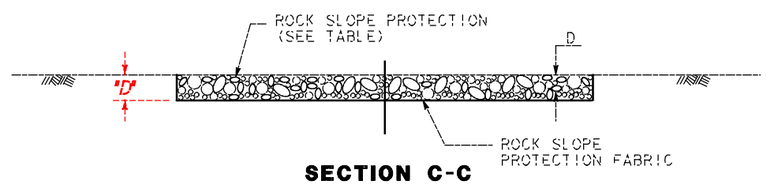

SECTION C-C

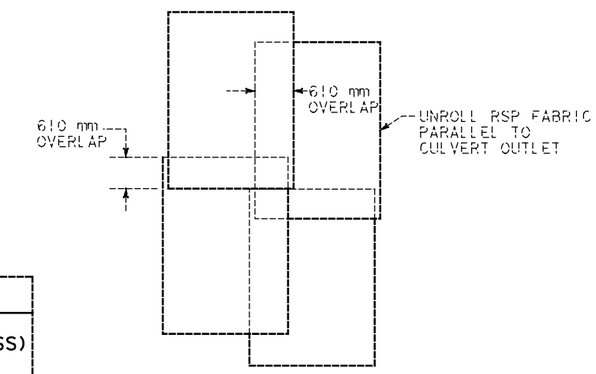

FILTER FABRIC OVERLAP

NOTE:
FILTER FABRIC TO BE PLACED UNDER ALL ROCK SLOPE PROTECTION PER FILTER FABRIC OVERLAP DETAIL.

CONCRETE APRON OR

ROCK SLOPE PROTECTION (METHOD B)

SYSTEM	UNIT	CULVERT DIAMETER	WIDTH "W1"	WIDTH "W2"	LENGTH "L1"	TYPE	(THICKNESS) "D"
30	a	DITCH	3.3 m	3.3 m	2 m	1/4 TONNE	1.0 m
31	a	600	4 m	4 m	4 m	1/4 TONNE	1.5 m
31	1	N/A	SEE D-18	SEE D-18	30 m	FACING	SEE D-18
40	a	750	2.6 ~~3~~ m	6.5 ~~10~~ m	11 ~~8~~ m	~~FACING~~	0.1m ~~CONCRETED~~
~~50~~	~~a~~	~~600~~	~~SEE D-21~~	~~SEE D-21~~	~~SEE D-21~~	~~1/4 TONNE~~	~~900~~

CONCRETE APRON PER CCO 18

RSP ELIMINATED PER QUANTITY ADJUSTMENT

ROCK SLOPE PROTECTION

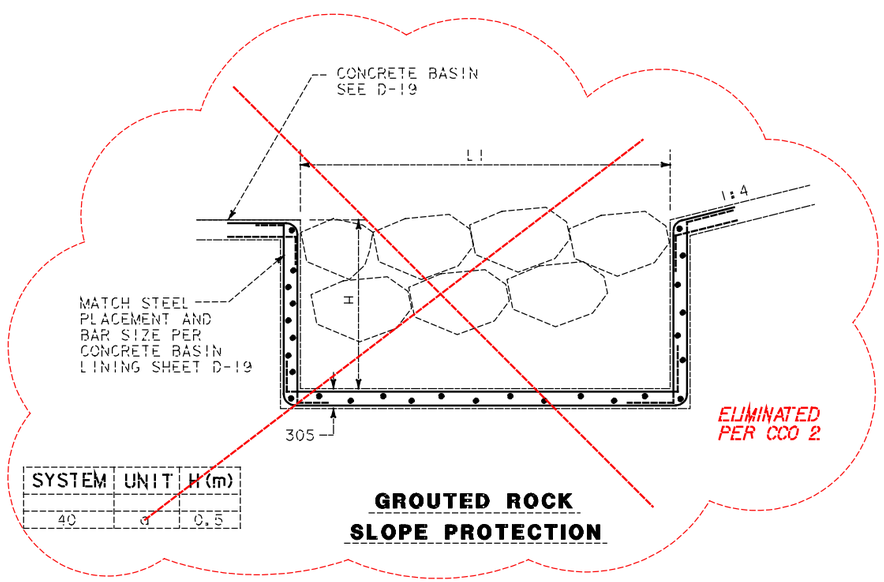

SYSTEM	UNIT	H(m)
40	a	0.5

GROUTED ROCK SLOPE PROTECTION

ALL DIMENSIONS ARE IN MILLIMETERS UNLESS OTHERWISE SHOWN

AS-CONSTRUCTED PLANS

The Caltrans AS-BUILT PLANS were compared to the Field Memorandums Issued by RBF to the Resident Engineer.

The changes reflected in these AS-CONSTRUCTED PLANS were obtained by conducting a review of the site by RBF field surveyors in June of 2000. The field survey was limited to the discrepancies between the Caltrans AS-BUILT PLANS and RBF Field Memorandums and review of the accessible invert elevations of drainage structures.

RBF is not responsible for the accuracy or completeness of electronic copies of this plan sheet.

Date of AS-CONSTRUCTED PLANS preparation. June 2000

AS-BUILT PLANS
CONTRACT NO. 11-233504
DATE COMPLETED 8-30-99
RE: D. JUAREZ

DRAINAGE DETAILS

NO SCALE

D-16

DATE	REVISED BY	DATE	REVISED
4/98	AMW	4/98	SMT

CALCULATED/DESIGNED BY AMW CHECKED BY SMT

DESIGN OVERSIGHT CHRISTIAN HERENCIA

NPDES

STATE OF CALIFORNIA - DEPARTMENT OF TRANSPORTATION

Caltrans

$DATE $TIME $FILE

LAST REVISION 05-09-98 DATE PLOTTED => $DATE TIME PLOTTED => $TIME

FOR REDUCED PLANS ORIGINAL SCALE IN MILLIMETERS 0 20 40 60 80

USERNAME => $USER DGN FILE => $REQUEST

CU 11332 EA 233501

DIST	COUNTY	ROUTE	KILOMETER POST TOTAL PROJECT	SHEET NO.	TOTAL SHEETS
11	SD	5,15	Var	23	41

REGISTERED CIVIL ENGINEER DATE

5-25-98

PLANS APPROVAL

REGISTERED PROFESSIONAL ENGINEER A. M. WALKER No. 57716 EXP. 12-31-01 CIVIL STATE OF CALIFORNIA

ROBERT BEIN, WILLIAM FROST & ASSOCIATES
14725 ALTON PARKWAY
IRVINE, CA 92618

The State of California or its officers or agents shall not be responsible for the accuracy or completeness of electronic copies of this plan sheet.

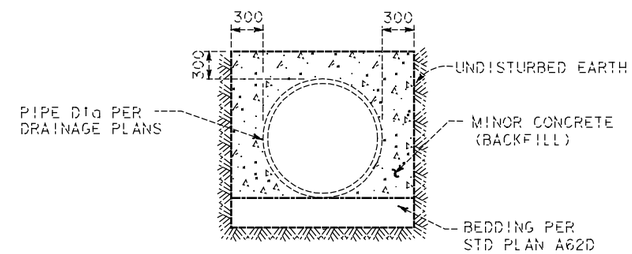

MINOR CONCRETE (BACKFILL) DETAIL

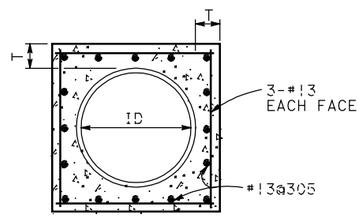

SECTION A-A

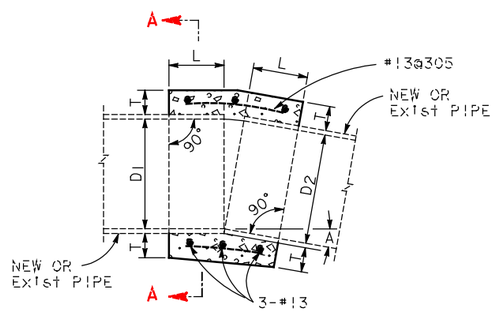

D	L	T
300	300	125
450	300	135
600	300	150
750	300	200
900	450	200
1200	450	250
1300	450	250
1500	525	280
1650	525	280
1800	600	300

CONCRETE COLLAR

NOTES (CONCRETE COLLAR)

1. WHERE PIPES OF DIFFERENT DIAMETER ARE JOIN WITH A CONCRETE COLLAR, D SHALL BE THE DIAMETER OF THE LARGER PIPE.
2. FOR PIPE SIZE NOT LISTED, USE NEXT SIZE LARGER.
3. OMIT REINFORCING ON PIPES 600mm AND LESS IN DIAMETER AND ON ALL PIPES WHERE ANGLE A IS LESS THAN 10°
4. REINFORCEMENT SHALL BE PLACED 40mm CLEAR FROM OUTSIDE DIAMETER OF PIPE.

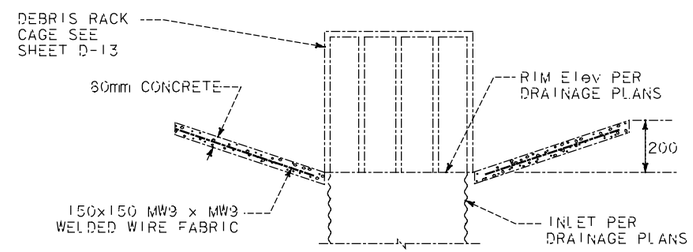

SECTION B-B

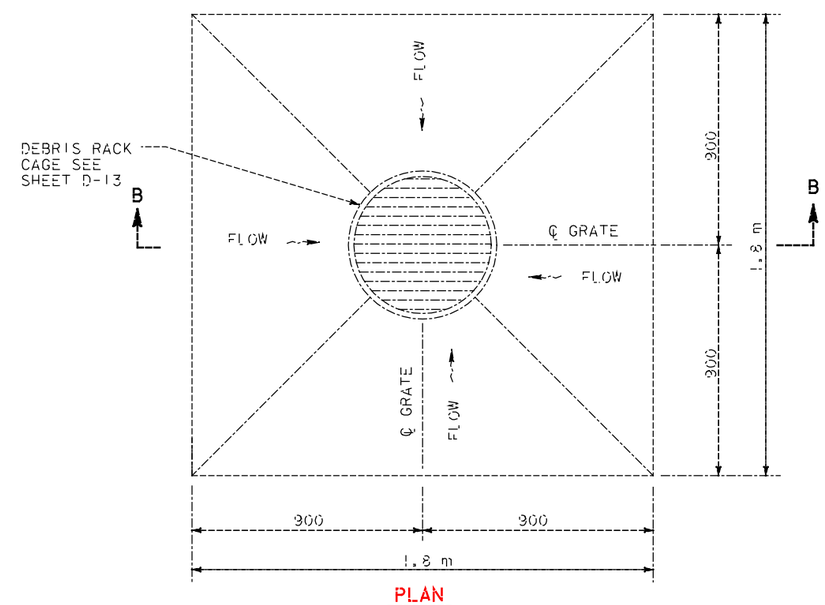

PLAN

DEPRESSED APRON

ALL DIMENSIONS ARE IN MILLIMETERS UNLESS OTHERWISE SHOWN

AS-CONSTRUCTED PLANS

The Caltrans AS-BUILT PLANS were compared to the Field Memorandums Issued by RBF to the Resident Engineer.

The changes reflected in these AS-CONSTRUCTED PLANS were obtained by conducting a review of the site by RBF field surveyors in June of 2000. The field survey was limited to the discrepancies between the Caltrans AS-BUILT PLANS and RBF Field Memorandums and review of the accessible invert elevations of drainage structures.

RBF is not responsible for the accuracy or completeness of electronic copies of this plan sheet.

Date of AS-CONSTRUCTED PLANS preparation, June 2000

AS-BUILT PLANS
CONTRACT NO. 11-233504
DATE COMPLETED 6-30-99
RE: D. JUAREZ

DRAINAGE DETAILS

NO SCALE

D-17

DESIGN OVERSIGHT: CHRISTIAN HERENCIA

CALCULATED/DESIGNED BY: AMW — DATE 4/98 — REVISED BY
CHECKED BY: SMT — 4/98 — DATE REVISED

STATE OF CALIFORNIA - DEPARTMENT OF TRANSPORTATION
Caltrans
NPDES

LAST REVISION 05-09-98 — DATE PLOTTED => $DATE — TIME PLOTTED => $TIME

FOR REDUCED PLANS ORIGINAL SCALE IN MILLIMETERS 0 20 40 60 80

USERNAME => $USER
DGN FILE => $REQUEST

CU 11332 | EA 233501

DIST	COUNTY	ROUTE	KILOMETER POST TOTAL PROJECT	SHEET NO.	TOTAL SHEETS
11	SD	5,15	Var	24	41

REGISTERED CIVIL ENGINEER

5-25-98
PLANS APPROVAL DATE

REGISTERED PROFESSIONAL ENGINEER A.M. WALKER No. 57716 Exp. 12-31-01 CIVIL STATE OF CALIFORNIA

ROBERT BEIN, WILLIAM FROST & ASSOCIATES
14725 ALTON PARKWAY
IRVINE, CA 92618

The State of California or its officers or agents shall not be responsible for the accuracy or completeness of electronic copies of this plan sheet.

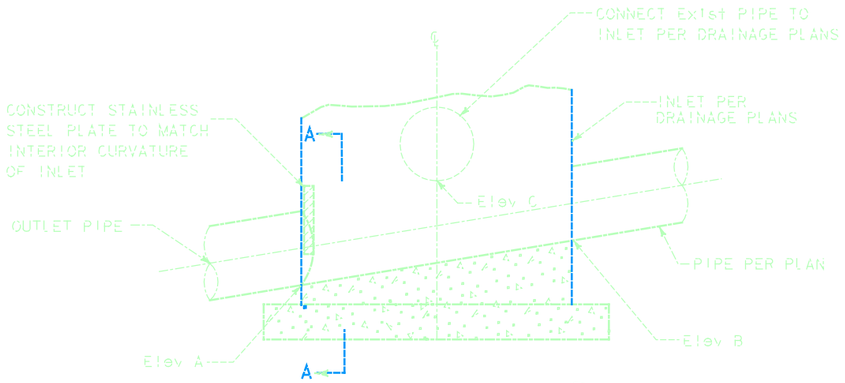

SYSTEM	UNIT	Elev A mm	Elev B mm	Elev C mm	H
50	k	2.550	2.570	2.930	204
50	r	4.000	N/A	4.510	183

FLOW RESTRICTION PLATE

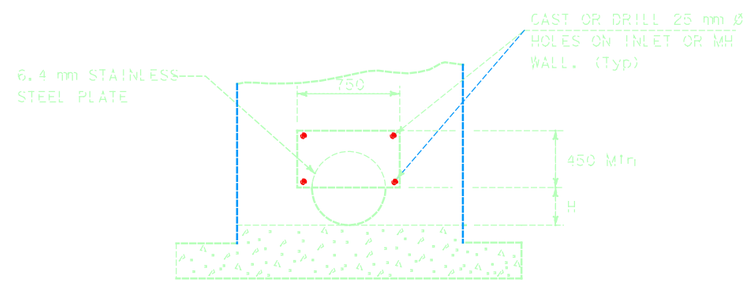

SECTION A-A

AS-CONSTRUCTED PLANS

The Caltrans AS-BUILT PLANS were compared to the Field Memorandums Issued by RBF to the Resident Engineer.

The changes reflected in these AS-CONSTRUCTED PLANS were obtained by conducting a review of the site by RBF field surveyors in June of 2000. The field survey was limited to the discrepancies between the Caltrans AS-BUILT PLANS and RBF Field Memorandums and review of the accessible invert elevations of drainage structures.

RBF is not responsible for the accuracy or completeness of electronic copies of this plan sheet.

Date of AS-CONSTRUCTED PLANS preparation. June 2000

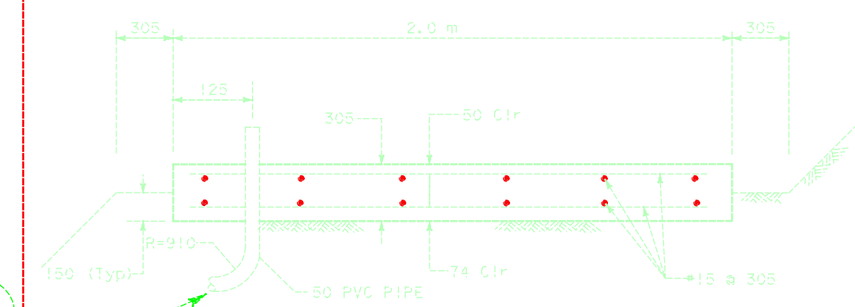

SCH 40 PVC CONDUIT FROM CONC.PAD TO WATER QUALITY MONITORING MANHOLES

2 x 2 CONCRETE PAD

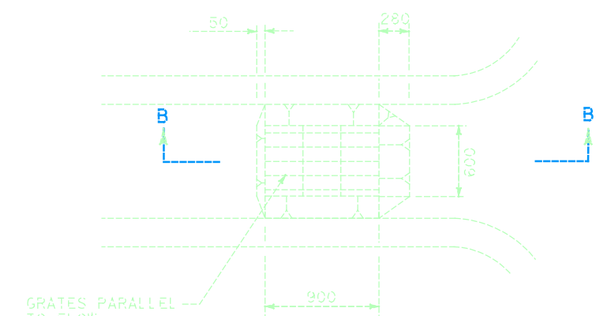

PLAN

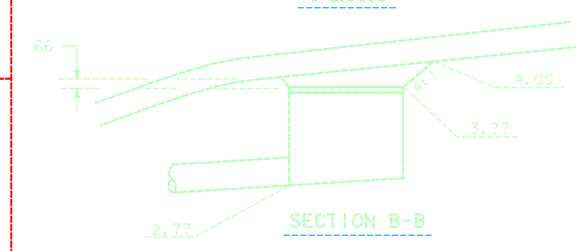

SECTION B-B

G1 INLET
WITHIN AC OVERSIDE DRAIN

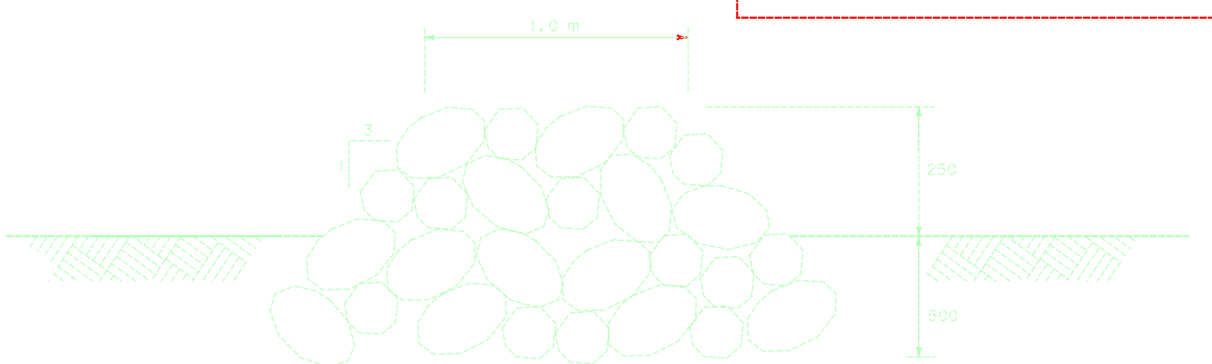

RSP (FACING, METHOD B)
DEFLECTION BERM

AS-BUILT PLANS
CONTRACT NO. 11-233504
DATE COMPLETED 6-30-99
RE: D. JUAREZ

DRAINAGE DETAILS

NO SCALE

D-18

ALL DIMENSIONS ARE IN MILLIMETERS UNLESS OTHERWISE SHOWN

STATE OF CALIFORNIA - DEPARTMENT OF TRANSPORTATION
Caltrans
NPDES
DESIGN OVERSIGHT CHRISTIAN HERENCIA
CALCULATED/DESIGNED BY AMW DATE 4/98 REVISED BY
CHECKED BY SMT 4/98 DATE REVISED

FOR REDUCED PLANS ORIGINAL SCALE IN MILLIMETERS 0 20 40 60 80
USERNAME => $USER
DGN FILE => $REQUEST
CU 11332
EA 233501
DATE PLOTTED => $DATE
TIME PLOTTED => $TIME

DIST	COUNTY	ROUTE	KILOMETER POST TOTAL PROJECT	SHEET NO.	TOTAL SHEETS
11	SD	5, 15	Var	25	41

REGISTERED CIVIL ENGINEER

5-25-98
PLANS APPROVAL DATE

REGISTERED PROFESSIONAL ENGINEER — MIKE CHESNEY — No. 48913 — Exp. 9-30-00 — CIVIL — STATE OF CALIFORNIA

ROBERT BEIN, WILLIAM FROST & ASSOCIATES
14725 ALTON PARKWAY
IRVINE, CA 92618

The State of California or its officers or agents shall not be responsible for the accuracy or completeness of electronic copies of this plan sheet.

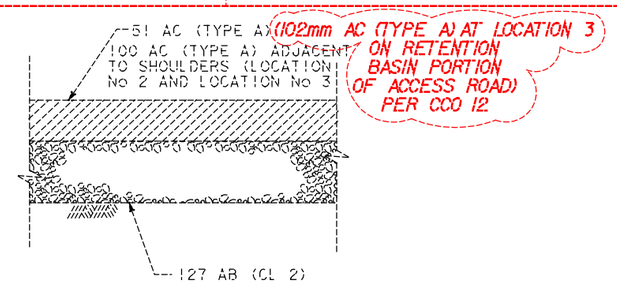

ASPHALT PAVING DETAIL

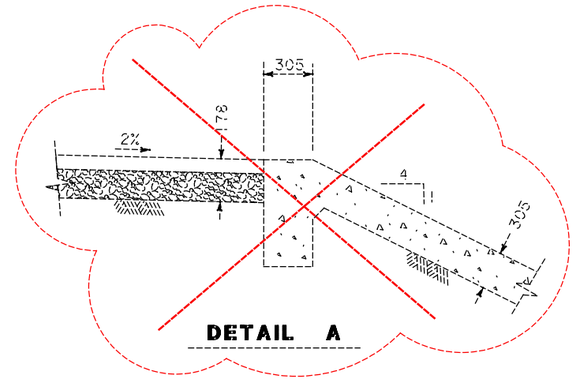

DETAIL A

ELIMINATED PER CCO 2

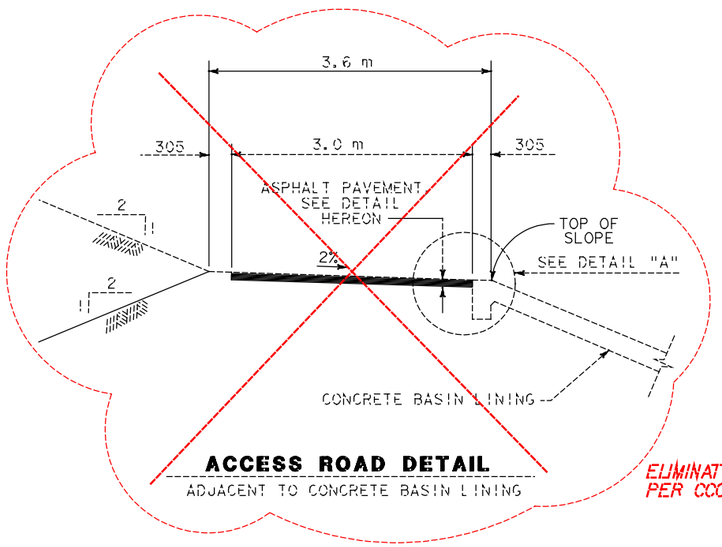

ACCESS ROAD DETAIL

ADJACENT TO CONCRETE BASIN LINING

ELIMINATED PER CCO 2

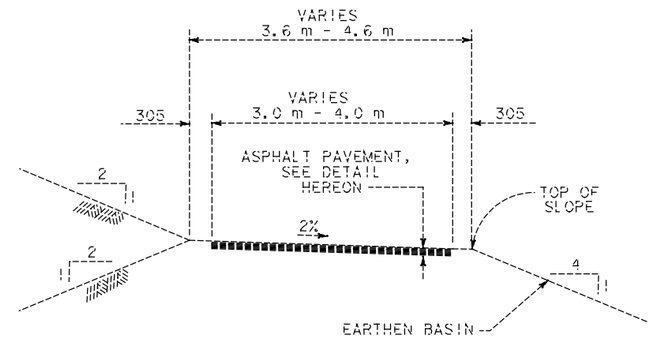

ACCESS ROAD DETAIL

ADJACENT TO EARTHEN BASIN

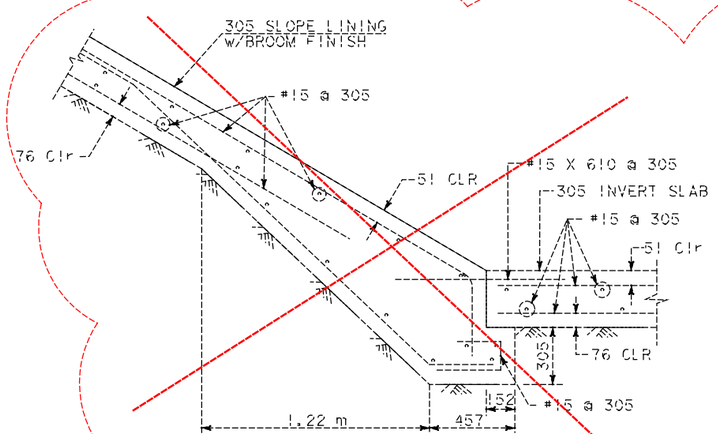

CONCRETE BASIN INVERT LINING

ELIMINATED PER CCO 2

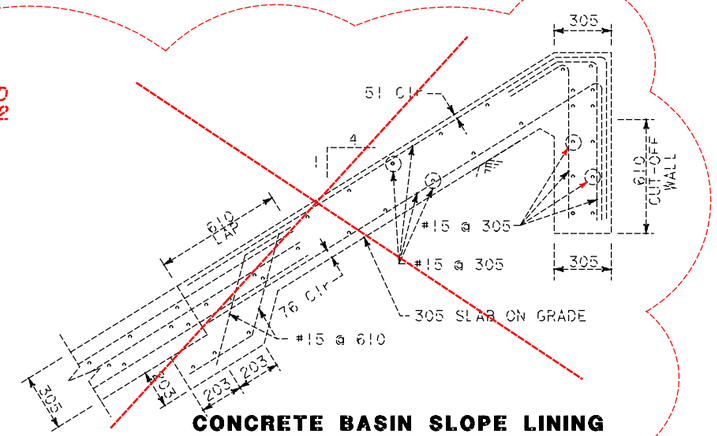

CONCRETE BASIN SLOPE LINING

AS-CONSTRUCTED PLANS

The Caltrans AS-BUILT PLANS were compared to the Field Memorandums issued by RBF to the Resident Engineer.

The changes reflected in these AS-CONSTRUCTED PLANS were obtained by conducting a review of the site by RBF field surveyors in June of 2000. The field survey was limited to the discrepancies between the Caltrans AS-BUILT PLANS and RBF Field Memorandums and review of the accessible invert elevations of drainage structures.

RBF is not responsible for the accuracy or completeness of electronic copies of this plan sheet.

Date of AS-CONSTRUCTED PLANS preparation. June 2000

AS-BUILT PLANS
CONTRACT NO. 11-233504
DATE COMPLETED 6-30-99
RE: D. JUAREZ

ALL DIMENSIONS ARE IN MILLIMETERS UNLESSOTHERWISE SHOWN

DRAINAGE DETAILS

NO SCALE

D-19

STATE OF CALIFORNIA - DEPARTMENT OF TRANSPORTATION
Caltrans
NPDES
DESIGN OVERSIGHT
CHRISTIAN HERENCIA
CALCULATED/DESIGNED BY MC
CHECKED BY SMT
DATE 4/98
DATE 4/98
REVISED BY
DATE REVISED

FOR REDUCED PLANS ORIGINAL SCALE IN MILLIMETERS 0 20 40 60 80
USERNAME => $USER
DGN FILE => $REQUEST
CU 11332
EA 233501
DATE PLOTTED => $DATE
TIME PLOTTED => $TIME
$DATE$ $TIME$ $FILE$

DIST	COUNTY	ROUTE	KILOMETER POST TOTAL PROJECT	SHEET NO.	TOTAL SHEETS
11	SD	5,15	Var	28	41

REGISTERED CIVIL ENGINEER DATE

5-25-98
PLANS APPROVAL DATE

REGISTERED PROFESSIONAL ENGINEER A. M. WALKER No. 57716 Exp. 12-31-01 CIVIL STATE OF CALIFORNIA

ROBERT BEIN, WILLIAM FROST & ASSOCIATES
14725 ALTON PARKWAY
IRVINE, CA 92618

The State of California or its officers or agents shall not be responsible for the accuracy or completeness of electronic copies of this plan sheet.

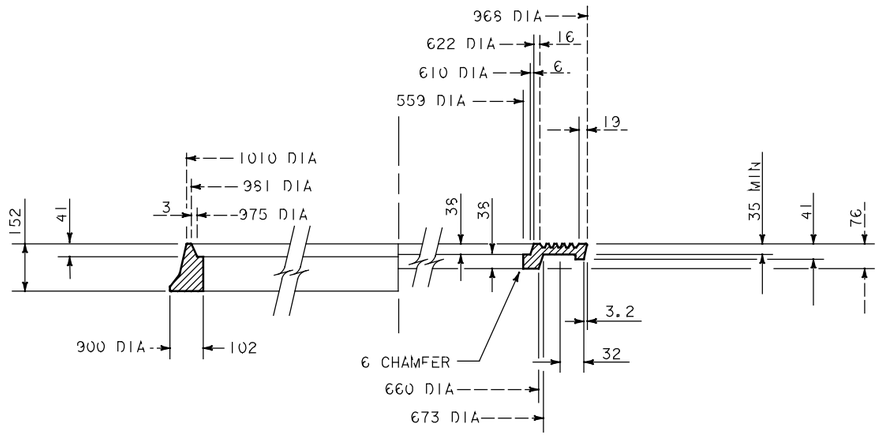

HALF SECTION FRAME AND COVER *

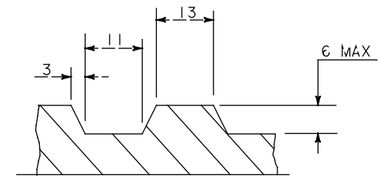

DETAIL A

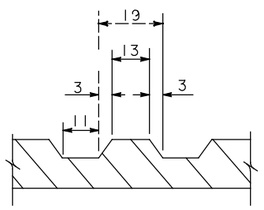

DETAIL B

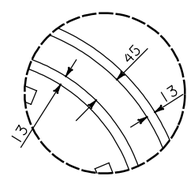

DETAIL C

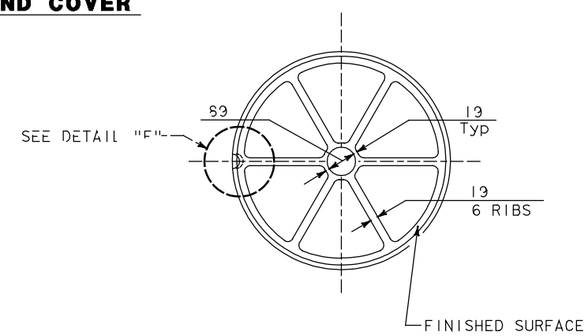

DETAIL E

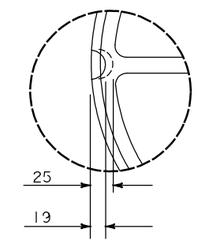

DETAIL F

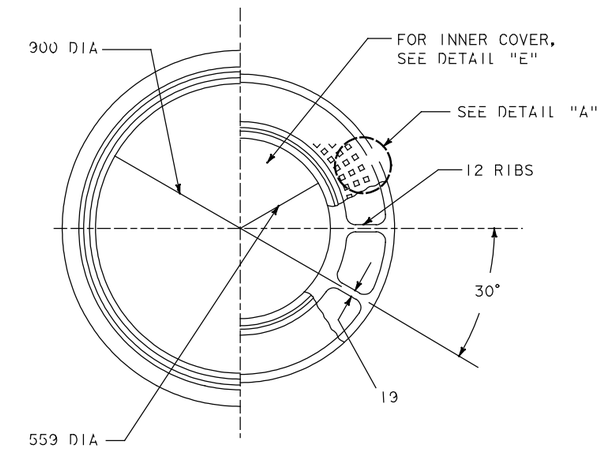

HALF PLAN FRAME AND COVER *

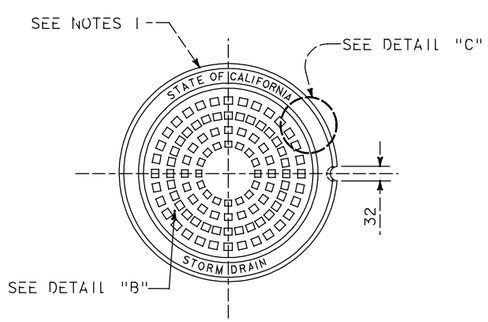

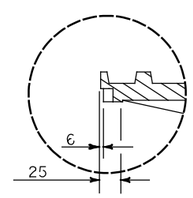

DETAIL D

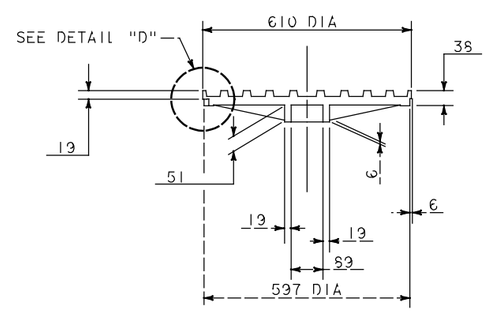

900MM MANHOLE FRAME AND TWO CONCENTRIC COVERS *

NOTE:

1. COVER SHALL BE MARKED "STATE OF CALIFORNIA" AND "STORM DRAIN" FOR FRAME AND COVER.

* STAINLESS STEEL AT WATER QUALITY MONITOR MH LOCATIONS SEE SHEET D-15

AS-CONSTRUCTED PLANS

The Caltrans AS-BUILT PLANS were compared to the Field Memorandums issued by RBF to the Resident Engineer.

The changes reflected in these AS-CONSTRUCTED PLANS were obtained by conducting a review of the site by RBF field surveyors in June of 2000. The field survey was limited to the discrepancies between the Caltrans AS-BUILT PLANS and RBF Field Memorandums and review of the accessible Invert elevations of drainage structures.

RBF is not responsible for the accuracy or completeness of electronic copies of this plan sheet.

Date of AS-CONSTRUCTED PLANS preparation. June 2000

AS-BUILT PLANS
CONTRACT NO. 11-233504
DATE COMPLETED 6-30-99
RE: D. JUAREZ

ALL DIMENSIONS ARE IN MILLIMETERS
UNLESS OTHERWISE SHOWN

NO SCALE

DRAINAGE DETAILS

D-22

DESIGN OVERSIGHT CHRISTIAN HERENCIA
CALCULATED/DESIGNED BY AMW DATE 4/98 REVISED BY
CHECKED BY SMT 4/98 DATE REVISED
STATE OF CALIFORNIA - DEPARTMENT OF TRANSPORTATION
Caltrans NPDES
$DATE$ $TIME$ $FILE$

FOR REDUCED PLANS ORIGINAL SCALE IN MILLIMETERS 0 20 40 60 80
USERNAME => $USER
DGN FILE => $REQUEST
CU 11332
EA 233501
LAST REVISION 05-09-98
DATE PLOTTED => $DATE
TIME PLOTTED => $TIME

DIST	COUNTY	ROUTE	KILOMETER POST TOTAL PROJECT	SHEET NO.	TOTAL SHEETS
11	SD	5, 15	Var	29	41

REGISTERED CIVIL ENGINEER DATE

5-25-99
PLANS APPROVAL DATE

REGISTERED PROFESSIONAL ENGINEER
MIKE CHESNEY
No. 48913
Exp. 9-30-00
CIVIL
STATE OF CALIFORNIA

ROBERT BEIN, WILLIAM FROST & ASSOCIATES
14725 ALTON PARKWAY
IRVINE, CA 92618

The State of California or its officers or agents shall not be responsible for the accuracy or completeness of electronic copies of this plan sheet.

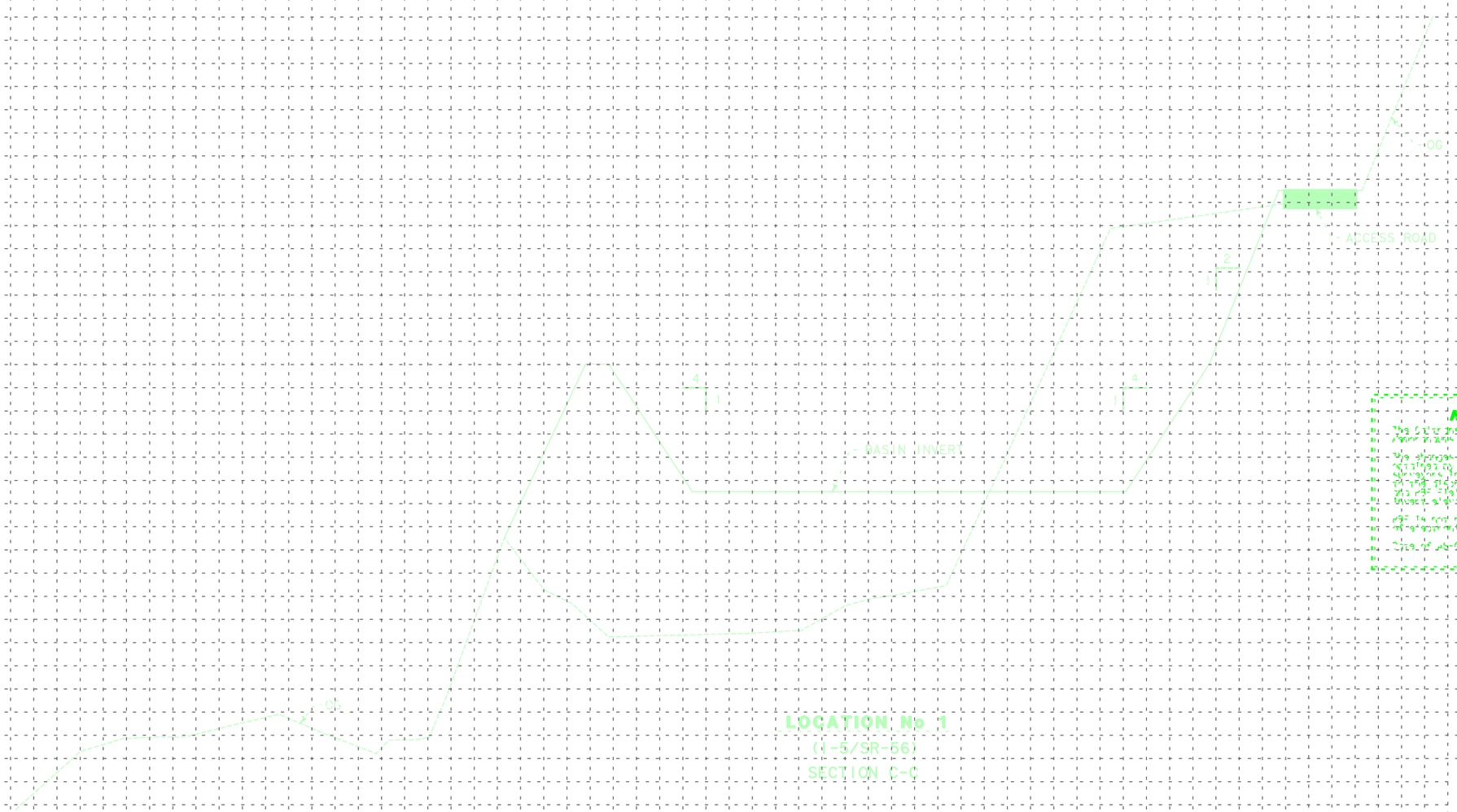

AS-CONSTRUCTED PLANS

The contractor's as-built plans have been prepared in the field under his direction based on the contractor's redline.

The drainage facilities are shown as constructed in accordance with information provided by the field survey as noted. The field survey is dated 5/25/99. The field survey was performed by the contractor's surveyor. The contractor's as-built plans are based on the contractor's redline and field survey information provided to the designer.

The contractor's redline and field survey information has been reviewed for reasonableness and consistency with the intent of the design.

The as-constructed data is subject to the usual errors.

AS-BUILT PLANS

CONTRACTOR
DATE COMPLETED
FIELD ENGINEER

ALL DIMENSIONS ARE IN METERS UNLESS OTHERWISE SHOWN

DRAINAGE CROSS SECTIONS

SCALE: Horiz 1:100
Vert 1:20

D-23

DATE	REVISED BY	DATE	REVISED BY
4/98			
4/98			

CALCULATED/DESIGNED BY: CRG
CHECKED BY: MC

DESIGN OVERSIGHT: CHRISTIAN HERENCIA

STATE OF CALIFORNIA - DEPARTMENT OF TRANSPORTATION
Caltrans
NPDES

Station
Exc
Emb

FOR REDUCED PLANS ORIGINAL SCALE IN MILLIMETERS 0 20 40 60 80

USERNAME = RUSER
DGN FILE = SPEC1UST

CU 11332
EA 23350!

DIST	COUNTY	ROUTE	KILOMETER POST TOTAL PROJECT	SHEET NO.	TOTAL SHEETS
11	SD	5,15	Var	32	41

REGISTERED CIVIL ENGINEER DATE

5-25-98

PLANS APPROVAL DATE

REGISTERED PROFESSIONAL ENGINEER A.M. WALKER No. 57716 Exp. 12-31-01 CIVIL STATE OF CALIFORNIA

ROBERT BEIN, WILLIAM FROST & ASSOCIATES
14725 ALTON PARKWAY
IRVINE, CA 92618

The State of California or its officers or agents shall not be responsible for the accuracy or completeness of electronic copies of this plan sheet.

AS-CONSTRUCTED PLANS

The Caltrans AS-BUILT PLANS were compared to the Field Memorandums issued by RBF to the Resident Engineer.

The changes reflected in these AS-CONSTRUCTED PLANS were obtained by conducting a review of the site by RBF field surveyors in June of 2000. The field survey was limited to the discrepancies between the Caltrans AS-BUILT PLANS and RBF Field Memorandums and review of the accessible Invert elevations of drainage structures.

RBF is not responsible for the accuracy or completeness of electronic copies of this plan sheet.

Date of AS-CONSTRUCTED PLANS preparation. June 2000

Caltrans Metric

DRAINAGE SYSTEM No	DRAINAGE UNIT	REMOVE HEADWALL (EA)	REMOVE CULVERT (m)	CONCRETE BACKFILL (m³)	CONCRETE (BASIN LINING) (m³)	MINOR CONCRETE (MINOR STRUCTURE) (m³)	MINOR CONCRETE (MISC CONSTRUCTION) (m³)		MISC IRON AND STEEL (kg)	STAINLESS STEEL WIRE FABRIC (m²)	FRAMES, GRATES AND COVERS (N): MH FRAME AND COVER (EA)	DEBRIS RACK CAGE (STAINLESS STEEL) (EA)	TYPE 600-12 (EA)	CHECKERED PL (STAINLESS STEEL) (EA)	MH FRAME & COVER (STAINLESS STEEL) (EA)		RSP: 1/4 TON, METHOD B (m³)	FACING, METHOD B (m²)	CONCRETE LIGHT, METHOD B (m²)	FABRIC (m²)	CONCRETE (CONCRETED RSP) (m³)	ABANDON CULVERT (m)			TYPE V RCP: 450 mm (m)	600 mm (m)	750 mm (m)	900 mm PRECAST CONCRETE PIPE RISER (m)			ALUMINIZED CSP: 450 mm (m)		900 mm INLET (m)	1200 mm INLET (m)		PIPE JOINT CLASSIFICATION	CANAL GATE (STAINLESS STEEL) (EA)			HEIGHT OF INLET "H" (m)	MAXIMUM COVER (m)	DESCRIPTION	LOCATION	DRAINAGE PLAN SHEET No	DRAINAGE SYSTEM No	DRAINAGE UNIT
30	a																5																											RSP		1	30	a
	b					~~0.5~~	~~000~~	2																																			SPILLWAY TRANSITION	N584795.7689/E1907281.1807			b
	c																								12.6										S						2.5	600 mm RCP				c
	d					2.53			475						1												0.60												0.60		WQM MH, Hb=1.2	N584806.1143/E1907289.4993			d
	e																								11.3										S						2.5	600 mm RCP				e
	f					~~5.3~~ 2	~~1.06~~		215	1		1																			0.6			2.0			1			1.99		Mod GMP w/Mod Conc	N584815.7351/E1907297.2351			f
																																										APRON AND CANAL GATE				
31	a																13.7			16																							RSP		1	31	a
	b					0.9																																					SINGLE PIPE HEADWALL	N584811.3810/E1907322.3242			b
	c																								3.3										S						1.3	600 mm RCP				c
	d					~~2.3~~ 25			150						1												0.05												0.05		WQM MH, Hb=1.2	N584808.7931/E1907325.1679			d
	e																								6.3										S						1.7	600 mm RCP				e
	f					~~2.3~~ 206			150						1												1.10												1.1		MH	N584802.6312/E1907331.9388			f
	g																								3.8										S						1.7	600 mm RCP				g
	h					~~0.7~~ 14			148				1																										2.2		GI INLET	N584804.5036/E1907335.8168			h
	i			~~13~~ 165																																						REMOVE RCP				i
	j		1																																							REMOVE HEADWALL				j
	k																	73.1																									DEFLECTION BERM				k
SHEET TOTAL			1	~~13~~ 165		~~16.0~~ 11.41	1.06		1138	1		1	1		3		18.7	73.1		16					37.3		1.75				0.6			2.0			1					SHEET TOTAL				

(N) NOT A SEPARATE PAY ITEM - FOR INFORMATION ONLY

WQM - WATER QUALITY MANHOLE

WTJ - WATER TIGHT JOINT

AS-BUILT PLANS
CONTRACT NO. 11-233504
DATE COMPLETED 8-30-99
RE: D. JUAREZ

DRAINAGE QUANTITIES

D-26

DESIGN OVERSIGHT
CHRISTIAN HERENCIA

	DATE	REVISED BY
CALCULATED/DESIGNED BY	TJR 4/98	
CHECKED BY	AMW 4/98	DATE REVISED

STATE OF CALIFORNIA - DEPARTMENT OF TRANSPORTATION
NPDES

Caltrans

&DATES &TIMES &FILES

LAST REVISION 05-09-98
DATE PLOTTED => &DATE
TIME PLOTTED => &TIME

FOR REDUCED PLANS ORIGINAL SCALE IN MILLIMETERS 0 20 40 60 80

USERNAME => &USER
DGN FILE => &REQUEST

CU 11332 EA 233501

DIST	COUNTY	ROUTE	KILOMETER POST TOTAL PROJECT	SHEET NO.	TOTAL SHEETS
11	SD	5,15	Var	35	41

REGISTERED CIVIL ENGINEER

5-25-98
PLANS APPROVAL DATE

REGISTERED PROFESSIONAL ENGINEER
HILBERT W. DICKSON
No. 19417
Exp. 9-30-01
CIVIL
STATE OF CALIFORNIA

ROBERT BEIN, WILLIAM FROST & ASSOCIATES
14725 ALTON PARKWAY
IRVINE, CA 92618

The State of California or its officers or agents shall not be responsible for the accuracy or completeness of electronic copies of this plan sheet.

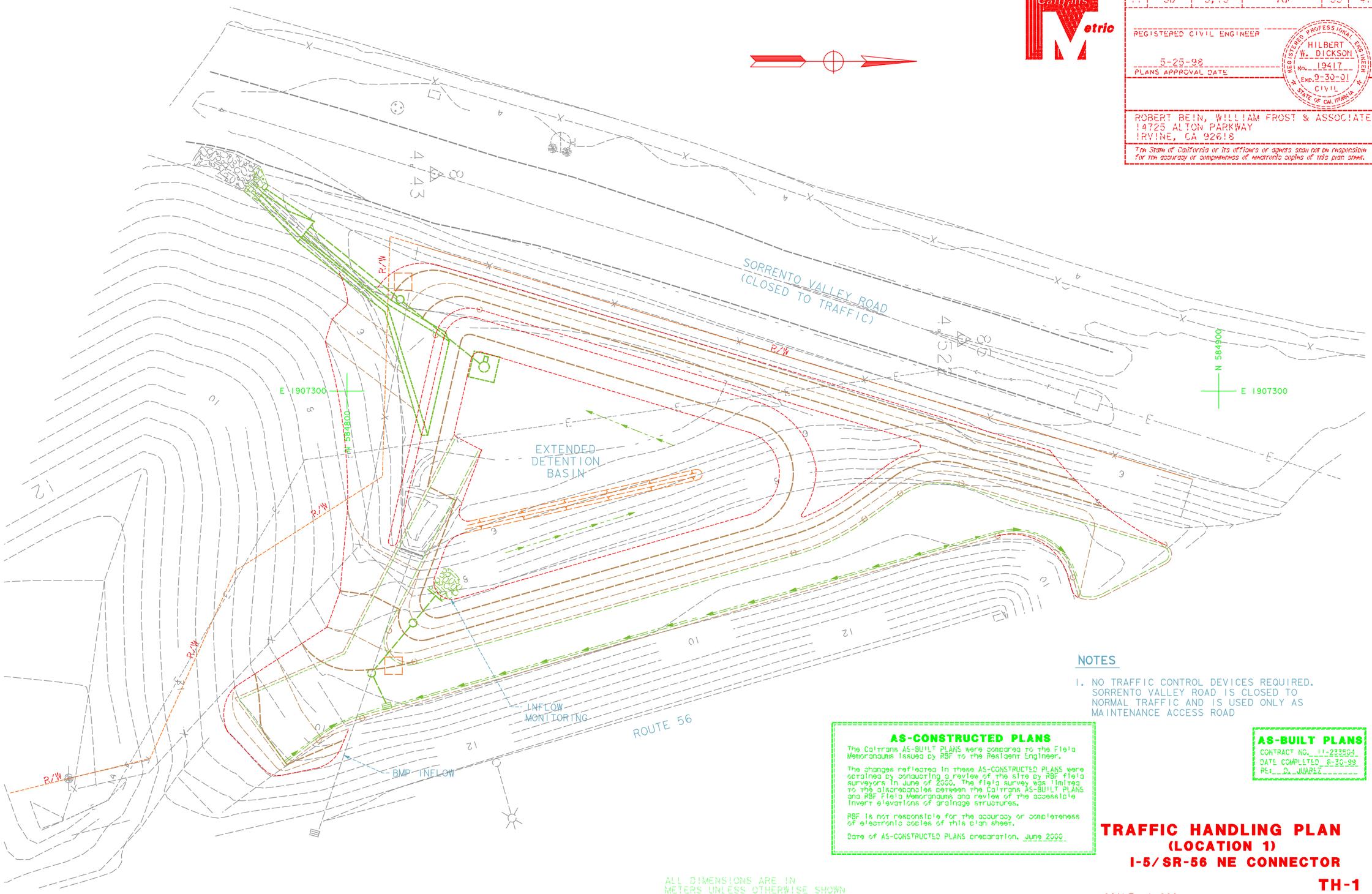

NOTES

1. NO TRAFFIC CONTROL DEVICES REQUIRED. SORRENTO VALLEY ROAD IS CLOSED TO NORMAL TRAFFIC AND IS USED ONLY AS MAINTENANCE ACCESS ROAD

AS-CONSTRUCTED PLANS

The Caltrans AS-BUILT PLANS were compared to the Field Memorandums issued by RBF to the Resident Engineer.

The changes reflected in these AS-CONSTRUCTED PLANS were obtained by conducting a review of the site by RBF field surveyors in June of 2000. The field survey was limited to the discrepancies between the Caltrans AS-BUILT PLANS and RBF Field Memorandums and review of the accessible Invert elevations of drainage structures.

RBF is not responsible for the accuracy or completeness of electronic copies of this plan sheet.

Date of AS-CONSTRUCTED PLANS preparation. June 2000

AS-BUILT PLANS
CONTRACT NO. 11-233504
DATE COMPLETED 8-30-99
REF: D. JUAREZ

TRAFFIC HANDLING PLAN
(LOCATION 1)
I-5/SR-56 NE CONNECTOR

TH-1

SCALE: 1:200

ALL DIMENSIONS ARE IN METERS UNLESS OTHERWISE SHOWN

DATE	REVISED BY	DATE	REVISED BY
4/98	HWD	4/98	HWD

CALCULATED/DESIGNED BY — CHECKED BY

DESIGN OVERSIGHT
CHRISTIAN HERENCIA

STATE OF CALIFORNIA - DEPARTMENT OF TRANSPORTATION
NPDES

Caltrans Metric

FOR REDUCED PLANS ORIGINAL SCALE IN MILLIMETERS 0 20 40 60 80

USERNAME => $USER
DGN FILE => $REQUEST

CU 11332 EA 233501

DATE PLOTTED => $DATE
TIME PLOTTED => $TIME

DIST	COUNTY	ROUTE	KILOMETER POST TOTAL PROJECT	SHEET NO.	TOTAL SHEETS
11	SD	5,15	Var	40	41

REGISTERED CIVIL ENGINEER DATE

5-25-98
PLANS APPROVAL DATE

REGISTERED PROFESSIONAL ENGINEER MIKE CHESNEY No. 48913 EXP. 9-30-00 CIVIL STATE OF CALIFORNIA

ROBERT BEIN, WILLIAM FROST & ASSOCIATES
14725 ALTON PARKWAY
IRVINE, CA 92618

The State of California or its officers or agents shall not be responsible for the accuracy or completeness of electronic copies of this plan sheet.

TRAFFIC HANDLING

SHEET No	Temp RAILING (TYPE K) WITH SCUPPERS	TRAFFIC PLASTIC DRUM	TEMPORARY CRASH CUSHION MODULES ARRAY TJ	
	M	Ea	Ea	
TH-1				
TH-2	116 ~~+15~~	10	~~-8~~ 12	
TH-3	57			
TH-4	323			
TH-5	29 ~~+6~~	8	~~-8~~ 12	
TOTAL	525 ~~+11~~	18	~~+6~~ 24	

CONSTRUCTION AREA SIGNS & QUANTITIES

SHEET No	SIGN No ◯	CODE	PANEL SIZE (mm)	No OF WOOD POSTS PER SIGN 89x140	REMARKS
TH-2	9	C18	900x900	1	
TH-2	10	C31A	900x900	1	
TH-2	11	C13	1200x450	1	
TH-3	12	C13	1200x450	1	
TH-5	13	C31A	900x900	1	
TH-5	14	C18	1200x1200	1	

AS-CONSTRUCTED PLANS

The Caltrans AS-BUILT PLANS were compared to the Field Memorandums issued by RBF to the Resident Engineer.

The changes reflected in these AS-CONSTRUCTED PLANS were obtained by conducting a review of the site by RBF field surveyors in June of 2000. The field survey was limited to the discrepancies between the Caltrans AS-BUILT PLANS and RBF Field Memorandums and review of the accessible invert elevations of drainage structures.

RBF is not responsible for the accuracy or completeness of electronic copies of this plan sheet.

Date of AS-CONSTRUCTED PLANS preparation. June 2000

ROADWAY ITEMS

LOCATION	DESCRIPTION	ASPHALT CONC (TYPE A) TONNE	AGGREGATE BASE (CLASS 2) m^3	PLACE AC DIKE (TYPE A) m	RECONSTRUCT CHAIN LINK FENCE m	ROADWAY EXCAVATION m^3	IMPORT BORROW m^3	
1	I-5/SR-56	94.13 ~~-49~~	103.66 ~~-77~~	120 ~~+25~~	71.3 ~~-55~~	845 ~~+377~~	950	PER CCO 7
2	I-15/SR-78	185.22 ~~-79~~	164.4 ~~+25~~			~~+1846~~		ELIMINATED VIA CCO 3
3	I-5/LA COSTA	138.15 ~~-38~~	59.06 ~~-61~~			1137 ~~+733~~		
	TOTAL	417.5 ~~+66~~	327.12 ~~-263~~	120 ~~+25~~	71.3 ~~-55~~	~~+4956~~	950	PER CCO 7

AS-BUILT PLANS

CONTRACT NO. 11-223504
DATE COMPLETED 6-30-99
RE: D. JUAREZ

SUMMARY OF QUANTITIES

Q-1

ALL DIMENSIONS ARE IN METERS UNLESS OTHERWISE SHOWN

DESIGN OVERSIGHT
CHRISTIAN HERENCIA

NPDES

STATE OF CALIFORNIA - DEPARTMENT OF TRANSPORTATION
Caltrans

CALCULATED/DESIGNED BY	MC	DATE 4/98	REVISED BY
CHECKED BY	MC	4/98	DATE REVISED

FOR REDUCED PLANS ORIGINAL SCALE IN MILLIMETERS 0 20 40 60 80

USERNAME => $USER
DGN FILE => $REQUEST

CU 11332 | EA 23350!

LAST REVISION 05-09-98 | DATE PLOTTED => $DATE | TIME PLOTTED => $TIME

$DATE $TIME $FILE

DIST	COUNTY	ROUTE	KILOMETER POST TOTAL PROJECT	SHEET TOTAL SHEETS
11	SD	5, 15	Var	41 41

REGISTERED CIVIL ENGINEER

December 4, 1997
PLANS APPROVAL DATE

Glenn DeCou
C34647
Exp. 9-30-99
CIVIL
STATE OF CALIFORNIA

For State of California or its officers or agents shall not be responsible for the accuracy or completeness of electronic copies of this plan sheet.

To accompany plans dated 5-25-98

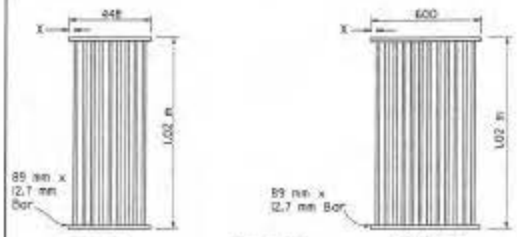

35 mm Clear spacing. Use within the roadbed on highways where bicycles and pedestrians are excluded.

51mm Clear spacing. Use in locations off the roadbed on all types of highways.

35 mm Clear spacing. Use within the roadbed on highways where bicycles and pedestrians are excluded.

RECTANGULAR GRATE DETAILS

(See table below)

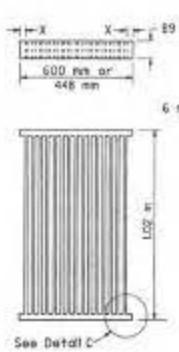

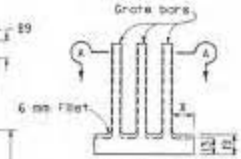

DETAIL C

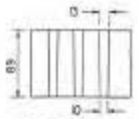

SECTION A-A

ALTERNATIVE CAST NODULAR IRON GRATE OR CAST STEEL GRATE

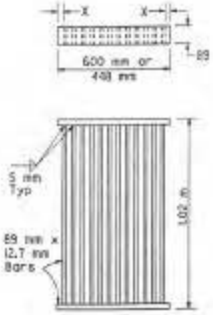

ALTERNATIVE WELDED GRATE

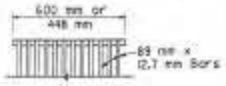

CAST END BLOCK

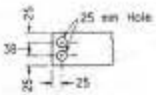

END OF BAR

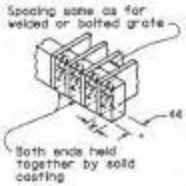

ALTERNATIVE CAST NODULAR IRON OR CAST STEEL END BLOCK GRATE

NOTES

1. Grate type numbers refer to approximate width of grate in millimeters and number of bars, respectively.
2. Contractor has the option of using cast nodular iron, cast steel, welded, bolted, or cast end block grate.
3. See Special Provisions for requirements pertaining to galvanizing or asphalt dipping of grates and frames.
4. Rounded top of bars optional on all grates.
5. Pipe inlets with a grate shall be placed so that bars parallel direction of principle surface flow.
6. Full penetration butt welds may be substituted for the fillet welds on all anchors.
7. Standard square, hexagon, round or equivalent headed anchors may be substituted for the right angle hooks on the anchors shown on this plan.
8. Grate and frame weights are based on welded grates (weights of face angles, steps, protection bars, etc. are not included).

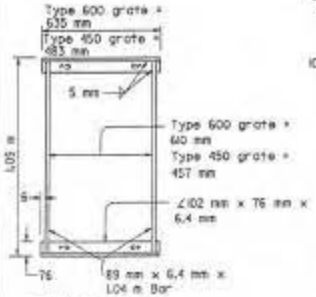

TYPICAL FRAME

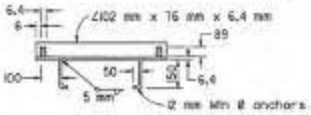

CROSS SECTION

(Thru frame)

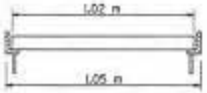

LONGITUDINAL SECTION

(Thru frame and grate)

RECTANGULAR FRAME DETAILS

(For all rectangular grates)

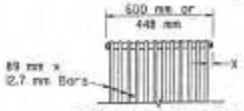

BOLTED END BLOCK

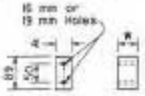

BAR SPACER

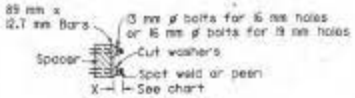

BOLTING DETAIL

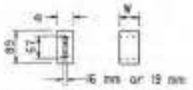

ALTERNATIVE SPACER

35 mm or 50 mm

ALTERNATIVE BOLTED GRATE

GRATE BAR SPACING TABLE

TYPE	NO. OF BARS	CLEAR BAR SPACING (mm)	X (mm)
450-9	9	35	27
600-9	9	51	40
600-12	12	35	32

INLET TYPE	COVER TYPE	MASS (kg)
CS	PLATE	79
CL-2.1	PLATE	77
CL-3.0	PLATE	77
CL-4.3	PLATE	77
CL-6.4	PLATE	77
CCP	PLATE	51
CCPI	PLATE	51
CCPI	REDWOOD	19
CMP	PLATE	80
CMPI	PLATE	80

INLET TYPE	GRATE TYPE	NO. OF GRATES	MASS (kg)
CDO	600-12	2	288
CDL-2.1	600-12	1	198
CDL-3.0	600-12	1	148
CD,D,D2,D3,D4(TYPE 600)	600-9	1	119
	600-12	1	148
D4(TYPE 450),D5,D6	450-9	1	113
CT-1	450-9	2	226
CT-2	450-9	2	226
CT-3	600-12	2	296
CT-4	600-12	2	296
TRASH RACK			10

BASIS FOR MISC IRON & STEEL FINAL PAY MASSES FOR DRAINAGE INLETS

(See General Notes, No. 8)

STATE OF CALIFORNIA
DEPARTMENT OF TRANSPORTATION

GRATE DETAILS

NO SCALE

ALL DIMENSIONS ARE IN MILLIMETERS UNLESS OTHERWISE SHOWN

RSP D77A DATED DECEMBER 4, 1997 SUPERSEDES STANDARD PLAN D77A DATED JULY 1, 1997-PAGE 82 OF THE STANDARD PLANS BOOK DATED JULY 1997.

REVISED STANDARD PLAN RSP D77A

STD. PLAN RSP D77A