CTSW-RT-01-072

SAMPLING AND ANALYSIS PLAN

CALTRANS TAHOE BASIN WATER QUALITY CHARACTERIZATION AND SEDIMENT TRAP EFFECTIVENESS STUDIES

Contract 43A0036 Task Orders 2 and 14

Prepared for:

STATE OF CALIFORNIA
DEPARTMENT OF TRANSPORTATION
SACRAMENTO, CALIFORNIA

NOVEMBER 2001

SAMPLING AND
ANALYSIS PLAN

CALTRANS
TAHOE BASIN

WATER QUALITY
CHARACTER.
AND SEDIMENT
TRAP EFFECT.
STUDIES

Prepared for:

STATE OF
CALIFORNIA

DEPARTMENT OF
TRANSPORTATION

SACRAMENTO,
CALIFORNIA

NOVEMBER 2001

SAMPLING AND
ANALYSIS PLAN

CALTRANS
TAHOE BASIN

WATER QUALITY
CHARACTER.
AND SEDIMENT
TRAP EFFECT.
STUDIES

Prepared for:

STATE OF
CALIFORNIA

DEPARTMENT OF
TRANSPORTATION

SACRAMENTO,
CALIFORNIA

NOVEMBER 2001

SAMPLING AND
ANALYSIS PLAN

CALTRANS
TAHOE BASIN

WATER QUALITY
CHARACTER.
AND SEDIMENT
TRAP EFFECT.
STUDIES

Prepared for:

STATE OF
CALIFORNIA

DEPARTMENT OF
TRANSPORTATION

SACRAMENTO,
CALIFORNIA

NOVEMBER 2001

SAMPLING AND
ANALYSIS PLAN

CALTRANS
TAHOE BASIN

WATER QUALITY
CHARACTER.
AND SEDIMENT
TRAP EFFECT.
STUDIES

Prepared for:

STATE OF
CALIFORNIA

DEPARTMENT OF
TRANSPORTATION

SACRAMENTO,
CALIFORNIA

NOVEMBER 2001

SAMPLING AND
ANALYSIS PLAN

CALTRANS
TAHOE BASIN

WATER QUALITY
CHARACTER.
AND SEDIMENT
TRAP EFFECT.
STUDIES

Prepared for:

STATE OF
CALIFORNIA

DEPARTMENT OF
TRANSPORTATION

SACRAMENTO,
CALIFORNIA

NOVEMBER 2001

Contents

1.0 Project Overview 1

2.0 Scope of This Plan 2

2.1 Runoff Water Quality 2
2.2 Precipitation Water Quality 2
2.3 Sediment Amounts, Size Distribution, and Quality 2
2.4 Double Barrel Sediment Trap Effectiveness 3
2.5 Suspended Sediment Concentration (SSC) 3

3.0 Project Organization and Responsibilities 3

4.0 Monitoring Locations 3

4.1 Highway 50 Near Echo Summit 4
4.2 Highway 50 Near Tahoe Airport 6
4.3 Highway 50 Near Tahoe Meadows 7
4.4 Highway 89 Near D.L. Bliss State Park 8
4.5 Highway 28 at Snow Creek 9
4.6 Highway 267 Brockway Summit 9

5.0 Analytical Constituents 11

5.1 Runoff Water Quality 11
5.2 Precipitation Water Quality 12
5.3 Sediment Size Distribution and Quality 12

6.0 Data Quality Objectives 14

7.0 Equipment 16

7.1 Automatic Sampler 16
7.2 Flow Meter 17
7.3 Rain Gauge 17
7.4 Precipitation Quality Sampler 17
7.5 Sediment Sampling Equipment 17

8.0 Health and Safety 18

9.0 Monitoring Preparations and Logistics 18

9.1 Bottle and Blank Water Order 18
9.2 Bottle Labels 19
9.3 Intake and Suction Tubing Installation 20
9.4 Field Equipment Maintenance 20
9.5 Composite Bottle Installation 22
9.6 Sediment Filter Installation 22
9.7 Storm/Event Selection Criteria 22
9.7.1 Runoff Monitoring 22

9.7.2 Precipitation Monitoring 23
9.7.3 Sediment Monitoring 23
9.8 Weather Tracking 23
9.9 Notification Procedures 24

10.0 Runoff Water Quality Sample Collection 26

10.1 Clean Sampling Techniques 26
10.2 Field Crew Mobilization 27
10.3 Pre-Event Set-Up 27
10.3.1 Check Autosampler Set-up and Programming 27
10.3.2 Check Flow Meter Set-up and Programming 29
10.4 Event Monitoring Activities 31
10.4.1 Composite Sample Collection 31
10.4.2 Oil and Grease Grab Sample Collection 33
10.4.3 SSC Grab Sample Collection 33
10.5 Post-Event Activities 33
10.6 Special Considerations for Cold Weather Monitoring 35
10.6.1 Snow Removal 36
10.6.2 Ice Removal 36
10.6.3 Equipment Insulation 36
10.6.4 Sampler Tube Gradient/Purge 36
10.6.5 Manual Grab Sampling 37
10.7 Snowmelt Runoff Monitoring 37
10.7.1 Field Verification of Conditions 37
10.7.2 Automated Equipment Programming 38
10.7.3 Visual and Photographic Observations 38

11.0 Precipitation Water Quality Sample Collection 38

11.1 Pre-Event Set-Up 38
11.2 Event Monitoring 39
11.3 Post Event Activities 40

12.0 Sediment Size Distribution and Quality Sample Collection 40

12.1 Background 41
12.1.1 Sediment Terminology 41
12.1.2 Sediment Sampling Methodologies 42
12.1.3 Sediment Characterization 42
12.2 Event Monitoring 43
12.2.1 Sediment Sample Collection – Filter Approach 43
12.2.2 Sediment Sample Collection – Small Particle Sampling 47

13.0 Sample Delivery/Shipping 47

13.1 Chain-of-Custody 47
13.2 Sample Packaging/Shipping 47

14.0 QA/QC Sample Collection 47

15.0 QA/QC Data Review 48

15.1 Initial Data Quality Screening 49
15.2 Detailed QA/QC Data Review 49

16.0 Data Management and Reporting 50

17.0 References 51

Appendicies

Appendix A Health and Safety Plan

Appendix B Equipment Cleaning Protocols

Appendix C Field Forms

Tables

4-1 Summary of Monitoring Site Characteristics

5-1 Highway Runoff Monitoring – Constituents to be Analyzed, Sample Type, EPA method, Bottle, Volume, Preservation, and Hold Time Requirements

5-2 Highway Precipitation Monitoring – Constituents to be Analyzed, Sample Type, EPA method, Bottle, Volume, Preservation, and Hold Time Requirements

5-3 Sediment Sample Laboratory Analyses

5-4 Sieve Sizes for the Grain Size Distribution Analysis

6-1 Control Limits for Precision and Accuracy for Water Samples

6-2 Control Limits for Precision and Accuracy for Sediment Samples

12-1 Example Sample Volumes Required for Sieve Analysis

12-2 Sources of Pollutant Constituents

Figures

4-1 Site Location Map

9-1 Field Equipment Checklist

9-2 Telephone Tree

10-1 Double-Barrel Sediment Trap Sampling Station

12-1 Sediments Classification

12-6 Conceptual diagram illustrating the filter approach

12-7 Sediment Sampling – Filter Approach

12-8 Flow Diagram of Filter Approach

1.0 Project Overview

The goals of the Tahoe Basin Stormwater Monitoring Program (Study) are to:

1. Characterize stormwater runoff quality from Caltrans highway facilities located within the Tahoe Basin, including the major factors controlling the quality.

2. Characterize precipitation water quality to preliminarily evaluate the relative contributions of precipitation to observed constituent concentrations in Tahoe area highway stormwater runoff.

3. Evaluate the treatment effectiveness of double-barrel sediment traps installed along Caltrans highways in the Tahoe area.

The first year of the Study focused on basic data gathering and on the development and testing of methods for high elevation monitoring. The objectives of the second year of this Study are:

Runoff Water Quality

1. Collect data to continue the characterization of runoff from urban and rural highways, based on the following assumptions:

   There are two distinct types of roadway and right-of-way conditions in the basin: urban and rural

   Rural roadway segments have lower annual average daily traffic (AADT) volumes than urban segments

2. Collect data to continue the characterization of highway runoff during snow management operations at both lake-level and mountain pass elevations, based on the assumption:

   - Snow management operates under two modes: high elevation and lake-level elevations

3. Collect data to continue the characterization of seasonal differences in highway runoff, based on the assumption:

   - There are three seasons: summer thunder storms, winter/spring snow melt, and transitional with snow/rain mix (fall and spring)

4. Collect data to preliminarily characterize storm water runoff quality from areas with commingled flow (Caltrans and non-Caltrans runoff), based upon the assumption:

   - Surrounding landuse contributes to variations in runoff quality

5. Collect data to preliminarily characterize storm water runoff quality across the Tahoe Basin, based upon the assumption:

    - Stormwater runoff quality varies depending upon the location within the Tahoe Basin

Precipitation Water Quality

1. Collect data to continue the characterization of precipitation water quality, including:

    - Evaluate the variability of rainwater quality in the Tahoe Basin

    - Provide data to evaluate the relative contributions of precipitation to observed constituent concentrations in Tahoe area highway runoff

Sediment Trap Effectiveness Study

1. Collect data to assess the effectiveness of the double-barrel sediment traps, consisting of:

    - Amount of sediment retained within the sediment traps

    - Distribution of sediment size fractions retained

    - Quality of the sediment retained

    - Quality of storm water influent vs storm water effluent water

2.0 Scope of This Plan

This Sampling and Analysis Plan (SAP) describes the monitoring of Caltrans highway stormwater runoff quality, precipitation water quality, and sediment quality within the Tahoe Basin.

2.1 Runoff Water Quality

Monitoring of highway runoff will be conducted at six monitoring stations during summer thunderstorm precipitation events, fall/spring precipitation events, and snowmelt events.

2.2 Precipitation Water Quality

Precipitation water quality samples will be collected at three highway runoff monitoring stations during runoff-monitoring events, conditions permitting. Samples of "wet deposition" (rainfall and/or snowfall) only will be collected. Precautions will be taken to minimize collection of any dry deposition or "dryfall."

2.3 Sediment Amounts, Size Distribution, and Quality

Sediment samples will be collected at two runoff-monitoring stations in the Tahoe Basin through May 2002.

2.4 Double Barrel Sediment Trap Effectiveness

The treatment effectiveness of sediment traps will be evaluated at two sites in the Tahoe Basin through May 2002. The effectiveness will be evaluated based on the comparison of water quality data collected from both the inflow and outflow points. In addition, the effectiveness will be evaluated based on the amounts and types of sediments collected in each barrel and sediments that overflow from the trap.

The portion of the sediment found in runoff representing particle sizes less than 20 µm will be characterized in more detail. Samples of untreated and treated runoff will be analyzed to determine the concentration of sediment with particles that range from 0.45-5 µm, 5-10 µm, and 10-20 µm. In addition, the particle size distribution of the accumulated material and quality of the particles less than 20 µm will be measured.

2.5 Suspended Sediment Concentration (SSC)

A comparative study will be performed that investigates differences between the results from TSS and SSC analyses. Duplicate grab samples will be collected of both untreated and treated runoff. One of the two samples will be analyzed for TSS and the second sample will be analyzed for SSC. The results will be compared and the relative percent difference calculated. Untreated samples should contain a wide range of particle sizes while the treated samples should be dominated by smaller particles. Up to eight duplicate samples will be collected for both untreated and treated runoff.

3.0 Project Organization and Responsibilities

This project will be conducted under the direction of Caltrans Headquarters. Camp Dresser & McKee (CDM) will manage the project from their Sacramento Office.

Monitoring station preparation and equipment installation and equipment maintenance will be conducted by CDM. Tahoe-based field teams will conduct sample collection and other field data acquisition work. CalScience Environmental Laboratories of Garden Grove will conduct sample equipment cleaning and analyses of water samples. CDM's soils laboratory in Denver, Colorado will perform sediment analyses.

4.0 Monitoring Locations

Based on the study objectives, five categories were selected to represent runoff from roadways in the Tahoe Basin. These categories include:

- Annual Average Daily Traffic (AADT)
- Elevation
- Geographical distribution
- Source of the storm water runoff
- Presence of double-barrel sediment traps

Monitoring locations have been selected that represent each of the five roadway categories. Each site is under the jurisdiction of Caltrans District 3,the Lahontan Regional Water Quality Control Board (LRWQCB), and the Tahoe Regional Planning Agency (TRPA). Locations of the six selected monitoring sites are presented in Figure 4-1 and are described below.

4.1 Highway 50 Near Echo Summit

This station (ID # 3-203 (influent) and 3-223 (effluent), 50E Echo Summit – El Dorado County – District 3) is located between the town of Meyers and Echo Summit, within the right-of-way of the eastbound lane of State Highway 50 at post mile 67.91. The site represents a rural, high elevation area with low AADT; it collects Caltrans-only flow and is located at a double-barrel sediment trap. This site is equipped to collect runoff influent and effluent samples, precipitation samples and sediment samples.

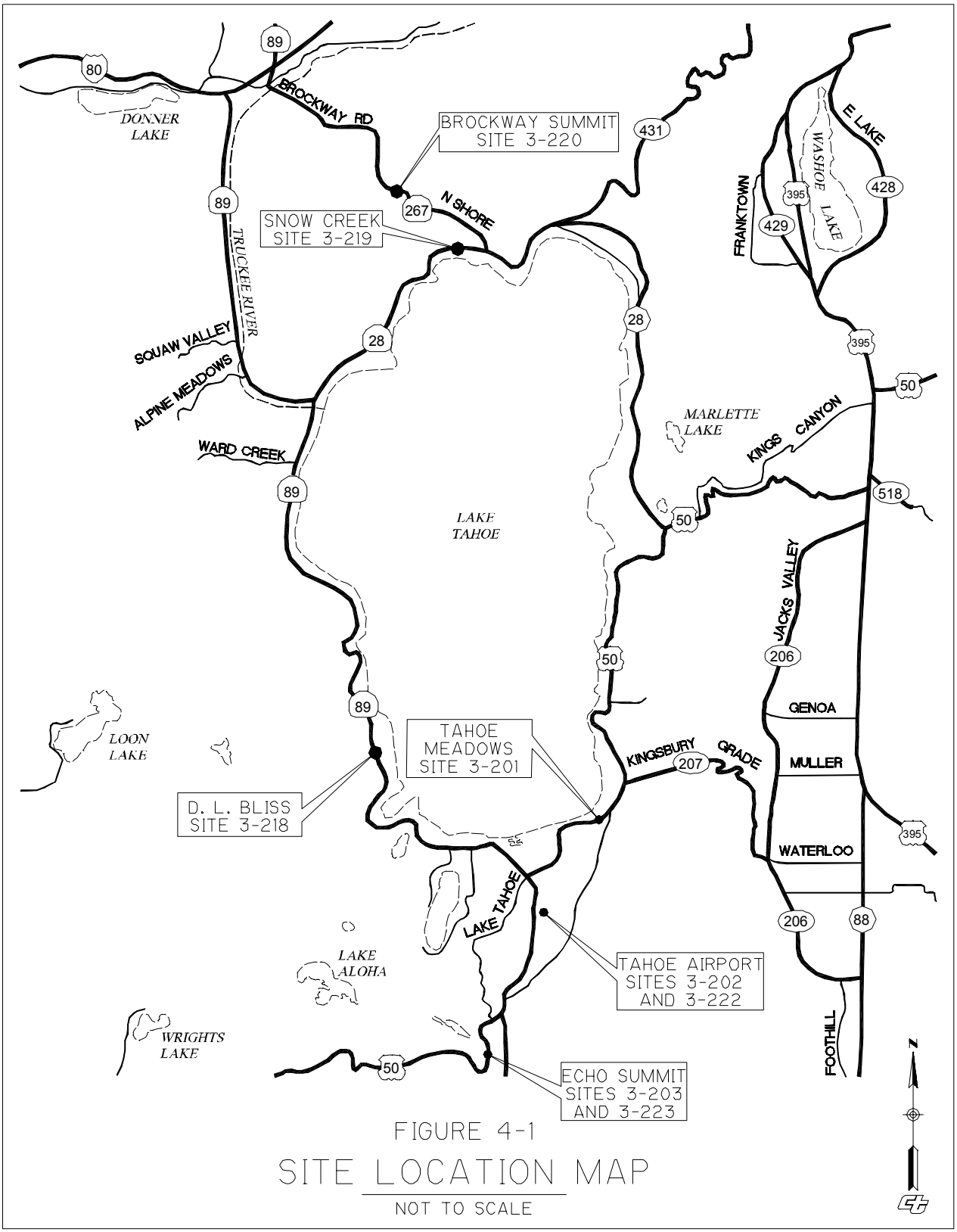

FIGURE 4-1

SITE LOCATION MAP

NOT TO SCALE

Highway 50 is a two-lane road at this point with a series of paved pullouts along the eastbound lane. Portions of both lanes drain to the curb along the eastbound lane where the station is located. Runoff from the highway flows along an asphalt curb and gutter into a double-barrel sediment trap.

View south of the upstream drainage of the Echo Summit site

The drainage area is approximately 2,833 m^2 (0.7 acre). AADT is estimated to be 11,600. The site elevation is approximately 2,134 meters (7,001 feet).

Parking in the large turnout directly adjacent to the monitoring station may be used to access this station. During site visits when runoff is occurring, vehicles should be parked outside of the runoff flow stream.

Directions: From the City of South Lake Tahoe:

1. Get onto Highway 50, heading west.
2. Stay on HY 50 toward Echo Summit.
3. At post mile 67.9, turn into the large turnout located on left side of the road.
4. Meyers Grade Road and the Echo Summit pass are beyond the station further to the west.

4.2 Highway 50 Near Tahoe Airport

This station (ID # 3-202 (influent) and 3-222 (effluent), 50E Tahoe Airport – El Dorado County – District. 3) is located in South Lake Tahoe within the right-of-way of the eastbound lane of State Highway 50, just south of H Street (post mile 74.27), near the Tahoe Airport. This site represents a rural, lake-level elevation area with low AADT; it collects Caltrans-only flow and is located at a double-barrel sediment trap. This site is equipped to collect runoff influent and effluent samples, precipitation samples and sediment samples.

Highway 50 is a two-lane road at this point. Only the eastbound lane drains to the curb along the eastbound lane where the station is located. Runoff from the highway flows along an asphalt curb and gutter into a double-barrel sediment trap.

View south of the drainage area and sampling equipment at the Tahoe Airport site. The double-barrel sediment traps are shown in the lower right foreground.

The drainage area is approximately 1,214 m^2 (0.3 acres). AADT is estimated to be 14,100. The site elevation is approximately 1,920 meters (6,299 feet).

This station may be accessed using the parking lot directly across the highway

(on the west side) from the monitoring station. Parking on the paved portion of the highway's shoulder is not recommended at this location due to the curve of the highway and high traffic speeds. However, parking on the grassy portion of the shoulder is permitted as long as on-coming traffic is notified using signs and traffic cones as defined in Caltrans traffic control specifications.

Directions: From the City of South Lake Tahoe:

1. Get onto Highway 50, heading west.
2. Drive 1.2 miles from the intersection with Highway 89.
3. Just past H Street, turn into the parking area located on the right side of the road.
4. The station is located across the road.

4.3 Highway 50 Near Tahoe Meadows

This station (ID # 3-201, 50W Tahoe Meadows – El Dorado County – District 3) is located in South Lake Tahoe within the right-of-way of the westbound lane of State Highway 50, at the entrance to Tahoe Meadows residential development (post mile 79.79). This site represents an urban, lake-level elevation area with high AADT; it collects Caltrans-only flow and is located within an underground storm drain system. This site is equipped to collect only runoff samples.

Highway 50 is a four-lane road at this point. Only the two westbound lanes drain to the curb along the westbound lane where the station is located. Runoff from the highway flows along a curb and gutter and into a drain inlet. Runoff samples are collected in an 18-inch drainpipe that collects the stormwater runoff along this portion of the highway and conveys it to the Ski Run wetland treatment facilities.

View east of the drainage area and drain inlet at the Tahoe Meadows site. The monitoring equipment is housed in the vault in the left foreground.

The drainage area is approximately 3,237 m^2 (0.8 acres). AADT is estimated to be 37,000. The site elevation is approximately 1,905 meters (6,250 feet).

This station may be accessed using the entrance/exit driveways to Tahoe Meadows. Parking is allowed in the area between the two driveways. The station is in the area between the highway and the light pole. The monitoring equipment is housed in an underground vault.

Directions: From the City of South Lake Tahoe:

1. Get onto Highway 50, heading east.
2. Drive 4.2 miles from the intersection with Highway 89.
3. Turn into the driveway for Tahoe Meadows at post mile 79.8.

4.4 Highway 89 Near D.L. Bliss State Park

This station (ID # 3-218, 89N - El Dorado County – District 3) is located along the border of D.L. Bliss State Park on the West Shore of Lake Tahoe within the right-of-way of the northbound lane of State Highway 89 at post mile 20.63. This site represents a rural, lake-level elevation area with low AADT; it collects Caltrans-only flow from the highway and a paved turnout, and is located at a double-barrel sediment trap. This site is equipped to only collect influent runoff samples.

Highway 89 is a two-lane road at this point. Portions of both lanes drain to the curb along the northbound lane where the station is located. Runoff from the highway flows along an asphalt curb and gutter, then through a paved swale between the pullout and the northbound lane, and finally into a double barrel sediment trap. Runoff samples are collected at the sediment trap inlet.

The drainage area is approximately 1,012 m^2 (0.25 acres). AADT is estimated to be 3,000. The site elevation is approximately 1,951 meters (6,400 feet)

Parking in the large turnout directly adjacent to the monitoring station may be used to access this station. During site visits when runoff is occurring, vehicles should be parked outside of the primary runoff flow stream.

View north of a portion of the drainage area at the D. L. Bliss site. The drainage inlet is at the edge of the pavement in the center of the photograph.

Directions: From the City of South Lake Tahoe:

1. Get onto Highway 89, heading north.
2. Stay on HY 89 to D.L. Bliss State Park.
3. Within D.L. Bliss State Park on HY 89, turn into the large paved turnout located on right side (east side) of the road just south of post mile 20.63.
4. The northern boundary of D.L. Bliss State Park is beyond the station to the North.

4.5 Highway 28 at Snow Creek

This station (ID # 3-219, 28W Snow Creek – Placer County – District 3) is located in Tahoe Vista, approximately one-quarter mile west of the intersection of Highway 28 and Highway 267 within the right-of-way of the westbound lane of State Highway 28, (post mile 9). This site represents an urban, lake-level elevation area with high AADT, commingled flow, and is located at a drain inlet with a sump bottom and an outfall pipe. This site is equipped to collect runoff influent samples and precipitation samples.

Highway 28 is a four-lane road at this point. In this area, drainage from the westbound lanes, Agatam Circle, and from commercial and private properties flows to the curb along the westbound lane where the station is located. Runoff from the highway flows along a curb and gutter and into drain inlet. Runoff samples are collected at the inlet to the drain inlet.

View west of the sampling equipment housing and drainage area at the Snow Creek site.

The drainage area is approximately 2,023 m^2 (0.5 acres). AADT is estimated to be 18,100. The site elevation is approximately 1,890 meters (6,200 feet).

This station may be accessed using the paved pullout located adjacent to the monitoring station. The station is located on the north side of Highway 28 just west the Snow Creek crossing.

Directions: From Kings Beach:

1. Get onto Highway 28, heading west toward Tahoe Vista.
2. Drive 0.25 miles from the intersection of Highway 28 and 267.
3. After crossing the Snow Creek Bridge, turn into the paved parking area immediately past the west side of the bridge.

4.6 Highway 267 Brockway Summit

This station (ID # 3-220, 267N Brockway Summit – Placer County – District. 3) is located near Kings Beach within the right-of-way of the northbound lane of State Highway 267, approximately two miles north of the intersection of State Highways 267 and 28 in Kings Beach (post mile 8.14). This site represents a rural, high elevation area with low AADT; it collects Caltrans-only flow from the highway and a paved turnout, and is located at a drain inlet with a sump bottom and outfall pipe. This site is equipped to collect only runoff influent samples.

In this area, Highway 267 is a two-lane road with bicycle lanes. Drainage from the crown of the highway and from an upslope paved turnout flows to the curb along the

northbound lane into a drainage inlet. Runoff samples are collected at the entrance to the drainage inlet.

The drainage area is approximately 1,012 m^2 (0.25 acres). Annual average daily traffic (AADT) is estimated to be 8,500. The site elevation is approximately 1,951 meters (6,400 feet).

View north of the drainage area at the Brockway Summit site. The drain inlet and outfall are shown in the right foreground.

This station may be accessed using the paved turnout located immediately to the north of the monitoring station. Parking on the paved portion of the highway's shoulder is not recommended at this location due to the high traffic speeds.

Directions: From Kings Beach:

1. Get onto Highway 267, heading north.
2. Drive 2 miles from the intersection of Highways 267 and 28.
3. The station is located approximately 30 meters (98 feet) north of post mile marker 8.14.
4. Turn into the unpaved road, locate just north of the site and park along the shoulder.

A summary of selected monitoring site characteristics is presented in Table 4-1.

Table 4-1
Summary of Monitoring Site Characteristics

Site Characteristics	**Echo Summit 3-203 & 3-223**	**Tahoe Airport 3-202 & 3-222**	**Tahoe Meadows 3-201**	**D.L. Bliss 3-218**	**Snow Creek 3-219**	**Brockway Summit 3-220**
Caltrans District	3	3	3	3	3	3
Regional Board	Lahontan, Region 6a	Lahontan, Region 6a	Lahontan, Region 6a	Lahontan, Region 6a	Lahontan, Region 6a	Lahontan, Region 6a
Post Mile	67.91	74.27	79.79	20.63	9	8.14
Longitude	120.03106	119.99939	119.56972	120.10878	120.04005	120.04705
Latitude	38.82858	38.89756	38.57139	38.98864	39.23930	39.25742
Catchment Area (m^2)	2,833	1,214	3,237	1,012	2,023	1,012
Drainage Type	Rural Highway	Rural Highway	Urban Highway	Rural Highway	Comingled Flow from Urban Highway, Commercial & Residential	Rural Highway
AADT	11,600	14,100	37,000	3,000	18,100	8,500
BMP Type	Double-Barrel Sand Trap	Double-Barrel Sand Trap	Wetland	Double-Barrel Sand Trap	Drain Inlet with Sump	Drain Inlet with Sump
Receiving Water Type	Intermittent	Intermittent	Seasonal Wetlands	Intermittent	Seasonal Wetlands	Intermittent

5.0 Analytical Constituents

This section identifies the constituents to be analyzed in storm water runoff, precipitation, and sediment.

5.1 Runoff Water Quality

A list of analytical constituents to be analyzed in runoff water samples obtained during each monitoring event is presented in Table 5-1. Sample type (sample collection method), EPA analytical method, sample bottle type, target reporting limit, volume required for analysis, sample preservation, and maximum holding time are also presented in Table 5-1.

Table 5-1
Highway Runoff Monitoring - Constituents to be Analyzed, Sample Type, EPA Method, Bottle, Volume, Preservation, and Hold Time Requirements

Constituent	Sample Type	EPA Method	Bottle	Target Reporting Limit	Vol. (ml)	Preservation	Holding Time
Conventional							
Conductivity	Flow-based comp.	120.1	HDPE	1 mg/L	50	4°C	28 days
Hardness as Ca CO_3		130.2		2 mg/L	100	4°C	6 mo.
Temperature		NA		0.1 units	NA	None	ASAP
pH		150.1		0.1	50	None	15 min.
TDS		160.1		1 mg/L	100	4°C	7 days
TSS		160.2		1 mg/L	100	4°C	7 days
Turbidity		180.1		0.05 NTU	50	4°C	48 hrs.
TOC/DOC		415.1		1 mg/L	100	4°C; HCl or H_2SO_4; pH<2*	28 days
Nutrients							
NO_3-N	Flow-based comp.	300.0	HDPE	0.1 mg/L	100	4°C	48 hrs.
NO_2-N		300.0		0.1mg/L	100		48 hrs.
Dissolved Ortho-P		365.2		0.03 mg/L	100		48 hrs.
NH_3-N		350.3		0.1mg/L	100		28 days
Dissolved Phosphorous		365.3		0.03 mg/L	100		28 days
Total Phosphorous		365.3		0.03 mg/L	100		28 days
Total Nitrogen (calculated)		--		0.1	--		--
TKN		351.3		0.1 mg/L	100		28 days
Metals (total & dissolved)							
Arsenic (As)	Flow-based comp.	206.3	HDPE	0.5 μg/L	100	4°C; HNO3; pH <2*	Filter for diss. & preserve 48 hrs. Analysis 6 mo.
Cadmium (Cd)		200.8		0.2 μg/L			
Chromium (Cr)		200.8		1 μg/L			
Copper (Cu)		200.8		1 μg/L			
Iron (Fe)		200.9		25 μg/L			
Lead (Pb)		200.8		1 μg/L			
Nickel (Pb)		200.8		2 μg/L			
Zinc (Zn)		200.8		5 μg/L			
Other							
SSC	Flow-based Comp or Grab.	ASTM D 3977-97	HDPE	1 mg/L	500	4°C	7 days
Chlorides	Flow-based comp.	300.0	HDPE	0.02 mg/L	100	4°C	28 days
Oil & grease	Grab	1664	wide-mouth glass	1 mg/L	1000	4°C; HCl or H2SO4; pH<2	28 days

*No preservative at time of composite sample collection; preservation at laboratory during sample splitting.

5.2 Precipitation Water Quality

The list of analytical constituents for precipitation water quality monitoring is listed in Table 5-2. The constituents are a subset of Table 5-1 and are considered likely to be present in precipitation in measurable quantities. The list is confined to those constituents for which samples may be collected as composites, and for which collection of sufficient sample volume can be expected to permit analysis.

Limitations in sample volume are common in precipitation monitoring, and the goal will be to analyze as many of the listed constituents as is feasible for each monitoring event, given the specific precipitation amount and the actual sample volume collected. Metals and nitrate are considered the highest priority for precipitation analysis. It is assumed that most constituents will be present in the dissolved form in precipitation; it is therefore not necessary to analyze for both dissolved and total recoverable metals, for example.

5.3 Sediment Size Distribution and Quality

A list of analytical constituents to be analyzed in sediment samples is presented in Table 5-3. Table 5-3 also summarizes constituents, EPA analytical methods, target reporting limits, volumes required for analysis, sample preservation, and maximum hold times.

The sieve sizes to be used by the laboratory for the grain size distribution analysis using the wet sieving method are presented in Table 5-4. The sieve sizes may be modified in order to collect sufficient sediment masses of the various size fractions for chemical analyses. This may be accomplished by compositing various size fractions following sieving. Sediment sizes smaller than 20 µm will be analyzed for grain size distribution using the hydrometer method (ASTM D422) or a particle counter.

Table 5-2
Highway Precipitation Monitoring - Constituents to be Analyzed, Sample Type, EPA Method, Bottle, Volume, Preservation, and Hold Time Requirements

Constituent	Sample Type	EPA Method	Bottle	Target Reporting Limit	Vol. (mL)	Preservation	Holding Time
HIGH-LEVEL PRIORITY CONSTITUENTS							
Conductivity	Flow-based comp.	120.1	HDPE	1 mg/L	50	4°C	28 days
pH		150.1		0.1	50	none	15 min
NO_3-N		300.0		0.1 mg/L	100	4°C	48 hrs.
NO_2-N		300.0		0.1mg/L	100		48 hrs.
Total Nitrogen (calculated)		--		0.1 mg/L	--	--	--
Metals (total recoverable only)							
Arsenic (As)	Flow-based comp.	206.3	HDPE	0.5 μg/L	100	4°C; HNO3; pH <2*	Filter for diss. & preserve 48 hrs. Analysis 6 mo.
Cadmium (Cd)		200.8		0.2 μg/L			
Chromium (Cr)		200.8		1 μg/L			
Copper (Cu)		200.8		1 μg/L			
Iron (Fe)		200.9		25 μg/L			
Lead (Pb)		200.8		1 μg/L			
Nickel (Pb)		200.8		2 μg/L			
Zinc (Zn)		200.8		5 μg/L			
MID-LEVEL PRIORITY CONSTITUENTS							
Hardness as $CaCO_3$	Flow-based comp.	130.2	HDPE	2 mg/l	100	4° C	6 mo.
Chloride		300.0		0.02 mg/l			28 days
ADDITIONAL CONSTITUENTS (when sample volume is adequate)							
Total Phosphorous	Flow-based comp.	365.3	HDPE	0.03 mg/l	100	4° C	28 days
Dissolved Orthophosphate		365.2		0.03 mg/l			48 hrs.
TKN		351.3		0.1 mg/l			28 days

*No preservation at time of composite sample collection; preservation at laboratory during sample splitting

The precipitation analytical listis subject to review and revision pending evaluation of the initial monitoring results and other issues and priorities as determined by Caltrans.

Table 5-3
Sediment Sample Laboratory Analyses

Constituent	EPA Analytical Method	Reporting Limit (mg/kg)	Required Mass/ Volume	Sample Preservation	Maximum Hold Time
Total Phosphorus	EPA Method 365.3	1	2 g	Chilled	28 days
Total Organic Carbon	EPA Method 415.1	50	2 g	Chilled	28 days
Total Nitrogen	EPA Method 351.4	1	2 g	Chilled	48 hours
Arsenic	EPA Method 6010	0.5	1 g	Chilled	6 months
Cadmium		0.5			
Chromium		0.5			
Copper		0.5			
Lead		5			
Nickel		2.5			
Zinc		0.5			
Iron		0.5			
Grain Size Distribution Analysis – Sieve Method	ASTM D422M/D4464	NA	50-100 g	NA	NA
Grain Size Distribution Analysis – Hydrometer Method	ASTM D422-63	NA	NA	NA	NA

Table 5-4
Sieve Sizes for the Grain Size Distribution Analysis

U.S. Standard Sieve Size	Mesh Opening (microns)
4	4,750
6	3,350
8	2,360
10	2,000
16	1,180
20	850
30	600
40	425
50	300
70	212
100	150
200	75
400	38
635	20

6.0 Data Quality Objectives

To provide scientifically defensible data in fulfillment of program objectives discussed in Section 1, data quality objectives are used to establish acceptable measures of data quality for monitoring data. The data quality objectives for this project include specifications for sampling and analytical procedures, and performance criteria for laboratory analytical work. Analytical methods, target reporting limits, sample preservation requirements, and maximum allowable holding times are presented in Tables 5-1 and 5-2. Performance control limit criteria for precision and accuracy are presented in Table 6-1. Table 6-1 lists the control limits for water samples. For guidance on application of performance acceptance criteria and QA/QC data

evaluation refer to Section 13 of Guidance Manual: Stormwater Monitoring Protocols, Caltrans, May 2000 (CTSW-RT-00-005).

Table 6-1
Control Limits for Precision and Accuracy for Water Samples

Constituent	EPA Method	Maximum Allowable RPD	Recovery Lower Limit	Recovery Upper Limit
Conventional				
Conductivity	120.1	20%	NA	NA
Hardness as Ca CO_3	130.2	20%	80%	120%
pH	150.1	20%	NA	NA
TDS	160.1	20%	80%	120%
TSS	160.2	20%	80%	120%
Turbidity	180.1	20%	NA	NA
TOC/DOC	415.1	15%	85%	115%
Chlorides	300.0	20%	80%	120%
Oil & grease	1664	18%	79%	114%
Nutrients				
NO3-N	300.0	20%	80%	120%
Dissolved Ortho-P	365.2	20%	80%	120%
Total P	365.3	20%	80%	120%
TKN	351.3	20%	80%	120%
Metals (total & dissolved)				
Arsenic (As)	206.3	20%	75%	125%
Cadmium (Cd)	200.8	20%	75%	125%
Chromium (Cr)	200.8	20%	75%	125%
Copper (Cu)	200.8	20%	75%	125%
Iron (Fe)	200.9	20%	75%	125%
Lead (Pb)	200.8	20%	75%	125%
Nickel (Pb)	200.8	20%	75%	125%
Zinc (Zn)	200.8	20%	75%	125%

Notes: RPD = relative percent difference between duplicate analyses.
Recovery, lower and upper limits refer to analysis of spiked samples.

Table 6-2
Control Limits for Precision and Accuracy for Sediment Samples

Constituent	EPA Method	Maximum Allowable RPD	Recovery Lower Limit	Recovery Upper Limit
Conventional				
TOC	415.1	15%	85%	115%
Nutrients				
Total P	365.3	20%	80%	120%
Total N	351.4	20%	80%	120%
Metals				
Arsenic (As)	6010	20%	75%	125%
Cadmium (Cd)	6010	20%	75%	125%
Chromium (Cr)	6010	20%	75%	125%
Copper (Cu)	6010	20%	75%	125%
Iron (Fe)	6010	20%	75%	125%
Lead (Pb)	6010	20%	75%	125%
Nickel (Pb)	6010	20%	75%	125%
Zinc (Zn)	6010	20%	75%	125%

Notes: RPD = relative percent difference between duplicate analyses. Recovery, lower and upper limits refer to analysis of spiked samples.

7.0 Equipment

Each of the six runoff monitoring stations are equipped with an American Sigma 900 peristaltic pump sampler, an American Sigma 950 flow meter and sensor, and a 12 Volt power source. Five of the six stations (excluding Tahoe Meadows) are also equipped with an American Sigma electronic tipping bucket rain gauge and three of the six sites are equipped with precipitation sampling equipment. This monitoring equipment is housed in either a locked steel box enclosure or underground vault.

In addition to the equipment listed above, two of the six sites (Echo Summit and Tahoe Airport) are equipped with sediment sampling equipment. This equipment consists of a #635 mesh size bag filter installed at the bottom of each double-barrel sediment trap and a series of three sediment trays equipped with progressively finer mesh. The sediment trays are located at the runoff discharge point to capture sediments that pass out of the sediment traps The monitoring station components are described below.

7.1 Automatic Sampler

The American Sigma 900 automatic sampler consists of Teflon coated stainless steel intake strainer, Teflon lined intake tubing, flexible pump tubing, a peristaltic pump, a composite sample bottle, and a controller. The sampler will be programmed to collect flow-based composite samples. The intake strainer is securely fastened at a location in the runoff flow stream. The Teflon intake tubing is securely fastened to the intake strainer then housed in protective conduit to the point where the tubing enters the monitoring equipment steel box enclosure. The Teflon intake tubing is attached to the flexible pump tubing at the sampler. The flexible pump tubing runs through the sampler peristaltic pump into the composite sample bottle.

Since the samplers will be configured to collect flow weighted samples, a signal will be sent from the flow meter to the sampler, and a sample aliquot collected, after a

programmed volume of flow has passed the flow monitoring point. This programmed volume between sample aliquot collection is established based on forecasted rainfall totals and estimated runoff volumes.

7.2 Flow Meter

American Sigma 950 flow meters will be utilized at each of the monitoring stations. The flow meter will be programmed to initiate water quality sampling based on user-selected conditions; generally the exceedance of some predetermined flow volume at the monitoring location. At stations with double-barrel sediment traps, a weir has been installed at the outlet of the second sediment trap. Using a bubbler technology to measure depth of flow over the weir, flow can be measured through the double-barrel sediment traps. The flow meter converts depth measurements to flow volumes based on the configuration of the weirs. At stations with outfall pipes, an area-velocity flow meter has been installed in the drainpipe. The flow meter calculates flow volumes from depth and velocity measurements through the drainpipe.

7.3 Rain Gauge

American Sigma electronic tipping bucket rain gauges will be used to measure and record precipitation amounts at each of the monitoring stations. The rain gauge is mounted at the top of a vertical steel pole. Rainfall data is sent through a cable running inside the pole and into the data logger of the flowmeter. The gauge records precipitation in 0.254 millimeter (0.01 inch) increments. Rainfall is funneled into a tipping bucket mechanism that tips when a volume equivalent to 0.254 millimeters (0.01 inch) of precipitation has accumulated. Each bucket tip is counted and a signal is sent to the data logger to record the precipitation.

7.4 Precipitation Quality Sampler

Precipitation samples will be collect at the Echo Summit, Tahoe Airport, and Snow Creek sites. The samples will be collected in a high-density polyethylene (HDPE) liner that slips into a 13.25-liter (3.5 gallon) capacity plastic bucket. The bucket with liner will be pole-mounted in an area having a clear opening to the atmosphere, without vertical obstruction. The pole will extend approximately 2.4 meters (7.8 feet) above grade. The mounting pole will be attached to the runoff monitoring enclosure in the same manner as the rain gauge pole.

7.5 Sediment Sampling Equipment

Sediment samples will be collected using a filter approach. Sampling equipment for this method is described below. A thorough description of sediment sampling equipment is located in Section 12.

This collection procedure utilizes a passive filtration system to collect the majority of the sediment as the stormwater passes through the sediment traps and into the natural channel downstream. Filters are placed in the existing sediment traps to collect the sediment that settles out, and within a filter box placed at the discharge of the sediment

traps. The filter box is equipped with three sediment screens and is designed to collect sediment that passes through the traps.

8.0 Health and Safety

Health and safety procedures that have been established for the Caltrans Tahoe Basin Stormwater Monitoring Project must be followed at all times. These procedures are presented in the document, *Caltrans Tahoe Basin Stormwater Monitoring Program Health and Safety Plan*. A copy of the plan is located in Appendix A. Each field team member will receive a copy to review prior to the start of the monitoring project. A copy must always accompany each crew out in the field.

Several general procedures that must be followed at all times include:

All field personnel must wear hard hats, traffic vests, and steel-toed boots when working outside the vehicle.

Traffic control must be set up before conducting any work in the Caltrans right-of-way where personnel will be exposed to traffic. Standard traffic control measures include parking vehicles to shield personnel from traffic and using hazard lights.

No field personnel will enter a sediment trap, manhole or storm pipe without submitting a confined-space entry permit with CDM. Confined space entry procedures are included in the Health and Safety Plan.

Housing lids and sampler trays containing full bottles can be very heavy. Personnel must be careful when lifting to avoid injury and/or spilling the samples (i.e., keep back straight and lift with your legs).

Clean nitrile gloves will be worn by all field crewmembers when working with sampler bottles (empty and filled) and during grab sampling.

All electronic equipment should be kept as dry as possible.

Cell phones are not to be used while driving.

9.0 Monitoring Preparations and Logistics

Sample bottle ordering, bottle labels, runoff monitoring tubing installation, field equipment maintenance, monitoring event selection criteria, weather tracking, notification procedures, and bottle labeling procedures are presented in this section.

9.1 Bottle and Blank Water Order

Prior to the first targeted storm and immediately after each monitored storm event, bottles for the next event must be ordered from the laboratory. Adequate composite and grab sample bottles will be ordered for each of the monitoring stations, plus bottles for quality control samples. Blank water will be ordered when blank samples are to be collected.

Prior to each targeted storm at least ten of the 10-liter (2.6 gallon) polyethylene composite sample bottles and lids shall be cleaned by the laboratory according to the methods specified in Appendix B.

9.2 Bottle Labels

All grab and composite sample bottles should be pre-labeled to the extent possible before each stormwater-monitoring event. Pre-labeling sample bottles simplifies field activities, leaving only date, time, sample number, and sampling personnel names to be filled out in the field. Basic bottle labels are available pre-printed with space to pre-label by hand writing or typing. Custom bottle labels may be produced using blank labels,labeling software, and waterproof ink. The bottle label should include the following information, with other items as appropriate:

Project Name _____
Station Name_____
Sample Code_____(see below for sample code development)
Date _____ Time_____
Sample __ of __. Type _(grab/composite)__
Collected by _____
Preservative _____ Analysis _____

Each sample bottle label shall include a sample identification code as shown below.

SSSSRYYMMDDHHmmTT##

Where:

SSSS	=	station number (3201, 3202…)
R, P, S1, S2, S3, Q	=	R = runoff, P = precipitation, S1 = sediment can 1, S2 = sediment can 2, S3 = Effluent Filter Box, Q = QA/QC Sample
YY	=	last two digits of the year (01)
MM	=	month (01-12)
DD	=	day (01-31)
HH	=	hour of the last sample collected (00-23)
mm	=	minute of the last sample collected (00-59)
TT	=	Type or QA/QC Identifier (if applicable) G = Grab, C = Composite EB = equipment blank FS = field split ## = bottle number

Note: Day, hour, and minute represent the day and time when the rain ended.

All sample bottles should be labeled on the bottle rather than the cap to identify the sample for laboratory analysis. Sample labels should include type of sample (precipitation samples are considered composite samples), type of QC sample (i.e. field splits), sampler's name, date, time, and location. For a composited runoff sample collected at Site 3202 collected on December 8, 2000, the sample number will be as follows given the last sample was collected ended at 4:15 PM:

Bottles should be labeled in a dry environment prior to field crew mobilization. Attempting to apply labels to sample bottles after filling may cause problems, as labels usually do not adhere to wet bottles. The labels should be applied to the bottles rather than to the caps. Following labeling, clear scotch tape should be applied over the label to prevent ink from smearing.

9.3 Intake and Suction Tubing Installation

Clean intake and pump tubing should be installed using "clean techniques," so as not to contaminate the tubing. The tubing should remain double bagged until the time of installation. The tubing ends should be covered with clean latex material to keep the tubing clean during installation, which involves feeding the tubing through protective conduit. During installation, the intake and pump tubing should only be handled wearing clean nitrile gloves. During installation, the tubing ends should not touch any item not known to be clean. It is important to avoid kinking of the intake tubing during installation, as this will hinder sample collection.

Once the tubing has been installed, the laboratory-cleaned Teflon-coated stainless steel intake strainer should be installed using "clean techniques." During installation, the strainer should only be handled while wearing clean nitrile gloves. The strainer should be attached to the end of the intake tubing and secured at the designated sampling location. All hardware in the immediate area of the intake strainer (hardware used to secure the suction tubing and intake strainer) must be stainless steel, polyethylene, or Teflon to minimize the possibility of sample contamination.

9.4 Field Equipment Maintenance

Prior to the first targeted storm and immediately after each of the subsequent sampling events, field personnel will inventory field equipment (see Figure 9-1 for field equipment checklist). Field equipment should be kept in one location, which is used as a staging area to simplify field crew mobilization.

Field personnel shall also perform field maintenance and testing of equipment to ensure proper operation. At a minimum, the frequency and nature of equipment maintenance shall be consistent with the manufacturer's recommendations. It is anticipated that there will be a period each year (May through July) when the equipment will not be operational. Equipment adversely affected by long non-operational periods will be removed, stored, and reinstalled prior to the commencement of the next sampling period. Records will be kept of all equipment maintenance.

Storm Kit Equipment List

- ☐ First aid kit
- ☐ Keys to enclosure locks
- ☐ Flashlights (2) - hand held and lantern
- ☐ Maps
- ☐ Precipitation sample buckets and liners
- ☐ Extra batteries
- ☐ Writing pens (2),
- ☐ Diagonal cutters
- ☐ Electrical tape
- ☐ Cable ties (assorted sizes)
- ☐ Utility knife
- ☐ Ziplock baggies (assorted sizes)
- ☐ Gloves - nitrile
- ☐ Duct tape

Storm Mobilization Equipment List

- ☐ Storm kit
- ☐ Log books/log sheets
- ☐ Paper towels
- ☐ Autosampler bottles
- ☐ Bottle labels
- ☐ Coolers and ice
- ☐ Laboratory-provided blank water
- ☐ Cellular phone
- ☐ Personal rain gear
- ☐ Hardhats and orange safety
- ☐ Traffic cones/signs
- ☐ Health and Safety Plan

Figure 9-1. Field Equipment Checklist

Standard equipment preparation procedures will be conducted prior to each target storm that is monitored for water quality, precipitation quality and sediment. For the water quality monitoring equipment, the autosampler, flow meter and rain gauge are all inspected. Tubing, clamps or cable ties, electrical connections, battery strength, intake strainer, flow probe and programming are all checked. For the precipitation monitoring, mounting poles and holders are inspected and cleared of any debris.

9.5 Composite Bottle Installation

Prior to each monitoring event, laboratory-cleaned composite sample bottles will be installed into both the autosampler and precipitation station using "clean techniques". The composite bottles must be sealed in a plastic bag until the time of installation. The lids must be kept individually bagged when not in use. During installation, the bottles and lids should be handled only while wearing clean nitrile gloves, and the lids should not touch any item not known to be clean. At no time should any object or material (even clean, gloved hands) contact the inner surface of a composite bottle or lid.

9.6 Sediment Filter Installation

Prior to each monitoring event, cleaned filters and filter fabric will be installed into the sediment traps or filter box using "clean techniques". The filters will be sealed in a plastic bag until the time of installation. During installation, the filters and filter fabric should be handled only while wearing clean nitrile gloves.

9.7 Storm/Event Selection Criteria

Event selection criteria for Runoff and Precipitation monitoring are presented below.

9.7.1 Runoff Monitoring

Selection criteria for summer thunderstorm runoff monitoring, fall/spring storm runoff monitoring, and snowmelt runoff monitoring is presented below.

Summer Thunderstorms
Summer storms that meet the following criteria will be considered for monitoring:

Approximately 40% or higher probability of precipitation,

At least a 24-72 hour dry period preceding precipitation.

Fall/Spring Precipitation Events
Fall/Spring storms (which may contain a mixture of rain and snow) that meet the following criteria will be considered for monitoring:

- Approximately 50% or higher probability of precipitation,
- A Quantity of Precipitation Forecast (QPF) of 0.5 cm or greater, and
- At least a 24-hour dry period preceding precipitation.

Snowmelt runoff monitoring differs fundamentally from stormwater runoff monitoring in that sampling can be initiated in response to runoff flow in the absence of precipitation. Once substantial snowfall has occurred, the following criteria will be considered for monitoring:

- Adequate snow is present on the ground to generate snowmelt runoff,
- Temperatures are forecasted to exceed 5^0C or 40^0F, and/or
- Salts are applied to melt the snow.

9.7.2 Precipitation Monitoring

Storms that meet the following criteria, which are the same criteria used for storm event selection for runoff monitoring, will be considered for precipitation monitoring:

- Approximately 50% or higher probability of precipitation,
- QPF of 0.5 cm or greater, and
- At least a 24-hour dry period preceding precipitation.

9.7.3 Sediment Monitoring

Since sediment is filtered from all runoff entering the sediment traps, sediment is monitored for each event that causes a runoff flow. This makes it possible to determine the entire amount of sediment removed from runoff by the trap during the monitoring period.

9.8 Weather Tracking

When the stormwater-monitoring program is active, the monitoring task manager or field coordinator continuously tracks weather conditions and potential storms. The frequency of weather tracking increases as incoming storms are identified as candidates for stormwater monitoring.

As a candidate storm approaches, a quantity of precipitation forecast (QPF) is projected by both the contract weather forecasting service and the National Weather Service. This is the amount of precipitation (in centimeters) expected over the entire storm event, and is normally provided along with the expected start time and duration of the storm. This information serves two essential purposes. First, it is necessary to determine, prior to making the decision to mobilize for a storm event, whether the storm will produce adequate runoff to permit collection of a meaningful set of samples. Second, because composite samples are typically collected on a flow-weighted basis, samples must be collected at appropriate intervals, so as to not under-fill or over-fill the composite bottles, based on the rainfall/runoff amounts expected during the course of the storm. When automated sampling equipment is used, the equipment must be programmed in advance with the appropriate flow-pacing rate.

If a storm event QPF is over-predicted, and the actual rainfall amount falls far short of the prediction, there may not be enough sample collected during the course of the monitoring event to conduct the specified analyses. If the QPF under-predicts the amount of rainfall actually received, then the composite bottles may need to be replaced one or more times during the event. Because it is more difficult to recover from an over-predicted QPF (inadequate sample volume), a conservatively low estimate of the expected rainfall amount is often used in programming the samplers, often equal to approximately one half of the forecast QPF.

9.9 Notification Procedures

The telephone tree (Figure 9-2) shows the lines of communication and notification responsibilities for the monitoring project. The telephone tree is used for stormwater monitoring preparation activities, communications during monitoring, and coordinating demobilization activities following a monitored event.

The telephone tree shows pertinent telephone numbers for each person involved in the project, including laboratory personnel numbers for the purpose of after-hours sample delivery. Emergency telephone numbers are also listed, including the number for the hospital nearest the monitoring stations.

Caltrans Personnel
Masoud Kayhanian (UCD)
(916) 278-8112 o
Kuen Tsay (HQ) (916) 653-5240 o
Sean Penders (Dist 3) (530) 741-4494 o

Task Manager
Charlie O'Neill CDM
(916) 567-9900 o
(916) 488-7334 h
Lou Regenmorter CDM
(916) 567-9900 o
(916) 708-3755 c
(916) 567-9905 f

CalScience Laboratory
(714) 895-5495 o
(714) 894-7501 f

Steve Nowak (310) 827-6683 h
(714) 335-4034 c
Bob Sterns (949) 643-5517 h

Courier Service:
FEDX (800) 463-3339

Field Coordinator
Stefan Schuster CDM
(775) 588-0201 o
(916) 708-3574 c

Field Crew
Tim Boyer (775) 588-0201 w
(530) 525-0480 h
(775) 690-9340 c
Beth Gross (530) 542-5560 w
(530) 542-0923 h

Monitoring Equipment:
American Sigma
24 hour help line (800) 653-1230
Oratech (local sales rep.)
Rob Larsen (415) 467-9455 o
(415) 467-4319 f

Forecasters:
Weather Watch (619) 223-8163

National Weather Service (916) 979-3051

Emergency: **911**
Hospital
Barton Memorial Hospital (530) 541-3420
Tahoe Forest Hospital (530) 587-6011

KEY
o = office
c = cellular
f = fax
h = home
p = pager
v = voice mail

Figure 9-2. Telephone Tree

10.0 Runoff Water Quality Sample Collection

Clean sampling techniques, field crew mobilization, pre-event set-up activities, event monitoring activities, post-event activities, and special considerations for cold weather and snowmelt monitoring are presented below.

10.1 Clean Sampling Techniques

"Clean sampling" techniques are required to provide for the collection of water samples in a way that neither contaminates, loses, or changes the chemical form of the analytes of interest. Samples are collected using rigorous protocols, based on EPA Method 1669, as summarized below:

Samples are collected only into rigorously pre-cleaned sample bottles.

At least two persons, wearing clean nitrile gloves at all times, are required on a sampling crew.

One person ("dirty hands") touches and opens only the outer bag of all double bagged items (such as sample bottles, tubing, strainers and lids), avoiding touching the inside of the bag.

The other person ("clean hands") reaches into the outer bag, opens the inner bag, and removes the clean item.

When a clean item must be re-bagged (such as a composite bottle lid), it is done in the opposite order from which it was removed.

Clean nitrile gloves are changed whenever something not known to be clean has been touched.

In order to reduce potential contamination, sample collection personnel will adhere to the following rules while collecting stormwater samples:

(1) No smoking!

(2) Never sample near a running vehicle. Do not park vehicles in immediate sample collection area (even non-running vehicles).

(3) Avoid allowing rainwater to drip from rain gear into sample bottles.

(4) Do not eat or drink during sample collection.

(5) Do not breath, sneeze, or cough in the direction of an open sample bottle.

For this program, clean techniques must be employed whenever handling the composite bottles, bottle lids, suction tubing, or intake strainers.

10.2 Field Crew Mobilization

When a candidate storm is approaching, or when a potential snowmelt event may occur, the monitoring task manager will alert the field crew and analytical laboratory. Field crews will be given notice to mobilize when precipitation or snowmelt has begun.

When first alerted, field crewmembers should check monitoring equipment and supplies to ensure they are ready to conduct monitoring. Once given the go-ahead by the monitoring task manager, the field crew members will obtain adequate ice for each station, including grab samples, and travel to each station to conduct final preparations for monitoring.

Site Check

Set-up traffic safety controls. Upon arriving at each station, traffic safety controls must be set-up as required.

Access equipment. Access to the monitoring equipment is gained by unlocking the padlocks to the lid of the enclosure, and lifting the lid until both hinges lock. Be careful to check for spiders and wasps in the padlock case and inside the housing.

Perform all the inspections listed in both the Sampler Inspection and Set-Up sections of the *Station Visit Checklist for Set-Up/Bottle Replacement/Shut-Down Form* (Appendix C).

10.3 Pre-Event Set-Up

The following are set-up activities that should be conducted prior to each runoff monitoring event.

10.3.1 Check Autosampler Set-up and Programming

1. Replace the sampler battery. Replace the existing battery with a freshly charged one at battery operated stations.

2. Inspect tubing and connections.

   - Remove sampler control lid by releasing the upper row of latches (3).

   - Perform the following checks:

     1) Intake tubing for kinks and twists (remove or straighten if found).

     2) Clamps for tightness and conditions (tighten if loose, replace if broken or missing).

     3) All electrical connections for tightness.

     4) Pump tubing for cracks and excessive wear/tear (replace if found).

3. Place clean sampler bottle in the base of the sampler.

- Release the bottom row of latches (3) and lift off the control section using the handles on the side of the sampler.
- Pump tubing must be connected and not kinked.
- Place a clean composite bottle with lid in the base.
- Fill the base with crushed ice (approximately one 5-pound bag).
- Using clean techniques, remove the bottle lid and store in a clean Ziplock bag (this lid will be reused when retrieving full composite bottle), and replace with clean tubing-hole lid.
- Using clean techniques, remove pump tubing end cover and insert tubing into the composite bottle.
- Place the control section back onto the base and shut each latch.

4. Review sampler programming.

   - Open the site notebook (or Appendix C) to the page documenting the Sampler Programming.
   - Compare the entries displayed by the sampler to those entries highlighted in the set-up document.

     1) Turn on the sampler by pressing the ON key. After a moment, the display reads either "READY TO START", "PROGRAM HALTED", or "PROGRAM COMPLETE." Press the * key, located next to the display window.

     2) Press the NO key to the question, "Alter Parameters?"

     3) The sampler now automatically scrolls through selected parameters.

     4) Upon completion of the review, the display should again read "READY TO START", "PROGRAM HALTED", or "PROGRAM COMPLETE."

   - Notify the Field Coordinator of any differences between the sampler's program and set-up document; re-program as instructed by the Field Coordinator.
   - Press the START PROGRAM key. The display should read "PROGRAM RUNNING," if not the sampler must be re-programmed based on the entries in the set-up document.

5. Match the sampler's clock to the flow meter's clock.

   - Wake up the flow meter by pressing the button on upper right side of the case.
   - The current time and date are displayed on the top bar of any display screen.

- Press the TIME READ key on the sampler to display the current time and date; they will be displayed for several seconds.
- The sampler's time and date should match the flow meter's time to the minute.
- If there is a difference between the two times, change the sampler's time to match the flow meters unless the flow meter is obviously wrong.
- Change the sampler's time and/or date.
    1) Press the TIME SET key.
    2) The time and date will be displayed with the hour flashing, change the hour by pressing the appropriate numerical key(s) and then pressing the YES/ENTER key.
    3) Minutes will now be flashing and can be changed by entering the correct numeric values and pressing the YES/ENTER key.
    4) Continuing this same procedure for setting time and date, pressing the YES/ENTER key to skip over correct entries.
    5) After the correct year is entered, the display will first read "SYNCHRONIZE TIME" and then "- ENTER- AT TIME".
    6) Press the YES/ENTER key to start the clock; the display will then move through "CLOCK IS NOW SET", the new time and date, and finally stop at the program status.

6. Replace the control lid. Place the lid back over the control section and close the three latches, being careful not to pinch the sampler tubing.

10.3.2 Check Flow Meter Set-up and Programming

1. Wake the flow meter.
    - Press the button on the upper right hand side of the flow meter to wake the meter and illuminate the screen.
    - If the STATUS SCREEN is not shown (check the upper right corner), this screen will need to be accessed.
        1) Open the clear plastic case lid by unlatching the two latches on the right side.
        2) Press the MAIN MENU key
        3) Press the "STATUS" option

4) the STATUS SCREEN should now be displayed

2. Record flow and rainfall volumes. Read the total flow in liters (l) and the total rainfall (cm) from the screen and record these values on the Set-Up section of the *Station Visit Checklist for Set-Up/Bottle Replacement/Shut-Down Form* at the designated space.

3. Review flow meter programming, if directed by the Field Coordinator.

   - Open the site notebook to the page documenting the Flow Meter Set-up and Programming.
   - From the Main Menu screen, select the "SETUP" option.
   - From the Setup screen, select the "REVIEW ALL ITEMS" option.
   - The current programming will be displayed. To view all entries, use the option to scroll through the entire listing.
   - Compare the programmed items to the entries documented on the *Flow Meter Set-up and Programming Form* located in the station notebook. If they do not match, call the Field Coordinator for direction.
   - Press the Main Menu key to return to the main menu.

4. Program the trigger volume, if directed by the Field Coordinator.

   - Press the RUN/STOP key to halt the program. The word "HALTED" should be flashing in the lower left corner.
   - Press Main Menu key to access the Main Menu screen.
   - Select the "SETUP" option.
   - Select the "MODIFY SELECTED ITEMS" option.
   - Scroll down the listing until "SAMPLER PACING" is highlighted, press the "SELECT" option.
   - Accept "ENABLE" by pressing the "ACCEPT" option.
   - Clear the existing entry, by selecting the "CLEAR ENTRY" option.
   - Key in a new value per the Field Coordinator, and press the key for the "ACCEPT" option.
   - Return to the main menu screen by pressing the "RETURN" option.

- Press the RUN/STOP key, then select the "RESUME" option. The program will restart, which is confirmed by the word "RUNNING" displayed in the lower left corner.

5. Shut the case lid and close the latches.

10.4 Event Monitoring Activities

Stormwater runoff monitoring event activities are described below.

10.4.1 Composite Sample Collection

After all of the pre-event set-up steps have been taken, flow weighted composite samples will automatically be collected at the entrance of the drain inlet or sediment trap. Sample collection will continue as long as significant runoff flow is present.

At two sites (Echo Summit and Tahoe Meadows), composite samples will be collected at the discharge point of the double-barrel sediment traps. These samples will be used to assess effectiveness of the double-barrel sediment traps in reducing constituents of concern from highway runoff. This assessment will be based upon the comparison of water quality data collected from both the inflow and outflow points. At these two sites a second autosampler will be used to collect the effluent samples. Figure 10-1 illustrates the general layout of the runoff sampling equipment at the Echo Summit and Tahoe Meadows sites.

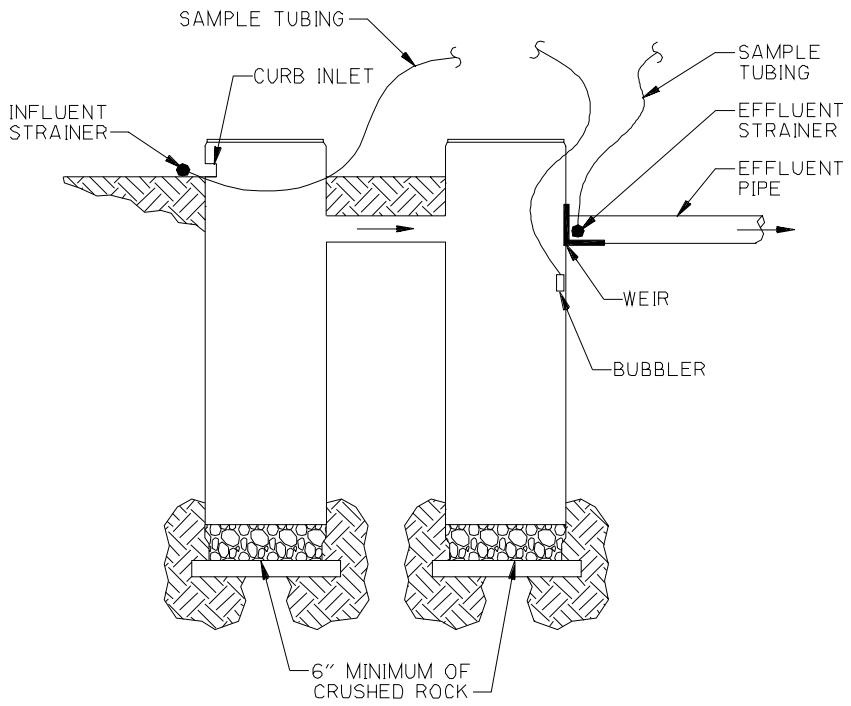

FIGURE 10-1 - Double-Barrel Sediment Trap Sampling Station

TYPICAL SECTION

NOT TO SCALE

10.4.2 Oil and Grease Grab Sample Collection

Grab samples for oil & grease will be taken at each monitoring site once per season. It is desired that grab samples be collected during storm event peak flow. However, due to the difficulty in predicting the time of peak flow, grab sampling during peak flow may not be possible. Therefore, to the greatest extent possible, grab samples will be collected at the approximate mid-point of the discharge period.

Oil & grease grab samples will be collected by directly submerging the sample bottle into the flow stream, allowing to fill, capping, and placing on ice.

10.4.3 SSC Grab Sample Collection

Grab samples for SSC and TSS comparison will be taken at the two sediment trap effectiveness monitoring sites. Up to eight duplicate samples will be collected representing both untreated and treated runoff. One or a series of duplicate samples will be collected per runoff event. Sampling times will be noted to identify the place on the flow hydrograph where each sample is collected. The grab samples will be collected using the autosamplers. Samples will be pumped into separate containers. After each round of grab sampling, the autosampler will be re-started to continue with its programmed sampling routine.

10.5 Post-Event Activities

1. If the STATUS SCREEN is not shown (check the upper right corner), this screen will need to be accessed.

2. Perform all tasks listed in the Shut-Down Checks section of the *Station Visit Checklist for Set-Up/Bottle Replacement/Shut-Down Form*.

3. Record the sampling times on the Field Data Log (Appendix C).

4. Fill in the top portion of the form, making sure to indicate the "composite sample replacement" number (especially important if bottles have been replaced over the course of the event at a particular site).

5. Turn the page over and fill in the station ID number, time, and date on the top three lines.

6. Record the individual sampling data in the table.

   - Press the TIME READ key on the sampler for three (3) seconds, the time of the first sample should be displayed

   - Record date, time, and any notes on the "Trigger #1" line of the Sample Identification Form

   - Press the ENTER key to move to the next sample time and record information on line #2 of the table

- Continue pressing the ENTER key and recording information on subsequent lines until "PROGRAM HALTED" is displayed

7. Record flow and rainfall volumes

   - Press the button on the upper right hand side of the flow meter to wake the meter and illuminate the screen.
   - If the STATUS SCREEN is not shown (check the upper right corner), this screen will need to be accessed.
   - Open the clear plastic case lid by unlatching the two latches on the right side.
   - Press the MAIN MENU key
   - Press the "STATUS" option
   - the STATUS SCREEN should now be displayed
   - Read the total flow in liters (l) and the total rainfall (cm) from the screen and record these values on the Shut-Down section of the *Station Visit Checklist for Set-Up/Bottle Replacement/Shut-Down Form* at the designated space.

8. Complete sample bottle labels

   - Complete the bottle label for each filled and partially filled bottle. This task can be performed for all labels at once using the information from the just-completed Sample Identification Form.
   - For writing ease, perform this task under cover to keep the labels and pages as dry as possible.
   - Complete the lower portion on the front page of the Field Data Log at the same time.

9. Remove bottle

   - Lift off the control section off the base using the handles on the side of the sampler.
   - Remove the lid from the Ziplock bag and place it securely on the bottle.
   - Remove the filled or partially filled bottle.

     1) Dry off the bottle
     2) Place the completed label on the bottle, not the lid
     3) Place a strip of clear packing tape over the label

4) Place the bottle in a cooler

- Pack each cooler with ice to keep samples cool.

10. Estimate Sample Coverage

- Note the following information:

1) Total number of successful samples

2) Times rainfall and runoff started

3) Time of first sample was collected

4) Time when last sample was collected

5) Times when rainfall and runoff ended

6) Portion of hydrograph covered (first, middle, last)

7) Peak flow captured

8) Estimate of hydrograph covered by sampling (%)

11. Site Exit

- Complete the Set-Up section of the Station Visit Checklist in the *Set-Up/Bottle Replacement/Shut-Down Form*. Field crews must complete the form and document the findings on this form before leaving the station.

- Fill in the *Site Visit Log* (Appendix C). Site visit log is located in the front of the station notebook. Place the notebook back on the shelf.

- Keep the completed forms at the office.

- Secure site. Remove any waste from the site, carefully close the housing lid, and lock up the enclosure.

- Inspect the sampler strainer and flow probes. If accessible from the outside, inspect the sampler strainer and flow probes; note any problems (debris or damage to the probes, strainer, tubing, and cords).

10.6 Special Considerations for Cold Weather Monitoring

Cold weather sampling activities may be hampered by two potential difficulties that are not present in moderate and warm weather: snow accumulation and freezing of sample water in the sample line. Measures to accommodate these potential problems will include:

- Regular snow removal
- Regular ice removal from around the equipment
- Insulation of the sampler cover and sample tubing conduit
- Maintaining a positive gradient from sample intake to sampler pump
- Checking of air temperature prior to and during sample collection
- Additional checking of the equipment by field crews, and
- Manual grab sampling during times when autosamplers cannot be used

10.6.1 Snow Removal

Accumulation of snow may interfere with the ability of field crews to access the monitoring equipment and perform sample collection functions. In addition, highway snow removal activities may cause additional accumulations along the highway right-of-way where the monitoring stations are located.

A snow removal contractor will be retained to provide regular clearing of snow at each monitoring station, to ensure that field crews have space for vehicle parking and have access by foot to the equipment enclosures, and that the enclosures themselves are free and clear of snow. This function should be performed on a regular basis (after every snowfall), to reduce the build-up of snow throughout the season, and to ensure that field crews have access to the stations at all times for monitoring activities. Snow and ice should also be removed from areas where it will block flow to the monitoring site.

10.6.2 Ice Removal

Accumulation of ice may interfere with the ability of the equipment to monitor flows and collect samples. The ends of the bubbler line, weirs and autosampler strainers all need to be kept free of ice. This function should be performed on a regular basis (prior to each sampling event).

10.6.3 Equipment Insulation

To help prevent freezing of the water in the sample line, the sample tube conduits will be insulated with pipe insulation wherever they are exposed to the outside, and the sampler cover will be lined with insulation material to help retain heat generated by the sampler.

10.6.4 Sampler Tube Gradient/Purge

To help prevent the freezing of water in the sampling line, the sampling tube will continue to be set so as to maintain a positive gradient from intake to sampler pump. This will allow sample water to drain fully from the tube after each aliquot.

The field crews will also ensure that the Sigma 900 sampler will continue to be programmed to perform a final purge after each sample aliquot is collected.

In the event that sample water is retained in the pump tubing and freezes, this could bind up the sampler pump. This would likely cause the sampler's fuse to blow before any damage occurs to the pump. Field crews will therefore need to check pump operation and verify that the fuse has not blown and that the unit is still operational. Extra fuses will be maintained on hand to cover this possibility.

10.6.5 Manual Grab Sampling

Snowmelt runoff may occur under weather conditions when autosamplers cannot be used. For example, snowmelt runoff may occur during a winter storm event when temperatures are below freezing, but snow control operations create runoff by using sediment and salts to melt the snow falling on the roads. Through attempts to conduct automated monitoring it may be discovered that, despite the field crews' best efforts, the autosamplers are unreliable under cold-weather conditions, and the effort required to keep them operational may be better served to simply collect manual grab samples. If this situation occurs, several grab samples may be taken to characterize an extended snow melt period (e.g., every four hours for a maximum of 24 hours). Manual grab sampling will only be conducted as long as the sites are accessible and snow control operations will not endanger the field crews.

10.7 Snowmelt Runoff Monitoring

Snowmelt runoff monitoring differs fundamentally from stormwater runoff monitoring in that sampling can be initiated in response to runoff flow in the absence of precipitation. Once substantial snowfall has occurred, field crews will need to track weather conditions so as to be alert to the possibility of significant snow melt. When the desired conditions occur (warming temperatures after a period of snow accumulation), field crews will program the automated equipment to collect flow-proportioned composite samples of the melting snow. This will include the following modifications to the typical runoff monitoring protocols:

- Field verification of conditions
- Automated equipment programming
- Visual and photographic observations

These modifications are described below.

10.7.1 Field Verification of Conditions

Field crews will verify that snowmelt runoff is occurring, and that there are no obstructions to runoff flow. As described above for cold weather monitoring, field crews also will verify the air temperature. If the temperature is above 5°C, and there is no ice present in the sampling tube, autosamplers will be used. Otherwise the event will be aborted or manual grab sampling may be performed, with multiple grabs collected on a time-paced basis dependent on the duration of the expected runoff.

10.7.2 Automated Equipment Programming

Field crews will use their best judgment about the expected flow volume that will be observed during a given monitoring period. Initially, it is recommended that the flow pacing be programmed at the same level as for a low (0.5 cm) rainfall event. To ensure composite sample representativeness, the goal will be to collect at least eight aliquots for each monitoring event, with a minimum number of six aliquots, as specified in the Guidance Manual for a small storm event.

Because snow melt may continue at varying rates for days, it will be necessary to limit the composite collection period to provide some degree of standardization and permit compliance with sample holding time requirements. The snowmelt sampling composite period therefore will be limited to 24 hours from the start of composite sampling. Field crews will also make observations of runoff flow rates at various times and in various conditions during the winter/spring snow-melt season to provide better approximations of the runoff volume to be expected from periods of snow melt.

If runoff continues after the initial 24-hour period, the existing bottle will be collected and a new bottle inserted so the sampling can continue for another 24 hours.

10.7.3 Visual and Photographic Observations

Field crews will make visual and photographic observations before and after each snowmelt runoff-sampling event. These observations will include:

- Approximate depth of snow in snow banks and on the ground
- Weather conditions during week leading up to monitoring event
- Visual condition of snow pack in sampling area
- Photographs of snow pack and snow-melt runoff before, during and after monitoring
- Brief summary of snow management activities conducted by Caltrans

An additional snowmelt monitoring log sheet will be filled out for these events. Refer to the example of the snow melt log sheet in Appendix C.

11.0 Precipitation Water Quality Sample Collection

Precipitation samples will be collected in a high-density polyethylene (HDPE) liner that slips into a 3.5-gallon capacity plastic bucket. The bucket with liner will be pole-mounted in an area having a clear opening to the atmosphere, without vertical obstruction. The pole will extend approximately 2.4 meters (7.8 feet) above grade.

11.1 Pre-Event Set-Up

The sampling liners must be pre-cleaned prior to each monitoring event, according to the composite bottle cleaning protocols used for the runoff composite samples, as

specified in Appendix B. The liners will be sealed with plastic after cleaning until they are slipped into the buckets on-site on the mounting poles. The liners must be stored so as to minimize exposure to environmental contamination. Blank samples must be run on the sampling liners in the same manner and using the same schedule as runoff composite samples.

Sampling bucket liners will be delivered to the sampling locations, unsealed, slipped into the bucket on the mounting poles as late as is feasible before the onset of precipitation, so as to minimize collection of dry deposition.

Clean techniques must be used when slipping the clean liners into the buckets and at all other times when handling precipitation sampling containers. This includes wearing gloves and taking additional precautions as described under Sample Collection below.

11.2 Event Monitoring

Buckets with liners will set out on site as close as possible to the onset of precipitation, using clean sample handling techniques.

Rain water and snow samples will be collected directly into the pole-mounted sampling bucket. Snow samples will be allowed to melt in the bucket.

Precipitation samples are particularly susceptible to contamination, due to their relatively low concentrations of pollutants. Care must be taken during all phases of sampling to minimize exposure of the samples to sources of contamination. To reduce potential contamination, sample collection personnel must adhere to the clean sampling techniques presented in Section 10.1 as well as the following rules while collecting precipitation samples:

- Never unseal the precipitation-sampling liners near a running vehicle. When possible, park the field vehicles out of the immediate sample collection area.
- Always wear clean, powder-free nitrile gloves when handling precipitation sampling liners and sample bottles.
- Never touch the inside surface of the sample bucket liner, even with gloved hands.
- Never allow the inner surface of the sample bucket liner to be contaminated by any material other than the sample water.
- Never allow any object or material to fall into or contact the collected sample water.
- Do not allow rainwater to drip from rain gear or other surfaces into sample buckets.

11.3 Post Event Activities

At the conclusion of the monitoring event, the samples collected in the precipitation sample buckets must be removed from the mounting poles as soon as possible after precipitation has stopped. The samples will then be poured directly into clean HDPE one-liter bottles. The bottles will be capped and labeled following the sample designation shown in Section 9.2.

All samples will be held at 4°C (on ice or refrigerated) until analysis. Samples will be delivered to laboratories along with the runoff characterization samples, using the procedures described in Section 12.

12.0 Sediment Size Distribution and Quality Sample Collection

Several potential concerns have been identified with the runoff based sampling technique for measuring sediment during storm events:

- The sampling inlet is typically screened to prevent clogging of the automatic sampling equipment. This also effectively screens out the larger size fractions from the sediment that is collected. In addition, the larger size sediments may not be collected due to gravity separation within the sampling tube.

- Sampling protocols used to measure sediment require large volumes of stormwater. For example, a sieve analysis may require approximately 120 grams sediment. Assuming an average total suspended solids (TSS) concentration of 200 milligrams per liter (mg/L), approximately 600 liters (160 gallons) of water sample would be needed to collect enough sediment for this analysis. Table 12-1 summarizes other sample volumes required for different TSS concentrations.

- The sampling inlet is sometimes positioned above the invert of a flow channel to prevent clogging of the automatic sampler. As a result, larger size sediments moving near the bottom of the channel by rolling, sliding, or skipping may not be collected, thereby not incorporating the larger sediment particle sizes in the sediment sampling.

Table 12-1
Example Sample Volumes Required for Sieve Analysis

TSS Concentration (mg/L)	Water Sample Volume Required (liters)
20	6,056
200	606
2,000	60

This SAP details sediment sampling protocols for Caltrans to implement. Sediment analytical results obtained from following these protocols will be compared to the previous years' sediment analytical results to determine if the protocols can be improved. In addition, the previous sediment sampling results will be evaluated for

possible adjustment to allow combination with results under the new protocols for statistical analysis of sediment concentrations.

12.1 Background

This section presents a discussion of sediment terminology, sediment sampling methods, and sediment characterization.

12.1.1 Sediment Terminology

Figure 12-1 is a diagram of sediment size (diameter in microns [µm]) for various classifications of solids expected in stormwater runoff.

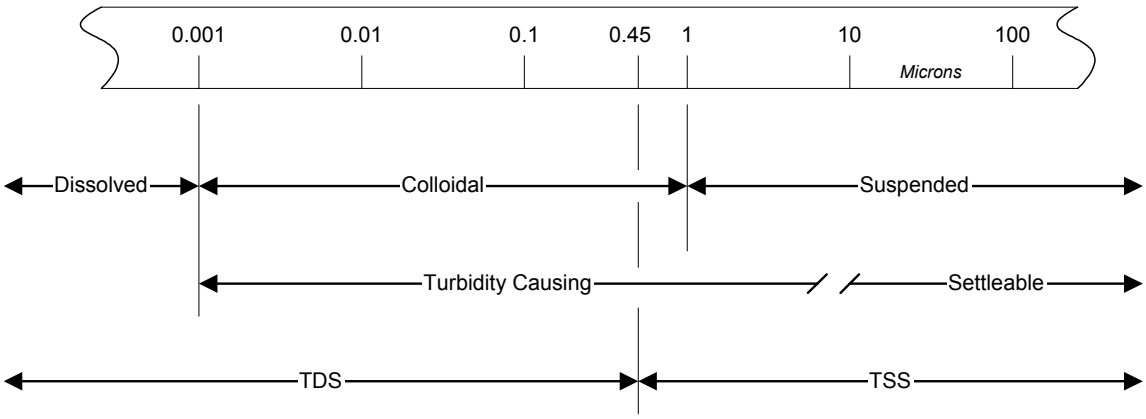

Figure 12-1. Sediments Classification

As shown, stormwater runoff will contain dissolved solids (<0.001 µm), colloidal solids (0.001 – 1 µm) and suspended solids (>1 µm). Colloidal solids (if present) and the smaller suspended solids (less than about 10 µm) typically are turbidity causing while the larger suspended solids (greater than about 10 µm) are typically settleable. Settleable solids will settle out due to gravity over time, with the smaller particles requiring longer periods of time to settle. Colloids are microparticles or macromolecules that remain suspended in waters because their gravitational settling is less than 0.01 cm/sec (Stumm et. al 1981). Differentiation between the various categories of solids generally will vary depending on such parameters as particle density, chemical composition (organic versus inorganic), flow rate, and turbulence. The cut-off between turbidity causing and settleable solids is especially sensitive to these parameters and will, therefore, vary depending on site conditions. Conversely, the cut-off between total dissolved solids (TDS) and total suspended solids (TSS), which are determined by standard analytical methods, is operationally defined at 0.45 µm. The 0.45 µm filtrate (measuring TDS) will contain turbidity causing colloids (if present) in addition to dissolved solids, while the particles retained on the 0.45 µm filter (measuring TSS) will consist primarily of particles in the suspended solids category (both turbidity causing and settleable) with some larger turbidity causing colloids.

12.1.2 Sediment Sampling Methodologies

The primary objectives of this project are to preliminarily characterize sediments in highway runoff and to determine a method to collect the total sediment load for widespread application. Sieve analysis is limited to sediments with particle sizes greater than 20 µm (#635 mesh). For particles less than 20 µm, filter paper (especially membrane filters) is required to obtain samples for size fractions and chemical analyses. Gravimetric methods to measure the quantity of various size fractions. Size fractions can also be determined using hydrometers and/or particle counting methods.

12.1.3 Sediment Characterization

The physical and chemical characteristics of the sediment affect its mobility and bioavailability to contaminants. For example, the oxidation/reduction status influences the retention or release of metals; the organic matter content affects the affinity of metals and nonpolar organic contaminants to the sediment; and the size and texture (sand, silt, or clay) of the particles affects which contaminants are more readily adsorbed to the sediment particles.

In addition, several particular constituents are found in highway runoff due to exposure to traffic. Typical constituents found in highway runoff and their sources are summarized in Table 12-2.

Table 12-2
Sources of Pollutant Constituents

Constituent	Primary Sources
Particulates	Pavement wear, vehicles, atmosphere, maintenance, snow/ice abrasives, sediment disturbance
Nitrogen, Phosphorus	Atmosphere, roadside fertilizer use, sediments
Lead	Tire wear, lubricating oil and grease, bearing wear, atmospheric fallout
Zinc	Tire wear, motor oil, grease
Iron	Auto body rust, steel highway structures, engine parts
Copper	Metal plating, bearing wear, engine parts, brake lining wear, fungicides and insecticides use
Cadmium	Tire wear, insecticide application
Chromium	Metal plating, engine parts, brake lining wear
Nickel	Diesel fuel and gasoline, lubricating oil, metal plating, brake lining wear, asphalt paving
Manganese	Engine parts
Bromide	Exhaust
Cyanide	Anticake compound used to keep deicing salt granular
Sodium, Calcium	Deicing salts, grease
Chloride	Deicing salts
Sulphate	Roadway beds, fuel, deicing salts
Petroleum	Spills, leaks, blow-by motor lubricants, antifreeze, hydraulic fluids, asphalt surface leachate
PCBs, Pesticides	Spraying of highway right of ways, atmospheric deposition, PCB catalyst in synthetic tires
Pathogenic Bacteria	Soil litter, bird droppings, trucks hauling livestock/stockyard waste
Rubber	Tire wear

Source: Kobringer, 1984.

12.2 Event Monitoring

Sediment samples will be collected using the filter approach. A detailed description of this method follows.

12.2.1 Sediment Sample Collection – Filter Approach

The filter approach utilizes a passive filtration system to collect the majority of the sediment load carried along by the runoff at each site. The runoff is directed through a series of filters that collect all the sediment that are greater than 20 µm in size.

A general diagram illustrating this approach is shown in Figure 12-6. When it rains the resulting runoff pickups the sediment and carries it along. The sediment particles vary in size as depicted by the different sizes of dots in the pool of runoff. The particle size classes represented by the dots were selected for illustrative purposes only.

At the two Tahoe Basin sediment monitoring sites, the runoff is first directed to a double barrel sediment trap. These traps are comprised of two 0.9 meter (3 feet) diameter barrels about 2 meters (6.5 feet) deep. A slot in the first lid (shaded area shown at the top of each barrel) allows the runoff to enter from the roadway. A pipe connects the two traps. A second slot is located near the lid of the second barrel that allows the treated runoff to exit. The inlets and outlets are placed so runoff does not backup onto the roadway when the traps are flowing full. The traps are designed to cause the larger and heavier sediment particles to settle to the bottom of either trap. The treated runoff is then discharged to the downstream area along with any sediment that is still in suspension.

The passive filter approach system is designed to collect the sediment that settles to the bottom of each barrel and is carried along with the runoff. Bags made of filter fabric material (#635 [20 µm]) are attached along the inside perimeter of each sediment trap barrel prior to the monitoring period. The filter bags will fit snugly against the inside of the barrel to prevent any flow from flowing under the bag. In addition, a four-foot by two-foot by two foot filter box is placed under the nappe of the flow as it discharges from the traps. The filter box contains a stack of cloth filters with progressively smaller pore sizes (#200 [75 µm], #400 [38 µm], and #635 [20 µm]. A diagram of the sampling set up is shown in Figure 12-7.

Following the monitoring period, the filters will be removed from both the barrels and box, sealed in suitable containers, labeled, and transported to the sediment laboratory. Sediments that have collected will be removed and analyzed for particle size and chemical constituents.

Sediment with sizes less than 20 µm will pass through the filter bags and box as shown by the smallest dotes in Figure 12-6. The autosampler or manual grab method will collect a sample with this size range (0 to 20 µm) for analysis. The total volume of stormwater runoff flowing through the station during the monitoring event will be recorded by a flow meter.

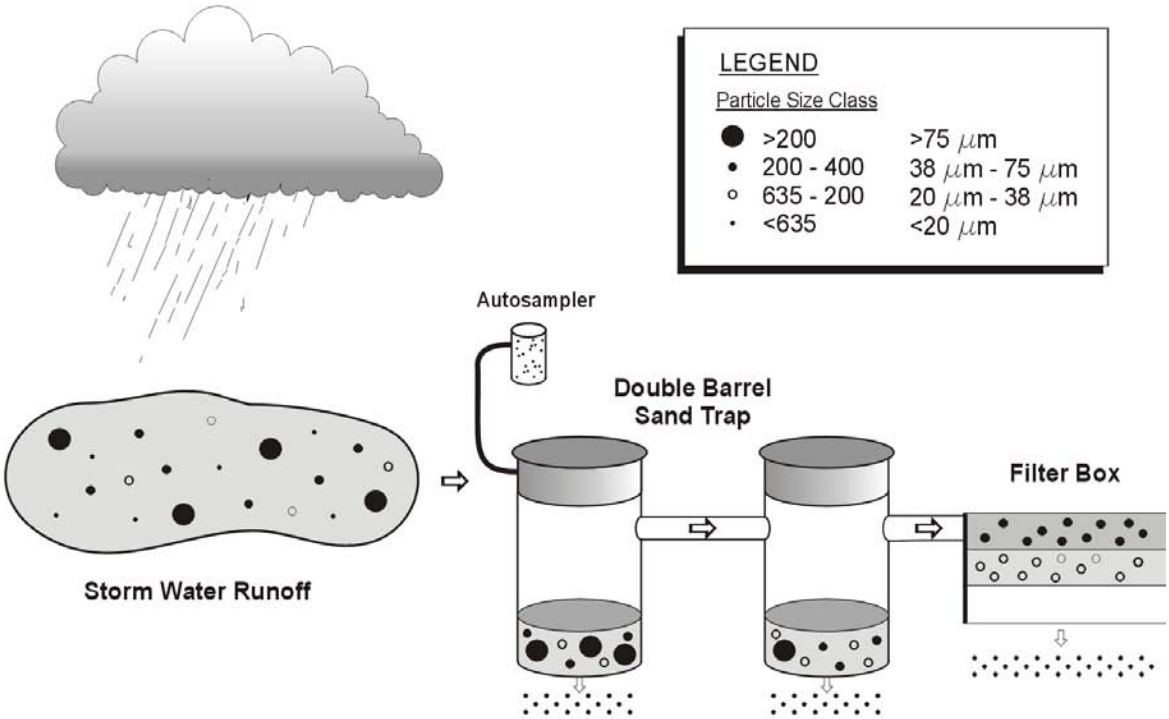

Figure 12-6. Diagram illustrating the filter approach.

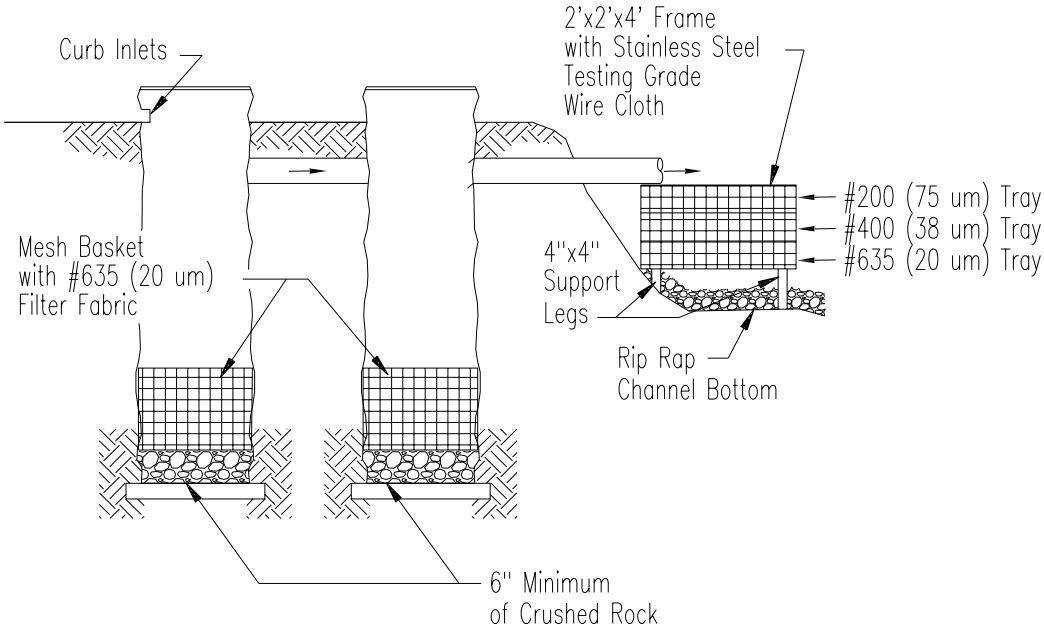

Figure 12-7. Sediment Sampling - Filter Approach

Sample Preparation
The filter fabric and cloth sheets will be weighed prior to use at the site for collection of sediments. At the laboratory, the filters will again be gravimetrically analyzed then flushed to remove the sediment from the filters. Following collection of sediments and washing to remove the sediments from the filters, the filter fabric sheets will be dried and re-weighed in order to calculate the amount of sediment not removed by washing (e.g., entrained within the filter pores). This step is necessary to evaluate the amount of fine sediments that are not included in the grain size and chemical analyses.

Figure 12-8 is a flow diagram of the entire filter approach. Stormwater runoff will be directed through all the filters. On a regular basis (after individual storm events or on a monthly basis) the filters will be retrieved and sent to the laboratory for analysis.

Sampling Equipment
The following sampling equipment is needed to conduct this sampling approach:

- Filter fabric material (#200 [75 μm] mesh, #400 [38 μm] mesh, and #635 [20 μm] mesh)
- Steel boxes for filter fabric material with three trays for #200 [75 μm] mesh, #400 [38 μm] mesh, and #635 [20 μm] mesh
- Mounting ring to hold the filter fabric bag in placed in sediment trap barrel
- Metal hook with rope capable of hauling up the filter bag from the inlet after sampling
- Large sample containers to hold filters for transport from field to laboratory

Pre-Event Preparation
Prior to sampling, the inlets will be thoroughly cleaned. Fifteen centimeters (6 inches) of crushed rock should be placed at the bottom of each inlet to prevent the bags from getting caught in the dirt bottom of the traps.

Measured Suspended Sediment Load
The method detailed above will collect a high percentage of the total sediment load for a particular storm event. The filter fabric will collect a portion of the suspended sediment load on the sediment trays located at the discharge point.

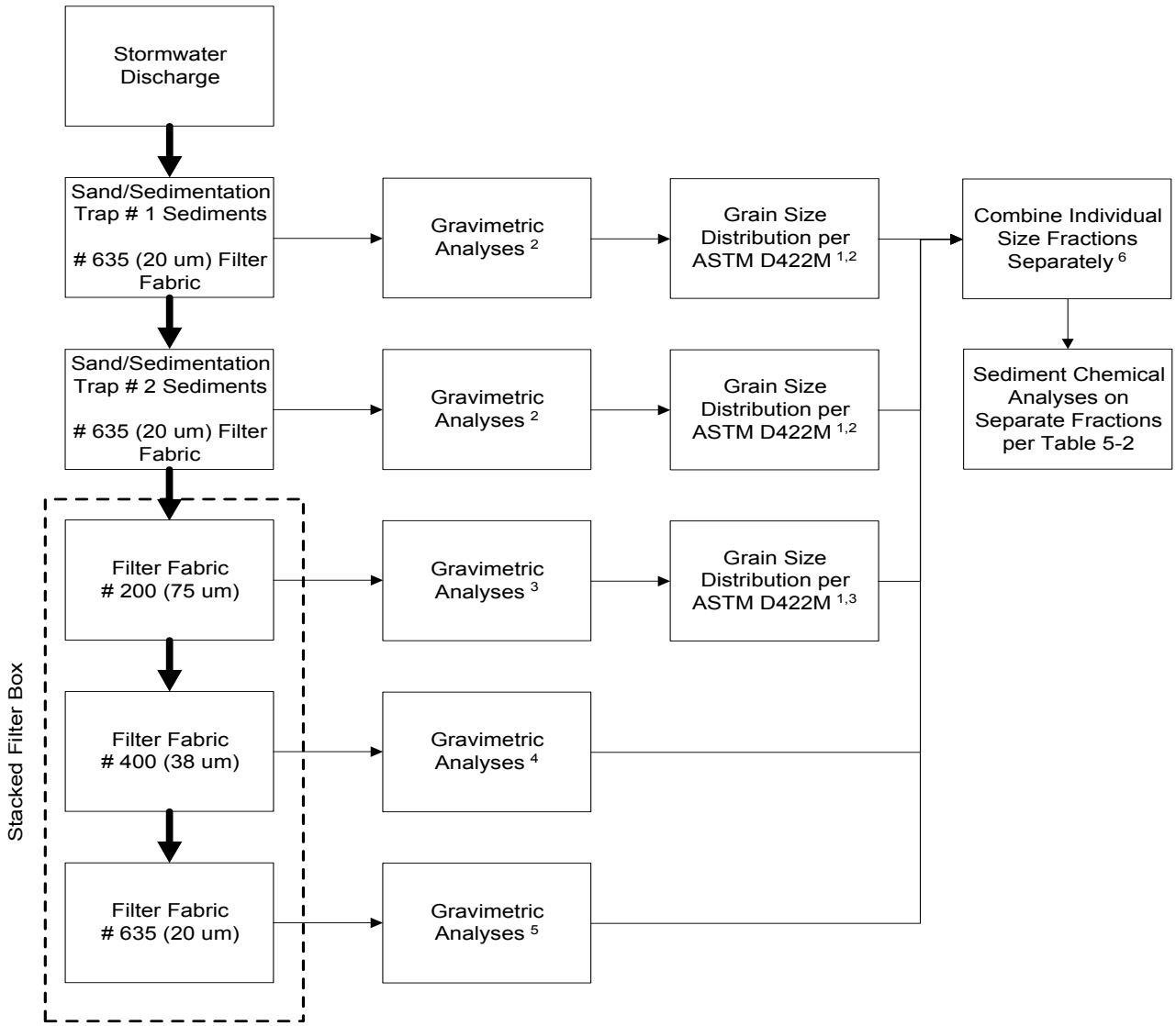

Notes: [1] Sieve sizes modified to include those specified in Table 5-3.
[2] Potential particle size range: >4750 um to >20 um (14 fractions).
[3] Potential particle size range: >4750 um to >75 um (12 fractions).
[4] Potential particle size range: <75 um to >38 um (1 fraction).
[5] Potential particle size range: <38 um to >20 um (1 fraction).
[6] Size fractions will be composited based on weight.

Large arrows indicate stormwater flow direction.
Small arrows indicate sample processing.

Figure 12-8. Flow Diagram of Filter Approach

12.2.2 Sediment Sample Collection – Small Particle Sampling

The samples to be analyzed for the small particle (< 20 µm) concentrations will be collected from the event composite sample collected by the autosampler and flow meter. Subsamples will be drawn off at the same time samples are drawn for the TSS analysis. Grab samples may also be collected using the same autosampler procedure discussed in Section 10.4.3.

The samples will be process by filtering a known volume through a series of filter sizes. The first filter size will be 20 µm, followed by 10 µm, 5 µm, and 0.45 µm. Each filter will be washed multiple times to ensure all the particles less than the filter size pass through. Each filter will then be dried and weighed. A concentration will be calculated based on the dry weight and sample volume. Concentrations will be determined for the following size categories: 0.45-5 µm, 5-10µm, and 10-20 µm.

13.0 Sample Delivery/Shipping

Following the collection of each sample, the sample bottle label must be completed, the sample kept on ice, the chain-of-custody form filled out, and the sample packaged for shipping to the laboratory.

13.1 Chain-of-Custody

Chain-of-custody (COC) forms will be filled out for all samples submitted to the laboratory. Sample date, location, and analyses requested shall be noted on each COC. Additionally, the note "filter for dissolved metals immediately" shall be added to all composite sample COC forms. COC forms shall be placed in a Ziploc bag inside the sample cooler for shipment to the laboratory. Copies of all COC forms shall be kept with field notes.

13.2 Sample Packaging/Shipping

Laboratory personnel will keep all samples on ice from the time of their collection to the time of receipt. It is imperative that all samples be analyzed within maximum holding times (refer to Table 5-1 and 5-2). The bottles are placed in coolers with adequate ice to keep samples cool until receipt by the laboratory. Coolers should be securely taped shut and properly labeled. Samples will be shipped FEDX delivery service.

To schedule sample delivery call: (800) 463-3339

Ship water samples to:
CalScience Environmental Laboratories Attn: Steve Nowak (714) 895-5495
7440 Lincoln Way
Garden Grove, CA 92841

14.0 QA/QC Sample Collection

Composite or grab QA/QC samples will be collected from one monitoring location during each monitoring event. The monitoring site from where the samples will be collected will be based upon the sample volume collected. Each type of QA/QC

sample described below will be collected from the selected site and analyzed. Based upon sample volumes collected, the site from where the samples QA/QC samples are collected will vary from monitoring event to monitoring event. Descriptions and specific collection methods for each type of quality control sample type are described below.

Field Blank (total recoverable metals, nitrogen series, and TOC/DOC only)

Composite sample field blanks (e.g., for metals analysis) should be collected at the time that the final composite bottle is removed from the autosampler. Blank water provided by the laboratory will be poured directly into a clean composite container on site.

Field blanks should be submitted "blind" to the laboratory (labeled as normal samples, with a false site name).

Matrix Spike/Duplicate (total recoverable metals only)

Matrix spike and matrix spike duplicate (MS/MSD) analyses should be requested on a specified sample for each storm for trace metals. No special sampling considerations are required. However, additional sample volume (up to 6 L) must be collected for each analysis.

Field Duplicate/Split (all analyses)

Grab sample field duplicates should be collected immediately following the collection of normal grab samples.

Composite sample field splits should be produced in a clean environment prior to shipment to the laboratory. Double the normal composite sample volume is required for these samples. The composite sample field split is generated by agitating the composite sample until it is well mixed and pouring half of the composite volume into a second clean composite bottle using clean techniques. The field duplicate should be submitted "blind" to the laboratory (labeled as normal samples, with a false site name).

Laboratory Duplicate (all analyses)

No special sampling considerations are required for composite sample laboratory duplicates. However, double the normal composite volume must be collected and laboratory duplicate analysis requested on the chain-of-custody form. Laboratory duplicates should be collected for the sites and storm events specified in the QA/QC schedule. Grab sample laboratory duplicates should be collected immediately following the collection of normal grab samples.

15.0 QA/QC Data Review

This section presents a discussion of the initial data quality screening and detailed QA/QC review.

15.1 Initial Data Quality Screening

When the laboratory reports are received following each monitored storm event, it is important to check the reported data as soon as possible to identify errors committed in sampling, analysis or reporting. The laboratory must report results in a timely fashion (typically within 30 days of receipt of the samples) and the results must then be reviewed immediately upon receipt. This may allow for re-analysis of questionable (out-of-range) results within the prescribed holding time. The initial screening includes the following checks:

- ✓ Completeness. The chain of custody forms should be checked to ensure that all laboratory analyses specified in the sampling plan were requested. The laboratory reports should also be checked to ensure that all laboratory analyses are performed as specified on the chain of custody forms, including the requested QA/QC analyses.

- ✓ Holding Time. The lab reports should be checked to verify that all analyses were performed within the prescribed holding times.

- ✓ Detection Limits. The reported analytical detection limits should meet or be lower than the levels agreed upon prior to laboratory submission.

- ✓ Reporting Errors. On occasion laboratories commit typographical errors or send incomplete results. Reported concentrations that appear out of range or inconsistent are indicators of potential laboratory reporting problems, and should be investigated when detected. Examples of this would be a dissolved concentration greater than the corresponding total recoverable concentration, or a constituent concentration orders of magnitude different than concentrations reported for the same constituent for other events.

Irregularities found in the initial screening should immediately be reported to the laboratory for clarification or correction. This process can identify and correct errors that would otherwise cause problems further along in the data evaluation process, or in subsequent uses of the data for higher-level analysis. When appropriate, reanalysis of out-of-range values can increase confidence in the integrity of questionable data. The laboratory data will also be reviewed using the Caltrans Stormwater Management Program Laboratory EDD Error Checker and Automated Data Validation Program.

15.2 Detailed QA/QC Data Review

The data quality evaluation process is structured to provide checks to ensure that the reported data accurately represented the concentrations of constituents actually present in water quality samples. Data evaluation can often identify sources of contamination in the sampling and analytical processes, as well as detect deficiencies in the laboratory analyses or errors in data reporting. Data quality evaluation allows monitoring data to be used in the proper contest with the appropriate level of confidence.

QA/QC parameters that should be reviewed are classified into the following categories:

- Contamination check results (method, field, trip, and equipment blanks)
- Precision analysis results (laboratory, field, and matrix spike duplicates)
- Accuracy analysis results (matrix spikes, surrogate spikes, laboratory control samples, and external reference standards)

Each of these QA/QC parameters should be compared to the data quality objectives listed in Section 6. The key steps that should be adhered to in the analysis of each of these QA/QC parameters are:

1. Compile a complete set of the QA/QC results for the parameter being analyzed.
2. Compare the laboratory QA/QC results to accepted criteria (DQOs).
3. Compile any out-of-range values and report them to the laboratory for verification.
4. Attach appropriate qualifiers to data that do not meet QA/QC acceptance criteria.
5. Prepare a report that tabulates the success rate for each QA/QC parameter analyzed.

Refer to Section 13 of the Caltrans Stormwater Monitoring Protocols Guidance Manual for specific direction on evaluating the results of contamination, accuracy, and precision checks, and on qualifying data that do not meet data quality objectives.

16.0 Data Management and Reporting

Analytical data for this project must follow the data validation procedures outlined in Section 13 of *Guidance Manual: Stormwater Monitoring Protocols, Caltrans, May 2000*. Additionally, electronic and hardcopy data must be filed in an organized and easily accessible fashion. Analytical data must be reported in the format consistent with the Caltrans Stormwater Management Program database. See *Caltrans Stormwater Management Program 1999-2000 Data-Reporting Protocols, 10/18/99* (or latest version) and Section 14 of *Guidance Manual: Stormwater Monitoring Protocols, Caltrans, May 2000* for data reporting guidance. The Caltrans Data Analysis Tool (Caltrans DAT) will be used to calculate summary statistics for laboratory datasets that include censored (not detected) data.

17.0 References

ASTM, Standard Guide for Sampling Fluvial Sediment in Motion (D 4411-93)

ASTM, 1997. Terminology for Fluvial Sediment (D-4410-97).

ASTM. 1998. Standard Test Method for Particle Size Analysis of Soils (D 422-63).

California Department of Transportation Environmental Program. 2000. Guidance Manual: Stormwater Monitoring Protocols (CTSW-RT-00-005). May 2000.

California Department of Transportation Environmental Program. 2000. 2000-2001 Data-Reporting Protocols (CTSW-TM-00-002). July 2000.

Denver Regional Council of Governments. 1980. Runoff Characteristics and Washoff Loads from Rainfall-Simulation Experiments on a Street Surface and a Native Pasture in the Denver Metropolitan Area, Colorado. U.S. Geological Survey Professional Paper 1441.

Irwin, G.A. and G.T. Losey in cooperation with the Florida Department of Transportation. 1979. Water Quality Assessment of Runoff from a Rural Highway Bridge near Tallahassee, Florida. U.S. Geological Survey Water Resources Investigations 79-1.

Stumm, W. and J.J. Morgan, 1981. Aquatic Chemistry, John Wiley and Sons.

Appendix A

Health and Safety Plan

HEALTH AND SAFETY PLAN

CALTRANS TAHOE BASIN WATER QUALITY CHARACTERIZATION AND SEDIMENT TRAP EFFECTIVENESS STUDIES

Prepared for:
STATE OF CALIFORNIA
DEPARTMENT OF TRANSPORTATION
SACRAMENTO, CALIFORNIA

NOVEMBER 2001

Contents

Section 1 Introduction **1-1**

Section 2 Project Health and Safety Personnel **2-1**

Section 3 Site Information **3-1**

Section 4 Work Activities Covered by Health and Safety Plan **4-1**

Section 5 Hazard Assessment **5-1**

5.1 Chemical Hazards 5-1
5.2 Confined Spaces 5-1
5.2.1 Atmospheric Hazards 5-1
5.3 Physical Hazards 5-3
5.3.1 Housing Lids 5-3
5.3.2 Open Vaults 5-3
5.3.3 Vehicle Traffic 5-3
5.4 Cold and Heat Stress 5-3
5.5 Biological Hazards 5-3

Section 6 General Health and Safety Requirements **6-1**

6.1 Employee Clearance 6-1
6.2 Site Safety Meetings 6-1
6.3 Incident Reporting 6-1
6.3.1 Purpose 6-1
6.3.2 Definitions 6-1
6.3.3 Reporting Procedures 6-2
6.4 Prohibited On-Site Activities 6-3

Section 7 Site Specific Health and Safety Requirements **7-1**

7.1 Special Medical Tests 7-1
7.2 Special Training 7-1
7.3 Physical Hazards 7-1
7.3.1 Housing Lids and Open Vaults 7-1
7.3.2 Work Site and Traffic Control 7-1
7.4 Hazardous Materials Identification and Protection 7-3
7.5 Confined Space Standard Operating Procedure 7-3
7.6 Site Illumination 7-5
7.7 Biological Hazards 7-5
7.8 Environmental Hazards 7-5
7.9 Personal Protective Equipment 7-5

Section 8 Emergency Response Procedures and Location of Nearest Hospitals and Fire Departments 8-1

Attachments

Attachment 1 Vicinity Map and Emergency Service Location Maps
Attachment 2 Forms
Attachment 3 Monitoring Site Specific Safety Information Sheets
Attachment 4 Camp Dresser & McKee Inc. Confined Space Entry Procedures

List of Tables

7-1 Traffic Cone Taper Lengths
8-1 Site and Hospital Locations

Section 1
Introduction

This Health and Safety Plan (HSP) identifies the health and safety procedures for work to be conducted for the Caltrans Tahoe Water Quality Characterization and Sediment Trap Effectiveness Studies. This includes equipment installation activities, field monitoring activities and periodic maintenance of the monitoring stations and equipment as required at the six monitoring sites. Implementation of this plan is the responsibility of the CDM Project Managers. The Site Safety Officer assists the CDM Project Managers in carrying out this responsibility at the work site by enforcing the requirements of the Health and Safety Plan and by the authority to suspend work to protect worker health and safety. Either the Site Safety Officer or the Corporate Health and Safety Officer may suspend or limit work, or direct changes in work practices, if the HSP and/or work practices used are deemed inadequate.

This HSP may not be used for work other than that described in Section 4.0. This plan is to be followed by all CDM personnel and CDM's subcontractors who will be participating in the monitoring program. All personnel included in the monitoring program shall be responsible for reading this plan and following its procedures.

CDM and CDM's subcontractors will share responsibility for providing health and safety management. This includes joint planning, management, site control, reporting and problem solving. Each employer is also responsible for its employees in accordance with the employer's own health and safety policies.

Section 2
Project Health and Safety Personnel

Project and Safety Personnel

This section identifies key project health and safety personnel involved in the Caltrans Tahoe Basin Stormwater Monitoring Program. This outline presents the names, titles, and specific responsibilities of these individuals in terms of project health and safety.

Personnel

Title	Name and Number	
Corporate Health and Safety Officer	Chris Marlowe	(908) 225-7000 (800) 313-5593

Responsibilities

- Overall health and safety advisor.
- Interface with CDM personnel, subcontractors and Caltrans' project managers in matters of health and safety.
- Review, approve or disapprove project Health and Safety Plans.
- Monitor compliance with Health and Safety Plans.

Title	Name and Number	
Study Project Manager	Charlie O'Neill	(916) 567-9900

Responsibilities

- Assure that the project is performed in a manner consistent with the CDM Health and Safety Program.
- Assure that the project Health and Safety Plan is prepared, approved, and properly implemented.
- Implement Health and Safety Plan.
- Assure that adequate project resources are allocated to fully implement the project HSP.
- Assure compliance with the Health and Safety Plan by contractor personnel.

- Coordinate with the Corporate Health and Safety Officer on Health and Safety matters.

Title	**Name and Number**	
Site Safety Officer	Rick Kern	(909) 945-3000

Responsibilities

- Direct health and safety activities on-site.
- Report all safety-related incident or accidents to the Corporate Health and Safety Officer and project manager.
- Assist project manager in all aspects of implementing Health and Safety Plan.
- Maintain health and safety equipment on-site.
- Implement emergency procedures as required.
- Conduct health and safety investigations and briefings as needed.

Section 3
Site Information

Six storm water monitoring stations have been installed in the District 3 Tahoe Basin (see vicinity map and site location maps in Attachment 1 at the end of this document). One of these stations monitors a closed conduit storm sewer system located below the highway. The other five stations monitor storm water runoff at dual-barrel sediment traps and in drain inlets. Monitoring equipment is installed below grade, within the storm drain system, within the dual barrel sediment traps, and in above ground protective enclosures.

Storm water sampling work requires that workers access the stations during storm events on a 24-hour basis. The general safety considerations associated with installation and sample collection at the stations include: traffic hazards, confined spaces, biological hazards, exposure to hazardous materials, limited visibility, fast moving flood waters, heat stress, exposure to cold or freezing temperatures, slippery conditions, and snow management activities conducted by Caltrans.

Section 4
Work Activities Covered by Health and Safety Plan

The objective of this project is to characterize flow and water quality of highway runoff, water quality of precipitation, and characteristics of sediment found in the runoff in the Tahoe Basin. The majority of the fieldwork will consist of crews collecting samples for analysis from all monitoring stations in response storm events. In addition, some fieldwork will be directed toward station set up and periodic station maintenance that would occur during dry conditions.

Field activities at all the monitoring sites will include sample collection (before, during, and after storm events) and general maintenance activities (on going). The hazards associated with all work performed at sampling stations include: (1) being involved in a vehicle accident while driving to or from a site, (2) being struck by a vehicle while working at a site, (3) confined space accidents, (4) experiencing heat and cold stress, (5) being exposed to hazardous materials or vapors, (6) slips, trips, and falls, and (7) muscle strains from moving heavy objects.

CDM staff and CDM subcontractors will maintain the sampling and monitoring equipment at all sites. Most installation and maintenance procedures at storm drain sampling stations will not require entry into confined spaces. Confined spaces have limited openings for entry and exit, unfavorable natural ventilation which could contain or produce dangerous air contaminants, and are not intended for continuous employee occupancy. All CDM employees and CDM subcontractors who enter a confined space during this project must have had confined-space entry training.

Sample collection in response to storm events will be performed by CDM staff and CDM subcontractors. Sample collection will involve one or more visits per site during storm events. It is anticipated that one field crew consisting of two people will be adequate for all sites. The general tasks performed by a crew visiting any given site will consist of: (1) driving to the site, (2) establishing traffic control (if needed), (3) interrogating flow monitor and/or sampler, (4) removing and replacing sample bottles, (5) taking grab samples, (6) resetting the sampler, and (7) removing traffic controls and proceeding to the next site. These activities do not require entry into the portion of the drainage system that is underground.

Section 5
Hazard Assessment

5.1 Chemical Hazards

Although all the monitoring sites are not known to contain hazardous materials, there is a potential for hazardous gaseous and/or liquid contaminants to be present as the result of spills and/or illicit dumping. The presence of chemicals and/or chemical vapors may result in (but is not limited to) one or more of the following threats: toxic conditions, oxygen displacement and explosion and/or fire. The risks associated with these threats include poisoning (acute and/or chronic), asphyxiation, and bodily injury.

5.2 Confined Spaces

The U.S. Occupational Safety and Health Administration (OSHA) classify storm sewers as confined spaces. Regulations for entry into confined spaces are provided in the OSHA Confined Space Standard (Title 29 Code of Federal Regulations (CFR) 1910.146) and in Section 5157 of CalOSHA CCR 8. The risks associated with confined spaces include dangerous atmospheres, engulfment, falls, falling objects, and bodily harm due to explosion. Confined Space Operating Procedures to be used during this project are presented in Section 7.5.

5.2.1 Atmospheric Hazards

Atmospheric hazards that may be present within the storm sewers include oxygen deficiency and toxic or flammable gases. More sewer workers die each year from atmospheric causes than from all other causes combined. Each potential hazard and the recommended evaluation method is presented below:

Oxygen deficiency: Oxygen (O2) deficiency can be caused by the aerobic decomposition of sewage and organic matter. Chemical and biological processes during the decomposition use the available oxygen. Oxygen deficient atmospheres can also result from displacement by gas such as methane or hydrogen sulfide which may or may not be harmful but cannot support life. Oxygen deficiency may be present in areas with little ventilation or air circulation or where biological or chemical processes are occurring. A confined space where water or sewage is enclosed for long periods, and where extensive oxidation of iron (rust) occurs has a high potential for being oxygen deficient.

The normal level of oxygen in the atmosphere is 20.8%. Levels between 19.5% and 20.7% are considered potentially hazardous. An atmosphere legally oxygen deficient contains less than 19.5% oxygen. An atmosphere containing less than 16% oxygen is considered immediately dangerous to life and health (IDLH).

Symptoms of oxygen deficiency include shortness of breath, dizziness, impaired vision, and loss of consciousness.

Hydrogen Sulfide: Hydrogen sulfide (H2S) is a dense, colorless gas that is the byproduct of sewage and organic material that has anaerobically decayed. It has the characteristic odor of rotten eggs. Initially, effects of the gas anesthetizes the sense of smell, and cannot be detected by odor only. Hydrogen sulfide prevents the bonding of oxygen to the hemoglobin molecule contained in the blood cells. Paralysis of the respiratory system is followed by unconsciousness and possibly death.

The eight-hour time-weighted average (TWA) permissible exposure limit (PEL) is 10 ppm. The 15-minute short-term exposure limit (STEL) is 15 ppm. The IDLH concentration is 300 ppm.

Symptoms of hydrogen sulfide poisoning include inflammation of the eyes and lungs, dizziness, loss of coordination, weakness, breathing difficulty, loss of consciousness, and cessation of breathing.

Hydrogen sulfide is often present as a dissolved gas in sewage or can be trapped within sewer sediment and sludge. Disturbing the sediment or sludge can release the trapped or dissolved gas.

Carbon Monoxide: Carbon monoxide (CO) is a colorless, odorless gas that acts as a chemical asphyxiant. It is lighter than air and accumulates beneath manhole covers. It is a product of almost any kind of combustion or hydrocarbon oxidation.

The eight-hour time-weighted average (TWA) permissible exposure limit (PEL) is 35 parts per million (ppm). The 15-minute short-term exposure limit (STEL) is 200 ppm. The IDLH concentration is 1500 ppm.

Symptoms of exposure include headache, dizziness, nausea, weakness, and confusion. In addition the skin becomes cherry red in color.

Methane: Methane (CH4) is a colorless, odorless gas that is lighter than air. It is produced by the chemical decomposition of sewage and organic matter. The gas tends to accumulate beneath manhole covers. Methane is both an asphyxiant and explosive. The lower explosive limit is reached when the concentration of methane reaches 5% of the total atmospheric composition.

Petroleum Hydrocarbons: Petroleum hydrocarbon vapors may enter storm drains as a result of spills or vehicle accidents. If gasoline or diesel fuel odors are present and/or an oily sheen is observed on the water surface within the confined space, employees should leave that space immediately.

5.3 Physical Hazards

5.3.1 Housing Lids

All monitoring stations include equipment housing with metal lids that are heavy. Accessing the housing units requires lifting and lowering these heavy steel lids, which if not opened or closed using proper techniques can easily cause injury. Failure to lift and lower these lids in a safe manner can put the worker at risk of crushing fingers, hands, or head. All lids are designed with mechanisms to lock the lid in the open position. The lids must be securely locked to prevent them from closing unexpectedly.

5.3.2 Open Vaults

When the vault at Station 3-201, Tahoe Meadows, is open, it poses a threat to workers and general public. Limited visibility, inattention, poor site control, slips, and/or trips could result in person falling into the vault. The risk associated with such a fall could be bodily injury.

5.3.3 Vehicle Traffic

Traffic hazards will be encountered when working at the side of or in a roadway. These hazards will be increased during times of reduced visibility such as during storm events and at night. The primary threats associated with working in or alongside roadways are workers being struck by passing vehicles or being involved in a vehicular collision. The risk associated with these threats is severe bodily injury and/or death. No work will be performed during snowstorms due to the high risks associated with poor visibility, slippery roads, and snow management activities.

5.4 Cold and Heat Stress

Hazards associated with the outside environment will be encountered when working at the monitoring sites. The primary threats associated with working outside are either cold or warm temperatures. These hazards will increase during times of freezing or near freezing temperatures, rainy conditions, and high levels of physical activity. The threats associated with these hazards are developing hypothermia, heat stress, and frostbite. The risk associated with these threats is decrease in mental capacity, bodily injury and/or death.

5.5 Biological Hazards

Rodents, pathogenic microorganisms, and viruses are potential biological hazards of concern. In addition, a significant potential exists for contact with, and bites from, poisonous brown recluse spiders when crews open the enclosures during a storm event, particularly when lighting is poor. The primary threats associated with these hazards are receiving bites and/or contracting disease. The threats associated with these hazards include flesh wounds and/or infections (acute and/or chronic).

Section 6
General Health and Safety Requirements

6.1 Employee Clearance

When CDM personnel and CDM subcontractors are directly involved in confined space entry activities, a minimum of two employees with an active safety and health clearance status will be present. Active health and safety clearance will consist of a confined space health and safety course approved by the person's employer. The Confined Space Entry Program (CSEP) that applies to any such entry will be that of the employer whose employees actually enter the space. All other field personnel involved in field and/or storm water sampling activities must receive training from the Site Safety Officer before conducting field work.

6.2 Site Safety Meetings

All personnel assigned to perform the work described in this HSP must be (1) given a personal copy of this HSP by a Site Safety Officer, (2) briefed on the health and safety requirements of this HSP by a Site Safety Officer, and (3) must acknowledge receipt of and willingness to comply with the provisions of the plan by signing the Employee Acknowledgment located in Attachment 2. Individuals refusing to sign the agreement will not be permitted to conduct field work for this project. Completed agreements shall be provided to the CDM Project Manager, who will file them with the Project Health and Safety Officer. It is expected that site safety meetings be conducted on two occasions: (1) at a project kick-off meeting to discuss the overall program and (2) just after the crew is mobilized for sampling. Additional briefings should be scheduled and conducted by the Site Safety Officer as needed.

6.3 Incident Reporting

6.3.1 Purpose

All health and safety incidents shall be reported to CDM management and health and safety staff immediately. The prompt investigation and reporting of incidents will reduce the risk of future incidents, better protect all employees, and reduce CDM liability.

6.3.2 Definitions

A health and safety incident is any event listed below:

- Illness resulting from chemical exposure or suspected chemical exposure.
- Physical injury, including both those that do and do not require medical attention to CDM employees or CDM subcontractors.
- Fire, explosions, and flashes resulting from activities performed by CDM and its subcontractors.

- Property damage resulting from activities performed by CDM and its subcontractors.
- Vehicular accidents occurring on-site, while traveling to and from client locations, or with any company-owned vehicle.
- Infractions of safety rules and requirements.
- Uncontrolled chemical exposures.
- Complaints from the public regarding CDM field operations.

6.3.3 Reporting Procedures

Reporting Format
Incident reports shall be prepared by completing an Incident Report Form. This form may be obtained from any CDM Health and Safety Officer and is located in Attachment 2.

Responsible Party
Reports of incidents occurring in the field shall be prepared by the Site Safety Officer or, in the absence of the Site Safety Officer, the supervising field engineer, witness, or injured/exposed individual.

Filing
A report must be submitted to the Health and Safety Officer of the Operating Unit to which the CDM Project Manager belongs within 24 hours of each incident involving medical treatment. In turn, the Health and Safety Officer must distribute copies of the report to the Corporate Health and Safety Officer. When an injury or illness is reported, the Health and Safety Officer must deliver a copy of the report to the individual in charge of Human Resources so that a Worker's Compensation Insurance Report can be filed if necessary. Reports must be received by Human Resources within 48 hours of each qualifying incident.

Major Incidents
Incidents that include fatalities, hospitalization of employees or subcontractors, or involve injury/illness of the public shall be reported to the Health and Safety Officer and CDM Project Manager as soon as possible after emergency authorities (e.g. ambulance) are contacted. Any contact with the media should be referred to the CDM Project Manager and Operating Unit Manager.

6.4 Prohibited On-site Activities

The following are prohibited on-site activities: (1) entering confined spaces without specific training, (2) conducting storm water sampling without clearance from the Site Safety Officer, (3) eating and drinking without prior decontaminating (e.g., washing hands and face), and (4) smoking. Violations of these prohibitions will result in dismissal from the field crew.

Section 7
Site Specific Health and Safety Requirements

7.1 Special Medical Tests

Special medical tests will not be required for any of the work activities proposed in this plan.

7.2 Special Training

Installation of sampling and flow monitoring equipment and some station maintenance activities may require confined space entry. Confined space entry requires specific training. Under no circumstances will personnel be allowed to enter a confined space without training approved by their employer.

7.3 Physical Hazards

7.3.1 Housing Lids and Open Vaults

All monitoring stations require opening lids on the housing units to gain access to the equipment during maintenance activities and to retrieve grab samples during sampling activities. The housing lids are very heavy and can easily break a finger or wrench a back if not lifted or lowered correctly. Each field crew will be instructed on how to properly open a lid, lock the lid in the open position, and lower the lid. The lids are raised by lifting up on the handles in the front and then with a firm grasp of the lid, walking along the side of the unit until the lid is fully extended. Hinges on either side of the lid must both be locked into place. The lid should be held up by one crewmember until both hinges are locked by the second crewmember. To lower the lid, one crewmember holds on to the lid, while the second member releases each hinge. The lid is slowly lowered by both crewmembers. Just before the lid closes, one member releases his or her grasp and the other member completes the closure.

Opening the lid at the underground vault unit creates a new hazard. A fall into the open vault may result in serious injury. The area around an open vault must be cordoned off from the general public by using barricades and/or traffic cones. All field crewmembers must be informed before the vault is opened. Each sampling crew will keep access control equipment (cones, barriers and tape) in its sampling crew vehicle throughout the duration of the project.

7.3.2 Work Site and Traffic Control

Work site control and work zones will be established each time a crew visits a sampling station. Field crews will use traffic control cones, warning signs, and vehicles to develop work zones and site control at sites where the safety of crews and the public may be threatened. An example of this would be the use of traffic cones to direct pedestrians away from an open manhole where vehicle traffic control is not required. Site specific protocols for proper vehicle and traffic safety in relation to a

given sampling station are provided in Attachment 3. Actual field conditions may require modification of the directions. Modifications, if any, will be made by the Site Safety Officer who will then inform the Project Health and Safety Officer.

Traffic hazards pose the greatest risk to workers visiting sampling stations. Traffic hazards to both workers and motorists must be minimized at each sampling station. Standard traffic control measures, which can be used to reduce traffic hazards, are described below. However, sampling sites may be located in areas where standard traffic measures may not be applicable. In these cases, standard control measures will be modified to meet a given situation.

Warning signs (i.e., Utility Work Ahead, Lane Closed, etc.) shall be erected on the roadway or shoulder and shall be removed upon termination of work. Portable signs shall be erected vertically, with the bottom of the sign a minimum of 18 inches above the roadway. Portable signs shall be illuminated at night and/or be accompanied by a flashing yellow light. Traffic cones or pylons shall be placed on the roadway to divert traffic away from the manhole opening. These cones must have reflective striping in order to be visible at night. The cone taper distance from the manhole shall be determined by the following equation when speed limit is 40 MPH or less:

$$L = (WS^2)/60$$

where L = pylon taper length in feet
W = width of desired closure or offset (feet)
S = posted speed limit (miles per hour)

(Adopted from Manual on Uniform Traffic Control Devices, 1988)

Table 7-1 shows taper lengths for various traffic speeds with 5 and 10 foot wide lane closure. A lane closure pertains only to traffic lanes and does not include shoulders other areas outside the main traffic flow. The site plans have been developed with these criteria.

Table 7-1
Traffic Cone Taper Lengths

Width of Closure (feet)	Traffic Speeds (mph)	Cone Taper Length (feet)
5	25	52
	30	75
	35	102
	40	133
10	25	104
	30	150
	35	204

Employees should not rely on traffic warning devices, like cones or saw-horses, for protection against oncoming traffic. CDM encourages work teams to place one or more vehicles between them and the direction from which traffic flows.

7.4 Hazardous Materials Identification and Protection

Storm water and storm water sewer systems have some potential to contain hazardous materials and/or microorganisms and should be approached with caution. Industrial and commercial areas are of particular concern because of possible illegal dumping of wastes into the storm sewer system. Any unusual smells and/or discolored sample water are definitely cause for alarm. The following procedures are recommended to help protect field personnel from these hazards:

- If field crews detect or suspect any dangerous situations they must notify the Site Safety Officer of their intended protective procedures.

- Field personnel should wear chemically resistant gloves when handling storm water samples. It is important to realize that storm water can contain dangerous constituents regardless of land use type. For example, storm water typically has high concentrations of bacteria in all areas including streams. All crew members who come into contact with storm water must decontaminate. This is especially important prior to eating and drinking or smoking. All personnel must also decontaminate before leaving the site. Proper decontamination techniques will ensure that contamination will not spread to vehicles or other locations. Decontamination should include disposal of gloves and washing the hands and face with soap and water. Each crew shall carry 5-gallon containers containing wash/drinking water. All crew members must be careful to not contaminate the container.

7.5 Confined Space Standard Operating Procedure

Storm sewers are defined by OSHA as confined spaces and are therefore subject to federal regulation. Each employer providing personnel for confined space entry will have its own written CSEP. A copy of this program will be submitted to the HSO prior to the start of work. All CDM employees will comply with CDM's confined space entry requirements and procedures, which are included in Attachment 4. All CDM subcontractors will comply with their confined space entry requirements and procedures.

The anticipated level of hazard will determine procedures for entries as defined below.

Low Hazard Entries

Definition: Includes any storm water system where there is clearly no potential for connection to a sewer system, and the storm water system is dry. It should be noted that the presence of mud at the bottom of a channel is evidence that the system is not dry. Under dry conditions, no potential for exposure to volatile contaminants is anticipated. Entries must be completed when there is no precipitation forecasted.

Procedure: Use 4-gas meter to monitor all levels of the space. Verify that the instrument has been calibrated to alarm at the action level, and document all readings. If explosive levels are below 10% of the LEL, oxygen content is between 19.5% and 22%, hydrogen sulfide is less than 5 ppm, and carbon monoxide concentrations are below 15 ppm, and no other hazards are anticipated, entry may proceed. No CSE permit is required. Fall protection is required for all entries with a vertical drop of greater than 6 feet. A ladder may be used in place of fall protection only if it is in full compliance with the OSHA standard.

Moderate Hazard Entries

Definition: Includes any storm water system where there is clearly no potential for connection to a sewer system, but the system contains liquids, and therefore may contain unknown volatile contaminants. Entries must be completed when no precipitation is forecasted.

Procedure: The standard confined space entry form will be used for approval and termination of entry. Emergency communications and use of an attendant will be required. Fall protection requirements will be the same as the low hazard entry. The space must be ventilated prior to and during entry. Entries into these spaces by CDM personnel require prior completion of the CDM permit form and approval by a CDM confined space entry coordinator.

High Hazard Entries

Definition: This includes sewers, entries when there is a potential for precipitation and any entries where additional hazards are anticipated.

Procedure: The confined space entry standards must be fully implemented. The CDM Project HSO will coordinate with the project manager to prepare the entry permit.

It is very important to notify all members of the field crew when hazardous situations are encountered. In general, the notification process will consist of notifying the Site Safety Officer. This individual, will in turn, notify higher levels of CDM management. However, if the Site Safety Officer is not available the CDM Project Manager must be contacted.

7.6 Site Illumination

This project will likely require personnel to work at night. Portable lighting shall be used to achieve sufficient illumination. CalOSHA (8 CCR 3317) requires 2-foot candles of illumination for the type of work covered by this plan. Vehicle lights, headlamps, and flashlights will be used to meet this requirement.

7.7 Biological Hazards

Field crews must protect themselves from biological hazards they may be exposed to during sampling activities. Bacteria and other micro-organisms may potentially be present in collected storm water samples. Crews should protect themselves by using disposable nitrile or latex gloves when handling storm water samples. Crews should also avoid hand to mouth and hand to eye contact until they have had a chance to wash with soap and water. Eating and drinking will not be allowed until proper decontamination has occurred.

There is also the possibility of exposure to either wild or domestic animals. Crews should avoid these animals since they may carry rabies or other diseases and they are capable of infecting serious wounds.

7.8 Environmental Hazards

Field crews must protect themselves from hazards associated with environmental conditions, such as cold temperatures, heat stress, and rain. Crews should protect themselves from heat stress by avoiding work during the hottest part of the day, drinking plenty of water, resting frequently, wearing light breathable clothes, and wearing a hat. When working during periods of cold temperatures (below 10 degrees Centigrade), crew members should dress in layers of warm clothing, avoid keeping their hands and head exposed for long periods of time, minimize the time spent outside of protected areas. When working during periods of rain, crewmembers should wear waterproof clothing and boots to avoid getting their underclothes wet. At the first signs of becoming overheated or very cold, crewmembers should seek shelter until their body temperature returns to near normal.

No on-site work will be performed when it is snowing and Caltrans is performing snow management activities. Overall conditions are too dangerous to be working along side an active traffic lane under this condition.

7.9 Personal Protective Equipment

Protective equipment shall be used and shall consist of the following:

- Hardhat
- Reflective safety vest

- Rubber boots with steel toes (when needed)
- Rain Gear (when needed)
- Cold weather gear such as hat, gloves, boots, coat, pants (when needed)
- Nitrile or latex gloves
- Splash proof goggles (if desired)

In addition, a first aid kit will be present in each vehicle used for field work. It is the responsibility of field crew leaders to be sure their vehicles have a first aid kit and cellular telephone before entering the field.

Section 8
Emergency Response Procedures and Location of Nearest Hospitals and Fire Departments

In the event of an injury, illness, or accident that may require the attention of a physician, the Site Safety Officer(s) must be notified immediately. In the event of emergency, the CDM Task Order Manager and the CDM Project Corporate Health and Safety Officer will also be notified immediately:

- CDM Task Order Managers: Charlie O'Neill (916) 567-9900
  (916) 488-7334 (home)
- CDM Corporate H&S Officer: Chris Marlowe (732) 225 - 7042 x 332
  (800) 313 - 5593 (pager)

If a person(s) is transported to a medical facility, the location of this facility must be given to the Site Safety Officer. In emergency situations, field personnel should call 911 for an emergency response team. All CDM employees and subcontractors must be familiar with the location of and route to the nearest hospital. Location maps and routes to local hospitals and fire departments are provided in Attachment 1 and must be carried in the field vehicle at all times.

Table 8-1
Site and Hospital Locations

Monitoring Site	*Hospital Location*	*Hospital Phone Number*	*Fire Department Location*	*Phone Number*
Echo Summit (3-203 & 3-223)	Barton Memorial Hospital 2170 South Avenue South Lake Tahoe, CA (corner of South & 3rd)	(530) 541-3420	2101 Lake Tahoe Blvd (Highway 50) South Lake Tahoe	911
Tahoe Airport (3-202 & 3-222)				
Tahoe Meadows (3-201)				
D. L. Bliss (3-218)				
D. L. Bliss (3-218)	Tahoe Forest Hospital 10121 Pine Avenue, Truckee, CA	(530) 587-6011	300 North Lake Blvd. Tahoe City, CA	911
Snow Creek (3-219)				
Brockway Summit (3-220)				

Attachment 1
Vicinity Map and Emergency Service Location Maps

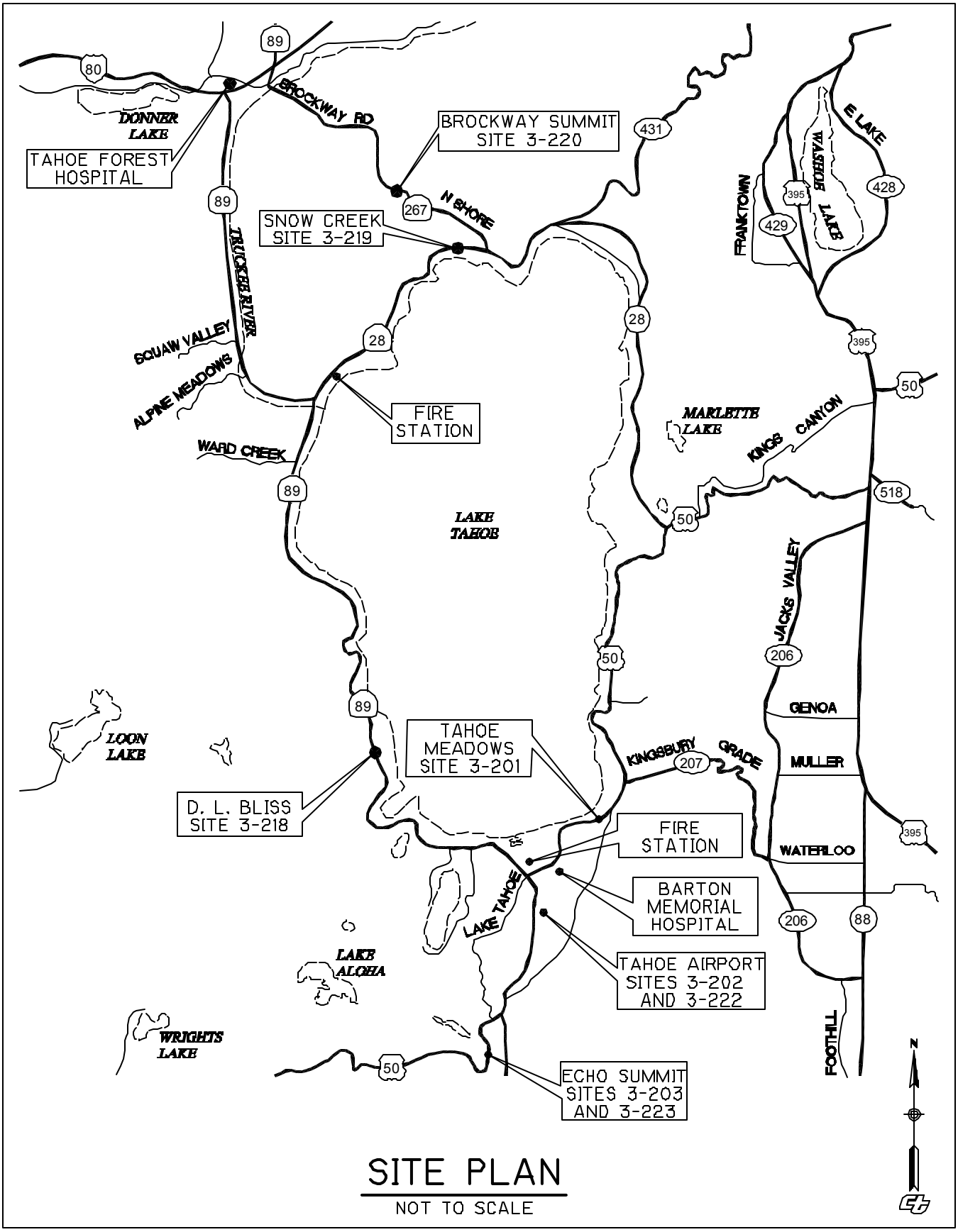

SITE PLAN

NOT TO SCALE

O:\Projects\9168_CalTrans\29394_TahoeBasinCharactzn\7_ProjectDocs\SAP 2001\Appendix A – HASP\ TahoeAreaMap 10/26/01 14:59 smithav

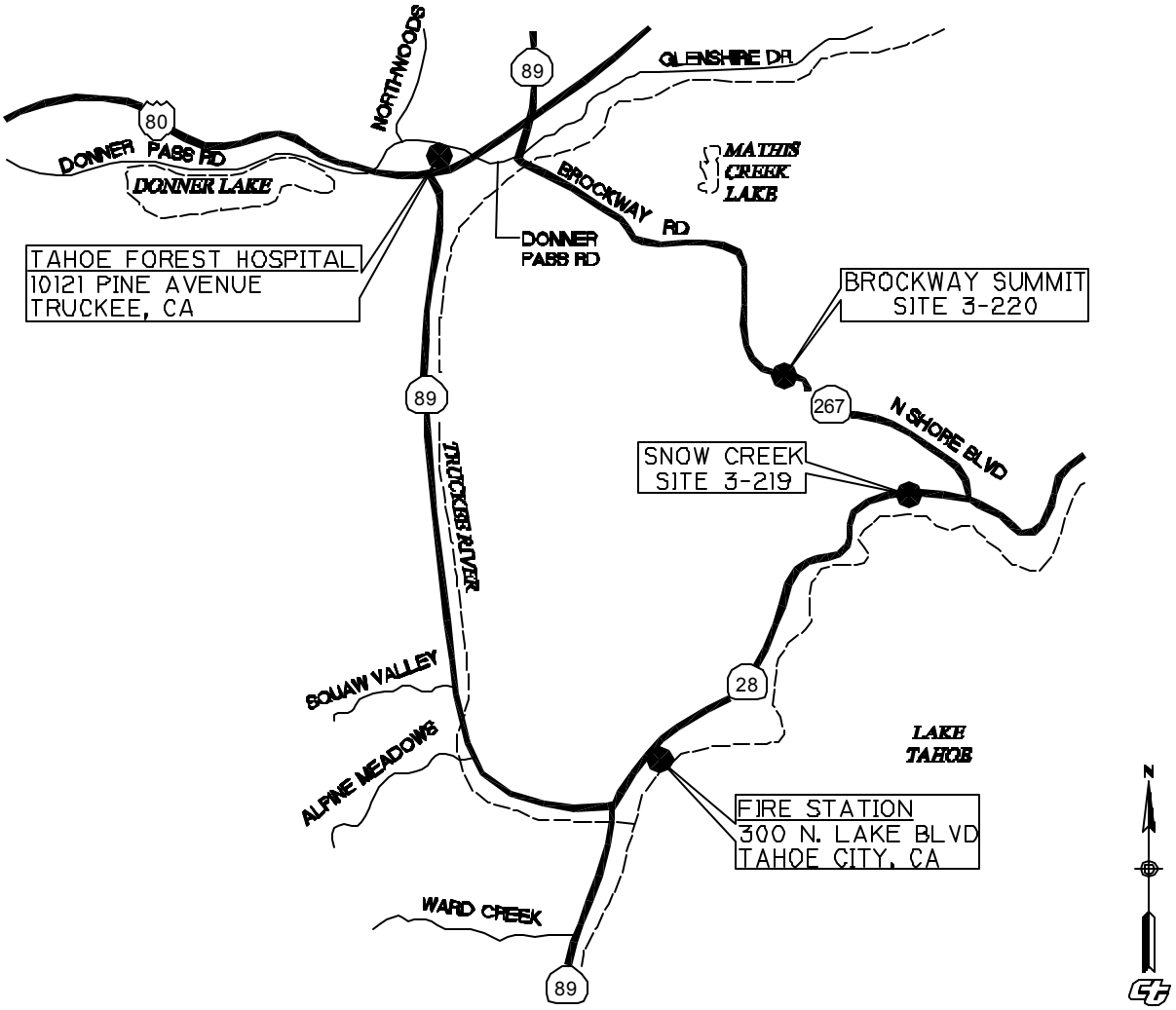

Emergency Services Location Map, North Lake Tahoe

SITE PLAN

NOT TO SCALE

O:\Projects\9168_CalTrans\29394_TahoeBasinCharactzn\7_ProjectDocs\SAP 2001\Appendix A - HASP\ TahoeAreaMap 10/26/01 14:59 smithav

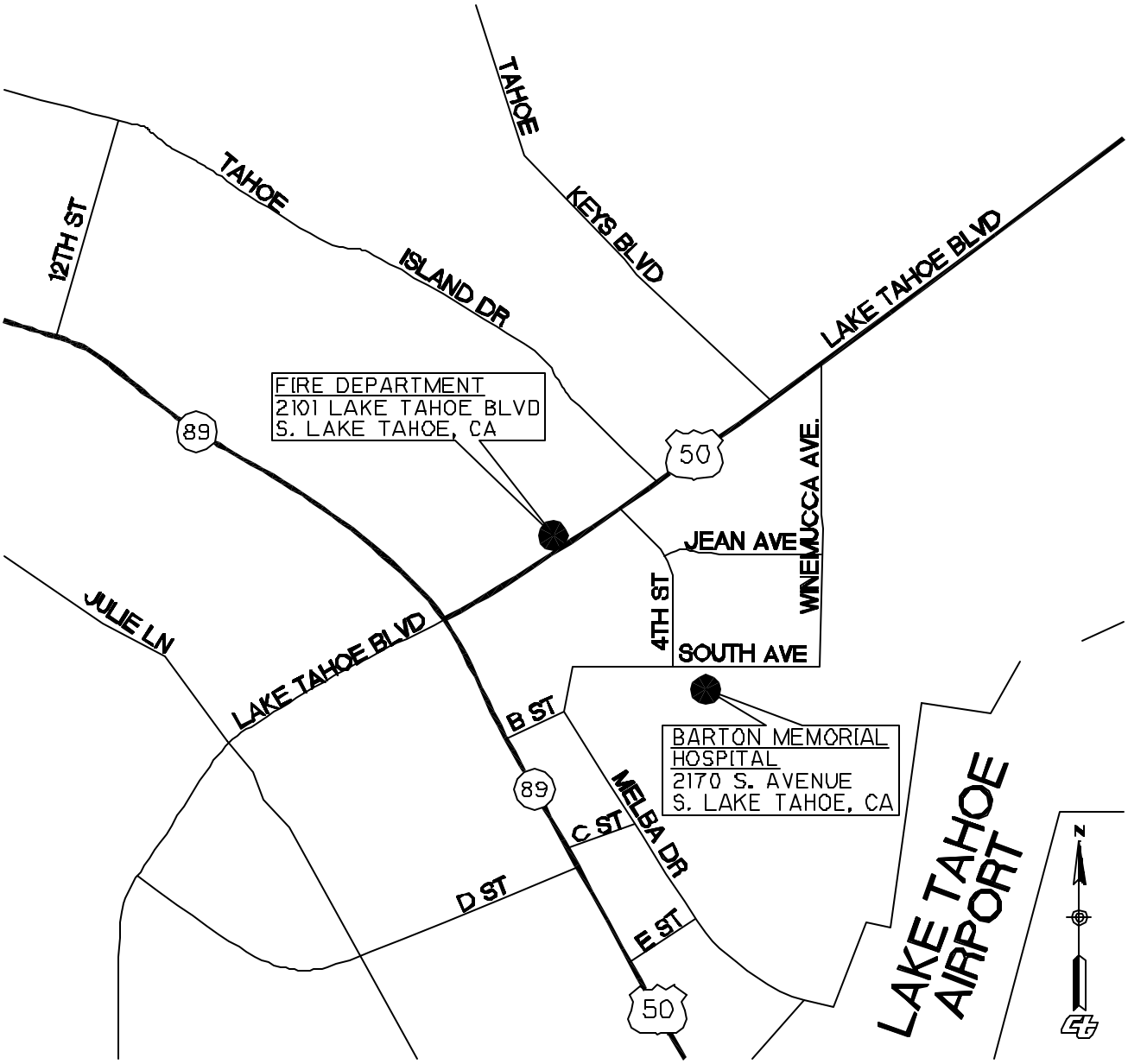

Emergency Services Location Map, South Lake Tahoe

SITE PLAN

NOT TO SCALE

O:\Projects\9168_CalTrans\29394_TahoeBasinCharactzn\7_ProjectDocs\SAP 2001\Appendix A – HASP\ TahoeAreaMap 10/26/01 14:59 smithav

Attachment 2
Employee Acknowledgement
Injury / Illness Report

Employee Acknowledgment

(Please sign, detach and return to CDM Project Manager)

I hereby certify that I have read and understand the safety and health guidelines contained in Caltrans Tahoe Basin Water Quality Characterization and Sediment Trap Effectiveness Studies Health and Safety Plan.

Employee Name

Signature Date

In case of emergency, please contact:

1.

Name Relationship Phone Number

2.

Name Relationship Phone Number

Received by:

Site Safety Officer

Signature Date

CDM Employee Injury or Exposure Incident Report

EMPLOYEE DATA:

Name _____ Business Unit _____

Address _____ Office Location _____

_____ Occupation _____

Home Phone _____ Marital Status _____

Soc. Sec. # _____ Date of Hire _____

Birth Date _____ Date of Report _____

INJURY/ILLNESS INFORMATION:

Location of Incident **Office** **Field** **Public Space** **Plant**

Site Name and Address _____

_____

Operation in Process _____

INCIDENT TYPE: Exposure ( ) Injury ( )

Possible Exposure ( ) Near Miss ( )

Date of Incident: _____

Time of Incident: _____

SOURCE OF HAZARD OR HARM *(e.g. Machine, Auger, Car, Chemical Substance)*

_____

INJURED OBJECT OR BODY PART *(e.g. Arm, Leg, Lungs, Shoe, Crew Vehicle)*

_____

NATURE OF LOSS *(e.g. Cut, Burn, Fracture, Headache, Property Damage*

_____

DESCRIBE HOW INJURY/ILLNESS OCCURRED *(e.g. Struck by…Fell from…Exposed to…)*

_____

_____

_____

SITE CONDITIONS AT TIME INCIDENT:

Temperature _____ Humidity _____

Wind Speed & Direction _____ Cloud Cover _____

Precipitation _____ Other _____

Physician Name and Address **Hospital Name and Address**

MEDICAL CARE RECEIVED *(when, where, by whom):*

PHYSICIAN'S COMMENTS: *(Attach Physicians' Report(s), if any).*

HAS INCIDIENT RESULTED IN:

Loss of Work Time	( )	*If Yes, Enter Below (Actual or Anticipated):*	
Number of Days Lost		*Date of Return to Work*	
Death	( )	Permanent Disability	( )
Temporary Disability	( )	Property Damage	( )
Other Type of Loss	( )	Explain:	

HEALTH AND SAFETY ISSURES (If applicable)

MATERIALS EXPOSED TO *(chemical compound name, physical state, etc.):*

OTHER INDIVIDUAL(S) INVOLVED OR AFFECTED:

WITNESSES TO THE INCIDENT:

WAS OPERATION SUBJECT TO AN APPROVED SAFETY PLAN OR PERMIT?

YES ( ) Reference _____

NO ( ) Explain _____

WAS INJURY/ILLNESS/EXPOSURE DUE TO FAILURE OF PROTECTIVE EQUIPMENT?

YES ( ) NO ( ) Explain _____

_____

POSSIBLE CAUSES OF INJURY OR EXPOSURE:

HAS HSM BEEN NOTIFIED? NO ( ) YES ( )

_____ _____

Employee Signature **Date**

HSM COMMENTS:

ACTION REQUIRED:

Attachment 3
Monitoring Site Specific
Safety Information Sheets

<u>CDM Site Safety Inspection</u>
Project: Tahoe Basin Water Quality Characterization and Sediment Trap Effectiveness Studies
Location: Highway 50 near Echo Summit
Site 3-203 and 3-223

Activities

Collection of stormwater runoff, sediment, and precipitation samples using automated equipment. Installation and maintenance of automated equipment and monitoring site will also be performed.

Site Description

Parking – The monitoring/maintenance crew will park in the emergency lane turnout adjacent to the storm water drain inlet being used for sample collection.

Facility – The facility is within Caltrans Highway 50 right-of-way (ROW). The monitoring equipment is housed in a locked metal enclosure attached to a wooden platform outside the limits of the emergency turnout. Sample collection inlet/tubing and the monitoring station (MS) flow measurement devices are installed in the sediment trap.

Safety Hazards

- Entering the emergency turnout either by turning left in front of cross traffic or turning right into the parking area. Re-entering the highway travel lane from the emergency turnout.
- Behind the storm water inlet facility and the MS, the terrain is rocky and slopes down and away at 1:1.
- The wooden platform the equipment enclosure sits on has a one-foot pad to stand on in front and only a few inches around the sides.
- Likely to have snow, sleet and fog at this MS.
- Poisonous spiders and other vermin/insects may be present.

Recommendations

- The monitoring crew will be traveling south from Lake Tahoe to the MS, hence they will turn left across the northbound travel lane. There is a good line of sight on this section of Hwy 50 that allows for a safe turn across the northbound travel lane in good weather conditions. Traffic along this stretch was observed to be moving at 50 to 60 mph during the safety inspection. During adverse weather conditions or heavy traffic, the monitoring crew should proceed to the next road Echo Lake Road, turn off and reenter traffic going north to enter the emergency turn-out. Activate the vehicle emergency lights and strobe 300 to 400-feet before the turn-out.

- At night use battery operated lanterns. Use extreme caution when accessing equipment in the enclosure, there is no platform footing for service personnel to stand on, a slip or misstep around the MS could result in a fall down the steep side slope and a potential serious injury.
- During operation and maintenance of the sample station, place a few traffic cones in the emergency lane (next to the curb) approximately 50-feet behind the emergency turn-out. Park the vehicle in front of the storm drain inlet and MS, i.e. use as a shield especially when performing maintenance on the sample tubing inlet. Keep emergency and vehicle strobe lights on during serving.
- Poisonous spiders and other vermin inhabit these areas, be aware and use gloves when possible.
- At night use battery operated lantern with 360-degree illumination.
- A team member during maintenance or when a crewmember has his/her back to traffic should be watching traffic.
- Always wear hardhats, steel toed boots, and safety vests.

<u>CDM Site Safety Inspection</u>
Project: Tahoe Basin Water Quality Characterization and Sediment Trap Effectiveness Studies
Location: Highway 50 near Tahoe Airport
Site 3-202 and 3-222

Activities

Collection of stormwater runoff, sediment, and precipitation samples using automated equipment. Installation and maintenance of automated equipment and monitoring site will also be performed.

Site Description

Parking – The monitoring/maintenance crew will either pull off the road, transition over the 6-inch curb and park adjacent to the monitoring station (MS) or park in the dirt parking lot across Hwy 50.

Facility – The facility is within Caltrans Highway 50 right-of-way (ROW). The monitoring equipment is housed in a locked metal enclosure attached to a wooden platform five feet from the Hwy 50 asphalt curb and 10-feet from the travel lane. Sample collection inlet/tubing and the monitoring station (MS) flow measurement devices are installed in the sediment trap.

Safety Hazards

- Exiting Hwy 50 from the northbound travel lane and parking next to the MS is potentially hazardous. Highway 50 at the MS is a two-lane highway with three-foot emergency lanes on each side of the road. O&M crews parking next to the MS will have to come to a near stop in the travel lane to jump the curb and pull in next to the MS.
- If the operation and maintenance (O&M) crew parks the service vehicle across the street, they will have to walk across Hwy 50 carrying equipment and supplies. Weather conditions may be adverse during MS O&M crossing, i.e. rain, sleet, snow, fog or icy conditions. Work at night time would compound adverse weather conditions. Additionally, when crossing from the MS back to the parking lot, the view of oncoming traffic is blocked approximately 100-feet south of the MS.
- As stated above, from the MS the view of oncoming traffic is blocked by vegetation 100-feet south of the MS. Traffic speeds observe during site safety inspection ranged from 45 to 55 mph (66 to 81 fps).
- The platform that the equipment enclosure sits on has a one-foot pad to stand on in front and only a few inches around the sides.
- Likely to have snow and sleet at this MS.
- During snow conditions be aware of buried rocks and changes in grade.
- Snowplow activities.
- Poisonous spiders and other vermin/insects may be present.

Recommendations

- Before performing MS operation and maintenance, the monitoring crew should set up a "MEN AT WORK" (see Caltrans Specifications) sign 200-feet before the vegetation at the road dogleg that blocks the view towards the MS. Activate the vehicle strobe and emergency lights after setting up the warning sign, maintain a safe speed that will allow a safe exit from Hwy 50, the transition over the asphalt curb and stopping adjacent to the MS. When re-entering the travel lane from the MS, ease part of the vehicle into the emergency lane, when traffic is clear pull into the travel lane, be prepared for a fast acceleration if traffic appears from the blind spot. Keep emergency and vehicle strobe lights on during servicing.
- When parking across the highway from the MS a clear view of the highway around the dog-leg south of the MS and the highway north of the MS is available. Don't take chances in adverse weather conditions, wait until traffic is clear in both directions before crossing Hwy 50.
- Set traffic cones at 15-foot intervals in the emergency lane and in front of the MS. Keep emergency and vehicle strobe lights on during servicing. When O&M personnel are lying on the ground servicing the MS sample inlet equipment, a team member should be watching traffic at all times.
- At night use battery operated lanterns. Use caution when accessing equipment in the enclosure, there is no platform footing for service personnel to stand on, a fall around the MS could result in injury.
- Poisonous spiders and other vermin inhabit these areas, be aware and use gloves when possible.
- Be aware of snowplow activities during MS activities – always watch the traffic!
- Always wear hardhats and safety vests.

<u>CDM Site Safety Inspection</u>
Project: Tahoe Basin Water Quality Characterization and Sediment Trap Effectiveness Studies
Location: Highway 50 near Tahoe Meadows
Site 3-201

Activities

Collection of stormwater runoff samples using automated equipment. Installation and maintenance of automated equipment and monitoring site will also be performed.

Site Description

Parking – The monitoring/maintenance crew should attempt to park between the bike path and Highway 50, without blocking traffic into Tahoe Meadows or the bike path.

Facility – The facility is within Caltrans Highway 50 right-of-way (ROW). The monitoring equipment is housed in a locked metal vault enclosure adjacent to Highway 50. Sample collection inlet/tubing and the monitoring station (MS) flow measurement devices are installed the storm drain pipe.

Safety Hazards

- Entering Tahoe Meadows (Lake Rd) from Highway 50, while observing bike and foot traffic along the bike path. Re-entering Highway 50 from Tahoe Meadows.
- Heavy traffic (Hwy 50 and residential), bikes, and people.
- Entering/exiting the metal vault structure.
- Likely to have snow, sleet and fog at this MS.
- Poisonous spiders and other vermin/insects may be present.
- Water or snow inside the vault.
- Snowplow activities.
- Vehicle traffic entering/existing Tahoe Meadows facility.

Recommendations

- The monitoring crew will be traveling north or south on Hwy 50 to access the MS, hence they will turn left across the southbound travel lane or they will turn right onto Lake Road. There is a good line of sight on this section of Hwy 50 that allows for a safe turn across the southbound travel lane in good weather conditions. Traffic along this stretch was observed to be moving at 30 to 40 mph during the safety inspection. During adverse weather conditions or heavy traffic, the monitoring crew should access the MS from the southbound travel lane, which will minimize any potential traffic accidents.

- At night use battery operated lanterns. Use extreme caution when accessing equipment in the vault; a slip or misstep around the MS could result in a fall and a potential serious injury.
- During operation and maintenance of the sample station, place a few traffic cones near the traffic lane (next to the curb), and around any vehicles. Park the vehicle in front of the storm drain inlet and MS, without blocking the bike lane or the entrance/exist to Tahoe meadows. Keep emergency and vehicle strobe lights on during service
- Poisonous spiders and other vermin inhabit these areas, be aware and use gloves when possible.
- Use a step ladder to enter and exit the housing vault.
- At night use battery operated lantern with 360-degree illumination.
- A team member during maintenance or when a crewmember has his/her back to traffic should be watching traffic.
- Always wear hardhats, steel toed boots, and safety vests.

<u>CDM Site Safety Inspection</u>
Project: Tahoe Basin Water Quality Characterization and Sediment Trap Effectiveness Studies
Location: Highway 89 at D.L. Bliss State Park
Site 3-218

Activities

Collection of stormwater runoff samples using automated equipment. Installation and maintenance of automated equipment and monitoring site will also be performed.

Site Description

Parking – The monitoring/maintenance crew will exit Hwy 89 (north or south bound) and park in the paved turnout (next to boulders). Field crews shall access the MS by foot from the paved turnout.

Facility – The MS is within Caltrans Highway 89 right-of-way. The Sigma Auto Sampler will be housed in a locked metal enclosure attached to a wooden platform approximately 5 -10 feet from the highway. Sample collection inlet/tubing and the MS flow measurement devices are installed in the sediment trap.

Safety Hazards

- Exiting Hwy 89 traffic.
- Road conditions along Hwy 89 (i.e. black ice)
- Adverse weather conditions while monitoring or O&M activities (i.e. rain, sleet, snow, fog or icy conditions)
- Work at nighttime compounded with adverse weather conditions.
- The platform that the equipment enclosure sits on.
- During snow conditions be aware of buried rocks and changes in grade.
- Snowplow activities.
- MS exposed – could easily be struck by an automobile.
- Poisonous spiders and other vermin/insects may be present.

Recommendations

- Emergency and vehicle strobe lights should be on prior to exiting/entering Hwy 89 (at least 200 – 300 feet)
- Set traffic cones around all field crew vehicles and use emergency and vehicle strobe lights appropriately.

- When O&M or field personnel are servicing the MS or related equipment, a team member should be watching traffic at all times.
- At night use battery operated lanterns.
- Use caution when accessing equipment in the enclosure or working around the wood platform.
- Poisonous spiders and other vermin inhabit these areas, be aware and use gloves when possible.
- Be aware of snowplow activities during MS activities – always watch the traffic!
- Be aware of slip, trip, and fall conditions.
- Be aware of traffic during adverse weather conditions – black ice
- Be aware of environmental conditions - avalanches
- Always wear hardhats, steel-toe boots and safety vests.

<u>CDM Site Safety Inspection</u>
Project: Tahoe Basin Water Quality Characterization and Sediment Trap Effectiveness Studies
Location: Highway 28 at Snow Creek
Site 3-219

Activities

Collection of stormwater runoff and precipitation samples using automated equipment. Installation and maintenance of automated equipment and monitoring site will also be performed.

Site Description

Parking – The monitoring/maintenance crew will exit Hwy 28 and park in the adjacent parking lot (real estate office). Field crews shall access the MS by foot from the parking lot.

Facility – The MS is within Caltrans Highway 28 right-of-way. The monitoring equipment will be housed in a locked metal enclosure attached to a wooden platform approximately 10 to 15 feet from the highway. Sample collection inlet/tubing and the MS flow measurement devices are installed in the drain inlet and outfall pipe.

Safety Hazards

- Exiting Hwy 28 traffic
- Adverse weather conditions while monitoring or O&M activities (i.e. rain, sleet, snow, fog or icy conditions)
- Work at nighttime compounded with adverse weather conditions.
- The platform that the equipment enclosure sits on.
- During snow conditions be aware of buried rocks and changes in grade.
- Snowplow activities.
- People accessing the MS area (foot and bike traffic)
- Adjacent Creek and overhead power lines.
- MS is located within a flood zone.
- Poisonous spiders and other vermin/insects may be present.

Recommendations

- Emergency and vehicle strobe lights should be on prior to exiting/entering Hwy 28 (200 – 300 feet)
- Set traffic cones around all field crew vehicles and use emergency and vehicle strobe lights appropriately.

- When O&M or field personnel are servicing the MS or related equipment, a team member should be watching traffic at all times.
- At night use battery operated lanterns.
- Use caution when accessing equipment in the enclosure or working around the wood platform.
- Poisonous spiders and other vermin inhabit these areas, be aware and use gloves when possible.
- Be aware of snowplow activities during MS activities – always watch the traffic!
- Be aware of slip, trip, and fall conditions.
- Be aware of rising water levels in neighboring creek
- Always wear hardhats, steel-toe boots and safety vests.

<u>CDM Site Safety Inspection</u>
Project: Tahoe Basin Water Quality Characterization and Sediment Trap Effectiveness Studies
Location: Highway 267 below Brockway Summit
Site 3-220

Activities

Collection of stormwater runoff samples using automated equipment. Installation and maintenance of automated equipment and monitoring site will also be performed.

Site Description

Parking – The monitoring/maintenance crew will exit Hwy 267 and park on an unpaved service road. Walking overland from the road to the station or south along the HY 267 shoulder accesses the MS.

Facility – The MS is within Caltrans Highway 267 right-of-way. The monitoring equipment will be housed in a locked metal enclosure attached to a wooden platform approximately 20 feet from the highway. Sample collection inlet/tubing and the MS flow measurement devices are installed in the drain inlet and outfall pipe.

Safety Hazards

- Exiting Hwy 267.
- Adverse weather conditions while monitoring or O&M activities (i.e. rain, sleet, snow, fog or icy conditions)
- Work at nighttime compounded with adverse weather conditions.
- Traffic along Hwy 267.
- The platform that the equipment enclosure sits on.
- During snow conditions be aware of buried rocks and changes in grade.
- Snowplow activities.
- Poisonous spiders and other vermin/insects may be present.
- People accessing the MS area.

Recommendations

- Emergency and vehicle strobe lights should be on prior to exiting/entering Brockway (200 – 300 feet)
- Set traffic cones around all field crew vehicles and use emergency and vehicle strobe lights appropriately.

- When O&M personnel are servicing the MS or related equipment, a team member should be watching traffic at all times.
- At night use battery operated lanterns.
- Use caution when accessing equipment in the enclosure or working around the wood platform.
- Poisonous spiders and other vermin inhabit these areas, be aware and use gloves when possible.
- Be aware of snowplow activities during MS activities – always watch the traffic!
- Be aware of slip, trip, and fall conditions.
- Always wear hardhats, steel-toe boots and safety vests.

Attachment 4
Camp Dresser & McKee Inc.
Confined Space Entry Procedures

Appendix B

Equipment and Bottle Cleaning Protocols

BOTTLE AND EQUIPMENT CLEANING PROCEDURES

Composite Bottles (carboys)

1. Rinse bottle with warm tap water three times as soon as possible after emptying sample.
2. Soak in a 2% Contrad solution for 48 hours; scrub with clean plastic brush.
3. Rinse three times with tap water.
4. Rinse five times with Milli-Q water, rotating the bottle to ensure contact with the entire inside surface.
5. Rinse three times with hexane, rotating the bottle to ensure contact with the entire inside surface (use 30 ml per rinse).
6. Rinse six times with Milli-Q water.
7. Rinse three times with 2N nitric acid (1 liter per bottle, per rinse) rotating the bottle to ensure contact with the entire inside surface.
8. Rinse six times with Milli-Q water.
9. Cap bottle with Teflon lined lid cleaned as specified below.

Teflon Tubing, Lids and Strainers

1. Make up a 2% solution of Micro soap in warm tap water.
2. Rinse tubing three times with the 2% Micro Solution, wash lids and strainers with micro solution and plastic brush.
3. Rinse three times with tap water.
4. Rinse three times with Milli-Q water.
5. Rinse three times with a 2N nitric acid solution.
6. Soak 24 hours in a 2N nitric acid solution.
7. Rinse three times with Milli-Q water.
8. Seal the tubing on both ends with clean latex material
9. Individually Double-bag tubing in new polyethylene bags properly labeled. Double-bag lids and strainers individually in zip-lock bags.

Cleaning Solutions

2% Contrad = 200 ml concentrated Contrad per full 10L bottle

2% HNO3 Acid = 80 ml concentrated HNO3 acid (16N) per gallon of Milli-Q water

2% Micro = 80 ml concentrated Micro per gallon of Milli-Q water

Equipment and Handling

1. Safety Precautions - All of the appropriate safety equipment must be worn by personnel involved in the cleaning of the bottles due to the corrosive nature of the chemicals being used to clean the bottles and tubing. This safety equipment must include protective gloves, lab coats, chemically resistant aprons, goggles with side shields and respirators. All MSDS must be read and signed off by personnel.

2. A record book must be kept of each sample bottle washed, outlining the day the bottle was cleaned and checked off for passage of the quality control check.

3. Nitrile gloves must be worn while cleaning and handling bottles and equipment. Care must be taken at all times to avoid introduction of contamination from any source.

Appendix C

Field Form

Site Visit Log

Caltrans Tahoe Basin Stormwater Monitoring and Sediment Trap Effectiveness Program

Date	*Time*	*Reason for Visit*	*Name (Printed)*

FLOW METER AND AUTOSAMPLER PROGRAM SHEETS

FLOW METER SET-UP PROGRAMMING
ECHO SUMMIT SITE

Caltrans Tahoe Basin Stormwater Monitoring and Sediment Trap Effectiveness Program

Set-up Menu: ***Modify All Items***

1. Select Flow Units	*liters per second (l/s)*		
2. Select Level Unit of Measure	*centimeters (cm)*		
3. Select Primary Device	*weir*		
4. Weir type	*noncontinuous rectangular*		
5. Width	*21.85 in.*		
6. Program Lock	*disabled*		
7. Sampler Pacing	*enabled*		
8. Flow Interval (i.e. trigger volume)	*get from SEC*		
9. Enter Site ID	*3203*		
10..Enter Total Flow Units	*liters (l)*		
11..Enter Velocity Direction	*upstream (normal)*		
12. Enter Velocity Units	*meters per second (m/s)*		
13. Enter Velocity Cutoff	*0.0*	Default Value	*0.0*

Options Menu:

1. Set Time & Date	*check*
2. Advanced Options	*select*

Advanced Options Menu:

1. Alarms		*none*				
2. Calibration		*bubbler rate*				
3. Communication Set-up						
Modem Set-up						
Modem Power		*enabled*				
Dial Method		*tone*				
Phone Number		*N/A*				
Cellular Modem Setting		*disabled*				
Pager Option		*N/A*				
Baud Rate		*N/A*				
RS-232 Set-up						
RS-232 Baud		*19200*				
4. Data Log						
Select Inputs						
Rainfall	Logged	*yes*	Logging Interval	*5 min.*	Units	*cm.*
Level/Flow	Logged	*yes*	Logging Interval	*1 min*	Units	*cm.*
Velocity	Logged	*N/A*	Logging Interval	*N/A*	Units	*N/A*
5. Extended Power Mode		*disabled*	Logging Intervals for all Channels			*5 min.*
6. Memory Mode		*wrap*				
7. Flow Totalizer Scaling		*X10*	Flow Units	*liters*		

Level Adjust Setting (Measured) -47.308 (cm)

AUTOSAMPLER SET-UP PROGRAMMING
ECHO SUMMIT SITE

Caltrans Tahoe Basin Stormwater Monitoring and Sediment Trap Effectiveness Program

Prior to programming, set the sampler with the correct time and date making sure the sampler and flow meter are synchronized.

1. To check time and date, press the **"TIME READ"** key
2. To change the time or date, press the **"TIME SET"** key

Press the **"ASTERICK" (*)** key to access programming

	INFLUENT SAMPLER	EFFLUENT SAMPLER
*1. Alter parameters?	*no*	*no*
2. Enable advanced program	*yes*	*yes*
3. Enter number of sample bottles	*1*	*1*
4. Enter units for bottle volume	*ml*	*ml*
5. Enter bottle volume	*10000*	*10000*
6. Enter units for tubing length	*ft.*	*ft.*
7. Enter length of tubing	*18*	*13*
Verify program		
8. Program lock?	*no*	*no*
9. Variable interval?	*don't touch*	*don't touch*
10. pH/ORP?	*no*	*no*
11. Program delay?	*no*	*no*
12. Flow mode?	yes	*yes*
13. Variable interval?	no	no
14. Interval counts?	*1*	*1*
15. Timed override?	*no*	*no*
16. Continuous mode?	*no*	*no*
17. Change volume?	*yes (40 samples)*	*yes (40 samples)*
18. Sample volume?	*250 ml.*	*250 ml.*
**19. Calibrate volume?	*yes*	*yes*
**20. Auto calibrate?	*yes*	*yes*
**21. Ready to pump?	*yes*	*yes*
22. Enter actual volume pumped	_____	_____
23. Intake rinses?	*yes*	*yes*
24. Rinse cycles?	*1*	*1*
25. Intake faults?	*no*	*no*
26. Enter ID#	*3-203*	*3-203*

(*) Answer yes if you wish to change the current program.
(**) Answer no if you do not wish to calibrate sample volume.

FLOW METER SET-UP PROGRAMMING
TAHOE AIRPORT SITE

Caltrans Tahoe Basin Stormwater Monitoring and Sediment Trap Effectiveness Program

Set-up Menu: ***Modify All Items***

1. Select Flow Units	*liters per second (l/s)*		
2. Select Level Unit of Measure	*centimeters (cm)*		
3. Select Primary Device	*weir*		
4. Weir type	*noncontinuous rectangular*		
5. Width	*21.94 in.*		
6. Program Lock	*disabled*		
7. Sampler Pacing	*enabled*		
8. Flow Interval (i.e. trigger volume)	*get from SEC*		
9. Enter Site ID	*3202*		
10..Enter Total Flow Units	*liters (l)*		
11..Enter Velocity Direction	*upstream (normal)*		
12. Enter Velocity Units	*meters per second (m/s)*		
13. Enter Velocity Cutoff	*0.0*	Default Value	*0.0*

Options Menu:

1. Set Time & Date	*check*
2. Advanced Options	*select*

Advanced Options Menu:

1. Alarms		*none*				
2. Calibration		*bubbler rate*				
3. Communication Set-up						
Modem Set-up						
Modem Power		*enabled*				
Dial Method		*tone*				
Phone Number		*N/A*				
Cellular Modem Setting		*disabled*				
Pager Option		*N/A*				
Baud Rate		*N/A*				
RS-232 Set-up						
RS-232 Baud		*19200*				
4. Data Log						
Select Inputs						
Rainfall	Logged	*yes*	Logging Interval	*5 min.*	Units	*cm.*
Level/Flow	Logged	*yes*	Logging Interval	*1 min*	Units	*cm.*
Velocity	Logged	*N/A*	Logging Interval	*N/A*	Units	*N/A*
5. Extended Power Mode		*disabled*	Logging Intervals for all Channels			*5 min.*
6. Memory Mode		*wrap*				
7. Flow Totalizer Scaling		*X10*	Flow Units	*liters*		

Level Adjust Setting (Measured) -41.593 cm

AUTOSAMPLER SET-UP PROGRAMMING
TAHOE AIRPORT SITE

Caltrans Tahoe Basin Stormwater Monitoring and Sediment Trap Effectiveness Program

Prior to programming, set the sampler with the correct time and date making sure the sampler and flow meter are synchronized.

1. To check time and date, press the **"TIME READ"** key
2. To change the time or date, press the **"TIME SET"** key

Press the **"ASTERICK" (*)** key to access programming

	INFLUENT SAMPLER	EFFLUENT SAMPLER
*1. Alter parameters?	*no*	*no*
2. Enable advanced program	*yes*	*yes*
3. Enter number of sample bottles	*1*	*1*
4. Enter units for bottle volume	*ml*	*ml*
5. Enter bottle volume	*10000*	*10000*
6. Enter units for tubing length	*ft.*	*ft.*
7. Enter length of tubing	*16*	*12*
Verify program		
8. Program lock?	*no*	*no*
9. Variable interval?	*don't touch*	*don't touch*
10. pH/ORP?	*no*	*no*
11. Program delay?	*no*	*no*
12. Flow mode?	yes	*yes*
13. Variable interval?	no	no
14. Interval counts?	*1*	*1*
15. Timed override?	*no*	*no*
16. Continuous mode?	*no*	*no*
17. Change volume?	*yes (40 samples)*	*yes (40 samples)*
18. Sample volume?	*250 ml.*	*250 ml.*
**19. Calibrate volume?	*yes*	*yes*
**20. Auto calibrate?	*yes*	*yes*
**21. Ready to pump?	*yes*	*yes*
22. Enter actual volume pumped	_____	_____
23. Intake rinses?	*yes*	*yes*
24. Rinse cycles?	*1*	*1*
25. Intake faults?	*no*	*no*
26. Enter ID#	*3-202*	*3-202*

(*) Answer yes if you wish to change the current program.
(**) Answer no if you do not wish to calibrate sample volume.

FLOW METER SET-UP PROGRAMMING
TAHOE MEADOWS SITE

Caltrans Tahoe Basin Stormwater Monitoring and Sediment Trap Effectiveness Program

Set-up Menu: ***Modify All Items***

1. Select Flow Units	*liters per second (l/s)*		
2. Select Level Unit of Measure	*centimeters (cm)*		
3. Select Primary Device	*area velocity*		
4. Method of Calculating Area	*geometry*		
5. Shape	*circular pipe*		
6. Pipe Diameter	*18 in.*		
7. Program Lock	*disabled*		
7. Sampler Pacing	*enabled*		
8. Flow Interval (i.e. trigger volume)	*get from SEC*		
9. Enter Site ID	*3201*		
10..Enter Total Flow Units	*liters (l)*		
11..Enter Velocity Direction	*upstream (normal)*		
12. Enter Velocity Units	*meters per second (m/s)*		
13. Enter Velocity Cutoff	*0.0*	Default Value	*0.0*

Options Menu:

1. Set Time & Date	*check*
2. Advanced Options	*select*

Advanced Options Menu:

1. Alarms		*none*				
2. Calibration		*bubbler rate*				
3. Communication Set-up						
Modem Set-up						
Modem Power		*enabled*				
Dial Method		*tone*				
Phone Number		*N/A*				
Cellular Modem Setting		*disabled*				
Pager Option		*N/A*				
Baud Rate		*N/A*				
RS-232 Set-up						
RS-232 Baud		*19200*				
4. Data Log						
Select Inputs						
Rainfall	Logged	*yes*	Logging Interval	*5 min.*	Units	*cm.*
Level/Flow	Logged	*yes*	Logging Interval	*1 min*	Units	*cm.*
Velocity	Logged	*yes*	Logging Interval	*1 min*	Units	*m/s*
5. Extended Power Mode		*disabled*	Logging Intervals for all Channels			*5 min.*
6. Memory Mode		*wrap*				
7. Flow Totalizer Scaling		*X10*	Flow Units	*liters*		

AUTOSAMPLER SET-UP PROGRAMMING
TAHOE MEADOWS SITE

Caltrans Tahoe Basin Stormwater Monitoring and Sediment Trap Effectiveness Program

Prior to programming, set the sampler with the correct time and date making sure the sampler and flow meter are synchronized.

1. To check time and date, press the **"TIME READ"** key
2. To change the time or date, press the **"TIME SET"** key

Press the **"ASTERICK" (*)** key to access programming

*1. Alter parameters?	*no*
2. Enable advanced program	*yes*
3. Enter number of sample bottles	*1*
4. Enter units for bottle volume	*ml*
5. Enter bottle volume	*10000*
6. Enter units for tubing length	*ft.*
7. Enter length of tubing	*28*

Verify program

8. Program lock?	*no*
9. Variable interval?	*don't touch*
10. pH/ORP?	*no*
11. Program delay?	*no*
12. Flow mode?	yes
13. Variable interval?	no
14. Interval counts?	*1*
15. Timed override?	*no*
16. Continuous mode?	*no*
17. Change volume?	*yes (40 samples)*
18. Sample volume?	*250 ml.*
**19. Calibrate volume?	*yes*
**20. Auto calibrate?	*yes*
**21. Ready to pump?	*yes*
22. Enter actual volume pumped	_____
23. Intake rinses?	*yes*
24. Rinse cycles?	*1*
25. Intake faults?	*no*
26. Enter ID#	*3-201*

(*) Answer yes if you wish to change the current program.
(**) Answer no if you do not wish to calibrate sample volume.

FLOW METER SET-UP PROGRAMMING
D.L. BLISS SITE

Caltrans Tahoe Basin Stormwater Monitoring and Sediment Trap Effectiveness Program

Set-up Menu: ***Modify All Items***

1. Select Flow Units	*liters per second (l/s)*		
2. Select Level Unit of Measure	*centimeters (cm.)*		
3. Select Primary Device	*weir*		
4. Weir type	*noncontinuous rectangular*		
5. Width	*21.75 in.*		
6. Program Lock	*disabled*		
7. Sampler Pacing	*enabled*		
8. Flow Interval (i.e. trigger volume)	*get from SEC*		
9. Enter Site ID	*3218*		
10..Enter Total Flow Units	*liters (l)*		
11..Enter Velocity Direction	*upstream (normal)*		
12. Enter Velocity Units	*meters per second (m/s)*		
13. Enter Velocity Cutoff	*0.0*	Default Value	*0.0*

Options Menu:

1. Set Time & Date	*check*
2. Advanced Options	*select*

Advanced Options Menu:

1. Alarms		*none*				
2. Calibration		*bubbler rate (1)*				
3. Communication Set-up						
Modem Set-up						
Modem Power		*enabled*				
Dial Method		*tone*				
Phone Number		*N/A*				
Cellular Modem Setting		*disabled*				
Pager Option		*N/A*				
Baud Rate		*N/A*				
RS-232 Set-up						
RS-232 Baud		*19200*				
4. Data Log						
Select Inputs						
Rainfall	Logged	*yes*	Logging Interval	*5 min.*	Units	*cm.*
Level/Flow	Logged	*yes*	Logging Interval	*1 min*	Units	*cm.*
Velocity	Logged	*N/A*	Logging Interval	*N/A*	Units	*N/A*
5. Extended Power Mode		*disabled*	Logging Intervals for all Channels			*5 min.*
6. Memory Mode		*wrap*				
7. Flow Totalizer Scaling		X10	low Units	*liters*		

Level Adjust Setting (Measured) -50.800 (cm)

AUTOSAMPLER SET-UP PROGRAMMING
D. L. BLISS SITE

Caltrans Tahoe Basin Stormwater Monitoring and Sediment Trap Effectiveness Program

Prior to programming, set the sampler with the correct time and date making sure the sampler and flow meter are synchronized.

1. To check time and date, press the **"TIME READ"** key
2. To change the time or date, press the **"TIME SET"** key

Press the **"ASTERICK" (*)** key to access programming

	INFLUENT SAMPLER
*1. Alter parameters?	*no*
2. Enable advanced program	*yes*
3. Enter number of sample bottles	*1*
4. Enter units for bottle volume	*ml*
5. Enter bottle volume	*10000*
6. Enter units for tubing length	*ft.*
7. Enter length of tubing	*10*
Verify program	
8. Program lock?	*no*
9. Variable interval?	*don't touch*
10. pH/ORP?	*no*
11. Program delay?	*no*
12. Flow mode?	yes
13. Variable interval?	no
14. Interval counts?	*1*
15. Timed override?	*no*
16. Continuous mode?	*no*
17. Change volume?	*yes (40 samples)*
18. Sample volume?	*250 ml.*
**19. Calibrate volume?	*yes*
**20. Auto calibrate?	*yes*
**21. Ready to pump?	*yes*
22. Enter actual volume pumped	_____
23. Intake rinses?	*yes*
24. Rinse cycles?	*1*
25. Intake faults?	*no*
26. Enter ID#	*3-218*

(*) Answer yes if you wish to change the current program.
(**) Answer no if you do not wish to calibrate sample volume.

FLOW METER SET-UP PROGRAMMING
SNOW CREEK SITE

Caltrans Tahoe Basin Stormwater Monitoring and Sediment Trap Effectiveness Program

Set-up Menu: ***Modify All Items***

1. Select Flow Units	*liters per second (l/s)*		
2. Select Level Unit of Measure	*centimeters (cm)*		
3. Select Primary Device	*area velocity*		
4. Method of Calculating Area	*geometry*		
5. Shape	*circular pipe*		
6. Pipe Diameter	*18 in.*		
7. Program Lock	*disabled*		
7. Sampler Pacing	*enabled*		
8. Flow Interval (i.e. trigger volume)	*get from SEC*		
9. Enter Site ID	*3219*		
10..Enter Total Flow Units	*liters (l)*		
11..Enter Velocity Direction	*upstream (normal)*		
12. Enter Velocity Units	*meters per second (m/s)*		
13. Enter Velocity Cutoff	*0.0*	Default Value	*0.0*

Options Menu:

1. Set Time & Date	*check*
2. Advanced Options	*select*

Advanced Options Menu:

1. Alarms		*none*				
2. Calibration		*bubbler rate (1)*				
3. Communication Set-up						
Modem Set-up						
Modem Power		di*sabled*				
Dial Method		*tone*				
Phone Number		*N/A*				
Cellular Modem Setting		*disabled*				
Pager Option		*N/A*				
Baud Rate		*N/A*				
RS-232 Set-up						
RS-232 Baud		*19200*				
4. Data Log						
Select Inputs						
Rainfall	Logged	*yes*	Logging Interval	*5 min.*	Units	*cm.*
Level/Flow	Logged	*yes*	Logging Interval	*1 min*	Units	*cm.*
Velocity	Logged	*yes*	Logging Interval	*1 min*	Units	*m/s*
5. Extended Power Mode		*disabled*	Logging Intervals for all Channels			*5 min.*
6. Memory Mode		*wrap*				
7. Flow Totalizer Scaling		*X10*	Flow Units	*liters*		

AUTOSAMPLER SET-UP PROGRAMMING
SNOW CREEK SITE

Caltrans Tahoe Basin Stormwater Monitoring and Sediment Trap Effectiveness Program

Prior to programming, set the sampler with the correct time and date making sure the sampler and flow meter are synchronized.

1. To check time and date, press the **"TIME READ"** key
2. To change the time or date, press the **"TIME SET"** key

Press the **"ASTERICK" (*)** key to access programming

*1. Alter parameters?	*no*
2. Enable advanced program	*yes*
3. Enter number of sample bottles	*1*
4. Enter units for bottle volume	*ml*
5. Enter bottle volume	*10000*
6. Enter units for tubing length	*ft.*
7. Enter length of tubing	15

Verify program

8. Program lock?	*no*
9. Variable interval?	*don't touch*
10. pH/ORP?	*no*
11. Program delay?	*no*
12. Flow mode?	yes
13. Variable interval?	no
14. Interval counts?	*1*
15. Timed override?	*no*
16. Continuous mode?	*no*
17. Change volume?	*yes (40 samples)*
18. Sample volume?	*250 ml.*
**19. Calibrate volume?	*yes*
**20. Auto calibrate?	*yes*
**21. Ready to pump?	*yes*
22. Enter actual volume pumped	_____
23. Intake rinses?	*yes*
24. Rinse cycles?	*1*
25. Intake faults?	*no*
26. Enter ID#	*3-219*

(*) Answer yes if you wish to change the current program.
(**) Answer no if you do not wish to calibrate sample volume.

FLOW METER SET-UP PROGRAMMING
BROCKWAY SUMMIT SITE

Caltrans Tahoe Basin Stormwater Monitoring and Sediment Trap Effectiveness Program

Set-up Menu: ***Modify All Items***

1. Select Flow Units	*liters per second (l/s)*		
2. Select Level Unit of Measure	*centimeters (cm)*		
3. Select Primary Device	*area velocity*		
4. Method of Calculating Area	*geometry*		
5. Shape	*circular pipe*		
6. Pipe Diameter	*18 in.*		
7. Program Lock	*disabled*		
7. Sampler Pacing	*enabled*		
8. Flow Interval (i.e. trigger volume)	*get from SEC*		
9. Enter Site ID	*3220*		
10..Enter Total Flow Units	*liters (l)*		
11..Enter Velocity Direction	*upstream (normal)*		
12. Enter Velocity Units	*meters per second (m/s)*		
13. Enter Velocity Cutoff	*0.0*	Default Value	*0.0*

Options Menu:

1. Set Time & Date	*check*
2. Advanced Options	*select*

Advanced Options Menu:

1. Alarms		*none*				
2. Calibration		*bubbler rate*				
3. Communication Set-up						
Modem Set-up						
Modem Power		di*sabled*				
Dial Method		*tone*				
Phone Number		*N/A*				
Cellular Modem Setting		*disabled*				
Pager Option		*N/A*				
Baud Rate		*N/A*				
RS-232 Set-up						
RS-232 Baud		*19200*				
4. Data Log						
Select Inputs						
Rainfall	Logged	*yes*	Logging Interval	*5 min.*	Units	*cm.*
Level/Flow	Logged	*yes*	Logging Interval	*1 min*	Units	*cm.*
Velocity	Logged	*yes*	Logging Interval	*1 min*	Units	*m/s*
5. Extended Power Mode		*disabled*	Logging Intervals for all Channels			*5 min.*
6. Memory Mode		*wrap*				
7. Flow Totalizer Scaling		*X10*	Flow Units	*liters*		

AUTOSAMPLER SET-UP PROGRAMMING
BROCKWAY SUMMIT SITE

Caltrans Tahoe Basin Stormwater Monitoring and Sediment Trap Effectiveness Program

Prior to programming, set the sampler with the correct time and date making sure the sampler and flow meter are synchronized.

1. To check time and date, press the **"TIME READ"** key
2. To change the time or date, press the **"TIME SET"** key

Press the **"ASTERICK" (*)** key to access programming

*1. Alter parameters?	*no*
2. Enable advanced program	*yes*
3. Enter number of sample bottles	*1*
4. Enter units for bottle volume	*ml*
5. Enter bottle volume	*10000*
6. Enter units for tubing length	*ft.*
7. Enter length of tubing	*29*

Verify program

8. Program lock?	*no*
9. Variable interval?	*don't touch*
10. pH/ORP?	*no*
11. Program delay?	*no*
12. Flow mode?	yes
13. Variable interval?	no
14. Interval counts?	*1*
15. Timed override?	*no*
16. Continuous mode?	*no*
17. Change volume?	*yes (40 samples)*
18. Sample volume?	*250 ml.*
**19. Calibrate volume?	*yes*
**20. Auto calibrate?	*yes*
**21. Ready to pump?	*yes*
22. Enter actual volume pumped	_____
23. Intake rinses?	*yes*
24. Rinse cycles?	*1*
25. Intake faults?	*no*
26. Enter ID#	*3-220*

(*) Answer yes if you wish to change the current program.
(**) Answer no if you do not wish to calibrate sample volume.

SEDIMENT TRAP EFFECTIVENESS STUDY FORMS

STATION VISIT CHECKLIST FOR SETUP/BOTTLE REPLACEMENT/SHUT-DOWN

Sediment Trap Effectiveness Study

Set-Up Crew Name: _____ Date & Time that Set-Up is Completed: _____

Station Name: _____ Date & Time that Shut-Down is Completed: _____

SAMPLER INSPECTION	**OK/not OK**	**Observations &/or Actions Taken to Correct**
Desiccant Indicator (color)	_____	_____
Flow Monitor Connections	_____	_____
Pump Tubing Conditions	_____	_____
Intake Tubing Connections	_____	_____
Intake Tubing Conditions	_____	_____

SET-UP CHECKS – FLOW METER

_____ Total Flow (l): _____Total Rainfall (cm): _____ Level Adjust (cm): _____

_____ Insert trigger volume

_____ Review flow meter programming

_____ Verify flow meter is "RUNNING"

_____ Check and replace battery if voltage is below 12.0 volts Volts: _____

SET-UP CHECKS – SAMPLERS

Influent Can #1	**Effluent Can #2**	
_____	_____	Check sampler programs with entries (listed in on-site notebook)
_____	_____	Sampler date/time match flow meter date/time
_____	_____	Check and replace battery if voltage is below 12.0 volts Volts: _____
_____	_____	Insert sample bottles (check for proper bottle position)
_____	_____	Put iced in samplers
_____	_____	Remove lids and put in ziplock bags (place lids on housing shelf)
_____	_____	Start sampler programs (confirm "Program Running")
_____	_____	Check intake lines for kinks, bends, or dips
_____		Call Storm Control

BOTTLE REPLACEMENTS

Influent	**Effluent**	
_____	_____	Halt sampler programs, expose bases, call Storm Control
_____	_____	Total Flow (l): _____ Total Rainfall (cm): _____
_____	_____	Record trigger times
_____	_____	Put lids on sample bottles
_____	_____	Complete Field Data Log and Sample Identification Form
_____	_____	Properly label full sample bottles
_____	_____	Place bottles in cooler with ice
_____	_____	Place a clean set of bottles in samplers
_____	_____	Check intake lines for kinks, bends, or dips
_____	_____	Check and replace battery if voltage is below 12.0 volts Volts: _____
_____	_____	**RESTART** sampler programs, verify "Program Running"

SHUT-DOWN CHECKS

Influent	**Effluent**	
_____	_____	Halt sampler programs
_____	_____	Record in the Sample Identification Form
_____	_____	Put lids on sample bottles
_____	_____	Properly label sample bottles
_____	_____	Total Flow (l): _____ Total Rainfall (cm): _____
_____	_____	Complete Chain of Custody form
_____	_____	Shut samplers off

SEDIMENT SAMPLING CHECK - (check to see if filters are installed and intact)

Influent can #1 _____ Effluent can #2 _____ Filter box #200 _____ #400 _____ #635 _____

SAMPLE IDENTIFICATION FORM
INFLUENT SEDIMENT CAN #1

Sediment Trap Effectiveness Study

Station ID Name:.....
24 hr. time: .....
Date: .....

Directions: To fill out the following table, press down on the "time read" key on the sampler pad and hold down until the first sample time appears on the display. After the sample time has been recorded, press the enter key and the second sample time will appear on the display. Continue in this manner until all sample times are recorded on the following table:

Trigger #	Date	Time	Notes (e.g., missed trigger)
1			
2			
3			
4			
5			
6			
7			
8			
9			
10			
11			
12			
13			
14			
15			
16			
17			
18			
19			
20			
21			
22			
23			
24			
25			
26			
27			
28			
29			
30			
31			
32			
33			
34			
35			
36			
37			
38			
39			
40			

SAMPLE IDENTIFICATION FORM
EFFLUENT SEDIMENT CAN #2

Sediment Trap Effectiveness Study

Station ID Name:.....
24 hr. time: .....
Date: .....

Directions: To fill out the following table, press down on the "time read" key on the sampler pad and hold down until the first sample time appears on the display. After the sample time has been recorded, press the enter key and the second sample time will appear on the display. Continue in this manner until all sample times are recorded on the following table:

Trigger #	Date	Time	Notes (e.g., missed trigger)
1			
2			
3			
4			
5			
6			
7			
8			
9			
10			
11			
12			
13			
14			
15			
16			
17			
18			
19			
20			
21			
22			
23			
24			
25			
26			
27			
28			
29			
30			
31			
32			
33			
34			
35			
36			
37			
38			
39			
40			

FILTER **BAG** FORM

Sediment Trap Effectiveness Study

Filter Bag ID _____ Date _____

1. Filter Bag Preparation

Mass (Bag only) _____
Mass (Bag + Container) _____
Date/Time Prepared _____

2. Filter Bag Installation

Catch Basin ID _____
Date/Time Installed _____

3. Filter Bag Retrieval

Pumping Required (Y/N) _____
Date/Time Retrieved _____

4. Filter Handling and Preparation

A. Filter Bag Drying and Weighing

Oven Temperature _____
Date/Time Drying Start _____
1st Mass of Container/Bag/Sediment _____
2nd Mass of Container/Bag/Sediment _____
3rd Mass of Container/Bag/Sediment _____
4th Mass of Container/Bag/Sediment _____
Date/Time Drying End _____
Mass of Sediment Removed _____

B. Filter Bag/Container Washing

Date/Time bag and container washed _____

C. Washed Filter Bag Drying and Weighing

Mass (Bag only) _____
Mass (Bag + Container) _____
Date/Time Prepared

Chain-of-Custody

Shipped/Received by _____ Date/Time _____
Shipped/Received by _____ Date/Time _____
Shipped/Received by _____ Date/Time _____
Shipped/Received by _____ Date/Time _____
Shipped/Received by _____ Date/Time _____
Shipped/Received by _____ Date/Time _____
Shipped/Received by _____ Date/Time _____
Shipped/Received by _____ Date/Time _____

FILTER **SHEET** FORM

Sediment Trap Effectiveness Study

Filter Sheet ID _____ Date _____

1. Filter Sheet Preparation

Mass (Sheet only) _____
Mass (Sheet + Container)
Date/Time Prepared _____

2. Filter Sheet Installation

Catch Basin ID _____
Date/Time Installed _____

3. Filter Sheet Retrieval

Pumping Required (Y/N) _____
Date/Time Retrieved _____

4. Filter Handling and Preparation

A. Filter Sheet Drying and Weighing

Oven Temperature _____
Date/Time Drying Start _____
1st Mass of Container/Sheet/Sediment _____
2nd Mass of Container/Sheet/Sediment _____
3rd Mass of Container/Sheet/Sediment _____
4th Mass of Container/Sheet/Sediment _____
Date/Time Drying End _____
Mass of Sediment Removed _____

B. Filter Sheet/Container Washing

Date/Time sheet and container washed _____

C. Washed Filter Sheet Drying and Weighing

Mass (Sheet only) _____
Mass (Sheet + Container)
Date/Time Prepared

Chain-of-Custody

Shipped/Received by _____ Date/Time _____
Shipped/Received by _____ Date/Time _____
Shipped/Received by _____ Date/Time _____
Shipped/Received by _____ Date/Time _____
Shipped/Received by _____ Date/Time _____
Shipped/Received by _____ Date/Time _____
Shipped/Received by _____ Date/Time _____

FIELD SAMPLE COLLECTION DATA LOG

(fill out one for each station visit)

Sediment Trap Effectiveness Study

GENERAL

Station ID #_____ Your Name_____

Date/24-HR Time_____ Field Crew_____

COMPOSITE SAMPLES COLLECTED: (carboys)

Bottle #	Sample ID	Sample Volume (e.g., ¼, 1/2, 3/4, full)	Date, 24-hr Time, Missed Triggers
1			
2			
3			
4			

PRECIPITATION SAMPLES COLLECTED: (nalgene bottles)

Bottle #	Sample ID	Sample Volume (e.g., ¼, ½, ¾, full)	Date, 24-hr Time
1			
2			
3			

SEDIMENT SAMPLES COLLECTED: (filters)

Filter Location	Sample ID	# of Containers	Date, 24-hr Time
Influent can #1			
Effluent can #2			
Filter box # 200			
Filter box # 400			
Filter box # 635			

COMMENTS:_____

_____

_____

_____

_____

_____

_____

_____

_____

SNOWMELT MONITORING LOG SHEET

Sediment Trap Effectiveness Study

Set-up Crew Name: _____ Date & Time Set-up is Completed: _____
Station Name ID#: _____ Date & Time Shut-down is Completed: _____

Approximate depth of snow within drainage area:

_____

_____

_____

_____

Weather conditions:
Cloud cover: _____ Temperature: _____ Wind direction: _____

Visual condition of snow pack in sampling area:
Fresh snowfall: _____
Frozen snowpack: _____
Melting snowpack: _____

Recent snow mangement activities conducted by Caltrans:
Sanding: _____
Plowing: _____
Blowing: _____
Salting: _____

Runoff appearance:
Color/clarity: _____
Apparent source: _____
Debris/litter: _____

Snow removal at site: _____

Comments/problems:

_____

_____

_____

_____

_____

STORMWATER RUNOFF WATER QUALITY STUDY FORMS

STATION VISIT CHECKLIST FOR SETUP/BOTTLE REPLACEMENT/SHUT-DOWN

Stormwater Runoff Water Quality Study

Set-Up Crew Name: _____ Date & Time that Set-Up is Completed: _____

Station Name: _____ Date & Time that Shut-Down is Completed: _____

SAMPLER INSPECTION	**OK/not OK**	**Observations &/or Actions Taken to Correct**
Desiccant Indicator (color)	_____	_____
Flow Monitor Connections	_____	_____
Pump Tubing Conditions	_____	_____
Intake Tubing Connections	_____	_____
Intake Tubing Conditions	_____	_____

SET-UP CHECKS – FLOW METER

_____ Total Flow (l): _____Total Rainfall (cm): _____ Level Adjust (cm):_____

_____ Insert trigger volume

_____ Review flow meter programming

_____ Verify flow meter is "RUNNING"

_____ Check and replace battery if voltage is below 12.0 volts Volts: _____

SET-UP CHECKS – SAMPLER

_____ Check sampler program with entries (listed in on-site notebook)

_____ Sampler date/time match flow meter date/time

_____ Check and replace battery if voltage is below 12.0 volts Volts: _____

_____ Insert sample bottle (check for proper bottle position)

_____ Put ice in sampler

_____ Remove lid and put in ziplock bag (place lids on housing shelf)

_____ Start sampler program (confirm "Program Running")

_____ Check intake line for kinks, bends, or dips

_____ Call Storm Control

BOTTLE REPLACEMENTS

_____ Halt sampler program, expose base, call Storm Control

_____ Total Flow (l): _____ Total Rainfall (cm): _____

_____ Record trigger times

_____ Put lid on sample bottle

_____ Complete Field Data Log and Sample Identification Form

_____ Properly label full sample bottle

_____ Place bottle in cooler with ice

_____ Place a clean bottle in sampler

_____ Check intake line for kinks, bends, or dips

_____ Check and replace battery if voltage is below 12.0 volts Volts: _____

_____ **RESTART** sampler program, verify "Program Running"

SHUT-DOWN CHECKS

_____ Halt sampler program

_____ Record in the Sample Identification Form

_____ Put lid on sample bottle

_____ Properly label sample bottle

_____ Total Flow (l): _____ Total Rainfall (cm): _____

_____ Complete Chain of Custody form

_____ Shut sampler off

Comments/Problems:_____

_____

_____

_____

_____

_____

_____

SAMPLE IDENTIFICATION FORM

Stormwater Runoff Water Quality Study

Station ID Name:.....
24 hr. time: .....
Date: .....

Directions: To fill out the following table, press down on the "time read" key on the sampler pad and hold down until the first sample time appears on the display. After the sample time has been recorded, press the enter key and the second sample time will appear on the display. Continue in this manner until all sample times are recorded on the following table:

Trigger #	Date	Time	Notes (e.g., missed trigger)
1			
2			
3			
4			
5			
6			
7			
8			
9			
10			
11			
12			
13			
14			
15			
16			
17			
18			
19			
20			
21			
22			
23			
24			
25			
26			
27			
28			
29			
30			
31			
32			
33			
34			
35			
36			
37			
38			
39			
40			

PRECIPITATION MONITORING CHECKLIST

Stormwater Runoff Water Quality Study

Set-up Crew Name: _____ Date & Time that Set-up is Completed: _____
Station Name ID#: _____ Date & Time that Shut-down is Completed: _____

SET-UP CHECKS

_____ Total Rainfall (cm.): _____
_____ Clear basket of any debris
_____ Unwrap bucket liner using clean sampling techniques
_____ Insert bucket liner into holding bucket

SHUT-DOWN CHECKS

_____ Type of precipitation
Rainfall: _____
Snow: _____
Mix: _____
_____ Remove bucket liner from bucket
_____ Pour samples into 1-L poly nalgene sample container
_____ Put lid on sample bottle
_____ Properly label sample bottle
_____ Place sample container on ice in cooler
_____ Total Rainfall (cm.): _____
_____ Complete Chain of Custody form

COMMENTS/PROBLEMS

_____
_____
_____
_____
_____
_____
_____
_____

FIELD SAMPLE COLLECTION DATA LOG

(fill out one for each station visit)

Stormwater Runoff Water Quality Study

GENERAL

Station ID #_____ Your Name_____

Date/24-HR Time_____ Field Crew_____

RUNOFF WATER COMPOSITE SAMPLES COLLECTED: (carboys)

Bottle #	Sample ID	Sample Volume (e.g., ¼, 1/2, 3/4, full)	Date, 24-hr Time, Missed Triggers
1			
2			
3			
4			
5			
6			
7			
8			

PRECIPITATION SAMPLES COLLECTED: (nalgene bottles)

Bottle #	Sample ID	Sample Volume (e.g., ¼, ½, ¾, full)	Date, 24-hr Time
1			
2			
3			
4			

COMMENTS:_____

_____

_____

_____

_____

_____

_____

_____

_____

SNOWMELT MONITORING LOG SHEET

Stormwater Runoff Water Quality Study

Set-up Crew Name: _____ Date & Time Set-up is Completed: _____
Station Name ID#: _____ Date & Time Shut-down is Completed: _____

Approximate depth of snow within drainage area:

_____

_____

_____

_____

Weather conditions:
Cloud cover: _____ Temperature: _____ Wind direction: _____

Visual condition of snow pack in sampling area:
Fresh snowfall: _____
Frozen snowpack: _____
Melting snowpack: _____

Recent snow mangement activities conducted by Caltrans:
Sanding: _____
Plowing: _____
Blowing: _____
Salting: _____

Runoff appearance:
Color/clarity: _____
Apparent source: _____
Debris/litter: _____

Snow removal at site: _____

Comments/problems:

_____

_____

_____

_____

_____