Medium Duty Cutaway Bus Standard Equipment Type VII
El Dorado National Aerolite (Chevy Chassis)

Standard Body Features

Mor/Ryde Rear Suspension
Streetside Exhaust
Rear Tow Hooks
Rear "Help" Bumper w/Hawkeye Sonar System
Backup Alarm
ILIS Electronic Interlock
(2) Grounds – Engine to Frame & Body to Frame
Rustproofing
36" Electric Entry Door
Entry Door Exterior Keylock
39" x 29" Windows
Red Exit Light Egress Windows
Rear Exit Window Buzzer
Thermo-King S40-II A/C
TM-31 A/C Compressor
65,000 BTU Rear Heater
Silicone Heater Hoses
LED Lighting Package
LED Rear Center Brake Light
LED Side Turn Signals
Stepwell LED Lights
Ground Plane
Two-Way Radio Prep
External ADA PA Speaker
PA System w/Hand-Held Mic
Battery Disconnect Switch
AM/FM/CD
"Stop Request" System
Wheelchair Touch Tape
Transpec Roof Hatch
Valve Stem Extenders
First Aid Kit – 16 Unit
Fire Extinguisher
Triangle Reflectors
B & R Remote Control Mirrors with Built-In Turn Signals
BDS Interior Mirror 6" x 9"
Spare Tire Shipped Loose
Steel Wheelwells
Hubodometer
Farebox Stanchion – Only
Tectyl Undercoating
Anti-Sail Mudflaps
Altro Interior Flooring
Right Hand Entry Assist Rail
Overhead Hand Rails
Altro Yellow Stepnosing
Altro Yellow Standee Line
Front Electric Destination Sign
Side Electric Destination Sign
Cove Molding
Driver Modesty Panel
Drivers Plexiglass Shield
Mid-High Passenger Seats
Seat Grabrails, Aisle Side Armrests, Synergy Fabric
Seatbelt Extender
Recaro Ergo Metro Driver Seat
Ricon or Braun 403 Lift
Q'Straint Wheelchair Tiedowns
Torso Pad
Lift Pad Cover
As-Built Manual
Under-Seat Retractor Seatbelts

Standard Chassis Features

Chevrolet 5500 Chassis
6.6 Liter Dura-Max Diesel 300hp
Allison Transmission
Dual 105 Amp Alternators
60 Gallon Fuel Tank
High Idle System

27' Bus – 16 + 2 Wheelchairs or 22 Ambulatory Passengers

29' Bus – 20 + 2 Wheelchairs or 26 Ambulatory Passengers

32' Bus – 24 + 2 Wheelchairs or 30 Ambulatory Passengers

Type VII Options
(Additional Options Available)

Caltrans – Option Pricing	**Cost Price**
<Credit> 8.1 Liter Gasoline Engine (225 hp)	- $3,715.00
<Credit> 8.1 Liter Gasoline Engine (325 hp)	-$3,385.00
Telma Brake Retarder	$7,950.00
A/C – Roof Mount Condenser	$1,650.00
Door – Access Fuel Sending Unit	$190.00
Door – Locking Fuel Door	$250.00
Door – Rear Door w/Window	$750.00
Farebox – Diamond Model "D" (1) Vault	$1,350.00
Farebox – Wiring Only	$295.00
Luggage – Compartment Underfloor (Skirt Language)	$950.00
Luggage Bins – Overhead	$2,500.00
Luggage Rack – 30"	$695.00
Luggage Rack – 60"	$950.00
Luggage Rack – 72"	$1,200.00
Mirror Crossover – Front	$220.00
Mirror Crossover – Rear	$220.00
Paint – Blackout Windows	$650.00
Paint – Full Body (Standard Color is White)	$3,250.00
Paint – Powder Coated Rims (Each)	Quote
Passenger Signal – To Touch Tape	$990.00
Seat – Child Safety Seat (Single)	$480.00
Tire Chains (Automatic)	$3,250.00
W/C – Full Length Track (Each) ILO Std. Position	$795.00
W/C – Full Length Track Only – Additional Position	$795.00
Underseat – QRT Storage (Foldaway Only)	$125.00
Wheelchair Position (QRT) – Additional	$795.00

32' Medium Duty Cutaway Bus – Type 7
Front Lift
Chevy Chassis – Aero Elite

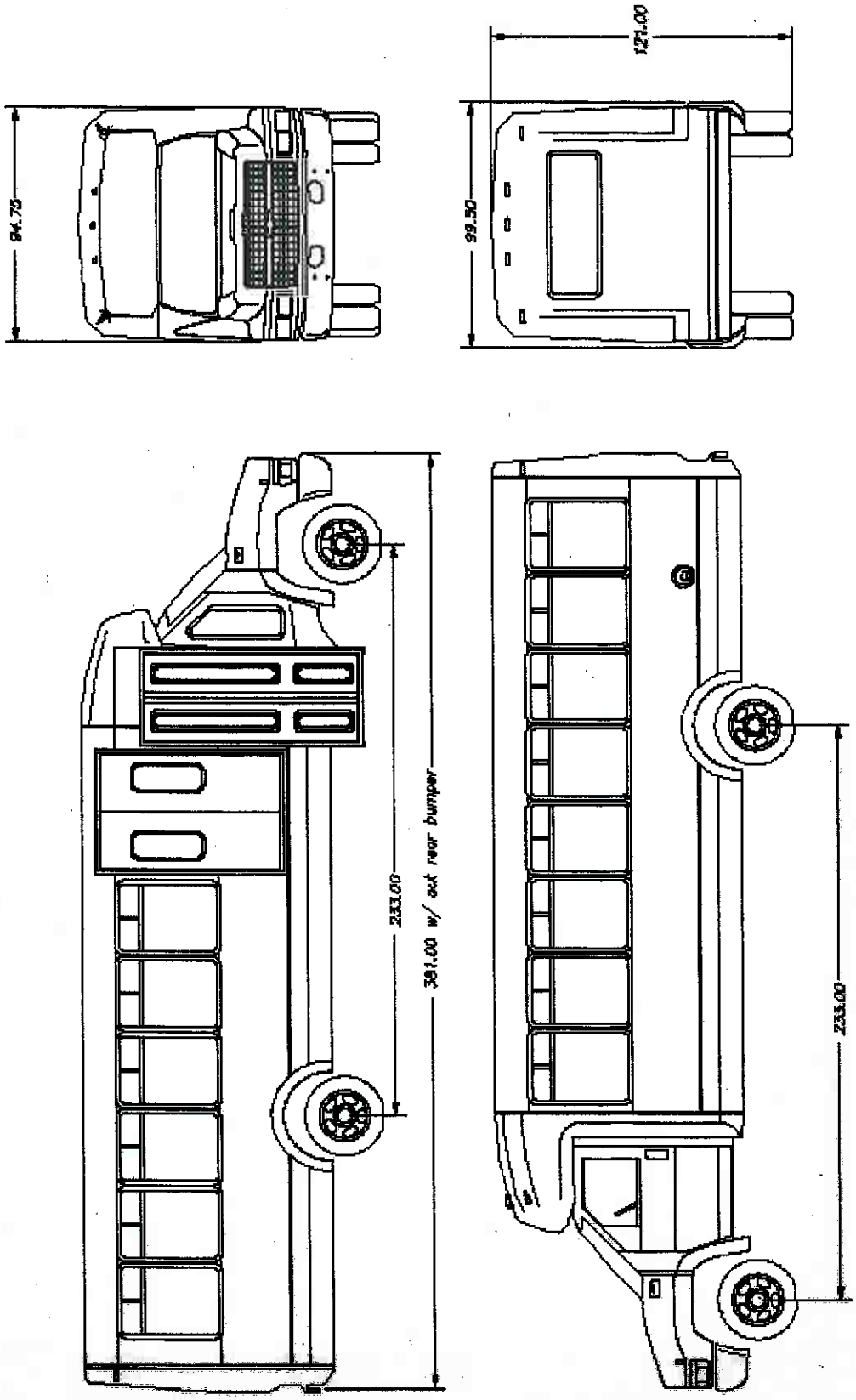

32' Medium Duty Cutaway Bus – Type 7
Front Lift
Chevy Chassis – Aero Elite

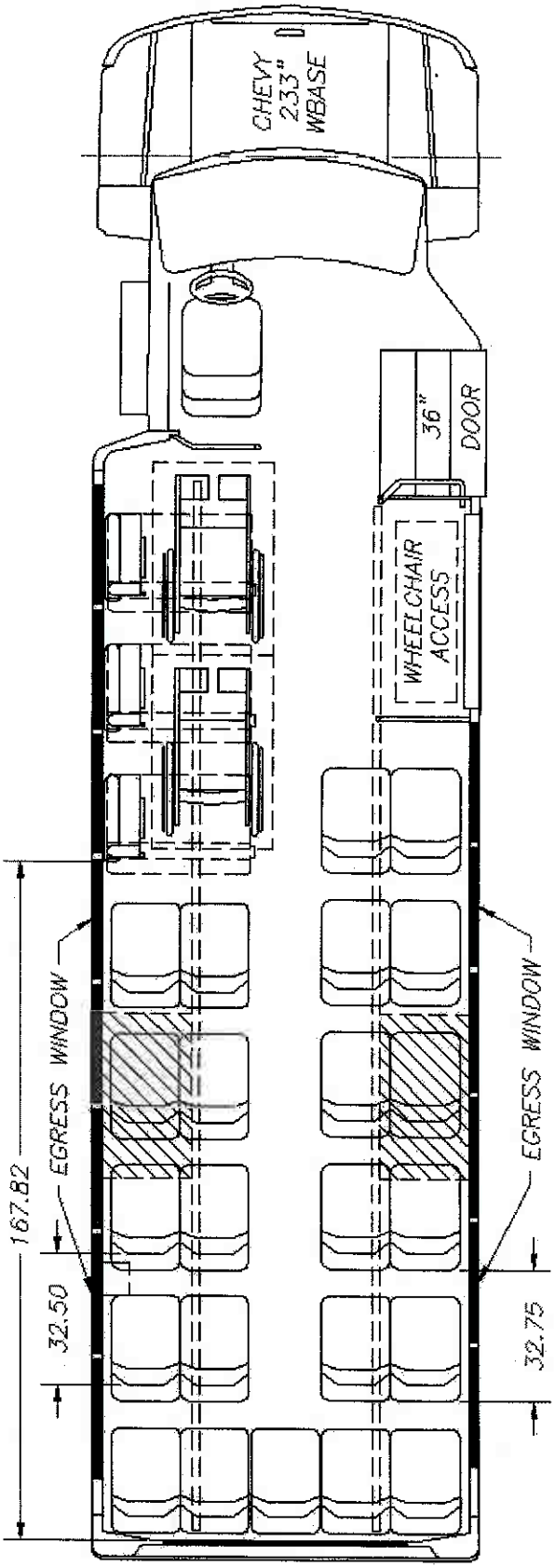

32' Medium Duty Cutaway Bus – Type 7
Rear Lift
Chevy Chassis – Aero Elite

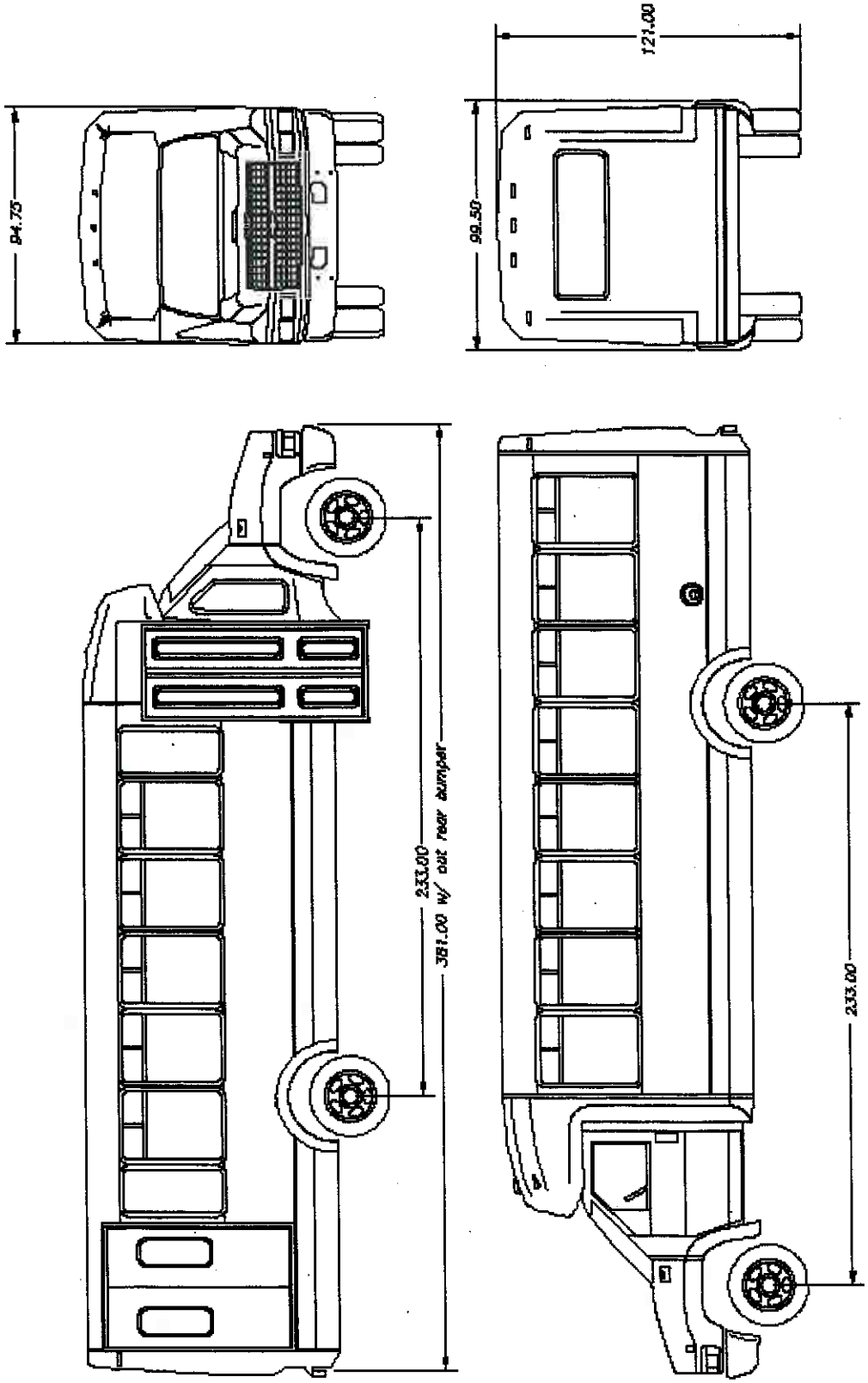
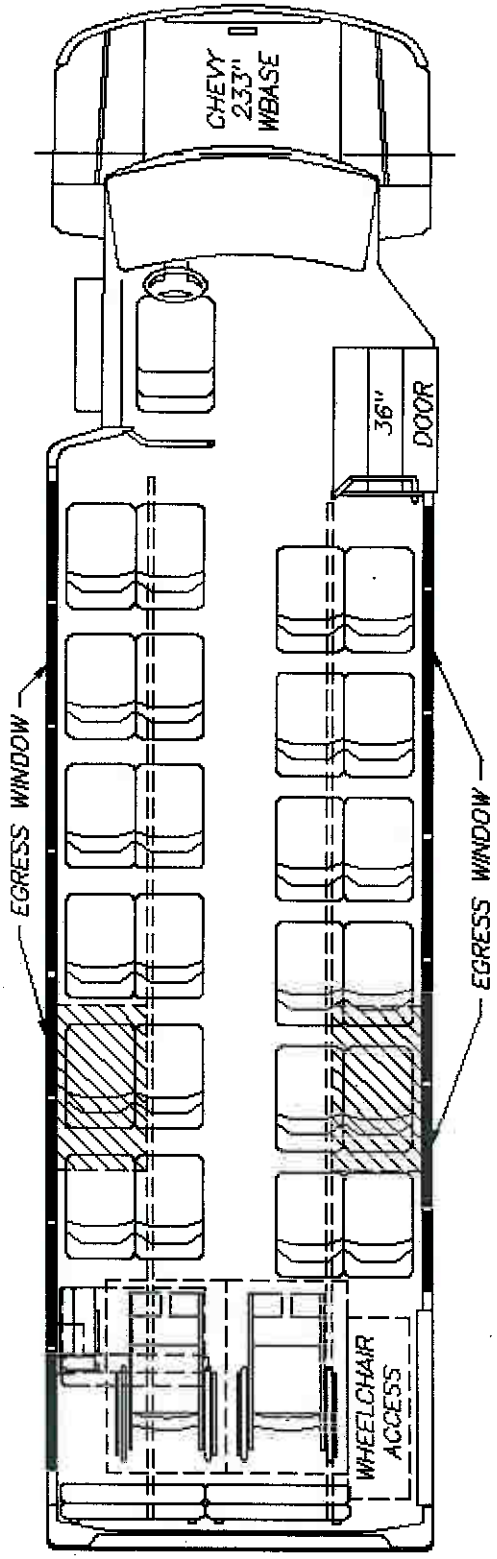
32' Medium Duty Cutaway Bus – Type 7
Rear Lift
Chevy Chassis – Aero Elite