Medium Bus Type II Equipment ("Short")
"Short" Front Lift (Only)

Standard Body Features

Galvanized Wheel Wells
Undercoat to be Tectyl 121-B
Ribbed Rubber Aisle and Entry
White or Yellow Step Nosing
(2) 5" Transit Stripe ref. 3M Reflective
Driver side Running Board, diamond plated step
Mor-Ryde Suspension System
Spare Tire with Spare Tire Carrier
Valve Stem Extender Inner Dual Rear Wheel
BrakeMax or Duratrans
Street side exhaust
Romeo Rim HELP Bumper with Anti-Ride
Driver Assist Handle at B-Pillar
TransAir® TA733 Super, 68,000 BTU
Silicone Heater Hoses
Heater, 40,000 BTU
Driver Electrical Controls Mounted Overhead
Stainless Steel Battery Box & Tray
LED Lighting Package
4 Speakers with Wire (OEM AM/FM/CD)
Ground Plane for 2-Way Radio, Pull Cord, Conduit
Electric 36" Passenger Door
Driver Storage in Cab Overhead with Lock
Tinted Glass
Back up alarm
Torso Pad
Double Wheelchair Doors, (2) Windows
Ricon® S-Series or Kleerview / Braun® Millenium or Vista Wheelchair
Fast Idle
SureLok® or Q'Straint® Retractor Tie Downs, Combination Lap/Shoulder with 'L' Track
Tool Box for Wheelchair Belt Storage
Tie Down Training Video
Aluminum Exterior Body Panels
Recess Marker Lights in Front Cap
Midship Turn/Marker Lights
Mirrors with Remote for Flat and Turn Signal
5 lb. Fire Extinguisher
16 Unit First Aid Kit
Emergency Triangle Kit
Back-Up Alarm
Interior Convex Mirror
Red Lights Over Emergency Exits
White or Yellow "Standee" Line
Intermotive Park Crank Only Module (PCOM)
Dual Ceiling Grab Rails
Stanchion and Modesty Panel Behind Driver
Recaro Driver Seat
(9) Mid High Seats, Forward Facing
(1) Double Foldaway Seat
(10) Seat Covers per Specification
(6) Anti-Vandal Grab Handles, Black
(3) Black US Armrest on Aisle Seats
(10) Seat Belts, USR Freedman Retractable
(2) Seat Belt Extensions, 24"

Standard Chassis Features

Ford E-450 SuperDuty Chassis
158" Wheelbase
6.8L Triton V-10 Gasoline Engine
TorqShift® 5-Speed Automatic Transmission
14,050 lbs. GVWR
4.56:1 Rear Axle Ratio
Power Steering
Power Brakes with ABS
130 Amp Alternator
Dual Batteries
OEM AM/FM Stereo/CD
Cruise Control/Tilt Steering
Chrome Appearance Package
Aerodynamic Headlamps

Type II "Short" Options
(Additional Options Available)

Chassis Options	Price
Folding Seat equal to Freedman Notch Back	$725.00
34"-36" equal to Freedman's Feather Weight Mid-Hi Flip Seat	$575.00
17"-18" equal to Freedman's Feather Weight Mid-Hi Flip Seat	$395.00
Child Restraint Seat	$625.00
Brake Retarder	$7,425.00
200 Amp Alternator Upgrade	$1,475.00
Roof Vents	$425.00
Additional mobility aid position(s) with tie downs	$625.00
Energy absorbing HELP Front bumper	$1,275.00
Removable fuel pump access plate in floor	$195.00
Locking fuel door	$155.00
Armored marker lights, and side turn signal	$195.00
Maxon Lift	$650.00
Raised floor when necessary to provide additional securement positions.	$990.00
Locking rear door in place of rear window.	$385.00
Alarm & Warning Light for Rear Door	$125.00

Medium Bus – Type 2 Short
Front Lift Only
Ford Chassis – Starcraft Allstar

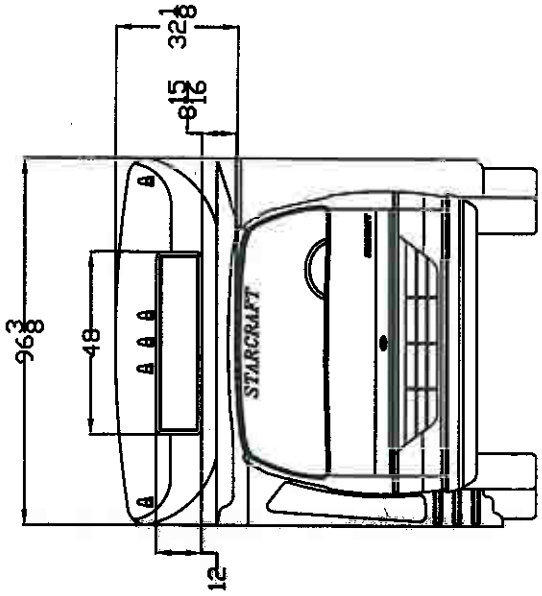

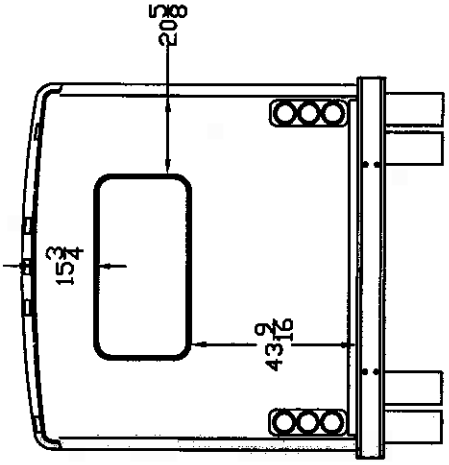

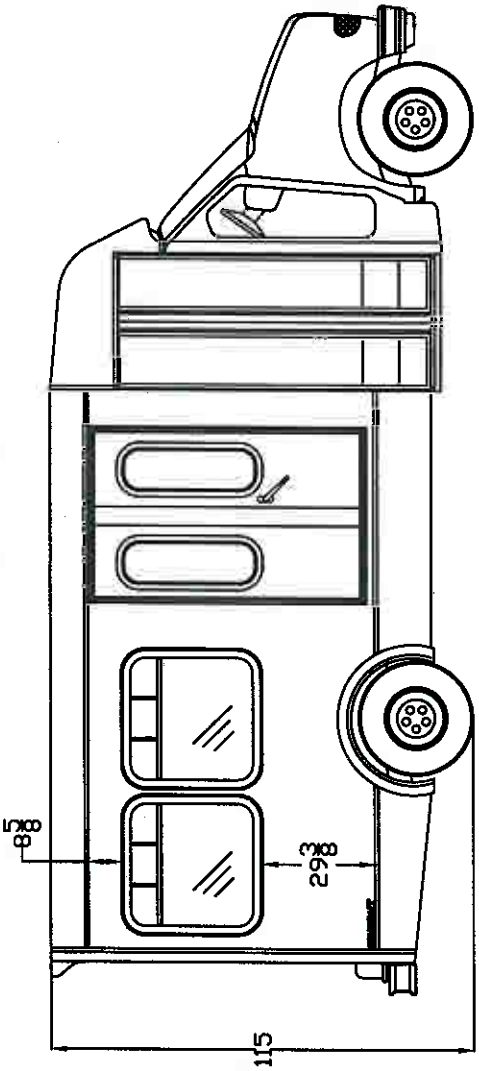

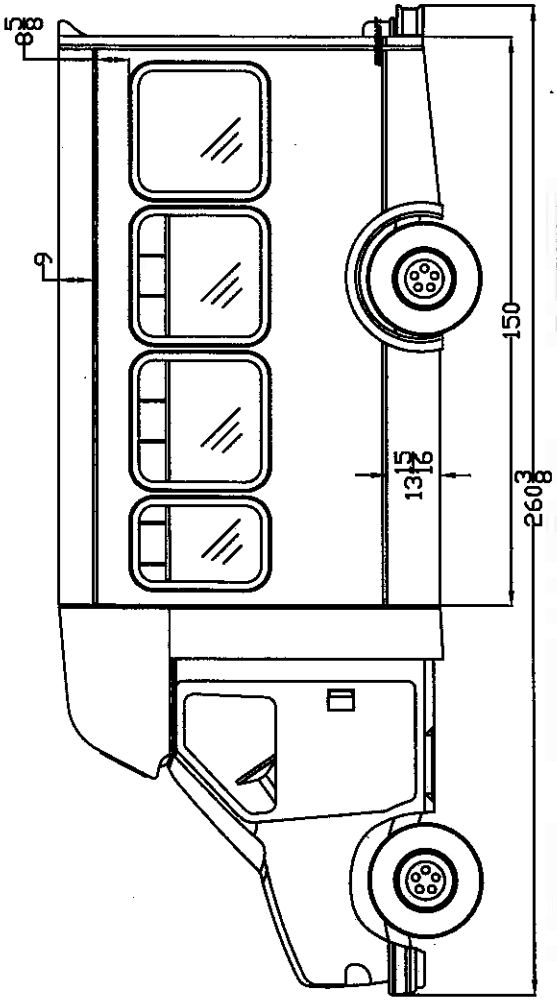

Medium Bus – Type 2 Short
Front Lift Only
Ford Chassis – Starcraft Allstar

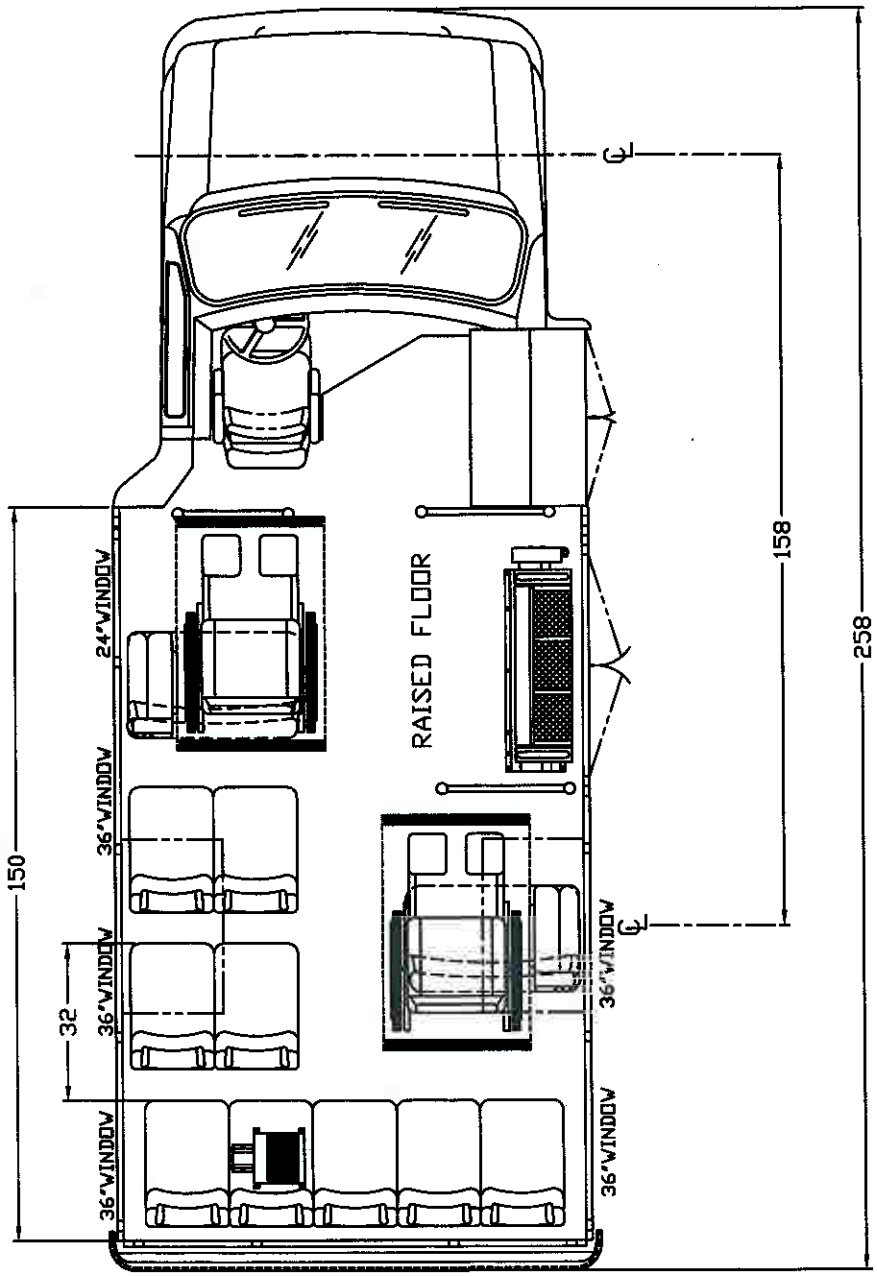

- REAR ROW OF SEATS WITHOUT REAR DOOR ARE LOW BACK SEATS
- 1 FOLDAWAY IS STANDARD, 1 IS OPTIONAL, CHOICE OF LOCATION
- SPARE TIRE CARRIER IS NOT AVAILABLE ON THIS WHEELBASE/BODY SIZE COMBINATION